Transcend Wireless

10 Industrial Ave,
Suite 3
Mahwah NJ 07430

Phone: 201.684.0055
Fax: 201.684.0066

October 7, 2019

Members of the Siting Council
Connecticut Siting Council
Ten Franklin Square
New Britain, CT 06051

RE: Notice of Exempt Modification
Keeney Street Manchester, CT 06040
Latitude: 41.743106
Longitude: -72.534928
Sprint Site#: CT33XC538 – DO Macro

Dear Ms. Bachman:

Sprint currently maintains three (3) antennas at the 116-foot level of the existing 120-foot transmission tower at Keeney Street Manchester, CT. The 120-foot transmission tower and property are owned by The Connecticut Light & Power Company, d/b/a Eversource Energy. Sprint now intends to replace three (3) of its existing antennas with three (3) new 800/1900/2500 MHz antennas. The new antennas will be installed at the same 116-foot level of the tower.

Planned Modifications:
Tower:

Remove
N/A

Remove and Replace:
(3) RFS APXVSPP18-C antennas (Remove) - CommScope DHHTT65B-3XR antennas (Replace)
800/1900/2500 MHz

Install New:
(3) RFS KIT-FD9R6004 / 1C-DL diplexers
(3) CCI DPO-7126Y-0-T1 diplexers

Existing to Remain:
(18) 1-5/8" coax cables
(6) RET cables

Ground:

Install New: (3) RFS KIT-FD9R6004 / 1C-DL diplexers, (3) CCI DPO-7126Y-0-T1 diplexers (3) 2500 MHz RRHs

This facility was approved by the CSC for Sprint use in Petition No. 713 dated June 8, 2005. This modification complies with this approval. Please see the enclosed.

Please accept this letter as notification pursuant to Regulations of Connecticut State Agencies§ 16- SOj-73, for construction that constitutes an exempt modification pursuant to R.C.S.A. § 16-50j-72(b)(2). In accordance with R.C.SA. § 16-SOj-73, a copy of this letter is being sent to Mayor – Jay Moran, Elected Official, and James Davis, Zoning Enforcement Officer for the Town of Manchester, as well as the owner.

The planned modifications to the facility fall squarely within those activities explicitly provided for in R.C.S;A. § 16-50j-72(b)(2).

1. The proposed modifications will not result in an increase in the height of the existing structure.

2. The proposed modifications will not require the extension of the site boundary.

3. The proposed modifications will not increase noise levels at the facility by six decibels or more, or to levels that exceed state and local criteria.

4. The operation of the replacement antennas will not increase radio frequency emissions at the facility to a level at or above the Federal Communications Commission safety standard.

5. The proposed modifications will not cause a change or alteration in the physical or environmental characteristics of the site.

6. The existing structure and its foundation can support the proposed loading.

For the foregoing reasons, Sprint respectfully submits that the proposed modifications to the above referenced telecommunications facility constitute an exempt modification under R.C.S.A. § 16-50j-72(b)(2).

Sincerely,

Jake Shappy
Transcend Wireless
Cell: 845-553-3330
Email: jshappy@transcendwireless.com

Attachments
cc: The Hon. Jay Moran – Town of Manchester Mayor
James Davis – Town of Manchester Zoning Enforcement Officer
The Connecticut Light & Power Company, d/b/a Eversource Energy – tower and property owner

EVERSOURCE ENERGY

56 Prospect Street,
Hartford, CT 06103

P.O. Box 270
Hartford, CT 06141-0270
(860) 665-5000

October 7, 2019

Mr. Jake Shappy
Transcend Mobile
10 Industrial Ave, Suite 3
Mahwah, NJ 07430

RE: Sprint Antenna Site, CT-03XC538, Keeney St, Manchester, CT, structure 29317

Dear Mr. Shappy:

Based on the structural report and construction drawings provided by Centek Engineering, as well as a review of the structural report by Paul J. Ford & Company, Eversource accepts the proposed modification of the subject Sprint site.

Please contact Christopher Gelinas of Eversource Real Estate at 860-665-2008 to complete the site lease amendment if needed. Please contact me at 860-728-4503 for other questions regarding this site.

Sincerely,

Joel Szarkowicz
Transmission Line Engineering

REF: 17159.14 - CT33XC538 - Structural Analysis Rev3 19.01.08
17159.14 CT33XC538 Manchester - CD REV 0 19.02.18 S&S

Connecticut Siting Council
Petition Staff Reports

Petition No. 713
Sprint Spectrum, L.P.
595 Keeney Street, Manchester
Staff Report
June 8, 2005

On April 13, 2005, Sprint Spectrum L.P. (Sprint) submitted a petition to the Connecticut Siting Council (Council) for a declaratory ruling that no Certificate of Environmental Compatibility and Public Need (Certificate) is required for the redesign and replacement an electric transmission structure in Manchester to accommodate telecommunications use. The existing wood H-frame transmission structure is owned by CL&P. A field review was conducted on May 2, 2005 with Council member Colin Tait, staff member Robert Mercier, and Sprint representative Thomas Regan.

Sprint submitted a revised site plan on June 2, 2005. The revised plan transposed the location of the antennas and equipment compound from the outer H-frame pole to the inner H-frame pole to enlarge the buffer, by 20 feet, between the site and an adjacent residence approximately 200 feet to the south.

Sprint, with the agreement of CL&P, proposes to replace an existing 80-foot H-frame transmission structure with a new laminated wood structure approximately 10 feet west of the existing structure. The new H-frame structure would consist of an 80-foot outer pole and a 120-foot inner pole connected by diagonal and horizontal cross beams. The 120-foot pole would accommodate three flush mounted panel antennas owned by Sprint at a centerline height of 117 feet above ground level (agl). The pole would be designed to accommodate three additional flush mounted panel antennas at a centerline height of 107 feet agl.

Sprint would construct a 23-foot by 16-foot equipment compound at the base of the 120-foot pole. The compound would be enclosed by an eight-foot high stockade fence surrounded by evergreen plantings. Sprint would mount four equipment cabinets on a concrete pad within the compound. The site would be accessed by an existing dirt road emanating from Keeney Street. Sprint would construct a new 110-foot dirt/gravel drive off of the existing road to access the compound. No wetlands or watercourses are within or adjacent to the proposed construction area. Soil and erosion controls would be installed prior to construction.

The site is approximately 1,000 feet east of Kenney Street within an existing CL&P transmission line right-of-way containing two separate lines and associated H-frames. Residential areas are located to the north and south. The nearest residence is approximately 200 feet south of the site.

Content Last Modified on 6/9/2005 10:21:13 AM

CT33XC538 GIS Map

Property Information

Property ID	09003077-324000595
Location	595 KEENEY STREET
Owner	CONNECTICUT LIGHT & POWER CO

CRCOG CAPITOL REGION COUNCIL OF GOVERNMENTS
Working together for a better region.

MAP FOR REFERENCE ONLY
NOT A LEGAL DOCUMENT

CRCOG makes no claims and no warranties, expressed or implied, concerning the validity or accuracy of the GIS data presented on this map.

595 KEENEY STREET

Location	595 KEENEY STREET	**Mblu**	68/ 3240/ 595/ /
Acct#	324000595	**Owner**	CONNECTICUT LIGHT & POWER CO
Assessment	$163,600	**Appraisal**	$233,800
PID	8695	**Building Count**	1
DISTRICT	T	**CONCRETE**	

Current Value

Appraisal			
Valuation Year	**Improvements**	**Land**	**Total**
2016	$0	$233,800	$233,800
Assessment			
Valuation Year	**Improvements**	**Land**	**Total**
2016	$0	$163,600	$163,600

Owner of Record

Owner CONNECTICUT LIGHT & POWER CO
Address PO BOX 270
HARTFORD, CT 06141-0270

Sale Price $0
Certificate C
Book & Page 414/ 361
Sale Date

Ownership History

Ownership History				
Owner	**Sale Price**	**Certificate**	**Book & Page**	**Sale Date**
CONNECTICUT LIGHT & POWER CO	$0	C	414/ 361	

Building Information

Building 1 : Section 1

Year Built:
Living Area: 0
Replacement Cost: $0
Replacement Cost Less Depreciation: $0

Building Attributes

Field	Description
Style	Vacant Land
Model	
Grade:	
Stories:	
Occupancy	
Exterior Wall 1	
Exterior Wall 2	
Roof Structure:	
Roof Cover	
Interior Wall 1	
Interior Wall 2	
Interior Flr 1	
Interior Flr 2	
Heat Fuel	
Heat Type:	
AC Type:	
Total Bedrooms:	
Total Bthrms:	
Total Half Baths:	
Total Xtra Fixtrs:	
Total Rooms:	
Bath Style:	
Kitchen Style:	
Extra Kitchens	
Whirlpool	
Fireplace	
Fin Basement	
Fin Bsmnt Qual	
Fin Bsmnt 2	
Fin Bsmnt2 Qual	
Bsmnt Garage	
SFA Code	

Building Photo

(http://images.vgsi.com/photos2/ManchesterCTPhotos//\00\03\9

Building Layout

(http://images.vgsi.com/photos2/ManchesterCTPhotos//Sketches

Building Sub-Areas (sq ft)	Legend
No Data for Building Sub-Areas	

Extra Features

Extra Features	Legend
No Data for Extra Features	

Land

Land Use

Use Code	400V
Description	Pub Util. 00
Zone	RR
Neighborhood	60
Alt Land Appr	No
Category	

Land Line Valuation

Size (Acres)	19.4
Frontage	0
Depth	0
Assessed Value	$163,600
Appraised Value	$233,800

Outbuildings

Outbuildings	Legend
No Data for Outbuildings	

Valuation History

Appraisal			
Valuation Year	**Improvements**	**Land**	**Total**
2015	$0	$269,800	$269,800
2010	$0	$276,600	$276,600
2005	$0	$229,000	$229,000

Assessment			
Valuation Year	**Improvements**	**Land**	**Total**
2015	$0	$188,900	$188,900
2010	$0	$193,600	$193,600
2005	$0	$160,300	$160,300

(c) 2019 Vision Government Solutions, Inc. All rights reserved.

UPS Internet Shipping: View/Print Label

1. **Ensure there are no other shipping or tracking labels attached to your package.** Select the Print button on the print dialog box that appears. Note: If your browser does not support this function select Print from the File menu to print the label.

2. **Fold the printed label at the solid line below.** Place the label in a UPS Shipping Pouch. If you do not have a pouch, affix the folded label using clear plastic shipping tape over the entire label.

3. **GETTING YOUR SHIPMENT TO UPS**
   Customers with a Daily Pickup
   Your driver will pickup your shipment(s) as usual.

   Customers without a Daily Pickup
   Take your package to any location of The UPS Store®, UPS Access Point(TM) location, UPS Drop Box, UPS Customer Center, Staples® or Authorized Shipping Outlet near you. Items sent via UPS Return Services(SM) (including via Ground) are also accepted at Drop Boxes. To find the location nearest you, please visit the 'Find Locations' Quick link at ups.com.
   Schedule a same day or future day Pickup to have a UPS driver pickup all of your Internet Shipping packages.
   Hand the package to any UPS driver in your area.

UPS Access Point™
MICHAELS STORE # 7773
75 INTERSTATE SHOP CTR
RAMSEY ,NJ 07446

UPS Access Point™
THE UPS STORE
115 FRANKLIN TPKE
MAHWAH ,NJ 07430

UPS Access Point™
THE UPS STORE
120 E MAIN ST
RAMSEY ,NJ 07446

FOLD HERE

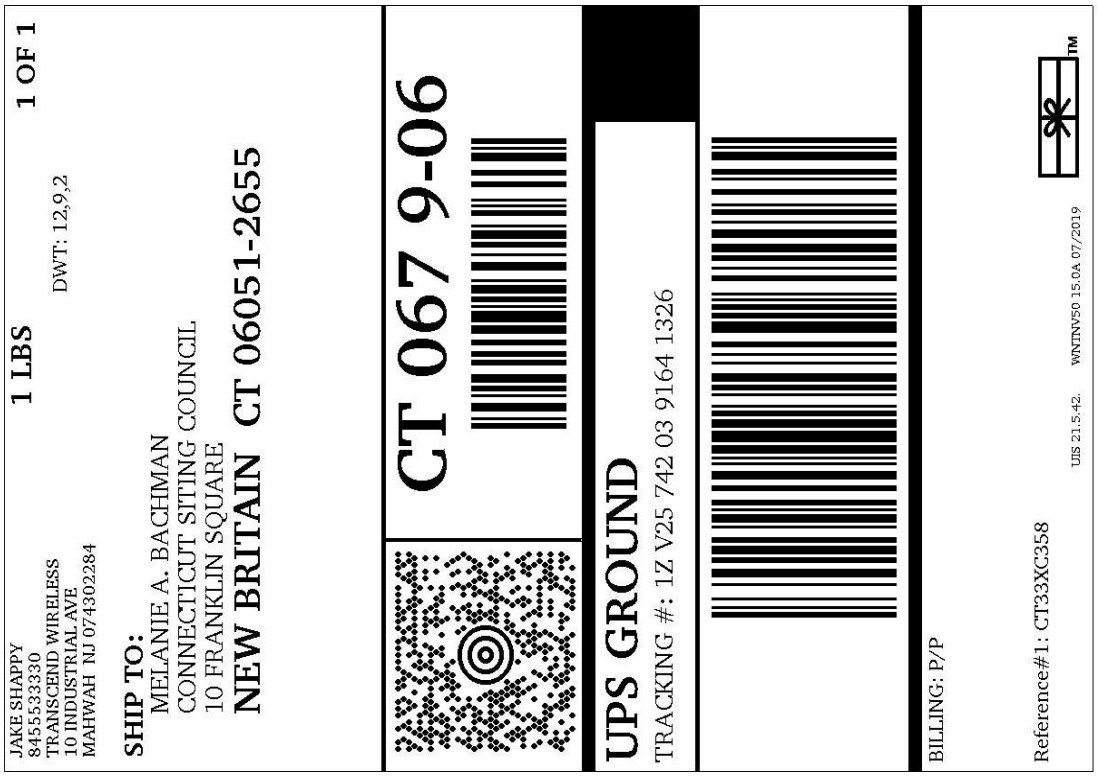

UPS Internet Shipping: View/Print Label

1. **Ensure there are no other shipping or tracking labels attached to your package.** Select the Print button on the print dialog box that appears. Note: If your browser does not support this function select Print from the File menu to print the label.

2. **Fold the printed label at the solid line below.** Place the label in a UPS Shipping Pouch. If you do not have a pouch, affix the folded label using clear plastic shipping tape over the entire label.

3. **GETTING YOUR SHIPMENT TO UPS**
   Customers with a Daily Pickup
   Your driver will pickup your shipment(s) as usual.

   Customers without a Daily Pickup
   Take your package to any location of The UPS Store®, UPS Access Point(TM) location, UPS Drop Box, UPS Customer Center, Staples® or Authorized Shipping Outlet near you. Items sent via UPS Return Services(SM) (including via Ground) are also accepted at Drop Boxes. To find the location nearest you, please visit the 'Find Locations' Quick link at ups.com.
   Schedule a same day or future day Pickup to have a UPS driver pickup all of your Internet Shipping packages.
   Hand the package to any UPS driver in your area.

UPS Access Point™
MICHAELS STORE # 7773
75 INTERSTATE SHOP CTR
RAMSEY ,NJ 07446

UPS Access Point™
THE UPS STORE
115 FRANKLIN TPKE
MAHWAH ,NJ 07430

UPS Access Point™
THE UPS STORE
120 E MAIN ST
RAMSEY ,NJ 07446

FOLD HERE

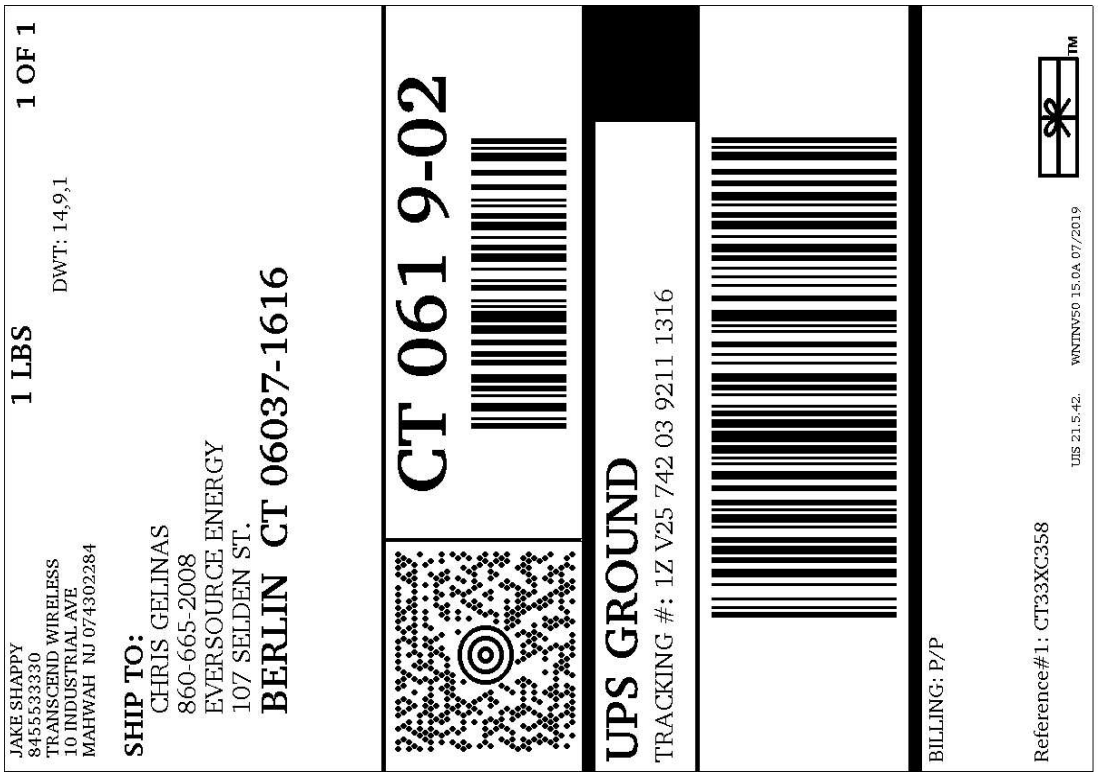

UPS Internet Shipping: View/Print Label

1. **Ensure there are no other shipping or tracking labels attached to your package.** Select the Print button on the print dialog box that appears. Note: If your browser does not support this function select Print from the File menu to print the label.

2. **Fold the printed label at the solid line below.** Place the label in a UPS Shipping Pouch. If you do not have a pouch, affix the folded label using clear plastic shipping tape over the entire label.

3. **GETTING YOUR SHIPMENT TO UPS**
   Customers with a Daily Pickup
   Your driver will pickup your shipment(s) as usual.

   Customers without a Daily Pickup
   Take your package to any location of The UPS Store®, UPS Access Point(TM) location, UPS Drop Box, UPS Customer Center, Staples® or Authorized Shipping Outlet near you. Items sent via UPS Return Services(SM) (including via Ground) are also accepted at Drop Boxes. To find the location nearest you, please visit the 'Find Locations' Quick link at ups.com.
   Schedule a same day or future day Pickup to have a UPS driver pickup all of your Internet Shipping packages.
   Hand the package to any UPS driver in your area.

UPS Access Point™
MICHAELS STORE # 7773
75 INTERSTATE SHOP CTR
RAMSEY ,NJ 07446

UPS Access Point™
THE UPS STORE
115 FRANKLIN TPKE
MAHWAH ,NJ 07430

UPS Access Point™
THE UPS STORE
120 E MAIN ST
RAMSEY ,NJ 07446

FOLD HERE

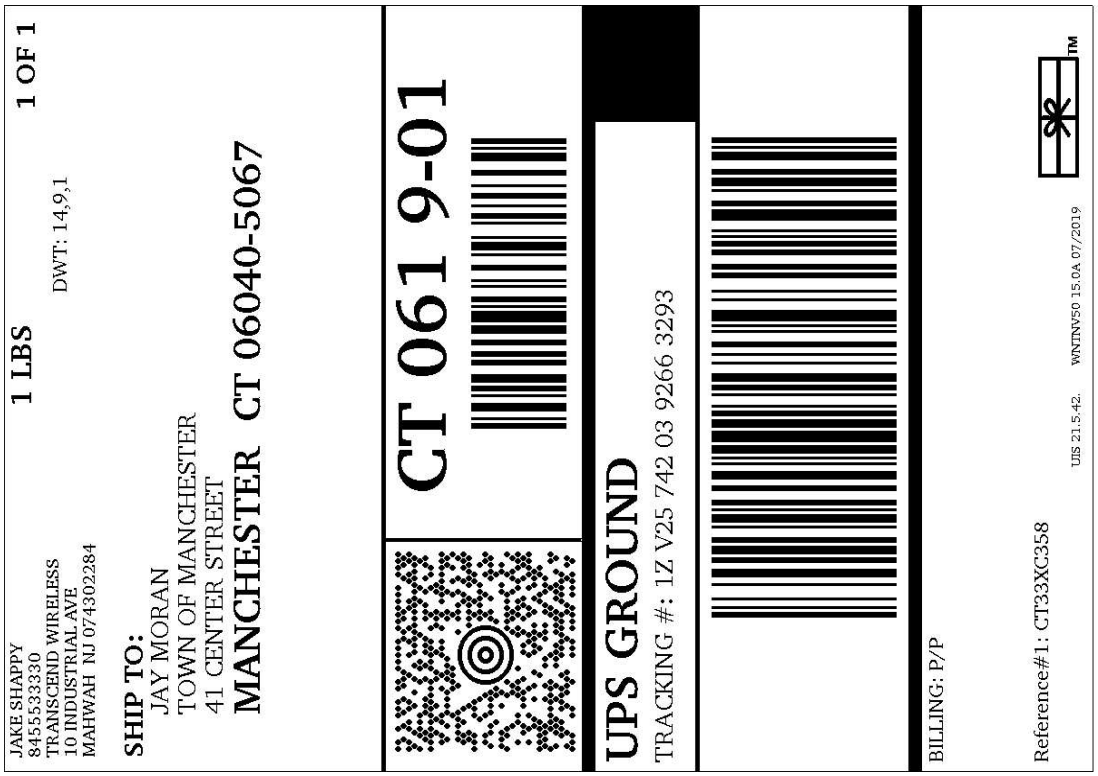

UPS Internet Shipping: View/Print Label

1. **Ensure there are no other shipping or tracking labels attached to your package.** Select the Print button on the print dialog box that appears. Note: If your browser does not support this function select Print from the File menu to print the label.

2. **Fold the printed label at the solid line below.** Place the label in a UPS Shipping Pouch. If you do not have a pouch, affix the folded label using clear plastic shipping tape over the entire label.

3. **GETTING YOUR SHIPMENT TO UPS**
   Customers with a Daily Pickup
   Your driver will pickup your shipment(s) as usual.

   Customers without a Daily Pickup
   Take your package to any location of The UPS Store®, UPS Access Point(TM) location, UPS Drop Box, UPS Customer Center, Staples® or Authorized Shipping Outlet near you. Items sent via UPS Return Services(SM) (including via Ground) are also accepted at Drop Boxes. To find the location nearest you, please visit the 'Find Locations' Quick link at ups.com.
   Schedule a same day or future day Pickup to have a UPS driver pickup all of your Internet Shipping packages.
   Hand the package to any UPS driver in your area.

UPS Access Point™
MICHAELS STORE # 7773
75 INTERSTATE SHOP CTR
RAMSEY ,NJ 07446

UPS Access Point™
THE UPS STORE
115 FRANKLIN TPKE
MAHWAH ,NJ 07430

UPS Access Point™
THE UPS STORE
120 E MAIN ST
RAMSEY ,NJ 07446

FOLD HERE

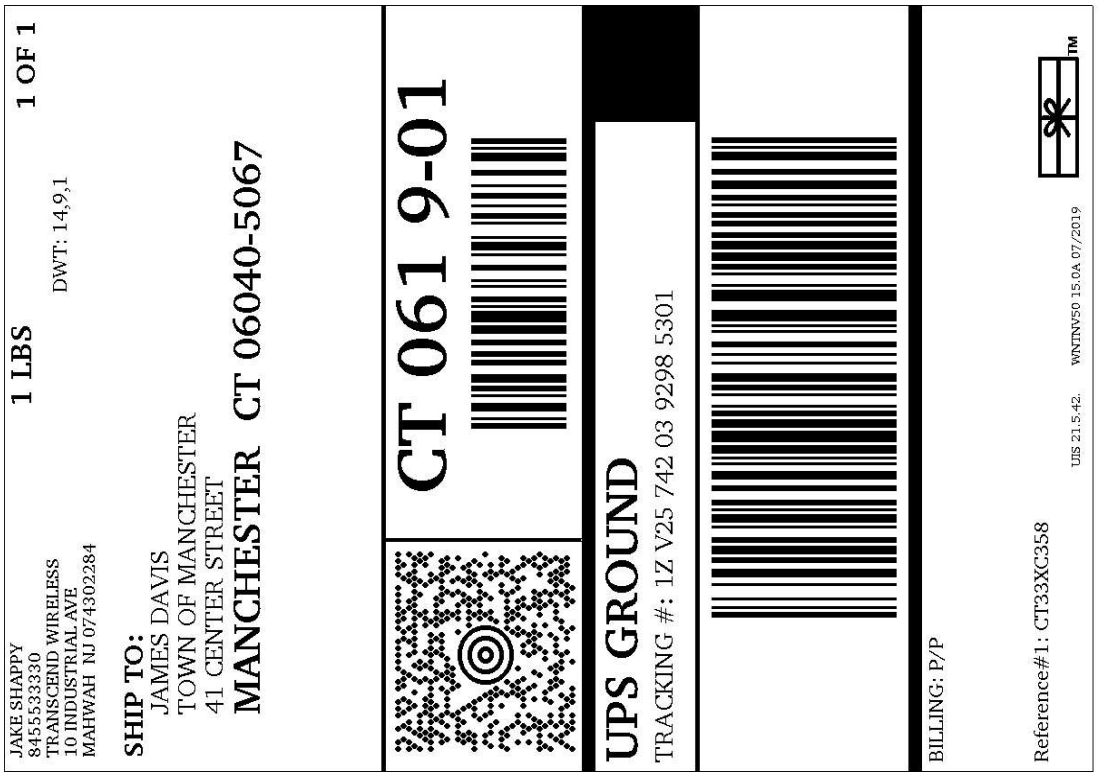

EBI Consulting

environmental | engineering | due diligence

RADIO FREQUENCY EMISSIONS ANALYSIS REPORT
EVALUATION OF HUMAN EXPOSURE POTENTIAL TO NON-IONIZING EMISSIONS

Sprint Existing Facility

Site ID: CT33XC538

Eversource Struct.: 29317
595 Keeney Street
Manchester, Connecticut 06040

June 4, 2019

EBI Project Number: 6219001931

Site Compliance Summary	
Compliance Status:	**COMPLIANT**
Site total MPE% of FCC general population allowable limit:	**3.88%**

June 4, 2019

Sprint
Attn: RF Engineering Manager
1 International Boulevard, Suite 800
Mahwah, New Jersey 07495

Emissions Analysis for Site: CT33XC538 - Eversource Struct.: 29317

EBI Consulting was directed to analyze the proposed Sprint facility located at **595 Keeney Street** in **Manchester, Connecticut** for the purpose of determining whether the emissions from the Proposed Sprint Antenna Installation located on this property are within specified federal limits.

All information used in this report was analyzed as a percentage of current Maximum Permissible Exposure (% MPE) as listed in the FCC OET Bulletin 65 Edition 97-01and ANSI/IEEE Std C95.1. The FCC regulates Maximum Permissible Exposure in units of microwatts per square centimeter ($\mu W/cm^2$). The number of $\mu W/cm^2$ calculated at each sample point is called the power density. The exposure limit for power density varies depending upon the frequencies being utilized. Wireless Carriers and Paging Services use different frequency bands each with different exposure limits; therefore, it is necessary to report results and limits in terms of percent MPE rather than power density.

All results were compared to the FCC (Federal Communications Commission) radio frequency exposure rules, 47 CFR 1.1307(b)(1) – (b)(3), to determine compliance with the Maximum Permissible Exposure (MPE) limits for General Population/Uncontrolled environments as defined below.

General population/uncontrolled exposure limits apply to situations in which the general population may be exposed or in which persons who are exposed as a consequence of their employment may not be made fully aware of the potential for exposure or cannot exercise control over their exposure. Therefore, members of the general population would always be considered under this category when exposure is not employment related, for example, in the case of a telecommunications tower that exposes persons in a nearby residential area.

Public exposure to radio frequencies is regulated and enforced in units of microwatts per square centimeter ($\mu W/cm^2$). The general population exposure limits for the 600 MHz and 700 MHz frequency bands are approximately 400 $\mu W/cm^2$ and 467 $\mu W/cm^2$, respectively. The general population exposure limit for the 1900 MHz (PCS), 2100 MHz (AWS) and 11 GHz frequency bands is 1000 $\mu W/cm^2$. Because each carrier will be using different frequency bands, and each frequency band has different exposure limits, it is necessary to report percent of MPE rather than power density.

Occupational/controlled exposure limits apply to situations in which persons are exposed as a consequence of their employment and in which those persons who are exposed have been made fully aware of the potential for exposure and can exercise control over their exposure. Occupational/controlled exposure limits also apply where exposure is of a transient nature as a result of incidental passage through a location where exposure levels may be above general population/uncontrolled limits (see below), as long as the exposed person has been made fully aware of the potential for exposure and can exercise control over his or her exposure by leaving the area or by some other appropriate means.

Additional details can be found in FCC OET 65.

CALCULATIONS

Calculations were done for the proposed Sprint Wireless antenna facility located at 595 Keeney Street in Manchester, Connecticut using the equipment information listed below. All calculations were performed per the specifications under FCC OET 65. Since Sprint is proposing highly focused directional panel antennas, which project most of the emitted energy out toward the horizon, all calculations were performed assuming a lobe representing the maximum gain of the antenna per the antenna manufacturer's supplied specifications, minus 10 dB for directional panel antennas and 20 dB for highly focused parabolic microwave dishes, was focused at the base of the tower. For this report, the sample point is the top of a 6-foot person standing at the base of the tower.

For all calculations, all equipment was calculated using the following assumptions:

1) 2 CDMA channels (800 MHz Band) were considered for each sector of the proposed installation. These Channels have a transmit power of 50 Watts per Channel.

2) 4 PCS channels (1900 MHz Band) were considered for each sector of the proposed installation. These Channels have a transmit power of 40 Watts per Channel.

3) 8 BRS channels (2500 MHz Band) were considered for each sector of the proposed installation. These Channels have a transmit power of 20 Watts per Channel.

4) All radios at the proposed installation were considered to be running at full power and were uncombined in their RF transmissions paths per carrier prescribed configuration. Per FCC OET Bulletin No. 65 - Edition 97-01 recommendations to achieve the maximum anticipated value at each sample point, all power levels emitting from the proposed antenna installation are increased by a factor of 2.56 to account for possible in-phase reflections from the surrounding environment. This is rarely the case, and if so, is never continuous.

5) For the following calculations, the sample point was the top of a 6-foot person standing at the base of the tower. The maximum gain of the antenna per the antenna manufacturer's supplied specifications, minus 10 dB for directional panel antennas and 20 dB for highly focused parabolic microwave dishes, was used in this direction. This value is a very conservative estimate as gain reductions for these particular antennas are typically much higher in this direction.

6) The antennas used in this modeling are the Commscope DHHTT65B-3XR for the 800 MHz / 1900 MHz / 2500 MHz channel(s) in Sector A, the Commscope DHHTT65B-3XR for the 800 MHz / 1900 MHz / 2500 MHz channel(s) in Sector B, the Commscope DHHTT65B-3XR for the 800 MHz / 1900 MHz / 2500 MHz channel(s) in Sector C. This is based on feedback from the carrier with regard to anticipated antenna selection. All Antenna gain values and associated transmit power levels are shown in the Site Inventory and Power Data table below. The maximum gain of the antenna per the antenna manufacturer's supplied specifications, minus 10 dB for directional panel antennas and 20 dB for highly focused parabolic microwave dishes, was used for all calculations. This value is a very conservative estimate as gain reductions for these particular antennas are typically much higher in this direction.

7) The antenna mounting height centerline of the proposed antennas is 116 feet above ground level (AGL).

8) Emissions values for additional carriers were taken from the Connecticut Siting Council active database. Values in this database are provided by the individual carriers themselves.

9) Emissions from additional carriers were not included because emissions data for the site location are not available.

10) All calculations were done with respect to uncontrolled / general population threshold limits.

Sprint Site Inventory and Power Data

Sector:	A	Sector:	B	Sector:	C
Antenna #:	1	Antenna #:	1	Antenna #:	1
Make / Model:	Commscope DHHTT65B-3XR	Make / Model:	Commscope DHHTT65B-3XR	Make / Model:	Commscope DHHTT65B-3XR
Frequency Bands:	800 MHz / 1900 MHz / 2500 MHz	Frequency Bands:	800 MHz / 1900 MHz / 2500 MHz	Frequency Bands:	800 MHz / 1900 MHz / 2500 MHz
Gain:	13.35 dBd / 15.25 dBd / 15.05 dBd	Gain:	13.35 dBd / 15.25 dBd / 15.05 dBd	Gain:	13.35 dBd / 15.25 dBd / 15.05 dBd
Height (AGL):	116 feet	Height (AGL):	116 feet	Height (AGL):	116 feet
Channel Count:	14	Channel Count:	14	Channel Count:	14
Total TX Power (W):	420 Watts	Total TX Power (W):	420 Watts	Total TX Power (W):	420 Watts
ERP (W):	12,640.40	ERP (W):	12,640.40	ERP (W):	12,640.40
Antenna A1 MPE %:	**3.88%**	Antenna B1 MPE %:	**3.88%**	Antenna C1 MPE %:	**3.88%**

Site Composite MPE %	
Carrier	**MPE %**
Sprint (Max at Sector A):	3.88%
no additional carriers	N/A
Site Total MPE % :	3.88%

Sprint MPE % Per Sector	
Sprint Sector A Total:	3.88%
Sprint Sector B Total:	3.88%
Sprint Sector C Total:	3.88%
Site Total MPE % :	3.88%

Sprint Maximum MPE Power Values (Sector A)

Sprint Frequency Band / Technology (Sector A)	# Channels	Watts ERP (Per Channel)	Height (feet)	Total Power Density (μW/cm²)	Frequency (MHz)	Allowable MPE (μW/cm²)	Calculated % MPE
Sprint 800 MHz CDMA	2	1081.36	116.0	5.78	800 MHz CDMA	533	1.08%
Sprint 1900 MHz PCS	4	1339.86	116.0	14.32	1900 MHz PCS	1000	1.43%
Sprint 2500 MHz BRS	8	639.78	116.0	13.67	2500 MHz BRS	1000	1.37%
						Total:	**3.88%**

• NOTE: Totals may vary by approximately 0.01% due to summation of remainders in calculations.

Summary

All calculations performed for this analysis yielded results that were **within** the allowable limits for general population exposure to RF Emissions.

The anticipated maximum composite contributions from the Sprint facility as well as the site composite emissions value with regards to compliance with FCC's allowable limits for general population exposure to RF Emissions are shown here:

Sprint Sector	Power Density Value (%)
Sector A:	3.88%
Sector B:	3.88%
Sector C:	3.88%
Sprint Maximum MPE % (Sector A):	3.88%
Site Total:	3.88%
Site Compliance Status:	**COMPLIANT**

The anticipated composite MPE value for this site assuming all carriers present is **3.88%** of the allowable FCC established general population limit sampled at the ground level. This is based upon values listed in the Connecticut Siting Council database for existing carrier emissions.

FCC guidelines state that if a site is found to be out of compliance (over allowable thresholds), that carriers over a 5% contribution to the composite value will require measures to bring the site into compliance. For this facility, the composite values calculated were well within the allowable 100% threshold standard per the federal government.

WIRELESS COMMUNICATIONS FACILITY

EVERSOURCE STRUCT.: 29317

SITE ID: CT33XC538

595 KEENEY STREET

MANCHESTER, CT 06040

GENERAL NOTES

1. ALL WORK SHALL BE IN ACCORDANCE WITH THE 2015 INTERNATIONAL BUILDING CODE AS MODIFIED BY THE 2018 CONNECTICUT SUPPLEMENT, INCLUDING THE TIA/EIA-222 REVISION "G" "STRUCTURAL STANDARDS FOR STEEL ANTENNA TOWERS AND SUPPORTING STRUCTURES." 2016 CONNECTICUT FIRE SAFETY CODE, NATIONAL ELECTRICAL CODE AND LOCAL CODES.
2. CONTRACTOR SHALL REVIEW ALL DRAWINGS AND SPECIFICATIONS IN THE CONTRACT DOCUMENT SET. CONTRACTOR SHALL COORDINATE ALL WORK SHOWN IN THE SET OF DRAWINGS. THE CONTRACTOR SHALL PROVIDE A COMPLETE SET OF DRAWINGS TO ALL SUBCONTRACTORS AND ALL RELATED PARTIES. THE SUBCONTRACTORS SHALL EXAMINE ALL THE DRAWINGS AND SPECIFICATIONS FOR THE INFORMATION THAT AFFECTS THEIR WORK.
3. CONTRACTOR SHALL PROVIDE A COMPLETE BUILD-OUT WITH ALL FINISHES, STRUCTURAL, MECHANICAL, AND ELECTRICAL COMPONENTS AND PROVIDE ALL ITEMS AS SHOWN OR INDICATED ON THE DRAWINGS OR IN THE WRITTEN SPECIFICATIONS.
4. CONTRACTOR SHALL FURNISH ALL MATERIAL, LABOR AND EQUIPMENT TO COMPLETE THE WORK AND FURNISH A COMPLETED JOB ALL IN ACCORDANCE WITH LOCAL AND STATE GOVERNING AUTHORITIES AND OTHER AUTHORITIES HAVING LAWFUL JURISDICTION OVER THE WORK.
5. CONTRACTOR SHALL SECURE AND PAY FOR ALL PERMITS AND ALL INSPECTIONS REQUIRED AND SHALL ALSO PAY FEES REQUIRED FOR THE GENERAL CONSTRUCTION, PLUMBING, ELECTRICAL AND HVAC. PERMITS SHALL BE PAID FOR BY THE RESPECTIVE SUBCONTRACTORS.
6. CONTRACTOR SHALL MAINTAIN A CURRENT SET OF DRAWINGS AND SPECIFICATIONS ON SITE AT ALL TIMES AND INSURE DISTRIBUTION OF NEW DRAWINGS TO SUBCONTRACTORS AND OTHER RELEVANT PARTIES AS SOON AS THEY ARE MADE AVAILABLE. ALL OLD DRAWINGS SHALL BE MARKED VOID AND REMOVED FROM THE CONTRACT AREA. THE CONTRACTOR SHALL FURNISH AN 'AS-BUILT' SET OF DRAWINGS TO OWNER UPON COMPLETION OF PROJECT.
7. LOCATION OF EQUIPMENT, AND WORK SUPPLIED BY OTHERS THAT IS DIAGRAMMATICALLY INDICATED ON THE DRAWINGS SHALL BE DETERMINED BY THE CONTRACTOR. THE CONTRACTOR SHALL DETERMINE LOCATIONS AND DIMENSIONS SUBJECT TO STRUCTURAL CONDITIONS AND WORK OF THE SUBCONTRACTORS.
8. THE CONTRACTOR IS SOLELY RESPONSIBLE TO DETERMINE CONSTRUCTION PROCEDURE AND SEQUENCE, AND TO ENSURE THE SAFETY OF THE EXISTING STRUCTURES AND ITS COMPONENT PARTS DURING CONSTRUCTION. THIS INCLUDES THE ADDITION OF WHATEVER SHORING, BRACING, UNDERPINNING, ETC. THAT MAY BE NECESSARY.
9. DRAWINGS INDICATE THE MINIMUM STANDARDS, BUT IF ANY WORK SHOULD BE INDICATED TO BE SUBSTANDARD TO ANY ORDINANCES, LAWS, CODES, RULES, OR REGULATIONS BEARING ON THE WORK, THE CONTRACTOR SHALL INCLUDE IN HIS WORK AND SHALL EXECUTE THE WORK CORRECTLY IN ACCORDANCE WITH SUCH ORDINANCES, LAWS, CODES, RULES OR REGULATIONS WITH NO INCREASE IN COSTS.
10. ALL UTILITY WORK SHALL BE IN ACCORDANCE WITH LOCAL UTILITY COMPANY REQUIREMENTS AND SPECIFICATIONS.
11. ALL EQUIPMENT AND PRODUCTS PURCHASED ARE TO BE REVIEWED BY CONTRACTOR AND ALL APPLICABLE SUBCONTRACTORS FOR ANY CONDITION PER MFR.'S RECOMMENDATIONS. CONTRACTOR TO SUPPLY THESE ITEMS AT NO COST TO OWNER OR CONSTRUCTION MANAGER.
12. ANY AND ALL ERRORS, DISCREPANCIES, AND 'MISSED" ITEMS ARE TO BE BROUGHT TO THE ATTENTION OF THE SPRINT CONSTRUCTION MANAGER DURING THE BIDDING PROCESS BY THE CONTRACTOR. ALL THESE ITEMS ARE TO BE INCLUDED IN THE BID. NO 'EXTRA' WILL BE ALLOWED FOR MISSED ITEMS.
13. CONTRACTOR SHALL BE RESPONSIBLE FOR ALL ON-SITE SAFETY FROM THE TIME THE JOB IS AWARDED UNTIL ALL WORK IS COMPLETE AND ACCEPTED BY THE OWNER.
14. CONTRACTOR TO REVIEW ALL SHOP DRAWINGS AND SUBMIT COPY TO ENGINEER FOR APPROVAL. DRAWINGS MUST BEAR THE CHECKER'S INITIALS BEFORE SUBMITTING TO THE CONSTRUCTION MANAGER FOR REVIEW.
15. THE CONTRACTOR SHALL FIELD VERIFY ALL DIMENSIONS, ELEVATIONS, ANGLES, AND EXISTING CONDITIONS AT THE SITE, PRIOR TO FABRICATION AND/OR INSTALLATION OF ANY WORK IN THE CONTRACT AREA.
16. COORDINATION, LAYOUT, FURNISHING AND INSTALLATION OF CONDUIT AND ALL APPURTENANCES REQUIRED FOR PROPER INSTALLATION OF ELECTRICAL AND TELECOMMUNICATION SERVICE SHALL BE THE SOLE RESPONSIBILITY OF THE CONTRACTOR.
17. ALL DAMAGE CAUSED TO ANY EXISTING STRUCTURE SHALL BE THE SOLE RESPONSIBILITY OF THE CONTRACTOR. THE CONTRACTOR WILL BE HELD LIABLE FOR ALL REPAIRS REQUIRED FOR EXISTING STRUCTURES IF DAMAGED DURING CONSTRUCTION ACTIVITIES.
18. THE CONTRACTOR SHALL CONTACT "CALL BEFORE YOU DIG" AT LEAST 48 HOURS PRIOR TO ANY EXCAVATIONS AT 1-800-922-4455. ALL UTILITIES SHALL BE IDENTIFIED AND CLEARLY MARKED. CONTRACTOR SHALL MAINTAIN AND PROTECT MARKED UTILITIES THROUGHOUT PROJECT COMPLETION.
19. CONTRACTOR SHALL COMPLY WITH OWNERS ENVIRONMENTAL ENGINEER ON ALL METHODS AND PROVISIONS FOR ALL EXCAVATION ACTIVITIES INCLUDING SOIL DISPOSAL. ALL BACKFILL MATERIALS TO BE PROVIDED BY THE CONTRACTOR.

SITE DIRECTIONS

FROM: 5 WAYSIDE ROAD
BURLINGTON, MA 01803

TO: 595 KEENEY STREET
MANCHESTER, CT 06040

1.	START OUT BY GOING TO WAYSIDE ROAD.	0.12 MI.
2.	TURN LEFT ONTO CAMBRIDGE ST/US-3 N/MA	0.50 MI.
3.	MERGE ONTO I-95 S/MA-128 S/YANKEE DIVISION HWY S TOWARD WALTHAM/LOWELL	12.1 MI.
4.	TAKE THE I-90/MASS PIKE EXIT, EXIT 25, TOWARD BOSTON/ALBANY NY.	0.40 MI.
5.	MERGE ONTO I-90 W/MASSACHUSETTS TPKE W TOWARD WORCESTER (PORTIONS TOLL).	44.30 MI.
6.	MERGE ONTO I-84 W/WILBUR CROSS HWY S VIA EXIT 9 TOWARD US-20(PORTIONS TOLL).	37.80 MI.
7.	TAKE EXIT 59 FOR I-384 E/SILVER LN/SPENCER STREET.	1.50 MI.
8.	KEEP LEFT, FOLLOW SIGNS FOR INTERSTATE 384 E.	0.3 MI.
9.	CONTINUE ONTO I-384.	1.50 MI.
10.	TAKE EXIT 2 TOWARD KEENEY ST.	0.30 MI.
11.	TAKE KEENEY ST TO SANTINA DR.	1.60 MI.

VICINITY MAP

SCALE: 1" = 1000'

NORTH

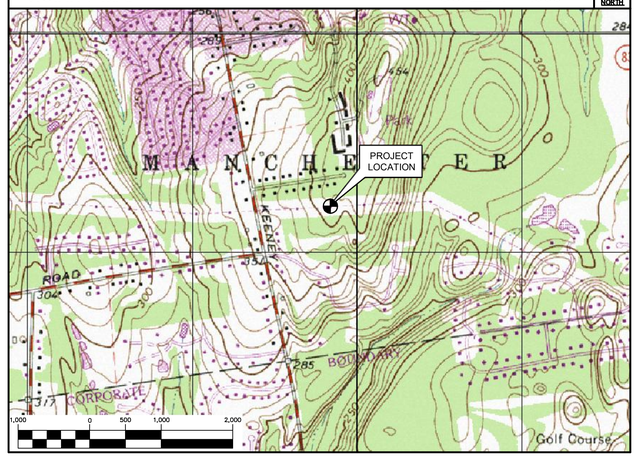

PROJECT SUMMARY

1. THE PROPOSED SCOPE OF WORK CONSISTS OF A MODIFICATION TO THE EXISTING UNMANNED TELECOMMUNICATIONS FACILITY INCLUDING THE FOLLOWING:
   - A. INSTALLATION OF A PROPOSED UNISTRUT EQUIPMENT RACK MOUNTED AT GRADE.
   - B. REMOVE (3) EXISTING PANEL ANTENNAS FROM EXISTING TOWER MOUNT.
   - C. INSTALL (3) PROPOSED 10-PORT PANEL ANTENNAS, (1) PER SECTOR.
   - D. INSTALL (6) PROPOSED DIPLEXERS ON TOWER.
   - E. INSTALL (6) PROPOSED DIPLEXERS ON PROPOSED UNISTRUT RACK.
   - F. INSTALL (3) PROPOSED RRH'S ON PROPOSED UNISTRUT RACK.
   - G. REPLACE EXISTING 9928 EQUIPMENT CABINET WITH 9927.
   - H. REPLACE EXISTING BATTERY CABINET WITH 60EVC2 BBU.

PROJECT INFORMATION

SITE NAME:	EVERSOURCE STRUCT.: 29317
SITE ID:	CT33XC538
SITE ADDRESS:	595 KEENEY STREET MANCHESTER, CT 06040
APPLICANT:	SPRINT 5 WAYSIDE ROAD BURLINGTON, MA 01803
CONTACT PERSON:	MIKE KITHCART (PROJECT MANAGER) (973)626-5792
ENGINEER:	CENTEK ENGINEERING, INC. 63-2 NORTH BRANFORD RD. BRANFORD, CT 06405
PROJECT COORDINATES:	LATITUDE: 41° 44' 35.18"N LONGITUDE: 72° 32' 05.74"W GROUND ELEVATION: ±415' AMSL SITE COORDINATES REFERENCED AND GROUND ELEVATION REFERENCED FROM GOOGLE EARTH.

SHEET INDEX

SHT. NO.	DESCRIPTION	REV.
T-1	TITLE SHEET	0
N-1	DESIGN BASIS AND SITE NOTES	0
C-1	COMPOUND PLANS AND ELEVATION	0
C-2	TYPICAL DETAILS	0
C-3	TYPICAL DETAILS	0
C-3	COLOR CODE AND CPRI DETAILS	0
E-1	COMPOUND GROUDING PLAN AND NOTES	0

REV.	DATE	DRAWN BY	CHK'D BY	DESCRIPTION
0	02/18/19	TJL	CAG	ISSUED FOR CONSTRUCTION

PROFESSIONAL ENGINEER SEAL

STATE OF CONNECTICUT — TIMOTHY J. LYNCH — 29599 — REGISTERED PROFESSIONAL ENGINEER

Sprint

CENTEK engineering
Centered on Solutions℠
(203) 488-0580
(203) 488-8587 Fax
63-2 North Branford Road
Branford, CT 06405
www.CentekEng.com

SPRINT
WIRELESS COMMUNICATIONS FACILITY
EVERSOURCE STRUCT.: 29317
SITE ID: CT33XC538
595 KEENEY STREET
MANCHESTER, CT 06040

DATE: 03/02/18
SCALE: AS NOTED
JOB NO. 17159.14

TITLE SHEET

T-1

Sheet No. 1 of 7

DESIGN BASIS:

GOVERNING CODE: 2015 INTERNATIONAL BUILDING (IBC) AS MODIFIED BY THE 2018 CT STATE BUILDING CODE AND AMENDMENTS.

1. DESIGN CRITERIA:

- WIND LOAD (UTILITY TOWER): 110 MPH (3 SECOND GUSTS) PER NESC C2-2012 SECTION 25 RULE 250C
- SEISMIC LOAD (DOES NOT CONTROL): PER ASCE 7-10 MINIMUM DESIGN LOADS FOR BUILDING AND OTHER STRUCTURES.

GENERAL NOTES:

1. ALL CONSTRUCTION SHALL BE IN COMPLIANCE WITH THE GOVERNING BUILDING CODE.
2. DRAWINGS INDICATE THE MINIMUM STANDARDS, BUT IF ANY WORK SHOULD BE INDICATED TO BE SUBSTANDARD TO ANY ORDINANCES, LAWS, CODES, RULES, OR REGULATIONS BEARING ON THE WORK, THE CONTRACTOR SHALL INCLUDE IN HIS WORK AND SHALL EXECUTE THE WORK CORRECTLY IN ACCORDANCE WITH SUCH ORDINANCES, LAWS, CODES, RULES OR REGULATIONS WITH NO INCREASE IN COSTS.
3. BEFORE BEGINNING THE WORK, THE CONTRACTOR IS RESPONSIBLE FOR MAKING SUCH INVESTIGATIONS CONCERNING PHYSICAL CONDITIONS (SURFACE AND SUBSURFACE) AT OR CONTIGUOUS TO THE SITE WHICH MAY AFFECT PERFORMANCE AND COST OF THE WORK.
4. DIMENSIONS AND DETAILS SHALL BE CHECKED AGAINST EXISTING FIELD CONDITIONS.
5. THE CONTRACTOR SHALL VERIFY AND COORDINATE THE SIZE AND LOCATION OF ALL OPENINGS, SLEEVES AND ANCHOR BOLTS AS REQUIRED BY ALL TRADES.
6. ALL DIMENSIONS, ELEVATIONS, AND OTHER REFERENCES TO EXISTING STRUCTURES, SURFACE, AND SUBSURFACE CONDITIONS ARE APPROXIMATE. NO GUARANTEE IS MADE FOR THE ACCURACY OR COMPLETENESS OF THE INFORMATION SHOWN. THE CONTRACTOR SHALL VERIFY AND COORDINATE ALL DIMENSIONS, ELEVATIONS, ANGLES WITH EXISTING CONDITIONS AND WITH ARCHITECTURAL AND SITE DRAWINGS BEFORE PROCEEDING WITH ANY WORK.
7. AS THE WORK PROGRESSES, THE CONTRACTOR SHALL NOTIFY THE OWNER OF ANY CONDITIONS WHICH ARE IN CONFLICT OR OTHERWISE NOT CONSISTENT WITH THE CONSTRUCTION DOCUMENTS AND SHALL NOT PROCEED WITH SUCH WORK UNTIL THE CONFLICT IS SATISFACTORILY RESOLVED.
8. THE CONTRACTOR SHALL COMPLY WITH ALL APPLICABLE SAFETY CODES AND REGULATIONS DURING ALL PHASES OF CONSTRUCTION. THE CONTRACTOR IS SOLELY RESPONSIBLE FOR PROVIDING AND MAINTAINING ADEQUATE SHORING, BRACING, AND BARRICADES AS MAY BE REQUIRED FOR THE PROTECTION OF EXISTING PROPERTY, CONSTRUCTION WORKERS, AND FOR PUBLIC SAFETY.
9. THE CONTRACTOR IS SOLELY RESPONSIBLE TO DETERMINE CONSTRUCTION PROCEDURE AND SEQUENCE, AND TO ENSURE THE SAFETY OF THE EXISTING STRUCTURES AND ITS COMPONENT PARTS DURING CONSTRUCTION. THIS INCLUDES THE ADDITION OF WHATEVER SHORING, BRACING, UNDERPINNING, ETC. THAT MAY BE NECESSARY. MAINTAIN EXISTING SITE OPERATIONS, COORDINATE WORK WITH NORTHEAST UTILITIES
10. THE STRUCTURE IS DESIGNED TO BE SELF-SUPPORTING AND STABLE AFTER FOUNDATION REMEDIATION WORK IS COMPLETE. IT IS THE CONTRACTOR'S SOLE RESPONSIBILITY TO DETERMINE ERECTION PROCEDURE AND SEQUENCE AND TO ENSURE THE SAFETY OF THE STRUCTURE AND ITS COMPONENT PARTS DURING ERECTION. THIS INCLUDES THE ADDITION OF WHATEVER SHORING, TEMPORARY BRACING, GUYS OR TIEDOWNS, WHICH MIGHT BE NECESSARY.
11. ALL DAMAGE CAUSED TO ANY EXISTING STRUCTURE SHALL BE THE SOLE RESPONSIBILITY OF THE CONTRACTOR. THE CONTRACTOR WILL BE HELD LIABLE FOR ALL REPAIRS REQUIRED FOR EXISTING STRUCTURES IF DAMAGED DURING CONSTRUCTION ACTIVITIES.
12. SHOP DRAWINGS, CONCRETE MIX DESIGNS, TEST REPORTS, AND OTHER SUBMITTALS PERTAINING TO STRUCTURAL WORK SHALL BE FORWARDED TO THE OWNER FOR REVIEW BEFORE FABRICATION AND/OR INSTALLATION IS MADE. SHOP DRAWINGS SHALL INCLUDE ERECTION DRAWINGS AND COMPLETE DETAILS OF CONNECTIONS AS WELL AS MANUFACTURER'S SPECIFICATION DATA WHERE APPROPRIATE. SHOP DRAWINGS SHALL BE CHECKED BY THE CONTRACTOR AND BEAR THE CHECKER'S INITIALS BEFORE BEING SUBMITTED FOR REVIEW.
13. NO DRILLING WELDING OR TAPING ON EVERSOURCE OWNED EQUIPMENT.
14. REFER TO DRAWING T1 FOR ADDITIONAL NOTES AND REQUIREMENTS.

STRUCTURAL STEEL

1. ALL STRUCTURAL STEEL IS DESIGNED BY ALLOWABLE STRESS DESIGN (ASD)

   A. STRUCTURAL STEEL (W SHAPES)---ASTM A992 (FY = 50 KSI)
   B. STRUCTURAL STEEL (OTHER SHAPES)---ASTM A36 (FY = 36 KSI)
   C. STRUCTURAL HSS (RECTANGULAR SHAPES)---ASTM A500 GRADE B, (FY = 46 KSI)
   D. STRUCTURAL HSS (ROUND SHAPES)---ASTM A500 GRADE B, (FY = 42 KSI)
   E. PIPE---ASTM A53 (FY = 35 KSI)
   F. CONNECTION BOLTS---ASTM A325-N
   G. U-BOLTS---ASTM A36
   H. ANCHOR RODS---ASTM F 1554
   I. WELDING ELECTRODE---ASTM E 70XX

2. CONTRACTOR TO REVIEW ALL SHOP DRAWINGS AND SUBMIT COPY TO ENGINEER FOR APPROVAL. DRAWINGS MUST BEAR THE CHECKER'S INITIALS BEFORE SUBMITTING TO THE ENGINEER FOR REVIEW. SHOP DRAWINGS SHALL INCLUDE THE FOLLOWING: SECTION PROFILES, SIZES, CONNECTION ATTACHMENTS, REINFORCING, ANCHORAGE, SIZE AND TYPE OF FASTENERS AND ACCESSORIES. INCLUDE ERECTION DRAWINGS, ELEVATIONS AND DETAILS.
3. STRUCTURAL STEEL SHALL BE DETAILED, FABRICATED AND ERECTED IN ACCORDANCE WITH THE LATEST PROVISIONS OF AISC MANUAL OF STEEL CONSTRUCTION.
4. PROVIDE ALL PLATES, CLIP ANGLES, CLOSURE PIECES, STRAP ANCHORS, MISCELLANEOUS PIECES AND HOLES REQUIRED TO COMPLETE THE STRUCTURE.
5. FIT AND SHOP ASSEMBLE FABRICATIONS IN THE LARGEST PRACTICAL SECTIONS FOR DELIVERY TO SITE.
6. INSTALL FABRICATIONS PLUMB AND LEVEL, ACCURATELY FITTED, AND FREE FROM DISTORTIONS OR DEFECTS.
7. AFTER ERECTION OF STRUCTURES, TOUCHUP ALL WELDS, ABRASIONS AND NON-GALVANIZED SURFACES WITH A 95% ORGANIC ZINC RICH PAINT IN ACCORDANCE WITH ASTM 780.
8. ALL STEEL MATERIAL (EXPOSED TO WEATHER) SHALL BE GALVANIZED AFTER FABRICATION IN ACCORDANCE WITH ASTM A123 "ZINC (HOT DIPPED GALVANIZED) COATINGS" ON IRONS AND STEEL PRODUCTS.
9. ALL BOLTS, ANCHORS AND MISCELLANEOUS HARDWARE SHALL BE GALVANIZED IN ACCORDANCE WITH ASTM A153 "ZINC COATING (HOT-DIP) ON IRON AND STEEL HARDWARE".
10. THE ENGINEER SHALL BE NOTIFIED OF ANY INCORRECTLY FABRICATED, DAMAGED OR OTHERWISE MISFITTING OR NON CONFORMING MATERIALS OR CONDITIONS TO REMEDIAL OR CORRECTIVE ACTION. ANY SUCH ACTION SHALL REQUIRE ENGINEER REVIEW.
11. CONNECTION ANGLES SHALL HAVE A MINIMUM THICKNESS OF 1/4 INCHES.
12. STRUCTURAL CONNECTION BOLTS SHALL CONFORM TO ASTM A325. ALL BOLTS SHALL BE 3/4" DIAMETER MINIMUM AND SHALL HAVE A MINIMUM OF TWO BOLTS, UNLESS OTHERWISE ON THE DRAWINGS.
13. LOCK WASHER ARE NOT PERMITTED FOR A325 STEEL ASSEMBLIES.
14. SHOP CONNECTIONS SHALL BE WELDED OR HIGH STRENGTH BOLTED.
15. MILL BEARING ENDS OF COLUMNS, STIFFENERS, AND OTHER BEARING SURFACES TO TRANSFER LOAD OVER ENTIRE CROSS SECTION.
16. FABRICATE BEAMS WITH MILL CAMBER UP.
17. LEVEL AND PLUMB INDIVIDUAL MEMBERS OF THE STRUCTURE TO AN ACCURACY OF 1:500, BUT NOT TO EXCEED 1/4" IN THE FULL HEIGHT OF THE COLUMN.
18. COMMENCEMENT OF STRUCTURAL STEEL WORK WITHOUT NOTIFYING THE ENGINEER OF ANY DISCREPANCIES WILL BE CONSIDERED ACCEPTANCE OF PRECEDING WORK.
19. INSPECTION AND TESTING OF ALL WELDING AND HIGH STRENGTH BOLTING SHALL BE PERFORMED BY AN INDEPENDENT TESTING LABORATORY.
20. FOUR COPIES OF ALL INSPECTION TEST REPORTS SHALL BE SUBMITTED TO THE ENGINEER WITHIN TEN (10) WORKING DAYS OF THE DATE OF INSPECTION.

REV.	DATE	DRAWN BY	CHK'D BY	DESCRIPTION
0	02/16/19	TJL	CAG	ISSUED FOR CONSTRUCTION

PROFESSIONAL ENGINEER SEAL

STATE OF CONNECTICUT · CRAIG A. GAUDIOSO · 25982 · REGISTERED PROFESSIONAL ENGINEER

Sprint

CENTEK engineering
Centered on Solutions℠
(203) 488-0580
(203) 488-8587 Fax
63-2 North Branford Road
Branford, CT 06405
www.CentekEng.com

SPRINT

WIRELESS COMMUNICATIONS FACILITY

EVERSOURCE STRUCT.: 29317
SITE ID: CT33XC538
595 KEENEY STREET
MANCHESTER, CT 06040

DATE:	03/02/18
SCALE:	AS NOTED
JOB NO.	17159.14

DESIGN BASIS AND SITE NOTES

N-1

Sheet No. 2 of 7

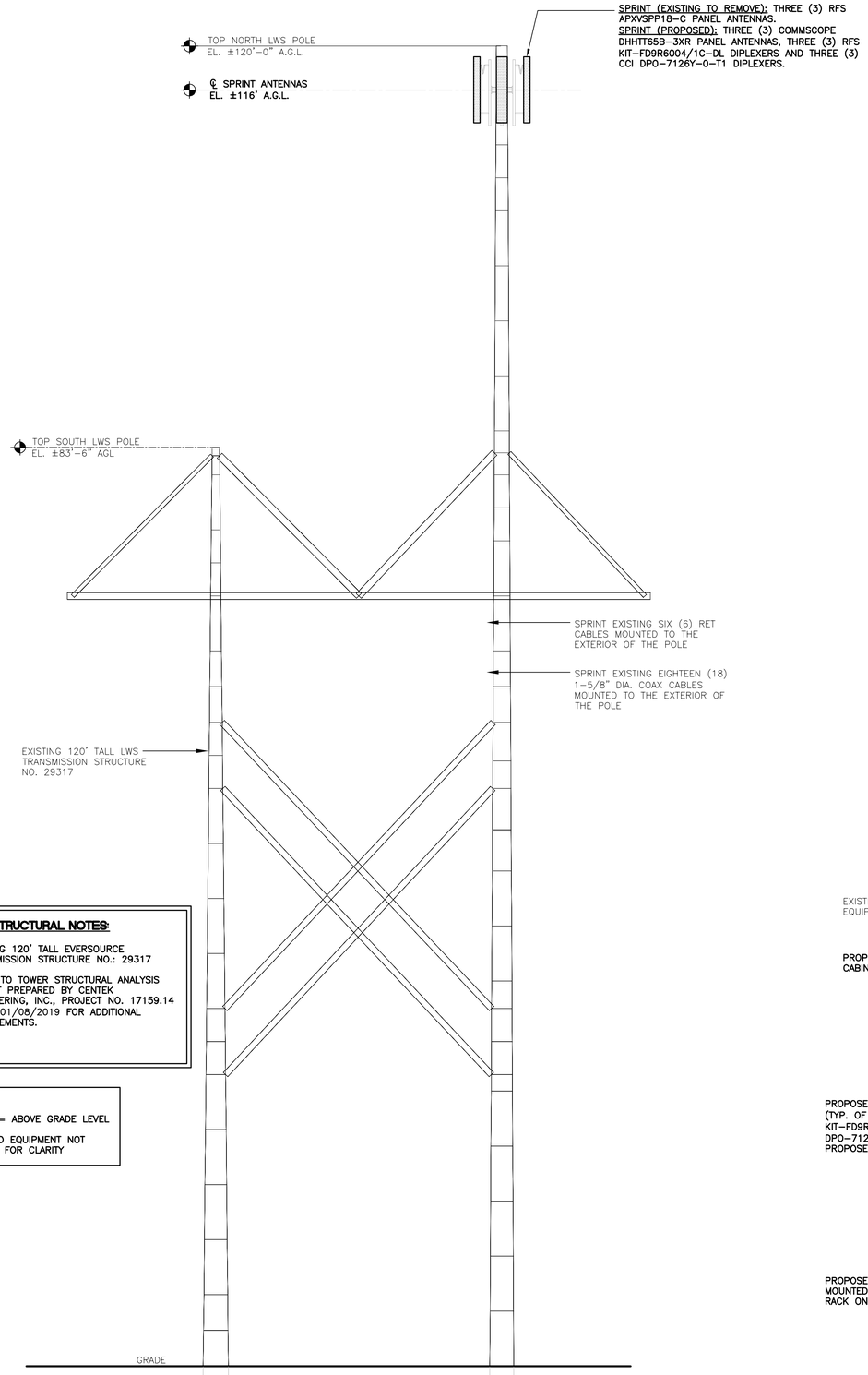

TOWER STRUCTURAL NOTES:

1. EXISTING 120' TALL EVERSOURCE TRANSMISSION STRUCTURE NO.: 29317
2. REFER TO TOWER STRUCTURAL ANALYSIS REPORT PREPARED BY CENTEK ENGINEERING, INC., PROJECT NO. 17159.14 DATED 01/08/2019 FOR ADDITIONAL REQUIREMENTS.

NOTES:

1. A.G.L. = ABOVE GRADE LEVEL
2. GROUND EQUIPMENT NOT SHOWN FOR CLARITY

1 / C-1 **TOWER ELEVATION**
SCALE: 1" = 7'-0"

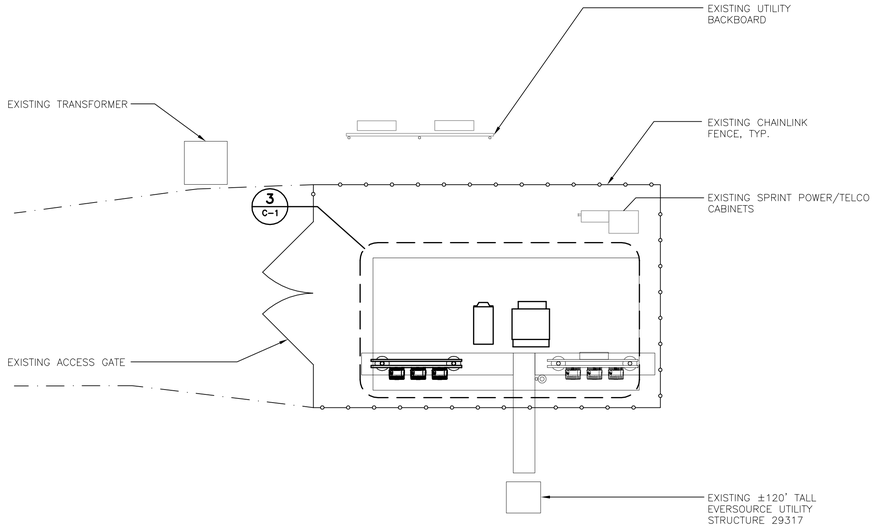

2 / C-1 **COMPOUND PLAN**
SCALE: 1" = 5'-0"

TRUE NORTH

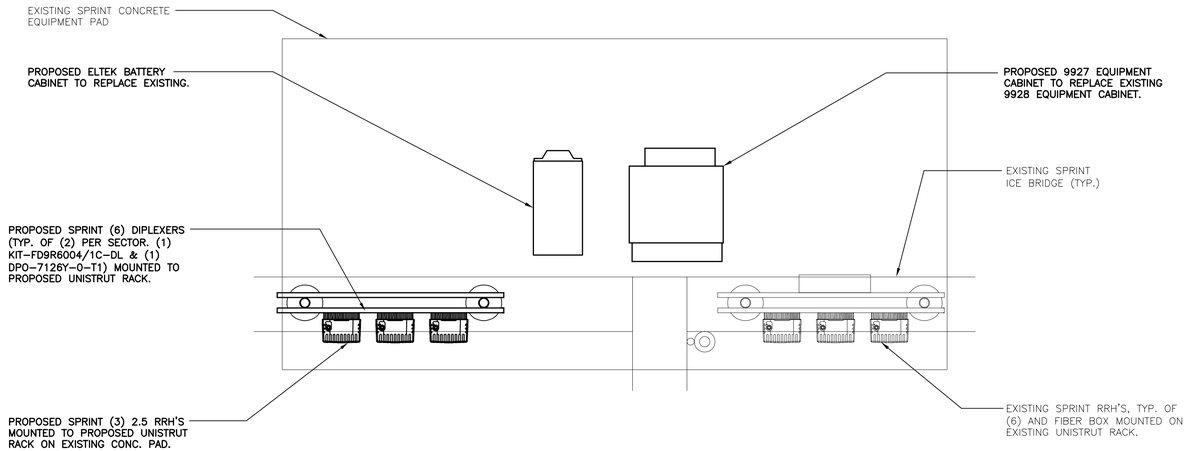

3 / C-1 **EQUIPMENT PLAN**
SCALE: 1/2" = 1'-0"

TRUE NORTH

GRAPHIC SCALE
4 0 2 4 8 16
(IN FEET)
1 inch = 4 ft.

REV.	DATE	DRAWN BY	CHK'D BY	DESCRIPTION
0	02/18/19	TJL	CAG	ISSUED FOR CONSTRUCTION

PROFESSIONAL ENGINEER SEAL

STATE OF CONNECTICUT · TIMOTHY J. LYNN · LICENSED PROFESSIONAL ENGINEER

Sprint

CENTEK engineering
Centered on Solutions™
(203) 488-0580
(203) 488-8587 Fax
63-2 North Branford Road
Branford, CT 06405
www.CentekEng.com

SPRINT
WIRELESS COMMUNICATIONS FACILITY
EVERSOURCE STRUCT.: 29317
SITE ID: CT33XC538
595 KEENEY STREET
MANCHESTER, CT 06040

DATE:	03/02/18
SCALE:	AS NOTED
JOB NO.	17159.14

COMPOUND PLANS AND ELEVATION

C-1

Sheet No. 3 of 7

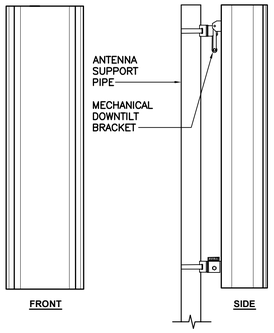

BOTTOM

ALPHA/BETA/GAMMA ANTENNA		
EQUIPMENT	DIMENSIONS	WEIGHT
MAKE: COMMSCOPE MODEL: DHHTT65B-3XR	71.9"L x 13.8"W x 8.2"D	58 LBS.

1 / C-2 PROPOSED ANTENNA DETAIL
SCALE: 1/2" = 1'-0"

TD-RRH8x20-25

RRU (REMOTE RADIO UNIT)			
EQUIPMENT	DIMENSIONS	WEIGHT	CLEARANCES
MAKE: ALCATEL-LUCENT MODEL: TD-RRH8x20-25	25.3"L x 17.5"W x 5.7"D	66 LBS.	ABOVE: 16" MIN. BELOW: 12" MIN. FRONT: 36" MIN.
NOTES: 1. CONTRACTOR TO COORDINATE FINAL EQUIPMENT MODEL SELECTION WITH SPRINT CONSTRUCTION MANAGER PRIOR TO ORDERING.			

2 / C-2 REMOTE RADIO HEAD DETAIL
SCALE: NOT TO SCALE

DOP-7126Y-0-T1

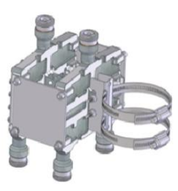

KIT-FD9R6004/1C-DL

DIPLEXERS		
EQUIPMENT	DIMENSIONS	WEIGHT
MAKE: RFS MODEL: KIT-FD9R6004/1C-DL	5.8"L x 6.5"W x 4.6"D	6.4 LBS.
MAKE: CCI MODEL: DPO-7126Y-0-T1	6.26"L x 7.42"W x 4.07"D	7.3 LBS.
NOTES: 1. CONTRACTOR TO COORDINATE FINAL EQUIPMENT MODEL SELECTION WITH SPRINT CONSTRUCTION MANAGER PRIOR TO ORDERING.		

3 / C-2 DIPLEXER DETAIL
SCALE: NOT TO SCALE

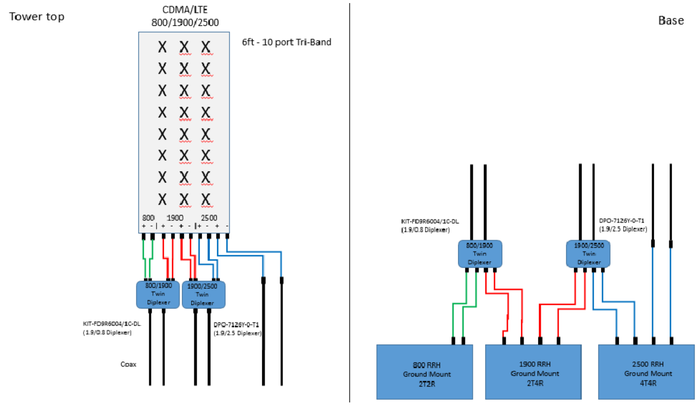

4 / C-2 PLUMBING DIAGRAM
NOT TO SCALE

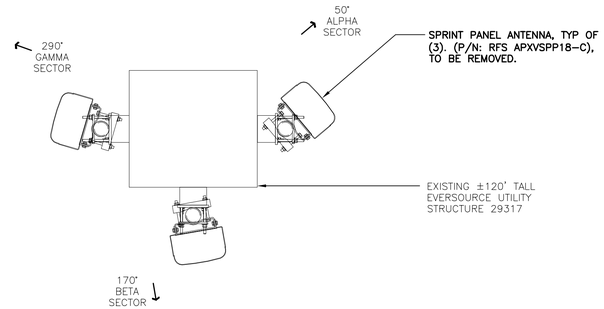

5 / C-2 EXISTING ANTENNA PLAN
SCALE: = 3/4" = 1'

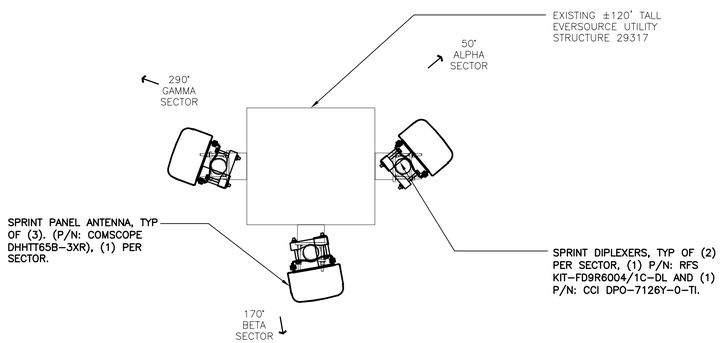

6 / C-2 PROPOSED ANTENNA PLAN
SCALE: = 3/4" = 1'

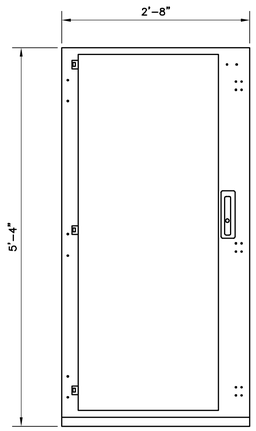

FRONT

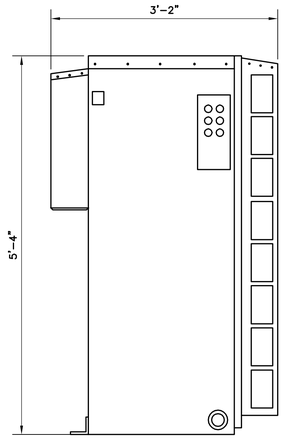

SIDE

EQUIPMENT CABINET		
EQUIPMENT	DIMENSIONS	WEIGHT
MAKE: ALCATEL-LUCENT MODEL: 9927	63.5"H x 31.5"W x 38.1"D	XX LBS.
NOTES: 1. CONTRACTOR TO COORDINATE FINAL EQUIPMENT MODEL SELECTION WITH SPRINT CONSTRUCTION MANAGER PRIOR TO ORDERING.		

7 / C-2 EQUIPMENT CABINET DETAIL
SCALE: NOT TO SCALE

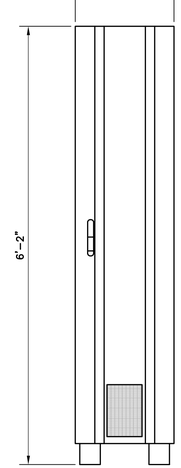

FRONT

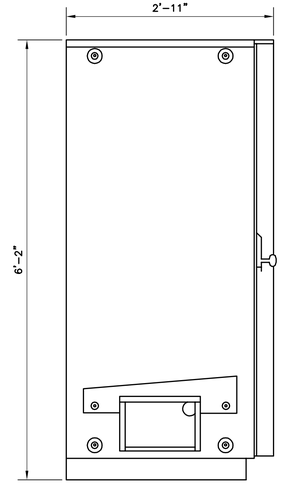

SIDE

BATTERY CABINET		
EQUIPMENT	DIMENSIONS	WEIGHT
MAKE: ELTEK MODEL: ESOF020-ECV02	73.8"H x 16.67"W x 34.7"D	330 LBS.
NOTES: 1. CONTRACTOR TO COORDINATE FINAL EQUIPMENT MODEL SELECTION WITH SPRINT CONSTRUCTION MANAGER PRIOR TO ORDERING.		

8 / C-2 BATTERY CABINET DETAIL
SCALE: NOT TO SCALE

REV.	DATE	DRAWN BY	CHK'D BY	DESCRIPTION
0	02/16/19	TJL	CAG	ISSUED FOR CONSTRUCTION

PROFESSIONAL ENGINEER SEAL

STATE OF CONNECTICUT — TIMOTHY J. LEVESQUE — 29317 — LICENSED PROFESSIONAL ENGINEER

Sprint

CENTEK engineering
Centered on Solutions℠
(203) 488-0580
(203) 488-8587 Fax
63-2 North Branford Road
Branford, CT 06405
www.CentekEng.com

SPRINT
WIRELESS COMMUNICATIONS FACILITY
EVERSOURCE STRUCT.: 29317
SITE ID: CT33XC538
595 KEENEY STREET
MANCHESTER, CT 06040

DATE:	03/02/18
SCALE:	AS NOTED
JOB NO.	17159.14

TYPICAL DETAILS

C-2

Sheet No. 4 of 7

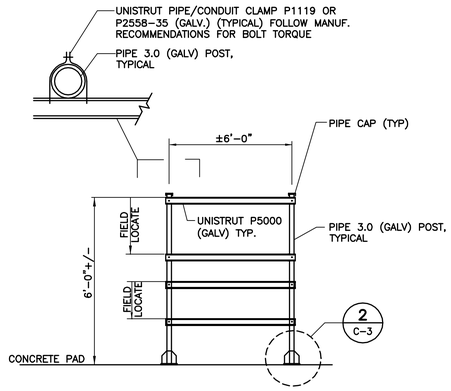

1 C-3 **PROPOSED EQUIPMENT MOUNTING FRAME DETAIL**
SCALE: NOT TO SCALE

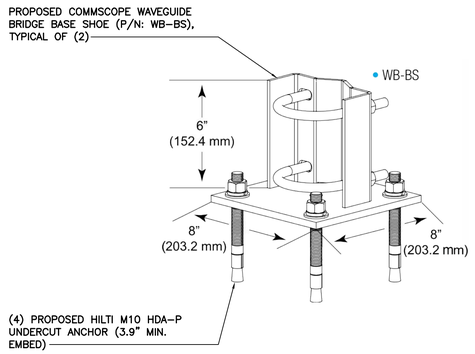

2 C-3 **EQUIPMENT FRAME POST ATTACHMENT DETAIL**
SCALE: NOT TO SCALE

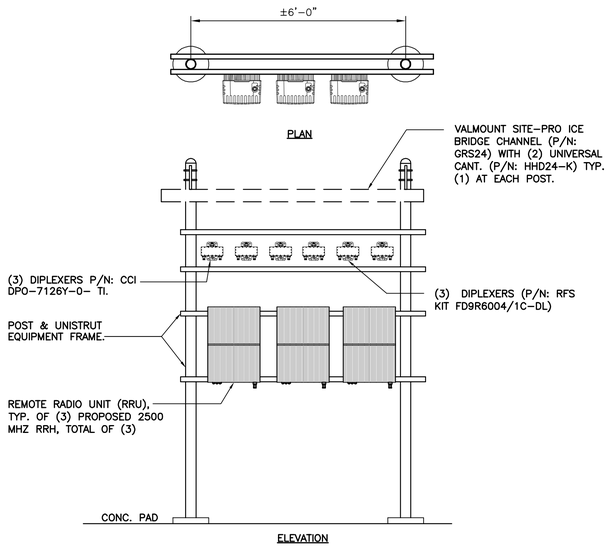

3 C-3 **RRU MOUNTING CONFIG.**
SCALE: 1/2" = 1'- 0"

REV.	DATE	DRAWN BY	CHK'D BY	DESCRIPTION
0	02/18/19	TJL	CAG	ISSUED FOR CONSTRUCTION

PROFESSIONAL ENGINEER SEAL

STATE OF CONNECTICUT · TIMOTHY J. LYNN · No. 25538 · LICENSED PROFESSIONAL ENGINEER

Sprint

CENTEK engineering
Centered on Solutions™
(203) 488-0580
(203) 488-8587 Fax
63-2 North Branford Road
Branford, CT 06405
www.CentekEng.com

SPRINT
WIRELESS COMMUNICATIONS FACILITY
EVERSOURCE STRUCT.: 29317
SITE ID: CT33XC538
595 KEENEY STREET
MANCHESTER, CT 06040

DATE: 03/02/18
SCALE: AS NOTED
JOB NO. 17159.14

TYPICAL DETAILS

C-3

Sheet No. 5 of 7

NV CABLES			
BAND	INDICATOR	PORT	COLOR
800-1	YEL GRN	NV-1	GRN
1900-1	YEL RED	NV-2	BLU
1900-2	YEL BRN	NV-3	BRN
1900-3	YEL BLU	NV-4	WHT
1900-4	YEL SLT	NV-5	RED
800-2	YEL ORG	NV-6	SLT
SPARE	YEL WHT	NV-7	PPL
2500	YEL PPL	NV-8	ORG

HYBRID	
HYBRID	COLOR
1	GRN
2	BLU
3	BRN
4	WHT
5	RED
6	SLT
7	PPL
8	ORG

2.5 Band	
2500 Radio 1	COLOR
YEL WHT	GRN
YEL WHT	BLU
YEL WHT	BRN
YEL WHT	WHT
YEL WHT	RED
YEL WHT	SLT
YEL WHT	PPL
YEL WHT	ORG

Figure 1: Antenna Orientation

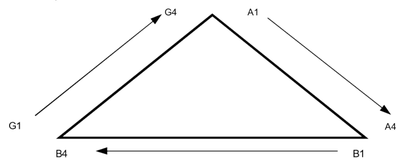

NOTES

1. All cables shall be marked at the top and bottom with 2" colored tape, stencil tag colored tape, or colored heat shrink tubing
2. Colored tape may be obtained from Graybar Electronic. UV stabilized tape or heat shrink are preferred.
3. The first ring shall be closest to the end of the cable, and there shall be a 1" space between each ring.
4. The cable color code shall be applied in accordance to Table 19-1.
   A. Table 19-1 only shows 3 sectors, but additional sectors are easily supported by adding the appropriate number of colored rings to the cable color code.
5. After the cable color code is applied, the frequency color code, Table 19-2, must be applied for the specific frequency band in use on a
   A.2" gap shall separate the cable color code from the frequency color code.
   B. The 2" color rings for the frequency code shall be placed next to each other with no spaces.
6. Wrap 2" colored tape a minimum of 3 times around the coax, and keep the tape in the same area as much as possible. This will allow remova
7. Examples of the cable and frequency color codes are shown in Figure 19-1 and Figure 19-2.

FIGURE 19.1 CABLE COLOR CODE

Sector	Cable	First Ring	Second Ring	Third Ring
1 Alpha	1	Green	No Tape	No Tape
1	2	Blue	No Tape	No Tape
1	3	Brown	No Tape	No Tape
1	4	White	No Tape	No Tape
1	5	Red	No Tape	No Tape
1	6	Grey	No Tape	No Tape
1	7	Purple	No Tape	No Tape
1	8	Orange	No Tape	No Tape
2 Beta	1	Green	Green	No Tape
2	2	Blue	Blue	No Tape
2	3	Brown	Brown	No Tape
2	4	White	White	No Tape
2	5	Red	Red	No Tape
2	6	Grey	Grey	No Tape
2	7	Purple	Purple	No Tape
2	8	Orange	Orange	No Tape
3 Gamma	1	Green	Green	Green
3	2	Blue	Blue	Blue
3	3	Brown	Brown	Brown
3	4	White	White	White
3	5	Red	Red	Red
3	6	Grey	Grey	Grey
3	7	Purple	Purple	Purple
3	8	Orange	Orange	Orange

FIGURE 19.2 COLOR CODE

FREQUENC	INDICATOR	ID
800-1	YEL	GRN
1900-1	YEL	RED
1900-2	YEL	BRN
1900-3	YEL	BLU
1900-4	YEL	SLT
800-1	YEL	ORG
RESERVED	YEL	WHT
RESERVED	YEL	PPL

FREQUE	INDICATOR		ID
2500 -1	YEL	WHT	GRN
2500 -2	YEL	WHT	RED
2500 -3	YEL	WHT	BRN
2500 -4	YEL	WHT	BLU
2500 -5	YEL	WHT	SLT
2500 -6	YEL	WHT	ORG
2500 -7	YEL	WHT	WHT
2500 -8	YEL	WHT	PPL

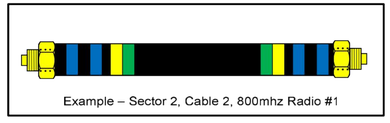
Example – Sector 2, Cable 2, 800mhz Radio #1

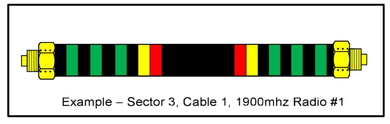
Example – Sector 3, Cable 1, 1900mhz Radio #1

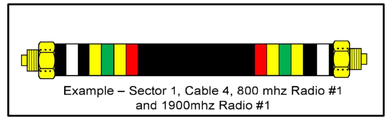
Example – Sector 1, Cable 4, 800 mhz Radio #1 and 1900mhz Radio #1

1 C-4 **COLOR CODE DIAGRAM**
NOT TO SCALE

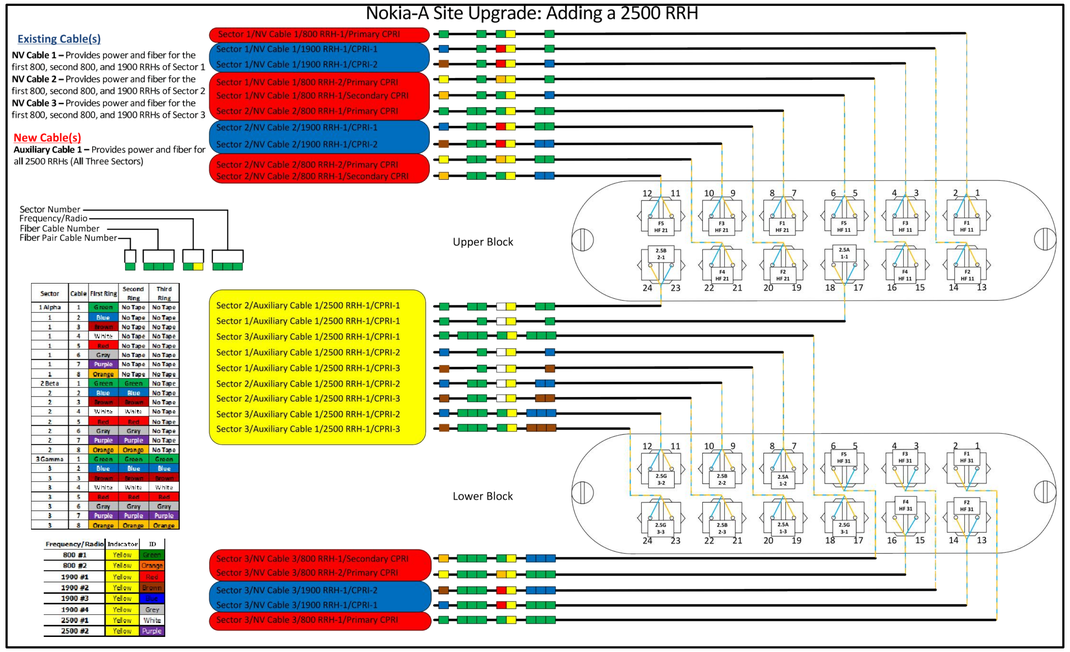

Sector	Cable	First Ring	Second Ring	Third Ring
1 Alpha	1	Green	No Tape	No Tape
1	2	Blue	No Tape	No Tape
1	3	Brown	No Tape	No Tape
1	4	White	No Tape	No Tape
1	5	Red	No Tape	No Tape
1	6	Grey	No Tape	No Tape
1	7	Purple	No Tape	No Tape
1	8	Orange	No Tape	No Tape
2 Beta	1	Green	Green	No Tape
2	2	Blue	Blue	No Tape
2	3	Brown	Brown	No Tape
2	4	White	White	No Tape
2	5	Red	Red	No Tape
2	6	Grey	Grey	No Tape
2	7	Purple	Purple	No Tape
2	8	Orange	Orange	No Tape
3 Gamma	1	Green	Green	Green
3	2	Blue	Blue	Blue
3	3	Brown	Brown	Brown
3	4	White	White	White
3	5	Red	Red	Red
3	6	Grey	Grey	Grey
3	7	Purple	Purple	Purple
3	8	Orange	Orange	Orange

Frequency/Radio	Indicator	ID
800 #1	Yellow	Green
800 #2	Yellow	Orange
1900 #1	Yellow	Red
1900 #2	Yellow	Brown
1900 #3	Yellow	Blue
1900 #4	Yellow	Grey
2500 #1	Yellow	White
2500 #2	Yellow	Purple

2 C-4 **CPRI DIAGRAM**
NOT TO SCALE

REV.	DATE	DRAWN BY	CHK'D BY	DESCRIPTION
0	02/16/19	TJL	CAG	ISSUED FOR CONSTRUCTION

PROFESSIONAL ENGINEER SEAL

STATE OF CONNECTICUT — TIMOTHY J. LYNCH — 29317 — PROFESSIONAL ENGINEER

Sprint

CENTEK engineering
Centered on Solutions℠
(203) 488-0580
(203) 488-8587 Fax
63-2 North Branford Road
Branford, CT 06405
www.CentekEng.com

SPRINT
WIRELESS COMMUNICATIONS FACILITY
EVERSOURCE STRUCT.: 29317
SITE ID: CT33XC538
595 KEENEY STREET
MANCHESTER, CT 06040

DATE: 03/02/18
SCALE: AS NOTED
JOB NO. 17159.14

COLOR CODE AND CPRI DETAILS

C-4

Sheet No. 6 of 7

EACH RRH CABINET SHALL BE GROUNDED IN THE FOLLOWING MANNER:

1. AT TOP OF THE CABINET
2. AT RIGHT SIDE OF THE CABINET.

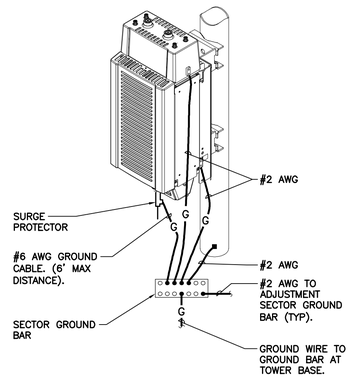

2 / E-2 **RRH POLE MOUNT GROUNDING**
NOT TO SCALE

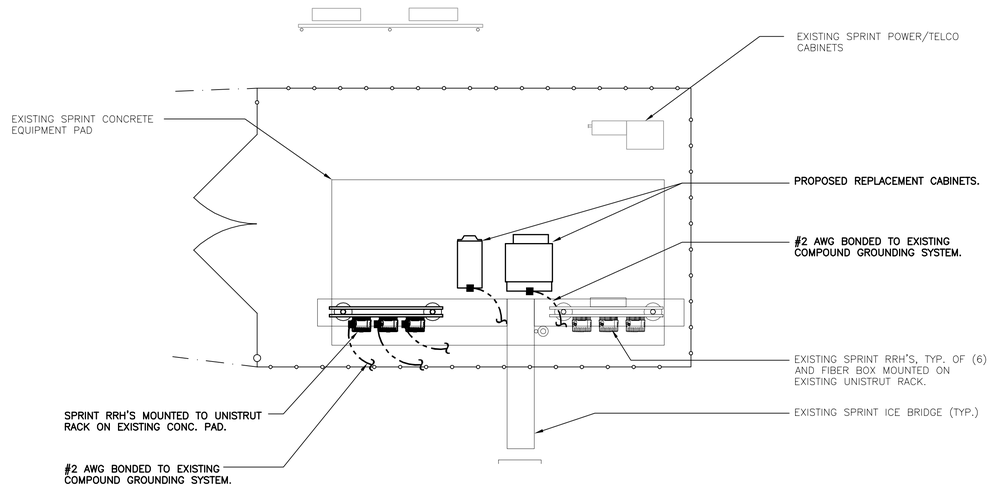

1 / E-1 **EQUIPMENT PLAN**
SCALE: 1 = 4'-0"

TRUE NORTH

GRAPHIC SCALE
4 0 2 4 8 16
(IN FEET)
1 inch = 4 ft.

CELLULAR GROUNDING NOTES

OBJECTIVE

PROVIDE A CELLULAR GROUNDING SYSTEM WITH MAXIMUM ALTERNATING CURRENT RESISTANCE OF 5 OHMS BETWEEN ANY POINT ON THE GROUNDING SYSTEM AND REFERENCE GROUND. PROVIDE EXTERIOR GROUNDING SCHEME WITH OWNER'S ENGINEER APPROVAL AS REQUIRED TO ACHIEVE DESIRED MAXIMUM AC RESISTANCE TO GROUND.

TESTING

CONTRACTOR TO PROVIDE AN INDEPENDENT TESTING CONTRACTOR TO DETERMINE THE GROUNDING SYSTEM RESISTANCE BY USE OF THE THREE POINT TEST AND AN AEMC MODEL 4500, OR APPROVED EQUAL. TEST TO BE PERFORMED PRIOR TO CONNECTION OF POWER SUPPLY TO THE CELL SITE AND CONNECTION OF THE GROUNDING SYSTEM TO THE WATER MAIN OR AC SUPPLY AS APPLICABLE. IF 5 OHM LIMIT IS EXCEEDED, CONTACT ENGINEER FOR ADDITIONAL INSTRUCTIONS TO ACHIEVE 5 OHMS OR LESS.

CONDUCTOR USED FOR CELLULAR GROUNDING SYSTEM

EGR – #2 AWG ANNEALED SOLID TINNED BARE COPPER
IGR – #2 AWG ANNEALED STRANDED (7 STRAND) 'THW' GREEN COLORED INSULATION
INTER–BUS EXTENSION (FROM IGR TO EGR) – SEE DETAILS
EXTERNAL BOND CONNECTIONS TO EGR – #2 ANNEALED SOLID TINNED BARE COPPER
INTERIOR BOND CONNECTIONS TO IGR – #6 ANNEALED STRANDED (7 STRAND) 'THW' GREEN COLORED INSULATION

MINIMUM BENDING RADIUS

IGR #2 : 1'–0" NOMINAL AND 8" MINIMUM
EGR #2 : 2'–0" NOMINAL AND 8" MINIMUM
CELLULAR GROUNDING CONDUCTOR SHALL BE AS STRAIGHT AS POSSIBLE WITH MINIMUM 6" BENDING RADIUS.

FASTENER FOR CELLULAR GROUNDING CONDUCTOR

USE NON–METALLIC FASTENER AND STANDOFF 'CLIC' (AVAIL. FROM NEFCO 800–969–0285) TO SURFACE SUPPORT CONDUCTOR 3" AWAY FROM SURFACES.

SPACING OF FASTENERS: 2'–0" O.C. OUTSIDE BUILDING
3'–0" O.C. INSIDE BUILDING

GROUNDING ELECTRODE

GROUNDING ELECTRODE SHALL BE 5/8" DIA. x 10'–0" l. COPPER CLAD STEEL ROD. ADJUST LOCATION OF GROUNDING ELECTRODE IF SOIL CONDITION IS NOT CONDUCTIVE (GRAVEL, SANDY SOIL, ROCKS). SPACE GROUNDING ELECTRODES 20'–0" APART (SPACING MAY BE REDUCED WHERE REQUIRED TO ACCOMMODATE FIELD CONDITIONS BUT SHALL NOT BE LESS THAN 10'–0"). ELECTRODES SHALL BE DRIVEN ONLY WITH PROPER DRIVER SLEEVE TO PREVENT MUSHROOMING TOP OF ROD. WHEN ROCK BOTTOM IS ENCOUNTERED, THE ELECTRODE SHALL BE DRIVEN AT AN OBLIQUE ANGLE NOT TO EXCEED 45° FROM THE VERTICAL AWAY FROM STRUCTURES. TOP OF GROUNDING ELECTRODE SHALL BE MIN. 3'–6" BELOW FINISH GRADE.

CONNECTIONS ABOVE GRADE (MECHANICAL)

COMPRESSION LUG CONNECTOR – 15 TON COMPRESSION, 2 HOLE, LONG BARREL, ELECTRO TINNED PLATED, HIGH CONDUCTIVITY, COPPER 600V RATED. USE 1/4" ø BOLT, 3/4" SPACING LUGS TO BOND OBJECTS FROM THE IGR. (CONNECTOR SHALL BE BURNDY HYLUG SERIES OR EQUAL.)

EXOTHERMIC WELD LUG CONNECTOR – 2 HOLE, OFFSET, ELECTRO TINNED PLATED, HIGH CONDUCTIVITY, COPPER 600V. USE 1/2"ø BOLT, 1–3/4" SPACING LUGS. CONNECTOR SHALL BE CADWELD CONNECTION STYLE (CABLE TO SURFACE) TYPE LA, LUG SIZE 1/8 x 1. EXOTHERMIC WELD TO LUG AS REQUIRED.

C–TAP COMPRESSION CONNECTOR – HIGH CONDUCTIVITY COPPER FOR MAIN TO BRANCH LINE TAPPING. (CONNECTOR SHALL BE BURNDY HYTAP SERIES OR EQUAL.)

MECHANICAL CONNECTIONS

USE MATCHING MANUFACTURER TOOL AND DIE FOR COMPRESSION CONNECTION.

APPLY ANTI–OXIDANT CONDUCTIVITY ENHANCER COMPOUND ON SURFACES THAT ARE COMPRESSED.

SURFACES INTENDED TO BE CONNECTED WITH MECHANICAL CONNECTORS SHALL BE BARE METAL TO BARE METAL. PRIME AND PAINT OVER BONDED AREA TO PREVENT CORROSION.

WHEN BONDING #2 TO #2

EXTERIOR OF BUILDING – USE EXOTHERMIC WELD CONNECTION
INTERIOR OF BUILDING – USE COMPRESSION CONNECTION ON STRANDED CONDUCTORS ONLY.
– USE EXOTHERMIC WELD CONNECTION ON SOLID CONDUCTOR.

WHEN BONDING #2 TO FENCE POST

USE EXOTHERMIC WELD (CADWELD TYPE 'VS') CONNECTION TO FENCE POST STEEL SURFACE. TEST WELD FOR POSSIBLE BURN THRU. PATCH WELDED AREA WITH GALVANIZED COATING AS REQUIRED FOR PROPER WELDED PERMANENT BOND. REFER TO MANUFACTURER'S REQUIREMENTS FOR DETAILS

GROUNDING SYSTEM INTERCONNECTION

BOND THE EGR DOWN CONDUCTORS, AND/OR BURIED GROUND RING TO ANY METALLIC OBJECT OR EXISTING GROUNDING SYSTEM WITHIN 6'.

WHEN BONDING #2 TO TOWER GROUND PLATE

TOWER GROUND PLATE SHALL BE 6" x 8" x 1/4" COPPER AND BE MADE AVAILABLE TO TOWER CONTRACTOR TO BE INSTALLED DURING TOWER CONSTRUCTION. USE EXOTHERMIC WELD (CADWELD TYPE 'HS') TO TOWER GROUND PLATE TEST WELD FOR POSSIBLE BURN THRU. COORDINATE THE SIZE OF THE MOUNTING HOLE WITH TOWER CONTRACTOR.

METALLIC CONDUITS

BOND ALL STEEL CONDUITS TO PANELS AT POINT OF CONTACT WITH APPROVED GROUNDING BUSHING.

REV.	DATE	DRAWN BY	CHK'D BY	DESCRIPTION
0	02/16/19	TJL	CAG	ISSUED FOR CONSTRUCTION

PROFESSIONAL ENGINEER SEAL

STATE OF CONNECTICUT · CHRISTOPHER A. GRONDIN · 25153 · LICENSED PROFESSIONAL ENGINEER

Sprint

CENTEK engineering
Centered on Solutions℠
(203) 488-0580
(203) 488-8587 Fax
63-2 North Branford Road
Branford, CT 06405
www.CentekEng.com

SPRINT
WIRELESS COMMUNICATIONS FACILITY
EVERSOURCE STRUCT.: 29317
SITE ID: CT33XC538
595 KEENEY STREET
MANCHESTER, CT 06040

DATE: 03/02/18
SCALE: AS NOTED
JOB NO. 17159.14

COMPOUND GROUNDING PLAN AND NOTES

E-1

Sheet No. 7 of 7

CENTEK engineering

Centered on Solutions℠

Structural Analysis of Transmission Tower

Sprint Site Ref: CT33XC538

Eversource Structure No. 29317

120' (AGL) Electric Transmission LWS Pole

595 Keeney Street
Manchester, CT

CENTEK Project No. 17159.14

~~Date: March 7, 2018~~

Rev 3: January 8, 2019

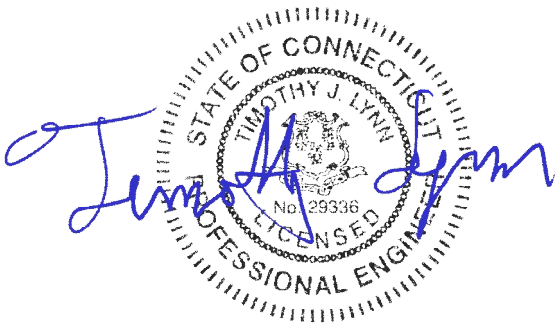

Prepared for:
Transcend Wireless
10 Industrial Ave, Suite 3
Mahwah, NJ 07430

Table of Contents

SECTION 1 - REPORT

- INTRODUCTION
- PRIMARY ASSUMPTIONS USED IN THE ANALYSIS
- ANALYSIS
- DESIGN BASIS
- RESULTS
- CONCLUSION

SECTION 2 - CONDITIONS & SOFTWARE

- STANDARD ENGINEERING CONDITIONS
- GENERAL DESCRIPTION OF STRUCTURAL ANALYSIS PROGRAMS
  - RISA 3-D
  - PLS TOWER

SECTION 3 - DESIGN CRITERIA

- CRITERIA FOR DESIGN OF PCS FACILITIES ON OR EXTENDING ABOVE METAL ELECTRIC TRANSMISSON TOWERS
- NU DESIGN CRITERIA TABLE
- WIRE LOADS SHEET

SECTION 4 - DRAWINGS

- EL-1 TOWER ELEVATION

SECTION 5 - NECS/NU LOAD CALCULATIONS

- EQUIPMENT LOAD CALCULATION
- COAX CABLE LOAD CALCULATION – ON TOWER

SECTION 6 - PLS TOWER RESULTS

- PLS REPORT
- FOUNDATION CHECK

SECTION 7 - REFERENCE MATERIAL

- EQUIPMENT CUT SHEETS

Introduction

The purpose of this report is to analyze the existing 135.5' utility pole (embedded 15'-5" into the ground) located at 595 Keeney Street in Manchester, CT for the proposed antenna and equipment upgrade by Sprint.

The existing/proposed loads consist of the following:

- SPRINT (Existing to Remain):
  Coax Cables: Eighteen (18) 1-5/8" ∅ coax cables and six (6) RET cables running on the exterior of the pole.
- SPRINT (Existing to Remove):
  Antennas: Three (3) RFS APXVSPP18-C panel antennas flush mounted to the existing tower with a RAD center elevation of 116-ft above grade level.
- **SPRINT (Proposed):**
  Antennas: Three (3) Commscope DHHTT65B-3XR panel antennas, three (3) RFS KIT-FD9R6004/1C-DL Diplexers and three (3) CCI DPO-7126Y-0-T1 Diplexers flush mounted to the existing tower with a RAD center elevation of 116-ft above grade level.

Primary assumptions used in the analysis

- All antenna mounts are modeled as listed above.
- All coaxial cable will be installed as indicated in Section 4 of this report.
- No residual stresses exist due to incorrect tower erection.
- Utility tower was properly installed and maintained and all members were properly designed, detailed, fabricated, and installed and have been properly maintained since erection.
- Any deviation from the analyzed loading will require a new analysis for verification of structural adequacy.

Analysis

Structural analysis of the utility pole was completed using the current version of PLS-Pole computer program licensed to CENTEK Engineering. Loading was developed per the requirements of the NESC standard and Northeast Utilities Design Criteria. These loads are developed in Section 5 of this report.

Design Basis

Our analysis was performed in accordance with NESC C2-2012 and Northeast Utilities Design Criteria.

- UTILITY TOWER ANALYSIS

  The purpose of this analysis is to determine the adequacy of the existing utility structure to support the proposed antenna loads. The loading and design requirements were analyzed in accordance with the NU Design Criteria Table, NESC C2-2012 ~ Construction Grade B.

  Load cases considered:

  Load Case 1: NESC Heavy
  Wind Pressure…….. 4.0 psf
  Radial Ice Thickness…….. 0.5”
  Vertical Overload Capacity Factor…… 1.50
  Wind Overload Capacity Factor…… 2.50
  Wire Tension Overload Capacity Factor…… 1.65

  Load Case 2: NESC Extreme
  Wind Speed…… 110 mph [(1)]
  Radial Ice Thickness…….. 0”

Results

- UTILITY POLE

  This analysis finds that the subject utility pole is adequate to support the proposed antenna configuration. A maximum usage of **84.48%** occurs in the utility pole under the **NESC Extreme** loading condition.

  POLE SECTION:

  The utility pole was found to be within allowable limits.

Tower Section	Stress Ratio (% of capacity)	Result
X-Arm	84.48%	**PASS**

- FOUNDATION

  The pole is directly embedded in the ground, concealed within a 4.5-ft diameter concrete encasement. The left and right poles are embedded 15.5-ft.

  POLE SECTION:

  The utility pole was found to be within allowable limits.

Check	Stress Ratio (% of capacity)	Result
Uplift	40.7%	**PASS**
Compression	69.7%	**PASS**
Embedment	75.4%	**PASS**

C o n c l u s i o n

This analysis shows that the subject utility tower **is adequate** to support the proposed equipment installation.

The analysis is based, in part, on the information provided to this office by Eversource and Sprint. If the existing conditions are different than the information in this report, Centek Engineering, Inc. must be contacted for resolution of any potential issues.

Please feel free to call with any questions or comments.

Respectfully Submitted by:

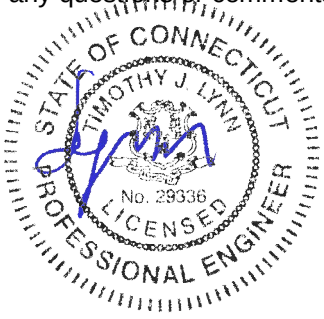

Timothy J. Lynn, PE
Structural Engineer

STANDARD CONDITIONS FOR FURNISHING OF PROFESSIONAL ENGINEERING SERVICES ON EXISTING STRUCTURES

All engineering services are performed on the basis that the information used is current and correct. This information may consist of, but is not necessarily limited to:

- Information supplied by the client regarding the structure itself, its foundations, the soil conditions, the antenna and feed line loading on the structure and its components, or other relevant information.

- Information from the field and/or drawings in the possession of CENTEK engineering, Inc. or generated by field inspections or measurements of the structure.

- It is the responsibility of the client to ensure that the information provided to CENTEK engineering, Inc. and used in the performance of our engineering services is correct and complete. In the absence of information to the contrary, we assume that all structures were constructed in accordance with the drawings and specifications and are in an un-corroded condition and have not deteriorated. It is therefore assumed that its capacity has not significantly changed from the “as new” condition.

- All services will be performed to the codes specified by the client, and we do not imply to meet any other codes or requirements unless explicitly agreed in writing. If wind and ice loads or other relevant parameters are to be different from the minimum values recommended by the codes, the client shall specify the exact requirement. In the absence of information to the contrary, all work will be performed in accordance with the latest revision of ANSI/ASCE10 & ANSI/EIA-222.

- All services are performed, results obtained, and recommendations made in accordance with generally accepted engineering principles and practices. CENTEK engineering, Inc. is not responsible for the conclusions, opinions and recommendations made by others based on the information we supply.

GENERAL DESCRIPTION OF STRUCTURAL ANALYSIS PROGRAM ~ RISA-3D

RISA-3D Structural Analysis Program is an integrated structural analysis and design software package for buildings, bridges, tower structures, etc.

Modeling Features:

- Comprehensive CAD-like graphic drawing/editing capabilities that let you draw, modify and load elements as well as snap, move, rotate, copy, mirror, scale, split, merge, mesh, delete, apply, etc.
- Versatile drawing grids (orthogonal, radial, skewed)
- Universal snaps and object snaps allow drawing without grids
- Versatile general truss generator
- Powerful graphic select/unselect tools including box, line, polygon, invert, criteria, spreadsheet selection, with locking
- Saved selections to quickly recall desired selections
- Modification tools that modify single items or entire selections
- Real spreadsheets with cut, paste, fill, math, sort, find, etc.
- Dynamic synchronization between spreadsheets and views so you can edit or view any data in the plotted views or in the spreadsheets
- Simultaneous view of multiple spreadsheets
- Constant in-stream error checking and data validation
- Unlimited undo/redo capability
- Generation templates for grids, disks, cylinders, cones, arcs, trusses, tanks, hydrostatic loads, etc.
- Support for all units systems & conversions at any time
- Automatic interaction with RISASection libraries
- Import DXF, RISA-2D, STAAD and ProSteel 3D files
- Export DXF, SDNF and ProSteel 3D files

Analysis Features:

- Static analysis and P-Delta effects
- Multiple simultaneous dynamic and response spectra analysis using Gupta, CQC or SRSS mode combinations
- Automatic inclusion of mass offset (5% or user defined) for dynamic analysis
- Physical member modeling that does not require members to be broken up at intermediate joints
- State of the art 3 or 4 node plate/shell elements
- High-end automatic mesh generation — draw a polygon with any number of sides to create a mesh of well-formed quadrilateral (NOT triangular) elements.
- Accurate analysis of tapered wide flanges - web, top and bottom flanges may all taper independently
- Automatic rigid diaphragm modeling
- Area loads with one-way or two-way distributions
- Multiple simultaneous moving loads with standard AASHTO loads and custom moving loads for bridges, cranes, etc.
- Torsional warping calculations for stiffness, stress and design
- Automatic Top of Member offset modeling
- Member end releases & rigid end offsets
- Joint master-slave assignments
- Joints detachable from diaphragms
- Enforced joint displacements
- 1-Way members, for tension only bracing, slipping, etc.

- 1-Way springs, for modeling soils and other effects
- Euler members that take compression up to their buckling load, then turn off.
- Stress calculations on any arbitrary shape
- Inactive members, plates, and diaphragms allows you to quickly remove parts of structures from consideration
- Story drift calculations provide relative drift and ratio to height
- Automatic self-weight calculations for members and plates
- Automatic subgrade soil spring generator

Graphics Features:

- Unlimited simultaneous model view windows
- Extraordinary “true to scale” rendering, even when drawing
- High-speed redraw algorithm for instant refreshing
- Dynamic scrolling stops right where you want
- Plot & print virtually everything with color coding & labeling
- Rotate, zoom, pan, scroll and snap views
- Saved views to quickly restore frequent or desired views
- Full render or wire-frame animations of deflected model and dynamic mode shapes with frame and speed control
- Animation of moving loads with speed control
- High quality customizable graphics printing

Design Features:

- Designs concrete, hot rolled steel, cold formed steel and wood
- ACI 1999/2002, BS 8110-97, CSA A23.3-94, IS456:2000,EC 2-1992 with consistent bar sizes through adjacent spans
- Exact integration of concrete stress distributions using parabolic or rectangular stress blocks
- Concrete beam detailing (Rectangular, T and L)
- Concrete column interaction diagrams
- Steel Design Codes: AISC ASD 9th, LRFD 2nd & 3rd, HSS Specification, CAN/CSA-S16.1-1994 & 2004, BS 5950-1-2000, IS 800-1984, Euro 3-1993 including local shape databases
- AISI 1999 cold formed steel design
- NDS 1991/1997/2001 wood design, including Structural Composite Lumber, multi-ply, full sawn
- Automatic spectra generation for UBC 1997, IBC 2000/2003
- Generation of load combinations: ASCE, UBC, IBC, BOCA, SBC, ACI
- Unbraced lengths for physical members that recognize connecting elements and full lengths of members
- Automatic approximation of K factors
- Tapered wide flange design with either ASD or LRFD codes
- Optimization of member sizes for all materials and all design codes, controlled by standard or user-defined lists of available sizes and criteria such as maximum depths
- Automatic calculation of custom shape properties
- Steel Shapes: AISC, HSS, CAN, ARBED, British, Euro, Indian, Chilean
- Light Gage Shapes: AISI, SSMA, Dale / Incor, Dietrich, Marino\WARE
- Wood Shapes: Complete NDS species/grade database
- Full seamless integration with RISAFoot (Ver 2 or better) for advanced footing design and detailing
- Plate force summation tool

Results Features:

- Graphic presentation of color-coded results and plotted designs
- Color contours of plate stresses and forces with quadratic smoothing, the contours may also be animated
- Spreadsheet results with sorting and filtering of: reactions, member & joint deflections, beam & plate forces/stresses, optimized sizes, code designs, concrete reinforcing, material takeoffs, frequencies and mode shapes
- Standard and user-defined reports
- Graphic member detail reports with force/stress/deflection diagrams and detailed design calculations and expanded diagrams that display magnitudes at any dialed location
- Saved solutions quickly restore analysis and design results.

GENERAL DESCRIPTION OF STRUCTURAL ANALYSIS PROGRAM ~ PLS-TOWER

PLS-TOWER is a Microsoft Windows program for the analysis and design of steel latticed towers used in electric power lines or communication facilities. Both self-supporting and guyed towers can be modeled. The program performs design checks of structures under user specified loads. For electric power structures it can also calculate maximum allowable wind and weight spans and interaction diagrams between different ratios of allowable wind and weight spans.

Modeling Features:

- Powerful graphics module (stress usages shown in different colors)
- Graphical selection of joints and members allows graphical editing and checking
- Towers can be shown as lines, wire frames or can be rendered as 3-d polygon surfaces
- Can extract geometry and connectivity information from a DXF CAD drawing
- CAD design drawings, title blocks, drawing borders or photos can be tied to structure model
- XML based post processor interface
- Steel Detailing Neutral File (SDNF) export to link with detailing packages
- Can link directly to line design program PLS-CADD
- Automatic generation of structure files for PLS-CADD
- Databases of steel angles, rounds, bolts, guys, etc.
- Automatic generation of joints and members by symmetries and interpolations
- Automated mast generation (quickly builds model for towers that have regular repeating sections) via graphical copy/paste
- Steel angles and rounds modeled either as truss, beam or tension-only elements
- Guys are easily handled (can be modeled as exact cable elements)

Analysis Features:

- Automatic handling of tension-only members
- Automatic distribution of loads in 2-part suspension insulators (v-strings, horizontal vees, etc.)
- Automatic calculation of tower dead, ice, and wind loads as well as drag coefficients according to:
    - ASCE 74-1991
    - NESC 2002
    - NESC 2007
    - IEC 60826:2003
    - EN50341-1:2001 (CENELEC)
    - EN50341-3-9:2001 (UK NNA)
    - EN50341-3-17:2001 (Portugal NNA)
    - ESAA C(b)1-2003 (Australia)
    - TPNZ (New Zealand)
    - REE (Spain)
    - EIA/TIA 222-F
    - ANSI/TIA 222-G
    - CSA S37-01
- Automated microwave antenna loading as per EIA/TIA 222-F and ANSI/TIA 222-G
- Minimization of problems caused by unstable joints and mechanisms
- Automatic bandwidth minimization and ability to solve large problems
- Design checks according to (other standards can be added easily):
    - ASCE Standard 10-90

- AS 3995 (Australian Standard 3995)
- BS 8100 (British Standard 8100)
- EN50341-1 (CENELEC, both empirical and analytical methods are available)
- ECCS 1985
- NGT-ECCS
- PN-90/B-03200
- EIA/TIA 222-F
- ANSI/TIA 222-G
- CSA S37-01
- EDF/RTE Resal
- IS 802 (India Standard 802)

Results Features:

- Design summaries printed for each group of members
- Easy to interpret text, spreadsheet and graphics design summaries
- Automatic determination of allowable wind and weight spans
- Automatic determination of interaction diagrams between allowable wind and weight spans
- Capability to batch run multiple tower configurations and consolidate the results
- Automated optimum angle member size selection and bolt quantity determination

Tool for interactive angle member sizing and bolt quantity determination.

Criteria for Design of PCS Facilities On or Extending Above Metal Electric Transmission Towers & Analysis of Transmission Towers Supporting PCS Masts (1)

Introduction

This criteria is the result from an evaluation of the methods and loadings specified by the separate standards, which are used in designing telecommunications towers and electric transmission towers. That evaluation is detailed elsewhere, but in summary; the methods and loadings are significantly different. This criteria specifies the manner in which the appropriate standard is used to design PCS facilities including masts and brackets (hereafter referred to as "masts"), and to evaluate the electric transmission towers to support PCS masts. The intent is to achieve an equivalent level of safety and security under the extreme design conditions expected in Connecticut and Massachusetts.

ANSI Standard TIA/EIA-222 covering the design of telecommunications structures specifies a working strength/allowable stress design approach. This approach applies the loads from extreme weather loading conditions, and designs the structure so that it does not exceed some defined percentage of failure strength (allowable stress).

ANSI Standard C2-2007 (National Electrical Safety Code) covering the design of electric transmission metal structures is based upon an ultimate strength/yield stress design approach. This approach applies a multiplier (overload capacity factor) to the loads possible from extreme weather loading conditions, and designs the structure so that it does not exceed its ultimate strength (yield stress).

Each standard defines the details of how loads are to be calculated differently. Most of the NU effort in "unifying" both codes was to establish what level of strength each approach would provide, and then increasing the appropriate elements of each to achieve a similar level of security under extreme weather loadings.

Two extreme weather conditions are considered. The first is an extreme wind condition (hurricane) based upon a 50-year recurrence (2% annual probability). The second is a winter condition combining wind and ice loadings.

The following sections describe the design criteria for any PCS mast extending above the top of an electric transmission tower, and the analysis criteria for evaluating the loads on the transmission tower from such a mast from the lower portions of such a mast, and loads on the pre-existing electric lower portions of such a mast, and loads on the pre-existing electric transmission tower and the conductors it supports.

Note 1: Prepared from documentation provide from Northeast Utilities.

P C S M a s t

The PCS facility (mast, external cable/trays, including the initial and any planned future support platforms, antennas, etc. extending the full height above the top level of the electric transmission structure) shall be designed in accordance with the provisions of TIA/EIA Standard 222 with two exceptions:

1. An 85 mph extreme wind speed shall be used for locations in all counties throughout the NU system.
2. The stress increase of TIA Section 3.1.1.1 is disallowed. The combined wind and ice condition shall consider ½" radial ice in combination with the wind load (0.75 Wi) as specified in TIA section 2.3.16.

E L E C T R I C T R A N S M I S S I O N T O W E R

The electric transmission tower shall be analyzed using yield stress theory in accordance with the attached table titled "NU Design Criteria". This specifies uniform loadings (different from the TIA loadings) on the each of the following components of the installed facility:

- PCS mast for its total height above ground level, including the initial and planned future support platforms, antennas, etc. above the top of an electric transmission structure.
- Conductors are related devices and hardware.
- Electric transmission structure. The loads from the PCS facility and from the electric conductors shall be applied to the structure at conductor and PCS mast attachment points, where those load transfer to the tower.

The uniform loadings and factors specified for the above components in the table are based upon the National Electrical Safety Code 2007 Edition Extreme Wind (Rule 250C) and Combined Ice and Wind (Rule 250B-Heavy) Loadings. These provide equivalent loadings compared to TIA and its loads and factors with the exceptions noted above. (Note that the NESC does not require the projected wind surfaces of structures and equipment to be increased by the ice covering.)

In the event that the electric transmission tower is not sufficient to support the additional loadings of the PCS mast, reinforcement will be necessary to upgrade the strength of the overstressed members.

Attachment A

		Attachment A NU Design Criteria	Basic Wind Speed	Pressure	Height factor	Gust Factor	Load or Stress Factor	Force Coef. - Shape Factor
			V (MPH)	Q (PSF)	Kz	Gh		
Ice Condition	TIA	Antenna Mount	TIA SUB 090	TIA SUB 090	TIA SUB 090	TIA SUB 090	TIA SUB 090	TIA SUB 090
Ice Condition	NESC Heavy	Tower/Pole Analysis with antennas extending above top of Tower/Pole (Yield Stress)	____	4	1	1	2.50	1.6 Flat Surfaces 1.3 Round Surfaces
Ice Condition	NESC Heavy	Tower/Pole Analysis with antennas below top of Tower/Pole (on two faces)	____	4	1	1	2.50	1.6 Flat Surfaces 1.3 Round Surfaces
Ice Condition	NESC Heavy	Conductors:	Conductor Loads Provided by NU					
High Wind Condition	TIA	Antenna Mount	TIA SUB 090	TIA SUB 090	TIA SUB 090	TIA SUB 090	TIA SUB 090	TIA SUB 090
High Wind Condition	NESC Extreme Wind	Tower/Pole Analysis with antennas extending above top of Tower/Pole	For wind speed use OTRM 060 Map 1, Rule 250C: Extreme Wind Loading Apply a 1.25 X Gust Response Factor to all telecommunication equipment projected above top of tower/pole and apply a 1.0 x Gust Response Factor to the tower/pole structure					1.6 Flat Surfaces 1.3 Round Surfaces
High Wind Condition	NESC Extreme Wind	Tower/Pole Analysis with antennas below top of Tower/Pole	For wind speed use OTRM 060 Map 1, Rule 250C: Extreme Wind Loading Height above ground is based on overall height to top of tower/pole					1.6 Flat Surfaces 1.3 Round Surfaces
High Wind Condition	NESC Extreme Wind	Conductors:	Conductor Loads Provided by NU					
NESC Extreme Ice with Wind Condition *		Tower/Pole Analysis with antennas extending above top of Tower/Pole	For wind speed use OTRM 060 Map 1, Rule 250D: Extreme Ice with Wind Loading 4 PSF Wind Load 1.25 X Gust Response Factor Apply a 1.25 X Gust Response Factor to all telecommunication equipment projected above top of tower/pole and apply a 1.0 x Gust Response Factor to the tower/pole structure					1.6 Flat Surfaces 1.3 Round Surfaces
NESC Extreme Ice with Wind Condition *		Tower/Pole Analysis with antennas below top of Tower/Pole	For wind speed use OTRM 060 Map 1, Rule 250D: Extreme Ice with Wind Loading 4 PSF Wind Load Height above ground is based on overall height to top of tower/pole					1.6 Flat Surfaces 1.3 Round Surfaces
NESC Extreme Ice with Wind Condition *		Conductors:	Conductor Loads Provided by NU					
		* Only for structures installed after 2007						

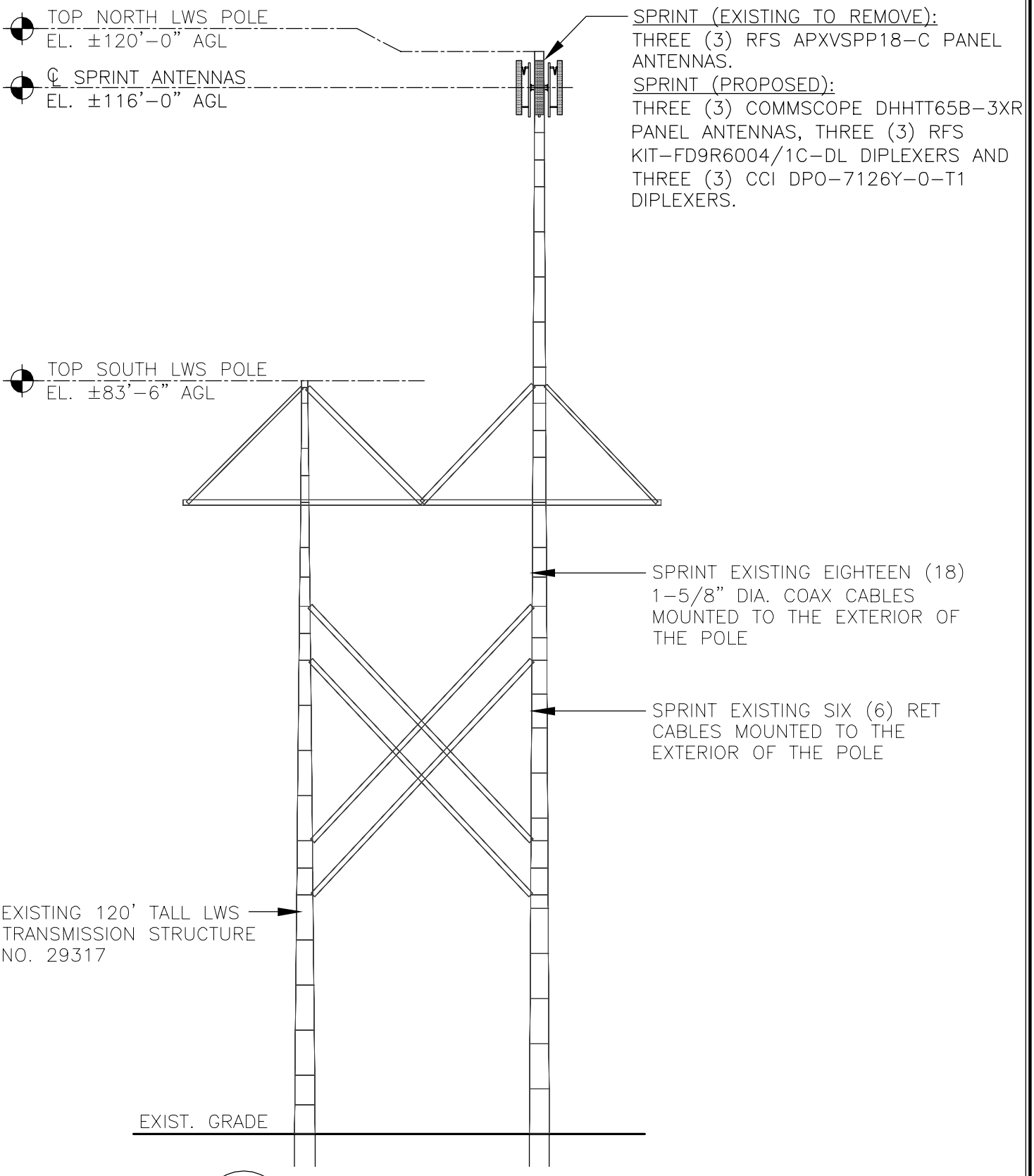

1 / EL-1 **TOWER ELEVATION**

SCALE: NOT TO SCALE

REVISIONS		
00	3/6/18	ISSUED FOR REVIEW
01	1/8/19	CONSTRUCTION

CENTEK engineering
Centered on Solutions℠
www.CentekEng.com
(203) 488-0580
(203) 488-8587 Fax
63-2 North Branford Road, Branford, CT 06405

CT33XC538
EVERSOURCE 29317

595 KEENEY STREET
MANCHESTER, CT 06040

PROJECT NO:	17159.14
DRAWN BY:	TJL
CHECKED BY:	CFC
SCALE:	AS NOTED
DATE:	3/6/18

TOWER ELEVATION

EL-1

DWG. 1 OF 1

CENTEK engineering
Centered on Solutions℠ www.centekeng.com
63-2 North Branford Road P: (203) 488-0580
Branford, CT 06405 F: (203) 488-8587

Subject:	Load Analysis of Equipment on Tower # 29317
Location:	Manchester, CT
Rev. 0: 3/6/18	Prepared by: T.J.L Checked by: C.F.C. Job No. 17159.14

Basic Components

Heavy Wind Pressure =	p := 4.00	psf	(User Input NESC 2007 Figure 250-1 & Table 250-1)
Basic Windspeed =	V := 110	mph	(User Input NESC 2007 Figure 250-2(e))
Radial Ice Thickness =	Ir := 0.50	in	(User Input)
Radial Ice Density =	Id := 56.0	pcf	(User Input)

Factors for Extreme Wind Calculation

Elevation of Top of Mast Above Grade =	TME := 120	ft	(User Input)
Multiplier Gust Response Factor =	m := 1.25		(User Input - Only for NESC Extreme wind case)
NESC Factor =	kv := 1.43		(User Input from NESC 2007 Table 250-3 equation)
Importance Factor =	I := 1.0		(User Input from NESC 2007 Section 250.C.2)
Velocity Pressure Coefficient =	$Kz := 2.01\cdot\left(\frac{TME}{900}\right)^{\frac{2}{9.5}} = 1.315$		(NESC 2007 Table 250-2)
Exposure Factor =	$Es := 0.346\left[\frac{33}{(0.67\cdot TME)}\right]^{\frac{1}{7}} = 0.305$		(NESC 2007 Table 250-3)
Response Term =	$Bs := \frac{1}{\left(1 + 0.375\cdot\frac{TME}{220}\right)} = 0.83$		(NESC 2007 Table 250-3)
Gust Response Factor =	$Grf := \frac{\left[1 + \left(2.7\cdot Es\cdot Bs^{\frac{1}{2}}\right)\right]}{kv^2} = 0.856$		(NESC 2007 Table 250-3)
Wind Pressure =	$qz := 0.00256\cdot Kz\cdot V^2\cdot Grf\cdot I = 34.9$	psf	(NESC 2007 Section 250.C.2)

Shape Factors

NUS Design Criteria Issued April 12, 2007

Shape Factor for Round Members =	$Cd_R := 1.3$	(User Input)
Shape Factor for Flat Members =	$Cd_F := 1.6$	(User Input)
Shape Factor for Coax Cables Attached to Outside of Pole =	$Cd_{coax} := 1.45$	(User Input)

Overload Factors

NU Design Criteria Table

Overload Factors for Wind Loads:

NESC Heavy Loading =	**2.5**	(User Input)	Apply in Risa-3D Analysis
NESC Extreme Loading =	**1.0**	(User Input)	Apply in Risa-3D Analysis

Overload Factors for Vertical Loads:

NESC Heavy Loading =	**1.5**	(User Input)	Apply in Risa-3D Analysis
NESC Extreme Loading =	**1.0**	(User Input)	Apply in Risa-3D Analysis

CENTEK engineering
Centered on Solutions℠ www.centekeng.com
63-2 North Branford Road P: (203) 488-0580
Branford, CT 06405 F: (203) 488-8587

Subject: Load Analysis of Equipment on Tower # 29317

Location: Manchester, CT

Rev. 0: 3/6/18

Prepared by: T.J.L Checked by: C.F.C.
Job No. 17159.14

Development of Wind & Ice Load on Antennas

(Sprint)

Antenna Data:

Antenna Model =	Commscope DHHTT65B-3XR		
Antenna Shape =	Flat		(User Input)
Antenna Height =	$L_{ant} := 72.1$	in	(User Input)
Antenna Width =	$W_{ant} := 11.9$	in	(User Input)
Antenna Thickness =	$T_{ant} := 7.1$	in	(User Input)
Antenna Weight =	$WT_{ant} := 46$	lbs	(User Input)
Number of Antennas =	$N_{ant} := 3$		(User Input)
Number of Prjected Antennas Transverse =	$NP_{Tant} := 2$		(User Input)
Number of Prjected Antennas Long =	$NP_{Lant} := 1$		(User Input)

Gravity Load (without ice)

Weight of All Antennas = $Wt_{ant1} := WT_{ant} \cdot N_{ant} = 138$ lbs

Gravity Load (ice only)

Volume of Each Antenna = $V_{ant} := L_{ant} \cdot W_{ant} \cdot T_{ant} = 6092$ cu in

Volume of Ice on Each Antenna = $V_{ice} := \left(L_{ant} + 2 \cdot Ir\right)\left(W_{ant} + 2 \cdot Ir\right)\left(T_{ant} + 2 \cdot Ir\right) - V_{ant} = 1546$ cu in

Weight of Ice on Each Antenna = $W_{ICEant} := \frac{V_{ice}}{1728} \cdot Id = 50$ lbs

Weight of Ice on All Antennas = $Wt_{ice.ant1} := W_{ICEant} \cdot N_{ant} = 150$ lbs

Wind Load (NESC Heavy)

Surface Area for One Antenna w/ Ice = $SA_{ICEant} := \frac{\left(L_{ant} + 2 \cdot Ir\right) \cdot \left(W_{ant} + 2 \cdot Ir\right)}{144} = 6.5$ sf

Total Antenna Wind Force w/ Ice Transverse = $Fi_{Tant1} := p \cdot Cd_F \cdot \left(SA_{ICEant} \cdot NP_{Tant}\right) = 84$ lbs

Total Antenna Wind Force w/ Ice Long = $Fi_{Lant1} := p \cdot Cd_F \cdot \left(SA_{ICEant} \cdot NP_{Lant}\right) = 42$ lbs

Wind Load (NESC Extreme)

Surface Area for One Antenna = $SA_{ant} := \frac{L_{ant} \cdot W_{ant}}{144} = 6$ sf

Total Antenna Wind Force Transverse = $F_{Tant1} := qz \cdot Cd_F \cdot \left(SA_{ICEant} \cdot NP_{Tant}\right) = 730$ lbs

Total Antenna Wind Force Long = $F_{Lant1} := qz \cdot Cd_F \cdot \left(SA_{ICEant} \cdot NP_{Lant}\right) = 365$ lbs

CENTEK engineering
Centered on Solutions℠ www.centekeng.com
63-2 North Branford Road P: (203) 488-0580
Branford, CT 06405 F: (203) 488-8587

Subject:	Load Analysis of Equipment on Tower # 29317
Location:	Manchester, CT
Rev. 0: 3/6/18	Prepared by: T.J.L Checked by: C.F.C. Job No. 17159.14

Development of Wind & Ice Load on Antennas (Sprint)

Antenna Data:

Antenna Model =	RFS KIT-FD9R6004/1C-DL Diplexer		
Antenna Shape =	Flat		(User Input)
Antenna Height =	$L_{ant} := 5.8$	in	(User Input)
Antenna Width =	$W_{ant} := 6.5$	in	(User Input)
Antenna Thickness =	$T_{ant} := 4.6$	in	(User Input)
Antenna Weight =	$WT_{ant} := 7$	lbs	(User Input)
Number of Antennas =	$N_{ant} := 3$		(User Input)

Gravity Load (without ice)

Weight of All Antennas = $Wt_{ant2} := WT_{ant} \cdot N_{ant} = 21$ lbs

Gravity Load (ice only)

Volume of Each Antenna = $V_{ant} := L_{ant} \cdot W_{ant} \cdot T_{ant} = 173$ cu in

Volume of Ice on Each Antenna = $V_{ice} := \left(L_{ant} + 2 \cdot Ir\right)\left(W_{ant} + 2 \cdot Ir\right)\left(T_{ant} + 2 \cdot Ir\right) - V_{ant} = 112$ cu in

Weight of Ice on Each Antenna = $W_{ICEant} := \frac{V_{ice}}{1728} \cdot Id = 4$ lbs

Weight of Ice on All Antennas = $Wt_{ice.ant2} := W_{ICEant} \cdot N_{ant} = 11$ lbs

Wind Load (NESC Heavy)

Assumes Maximum Possible Wind Pressure Applied to all Antennas Simultaneously

Surface Area for One Antenna w/ Ice = $SA_{ICEant} := \frac{\left(L_{ant} + 2 \cdot Ir\right) \cdot \left(W_{ant} + 2 \cdot Ir\right)}{144} = 0.4$ sf

Antenna Projected Surface Area w/ Ice = $A_{ICEant} := SA_{ICEant} \cdot N_{ant} = 1.1$ sf

Total Antenna Wind Force w/ Ice = $Fi_{ant2} := p \cdot Cd_F \cdot A_{ICEant} = 7$ lbs

Wind Load (NESC Extreme)

Assumes Maximum Possible Wind Pressure Applied to all Antennas Simultaneously

Surface Area for One Antenna = $SA_{ant} := \frac{L_{ant} \cdot W_{ant}}{144} = 0.3$ sf

Antenna Projected Surface Area = $A_{ant} := SA_{ant} \cdot N_{ant} = 0.8$ sf

Total Antenna Wind Force = $F_{ant2} := qz \cdot Cd_F \cdot A_{ant} = 44$ lbs

Development of Wind & Ice Load on Antennas

(Sprint)

Antenna Data:

Antenna Model =	CCI DPO-7126Y-0-T1 Diplexer		
Antenna Shape =	Flat		(User Input)
Antenna Height =	$L_{ant} := 4.07$	in	(User Input)
Antenna Width =	$W_{ant} := 7.42$	in	(User Input)
Antenna Thickness =	$T_{ant} := 6.26$	in	(User Input)
Antenna Weight =	$WT_{ant} := 8$	lbs	(User Input)
Number of Antennas =	$N_{ant} := 3$		(User Input)

Gravity Load (without ice)

Weight of All Antennas = $Wt_{ant3} := WT_{ant} \cdot N_{ant} = 24$ lbs

Gravity Load (ice only)

Volume of Each Antenna = $V_{ant} := L_{ant} \cdot W_{ant} \cdot T_{ant} = 189$ cu in

Volume of Ice on Each Antenna = $V_{ice} := \left(L_{ant} + 2 \cdot Ir\right)\left(W_{ant} + 2 \cdot Ir\right)\left(T_{ant} + 2 \cdot Ir\right) - V_{ant} = 121$ cu in

Weight of Ice on Each Antenna = $W_{ICEant} := \frac{V_{ice}}{1728} \cdot Id = 4$ lbs

Weight of Ice on All Antennas = $Wt_{ice.ant3} := W_{ICEant} \cdot N_{ant} = 12$ lbs

Wind Load (NESC Heavy)

Assumes Maximum Possible Wind Pressure Applied to all Antennas Simultaneously

Surface Area for One Antenna w/ Ice = $SA_{ICEant} := \frac{\left(L_{ant} + 2 \cdot Ir\right) \cdot \left(W_{ant} + 2 \cdot Ir\right)}{144} = 0.3$ sf

Antenna Projected Surface Area w/ Ice = $A_{ICEant} := SA_{ICEant} \cdot N_{ant} = 0.9$ sf

Total Antenna Wind Force w/ Ice = $Fi_{ant3} := p \cdot Cd_F \cdot A_{ICEant} = 6$ lbs

Wind Load (NESC Extreme)

Assumes Maximum Possible Wind Pressure Applied to all Antennas Simultaneously

Surface Area for One Antenna = $SA_{ant} := \frac{L_{ant} \cdot W_{ant}}{144} = 0.2$ sf

Antenna Projected Surface Area = $A_{ant} := SA_{ant} \cdot N_{ant} = 0.6$ sf

Total Antenna Wind Force = $F_{ant3} := qz \cdot Cd_F \cdot A_{ant} = 35$ lbs

Development of Wind & Ice Load on Antenna Mounts (Sprint)

Mount Data:

Mount Type:	Pipe Mount		
Mount Shape =	Round		(User Input)
Pipe Mount Length =	$L_{mnt} := 72$	in	(User Input)
Pipe Mount Linear Weight =	$W_{mnt} := 7.58$	plf	(User Input)
Pipe Mount Outside Diameter =	$D_{mnt} := 3.5$	in	(User Input)
Number of Mounting Pipes =	$N_{mnt} := 3$		(User Input)

Wind Load (NESC Extreme)

Mount Projected Surface Area = $A_{mnt} := \frac{D_{mnt} \cdot L_{mnt}}{144} \cdot N_{mnt} = 5.25$ sf

Total Mount Wind Force = $F_{mnt1} := qz \cdot Cd_R \cdot A_{mnt} = 238$ lbs

Wind Load (NESC Heavy)

Mount Projected Surface Area w/ Ice = $A_{ICEmnt} := \frac{(L_{ant} + 1) \cdot (W_{ant} + 1)}{144} \cdot N_{mnt} = 0.889$ sf

Total Mount Wind Force = $Fi_{mnt1} := p \cdot Cd_R \cdot A_{ICEmnt} = 5$ lbs

Gravity Loads (without ice)

Weight Each Pipe Mount = $WT_{mnt} := W_{mnt} \cdot \frac{L_{mnt}}{12} = 45$ lbs

Weight of All Mounts = $Wt_{mnt1} := WT_{mnt} \cdot N_{mnt} = 136$ lbs

Gravity Load (ice only)

Volume of Each Pipe = $V_{mnt} := \frac{\pi}{4} \cdot D_{mnt}^{2} \cdot L_{mnt} = 693$ cu in

Volume of Ice on Each Pipe = $V_{ice} := \left[\frac{\pi}{4} \cdot \left[(D_{mnt} + 1)^2\right] \cdot (L_{mnt} + 1)\right] - V_{mnt} = 468$ cu in

Weight of Ice each mount (incl, hardware) = $W_{ICEmnt} := \frac{V_{ice}}{1728} \cdot Id = 15$ lbs

Weight of Ice on All Mounts = $Wt_{ice.mnt1} := (W_{ICEmnt} \cdot N_{mnt} + 5) = 51$ lbs

Sprint @ 116-ft AGL

NESC Heavy Wind Vertical = $\left(Wt_{ant1} + Wt_{ice.ant1} + Wt_{ant2} + Wt_{ice.ant2} + Wt_{ant3} + Wt_{ice.ant3} + Wt_{mnt1} + Wt_{ice.mnt1}\right)\cdot 1.5 = 814$

NESC Heavy Wind Trasnsverse = $\left(Fi_{Tant1} + Fi_{ant2} + Fi_{ant3} + Fi_{mnt1}\right)\cdot 2.5 = 252$

NESC Heavy Wind Long = $\left(Fi_{Lant1} + Fi_{ant2} + Fi_{ant3} + Fi_{mnt1}\right)\cdot 2.5 = 148$

NESC Extreme Wind Vertical = $\left(Wt_{ant1} + Wt_{ant2} + Wt_{ant3} + Wt_{mnt1}\right) = 319$

NESC Extreme Wind Trasnsverse = $\left(F_{Tant1} + F_{ant2} + F_{ant3} + F_{mnt1}\right) = 1047$

NESC Extreme Wind Long = $\left(F_{Lant1} + F_{ant2} + F_{ant3} + F_{mnt1}\right) = 682$

CENTEK engineering
Centered on Solutions℠ www.centekeng.com
63-2 North Branford Road P: (203) 488-0580
Branford, CT 06405 F: (203) 488-8587

Subject: Coax Cable Loads Tower # 29317

Location: Manchester, CT

Rev. 3: 1/8/19

Prepared by: T.J.L Checked by: C.F.C.
Job No. 17159.14

Coax Cable on Tower

Heavy Wind Pressure =	$p := 4 \cdot psf$		*(User Input)*
Radial Ice Thickness =	$Ir := 0.5 \cdot in$		*(User Input)*
Radial Ice Density =	$Id := 56 \cdot pcf$		*(User Input)*
Basic Windspeed =	$V := 110$	mph	(User Input NESC 2007 Figure 250-2(e))
Height to Top of Coax Above Grade =	$TC := 120$	ft	(User Input)
NESC Factor =	$kv := 1.43$		(User Input from NESC 2007 Table 250-3 equation)
Importance Factor =	$I := 1.0$		(User Input from NESC 2007 Section 250.C.2)
Velocity Pressure Coefficient =	$Kz := 2.01 \cdot \left(\frac{0.67TC}{900}\right)^{\frac{2}{9.5}} = 1.209$		(NESC 2007 Table 250-2)
Exposure Factor =	$Es := 0.346\left[\frac{33}{(0.67 \cdot TC)}\right]^{\frac{1}{7}} = 0.305$		(NESC 2007 Table 250-3)
Response Term =	$Bs := \frac{1}{\left(1 + 0.375 \cdot \frac{TC}{220}\right)} = 0.83$		(NESC 2007 Table 250-3)
Gust Response Factor =	$Grf := \frac{\left[1 + \left(2.7 \cdot Es \cdot Bs^{\frac{1}{2}}\right)\right]}{kv^2} = 0.856$		(NESC 2007 Table 250-3)
Wind Pressure =	$qz := 0.00256 \cdot Kz \cdot V^2 \cdot Grf \cdot I = 32$	psf	(NESC 2007 Section 250.C.2)
Coax Cable Span =	$Coax_{Span} := 10 \cdot ft$		*(Typ. User Input)*
Diameter of Coax Cable =	$D_{coax} := 1.98 \cdot in$		*(User Input)*
Weight of Coax Cable =	$W_{coax} := 1.04 \cdot plf$		*(User Input)*
Number of Coax Cables =	$N_{coax} := 18$		*(User Input)*
Number of Projected Coax Cables Transverse =	$NP_{Tcoax} := 2$		*(User Input)*
Number of Projected Coax Cables Long =	$NP_{Lcoax} := 6$		*(User Input)*
Diameter of RET Cable =	$D_{RET} := 0.315 \cdot in$		*(User Input)*
Weight of RET Cable =	$W_{RET} := 0.06 \cdot plf$		*(User Input)*
Number of RET Cables =	$N_{RET} := 6$		*(User Input)*
Number of Projected RET Cables Transverse =	$NP_{TRET} := 0$		*(User Input)*
Number of Projected RET Cables Long =	$NP_{LRET} := 0$		*(User Input)*

CENTEK engineering
Centered on Solutions℠ www.centekeng.com
63-2 North Branford Road P: (203) 488-0580
Branford, CT 06405 F: (203) 488-8587

Subject:	Coax Cable Loads Tower # 29317
Location:	Manchester, CT
Rev. 3: 1/8/19	Prepared by: T.J.L Checked by: C.F.C. Job No. 17159.14

Shape Factor = $Cd_{coax} := 1.6$ *(User Input)*

Overload Factor for NESC Heavy Wind Load = $OF_{HW} := 2.5$ *(User Input)*

Overload Factor for NESC Extreme Wind Load = $OF_{EW} := 1.0$ *(User Input)*

Overload Factor for NESC Heavy Vertical Load = $OF_{HV} := 1.5$ *(User Input)*

Overload Factor for NESC Extreme Vertical Load = $OF_{EV} := 1.0$ *(User Input)*

Wind Area with Ice Transverse = $A_{Tice} := \left(NP_{Tcoax} \cdot D_{coax} + 2 \cdot Ir\right) = 4.96 \cdot in$

Wind Area with Ice Long = $A_{Lice} := \left(NP_{Lcoax} \cdot D_{coax} + 2 \cdot Ir\right) = 12.88 \cdot in$

Wind Area without Ice Transverse = $A_T := \left(NP_{Tcoax} \cdot D_{coax}\right) = 3.96 \cdot in$

Wind Area without Ice Long = $A_L := \left(NP_{Lcoax} \cdot D_{coax}\right) = 11.88 \cdot in$

Ice Area per Liner Ft = $Ai_{coax} := \frac{\pi}{4} \cdot \left[\left(D_{coax} + 2 \cdot Ir\right)^2 - D_{coax}^2\right] = 0.027\,ft^2$

Weight of Ice on All Coax Cables = $W_{ice} := Ai_{coax} \cdot Id \cdot N_{coax} = 27.269 \cdot plf$

Heavy Vertical Load =

$$Heavy_{Vert} := \overrightarrow{\left[\left(N_{coax} \cdot W_{coax} + N_{RET} \cdot W_{RET} + W_{ice}\right) \cdot Coax_{Span} \cdot OF_{HV}\right]}$$

$Heavy_{Vert} = 695\,lb$

Heavy Transverse Load =

$$Heavy_{Trans} := \overrightarrow{\left(p \cdot A_{Tice} \cdot Cd_{coax} \cdot Coax_{Span} \cdot OF_{HW}\right)}$$

$Heavy_{Trans} = 66\,lb$

Heavy Transverse Load =

$$Heavy_{Long} := \overrightarrow{\left(p \cdot A_{Lice} \cdot Cd_{coax} \cdot Coax_{Span} \cdot OF_{HW}\right)}$$

$Heavy_{Long} = 172\,lb$

Extreme Vertical Load =

$$Extreme_{Vert} := \overrightarrow{\left[\left(N_{coax} \cdot W_{coax} + N_{RET} \cdot W_{RET}\right) \cdot Coax_{Span} \cdot OF_{EV}\right]}$$

$Extreme_{Vert} = 191\,lb$

Extreme Transverse Load =

$$Extreme_{Trans} := \overrightarrow{\left[\left(qz \cdot psf \cdot A_T \cdot Cd_{coax}\right) \cdot Coax_{Span} \cdot OF_{EW}\right]}$$

$Extreme_{Trans} = 169\,lb$

Extreme Long Load =

$$Extreme_{Long} := \overrightarrow{\left[\left(qz \cdot psf \cdot A_L \cdot Cd_{coax}\right) \cdot Coax_{Span} \cdot OF_{EW}\right]}$$

$Extreme_{Long} = 507\,lb$

Centek Engineering Inc, Project: "Structure 29317"
PLS-POLE Version 14.21, 2:43:15 PM Tuesday, March 06, 2018
Undeformed geometry displayed

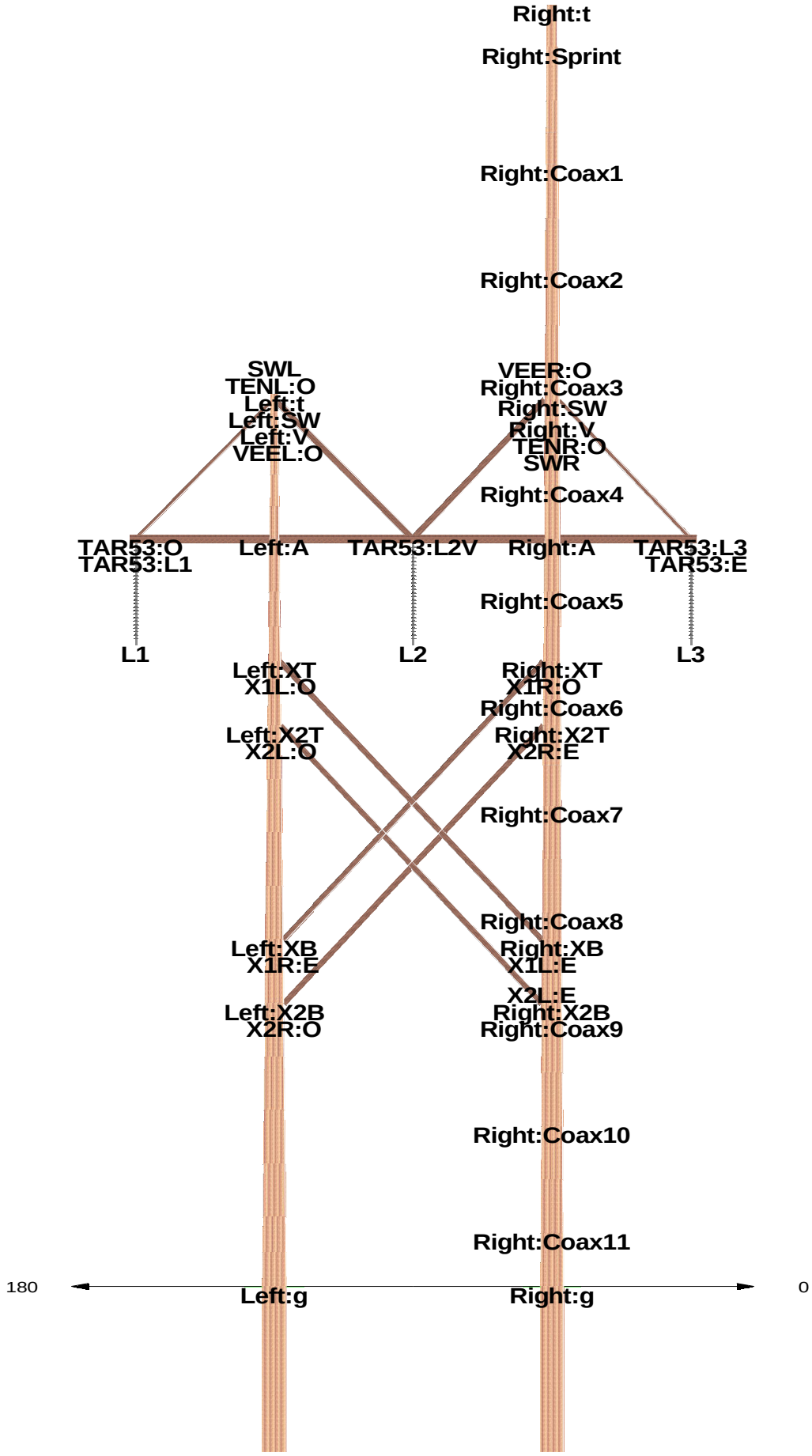

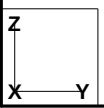

Project Name : 17159.14 - Manchester, CT
Project Notes: Structure 29317 / Sprint CT33XC538
Project File : j:\jobs\1715900.wi\14_ct33xc538 manchester\04_structural\calcs\rev (3)\pls pole\structure 29317.pol
Date run : 9:47:43 AM Tuesday, January 08, 2019
by : PLS-POLE Version 14.21
Licensed to : Centek Engineering Inc

Successfully performed nonlinear analysis

The model has 0 warnings.

Loads from file: j:\jobs\1715900.wi\14_ct33xc538 manchester\04_structural\calcs\rev (3)\pls pole\29317.lca

*** Analysis Results:

Maximum element usage is 84.48% for X-Arm "TAR53" in load case "Ext. Wind L"
Maximum insulator usage is 16.22% for Clamp "C1" in load case "Ext. Wind T"

Summary of Joint Support Reactions For All Load Cases:

Load Case	Joint Label	Long. Force (kips)	Tran. Force (kips)	Vert. Force (kips)	Shear Force (kips)	Tran. Moment (ft-k)	Long. Moment (ft-k)	Bending Moment (ft-k)	Vert. Moment (ft-k)	Found. Usage %
NESC Heavy T	Left:g	-0.03	-5.16	4.46	5.16	92.47	-1.05	92.48	-0.12	0.00
NESC Heavy T	Right:g	-0.06	-6.96	-67.21	6.96	125.24	-3.64	125.29	-0.16	0.00
NESC Heavy L	Left:g	-2.43	0.12	-16.53	2.43	-2.41	-95.24	95.27	-8.65	0.00
NESC Heavy L	Right:g	-7.03	-0.23	-46.24	7.03	3.19	-437.06	437.07	-10.74	0.00
Ext. Wind T	Left:g	-0.03	-13.91	43.98	13.91	243.73	-0.88	243.73	-0.09	0.00
Ext. Wind T	Right:g	-0.05	-18.68	-81.60	18.68	332.53	-2.98	332.54	-0.10	0.00
Ext. Wind L	Left:g	-7.90	-0.27	-10.18	7.90	0.76	-295.63	295.63	-25.64	0.00
Ext. Wind L	Right:g	-22.09	0.06	-27.63	22.09	-2.47	-1336.26	1336.27	-32.95	0.00

Summary of Tip Deflections For All Load Cases:

Note: positive tip load results in positive deflection

Load Case	Joint Label	Long. Defl. (in)	Tran. Defl. (in)	Vert. Defl. (in)	Resultant Defl. (in)	Long. Rot. (deg)	Tran. Rot. (deg)	Twist (deg)
NESC Heavy T	Left:t	0.20	0.27	-0.00	0.33	0.02	0.57	0.01
NESC Heavy T	Right:t	0.20	6.38	-0.06	6.38	0.01	-0.62	0.00
NESC Heavy L	Left:t	19.93	-0.06	-0.25	19.94	1.57	0.11	0.52
NESC Heavy L	Right:t	25.17	0.95	-0.28	25.19	1.35	-0.08	0.10
Ext. Wind T	Left:t	0.15	0.68	0.00	0.69	0.01	1.42	0.00
Ext. Wind T	Right:t	0.17	17.37	-0.23	17.37	0.01	-1.79	0.00
Ext. Wind L	Left:t	60.45	0.60	-2.11	60.49	4.75	0.14	1.55
Ext. Wind L	Right:t	76.56	1.42	-2.36	76.61	4.10	-0.09	0.32

*** Overall summary for all load cases - Usage = Maximum Stress / Allowable Stress

Summary of Laminated Wood Pole Usages:

Laminated Wood Pole Label	Maximum Usage %	Load Case	Segment Number	Weight (lbs)
Left	64.08	Ext. Wind L	22	8687.1
Right	77.70	Ext. Wind L	31	24300.8

Summary of X-Arm Usages:

X-Arm Label	Maximum Usage %	Load Case	Segment Number	Weight (lbs)
TAR53	84.48	Ext. Wind L	10	1500.0

Summary of Brace Usages:

Brace Label	Maximum Usage %	Load Case	Weight (lbs)
TENL	5.13	NESC Heavy T	70.0
TENR	4.90	NESC Heavy T	70.0
VEEL	40.91	Ext. Wind T	210.0
VEER	7.56	Ext. Wind T	210.0
X1L	70.43	Ext. Wind T	450.0
X1R	7.42	Ext. Wind T	450.0
X2L	45.80	Ext. Wind T	450.0
X2R	7.22	Ext. Wind T	450.0

*** Maximum Stress Summary for Each Load Case

Summary of Maximum Usages by Load Case:

Load Case	Maximum Usage %	Element Label	Element Type
NESC Heavy T	33.38	X1L	Brace
NESC Heavy L	31.35	TAR53	X-Arm
Ext. Wind T	70.43	X1L	Brace
Ext. Wind L	84.48	TAR53	X-Arm

Summary of Laminated Wood Pole Usages by Load Case:

Load Case	Maximum Usage %	Laminated Wood Pole Segment Label	Number
NESC Heavy T	29.01	Left	6
NESC Heavy L	30.51	Right	31
Ext. Wind T	62.01	Left	6
Ext. Wind L	77.70	Right	31

Summary of X-Arm Usages by Load Case:

Load Case	Maximum Usage %	X-Arm Segment Label	Number
NESC Heavy T	15.28	TAR53	7
NESC Heavy L	31.35	TAR53	10
Ext. Wind T	32.88	TAR53	7
Ext. Wind L	84.48	TAR53	10

Summary of Brace Usages by Load Case:

Load Case	Maximum Usage %	Brace Label
NESC Heavy T	33.38	X1L
NESC Heavy L	4.96	TENL
Ext. Wind T	70.43	X1L
Ext. Wind L	3.36	X2R

Summary of Insulator Usages:

Insulator Label	Insulator Type	Maximum Usage %	Load Case	Weight (lbs)
C1	Clamp	16.22	Ext. Wind T	0.0
C2	Clamp	7.68	Ext. Wind L	0.0
C3	Clamp	8.48	Ext. Wind L	0.0
C4	Clamp	7.69	Ext. Wind L	0.0
C5	Clamp	8.27	Ext. Wind L	0.0
C6	Clamp	8.52	Ext. Wind L	0.0
C7	Clamp	7.82	Ext. Wind L	0.0
C8	Clamp	9.18	Ext. Wind L	0.0
C9	Clamp	8.78	Ext. Wind L	0.0
C10	Clamp	8.53	Ext. Wind L	0.0
C11	Clamp	10.45	Ext. Wind L	0.0
C12	Clamp	10.70	Ext. Wind L	0.0
SUSL	Suspension	4.16	Ext. Wind T	200.0
SUSC	Suspension	4.16	Ext. Wind T	200.0
SUSR	Suspension	4.16	Ext. Wind T	200.0
SWL	Suspension	1.69	NESC Heavy T	3.0
SWR	Suspension	1.69	NESC Heavy T	3.0

*** Weight of structure (lbs):

Weight of Braces:	2360.0
Weight of X-Arms:	1500.0
Weight of Laminated Wood Poles:	32987.9
Weight of Suspensions:	606.0
Total:	37453.9

*** End of Report

```
**************************************************************************
*                                                                        *
*                              PLS-POLE                                  *
*                   POLE AND FRAME ANALYSIS AND DESIGN                   *
*               Copyright Power Line Systems, Inc. 1999-2016             *
*                                                                        *
**************************************************************************

Project Name : 17159.14 - Manchester, CT
Project Notes: Structure 29317 / Sprint CT33XC538
Project File : j:\jobs\1715900.wi\14_ct33xc538 manchester\04_structural\calcs\rev (3)\pls pole\structure 29317.pol
Date run     : 9:47:42 AM Tuesday, January 08, 2019
by           : PLS-POLE Version 14.21
Licensed to  : Centek Engineering Inc

Successfully performed nonlinear analysis

The model has 0 warnings.
```

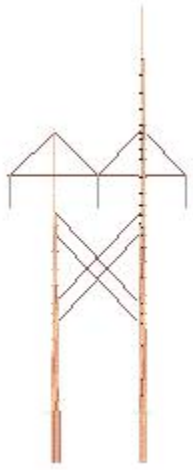

```
Modeling options:
  Offset Arms from Pole/Mast:   Yes
  Offset Braces from Pole/Mast: Yes
  Offset Guys from Pole/Mast:   Yes
  Offset Posts from Pole/Mast:  Yes
  Offset Strains from Pole/Mast:  Yes
  Use Alternate Convergence Process: No
```

Laminated Wood Pole Properties:

Laminated Pole Property Label	Stock Pole Number	Length (ft)	Default Embedded Length (ft)	Stop Dist. From Butt (ft)	Taper Tip Dim. (in)	Trans. Tip Dim. (in)	Long. Base Dim. (in)	Trans. Base Dim. (in)	Long. Default Drag Coef.	Modulus of Elasticity (ksi)	Density (lbs/ft^3)	Trans. MOR (ksi)	Long. MOR (ksi)

AP12001155T19P	SYP (LWS)	135.50	15.5	15.50	12	28.25	26.13	28.25	1.60	2400	46	7.68
PELR-H3-99WC155	SYP (LWS)	99.00	15.5	15.50	8	14.25	27.5	14.25	1.60	2400	46	7.68

Laminated Wood Pole Connectivity:

Pole Label	Tip Joint	Base Joint	X of Base (ft)	Y of Base (ft)	Z of Base (ft)	Inclin. About X (deg)	Inclin. About Y (deg)	Property Set	Attach. Labels	Base Connect	Embed % Override	Embed C. Override (ft)
Left			0	-13	0	0	0	PELR-H3-99WC155	7 labels	Fixed	0.00	0
Right			0	13	0	0	0	AP12001155T19P	19 labels	Fixed	0.00	0

Relative Attachment Labels for Laminated Wood Pole "Left":

Joint Label	Distance From Origin/Top Joint (ft)	Global Z of Attach (ft)
Left:SW	0.75	0.00
Left:V	2.50	0.00
Left:A	13.50	0.00
Left:XT	25.00	0.00
Left:XB	51.00	0.00
Left:X2T	31.00	0.00
Left:X2B	57.00	0.00

Relative Attachment Labels for Laminated Wood Pole "Right":

Joint Label	Distance From Origin/Top Joint (ft)	Global Z of Attach (ft)
Right:Sprint	4.00	0.00
Right:SW	37.00	0.00
Right:V	39.00	0.00
Right:A	50.00	0.00
Right:XT	61.50	0.00
Right:XB	87.50	0.00
Right:X2T	67.50	0.00
Right:X2B	93.50	0.00
Right:Coax1	0.00	105.00
Right:Coax2	0.00	95.00
Right:Coax3	0.00	85.00
Right:Coax4	0.00	75.00
Right:Coax5	0.00	65.00
Right:Coax6	0.00	55.00
Right:Coax7	0.00	45.00
Right:Coax8	0.00	35.00
Right:Coax9	0.00	25.00
Right:Coax10	0.00	15.00
Right:Coax11	0.00	5.00

Detailed Laminated Wood Properties:

Element Label	Pole Feature	Dist. Above Ground (ft)	Dist. From Tip (ft)	Trans. Dim. (in)	Long. Dim. (in)	Area (in^2)	Trans. Section Modulus (in^3)	Long. Section Modulus (in^3)	Trans. Inertia (in^4)	Long. Inertia (in^4)	Trans. MOR (ksi)	Long. MOR (ksi)	Trans. Moment Capacity (ft-k)	Long. Moment Capacity (ft-k)
Left	Left:t	83.50	0.00	8.00	14.25	114.00	152.00	270.75	608.00	1929.09	7.600	8.000	96.267	180.500
Left	Left:SW	82.75	0.75	8.18	14.25	116.50	158.73	276.68	648.81	1971.33	7.600	8.000	100.528	184.452
Left	Left:V	81.00	2.50	8.58	14.25	122.32	175.00	290.51	751.06	2069.88	7.600	8.000	110.830	193.672
Left		76.00	7.50	9.75	14.25	138.96	225.84	330.03	1101.15	2351.44	7.600	8.000	143.034	220.018
Left		73.00	10.50	10.45	14.25	148.94	259.46	353.74	1355.95	2520.38	7.600	8.000	164.324	235.825
Left	Left:A	70.00	13.50	11.15	14.25	158.93	295.41	377.45	1647.30	2689.32	7.600	8.000	187.092	251.632
Left		65.00	18.50	12.32	14.25	175.57	360.50	416.97	2220.77	2970.89	7.600	8.000	228.319	277.978
Left		61.75	21.75	13.08	14.25	186.38	406.29	442.65	2657.00	3153.91	7.600	8.000	257.316	295.102
Left	Left:XT	58.50	25.00	13.84	14.25	197.20	454.81	468.34	3146.91	3336.93	7.600	8.000	288.046	312.227
Left		55.50	28.00	14.54	14.25	207.18	502.03	492.05	3649.47	3505.87	7.600	8.000	317.951	328.034
Left	Left:X2T	52.50	31.00	15.24	14.25	217.16	551.58	515.76	4202.89	3674.81	7.600	8.000	349.332	343.841
Left		47.50	36.00	16.41	14.25	233.80	639.34	555.28	5244.88	3956.37	7.581	8.000	403.898	370.187
Left		42.50	41.00	17.57	14.25	250.44	733.58	594.80	6446.27	4237.94	7.529	8.000	460.258	396.532
Left		37.50	46.00	18.74	14.25	267.08	834.29	634.32	7818.39	4519.51	7.481	8.000	520.092	422.877
Left	Left:XB	32.50	51.00	19.91	14.25	283.72	941.49	673.84	9372.58	4801.08	7.436	8.000	583.378	449.223
Left		29.50	54.00	20.61	14.25	293.70	1008.91	697.55	10397.21	4970.02	7.410	8.000	622.998	465.030
Left	Left:X2B	26.50	57.00	21.31	14.25	303.69	1078.67	721.26	11493.92	5138.96	7.385	8.000	663.849	480.837
Left		21.50	62.00	22.48	14.25	320.33	1200.10	760.78	13488.60	5420.52	7.346	8.000	734.658	507.183
Left		16.50	67.00	23.65	14.25	336.97	1328.02	800.29	15701.66	5702.09	7.309	8.000	808.857	533.528
Left		11.50	72.00	24.81	14.25	353.60	1462.41	839.81	18144.43	5983.66	7.274	8.000	886.428	559.873
Left		6.50	77.00	25.98	14.25	370.24	1603.28	879.33	20828.27	6265.22	7.240	8.000	967.356	586.219
Left		3.25	80.25	26.74	14.25	381.06	1698.32	905.02	22707.40	6448.24	7.220	8.000	1021.752	603.343
Left	Left:g	0.00	83.50	27.50	14.25	391.88	1796.09	930.70	24696.29	6631.26	7.199	8.000	1077.555	620.468
Right	Right:t	120.00	0.00	12.00	28.25	339.00	678.00	1596.13	4068.00	22545.27	7.600	8.000	429.399	1064.082
Right	Right:Sprint	116.00	4.00	12.47	28.25	352.31	732.27	1658.77	4566.05	23430.17	7.600	8.000	463.769	1105.847
Right		111.00	9.00	13.06	28.25	368.94	803.04	1737.08	5243.75	24536.29	7.600	8.000	508.591	1158.053
Right		108.00	12.00	13.41	28.25	378.92	847.07	1784.07	5680.87	25199.97	7.600	8.000	536.477	1189.377
Right	Right:Coax1	105.00	15.00	13.77	28.25	388.90	892.27	1831.05	6141.64	25863.65	7.600	8.000	565.106	1220.701
Right		100.00	20.00	14.35	28.25	405.53	970.23	1909.36	6963.81	26969.77	7.600	8.000	614.476	1272.908
Right	Right:Coax2	95.00	25.00	14.94	28.25	422.16	1051.44	1987.67	7856.26	28075.90	7.600	8.000	665.914	1325.114
Right		90.00	30.00	15.53	28.25	438.79	1135.93	2065.98	8821.88	29182.03	7.600	8.000	719.418	1377.321
Right	Right:Coax3	85.00	35.00	16.12	28.25	455.43	1223.67	2144.29	9863.55	30288.16	7.594	8.000	774.405	1429.527
Right	Right:SW	83.00	37.00	16.36	28.25	462.08	1259.68	2175.62	10302.16	30730.61	7.583	8.000	796.041	1450.410
Right	Right:V	81.00	39.00	16.59	28.25	468.73	1296.22	2206.94	10753.58	31173.06	7.572	8.000	817.958	1471.292
Right		78.00	42.00	16.95	28.25	478.71	1352.00	2253.93	11455.14	31836.73	7.556	8.000	851.362	1502.616
Right	Right:Coax4	75.00	45.00	17.30	28.25	488.69	1408.95	2300.91	12186.57	32500.41	7.541	8.000	885.399	1533.940
Right	Right:A	70.00	50.00	17.89	28.25	505.32	1506.49	2379.22	13473.68	33606.54	7.516	8.000	943.529	1586.147
Right	Right:Coax5	65.00	55.00	18.48	28.25	521.95	1607.29	2457.53	14848.37	34712.66	7.491	8.000	1003.407	1638.353
Right		61.75	58.25	18.86	28.25	532.76	1674.56	2508.44	15790.25	35431.65	7.476	8.000	1043.262	1672.287
Right	Right:XT	58.50	61.50	19.24	28.25	543.58	1743.21	2559.34	16771.13	36150.63	7.461	8.000	1083.853	1706.222
Right	Right:Coax6	55.00	65.00	19.65	28.25	555.22	1818.69	2614.15	17872.01	36924.92	7.445	8.000	1128.385	1742.766
Right	Right:X2T	52.50	67.50	19.95	28.25	563.53	1873.58	2653.31	18687.17	37477.98	7.434	8.000	1160.713	1768.870
Right		48.75	71.25	20.39	28.25	576.01	1957.44	2712.04	19955.79	38307.58	7.418	8.000	1210.016	1808.024
Right	Right:Coax7	45.00	75.00	20.83	28.25	588.48	2043.14	2770.77	21280.57	39137.17	7.402	8.000	1260.289	1847.179
Right		40.00	80.00	21.42	28.25	605.12	2160.26	2849.08	23136.39	40243.30	7.381	8.000	1328.825	1899.386
Right	Right:Coax8	35.00	85.00	22.01	28.25	621.75	2280.65	2927.39	25097.09	41349.43	7.361	8.000	1399.079	1951.592
Right	Right:XB	32.50	87.50	22.30	28.25	630.06	2342.06	2966.55	26117.67	41902.49	7.352	8.000	1434.847	1977.696
Right		29.50	90.50	22.66	28.25	640.04	2416.84	3013.53	27378.43	42566.17	7.340	8.000	1478.334	2009.019
Right	Right:X2B	26.50	93.50	23.01	28.25	650.02	2492.79	3060.52	28679.12	43229.84	7.329	8.000	1522.436	2040.343
Right	Right:Coax9	25.00	95.00	23.19	28.25	655.01	2531.21	3084.01	29344.64	43561.68	7.323	8.000	1544.717	2056.005
Right		20.00	100.00	23.78	28.25	671.64	2661.39	3162.32	31637.25	44667.81	7.305	8.000	1620.093	2108.212
Right	Right:Coax10	15.00	105.00	24.36	28.25	688.28	2794.83	3240.63	34046.28	45773.93	7.287	8.000	1697.168	2160.418
Right		10.00	110.00	24.95	28.25	704.91	2931.54	3318.94	36574.58	46880.06	7.270	8.000	1775.937	2212.625

Right	Right:Coax11	5.00	115.00	25.54	28.25	721.54	3071.51	3397.25	39225.06	47986.19	7.253	8.000	1856.397	2264.831					
Right	Right:g	0.00	120.00	26.13	28.25	738.17	3214.74	3475.56	42000.59	49092.32	7.236	8.000	1938.544	2317.038					

Brace Properties:

Brace Property Label	Stock Number	Cross Section	Length	Depth	Width	Weight	Unit Wt. (If Length Unknown)	Modulus of Elasticity	Drag Coef.	Strength Check Type	Use Steel S.F.	Tension Capacity	Compres. Capacity	Net Area	Design Normal Stress	X-Moment Of Inertia	Z-Moment Of Inertia	Unbraced Length Ratio-X	Unbraced Length Ratio-Z
		(in^2)	(ft)	(in)	(in)	(lbs)	(lbs/ft)	(ksi)				(lbs)	(lbs)	(in^2)	(ksi)	(in^4)	(in^4)		
ten2038	2038E160.5	15.75	18	4.5	3.5	70	0	1600	1.6	Calculated	No	30000	16505	15.75	6.3	16.1	26.6	1	1
X2123	2123-23-0	40.5	36	6.75	6	450	0	1600	1.6	Calculated	No	30000	16505	40.5	6.3	153.8	121.5	0.5	0.5
x2123	2123-26-0	40.5	36	6.75	6	450	0	1600	1.6	Calculated	No	35000	66950	40.5	6.3	153.8	121.5	0.5	0.5
v2579-M	b5279-m	38.4	18	7.5	5.125	210	0	1600	1.6	Calculated	No	30000	23141	38.4	6.3	84.1	180.2	1	1

Brace Connectivity:

Brace Label	Origin Label	End Label	Brace Property Set	Element Type
TENL	Left:SW	TAR53:L1	ten2038	Standard
TENR	Right:SW	TAR53:L3	ten2038	Standard
VEEL	Left:SW	TAR53:L2V	v2579-M	Standard
VEER	Right:SW	TAR53:L2V	v2579-M	Standard
X1L	Left:XT	Right:XB	x2123	Standard
X1R	Right:XT	Left:XB	x2123	Standard
X2L	Left:X2T	Right:X2B	x2123	Standard
X2R	Left:X2B	Right:X2T	X2123	Standard

X-Arm Properties:

Cross Arm Property Label	Stock Number	Cross Section Area	X Inertia	Z Inertia	Weight	Depth	Width	Length	Modulus of Elasticity	Drag Coef.	Geometry Check	Strength Type	Use Steel S.F.	Vertical Capacity	Trans. Capacity	Long. Capacity	Design Normal Stress	X Section Modulus	Z Section Modulus
		(in^2)	(in^4)	(in^4)	(lbs)	(in)	(in)	(ft)	(ksi)					(lbs)	(lbs)	(lbs)	(psi)	(in^3)	(in^3)
TAR53DBL		76.9	168.3	360.4	1500	7.5	10.25	53	2100	1.6	5 points	Calculated	No	0	0	0	8000	65.7	96.1

Intermediate Joints and Bolt Holes for Cross Arm Property "TAR53DBL":

Joint Label	Offset	Horz. Hole Diameter	Vert. Hole Diameter

	(ft)	(in)	(in)
L1	0.5	0	0
PL	13.5	0	0
L2V	26.5	0	0
PR	39.5	0	0
L3	52.5	0	0

X-Arm Connectivity:

X-Arm Label	X-Arm Property Set	Azimuth (deg)	Slope (deg)	Attach. Labels	Connects
TAR53	TAR53DBL	0	0		7 connections

X-Arm Connections for "TAR53":

Attach Label	Offset (ft)	Connect At	Connection Code Type
TAR53:O	0.000		
TAR53:L1	0.500		
TAR53:PL	13.500	Left:A	Pinned X
TAR53:L2V	26.500		
TAR53:PR	39.500	Right:A	Pinned X
TAR53:L3	52.500		
TAR53:E	53.000		

*** Insulator Data

Clamp Properties:

Label	Stock Number	Holding Capacity (lbs)
Clamp 1		1e+004

Clamp Insulator Connectivity:

Clamp Label	Structure And Tip Attach	Property Set	Min. Required Vertical Load (uplift) (lbs)
C1	Right:Sprint	Clamp 1	No Limit
C2	Right:Coax1	Clamp 1	No Limit
C3	Right:Coax2	Clamp 1	No Limit
C4	Right:Coax3	Clamp 1	No Limit
C5	Right:Coax4	Clamp 1	No Limit
C6	Right:Coax5	Clamp 1	No Limit
C7	Right:Coax6	Clamp 1	No Limit
C8	Right:Coax7	Clamp 1	No Limit
C9	Right:Coax8	Clamp 1	No Limit

C10	Right:Coax9	Clamp 1	No Limit
C11	Right:Coax10	Clamp 1	No Limit
C12	Right:Coax11	Clamp 1	No Limit

Suspension Properties:

Label	Stock Number	Length (ft)	Weight (lbs)	Wind Area (ft^2)	Tension Capacity (lbs)	Top Rect Width (ft)	Top Rect Height (ft)	Bot. Rect Width (ft)	Bot. Rect Height (ft)	Vert. Rect Width (ft)	Vert. Rect Height (ft)
SUSSW		0.25	3	0.1	6e+004	0	0	0	0	0	0
SUS345		10	200	5	6e+004	0	0	0	0	0	0

Suspension Insulator Connectivity:

Suspension Label	Structure Attach	Tip Property Set	Cond. 1 Minimum Swing (deg)	Cond. 1 Maximum Swing (deg)	Cond. 2 Minimum Swing (deg)	Cond. 2 Maximum Swing (deg)	Cond. 3 Minimum Swing (deg)	Cond. 3 Maximum Swing (deg)	Cond. 4 Minimum Swing (deg)	Cond. 4 Maximum Swing (deg)	Min. Required Vertical Load (uplift) (lbs)
SUSL	TAR53:L1	L1	SUS345	-90.00	90.00	-90.00	90.00	-90.00	90.00	-180.00	180.00	No Limit
SUSC	TAR53:L2V	L2	SUS345	-90.00	90.00	-90.00	90.00	-90.00	90.00	-180.00	180.00	No Limit
SUSR	TAR53:L3	L3	SUS345	-90.00	90.00	-90.00	90.00	-90.00	90.00	-180.00	180.00	No Limit
SWL	Left:SW	SWL	SUSSW	-90.00	90.00	-90.00	90.00	-90.00	90.00	-180.00	180.00	No Limit
SWR	Right:SW	SWR	SUSSW	-90.00	90.00	-90.00	90.00	-90.00	90.00	-180.00	180.00	No Limit

Material List

Stock Number	Item Description	Quantity	Unit of Measure
2038E160.5	Brace property: ten2038	2.00	Each
b5279-m	Brace property: v2579-M	2.00	Each
2123-26-0	Brace property: x2123	3.00	Each
2123-23-0	Brace property: X2123	1.00	Each

*** Loads Data

Loads from file: j:\jobs\1715900.wi\14_ct33xc538 manchester\04_structural\calcs\rev (3)\pls pole\29317.lca

Insulator dead and wind loads are already included in the point loads printed below.

Loading Method Parameters:

Structure Height Summary (used for calculating wind/ice adjust with height):
  Z of ground for wind height adjust   0.00 (ft) and structure Z coordinate that will be put on the centerline ground profile in PLS-CADD.
  Ground elevation shift   0.00 (ft)
  Z of ground with shift   0.00 (ft)
  Z of structure top (highest joint)   120.00 (ft)
  Structure height   120.00 (ft)
  Structure height above ground   120.00 (ft)

Vector Load Cases:

Load Case Description	Dead Load Factor	Wind Area Factor	SF for Steel Poles and Towers	SF for Wood Poles	SF for Conc. Poles First Crack	SF for Conc. Poles Ult.	SF for Conc. Poles Zero Tens.	SF for Guys and Cables	SF for Tubular Arms	SF for Braces	SF for Insuls.	SF For Found.	Point Loads	Wind/Ice Model	Trans. Wind Pressure (psf)	Longit. Wind Pressure (psf)	Ice Thick. (in)	Ice Density (lbs/ft^3)	Temperature (deg F)	Deflection Check	Deflection Limit % or (ft)
NESC Heavy T	1.5000	2.5000	1.00000	0.6500	0.0000	0.0000	0.0000	1.0000	0.6500	0.6500	1.0000	1.0000	17 loads	Wind on All	4	0	0.000	0.000	0.0	No Limit	0
NESC Heavy L	1.5000	2.5000	1.00000	0.6500	0.0000	0.0000	0.0000	1.0000	0.6500	0.6500	1.0000	1.0000	17 loads	Wind on All	0	4	0.000	0.000	0.0	No Limit	0
Ext. Wind T	1.0000	1.0000	1.00000	0.7500	0.0000	0.0000	0.0000	1.0000	0.7500	0.7500	1.0000	1.0000	17 loads	NESC 2012	31	0	0.000	0.000	0.0	No Limit	0
Ext. Wind L	1.0000	1.0000	1.00000	0.7500	0.0000	0.0000	0.0000	1.0000	0.7500	0.7500	1.0000	1.0000	17 loads	NESC 2012	0	31	0.000	0.000	0.0	No Limit	0

Point Loads for Load Case "NESC Heavy T":

Joint Label	Vertical Load (lbs)	Transverse Load (lbs)	Longitudinal Load (lbs)	Load Comment
SWL	771	654	0	Shield Wire
SWR	771	654	0	Shield Wire
L1	1966	1004	0	Conductor
L2	1966	1004	0	Conductor
L3	1966	1004	0	Conductor
Right:Sprint	814	252	0	Sprint
Right:Coax1	695	66	0	Coax
Right:Coax2	695	66	0	Coax
Right:Coax3	695	66	0	Coax
Right:Coax4	695	66	0	Coax
Right:Coax5	695	66	0	Coax
Right:Coax6	695	66	0	Coax

Right:Coax7	695	66	0	Coax
Right:Coax8	695	66	0	Coax
Right:Coax9	695	66	0	Coax
Right:Coax10	695	66	0	Coax
Right:Coax11	695	66	0	Coax

Detailed Pole Loading Data for Load Case "NESC Heavy T":

Notes: Does not include loads from equipment, arms, guys, braces, etc. or user input loads.
Wind load is calculated for the undeformed shape of a pole.

Pole Label	Top Joint	Bottom Joint	Section Top Z (ft)	Section Bottom Z (ft)	Section Average Elevation (ft)	Outer Diameter (in)	Reynolds Number	Drag Coef.	Adjusted Wind Pressure (psf)	Adjusted Ice Thickness (in)	Pole Vert. Load (lbs)	Pole Wind Load (lbs)	Pole Ice Vertical Load (lbs)	Pole Ice Wind Load (lbs)	Tran. Wind Load (lbs)	Long. Wind Load (lbs)
Left	Left:t	Left:SW	83.50	82.75	83.13	8.088	3.83e+005	1.600	10.00	0.00	41.42	14.25	0.00	0.00	14.25	0.08
Left	Left:SW	Left:V	82.75	81.00	81.88	8.379	3.97e+005	1.600	10.00	0.00	100.13	33.25	0.00	0.00	33.25	0.20
Left	Left:V		81.00	76.00	78.50	9.168	4.34e+005	1.600	10.00	0.00	312.99	95.00	0.00	0.00	95.00	0.64
Left			76.00	73.00	74.50	10.102	4.78e+005	1.600	10.00	0.00	206.93	57.00	0.00	0.00	57.00	0.42
Left		Left:A	73.00	70.00	71.50	10.802	5.11e+005	1.600	10.00	0.00	221.28	57.00	0.00	0.00	57.00	0.45
Left	Left:A		70.00	65.00	67.50	11.737	5.56e+005	1.600	10.00	0.00	400.69	95.00	0.00	0.00	95.00	0.82
Left			65.00	61.75	63.38	12.700	6.01e+005	1.600	10.00	0.00	281.83	61.75	0.00	0.00	61.75	0.57
Left		Left:XT	61.75	58.50	60.13	13.459	6.37e+005	1.600	10.00	0.00	298.67	61.75	0.00	0.00	61.75	0.61
Left	Left:XT		58.50	55.50	57.00	14.189	6.72e+005	1.600	10.00	0.00	290.65	57.00	0.00	0.00	57.00	0.59
Left		Left:X2T	55.50	52.50	54.00	14.250	6.75e+005	1.600	10.00	0.00	305.00	57.00	0.00	0.00	57.00	0.62
Left	Left:X2T		52.50	47.50	50.00	14.250	6.75e+005	1.600	10.00	0.00	540.22	95.01	0.00	0.00	95.00	1.10
Left			47.50	42.50	45.00	14.250	6.75e+005	1.600	10.00	0.00	580.08	95.01	0.00	0.00	95.00	1.18
Left			42.50	37.50	40.00	14.250	6.75e+005	1.600	10.00	0.00	619.95	95.01	0.00	0.00	95.00	1.26
Left		Left:XB	37.50	32.50	35.00	14.250	6.75e+005	1.600	10.00	0.00	659.81	95.01	0.00	0.00	95.00	1.35
Left	Left:XB		32.50	29.50	31.00	14.250	6.75e+005	1.600	10.00	0.00	415.02	57.01	0.00	0.00	57.00	0.85
Left		Left:X2B	29.50	26.50	28.00	14.250	6.75e+005	1.600	10.00	0.00	429.37	57.01	0.00	0.00	57.00	0.88
Left	Left:X2B		26.50	21.50	24.00	14.250	6.75e+005	1.600	10.00	0.00	747.52	95.01	0.00	0.00	95.00	1.52
Left			21.50	16.50	19.00	14.250	6.75e+005	1.600	10.00	0.00	787.38	95.01	0.00	0.00	95.00	1.61
Left			16.50	11.50	14.00	14.250	6.75e+005	1.600	10.00	0.00	827.25	95.01	0.00	0.00	95.00	1.69
Left			11.50	6.50	9.00	14.250	6.75e+005	1.600	10.00	0.00	867.11	95.02	0.00	0.00	95.00	1.77
Left			6.50	3.25	4.87	14.250	6.75e+005	1.600	10.00	0.00	585.00	61.76	0.00	0.00	61.75	1.19
Left		Left:g	3.25	0.00	1.62	14.250	6.75e+005	1.600	10.00	0.00	601.84	61.76	0.00	0.00	61.75	1.23
Right	Right:t	Right:Sprint	120.00	116.00	118.00	12.236	5.79e+005	1.600	10.00	0.00	662.50	150.67	0.00	0.00	150.67	0.68
Right	Right:Sprint		116.00	111.00	113.50	12.765	6.04e+005	1.600	10.00	0.00	863.99	188.34	0.00	0.00	188.33	0.89
Right			111.00	108.00	109.50	13.236	6.27e+005	1.600	10.00	0.00	537.52	113.00	0.00	0.00	113.00	0.55
Right		Right:Coax1	108.00	105.00	106.50	13.590	6.43e+005	1.600	10.00	0.00	551.87	113.00	0.00	0.00	113.00	0.57
Right	Right:Coax1		105.00	100.00	102.50	14.061	6.66e+005	1.600	10.00	0.00	951.66	188.34	0.00	0.00	188.33	0.98
Right		Right:Coax2	100.00	95.00	97.50	14.649	6.94e+005	1.600	10.00	0.00	991.50	188.34	0.00	0.00	188.33	1.02
Right	Right:Coax2		95.00	90.00	92.50	15.238	7.21e+005	1.600	10.00	0.00	1031.35	188.34	0.00	0.00	188.33	1.06
Right		Right:Coax3	90.00	85.00	87.50	15.827	7.49e+005	1.600	10.00	0.00	1071.20	188.34	0.00	0.00	188.33	1.10
Right	Right:Coax3	Right:SW	85.00	83.00	84.00	16.239	7.69e+005	1.600	10.00	0.00	439.64	75.33	0.00	0.00	75.33	0.45
Right	Right:SW	Right:V	83.00	81.00	82.00	16.474	7.8e+005	1.600	10.00	0.00	446.01	75.33	0.00	0.00	75.33	0.46
Right	Right:V		81.00	78.00	79.50	16.769	7.94e+005	1.600	10.00	0.00	680.97	113.00	0.00	0.00	113.00	0.70
Right		Right:Coax4	78.00	75.00	76.50	17.122	8.11e+005	1.600	10.00	0.00	695.32	113.00	0.00	0.00	113.00	0.72
Right	Right:Coax4	Right:A	75.00	70.00	72.50	17.593	8.33e+005	1.600	10.00	0.00	1190.74	188.34	0.00	0.00	188.33	1.22
Right	Right:A	Right:Coax5	70.00	65.00	67.50	18.182	8.61e+005	1.600	10.00	0.00	1230.59	188.34	0.00	0.00	188.33	1.27
Right	Right:Coax5		65.00	61.75	63.38	18.668	8.84e+005	1.600	10.00	0.00	821.25	122.42	0.00	0.00	122.42	0.84
Right		Right:XT	61.75	58.50	60.13	19.050	9.02e+005	1.600	10.00	0.00	838.09	122.42	0.00	0.00	122.42	0.86
Right	Right:XT	Right:Coax6	58.50	55.00	56.75	19.448	9.21e+005	1.600	10.00	0.00	921.38	131.84	0.00	0.00	131.83	0.95
Right	Right:Coax6	Right:X2T	55.00	52.50	53.75	19.801	9.37e+005	1.600	10.00	0.00	670.09	94.17	0.00	0.00	94.17	0.69
Right	Right:X2T		52.50	48.75	50.63	20.169	9.55e+005	1.600	10.00	0.00	1023.81	141.25	0.00	0.00	141.25	1.05
Right		Right:Coax7	48.75	45.00	46.88	20.610	9.76e+005	1.600	10.00	0.00	1046.22	141.25	0.00	0.00	141.25	1.08
Right	Right:Coax7		45.00	40.00	42.50	21.126	1e+006	1.600	10.00	0.00	1429.83	188.34	0.00	0.00	188.33	1.47

Right		Right:Coax8	40.00	35.00	37.50	21.714	1.03e+006	1.600	10.00	0.00	1469.68	188.34	0.00	0.00	188.33	1.51
Right	Right:Coax8	Right:XB	35.00	32.50	33.75	22.156	1.05e+006	1.600	10.00	0.00	749.78	94.17	0.00	0.00	94.17	0.77
Right	Right:XB		32.50	29.50	31.00	22.480	1.06e+006	1.600	10.00	0.00	912.89	113.00	0.00	0.00	113.00	0.94
Right		Right:X2B	29.50	26.50	28.00	22.833	1.08e+006	1.600	10.00	0.00	927.23	113.00	0.00	0.00	113.00	0.95
Right	Right:X2B	Right:Coax9	26.50	25.00	25.75	23.098	1.09e+006	1.600	10.00	0.00	469.00	56.50	0.00	0.00	56.50	0.48
Right	Right:Coax9		25.00	20.00	22.50	23.481	1.11e+006	1.600	10.00	0.00	1589.22	188.34	0.00	0.00	188.33	1.63
Right		Right:Coax10	20.00	15.00	17.50	24.069	1.14e+006	1.600	10.00	0.00	1629.07	188.34	0.00	0.00	188.33	1.68
Right	Right:Coax10		15.00	10.00	12.50	24.658	1.17e+006	1.600	10.00	0.00	1668.92	188.34	0.00	0.00	188.33	1.72
Right		Right:Coax11	10.00	5.00	7.50	25.247	1.2e+006	1.600	10.00	0.00	1708.77	188.34	0.00	0.00	188.33	1.76
Right	Right:Coax11	Right:g	5.00	0.00	2.50	25.836	1.22e+006	1.600	10.00	0.00	1748.61	188.34	0.00	0.00	188.33	1.80

Point Loads for Load Case "NESC Heavy L":

Joint Label	Vertical Load (lbs)	Transverse Load (lbs)	Longitudinal Load (lbs)	Load Comment
SWL	771	0	0	Shield Wire
SWR	771	0	0	Shield Wire
L1	1966	0	0	Conductor
L2	1966	0	0	Conductor
L3	1966	0	0	Conductor
Right:Sprint	814	0	148	Sprint
Right:Coax1	695	0	172	Coax
Right:Coax2	695	0	172	Coax
Right:Coax3	695	0	172	Coax
Right:Coax4	695	0	172	Coax
Right:Coax5	695	0	172	Coax
Right:Coax6	695	0	172	Coax
Right:Coax7	695	0	172	Coax
Right:Coax8	695	0	172	Coax
Right:Coax9	695	0	172	Coax
Right:Coax10	695	0	172	Coax
Right:Coax11	695	0	172	Coax

Detailed Pole Loading Data for Load Case "NESC Heavy L":

Notes: Does not include loads from equipment, arms, guys, braces, etc. or user input loads.
Wind load is calculated for the undeformed shape of a pole.

Pole Label	Top Joint	Bottom Joint	Section Top Z (ft)	Section Bottom Z (ft)	Section Average Elevation (ft)	Outer Diameter (in)	Reynolds Number	Drag Coef.	Adjusted Wind Pressure (psf)	Adjusted Ice Thickness (in)	Pole Vert. Load (lbs)	Pole Wind Load (lbs)	Pole Ice Vertical Load (lbs)	Pole Ice Wind Load (lbs)	Tran. Wind Load (lbs)	Long. Wind Load (lbs)
Left	Left:t	Left:SW	83.50	82.75	83.13	8.088	3.83e+005	1.600	10.00	0.00	41.42	8.09	0.00	0.00	0.15	8.09
Left	Left:SW	Left:V	82.75	81.00	81.88	8.379	3.97e+005	1.600	10.00	0.00	100.13	19.56	0.00	0.00	0.35	19.55
Left	Left:V		81.00	76.00	78.50	9.168	4.34e+005	1.600	10.00	0.00	312.99	61.13	0.00	0.00	0.99	61.12
Left			76.00	73.00	74.50	10.102	4.78e+005	1.600	10.00	0.00	206.93	40.41	0.00	0.00	0.60	40.41
Left		Left:A	73.00	70.00	71.50	10.802	5.11e+005	1.600	10.00	0.00	221.28	43.21	0.00	0.00	0.60	43.21
Left	Left:A		70.00	65.00	67.50	11.737	5.56e+005	1.600	10.00	0.00	400.69	78.25	0.00	0.00	0.99	78.24
Left			65.00	61.75	63.38	12.700	6.01e+005	1.600	10.00	0.00	281.83	55.04	0.00	0.00	0.64	55.03
Left		Left:XT	61.75	58.50	60.13	13.459	6.37e+005	1.600	10.00	0.00	298.67	58.33	0.00	0.00	0.64	58.32
Left	Left:XT		58.50	55.50	57.00	14.189	6.72e+005	1.600	10.00	0.00	290.65	56.76	0.00	0.00	0.60	56.75
Left		Left:X2T	55.50	52.50	54.00	14.250	6.75e+005	1.600	10.00	0.00	305.00	59.56	0.00	0.00	0.60	59.56
Left	Left:X2T		52.50	47.50	50.00	14.250	6.75e+005	1.600	10.00	0.00	540.22	105.49	0.00	0.00	0.99	105.49
Left			47.50	42.50	45.00	14.250	6.75e+005	1.600	10.00	0.00	580.08	113.28	0.00	0.00	0.99	113.27
Left			42.50	37.50	40.00	14.250	6.75e+005	1.600	10.00	0.00	619.95	121.06	0.00	0.00	0.99	121.06
Left		Left:XB	37.50	32.50	35.00	14.250	6.75e+005	1.600	10.00	0.00	659.81	128.85	0.00	0.00	0.99	128.84

Left	Left:XB		32.50	29.50	31.00	14.250	6.75e+005	1.600	10.00	0.00	415.02	81.04	0.00	0.00	0.60	81.04
Left		Left:X2B	29.50	26.50	28.00	14.250	6.75e+005	1.600	10.00	0.00	429.37	83.85	0.00	0.00	0.60	83.84
Left	Left:X2B		26.50	21.50	24.00	14.250	6.75e+005	1.600	10.00	0.00	747.52	145.97	0.00	0.00	0.99	145.97
Left			21.50	16.50	19.00	14.250	6.75e+005	1.600	10.00	0.00	787.38	153.76	0.00	0.00	0.99	153.75
Left			16.50	11.50	14.00	14.250	6.75e+005	1.600	10.00	0.00	827.25	161.54	0.00	0.00	0.99	161.54
Left			11.50	6.50	9.00	14.250	6.75e+005	1.600	10.00	0.00	867.11	169.32	0.00	0.00	0.99	169.32
Left			6.50	3.25	4.87	14.250	6.75e+005	1.600	10.00	0.00	585.00	114.23	0.00	0.00	0.64	114.23
Left		Left:g	3.25	0.00	1.62	14.250	6.75e+005	1.600	10.00	0.00	601.84	117.52	0.00	0.00	0.64	117.52
Right	Right:t	Right:Sprint	120.00	116.00	118.00	12.236	5.79e+005	1.600	10.00	0.00	662.50	65.27	0.00	0.00	1.57	65.26
Right	Right:Sprint		116.00	111.00	113.50	12.765	6.04e+005	1.600	10.00	0.00	863.99	85.13	0.00	0.00	1.97	85.10
Right			111.00	108.00	109.50	13.236	6.27e+005	1.600	10.00	0.00	537.52	52.96	0.00	0.00	1.18	52.95
Right		Right:Coax1	108.00	105.00	106.50	13.590	6.43e+005	1.600	10.00	0.00	551.87	54.37	0.00	0.00	1.18	54.36
Right	Right:Coax1		105.00	100.00	102.50	14.061	6.66e+005	1.600	10.00	0.00	951.66	93.76	0.00	0.00	1.97	93.74
Right		Right:Coax2	100.00	95.00	97.50	14.649	6.94e+005	1.600	10.00	0.00	991.50	97.68	0.00	0.00	1.97	97.66
Right	Right:Coax2		95.00	90.00	92.50	15.238	7.21e+005	1.600	10.00	0.00	1031.35	101.61	0.00	0.00	1.97	101.59
Right		Right:Coax3	90.00	85.00	87.50	15.827	7.49e+005	1.600	10.00	0.00	1071.20	105.53	0.00	0.00	1.97	105.51
Right	Right:Coax3	Right:SW	85.00	83.00	84.00	16.239	7.69e+005	1.600	10.00	0.00	439.64	43.31	0.00	0.00	0.79	43.30
Right	Right:SW	Right:V	83.00	81.00	82.00	16.474	7.8e+005	1.600	10.00	0.00	446.01	43.94	0.00	0.00	0.79	43.93
Right	Right:V		81.00	78.00	79.50	16.769	7.94e+005	1.600	10.00	0.00	680.97	67.09	0.00	0.00	1.18	67.08
Right		Right:Coax4	78.00	75.00	76.50	17.122	8.11e+005	1.600	10.00	0.00	695.32	68.50	0.00	0.00	1.18	68.49
Right	Right:Coax4	Right:A	75.00	70.00	72.50	17.593	8.33e+005	1.600	10.00	0.00	1190.74	117.30	0.00	0.00	1.97	117.29
Right	Right:A	Right:Coax5	70.00	65.00	67.50	18.182	8.61e+005	1.600	10.00	0.00	1230.59	121.23	0.00	0.00	1.97	121.21
Right	Right:Coax5		65.00	61.75	63.38	18.668	8.84e+005	1.600	10.00	0.00	821.25	80.90	0.00	0.00	1.28	80.89
Right		Right:XT	61.75	58.50	60.13	19.050	9.02e+005	1.600	10.00	0.00	838.09	82.56	0.00	0.00	1.28	82.55
Right	Right:XT	Right:Coax6	58.50	55.00	56.75	19.448	9.21e+005	1.600	10.00	0.00	921.38	90.77	0.00	0.00	1.38	90.76
Right	Right:Coax6	Right:X2T	55.00	52.50	53.75	19.801	9.37e+005	1.600	10.00	0.00	670.09	66.01	0.00	0.00	0.98	66.00
Right	Right:X2T		52.50	48.75	50.63	20.169	9.55e+005	1.600	10.00	0.00	1023.81	100.86	0.00	0.00	1.48	100.84
Right		Right:Coax7	48.75	45.00	46.88	20.610	9.76e+005	1.600	10.00	0.00	1046.22	103.06	0.00	0.00	1.48	103.05
Right	Right:Coax7		45.00	40.00	42.50	21.126	1e+006	1.600	10.00	0.00	1429.83	140.85	0.00	0.00	1.97	140.84
Right		Right:Coax8	40.00	35.00	37.50	21.714	1.03e+006	1.600	10.00	0.00	1469.68	144.78	0.00	0.00	1.97	144.76
Right	Right:Coax8	Right:XB	35.00	32.50	33.75	22.156	1.05e+006	1.600	10.00	0.00	749.78	73.86	0.00	0.00	0.98	73.85
Right	Right:XB		32.50	29.50	31.00	22.480	1.06e+006	1.600	10.00	0.00	912.89	89.93	0.00	0.00	1.18	89.92
Right		Right:X2B	29.50	26.50	28.00	22.833	1.08e+006	1.600	10.00	0.00	927.23	91.34	0.00	0.00	1.18	91.33
Right	Right:X2B	Right:Coax9	26.50	25.00	25.75	23.098	1.09e+006	1.600	10.00	0.00	469.00	46.20	0.00	0.00	0.59	46.20
Right	Right:Coax9		25.00	20.00	22.50	23.481	1.11e+006	1.600	10.00	0.00	1589.22	156.55	0.00	0.00	1.97	156.54
Right		Right:Coax10	20.00	15.00	17.50	24.069	1.14e+006	1.600	10.00	0.00	1629.07	160.47	0.00	0.00	1.97	160.46
Right	Right:Coax10		15.00	10.00	12.50	24.658	1.17e+006	1.600	10.00	0.00	1668.92	164.40	0.00	0.00	1.97	164.39
Right		Right:Coax11	10.00	5.00	7.50	25.247	1.2e+006	1.600	10.00	0.00	1708.77	168.32	0.00	0.00	1.97	168.31
Right	Right:Coax11	Right:g	5.00	0.00	2.50	25.836	1.22e+006	1.600	10.00	0.00	1748.61	172.25	0.00	0.00	1.97	172.24

Point Loads for Load Case "Ext. Wind T":

Joint Label	Vertical Load (lbs)	Transverse Load (lbs)	Longitudinal Load (lbs)	Load Comment
SWL	215	630	0	Shield Wire
SWR	215	630	0	Shield Wire
L1	1177	2199	0	Conductor
L2	1177	2199	0	Conductor
L3	1177	2199	0	Conductor
Right:Sprint	319	1047	0	Sprint
Right:Coax1	191	169	0	Coax
Right:Coax2	191	169	0	Coax
Right:Coax3	191	169	0	Coax
Right:Coax4	191	169	0	Coax
Right:Coax5	191	169	0	Coax
Right:Coax6	191	169	0	Coax
Right:Coax7	191	169	0	Coax

Right:Coax8	191	169	0	Coax
Right:Coax9	191	169	0	Coax
Right:Coax10	191	169	0	Coax
Right:Coax11	191	169	0	Coax

Detailed Pole Loading Data for Load Case "Ext. Wind T":

Notes: Does not include loads from equipment, arms, guys, braces, etc. or user input loads.
Wind load is calculated for the undeformed shape of a pole.

Pole Label	Top Joint	Bottom Joint	Section Top Z (ft)	Section Bottom Z (ft)	Section Average Elevation (ft)	Outer Diameter (in)	Reynolds Number	Drag Coef.	Adjusted Wind Pressure (psf)	Adjusted Ice Thickness (in)	Pole Vert. Load (lbs)	Pole Wind Load (lbs)	Pole Ice Vertical Load (lbs)	Pole Ice Wind Load (lbs)	Tran. Wind Load (lbs)	Long. Wind Load (lbs)
Left	Left:t	Left:SW	83.50	82.75	83.13	8.088	6.85e+005	1.600	32.03	0.00	27.61	45.64	0.00	0.00	45.64	0.10
Left	Left:SW	Left:V	82.75	81.00	81.88	8.379	7.1e+005	1.600	32.03	0.00	66.75	106.50	0.00	0.00	106.50	0.25
Left	Left:V		81.00	76.00	78.50	9.168	7.77e+005	1.600	32.03	0.00	208.66	304.29	0.00	0.00	304.29	0.77
Left			76.00	73.00	74.50	10.102	8.56e+005	1.600	32.03	0.00	137.95	182.58	0.00	0.00	182.58	0.51
Left		Left:A	73.00	70.00	71.50	10.802	9.15e+005	1.600	32.03	0.00	147.52	182.58	0.00	0.00	182.58	0.55
Left	Left:A		70.00	65.00	67.50	11.737	9.94e+005	1.600	32.03	0.00	267.13	304.29	0.00	0.00	304.29	0.99
Left			65.00	61.75	63.38	12.700	1.08e+006	1.600	32.03	0.00	187.89	197.79	0.00	0.00	197.79	0.69
Left		Left:XT	61.75	58.50	60.13	13.459	1.14e+006	1.600	32.03	0.00	199.11	197.79	0.00	0.00	197.79	0.74
Left	Left:XT		58.50	55.50	57.00	14.189	1.2e+006	1.600	32.03	0.00	193.76	182.58	0.00	0.00	182.58	0.72
Left		Left:X2T	55.50	52.50	54.00	14.250	1.21e+006	1.600	32.03	0.00	203.33	182.58	0.00	0.00	182.58	0.75
Left	Left:X2T		52.50	47.50	50.00	14.250	1.21e+006	1.600	32.03	0.00	360.15	304.30	0.00	0.00	304.29	1.33
Left			47.50	42.50	45.00	14.250	1.21e+006	1.600	32.03	0.00	386.72	304.30	0.00	0.00	304.29	1.43
Left			42.50	37.50	40.00	14.250	1.21e+006	1.600	32.03	0.00	413.30	304.30	0.00	0.00	304.29	1.53
Left		Left:XB	37.50	32.50	35.00	14.250	1.21e+006	1.600	32.03	0.00	439.88	304.30	0.00	0.00	304.29	1.63
Left	Left:XB		32.50	29.50	31.00	14.250	1.21e+006	1.600	32.03	0.00	276.68	182.58	0.00	0.00	182.58	1.02
Left		Left:X2B	29.50	26.50	28.00	14.250	1.21e+006	1.600	32.03	0.00	286.25	182.58	0.00	0.00	182.58	1.06
Left	Left:X2B		26.50	21.50	24.00	14.250	1.21e+006	1.600	32.03	0.00	498.34	304.30	0.00	0.00	304.29	1.84
Left			21.50	16.50	19.00	14.250	1.21e+006	1.600	32.03	0.00	524.92	304.30	0.00	0.00	304.29	1.94
Left			16.50	11.50	14.00	14.250	1.21e+006	1.600	32.03	0.00	551.50	304.30	0.00	0.00	304.29	2.04
Left			11.50	6.50	9.00	14.250	1.21e+006	1.600	32.03	0.00	578.07	304.30	0.00	0.00	304.29	2.14
Left			6.50	3.25	4.87	14.250	1.21e+006	1.600	32.03	0.00	390.00	197.80	0.00	0.00	197.79	1.44
Left		Left:g	3.25	0.00	1.62	14.250	1.21e+006	1.600	32.03	0.00	401.23	197.80	0.00	0.00	197.79	1.48
Right	Right:t	Right:Sprint	120.00	116.00	118.00	12.236	1.04e+006	1.600	32.03	0.00	441.67	482.60	0.00	0.00	482.60	0.82
Right	Right:Sprint		116.00	111.00	113.50	12.765	1.08e+006	1.600	32.03	0.00	575.99	603.25	0.00	0.00	603.25	1.07
Right			111.00	108.00	109.50	13.236	1.12e+006	1.600	32.03	0.00	358.35	361.95	0.00	0.00	361.95	0.67
Right		Right:Coax1	108.00	105.00	106.50	13.590	1.15e+006	1.600	32.03	0.00	367.91	361.95	0.00	0.00	361.95	0.69
Right	Right:Coax1		105.00	100.00	102.50	14.061	1.19e+006	1.600	32.03	0.00	634.44	603.25	0.00	0.00	603.25	1.18
Right		Right:Coax2	100.00	95.00	97.50	14.649	1.24e+006	1.600	32.03	0.00	661.00	603.25	0.00	0.00	603.25	1.23
Right	Right:Coax2		95.00	90.00	92.50	15.238	1.29e+006	1.600	32.03	0.00	687.57	603.25	0.00	0.00	603.25	1.28
Right		Right:Coax3	90.00	85.00	87.50	15.827	1.34e+006	1.600	32.03	0.00	714.13	603.25	0.00	0.00	603.25	1.33
Right	Right:Coax3	Right:SW	85.00	83.00	84.00	16.239	1.38e+006	1.600	32.03	0.00	293.09	241.30	0.00	0.00	241.30	0.55
Right	Right:SW	Right:V	83.00	81.00	82.00	16.474	1.4e+006	1.600	32.03	0.00	297.34	241.30	0.00	0.00	241.30	0.55
Right	Right:V		81.00	78.00	79.50	16.769	1.42e+006	1.600	32.03	0.00	453.98	361.95	0.00	0.00	361.95	0.85
Right		Right:Coax4	78.00	75.00	76.50	17.122	1.45e+006	1.600	32.03	0.00	463.55	361.95	0.00	0.00	361.95	0.86
Right	Right:Coax4	Right:A	75.00	70.00	72.50	17.593	1.49e+006	1.600	32.03	0.00	793.83	603.25	0.00	0.00	603.25	1.48
Right	Right:A	Right:Coax5	70.00	65.00	67.50	18.182	1.54e+006	1.600	32.03	0.00	820.39	603.25	0.00	0.00	603.25	1.53
Right	Right:Coax5		65.00	61.75	63.38	18.668	1.58e+006	1.600	32.03	0.00	547.50	392.11	0.00	0.00	392.11	1.02
Right		Right:XT	61.75	58.50	60.13	19.050	1.61e+006	1.600	32.03	0.00	558.73	392.11	0.00	0.00	392.11	1.04
Right	Right:XT	Right:Coax6	58.50	55.00	56.75	19.448	1.65e+006	1.600	32.03	0.00	614.26	422.28	0.00	0.00	422.27	1.15
Right	Right:Coax6	Right:X2T	55.00	52.50	53.75	19.801	1.68e+006	1.600	32.03	0.00	446.72	301.63	0.00	0.00	301.62	0.83
Right	Right:X2T		52.50	48.75	50.63	20.169	1.71e+006	1.600	32.03	0.00	682.54	452.44	0.00	0.00	452.44	1.27
Right		Right:Coax7	48.75	45.00	46.88	20.610	1.75e+006	1.600	32.03	0.00	697.48	452.44	0.00	0.00	452.44	1.30
Right	Right:Coax7		45.00	40.00	42.50	21.126	1.79e+006	1.600	32.03	0.00	953.22	603.25	0.00	0.00	603.25	1.78
Right		Right:Coax8	40.00	35.00	37.50	21.714	1.84e+006	1.600	32.03	0.00	979.79	603.25	0.00	0.00	603.25	1.83

Right	Right:Coax8	Right:XB	35.00	32.50	33.75	22.156	1.88e+006	1.600	32.03	0.00	499.85	301.63	0.00	0.00	301.62	0.93
Right	Right:XB		32.50	29.50	31.00	22.480	1.9e+006	1.600	32.03	0.00	608.59	361.95	0.00	0.00	361.95	1.13
Right		Right:X2B	29.50	26.50	28.00	22.833	1.93e+006	1.600	32.03	0.00	618.16	361.95	0.00	0.00	361.95	1.15
Right	Right:X2B	Right:Coax9	26.50	25.00	25.75	23.098	1.96e+006	1.600	32.03	0.00	312.66	180.98	0.00	0.00	180.97	0.58
Right	Right:Coax9		25.00	20.00	22.50	23.481	1.99e+006	1.600	32.03	0.00	1059.48	603.25	0.00	0.00	603.25	1.97
Right		Right:Coax10	20.00	15.00	17.50	24.069	2.04e+006	1.600	32.03	0.00	1086.05	603.25	0.00	0.00	603.25	2.02
Right	Right:Coax10		15.00	10.00	12.50	24.658	2.09e+006	1.600	32.03	0.00	1112.61	603.25	0.00	0.00	603.25	2.07
Right		Right:Coax11	10.00	5.00	7.50	25.247	2.14e+006	1.600	32.03	0.00	1139.18	603.25	0.00	0.00	603.25	2.12
Right	Right:Coax11	Right:g	5.00	0.00	2.50	25.836	2.19e+006	1.600	32.03	0.00	1165.74	603.25	0.00	0.00	603.25	2.17

Point Loads for Load Case "Ext. Wind L":

Joint Label	Vertical Load (lbs)	Transverse Load (lbs)	Longitudinal Load (lbs)	Load Comment
SWL	215	0	0	Shield Wire
SWR	215	0	0	Shield Wire
L1	1177	0	0	Conductor
L2	1177	0	0	Conductor
L3	1177	0	0	Conductor
Right:Sprint	319	0	682	Sprint
Right:Coax1	191	0	507	Coax
Right:Coax2	191	0	507	Coax
Right:Coax3	191	0	507	Coax
Right:Coax4	191	0	507	Coax
Right:Coax5	191	0	507	Coax
Right:Coax6	191	0	507	Coax
Right:Coax7	191	0	507	Coax
Right:Coax8	191	0	507	Coax
Right:Coax9	191	0	507	Coax
Right:Coax10	191	0	507	Coax
Right:Coax11	191	0	507	Coax

Detailed Pole Loading Data for Load Case "Ext. Wind L":

Notes: Does not include loads from equipment, arms, guys, braces, etc. or user input loads.
Wind load is calculated for the undeformed shape of a pole.

Pole Label	Top Joint	Bottom Joint	Section Top Z (ft)	Section Bottom Z (ft)	Section Average Elevation (ft)	Outer Diameter (in)	Reynolds Number	Drag Coef.	Adjusted Wind Pressure (psf)	Adjusted Ice Thickness (in)	Pole Vert. Load (lbs)	Pole Wind Load (lbs)	Pole Vertical Load (lbs)	Pole Ice Wind Load (lbs)	Tran. Wind Load (lbs)	Long. Wind Load (lbs)
Left	Left:t	Left:SW	83.50	82.75	83.13	8.088	6.85e+005	1.600	32.03	0.00	27.61	25.91	0.00	0.00	0.18	25.91
Left	Left:SW	Left:V	82.75	81.00	81.88	8.379	7.1e+005	1.600	32.03	0.00	66.75	62.63	0.00	0.00	0.42	62.63
Left	Left:V		81.00	76.00	78.50	9.168	7.77e+005	1.600	32.03	0.00	208.66	195.77	0.00	0.00	1.20	195.77
Left			76.00	73.00	74.50	10.102	8.56e+005	1.600	32.03	0.00	137.95	129.43	0.00	0.00	0.72	129.43
Left		Left:A	73.00	70.00	71.50	10.802	9.15e+005	1.600	32.03	0.00	147.52	138.41	0.00	0.00	0.72	138.40
Left	Left:A		70.00	65.00	67.50	11.737	9.94e+005	1.600	32.03	0.00	267.13	250.62	0.00	0.00	1.20	250.62
Left			65.00	61.75	63.38	12.700	1.08e+006	1.600	32.03	0.00	187.89	176.28	0.00	0.00	0.78	176.27
Left		Left:XT	61.75	58.50	60.13	13.459	1.14e+006	1.600	32.03	0.00	199.11	186.81	0.00	0.00	0.78	186.81
Left	Left:XT		58.50	55.50	57.00	14.189	1.2e+006	1.600	32.03	0.00	193.76	181.79	0.00	0.00	0.72	181.79
Left		Left:X2T	55.50	52.50	54.00	14.250	1.21e+006	1.600	32.03	0.00	203.33	190.77	0.00	0.00	0.72	190.77
Left	Left:X2T		52.50	47.50	50.00	14.250	1.21e+006	1.600	32.03	0.00	360.15	337.89	0.00	0.00	1.20	337.89
Left			47.50	42.50	45.00	14.250	1.21e+006	1.600	32.03	0.00	386.72	362.83	0.00	0.00	1.20	362.82
Left			42.50	37.50	40.00	14.250	1.21e+006	1.600	32.03	0.00	413.30	387.76	0.00	0.00	1.20	387.76
Left		Left:XB	37.50	32.50	35.00	14.250	1.21e+006	1.600	32.03	0.00	439.88	412.69	0.00	0.00	1.20	412.69
Left	Left:XB		32.50	29.50	31.00	14.250	1.21e+006	1.600	32.03	0.00	276.68	259.59	0.00	0.00	0.72	259.58

Left		Left:X2B	29.50	26.50	28.00	14.250	1.21e+006	1.600	32.03	0.00	286.25	268.56	0.00	0.00	0.72	268.56
Left	Left:X2B		26.50	21.50	24.00	14.250	1.21e+006	1.600	32.03	0.00	498.34	467.55	0.00	0.00	1.20	467.55
Left			21.50	16.50	19.00	14.250	1.21e+006	1.600	32.03	0.00	524.92	492.48	0.00	0.00	1.20	492.48
Left			16.50	11.50	14.00	14.250	1.21e+006	1.600	32.03	0.00	551.50	517.42	0.00	0.00	1.20	517.42
Left			11.50	6.50	9.00	14.250	1.21e+006	1.600	32.03	0.00	578.07	542.35	0.00	0.00	1.20	542.35
Left			6.50	3.25	4.87	14.250	1.21e+006	1.600	32.03	0.00	390.00	365.90	0.00	0.00	0.78	365.90
Left		Left:g	3.25	0.00	1.62	14.250	1.21e+006	1.600	32.03	0.00	401.23	376.43	0.00	0.00	0.78	376.43
Right	Right:t	Right:Sprint	120.00	116.00	118.00	12.236	1.04e+006	1.600	32.03	0.00	441.67	209.03	0.00	0.00	1.90	209.02
Right	Right:Sprint		116.00	111.00	113.50	12.765	1.08e+006	1.600	32.03	0.00	575.99	272.60	0.00	0.00	2.38	272.59
Right			111.00	108.00	109.50	13.236	1.12e+006	1.600	32.03	0.00	358.35	169.60	0.00	0.00	1.43	169.59
Right		Right:Coax1	108.00	105.00	106.50	13.590	1.15e+006	1.600	32.03	0.00	367.91	174.12	0.00	0.00	1.43	174.11
Right	Right:Coax1		105.00	100.00	102.50	14.061	1.19e+006	1.600	32.03	0.00	634.44	300.26	0.00	0.00	2.38	300.25
Right		Right:Coax2	100.00	95.00	97.50	14.649	1.24e+006	1.600	32.03	0.00	661.00	312.83	0.00	0.00	2.38	312.82
Right	Right:Coax2		95.00	90.00	92.50	15.238	1.29e+006	1.600	32.03	0.00	687.57	325.40	0.00	0.00	2.38	325.39
Right		Right:Coax3	90.00	85.00	87.50	15.827	1.34e+006	1.600	32.03	0.00	714.13	337.97	0.00	0.00	2.38	337.97
Right	Right:Coax3	Right:SW	85.00	83.00	84.00	16.239	1.38e+006	1.600	32.03	0.00	293.09	138.71	0.00	0.00	0.95	138.71
Right	Right:SW	Right:V	83.00	81.00	82.00	16.474	1.4e+006	1.600	32.03	0.00	297.34	140.72	0.00	0.00	0.95	140.72
Right	Right:V		81.00	78.00	79.50	16.769	1.42e+006	1.600	32.03	0.00	453.98	214.85	0.00	0.00	1.43	214.85
Right		Right:Coax4	78.00	75.00	76.50	17.122	1.45e+006	1.600	32.03	0.00	463.55	219.38	0.00	0.00	1.43	219.37
Right	Right:Coax4	Right:A	75.00	70.00	72.50	17.593	1.49e+006	1.600	32.03	0.00	793.83	375.69	0.00	0.00	2.38	375.68
Right	Right:A	Right:Coax5	70.00	65.00	67.50	18.182	1.54e+006	1.600	32.03	0.00	820.39	388.26	0.00	0.00	2.38	388.25
Right	Right:Coax5		65.00	61.75	63.38	18.668	1.58e+006	1.600	32.03	0.00	547.50	259.11	0.00	0.00	1.54	259.11
Right		Right:XT	61.75	58.50	60.13	19.050	1.61e+006	1.600	32.03	0.00	558.73	264.42	0.00	0.00	1.54	264.42
Right	Right:XT	Right:Coax6	58.50	55.00	56.75	19.448	1.65e+006	1.600	32.03	0.00	614.26	290.70	0.00	0.00	1.66	290.70
Right	Right:Coax6	Right:X2T	55.00	52.50	53.75	19.801	1.68e+006	1.600	32.03	0.00	446.72	211.42	0.00	0.00	1.19	211.41
Right	Right:X2T		52.50	48.75	50.63	20.169	1.71e+006	1.600	32.03	0.00	682.54	323.02	0.00	0.00	1.78	323.01
Right		Right:Coax7	48.75	45.00	46.88	20.610	1.75e+006	1.600	32.03	0.00	697.48	330.09	0.00	0.00	1.78	330.09
Right	Right:Coax7		45.00	40.00	42.50	21.126	1.79e+006	1.600	32.03	0.00	953.22	451.12	0.00	0.00	2.38	451.11
Right		Right:Coax8	40.00	35.00	37.50	21.714	1.84e+006	1.600	32.03	0.00	979.79	463.69	0.00	0.00	2.38	463.69
Right	Right:Coax8	Right:XB	35.00	32.50	33.75	22.156	1.88e+006	1.600	32.03	0.00	499.85	236.56	0.00	0.00	1.19	236.56
Right	Right:XB		32.50	29.50	31.00	22.480	1.9e+006	1.600	32.03	0.00	608.59	288.02	0.00	0.00	1.43	288.02
Right		Right:X2B	29.50	26.50	28.00	22.833	1.93e+006	1.600	32.03	0.00	618.16	292.55	0.00	0.00	1.43	292.54
Right	Right:X2B	Right:Coax9	26.50	25.00	25.75	23.098	1.96e+006	1.600	32.03	0.00	312.66	147.97	0.00	0.00	0.71	147.97
Right	Right:Coax9		25.00	20.00	22.50	23.481	1.99e+006	1.600	32.03	0.00	1059.48	501.41	0.00	0.00	2.38	501.40
Right		Right:Coax10	20.00	15.00	17.50	24.069	2.04e+006	1.600	32.03	0.00	1086.05	513.98	0.00	0.00	2.38	513.98
Right	Right:Coax10		15.00	10.00	12.50	24.658	2.09e+006	1.600	32.03	0.00	1112.61	526.55	0.00	0.00	2.38	526.55
Right		Right:Coax11	10.00	5.00	7.50	25.247	2.14e+006	1.600	32.03	0.00	1139.18	539.12	0.00	0.00	2.38	539.12
Right	Right:Coax11	Right:g	5.00	0.00	2.50	25.836	2.19e+006	1.600	32.03	0.00	1165.74	551.70	0.00	0.00	2.38	551.69

*** Analysis Results:

Maximum element usage is 84.48% for X-Arm "TAR53" in load case "Ext. Wind L"
Maximum insulator usage is 16.22% for Clamp "C1" in load case "Ext. Wind T"

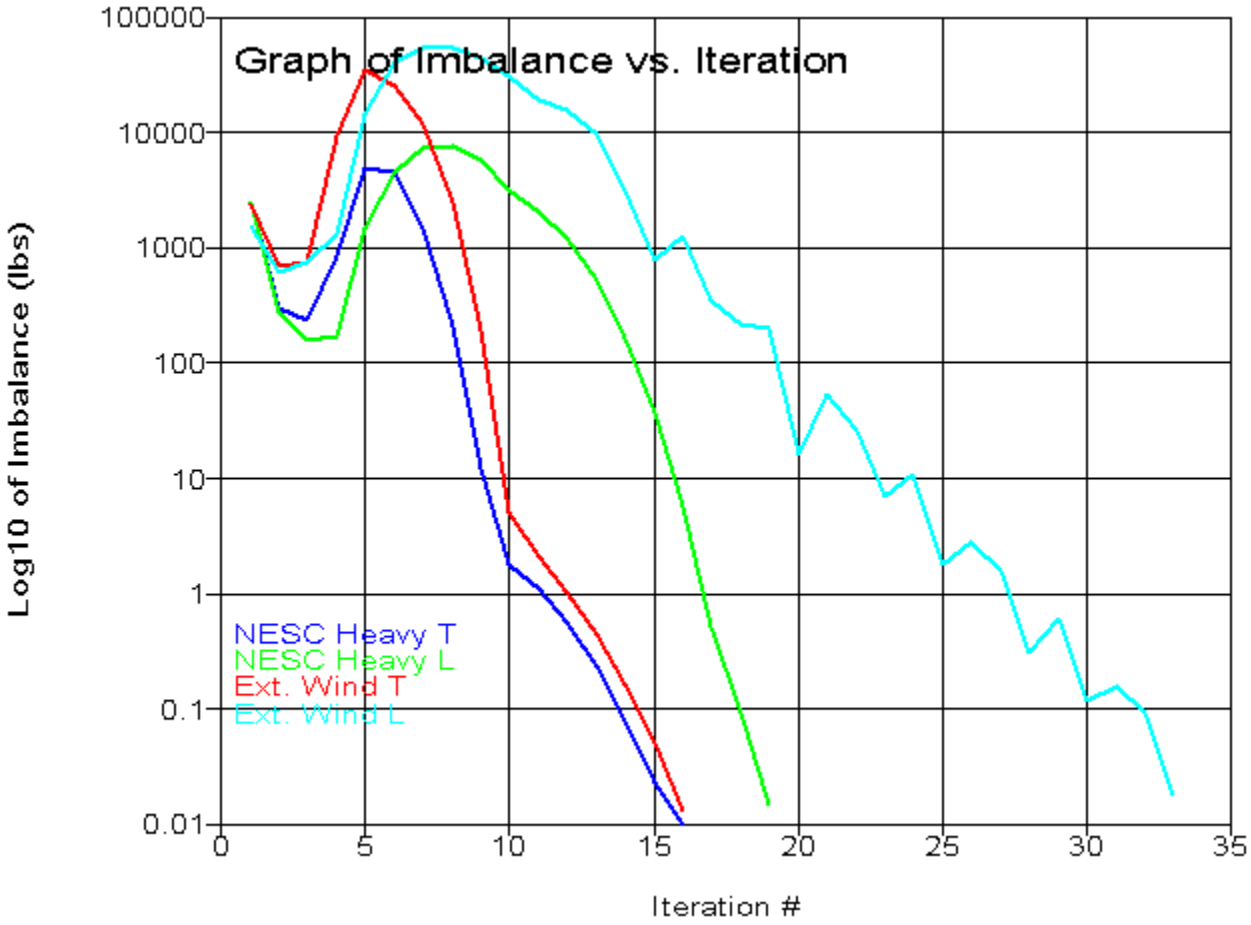

*** Analysis Results for Load Case No. 1 "NESC Heavy T" - Number of iterations in SAPS 16

Equilibrium Joint Positions and Rotations for Load Case "NESC Heavy T":

Joint Label	X-Displ (ft)	Y-Displ (ft)	Z-Displ (ft)	X-Rot (deg)	Y-Rot (deg)	Z-Rot (deg)	X-Pos (ft)	Y-Pos (ft)	Z-Pos (ft)
Left:g	0	0	0	0.0000	0.0000	0.0000	0	-13	0
Left:t	0.01638	0.0224	-0.0002439	0.5688	0.0153	0.0071	0.01638	-12.98	83.5
Left:SW	0.01618	0.02985	-0.0002068	0.5688	0.0153	0.0071	0.01618	-12.97	82.75

Left:V	0.01571	0.0469	-0.0001099	0.5382	0.0153	0.0071	0.01571	-12.95	81
Left:A	0.01281	0.097	0.0001477	-0.1045	0.0148	0.0072	0.01281	-12.9	70
Left:XT	0.009907	0.04902	0.0003493	-0.1742	0.0143	0.0048	0.009907	-12.95	58.5
Left:X2T	0.008427	0.03986	0.0003377	-0.0068	0.0140	0.0038	0.008427	-12.96	52.5
Left:XB	0.003866	0.05428	0.0002175	-0.0262	0.0117	0.0016	0.003866	-12.95	32.5
Left:X2B	0.002709	0.04737	0.0001702	-0.1013	0.0104	0.0012	0.002709	-12.95	26.5
Right:g	0	0	0	0.0000	0.0000	0.0000	0	13	0
Right:t	0.01708	0.5318	-0.004589	-0.6201	0.0108	0.0016	0.01708	13.53	120
Right:Sprint	0.01633	0.4885	-0.004353	-0.6196	0.0108	0.0016	0.01633	13.49	116
Right:Coax1	0.01427	0.3711	-0.003696	-0.5959	0.0108	0.0016	0.01427	13.37	105
Right:Coax2	0.0124	0.2719	-0.003151	-0.5341	0.0107	0.0016	0.0124	13.27	95
Right:Coax3	0.01054	0.1868	-0.002714	-0.4328	0.0106	0.0016	0.01054	13.19	85
Right:SW	0.01017	0.1721	-0.002642	-0.4081	0.0105	0.0016	0.01017	13.17	83
Right:V	0.009808	0.1583	-0.002562	-0.3841	0.0105	0.0016	0.009808	13.16	81
Right:Coax4	0.008716	0.1217	-0.002351	-0.3139	0.0104	0.0016	0.008716	13.12	75
Right:A	0.007819	0.09681	-0.002201	-0.2562	0.0102	0.0015	0.007819	13.1	70
Right:Coax5	0.006939	0.07697	-0.00207	-0.1966	0.0100	0.0014	0.006939	13.08	65
Right:XT	0.005829	0.05929	-0.00192	-0.1132	0.0096	0.0012	0.005829	13.06	58.5
Right:Coax6	0.005252	0.05364	-0.001834	-0.0730	0.0093	0.0011	0.005252	13.05	55
Right:X2T	0.004849	0.051	-0.001773	-0.0486	0.0091	0.0010	0.004849	13.05	52.5
Right:Coax7	0.003704	0.04763	-0.001568	-0.0128	0.0084	0.0009	0.003704	13.05	45
Right:Coax8	0.002355	0.04462	-0.001288	-0.0337	0.0071	0.0006	0.002355	13.04	35
Right:XB	0.002055	0.04287	-0.001215	-0.0480	0.0067	0.0006	0.002055	13.04	32.5
Right:X2B	0.001405	0.03581	-0.00101	-0.0844	0.0057	0.0005	0.001405	13.04	26.5
Right:Coax9	0.001259	0.03349	-0.0009543	-0.0918	0.0054	0.0004	0.001259	13.03	25
Right:Coax10	0.000474	0.01573	-0.0005721	-0.0993	0.0035	0.0003	0.000474	13.02	15
Right:Coax11	5.523e-005	0.002152	-0.0001898	-0.0457	0.0012	0.0001	5.523e-005	13	5
TAR53:O	0.01477	0.09749	-0.07578	0.2394	0.0147	0.0089	0.01477	-26.4	69.92
TAR53:L1	0.01469	0.09749	-0.07369	0.2394	0.0147	0.0089	0.01469	-25.9	69.93
TAR53:PL	0.01281	0.097	0.0001477	0.4196	0.0148	0.0072	0.01281	-12.9	70
TAR53:L2V	0.01008	0.09718	0.07107	0.0004	0.0125	0.0143	0.01008	0.09718	70.07
TAR53:PR	0.007819	0.09681	-0.002201	-0.4376	0.0102	0.0015	0.007819	13.1	70
TAR53:L3	0.007664	0.09647	-0.08182	-0.2658	0.0102	0.0002	0.007664	26.1	69.92
TAR53:E	0.007663	0.09647	-0.08415	-0.2659	0.0102	0.0002	0.007663	26.6	69.92
TENL:O	0.01622	0.02986	-0.003589	0.5688	0.0153	0.0071	0.01622	-13.31	82.75
TENR:O	0.01015	0.1721	-0.007497	-0.4081	0.0105	0.0016	0.01015	13.85	82.99
VEEL:O	0.01614	0.02983	0.003175	0.5688	0.0153	0.0071	0.01614	-12.63	82.75
VEER:O	0.01019	0.1721	0.002212	-0.4081	0.0105	0.0016	0.01019	12.49	83
X1L:O	0.009859	0.04902	-0.001404	-0.1742	0.0143	0.0048	0.009859	-12.37	58.5
X1L:E	0.002064	0.04287	-0.0004365	-0.0480	0.0067	0.0006	0.002064	12.11	32.5
X1R:O	0.005846	0.05929	-0.000337	-0.1132	0.0096	0.0012	0.005846	12.26	58.5
X1R:E	0.003842	0.05428	-0.000162	-0.0262	0.0117	0.0016	0.003842	-12.12	32.5
X2L:O	0.008385	0.03986	0.0002621	-0.0068	0.0140	0.0038	0.008385	-12.33	52.5
X2L:E	0.001413	0.03581	0.000402	-0.0844	0.0057	0.0005	0.001413	12.08	26.5
X2R:O	0.00269	0.04736	-0.0014	-0.1013	0.0104	0.0012	0.00269	-12.06	26.5
X2R:E	0.004865	0.051	-0.001068	-0.0486	0.0091	0.0010	0.004865	12.22	52.5

Joint Support Reactions for Load Case "NESC Heavy T":

Joint Label	X Force (kips)	X Usage %(kips)	Y Force (kips)	Y Usage %	H-Shear Usage %	Z Force (kips)	Comp. Usage %	Uplift Usage %	Result. Force (kips)	Result. Usage %	X Moment (ft-k)	X-M. Usage %	Y Moment (ft-k)	Y-M. Usage %	H-Bend-M Usage %	Z Moment (ft-k)	Z-M. Usage %	Max. Usage %
Left:g	-0.03	0.0	-5.16	0.0	0.0	4.46	0.0	0.0	6.82	0.0	92.47	0.0	-1.0	0.0	0.0	-0.12	0.0	0.0
Right:g	-0.06	0.0	-6.96	0.0	0.0	-67.21	0.0	0.0	67.57	0.0	125.24	0.0	-3.6	0.0	0.0	-0.16	0.0	0.0

Detailed Laminated Wood Pole Usages for Load Case "NESC Heavy T":

Element Label	Joint Label	Joint Position	Rel. Dist. (ft)	Trans. Defl. (in)	Long. Defl. (in)	Vert. Defl. (in)	Trans. Mom. (ft-k)	Long. Mom. (ft-k)	Tors. Mom. (ft-k)	Axial Force (kips)	Tran. Shear (kips)	Long. Shear (kips)	Usage %
Left	Left:t	Origin	0.00	0.27	0.20	-0.00	0.00	-0.00	-0.0	-0.02	0.01	-0.00	0.0
Left	Left:SW	End	0.75	0.36	0.19	-0.00	0.01	-0.00	-0.0	-0.02	0.01	-0.00	0.0
Left	Left:SW	Origin	0.75	0.36	0.19	-0.00	-1.16	-0.00	-0.0	-2.26	-2.75	-0.00	2.2
Left	Left:V	End	2.50	0.56	0.19	-0.00	-5.97	-0.01	-0.0	-2.26	-2.75	-0.00	8.7
Left	Left:V	Origin	2.50	0.56	0.19	-0.00	-5.97	-0.01	-0.0	-2.47	-2.68	-0.00	8.7
Left	#Left:0	End	7.50	1.03	0.17	0.00	-19.36	-0.03	-0.0	-2.47	-2.68	-0.00	21.2
Left	#Left:0	Origin	7.50	1.03	0.17	0.00	-19.36	-0.03	-0.0	-2.74	-2.59	-0.00	21.2
Left	#Left:1	End	10.50	1.16	0.16	0.00	-27.14	-0.04	-0.0	-2.74	-2.59	-0.00	25.8
Left	#Left:1	Origin	10.50	1.16	0.16	0.00	-27.14	-0.04	-0.0	-2.97	-2.53	-0.00	25.8
Left	Left:A	End	13.50	1.16	0.15	0.00	-34.72	-0.05	-0.0	-2.97	-2.53	-0.00	29.0
Left	Left:A	Origin	13.50	1.16	0.15	0.00	-34.72	-0.04	0.1	-3.44	5.84	0.00	29.0
Left	#Left:2	End	18.50	0.94	0.14	0.00	-5.52	-0.04	0.1	-3.44	5.84	0.00	4.1
Left	#Left:2	Origin	18.50	0.94	0.14	0.00	-5.52	-0.04	0.1	-3.77	5.93	0.00	4.2
Left	#Left:3	End	21.75	0.74	0.13	0.00	13.74	-0.03	0.1	-3.77	5.93	0.00	8.6
Left	#Left:3	Origin	21.75	0.74	0.13	0.00	13.74	-0.03	0.1	-4.07	5.98	0.00	8.7
Left	Left:XT	End	25.00	0.59	0.12	0.00	33.19	-0.03	0.1	-4.07	5.98	0.00	18.2
Left	Left:XT	Origin	25.00	0.59	0.12	0.00	29.62	-0.03	0.1	1.83	-0.03	-0.00	16.0
Left	#Left:4	End	28.00	0.51	0.11	0.00	29.52	-0.04	0.1	1.83	-0.03	-0.00	14.5
Left	#Left:4	Origin	28.00	0.51	0.11	0.00	29.52	-0.04	0.1	1.54	0.03	-0.00	14.4
Left	Left:X2T	End	31.00	0.48	0.10	0.00	29.60	-0.06	0.1	1.54	0.03	-0.00	13.2
Left	Left:X2T	Origin	31.00	0.48	0.10	0.00	27.36	-0.06	0.1	4.64	-3.40	-0.01	12.5
Left	#Left:5	End	36.00	0.51	0.09	0.00	10.36	-0.10	0.1	4.64	-3.40	-0.01	4.4
Left	#Left:5	Origin	36.00	0.51	0.09	0.00	10.36	-0.10	0.1	4.08	-3.30	-0.01	4.3
Left	#Left:6	End	41.00	0.59	0.07	0.00	-6.16	-0.14	0.1	4.08	-3.30	-0.01	2.4
Left	#Left:6	Origin	41.00	0.59	0.07	0.00	-6.16	-0.14	0.1	3.48	-3.21	-0.01	2.4
Left	#Left:7	End	46.00	0.64	0.06	0.00	-22.21	-0.20	0.1	3.48	-3.21	-0.01	6.9
Left	#Left:7	Origin	46.00	0.64	0.06	0.00	-22.21	-0.20	0.1	2.84	-3.12	-0.01	6.9
Left	Left:XB	End	51.00	0.65	0.05	0.00	-37.80	-0.26	0.1	2.84	-3.12	-0.01	10.3
Left	Left:XB	Origin	51.00	0.65	0.05	0.00	-41.10	-0.26	0.1	6.28	1.11	-0.02	11.4
Left	#Left:8	End	54.00	0.62	0.04	0.00	-37.77	-0.31	0.1	6.28	1.11	-0.02	9.9
Left	#Left:8	Origin	54.00	0.62	0.04	0.00	-37.77	-0.31	0.1	5.86	1.16	-0.02	9.8
Left	Left:X2B	End	57.00	0.57	0.03	0.00	-34.28	-0.36	0.1	5.86	1.16	-0.02	8.4
Left	Left:X2B	Origin	57.00	0.57	0.03	0.00	-37.16	-0.36	0.1	8.52	4.68	-0.02	9.3
Left	#Left:9	End	62.00	0.44	0.02	0.00	-13.75	-0.47	0.1	8.52	4.68	-0.02	3.6
Left	#Left:9	Origin	62.00	0.44	0.02	0.00	-13.75	-0.47	0.1	7.75	4.78	-0.02	3.5
Left	#Left:10	End	67.00	0.29	0.01	0.00	10.14	-0.59	0.1	7.75	4.78	-0.02	2.6
Left	#Left:10	Origin	67.00	0.29	0.01	0.00	10.14	-0.59	0.1	6.94	4.87	-0.03	2.5
Left	#Left:11	End	72.00	0.16	0.01	0.00	34.51	-0.71	0.1	6.94	4.87	-0.03	6.6
Left	#Left:11	Origin	72.00	0.16	0.01	0.00	34.51	-0.71	0.1	6.09	4.97	-0.03	6.5
Left	#Left:12	End	77.00	0.05	0.00	0.00	59.38	-0.85	0.1	6.09	4.97	-0.03	10.0
Left	#Left:12	Origin	77.00	0.05	0.00	0.00	59.38	-0.85	0.1	5.36	5.06	-0.03	10.0
Left	#Left:13	End	80.25	0.01	0.00	0.00	75.82	-0.95	0.1	5.36	5.06	-0.03	11.9
Left	#Left:13	Origin	80.25	0.01	0.00	0.00	75.82	-0.95	0.1	4.77	5.12	-0.03	11.9
Left	Left:g	End	83.50	0.00	0.00	0.00	92.47	-1.05	0.1	4.77	5.12	-0.03	13.7
Right	Right:t	Origin	0.00	6.38	0.20	-0.06	0.00	-0.00	-0.0	-0.33	0.08	-0.00	0.0
Right	Right:Sprint	End	4.00	5.86	0.20	-0.05	0.32	-0.00	-0.0	-0.33	0.08	-0.00	0.1
Right	Right:Sprint	Origin	4.00	5.86	0.20	-0.05	0.32	-0.00	-0.0	-1.90	0.52	-0.00	0.2
Right	#Right:14	End	9.00	5.22	0.18	-0.05	2.90	-0.01	-0.0	-1.90	0.52	-0.00	1.0
Right	#Right:14	Origin	9.00	5.22	0.18	-0.05	2.90	-0.01	-0.0	-2.60	0.68	-0.00	1.0
Right	#Right:15	End	12.00	4.83	0.18	-0.05	4.93	-0.02	-0.0	-2.60	0.68	-0.00	1.6
Right	#Right:15	Origin	12.00	4.83	0.18	-0.05	4.93	-0.02	-0.0	-3.15	0.79	-0.00	1.6
Right	Right:Coax1	End	15.00	4.45	0.17	-0.04	7.31	-0.03	-0.0	-3.15	0.79	-0.00	2.2
Right	Right:Coax1	Origin	15.00	4.45	0.17	-0.04	7.31	-0.03	-0.0	-4.59	1.02	-0.00	2.2
Right	#Right:16	End	20.00	3.84	0.16	-0.04	12.43	-0.05	-0.0	-4.59	1.02	-0.00	3.3

Right	#Right:16	Origin	20.00	3.84	0.16	-0.04	12.43	-0.05	-0.0	-5.56	1.22	-0.01	3.4
Right	Right:Coax2	End	25.00	3.26	0.15	-0.04	18.53	-0.07	-0.0	-5.56	1.22	-0.01	4.5
Right	Right:Coax2	Origin	25.00	3.26	0.15	-0.04	18.53	-0.07	-0.0	-7.27	1.48	-0.01	4.6
Right	#Right:17	End	30.00	2.73	0.14	-0.03	25.95	-0.10	-0.0	-7.27	1.48	-0.01	5.9
Right	#Right:17	Origin	30.00	2.73	0.14	-0.03	25.95	-0.10	-0.0	-8.32	1.68	-0.01	5.9
Right	Right:Coax3	End	35.00	2.24	0.13	-0.03	34.33	-0.14	-0.0	-8.32	1.68	-0.01	7.2
Right	Right:Coax3	Origin	35.00	2.24	0.13	-0.03	34.33	-0.14	-0.0	-9.77	1.88	-0.01	7.3
Right	Right:SW	End	37.00	2.07	0.12	-0.03	38.08	-0.16	-0.0	-9.77	1.88	-0.01	7.8
Right	Right:SW	Origin	37.00	2.07	0.12	-0.03	36.37	-0.16	0.0	-18.14	0.46	-0.01	7.8
Right	Right:V	End	39.00	1.90	0.12	-0.03	37.28	-0.19	0.0	-18.14	0.46	-0.01	7.8
Right	Right:V	Origin	39.00	1.90	0.12	-0.03	37.28	-0.19	0.0	-18.70	0.54	-0.01	7.8
Right	#Right:18	End	42.00	1.67	0.11	-0.03	38.92	-0.23	0.0	-18.70	0.54	-0.01	7.8
Right	#Right:18	Origin	42.00	1.67	0.11	-0.03	38.92	-0.23	0.0	-19.39	0.65	-0.01	7.9
Right	Right:Coax4	End	45.00	1.46	0.10	-0.03	40.87	-0.27	0.0	-19.39	0.65	-0.01	7.9
Right	Right:Coax4	Origin	45.00	1.46	0.10	-0.03	40.87	-0.27	0.0	-21.02	0.86	-0.02	8.0
Right	Right:A	End	50.00	1.16	0.09	-0.03	45.16	-0.35	0.0	-21.02	0.86	-0.02	8.2
Right	Right:A	Origin	50.00	1.16	0.09	-0.03	45.16	-0.36	0.2	-22.47	1.59	-0.03	8.3
Right	Right:Coax5	End	55.00	0.92	0.08	-0.02	53.11	-0.52	0.2	-22.47	1.59	-0.03	9.0
Right	Right:Coax5	Origin	55.00	0.92	0.08	-0.02	53.11	-0.52	0.2	-24.19	1.80	-0.03	9.1
Right	#Right:19	End	58.25	0.80	0.08	-0.02	58.95	-0.62	0.2	-24.19	1.80	-0.03	9.7
Right	#Right:19	Origin	58.25	0.80	0.08	-0.02	58.95	-0.62	0.2	-25.02	1.90	-0.03	9.7
Right	Right:XT	End	61.50	0.71	0.07	-0.02	65.14	-0.73	0.2	-25.02	1.90	-0.03	10.2
Right	Right:XT	Origin	61.50	0.71	0.07	-0.02	61.31	-0.73	0.2	-30.67	-2.01	-0.04	9.9
Right	Right:Coax6	End	65.00	0.64	0.06	-0.02	54.27	-0.87	0.2	-30.67	-2.01	-0.04	8.6
Right	Right:Coax6	Origin	65.00	0.64	0.06	-0.02	54.27	-0.87	0.2	-32.16	-1.85	-0.04	8.6
Right	Right:X2T	End	67.50	0.61	0.06	-0.02	49.65	-0.96	0.2	-32.16	-1.85	-0.04	7.8
Right	Right:X2T	Origin	67.50	0.61	0.06	-0.02	46.30	-0.96	0.2	-37.03	-5.07	-0.04	7.5
Right	#Right:20	End	71.25	0.58	0.05	-0.02	27.30	-1.13	0.2	-37.03	-5.07	-0.04	4.8
Right	#Right:20	Origin	71.25	0.58	0.05	-0.02	27.30	-1.13	0.2	-38.06	-4.94	-0.04	4.9
Right	Right:Coax7	End	75.00	0.57	0.04	-0.02	8.77	-1.29	0.2	-38.06	-4.94	-0.04	2.5
Right	Right:Coax7	Origin	75.00	0.57	0.04	-0.02	8.77	-1.29	0.2	-39.99	-4.71	-0.05	2.5
Right	#Right:21	End	80.00	0.56	0.04	-0.02	-14.78	-1.52	0.2	-39.99	-4.71	-0.05	3.2
Right	#Right:21	Origin	80.00	0.56	0.04	-0.02	-14.78	-1.52	0.2	-41.44	-4.51	-0.05	3.2
Right	Right:Coax8	End	85.00	0.54	0.03	-0.02	-37.35	-1.75	0.2	-41.44	-4.51	-0.05	5.6
Right	Right:Coax8	Origin	85.00	0.54	0.03	-0.02	-37.35	-1.75	0.2	-43.25	-4.29	-0.05	5.6
Right	Right:XB	End	87.50	0.51	0.02	-0.01	-48.09	-1.87	0.2	-43.25	-4.29	-0.05	6.7
Right	Right:XB	Origin	87.50	0.51	0.02	-0.01	-54.38	-1.87	0.2	-50.85	2.01	-0.05	7.6
Right	#Right:22	End	90.50	0.48	0.02	-0.01	-48.34	-2.02	0.2	-50.85	2.01	-0.05	6.8
Right	#Right:22	Origin	90.50	0.48	0.02	-0.01	-48.34	-2.02	0.2	-51.77	2.14	-0.05	6.8
Right	Right:X2B	End	93.50	0.43	0.02	-0.01	-41.91	-2.17	0.2	-51.77	2.14	-0.05	6.0
Right	Right:X2B	Origin	93.50	0.43	0.02	-0.01	-45.82	-2.17	0.2	-56.54	5.88	-0.05	6.5
Right	Right:Coax9	End	95.00	0.40	0.02	-0.01	-37.00	-2.25	0.2	-56.54	5.88	-0.05	5.6
Right	Right:Coax9	Origin	95.00	0.40	0.02	-0.01	-37.00	-2.25	0.2	-58.26	6.08	-0.05	5.6
Right	#Right:23	End	100.00	0.30	0.01	-0.01	-6.60	-2.52	0.2	-58.26	6.08	-0.05	2.6
Right	#Right:23	Origin	100.00	0.30	0.01	-0.01	-6.60	-2.52	0.2	-59.87	6.28	-0.06	2.6
Right	Right:Coax10	End	105.00	0.19	0.01	-0.01	24.77	-2.80	0.2	-59.87	6.28	-0.06	4.2
Right	Right:Coax10	Origin	105.00	0.19	0.01	-0.01	24.77	-2.80	0.2	-62.21	6.52	-0.06	4.3
Right	#Right:24	End	110.00	0.09	0.00	-0.00	57.37	-3.08	0.2	-62.21	6.52	-0.06	7.0
Right	#Right:24	Origin	110.00	0.09	0.00	-0.00	57.37	-3.08	0.2	-63.91	6.68	-0.06	7.0
Right	Right:Coax11	End	115.00	0.03	0.00	-0.00	90.78	-3.36	0.2	-63.91	6.68	-0.06	9.5
Right	Right:Coax11	Origin	115.00	0.03	0.00	-0.00	90.78	-3.36	0.2	-66.33	6.89	-0.06	9.6
Right	Right:g	End	120.00	0.00	0.00	0.00	125.24	-3.64	0.2	-66.33	6.89	-0.06	12.0

Summary of Brace Forces and Usages for Load Case "NESC Heavy T":

Brace Label	Forces (kips)	Allowable Compression (kips)	Allowable Tension (kips)	Usage %

TENL	3.31	5.45	99.22	5.13
TENR	3.16	5.45	99.22	4.90
VEEL	-1.61	28.46	241.92	8.69
VEER	6.39	28.46	241.92	4.06
X1L	-8.92	41.12	255.15	33.38
X1R	5.99	41.12	255.15	3.61
X2L	-5.22	41.12	255.15	19.52
X2R	4.97	41.12	255.15	2.99

Detailed X-Arm Usages for Load Case "NESC Heavy T":

X-Arm Label	Joint Label	Joint Position	Rel. Dist. (ft)	Area (in^2)	X Sect. Modulus (in^3)	Z Sect. Modulus (in^3)	Tran. Defl. (in)	Long. Defl. (in)	Vert. Defl. (in)	X Mom. (ft-k)	Z Mom. (ft-k)	Tors. Mom. (ft-k)	Axial Force (kips)	X Shear (kips)	Z Shear (kips)	P/A (psi)	Mx/Sx (psi)	Mz/Sz (psi)	Max. Usage %
TAR53	TAR53:O	Origin	0.00	76.90	65.70	96.10	1.17	0.18	-0.91	0.00	0.00	0.0	0.00	-0.01	-0.00	0.00058	4.55e-005	5.31e-006	0.0
TAR53	TAR53:L1	End	0.50	76.90	65.70	96.10	1.17	0.18	-0.88	-0.01	0.00	0.0	0.00	-0.01	-0.00	0.00058	0.969	0.000272	0.0
TAR53	TAR53:L1	Origin	0.50	76.90	65.70	96.10	1.17	0.18	-0.88	0.01	-0.00	-0.0	-3.35	0.18	-0.00	43	0.969	0.000265	0.9
TAR53	#gTAR53:0	End	5.50	76.90	65.70	96.10	1.17	0.17	-0.62	0.91	0.01	-0.0	-3.35	0.18	-0.00	43	166	1.11	4.0
TAR53	#gTAR53:0	Origin	5.50	76.90	65.70	96.10	1.17	0.17	-0.62	-0.91	-0.01	-0.0	-3.34	-0.01	-0.00	43	166	1.11	4.0
TAR53	#gTAR53:1	End	9.50	76.90	65.70	96.10	1.17	0.16	-0.34	0.86	0.02	-0.0	-3.34	-0.01	-0.00	43	156	2.02	3.9
TAR53	#gTAR53:1	Origin	9.50	76.90	65.70	96.10	1.17	0.16	-0.34	-0.86	-0.02	-0.0	-3.34	-0.19	-0.00	43	156	2.02	3.9
TAR53	TAR53:PL	End	13.50	76.90	65.70	96.10	1.16	0.15	0.00	0.11	0.02	-0.0	-3.34	-0.19	-0.00	43	20	2.95	1.3
TAR53	TAR53:PL	Origin	13.50	76.90	65.70	96.10	1.16	0.15	0.00	-0.11	0.11	-0.0	4.94	-0.14	-0.01	64	20	13.2	1.9
TAR53	#gTAR53:2	End	18.50	76.90	65.70	96.10	1.16	0.14	0.43	-0.58	-0.06	-0.0	4.94	-0.14	-0.01	64	105	7.68	3.4
TAR53	#gTAR53:2	Origin	18.50	76.90	65.70	96.10	1.16	0.14	0.43	0.58	0.06	-0.0	4.94	-0.33	-0.01	64	105	7.68	3.4
TAR53	#gTAR53:3	End	22.50	76.90	65.70	96.10	1.16	0.13	0.72	-1.91	-0.03	-0.0	4.94	-0.33	-0.01	64	349	3.39	8.0
TAR53	#gTAR53:3	Origin	22.50	76.90	65.70	96.10	1.16	0.13	0.72	1.91	0.03	-0.0	4.94	-0.52	-0.01	64	349	3.39	8.0
TAR53	TAR53:L2V	End	26.50	76.90	65.70	96.10	1.17	0.12	0.85	-3.99	0.01	-0.0	4.94	-0.52	-0.01	64	729	0.877	15.3
TAR53	TAR53:L2V	Origin	26.50	76.90	65.70	96.10	1.17	0.12	0.85	3.99	-0.01	-0.0	-1.69	0.48	-0.01	22	729	0.883	14.5
TAR53	#gTAR53:4	End	31.50	76.90	65.70	96.10	1.17	0.11	0.66	-1.60	0.07	-0.0	-1.69	0.48	-0.01	22	293	8.89	6.2
TAR53	#gTAR53:4	Origin	31.50	76.90	65.70	96.10	1.17	0.11	0.66	1.60	-0.07	-0.0	-1.69	0.29	-0.01	22	293	8.89	6.2
TAR53	#gTAR53:5	End	35.50	76.90	65.70	96.10	1.16	0.10	0.34	-0.43	0.12	-0.0	-1.69	0.29	-0.01	22	78.3	15.3	2.2
TAR53	#gTAR53:5	Origin	35.50	76.90	65.70	96.10	1.16	0.10	0.34	0.43	-0.12	-0.0	-1.69	0.12	-0.01	22	78.3	15.3	2.2
TAR53	TAR53:PR	End	39.50	76.90	65.70	96.10	1.16	0.09	-0.03	0.07	0.17	-0.0	-1.69	0.12	-0.01	22	13	21.6	1.1
TAR53	TAR53:PR	Origin	39.50	76.90	65.70	96.10	1.16	0.09	-0.03	-0.07	-0.02	0.0	-1.14	0.17	0.00	15	13	2.44	0.6
TAR53	#gTAR53:6	End	44.50	76.90	65.70	96.10	1.16	0.09	-0.46	0.90	0.01	0.0	-1.14	0.17	0.00	15	164	1.47	3.5
TAR53	#gTAR53:6	Origin	44.50	76.90	65.70	96.10	1.16	0.09	-0.46	-0.90	-0.01	0.0	-1.14	-0.03	0.00	15	164	1.47	3.5
TAR53	#gTAR53:7	End	48.50	76.90	65.70	96.10	1.16	0.09	-0.75	0.79	0.01	0.0	-1.14	-0.03	0.00	15	144	0.722	3.1
TAR53	#gTAR53:7	Origin	48.50	76.90	65.70	96.10	1.16	0.09	-0.75	-0.79	-0.01	-0.0	-1.14	-0.20	0.00	15	144	0.722	3.1
TAR53	TAR53:L3	End	52.50	76.90	65.70	96.10	1.16	0.09	-0.98	-0.01	0.00	-0.0	-1.14	-0.20	0.00	15	0.969	0.00022	0.3
TAR53	TAR53:L3	Origin	52.50	76.90	65.70	96.10	1.16	0.09	-0.98	0.01	-0.00	-0.0	0.00	0.01	0.00	0.00064	0.969	0.000225	0.0
TAR53	TAR53:E	End	53.00	76.90	65.70	96.10	1.16	0.09	-1.01	-0.00	-0.00	-0.0	0.00	0.01	0.00	0.00064	3.36e-007	2.38e-006	0.0

Summary of Clamp Capacities and Usages for Load Case "NESC Heavy T":

Clamp Label	Force (kips)	Input Holding Capacity (kips)	Factored Holding Capacity (kips)	Usage %
C1	0.917	10.00	10.00	9.17
C2	0.728	10.00	10.00	7.28
C3	0.740	10.00	10.00	7.40
C4	0.723	10.00	10.00	7.23
C5	0.728	10.00	10.00	7.28
C6	0.729	10.00	10.00	7.29

C7	0.718	10.00	10.00	7.18
C8	0.732	10.00	10.00	7.32
C9	0.725	10.00	10.00	7.25
C10	0.720	10.00	10.00	7.20
C11	0.740	10.00	10.00	7.40
C12	0.740	10.00	10.00	7.40

Summary of Suspension Capacities and Usages for Load Case "NESC Heavy T":

Suspension Label	Tension (kips)	Input Tension Capacity (kips)	Factored Tension Capacity (kips)	Usage %
SUSL	2.208	60.00	60.00	3.68
SUSC	2.208	60.00	60.00	3.68
SUSR	2.208	60.00	60.00	3.68
SWL	1.011	60.00	60.00	1.69
SWR	1.011	60.00	60.00	1.69

*** Analysis Results for Load Case No. 2 "NESC Heavy L" - Number of iterations in SAPS 19

Equilibrium Joint Positions and Rotations for Load Case "NESC Heavy L":

Joint Label	X-Displ (ft)	Y-Displ (ft)	Z-Displ (ft)	X-Rot (deg)	Y-Rot (deg)	Z-Rot (deg)	X-Pos (ft)	Y-Pos (ft)	Z-Pos (ft)
Left:g	0	0	0	0.0000	0.0000	0.0000	0	-13	0
Left:t	1.661	-0.005367	-0.02046	0.1114	1.5744	0.5156	1.661	-13.01	83.48
Left:SW	1.641	-0.004095	-0.02017	0.1114	1.5744	0.5156	1.641	-13	82.73
Left:V	1.592	-0.001161	-0.01948	0.1078	1.5739	0.5158	1.592	-13	80.98
Left:A	1.292	0.009698	-0.01519	0.0207	1.5467	0.5184	1.292	-12.99	69.98
Left:XT	0.9866	0.003335	-0.01093	-0.0042	1.4944	0.3414	0.9866	-13	58.49
Left:X2T	0.8322	0.001429	-0.00886	0.0022	1.4515	0.2733	0.8322	-13	52.49
Left:XB	0.3702	-0.0005681	-0.003195	0.0022	1.1509	0.1212	0.3702	-13	32.5
Left:X2B	0.2569	-0.00075	-0.00203	0.0020	1.0073	0.0904	0.2569	-13	26.5
Right:g	0	0	0	0.0000	0.0000	0.0000	0	13	0
Right:t	2.097	0.07905	-0.02296	-0.0846	1.3452	0.1027	2.097	13.08	120
Right:Sprint	2.003	0.07298	-0.02185	-0.0846	1.3452	0.1027	2.003	13.07	116
Right:Coax1	1.745	0.0563	-0.01878	-0.0843	1.3422	0.1027	1.745	13.06	105
Right:Coax2	1.512	0.04122	-0.01599	-0.0836	1.3321	0.1027	1.512	13.04	94.98
Right:Coax3	1.281	0.02632	-0.01324	-0.0823	1.3109	0.1027	1.281	13.03	84.99
Right:SW	1.235	0.02337	-0.0127	-0.0820	1.3050	0.1027	1.235	13.02	82.99
Right:V	1.19	0.02044	-0.01216	-0.0804	1.2985	0.1026	1.19	13.02	80.99
Right:Coax4	1.055	0.01236	-0.01056	-0.0671	1.2748	0.1023	1.055	13.01	74.99
Right:A	0.9449	0.00705	-0.009267	-0.0482	1.2498	0.1019	0.9449	13.01	69.99
Right:Coax5	0.8371	0.003389	-0.008027	-0.0288	1.2180	0.0921	0.8371	13	64.99
Right:XT	0.7018	0.0008706	-0.00651	-0.0105	1.1644	0.0801	0.7018	13	58.49
Right:Coax6	0.6317	0.0002743	-0.005746	-0.0042	1.1296	0.0740	0.6317	13	54.99
Right:X2T	0.583	6.412e-005	-0.005226	-0.0010	1.1022	0.0698	0.583	13	52.49
Right:Coax7	0.4447	6.63e-005	-0.003809	0.0041	1.0064	0.0577	0.4447	13	45
Right:Coax8	0.2823	0.0006203	-0.002288	0.0037	0.8471	0.0430	0.2823	13	35
Right:XB	0.2463	0.0007195	-0.001976	0.0026	0.8016	0.0395	0.2463	13	32.5
Right:X2B	0.1684	0.0007418	-0.001335	-0.0003	0.6832	0.0314	0.1684	13	26.5
Right:Coax9	0.1509	0.0007137	-0.001199	-0.0007	0.6515	0.0295	0.1509	13	25
Right:Coax10	0.0568	0.0003761	-0.0005153	-0.0020	0.4186	0.0169	0.0568	13	15
Right:Coax11	0.006625	5.43e-005	-0.0001339	-0.0011	0.1486	0.0054	0.006625	13	5
TAR53:O	1.439	0.0107	-0.03737	0.0315	1.5457	0.6738	1.439	-26.49	69.96
TAR53:L1	1.433	0.01067	-0.03694	0.0315	1.5457	0.6738	1.433	-25.99	69.96
TAR53:PL	1.292	0.009698	-0.01519	0.0978	1.5467	0.5184	1.292	-12.99	69.98
TAR53:L2V	1.102	0.008158	0.002839	-0.0239	1.3980	0.9928	1.102	0.008158	70
TAR53:PR	0.9449	0.00705	-0.009267	-0.1049	1.2498	0.1019	0.9449	13.01	69.99
TAR53:L3	0.9438	0.006858	-0.02912	-0.0372	1.2496	-0.0426	0.9438	26.01	69.97
TAR53:E	0.9442	0.006858	-0.02945	-0.0372	1.2496	-0.0426	0.9442	26.51	69.97
TENL:O	1.644	-0.004081	-0.02083	0.1114	1.5744	0.5156	1.644	-13.34	82.73
TENR:O	1.234	0.02336	-0.01368	-0.0820	1.3050	0.1027	1.234	13.7	82.99
VEEL:O	1.637	-0.004109	-0.01951	0.1114	1.5744	0.5156	1.637	-12.66	82.73
VEER:O	1.237	0.02337	-0.01173	-0.0820	1.3050	0.1027	1.237	12.34	82.99
X1L:O	0.9831	0.003324	-0.01098	-0.0042	1.4944	0.3414	0.9831	-12.42	58.49
X1L:E	0.2469	0.0007197	-0.002018	0.0026	0.8016	0.0395	0.2469	12.07	32.5
X1R:O	0.7029	0.0008714	-0.006363	-0.0105	1.1644	0.0801	0.7029	12.2	58.49
X1R:E	0.3685	-0.0005699	-0.003163	0.0022	1.1509	0.1212	0.3685	-12.17	32.5
X2L:O	0.8292	0.001422	-0.008836	0.0022	1.4515	0.2733	0.8292	-12.36	52.49
X2L:E	0.1689	0.0007419	-0.001331	-0.0003	0.6832	0.0314	0.1689	12.04	26.5
X2R:O	0.2555	-0.0007512	-0.001999	0.0020	1.0073	0.0904	0.2555	-12.11	26.5
X2R:E	0.584	6.474e-005	-0.005211	-0.0010	1.1022	0.0698	0.584	12.17	52.49

Joint Support Reactions for Load Case "NESC Heavy L":

Joint Label	X Force (kips)	X Usage %	Y Force (kips)	Y Usage %	H-Shear Usage %	Z Force (kips)	Comp. Usage %	Uplift Usage %	Result. Force (kips)	Result. Usage %	X Moment (ft-k)	X-M. Usage %	Y Moment (ft-k)	Y-M. Usage %	H-Bend-M Usage %	Z Moment (ft-k)	Z-M. Usage %	Max. Usage %
Left:g	-2.43	0.0	0.12	0.0	0.0	-16.53	0.0	0.0	16.71	0.0	-2.41	0.0	-95.2	0.0	0.0	-8.65	0.0	0.0
Right:g	-7.03	0.0	-0.23	0.0	0.0	-46.24	0.0	0.0	46.77	0.0	3.19	0.0	-437.1	0.0	0.0	-10.74	0.0	0.0

Detailed Laminated Wood Pole Usages for Load Case "NESC Heavy L":

Element Label	Joint Label	Joint Position	Rel. Dist. (ft)	Trans. Defl. (in)	Long. Defl. (in)	Vert. Defl. (in)	Trans. Mom. (ft-k)	Long. Mom. (ft-k)	Tors. Mom. (ft-k)	Axial Force (kips)	Tran. Shear (kips)	Long. Shear (kips)	Usage %
Left	Left:t	Origin	0.00	-0.06	19.93	-0.25	-0.00	0.00	0.0	-0.02	0.00	-0.00	0.0
Left	Left:SW	End	0.75	-0.05	19.69	-0.24	0.00	-0.00	0.0	-0.02	0.00	-0.00	0.0
Left	Left:SW	Origin	0.75	-0.05	19.69	-0.24	-0.09	-0.00	-0.0	-5.23	-0.38	-0.19	1.0
Left	Left:V	End	2.50	-0.01	19.11	-0.23	-0.75	-0.33	-0.0	-5.23	-0.38	-0.19	2.1
Left	Left:V	Origin	2.50	-0.01	19.11	-0.23	-0.75	-0.33	-0.0	-5.43	-0.37	-0.23	2.2
Left	#Left:0	End	7.50	0.07	17.46	-0.21	-2.62	-1.48	-0.0	-5.43	-0.37	-0.23	4.6
Left	#Left:0	Origin	7.50	0.07	17.46	-0.21	-2.62	-1.48	-0.0	-5.69	-0.37	-0.29	4.7
Left	#Left:1	End	10.50	0.10	16.48	-0.20	-3.73	-2.35	-0.0	-5.69	-0.37	-0.29	5.8
Left	#Left:1	Origin	10.50	0.10	16.48	-0.20	-3.73	-2.34	-0.0	-5.91	-0.37	-0.33	5.8
Left	Left:A	End	13.50	0.12	15.51	-0.18	-4.84	-3.35	-0.0	-5.91	-0.37	-0.33	6.8
Left	Left:A	Origin	13.50	0.12	15.51	-0.18	-4.59	-2.75	9.2	-6.79	0.60	-0.19	6.3
Left	#Left:2	End	18.50	0.09	13.90	-0.16	-1.60	-3.70	9.2	-6.79	0.60	-0.19	3.9
Left	#Left:2	Origin	18.50	0.09	13.90	-0.16	-1.60	-3.69	9.2	-7.13	0.60	-0.26	3.9
Left	#Left:3	End	21.75	0.06	12.86	-0.15	0.35	-4.55	9.2	-7.13	0.60	-0.26	3.3
Left	#Left:3	Origin	21.75	0.06	12.86	-0.15	0.35	-4.55	9.2	-7.42	0.60	-0.32	3.4
Left	Left:XT	End	25.00	0.04	11.84	-0.13	2.29	-5.60	9.2	-7.42	0.60	-0.32	4.7
Left	Left:XT	Origin	25.00	0.04	11.84	-0.13	1.93	-5.60	9.1	-7.09	-0.29	-0.55	4.5
Left	#Left:4	End	28.00	0.03	10.91	-0.12	1.06	-7.25	9.1	-7.09	-0.29	-0.55	4.6
Left	#Left:4	Origin	28.00	0.03	10.91	-0.12	1.05	-7.26	9.1	-7.39	-0.29	-0.62	4.6
Left	Left:X2T	End	31.00	0.02	9.99	-0.11	0.18	-9.10	9.1	-7.39	-0.29	-0.62	4.8
Left	Left:X2T	Origin	31.00	0.02	9.99	-0.11	0.53	-9.10	9.0	-8.37	-0.07	-0.87	5.1
Left	#Left:5	End	36.00	0.01	8.49	-0.09	0.18	-13.47	9.0	-8.37	-0.07	-0.87	6.4
Left	#Left:5	Origin	36.00	0.01	8.49	-0.09	0.17	-13.47	9.0	-8.93	-0.07	-0.99	6.4
Left	#Left:6	End	41.00	-0.00	7.06	-0.07	-0.17	-18.41	9.0	-8.93	-0.07	-0.99	7.9
Left	#Left:6	Origin	41.00	-0.00	7.06	-0.07	-0.18	-18.41	9.0	-9.53	-0.07	-1.11	8.0
Left	#Left:7	End	46.00	-0.00	5.70	-0.05	-0.51	-23.95	9.0	-9.53	-0.07	-1.11	9.6
Left	#Left:7	Origin	46.00	-0.00	5.70	-0.05	-0.53	-23.95	9.0	-10.17	-0.07	-1.23	9.6
Left	Left:XB	End	51.00	-0.01	4.44	-0.04	-0.86	-30.10	9.0	-10.17	-0.07	-1.23	11.2
Left	Left:XB	Origin	51.00	-0.01	4.44	-0.04	-0.84	-30.10	8.8	-10.75	0.21	-1.50	11.3
Left	#Left:8	End	54.00	-0.01	3.74	-0.03	-0.20	-34.59	8.8	-10.75	0.21	-1.50	12.2
Left	#Left:8	Origin	54.00	-0.01	3.74	-0.03	-0.21	-34.59	8.8	-11.17	0.21	-1.57	12.3
Left	Left:X2B	End	57.00	-0.01	3.08	-0.02	0.42	-39.31	8.8	-11.17	0.21	-1.57	13.4
Left	Left:X2B	Origin	57.00	-0.01	3.08	-0.02	1.02	-39.31	8.7	-12.46	-0.13	-1.84	13.6
Left	#Left:9	End	62.00	-0.01	2.10	-0.02	0.39	-48.52	8.7	-12.46	-0.13	-1.84	15.6
Left	#Left:9	Origin	62.00	-0.01	2.10	-0.02	0.36	-48.52	8.7	-13.23	-0.13	-1.97	15.6
Left	#Left:10	End	67.00	-0.01	1.28	-0.01	-0.27	-58.37	8.7	-13.23	-0.13	-1.97	17.7
Left	#Left:10	Origin	67.00	-0.01	1.28	-0.01	-0.30	-58.37	8.7	-14.04	-0.13	-2.10	17.7
Left	#Left:11	End	72.00	-0.00	0.64	-0.00	-0.92	-68.85	8.7	-14.04	-0.13	-2.10	19.9
Left	#Left:11	Origin	72.00	-0.00	0.64	-0.00	-0.95	-68.85	8.7	-14.89	-0.13	-2.22	19.9
Left	#Left:12	End	77.00	-0.00	0.21	-0.00	-1.57	-79.94	8.7	-14.89	-0.13	-2.22	22.0
Left	#Left:12	Origin	77.00	-0.00	0.21	-0.00	-1.59	-79.94	8.7	-15.62	-0.13	-2.32	22.1
Left	#Left:13	End	80.25	-0.00	0.05	-0.00	-1.99	-87.47	8.7	-15.62	-0.13	-2.32	23.4
Left	#Left:13	Origin	80.25	-0.00	0.05	-0.00	-2.01	-87.47	8.7	-16.22	-0.12	-2.39	23.5

Left	Left:g	End	83.50	0.00	0.00	0.00	-2.40	-95.24	8.7	-16.22	-0.12	-2.39	24.8
Right	Right:t	Origin	0.00	0.95	25.17	-0.28	0.00	-0.00	0.0	-0.33	0.00	-0.04	0.0
Right	Right:Sprint	End	4.00	0.88	24.04	-0.26	0.00	-0.16	0.0	-0.33	0.00	-0.04	0.0
Right	Right:Sprint	Origin	4.00	0.88	24.04	-0.26	0.00	-0.16	-0.0	-1.90	0.00	-0.30	0.1
Right	#Right:14	End	9.00	0.78	22.63	-0.25	0.03	-1.66	-0.0	-1.90	0.00	-0.30	0.3
Right	#Right:14	Origin	9.00	0.78	22.63	-0.25	0.03	-1.66	-0.0	-2.60	0.01	-0.39	0.4
Right	#Right:15	End	12.00	0.73	21.79	-0.24	0.05	-2.82	-0.0	-2.60	0.01	-0.39	0.5
Right	#Right:15	Origin	12.00	0.73	21.79	-0.24	0.05	-2.82	-0.0	-3.14	0.01	-0.45	0.5
Right	Right:Coax1	End	15.00	0.68	20.94	-0.23	0.08	-4.18	-0.0	-3.14	0.01	-0.45	0.7
Right	Right:Coax1	Origin	15.00	0.68	20.94	-0.23	0.08	-4.18	-0.0	-4.58	0.01	-0.73	0.8
Right	#Right:16	End	20.00	0.58	19.54	-0.21	0.14	-7.84	-0.0	-4.58	0.01	-0.73	1.2
Right	#Right:16	Origin	20.00	0.58	19.54	-0.21	0.14	-7.84	-0.0	-5.55	0.02	-0.85	1.3
Right	Right:Coax2	End	25.00	0.49	18.14	-0.19	0.22	-12.09	-0.0	-5.55	0.02	-0.85	1.7
Right	Right:Coax2	Origin	25.00	0.49	18.14	-0.19	0.22	-12.09	-0.0	-7.25	0.02	-1.16	1.8
Right	#Right:17	End	30.00	0.40	16.75	-0.18	0.32	-17.89	-0.0	-7.25	0.02	-1.16	2.4
Right	#Right:17	Origin	30.00	0.40	16.75	-0.18	0.32	-17.89	-0.0	-8.30	0.02	-1.29	2.4
Right	Right:Coax3	End	35.00	0.32	15.37	-0.16	0.43	-24.32	-0.0	-8.30	0.02	-1.29	3.1
Right	Right:Coax3	Origin	35.00	0.32	15.37	-0.16	0.43	-24.32	-0.0	-9.75	0.03	-1.56	3.1
Right	Right:SW	End	37.00	0.28	14.82	-0.15	0.48	-27.45	-0.0	-9.75	0.03	-1.56	3.4
Right	Right:SW	Origin	37.00	0.28	14.82	-0.15	1.27	-27.45	0.0	-14.45	1.22	-1.80	3.8
Right	Right:V	End	39.00	0.25	14.28	-0.15	3.71	-31.05	0.0	-14.45	1.22	-1.80	4.6
Right	Right:V	Origin	39.00	0.25	14.28	-0.15	3.71	-31.05	0.0	-15.01	1.22	-1.86	4.6
Right	#Right:18	End	42.00	0.19	13.47	-0.14	7.37	-36.64	0.0	-15.01	1.22	-1.86	5.7
Right	#Right:18	Origin	42.00	0.19	13.47	-0.14	7.37	-36.64	0.0	-15.70	1.22	-1.94	5.7
Right	Right:Coax4	End	45.00	0.15	12.66	-0.13	11.03	-42.48	0.0	-15.70	1.22	-1.94	6.8
Right	Right:Coax4	Origin	45.00	0.15	12.66	-0.13	11.03	-42.48	0.0	-17.33	1.22	-2.24	6.9
Right	Right:A	End	50.00	0.08	11.34	-0.11	17.13	-53.68	0.0	-17.33	1.22	-2.24	8.7
Right	Right:A	Origin	50.00	0.08	11.34	-0.11	17.34	-54.27	10.2	-19.08	-0.55	-3.62	8.8
Right	Right:Coax5	End	55.00	0.04	10.05	-0.10	14.62	-72.35	10.2	-19.08	-0.55	-3.62	9.8
Right	Right:Coax5	Origin	55.00	0.04	10.05	-0.10	14.61	-72.35	10.2	-20.79	-0.55	-3.92	9.8
Right	#Right:19	End	58.25	0.02	9.22	-0.09	12.84	-85.08	10.2	-20.79	-0.55	-3.92	10.5
Right	#Right:19	Origin	58.25	0.02	9.22	-0.09	12.83	-85.08	10.2	-21.62	-0.55	-4.01	10.5
Right	Right:XT	End	61.50	0.01	8.42	-0.08	11.05	-98.10	10.2	-21.62	-0.55	-4.01	11.2
Right	Right:XT	Origin	61.50	0.01	8.42	-0.08	10.54	-98.11	10.3	-23.13	-0.83	-4.27	11.2
Right	Right:Coax6	End	65.00	0.00	7.58	-0.07	7.66	-113.04	10.3	-23.13	-0.83	-4.27	11.9
Right	Right:Coax6	Origin	65.00	0.00	7.58	-0.07	7.66	-113.04	10.3	-24.62	-0.83	-4.53	11.9
Right	Right:X2T	End	67.50	0.00	7.00	-0.06	5.60	-124.38	10.3	-24.62	-0.83	-4.53	12.4
Right	Right:X2T	Origin	67.50	0.00	7.00	-0.06	5.62	-124.38	10.4	-25.43	-0.48	-4.78	12.5
Right	#Right:20	End	71.25	-0.00	6.15	-0.05	3.82	-142.31	10.4	-25.43	-0.48	-4.78	13.5
Right	#Right:20	Origin	71.25	-0.00	6.15	-0.05	3.81	-142.31	10.4	-26.47	-0.48	-4.88	13.5
Right	Right:Coax7	End	75.00	0.00	5.34	-0.05	2.01	-160.62	10.4	-26.47	-0.48	-4.88	14.5
Right	Right:Coax7	Origin	75.00	0.00	5.34	-0.05	2.00	-160.62	10.4	-28.40	-0.48	-5.18	14.6
Right	#Right:21	End	80.00	0.00	4.32	-0.04	-0.39	-186.52	10.4	-28.40	-0.48	-5.18	16.1
Right	#Right:21	Origin	80.00	0.00	4.32	-0.04	-0.40	-186.52	10.4	-29.86	-0.48	-5.31	16.1
Right	Right:Coax8	End	85.00	0.01	3.39	-0.03	-2.77	-213.05	10.4	-29.86	-0.48	-5.31	18.1
Right	Right:Coax8	Origin	85.00	0.01	3.39	-0.03	-2.79	-213.05	10.4	-31.66	-0.48	-5.58	18.1
Right	Right:XB	End	87.50	0.01	2.96	-0.02	-3.97	-226.99	10.4	-31.66	-0.48	-5.58	19.1
Right	Right:XB	Origin	87.50	0.01	2.96	-0.02	-5.17	-226.99	10.6	-33.78	0.42	-5.80	19.3
Right	#Right:22	End	90.50	0.01	2.47	-0.02	-3.88	-244.38	10.6	-33.78	0.42	-5.80	20.2
Right	#Right:22	Origin	90.50	0.01	2.47	-0.02	-3.89	-244.38	10.6	-34.71	0.43	-5.86	20.2
Right	Right:X2B	End	93.50	0.01	2.02	-0.02	-2.60	-261.97	10.6	-34.71	0.43	-5.86	21.1
Right	Right:X2B	Origin	93.50	0.01	2.02	-0.02	-2.70	-261.97	10.7	-35.51	0.21	-6.08	21.1
Right	Right:Coax9	End	95.00	0.01	1.81	-0.01	-2.37	-271.09	10.7	-35.51	0.21	-6.08	21.6
Right	Right:Coax9	Origin	95.00	0.01	1.81	-0.01	-2.39	-271.09	10.7	-37.24	0.21	-6.33	21.7
Right	#Right:23	End	100.00	0.01	1.19	-0.01	-1.28	-302.72	10.7	-37.24	0.21	-6.33	23.3
Right	#Right:23	Origin	100.00	0.01	1.19	-0.01	-1.30	-302.72	10.7	-38.86	0.22	-6.42	23.4
Right	Right:Coax10	End	105.00	0.00	0.68	-0.01	-0.18	-334.83	10.7	-38.86	0.22	-6.42	25.0
Right	Right:Coax10	Origin	105.00	0.00	0.68	-0.01	-0.20	-334.83	10.7	-41.21	0.22	-6.69	25.1

Right	#Right:24	End	110.00	0.00	0.31	-0.00	0.94	-368.26	10.7	-41.21	0.22	-6.69	26.9
Right	#Right:24	Origin	110.00	0.00	0.31	-0.00	0.91	-368.26	10.7	-42.92	0.22	-6.76	26.9
Right	Right:Coax11	End	115.00	0.00	0.08	-0.00	2.06	-402.07	10.7	-42.92	0.22	-6.76	28.7
Right	Right:Coax11	Origin	115.00	0.00	0.08	-0.00	2.04	-402.07	10.7	-45.36	0.22	-7.00	28.7
Right	Right:g	End	120.00	0.00	0.00	0.00	3.20	-437.06	10.7	-45.36	0.22	-7.00	30.5

Summary of Brace Forces and Usages for Load Case "NESC Heavy L":

Brace Label	Forces (kips)	Allowable Compression (kips)	Allowable Tension (kips)	Usage %
TENL	3.20	5.45	99.22	4.96
TENR	3.12	5.45	99.22	4.84
VEEL	2.67	28.46	241.92	1.70
VEER	1.40	28.46	241.92	0.89
X1L	-1.30	41.12	255.15	4.88
X1R	0.40	41.12	255.15	0.24
X2L	0.32	41.12	255.15	0.19
X2R	-0.50	41.12	255.15	1.87

Detailed X-Arm Usages for Load Case "NESC Heavy L":

X-Arm Label	Joint Label	Joint Position	Rel. Dist. (ft)	Area (in^2)	X Sect. Modulus (in^3)	Z Sect. Modulus (in^3)	Tran. Defl. (in)	Long. Defl. (in)	Vert. Defl. (in)	X Mom. (ft-k)	Z Mom. (ft-k)	Tors. Mom. (ft-k)	Axial Force (kips)	X Shear (kips)	Z Shear (kips)	P/A (psi)	Mx/Sx (psi)	Mz/Sz (psi)	Max. Usage %
TAR53	TAR53:O	Origin	0.00	76.90	65.70	96.10	0.13	17.27	-0.45	-0.00	-0.00	-0.0	0.00	-0.01	-0.00	0.00012	0.000663	5.6e-005	0.0
TAR53	TAR53:L1	End	0.50	76.90	65.70	96.10	0.13	17.20	-0.44	-0.01	0.00	-0.0	0.00	-0.01	-0.00	0.00012	0.963	0.174	0.0
TAR53	TAR53:L1	Origin	0.50	76.90	65.70	96.10	0.13	17.20	-0.44	0.01	-0.00	-0.0	-2.25	0.13	-0.14	29	0.963	0.174	0.6
TAR53	#gTAR53:0	End	5.50	76.90	65.70	96.10	0.12	16.50	-0.38	0.62	0.72	-0.0	-2.25	0.13	-0.14	29	113	90.1	4.5
TAR53	#gTAR53:0	Origin	5.50	76.90	65.70	96.10	0.12	16.50	-0.38	-0.62	-0.72	-0.0	-2.25	-0.07	-0.19	29	113	90.1	4.5
TAR53	#gTAR53:1	End	9.50	76.90	65.70	96.10	0.12	15.98	-0.29	0.35	1.49	-0.0	-2.25	-0.07	-0.19	29	64.8	186	5.4
TAR53	#gTAR53:1	Origin	9.50	76.90	65.70	96.10	0.12	15.98	-0.29	-0.35	-1.49	-0.0	-2.25	-0.24	-0.23	29	64.8	186	5.4
TAR53	TAR53:PL	End	13.50	76.90	65.70	96.10	0.12	15.51	-0.18	-0.59	2.43	-0.0	-2.25	-0.24	-0.23	29	108	304	8.5
TAR53	TAR53:PL	Origin	13.50	76.90	65.70	96.10	0.12	15.51	-0.18	0.84	6.73	-0.6	-1.29	0.15	-0.50	17	154	841	19.5
TAR53	#gTAR53:2	End	18.50	76.90	65.70	96.10	0.11	14.80	-0.08	-0.09	-4.24	-0.6	-1.29	0.15	-0.50	17	17	529	10.8
TAR53	#gTAR53:2	Origin	18.50	76.90	65.70	96.10	0.11	14.80	-0.08	0.10	4.24	-0.6	-1.29	-0.04	-0.55	17	17.4	529	10.8
TAR53	#gTAR53:3	End	22.50	76.90	65.70	96.10	0.11	14.05	-0.01	-0.26	-2.02	-0.6	-1.29	-0.04	-0.55	17	46.7	252	6.1
TAR53	#gTAR53:3	Origin	22.50	76.90	65.70	96.10	0.11	14.05	-0.01	0.26	2.02	-0.6	-1.29	-0.21	-0.60	17	46.8	252	6.1
TAR53	TAR53:L2V	End	26.50	76.90	65.70	96.10	0.10	13.22	0.03	-1.09	0.38	-0.6	-1.29	-0.21	-0.60	17	200	47.5	5.1
TAR53	TAR53:L2V	Origin	26.50	76.90	65.70	96.10	0.10	13.22	0.03	1.09	-0.38	-0.6	-0.37	0.23	-0.89	4.8	199	47.6	4.8
TAR53	#gTAR53:4	End	31.50	76.90	65.70	96.10	0.09	12.24	-0.00	0.03	4.82	-0.6	-0.37	0.23	-0.89	4.8	6.35	602	11.8
TAR53	#gTAR53:4	Origin	31.50	76.90	65.70	96.10	0.09	12.24	-0.00	-0.04	-4.82	-0.6	-0.37	0.04	-0.94	4.8	6.76	602	11.8
TAR53	#gTAR53:5	End	35.50	76.90	65.70	96.10	0.09	11.63	-0.05	0.17	8.57	-0.6	-0.37	0.04	-0.94	4.8	31.6	1.07e+003	21.3
TAR53	#gTAR53:5	Origin	35.50	76.90	65.70	96.10	0.09	11.63	-0.05	-0.18	-8.57	-0.6	-0.38	-0.13	-0.98	4.9	32.3	1.07e+003	21.3
TAR53	TAR53:PR	End	39.50	76.90	65.70	96.10	0.08	11.34	-0.11	-0.37	12.48	-0.6	-0.38	-0.13	-0.98	4.9	67.3	1.56e+003	31.4
TAR53	TAR53:PR	Origin	39.50	76.90	65.70	96.10	0.08	11.34	-0.11	0.59	-2.28	0.0	-2.14	0.21	0.22	28	107	285	8.1
TAR53	#gTAR53:6	End	44.50	76.90	65.70	96.10	0.08	11.28	-0.24	0.49	1.19	0.0	-2.14	0.21	0.22	28	88.9	149	5.1
TAR53	#gTAR53:6	Origin	44.50	76.90	65.70	96.10	0.08	11.28	-0.24	-0.49	-1.19	0.0	-2.14	0.02	0.17	28	88.9	149	5.1
TAR53	#gTAR53:7	End	48.50	76.90	65.70	96.10	0.08	11.29	-0.31	0.58	0.51	0.0	-2.14	0.02	0.17	28	106	63.9	3.8
TAR53	#gTAR53:7	Origin	48.50	76.90	65.70	96.10	0.08	11.29	-0.31	-0.58	-0.51	0.0	-2.14	-0.15	0.13	28	106	63.9	3.8
TAR53	TAR53:L3	End	52.50	76.90	65.70	96.10	0.08	11.33	-0.35	-0.01	0.00	0.0	-2.14	-0.15	0.13	28	0.964	0.17	0.6
TAR53	TAR53:L3	Origin	52.50	76.90	65.70	96.10	0.08	11.33	-0.35	0.01	-0.00	-0.0	0.00	0.01	0.00	9.2e-005	0.964	0.17	0.0
TAR53	TAR53:E	End	53.00	76.90	65.70	96.10	0.08	11.33	-0.35	-0.00	-0.00	-0.0	0.00	0.01	0.00	9.2e-005	0.000149	1.11e-005	0.0

Summary of Clamp Capacities and Usages for Load Case "NESC Heavy L":

Clamp Label	Force (kips)	Input Holding Capacity (kips)	Factored Holding Capacity (kips)	Usage %
C1	0.844	10.00	10.00	8.44
C2	0.737	10.00	10.00	7.37
C3	0.746	10.00	10.00	7.46
C4	0.737	10.00	10.00	7.37
C5	0.744	10.00	10.00	7.44
C6	0.747	10.00	10.00	7.47
C7	0.739	10.00	10.00	7.39
C8	0.755	10.00	10.00	7.55
C9	0.750	10.00	10.00	7.50
C10	0.747	10.00	10.00	7.47
C11	0.771	10.00	10.00	7.71
C12	0.775	10.00	10.00	7.75

Summary of Suspension Capacities and Usages for Load Case "NESC Heavy L":

Suspension Label	Tension (kips)	Input Tension Capacity (kips)	Factored Tension Capacity (kips)	Usage %
SUSL	1.966	60.00	60.00	3.28
SUSC	1.966	60.00	60.00	3.28
SUSR	1.966	60.00	60.00	3.28
SWL	0.771	60.00	60.00	1.29
SWR	0.771	60.00	60.00	1.29

*** Analysis Results for Load Case No. 3 "Ext. Wind T" - Number of iterations in SAPS 16

Equilibrium Joint Positions and Rotations for Load Case "Ext. Wind T":

Joint Label	X-Displ (ft)	Y-Displ (ft)	Z-Displ (ft)	X-Rot (deg)	Y-Rot (deg)	Z-Rot (deg)	X-Pos (ft)	Y-Pos (ft)	Z-Pos (ft)
Left:g	0	0	0	0.0000	0.0000	0.0000	0	-13	0
Left:t	0.01241	0.05628	0.0003501	1.4249	0.0113	0.0044	0.01241	-12.94	83.5
Left:SW	0.01226	0.07493	0.0005821	1.4249	0.0113	0.0044	0.01226	-12.93	82.75
Left:V	0.01191	0.1177	0.001078	1.3502	0.0113	0.0044	0.01191	-12.88	81
Left:A	0.009755	0.2451	0.002031	-0.2435	0.0109	0.0047	0.009755	-12.75	70
Left:XT	0.007614	0.1282	0.002517	-0.4278	0.0106	0.0031	0.007614	-12.87	58.5
Left:X2T	0.006511	0.1058	0.002335	-0.0132	0.0105	0.0024	0.006511	-12.89	52.5
Left:XB	0.003052	0.1416	0.001417	-0.0703	0.0090	0.0011	0.003052	-12.86	32.5
Left:X2B	0.002157	0.1237	0.001126	-0.2620	0.0081	0.0008	0.002157	-12.88	26.5
Right:g	0	0	0	0.0000	0.0000	0.0000	0	13	0
Right:t	0.0144	1.447	-0.01897	-1.7861	0.0092	0.0012	0.0144	14.45	120
Right:Sprint	0.01376	1.323	-0.01703	-1.7845	0.0092	0.0012	0.01376	14.32	116
Right:Coax1	0.012	0.9857	-0.01185	-1.7011	0.0092	0.0012	0.012	13.99	105
Right:Coax2	0.0104	0.7051	-0.007879	-1.4897	0.0091	0.0011	0.0104	13.71	94.99
Right:Coax3	0.008825	0.4725	-0.005121	-1.1514	0.0090	0.0011	0.008825	13.47	84.99
Right:SW	0.008512	0.4337	-0.004735	-1.0698	0.0090	0.0011	0.008512	13.43	83
Right:V	0.0082	0.3977	-0.00438	-0.9922	0.0089	0.0011	0.0082	13.4	81
Right:Coax4	0.007275	0.305	-0.003566	-0.7833	0.0088	0.0010	0.007275	13.3	75
Right:A	0.006517	0.2434	-0.003106	-0.6289	0.0086	0.0010	0.006517	13.24	70
Right:Coax5	0.005775	0.1949	-0.002793	-0.4780	0.0084	0.0009	0.005775	13.19	65
Right:XT	0.004842	0.1521	-0.002546	-0.2721	0.0080	0.0008	0.004842	13.15	58.5
Right:Coax6	0.004357	0.1386	-0.002434	-0.1731	0.0078	0.0007	0.004357	13.14	55
Right:X2T	0.004021	0.1324	-0.002365	-0.1126	0.0076	0.0006	0.004021	13.13	52.5
Right:Coax7	0.003064	0.1249	-0.002121	-0.0268	0.0070	0.0005	0.003064	13.12	45
Right:Coax8	0.001941	0.1176	-0.001801	-0.0875	0.0059	0.0004	0.001941	13.12	35
Right:XB	0.001693	0.113	-0.001717	-0.1256	0.0055	0.0004	0.001693	13.11	32.5
Right:X2B	0.001155	0.09451	-0.001438	-0.2215	0.0047	0.0003	0.001155	13.09	26.5
Right:Coax9	0.001035	0.08841	-0.001353	-0.2410	0.0045	0.0003	0.001035	13.09	25
Right:Coax10	0.0003885	0.04162	-0.0007681	-0.2622	0.0029	0.0002	0.0003885	13.04	15
Right:Coax11	4.519e-005	0.005709	-0.0002345	-0.1212	0.0010	0.0001	4.519e-005	13.01	5
TAR53:O	0.01097	0.2467	-0.184	0.6533	0.0109	0.0056	0.01097	-26.25	69.82
TAR53:L1	0.01093	0.2467	-0.1783	0.6533	0.0109	0.0056	0.01093	-25.75	69.82
TAR53:PL	0.009755	0.2451	0.002031	1.0245	0.0109	0.0047	0.009755	-12.75	70
TAR53:L2V	0.008002	0.245	0.184	0.0133	0.0098	0.0092	0.008002	0.245	70.18
TAR53:PR	0.006517	0.2434	-0.003106	-1.0859	0.0086	0.0010	0.006517	13.24	70
TAR53:L3	0.006358	0.2419	-0.1983	-0.7207	0.0086	0.0003	0.006358	26.24	69.8
TAR53:E	0.006354	0.2419	-0.2046	-0.7207	0.0086	0.0003	0.006354	26.74	69.8
TENL:O	0.01229	0.07503	-0.007888	1.4249	0.0113	0.0044	0.01229	-13.27	82.74
TENR:O	0.008497	0.4336	-0.01746	-1.0698	0.0090	0.0011	0.008497	14.12	82.98
VEEL:O	0.01224	0.07482	0.009053	1.4249	0.0113	0.0044	0.01224	-12.58	82.76
VEER:O	0.008527	0.4338	0.007989	-1.0698	0.0090	0.0011	0.008527	12.75	83.01
X1L:O	0.007581	0.1282	-0.001788	-0.4278	0.0106	0.0031	0.007581	-12.3	58.5
X1L:E	0.001698	0.113	0.00032	-0.1256	0.0055	0.0004	0.001698	12.18	32.5
X1R:O	0.004853	0.1521	0.001261	-0.2721	0.0080	0.0008	0.004853	12.35	58.5
X1R:E	0.003037	0.1416	0.0003984	-0.0703	0.0090	0.0011	0.003037	-12.03	32.5
X2L:O	0.006484	0.1058	0.002189	-0.0132	0.0105	0.0024	0.006484	-12.26	52.5
X2L:E	0.00116	0.09452	0.002268	-0.2215	0.0047	0.0003	0.00116	12.14	26.5
X2R:O	0.002144	0.1236	-0.002935	-0.2620	0.0081	0.0008	0.002144	-11.99	26.5
X2R:E	0.00403	0.1324	-0.0007314	-0.1126	0.0076	0.0006	0.00403	12.3	52.5

Joint Support Reactions for Load Case "Ext. Wind T":

Joint Label	X Force (kips)	X Usage %	Y Force (kips)	Y Usage %	H-Shear Usage %	Z Force (kips)	Comp. Usage %	Uplift Usage %	Result. Force (kips)	Result. Usage %	X Moment (ft-k)	X-M. Usage %	Y Moment (ft-k)	Y-M. Usage %	H-Bend-M Usage %	Z Moment (ft-k)	Z-M. Usage %	Max. Usage %
Left:g	-0.03	0.0	-13.91	0.0	0.0	43.98	0.0	0.0	46.13	0.0	243.73	0.0	-0.9	0.0	0.0	-0.09	0.0	0.0
Right:g	-0.05	0.0	-18.68	0.0	0.0	-81.60	0.0	0.0	83.71	0.0	332.53	0.0	-3.0	0.0	0.0	-0.10	0.0	0.0

Detailed Laminated Wood Pole Usages for Load Case "Ext. Wind T":

Element Label	Joint Label	Joint Position	Rel. Dist. (ft)	Trans. Defl. (in)	Long. Defl. (in)	Vert. Defl. (in)	Trans. Mom. (ft-k)	Long. Mom. (ft-k)	Tors. Mom. (ft-k)	Axial Force (kips)	Tran. Shear (kips)	Long. Shear (kips)	Usage %
Left	Left:t	Origin	0.00	0.68	0.15	0.00	0.00	-0.00	-0.0	-0.01	0.02	-0.00	0.0
Left	Left:SW	End	0.75	0.90	0.15	0.01	0.02	-0.00	-0.0	-0.01	0.02	-0.00	0.0
Left	Left:SW	Origin	0.75	0.90	0.15	0.01	-2.70	-0.00	-0.0	4.25	-6.84	-0.00	4.2
Left	Left:V	End	2.50	1.41	0.14	0.01	-14.68	-0.00	-0.0	4.25	-6.84	-0.00	18.3
Left	Left:V	Origin	2.50	1.41	0.14	0.01	-14.68	-0.00	-0.0	4.07	-6.66	-0.00	18.2
Left	#Left:0	End	7.50	2.58	0.13	0.02	-48.00	-0.02	-0.0	4.07	-6.66	-0.00	45.3
Left	#Left:0	Origin	7.50	2.58	0.13	0.02	-48.00	-0.02	-0.0	3.83	-6.46	-0.00	45.2
Left	#Left:1	End	10.50	2.92	0.12	0.02	-67.38	-0.02	-0.0	3.83	-6.46	-0.00	55.1
Left	#Left:1	Origin	10.50	2.92	0.12	0.02	-67.38	-0.02	-0.0	3.63	-6.31	-0.00	55.1
Left	Left:A	End	13.50	2.94	0.12	0.02	-86.32	-0.04	-0.0	3.63	-6.31	-0.00	61.9
Left	Left:A	Origin	13.50	2.94	0.12	0.02	-86.32	-0.03	0.1	4.47	14.38	0.00	62.0
Left	#Left:2	End	18.50	2.39	0.11	0.03	-14.40	-0.02	0.1	4.47	14.38	0.00	8.9
Left	#Left:2	Origin	18.50	2.39	0.11	0.03	-14.40	-0.02	0.1	4.29	14.62	0.00	8.8
Left	#Left:3	End	21.75	1.92	0.10	0.03	33.13	-0.02	0.1	4.29	14.62	0.00	17.6
Left	#Left:3	Origin	21.75	1.92	0.10	0.03	33.13	-0.02	0.1	4.06	14.83	0.00	17.5
Left	Left:XT	End	25.00	1.54	0.09	0.03	81.34	-0.02	0.1	4.06	14.83	0.00	38.0
Left	Left:XT	Origin	25.00	1.54	0.09	0.03	72.30	-0.02	0.1	19.50	0.26	-0.00	35.2
Left	#Left:4	End	28.00	1.34	0.08	0.03	73.09	-0.02	0.1	19.50	0.26	-0.00	32.3
Left	#Left:4	Origin	28.00	1.34	0.08	0.03	73.09	-0.02	0.1	19.30	0.52	-0.00	32.3
Left	Left:X2T	End	31.00	1.27	0.08	0.03	74.64	-0.03	0.1	19.30	0.52	-0.00	30.0
Left	Left:X2T	Origin	31.00	1.27	0.08	0.03	68.12	-0.03	0.1	29.30	-8.63	-0.00	28.3
Left	#Left:5	End	36.00	1.36	0.07	0.02	24.99	-0.06	0.1	29.30	-8.63	-0.00	10.4
Left	#Left:5	Origin	36.00	1.36	0.07	0.02	24.99	-0.06	0.1	28.94	-8.28	-0.01	10.4
Left	#Left:6	End	41.00	1.54	0.06	0.02	-16.40	-0.09	0.1	28.94	-8.28	-0.01	6.8
Left	#Left:6	Origin	41.00	1.54	0.06	0.02	-16.40	-0.09	0.1	28.53	-7.99	-0.01	6.7
Left	#Left:7	End	46.00	1.69	0.05	0.02	-56.37	-0.13	0.1	28.53	-7.99	-0.01	16.3
Left	#Left:7	Origin	46.00	1.69	0.05	0.02	-56.37	-0.13	0.1	28.09	-7.75	-0.01	16.3
Left	Left:XB	End	51.00	1.70	0.04	0.02	-95.13	-0.18	0.1	28.09	-7.75	-0.01	23.5
Left	Left:XB	Origin	51.00	1.70	0.04	0.02	-103.39	-0.18	0.1	37.68	2.31	-0.01	26.0
Left	#Left:8	End	54.00	1.62	0.03	0.02	-96.45	-0.22	0.1	37.68	2.31	-0.01	22.9
Left	#Left:8	Origin	54.00	1.62	0.03	0.02	-96.45	-0.22	0.1	37.40	2.43	-0.01	22.9
Left	Left:X2B	End	57.00	1.48	0.03	0.01	-89.15	-0.26	0.1	37.40	2.43	-0.01	20.1
Left	Left:X2B	Origin	57.00	1.48	0.03	0.01	-97.79	-0.26	0.1	46.75	12.19	-0.02	22.4
Left	#Left:9	End	62.00	1.15	0.02	0.01	-36.85	-0.34	0.1	46.75	12.19	-0.02	9.3
Left	#Left:9	Origin	62.00	1.15	0.02	0.01	-36.85	-0.34	0.1	46.25	12.46	-0.02	9.3
Left	#Left:10	End	67.00	0.77	0.01	0.01	25.43	-0.44	0.1	46.25	12.46	-0.02	6.7
Left	#Left:10	Origin	67.00	0.77	0.01	0.01	25.43	-0.44	0.1	45.71	12.78	-0.02	6.7
Left	#Left:11	End	72.00	0.41	0.01	0.01	89.36	-0.55	0.1	45.71	12.78	-0.02	15.8
Left	#Left:11	Origin	72.00	0.41	0.01	0.01	89.36	-0.55	0.1	45.12	13.16	-0.03	15.8
Left	#Left:12	End	77.00	0.14	0.00	0.00	155.15	-0.68	0.1	45.12	13.16	-0.03	23.7
Left	#Left:12	Origin	77.00	0.14	0.00	0.00	155.15	-0.68	0.1	44.62	13.49	-0.03	23.6
Left	#Left:13	End	80.25	0.04	0.00	0.00	198.99	-0.78	0.1	44.62	13.49	-0.03	28.2
Left	#Left:13	Origin	80.25	0.04	0.00	0.00	198.99	-0.78	0.1	44.20	13.76	-0.03	28.2

Left	Left:g	End	83.50	0.00	0.00	0.00	243.73	-0.88	0.1	44.20	13.76	-0.03	32.3
Right	Right:t	Origin	0.00	17.37	0.17	-0.23	0.00	-0.00	-0.0	-0.21	0.25	-0.00	0.0
Right	Right:Sprint	End	4.00	15.87	0.17	-0.20	0.99	-0.00	-0.0	-0.21	0.25	-0.00	0.3
Right	Right:Sprint	Origin	4.00	15.87	0.17	-0.20	0.99	-0.00	-0.0	-0.99	1.86	-0.00	0.3
Right	#Right:14	End	9.00	14.01	0.16	-0.18	10.31	-0.01	-0.0	-0.99	1.86	-0.00	2.7
Right	#Right:14	Origin	9.00	14.01	0.16	-0.18	10.31	-0.01	-0.0	-1.44	2.36	-0.00	2.8
Right	#Right:15	End	12.00	12.91	0.15	-0.16	17.38	-0.02	-0.0	-1.44	2.36	-0.00	4.4
Right	#Right:15	Origin	12.00	12.91	0.15	-0.16	17.38	-0.02	-0.0	-1.80	2.73	-0.00	4.4
Right	Right:Coax1	End	15.00	11.83	0.14	-0.14	25.58	-0.03	-0.0	-1.80	2.73	-0.00	6.1
Right	Right:Coax1	Origin	15.00	11.83	0.14	-0.14	25.58	-0.03	-0.0	-2.47	3.40	-0.00	6.1
Right	#Right:16	End	20.00	10.09	0.13	-0.12	42.58	-0.05	-0.0	-2.47	3.40	-0.00	9.3
Right	#Right:16	Origin	20.00	10.09	0.13	-0.12	42.58	-0.05	-0.0	-3.11	4.02	-0.01	9.4
Right	Right:Coax2	End	25.00	8.46	0.12	-0.09	62.66	-0.08	-0.0	-3.11	4.02	-0.01	12.7
Right	Right:Coax2	Origin	25.00	8.46	0.12	-0.09	62.66	-0.08	-0.0	-3.97	4.80	-0.01	12.7
Right	#Right:17	End	30.00	6.98	0.12	-0.08	86.67	-0.11	-0.0	-3.97	4.80	-0.01	16.2
Right	#Right:17	Origin	30.00	6.98	0.12	-0.08	86.67	-0.11	-0.0	-4.67	5.41	-0.01	16.3
Right	Right:Coax3	End	35.00	5.67	0.11	-0.06	113.72	-0.15	-0.0	-4.67	5.41	-0.01	19.8
Right	Right:Coax3	Origin	35.00	5.67	0.11	-0.06	113.72	-0.15	-0.0	-5.36	6.00	-0.01	19.8
Right	Right:SW	End	37.00	5.20	0.10	-0.06	125.72	-0.17	-0.0	-5.36	6.00	-0.01	21.3
Right	Right:SW	Origin	37.00	5.20	0.10	-0.06	119.73	-0.17	-0.0	-17.48	-0.97	-0.01	20.7
Right	Right:V	End	39.00	4.77	0.10	-0.05	117.79	-0.20	-0.0	-17.48	-0.97	-0.01	19.9
Right	Right:V	Origin	39.00	4.77	0.10	-0.05	117.79	-0.20	-0.0	-17.84	-0.69	-0.01	19.9
Right	#Right:18	End	42.00	4.18	0.09	-0.05	115.70	-0.24	-0.0	-17.84	-0.69	-0.01	18.8
Right	#Right:18	Origin	42.00	4.18	0.09	-0.05	115.70	-0.24	-0.0	-18.30	-0.36	-0.01	18.8
Right	Right:Coax4	End	45.00	3.66	0.09	-0.04	114.63	-0.28	-0.0	-18.30	-0.36	-0.01	17.9
Right	Right:Coax4	Origin	45.00	3.66	0.09	-0.04	114.63	-0.28	-0.0	-19.11	0.26	-0.02	18.0
Right	Right:A	End	50.00	2.92	0.08	-0.04	115.94	-0.35	-0.0	-19.11	0.26	-0.02	17.1
Right	Right:A	Origin	50.00	2.92	0.08	-0.04	115.94	-0.36	0.1	-19.29	3.32	-0.03	17.1
Right	Right:Coax5	End	55.00	2.34	0.07	-0.03	132.57	-0.49	0.1	-19.29	3.32	-0.03	18.3
Right	Right:Coax5	Origin	55.00	2.34	0.07	-0.03	132.57	-0.49	0.1	-20.16	3.96	-0.03	18.3
Right	#Right:19	End	58.25	2.05	0.06	-0.03	145.42	-0.57	0.1	-20.16	3.96	-0.03	19.3
Right	#Right:19	Origin	58.25	2.05	0.06	-0.03	145.42	-0.57	0.1	-20.72	4.31	-0.03	19.3
Right	Right:XT	End	61.50	1.83	0.06	-0.03	159.44	-0.66	0.1	-20.72	4.31	-0.03	20.3
Right	Right:XT	Origin	61.50	1.83	0.06	-0.03	150.78	-0.66	0.1	-32.11	-4.78	-0.03	19.6
Right	Right:Coax6	End	65.00	1.66	0.05	-0.03	134.04	-0.77	0.1	-32.11	-4.78	-0.03	16.9
Right	Right:Coax6	Origin	65.00	1.66	0.05	-0.03	134.04	-0.77	0.1	-32.83	-4.29	-0.03	16.9
Right	Right:X2T	End	67.50	1.59	0.05	-0.03	123.31	-0.85	0.1	-32.83	-4.29	-0.03	15.2
Right	Right:X2T	Origin	67.50	1.59	0.05	-0.03	114.57	-0.85	0.1	-43.90	-13.16	-0.03	14.6
Right	#Right:20	End	71.25	1.53	0.04	-0.03	65.21	-0.98	0.1	-43.90	-13.16	-0.03	8.6
Right	#Right:20	Origin	71.25	1.53	0.04	-0.03	65.21	-0.98	0.1	-44.58	-12.74	-0.04	8.6
Right	Right:Coax7	End	75.00	1.50	0.04	-0.03	17.43	-1.11	0.1	-44.58	-12.74	-0.04	3.2
Right	Right:Coax7	Origin	75.00	1.50	0.04	-0.03	17.43	-1.11	0.1	-45.59	-12.05	-0.04	3.3
Right	#Right:21	End	80.00	1.47	0.03	-0.02	-42.84	-1.30	0.1	-45.59	-12.05	-0.04	5.7
Right	#Right:21	Origin	80.00	1.47	0.03	-0.02	-42.84	-1.30	0.1	-46.57	-11.42	-0.04	5.7
Right	Right:Coax8	End	85.00	1.41	0.02	-0.02	-99.96	-1.49	0.1	-46.57	-11.42	-0.04	10.9
Right	Right:Coax8	Origin	85.00	1.41	0.02	-0.02	-99.96	-1.49	0.1	-47.50	-10.76	-0.04	11.0
Right	Right:XB	End	87.50	1.36	0.02	-0.02	-126.86	-1.59	0.1	-47.50	-10.76	-0.04	13.2
Right	Right:XB	Origin	87.50	1.36	0.02	-0.02	-141.56	-1.59	0.1	-63.88	4.74	-0.04	15.0
Right	#Right:22	End	90.50	1.26	0.02	-0.02	-127.34	-1.71	0.1	-63.88	4.74	-0.04	13.3
Right	#Right:22	Origin	90.50	1.26	0.02	-0.02	-127.34	-1.71	0.1	-64.49	5.16	-0.04	13.3
Right	Right:X2B	End	93.50	1.13	0.01	-0.02	-111.86	-1.83	0.1	-64.49	5.16	-0.04	11.6
Right	Right:X2B	Origin	93.50	1.13	0.01	-0.02	-121.73	-1.83	0.1	-75.24	15.38	-0.04	12.8
Right	Right:Coax9	End	95.00	1.06	0.01	-0.02	-98.67	-1.89	0.1	-75.24	15.38	-0.04	10.6
Right	Right:Coax9	Origin	95.00	1.06	0.01	-0.02	-98.67	-1.89	0.1	-76.11	15.98	-0.04	10.7
Right	#Right:23	End	100.00	0.79	0.01	-0.01	-18.77	-2.10	0.1	-76.11	15.98	-0.04	3.7
Right	#Right:23	Origin	100.00	0.79	0.01	-0.01	-18.77	-2.10	0.1	-77.18	16.60	-0.04	3.7
Right	Right:Coax10	End	105.00	0.50	0.00	-0.01	64.24	-2.31	0.1	-77.18	16.60	-0.04	7.1
Right	Right:Coax10	Origin	105.00	0.50	0.00	-0.01	64.24	-2.31	0.1	-78.47	17.34	-0.04	7.2

Right	#Right:24	End	110.00	0.25	0.00	-0.01	150.93	-2.53	0.1	-78.47	17.34	-0.04	13.4
Right	#Right:24	Origin	110.00	0.25	0.00	-0.01	150.93	-2.53	0.1	-79.62	17.85	-0.04	13.5
Right	Right:Coax11	End	115.00	0.07	0.00	-0.00	240.16	-2.75	0.1	-79.62	17.85	-0.04	19.3
Right	Right:Coax11	Origin	115.00	0.07	0.00	-0.00	240.16	-2.75	0.1	-81.00	18.48	-0.05	19.4
Right	Right:g	End	120.00	0.00	0.00	0.00	332.53	-2.98	0.1	-81.00	18.48	-0.05	25.0

Summary of Brace Forces and Usages for Load Case "Ext. Wind T":

Brace Label	Forces (kips)	Allowable Compression (kips)	Allowable Tension (kips)	Usage %
TENL	2.30	5.45	99.22	3.10
TENR	1.99	5.45	99.22	2.68
VEEL	-8.73	28.46	241.92	40.91
VEER	13.72	28.46	241.92	7.56
X1L	-21.72	41.12	255.15	70.43
X1R	14.19	41.12	255.15	7.42
X2L	-14.13	41.12	255.15	45.80
X2R	13.81	41.12	255.15	7.22

Detailed X-Arm Usages for Load Case "Ext. Wind T":

X-Arm Label	Joint Label	Joint Position	Rel. Dist. (ft)	Area (in^2)	X Sect. Modulus (in^3)	Z Sect. Modulus (in^3)	Tran. Defl. (in)	Long. Defl. (in)	Vert. Defl. (in)	X Mom. (ft-k)	Z Mom. (ft-k)	Tors. Mom. (ft-k)	Axial Force (kips)	X Shear (kips)	Z Shear (kips)	P/A (psi)	Mx/Sx (psi)	Mz/Sz (psi)	Max. Usage %
TAR53	TAR53:O	Origin	0.00	76.90	65.70	96.10	2.96	0.13	-2.21	0.00	0.00	0.0	0.00	-0.01	-0.00	0.001	2.26e-005	2.12e-006	0.0
TAR53	TAR53:L1	End	0.50	76.90	65.70	96.10	2.96	0.13	-2.14	-0.00	0.00	0.0	0.00	-0.01	-0.00	0.001	0.646	9.86e-005	0.0
TAR53	TAR53:L1	Origin	0.50	76.90	65.70	96.10	2.96	0.13	-2.14	0.00	-0.00	-0.0	-3.87	0.25	-0.00	50	0.646	9.84e-005	0.8
TAR53	#gTAR53:0	End	5.50	76.90	65.70	96.10	2.95	0.13	-1.43	1.25	0.00	-0.0	-3.87	0.25	-0.00	50	229	0.568	4.7
TAR53	#gTAR53:0	Origin	5.50	76.90	65.70	96.10	2.95	0.13	-1.43	-1.25	-0.00	-0.0	-3.87	0.12	-0.00	50	229	0.568	4.7
TAR53	#gTAR53:1	End	9.50	76.90	65.70	96.10	2.95	0.12	-0.77	1.72	0.01	-0.0	-3.87	0.12	-0.00	50	314	1.03	6.1
TAR53	#gTAR53:1	Origin	9.50	76.90	65.70	96.10	2.95	0.12	-0.77	-1.72	-0.01	-0.0	-3.86	-0.01	-0.00	50	314	1.03	6.1
TAR53	TAR53:PL	End	13.50	76.90	65.70	96.10	2.94	0.12	0.02	1.69	0.01	-0.0	-3.86	-0.01	-0.00	50	309	1.49	6.0
TAR53	TAR53:PL	Origin	13.50	76.90	65.70	96.10	2.94	0.12	0.02	-1.69	0.07	-0.0	16.65	-0.68	-0.01	2.2e+002	309	8.92	8.9
TAR53	#gTAR53:2	End	18.50	76.90	65.70	96.10	2.94	0.11	1.13	-1.72	-0.04	-0.0	16.65	-0.68	-0.01	2.2e+002	314	4.87	8.9
TAR53	#gTAR53:2	Origin	18.50	76.90	65.70	96.10	2.94	0.11	1.13	1.72	0.04	-0.0	16.65	-0.86	-0.01	2.2e+002	314	4.87	8.9
TAR53	#gTAR53:3	End	22.50	76.90	65.70	96.10	2.94	0.10	1.88	-5.15	-0.02	-0.0	16.65	-0.86	-0.01	2.2e+002	940	1.91	19.3
TAR53	#gTAR53:3	Origin	22.50	76.90	65.70	96.10	2.94	0.10	1.88	5.15	0.02	-0.0	16.64	-1.12	-0.01	2.2e+002	940	1.91	19.3
TAR53	TAR53:L2V	End	26.50	76.90	65.70	96.10	2.94	0.10	2.21	-9.61	0.01	-0.0	16.64	-1.12	-0.01	2.2e+002	1.76e+003	0.938	32.9
TAR53	TAR53:L2V	Origin	26.50	76.90	65.70	96.10	2.94	0.10	2.21	9.61	-0.01	-0.0	-1.58	0.97	-0.01	21	1.76e+003	0.942	29.6
TAR53	#gTAR53:4	End	31.50	76.90	65.70	96.10	2.94	0.09	1.73	-4.74	0.05	-0.0	-1.58	0.97	-0.01	21	866	5.93	14.9
TAR53	#gTAR53:4	Origin	31.50	76.90	65.70	96.10	2.94	0.09	1.73	4.74	-0.05	-0.0	-1.57	0.86	-0.01	20	866	5.93	14.9
TAR53	#gTAR53:5	End	35.50	76.90	65.70	96.10	2.93	0.08	0.90	-1.29	0.08	-0.0	-1.57	0.86	-0.01	20	236	9.91	4.4
TAR53	#gTAR53:5	Origin	35.50	76.90	65.70	96.10	2.93	0.08	0.90	1.29	-0.08	-0.0	-1.57	0.75	-0.01	20	236	9.91	4.4
TAR53	TAR53:PR	End	39.50	76.90	65.70	96.10	2.92	0.08	-0.04	1.72	0.11	-0.0	-1.57	0.75	-0.01	20	314	13.9	5.8
TAR53	TAR53:PR	Origin	39.50	76.90	65.70	96.10	2.92	0.08	-0.04	-1.72	-0.01	0.0	0.92	-0.02	0.00	12	314	1.1	5.4
TAR53	#gTAR53:6	End	44.50	76.90	65.70	96.10	2.91	0.08	-1.07	1.61	0.01	0.0	0.92	-0.02	0.00	12	294	0.659	5.1
TAR53	#gTAR53:6	Origin	44.50	76.90	65.70	96.10	2.91	0.08	-1.07	-1.61	-0.01	0.0	0.92	-0.15	0.00	12	294	0.659	5.1
TAR53	#gTAR53:7	End	48.50	76.90	65.70	96.10	2.91	0.08	-1.76	1.03	0.00	0.0	0.92	-0.15	0.00	12	188	0.323	3.3
TAR53	#gTAR53:7	Origin	48.50	76.90	65.70	96.10	2.91	0.08	-1.76	-1.03	-0.00	-0.0	0.92	-0.26	0.00	12	188	0.323	3.3
TAR53	TAR53:L3	End	52.50	76.90	65.70	96.10	2.90	0.08	-2.38	-0.00	0.00	-0.0	0.92	-0.26	0.00	12	0.646	8.2e-005	0.2
TAR53	TAR53:L3	Origin	52.50	76.90	65.70	96.10	2.90	0.08	-2.38	0.00	-0.00	-0.0	0.00	0.01	0.00	0.0012	0.646	9.06e-005	0.0
TAR53	TAR53:E	End	53.00	76.90	65.70	96.10	2.90	0.08	-2.46	0.00	-0.00	-0.0	0.00	0.01	0.00	0.0012	1.72e-007	4.05e-006	0.0

Summary of Clamp Capacities and Usages for Load Case "Ext. Wind T":

Clamp Label	Force (kips)	Input Holding Capacity (kips)	Factored Holding Capacity (kips)	Usage %
C1	1.622	10.00	10.00	16.22
C2	0.679	10.00	10.00	6.79
C3	0.796	10.00	10.00	7.96
C4	0.621	10.00	10.00	6.21
C5	0.679	10.00	10.00	6.79
C6	0.694	10.00	10.00	6.94
C7	0.564	10.00	10.00	5.64
C8	0.723	10.00	10.00	7.23
C9	0.650	10.00	10.00	6.50
C10	0.593	10.00	10.00	5.93
C11	0.796	10.00	10.00	7.96
C12	0.796	10.00	10.00	7.96

Summary of Suspension Capacities and Usages for Load Case "Ext. Wind T":

Suspension Label	Tension (kips)	Input Tension Capacity (kips)	Factored Tension Capacity (kips)	Usage %
SUSL	2.494	60.00	60.00	4.16
SUSC	2.494	60.00	60.00	4.16
SUSR	2.494	60.00	60.00	4.16
SWL	0.666	60.00	60.00	1.11
SWR	0.666	60.00	60.00	1.11

*** Analysis Results for Load Case No. 4 "Ext. Wind L" - Number of iterations in SAPS 33

Equilibrium Joint Positions and Rotations for Load Case "Ext. Wind L":

Joint Label	X-Displ (ft)	Y-Displ (ft)	Z-Displ (ft)	X-Rot (deg)	Y-Rot (deg)	Z-Rot (deg)	X-Pos (ft)	Y-Pos (ft)	Z-Pos (ft)
Left:g	0	0	0	0.0000	0.0000	0.0000	0	-13	0
Left:t	5.037	0.04962	-0.1761	0.1374	4.7457	1.5456	5.037	-12.95	83.32
Left:SW	4.975	0.04974	-0.1736	0.1374	4.7457	1.5456	4.975	-12.95	82.58
Left:V	4.831	0.05003	-0.1675	0.1363	4.7442	1.5459	4.831	-12.95	80.83
Left:A	3.926	0.04942	-0.1302	0.1074	4.6662	1.5491	3.926	-12.95	69.87
Left:XT	3.005	0.01841	-0.0931	0.1078	4.5181	1.0137	3.005	-12.98	58.41
Left:X2T	2.539	0.01182	-0.07487	0.0952	4.3964	0.8100	2.539	-12.99	52.43
Left:XB	1.136	0.004563	-0.02522	0.0258	3.5126	0.3584	1.136	-13	32.47
Left:X2B	0.7898	0.002832	-0.01517	0.0095	3.0826	0.2676	0.7898	-13	26.48
Right:g	0	0	0	0.0000	0.0000	0.0000	0	13	0
Right:t	6.38	0.1182	-0.1965	-0.0857	4.1038	0.3156	6.38	13.12	119.8
Right:Sprint	6.094	0.1107	-0.1862	-0.0857	4.1037	0.3156	6.094	13.11	115.8
Right:Coax1	5.308	0.08988	-0.158	-0.0857	4.0930	0.3156	5.308	13.09	104.8
Right:Coax2	4.596	0.07102	-0.1326	-0.0855	4.0590	0.3157	4.596	13.07	94.87
Right:Coax3	3.894	0.05226	-0.1079	-0.0850	3.9906	0.3158	3.894	13.05	84.89
Right:SW	3.755	0.04853	-0.103	-0.0849	3.9720	0.3158	3.755	13.05	82.9
Right:V	3.617	0.04481	-0.09824	-0.0839	3.9515	0.3157	3.617	13.04	80.9
Right:Coax4	3.207	0.03411	-0.08418	-0.0756	3.8772	0.3152	3.207	13.03	74.92
Right:A	2.872	0.02615	-0.07291	-0.0635	3.7998	0.3144	2.872	13.03	69.93
Right:Coax5	2.545	0.01823	-0.06213	-0.0469	3.7020	0.2842	2.545	13.02	64.94
Right:XT	2.134	0.01075	-0.04907	-0.0255	3.5383	0.2473	2.134	13.01	58.45
Right:Coax6	1.921	0.007935	-0.04254	-0.0168	3.4326	0.2283	1.921	13.01	54.96
Right:X2T	1.773	0.006323	-0.03814	-0.0123	3.3493	0.2152	1.773	13.01	52.46
Right:Coax7	1.353	0.002906	-0.02627	-0.0032	3.0587	0.1777	1.353	13	44.97
Right:Coax8	0.8596	0.0007108	-0.01395	0.0023	2.5759	0.1322	0.8596	13	34.99
Right:XB	0.7501	0.0004286	-0.01153	0.0027	2.4383	0.1215	0.7501	13	32.49
Right:X2B	0.5131	-1.062e-005	-0.006757	0.0028	2.0795	0.0966	0.5131	13	26.49
Right:Coax9	0.4599	-7.541e-005	-0.005792	0.0028	1.9835	0.0905	0.4599	13	24.99
Right:Coax10	0.1733	-0.0001818	-0.001501	0.0023	1.2761	0.0518	0.1733	13	15
Right:Coax11	0.02025	-3.755e-005	-0.0001179	0.0009	0.4538	0.0165	0.02025	13	5
TAR53:O	4.357	0.05648	-0.1675	-0.0233	4.6633	1.9670	4.357	-26.44	69.83
TAR53:L1	4.34	0.05619	-0.1663	-0.0233	4.6633	1.9670	4.34	-25.94	69.83
TAR53:PL	3.926	0.04942	-0.1302	0.0302	4.6662	1.5491	3.926	-12.95	69.87
TAR53:L2V	3.351	0.03614	-0.08415	-0.2131	4.2229	3.0368	3.351	0.03614	69.92
TAR53:PR	2.872	0.02615	-0.07291	-0.1153	3.7998	0.3144	2.872	13.03	69.93
TAR53:L3	2.862	0.026	-0.09676	-0.0781	3.7990	-0.0828	2.862	26.03	69.9
TAR53:E	2.862	0.026	-0.09749	-0.0781	3.7990	-0.0828	2.862	26.53	69.9
TENL:O	4.985	0.04986	-0.1744	0.1374	4.7457	1.5456	4.985	-13.29	82.58
TENR:O	3.751	0.04852	-0.104	-0.0849	3.9720	0.3158	3.751	13.73	82.9
VEEL:O	4.966	0.04962	-0.1727	0.1374	4.7457	1.5456	4.966	-12.61	82.58
VEER:O	3.759	0.04854	-0.102	-0.0849	3.9720	0.3158	3.759	12.37	82.9
X1L:O	2.995	0.01832	-0.09202	0.1078	4.5181	1.0137	2.995	-12.41	58.41
X1L:E	0.7521	0.0004306	-0.01157	0.0027	2.4383	0.1215	0.7521	12.07	32.49
X1R:O	2.137	0.01075	-0.04871	-0.0255	3.5383	0.2473	2.137	12.21	58.45
X1R:E	1.131	0.004547	-0.02484	0.0258	3.5126	0.3584	1.131	-12.17	32.48
X2L:O	2.53	0.01176	-0.07381	0.0952	4.3964	0.8100	2.53	-12.35	52.43
X2L:E	0.5147	-9.256e-006	-0.006804	0.0028	2.0795	0.0966	0.5147	12.04	26.49
X2R:O	0.7856	0.002822	-0.01502	0.0095	3.0826	0.2676	0.7856	-12.11	26.48
X2R:E	1.776	0.006329	-0.03796	-0.0123	3.3493	0.2152	1.776	12.18	52.46

Joint Support Reactions for Load Case "Ext. Wind L":

Joint Label	X Force (kips)	X Usage %	Y Force (kips)	Y Usage %	H-Shear Usage %	Z Force (kips)	Comp. Usage %	Uplift Usage %	Result. Force (kips)	Result. Usage %	X Moment (ft-k)	X-M. Usage %	Y Moment (ft-k)	Y-M. Usage %	H-Bend-M Usage %	Z Moment (ft-k)	Z-M. Usage %	Max. Usage %
Left:g	-7.90	0.0	-0.27	0.0	0.0	-10.18	0.0	0.0	12.89	0.0	0.76	0.0	-295.6	0.0	0.0	-25.64	0.0	0.0
Right:g	-22.09	0.0	0.06	0.0	0.0	-27.63	0.0	0.0	35.37	0.0	-2.47	0.0	-1336.3	0.0	0.0	-32.95	0.0	0.0

Detailed Laminated Wood Pole Usages for Load Case "Ext. Wind L":

Element Label	Joint Label	Joint Position	Rel. Dist. (ft)	Trans. Defl. (in)	Long. Defl. (in)	Vert. Defl. (in)	Trans. Mom. (ft-k)	Long. Mom. (ft-k)	Tors. Mom. (ft-k)	Axial Force (kips)	Tran. Shear (kips)	Long. Shear (kips)	Usage %
Left	Left:t	Origin	0.00	0.60	60.45	-2.11	0.00	0.00	-0.0	-0.01	-0.00	-0.01	0.0
Left	Left:SW	End	0.75	0.60	59.70	-2.08	-0.00	-0.01	-0.0	-0.01	-0.00	-0.01	0.0
Left	Left:SW	Origin	0.75	0.60	59.70	-2.08	-0.02	-0.01	-0.0	-3.01	-0.13	-0.53	0.5
Left	Left:V	End	2.50	0.60	57.97	-2.01	-0.25	-0.95	-0.0	-3.01	-0.13	-0.53	1.4
Left	Left:V	Origin	2.50	0.60	57.97	-2.01	-0.25	-0.95	-0.0	-3.14	-0.13	-0.67	1.4
Left	#Left:0	End	7.50	0.61	53.01	-1.80	-0.93	-4.32	-0.0	-3.14	-0.13	-0.67	3.9
Left	#Left:0	Origin	7.50	0.61	53.01	-1.80	-0.93	-4.32	-0.0	-3.29	-0.14	-0.85	3.9
Left	#Left:1	End	10.50	0.60	50.06	-1.68	-1.34	-6.86	-0.0	-3.29	-0.14	-0.85	5.3
Left	#Left:1	Origin	10.50	0.60	50.06	-1.68	-1.34	-6.86	-0.0	-3.43	-0.14	-0.99	5.4
Left	Left:A	End	13.50	0.59	47.12	-1.56	-1.76	-9.84	-0.0	-3.43	-0.14	-0.99	6.8
Left	Left:A	Origin	13.50	0.59	47.12	-1.56	0.52	-8.00	27.6	-4.09	-0.14	-0.47	5.1
Left	#Left:2	End	18.50	0.39	42.27	-1.37	-0.11	-10.37	27.6	-4.09	-0.14	-0.47	5.4
Left	#Left:2	Origin	18.50	0.39	42.27	-1.37	-0.13	-10.40	27.5	-4.30	-0.14	-0.70	5.5
Left	#Left:3	End	21.75	0.29	39.15	-1.24	-0.56	-12.68	27.5	-4.30	-0.14	-0.70	6.4
Left	#Left:3	Origin	21.75	0.29	39.15	-1.24	-0.58	-12.70	27.5	-4.48	-0.15	-0.89	6.4
Left	Left:XT	End	25.00	0.22	36.06	-1.12	-1.02	-15.61	27.5	-4.48	-0.15	-0.89	7.5
Left	Left:XT	Origin	25.00	0.22	36.06	-1.12	-1.15	-15.62	27.2	-4.48	-0.50	-1.62	7.6
Left	#Left:4	End	28.00	0.18	33.25	-1.01	-2.60	-20.48	27.2	-4.48	-0.50	-1.62	9.8
Left	#Left:4	Origin	28.00	0.18	33.25	-1.01	-2.63	-20.49	27.2	-4.67	-0.50	-1.81	9.8
Left	Left:X2T	End	31.00	0.14	30.47	-0.90	-4.08	-25.94	27.2	-4.67	-0.50	-1.81	12.0
Left	Left:X2T	Origin	31.00	0.14	30.47	-0.90	-3.92	-25.94	26.9	-5.26	-0.37	-2.62	12.0
Left	#Left:5	End	36.00	0.11	25.94	-0.73	-5.68	-39.07	26.9	-5.26	-0.37	-2.62	16.3
Left	#Left:5	Origin	36.00	0.11	25.94	-0.73	-5.76	-39.07	26.8	-5.61	-0.37	-2.98	16.4
Left	#Left:6	End	41.00	0.08	21.59	-0.57	-7.49	-54.00	26.8	-5.61	-0.37	-2.98	20.7
Left	#Left:6	Origin	41.00	0.08	21.59	-0.57	-7.59	-54.01	26.8	-6.00	-0.37	-3.36	20.8
Left	#Left:7	End	46.00	0.07	17.47	-0.43	-9.29	-70.85	26.8	-6.00	-0.37	-3.36	25.1
Left	#Left:7	Origin	46.00	0.07	17.47	-0.43	-9.42	-70.85	26.8	-6.41	-0.36	-3.76	25.2
Left	Left:XB	End	51.00	0.05	13.63	-0.30	-11.08	-89.68	26.8	-6.41	-0.36	-3.76	29.5
Left	Left:XB	Origin	51.00	0.05	13.63	-0.30	-12.20	-89.68	26.3	-5.56	0.95	-4.60	29.7
Left	#Left:8	End	54.00	0.04	11.49	-0.24	-9.25	-103.48	26.3	-5.56	0.95	-4.60	32.0
Left	#Left:8	Origin	54.00	0.04	11.49	-0.24	-9.35	-103.48	26.3	-5.84	0.96	-4.86	32.0
Left	Left:X2B	End	57.00	0.03	9.48	-0.18	-6.38	-118.05	26.3	-5.84	0.96	-4.86	34.3
Left	Left:X2B	Origin	57.00	0.03	9.48	-0.18	-5.67	-118.05	25.8	-7.21	0.24	-5.74	34.3
Left	#Left:9	End	62.00	0.02	6.47	-0.11	-4.30	-146.74	25.8	-7.21	0.24	-5.74	39.7
Left	#Left:9	Origin	62.00	0.02	6.47	-0.11	-4.51	-146.74	25.7	-7.74	0.25	-6.18	39.8
Left	#Left:10	End	67.00	0.01	3.94	-0.05	-3.09	-177.64	25.7	-7.74	0.25	-6.18	45.3
Left	#Left:10	Origin	67.00	0.01	3.94	-0.05	-3.33	-177.64	25.7	-8.32	0.25	-6.63	45.4
Left	#Left:11	End	72.00	0.00	1.98	-0.02	-1.88	-210.79	25.7	-8.32	0.25	-6.63	50.9
Left	#Left:11	Origin	72.00	0.00	1.98	-0.02	-2.15	-210.79	25.7	-8.95	0.26	-7.08	51.0
Left	#Left:12	End	77.00	0.00	0.65	-0.00	-0.66	-246.20	25.7	-8.95	0.26	-7.08	56.5
Left	#Left:12	Origin	77.00	0.00	0.65	-0.00	-0.91	-246.20	25.6	-9.49	0.27	-7.46	56.6
Left	#Left:13	End	80.25	0.00	0.17	-0.00	0.08	-270.44	25.6	-9.49	0.27	-7.46	60.2
Left	#Left:13	Origin	80.25	0.00	0.17	-0.00	-0.13	-270.44	25.6	-9.95	0.27	-7.75	60.2

Left	Left:g	End	83.50	0.00	0.00	0.00	0.87	-295.63	25.6	-9.95	0.27	-7.75	64.1
Right	Right:t	Origin	0.00	1.42	76.56	-2.36	0.00	-0.00	-0.0	-0.21	0.00	-0.12	0.0
Right	Right:Sprint	End	4.00	1.33	73.13	-2.23	0.00	-0.48	-0.0	-0.21	0.00	-0.12	0.1
Right	Right:Sprint	Origin	4.00	1.33	73.13	-2.23	0.00	-0.48	-0.0	-0.97	-0.00	-1.10	0.1
Right	#Right:14	End	9.00	1.21	68.84	-2.08	-0.00	-5.98	-0.0	-0.97	-0.00	-1.10	0.7
Right	#Right:14	Origin	9.00	1.21	68.84	-2.08	-0.00	-5.98	-0.0	-1.42	0.00	-1.35	0.8
Right	#Right:15	End	12.00	1.15	66.26	-1.99	-0.00	-10.04	-0.0	-1.42	0.00	-1.35	1.2
Right	#Right:15	Origin	12.00	1.15	66.26	-1.99	-0.00	-10.04	-0.0	-1.77	0.00	-1.55	1.2
Right	Right:Coax1	End	15.00	1.08	63.69	-1.90	0.00	-14.69	-0.0	-1.77	0.00	-1.55	1.7
Right	Right:Coax1	Origin	15.00	1.08	63.69	-1.90	0.00	-14.69	-0.0	-2.41	-0.00	-2.34	1.7
Right	#Right:16	End	20.00	0.97	59.42	-1.74	0.00	-26.40	-0.0	-2.41	-0.00	-2.34	2.9
Right	#Right:16	Origin	20.00	0.97	59.42	-1.74	0.00	-26.40	-0.0	-3.04	0.00	-2.69	2.9
Right	Right:Coax2	End	25.00	0.85	55.16	-1.59	0.01	-39.87	-0.0	-3.04	0.00	-2.69	4.1
Right	Right:Coax2	Origin	25.00	0.85	55.16	-1.59	0.01	-39.87	-0.0	-3.84	0.00	-3.58	4.2
Right	#Right:17	End	30.00	0.74	50.93	-1.44	0.01	-57.75	-0.0	-3.84	0.00	-3.58	5.7
Right	#Right:17	Origin	30.00	0.74	50.93	-1.44	0.01	-57.75	-0.0	-4.52	0.00	-3.95	5.8
Right	Right:Coax3	End	35.00	0.63	46.73	-1.29	0.02	-77.53	-0.0	-4.52	0.00	-3.95	7.4
Right	Right:Coax3	Origin	35.00	0.63	46.73	-1.29	0.02	-77.53	-0.0	-5.16	0.00	-4.74	7.4
Right	Right:SW	End	37.00	0.58	45.06	-1.24	0.02	-87.02	-0.0	-5.16	0.00	-4.74	8.2
Right	Right:SW	Origin	37.00	0.58	45.06	-1.24	0.54	-87.02	0.1	-7.70	0.78	-5.41	8.4
Right	Right:V	End	39.00	0.54	43.40	-1.18	2.10	-97.84	0.1	-7.70	0.78	-5.41	9.5
Right	Right:V	Origin	39.00	0.54	43.40	-1.18	2.10	-97.84	0.1	-8.06	0.78	-5.61	9.5
Right	#Right:18	End	42.00	0.47	40.93	-1.09	4.44	-114.67	0.1	-8.06	0.78	-5.61	11.2
Right	#Right:18	Origin	42.00	0.47	40.93	-1.09	4.44	-114.67	0.1	-8.51	0.78	-5.85	11.2
Right	Right:Coax4	End	45.00	0.41	38.49	-1.01	6.79	-132.22	0.1	-8.51	0.78	-5.85	12.8
Right	Right:Coax4	Origin	45.00	0.41	38.49	-1.01	6.79	-132.22	0.1	-9.28	0.78	-6.70	12.8
Right	Right:A	End	50.00	0.31	34.47	-0.87	10.68	-165.73	0.1	-9.28	0.78	-6.70	15.8
Right	Right:A	Origin	50.00	0.31	34.47	-0.87	12.73	-167.37	31.6	-10.24	0.20	-10.85	16.2
Right	Right:Coax5	End	55.00	0.22	30.54	-0.75	13.86	-221.60	31.6	-10.24	0.20	-10.85	20.2
Right	Right:Coax5	Origin	55.00	0.22	30.54	-0.75	13.82	-221.61	31.5	-11.08	0.20	-11.72	20.2
Right	#Right:19	End	58.25	0.17	28.05	-0.67	14.57	-259.68	31.5	-11.08	0.20	-11.72	22.9
Right	#Right:19	Origin	58.25	0.17	28.05	-0.67	14.53	-259.68	31.5	-11.63	0.21	-12.00	22.9
Right	Right:XT	End	61.50	0.13	25.61	-0.59	15.29	-298.67	31.5	-11.63	0.21	-12.00	25.6
Right	Right:XT	Origin	61.50	0.13	25.61	-0.59	13.95	-298.67	31.9	-13.83	-1.12	-12.84	25.5
Right	Right:Coax6	End	65.00	0.10	23.05	-0.51	10.12	-343.61	31.9	-13.83	-1.12	-12.84	27.9
Right	Right:Coax6	Origin	65.00	0.10	23.05	-0.51	10.07	-343.62	31.8	-14.53	-1.12	-13.62	27.9
Right	Right:X2T	End	67.50	0.08	21.28	-0.46	7.35	-377.66	31.8	-14.53	-1.12	-13.62	29.8
Right	Right:X2T	Origin	67.50	0.08	21.28	-0.46	7.75	-377.66	32.2	-14.55	-0.43	-14.40	29.8
Right	#Right:20	End	71.25	0.05	18.70	-0.38	6.30	-431.67	32.2	-14.55	-0.43	-14.40	33.0
Right	#Right:20	Origin	71.25	0.05	18.70	-0.38	6.22	-431.67	32.2	-15.26	-0.42	-14.73	33.0
Right	Right:Coax7	End	75.00	0.03	16.24	-0.32	4.80	-486.90	32.2	-15.26	-0.42	-14.73	36.1
Right	Right:Coax7	Origin	75.00	0.03	16.24	-0.32	4.69	-486.91	32.2	-16.28	-0.42	-15.63	36.1
Right	#Right:21	End	80.00	0.02	13.15	-0.24	2.83	-565.04	32.2	-16.28	-0.42	-15.63	40.4
Right	#Right:21	Origin	80.00	0.02	13.15	-0.24	2.70	-565.05	32.1	-17.29	-0.41	-16.06	40.4
Right	Right:Coax8	End	85.00	0.01	10.32	-0.17	0.88	-645.35	32.1	-17.29	-0.41	-16.06	44.7
Right	Right:Coax8	Origin	85.00	0.01	10.32	-0.17	0.77	-645.36	32.1	-18.23	-0.41	-16.90	44.7
Right	Right:XB	End	87.50	0.01	9.00	-0.14	-0.12	-687.60	32.1	-18.23	-0.41	-16.90	46.9
Right	Right:XB	Origin	87.50	0.01	9.00	-0.14	-0.77	-687.60	32.5	-19.43	-0.02	-17.64	47.0
Right	#Right:22	End	90.50	0.00	7.52	-0.11	-0.66	-740.52	32.5	-19.43	-0.02	-17.64	49.7
Right	#Right:22	Origin	90.50	0.00	7.52	-0.11	-0.76	-740.52	32.5	-20.09	-0.01	-17.89	49.8
Right	Right:X2B	End	93.50	-0.00	6.16	-0.08	-0.64	-794.19	32.5	-20.09	-0.01	-17.89	52.5
Right	Right:X2B	Origin	93.50	-0.00	6.16	-0.08	-0.81	-794.20	33.0	-20.69	-0.11	-18.60	52.5
Right	Right:Coax9	End	95.00	-0.00	5.52	-0.07	-0.88	-822.10	33.0	-20.69	-0.11	-18.60	53.9
Right	Right:Coax9	Origin	95.00	-0.00	5.52	-0.07	-1.01	-822.10	33.0	-21.61	-0.10	-19.39	54.0
Right	#Right:23	End	100.00	-0.00	3.61	-0.04	-1.21	-919.03	33.0	-21.61	-0.10	-19.39	58.8
Right	#Right:23	Origin	100.00	-0.00	3.61	-0.04	-1.41	-919.03	33.0	-22.79	-0.10	-19.79	58.8
Right	Right:Coax10	End	105.00	-0.00	2.08	-0.02	-1.55	-1017.96	33.0	-22.79	-0.10	-19.79	63.5
Right	Right:Coax10	Origin	105.00	-0.00	2.08	-0.02	-1.77	-1017.96	33.0	-24.19	-0.09	-20.69	63.6

Right	#Right:24	End	110.00	-0.00	0.95	-0.01	-1.86	-1121.38	33.0	-24.19	-0.09	-20.69	68.3
Right	#Right:24	Origin	110.00	-0.00	0.95	-0.01	-2.09	-1121.38	32.9	-25.46	-0.08	-21.06	68.4
Right	Right:Coax11	End	115.00	-0.00	0.24	-0.00	-2.12	-1226.67	32.9	-25.46	-0.08	-21.06	73.0
Right	Right:Coax11	Origin	115.00	-0.00	0.24	-0.00	-2.37	-1226.67	32.9	-26.96	-0.07	-21.92	73.0
Right	Right:g	End	120.00	0.00	0.00	0.00	-2.34	-1336.26	32.9	-26.96	-0.07	-21.92	77.7

Summary of Brace Forces and Usages for Load Case "Ext. Wind L":

Brace Label	Forces (kips)	Allowable Compression (kips)	Allowable Tension (kips)	Usage %
TENL	1.94	5.45	99.22	2.60
TENR	1.89	5.45	99.22	2.53
VEEL	1.75	28.46	241.92	0.96
VEER	0.75	28.46	241.92	0.42
X1L	-0.53	41.12	255.15	1.72
X1R	1.93	41.12	255.15	1.01
X2L	0.17	41.12	255.15	0.09
X2R	-1.04	41.12	255.15	3.36

Detailed X-Arm Usages for Load Case "Ext. Wind L":

X-Arm Label	Joint Label	Joint Position	Rel. Dist. (ft)	Area (in^2)	X Sect. Modulus (in^3)	Z Sect. Modulus (in^3)	Tran. Defl. (in)	Long. Defl. (in)	Vert. Defl. (in)	X Mom. (ft-k)	Z Mom. (ft-k)	Tors. Mom. (ft-k)	Axial Force (kips)	X Shear (kips)	Z Shear (kips)	P/A (psi)	Mx/Sx (psi)	Mz/Sz (psi)	Max. Usage %
TAR53	TAR53:O	Origin	0.00	76.90	65.70	96.10	0.68	52.28	-2.01	0.00	-0.00	0.0	0.00	-0.01	-0.01	0.00022	0.000736	0.000191	0.0
TAR53	TAR53:L1	End	0.50	76.90	65.70	96.10	0.67	52.08	-2.00	-0.00	0.00	0.0	0.00	-0.01	-0.01	0.00022	0.584	0.534	0.0
TAR53	TAR53:L1	Origin	0.50	76.90	65.70	96.10	0.67	52.08	-2.00	0.00	-0.00	-0.0	-1.35	0.10	-0.38	18	0.585	0.534	0.3
TAR53	#gTAR53:0	End	5.50	76.90	65.70	96.10	0.64	50.05	-1.85	0.49	1.89	-0.0	-1.35	0.10	-0.38	18	89.3	236	5.7
TAR53	#gTAR53:0	Origin	5.50	76.90	65.70	96.10	0.64	50.05	-1.85	-0.49	-1.89	-0.0	-1.35	-0.02	-0.53	18	89.3	236	5.7
TAR53	#gTAR53:1	End	9.50	76.90	65.70	96.10	0.61	48.51	-1.71	0.42	4.00	-0.0	-1.35	-0.02	-0.53	18	76.5	500	9.9
TAR53	#gTAR53:1	Origin	9.50	76.90	65.70	96.10	0.61	48.51	-1.71	-0.42	-4.00	-0.0	-1.35	-0.12	-0.66	18	76.5	500	9.9
TAR53	TAR53:PL	End	13.50	76.90	65.70	96.10	0.59	47.12	-1.56	-0.06	6.65	-0.0	-1.35	-0.12	-0.66	18	11.5	830	14.3
TAR53	TAR53:PL	Origin	13.50	76.90	65.70	96.10	0.59	47.12	-1.56	2.38	20.92	-1.7	-1.34	0.23	-1.55	17	434	2.61e+003	51.1
TAR53	#gTAR53:2	End	18.50	76.90	65.70	96.10	0.55	44.99	-1.31	-1.17	-13.17	-1.7	-1.34	0.23	-1.55	17	213	1.64e+003	31.3
TAR53	#gTAR53:2	Origin	18.50	76.90	65.70	96.10	0.55	44.99	-1.31	1.19	13.17	-1.7	-1.32	0.12	-1.72	17	217	1.64e+003	31.3
TAR53	#gTAR53:3	End	22.50	76.90	65.70	96.10	0.50	42.71	-1.14	-0.71	-6.29	-1.7	-1.32	0.12	-1.72	17	129	785	15.5
TAR53	#gTAR53:3	Origin	22.50	76.90	65.70	96.10	0.50	42.71	-1.14	0.72	6.29	-1.7	-1.32	0.01	-1.86	17	131	785	15.5
TAR53	TAR53:L2V	End	26.50	76.90	65.70	96.10	0.43	40.21	-1.01	-0.68	1.16	-1.7	-1.32	0.01	-1.86	17	123	145	4.8
TAR53	TAR53:L2V	Origin	26.50	76.90	65.70	96.10	0.43	40.21	-1.01	0.67	-1.17	-1.7	-0.59	0.31	-2.69	7.6	123	146	4.6
TAR53	#gTAR53:4	End	31.50	76.90	65.70	96.10	0.36	37.19	-0.93	0.86	14.64	-1.7	-0.59	0.31	-2.69	7.6	156	1.83e+003	33.2
TAR53	#gTAR53:4	Origin	31.50	76.90	65.70	96.10	0.36	37.19	-0.93	-0.87	-14.64	-1.7	-0.62	0.19	-2.84	8.1	160	1.83e+003	33.3
TAR53	#gTAR53:5	End	35.50	76.90	65.70	96.10	0.32	35.35	-0.89	1.57	26.00	-1.7	-0.62	0.19	-2.84	8.1	287	3.25e+003	59.0
TAR53	#gTAR53:5	Origin	35.50	76.90	65.70	96.10	0.32	35.35	-0.89	-1.60	-26.00	-1.7	-0.68	0.08	-2.96	8.8	293	3.25e+003	59.1
TAR53	TAR53:PR	End	39.50	76.90	65.70	96.10	0.31	34.47	-0.87	1.83	37.85	-1.7	-0.68	0.08	-2.96	8.8	334	4.73e+003	84.5
TAR53	TAR53:PR	Origin	39.50	76.90	65.70	96.10	0.31	34.47	-0.87	0.23	-6.38	-0.0	-1.29	0.12	0.62	17	42.5	797	14.3
TAR53	#gTAR53:6	End	44.50	76.90	65.70	96.10	0.31	34.28	-1.00	0.38	3.27	-0.0	-1.29	0.12	0.62	17	69.4	408	8.2
TAR53	#gTAR53:6	Origin	44.50	76.90	65.70	96.10	0.31	34.28	-1.00	-0.38	-3.27	0.0	-1.29	0.00	0.47	17	69.4	408	8.2
TAR53	#gTAR53:7	End	48.50	76.90	65.70	96.10	0.31	34.28	-1.09	0.40	1.37	0.0	-1.29	0.00	0.47	17	72.8	171	4.3
TAR53	#gTAR53:7	Origin	48.50	76.90	65.70	96.10	0.31	34.28	-1.09	-0.40	-1.37	0.0	-1.29	-0.10	0.34	17	72.8	171	4.3
TAR53	TAR53:L3	End	52.50	76.90	65.70	96.10	0.31	34.34	-1.16	-0.00	0.00	0.0	-1.29	-0.10	0.34	17	0.596	0.528	0.3
TAR53	TAR53:L3	Origin	52.50	76.90	65.70	96.10	0.31	34.34	-1.16	0.00	-0.00	-0.0	0.00	0.01	0.01	0.00013	0.596	0.528	0.0
TAR53	TAR53:E	End	53.00	76.90	65.70	96.10	0.31	34.35	-1.17	0.00	-0.00	-0.0	0.00	0.01	0.01	0.00013	0.000151	4.57e-005	0.0

Summary of Clamp Capacities and Usages for Load Case "Ext. Wind L":

Clamp Label	Force (kips)	Input Holding Capacity (kips)	Factored Holding Capacity (kips)	Usage %
C1	0.976	10.00	10.00	9.76
C2	0.768	10.00	10.00	7.68
C3	0.848	10.00	10.00	8.48
C4	0.769	10.00	10.00	7.69
C5	0.827	10.00	10.00	8.27
C6	0.852	10.00	10.00	8.52
C7	0.782	10.00	10.00	7.82
C8	0.918	10.00	10.00	9.18
C9	0.878	10.00	10.00	8.78
C10	0.853	10.00	10.00	8.53
C11	1.045	10.00	10.00	10.45
C12	1.070	10.00	10.00	10.70

Summary of Suspension Capacities and Usages for Load Case "Ext. Wind L":

Suspension Label	Tension (kips)	Input Tension Capacity (kips)	Factored Tension Capacity (kips)	Usage %
SUSL	1.177	60.00	60.00	1.96
SUSC	1.177	60.00	60.00	1.96
SUSR	1.177	60.00	60.00	1.96
SWL	0.215	60.00	60.00	0.36
SWR	0.215	60.00	60.00	0.36

*** Overall summary for all load cases - Usage = Maximum Stress / Allowable Stress

Summary of Laminated Wood Pole Usages:

Laminated Wood Pole Label	Maximum Usage %	Load Case	Segment Number	Weight (lbs)
Left	64.08	Ext. Wind L	22	8687.1
Right	77.70	Ext. Wind L	31	24300.8

Summary of X-Arm Usages:

X-Arm Label	Maximum Usage %	Load Case	Segment Number	Weight (lbs)
TAR53	84.48	Ext. Wind L	10	1500.0

Summary of Brace Usages:

Brace Label	Maximum Usage %	Load Case	Weight (lbs)
TENL	5.13	NESC Heavy T	70.0
TENR	4.90	NESC Heavy T	70.0
VEEL	40.91	Ext. Wind T	210.0
VEER	7.56	Ext. Wind T	210.0
X1L	70.43	Ext. Wind T	450.0
X1R	7.42	Ext. Wind T	450.0
X2L	45.80	Ext. Wind T	450.0
X2R	7.22	Ext. Wind T	450.0

*** Maximum Stress Summary for Each Load Case

Summary of Maximum Usages by Load Case:

Load Case	Maximum Usage %	Element Label	Element Type
NESC Heavy T	33.38	X1L	Brace
NESC Heavy L	31.35	TAR53	X-Arm
Ext. Wind T	70.43	X1L	Brace
Ext. Wind L	84.48	TAR53	X-Arm

Summary of Laminated Wood Pole Usages by Load Case:

Load Case	Maximum Usage %	Laminated Wood Pole Segment Label	Number
NESC Heavy T	29.01	Left	6
NESC Heavy L	30.51	Right	31
Ext. Wind T	62.01	Left	6
Ext. Wind L	77.70	Right	31

Summary of X-Arm Usages by Load Case:

Load Case	Maximum Usage %	X-Arm Label	Segment Number
NESC Heavy T	15.28	TAR53	7
NESC Heavy L	31.35	TAR53	10
Ext. Wind T	32.88	TAR53	7
Ext. Wind L	84.48	TAR53	10

Summary of Brace Usages by Load Case:

Load Case	Maximum Usage %	Brace Label
NESC Heavy T	33.38	X1L
NESC Heavy L	4.96	TENL
Ext. Wind T	70.43	X1L
Ext. Wind L	3.36	X2R

Summary of Insulator Usages:

Insulator Label	Insulator Type	Maximum Usage %	Load Case	Weight (lbs)
C1	Clamp	16.22	Ext. Wind T	0.0
C2	Clamp	7.68	Ext. Wind L	0.0
C3	Clamp	8.48	Ext. Wind L	0.0
C4	Clamp	7.69	Ext. Wind L	0.0
C5	Clamp	8.27	Ext. Wind L	0.0
C6	Clamp	8.52	Ext. Wind L	0.0
C7	Clamp	7.82	Ext. Wind L	0.0
C8	Clamp	9.18	Ext. Wind L	0.0
C9	Clamp	8.78	Ext. Wind L	0.0
C10	Clamp	8.53	Ext. Wind L	0.0
C11	Clamp	10.45	Ext. Wind L	0.0
C12	Clamp	10.70	Ext. Wind L	0.0
SUSL	Suspension	4.16	Ext. Wind T	200.0
SUSC	Suspension	4.16	Ext. Wind T	200.0
SUSR	Suspension	4.16	Ext. Wind T	200.0
SWL	Suspension	1.69	NESC Heavy T	3.0
SWR	Suspension	1.69	NESC Heavy T	3.0

Loads At Insulator Attachments For All Load Cases:

Load Case	Insulator Label	Insulator Type	Structure Attach Label	Structure Attach Load X (kips)	Structure Attach Load Y (kips)	Structure Attach Load Z (kips)	Structure Attach Load Res. (kips)
NESC Heavy T	C1	Clamp	Right:Sprint	0.001	0.421	0.814	0.917
NESC Heavy T	C2	Clamp	Right:Coax1	0.001	0.217	0.695	0.728
NESC Heavy T	C3	Clamp	Right:Coax2	0.001	0.254	0.695	0.740
NESC Heavy T	C4	Clamp	Right:Coax3	0.001	0.198	0.695	0.723
NESC Heavy T	C5	Clamp	Right:Coax4	0.001	0.217	0.695	0.728
NESC Heavy T	C6	Clamp	Right:Coax5	0.001	0.221	0.695	0.729
NESC Heavy T	C7	Clamp	Right:Coax6	0.001	0.179	0.695	0.718
NESC Heavy T	C8	Clamp	Right:Coax7	0.001	0.231	0.695	0.732
NESC Heavy T	C9	Clamp	Right:Coax8	0.001	0.207	0.695	0.725

NESC Heavy T	C10	Clamp	Right:Coax9	0.001	0.188	0.695	0.720
NESC Heavy T	C11	Clamp	Right:Coax10	0.002	0.254	0.695	0.740
NESC Heavy T	C12	Clamp	Right:Coax11	0.002	0.254	0.695	0.740
NESC Heavy T	SUSL	Suspension	TAR53:L1	0.000	1.004	1.966	2.208
NESC Heavy T	SUSC	Suspension	TAR53:L2V	0.000	1.004	1.966	2.208
NESC Heavy T	SUSR	Suspension	TAR53:L3	0.000	1.004	1.966	2.208
NESC Heavy T	SWL	Suspension	Left:SW	0.000	0.654	0.771	1.011
NESC Heavy T	SWR	Suspension	Right:SW	0.000	0.654	0.771	1.011
NESC Heavy L	C1	Clamp	Right:Sprint	0.223	0.002	0.814	0.844
NESC Heavy L	C2	Clamp	Right:Coax1	0.246	0.002	0.695	0.737
NESC Heavy L	C3	Clamp	Right:Coax2	0.272	0.002	0.695	0.746
NESC Heavy L	C4	Clamp	Right:Coax3	0.246	0.001	0.695	0.737
NESC Heavy L	C5	Clamp	Right:Coax4	0.265	0.002	0.695	0.744
NESC Heavy L	C6	Clamp	Right:Coax5	0.273	0.002	0.695	0.747
NESC Heavy L	C7	Clamp	Right:Coax6	0.250	0.001	0.695	0.739
NESC Heavy L	C8	Clamp	Right:Coax7	0.294	0.002	0.695	0.755
NESC Heavy L	C9	Clamp	Right:Coax8	0.281	0.001	0.695	0.750
NESC Heavy L	C10	Clamp	Right:Coax9	0.273	0.001	0.695	0.747
NESC Heavy L	C11	Clamp	Right:Coax10	0.334	0.002	0.695	0.771
NESC Heavy L	C12	Clamp	Right:Coax11	0.342	0.002	0.695	0.775
NESC Heavy L	SUSL	Suspension	TAR53:L1	0.000	0.000	1.966	1.966
NESC Heavy L	SUSC	Suspension	TAR53:L2V	0.000	0.000	1.966	1.966
NESC Heavy L	SUSR	Suspension	TAR53:L3	0.000	0.000	1.966	1.966
NESC Heavy L	SWL	Suspension	Left:SW	0.000	0.000	0.771	0.771
NESC Heavy L	SWR	Suspension	Right:SW	0.000	0.000	0.771	0.771
Ext. Wind T	C1	Clamp	Right:Sprint	0.001	1.590	0.319	1.622
Ext. Wind T	C2	Clamp	Right:Coax1	0.001	0.652	0.191	0.679
Ext. Wind T	C3	Clamp	Right:Coax2	0.001	0.772	0.191	0.796
Ext. Wind T	C4	Clamp	Right:Coax3	0.001	0.591	0.191	0.621
Ext. Wind T	C5	Clamp	Right:Coax4	0.001	0.652	0.191	0.679
Ext. Wind T	C6	Clamp	Right:Coax5	0.001	0.667	0.191	0.694
Ext. Wind T	C7	Clamp	Right:Coax6	0.001	0.531	0.191	0.564
Ext. Wind T	C8	Clamp	Right:Coax7	0.002	0.697	0.191	0.723
Ext. Wind T	C9	Clamp	Right:Coax8	0.001	0.621	0.191	0.650
Ext. Wind T	C10	Clamp	Right:Coax9	0.001	0.561	0.191	0.593
Ext. Wind T	C11	Clamp	Right:Coax10	0.002	0.772	0.191	0.796
Ext. Wind T	C12	Clamp	Right:Coax11	0.002	0.772	0.191	0.796
Ext. Wind T	SUSL	Suspension	TAR53:L1	0.000	2.199	1.177	2.494
Ext. Wind T	SUSC	Suspension	TAR53:L2V	0.000	2.199	1.177	2.494
Ext. Wind T	SUSR	Suspension	TAR53:L3	0.000	2.199	1.177	2.494
Ext. Wind T	SWL	Suspension	Left:SW	0.000	0.630	0.215	0.666
Ext. Wind T	SWR	Suspension	Right:SW	0.000	0.630	0.215	0.666
Ext. Wind L	C1	Clamp	Right:Sprint	0.923	0.002	0.319	0.976
Ext. Wind L	C2	Clamp	Right:Coax1	0.744	0.002	0.191	0.768
Ext. Wind L	C3	Clamp	Right:Coax2	0.826	0.002	0.191	0.848
Ext. Wind L	C4	Clamp	Right:Coax3	0.745	0.002	0.191	0.769
Ext. Wind L	C5	Clamp	Right:Coax4	0.805	0.002	0.191	0.827
Ext. Wind L	C6	Clamp	Right:Coax5	0.831	0.002	0.191	0.852
Ext. Wind L	C7	Clamp	Right:Coax6	0.758	0.001	0.191	0.782
Ext. Wind L	C8	Clamp	Right:Coax7	0.898	0.002	0.191	0.918
Ext. Wind L	C9	Clamp	Right:Coax8	0.857	0.002	0.191	0.878
Ext. Wind L	C10	Clamp	Right:Coax9	0.832	0.002	0.191	0.853
Ext. Wind L	C11	Clamp	Right:Coax10	1.027	0.002	0.191	1.045
Ext. Wind L	C12	Clamp	Right:Coax11	1.052	0.002	0.191	1.070
Ext. Wind L	SUSL	Suspension	TAR53:L1	0.000	0.000	1.177	1.177
Ext. Wind L	SUSC	Suspension	TAR53:L2V	0.000	0.000	1.177	1.177
Ext. Wind L	SUSR	Suspension	TAR53:L3	0.000	0.000	1.177	1.177
Ext. Wind L	SWL	Suspension	Left:SW	0.000	0.000	0.215	0.215
Ext. Wind L	SWR	Suspension	Right:SW	0.000	0.000	0.215	0.215

Overturning Moments For User Input Concentrated Loads:

Moments are static equivalents based on central axis of 0,0 (i.e. a single pole).

Load Case	Total Tran. Load (kips)	Total Long. Load (kips)	Total Vert. Load (kips)	Transverse Overturning Moment (ft-k)	Longitudinal Overturning Moment (ft-k)	Torsional Moment (ft-k)
NESC Heavy T	5.298	0.000	15.899	498.369	0.000	0.000
NESC Heavy L	0.000	2.040	15.899	109.967	121.228	-26.520
Ext. Wind T	10.763	0.000	6.381	821.369	0.000	0.000
Ext. Wind L	0.000	6.259	6.381	31.460	385.847	-81.367

*** Weight of structure (lbs):

Weight of Braces:	2360.0
Weight of X-Arms:	1500.0
Weight of Laminated Wood Poles:	32987.9
Weight of Suspensions:	606.0
Total:	37453.9

*** End of Report

CENTEK engineering
Centered on Solutions℠ www.centekeng.com
63-2 North Branford Road P: (203) 488-0580
Branford, CT 06405 F: (203) 488-8587

Subject: FOUNDATION ANALYSIS

Location: Manchester, CT

Rev. 3: 1/8/19

Prepared by: T.J.L Checked by: C.F.C.
Job no. 17159.14

Caisson Foundation:

Input Data:

Tower Data

Uplift =	$Uplift := 43.98 \cdot kips \cdot 1.1 = 48 \cdot kips$	(User Input)
Compression =	$Comp := 81.60 \cdot kips \cdot 1.1 = 90 \cdot kips$	(User Input)
Shear Force =	$Shear := 22.09 \cdot kips \cdot 1.1 = 24 \cdot kips$	(User Input)
Moment =	$Moment := 1336.27 \cdot ft \cdot kip \cdot 1.1 = 1470 \cdot kips$	(User Input)
Pole Length =	$L := 135.5 \cdot ft$	
Pole Base Width 1 =	$W_{pole1} := 28.25 \cdot in$	
Pole Base Width 2 =	$W_{pole2} := 26.13 \cdot in$	

Footing Data:

Length of Concrete Encasement =	$L_c := 15.5 \cdot ft$	(User Input)
Extension of Concrete Above Grade =	$L_{cag} := 0 \cdot ft$	(User Input)
Diameter of Concrete =	$d_c := 4.5 \cdot ft$	(User Input)
Length of Concrete Above Wate Table =	$L_{c.AWT} := 15.5 \cdot ft$	(User Input)
Length of Concrete Below Wate Table =	$L_{c.BWT} := 0 \cdot ft$	(User Input)
Embedment Depth =	$D_e := 15.5 \cdot ft$	(User Input)

Material Properties:

Concrete Compressive Strength =	$f_c := 2000 \cdot psi$	(User Input)
Ultimate Soil Bearing Capacity =	$q_u := 9000 \cdot psf$	(User Input)
Unit Weight of Soil =	$\gamma_{soil} := 100 \cdot pcf$	(User Input)
Unit Weight of Concrete =	$\gamma_{conc} := 145 \cdot pcf$	(User Input)
Depth to Neglect =	$n := 1 \cdot ft$	(User Input)
Ultimate Skin Friction =	$\mu := 100 \cdot psf$	(User Input - Per RUS Bulletin 1742E-200 Section 12.5)
Soil Constant =	$S_e := 70$	(User Input - Per RUS Bulletin 1742E-200 Section 12.3 for Average Soil)
	$\theta := 40 \cdot deg$	
Resisting Cone Radius Top =	$R := \tan\left(\frac{\theta}{2}\right) \cdot \left(D_e - n\right) + \frac{d_c}{2} = 7.53 \cdot ft$	(User Input)
Resisting Cone Radius Bottom =	$r := \frac{d_c}{2} = 2.25 \cdot ft$	(User Input)

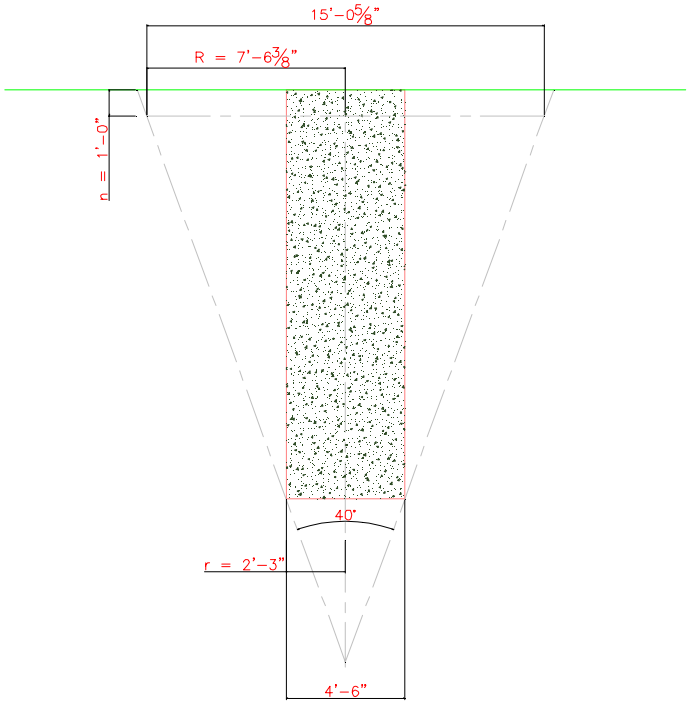

Calculated Properties:

Area of Concrete Caisson = $A_c := \frac{\pi}{4}\cdot\left(d_c^2\right) - W_{pole1}\cdot W_{pole2} = 10.78\cdot ft^2$

Volume of Concrete Caisson= $V_c := A_c\cdot L_c = 167.06\cdot ft^3$

Volume of Resisting Cone = $V_{cone} := \frac{\pi\cdot\left(D_e - n\right)}{3}\cdot\left(R^2 + R\cdot r + r^2\right) = 1194\cdot ft^3$

Volume of Resisting Soil = $V_{soil} := V_{cone} - \frac{\pi}{4}\cdot\left(d_c^2\right)\cdot L_c = 948\cdot ft^3$

Weight of Concrete Caisson (no water) = $WT_c := V_c\cdot\gamma_{conc} = 24.224\cdot kip$

Weight of Soil = $WT_s := V_{soil}\cdot\gamma_{soil} = 94.794\cdot kip$

Check Uplift:

Total Uplift Resistance = $Uplift_R := WT_c + WT_s = 119 \cdot kips$

Uplift Check = $\frac{Uplift}{Uplift_R} = 40.65 \cdot \%$

$Uplift\_Check := if\left(\frac{Uplift_R}{Uplift} \geq 1.0, "Okay", "No Good"\right)$

Uplift_Check = "Okay"

Check Compression:

Total Compression Force = $Comp_{tot} := WT_c + Comp = 114 \cdot kips$

Compression Resistance from Bearing = $Comp_{bearing} := \frac{\pi}{4} \cdot d_c^{\,2} \cdot q_u = 143.1 \cdot kips$

Compression Resistance from Skin Friction = $Comp_{SF} := \pi \cdot d_c \cdot \left(L_c - L_{cag} - n\right) \cdot \mu = 20.5 \cdot kips$

Total Compression Resistance = $Comp_R := Comp_{bearing} + Comp_{SF} = 163.6 \cdot kips$

Compression Check = $\frac{Comp_{tot}}{Comp_R} = 69.66 \cdot \%$

$Compression\_Check := if\left(\frac{Comp_R}{Comp_{tot}} \geq 1.0, "Okay", "No Good"\right)$

Compression_Check = "Okay"

Check Embedment for Lateral:

Horizontal Force at 2-ft from top that will overturn pole = $P := \frac{\left(S_e \cdot D_e^{\,3.75}\right)}{L - 2 - 0.662 \cdot D_e} = 16523$ lbs

(User Input - Per RUS Bulletin 1742E-200 Section 12.3)

Max Permissible Ground Line Moment = $M := P \cdot lb \cdot \left(L - D_e - 2 \cdot ft\right) = 1950 \cdot ft \cdot kip$

Embedment Check = $\frac{Moment}{M} = 75.39 \cdot \%$

$Embedment\_Check := if\left(\frac{M}{Moment} \geq 1.0, "Okay", "No Good"\right)$

Embedment_Check = "Okay"

Product Specifications

DHHTT65B-3XR

Multiband Antenna, 790–960, 2 x 1710–2180 and 2 x 2490-2690 MHz, 65° horizontal beamwidth, internal electrical tilt with individual tilt available for the 850 MHz band, 1900 MHz bands and 2500 MHz bands.

Electrical Specifications

Frequency Band, MHz	790–896	870–960	1710–1880	1850–1990	1920–2180	2490–2690
Connector Interface	7-16 DIN Female	7-16 DIN Female	7-16 DIN Female	7-16 DIN Female	7-16 DIN Female	4.1-9.5 DIN Female
Connector Location	Bottom	Bottom	Bottom	Bottom	Bottom	Bottom
Gain, dBi	15.5	15.5	17.3	17.4	17.5	17.2
Beamwidth, Horizontal, degrees	64	63	71	69	66	60
Beamwidth, Vertical, degrees	11.2	10.3	5.6	5.4	5.1	4.3
Beam Tilt, degrees	0–10	0–10	0–8	0–8	0–8	0–8
USLS (First Lobe), dB	15	16	15	16	15	18
Front-to-Back Ratio at 180°, dB	28	31	31	29	25	26
CPR at Boresight, dB	20	19	20	20	18	16
CPR at Sector, dB	9	9	9	9	7	4
Isolation, dB	25	25	25	25	25	25
Isolation, Intersystem, dB	30	30	30	30	30	30
VSWR | Return Loss, dB	1.5 | 14.0	1.5 | 14.0	1.5 | 14.0	1.5 | 14.0	1.5 | 14.0	1.5 | 14.0
PIM, 3rd Order, 2 x 20 W, dBc	-153	-153	-153	-153	-153	-150
Input Power per Port, maximum, watts	350	350	300	300	300	250
Polarization	±45°	±45°	±45°	±45°	±45°	±45°
Impedance	50 ohm	50 ohm	50 ohm	50 ohm	50 ohm	50 ohm

Electrical Specifications, BASTA*

Frequency Band, MHz	790–896	870–960	1710–1880	1850–1990	1920–2180	2490–2690
Gain by all Beam Tilts, average, dBi	15.0	15.1	17.0	17.1	17.1	17.1
Gain by all Beam Tilts Tolerance, dB	±0.4	±0.3	±0.3	±0.3	±0.3	±0.6
Gain by Beam Tilt, average, dBi	0 ° | 15.0	0 ° | 15.0	0 ° | 16.8	0 ° | 17.0	0 ° | 17.0	0 ° | 17.1
	5 ° | 15.1	5 ° | 15.1	4 ° | 17.0	4 ° | 17.1	4 ° | 17.1	4 ° | 17.2
	10 ° | 15.0	10 ° | 15.0	8 ° | 17.0	8 ° | 17.1	8 ° | 17.1	8 ° | 17.0
Beamwidth, Horizontal Tolerance, degrees	±2.5	±1.8	±3.2	±2.7	±5	±6.6
Beamwidth, Vertical Tolerance, degrees	±0.8	±0.6	±0.2	±0.2	±0.4	±0.3
USLS, beampeak to 20° above beampeak, dB	16	17	16	17	16	19
Front-to-Back Total Power at 180° ± 30°, dB	24	26	26	25	23	23
CPR at Boresight, dB	21	20	22	22	21	16
CPR at Sector, dB	9	10	13	10	8	5

* CommScope® supports NGMN recommendations on Base Station Antenna Standards (BASTA). To learn more about the benefits of BASTA, download the whitepaper Time to Raise the Bar on BSAs.

General Specifications

Antenna Brand	Andrew®
Antenna Type	DualPol® multiband with internal RET
Band	Multiband
Brand	DualPol®

©2016 CommScope, Inc. All rights reserved. All trademarks identified by ® or ™ are registered trademarks, respectively, of CommScope.
All specifications are subject to change without notice. See www.commscope.com for the most current information. Revised: April 19, 2016

Product Specifications

DHHTT65B-3XR

Operating Frequency Band	1710 – 2180 MHz | 2490 – 2690 MHz | 790 – 960 MHz
Performance Note	Outdoor usage

Mechanical Specifications

Color	Light gray
Lightning Protection	dc Ground
Radiator Material	Copper | Low loss circuit board
Radome Material	ASA, UV stabilized
Reflector Material	Aluminum
RF Connector Interface	4.1-9.5 DIN Female | 7-16 DIN Female
RF Connector Location	Bottom
RF Connector Quantity, total	10
Wind Loading, frontal	618.0 N @ 150 km/h 138.9 lbf @ 150 km/h
Wind Speed, maximum	241 km/h | 150 mph

Dimensions

Depth	181.0 mm | 7.1 in
Length	1832.0 mm | 72.1 in
Width	301.0 mm | 11.9 in
Net Weight	20.6 kg | 45.4 lb

Remote Electrical Tilt (RET) Information

Input Voltage	10–30 Vdc
Power Consumption, idle state, maximum	2.0 W
Power Consumption, normal conditions, maximum	13.0 W
Protocol	3GPP/AISG 2.0 (Multi-RET)
RET Interface	8-pin DIN Female | 8-pin DIN Male
RET Interface, quantity	1 female | 1 male

Packed Dimensions

Depth	299.0 mm | 11.8 in
Length	1954.0 mm | 76.9 in
Width	409.0 mm | 16.1 in
Shipping Weight	33.2 kg | 73.2 lb

Regulatory Compliance/Certifications

Agency	Classification
RoHS 2011/65/EU	Compliant by Exemption
China RoHS SJ/T 11364-2006	Above Maximum Concentration Value (MCV)
ISO 9001:2008	

©2016 CommScope, Inc. All rights reserved. All trademarks identified by ® or ™ are registered trademarks, respectively, of CommScope.
All specifications are subject to change without notice. See www.commscope.com for the most current information. Revised: April 19, 2016

DATA SHEET

Outdoor Diplexer

DPO-7126Y-0x1

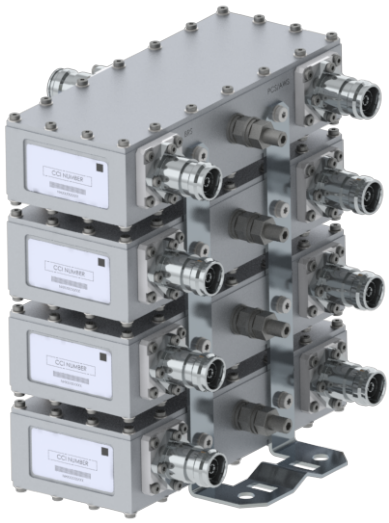

- Combines the frequencies covering PCS/AWS (1695-2180 MHz) with BRS (2496-2690 MHz)
- High power 250 W per port with low insertion loss in a small, lightweight enclosure
- Low intermodulation with isolation of >50 dB port to port
- High reliability of >500K Hours MTBF and multi-strike lightning protection
- Designed and produced to ISO 9001:2008 certification standards
- Weatherproof enclosure (IP67) with available outdoor pole or wall mounting options

Overview

The CCI Outdoor Diplexer passes the PCS and AWS bands covering 1695-2180 MHz on its low band input port and the full BRS band which covers 2496-2690 MHz on its high band input port. The Diplexer combines the low band and high band signals on to a common port and is specifically intended for use in multi-band systems with limited feeder lines. The Diplexer facilitates the addition of new technologies including LTE and new spectrum to existing sites while providing a high degree of isolation between systems. Decreasing the number of feeder lines lowers tower loading, leasing and installation expenditures and significantly reduces the total cost to upgrade a site.
The CCI Outdoor Diplexer provides full band performance for each band with low insertion loss, low Intermodulation, and high 250 W per port power handling. Excellent return loss performance delivers the best match to the antennas and base station, saving precious transmit power. The CCI Diplexer is available in a single, twin or quad unit configuration.

Technical Description:

The CCI Outdoor Diplexer consists of multiple filters and can be used as either a splitter or combiner to aggregate the PCS/AWS with the BRS bands on to a common feeder line. The fully weatherproof tower mount Diplexer has internal multi-strike lightning protection using a multi-stage surge protection circuit.
The unit has been designed to minimize insertion loss while maximizing isolation. Particular attention has been given to the intermodulation performance of the Diplexer to minimize any passive intermodulation products from occurring. The Diplexer housing is constructed from die cast aluminum and consists of an IP67 moisture proof enclosure, with IP68 immersion proof connectors suited to long-life masthead mounting. The Diplexer can be pole or wall mounted with the included bracket. The RF ports are configured with DIN 7-16.
CCI filter and combiner products are designed and produced to ISO 9001:2008 certification standards for reliability and quality at our state-of-the-art engineering and manufacturing facilities.

© 2017 CCI All rights reserved. Specifications are subject to change.

SPECIFICATIONS

Outdoor Diplexer

DPO-7126Y-0x1

Electrical

RF Parameters	Ports	Frequency(MHz)	Specification
Return Loss	COMMON	1695 - 2180	18 dB minimum, 20 dB typical
		2496 - 2690	18 dB minimum, 20 dB typical
	PCS/AWS	1695 - 2180	18 dB minimum, 20 dB typical
	BRS	2496 - 2690	18 dB minimum, 20 dB typical
Insertion Loss	COMMON to PCS/AWS	1695 - 2180	0.2 dB typical, 0.25 dB maximum
	COMMON to BRS	2496 - 2690	0.2 dB typical, 0.25 dB maximum
Rejection	COMMON to PCS/AWS	2496 - 2690	50 dB minimum
	COMMON to BRS	1695 - 2180	50 dB minimum
Isolation	PCS/AWS to BRS	1695 - 2180	50 dB minimum
	BRS to PCS/AWS	2496 - 2690	50 dB minimum

General Characteristics	
General Impedance	50 ohms
Continuous Average Power	250 W maximum (input ports), 500 W maximum (Common port)
Peak Envelope Power	1 kW maximum (input ports), 3 kW maximum (Common port)
Intermodulation Performance	<-117 dBm (-160 dBc) at 2 × +43 dBm tones all bands

Environmental

Operating Temperature	-40˚C to +65˚C
Enclosure	Enclosure IP67, Connectors IP68
MTBF	>500,000 hours
Lightning Protection	8/20us, ±20KA maximum, 10 strikes per IEC61000-4-5

Mechanical

Model	DPO-7126Y-0-S1	DPO-7126Y-0-T1	DPO-7126Y-0-Q1
Modularity	Single	Twin	Quad
Weight with brackets	3.7 lbs (1.6 Kg)	7.3 lbs (3.3 Kg)	14.4 lbs (6.6 Kg)
Dimensions with brackets	6.26 x 7.42 x 2.02 in. (159 x 188.5 x 51.4 mm)	6.26 x 7.42 x 4.07 in. (159 x 188.5 x 103.4 mm)	6.26x 7.42 x 8.17 in. (159 x 188.5 x 207.4 mm)
Dimensions enclosure only	2.95 x 7.42 x 1.95 in. (75 x 188.5 x 48.8 mm)		
Connectors	3 x 7-16 DIN female long neck		
Mounting	Pole/Wall mounting bracket		

© 2017 CCI All rights reserved. Specifications are subject to change.

RADIO FREQUENCY SYSTEMS
The Clear Choice®

ShareLite™ Wideband Diplexer Kit – In-line 698-960 MHz/1710-2200 MHz, full DC/AISG pass

The ShareLite FD9R6004 Series of diplexers are designed to enable feeder sharing between systems in the 698-960 MHz range and in the 1710-2200 MHz range, including all the new AWS-3 paired spectrum blocks (G, H, I, J).. The diplexer is equipped with in-line connector placement so it can be installed in the BTS cabinet or at the tower top. This is especially valuable in crowded sites or when the feeders are not easily accessible. Due to its wideband design, the FD9R6004 Series can accommodate many combining solutions between 698-960 MHz and 1710-2200 MHz systems such as LTE 700 MHz, Cellular 800 MHz with PCS, GSM900 with GSM1800, or GSM900 with UMTS. This diplexer features a highly selective filter. It provides a high level of isolation between ports, while keeping the insertion loss on both paths at an extremely low level. The FD9R6004 diplexers are available with various DC pass options, helpful in configurations with or without the Tower Mount Amplifiers installed.

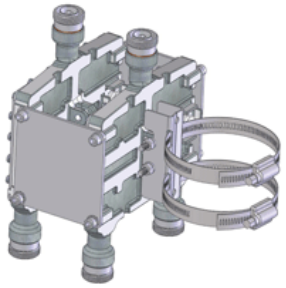

FEATURES / BENEFITS

- LTE and AWS-3 ready design
- Extremely Low Insertion Loss
- High level of Rejection between bands – Protection against interferences
- Extremely High Power Handling Capability
- DC/AISG 1.1/2.0 pass through all ports
- Very compact & small size design – Easy installation and reduced tower load
- In-line long-neck connectors for easy connection & waterproofing
- Exceptional reliability & environmental protection (IP 67)
- Equipped with 1 * Breathable Vent – Prevent any humidity inside the product
- Mounting hardware for Wall and Pole mount provided (P/N SEM2-1A)
- Grounding already provided through the mounting bracket

Technical Features

GENERAL SPECIFICATIONS		
Product Type		Diplexer/Cross Band Combiner
Application		LTE700, GSM900, UMTS, GSM1800, Cellular 800, PCS, AWS-1, AWS-3
Configuration		ShareLite Kit consisting of (2) in-line long neck connector diplexers (Full DC Pass), (1) mounting hardware SEM2-1A, & (1) assembly kit SEM2-3 disassembled

ELECTRICAL SPECIFICATIONS		
Frequency Range 1	MHz	698 - 960
Frequency Range 2	MHz	1710 - 2200
Return Loss All Ports	dB	19 Min/23 Typ.
Power Handling Continuous, Max	W	1250 at common port; 750 in low frequency path & 500 in high frequency path
Power Handling Peak, Max	W	15000 in low frequency path & 8000 in high frequency path
Impedance	Ω	50.0
Insertion Loss, Path 1	dB	0.07 typ.
Insertion Loss, Path 2	dB	0.13 typ.
Rejection Between Bands Min/Typ	dB	58/64@698-960MHz 57/70@1710-2200MHz
Group Delay, Path 1	ns	3 Max.
Group Delay, Path 2	ns	3 Max.
IMP Level at the COM Port	dBm (dBc)	-112 (-155) @2x43 typ.
DC Pass in Path 1		Yes
DC Pass in Path 2		Yes

MECHANICAL SPECIFICATIONS		
Mounting		Wall Mounting: With 4 screws (maximum 6mm diameter) Pole Mounting: With included clamp set 40-110mm (1.57-4.33)
RF Connectors		In-line long-neck 7-16-Female
Weight	kg (lb)	2.9 (6.4)
Dimensions, H x W x D	mm (in)	147 x 164 x 118 (5.8 x 6.5 x 4.6)
Shipping Dimensions, H x W x D	mm (in)	254 x 406 x 82 (10 x 16 x 3.2) for 1 * Dual unit in 1 * box, 280 x 406 x 241 (11 x 16 x 9.5) for 3 * Dual units = 3 * Boxes in 1 * overwrap
Housing		Aluminum

TESTING AND ENVIRONMENTAL		
Temperature Range	°C (°F)	-40 to 60 (-40 to 140)
Environmental		ETSI 300-019-2-4 Class 4.1E
Ingress Protection		IP 67
Lightning Protection		EN/IEC61000-4-5 Level 4

External Document Links

RFS Diplexer Field Test Procedure□□

KIT-FD9R6004/1C-DL Installation Instructions

Notes

All information contained in the present datasheet is subject to confirmation at time of ordering

RADIO FREQUENCY SYSTEMS
The Clear Choice®

ShareLite™ Wideband Diplexer Kit – In-line 698-960 MHz/1710-2200 MHz, full DC/AISG pass

Selection Guide Diplexer 698-960 / 1710-2200MHz					
	Model Number	Full DC Pass	DC Pass High Band	DC Pass Low Band	Mounting Hardware Included
Single	FD9R6004/1C-3L				X
	FD9R6004/2C-3L				X
	FD9R6004/3C-3L				X
Dual	KIT-FD9R6004/1C-DL				X
	KIT-FD9R6004/2C-DL				X
	KIT-FD9R6004/3C-DL				X

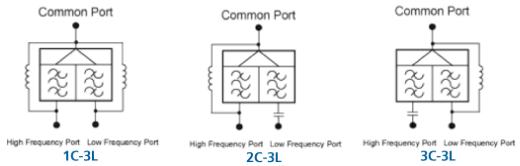

The FD9R6004 Series is upgradeable to a Dual Diplexer kit by means of 2 diplexers and mounting hardware kits SEM2-1A and SEM2-3

Mounting Hardware and Ground Cable Ordering Information		
Model Number	**Description**	
SEM2-1A	Mounting Hardware, Pole mount ø40-110mm (Included with the Single and Dual Diplexer) Wall Screws M6 (Not included with the product)	
SEM2-3	Assembly kit for 2 pcs of FD9R6004/xC-3L (Can be ordered separately but included with the Dual Diplexer Kit)	
CA020-2	Ground Cable, 2m, includes lugs (Optional)	
CA030-2	Ground Cable, 3m, includes lugs (Optional)	
SEM6	Mounting Hardware for 6 Diplexers, Tower Base (Optional)	

All information contained in the present datasheet is subject to confirmation at time of ordering