Crown Castle
3 Corporate Park Drive, Suite 101
Clifton Park, NY 12065

July 6, 2022

Melanie A. Bachman
Executive Director
Connecticut Siting Council
10 Franklin Square
New Britain, CT 06051

RE: **Notice of Exempt Modification for T-Mobile: CT11237C**
Crown Site ID#823666
15 Pent Road, Deep River, CT 06417
Latitude: 41° 22′ 22.17″ / Longitude: -72° 26′ 3.97″

Dear Ms. Bachman:

T-Mobile currently maintains six (6) antennas at the 178-foot mount on the existing 178-foot monopole tower located at 15 Pent Road, Deep River, CT. The property is owned by Jasavic Dzenis and tower is owned by Crown Castle. T-Mobile now intends to replace three (3) antennas and ancillary equipment at the 178ft level. This modification/proposal includes hardware that is both 4G (LTE) and 5G capable through remote software configuration and either or both services may be turned on or off at various times.

Panned Modification:

Tower:

Installed New:

(3) Ericsson AIR449 B41 Antennas
(3) Ericsson-Radio 4460 B25+ B66 RRU
(2) Hybrid Cable (6x24)
(1) Site Pro F4P-12W Platform Mount

Remove:

(3) EMS- RR90-17-XXPD Antennas
(3) Generic Twin Style 1A PCS TMA
(3) Ericsson Twin Style 1BX KRY 112 144/2 TMAs
(12) 1-5/8" Coaxial Cables
Platform Mounts

Ground:

Install New:

(1) B160 Battery Cabinet
(2) PSU 4813 Voltage Booster
(1.) 6160 Cabinet
(1.) CSR IXRe Router
(1^) RP 6651

(3) Ericsson 4415 B66A Radios
(3^) RUS01 B2 Radios

The facility was approved by the Town of Deep River, building permit No. 00-1-182 on August 18, 2000.

Please accept this letter as notification pursuant to Regulations of Connecticut State Agencies §16-50j-73, for construction that constitutes an exempt modification pursuant to R.C.S.A. § 16-50j-72(b)(2). In accordance with R.C.S.A. § 16-50j-73, a copy of this letter is being sent to Angus L. McDonald, First Selectman, Town of Deep River, John Guszkowski, CO Zoning Enforcement Officer, Town of Deep River. Jasavic Dzenis, Property Owner and Crown Castle is the tower owner.

1. The proposed modifications will not result in an increase in the height of the existing tower.

2. The proposed modifications will not require the extension of the site boundary.

3. The proposed modification will not increase noise levels at the facility by six decibels or more, or to levels that exceed state and local criteria.

4. The operation of the replacement antennas will not increase radio frequency emissions at the facility to a level at or above the Federal Communication Commission safety standard.
5. The proposed modifications will not cause a change or alteration in the physical or environmental characteristics of the site.

6. The existing structure and its foundation can support the proposed loading.

For the foregoing reasons, T-Mobile respectfully submits that the proposed modifications to the above-reference telecommunications facility constitutes an exempt modification under R.C.S.A. § 16-50j-72(b)(2). Please send approval/rejection letter to Attn: Jeffrey Barbadora.

Sincerely,

Jeffrey Barbadora
Site Acquisition Specialist
1800 W. Park Drive
Westborough, MA 01581
(781) 970-0053
Jeff.Barbadora@crowncastle.com

Attachments
cc:

Angus L. McDonald, Jr, First Selectman
Deep River Town Hall
174 Main Street
Deep River, CT
860-526-6020

John Guszkowski, CO Zoning Enforcement Officer
Deep River Town Hall
174 Main Street
Deep River, CT
860-526-6030

Jasavic Dzenis, Property Owner
15 Pent Road
Deep River, CT 06417

Crown Castle – Tower Owner

CT-11-237C

BUILDING PERMIT

JOB WEATHER CARD

DATE AUGUST 18, 2000 PERMIT NO. 00-1-182

APPLICANT VOICE STREAM WIRELESS ADDRESS 109 FILLEY, BLOOMFIELD, CT. 06002 (NO.) (STREET) (CONTR'S LICENSE)

PERMIT TO CONSTRUCT ANTENNA TOWER (TYPE OF IMPROVEMENT) NO. STORY (PROPOSED USE) NUMBER OF DWELLING UNITS 0

AT (LOCATION) 19 PEAT ROAD, DEEP RIVER (NO.) (STREET) ZONING DISTRICT

BETWEEN (CROSS STREET) AND (CROSS STREET)

SUBDIVISION LOT BLOCK LOT SIZE

BUILDING IS TO BE FT. WIDE BY FT. LONG BY FT. IN HEIGHT AND SHALL CONFORM IN CONSTRUCTION

TO TYPE USE GROUP BASEMENT WALLS OR FOUNDATION (TYPE)

REMARKS: PERMIT ISSUED FOR THE CONSTRUCTION OF TOWER PER SUBMITTED APPLICATION AND DRAWINGS. ALL APPLICABLE CODES MUST BE MET AND INSPECTIONS REQUESTED. FIRST INSPECTION REQUIRED PRIOR TO POURING ANY CONCRETE.
CONTRACTOR: COSTELOTTA CONST. 2534 FOXDALE AVE., OCEANSIDE, NY 11572

AREA OR VOLUME (CUBIC/SQUARE FEET) ESTIMATED COST $ 15,000.00 PERMIT FEE $ 240.00

OWNER BERNAT STALBERG

ADDRESS 19 PEAT ROAD, DEEP RIVER BUILDING DEPT. BY

THIS PERMIT CONVEYS NO RIGHT TO OCCUPY ANY STREET, ALLEY OR SIDEWALK OR ANY PART THEREOF, EITHER TEMPORARILY OR PERMANENTLY. ENCROACHMENTS ON PUBLIC PROPERTY, NOT SPECIFICALLY PERMITTED UNDER THE BUILDING CODE, MUST BE APPROVED BY THE JURISDICTION. STREET OR ALLEY GRADES AS WELL AS DEPTH AND LOCATION OF PUBLIC SEWERS MAY BE OBTAINED FROM THE DEPARTMENT OF PUBLIC WORKS. THE ISSUANCE OF THIS PERMIT DOES NOT RELEASE THE APPLICANT FROM THE CONDITIONS OF ANY APPLICABLE SUBDIVISION RESTRICTIONS.

MINIMUM OF THREE CALLED INSPECTIONS REQUIRED FOR ALL CONSTRUCTION WORK:
1. FOUNDATIONS OR FOOTINGS.
2. PRIOR TO COVERING STRUCTURAL MEMBERS (READY FOR LATH OR FINISH COVERING).
3. FINAL INSPECTION BEFORE OCCUPANCY.

APPROVED PLANS MUST BE RETAINED ON JOB AND THIS CARD KEPT POSTED UNTIL FINAL INSPECTION HAS BEEN MADE. WHERE A CERTIFICATE OF OCCUPANCY IS REQUIRED, SUCH BUILDING SHALL NOT BE OCCUPIED UNTIL FINAL INSPECTION HAS BEEN MADE.

WHERE APPLICABLE SEPARATE PERMITS ARE REQUIRED FOR ELECTRICAL, PLUMBING AND MECHANICAL INSTALLATIONS.

POST THIS CARD SO IT IS VISIBLE FROM STREET

BUILDING INSPECTION APPROVALS	PLUMBING INSPECTION APPROVALS	ELECTRICAL INSPECTION APPROVALS
1	1	1
2	2	2
3	HEATING INSPECTING APPROVALS	REFRIGERATION INSPECTION APPROVALS
	1	1
OTHER	2	2

WORK SHALL NOT PROCEED UNTIL THE INSPECTOR HAS APPROVED THE VARIOUS STAGES OF CONSTRUCTION.

PERMIT WILL BECOME NULL AND VOID IF CONSTRUCTION WORK IS NOT STARTED WITHIN SIX MONTHS OF DATE THE PERMIT IS ISSUED AS NOTED ABOVE.

INSPECTIONS INDICATED ON THIS CARD CAN BE ARRANGED FOR BY TELEPHONE OR WRITTEN NOTIFICATION.

FORM NO. BOCA-BP 1994

15 PENT RD

Location	15 PENT RD	**Mblu**	58/ / 34/ /
Acct#	00155800	**Owner**	JASAVIC DZENIS
Assessment	$294,210	**Appraisal**	$420,300
PID	1745	**Building Count**	2

Current Value

Appraisal			
Valuation Year	**Improvements**	**Land**	**Total**
2020	$280,000	$140,300	$420,300

Assessment			
Valuation Year	**Improvements**	**Land**	**Total**
2020	$196,000	$98,210	$294,210

Parcel Addreses

Additional Addresses
No Additional Addresses available for this parcel

Owner of Record

Owner	JASAVIC DZENIS	**Sale Price**	$0
Co-Owner		**Certificate**	
Address	15 PENT RD DEEP RIVER , CT 06417	**Book & Page**	0249/0355
		Sale Date	12/21/2020
		Instrument	29

Ownership History

Ownership History					
Owner	**Sale Price**	**Certificate**	**Book & Page**	**Instrument**	**Sale Date**
JASAVIC DZENIS	$0		0249/0355	29	12/21/2020
JASAVIC DZENIS	$215,500		0249/0227	00	12/10/2020
BEKS HOLDINGS LLC	$0		0245/0450	29	11/13/2019
BEKS HOLDINGS LLC	$0		0245/0035	29	09/30/2019

Building Information

Building 1 : Section 1

Year Built: 1930
Living Area: 2,954

Building Attributes	
Field	**Description**
Style:	Colonial
Model	Residential
Grade:	Good
Stories:	2
Occupancy	1
Exterior Wall 1	Aluminum Sidng
Exterior Wall 2	
Roof Structure:	Gable/Hip
Roof Cover	Asph/F Gls/Cmp
Interior Wall 1	Plastered
Interior Wall 2	Cust Wd Panel
Interior Flr 1	Hardwood
Interior Flr 2	Carpet
Heat Fuel	Oil
Heat Type:	Hot Water
AC Type:	None
Total Bedrooms:	4 Bedrooms
Total Bthrms:	2
Total Half Baths:	1
Total Xtra Fixtrs:	1
Total Rooms:	12 Rooms
Bath Style:	Average
Kitchen Style:	Average
Num Kitchens	
Cndtn	
Num Park	
Fireplaces	
Fndtn Cndtn	
Basement	

Building Photo

(https://images.vgsi.com/photos/DeepRiverCTPhotos///0009/15PENTRD_9

Building Layout

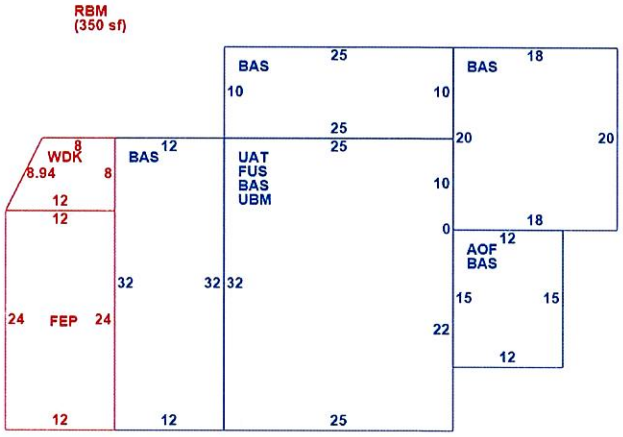

(ParcelSketch.ashx?pid=1745&bid=1745)

Building Sub-Areas (sq ft)			
Code	**Description**	**Gross Area**	**Living Area**
BAS	First Floor	1,974	1,974
FUS	Upper Story, Finished	800	800
AOF	Office, (Average)	180	180
FEP	Porch, Enclosed, Finished	288	0
RBM	Rec Room Bsmt	350	0
UAT	Attic, Unfinished	800	0
UBM	Basement, Unfinished	800	0
WDK	Deck, Wood	80	0
		5,272	2,954

Building 2 : Section 1

Year Built: 1948
Living Area: 408

Building Attributes : Bldg 2 of 2	
Field	**Description**
Style:	Warehouse
Model	Ind or Comm
Grade	Average
Stories:	1
Occupancy	1.00
Exterior Wall 1	Concr/Cinder
Exterior Wall 2	
Roof Structure	Gable/Hip
Roof Cover	Asph/F Gls/Cmp
Interior Wall 1	Minim/Masonry
Interior Wall 2	Cust Wd Panel
Interior Floor 1	Concr-Finished
Interior Floor 2	Carpet
Heating Fuel	None
Heating Type	None
AC Type	None
Struct Class	
Bldg Use	COMM WHSE
Total Rooms	
Total Bedrms	00
Total Baths	0
1st Floor Use:	3160
Heat/AC	NONE
Frame Type	MASONRY
Baths/Plumbing	AVERAGE
Ceiling/Wall	CEILING ONLY
Rooms/Prtns	AVERAGE
Wall Height	12.00
% Comn Wall	0.00

Building Photo

(https://images.vgsi.com/photos/DeepRiverCTPhotos///0009/PENTRD2_98

Building Layout

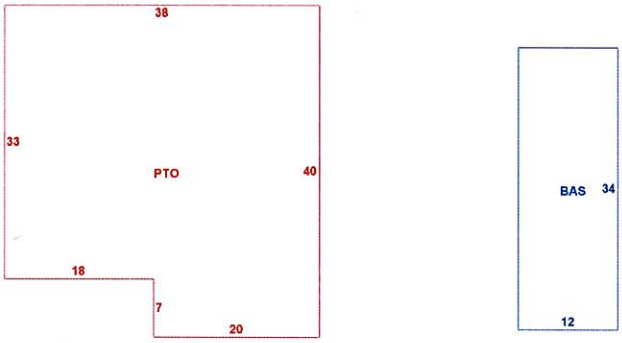

(ParcelSketch.ashx?pid=1745&bid=2279)

Building Sub-Areas (sq ft)			
Code	**Description**	**Gross Area**	**Living Area**
BAS	First Floor	408	408
PTO	Patio	1,394	0
		1,802	408

Land

Land Use

Use Code 0101
Description Single Fam MDL-01

Land Line Valuation

Size (Acres) 3.9
Assessed Value $98,210

Zone R60
Neighborhood 0002

Appraised Value $140,300

Outbuildings

Outbuildings		
Code	**Description**	**Size**
SHD1	SHED FRAME	30.00 S.F.
SHD2	W/LIGHTS ETC	80.00 S.F.
SPL3	GUNITE	800.00 S.F.

(c) 2022 Vision Government Solutions, Inc. All rights reserved.

15 Pent Rd

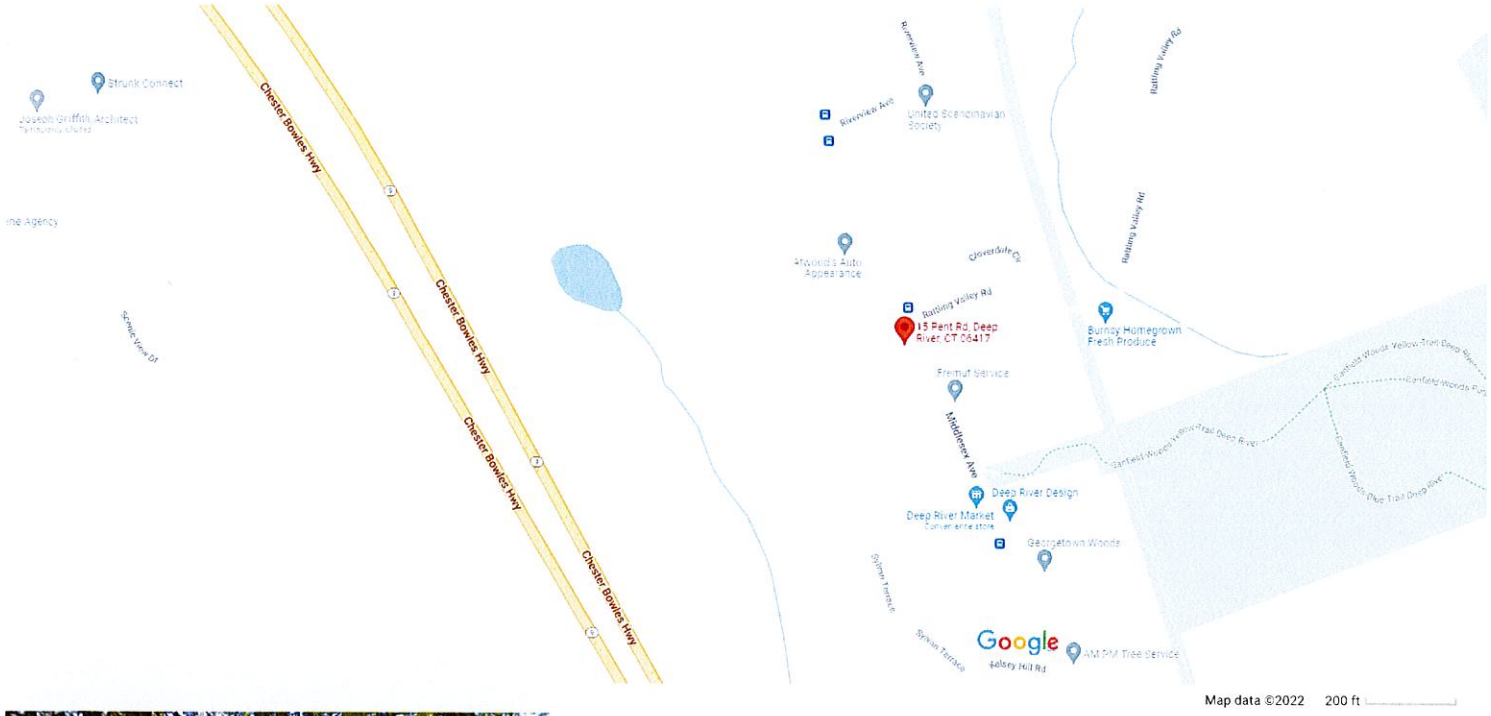

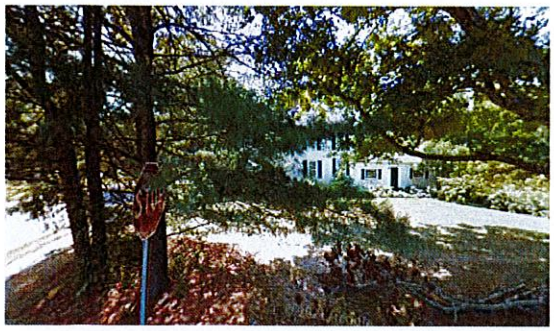

15 Pent Rd

Deep River, CT 06417
Building

Directions Save Nearby Send to phone Share

Photos

Barbadora, Jeff

From: TrackingUpdates@fedex.com
Sent: Thursday, July 7, 2022 11:37 AM
To: Barbadora, Jeff
Subject: FedEx Shipment 777317063833: Your package has been delivered

CAUTION: This email originated from outside of the organization. Do not click links or open attachments unless you recognize the sender and know the content is safe.

FedEx®

Hi. Your package was delivered Thu, 07/07/2022 at 11:36am.

Delivered to 174 MAIN ST, DEEP RIVER, CT 06417
Received by A.WINCELL

OBTAIN PROOF OF DELIVERY

TRACKING NUMBER 777317063833

FROM	Jeff Barbadora 1800 W. Park Drive WESTBOROUGH, MA, US, 01581
TO	Deep River Town Hall Angus McDonald, Jr, First Selectman 174 Main Street DEEP RIVER, CT, US, 06417
REFERENCE	799001.7680
SHIPPER REFERENCE	799001.7680
SHIP DATE	Wed 7/06/2022 05:11 PM
DELIVERED TO	Receptionist/Front Desk
PACKAGING TYPE	FedEx Envelope
ORIGIN	WESTBOROUGH, MA, US, 01581
DESTINATION	DEEP RIVER, CT, US, 06417
SPECIAL HANDLING	Deliver Weekday
NUMBER OF PIECES	1
TOTAL SHIPMENT WEIGHT	0.50 LB
SERVICE TYPE	FedEx Priority Overnight

Barbadora, Jeff

From: TrackingUpdates@fedex.com
Sent: Thursday, July 7, 2022 11:37 AM
To: Barbadora, Jeff
Subject: FedEx Shipment 777317115650: Your package has been delivered

CAUTION: This email originated from outside of the organization. Do not click links or open attachments unless you recognize the sender and know the content is safe.

FedEx®

Hi. Your package was delivered Thu, 07/07/2022 at 11:36am.

Delivered to 174 MAIN ST, DEEP RIVER, CT 06417
Received by A.WINCELL

OBTAIN PROOF OF DELIVERY

TRACKING NUMBER 777317115650

FROM	Jeff Barbadora 1800 W. Park Drive WESTBOROUGH, MA, US, 01581
TO	Deep River Town Hall John Guszowski, ZEO 174 Main Street DEEP RIVER, CT, US, 06417
REFERENCE	799001.7680
SHIPPER REFERENCE	799001.7680
SHIP DATE	Wed 7/06/2022 05:11 PM
DELIVERED TO	Receptionist/Front Desk
PACKAGING TYPE	FedEx Envelope
ORIGIN	WESTBOROUGH, MA, US, 01581
DESTINATION	DEEP RIVER, CT, US, 06417
SPECIAL HANDLING	Deliver Weekday
NUMBER OF PIECES	1
TOTAL SHIPMENT WEIGHT	1.00 LB
SERVICE TYPE	FedEx Priority Overnight

Barbadora, Jeff

From: TrackingUpdates@fedex.com
Sent: Thursday, July 7, 2022 11:45 AM
To: Barbadora, Jeff
Subject: FedEx Shipment 777317148696: Your package has been delivered

CAUTION: This email originated from outside of the organization. Do not click links or open attachments unless you recognize the sender and know the content is safe.

FedEx®

Hi. Your package was delivered Thu, 07/07/2022 at 11:44am.

Delivered to 15 PENT RD, DEEP RIVER, CT 06417

OBTAIN PROOF OF DELIVERY

TRACKING NUMBER 777317148696

FROM	Jeff Barbadora 1800 W. Park Drive WESTBOROUGH, MA, US, 01581
TO	Property Owner Jasavic Dzenis 15 Pent Road DEEP RIVER, CT, US, 06417
REFERENCE	799001.7680
SHIPPER REFERENCE	799001.7680
SHIP DATE	Wed 7/06/2022 05:11 PM
DELIVERED TO	Residence
PACKAGING TYPE	FedEx Envelope
ORIGIN	WESTBOROUGH, MA, US, 01581
DESTINATION	DEEP RIVER, CT, US, 06417
SPECIAL HANDLING	Deliver Weekday Residential Delivery
NUMBER OF PIECES	1
TOTAL SHIPMENT WEIGHT	1.00 LB
SERVICE TYPE	FedEx Priority Overnight

Date: **June 9, 2022**

Trylon
1825 W. Walnut Hill Lane,
Suite 302
Irving, TX 75038
214-930-1730

Subject:	**Mount Replacement Analysis Report**	
Carrier Designation:	**T-Mobile Equipment Change Out**	
	Carrier Site Number:	CT11237C
	Carrier Site Name:	Deep River/Rt 9
Crown Castle Designation:	**BU Number:**	823666
	Site Name:	Deep River/Rt 9
	JDE Job Number:	713860
	Order Number:	613481 Rev. 1
Engineering Firm Designation:	**Trylon Report Designation:**	211539
Site Data:	**15 Pent Rd, Deep River, Middlesex County, CT, 06417**	
	Latitude 41°22'22.17" Longitude -72°26'3.97"	
Structure Information:	**Tower Height & Type:**	**178.0 ft Monopole**
	Mount Elevation:	**178.0 ft**
	Mount Width & Type:	**12.5 ft Platform**

Trylon is pleased to submit this **"Mount Replacement Analysis Report"** to determine the structural integrity of T-Mobile's antenna mounting system with the proposed appurtenance and equipment addition on the abovementioned supporting tower structure. Analysis of the existing supporting tower structure is to be completed by others and therefore is not part of this analysis. Analysis of the antenna mounting system as a tie-off point for fall protection or rigging is not part of this document.

The purpose of the analysis is to determine acceptability of the mount stress level. Based on our analysis we have determined the mount stress level to be:

Platform **Sufficient***
***Sufficient upon completion of the changes listed in the 'Recommendations' section of this report.**

This analysis has been performed in accordance with the 2018 Connecticut State Building Code based upon an ultimate 3-second gust wind speed of 124 mph. Applicable Standard references and design criteria are listed in Section 2 - Analysis Criteria.

Mount analysis prepared by: Steve Mustaro, P.E.

Respectfully Submitted by:
Cliff Abernathy, P.E.

TABLE OF CONTENTS

1) INTRODUCTION

2) ANALYSIS CRITERIA
Table 1 - Proposed Equipment Configuration

3) ANALYSIS PROCEDURE
Table 2 - Documents Provided
3.1) Analysis Method
3.2) Assumptions

4) ANALYSIS RESULTS
Table 3 - Mount Component Stresses vs. Capacity
4.1) Recommendations

5) APPENDIX A
Wire Frame and Rendered Models

6) APPENDIX B
Software Input Calculations

7) APPENDIX C
Software Analysis Output

8) APPENDIX D
Additional Calculations

9) APPENDIX E
Supplemental Drawings

1) INTRODUCTION

This is a proposed three sector 12.5 ft Platform, designed by Site Pro 1.

2) ANALYSIS CRITERIA

Building Code:	2018 CSBC
TIA-222 Revision:	TIA-222-H
Risk Category:	II
Ultimate Wind Speed:	124 mph
Exposure Category:	B
Topographic Factor at Base:	1.0
Topographic Factor at Mount:	1.0
Ice Thickness:	1.0 in
Wind Speed with Ice:	50 mph
Seismic S_s:	0.209
Seismic S_1:	0.054
Live Loading Wind Speed:	30 mph
Man Live Load at Mid/End-Points:	250 lb
Man Live Load at Mount Pipes:	500 lb

Table 1 - Proposed Equipment Configuration

Mount Centerline (ft)	Antenna Centerline (ft)	Number of Antennas	Antenna Manufacturer	Antenna Model	Mount / Modification Details
178.0	178.0	3	ERICSSON	AIR 6419 B41_TMO	12.5 ft Platform [Site Pro 1 F4P-12W]
		3	RFS/CELWAVE	APXVAARR24_43-U-NA20	
		3	ERICSSON	RADIO 4449 B71 B85A_T-MOBILE	
		3	ERICSSON	RADIO 4460 B2/B25 B66_TMO	

3) ANALYSIS PROCEDURE

Table 2 - Documents Provided

Document	Remarks	Reference	Source
Crown Application	T-Mobile Application	613481 Rev. 1	CCI Sites
Mount Manufacturer Drawings	Site Pro 1	F4P-12W	Trylon

3.1) Analysis Method

RISA-3D (Version 17.0.4), a commercially available analysis software package, was used to create a three-dimensional model of the antenna mounting system and calculate member stresses for various loading cases.

A tool internally developed, using Microsoft Excel, by Trylon was used to calculate wind loading on all appurtenances, dishes, and mount members for various load cases. Selected output from the analysis is included in Appendix B.

This analysis was performed in accordance with Crown Castle's ENG-SOW-10208 *Tower Mount Analysis* (Revision E).

3.2) Assumptions

1) The antenna mounting system was properly fabricated, installed and maintained in good condition in accordance with its original design and manufacturer's specifications.
2) The configuration of antennas, mounts, and other appurtenances are as specified in Table 1 and the referenced drawings.
3) All member connections are assumed to have been designed to meet or exceed the load carrying capacity of the connected member unless otherwise specified in this report.
4) The analysis will be required to be revised if the existing conditions in the field differ from those shown in the above-referenced documents or assumed in this analysis. No allowance was made for any damaged, missing, or rusted members.
5) Prior structural modifications to the tower mounting system are assumed to be installed as shown per available data.
6) Steel grades have been assumed as follows, unless noted otherwise:

Channel, Solid Round, Angle, Plate	ASTM A36 (GR 36)
HSS (Rectangular)	ASTM A500 (GR B-46)
Pipe	ASTM A53 (GR 35)
Connection Bolts	ASTM A325

This analysis may be affected if any assumptions are not valid or have been made in error. Trylon should be notified to determine the effect on the structural integrity of the antenna mounting system.

4) ANALYSIS RESULTS

Table 3 - Mount Component Stresses vs. Capacity (Platform, All Sectors)

Notes	Component	Critical Member	Centerline (ft)	% Capacity	Pass / Fail
1, 2, 3, 4	Mount Pipe(s)	MP4	178.0	79.1	Pass
	Horizontal(s)	H2		29.1	Pass
	Standoff(s)	M397		34.4	Pass
	Bracing(s)	M228		29.9	Pass
	Mount Connection(s)	-		18.3	Pass

Structure Rating (max from all components) =	**79.1%**

Notes:
1) See additional documentation in "Appendix C - Software Analysis Output" for calculations supporting the % capacity consumed.
2) See additional documentation in “Appendix D – Additional Calculations” for detailed mount connection calculations.
3) All sectors are typical
4) Rating per TIA-222-H, Section 15.5

4.1) Recommendations

The mount has sufficient capacity to carry the proposed loading configuration. In order for the results of the analysis to be considered valid, the proposed mount listed below must be installed.

1. Site Pro 1 F4P-12W.

No structural modifications are required at this time, provided that the above-listed changes are implemented.

APPENDIX A

WIRE FRAME AND RENDERED MODELS

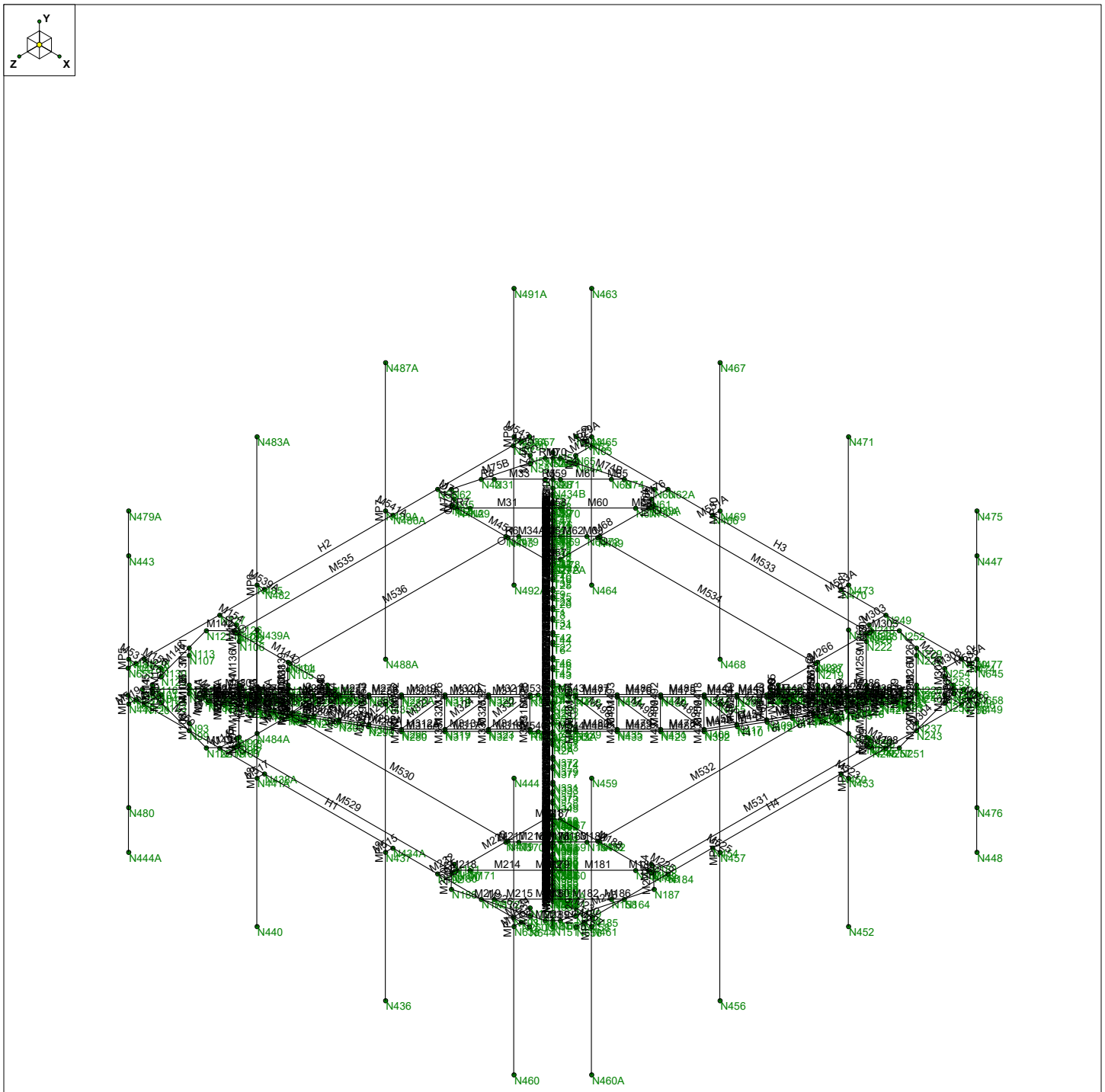

Envelope Only Solution

Trylon	823666	Wireframe
SMM		June 9, 2022 at 3:28 PM
211539		823666_loaded.r3d

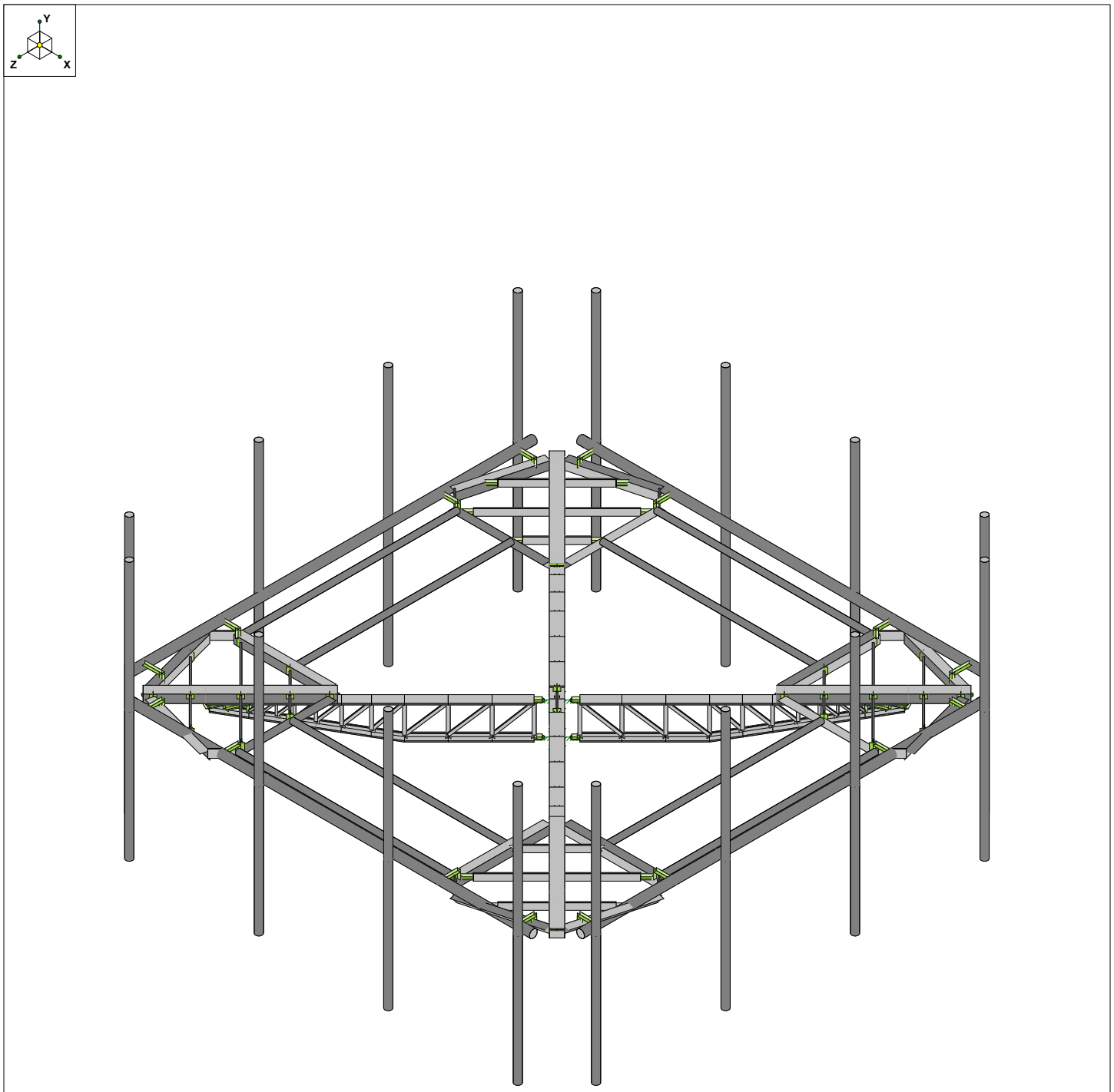

Envelope Only Solution

Trylon	823666	Render
SMM		June 9, 2022 at 3:29 PM
211539		823666_loaded.r3d

APPENDIX B

SOFTWARE INPUT CALCULATIONS

ASCE 7 Hazards Report

Address:
No Address at This Location

Standard: ASCE/SEI 7-16
Risk Category: II
Soil Class: D - Default (see Section 11.4.3)

Elevation: 94.97 ft (NAVD 88)
Latitude: 41.372825
Longitude: -72.434436

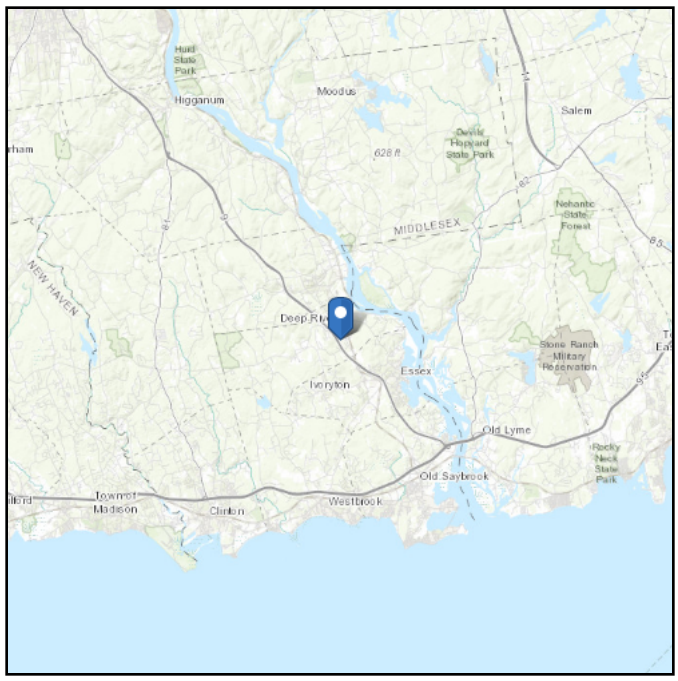

Wind

Results:

Wind Speed	124 Vmph
10-year MRI	75 Vmph
25-year MRI	85 Vmph
50-year MRI	95 Vmph
100-year MRI	101 Vmph

Data Source:	ASCE/SEI 7-16, Fig. 26.5-1B and Figs. CC.2-1–CC.2-4, and Section 26.5.2
Date Accessed:	Thu Jun 09 2022

Value provided is 3-second gust wind speeds at 33 ft above ground for Exposure C Category, based on linear interpolation between contours. Wind speeds are interpolated in accordance with the 7-16 Standard. Wind speeds correspond to approximately a 7% probability of exceedance in 50 years (annual exceedance probability = 0.00143, MRI = 700 years).

Site is in a hurricane-prone region as defined in ASCE/SEI 7-16 Section 26.2. Glazed openings need not be protected against wind-borne debris.

Seismic

Site Soil Class: D - Default (see Section 11.4.3)

Results:

S_S :	0.209	S_{D1} :	0.087
S_1 :	0.054	T_L :	6
F_a :	1.6	PGA :	0.117
F_v :	2.4	PGA_M :	0.184
S_{MS} :	0.335	F_{PGA} :	1.566
S_{M1} :	0.131	I_e :	1
S_{DS} :	0.223	C_v :	0.719

Seismic Design Category B

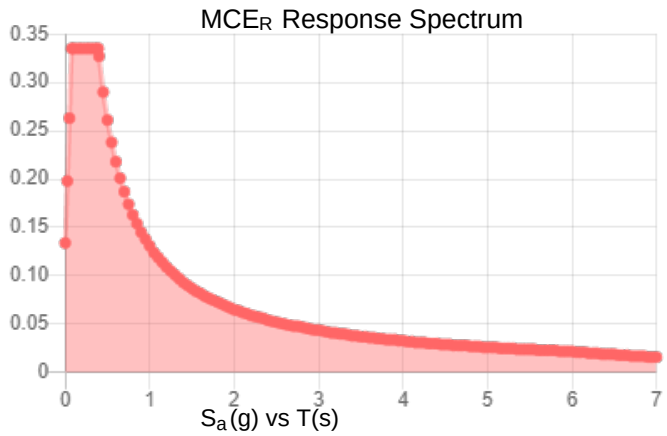

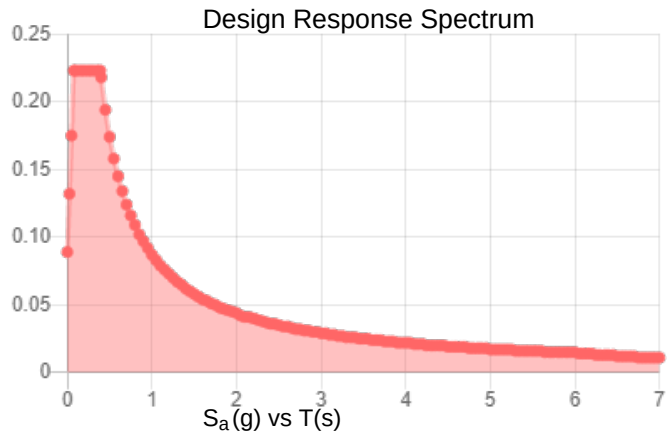

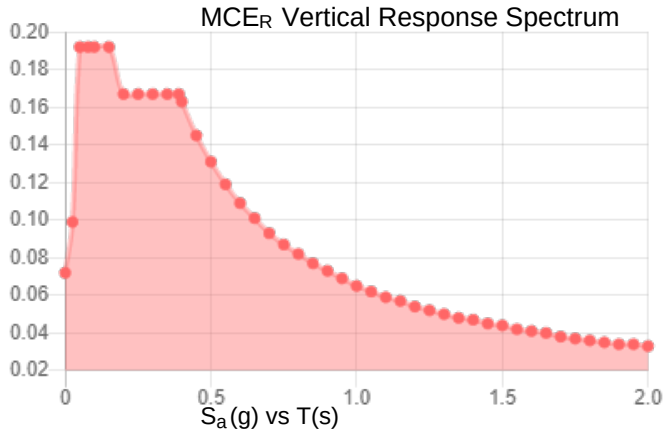

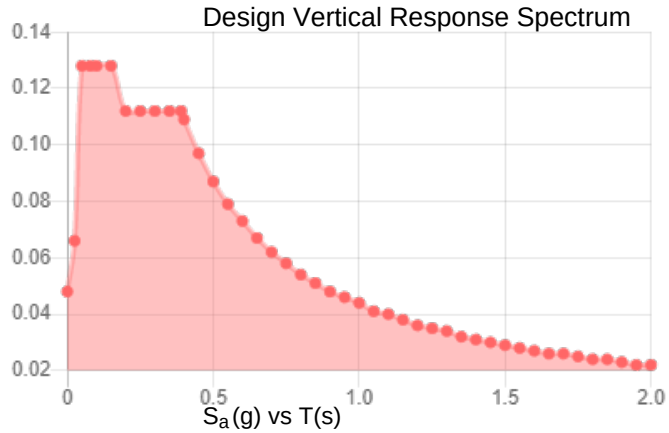

Data Accessed: **Thu Jun 09 2022**

Date Source:

USGS Seismic Design Maps based on ASCE/SEI 7-16 and ASCE/SEI 7-16 Table 1.5-2. Additional data for site-specific ground motion procedures in accordance with ASCE/SEI 7-16 Ch. 21 are available from USGS.

Ice

Results:

Ice Thickness:	1.00 in.
Concurrent Temperature:	15 F
Gust Speed	50 mph
Data Source:	Standard ASCE/SEI 7-16, Figs. 10-2 through 10-8
Date Accessed:	Thu Jun 09 2022

Ice thicknesses on structures in exposed locations at elevations higher than the surrounding terrain and in valleys and gorges may exceed the mapped values.

Values provided are equivalent radial ice thicknesses due to freezing rain with concurrent 3-second gust speeds, for a 500-year mean recurrence interval, and temperatures concurrent with ice thicknesses due to freezing rain. Thicknesses for ice accretions caused by other sources shall be obtained from local meteorological studies. Ice thicknesses in exposed locations at elevations higher than the surrounding terrain and in valleys and gorges may exceed the mapped values.

The ASCE 7 Hazard Tool is provided for your convenience, for informational purposes only, and is provided “as is” and without warranties of any kind. The location data included herein has been obtained from information developed, produced, and maintained by third party providers; or has been extrapolated from maps incorporated in the ASCE 7 standard. While ASCE has made every effort to use data obtained from reliable sources or methodologies, ASCE does not make any representations or warranties as to the accuracy, completeness, reliability, currency, or quality of any data provided herein. Any third-party links provided by this Tool should not be construed as an endorsement, affiliation, relationship, or sponsorship of such third-party content by or from ASCE.

ASCE does not intend, nor should anyone interpret, the results provided by this Tool to replace the sound judgment of a competent professional, having knowledge and experience in the appropriate field(s) of practice, nor to substitute for the standard of care required of such professionals in interpreting and applying the contents of this Tool or the ASCE 7 standard.

In using this Tool, you expressly assume all risks associated with your use. Under no circumstances shall ASCE or its officers, directors, employees, members, affiliates, or agents be liable to you or any other person for any direct, indirect, special, incidental, or consequential damages arising from or related to your use of, or reliance on, the Tool or any information obtained therein. To the fullest extent permitted by law, you agree to release and hold harmless ASCE from any and all liability of any nature arising out of or resulting from any use of data provided by the ASCE 7 Hazard Tool.

Trylon
1825 W. Walnut Hill Lane Suite 120
Irving, TX 75038

TIA LOAD CALCULATOR 2.2

PROJECT DATA	
Job Code:	211539
Carrier Site ID:	BU 823666
Carrier Site Name:	Deep River/Rt 9

CODES AND STANDARDS	
Building Code:	2015 IBC
Local Building Code:	2018 CSBC
Design Standard:	TIA-222-H

STRUCTURE DETAILS		
Mount Type:	Platform	--
Mount Elevation:	178.0	ft.
Number of Sectors:	4	--
Structure Type:	Monopole	--
Structure Height:	178.0	ft.

ANALYSIS CRITERIA		
Structure Risk Category:	II	--
Exposure Category:	B	--
Site Class:	D - Stiff Soil	--
Ground Elevation:	94.97	ft.

TOPOGRAPHIC DATA		
Topographic Category:	1.00	--
Topographic Feature:	N/A	--
Crest Point Elevation:	0.00	ft.
Base Point Elevation:	0.00	ft.
Crest to Mid-Height (L/2):	0.00	ft.
Distance from Crest (x):	0.00	ft.
Base Topo Factor (K_{zt}):	1.00	--
Mount Topo Factor (K_{zt}):	1.00	--

WIND PARAMETERS		
Design Wind Speed:	124	mph
Wind Escalation Factor (K_s):	1.00	--
Velocity Coefficient (K_z):	1.17	--
Directionality Factor (K_d):	0.95	--
Gust Effect Factor (Gh):	1.00	--
Shielding Factor (K_a):	0.90	--
Velocity Pressure (q_z):	43.42	psf
Ground Elevation Factor (K_e):	1.00	--

ICE PARAMETERS		
Design Ice Wind Speed:	50	mph
Design Ice Thickness (t_i):	1.00	in
Importance Factor (I_i):	1.00	--
Ice Velocity Pressure (q_{zi}):	7.17	psf
Mount Ice Thickness (t_{iz}):	1.18	in

WIND STRUCTURE CALCULATIONS		
Flat Member Pressure:	78.16	psf
Round Member Pressure:	46.90	psf
Ice Wind Pressure:	7.75	psf

SEISMIC PARAMETERS		
Importance Factor (I_e):	1.00	--
Short Period Accel .(S_s):	0.21	g
1 Second Accel (S_1):	0.05	g
Short Period Des. (S_{DS}):	0.22	g
1 Second Des. (S_{D1}):	0.09	g
Short Period Coeff. (F_a):	1.60	--
1 Second Coeff. (F_v):	2.40	--
Response Coefficient (Cs):	0.11	--
Amplification Factor (A_S):	1.20	--

LOAD COMBINATIONS [LRFD]

#	Description
1	1.4DL
2	1.2DL + 1WL 0 AZI
3	1.2DL + 1WL 30 AZI
4	1.2DL + 1WL 45 AZI
5	1.2DL + 1WL 60 AZI
6	1.2DL + 1WL 90 AZI
7	1.2DL + 1WL 120 AZI
8	1.2DL + 1WL 135 AZI
9	1.2DL + 1WL 150 AZI
10	1.2DL + 1WL 180 AZI
11	1.2DL + 1WL 210 AZI
12	1.2DL + 1WL 225 AZI
13	1.2DL + 1WL 240 AZI
14	1.2DL + 1WL 270 AZI
15	1.2DL + 1WL 300 AZI
16	1.2DL + 1WL 315 AZI
17	1.2DL + 1WL 330 AZI
18	0.9DL + 1WL 0 AZI
19	0.9DL + 1WL 30 AZI
20	0.9DL + 1WL 45 AZI
21	0.9DL + 1WL 60 AZI
22	0.9DL + 1WL 90 AZI
23	0.9DL + 1WL 120 AZI
24	0.9DL + 1WL 135 AZI
25	0.9DL + 1WL 150 AZI
26	0.9DL + 1WL 180 AZI
27	0.9DL + 1WL 210 AZI
28	0.9DL + 1WL 225 AZI
29	0.9DL + 1WL 240 AZI
30	0.9DL + 1WL 270 AZI
31	0.9DL + 1WL 300 AZI
32	0.9DL + 1WL 315 AZI
33	0.9DL + 1WL 330 AZI
34	1.2DL + 1DLi + 1WLi 0 AZI
35	1.2DL + 1DLi + 1WLi 30 AZI
36	1.2DL + 1DLi + 1WLi 45 AZI
37	1.2DL + 1DLi + 1WLi 60 AZI
38	1.2DL + 1DLi + 1WLi 90 AZI
39	1.2DL + 1DLi + 1WLi 120 AZI
40	1.2DL + 1DLi + 1WLi 135 AZI
41	1.2DL + 1DLi + 1WLi 150 AZI

#	Description
42	1.2DL + 1DLi + 1WLi 180 AZI
43	1.2DL + 1DLi + 1WLi 210 AZI
44	1.2DL + 1DLi + 1WLi 225 AZI
45	1.2DL + 1DLi + 1WLi 240 AZI
46	1.2DL + 1DLi + 1WLi 270 AZI
47	1.2DL + 1DLi + 1WLi 300 AZI
48	1.2DL + 1DLi + 1WLi 315 AZI
49	1.2DL + 1DLi + 1WLi 330 AZI
50	(1.2+0.2Sds) + 1.0E 0 AZI
51	(1.2+0.2Sds) + 1.0E 30 AZI
52	(1.2+0.2Sds) + 1.0E 45 AZI
53	(1.2+0.2Sds) + 1.0E 60 AZI
54	(1.2+0.2Sds) + 1.0E 90 AZI
55	(1.2+0.2Sds) + 1.0E 120 AZI
56	(1.2+0.2Sds) + 1.0E 135 AZI
57	(1.2+0.2Sds) + 1.0E 150 AZI
58	(1.2+0.2Sds) + 1.0E 180 AZI
59	(1.2+0.2Sds) + 1.0E 210 AZI
60	(1.2+0.2Sds) + 1.0E 225 AZI
61	(1.2+0.2Sds) + 1.0E 240 AZI
62	(1.2+0.2Sds) + 1.0E 270 AZI
63	(1.2+0.2Sds) + 1.0E 300 AZI
64	(1.2+0.2Sds) + 1.0E 315 AZI
65	(1.2+0.2Sds) + 1.0E 330 AZI
66	(0.9-0.2Sds) + 1.0E 0 AZI
67	(0.9-0.2Sds) + 1.0E 30 AZI
68	(0.9-0.2Sds) + 1.0E 45 AZI
69	(0.9-0.2Sds) + 1.0E 60 AZI
70	(0.9-0.2Sds) + 1.0E 90 AZI
71	(0.9-0.2Sds) + 1.0E 120 AZI
72	(0.9-0.2Sds) + 1.0E 135 AZI
73	(0.9-0.2Sds) + 1.0E 150 AZI
74	(0.9-0.2Sds) + 1.0E 180 AZI
75	(0.9-0.2Sds) + 1.0E 210 AZI
76	(0.9-0.2Sds) + 1.0E 225 AZI
77	(0.9-0.2Sds) + 1.0E 240 AZI
78	(0.9-0.2Sds) + 1.0E 270 AZI
79	(0.9-0.2Sds) + 1.0E 300 AZI
80	(0.9-0.2Sds) + 1.0E 315 AZI
81	(0.9-0.2Sds) + 1.0E 330 AZI
82-88	1.2D + 1.5 Lv1

#	Description
89	1.2D + 1.5Lm + 1.0Wm 0 AZI - MP1
90	1.2D + 1.5Lm + 1.0Wm 30 AZI - MP1
91	1.2D + 1.5Lm + 1.0Wm 45 AZI - MP1
92	1.2D + 1.5Lm + 1.0Wm 60 AZI - MP1
93	1.2D + 1.5Lm + 1.0Wm 90 AZI - MP1
94	1.2D + 1.5Lm + 1.0Wm 120 AZI - MP1
95	1.2D + 1.5Lm + 1.0Wm 135 AZI - MP1
96	1.2D + 1.5Lm + 1.0Wm 150 AZI - MP1
97	1.2D + 1.5Lm + 1.0Wm 180 AZI - MP1
98	1.2D + 1.5Lm + 1.0Wm 210 AZI - MP1
99	1.2D + 1.5Lm + 1.0Wm 225 AZI - MP1
100	1.2D + 1.5Lm + 1.0Wm 240 AZI - MP1
101	1.2D + 1.5Lm + 1.0Wm 270 AZI - MP1
102	1.2D + 1.5Lm + 1.0Wm 300 AZI - MP1
103	1.2D + 1.5Lm + 1.0Wm 315 AZI - MP1
104	1.2D + 1.5Lm + 1.0Wm 330 AZI - MP1
105	1.2D + 1.5Lm + 1.0Wm 0 AZI - MP2
106	1.2D + 1.5Lm + 1.0Wm 30 AZI - MP2
107	1.2D + 1.5Lm + 1.0Wm 45 AZI - MP2
108	1.2D + 1.5Lm + 1.0Wm 60 AZI - MP2
109	1.2D + 1.5Lm + 1.0Wm 90 AZI - MP2
110	1.2D + 1.5Lm + 1.0Wm 120 AZI - MP2
111	1.2D + 1.5Lm + 1.0Wm 135 AZI - MP2
112	1.2D + 1.5Lm + 1.0Wm 150 AZI - MP2
113	1.2D + 1.5Lm + 1.0Wm 180 AZI - MP2
114	1.2D + 1.5Lm + 1.0Wm 210 AZI - MP2
115	1.2D + 1.5Lm + 1.0Wm 225 AZI - MP2
116	1.2D + 1.5Lm + 1.0Wm 240 AZI - MP2
117	1.2D + 1.5Lm + 1.0Wm 270 AZI - MP2
118	1.2D + 1.5Lm + 1.0Wm 300 AZI - MP2
119	1.2D + 1.5Lm + 1.0Wm 315 AZI - MP2
120	1.2D + 1.5Lm + 1.0Wm 330 AZI - MP2

#	Description
121	1.2D + 1.5Lm + 1.0Wm 0 AZI - MP3
122	1.2D + 1.5Lm + 1.0Wm 30 AZI - MP3
123	1.2D + 1.5Lm + 1.0Wm 45 AZI - MP3
124	1.2D + 1.5Lm + 1.0Wm 60 AZI - MP3
125	1.2D + 1.5Lm + 1.0Wm 90 AZI - MP3
126	1.2D + 1.5Lm + 1.0Wm 120 AZI - MP3
127	1.2D + 1.5Lm + 1.0Wm 135 AZI - MP3
128	1.2D + 1.5Lm + 1.0Wm 150 AZI - MP3
129	1.2D + 1.5Lm + 1.0Wm 180 AZI - MP3
130	1.2D + 1.5Lm + 1.0Wm 210 AZI - MP3
131	1.2D + 1.5Lm + 1.0Wm 225 AZI - MP3
132	1.2D + 1.5Lm + 1.0Wm 240 AZI - MP3
133	1.2D + 1.5Lm + 1.0Wm 270 AZI - MP3
134	1.2D + 1.5Lm + 1.0Wm 300 AZI - MP3
135	1.2D + 1.5Lm + 1.0Wm 315 AZI - MP3
136	1.2D + 1.5Lm + 1.0Wm 330 AZI - MP3
137	1.2D + 1.5Lm + 1.0Wm 0 AZI - MP4
138	1.2D + 1.5Lm + 1.0Wm 30 AZI - MP4
139	1.2D + 1.5Lm + 1.0Wm 45 AZI - MP4
140	1.2D + 1.5Lm + 1.0Wm 60 AZI - MP4
141	1.2D + 1.5Lm + 1.0Wm 90 AZI - MP4
142	1.2D + 1.5Lm + 1.0Wm 120 AZI - MP4
143	1.2D + 1.5Lm + 1.0Wm 135 AZI - MP4
144	1.2D + 1.5Lm + 1.0Wm 150 AZI - MP4
145	1.2D + 1.5Lm + 1.0Wm 180 AZI - MP4
146	1.2D + 1.5Lm + 1.0Wm 210 AZI - MP4
147	1.2D + 1.5Lm + 1.0Wm 225 AZI - MP4
148	1.2D + 1.5Lm + 1.0Wm 240 AZI - MP4
149	1.2D + 1.5Lm + 1.0Wm 270 AZI - MP4
150	1.2D + 1.5Lm + 1.0Wm 300 AZI - MP4
151	1.2D + 1.5Lm + 1.0Wm 315 AZI - MP4
152	1.2D + 1.5Lm + 1.0Wm 330 AZI - MP4

*This page shows an example of maintenance loads for (4) pipes, the number of mount pipe LCs may vary per site

EQUIPMENT LOADING

Appurtenance Name	Qty.	Elevation [ft]	--	EPA_N (ft2)	EPA_T (ft2)	Weight (lbs)
AIR 6419 B41_TMO	3	178	No Ice	7	2.83	96.50
--	--	--	w/ Ice	8.08	3.68	110.15
APXVAARR24_43-U-NA20	3	178	No Ice	14.67	5.32	128.00
--	--	--	w/ Ice	16.22	6.68	280.36
RADIO 4449 B71 B85A_T-MOBILE	3	178	No Ice	1.97	1.59	73.21
--	--	--	w/ Ice	2.26	1.85	51.51
RADIO 4460 B2/B25 B66_TMO	3	178	No Ice	2.14	1.69	109.00
--	--	--	w/ Ice	2.43	1.95	57.42
			No Ice			
--	--	--	w/ Ice			
			No Ice			
--	--	--	w/ Ice			
			No Ice			
--	--	--	w/ Ice			
			No Ice			
--	--	--	w/ Ice			
			No Ice			
--	--	--	w/ Ice			
			No Ice			
--	--	--	w/ Ice			
			No Ice			
--	--	--	w/ Ice			
			No Ice			
--	--	--	w/ Ice			
			No Ice			
--	--	--	w/ Ice			
			No Ice			
--	--	--	w/ Ice			
			No Ice			
--	--	--	w/ Ice			
			No Ice			
--	--	--	w/ Ice			
			No Ice			
--	--	--	w/ Ice			
			No Ice			
--	--	--	w/ Ice			
			No Ice			
--	--	--	w/ Ice			
			No Ice			
--	--	--	w/ Ice			
			No Ice			
--	--	--	w/ Ice			
			No Ice			
--	--	--	w/ Ice			
			No Ice			
--	--	--	w/ Ice			
			No Ice			
--	--	--	w/ Ice			
			No Ice			
--	--	--	w/ Ice			
			No Ice			
--	--	--	w/ Ice			

EQUIPMENT LOADING [CONT.]

Appurtenance Name	Qty.	Elevation [ft]	--	EPA_N (ft2)	EPA_T (ft2)	Weight (lbs)
			No Ice			
--	--	--	w/ Ice			
			No Ice			
--	--	--	w/ Ice			
			No Ice			
--	--	--	w/ Ice			
			No Ice			
--	--	--	w/ Ice			
			No Ice			
--	--	--	w/ Ice			
			No Ice			
--	--	--	w/ Ice			
			No Ice			
--	--	--	w/ Ice			
			No Ice			
--	--	--	w/ Ice			
			No Ice			
--	--	--	w/ Ice			
			No Ice			
--	--	--	w/ Ice			
			No Ice			
--	--	--	w/ Ice			
			No Ice			
--	--	--	w/ Ice			

EQUIPMENT WIND CALCULATIONS

Appurtenance Name	Qty.	Elevation [ft]	K_{zt}	K_z	K_d	t_d	q_z [psf]	q_{zi} [psf]
AIR 6419 B41_TMO	3	178	1.00	1.17	0.95	1.18	43.42	7.06
APXVAARR24_43-U-NA20	3	178	1.00	1.17	0.95	1.18	43.42	7.06
DIO 4449 B71 B85A_T-MOI	3	178	1.00	1.17	0.95	1.18	43.42	7.06
ADIO 4460 B2/B25 B66_TM	3	178	1.00	1.17	0.95	1.18	43.42	7.06

EQUIPMENT LATERAL WIND FORCE CALCULATIONS

Appurtenance Name	Qty.	--	0° 180°	30° 210°	60° 240°	90° 270°	120° 300°	150° 330°
AIR 6419 B41_TMO	3	No Ice	273.57	151.34	232.82	110.60	232.82	151.34
--	--	w/ Ice	51.36	30.38	44.37	23.39	44.37	30.38
APXVAARR24_43-U-NA20	3	No Ice	573.32	299.26	481.96	207.91	481.96	299.26
--	--	w/ Ice	103.05	57.61	87.90	42.46	87.90	57.61
ADIO 4449 B71 B85A_T-MOBIL	3	No Ice	76.99	65.75	73.25	62.00	73.25	65.75
--	--	w/ Ice	14.33	12.41	13.69	11.76	13.69	12.41
RADIO 4460 B2/B25 B66_TMO	3	No Ice	83.60	70.31	79.17	65.88	79.17	70.31
--	--	w/ Ice	15.46	13.17	14.69	12.41	14.69	13.17
		No Ice						
--	--	w/ Ice						
		No Ice						
--	--	w/ Ice						
		No Ice						
--	--	w/ Ice						
		No Ice						
--	--	w/ Ice						
		No Ice						
--	--	w/ Ice						
		No Ice						
--	--	w/ Ice						
		No Ice						
--	--	w/ Ice						
		No Ice						
--	--	w/ Ice						
		No Ice						
--	--	w/ Ice						
		No Ice						
--	--	w/ Ice						
		No Ice						
--	--	w/ Ice						
		No Ice						
--	--	w/ Ice						
		No Ice						
--	--	w/ Ice						
		No Ice						
--	--	w/ Ice						
		No Ice						
--	--	w/ Ice						
		No Ice						
--	--	w/ Ice						
		No Ice						
--	--	w/ Ice						
		No Ice						
--	--	w/ Ice						

EQUIPMENT LATERAL WIND FORCE CALCULATIONS [CONT.]

Appurtenance Name	*Qty.*	*--*	*0° 180°*	*30° 210°*	*60° 240°*	*90° 270°*	*120° 300°*	*150° 330°*
		No Ice						
--	--	w/ Ice						
		No Ice						
--	--	w/ Ice						
		No Ice						
--	--	w/ Ice						
		No Ice						
--	--	w/ Ice						
		No Ice						
--	--	w/ Ice						
		No Ice						
--	--	w/ Ice						
		No Ice						
--	--	w/ Ice						
		No Ice						
--	--	w/ Ice						
		No Ice						
--	--	w/ Ice						
		No Ice						
--	--	w/ Ice						
		No Ice						
--	--	w/ Ice						
		No Ice						
--	--	w/ Ice						

EQUIPMENT SEISMIC FORCE CALCULATIONS

Appurtenance Name	*Qty.*	*Elevation [ft]*	*Weight [lbs]*	F_p [lbs]
AIR 6419 B41_TMO	3	178	96.5	12.91
APXVAARR24_43-U-NA20	3	178	128	17.12
RADIO 4449 B71 B85A_T-MOBILE	3	178	73.21	9.79
RADIO 4460 B2/B25 B66_TMO	3	178	109	14.58

ELEVATION VIEW

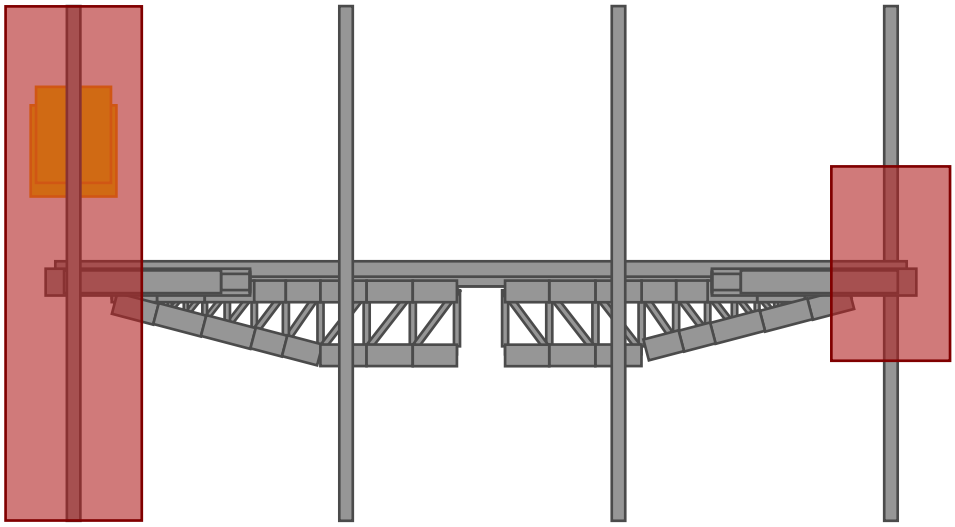

*these drawings are intended to show approximate locations of equipment on the mount and should not be used to determine exact placement of equipment or additional hardware

**Elevation View Shows Only One Sector

PLAN VIEW

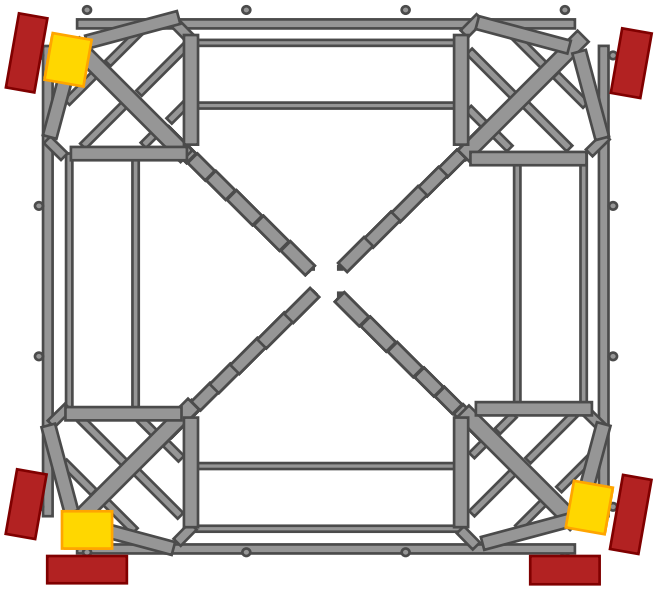

1825 W. Walnut Hill Lane, Suite 120
Irving, Texas 75038

Equipment Name	Total Quantity	Antenna Centerline	Mount Pipe Positions	Equipment Azimuths
AIR 6419 B41_TMO	3	178	MP1/MP5/MP13	30/130/310
APXVAARR24_43-U-NA20	3	178	MP4/MP8/MP16	30/130/310
RADIO 4449 B71 B85A_T-MOBILE	3	178	MP4/MP8/MP16	30/130/310
RADIO 4460 B2/B25 B66_TMO	3	178	MP4/MP8/MP16	30/130/310

APPENDIX C

SOFTWARE ANALYSIS OUTPUT

(Global) Model Settings

Display Sections for Member Calcs	20
Max Internal Sections for Member Calcs	39
Include Shear Deformation?	Yes
Increase Nailing Capacity for Wind?	Yes
Include Warping?	No
Trans Load Btwn Intersecting Wood Wall?	Yes
Area Load Mesh (in^2)	144
Merge Tolerance (in)	.12
P-Delta Analysis Tolerance	0.50%
Include P-Delta for Walls?	Yes
Automatically Iterate Stiffness for Walls?	No
Max Iterations for Wall Stiffness	3
Gravity Acceleration (in/sec^2)	386.4
Wall Mesh Size (in)	12
Eigensolution Convergence Tol. (1.E-)	4
Vertical Axis	Y
Global Member Orientation Plane	XZ
Static Solver	Sparse Accelerated
Dynamic Solver	Accelerated Solver

Hot Rolled Steel Code	AISC 14th(360-10): LRFD
Adjust Stiffness?	No
RISAConnection Code	AISC 14th(360-10): LRFD
Cold Formed Steel Code	AISI S100-12: LRFD
Wood Code	AF&PA NDS-05/08: ASD
Wood Temperature	< 100F
Concrete Code	ACI 318-05
Masonry Code	ACI 530-05: ASD
Aluminum Code	AA ADM1-10: ASD - Building
Stainless Steel Code	AISC 14th(360-10): ASD
Adjust Stiffness?	Yes(Iterative)

Number of Shear Regions	4
Region Spacing Increment (in)	4
Biaxial Column Method	Exact Integration
Parme Beta Factor (PCA)	.65
Concrete Stress Block	Rectangular
Use Cracked Sections?	Yes
Use Cracked Sections Slab?	Yes
Bad Framing Warnings?	No
Unused Force Warnings?	Yes
Min 1 Bar Diam. Spacing?	No
Concrete Rebar Set	REBAR_SET_ASTMA615
Min % Steel for Column	1
Max % Steel for Column	8

(Global) Model Settings, Continued

Seismic Code	ASCE 7-05
Seismic Base Elevation (in)	Not Entered
Add Base Weight?	No
Ct X	.035
Ct Z	.035
T X (sec)	Not Entered
T Z (sec)	Not Entered
R X	8.5
R Z	8.5
Ct Exp. X	.75
Ct Exp. Z	.75
SD1	1
SDS	1
S1	1
TL (sec)	Not Entered
Occupancy Cat	I or II
Drift Cat	Other
Om Z	1
Om X	1
Cd Z	1
Cd X	1
Rho Z	1
Rho X	1

Hot Rolled Steel Properties

	Label	E [ksi]	G [ksi]	Nu	Therm (/1E...	Density[k/ft...	Yield[ksi]	Ry	Fu[ksi]	Rt
1	A992	29000	11154	.3	.65	.49	50	1.1	65	1.1
2	A36 Gr.36	29000	11154	.3	.65	.49	36	1.5	58	1.2
3	A572 Gr.50	29000	11154	.3	.65	.49	50	1.1	65	1.1
4	A500 Gr.B RND	29000	11154	.3	.65	.527	42	1.4	58	1.3
5	A500 Gr.B Rect	29000	11154	.3	.65	.527	46	1.4	58	1.3
6	A53 Gr.B	29000	11154	.3	.65	.49	35	1.6	60	1.2
7	A1085	29000	11154	.3	.65	.49	50	1.4	65	1.3
8	Q235-GB	29000	11154	.3	.65	.49	35	1.5	58	1.2
9	Q345	29000	11154	.3	.65	.49	36	1.5	58	1.2

Cold Formed Steel Properties

	Label	E [ksi]	G [ksi]	Nu	Therm (/1E5 F)	Density[k/ft^3]	Yield[ksi]	Fu[ksi]
1	A653 SS Gr33	29500	11346	.3	.65	.49	33	45
2	A653 SS Gr50/1	29500	11346	.3	.65	.49	50	65

Hot Rolled Steel Section Sets

	Label	Shape	Type	Design List	Material	Design Rul...	A [in2]	Iyy [in4]	Izz [in4]	J [in4]
1	Horizontals	PIPE_2.5	Beam	None	Q235-GB	Typical	1.61	1.45	1.45	2.89
2	Pipe Mounts	PIPE_2.0	Beam	None	Q235-GB	Typical	1.02	.627	.627	1.25
3	Angle Bracings	L3X3X6	Beam	None	Q345	Typical	2.11	1.75	1.75	.101
4	Walking Platform Br...	L2x2x4	Beam	None	Q345	Typical	.944	.346	.346	.021
5	Walking Platform	C10X30	Beam	None	Q345	Typical	8.81	3.93	103	1.22

Hot Rolled Steel Section Sets (Continued)

	Label	Shape	Type	Design List	Material	Design Rul...	A [in2]	Iyy [in4]	Izz [in4]	J [in4]
6	Walking Platform C...	3/8" x 1"A	Beam	None	Q345	Typical	.375	.004	.031	.013
7	HSS Standoffs	HSS4X3X4	Beam	None	Q235-GB	Typical	2.91	3.91	6.15	7.96
8	Standoff (Bottom C...	3/8" x 4"	Beam	None	A992	Typical	1.5	.018	2	.066
9	Standoff (Top Chord)	1/2" x 4"	Beam	None	A992	Typical	2	.042	2.667	.154
10	Standoff Bracing 1	3/8" x 1"A	Beam	None	A992	Typical	.375	.004	.031	.013
11	Standoff Bracing 2	3/8" x 5/8"	Beam	None	A992	Typical	.234	.003	.008	.007
12	Standoff Bracing 3	3/8" x 3/4"	Beam	None	A992	Typical	.281	.003	.013	.009
13	Standoff Bracing 4	3/8" x 7/8"	Beam	None	A992	Typical	.328	.004	.021	.011
14	Platform Bracing	1/2" x 2 3/8"	Beam	None	Q345	Typical	1.188	.025	.558	.086
15	Connection Plates	3/8" x 3"	Beam	None	Q345	Typical	1.125	.013	.844	.049
16	Walkway Bracing	PIPE_1.5	Beam	None	Q235-GB	Typical	.749	.293	.293	.586

Cold Formed Steel Section Sets

	Label	Shape	Type	Design List	Material	Design Rules	A [in2]	Iyy [in4]	Izz [in4]	J [in4]
1	CF1A	162T125-18	Beam	CU	A653 SS Gr33	Typical	.078	.013	.042	9e-6

Joint Boundary Conditions

	Joint Label	X [k/in]	Y [k/in]	Z [k/in]	X Rot.[k-ft/rad]	Y Rot.[k-ft/rad]	Z Rot.[k-ft/rad]
1	R4						
2	R4A						
3	R1						
4	R1A						
5	R2						
6	R2A						
7	R3						
8	R3A						
9	N486	Reaction	Reaction	Reaction	Reaction	Reaction	Reaction
10	N487	Reaction	Reaction	Reaction	Reaction	Reaction	Reaction
11	T52						
12	T53						
13	N326						
14	N327						
15	N382						
16	N383						
17	N438						
18	N439						
19	N491	Reaction	Reaction	Reaction	Reaction	Reaction	Reaction
20	N492	Reaction	Reaction	Reaction	Reaction	Reaction	Reaction
21	N496	Reaction	Reaction	Reaction	Reaction	Reaction	Reaction
22	N497	Reaction	Reaction	Reaction	Reaction	Reaction	Reaction
23	N501	Reaction	Reaction	Reaction	Reaction	Reaction	Reaction
24	N502	Reaction	Reaction	Reaction	Reaction	Reaction	Reaction

Basic Load Cases

	BLC Description	Category	X Gravity	Y Gravity	Z Gravity	Joint	Point	Distributed	Area(Me...	Surface(P...
1	Self Weight	DL		-1			18		16	
2	Structure Wind Z	WLZ						544		

Basic Load Cases (Continued)

	BLC Description	Category	X Gravity	Y Gravity	Z Gravity	Joint	Point	Distributed	Area(Me...	Surface(P...
3	Structure Wind X	WLX						544		
4	Wind Load 0 AZI	WLZ					36			
5	Wind Load 30 AZI	None					36			
6	Wind Load 45 AZI	None					36			
7	Wind Load 60 AZI	None					36			
8	Wind Load 90 AZI	WLX					36			
9	Wind Load 120 AZI	None					36			
10	Wind Load 135 AZI	None					36			
11	Wind Load 150 AZI	None					36			
12	Ice Weight	OL1					18	544	16	
13	Ice Structure Wind Z	OL2						544		
14	Ice Structure Wind X	OL3						544		
15	Ice Wind Load 0 AZI	OL2					36			
16	Ice Wind Load 30 AZI	None					36			
17	Ice Wind Load 45 AZI	None					36			
18	Ice Wind Load 60 AZI	None					36			
19	Ice Wind Load 90 AZI	OL3					36			
20	Ice Wind Load 120 AZI	None					36			
21	Ice Wind Load 135 AZI	None					36			
22	Ice Wind Load 150 AZI	None					36			
23	Seismic Load Z	ELZ			-.134		18			
24	Seismic Load X	ELX	-.134				18			
25	Live Load 1 (Lv)	None					1			
26	Live Load 2 (Lv)	None					1			
27	Live Load 3 (Lv)	None					1			
28	Live Load 4 (Lv)	None					1			
29	Live Load 5 (Lv)	None					1			
30	Live Load 6 (Lv)	None					1			
31	Live Load 7 (Lv)	None					1			
32	Live Load 8 (Lv)	None					1			
33	Live Load 9 (Lv)	None					1			
34	Live Load 10 (Lv)	None					1			
35	Live Load 11 (Lv)	None					1			
36	Live Load 12 (Lv)	None					1			
37	Maintenance Load 1 (...	None					1			
38	Maintenance Load 2 (...	None					1			
39	Maintenance Load 3 (...	None					1			
40	Maintenance Load 4 (...	None					1			
41	Maintenance Load 5 (...	None					1			
42	Maintenance Load 6 (...	None					1			
43	Maintenance Load 7 (...	None					1			
44	Maintenance Load 8 (...	None					1			
45	Maintenance Load 9 (...	None					1			
46	Maintenance Load 10 ...	None					1			
47	Maintenance Load 11 ...	None					1			
48	Maintenance Load 12 ...	None					1			
49	Maintenance Load 13 ...	None					1			
50	Maintenance Load 14 ...	None					1			
51	Maintenance Load 15 ...	None					1			
52	Maintenance Load 16 ...	None					1			
53	BLC 1 Transient Area...	None						393		
54	BLC 12 Transient Are...	None						393		

Load Combinations

	Description	So..	P...	S...	BLC	Fac..	BLC	Fac..	BLC	Fac..	BLC	Fac..	BLC	Fac..	BLC	Fac..	BLC	Fac..	BLC	Fac..	BLC	Fac..	BLC	Fac...
1	1.4DL	Yes	Y		DL	1.4																		
2	1.2DL + 1WL 0 AZI	Yes	Y		DL	1.2	2	1	3		4	1												
3	1.2DL + 1WL 30 AZI	Yes	Y		DL	1.2	2	.866	3	.5	5	1												
4	1.2DL + 1WL 45 AZI	Yes	Y		DL	1.2	2	.707	3	.707	6	1												
5	1.2DL + 1WL 60 AZI	Yes	Y		DL	1.2	2	.5	3	.866	7	1												
6	1.2DL + 1WL 90 AZI	Yes	Y		DL	1.2	2		3	1	8	1												
7	1.2DL + 1WL 120 AZI	Yes	Y		DL	1.2	2	-.5	3	.866	9	1												
8	1.2DL + 1WL 135 AZI	Yes	Y		DL	1.2	2	-.707	3	.707	10	1												
9	1.2DL + 1WL 150 AZI	Yes	Y		DL	1.2	2	-.866	3	.5	11	1												
10	1.2DL + 1WL 180 AZI	Yes	Y		DL	1.2	2	-1	3		4	-1												
11	1.2DL + 1WL 210 AZI	Yes	Y		DL	1.2	2	-.866	3	-.5	5	-1												
12	1.2DL + 1WL 225 AZI	Yes	Y		DL	1.2	2	-.707	3	-.707	6	-1												
13	1.2DL + 1WL 240 AZI	Yes	Y		DL	1.2	2	-.5	3	-.866	7	-1												
14	1.2DL + 1WL 270 AZI	Yes	Y		DL	1.2	2		3	-1	8	-1												
15	1.2DL + 1WL 300 AZI	Yes	Y		DL	1.2	2	.5	3	-.866	9	-1												
16	1.2DL + 1WL 315 AZI	Yes	Y		DL	1.2	2	.707	3	-.707	10	-1												
17	1.2DL + 1WL 330 AZI	Yes	Y		DL	1.2	2	.866	3	-.5	11	-1												
18	0.9DL + 1WL 0 AZI	Yes	Y		DL	.9	2	1	3		4	1												
19	0.9DL + 1WL 30 AZI	Yes	Y		DL	.9	2	.866	3	.5	5	1												
20	0.9DL + 1WL 45 AZI	Yes	Y		DL	.9	2	.707	3	.707	6	1												
21	0.9DL + 1WL 60 AZI	Yes	Y		DL	.9	2	.5	3	.866	7	1												
22	0.9DL + 1WL 90 AZI	Yes	Y		DL	.9	2		3	1	8	1												
23	0.9DL + 1WL 120 AZI	Yes	Y		DL	.9	2	-.5	3	.866	9	1												
24	0.9DL + 1WL 135 AZI	Yes	Y		DL	.9	2	-.707	3	.707	10	1												
25	0.9DL + 1WL 150 AZI	Yes	Y		DL	.9	2	-.866	3	.5	11	1												
26	0.9DL + 1WL 180 AZI	Yes	Y		DL	.9	2	-1	3		4	-1												
27	0.9DL + 1WL 210 AZI	Yes	Y		DL	.9	2	-.866	3	-.5	5	-1												
28	0.9DL + 1WL 225 AZI	Yes	Y		DL	.9	2	-.707	3	-.707	6	-1												
29	0.9DL + 1WL 240 AZI	Yes	Y		DL	.9	2	-.5	3	-.866	7	-1												
30	0.9DL + 1WL 270 AZI	Yes	Y		DL	.9	2		3	-1	8	-1												
31	0.9DL + 1WL 300 AZI	Yes	Y		DL	.9	2	.5	3	-.866	9	-1												
32	0.9DL + 1WL 315 AZI	Yes	Y		DL	.9	2	.707	3	-.707	10	-1												
33	0.9DL + 1WL 330 AZI	Yes	Y		DL	.9	2	.866	3	-.5	11	-1												
34	1.2DL + 1DLi + 1W Li 0 ..	Yes	Y		DL	1.2	OL1	1	13	1	14		15	1										
35	1.2DL + 1DLi + 1W Li 3...	Yes	Y		DL	1.2	OL1	1	13	.866	14	.5	16	1										
36	1.2DL + 1DLi + 1W Li 4...	Yes	Y		DL	1.2	OL1	1	13	.707	14	.707	17	1										
37	1.2DL + 1DLi + 1W Li 6...	Yes	Y		DL	1.2	OL1	1	13	.5	14	.866	18	1										
38	1.2DL + 1DLi + 1W Li 9...	Yes	Y		DL	1.2	OL1	1	13		14	1	19	1										
39	1.2DL + 1DLi + 1W Li 1...	Yes	Y		DL	1.2	OL1	1	13	-.5	14	.866	20	1										
40	1.2DL + 1DLi + 1W Li 1...	Yes	Y		DL	1.2	OL1	1	13	-.707	14	.707	21	1										
41	1.2DL + 1DLi + 1W Li 1...	Yes	Y		DL	1.2	OL1	1	13	-.866	14	.5	22	1										
42	1.2DL + 1DLi + 1W Li 1...	Yes	Y		DL	1.2	OL1	1	13	-1	14		15	-1										
43	1.2DL + 1DLi + 1W Li 2...	Yes	Y		DL	1.2	OL1	1	13	-.866	14	-.5	16	-1										
44	1.2DL + 1DLi + 1W Li 2...	Yes	Y		DL	1.2	OL1	1	13	-.707	14	-.707	17	-1										
45	1.2DL + 1DLi + 1W Li 2...	Yes	Y		DL	1.2	OL1	1	13	-.5	14	-.866	18	-1										
46	1.2DL + 1DLi + 1W Li 2...	Yes	Y		DL	1.2	OL1	1	13		14	-1	19	-1										
47	1.2DL + 1DLi + 1W Li 3...	Yes	Y		DL	1.2	OL1	1	13	.5	14	-.866	20	-1										
48	1.2DL + 1DLi + 1W Li 3...	Yes	Y		DL	1.2	OL1	1	13	.707	14	-.707	21	-1										
49	1.2DL + 1DLi + 1W Li 3...	Yes	Y		DL	1.2	OL1	1	13	.866	14	-.5	22	-1										
50	(1.2+0.2Sds)DL + 1E 0 ...	Yes	Y		DL	1.2...	23	1	24															
51	(1.2+0.2Sds)DL + 1E 3...	Yes	Y		DL	1.2...	23	.866	24	.5														

Load Combinations (Continued)

	Description	So..	P...	S...	BLC	Fac..	BLC	Fac..	BLC	Fac..	BLC	Fac..	BLC	Fac..	BLC	Fac..	BLC	Fac..	BLC	Fac..	BLC	Fac..	BLC	Fac...
52	(1.2+0.2Sds)DL + 1E 4...	Yes	Y		DL	1.2...	23	.707	24	.707														
53	(1.2+0.2Sds)DL + 1E 6...	Yes	Y		DL	1.2...	23	.5	24	.866														
54	(1.2+0.2Sds)DL + 1E 9...	Yes	Y		DL	1.2...	23		24	1														
55	(1.2+0.2Sds)DL + 1E 1...	Yes	Y		DL	1.2...	23	-.5	24	.866														
56	(1.2+0.2Sds)DL + 1E 1...	Yes	Y		DL	1.2...	23	-.707	24	.707														
57	(1.2+0.2Sds)DL + 1E 1...	Yes	Y		DL	1.2...	23	-.866	24	.5														
58	(1.2+0.2Sds)DL + 1E 1...	Yes	Y		DL	1.2...	23	-1	24															
59	(1.2+0.2Sds)DL + 1E 2...	Yes	Y		DL	1.2...	23	-.866	24	-.5														
60	(1.2+0.2Sds)DL + 1E 2...	Yes	Y		DL	1.2...	23	-.707	24	-.707														
61	(1.2+0.2Sds)DL + 1E 2...	Yes	Y		DL	1.2...	23	-.5	24	-.866														
62	(1.2+0.2Sds)DL + 1E 2...	Yes	Y		DL	1.2...	23		24	-1														
63	(1.2+0.2Sds)DL + 1E 3...	Yes	Y		DL	1.2...	23	.5	24	-.866														
64	(1.2+0.2Sds)DL + 1E 3...	Yes	Y		DL	1.2...	23	.707	24	-.707														
65	(1.2+0.2Sds)DL + 1E 3...	Yes	Y		DL	1.2...	23	.866	24	-.5														
66	(0.9-0.2Sds)DL + 1E 0 ...	Yes	Y		DL	.855	23	1	24															
67	(0.9-0.2Sds)DL + 1E 3...	Yes	Y		DL	.855	23	.866	24	.5														
68	(0.9-0.2Sds)DL + 1E 4...	Yes	Y		DL	.855	23	.707	24	.707														
69	(0.9-0.2Sds)DL + 1E 6...	Yes	Y		DL	.855	23	.5	24	.866														
70	(0.9-0.2Sds)DL + 1E 9...	Yes	Y		DL	.855	23		24	1														
71	(0.9-0.2Sds)DL + 1E 1...	Yes	Y		DL	.855	23	-.5	24	.866														
72	(0.9-0.2Sds)DL + 1E 1...	Yes	Y		DL	.855	23	-.707	24	.707														
73	(0.9-0.2Sds)DL + 1E 1...	Yes	Y		DL	.855	23	-.866	24	.5														
74	(0.9-0.2Sds)DL + 1E 1...	Yes	Y		DL	.855	23	-1	24															
75	(0.9-0.2Sds)DL + 1E 2...	Yes	Y		DL	.855	23	-.866	24	-.5														
76	(0.9-0.2Sds)DL + 1E 2...	Yes	Y		DL	.855	23	-.707	24	-.707														
77	(0.9-0.2Sds)DL + 1E 2...	Yes	Y		DL	.855	23	-.5	24	-.866														
78	(0.9-0.2Sds)DL + 1E 2...	Yes	Y		DL	.855	23		24	-1														
79	(0.9-0.2Sds)DL + 1E 3...	Yes	Y		DL	.855	23	.5	24	-.866														
80	(0.9-0.2Sds)DL + 1E 3...	Yes	Y		DL	.855	23	.707	24	-.707														
81	(0.9-0.2Sds)DL + 1E 3...	Yes	Y		DL	.855	23	.866	24	-.5														
82	1.2DL + 1Lv1	Yes	Y		DL	1.2	25	1.5																
83	1.2DL + 1Lv2	Yes	Y		DL	1.2	26	1.5																
84	1.2DL + 1Lv3	Yes	Y		DL	1.2	27	1.5																
85	1.2DL + 1Lv4	Yes	Y		DL	1.2	28	1.5																
86	1.2DL + 1Lv5	Yes	Y		DL	1.2	29	1.5																
87	1.2DL + 1Lv6	Yes	Y		DL	1.2	30	1.5																
88	1.2DL + 1Lv7	Yes	Y		DL	1.2	31	1.5																
89	1.2DL + 1Lv8	Yes	Y		DL	1.2	32	1.5																
90	1.2DL + 1Lv9	Yes	Y		DL	1.2	33	1.5																
91	1.2DL + 1Lv10	Yes	Y		DL	1.2	34	1.5																
92	1.2DL + 1Lv11	Yes	Y		DL	1.2	35	1.5																
93	1.2DL + 1Lv12	Yes	Y		DL	1.2	36	1.5																
94	1.2DL + 1.5Lm + 1Wm ...	Yes	Y		DL	1.2	37	1.5	2	.059	3		4	.059										
95	1.2DL + 1.5Lm + 1Wm ...	Yes	Y		DL	1.2	37	1.5	2	.051	3	.029	5	.059										
96	1.2DL + 1.5Lm + 1Wm ...	Yes	Y		DL	1.2	37	1.5	2	.041	3	.041	6	.059										
97	1.2DL + 1.5Lm + 1Wm ...	Yes	Y		DL	1.2	37	1.5	2	.029	3	.051	7	.059										
98	1.2DL + 1.5Lm + 1Wm ...	Yes	Y		DL	1.2	37	1.5	2		3	.059	8	.059										
99	1.2DL + 1.5Lm + 1Wm ...	Yes	Y		DL	1.2	37	1.5	2	-.029	3	.051	9	.059										
100	1.2DL + 1.5Lm + 1Wm ...	Yes	Y		DL	1.2	37	1.5	2	-.041	3	.041	10	.059										
101	1.2DL + 1.5Lm + 1Wm ...	Yes	Y		DL	1.2	37	1.5	2	-.051	3	.029	11	.059										
102	1.2DL + 1.5Lm + 1Wm ...	Yes	Y		DL	1.2	37	1.5	2	-.059	3		4	-.059										
103	1.2DL + 1.5Lm + 1Wm ...	Yes	Y		DL	1.2	37	1.5	2	-.051	3	-.029	5	-.059										

Load Combinations (Continued)

	Description	So..	P...	S...	BLC	Fac..	BLC	Fac..	BLC	Fac..	BLC	Fac..	BLC	Fac..	BLC	Fac..	BLC	Fac..	BLC	Fac..	BLC	Fac..	BLC	Fac...
104	1.2DL + 1.5Lm + 1Wm ..	Yes	Y		DL	1.2	37	1.5	2	-.041	3	-.041	6	-.059										
105	1.2DL + 1.5Lm + 1Wm ..	Yes	Y		DL	1.2	37	1.5	2	-.029	3	-.051	7	-.059										
106	1.2DL + 1.5Lm + 1Wm ..	Yes	Y		DL	1.2	37	1.5	2		3	-.059	8	-.059										
107	1.2DL + 1.5Lm + 1Wm ..	Yes	Y		DL	1.2	37	1.5	2	.029	3	-.051	9	-.059										
108	1.2DL + 1.5Lm + 1Wm ..	Yes	Y		DL	1.2	37	1.5	2	.041	3	-.041	10	-.059										
109	1.2DL + 1.5Lm + 1Wm ..	Yes	Y		DL	1.2	37	1.5	2	.051	3	-.029	11	-.059										
110	1.2DL + 1.5Lm + 1Wm ..	Yes	Y		DL	1.2	38	1.5	2	.059	3		4	.059										
111	1.2DL + 1.5Lm + 1Wm ..	Yes	Y		DL	1.2	38	1.5	2	.051	3	.029	5	.059										
112	1.2DL + 1.5Lm + 1Wm ..	Yes	Y		DL	1.2	38	1.5	2	.041	3	.041	6	.059										
113	1.2DL + 1.5Lm + 1Wm ..	Yes	Y		DL	1.2	38	1.5	2	.029	3	.051	7	.059										
114	1.2DL + 1.5Lm + 1Wm ..	Yes	Y		DL	1.2	38	1.5	2		3	.059	8	.059										
115	1.2DL + 1.5Lm + 1Wm ..	Yes	Y		DL	1.2	38	1.5	2	-.029	3	.051	9	.059										
116	1.2DL + 1.5Lm + 1Wm ..	Yes	Y		DL	1.2	38	1.5	2	-.041	3	.041	10	.059										
117	1.2DL + 1.5Lm + 1Wm ..	Yes	Y		DL	1.2	38	1.5	2	-.051	3	.029	11	.059										
118	1.2DL + 1.5Lm + 1Wm ..	Yes	Y		DL	1.2	38	1.5	2	-.059	3		4	-.059										
119	1.2DL + 1.5Lm + 1Wm ..	Yes	Y		DL	1.2	38	1.5	2	-.051	3	-.029	5	-.059										
120	1.2DL + 1.5Lm + 1Wm ..	Yes	Y		DL	1.2	38	1.5	2	-.041	3	-.041	6	-.059										
121	1.2DL + 1.5Lm + 1Wm ..	Yes	Y		DL	1.2	38	1.5	2	-.029	3	-.051	7	-.059										
122	1.2DL + 1.5Lm + 1Wm ..	Yes	Y		DL	1.2	38	1.5	2		3	-.059	8	-.059										
123	1.2DL + 1.5Lm + 1Wm ..	Yes	Y		DL	1.2	38	1.5	2	.029	3	-.051	9	-.059										
124	1.2DL + 1.5Lm + 1Wm ..	Yes	Y		DL	1.2	38	1.5	2	.041	3	-.041	10	-.059										
125	1.2DL + 1.5Lm + 1Wm ..	Yes	Y		DL	1.2	38	1.5	2	.051	3	-.029	11	-.059										
126	1.2DL + 1.5Lm + 1Wm ..	Yes	Y		DL	1.2	39	1.5	2	.059	3		4	.059										
127	1.2DL + 1.5Lm + 1Wm ..	Yes	Y		DL	1.2	39	1.5	2	.051	3	.029	5	.059										
128	1.2DL + 1.5Lm + 1Wm ..	Yes	Y		DL	1.2	39	1.5	2	.041	3	.041	6	.059										
129	1.2DL + 1.5Lm + 1Wm ..	Yes	Y		DL	1.2	39	1.5	2	.029	3	.051	7	.059										
130	1.2DL + 1.5Lm + 1Wm ..	Yes	Y		DL	1.2	39	1.5	2		3	.059	8	.059										
131	1.2DL + 1.5Lm + 1Wm ..	Yes	Y		DL	1.2	39	1.5	2	-.029	3	.051	9	.059										
132	1.2DL + 1.5Lm + 1Wm ..	Yes	Y		DL	1.2	39	1.5	2	-.041	3	.041	10	.059										
133	1.2DL + 1.5Lm + 1Wm ..	Yes	Y		DL	1.2	39	1.5	2	-.051	3	.029	11	.059										
134	1.2DL + 1.5Lm + 1Wm ..	Yes	Y		DL	1.2	39	1.5	2	-.059	3		4	-.059										
135	1.2DL + 1.5Lm + 1Wm ..	Yes	Y		DL	1.2	39	1.5	2	-.051	3	-.029	5	-.059										
136	1.2DL + 1.5Lm + 1Wm ..	Yes	Y		DL	1.2	39	1.5	2	-.041	3	-.041	6	-.059										
137	1.2DL + 1.5Lm + 1Wm ..	Yes	Y		DL	1.2	39	1.5	2	-.029	3	-.051	7	-.059										
138	1.2DL + 1.5Lm + 1Wm ..	Yes	Y		DL	1.2	39	1.5	2		3	-.059	8	-.059										
139	1.2DL + 1.5Lm + 1Wm ..	Yes	Y		DL	1.2	39	1.5	2	.029	3	-.051	9	-.059										
140	1.2DL + 1.5Lm + 1Wm ..	Yes	Y		DL	1.2	39	1.5	2	.041	3	-.041	10	-.059										
141	1.2DL + 1.5Lm + 1Wm ..	Yes	Y		DL	1.2	39	1.5	2	.051	3	-.029	11	-.059										
142	1.2DL + 1.5Lm + 1Wm ..	Yes	Y		DL	1.2	40	1.5	2	.059	3		4	.059										
143	1.2DL + 1.5Lm + 1Wm ..	Yes	Y		DL	1.2	40	1.5	2	.051	3	.029	5	.059										
144	1.2DL + 1.5Lm + 1Wm ..	Yes	Y		DL	1.2	40	1.5	2	.041	3	.041	6	.059										
145	1.2DL + 1.5Lm + 1Wm ..	Yes	Y		DL	1.2	40	1.5	2	.029	3	.051	7	.059										
146	1.2DL + 1.5Lm + 1Wm ..	Yes	Y		DL	1.2	40	1.5	2		3	.059	8	.059										
147	1.2DL + 1.5Lm + 1Wm ..	Yes	Y		DL	1.2	40	1.5	2	-.029	3	.051	9	.059										
148	1.2DL + 1.5Lm + 1Wm ..	Yes	Y		DL	1.2	40	1.5	2	-.041	3	.041	10	.059										
149	1.2DL + 1.5Lm + 1Wm ..	Yes	Y		DL	1.2	40	1.5	2	-.051	3	.029	11	.059										
150	1.2DL + 1.5Lm + 1Wm ..	Yes	Y		DL	1.2	40	1.5	2	-.059	3		4	-.059										
151	1.2DL + 1.5Lm + 1Wm ..	Yes	Y		DL	1.2	40	1.5	2	-.051	3	-.029	5	-.059										
152	1.2DL + 1.5Lm + 1Wm ..	Yes	Y		DL	1.2	40	1.5	2	-.041	3	-.041	6	-.059										
153	1.2DL + 1.5Lm + 1Wm ..	Yes	Y		DL	1.2	40	1.5	2	-.029	3	-.051	7	-.059										
154	1.2DL + 1.5Lm + 1Wm ..	Yes	Y		DL	1.2	40	1.5	2		3	-.059	8	-.059										
155	1.2DL + 1.5Lm + 1Wm ..	Yes	Y		DL	1.2	40	1.5	2	.029	3	-.051	9	-.059										

Load Combinations (Continued)

	Description	So..	P...	S...	BLC	Fac..	BLC	Fac..	BLC	Fac..	BLC	Fac..	BLC	Fac..	BLC	Fac..	BLC	Fac..	BLC	Fac..	BLC	Fac..	BLC	Fac...
156	1.2DL + 1.5Lm + 1Wm ..	Yes	Y		DL	1.2	40	1.5	2	.041	3	-.041	10	-.059										
157	1.2DL + 1.5Lm + 1Wm ..	Yes	Y		DL	1.2	40	1.5	2	.051	3	-.029	11	-.059										
158	1.2DL + 1.5Lm + 1Wm ..	Yes	Y		DL	1.2	41	1.5	2	.059	3		4	.059										
159	1.2DL + 1.5Lm + 1Wm ..	Yes	Y		DL	1.2	41	1.5	2	.051	3	.029	5	.059										
160	1.2DL + 1.5Lm + 1Wm ..	Yes	Y		DL	1.2	41	1.5	2	.041	3	.041	6	.059										
161	1.2DL + 1.5Lm + 1Wm ..	Yes	Y		DL	1.2	41	1.5	2	.029	3	.051	7	.059										
162	1.2DL + 1.5Lm + 1Wm ..	Yes	Y		DL	1.2	41	1.5	2		3	.059	8	.059										
163	1.2DL + 1.5Lm + 1Wm ..	Yes	Y		DL	1.2	41	1.5	2	-.029	3	.051	9	.059										
164	1.2DL + 1.5Lm + 1Wm ..	Yes	Y		DL	1.2	41	1.5	2	-.041	3	.041	10	.059										
165	1.2DL + 1.5Lm + 1Wm ..	Yes	Y		DL	1.2	41	1.5	2	-.051	3	.029	11	.059										
166	1.2DL + 1.5Lm + 1Wm ..	Yes	Y		DL	1.2	41	1.5	2	-.059	3		4	-.059										
167	1.2DL + 1.5Lm + 1Wm ..	Yes	Y		DL	1.2	41	1.5	2	-.051	3	-.029	5	-.059										
168	1.2DL + 1.5Lm + 1Wm ..	Yes	Y		DL	1.2	41	1.5	2	-.041	3	-.041	6	-.059										
169	1.2DL + 1.5Lm + 1Wm ..	Yes	Y		DL	1.2	41	1.5	2	-.029	3	-.051	7	-.059										
170	1.2DL + 1.5Lm + 1Wm ..	Yes	Y		DL	1.2	41	1.5	2		3	-.059	8	-.059										
171	1.2DL + 1.5Lm + 1Wm ..	Yes	Y		DL	1.2	41	1.5	2	.029	3	-.051	9	-.059										
172	1.2DL + 1.5Lm + 1Wm ..	Yes	Y		DL	1.2	41	1.5	2	.041	3	-.041	10	-.059										
173	1.2DL + 1.5Lm + 1Wm ..	Yes	Y		DL	1.2	41	1.5	2	.051	3	-.029	11	-.059										
174	1.2DL + 1.5Lm + 1Wm ..	Yes	Y		DL	1.2	42	1.5	2	.059	3		4	.059										
175	1.2DL + 1.5Lm + 1Wm ..	Yes	Y		DL	1.2	42	1.5	2	.051	3	.029	5	.059										
176	1.2DL + 1.5Lm + 1Wm ..	Yes	Y		DL	1.2	42	1.5	2	.041	3	.041	6	.059										
177	1.2DL + 1.5Lm + 1Wm ..	Yes	Y		DL	1.2	42	1.5	2	.029	3	.051	7	.059										
178	1.2DL + 1.5Lm + 1Wm ..	Yes	Y		DL	1.2	42	1.5	2		3	.059	8	.059										
179	1.2DL + 1.5Lm + 1Wm ..	Yes	Y		DL	1.2	42	1.5	2	-.029	3	.051	9	.059										
180	1.2DL + 1.5Lm + 1Wm ..	Yes	Y		DL	1.2	42	1.5	2	-.041	3	.041	10	.059										
181	1.2DL + 1.5Lm + 1Wm ..	Yes	Y		DL	1.2	42	1.5	2	-.051	3	.029	11	.059										
182	1.2DL + 1.5Lm + 1Wm ..	Yes	Y		DL	1.2	42	1.5	2	-.059	3		4	-.059										
183	1.2DL + 1.5Lm + 1Wm ..	Yes	Y		DL	1.2	42	1.5	2	-.051	3	-.029	5	-.059										
184	1.2DL + 1.5Lm + 1Wm ..	Yes	Y		DL	1.2	42	1.5	2	-.041	3	-.041	6	-.059										
185	1.2DL + 1.5Lm + 1Wm ..	Yes	Y		DL	1.2	42	1.5	2	-.029	3	-.051	7	-.059										
186	1.2DL + 1.5Lm + 1Wm ..	Yes	Y		DL	1.2	42	1.5	2		3	-.059	8	-.059										
187	1.2DL + 1.5Lm + 1Wm ..	Yes	Y		DL	1.2	42	1.5	2	.029	3	-.051	9	-.059										
188	1.2DL + 1.5Lm + 1Wm ..	Yes	Y		DL	1.2	42	1.5	2	.041	3	-.041	10	-.059										
189	1.2DL + 1.5Lm + 1Wm ..	Yes	Y		DL	1.2	42	1.5	2	.051	3	-.029	11	-.059										
190	1.2DL + 1.5Lm + 1Wm ..	Yes	Y		DL	1.2	43	1.5	2	.059	3		4	.059										
191	1.2DL + 1.5Lm + 1Wm ..	Yes	Y		DL	1.2	43	1.5	2	.051	3	.029	5	.059										
192	1.2DL + 1.5Lm + 1Wm ..	Yes	Y		DL	1.2	43	1.5	2	.041	3	.041	6	.059										
193	1.2DL + 1.5Lm + 1Wm ..	Yes	Y		DL	1.2	43	1.5	2	.029	3	.051	7	.059										
194	1.2DL + 1.5Lm + 1Wm ..	Yes	Y		DL	1.2	43	1.5	2		3	.059	8	.059										
195	1.2DL + 1.5Lm + 1Wm ..	Yes	Y		DL	1.2	43	1.5	2	-.029	3	.051	9	.059										
196	1.2DL + 1.5Lm + 1Wm ..	Yes	Y		DL	1.2	43	1.5	2	-.041	3	.041	10	.059										
197	1.2DL + 1.5Lm + 1Wm ..	Yes	Y		DL	1.2	43	1.5	2	-.051	3	.029	11	.059										
198	1.2DL + 1.5Lm + 1Wm ..	Yes	Y		DL	1.2	43	1.5	2	-.059	3		4	-.059										
199	1.2DL + 1.5Lm + 1Wm ..	Yes	Y		DL	1.2	43	1.5	2	-.051	3	-.029	5	-.059										
200	1.2DL + 1.5Lm + 1Wm ..	Yes	Y		DL	1.2	43	1.5	2	-.041	3	-.041	6	-.059										
201	1.2DL + 1.5Lm + 1Wm ..	Yes	Y		DL	1.2	43	1.5	2	-.029	3	-.051	7	-.059										
202	1.2DL + 1.5Lm + 1Wm ..	Yes	Y		DL	1.2	43	1.5	2		3	-.059	8	-.059										
203	1.2DL + 1.5Lm + 1Wm ..	Yes	Y		DL	1.2	43	1.5	2	.029	3	-.051	9	-.059										
204	1.2DL + 1.5Lm + 1Wm ..	Yes	Y		DL	1.2	43	1.5	2	.041	3	-.041	10	-.059										
205	1.2DL + 1.5Lm + 1Wm ..	Yes	Y		DL	1.2	43	1.5	2	.051	3	-.029	11	-.059										
206	1.2DL + 1.5Lm + 1Wm ..	Yes	Y		DL	1.2	44	1.5	2	.059	3		4	.059										
207	1.2DL + 1.5Lm + 1Wm ..	Yes	Y		DL	1.2	44	1.5	2	.051	3	.029	5	.059										

Load Combinations (Continued)

	Description	So..	P...	S...	BLC	Fac..	BLC	Fac..	BLC	Fac..	BLC	Fac..	BLC	Fac..	BLC	Fac..	BLC	Fac..	BLC	Fac..	BLC	Fac..	BLC	Fac...
208	1.2DL + 1.5Lm + 1Wm ..	Yes	Y		DL	1.2	44	1.5	2	.041	3	.041	6	.059										
209	1.2DL + 1.5Lm + 1Wm ..	Yes	Y		DL	1.2	44	1.5	2	.029	3	.051	7	.059										
210	1.2DL + 1.5Lm + 1Wm ..	Yes	Y		DL	1.2	44	1.5	2		3	.059	8	.059										
211	1.2DL + 1.5Lm + 1Wm ..	Yes	Y		DL	1.2	44	1.5	2	-.029	3	.051	9	.059										
212	1.2DL + 1.5Lm + 1Wm ..	Yes	Y		DL	1.2	44	1.5	2	-.041	3	.041	10	.059										
213	1.2DL + 1.5Lm + 1Wm ..	Yes	Y		DL	1.2	44	1.5	2	-.051	3	.029	11	.059										
214	1.2DL + 1.5Lm + 1Wm ..	Yes	Y		DL	1.2	44	1.5	2	-.059	3		4	-.059										
215	1.2DL + 1.5Lm + 1Wm ..	Yes	Y		DL	1.2	44	1.5	2	-.051	3	-.029	5	-.059										
216	1.2DL + 1.5Lm + 1Wm ..	Yes	Y		DL	1.2	44	1.5	2	-.041	3	-.041	6	-.059										
217	1.2DL + 1.5Lm + 1Wm ..	Yes	Y		DL	1.2	44	1.5	2	-.029	3	-.051	7	-.059										
218	1.2DL + 1.5Lm + 1Wm ..	Yes	Y		DL	1.2	44	1.5	2		3	-.059	8	-.059										
219	1.2DL + 1.5Lm + 1Wm ..	Yes	Y		DL	1.2	44	1.5	2	.029	3	-.051	9	-.059										
220	1.2DL + 1.5Lm + 1Wm ..	Yes	Y		DL	1.2	44	1.5	2	.041	3	-.041	10	-.059										
221	1.2DL + 1.5Lm + 1Wm ..	Yes	Y		DL	1.2	44	1.5	2	.051	3	-.029	11	-.059										
222	1.2DL + 1.5Lm + 1Wm ..	Yes	Y		DL	1.2	45	1.5	2	.059	3		4	.059										
223	1.2DL + 1.5Lm + 1Wm ..	Yes	Y		DL	1.2	45	1.5	2	.051	3	.029	5	.059										
224	1.2DL + 1.5Lm + 1Wm ..	Yes	Y		DL	1.2	45	1.5	2	.041	3	.041	6	.059										
225	1.2DL + 1.5Lm + 1Wm ..	Yes	Y		DL	1.2	45	1.5	2	.029	3	.051	7	.059										
226	1.2DL + 1.5Lm + 1Wm ..	Yes	Y		DL	1.2	45	1.5	2		3	.059	8	.059										
227	1.2DL + 1.5Lm + 1Wm ..	Yes	Y		DL	1.2	45	1.5	2	-.029	3	.051	9	.059										
228	1.2DL + 1.5Lm + 1Wm ..	Yes	Y		DL	1.2	45	1.5	2	-.041	3	.041	10	.059										
229	1.2DL + 1.5Lm + 1Wm ..	Yes	Y		DL	1.2	45	1.5	2	-.051	3	.029	11	.059										
230	1.2DL + 1.5Lm + 1Wm ..	Yes	Y		DL	1.2	45	1.5	2	-.059	3		4	-.059										
231	1.2DL + 1.5Lm + 1Wm ..	Yes	Y		DL	1.2	45	1.5	2	-.051	3	-.029	5	-.059										
232	1.2DL + 1.5Lm + 1Wm ..	Yes	Y		DL	1.2	45	1.5	2	-.041	3	-.041	6	-.059										
233	1.2DL + 1.5Lm + 1Wm ..	Yes	Y		DL	1.2	45	1.5	2	-.029	3	-.051	7	-.059										
234	1.2DL + 1.5Lm + 1Wm ..	Yes	Y		DL	1.2	45	1.5	2		3	-.059	8	-.059										
235	1.2DL + 1.5Lm + 1Wm ..	Yes	Y		DL	1.2	45	1.5	2	.029	3	-.051	9	-.059										
236	1.2DL + 1.5Lm + 1Wm ..	Yes	Y		DL	1.2	45	1.5	2	.041	3	-.041	10	-.059										
237	1.2DL + 1.5Lm + 1Wm ..	Yes	Y		DL	1.2	45	1.5	2	.051	3	-.029	11	-.059										
238	1.2DL + 1.5Lm + 1Wm ..	Yes	Y		DL	1.2	46	1.5	2	.059	3		4	.059										
239	1.2DL + 1.5Lm + 1Wm ..	Yes	Y		DL	1.2	46	1.5	2	.051	3	.029	5	.059										
240	1.2DL + 1.5Lm + 1Wm ..	Yes	Y		DL	1.2	46	1.5	2	.041	3	.041	6	.059										
241	1.2DL + 1.5Lm + 1Wm ..	Yes	Y		DL	1.2	46	1.5	2	.029	3	.051	7	.059										
242	1.2DL + 1.5Lm + 1Wm ..	Yes	Y		DL	1.2	46	1.5	2		3	.059	8	.059										
243	1.2DL + 1.5Lm + 1Wm ..	Yes	Y		DL	1.2	46	1.5	2	-.029	3	.051	9	.059										
244	1.2DL + 1.5Lm + 1Wm ..	Yes	Y		DL	1.2	46	1.5	2	-.041	3	.041	10	.059										
245	1.2DL + 1.5Lm + 1Wm ..	Yes	Y		DL	1.2	46	1.5	2	-.051	3	.029	11	.059										
246	1.2DL + 1.5Lm + 1Wm ..	Yes	Y		DL	1.2	46	1.5	2	-.059	3		4	-.059										
247	1.2DL + 1.5Lm + 1Wm ..	Yes	Y		DL	1.2	46	1.5	2	-.051	3	-.029	5	-.059										
248	1.2DL + 1.5Lm + 1Wm ..	Yes	Y		DL	1.2	46	1.5	2	-.041	3	-.041	6	-.059										
249	1.2DL + 1.5Lm + 1Wm ..	Yes	Y		DL	1.2	46	1.5	2	-.029	3	-.051	7	-.059										
250	1.2DL + 1.5Lm + 1Wm ..	Yes	Y		DL	1.2	46	1.5	2		3	-.059	8	-.059										
251	1.2DL + 1.5Lm + 1Wm ..	Yes	Y		DL	1.2	46	1.5	2	.029	3	-.051	9	-.059										
252	1.2DL + 1.5Lm + 1Wm ..	Yes	Y		DL	1.2	46	1.5	2	.041	3	-.041	10	-.059										
253	1.2DL + 1.5Lm + 1Wm ..	Yes	Y		DL	1.2	46	1.5	2	.051	3	-.029	11	-.059										
254	1.2DL + 1.5Lm + 1Wm ..	Yes	Y		DL	1.2	47	1.5	2	.059	3		4	.059										
255	1.2DL + 1.5Lm + 1Wm ..	Yes	Y		DL	1.2	47	1.5	2	.051	3	.029	5	.059										
256	1.2DL + 1.5Lm + 1Wm ..	Yes	Y		DL	1.2	47	1.5	2	.041	3	.041	6	.059										
257	1.2DL + 1.5Lm + 1Wm ..	Yes	Y		DL	1.2	47	1.5	2	.029	3	.051	7	.059										
258	1.2DL + 1.5Lm + 1Wm ..	Yes	Y		DL	1.2	47	1.5	2		3	.059	8	.059										
259	1.2DL + 1.5Lm + 1Wm ..	Yes	Y		DL	1.2	47	1.5	2	-.029	3	.051	9	.059										

Load Combinations (Continued)

	Description	So..	P...	S...	BLC	Fac..	BLC	Fac..	BLC	Fac..	BLC	Fac..	BLC	Fac..	BLC	Fac..	BLC	Fac..	BLC	Fac..	BLC	Fac..	BLC	Fac...
260	1.2DL + 1.5Lm + 1Wm ..	Yes	Y		DL	1.2	47	1.5	2	-.041	3	.041	10	.059										
261	1.2DL + 1.5Lm + 1Wm ..	Yes	Y		DL	1.2	47	1.5	2	-.051	3	.029	11	.059										
262	1.2DL + 1.5Lm + 1Wm ..	Yes	Y		DL	1.2	47	1.5	2	-.059	3		4	-.059										
263	1.2DL + 1.5Lm + 1Wm ..	Yes	Y		DL	1.2	47	1.5	2	-.051	3	-.029	5	-.059										
264	1.2DL + 1.5Lm + 1Wm ..	Yes	Y		DL	1.2	47	1.5	2	-.041	3	-.041	6	-.059										
265	1.2DL + 1.5Lm + 1Wm ..	Yes	Y		DL	1.2	47	1.5	2	-.029	3	-.051	7	-.059										
266	1.2DL + 1.5Lm + 1Wm ..	Yes	Y		DL	1.2	47	1.5	2		3	-.059	8	-.059										
267	1.2DL + 1.5Lm + 1Wm ..	Yes	Y		DL	1.2	47	1.5	2	.029	3	-.051	9	-.059										
268	1.2DL + 1.5Lm + 1Wm ..	Yes	Y		DL	1.2	47	1.5	2	.041	3	-.041	10	-.059										
269	1.2DL + 1.5Lm + 1Wm ..	Yes	Y		DL	1.2	47	1.5	2	.051	3	-.029	11	-.059										
270	1.2DL + 1.5Lm + 1Wm ..	Yes	Y		DL	1.2	48	1.5	2	.059	3		4	.059										
271	1.2DL + 1.5Lm + 1Wm ..	Yes	Y		DL	1.2	48	1.5	2	.051	3	.029	5	.059										
272	1.2DL + 1.5Lm + 1Wm ..	Yes	Y		DL	1.2	48	1.5	2	.041	3	.041	6	.059										
273	1.2DL + 1.5Lm + 1Wm ..	Yes	Y		DL	1.2	48	1.5	2	.029	3	.051	7	.059										
274	1.2DL + 1.5Lm + 1Wm ..	Yes	Y		DL	1.2	48	1.5	2		3	.059	8	.059										
275	1.2DL + 1.5Lm + 1Wm ..	Yes	Y		DL	1.2	48	1.5	2	-.029	3	.051	9	.059										
276	1.2DL + 1.5Lm + 1Wm ..	Yes	Y		DL	1.2	48	1.5	2	-.041	3	.041	10	.059										
277	1.2DL + 1.5Lm + 1Wm ..	Yes	Y		DL	1.2	48	1.5	2	-.051	3	.029	11	.059										
278	1.2DL + 1.5Lm + 1Wm ..	Yes	Y		DL	1.2	48	1.5	2	-.059	3		4	-.059										
279	1.2DL + 1.5Lm + 1Wm ..	Yes	Y		DL	1.2	48	1.5	2	-.051	3	-.029	5	-.059										
280	1.2DL + 1.5Lm + 1Wm ..	Yes	Y		DL	1.2	48	1.5	2	-.041	3	-.041	6	-.059										
281	1.2DL + 1.5Lm + 1Wm ..	Yes	Y		DL	1.2	48	1.5	2	-.029	3	-.051	7	-.059										
282	1.2DL + 1.5Lm + 1Wm ..	Yes	Y		DL	1.2	48	1.5	2		3	-.059	8	-.059										
283	1.2DL + 1.5Lm + 1Wm ..	Yes	Y		DL	1.2	48	1.5	2	.029	3	-.051	9	-.059										
284	1.2DL + 1.5Lm + 1Wm ..	Yes	Y		DL	1.2	48	1.5	2	.041	3	-.041	10	-.059										
285	1.2DL + 1.5Lm + 1Wm ..	Yes	Y		DL	1.2	48	1.5	2	.051	3	-.029	11	-.059										
286	1.2DL + 1.5Lm + 1Wm ..	Yes	Y		DL	1.2	49	1.5	2	.059	3		4	.059										
287	1.2DL + 1.5Lm + 1Wm ..	Yes	Y		DL	1.2	49	1.5	2	.051	3	.029	5	.059										
288	1.2DL + 1.5Lm + 1Wm ..	Yes	Y		DL	1.2	49	1.5	2	.041	3	.041	6	.059										
289	1.2DL + 1.5Lm + 1Wm ..	Yes	Y		DL	1.2	49	1.5	2	.029	3	.051	7	.059										
290	1.2DL + 1.5Lm + 1Wm ..	Yes	Y		DL	1.2	49	1.5	2		3	.059	8	.059										
291	1.2DL + 1.5Lm + 1Wm ..	Yes	Y		DL	1.2	49	1.5	2	-.029	3	.051	9	.059										
292	1.2DL + 1.5Lm + 1Wm ..	Yes	Y		DL	1.2	49	1.5	2	-.041	3	.041	10	.059										
293	1.2DL + 1.5Lm + 1Wm ..	Yes	Y		DL	1.2	49	1.5	2	-.051	3	.029	11	.059										
294	1.2DL + 1.5Lm + 1Wm ..	Yes	Y		DL	1.2	49	1.5	2	-.059	3		4	-.059										
295	1.2DL + 1.5Lm + 1Wm ..	Yes	Y		DL	1.2	49	1.5	2	-.051	3	-.029	5	-.059										
296	1.2DL + 1.5Lm + 1Wm ..	Yes	Y		DL	1.2	49	1.5	2	-.041	3	-.041	6	-.059										
297	1.2DL + 1.5Lm + 1Wm ..	Yes	Y		DL	1.2	49	1.5	2	-.029	3	-.051	7	-.059										
298	1.2DL + 1.5Lm + 1Wm ..	Yes	Y		DL	1.2	49	1.5	2		3	-.059	8	-.059										
299	1.2DL + 1.5Lm + 1Wm ..	Yes	Y		DL	1.2	49	1.5	2	.029	3	-.051	9	-.059										
300	1.2DL + 1.5Lm + 1Wm ..	Yes	Y		DL	1.2	49	1.5	2	.041	3	-.041	10	-.059										
301	1.2DL + 1.5Lm + 1Wm ..	Yes	Y		DL	1.2	49	1.5	2	.051	3	-.029	11	-.059										
302	1.2DL + 1.5Lm + 1Wm ..	Yes	Y		DL	1.2	50	1.5	2	.059	3		4	.059										
303	1.2DL + 1.5Lm + 1Wm ..	Yes	Y		DL	1.2	50	1.5	2	.051	3	.029	5	.059										
304	1.2DL + 1.5Lm + 1Wm ..	Yes	Y		DL	1.2	50	1.5	2	.041	3	.041	6	.059										
305	1.2DL + 1.5Lm + 1Wm ..	Yes	Y		DL	1.2	50	1.5	2	.029	3	.051	7	.059										
306	1.2DL + 1.5Lm + 1Wm ..	Yes	Y		DL	1.2	50	1.5	2		3	.059	8	.059										
307	1.2DL + 1.5Lm + 1Wm ..	Yes	Y		DL	1.2	50	1.5	2	-.029	3	.051	9	.059										
308	1.2DL + 1.5Lm + 1Wm ..	Yes	Y		DL	1.2	50	1.5	2	-.041	3	.041	10	.059										
309	1.2DL + 1.5Lm + 1Wm ..	Yes	Y		DL	1.2	50	1.5	2	-.051	3	.029	11	.059										
310	1.2DL + 1.5Lm + 1Wm ..	Yes	Y		DL	1.2	50	1.5	2	-.059	3		4	-.059										
311	1.2DL + 1.5Lm + 1Wm ..	Yes	Y		DL	1.2	50	1.5	2	-.051	3	-.029	5	-.059										

Load Combinations (Continued)

	Description	So..	P...	S...	BLC	Fac..	BLC	Fac..	BLC	Fac..	BLC	Fac..	BLC	Fac..	BLC	Fac..	BLC	Fac..	BLC	Fac..	BLC	Fac..	BLC	Fac...
312	1.2DL + 1.5Lm + 1Wm ..	Yes	Y		DL	1.2	50	1.5	2	-.041	3	-.041	6	-.059										
313	1.2DL + 1.5Lm + 1Wm ..	Yes	Y		DL	1.2	50	1.5	2	-.029	3	-.051	7	-.059										
314	1.2DL + 1.5Lm + 1Wm ..	Yes	Y		DL	1.2	50	1.5	2		3	-.059	8	-.059										
315	1.2DL + 1.5Lm + 1Wm ..	Yes	Y		DL	1.2	50	1.5	2	.029	3	-.051	9	-.059										
316	1.2DL + 1.5Lm + 1Wm ..	Yes	Y		DL	1.2	50	1.5	2	.041	3	-.041	10	-.059										
317	1.2DL + 1.5Lm + 1Wm ..	Yes	Y		DL	1.2	50	1.5	2	.051	3	-.029	11	-.059										
318	1.2DL + 1.5Lm + 1Wm ..	Yes	Y		DL	1.2	51	1.5	2	.059	3		4	.059										
319	1.2DL + 1.5Lm + 1Wm ..	Yes	Y		DL	1.2	51	1.5	2	.051	3	.029	5	.059										
320	1.2DL + 1.5Lm + 1Wm ..	Yes	Y		DL	1.2	51	1.5	2	.041	3	.041	6	.059										
321	1.2DL + 1.5Lm + 1Wm ..	Yes	Y		DL	1.2	51	1.5	2	.029	3	.051	7	.059										
322	1.2DL + 1.5Lm + 1Wm ..	Yes	Y		DL	1.2	51	1.5	2		3	.059	8	.059										
323	1.2DL + 1.5Lm + 1Wm ..	Yes	Y		DL	1.2	51	1.5	2	-.029	3	.051	9	.059										
324	1.2DL + 1.5Lm + 1Wm ..	Yes	Y		DL	1.2	51	1.5	2	-.041	3	.041	10	.059										
325	1.2DL + 1.5Lm + 1Wm ..	Yes	Y		DL	1.2	51	1.5	2	-.051	3	.029	11	.059										
326	1.2DL + 1.5Lm + 1Wm ..	Yes	Y		DL	1.2	51	1.5	2	-.059	3		4	-.059										
327	1.2DL + 1.5Lm + 1Wm ..	Yes	Y		DL	1.2	51	1.5	2	-.051	3	-.029	5	-.059										
328	1.2DL + 1.5Lm + 1Wm ..	Yes	Y		DL	1.2	51	1.5	2	-.041	3	-.041	6	-.059										
329	1.2DL + 1.5Lm + 1Wm ..	Yes	Y		DL	1.2	51	1.5	2	-.029	3	-.051	7	-.059										
330	1.2DL + 1.5Lm + 1Wm ..	Yes	Y		DL	1.2	51	1.5	2		3	-.059	8	-.059										
331	1.2DL + 1.5Lm + 1Wm ..	Yes	Y		DL	1.2	51	1.5	2	.029	3	-.051	9	-.059										
332	1.2DL + 1.5Lm + 1Wm ..	Yes	Y		DL	1.2	51	1.5	2	.041	3	-.041	10	-.059										
333	1.2DL + 1.5Lm + 1Wm ..	Yes	Y		DL	1.2	51	1.5	2	.051	3	-.029	11	-.059										
334	1.2DL + 1.5Lm + 1Wm ..	Yes	Y		DL	1.2	52	1.5	2	.059	3		4	.059										
335	1.2DL + 1.5Lm + 1Wm ..	Yes	Y		DL	1.2	52	1.5	2	.051	3	.029	5	.059										
336	1.2DL + 1.5Lm + 1Wm ..	Yes	Y		DL	1.2	52	1.5	2	.041	3	.041	6	.059										
337	1.2DL + 1.5Lm + 1Wm ..	Yes	Y		DL	1.2	52	1.5	2	.029	3	.051	7	.059										
338	1.2DL + 1.5Lm + 1Wm ..	Yes	Y		DL	1.2	52	1.5	2		3	.059	8	.059										
339	1.2DL + 1.5Lm + 1Wm ..	Yes	Y		DL	1.2	52	1.5	2	-.029	3	.051	9	.059										
340	1.2DL + 1.5Lm + 1Wm ..	Yes	Y		DL	1.2	52	1.5	2	-.041	3	.041	10	.059										
341	1.2DL + 1.5Lm + 1Wm ..	Yes	Y		DL	1.2	52	1.5	2	-.051	3	.029	11	.059										
342	1.2DL + 1.5Lm + 1Wm ..	Yes	Y		DL	1.2	52	1.5	2	-.059	3		4	-.059										
343	1.2DL + 1.5Lm + 1Wm ..	Yes	Y		DL	1.2	52	1.5	2	-.051	3	-.029	5	-.059										
344	1.2DL + 1.5Lm + 1Wm ..	Yes	Y		DL	1.2	52	1.5	2	-.041	3	-.041	6	-.059										
345	1.2DL + 1.5Lm + 1Wm ..	Yes	Y		DL	1.2	52	1.5	2	-.029	3	-.051	7	-.059										
346	1.2DL + 1.5Lm + 1Wm ..	Yes	Y		DL	1.2	52	1.5	2		3	-.059	8	-.059										
347	1.2DL + 1.5Lm + 1Wm ..	Yes	Y		DL	1.2	52	1.5	2	.029	3	-.051	9	-.059										
348	1.2DL + 1.5Lm + 1Wm ..	Yes	Y		DL	1.2	52	1.5	2	.041	3	-.041	10	-.059										
349	1.2DL + 1.5Lm + 1Wm ..	Yes	Y		DL	1.2	52	1.5	2	.051	3	-.029	11	-.059										

Envelope Joint Reactions

	Joint		X [lb]	LC	Y [lb]	LC	Z [lb]	LC	MX [lb-ft]	LC	MY [lb-ft]	LC	MZ [lb-ft]	LC
1	N486	max	7294.108	36	2167.158	36	7283.362	36	206.502	44	780.524	19	-48.93	20
2		min	-318.057	28	660.651	28	-535.752	28	42.907	20	-831.586	11	-213.587	45
3	N487	max	-2686.731	28	89.107	45	-2760.248	29	-20.602	29	548.451	3	78.531	35
4		min	-10630.399	36	29.694	75	-10545.184	37	-79.82	37	-422.168	27	16.336	27
5	N491	max	9089.489	40	2461.042	39	-129.377	32	-54.721	24	1014.338	19	-53.418	24
6		min	37.629	32	749.491	31	-9092.697	40	-229.639	48	-1049.762	11	-229.269	48
7	N492	max	-3298.668	32	96.773	49	12378.805	40	94.409	39	445.97	20	94.583	42
8		min	-12374.6	40	33.361	80	3255.439	32	21.776	31	-449.806	312	22.612	18
9	N496	max	91.374	20	2474.339	44	-165.261	20	-52.116	28	807.975	4	233.176	36

Envelope Joint Reactions (Continued)

	Joint		X [lb]	LC	Y [lb]	LC	Z [lb]	LC	MX [lb-ft]	LC	MY [lb-ft]	LC	MZ [lb-ft]	LC
10		min	-9240.162	44	769.782	20	-9167.443	44	-228.69	36	-833.415	12	52.04	28
11	N497	max	12480.257	44	97.276	36	12451.762	44	96.034	45	508.746	4	-26.068	20
12		min	3398.147	20	33.665	69	3274.297	20	21.245	21	-419.994	28	-94.061	43
13	N501	max	1240.366	23	1678.444	47	5721.262	283	175.353	40	602.696	3	180.608	39
14		min	-5726.274	171	472.569	23	-1316.659	23	37.283	32	-579.794	27	39.994	31
15	N502	max	7794.902	171	74.674	40	-1731.485	23	-12.142	23	377.65	255	-9.863	23
16		min	1720.309	23	23.35	72	-7763.863	283	-61.637	171	-502.463	183	-61.11	283
17	Totals:	max	5930.055	22	9092.715	46	5436.69	2						
18		min	-5930.06	14	2834.501	70	-5436.686	26						

Envelope AISC 14th(360-10): LRFD Steel Code Checks

	Member	Shape	Code C...	Loc[in]	LC	Shear ...	Loc[in]	Dir	LC	phi*Pnc [lb]	phi*Pnt [lb]	phi*Mn y-...	phi*Mn z-...	Cb	Eqn
1	MP4	PIPE_2.0	.831	48	10	.051	48		10	14916.096	32130	1871.625	1871.625	1....	H1-1b
2	MP8	PIPE_2.0	.819	48	6	.050	48		6	14916.096	32130	1871.625	1871.625	1....	H1-1b
3	MP16	PIPE_2.0	.818	48	14	.050	48		14	14916.096	32130	1871.625	1871.625	1....	H1-1b
4	M397	3/8" x 1"A	.361	11	45	.014	11	y	203	11886.48	16875	128	352.5	2....	H1-1a
5	M314A	3/8" x 1"A	.359	11	39	.016	11	y	11	11886.48	16875	128	352.5	2....	H1-1a
6	M396	3/8" x 1"A	.348	11.5	45	.021	11.5	y	200	11505.442	16875	128	352.5	2....	H1-1a
7	M313A	3/8" x 1"A	.345	11.5	39	.022	11.5	y	11	11505.442	16875	128	352.5	2....	H1-1a
8	M401	3/8" x 4"	.343	11	36	.014	0	y	203	49065.428	67500	527.344	5625	1....	H1-1a
9	M318	3/8" x 4"	.332	11	43	.015	11	y	11	49065.428	67500	527.344	5599.28	1....	H1-1a
10	M395	3/8" x 1"A	.322	11.5	44	.031	11.5	y	12	11505.442	16875	128	352.5	2....	H1-1a
11	M312A	3/8" x 1"A	.319	11.5	39	.032	11.5	y	11	11505.442	16875	128	352.5	2....	H1-1a
12	M228	L3X3X6	.314	0	46	.419	0	z	218	68266.753	68364	2307.398	5322.329	1....	H2-1
13	M400	3/8" x 4"	.314	11.5	35	.019	0	y	200	47631.679	67500	527.344	5625	1....	H1-1a
14	MT67	3/8" x 4"	.312	11	35	.015	0	y	327	49065.428	67500	527.344	5625	1....	H1-1a
15	MT63	3/8" x 1"A	.312	11	35	.014	11	y	327	11886.48	16875	128	352.5	2....	H1-1a
16	M150	L3X3X6	.309	0	42	.416	0	z	150	68266.753	68364	2307.398	5322.329	1....	H2-1
17	H2	PIPE_2.5	.306	51.316	323	.244	7.895		338	29547.045	50715	3596.25	3596.25	1....	H1-1b
18	M317	3/8" x 4"	.306	11.5	43	.021	11.5	y	11	47631.679	67500	527.344	5625	1....	H1-1a
19	M148	L3X3X6	.303	0	42	.316	0	y	290	68266.753	68364	2307.398	5322.329	1....	H2-1
20	M226	L3X3X6	.302	0	46	.314	0	y	102	68266.753	68364	2307.398	5322.329	1....	H2-1
21	MT62	3/8" x 1"A	.298	11.5	35	.021	11.5	y	327	11505.442	16875	128	352.5	2....	H1-1a
22	H4	PIPE_2.5	.298	98.714	175	.236	7.897		218	29537.316	50715	3596.25	3596.25	1....	H1-1b
23	H1	PIPE_2.5	.283	51.316	136	.239	7.895		150	29547.045	50715	3596.25	3596.25	2....	H1-1b
24	MT66	3/8" x 4"	.282	11.5	36	.021	0	y	327	47631.679	67500	527.344	5625	1....	H1-1a
25	H3	PIPE_2.5	.273	51.316	258	.160	31.579		275	29547.045	50715	3596.25	3596.25	2....	H1-1b
26	M75B	L3X3X6	.266	0	38	.420	0	z	338	68266.753	68364	2307.398	5322.329	2	H2-1
27	M399	3/8" x 4"	.265	11.5	35	.029	0	y	12	47631.679	67500	527.344	5625	1....	H1-1a
28	M316A	3/8" x 4"	.262	11.5	39	.031	11.5	y	11	47631.679	67500	527.344	5625	1....	H1-1a
29	M74B	L3X3X6	.251	0	242	.268	0	y	235	68266.753	68364	2307.398	5322.329	1....	H2-1
30	M45A	L3X3X6	.238	32.212	338	.199	34.053	z	322	66881.105	68364	2307.398	5322.329	1....	H2-1
31	M188	L3X3X6	.237	32.212	218	.219	33.132	y	118	66881.105	68364	2307.398	5322.329	1....	H2-1
32	M304	L3X3X6	.233	0	186	.326	0	y	170	68266.753	68364	2307.398	5322.329	1....	H2-1
33	M227	3/8" x 3"	.230	0	202	.102	7.261	y	118	32932.944	36450	283.5	2278.8	1....	H1-1b
34	M110	L3X3X6	.228	32.212	150	.221	33.132	z	307	66881.105	68364	2307.398	5322.329	1....	H2-1
35	M306	L3X3X6	.226	0	266	.275	0	z	271	68266.753	68364	2307.398	5322.329	1....	H2-1
36	M74C	3/8" x 3"	.224	0	322	.086	7.261	y	253	32932.944	36450	283.5	2278.8	1....	H1-1b
37	M149	3/8" x 3"	.211	0	135	.102	7.261	y	306	32932.944	36450	283.5	2278.8	1....	H1-1b
38	M298	3/8" x 3"	.209	0	175	.101	7.261	y	266	32932.944	36450	283.5	2278.8	1....	H1-1b

Envelope AISC 14th(360-10): LRFD Steel Code Checks (Continued)

	Member	Shape	Code C...	Loc[in]	LC	Shear ...	Loc[in]	Dir	LC	phi*Pnc [lb]	phi*Pnt [lb]	phi*Mn y-...	phi*Mn z-...	Cb	Eqn
39	M142	3/8" x 3"	.206	0	304	.125	7.261	y	134	32932.944	36450	283.5	2278.8	1....	H1-1b
40	M300	L3X3X6	.195	32.212	170	.232	33.132	z	266	66881.105	68364	2307.398	5322.329	1....	H2-1
41	MT61	3/8" x 1"A	.194	11.5	35	.030	11.5	y	11	11505.442	16875	128	352.5	2....	H1-1b
42	M216	1/2" x 2 3/8"	.191	0	204	.040	0	y	119	37024.308	38475	400.783	1903.711	1....	H1-1b
43	M220	3/8" x 3"	.189	0	117	.127	7.261	y	202	32932.944	36450	283.5	2278.8	1.7	H1-1b
44	M144	L3X3X6	.187	32.212	289	.266	33.132	z	134	66881.105	68364	2307.398	5322.329	1....	H2-1
45	M138	1/2" x 2 3/8"	.185	0	135	.041	0	y	306	37024.308	38475	400.783	1903.711	1....	H1-1b
46	M182	1/2" x 2 3/8"	.185	0	202	.035	0	y	219	37024.308	38475	400.783	1903.711	1....	H1-1b
47	M62	1/2" x 2 3/8"	.184	0	323	.036	0	y	253	37024.308	38475	400.783	1903.711	1....	H1-1b
48	M408	3/8" x 1"A	.183	0	44	.014	10.449	y	203	12300.705	16875	128	352.5	1....	H1-1b*
49	M321	1/2" x 4"	.182	11	11	.021	11	y	135	75217.966	90000	937.5	7500	1....	H1-1b
50	M325	3/8" x 1"A	.182	0	39	.013	10.449	y	135	12300.705	16875	128	352.5	1.9	H1-1b*
51	MT65	3/8" x 4"	.182	0	36	.029	11.5	y	11	47631.679	67500	527.344	5625	1....	H1-1b*
52	M484	3/8" x 4"	.181	0	171	.014	11	y	175	49065.428	67500	527.344	5625	1....	H1-1b*
53	M406	3/8" x 1"A	.181	0	44	.021	10.449	y	203	12300.705	16875	128	352.5	1....	H1-1b*
54	M104	1/2" x 2 3/8"	.180	0	134	.034	0	y	151	37024.308	38475	400.783	1903.711	1....	H1-1b
55	M261	1/2" x 2 3/8"	.180	0	184	.037	0	y	254	37024.308	38475	400.783	1903.711	1....	H1-1b
56	M137	1/2" x 2 3/8"	.180	0	307	.028	0	y	134	37024.308	38475	400.783	1903.711	1....	H1-1b
57	M222	L3X3X6	.180	32.212	102	.270	33.132	z	202	66881.105	68364	2307.398	5322.329	1....	H2-1
58	M323	3/8" x 1"A	.180	0	39	.020	10.449	y	135	12300.705	16875	128	352.5	1....	H1-1b*
59	M105	1/2" x 2 3/8"	.178	0	303	.040	0	y	134	37024.308	38475	400.783	1903.711	1....	H1-1b
60	M215	1/2" x 2 3/8"	.178	0	119	.029	0	y	202	37024.308	38475	400.783	1903.711	1....	H1-1b
61	M363	3/8" x 4"	.177	12.543	44	.032	0	y	191	44585.04	67500	527.344	5209.508	1....	H1-1b*
62	M280	3/8" x 4"	.176	12.543	40	.028	5.611	y	127	44585.04	67500	527.344	5625	2....	H1-1b*
63	M480	3/8" x 1"A	.173	0	171	.013	11	y	175	11886.48	16875	128	352.5	2....	H1-1b*
64	M183	1/2" x 2 3/8"	.173	0	114	.041	0	y	202	37024.308	38475	400.783	1903.711	1....	H1-1b
65	M404	1/2" x 4"	.171	11	12	.023	11	y	203	75217.966	90000	937.5	7500	1....	H1-1b
66	M33	1/2" x 2 3/8"	.171	0	322	.036	0	y	339	37024.308	38475	400.783	1903.711	1....	H1-1b
67	M66	3/8" x 3"	.170	0	243	.123	7.261	y	322	32932.944	36450	283.5	2278.8	1....	H1-1b
68	M305	3/8" x 3"	.170	0	263	.113	7.261	y	187	32932.944	36450	283.5	2278.8	1....	H1-1b
69	M208	HSS4X3X4	.166	34.848	213	.117	34.848	z	218	83040.402	91665	8190	10001.25	1....	H1-1b
70	M130	HSS4X3X4	.166	34.848	145	.114	34.848	z	150	83040.402	91665	8190	10001.25	1....	H1-1b
71	M294	1/2" x 2 3/8"	.166	0	257	.039	0	y	186	37024.308	38475	400.783	1903.711	1....	H1-1b
72	M373	3/8" x 1"A	.164	5.941	44	.033	5.611	y	191	10699.546	16875	128	352.5	2....	H1-1b*
73	M483	3/8" x 4"	.164	0	171	.020	11.5	y	175	47631.679	67500	527.344	5625	1....	H1-1b*
74	M290A	3/8" x 1"A	.163	5.941	40	.030	5.611	y	311	10699.546	16875	128	352.5	2....	H1-1b*
75	M293	1/2" x 2 3/8"	.162	0	186	.029	0	y	169	37024.308	38475	400.783	1903.711	1....	H1-1b
76	M34A	1/2" x 2 3/8"	.160	0	250	.038	0	y	322	37024.308	38475	400.783	1903.711	1....	H1-1b
77	MT74	3/8" x 1"A	.160	0	36	.015	0	y	327	12300.705	16875	128	352.5	1....	H1-1b*
78	M365	3/8" x 4"	.160	8.906	44	.036	0	y	3	54763.772	67500	527.344	5575.267	1....	H1-1b*
79	M61	1/2" x 2 3/8"	.159	0	242	.030	0	y	322	37024.308	38475	400.783	1903.711	1....	H1-1b
80	M282	3/8" x 4"	.159	8.906	40	.024	8.906	y	4	54763.772	67500	527.344	5625	1....	H1-1b*
81	MT72	3/8" x 1"A	.158	0	36	.023	0	y	327	12300.705	16875	128	352.5	1....	H1-1b*
82	M54	HSS4X3X4	.155	34.848	334	.114	34.848	z	338	83040.402	91665	8190	10001.25	1....	H1-1b
83	M181	1/2" x 2 3/8"	.155	0	202	.039	0	y	218	37024.308	38475	400.783	1903.711	1....	H1-1b
84	M479	3/8" x 1"A	.154	0	171	.019	11.5	y	175	11505.442	16875	128	352.5	2....	H1-1b*
85	M260	1/2" x 2 3/8"	.153	0	269	.028	0	y	187	37024.308	38475	400.783	1903.711	1....	H1-1b
86	MP1	PIPE_2.0	.153	48	10	.018	48		10	14916.096	32130	1871.625	1871.625	1....	H1-1b
87	MT70	1/2" x 4"	.152	11	3	.025	11	y	326	75217.966	90000	937.5	7500	1....	H1-1b
88	M136	1/2" x 2 3/8"	.151	0	306	.029	0	y	289	37024.308	38475	400.783	1903.711	1....	H1-1b
89	MP5	PIPE_2.0	.151	48	6	.018	48		6	14916.096	32130	1871.625	1871.625	1....	H1-1b
90	MP13	PIPE_2.0	.151	48	14	.018	48		14	14916.096	32130	1871.625	1871.625	1....	H1-1b

Envelope AISC 14th(360-10): LRFD Steel Code Checks (Continued)

	Member	Shape	Code C...	Loc[in]	LC	Shear ...	Loc[in]	Dir	LC	phi*Pnc [lb]	phi*Pnt [lb]	phi*Mn y-...	phi*Mn z-...	Cb	Eqn
91	M103	1/2" x 2 3/8"	.151	0	134	.038	0	y	150	37024.308	38475	400.783	1903.711	1....	H1-1b
92	M266	L3X3X6	.150	32.212	285	.253	33.132	y	188	66881.105	68364	2307.398	5322.329	1....	H2-1
93	M214	1/2" x 2 3/8"	.150	0	118	.028	0	y	102	37024.308	38475	400.783	1903.711	1....	H1-1b
94	MT29	3/8" x 4"	.149	12.543	336	.034	0	y	320	44585.04	67500	527.344	5625	1.2	H1-1b*
95	M362	3/8" x 4"	.148	12.067	44	.031	7.304	y	191	45983.668	67500	527.344	5482.609	1....	H1-1b*
96	M279	3/8" x 4"	.147	12.067	40	.028	12.067	y	311	45983.668	67500	527.344	5625	1....	H1-1b*
97	M68	L3X3X6	.146	32.212	234	.258	33.132	z	322	66881.105	68364	2307.398	5322.329	1....	H2-1
98	M364	3/8" x 4"	.146	7.998	44	.027	0	y	191	57024.39	67500	527.344	5490.019	1....	H1-1b*
99	M405	3/8" x 1"A	.145	0	43	.028	15.538	y	3	8386.67	16875	128	352.5	2....	H1-1b
100	M415	3/8" x 1"A	.145	15.171	47	.012	15.171	y	4	8664.42	16875	128	352.5	2....	H1-1b
101	M332	3/8" x 1"A	.145	15.171	44	.013	15.171	y	12	8664.42	16875	128	352.5	2....	H1-1b
102	M281	3/8" x 4"	.145	7.998	40	.024	7.998	y	128	57024.39	67500	527.344	5625	1....	H1-1b*
103	M31	1/2" x 2 3/8"	.144	0	322	.040	0	y	338	37024.308	38475	400.783	1903.711	1....	H1-1b
104	M394	3/8" x 1"A	.143	11	45	.022	11	y	190	11886.48	16875	128	352.5	2....	H1-1b
105	M292	1/2" x 2 3/8"	.142	0	186	.032	0	y	170	37024.308	38475	400.783	1903.711	1....	H1-1b
106	M311A	3/8" x 1"A	.142	11	42	.021	11	y	134	11886.48	16875	128	352.5	2....	H1-1b
107	M322	3/8" x 1"A	.140	0	43	.026	15.538	y	12	8386.67	16875	128	352.5	2....	H1-1b
108	M534	PIPE_1.5	.140	40.703	42	.018	81.406		238	9913.732	23593.5	1105.125	1105.125	1....	H1-1b
109	M60	1/2" x 2 3/8"	.139	0	243	.023	0	y	234	37024.308	38475	400.783	1903.711	1....	H1-1b
110	M478	3/8" x 1"A	.139	11.5	283	.030	11.5	y	3	11505.442	16875	128	352.5	2....	H1-1b
111	M530	PIPE_1.5	.138	40.703	34	.021	81.406		138	9913.732	23593.5	1105.125	1105.125	1....	H1-1b
112	M482	3/8" x 4"	.138	0	171	.029	0	y	3	47631.679	67500	527.344	5625	1....	H1-1b*
113	MT39	3/8" x 1"A	.137	5.941	336	.034	5.611	y	319	10699.546	16875	128	352.5	2....	H1-1b*
114	M403	1/2" x 4"	.137	11.5	12	.027	11.5	y	203	73973.619	90000	937.5	7500	1....	H1-1b
115	M259	1/2" x 2 3/8"	.136	0	264	.025	0	y	272	37024.308	38475	400.783	1903.711	1....	H1-1b
116	M536	PIPE_1.5	.136	40.703	46	.023	0		326	9913.732	23593.5	1105.125	1105.125	1....	H1-1b
117	M375	3/8" x 1"A	.135	0	44	.033	8.771	y	3	13504.3	16875	128	352.5	2....	H1-1b*
118	M320	1/2" x 4"	.134	11.5	11	.026	11.5	y	135	73973.619	90000	937.5	7500	1....	H1-1b
119	M532	PIPE_1.5	.134	40.703	38	.020	81.406		202	9913.732	23593.5	1105.125	1105.125	1....	H1-1b
120	M292A	3/8" x 1"A	.134	0	40	.022	8.771	y	3	13504.3	16875	128	352.5	2....	H1-1b*
121	M407	3/8" x 1"A	.133	15.538	47	.017	15.538	y	4	8386.67	16875	128	352.5	2....	H1-1b
122	MT31	3/8" x 4"	.133	8.906	36	.038	8.906	y	4	54763.772	67500	527.344	5625	2....	H1-1b*
123	M324	3/8" x 1"A	.133	15.538	36	.016	15.538	y	12	8386.67	16875	128	352.5	2....	H1-1b
124	M372	3/8" x 1"A	.133	7.304	44	.035	6.986	y	191	11068.858	16875	128	352.5	1....	H1-1b*
125	M289A	3/8" x 1"A	.132	7.304	40	.034	6.986	y	311	11068.858	16875	128	352.5	1....	H1-1b*
126	M374	3/8" x 1"A	.130	0	44	.023	7.998	y	191	14020.938	16875	128	352.5	2....	H1-1b*
127	MT28	3/8" x 4"	.130	12.067	336	.033	7.304	y	320	45983.668	67500	527.344	5625	1....	H1-1b*
128	M291A	3/8" x 1"A	.129	0	40	.020	7.998	y	127	14020.938	16875	128	352.5	2....	H1-1b*
129	M531	PIPE_1.5	.128	40.703	38	.025	0		202	9913.732	23593.5	1105.125	1105.125	1....	H1-1b
130	MT71	3/8" x 1"A	.128	0	47	.028	0	y	3	8386.67	16875	128	352.5	2....	H1-1b
131	MT81	3/8" x 1"A	.127	15.171	42	.012	0	y	3	8664.42	16875	128	352.5	2....	H1-1b
132	M491	3/8" x 1"A	.123	0	47	.014	10.449	y	175	12300.705	16875	128	352.5	2....	H1-1b*
133	MT69	1/2" x 4"	.123	11.5	3	.030	11.5	y	326	73973.619	90000	937.5	7500	1....	H1-1b
134	M535	PIPE_1.5	.123	40.703	46	.028	81.406		322	9913.732	23593.5	1105.125	1105.125	1....	H1-1b
135	MT60	3/8" x 1"A	.122	11	35	.022	11	y	322	11886.48	16875	128	352.5	2....	H1-1b
136	M489	3/8" x 1"A	.121	0	47	.021	10.449	y	175	12300.705	16875	128	352.5	1....	H1-1b*
137	MT30	3/8" x 4"	.120	7.998	36	.029	0	y	320	57024.39	67500	527.344	5625	1....	H1-1b*
138	M446	3/8" x 4"	.119	12.543	171	.033	0	y	184	44585.04	67500	527.344	5625	1....	H1-1b*
139	M393	3/8" x 1"A	.118	11.5	45	.024	11.5	y	204	11505.442	16875	128	352.5	2....	H1-1b
140	M286	HSS4X3X4	.118	34.848	161	.092	34.848	z	170	83040.402	91665	8190	10001.25	1....	H1-1b
141	M310A	3/8" x 1"A	.117	11.5	39	.022	11.5	y	135	11505.442	16875	128	352.5	2....	H1-1b
142	MT73	3/8" x 1"A	.117	0	47	.017	0	y	3	8386.67	16875	128	352.5	2....	H1-1b

Envelope AISC 14th(360-10): LRFD Steel Code Checks (Continued)

	Member	Shape	Code C...	Loc[in]	LC	Shear ...	Loc[in]	Dir	LC	phi*Pnc [lb]	phi*Pnt [lb]	phi*Mn y-...	phi*Mn z-...	Cb	Eqn
143	MT38	3/8" x 1"A	.115	7.304	336	.035	6.986	y	319	11068.858	16875	128	352.5	1....	H1-1b*
144	MT41	3/8" x 1"A	.113	0	36	.033	8.771	y	4	13504.3	16875	128	352.5	2....	H1-1b*
145	M529	PIPE 1.5	.112	40.703	34	.027	81.406		135	9913.732	23593.5	1105.125	1105.125	1....	H1-1b
146	M276	1/2" x 4"	.111	9.411	9	.060	11.034	y	304	71831.003	90000	937.5	7500	3....	H1-1b
147	M456	3/8" x 1"A	.110	12.543	171	.032	5.611	y	188	10699.546	16875	128	352.5	2....	H1-1b*
148	M445	3/8" x 4"	.109	0	184	.031	7.304	y	184	45983.668	67500	527.344	5625	1....	H1-1b
149	M533	PIPE 1.5	.109	40.703	42	.020	81.406		259	9913.732	23593.5	1105.125	1105.125	1....	H1-1b
150	MT40	3/8" x 1"A	.109	0	36	.024	7.998	y	320	14020.938	16875	128	352.5	2....	H1-1b*
151	M359	1/2" x 4"	.108	9.411	13	.063	11.034	y	205	71831.003	90000	937.5	7500	3....	H1-1b
152	M487	1/2" x 4"	.105	11	3	.023	0	y	175	75217.966	90000	937.5	7500	1....	H1-1b
153	MT25	1/2" x 4"	.104	9.411	5	.067	11.034	y	323	71831.003	90000	937.5	7500	4....	H1-1b
154	M448	3/8" x 4"	.103	8.906	171	.037	0	y	12	54763.772	67500	527.344	5625	1....	H1-1b*
155	M402	1/2" x 4"	.102	11.5	12	.032	11.5	y	203	73973.619	90000	937.5	7500	1.2	H1-1b
156	M488	3/8" x 1"A	.101	0	35	.026	15.538	y	11	8386.67	16875	128	352.5	2....	H1-1b
157	MT59	3/8" x 1"A	.100	11.5	35	.025	11.5	y	322	11505.442	16875	128	352.5	2....	H1-1b
158	M300A	3/8" x 7/8"	.099	6.114	310	.025	6.114	y	131	13379.787	14765.625	115.358	269.164	2....	H1-1b
159	M383	3/8" x 7/8"	.098	6.114	192	.028	0	y	191	13379.787	14765.625	115.358	269.164	2....	H1-1b
160	M498	3/8" x 1"A	.097	15.171	45	.009	15.171	y	11	8664.42	16875	128	352.5	2....	H1-1b
161	M447	3/8" x 4"	.096	7.998	171	.027	0	y	184	57024.39	67500	527.344	5625	1....	H1-1b*
162	MT49	3/8" x 7/8"	.096	6.114	319	.029	6.114	y	319	13379.787	14765.625	115.358	269.164	2....	H1-1b
163	MT68	1/2" x 4"	.095	11.5	4	.034	11.5	y	326	73973.619	90000	937.5	7500	1....	H1-1b
164	M455	3/8" x 1"A	.092	12.067	171	.033	6.986	y	188	11068.858	16875	128	352.5	1....	H1-1b*
165	M490	3/8" x 1"A	.092	0	35	.013	15.538	y	11	8386.67	16875	128	352.5	2....	H1-1b
166	M466	3/8" x 7/8"	.091	6.114	188	.027	6.114	y	189	13379.787	14765.625	115.358	269.164	2....	H1-1b
167	M464	3/8" x 7/8"	.090	7.361	178	.026	0	y	178	12800.22	14765.625	115.358	269.164	2....	H1-1b
168	M442	1/2" x 4"	.088	9.411	7	.065	9.411	y	175	71831.003	90000	937.5	7500	3....	H1-1b
169	M319	1/2" x 4"	.088	11.5	11	.030	11.5	y	135	73973.619	90000	937.5	7500	1....	H1-1b
170	M486	1/2" x 4"	.088	11.5	3	.028	0	y	175	73973.619	90000	937.5	7500	1....	H1-1b
171	M458	3/8" x 1"A	.087	8.771	171	.033	8.771	y	12	13504.3	16875	128	352.5	2....	H1-1b*
172	M387	3/8" x 5/8"	.087	0	201	.027	0	y	191	10070.299	10546.875	82.399	137.329	2....	H1-1b
173	MT47	3/8" x 7/8"	.086	7.361	330	.028	7.361	y	323	12800.22	14765.625	115.358	269.164	2....	H1-1b
174	M392	3/8" x 1"A	.086	11.5	45	.026	11.5	y	204	11505.442	16875	128	352.5	2....	H1-1b
175	M477	3/8" x 1"A	.086	11	172	.021	11	y	189	11886.48	16875	128	352.5	2....	H1-1b
176	M309A	3/8" x 1"A	.086	11.5	39	.024	11.5	y	135	11505.442	16875	128	352.5	2....	H1-1b
177	M457	3/8" x 1"A	.085	7.998	171	.023	7.998	y	184	14020.938	16875	128	352.5	2....	H1-1b*
178	M304A	3/8" x 5/8"	.085	0	131	.025	4.188	y	132	10070.299	10546.875	82.399	137.329	2....	H1-1b
179	M459	3/8" x 1"A	.084	0	4	.022	10.449	y	175	12300.705	16875	128	352.5	1....	H1-1b
180	M381	3/8" x 7/8"	.084	7.361	193	.026	0	y	191	12800.22	14765.625	115.358	269.164	2....	H1-1b
181	M389	3/8" x 5/8"	.083	0	202	.021	0	y	190	10221.965	10546.875	82.399	137.329	2....	H1-1b
182	M298A	3/8" x 7/8"	.083	7.361	315	.023	0	y	137	12800.22	14765.625	115.358	269.164	2....	H1-1b
183	M358	1/2" x 4"	.082	0	204	.026	3.122	y	203	73047.429	90000	937.5	7500	2....	H1-1b
184	MT53	3/8" x 5/8"	.082	0	320	.028	4.188	y	320	10070.299	10546.875	82.399	137.329	2....	H1-1b
185	MT24	1/2" x 4"	.082	0	327	.029	3.122	y	322	73047.429	90000	937.5	7500	2....	H1-1b
186	MT55	3/8" x 5/8"	.081	0	321	.022	3.446	y	322	10221.965	10546.875	82.399	137.329	2....	H1-1b
187	M306A	3/8" x 5/8"	.081	0	133	.019	3.446	y	133	10221.965	10546.875	82.399	137.329	2....	H1-1b
188	M302A	3/8" x 3/4"	.080	5.069	310	.026	5.069	y	131	11827.373	12656.25	98.876	197.753	2....	H1-1b
189	M376	3/8" x 1"A	.079	0	3	.022	0	y	203	12300.705	16875	128	352.5	1....	H1-1b
190	MT42	3/8" x 1"A	.079	0	12	.023	0	y	327	12300.705	16875	128	352.5	1....	H1-1b
191	M385	3/8" x 3/4"	.077	5.069	121	.029	0	y	191	11827.373	12656.25	98.876	197.753	2....	H1-1b
192	M441	1/2" x 4"	.077	0	175	.025	3.122	y	184	73047.429	90000	937.5	7500	2....	H1-1b
193	M275	1/2" x 4"	.076	0	305	.024	3.122	y	134	73047.429	90000	937.5	7500	2....	H1-1b
194	M470	3/8" x 5/8"	.074	0	188	.026	4.188	y	187	10070.299	10546.875	82.399	137.329	2....	H1-1b

Envelope AISC 14th(360-10): LRFD Steel Code Checks (Continued)

	Member	Shape	Code C...	Loc[in]	LC	Shear ...	Loc[in]	Dir	LC	phi*Pnc [lb]	phi*Pnt [lb]	phi*Mn y-...	phi*Mn z-...	Cb	Eqn
195	MT58	3/8" x 1"A	.073	11.5	36	.027	11.5	y	322	11505.442	16875	128	352.5	2....	H1-1b
196	M472	3/8" x 5/8"	.073	0	188	.021	3.446	y	187	10221.965	10546.875	82.399	137.329	2....	H1-1b
197	M476	3/8" x 1"A	.072	11.5	172	.023	11.5	y	186	11505.442	16875	128	352.5	2....	H1-1b
198	M485	1/2" x 4"	.072	11.5	11	.032	0	y	175	73973.619	90000	937.5	7500	1....	H1-1b
199	MT51	3/8" x 3/4"	.071	5.069	319	.030	5.069	y	320	11827.373	12656.25	98.876	197.753	2....	H1-1b
200	M293A	3/8" x 1"A	.068	0	3	.020	0	y	135	12300.705	16875	128	352.5	1....	H1-1b
201	M468	3/8" x 3/4"	.067	5.069	187	.028	5.069	y	188	11827.373	12656.25	98.876	197.753	2....	H1-1b
202	MT27	1/2" x 4"	.066	8.619	4	.040	8.619	y	326	80612.174	90000	937.5	7500	1....	H1-1b
203	M361	1/2" x 4"	.066	8.619	11	.038	8.619	y	203	80612.174	90000	937.5	7500	1....	H1-1b
204	M368	3/8" x 1"A	.063	3.434	45	.022	3.122	y	219	11225.763	16875	128	352.5	2....	H1-1b
205	MT26	1/2" x 4"	.063	7.864	5	.049	7.864	y	326	82114.094	90000	937.5	7500	1....	H1-1b
206	M285	3/8" x 1"A	.062	3.434	41	.020	3.122	y	151	11225.763	16875	128	352.5	2....	H1-1b
207	M462	3/8" x 1"A	.058	8.821	178	.025	8.821	y	175	13469.947	16875	128	352.5	2....	H1-1b
208	M299A	3/8" x 7/8"	.058	9.076	310	.030	9.076	y	311	11883.355	14765.625	115.358	269.164	2....	H1-1b
209	M369	3/8" x 1"A	.057	12.332	45	.022	12.332	y	202	10863.546	16875	128	352.5	2....	H1-1b
210	MT45	3/8" x 1"A	.057	8.821	329	.027	8.821	y	323	13469.947	16875	128	352.5	2....	H1-1b
211	M382	3/8" x 7/8"	.056	9.076	121	.030	9.076	y	192	11883.355	14765.625	115.358	269.164	2....	H1-1b
212	M379	3/8" x 1"A	.056	8.821	193	.025	8.821	y	203	13469.947	16875	128	352.5	2....	H1-1b
213	M286A	3/8" x 1"A	.056	12.332	41	.020	12.332	y	135	10863.546	16875	128	352.5	2....	H1-1b
214	M360	1/2" x 4"	.056	7.864	11	.046	7.864	y	204	82114.094	90000	937.5	7500	1....	H1-1b
215	M444	1/2" x 4"	.055	8.619	11	.039	0	y	175	80612.174	90000	937.5	7500	1....	H1-1b
216	M388	3/8" x 5/8"	.055	5.278	201	.008	0	y	122	9800.276	10546.875	82.399	137.329	2....	H1-1b
217	M296A	3/8" x 1"A	.055	8.821	314	.023	8.821	y	135	13469.947	16875	128	352.5	2....	H1-1b
218	M305A	3/8" x 5/8"	.054	5.278	134	.009	0	y	311	9800.276	10546.875	82.399	137.329	2....	H1-1b
219	M475	3/8" x 1"A	.054	11.5	39	.025	11.5	y	186	11505.442	16875	128	352.5	2....	H1-1b
220	M301A	3/8" x 3/4"	.054	7.572	310	.027	0	y	311	10881.153	12656.25	98.876	197.753	1....	H1-1b
221	MT54	3/8" x 5/8"	.052	5.278	321	.008	0	y	242	9800.276	10546.875	82.399	137.329	2....	H1-1b
222	M384	3/8" x 3/4"	.052	7.572	192	.027	0	y	192	10881.153	12656.25	98.876	197.753	1....	H1-1b
223	M443	1/2" x 4"	.051	7.864	11	.047	0	y	175	82114.094	90000	937.5	7500	1....	H1-1b
224	MT48	3/8" x 7/8"	.051	9.076	319	.032	9.076	y	319	11883.355	14765.625	115.358	269.164	2....	H1-1b
225	MT34	3/8" x 1"A	.051	3.434	37	.023	3.122	y	339	11225.763	16875	128	352.5	2....	H1-1b
226	M386	3/8" x 3/4"	.050	0	201	.017	0	y	193	11389.697	12656.25	98.876	197.753	2....	H1-1b
227	M303A	3/8" x 3/4"	.050	0	309	.018	0	y	311	11389.697	12656.25	98.876	197.753	2....	H1-1b
228	MT35	3/8" x 1"A	.049	12.332	321	.022	12.332	y	322	10863.546	16875	128	352.5	2....	H1-1b
229	MT50	3/8" x 3/4"	.049	7.572	319	.028	0	y	319	10881.153	12656.25	98.876	197.753	1....	H1-1b
230	M277	1/2" x 4"	.049	7.864	9	.043	7.864	y	303	82114.094	90000	937.5	7500	1....	H1-1b
231	M278	1/2" x 4"	.049	8.619	8	.035	8.619	y	135	80612.174	90000	937.5	7500	1....	H1-1b
232	M467	3/8" x 3/4"	.047	7.572	187	.028	7.572	y	188	10881.153	12656.25	98.876	197.753	1....	H1-1b
233	MT52	3/8" x 3/4"	.046	0	320	.017	0	y	319	11389.697	12656.25	98.876	197.753	2....	H1-1b
234	M465	3/8" x 7/8"	.046	9.076	188	.031	9.076	y	183	11883.355	14765.625	115.358	269.164	2....	H1-1b
235	M471	3/8" x 5/8"	.046	5.278	188	.007	0	y	189	9800.276	10546.875	82.399	137.329	2....	H1-1b
236	M370	3/8" x 1"A	.045	7.864	201	.034	7.864	y	205	14107.834	16875	128	352.5	2....	H1-1b
237	M287	3/8" x 1"A	.044	7.864	132	.032	7.864	y	304	14107.834	16875	128	352.5	2....	H1-1b
238	M451	3/8" x 1"A	.043	3.434	187	.019	3.122	y	169	11225.763	16875	128	352.5	2....	H1-1b
239	M453	3/8" x 1"A	.043	7.864	7	.035	7.864	y	175	14107.834	16875	128	352.5	2....	H1-1b*
240	M469	3/8" x 3/4"	.042	0	188	.018	0	y	188	11389.697	12656.25	98.876	197.753	2....	H1-1b
241	MT36	3/8" x 1"A	.041	7.864	320	.036	7.864	y	323	14107.834	16875	128	352.5	2....	H1-1b
242	MP7	PIPE_2.0	.040	48	6	.004	48		6	14916.096	32130	1871.625	1871.625	1....	H1-1b
243	MP15	PIPE_2.0	.040	48	14	.004	48		14	14916.096	32130	1871.625	1871.625	1....	H1-1b
244	MP3	PIPE_2.0	.040	48	10	.004	48		10	14916.096	32130	1871.625	1871.625	1....	H1-1b
245	MP6	PIPE_2.0	.040	48	6	.004	48		6	14916.096	32130	1871.625	1871.625	1....	H1-1b
246	MP14	PIPE_2.0	.040	48	14	.004	48		14	14916.096	32130	1871.625	1871.625	1....	H1-1b

Envelope AISC 14th(360-10): LRFD Steel Code Checks (Continued)

	Member	Shape	Code C...	Loc[in]	LC	Shear ...	Loc[in]	Dir	LC	phi*Pnc [lb]	phi*Pnt [lb]	phi*Mn y-...	phi*Mn z-...	Cb	Eqn
247	MP9	PIPE_2.0	.040	48	7	.004	48		7	14916.096	32130	1871.625	1871.625	1....	H1-1b
248	MP2	PIPE_2.0	.040	48	10	.004	48		10	14916.096	32130	1871.625	1871.625	1....	H1-1b
249	MP12	PIPE_2.0	.040	48	14	.004	48		14	14916.096	32130	1871.625	1871.625	1....	H1-1b
250	MT56	3/8" x 5/8"	.040	4.241	339	.008	4.241	y	338	10058.644	10546.875	82.399	137.329	2....	H1-1b
251	MP10	PIPE_2.0	.040	48	8	.004	48		8	14916.096	32130	1871.625	1871.625	1....	H1-1b
252	MP11	PIPE_2.0	.040	48	10	.004	48		10	14916.096	32130	1871.625	1871.625	1....	H1-1b
253	M452	3/8" x 1"A	.039	12.332	187	.020	12.332	y	174	10863.546	16875	128	352.5	2....	H1-1b
254	M390	3/8" x 5/8"	.039	4.241	219	.007	4.241	y	218	10058.644	10546.875	82.399	137.329	2....	H1-1b
255	M371	3/8" x 1"A	.038	0	216	.026	8.619	y	204	13608.237	16875	128	352.5	2....	H1-1b
256	M288	3/8" x 1"A	.038	0	292	.024	8.619	y	303	13608.237	16875	128	352.5	2....	H1-1b
257	M307A	3/8" x 5/8"	.037	4.241	151	.007	4.241	y	150	10058.644	10546.875	82.399	137.329	2....	H1-1b
258	M454	3/8" x 1"A	.037	8.619	7	.027	8.619	y	175	13608.237	16875	128	352.5	2....	H1-1b*
259	M473	3/8" x 5/8"	.034	4.241	165	.006	4.241	y	168	10058.644	10546.875	82.399	137.329	2....	H1-1b
260	MT37	3/8" x 1"A	.033	0	337	.028	8.619	y	326	13608.237	16875	128	352.5	2....	H1-1b
261	M463	3/8" x 1"A	.033	10.771	38	.023	0	y	183	12058.995	16875	128	352.5	1....	H1-1b
262	M297A	3/8" x 1"A	.031	0	46	.021	0	y	312	12058.995	16875	128	352.5	2....	H1-1b
263	MT46	3/8" x 1"A	.030	0	43	.023	0	y	319	12058.995	16875	128	352.5	2....	H1-1b
264	M380	3/8" x 1"A	.029	0	37	.022	0	y	192	12058.995	16875	128	352.5	2....	H1-1b
265	MT44	3/8" x 1"A	.029	12.333	44	.021	0	y	3	10862.355	16875	128	352.5	1....	H1-1b
266	M461	3/8" x 1"A	.028	12.333	4	.018	12.333	y	183	10862.355	16875	128	352.5	1....	H1-1b
267	M378	3/8" x 1"A	.027	12.333	199	.021	12.333	y	3	10862.355	16875	128	352.5	2....	H1-1b
268	M295A	3/8" x 1"A	.027	12.333	136	.017	12.333	y	12	10862.355	16875	128	352.5	2....	H1-1b
269	MT64	3/8" x 1"A	.003	0	17	.000	10.449	y	28	12300.705	16875	128	352.5	2....	H1-1b
270	M481	3/8" x 1"A	.003	0	13	.000	0	y	32	12300.705	16875	128	352.5	2....	H1-1b
271	M315A	3/8" x 1"A	.003	0	13	.000	10.449	y	32	12300.705	16875	128	352.5	2....	H1-1b
272	M398	3/8" x 1"A	.003	0	17	.000	0	y	28	12300.705	16875	128	352.5	2....	H1-1b
273	M367	3/8" x 1"A	.001	10.47	16	.000	10.47	y	44	12285.053	16875	128	352.5	2....	H1-1b
274	M284	3/8" x 1"A	.001	10.47	12	.000	10.47	y	40	12285.053	16875	128	352.5	2....	H1-1b
275	MT33	3/8" x 1"A	.001	10.47	16	.000	10.47	y	36	12285.053	16875	128	352.5	2....	H1-1b
276	M450	3/8" x 1"A	.001	10.47	12	.000	10.47	y	48	12285.053	16875	128	352.5	2....	H1-1b
277	M366	3/8" x 1"A	.001	11.321	16	.000	11.321	y	49	11642.12	16875	128	352.5	1....	H1-1b
278	M283	3/8" x 1"A	.001	11.321	12	.000	11.321	y	49	11642.12	16875	128	352.5	1....	H1-1b
279	MT32	3/8" x 1"A	.001	11.321	16	.000	11.321	y	49	11642.12	16875	128	352.5	1....	H1-1b
280	M449	3/8" x 1"A	.001	11.321	12	.000	11.321	y	49	11642.12	16875	128	352.5	1....	H1-1b
281	M357	3/8" x 4"	.001	10.486	46	.000	10.486	z	44	50515.401	67500	527.344	5625	2....	H1-1b
282	M274	3/8" x 4"	.001	10.486	42	.000	10.486	z	40	50515.401	67500	527.344	5625	2....	H1-1b
283	MT23	3/8" x 4"	.001	10.486	38	.000	10.486	z	36	50515.401	67500	527.344	5625	2....	H1-1b
284	M440	3/8" x 4"	.001	10.486	46	.000	10.486	z	48	50515.401	67500	527.344	5625	2....	H1-1b
285	M439	1/2" x 4"	.000	11.321	43	.000	11.321	z	49	74422.245	90000	937.5	7500	1....	H1-1b
286	M273	1/2" x 4"	.000	11.321	46	.000	11.321	z	49	74422.245	90000	937.5	7500	1....	H1-1b
287	MT22	1/2" x 4"	.000	11.321	47	.000	11.321	z	49	74422.245	90000	937.5	7500	1....	H1-1b
288	M356	1/2" x 4"	.000	11.321	49	.000	11.321	z	49	74422.245	90000	937.5	7500	1....	H1-1b

Envelope AISI S100-12: LRFD Cold Formed Steel Code Checks

Member	Shape	Code ...	Loc[in]	LC	Shear ...	Loc[in]	Dir	LC	phi*Pn[lb]	phi*Tn[lb]	phi*Mny...	phi*Mnz...	Cb	Cmyy	Cmzz	Eqn
No Data to Print ...																

APPENDIX D

ADDITIONAL CALCULATIONS

Trylon

Analysis date: 6/9/2022

BOLT TOOL 1.5.2

Project Data	
Job Code:	211539
Carrier Site ID:	BU 823666
Carrier Site Name:	Deep River/Rt 9

Code	
Design Standard:	TIA-222-H
Slip Check:	No
Pretension Standard:	TIA-222-H

Bolt Properties		
Connection Type:	Bolt	
Diameter:	0.625	in
Grade:	A325	--
Yield Strength (Fy):	92	ksi
Ultimate Strength (Fu):	120	ksi
Number of Bolts:	4	--
Threads Included:	Yes	--
Double Shear:	No	--
Connection Pipe Size:	-	in

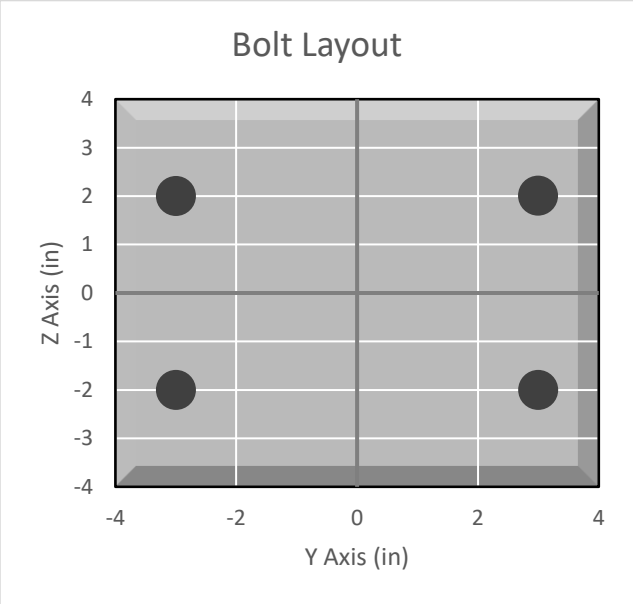

Connection Description
Standoff to Collar

Bolt Check*		
Tensile Capacity (ϕT_n):	20340.1	lbs
Shear Capacity (ϕV_n):	13805.8	lbs
Tension Force (T_u):	3889.8	lbs
Shear Force (V_u):	616.8	lbs
Tension Usage:	18.2%	--
Shear Usage:	4.3%	--
Interaction:	18.2%	Pass
Controlling Member:	M541	--
Controlling LC:	44	--

**Rating per TIA-222-H Section 15.5*

1825 W. Walnut Hill Lane, Suite 120
Irving, Texas 75038

Trylon

Analysis date: 6/9/2022

BOLT TOOL 1.5.2

Project Data	
Job Code:	211539
Carrier Site ID:	BU 823666
Carrier Site Name:	Deep River/Rt 9

Code	
Design Standard:	TIA-222-H
Slip Check:	Yes
Pretension Standard:	TIA-222-H

Bolt Properties		
Connection Type:	U-Bolt	
Diameter:	0.625	in
Grade:	A307	--
Yield Strength (Fy):	36	ksi
Ultimate Strength (Fu):	60	ksi
Number of Bolts:	2	--
Threads Included:	Yes	--
Double Shear:	No	--
Connection Pipe Size:	2.875	in

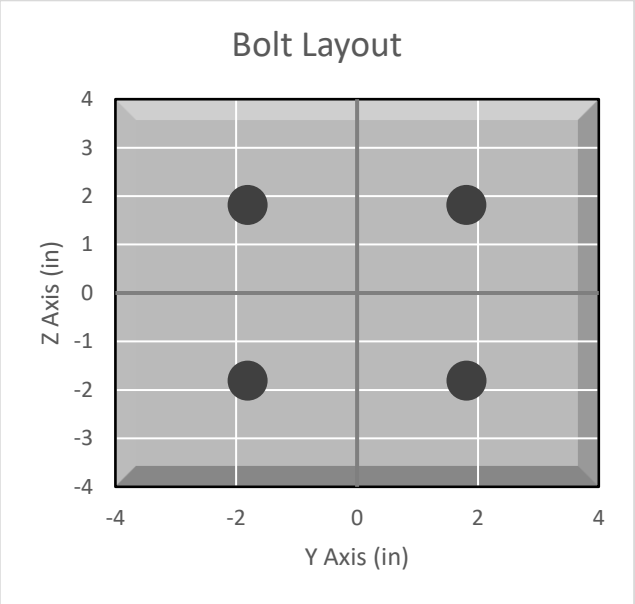

Connection Description
Mount Pipes to Horizontals

Bolt Check*		
Tensile Capacity (ϕT_n):	10170.1	lbs
Shear Capacity (ϕV_n):	6902.9	lbs
Tension Force (T_u):	726.1	lbs
Shear Force (V_u):	99.7	lbs
Tension Usage:	6.8%	--
Shear Usage:	1.4%	--
Interaction:	6.8%	Pass
Controlling Member:	M519	--
Controlling LC:	10	--

**Rating per TIA-222-H Section 15.5*

Slip Check*		
Sliding Capacity (ϕR_{ns}):	14241.3	lbs
Torsion Capacity (ϕR_{nr}):	1706.0	lb-ft
Sliding Force (V_{us}):	2.0	lbs
Torsional Force (T_{ur}):	316.6	lb-ft
Sliding Usage:	0.0%	--
Torsion Usage:	18.3%	--
Interaction:	18.3%	Pass
Controlling Member:	M519	--
Controlling LC:	10	--

**Rating per TIA-222-H Section 15.5*

APPENDIX E

SUPPLEMENTAL DRAWINGS

PARTS LIST						
ITEM	QTY	PART NO.	PART DESCRIPTION	LENGTH	UNIT WT.	NET WT.
1	4	X-LPP-CW	LOW PROFILE PLATFORM CORNER WELDMENT		198.75	795.01
2	4	X-LPP-SA12	SIDE ARM WELDMENT FOR 12' LOW PROFILE PLATFORMS		119.21	476.84
3	4	X-RM4HD	WELDMENT FOR 4-SIDED HEAVY DUTY RING MOUNT		71.27	285.08
4	4	X-LPP-W12	WALKWAY FOR 12' LOW PROFILE PLATFORM		86.48	345.92
5	16	X-LPP-PC	FACE PIPE CONNECTION BRACKET FORTRESS PLATFORM		7.01	112.15
6	16	X-SCX3-FR	FORTRESS CROSSOVER PLATE		6.61	105.82
7	16	X-LPP-A7	CORNER WELDMENT ATTACHMENT ANGLE	2 1/2 in	1.27	20.33
8	8	X-LPP-H	HINGE FOR LOW PROFILE PLATFORM WALKWAY		2.78	22.22
9	4	P30150	2-7/8" X 150" (2-1/2" SCH. 40) GALVANIZED PIPE	150 in	76.94	307.75
10	16	G58R-48	5/8" x 48" THREADED ROD (HDG.)	48 in	0.40	6.38
10	16	G58R-24	5/8" x 24" THREADED ROD (HDG.)	24 in	0.40	6.38
11	8	G58R-8	5/8" x 8" THREADED ROD (HDG.)		0.70	5.58
12	64	X-UB5300	5/8" X 3" X 5-1/4" X 2-1/2" U-BOLT (HDG.)		1.15	73.56
13	32	X-UB5258	5/8" X 2-5/8" X 4-1/2" X 2" U-BOLT (HDG.)		1.00	32.00
14	16	X-UB5304	5/8" X 3" X 4-1/4" X 2-1/2" U-BOLT (HDG.)		0.98	15.60
15	64	G58214	5/8" x 2-1/4" HDG HEX BOLT GR5		0.29	18.66
16	256	G58FW	5/8" HDG USS FLATWASHER	1/8 in	0.07	18.04
17	272	G58LW	5/8" HDG LOCKWASHER		0.03	7.10
18	272	G58NUT	5/8" HDG HEAVY 2H HEX NUT		0.13	35.33
					TOTAL WT. #	2777.35

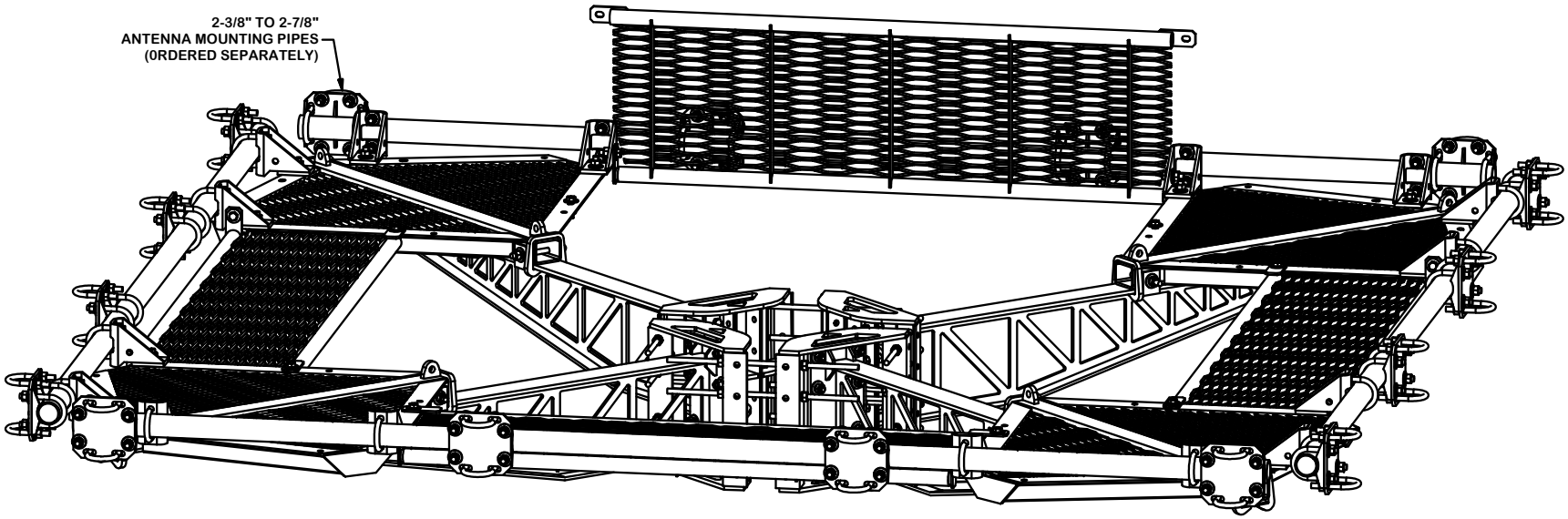

TOLERANCE NOTES

TOLERANCES ON DIMENSIONS, UNLESS OTHERWISE NOTED ARE:
SAWED, SHEARED AND GAS CUT EDGES *(± 0.030")*
DRILLED AND GAS CUT HOLES *(± 0.030")* - NO CONING OF HOLES
LASER CUT EDGES AND HOLES *(± 0.010")* - NO CONING OF HOLES
BENDS ARE ± 1/2 DEGREE
ALL OTHER MACHINING *(± 0.030")*
ALL OTHER ASSEMBLY *(± 0.060")*

PROPRIETARY NOTE:
THE DATA AND TECHNIQUES CONTAINED IN THIS DRAWING ARE PROPRIETARY INFORMATION OF VALMONT INDUSTRIES AND CONSIDERED A TRADE SECRET. ANY USE OR DISCLOSURE WITHOUT THE CONSENT OF VALMONT INDUSTRIES IS STRICTLY PROHIBITED.

DESCRIPTION
12' FORTRESS™
QUAD-PLATFORM MOUNT
WITH WALKWAYS

SITE PRO 1
A valmont COMPANY

Engineering Support Team:
1-888-753-7446

Locations:
New York, NY
Atlanta, GA
Los Angeles, CA
Plymouth, IN
Salem, OR
Dallas, TX

CPD NO.	DRAWN BY	ENG. APPROVAL	PART NO.
	CEK 8/9/2017		F4P-12W

CLASS	SUB	DRAWING USAGE	CHECKED BY	DWG. NO.
81	02	CUSTOMER	BMC 8/30/2017	F4P-12W

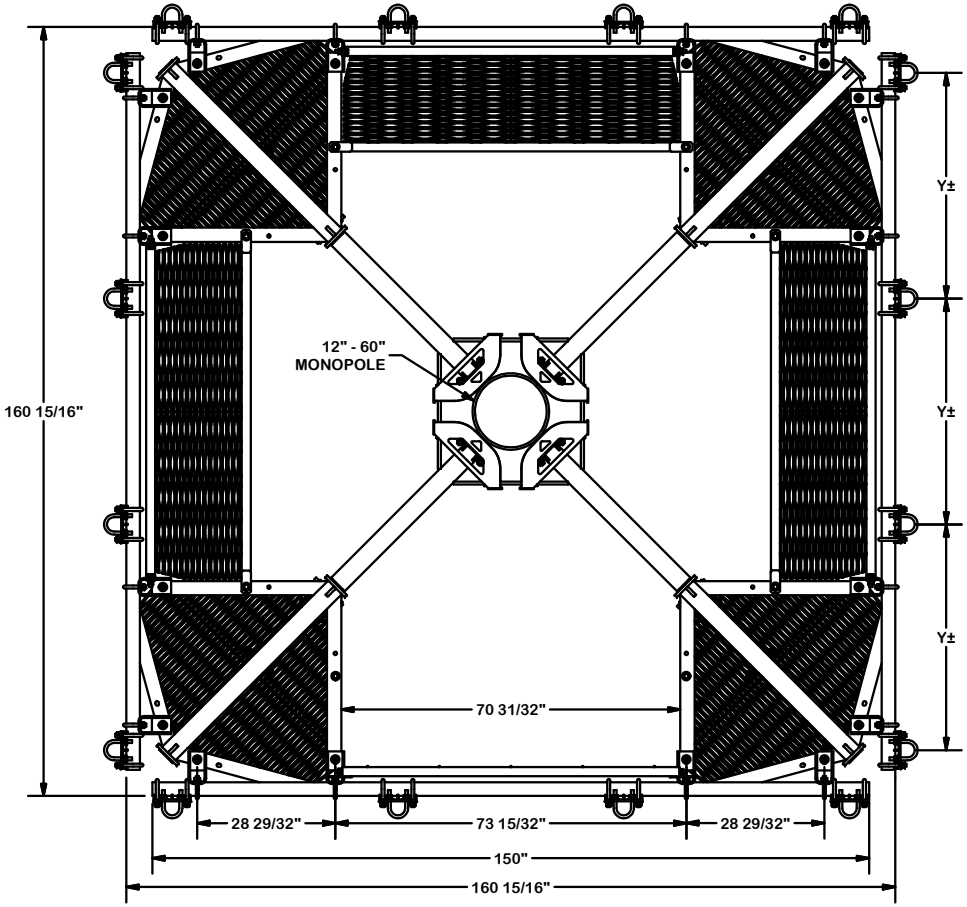

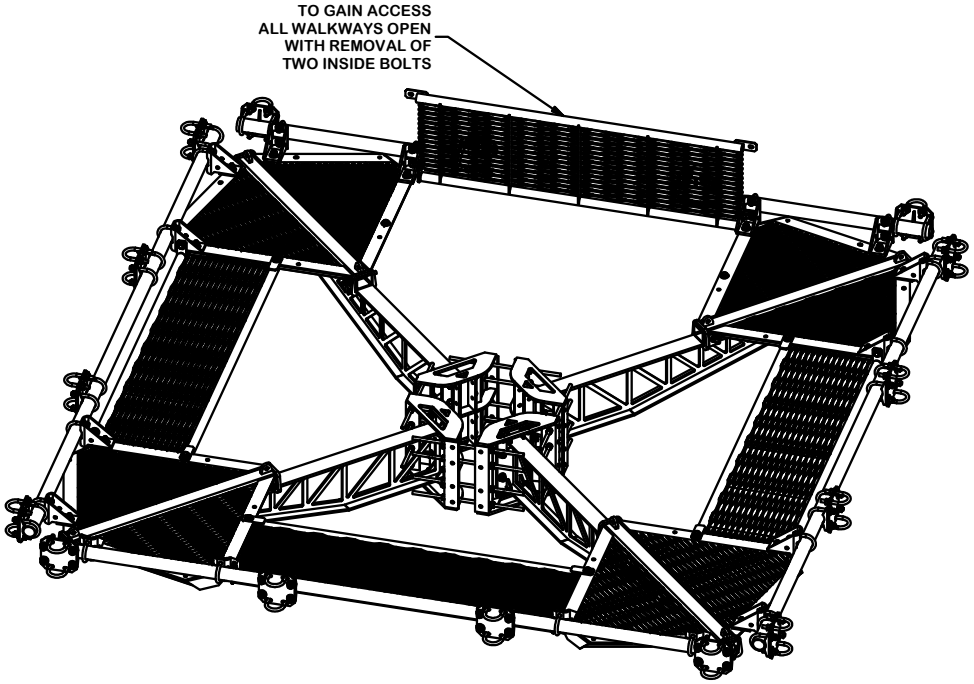

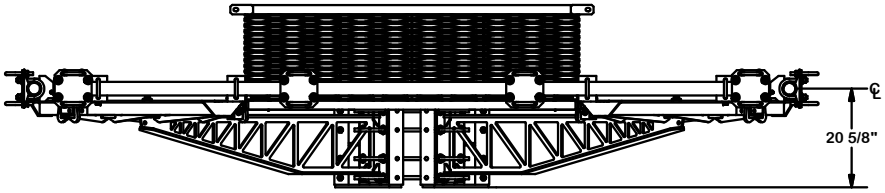

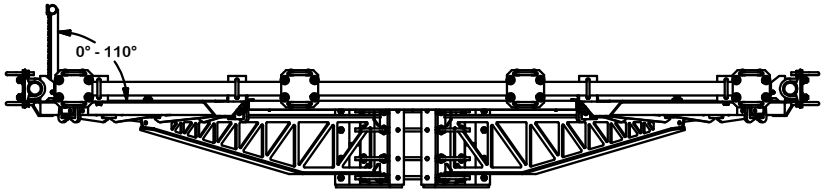

TOLERANCE NOTES

TOLERANCES ON DIMENSIONS, UNLESS OTHERWISE NOTED ARE:
SAWED, SHEARED AND GAS CUT EDGES *(± 0.030")*
DRILLED AND GAS CUT HOLES *(± 0.030")* - NO CONING OF HOLES
LASER CUT EDGES AND HOLES *(± 0.010")* - NO CONING OF HOLES
BENDS ARE ± 1/2 DEGREE
ALL OTHER MACHINING *(± 0.030")*
ALL OTHER ASSEMBLY *(± 0.060")*

PROPRIETARY NOTE:
THE DATA AND TECHNIQUES CONTAINED IN THIS DRAWING ARE PROPRIETARY INFORMATION OF VALMONT INDUSTRIES AND CONSIDERED A TRADE SECRET. ANY USE OR DISCLOSURE WITHOUT THE CONSENT OF VALMONT INDUSTRIES IS STRICTLY PROHIBITED.

DESCRIPTION
12' FORTRESS™
QUAD-PLATFORM MOUNT
WITH WALKWAYS

SITE PRO 1
A valmont COMPANY

Engineering Support Team:
1-888-753-7446

Locations:
New York, NY
Atlanta, GA
Los Angeles, CA
Plymouth, IN
Salem, OR
Dallas, TX

CPD NO.	DRAWN BY	ENG. APPROVAL	PART NO.
	CEK 8/9/2017		F4P-12W

CLASS	SUB	DRAWING USAGE	CHECKED BY	DWG. NO.
81	02	CUSTOMER	BMC 8/30/2017	F4P-12W

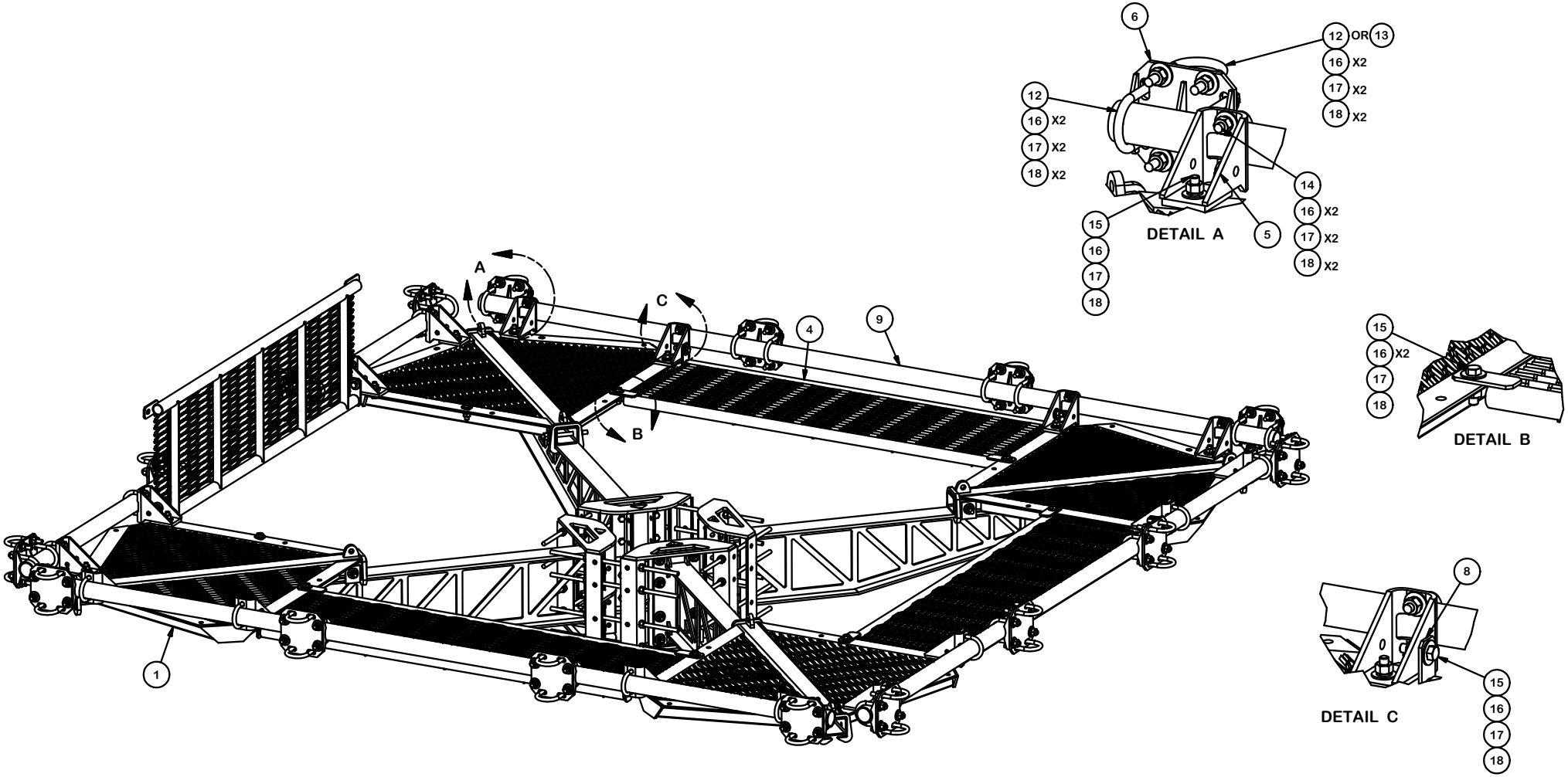

TOLERANCE NOTES

TOLERANCES ON DIMENSIONS, UNLESS OTHERWISE NOTED ARE:
SAWED, SHEARED AND GAS CUT EDGES *(± 0.030")*
DRILLED AND GAS CUT HOLES *(± 0.030")* - NO CONING OF HOLES
LASER CUT EDGES AND HOLES *(± 0.010")* - NO CONING OF HOLES
BENDS ARE ± 1/2 DEGREE
ALL OTHER MACHINING *(± 0.030")*
ALL OTHER ASSEMBLY *(± 0.060")*

PROPRIETARY NOTE:
THE DATA AND TECHNIQUES CONTAINED IN THIS DRAWING ARE PROPRIETARY INFORMATION OF VALMONT INDUSTRIES AND CONSIDERED A TRADE SECRET. ANY USE OR DISCLOSURE WITHOUT THE CONSENT OF VALMONT INDUSTRIES IS STRICTLY PROHIBITED.

DESCRIPTION
12' FORTRESS™
QUAD-PLATFORM MOUNT
WITH WALKWAYS

SITE PRO 1
A valmont COMPANY

Engineering Support Team:
1-888-753-7446

Locations:
New York, NY
Atlanta, GA
Los Angeles, CA
Plymouth, IN
Salem, OR
Dallas, TX

CPD NO.	DRAWN BY	ENG. APPROVAL	PART NO.
	CEK 8/9/2017		F4P-12W

CLASS	SUB	DRAWING USAGE	CHECKED BY	DWG. NO.
81	02	CUSTOMER	BMC 8/30/2017	F4P-12W

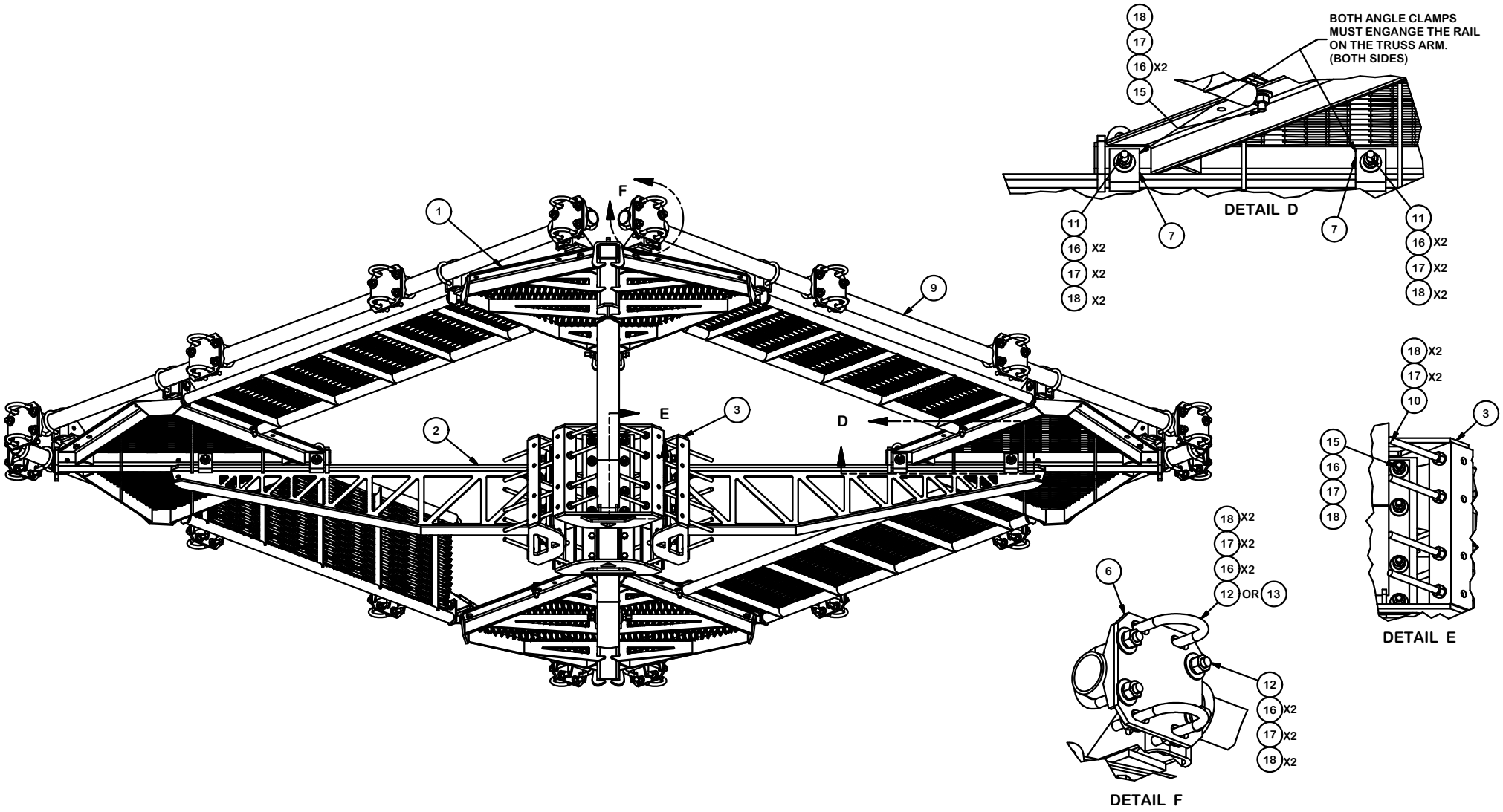

TOLERANCE NOTES

TOLERANCES ON DIMENSIONS, UNLESS OTHERWISE NOTED ARE:
SAWED, SHEARED AND GAS CUT EDGES *(± 0.030")*
DRILLED AND GAS CUT HOLES *(± 0.030")* - NO CONING OF HOLES
LASER CUT EDGES AND HOLES *(± 0.010")* - NO CONING OF HOLES
BENDS ARE ± 1/2 DEGREE
ALL OTHER MACHINING *(± 0.030")*
ALL OTHER ASSEMBLY *(± 0.060")*

PROPRIETARY NOTE:
THE DATA AND TECHNIQUES CONTAINED IN THIS DRAWING ARE PROPRIETARY INFORMATION OF VALMONT INDUSTRIES AND CONSIDERED A TRADE SECRET. ANY USE OR DISCLOSURE WITHOUT THE CONSENT OF VALMONT INDUSTRIES IS STRICTLY PROHIBITED.

DESCRIPTION
12' FORTRESS™
QUAD-PLATFORM MOUNT
WITH WALKWAYS

SITE PRO 1
A valmont COMPANY

Engineering Support Team:
1-888-753-7446

Locations:
New York, NY
Atlanta, GA
Los Angeles, CA
Plymouth, IN
Salem, OR
Dallas, TX

CPD NO.	DRAWN BY	ENG. APPROVAL	PART NO.
	CEK 8/9/2017		F4P-12W

CLASS	SUB	DRAWING USAGE	CHECKED BY	DWG. NO.
81	02	CUSTOMER	BMC 8/30/2017	F4P-12W

Date: **June 14, 2022**

MTS Engineering, P.L.LC.
1717 S. Boulder, Suite 300
Tulsa, OK 74119
(918) 587-4630

Subject:	**Structural Analysis Report**	
Carrier Designation:	***T-Mobile* Co-Locate**	
	Site Number:	CT11237C
	Site Name:	Deep River/Rt 9
Crown Castle Designation:	**BU Number:**	823666
	Site Name:	Deep River/Rt 9
	JDE Job Number:	713860
	Work Order Number:	2127808
	Order Number:	613481 Rev. 1
Engineering Firm Designation:	**Project Number:**	135998.006.01
Site Data:	**15 Pent Rd., Deep River, Middlesex County, CT**	
	Latitude *41° 22' 22.17"*, Longitude *-72° 26' 3.97"*	
	178 Foot - Monopole Tower	

We are pleased to submit this **"Structural Analysis Report"** to determine the structural integrity of the above-mentioned tower.

The purpose of the analysis is to determine acceptability of the tower stress level. Based on our analysis we have determined the tower stress level for the structure and foundation, under the following load case, to be:

LC7: Proposed Equipment Configuration **Sufficient Capacity – 87.1%**

This analysis utilizes an ultimate 3-second gust wind speed of 124 mph as required by the 2018 Connecticut State Building Code. Applicable Standard references and design criteria are listed in Section 2 - Analysis Criteria.

Structural analysis prepared by: Clint Coody

Respectfully submitted by: MTS Engineering, P.L.LC.
COA: BER: 2386985

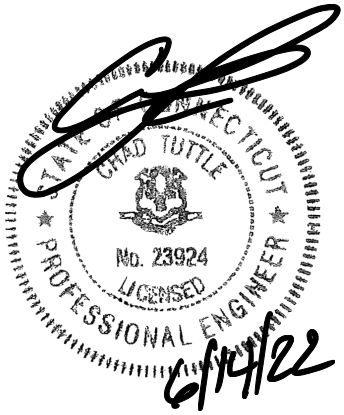

Chad E. Tuttle, P.E.

tnxTower Report - version 8.1.1.0

TABLE OF CONTENTS

1) INTRODUCTION

2) ANALYSIS CRITERIA
- Table 1 - Proposed Equipment Configuration
- Table 2 - Other Considered Equipment

3) ANALYSIS PROCEDURE
- Table 3 - Documents Provided
- 3.1) Analysis Method
- 3.2) Assumptions

4) ANALYSIS RESULTS
- Table 4 - Section Capacity (Summary)
- Table 5 – Tower Component Stresses vs. Capacity
- 4.1) Recommendations

5) APPENDIX A
- tnxTower Output

6) APPENDIX B
- Base Level Drawing

7) APPENDIX C
- Additional Calculations

1) INTRODUCTION

This tower is a 178 ft. Monopole tower designed by Pirod Manufactures Inc.

2) ANALYSIS CRITERIA

TIA-222 Revision:	TIA-222-H
Risk Category:	II
Wind Speed:	124 mph
Exposure Category:	B
Topographic Factor:	1
Ice Thickness:	1 in
Wind Speed with Ice:	50 mph
Service Wind Speed:	60 mph

Table 1 - Proposed Equipment Configuration

Mounting Level (ft)	Center Line Elevation (ft)	Number of Antennas	Antenna Manufacturer	Antenna Model	Number of Feed Lines	Feed Line Size (in)
178.0	178.0	3	Ericsson	AIR 6419 B41_TMO	3	1-5/8
		3	Ericsson	RADIO 4449 B71 B85A_T-MOBILE		
		3	Ericsson	RADIO 4460 B2/B25 B66_TMO		
		3	RFS Celwave	APXVAARR24_43-U-NA20		
		1	Site Pro 1	F4P-12W Platform Mount		

Table 2 - Other Considered Equipment

Mounting Level (ft)	Center Line Elevation (ft)	Number of Antennas	Antenna Manufacturer	Antenna Model	Number of Feed Lines	Feed Line Size (in)
168.0	170.0	3	Andrew	LNX-6514DS-A1M	13	1-5/8
		6	JMA Wireless	MX06FRO660-03		
		1	Raycap	RVZDC-6627-PF-48		
		3	Samsung Telecom.	MT6407-77A		
		3	Samsung Telecom.	RFV01U-D1A		
		3	Samsung Telecom.	RFV01U-D2A		
	168.0	1	JMA Wireless	91900314 Dual Bracket Kit		
		1	--	Platform Mount [LP 303-1]		
160.0	160.0	3	CCI Antennas	TPA-65R-LCUUUU-H8	12 4 2	1-5/8 7/16 3/8
		1	Commscope	SBNH-1D6565C		
		3	Ericsson	RRUS 11 B12		
		1	Ericsson	RRUS 32		
		2	Ericsson	RRUS 32 B2		
		3	Ericsson	RRUS 32 B30		
		3	Kaelus	DBC0061F1V51-2		
		2	KMW	AM-X-CD-17-65-00T-RET		
		6	Powerwave Tech.	7020.00		
		6	Powerwave Tech.	LGP21401		
		3	Powerwave Tech.	RA21.7770.00		

Mounting Level (ft)	Center Line Elevation (ft)	Number of Antennas	Antenna Manufacturer	Antenna Model	Number of Feed Lines	Feed Line Size (in)
		1	Raycap	DC6-48-60-18-8C-EV		
		1	Raycap	DC6-48-60-18-8F		
		1	--	Platform Mount [LP 303-1_HR-1]		
148.0	148.0	3	Fujitsu	TA08025-B604	1	1-1/2
		3	Fujitsu	TA08025-B605		
		3	JMA Wireless	MX08FRO665-20		
		1	Raycap	RDIDC-9181-PF-48		
		1	Commscope	MC-PK8-DSH		

3) ANALYSIS PROCEDURE

Table 3 - Documents Provided

Document	Reference	Source
Tower Manufacturer Drawing	3585272	CCI Sites
Foundation Drawing	3845247	CCI Sites
Geotech Report	3585271	CCI Sites
Crown CAD Package	Date: 06/10/2022	CCI Sites

3.1) Analysis Method

tnxTower (version 8.1.1.0), a commercially available analysis software package, was used to create a three-dimensional model of the tower and calculate member stresses for various loading cases. Selected output from the analysis is included in Appendix A. When applicable, Crown Castle has calculated and provided the effective area for panel antennas using approved methods following the intent of the TIA-222 standard.

3.2) Assumptions

1) The tower and structures were maintained in accordance with the - TIA-222 standard.
2) The configuration of antennas, transmission cables, mounts and other appurtenances are as specified in Tables 1 and 2 and the referenced drawings.

This analysis may be affected if any assumptions are not valid or have been made in error. We should be notified to determine the effect on the structural integrity of the tower.

4) ANALYSIS RESULTS

Table 4 - Section Capacity (Summary)

Section No.	Elevation (ft)	Component Type	Size	Critical Element	P (K)	SF*P_allow (K)	% Capacity	Pass / Fail
L1	178 - 164.25	Pole	TP26x12.75x0.25	1	-8.753	1118.082	11.3	Pass
L2	164.25 - 129.667	Pole	TP34.063x22.689x0.313	2	-20.352	1985.424	37.1	Pass
L3	129.667 - 96	Pole	TP41.75x32.275x0.375	3	-28.381	2938.761	44.0	Pass
L4	96 - 63.1667	Pole	TP49.063x39.821x0.375	4	-37.897	3460.495	53.2	Pass
L5	63.1667 - 31.1667	Pole	TP56.125x46.957x0.375	5	-48.719	3964.233	60.1	Pass
L6	31.1667 - 0	Pole	TP62.938x53.847x0.375	6	-63.276	4574.010	66.6	Pass
							Summary	
						Pole (L6)	66.6	Pass
						Rating =	66.6	Pass

Table 5 - Tower Component Stresses vs. Capacity

Notes	Component	Elevation (ft)	% Capacity	Pass / Fail
1,2	Anchor Rods	Base	64.3	Pass
1,2	Base Plate	Base	87.1	Pass
1,2	Base Foundation (Structure)	Base	35.5	Pass
1,2	Base Foundation (Soil Interaction)	Base	59.4	Pass

Structure Rating (max from all components) =	**87.1%**

Notes:
1) See additional documentation in “Appendix C – Additional Calculations” for calculations supporting the % capacity consumed.
2) Rating per TIA-222-H Section 15.5.

4.1) Recommendations

The tower and its foundations have sufficient capacity to carry the proposed load configuration. No modifications are required at this time.

APPENDIX A

TNXTOWER OUTPUT

Section	Length (ft)	Number of Sides	Thickness (in)	Socket Length (ft)	Top Dia (in)	Bot Dia (in)	Grade	Weight (K)
1	13.750	18	0.250	2.917	12.750	26.000	A572-65	0.7
2	37.500	18	0.313	3.833	22.689	34.063		3.6
3	37.500	18	0.375	4.667	32.275	41.750		5.6
4	37.500	18	0.375	5.500	39.821	49.063		6.7
5	37.500	18	0.375	6.250	46.957	56.125		7.8
6	37.417	18	0.375		53.847	62.938		8.8
								33.1

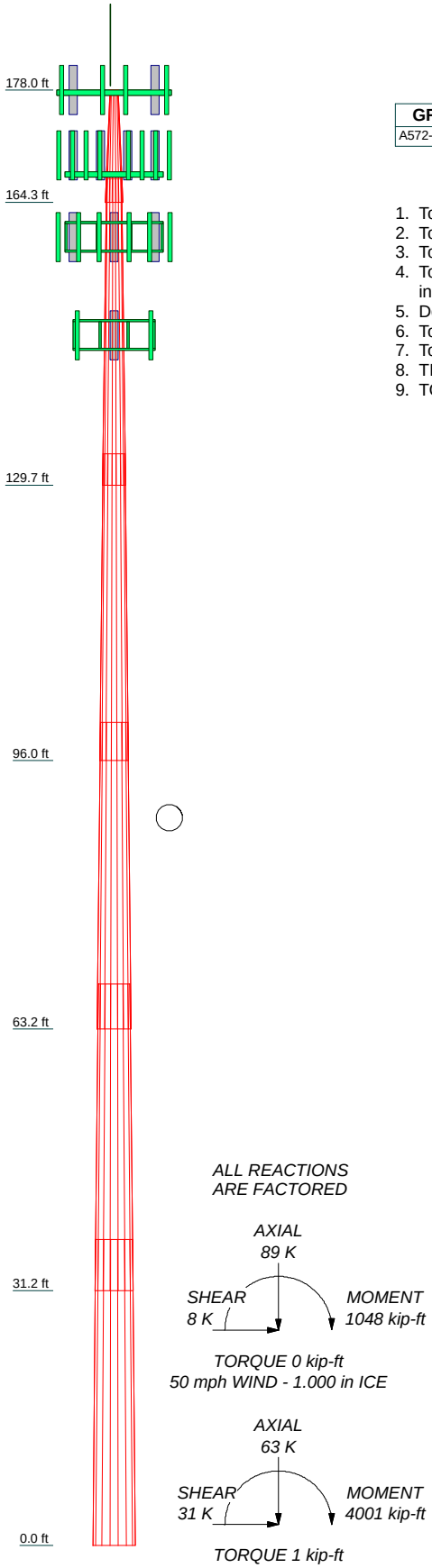

MATERIAL STRENGTH

GRADE	Fy	Fu	GRADE	Fy	Fu
A572-65	65 ksi	80 ksi			

TOWER DESIGN NOTES

1. Tower is located in Middlesex County, Connecticut.
2. Tower designed for Exposure B to the TIA-222-H Standard.
3. Tower designed for a 124 mph basic wind in accordance with the TIA-222-H Standard.
4. Tower is also designed for a 50 mph basic wind with 1.00 in ice. Ice is considered to increase in thickness with height.
5. Deflections are based upon a 60 mph wind.
6. Tower Risk Category II.
7. Topographic Category 1 with Crest Height of 0.000 ft
8. TIA-222-H Annex-S
9. TOWER RATING: 66.6%

B+T GRP

MTS Engineering, P.L.LC.
1717 S. Boulder, Suite 300
Tulsa, OK 74119
Phone: (918) 587-4630
FAX: (918) 295-0265

Job: ***135998.006.01 - Deep River Rt9, CT (BU# 823666***		
Project:		
Client: Crown Castle	Drawn by: Rakshak	App'd:
Code: TIA-222-H	Date: 06/14/22	Scale: NTS
Path:		Dwg No. E-1

TIA-222-H - 124 mph/50 mph 1.000 in Ice Exposure B

Vx Vz

Maximum Values

Mx Mz

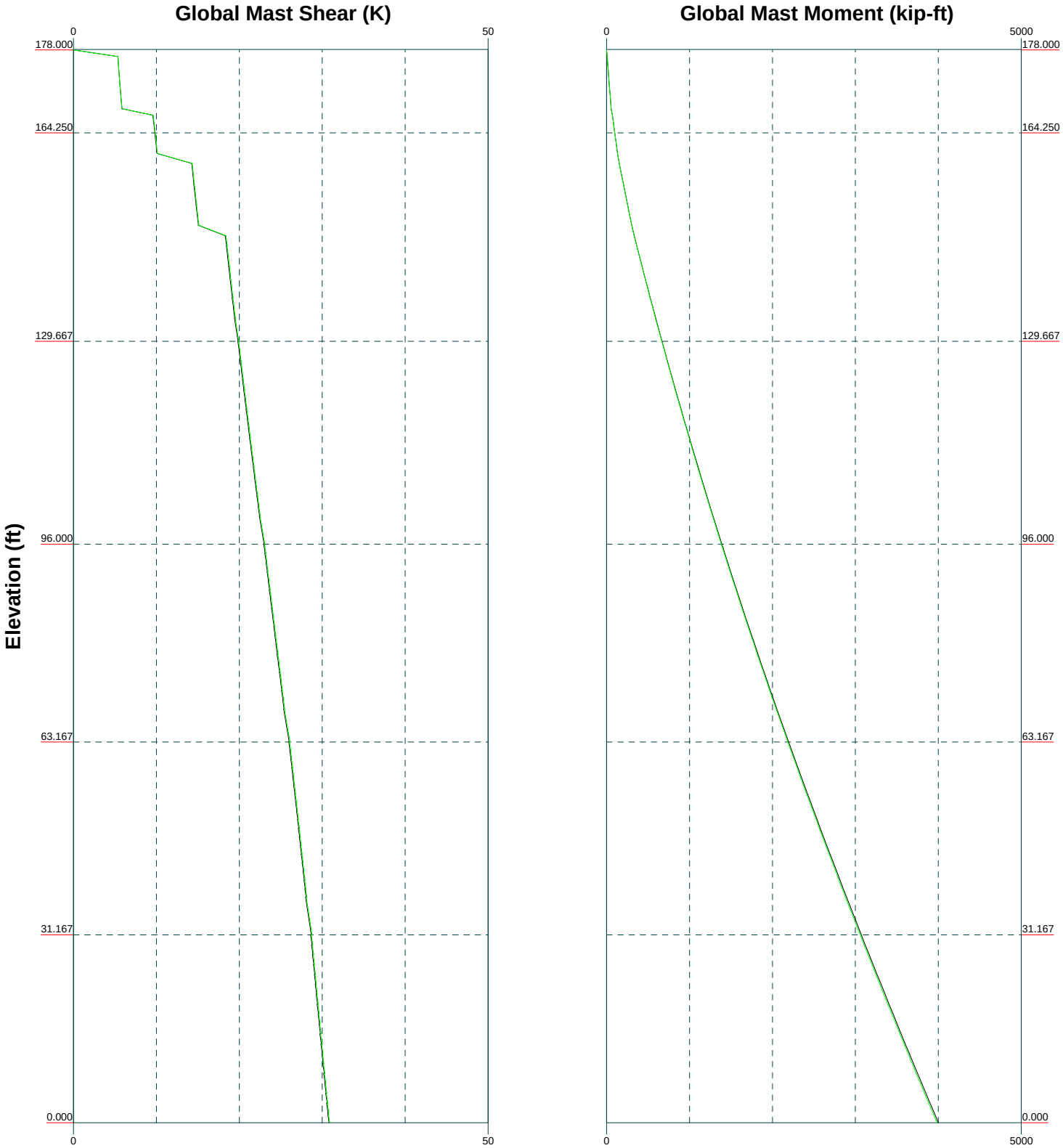

MTS Engineering, P.L.LC.
1717 S. Boulder, Suite 300
Tulsa, OK 74119
Phone: (918) 587-4630
FAX: (918) 295-0265

Job: ***135998.006.01 - Deep River Rt9, CT (BU# 823666***		
Project:		
Client: Crown Castle	Drawn by: Rakshak	App'd:
Code: TIA-222-H	Date: 06/14/22	Scale: NTS
Path:		Dwg No. E-4

TIA-222-H - Service - 60 mph

Maximum Values

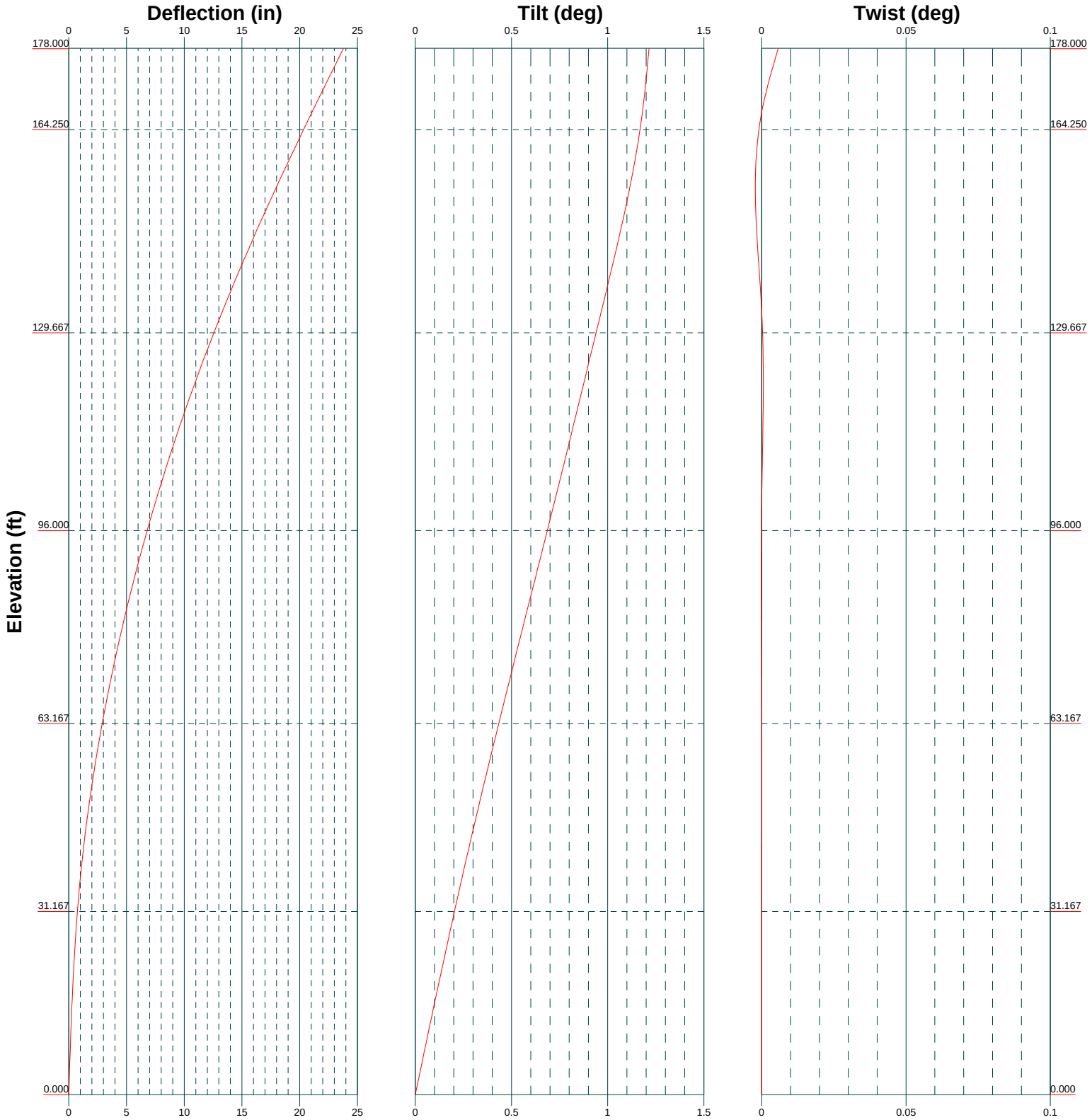

MTS Engineering, P.L.LC.
1717 S. Boulder, Suite 300
Tulsa, OK 74119
Phone: (918) 587-4630
FAX: (918) 295-0265

Job: ***135998.006.01 - Deep River Rt9, CT (BU# 823666***		
Project:		
Client: Crown Castle	Drawn by: Rakshak	App'd:
Code: TIA-222-H	Date: 06/14/22	Scale: NTS
Path:		Dwg No. E-5

Feed Line Distribution Chart
0' - 178'

Round | Flat | App In Face | App Out Face | Truss Leg

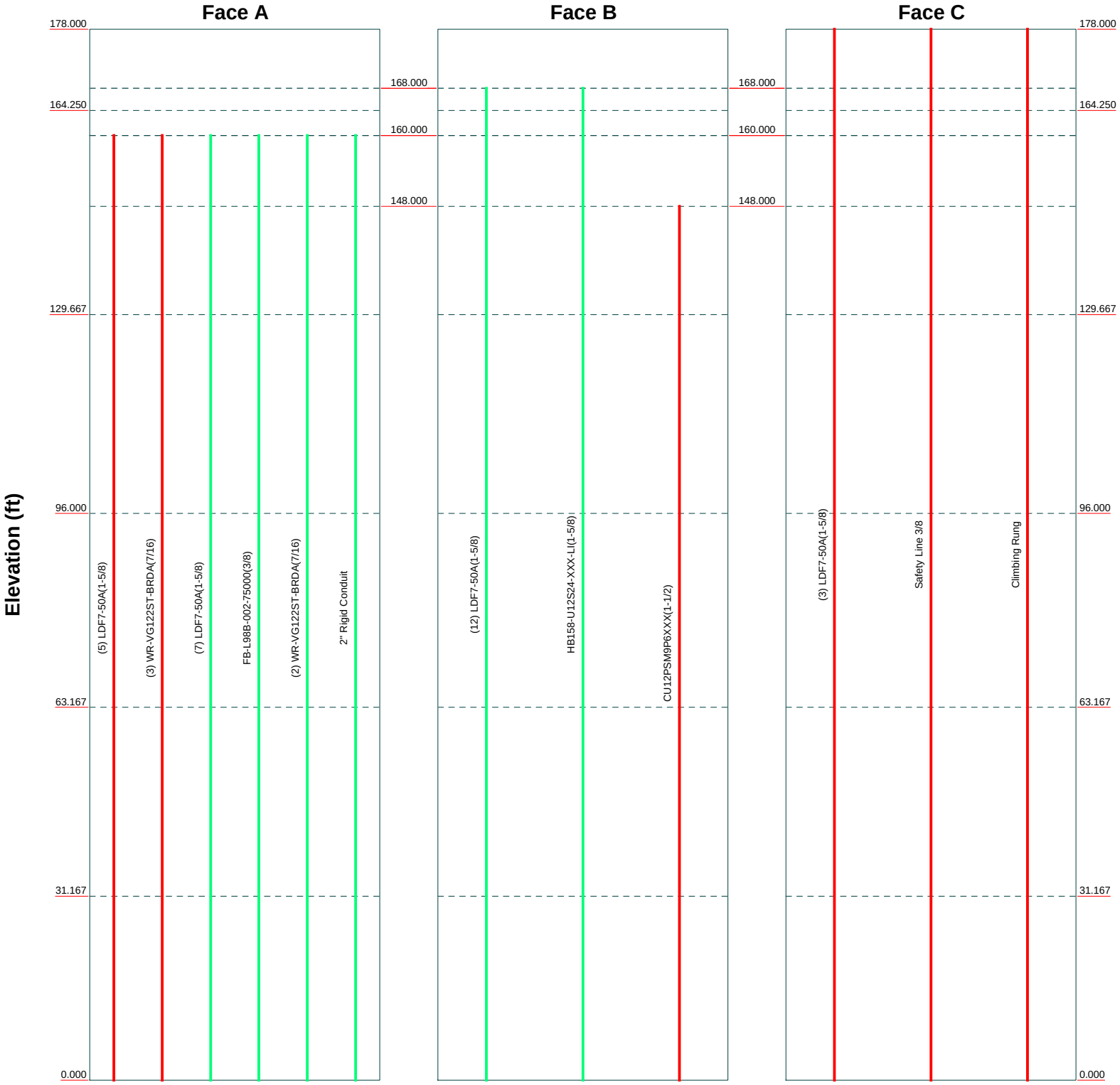

B+T GRP

MTS Engineering, P.L.LC.
1717 S. Boulder, Suite 300
Tulsa, OK 74119
Phone: (918) 587-4630
FAX: (918) 295-0265

Job: ***135998.006.01 - Deep River Rt9, CT (BU# 823666***		
Project:		
Client: Crown Castle	Drawn by: Rakshak	App'd:
Code: TIA-222-H	Date: 06/14/22	Scale: NTS
Path:		Dwg No. E-7

Tower Input Data

The tower is a monopole.
This tower is designed using the TIA-222-H standard.
The following design criteria apply:

Tower is located in Middlesex County, Connecticut.
Tower base elevation above sea level: 95.000 ft.
Basic wind speed of 124 mph.
Risk Category II.
Exposure Category B.
Simplified Topographic Factor Procedure for wind speed-up calculations is used.
Topographic Category: 1.
Crest Height: 0.000 ft.
Nominal ice thickness of 1.000 in.
Ice thickness is considered to increase with height.
Ice density of 56.000 pcf.
A wind speed of 50 mph is used in combination with ice.
Temperature drop of 50.000 °F.
Deflections calculated using a wind speed of 60 mph.
TIA-222-H Annex-S.
A non-linear (P-delta) analysis was used.
Pressures are calculated at each section.
Stress ratio used in pole design is 1.
Tower analysis based on target reliabilities in accordance with Annex S.
Load Modification Factors used: $K_{es}(F_w) = 0.95$, $K_{es}(t_i) = 0.85$.
Maximum demand-capacity ratio is: 1.05.
Local bending stresses due to climbing loads, feed line supports, and appurtenance mounts are not considered.

Options

Consider Moments - Legs
Consider Moments - Horizontals
Consider Moments - Diagonals
Use Moment Magnification
√ Use Code Stress Ratios
√ Use Code Safety Factors - Guys
Escalate Ice
Always Use Max Kz
Use Special Wind Profile
Include Bolts In Member Capacity
Leg Bolts Are At Top Of Section
Secondary Horizontal Braces Leg
Use Diamond Inner Bracing (4 Sided)
SR Members Have Cut Ends
SR Members Are Concentric

Distribute Leg Loads As Uniform
Assume Legs Pinned
√ Assume Rigid Index Plate
√ Use Clear Spans For Wind Area
Use Clear Spans For KL/r
Retension Guys To Initial Tension
√ Bypass Mast Stability Checks
√ Use Azimuth Dish Coefficients
√ Project Wind Area of Appurt.
Autocalc Torque Arm Areas
Add IBC .6D+W Combination
Sort Capacity Reports By Component
Triangulate Diamond Inner Bracing
Treat Feed Line Bundles As Cylinder
Ignore KL/ry For 60 Deg. Angle Legs

Use ASCE 10 X-Brace Ly Rules
Calculate Redundant Bracing Forces
Ignore Redundant Members in FEA
SR Leg Bolts Resist Compression
All Leg Panels Have Same Allowable
Offset Girt At Foundation
√ Consider Feed Line Torque
Include Angle Block Shear Check
Use TIA-222-H Bracing Resist. Exemption
Use TIA-222-H Tension Splice Exemption

Poles

√ Include Shear-Torsion Interaction
Always Use Sub-Critical Flow
Use Top Mounted Sockets
Pole Without Linear Attachments
Pole With Shroud Or No Appurtenances
Outside and Inside Corner Radii Are Known

Tapered Pole Section Geometry

Section	Elevation ft	Section Length ft	Splice Length ft	Number of Sides	Top Diameter in	Bottom Diameter in	Wall Thickness in	Bend Radius in	Pole Grade
L1	178.000-164.250	13.750	2.917	18	12.750	26.000	0.250	1.000	A572-65 (65 ksi)
L2	164.250-129.667	37.500	3.833	18	22.689	34.063	0.313	1.250	A572-65 (65 ksi)
L3	129.667-96.000	37.500	4.667	18	32.275	41.750	0.375	1.500	A572-65 (65 ksi)
L4	96.000-63.167	37.500	5.500	18	39.821	49.063	0.375	1.500	A572-65 (65 ksi)
L5	63.167-31.167	37.500	6.250	18	46.957	56.125	0.375	1.500	A572-65 (65 ksi)
L6	31.167-0.000	37.417		18	53.847	62.938	0.375	1.500	A572-65 (65 ksi)

Tapered Pole Properties

Section	Tip Dia. in	Area in^2	I in^4	r in	C in	I/C in^3	J in^4	It/Q in^2	w in	w/t
L1	12.908	9.919	195.801	4.438	6.477	30.230	391.859	4.960	1.804	7.216
	26.363	20.433	1711.654	9.141	13.208	129.592	3425.561	10.218	4.136	16.544
L2	23.889	22.195	1404.080	7.944	11.526	121.816	2810.008	11.100	3.443	11.019
	34.540	33.476	4817.433	11.981	17.304	278.404	9641.206	16.741	5.445	17.424
L3	33.698	37.969	4881.402	11.324	16.396	297.725	9769.226	18.988	5.020	13.388
	42.336	49.247	10650.982	14.688	21.209	502.192	21315.979	24.628	6.688	17.835
L4	41.545	46.950	9229.545	14.003	20.229	456.253	18471.234	23.480	6.348	16.929
	49.762	57.950	17355.138	17.284	24.924	696.329	34733.112	28.981	7.975	21.267
L5	48.989	55.444	15199.585	16.537	23.854	637.187	30419.171	27.727	7.604	20.279
	56.933	66.356	26056.151	19.791	28.511	913.882	52146.587	33.185	9.218	24.581
L6	56.162	63.645	22990.857	18.983	27.354	840.485	46011.967	31.829	8.817	23.512
	63.851	74.465	36822.895	22.210	31.972	1151.714	73694.242	37.240	10.417	27.779

Tower Elevation ft	Gusset Area (per face) ft^2	Gusset Thickness in	Gusset Grade	Adjust. Factor A_f	Adjust. Factor A_r	Weight Mult.	Double Angle Stitch Bolt Spacing Diagonals in	Double Angle Stitch Bolt Spacing Horizontals in	Double Angle Stitch Bolt Spacing Redundants in
L1 178.000-164.250				1	1	1			
L2 164.250-129.667				1	1	1			
L3 129.667-96.000				1	1	1			
L4 96.000-63.167				1	1	1			
L5 63.167-31.167				1	1	1			
L6 31.167-0.000				1	1	1			

Feed Line/Linear Appurtenances - Entered As Round Or Flat

Description	Sector	Exclude From Torque Calculation	Component Type	Placement ft	Total Number	Number Per Row	Start/End Position	Width or Diameter in	Perimeter in	Weight klf
LDF7-50A(1-5/8) *	C	No	Surface Ar (CaAa)	178.000 - 0.000	3	3	-0.150 -0.050	1.980		0.001
LDF7-50A(1-5/8)	A	No	Surface Ar (CaAa)	160.000 - 0.000	5	5	-0.400 -0.200	1.980		0.001
WR-VG122ST-BRDA(7/16) *	A	No	Surface Ar (CaAa)	160.000 - 0.000	3	2	-0.190 -0.160	0.460		0.000
CU12PSM9P6XXX(1-1/2) *	B	No	Surface Ar (CaAa)	148.000 - 0.000	1	1	-0.080 -0.050	1.600		0.002
Safety Line 3/8	C	No	Surface Ar (CaAa)	178.000 - 0.000	1	1	-0.450 -0.440	0.375		0.000
Climbing Rung *	C	No	Surface Ar (CaAa)	178.000 - 0.000	1	1	-0.470 -0.420	1.000		0.008

Feed Line/Linear Appurtenances - Entered As Area

Description	Face or Leg	Allow Shield	Exclude From Torque Calculation	Component Type	Placement ft	Total Number		C_AA_A ft^2/ft	Weight klf
*									
LDF7-50A(1-5/8)	B	No	No	Inside Pole	168.000 - 0.000	12	No Ice	0.000	0.001
							1/2" Ice	0.000	0.001
							1" Ice	0.000	0.001
HB158-U12S24-XXX-LI(1-5/8)	B	No	No	Inside Pole	168.000 - 0.000	1	No Ice	0.000	0.003
							1/2" Ice	0.000	0.003
							1" Ice	0.000	0.003
LDF7-50A(1-5/8)	A	No	No	Inside Pole	160.000 - 0.000	7	No Ice	0.000	0.001
							1/2" Ice	0.000	0.001
							1" Ice	0.000	0.001
FB-L98B-002-75000(3/8)	A	No	No	Inside Pole	160.000 - 0.000	1	No Ice	0.000	0.000
							1/2" Ice	0.000	0.000
							1" Ice	0.000	0.000
WR-VG122ST-BRDA(7/16)	A	No	No	Inside Pole	160.000 - 0.000	2	No Ice	0.000	0.000
							1/2" Ice	0.000	0.000
							1" Ice	0.000	0.000
2" Rigid Conduit	A	No	No	Inside Pole	160.000 - 0.000	1	No Ice	0.000	0.003
							1/2" Ice	0.000	0.003
							1" Ice	0.000	0.003
*									

Feed Line/Linear Appurtenances Section Areas

Tower Section	Tower Elevation ft	Face	A_R ft^2	A_F ft^2	C_AA_A In Face ft^2	C_AA_A Out Face ft^2	Weight K
L1	178.000-164.250	A	0.000	0.000	0.000	0.000	0.000
		B	0.000	0.000	0.000	0.000	0.049
		C	0.000	0.000	10.058	0.000	0.152
L2	164.250-129.667	A	0.000	0.000	32.821	0.000	0.407
		B	0.000	0.000	2.933	0.000	0.494
		C	0.000	0.000	25.298	0.000	0.383
L3	129.667-96.000	A	0.000	0.000	36.427	0.000	0.451
		B	0.000	0.000	5.387	0.000	0.518
		C	0.000	0.000	24.627	0.000	0.373
L4	96.000-63.167	A	0.000	0.000	35.526	0.000	0.440
		B	0.000	0.000	5.253	0.000	0.505
		C	0.000	0.000	24.018	0.000	0.364
L5	63.167-31.167	A	0.000	0.000	34.624	0.000	0.429
		B	0.000	0.000	5.120	0.000	0.492
		C	0.000	0.000	23.408	0.000	0.355
L6	31.167-0.000	A	0.000	0.000	33.722	0.000	0.418
		B	0.000	0.000	4.987	0.000	0.480
		C	0.000	0.000	22.798	0.000	0.345

Feed Line/Linear Appurtenances Section Areas - With Ice

Tower Section	Tower Elevation ft	Face or Leg	Ice Thickness in	A_R ft^2	A_F ft^2	C_AA_A In Face ft^2	C_AA_A Out Face ft^2	Weight K
L1	178.000-164.250	A	1.002	0.000	0.000	0.000	0.000	0.000
		B		0.000	0.000	0.000	0.000	0.049
		C		0.000	0.000	21.052	0.000	0.311
L2	164.250-129.667	A	0.986	0.000	0.000	56.217	0.000	0.818
		B		0.000	0.000	6.606	0.000	0.552
		C		0.000	0.000	52.949	0.000	0.782
L3	129.667-96.000	A	0.961	0.000	0.000	62.137	0.000	0.901
		B		0.000	0.000	12.028	0.000	0.623
		C		0.000	0.000	51.211	0.000	0.753
L4	96.000-63.167	A	0.928	0.000	0.000	60.180	0.000	0.866
		B		0.000	0.000	11.563	0.000	0.604
		C		0.000	0.000	49.398	0.000	0.723
L5	63.167-31.167	A	0.881	0.000	0.000	58.127	0.000	0.829
		B		0.000	0.000	11.059	0.000	0.584
		C		0.000	0.000	47.461	0.000	0.690
L6	31.167-0.000	A	0.787	0.000	0.000	55.880	0.000	0.787
		B		0.000	0.000	10.478	0.000	0.563
		C		0.000	0.000	45.272	0.000	0.651

Feed Line Center of Pressure

Section	Elevation ft	CP_X in	CP_Z in	CP_X Ice in	CP_Z Ice in
L1	178.000-164.250	1.264	3.651	1.561	3.242
L2	164.250-129.667	-2.864	2.976	-1.717	2.497
L3	129.667-96.000	-3.302	3.007	-2.026	2.536
L4	96.000-63.167	-3.546	3.231	-2.236	2.782
L5	63.167-31.167	-3.737	3.407	-2.417	2.979
L6	31.167-0.000	-3.894	3.551	-2.583	3.136

Note: For pole sections, center of pressure calculations do not consider feed line shielding.

Shielding Factor Ka

Tower Section	Feed Line Record No.	Description	Feed Line Segment Elev.	K_a No Ice	K_a Ice
L1	3	LDF7-50A(1-5/8)	164.25 - 178.00	1.0000	1.0000
L1	20	Safety Line 3/8	164.25 - 178.00	1.0000	1.0000
L1	21	Climbing Rung	164.25 - 178.00	1.0000	1.0000
L2	3	LDF7-50A(1-5/8)	129.67 - 164.25	1.0000	1.0000
L2	10	LDF7-50A(1-5/8)	129.67 - 160.00	1.0000	1.0000
L2	11	WR-VG122ST-BRDA(7/16)	129.67 - 160.00	1.0000	1.0000
L2	18	CU12PSM9P6XXX(1-1/2)	129.67 - 148.00	1.0000	1.0000
L2	20	Safety Line 3/8	129.67 - 164.25	1.0000	1.0000
L2	21	Climbing Rung	129.67 - 164.25	1.0000	1.0000
L3	3	LDF7-50A(1-5/8)	96.00 - 129.67	1.0000	1.0000
L3	10	LDF7-50A(1-5/8)	96.00 - 129.67	1.0000	1.0000
L3	11	WR-VG122ST-BRDA(7/16)	96.00 - 129.67	1.0000	1.0000
L3	18	CU12PSM9P6XXX(1-1/2)	96.00 - 129.67	1.0000	1.0000
L3	20	Safety Line 3/8	96.00 - 129.67	1.0000	1.0000
L3	21	Climbing Rung	96.00 - 129.67	1.0000	1.0000
L4	3	LDF7-50A(1-5/8)	63.17 - 96.00	1.0000	1.0000
L4	10	LDF7-50A(1-5/8)	63.17 - 96.00	1.0000	1.0000
L4	11	WR-VG122ST-BRDA(7/16)	63.17 - 96.00	1.0000	1.0000
L4	18	CU12PSM9P6XXX(1-1/2)	63.17 - 96.00	1.0000	1.0000
L4	20	Safety Line 3/8	63.17 - 96.00	1.0000	1.0000
L4	21	Climbing Rung	63.17 - 96.00	1.0000	1.0000
L5	3	LDF7-50A(1-5/8)	31.17 - 63.17	1.0000	1.0000
L5	10	LDF7-50A(1-5/8)	31.17 - 63.17	1.0000	1.0000
L5	11	WR-VG122ST-BRDA(7/16)	31.17 - 63.17	1.0000	1.0000
L5	18	CU12PSM9P6XXX(1-1/2)	31.17 - 63.17	1.0000	1.0000
L5	20	Safety Line 3/8	31.17 - 63.17	1.0000	1.0000
L5	21	Climbing Rung	31.17 - 63.17	1.0000	1.0000
L6	3	LDF7-50A(1-5/8)	0.00 - 31.17	1.0000	1.0000
L6	10	LDF7-50A(1-5/8)	0.00 - 31.17	1.0000	1.0000
L6	11	WR-VG122ST-BRDA(7/16)	0.00 - 31.17	1.0000	1.0000
L6	18	CU12PSM9P6XXX(1-1/2)	0.00 - 31.17	1.0000	1.0000
L6	20	Safety Line 3/8	0.00 - 31.17	1.0000	1.0000
L6	21	Climbing Rung	0.00 - 31.17	1.0000	1.0000

Discrete Tower Loads

Description	Face or Leg	Offset Type	Offsets: Horz Lateral Vert ft ft ft	Azimuth Adjustment °	Placement ft		C_AA_A Front ft^2	C_AA_A Side ft^2	Weight K
Lightning Rod 5/8" x 5' on 6' pole	C	From Leg	0.000 0.000 5.500	0.000	178.000	No Ice 1/2" Ice 1" Ice	2.038 2.914 3.781	2.038 2.914 3.781	0.055 0.077 0.105
*									
APXVAARR24_43-U-NA20 w/ Mount Pipe	A	From Leg	4.000 0.000 0.000	0.000	178.000	No Ice 1/2" Ice 1" Ice	14.690 15.460 16.230	6.870 7.550 8.250	0.186 0.315 0.458
APXVAARR24_43-U-NA20 w/ Mount Pipe	B	From Leg	4.000 0.000 0.000	0.000	178.000	No Ice 1/2" Ice 1" Ice	14.690 15.460 16.230	6.870 7.550 8.250	0.186 0.315 0.458
APXVAARR24_43-U-NA20 w/ Mount Pipe	C	From Leg	4.000 0.000 0.000	0.000	178.000	No Ice 1/2" Ice 1" Ice	14.690 15.460 16.230	6.870 7.550 8.250	0.186 0.315 0.458
AIR 6419 B41_TMO w/ Mount Pipe	A	From Leg	4.000 0.000 0.000	0.000	178.000	No Ice 1/2" Ice 1" Ice	6.580 7.060 7.570	3.500 3.900 4.320	0.111 0.162 0.220
AIR 6419 B41_TMO w/ Mount Pipe	B	From Leg	4.000 0.000 0.000	0.000	178.000	No Ice 1/2" Ice 1" Ice	6.580 7.060 7.570	3.500 3.900 4.320	0.111 0.162 0.220
AIR 6419 B41_TMO w/ Mount Pipe	C	From Leg	4.000 0.000 0.000	0.000	178.000	No Ice 1/2" Ice 1" Ice	6.580 7.060 7.570	3.500 3.900 4.320	0.111 0.162 0.220
RADIO 4449 B71 B85A_T-MOBILE	A	From Leg	4.000 0.000 0.000	0.000	178.000	No Ice 1/2" Ice 1" Ice	1.970 2.147 2.331	1.587 1.749 1.918	0.073 0.093 0.116
RADIO 4449 B71 B85A_T-MOBILE	B	From Leg	4.000 0.000 0.000	0.000	178.000	No Ice 1/2" Ice 1" Ice	1.970 2.147 2.331	1.587 1.749 1.918	0.073 0.093 0.116
RADIO 4449 B71 B85A_T-MOBILE	C	From Leg	4.000 0.000 0.000	0.000	178.000	No Ice 1/2" Ice 1" Ice	1.970 2.147 2.331	1.587 1.749 1.918	0.073 0.093 0.116
RADIO 4460 B2/B25 B66_TMO	A	From Leg	4.000 0.000 0.000	0.000	178.000	No Ice 1/2" Ice 1" Ice	2.139 2.321 2.511	1.686 1.850 2.022	0.109 0.131 0.156
RADIO 4460 B2/B25 B66_TMO	B	From Leg	4.000 0.000 0.000	0.000	178.000	No Ice 1/2" Ice 1" Ice	2.139 2.321 2.511	1.686 1.850 2.022	0.109 0.131 0.156
RADIO 4460 B2/B25 B66_TMO	C	From Leg	4.000 0.000 0.000	0.000	178.000	No Ice 1/2" Ice 1" Ice	2.139 2.321 2.511	1.686 1.850 2.022	0.109 0.131 0.156
(2) 8' x 2" Mount Pipe	A	From Leg	4.000 0.000 0.000	0.000	178.000	No Ice 1/2" Ice 1" Ice	1.900 2.728 3.401	1.900 2.728 3.401	0.029 0.044 0.063
(2) 8' x 2" Mount Pipe	B	From Leg	4.000 0.000 0.000	0.000	178.000	No Ice 1/2" Ice 1" Ice	1.900 2.728 3.401	1.900 2.728 3.401	0.029 0.044 0.063
(6) 8' x 2" Mount Pipe	C	From Leg	4.000 0.000 0.000	0.000	178.000	No Ice 1/2" Ice 1" Ice	1.900 2.728 3.401	1.900 2.728 3.401	0.029 0.044 0.063
Site Pro1-F4P-12W	C	None		0.000	178.000	No Ice 1/2" Ice 1" Ice	34.650 44.060 56.640	34.650 44.060 56.640	2.636 3.477 4.638
*									
LNX-6514DS-A1M w/ Mount Pipe	A	From Leg	4.000 0.000 2.000	0.000	168.000	No Ice 1/2" Ice 1" Ice	4.090 4.490 4.890	3.300 3.680 4.060	0.065 0.128 0.202

Description	Face or Leg	Offset Type	Offsets: Horz Lateral Vert ft ft ft	Azimuth Adjustment °	Placement ft		C_AA_A Front ft^2	C_AA_A Side ft^2	Weight K
LNX-6514DS-A1M w/ Mount Pipe	B	From Leg	4.000 0.000 2.000	0.000	168.000	No Ice 1/2" Ice 1" Ice	4.090 4.490 4.890	3.300 3.680 4.060	0.065 0.128 0.202
LNX-6514DS-A1M w/ Mount Pipe	C	From Leg	4.000 0.000 2.000	0.000	168.000	No Ice 1/2" Ice 1" Ice	4.090 4.490 4.890	3.300 3.680 4.060	0.065 0.128 0.202
(2) MX06FRO660-03 w/ Mount Pipe	A	From Leg	4.000 0.000 2.000	0.000	168.000	No Ice 1/2" Ice 1" Ice	6.540 7.060 7.600	5.550 6.050 6.570	0.103 0.185 0.277
(2) MX06FRO660-03 w/ Mount Pipe	B	From Leg	4.000 0.000 2.000	0.000	168.000	No Ice 1/2" Ice 1" Ice	6.540 7.060 7.600	5.550 6.050 6.570	0.103 0.185 0.277
(2) MX06FRO660-03 w/ Mount Pipe	C	From Leg	4.000 0.000 2.000	0.000	168.000	No Ice 1/2" Ice 1" Ice	6.540 7.060 7.600	5.550 6.050 6.570	0.103 0.185 0.277
MT6407-77A w/ Mount Pipe	A	From Leg	4.000 0.000 2.000	0.000	168.000	No Ice 1/2" Ice 1" Ice	4.907 5.256 5.615	2.682 3.145 3.624	0.096 0.136 0.180
MT6407-77A w/ Mount Pipe	B	From Leg	4.000 0.000 2.000	0.000	168.000	No Ice 1/2" Ice 1" Ice	4.907 5.256 5.615	2.682 3.145 3.624	0.096 0.136 0.180
MT6407-77A w/ Mount Pipe	C	From Leg	4.000 0.000 2.000	0.000	168.000	No Ice 1/2" Ice 1" Ice	4.907 5.256 5.615	2.682 3.145 3.624	0.096 0.136 0.180
RVZDC-6627-PF-48	A	From Leg	4.000 0.000 2.000	0.000	168.000	No Ice 1/2" Ice 1" Ice	3.792 4.044 4.303	2.514 2.727 2.947	0.032 0.063 0.099
RFV01U-D2A	A	From Leg	4.000 0.000 2.000	0.000	168.000	No Ice 1/2" Ice 1" Ice	1.875 2.045 2.223	1.013 1.145 1.284	0.070 0.087 0.106
RFV01U-D2A	B	From Leg	4.000 0.000 2.000	0.000	168.000	No Ice 1/2" Ice 1" Ice	1.875 2.045 2.223	1.013 1.145 1.284	0.070 0.087 0.106
RFV01U-D2A	C	From Leg	4.000 0.000 2.000	0.000	168.000	No Ice 1/2" Ice 1" Ice	1.875 2.045 2.223	1.013 1.145 1.284	0.070 0.087 0.106
RFV01U-D1A	A	From Leg	4.000 0.000 2.000	0.000	168.000	No Ice 1/2" Ice 1" Ice	1.875 2.045 2.223	1.250 1.393 1.543	0.084 0.103 0.124
RFV01U-D1A	B	From Leg	4.000 0.000 2.000	0.000	168.000	No Ice 1/2" Ice 1" Ice	1.875 2.045 2.223	1.250 1.393 1.543	0.084 0.103 0.124
RFV01U-D1A	C	From Leg	4.000 0.000 2.000	0.000	168.000	No Ice 1/2" Ice 1" Ice	1.875 2.045 2.223	1.250 1.393 1.543	0.084 0.103 0.124
Platform Mount [LP 303-1]	C	None		0.000	168.000	No Ice 1/2" Ice 1" Ice	14.690 18.010 21.340	14.690 18.010 21.340	1.250 1.569 1.942
Side Arm Mount [SO 102-3]	C	None		0.000	168.000	No Ice 1/2" Ice 1" Ice	3.600 4.180 4.750	3.600 4.180 4.750	0.075 0.105 0.135
*									
RA21.7770.00 w/ Mount Pipe	A	From Leg	4.000 0.000 0.000	0.000	160.000	No Ice 1/2" Ice 1" Ice	4.140 4.570 5.010	2.460 2.870 3.290	0.063 0.111 0.169
RA21.7770.00 w/ Mount Pipe	B	From Leg	4.000 0.000	0.000	160.000	No Ice 1/2" Ice	4.140 4.570	2.460 2.870	0.063 0.111

Description	Face or Leg	Offset Type	Offsets: Horz Lateral Vert ft ft ft	Azimuth Adjustment °	Placement ft		C_AA_A Front ft^2	C_AA_A Side ft^2	Weight K
			0.000			1" Ice	5.010	3.290	0.169
RA21.7770.00 w/ Mount Pipe	C	From Leg	4.000	0.000	160.000	No Ice	4.140	2.460	0.063
			0.000			1/2" Ice	4.570	2.870	0.111
			0.000			1" Ice	5.010	3.290	0.169
AM-X-CD-17-65-00T-RET w/ Mount Pipe	A	From Leg	4.000	0.000	160.000	No Ice	6.090	4.310	0.092
			0.000			1/2" Ice	6.660	4.860	0.170
			0.000			1" Ice	7.240	5.420	0.261
AM-X-CD-17-65-00T-RET w/ Mount Pipe	C	From Leg	4.000	0.000	160.000	No Ice	6.090	4.310	0.092
			0.000			1/2" Ice	6.660	4.860	0.170
			0.000			1" Ice	7.240	5.420	0.261
TPA-65R-LCUUUU-H8 w/ Mount Pipe	A	From Leg	4.000	0.000	160.000	No Ice	11.850	8.990	0.115
			0.000			1/2" Ice	12.770	9.880	0.210
			0.000			1" Ice	13.710	10.790	0.319
TPA-65R-LCUUUU-H8 w/ Mount Pipe	B	From Leg	4.000	0.000	160.000	No Ice	11.850	8.990	0.115
			0.000			1/2" Ice	12.770	9.880	0.210
			0.000			1" Ice	13.710	10.790	0.319
TPA-65R-LCUUUU-H8 w/ Mount Pipe	C	From Leg	4.000	0.000	160.000	No Ice	11.850	8.990	0.115
			0.000			1/2" Ice	12.770	9.880	0.210
			0.000			1" Ice	13.710	10.790	0.319
SBNH-1D6565C w/ Mount Pipe	B	From Leg	4.000	0.000	160.000	No Ice	5.560	4.470	0.085
			0.000			1/2" Ice	6.070	4.970	0.167
			0.000			1" Ice	6.590	5.470	0.262
(2) LGP21401	A	From Leg	4.000	0.000	160.000	No Ice	1.104	0.207	0.014
			0.000			1/2" Ice	1.239	0.274	0.021
			0.000			1" Ice	1.381	0.348	0.030
(2) LGP21401	B	From Leg	4.000	0.000	160.000	No Ice	1.104	0.207	0.014
			0.000			1/2" Ice	1.239	0.274	0.021
			0.000			1" Ice	1.381	0.348	0.030
(2) LGP21401	C	From Leg	4.000	0.000	160.000	No Ice	1.104	0.207	0.014
			0.000			1/2" Ice	1.239	0.274	0.021
			0.000			1" Ice	1.381	0.348	0.030
(2) 7020.00	A	From Leg	4.000	0.000	160.000	No Ice	0.102	0.175	0.002
			0.000			1/2" Ice	0.147	0.239	0.005
			0.000			1" Ice	0.199	0.311	0.009
(2) 7020.00	B	From Leg	4.000	0.000	160.000	No Ice	0.102	0.175	0.002
			0.000			1/2" Ice	0.147	0.239	0.005
			0.000			1" Ice	0.199	0.311	0.009
(2) 7020.00	C	From Leg	4.000	0.000	160.000	No Ice	0.102	0.175	0.002
			0.000			1/2" Ice	0.147	0.239	0.005
			0.000			1" Ice	0.199	0.311	0.009
DC6-48-60-18-8F	A	From Leg	4.000	0.000	160.000	No Ice	0.791	0.791	0.020
			0.000			1/2" Ice	1.274	1.274	0.035
			0.000			1" Ice	1.450	1.450	0.053
RRUS 11 B12	A	From Leg	4.000	0.000	160.000	No Ice	2.833	1.182	0.051
			0.000			1/2" Ice	3.043	1.330	0.072
			0.000			1" Ice	3.259	1.485	0.095
RRUS 11 B12	B	From Leg	4.000	0.000	160.000	No Ice	2.833	1.182	0.051
			0.000			1/2" Ice	3.043	1.330	0.072
			0.000			1" Ice	3.259	1.485	0.095
RRUS 11 B12	C	From Leg	4.000	0.000	160.000	No Ice	2.833	1.182	0.051
			0.000			1/2" Ice	3.043	1.330	0.072
			0.000			1" Ice	3.259	1.485	0.095
RRUS 32 B2	A	From Leg	4.000	0.000	160.000	No Ice	2.731	1.668	0.053
			0.000			1/2" Ice	2.953	1.855	0.074
			0.000			1" Ice	3.182	2.049	0.098
RRUS 32 B2	B	From Leg	4.000	0.000	160.000	No Ice	2.731	1.668	0.053
			0.000			1/2" Ice	2.953	1.855	0.074

Description	Face or Leg	Offset Type	Offsets: Horz Lateral Vert ft ft ft	Azimuth Adjustment °	Placement ft		C_AA_A Front ft^2	C_AA_A Side ft^2	Weight K
			0.000			1" Ice	3.182	2.049	0.098
DBC0061F1V51-2	A	From Leg	4.000	0.000	160.000	No Ice	0.413	0.433	0.025
			0.000			1/2" Ice	0.496	0.518	0.031
			0.000			1" Ice	0.586	0.609	0.038
DBC0061F1V51-2	B	From Leg	4.000	0.000	160.000	No Ice	0.413	0.433	0.025
			0.000			1/2" Ice	0.496	0.518	0.031
			0.000			1" Ice	0.586	0.609	0.038
DBC0061F1V51-2	C	From Leg	4.000	0.000	160.000	No Ice	0.413	0.433	0.025
			0.000			1/2" Ice	0.496	0.518	0.031
			0.000			1" Ice	0.586	0.609	0.038
RRUS 32 B30	A	From Leg	4.000	0.000	160.000	No Ice	2.692	1.573	0.060
			0.000			1/2" Ice	2.912	1.756	0.080
			0.000			1" Ice	3.138	1.945	0.104
RRUS 32 B30	B	From Leg	4.000	0.000	160.000	No Ice	2.692	1.573	0.060
			0.000			1/2" Ice	2.912	1.756	0.080
			0.000			1" Ice	3.138	1.945	0.104
RRUS 32 B30	C	From Leg	4.000	0.000	160.000	No Ice	2.692	1.573	0.060
			0.000			1/2" Ice	2.912	1.756	0.080
			0.000			1" Ice	3.138	1.945	0.104
DC6-48-60-18-8C-EV	B	From Leg	4.000	0.000	160.000	No Ice	2.736	2.736	0.026
			0.000			1/2" Ice	2.962	2.962	0.052
			0.000			1" Ice	3.195	3.195	0.082
RRUS 32	C	From Leg	4.000	0.000	160.000	No Ice	2.857	1.777	0.055
			0.000			1/2" Ice	3.083	1.968	0.077
			0.000			1" Ice	3.316	2.166	0.103
Platform Mount [LP 303-1_HR-1]	C	None		0.000	160.000	No Ice	17.090	17.090	1.495
						1/2" Ice	21.470	21.470	1.881
						1" Ice	25.720	25.720	2.346
*									
*									
MX08FRO665-20 w/ Mount Pipe	A	From Leg	4.000	0.000	148.000	No Ice	8.010	4.230	0.098
			0.000			1/2" Ice	8.520	4.690	0.184
			0.000			1" Ice	9.040	5.160	0.281
MX08FRO665-20 w/ Mount Pipe	B	From Leg	4.000	0.000	148.000	No Ice	8.010	4.230	0.098
			0.000			1/2" Ice	8.520	4.690	0.184
			0.000			1" Ice	9.040	5.160	0.281
MX08FRO665-20 w/ Mount Pipe	C	From Leg	4.000	0.000	148.000	No Ice	8.010	4.230	0.098
			0.000			1/2" Ice	8.520	4.690	0.184
			0.000			1" Ice	9.040	5.160	0.281
TA08025-B604	A	From Leg	4.000	0.000	148.000	No Ice	1.964	0.981	0.064
			0.000			1/2" Ice	2.138	1.112	0.081
			0.000			1" Ice	2.320	1.250	0.100
TA08025-B604	B	From Leg	4.000	0.000	148.000	No Ice	1.964	0.981	0.064
			0.000			1/2" Ice	2.138	1.112	0.081
			0.000			1" Ice	2.320	1.250	0.100
TA08025-B604	C	From Leg	4.000	0.000	148.000	No Ice	1.964	0.981	0.064
			0.000			1/2" Ice	2.138	1.112	0.081
			0.000			1" Ice	2.320	1.250	0.100
TA08025-B605	A	From Leg	4.000	0.000	148.000	No Ice	1.964	1.129	0.075
			0.000			1/2" Ice	2.138	1.267	0.093
			0.000			1" Ice	2.320	1.411	0.114
TA08025-B605	B	From Leg	4.000	0.000	148.000	No Ice	1.964	1.129	0.075
			0.000			1/2" Ice	2.138	1.267	0.093
			0.000			1" Ice	2.320	1.411	0.114
TA08025-B605	C	From Leg	4.000	0.000	148.000	No Ice	1.964	1.129	0.075
			0.000			1/2" Ice	2.138	1.267	0.093
			0.000			1" Ice	2.320	1.411	0.114

Description	Face or Leg	Offset Type	Offsets: Horz Lateral Vert ft ft ft	Azimuth Adjustment °	Placement ft		C_AA_A Front ft^2	C_AA_A Side ft^2	Weight K
RDIDC-9181-PF-48	A	From Leg	4.000 0.000 0.000	0.000	148.000	No Ice 1/2" Ice 1" Ice	2.012 2.189 2.373	1.168 1.311 1.461	0.022 0.040 0.060
(2) 8' x 2" Mount Pipe	A	From Leg	4.000 0.000 0.000	0.000	148.000	No Ice 1/2" Ice 1" Ice	1.900 2.728 3.401	1.900 2.728 3.401	0.029 0.044 0.063
(2) 8' x 2" Mount Pipe	B	From Leg	4.000 0.000 0.000	0.000	148.000	No Ice 1/2" Ice 1" Ice	1.900 2.728 3.401	1.900 2.728 3.401	0.029 0.044 0.063
(2) 8' x 2" Mount Pipe	C	From Leg	4.000 0.000 0.000	0.000	148.000	No Ice 1/2" Ice 1" Ice	1.900 2.728 3.401	1.900 2.728 3.401	0.029 0.044 0.063
Commscope MC-PK8-DSH *	C	None		0.000	148.000	No Ice 1/2" Ice 1" Ice	34.240 62.950 91.660	34.240 62.950 91.660	1.749 2.099 2.450

Load Combinations

Comb. No.	Description
1	Dead Only
2	1.2 Dead+1.0 Wind 0 deg - No Ice
3	0.9 Dead+1.0 Wind 0 deg - No Ice
4	1.2 Dead+1.0 Wind 30 deg - No Ice
5	0.9 Dead+1.0 Wind 30 deg - No Ice
6	1.2 Dead+1.0 Wind 60 deg - No Ice
7	0.9 Dead+1.0 Wind 60 deg - No Ice
8	1.2 Dead+1.0 Wind 90 deg - No Ice
9	0.9 Dead+1.0 Wind 90 deg - No Ice
10	1.2 Dead+1.0 Wind 120 deg - No Ice
11	0.9 Dead+1.0 Wind 120 deg - No Ice
12	1.2 Dead+1.0 Wind 150 deg - No Ice
13	0.9 Dead+1.0 Wind 150 deg - No Ice
14	1.2 Dead+1.0 Wind 180 deg - No Ice
15	0.9 Dead+1.0 Wind 180 deg - No Ice
16	1.2 Dead+1.0 Wind 210 deg - No Ice
17	0.9 Dead+1.0 Wind 210 deg - No Ice
18	1.2 Dead+1.0 Wind 240 deg - No Ice
19	0.9 Dead+1.0 Wind 240 deg - No Ice
20	1.2 Dead+1.0 Wind 270 deg - No Ice
21	0.9 Dead+1.0 Wind 270 deg - No Ice
22	1.2 Dead+1.0 Wind 300 deg - No Ice
23	0.9 Dead+1.0 Wind 300 deg - No Ice
24	1.2 Dead+1.0 Wind 330 deg - No Ice
25	0.9 Dead+1.0 Wind 330 deg - No Ice
26	1.2 Dead+1.0 Ice+1.0 Temp
27	1.2 Dead+1.0 Wind 0 deg+1.0 Ice+1.0 Temp
28	1.2 Dead+1.0 Wind 30 deg+1.0 Ice+1.0 Temp
29	1.2 Dead+1.0 Wind 60 deg+1.0 Ice+1.0 Temp
30	1.2 Dead+1.0 Wind 90 deg+1.0 Ice+1.0 Temp

Comb. No.	Description
31	1.2 Dead+1.0 Wind 120 deg+1.0 Ice+1.0 Temp
32	1.2 Dead+1.0 Wind 150 deg+1.0 Ice+1.0 Temp
33	1.2 Dead+1.0 Wind 180 deg+1.0 Ice+1.0 Temp
34	1.2 Dead+1.0 Wind 210 deg+1.0 Ice+1.0 Temp
35	1.2 Dead+1.0 Wind 240 deg+1.0 Ice+1.0 Temp
36	1.2 Dead+1.0 Wind 270 deg+1.0 Ice+1.0 Temp
37	1.2 Dead+1.0 Wind 300 deg+1.0 Ice+1.0 Temp
38	1.2 Dead+1.0 Wind 330 deg+1.0 Ice+1.0 Temp
39	Dead+Wind 0 deg - Service
40	Dead+Wind 30 deg - Service
41	Dead+Wind 60 deg - Service
42	Dead+Wind 90 deg - Service
43	Dead+Wind 120 deg - Service
44	Dead+Wind 150 deg - Service
45	Dead+Wind 180 deg - Service
46	Dead+Wind 210 deg - Service
47	Dead+Wind 240 deg - Service
48	Dead+Wind 270 deg - Service
49	Dead+Wind 300 deg - Service
50	Dead+Wind 330 deg - Service

Maximum Member Forces

Section No.	Elevation ft	Component Type	Condition	Gov. Load Comb.	Axial K	Major Axis Moment kip-ft	Minor Axis Moment kip-ft
L1	178 - 164.25	Pole	Max Tension	26	0.000	-0.000	0.000
			Max. Compression	26	-16.606	1.168	-0.389
			Max. Mx	20	-8.760	69.726	-0.251
			Max. My	14	-8.752	0.472	-69.569
			Max. Vy	20	-9.570	69.726	-0.251
			Max. Vx	14	9.619	0.472	-69.569
			Max. Torque	24			1.513
L2	164.25 - 129.667	Pole	Max Tension	1	0.000	0.000	0.000
			Max. Compression	26	-35.551	1.405	-0.717
			Max. Mx	20	-20.365	589.351	-0.835
			Max. My	14	-20.352	0.907	-591.852
			Max. Vy	20	-19.444	589.351	-0.835
			Max. Vx	14	19.537	0.907	-591.852
			Max. Torque	14			-1.310
L3	129.667 - 96	Pole	Max Tension	1	0.000	0.000	0.000
			Max. Compression	26	-45.914	2.106	-1.443
			Max. Mx	20	-28.391	1277.212	-1.742
			Max. My	14	-28.381	1.457	-1283.147
			Max. Vy	20	-22.448	1277.212	-1.742
			Max. Vx	14	22.542	1.457	-1283.147
			Max. Torque	24			0.889
L4	96 - 63.1667	Pole	Max Tension	1	0.000	0.000	0.000
			Max. Compression	26	-57.881	2.774	-2.169
			Max. Mx	20	-37.905	2043.897	-2.705
			Max. My	14	-37.897	1.998	-2053.238
			Max. Vy	20	-25.401	2043.897	-2.705
			Max. Vx	14	25.494	1.998	-2053.238
			Max. Torque	24			0.887
L5	63.1667 - 31.1667	Pole	Max Tension	1	0.000	0.000	0.000
			Max. Compression	26	-71.222	3.507	-2.978
			Max. Mx	20	-48.723	2881.157	-3.714

Section No.	Elevation ft	Component Type	Condition	Gov. Load Comb.	Axial K	Major Axis Moment kip-ft	Minor Axis Moment kip-ft
			Max. My	14	-48.719	2.529	-2893.841
			Max. Vy	20	-28.056	2881.157	-3.714
			Max. Vx	14	28.147	2.529	-2893.841
			Max. Torque	24			0.885
L6	31.1667 - 0	Pole	Max Tension	1	0.000	0.000	0.000
			Max. Compression	26	-88.692	4.464	-4.060
			Max. Mx	20	-63.276	3984.095	-4.987
			Max. My	14	-63.276	3.160	-4000.743
			Max. Vy	20	-30.822	3984.095	-4.987
			Max. Vx	14	30.909	3.160	-4000.743
			Max. Torque	24			0.884

Maximum Reactions

Location	Condition	Gov. Load Comb.	Vertical K	Horizontal, X K	Horizontal, Z K
Pole	Max. Vert	33	88.692	0.002	-8.009
	Max. H_x	21	47.467	30.794	-0.011
	Max. H_z	2	63.289	-0.011	30.881
	Max. M_x	2	3994.450	-0.011	30.881
	Max. M_z	8	3981.430	-30.794	0.011
	Max. Torsion	24	0.884	15.388	26.738
	Min. Vert	11	47.467	-26.663	-15.431
	Min. H_x	9	47.467	-30.794	0.011
	Min. H_z	14	63.289	0.011	-30.881
	Min. M_x	14	-4000.743	0.011	-30.881
	Min. M_z	20	-3984.095	30.794	-0.011
	Min. Torsion	12	-0.883	-15.388	-26.738

Tower Mast Reaction Summary

Load Combination	Vertical K	$Shear_x$ K	$Shear_z$ K	Overturning Moment, M_x kip-ft	Overturning Moment, M_z kip-ft	Torque kip-ft
Dead Only	52.741	0.000	0.000	2.481	1.029	0.000
1.2 Dead+1.0 Wind 0 deg - No Ice	63.289	0.011	-30.881	-3994.450	-0.510	-0.882
0.9 Dead+1.0 Wind 0 deg - No Ice	47.467	0.011	-30.881	-3935.835	-0.833	-0.867
1.2 Dead+1.0 Wind 30 deg - No Ice	63.289	15.406	-26.749	-3459.796	-1991.629	-0.644
0.9 Dead+1.0 Wind 30 deg - No Ice	47.467	15.406	-26.749	-3409.128	-1962.356	-0.636
1.2 Dead+1.0 Wind 60 deg - No Ice	63.289	26.674	-15.450	-1997.251	-3448.753	-0.233
0.9 Dead+1.0 Wind 60 deg - No Ice	47.467	26.674	-15.450	-1968.328	-3397.822	-0.235
1.2 Dead+1.0 Wind 90 deg - No Ice	63.289	30.794	-0.011	1.317	-3981.430	0.240
0.9 Dead+1.0 Wind 90 deg - No Ice	47.467	30.794	-0.011	0.522	-3922.564	0.229
1.2 Dead+1.0 Wind 120 deg -	63.289	26.663	15.431	2000.378	-3446.922	0.648

Load Combination	Vertical K	$Shear_x$ K	$Shear_z$ K	Overturning Moment, M_x kip-ft	Overturning Moment, M_z kip-ft	Torque kip-ft
No Ice						
0.9 Dead+1.0 Wind 120 deg - No Ice	47.467	26.663	15.431	1969.859	-3396.021	0.631
1.2 Dead+1.0 Wind 150 deg - No Ice	63.289	15.388	26.738	3464.265	-1988.452	0.883
0.9 Dead+1.0 Wind 150 deg - No Ice	47.467	15.388	26.738	3411.979	-1959.230	0.865
1.2 Dead+1.0 Wind 180 deg - No Ice	63.289	-0.011	30.881	4000.743	3.160	0.882
0.9 Dead+1.0 Wind 180 deg - No Ice	47.467	-0.011	30.881	3940.483	2.778	0.867
1.2 Dead+1.0 Wind 210 deg - No Ice	63.289	-15.406	26.749	3466.098	1994.278	0.644
0.9 Dead+1.0 Wind 210 deg - No Ice	47.467	-15.406	26.749	3413.782	1964.301	0.637
1.2 Dead+1.0 Wind 240 deg - No Ice	63.289	-26.674	15.450	2003.558	3451.410	0.234
0.9 Dead+1.0 Wind 240 deg - No Ice	47.467	-26.674	15.450	1972.986	3399.772	0.236
1.2 Dead+1.0 Wind 270 deg - No Ice	63.289	-30.794	0.011	4.987	3984.095	-0.240
0.9 Dead+1.0 Wind 270 deg - No Ice	47.467	-30.794	0.011	4.133	3924.520	-0.229
1.2 Dead+1.0 Wind 300 deg - No Ice	63.289	-26.663	-15.431	-1994.084	3449.587	-0.649
0.9 Dead+1.0 Wind 300 deg - No Ice	47.467	-26.663	-15.431	-1965.210	3397.977	-0.632
1.2 Dead+1.0 Wind 330 deg - No Ice	63.289	-15.388	-26.738	-3457.976	1991.109	-0.884
0.9 Dead+1.0 Wind 330 deg - No Ice	47.467	-15.388	-26.738	-3407.334	1961.181	-0.865
1.2 Dead+1.0 Ice+1.0 Temp	88.692	-0.000	0.000	4.060	4.464	-0.000
1.2 Dead+1.0 Wind 0 deg+1.0 Ice+1.0 Temp	88.692	0.002	-8.009	-1038.358	4.384	-0.322
1.2 Dead+1.0 Wind 30 deg+1.0 Ice+1.0 Temp	88.692	3.999	-6.937	-898.845	-515.556	-0.222
1.2 Dead+1.0 Wind 60 deg+1.0 Ice+1.0 Temp	88.692	6.924	-4.006	-517.330	-896.094	-0.063
1.2 Dead+1.0 Wind 90 deg+1.0 Ice+1.0 Temp	88.692	7.994	-0.002	3.945	-1035.249	0.114
1.2 Dead+1.0 Wind 120 deg+1.0 Ice+1.0 Temp	88.692	6.922	4.003	525.304	-895.779	0.260
1.2 Dead+1.0 Wind 150 deg+1.0 Ice+1.0 Temp	88.692	3.996	6.935	907.049	-515.011	0.336
1.2 Dead+1.0 Wind 180 deg+1.0 Ice+1.0 Temp	88.692	-0.002	8.009	1046.877	5.014	0.322
1.2 Dead+1.0 Wind 210 deg+1.0 Ice+1.0 Temp	88.692	-3.999	6.937	907.365	524.954	0.222
1.2 Dead+1.0 Wind 240 deg+1.0 Ice+1.0 Temp	88.692	-6.924	4.006	525.850	905.493	0.063
1.2 Dead+1.0 Wind 270 deg+1.0 Ice+1.0 Temp	88.692	-7.994	0.002	4.574	1044.649	-0.114
1.2 Dead+1.0 Wind 300 deg+1.0 Ice+1.0 Temp	88.692	-6.922	-4.003	-516.785	905.178	-0.260
1.2 Dead+1.0 Wind 330 deg+1.0 Ice+1.0 Temp	88.692	-3.996	-6.935	-898.531	524.409	-0.336
Dead+Wind 0 deg - Service	52.741	0.002	-6.811	-871.415	0.698	-0.194
Dead+Wind 30 deg - Service	52.741	3.398	-5.900	-754.519	-434.633	-0.146
Dead+Wind 60 deg - Service	52.741	5.883	-3.408	-434.753	-753.210	-0.058
Dead+Wind 90 deg - Service	52.741	6.792	-0.002	2.203	-869.671	0.045
Dead+Wind 120 deg - Service	52.741	5.881	3.403	439.267	-752.809	0.136

Load Combination	Vertical K	$Shear_x$ K	$Shear_z$ K	Overturning Moment, M_x kip-ft	Overturning Moment, M_z kip-ft	Torque kip-ft
Dead+Wind 150 deg - Service	52.741	3.394	5.897	759.327	-433.939	0.191
Dead+Wind 180 deg - Service	52.741	-0.002	6.811	876.623	1.500	0.194
Dead+Wind 210 deg - Service	52.741	-3.398	5.900	759.727	436.831	0.146
Dead+Wind 240 deg - Service	52.741	-5.883	3.408	439.961	755.408	0.058
Dead+Wind 270 deg - Service	52.741	-6.792	0.002	3.005	871.869	-0.045
Dead+Wind 300 deg - Service	52.741	-5.881	-3.403	-434.059	755.008	-0.136
Dead+Wind 330 deg - Service	52.741	-3.394	-5.897	-754.119	436.137	-0.191

Solution Summary

	Sum of Applied Forces			Sum of Reactions			
Load Comb.	PX K	PY K	PZ K	PX K	PY K	PZ K	% Error
1	0.000	-52.741	0.000	0.000	52.741	0.000	0.000%
2	0.011	-63.289	-30.881	-0.011	63.289	30.881	0.000%
3	0.011	-47.467	-30.881	-0.011	47.467	30.881	0.000%
4	15.406	-63.289	-26.749	-15.406	63.289	26.749	0.000%
5	15.406	-47.467	-26.749	-15.406	47.467	26.749	0.000%
6	26.674	-63.289	-15.450	-26.674	63.289	15.450	0.000%
7	26.674	-47.467	-15.450	-26.674	47.467	15.450	0.000%
8	30.794	-63.289	-0.011	-30.794	63.289	0.011	0.000%
9	30.794	-47.467	-0.011	-30.794	47.467	0.011	0.000%
10	26.663	-63.289	15.431	-26.663	63.289	-15.431	0.000%
11	26.663	-47.467	15.431	-26.663	47.467	-15.431	0.000%
12	15.388	-63.289	26.738	-15.388	63.289	-26.738	0.000%
13	15.388	-47.467	26.738	-15.388	47.467	-26.738	0.000%
14	-0.011	-63.289	30.881	0.011	63.289	-30.881	0.000%
15	-0.011	-47.467	30.881	0.011	47.467	-30.881	0.000%
16	-15.406	-63.289	26.749	15.406	63.289	-26.749	0.000%
17	-15.406	-47.467	26.749	15.406	47.467	-26.749	0.000%
18	-26.674	-63.289	15.450	26.674	63.289	-15.450	0.000%
19	-26.674	-47.467	15.450	26.674	47.467	-15.450	0.000%
20	-30.794	-63.289	0.011	30.794	63.289	-0.011	0.000%
21	-30.794	-47.467	0.011	30.794	47.467	-0.011	0.000%
22	-26.663	-63.289	-15.431	26.663	63.289	15.431	0.000%
23	-26.663	-47.467	-15.431	26.663	47.467	15.431	0.000%
24	-15.388	-63.289	-26.738	15.388	63.289	26.738	0.000%
25	-15.388	-47.467	-26.738	15.388	47.467	26.738	0.000%
26	0.000	-88.692	0.000	0.000	88.692	-0.000	0.000%
27	0.002	-88.692	-8.009	-0.002	88.692	8.009	0.000%
28	3.999	-88.692	-6.937	-3.999	88.692	6.937	0.000%
29	6.924	-88.692	-4.006	-6.924	88.692	4.006	0.000%
30	7.994	-88.692	-0.002	-7.994	88.692	0.002	0.000%
31	6.922	-88.692	4.003	-6.922	88.692	-4.003	0.000%
32	3.996	-88.692	6.935	-3.996	88.692	-6.935	0.000%
33	-0.002	-88.692	8.009	0.002	88.692	-8.009	0.000%
34	-3.999	-88.692	6.937	3.999	88.692	-6.937	0.000%
35	-6.924	-88.692	4.006	6.924	88.692	-4.006	0.000%
36	-7.994	-88.692	0.002	7.994	88.692	-0.002	0.000%
37	-6.922	-88.692	-4.003	6.922	88.692	4.003	0.000%
38	-3.996	-88.692	-6.935	3.996	88.692	6.935	0.000%
39	0.002	-52.741	-6.811	-0.002	52.741	6.811	0.000%
40	3.398	-52.741	-5.900	-3.398	52.741	5.900	0.000%
41	5.883	-52.741	-3.408	-5.883	52.741	3.408	0.000%
42	6.792	-52.741	-0.002	-6.792	52.741	0.002	0.000%
43	5.881	-52.741	3.403	-5.881	52.741	-3.403	0.000%
44	3.394	-52.741	5.897	-3.394	52.741	-5.897	0.000%
45	-0.002	-52.741	6.811	0.002	52.741	-6.811	0.000%

Load Comb.	Sum of Applied Forces PX K	PY K	PZ K	Sum of Reactions PX K	PY K	PZ K	% Error
46	-3.398	-52.741	5.900	3.398	52.741	-5.900	0.000%
47	-5.883	-52.741	3.408	5.883	52.741	-3.408	0.000%
48	-6.792	-52.741	0.002	6.792	52.741	-0.002	0.000%
49	-5.881	-52.741	-3.403	5.881	52.741	3.403	0.000%
50	-3.394	-52.741	-5.897	3.394	52.741	5.897	0.000%

Non-Linear Convergence Results

Load Combination	Converged?	Number of Cycles	Displacement Tolerance	Force Tolerance
1	Yes	4	0.00000001	0.00000001
2	Yes	5	0.00000001	0.00012082
3	Yes	5	0.00000001	0.00005603
4	Yes	6	0.00000001	0.00027670
5	Yes	6	0.00000001	0.00009595
6	Yes	6	0.00000001	0.00027995
7	Yes	6	0.00000001	0.00009724
8	Yes	5	0.00000001	0.00007121
9	Yes	4	0.00000001	0.00066256
10	Yes	6	0.00000001	0.00028219
11	Yes	6	0.00000001	0.00009799
12	Yes	6	0.00000001	0.00027575
13	Yes	6	0.00000001	0.00009555
14	Yes	5	0.00000001	0.00012899
15	Yes	5	0.00000001	0.00006016
16	Yes	6	0.00000001	0.00028363
17	Yes	6	0.00000001	0.00009839
18	Yes	6	0.00000001	0.00027960
19	Yes	6	0.00000001	0.00009689
20	Yes	5	0.00000001	0.00007605
21	Yes	4	0.00000001	0.00070434
22	Yes	6	0.00000001	0.00027608
23	Yes	6	0.00000001	0.00009576
24	Yes	6	0.00000001	0.00028330
25	Yes	6	0.00000001	0.00009841
26	Yes	4	0.00000001	0.00004509
27	Yes	5	0.00000001	0.00090520
28	Yes	6	0.00000001	0.00012957
29	Yes	6	0.00000001	0.00012974
30	Yes	5	0.00000001	0.00090070
31	Yes	6	0.00000001	0.00013101
32	Yes	6	0.00000001	0.00013048
33	Yes	5	0.00000001	0.00091325
34	Yes	6	0.00000001	0.00013273
35	Yes	6	0.00000001	0.00013223
36	Yes	5	0.00000001	0.00091146
37	Yes	6	0.00000001	0.00013078
38	Yes	6	0.00000001	0.00013164
39	Yes	4	0.00000001	0.00018779
40	Yes	4	0.00000001	0.00071407
41	Yes	4	0.00000001	0.00074084
42	Yes	4	0.00000001	0.00017356
43	Yes	4	0.00000001	0.00076300
44	Yes	4	0.00000001	0.00071358
45	Yes	4	0.00000001	0.00018959
46	Yes	4	0.00000001	0.00077244

47	Yes	4	0.00000001	0.00074033
48	Yes	4	0.00000001	0.00017449
49	Yes	4	0.00000001	0.00071610
50	Yes	4	0.00000001	0.00077041

Maximum Tower Deflections - Service Wind

Section No.	Elevation ft	Horz. Deflection in	Gov. Load Comb.	Tilt °	Twist °
L1	178 - 164.25	23.782	46	1.217	0.004
L2	167.167 - 129.667	21.059	45	1.182	0.002
L3	133.5 - 96	13.347	45	0.971	0.001
L4	100.667 - 63.1667	7.482	45	0.720	0.000
L5	68.6667 - 31.1667	3.436	45	0.473	0.000
L6	37.4167 - 0	1.027	45	0.248	0.000

Critical Deflections and Radius of Curvature - Service Wind

Elevation ft	Appurtenance	Gov. Load Comb.	Deflection in	Tilt °	Twist °	Radius of Curvature ft
178.000	Lightning Rod 5/8" x 5' on 6' pole	46	23.782	1.217	0.004	29157
168.000	LNX-6514DS-A1M w/ Mount Pipe	45	21.266	1.186	0.002	15109
160.000	RA21.7770.00 w/ Mount Pipe	45	19.304	1.149	0.001	11409
148.000	MX08FRO665-20 w/ Mount Pipe	45	16.490	1.076	0.000	9085

Maximum Tower Deflections - Design Wind

Section No.	Elevation ft	Horz. Deflection in	Gov. Load Comb.	Tilt °	Twist °
L1	178 - 164.25	108.697	14	5.553	0.020
L2	167.167 - 129.667	96.262	14	5.408	0.008
L3	133.5 - 96	61.013	14	4.442	0.003
L4	100.667 - 63.1667	34.195	14	3.294	0.002
L5	68.6667 - 31.1667	15.698	14	2.163	0.001
L6	37.4167 - 0	4.691	14	1.133	0.000

Critical Deflections and Radius of Curvature - Design Wind

Elevation ft	Appurtenance	Gov. Load Comb.	Deflection in	Tilt °	Twist °	Radius of Curvature ft
178.000	Lightning Rod 5/8" x 5' on 6' pole	14	108.697	5.553	0.020	6663
168.000	LNX-6514DS-A1M w/ Mount Pipe	14	97.208	5.422	0.009	3449
160.000	RA21.7770.00 w/ Mount Pipe	14	88.245	5.261	0.004	2577

Elevation ft	Appurtenance	Gov. Load Comb.	Deflection in	Tilt °	Twist °	Radius of Curvature ft
148.000	MX08FRO665-20 w/ Mount Pipe	14	75.384	4.927	0.002	2024

Compression Checks

Pole Design Data

Section No.	Elevation ft	Size	L ft	L_u ft	Kl/r	A in^2	P_u K	ϕP_n K	Ratio $\frac{P_u}{\phi P_n}$
L1	178 - 164.25 (1)	TP26x12.75x0.25	13.750	0.000	0.0	18.202	-8.753	1064.840	0.008
L2	164.25 - 129.667 (2)	TP34.063x22.689x0.313	37.500	0.000	0.0	32.323	-20.352	1890.880	0.011
L3	129.667 - 96 (3)	TP41.75x32.275x0.375	37.500	0.000	0.0	47.843	-28.381	2798.820	0.010
L4	96 - 63.1667 (4)	TP49.063x39.821x0.375	37.500	0.000	0.0	56.337	-37.897	3295.710	0.011
L5	63.1667 - 31.1667 (5)	TP56.125x46.957x0.375	37.500	0.000	0.0	64.538	-48.719	3775.460	0.013
L6	31.1667 - 0 (6)	TP62.938x53.847x0.375	37.417	0.000	0.0	74.465	-63.276	4356.200	0.015

Pole Bending Design Data

Section No.	Elevation ft	Size	M_{ux} kip-ft	ϕM_{nx} kip-ft	Ratio $\frac{M_{ux}}{\phi M_{nx}}$	M_{uy} kip-ft	ϕM_{ny} kip-ft	Ratio $\frac{M_{uy}}{\phi M_{ny}}$
L1	178 - 164.25 (1)	TP26x12.75x0.25	69.788	635.996	0.110	0.000	635.996	0.000
L2	164.25 - 129.667 (2)	TP34.063x22.689x0.313	591.853	1569.308	0.377	0.000	1569.308	0.000
L3	129.667 - 96 (3)	TP41.75x32.275x0.375	1283.150	2844.517	0.451	0.000	2844.517	0.000
L4	96 - 63.1667 (4)	TP49.063x39.821x0.375	2053.242	3755.292	0.547	0.000	3755.292	0.000
L5	63.1667 - 31.1667 (5)	TP56.125x46.957x0.375	2893.842	4686.542	0.617	0.000	4686.542	0.000
L6	31.1667 - 0 (6)	TP62.938x53.847x0.375	4000.742	5847.241	0.684	0.000	5847.241	0.000

Pole Shear Design Data

Section No.	Elevation ft	Size	Actual V_u K	ϕV_n K	Ratio $\frac{V_u}{\phi V_n}$	Actual T_u kip-ft	ϕT_n kip-ft	Ratio $\frac{T_u}{\phi T_n}$
L1	178 - 164.25 (1)	TP26x12.75x0.25	9.608	319.452	0.030	0.978	641.752	0.002
L2	164.25 -	TP34.063x22.689x0.313	19.537	567.263	0.034	0.887	1618.875	0.001

Section No.	Elevation ft	Size	Actual V_u K	ϕV_n K	Ratio $\frac{V_u}{\phi V_n}$	Actual T_u kip-ft	ϕT_n kip-ft	Ratio $\frac{T_u}{\phi T_n}$
	129.667 (2)							
L3	129.667 - 96 (3)	TP41.75x32.275x0.375	22.542	839.647	0.027	0.885	2955.683	0.000
L4	96 - 63.1667 (4)	TP49.063x39.821x0.375	25.494	988.714	0.026	0.883	4098.325	0.000
L5	63.1667 - 31.1667 (5)	TP56.125x46.957x0.375	28.147	1132.640	0.025	0.882	5378.317	0.000
L6	31.1667 - 0 (6)	TP62.938x53.847x0.375	30.909	1306.860	0.024	0.882	7160.175	0.000

Pole Interaction Design Data

Section No.	Elevation ft	Ratio $\frac{P_u}{\phi P_n}$	Ratio $\frac{M_{ux}}{\phi M_{nx}}$	Ratio $\frac{M_{uy}}{\phi M_{ny}}$	Ratio $\frac{V_u}{\phi V_n}$	Ratio $\frac{T_u}{\phi T_n}$	Comb. Stress Ratio	Allow. Stress Ratio	Criteria
L1	178 - 164.25 (1)	0.008	0.110	0.000	0.030	0.002	0.119 ✔	1.050	4.8.2 ✔
L2	164.25 - 129.667 (2)	0.011	0.377	0.000	0.034	0.001	0.389 ✔	1.050	4.8.2 ✔
L3	129.667 - 96 (3)	0.010	0.451	0.000	0.027	0.000	0.462 ✔	1.050	4.8.2 ✔
L4	96 - 63.1667 (4)	0.011	0.547	0.000	0.026	0.000	0.559 ✔	1.050	4.8.2 ✔
L5	63.1667 - 31.1667 (5)	0.013	0.617	0.000	0.025	0.000	0.631 ✔	1.050	4.8.2 ✔
L6	31.1667 - 0 (6)	0.015	0.684	0.000	0.024	0.000	0.699 ✔	1.050	4.8.2 ✔

Section Capacity Table

Section No.	Elevation ft	Component Type	Size	Critical Element	P K	ϕP_{allow} K	% Capacity	Pass Fail
L1	178 - 164.25	Pole	TP26x12.75x0.25	1	-8.753	1118.082	11.3	Pass
L2	164.25 - 129.667	Pole	TP34.063x22.689x0.313	2	-20.352	1985.424	37.1	Pass
L3	129.667 - 96	Pole	TP41.75x32.275x0.375	3	-28.381	2938.761	44.0	Pass
L4	96 - 63.1667	Pole	TP49.063x39.821x0.375	4	-37.897	3460.495	53.2	Pass
L5	63.1667 - 31.1667	Pole	TP56.125x46.957x0.375	5	-48.719	3964.233	60.1	Pass
L6	31.1667 - 0	Pole	TP62.938x53.847x0.375	6	-63.276	4574.010	66.6	Pass
							Summary	
						Pole (L6)	66.6	Pass
						RATING =	**66.6**	**Pass**

APPENDIX B

BASE LEVEL DRAWING

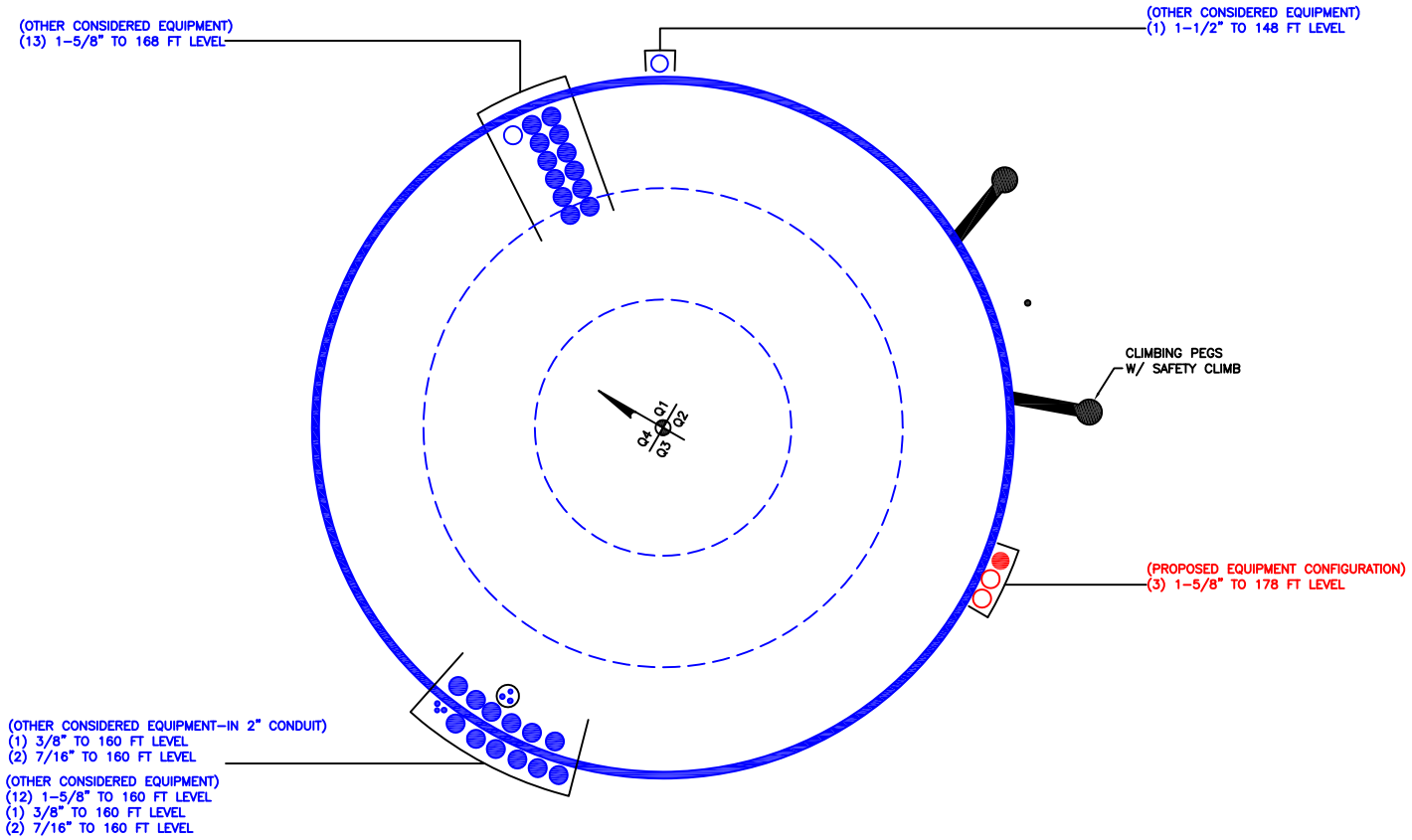

BUSINESS UNIT: 823666

APPENDIX C

ADDITIONAL CALCULATIONS

Monopole Base Plate Connection

Site Info	
BU #	823666
Site Name	Deep River/Rt 9, CT
Order #	613481; Rev.1

Analysis Considerations	
TIA-222 Revision	H
Grout Considered:	No
l_{ar} (in)	2.875

Applied Loads	
Moment (kip-ft)	4000.74
Axial Force (kips)	63.28
Shear Force (kips)	30.91

**TIA-222-H Section 15.5 Applied*

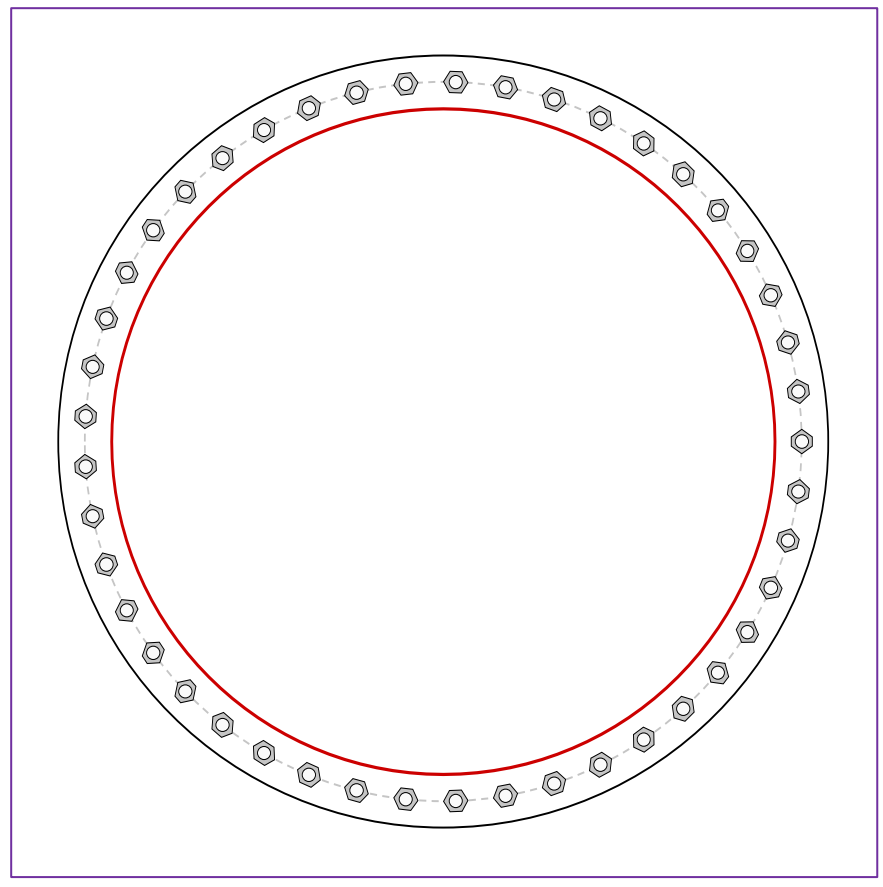

Connection Properties

Anchor Rod Data

(45) 1-1/4" ø bolts (A687 N; Fy=105 ksi, Fu=125 ksi) on 68" BC

Base Plate Data

73" OD x 1.5" Plate (A572-50; Fy=50 ksi, Fu=65 ksi)

Stiffener Data

N/A

Pole Data

62.9375" x 0.375" 18-sided pole (A572-65; Fy=65 ksi, Fu=80 ksi)

Analysis Results

Anchor Rod Summary *(units of kips, kip-in)*

Pu_t = 61.34	ϕPn_t = 90.84	**Stress Rating**
Vu = 0.69	ϕVn = 57.52	**64.3%**
Mu = 1.28	ϕMn = 30.76	**Pass**

Base Plate Summary

Max Stress (ksi):	41.15	(Flexural)
Allowable Stress (ksi):	45	
Stress Rating:	**87.1%**	**Pass**

Pier and Pad Foundation

BU # :	823666
Site Name:	Deep River/Rt 9, C
App. Number:	613481; Rev.1

TIA-222 Revision:	H
Tower Type:	Monopole

Top & Bot. Pad Rein. Different?:	☐
Block Foundation?:	☑
Rectangular Pad?:	☐

Superstructure Analysis Reactions		
Compression, P_{comp}:	63.29	kips
Base Shear, Vu_comp:	30.88	kips
Moment, M_u:	4000.74	ft-kips
Tower Height, **H**:	178	ft
BP Dist. Above Fdn, bp_{dist}:	2.5	in
Bolt Circle / Bearing Plate Width, **BC**:	68	in

Foundation Analysis Checks	Capacity	Demand	Rating*	Check
Lateral (Sliding) (kips)	188.94	30.88	**15.6%**	**Pass**
Bearing Pressure (ksf)	18.00	2.48	**13.8%**	**Pass**
*Overturning (kip*ft)*	6951.97	4130.69	**59.4%**	**Pass**
*Pad Flexure (kip*ft)*	4875.64	1815.18	**35.5%**	**Pass**
Pad Shear - 1-way (kips)	1436.12	211.47	**14.0%**	**Pass**
Pad Shear - 2-way (Comp) (ksi)	0.190	0.003	**1.7%**	**Pass**
*Flexural 2-way (Comp) (kip*ft)*	3989.84	0.00	**0.0%**	**Pass**

**Rating per TIA-222-H Section 15.5*

Structural Rating*:	**35.5%**
Soil Rating*:	**59.4%**

Pad Properties		
Depth, **D**:	3.5	ft
Pad Width, W_1:	29	ft
Pad Thickness, **T**:	4	ft
Pad Rebar Size (Bottom dir. 2), Sp_2:	8	
Pad Rebar Quantity (Bottom dir. 2), mp_2:	32	
Pad Clear Cover, cc_{pad}:	3	in

Material Properties		
Rebar Grade, **Fy**:	60	ksi
Concrete Compressive Strength, **F'c**:	4	ksi
Dry Concrete Density, δ**c**:	150	pcf

Soil Properties		
Total Soil Unit Weight, γ:	165	pcf
Ultimate Gross Bearing, Qult:	24.000	ksf
Cohesion, **Cu**:	0.000	ksf
Friction Angle, φ:	40	degrees
SPT Blow Count, N_{blows}:	50	
Base Friction, μ:		
Neglected Depth, **N**:	3.50	ft
Foundation Bearing on Rock?	Yes	
Groundwater Depth, **gw**:	N/A	ft

<--Toggle between Gross and Net

ASCE 7 Hazards Report

Address:
No Address at This Location

Standard: ASCE/SEI 7-16
Risk Category: II
Soil Class: D - Stiff Soil

Elevation: 94.97 ft (NAVD 88)
Latitude: 41.372825
Longitude: -72.434436

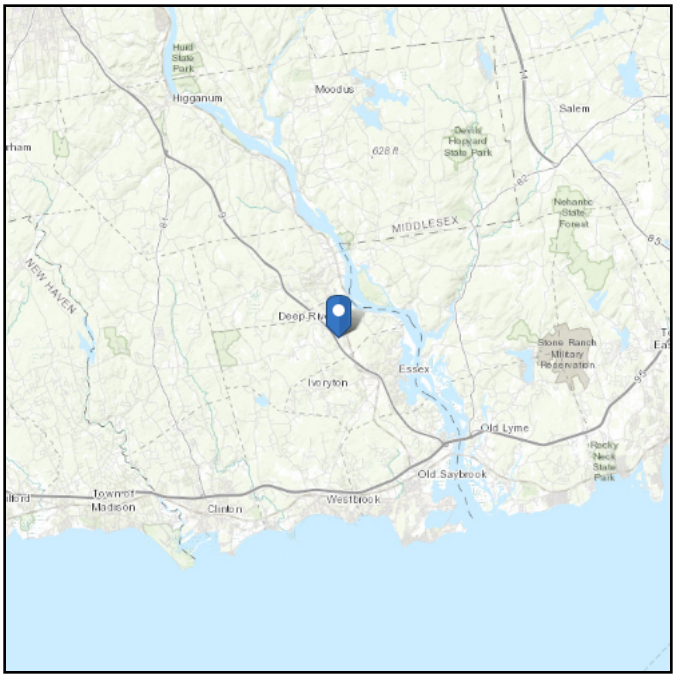

Wind

Results:

Wind Speed	124 Vmph
10-year MRI	75 Vmph
25-year MRI	85 Vmph
50-year MRI	95 Vmph
100-year MRI	101 Vmph

Data Source:	ASCE/SEI 7-16, Fig. 26.5-1B and Figs. CC.2-1–CC.2-4, and Section 26.5.2
Date Accessed:	Tue May 10 2022

Value provided is 3-second gust wind speeds at 33 ft above ground for Exposure C Category, based on linear interpolation between contours. Wind speeds are interpolated in accordance with the 7-16 Standard. Wind speeds correspond to approximately a 7% probability of exceedance in 50 years (annual exceedance probability = 0.00143, MRI = 700 years).

Site is in a hurricane-prone region as defined in ASCE/SEI 7-16 Section 26.2. Glazed openings need not be protected against wind-borne debris.

Seismic

Site Soil Class: D - Stiff Soil

Results:

S_S :	0.209	S_{D1} :	0.087
S_1 :	0.054	T_L :	6
F_a :	1.6	PGA :	0.117
F_v :	2.4	PGA_M :	0.184
S_{MS} :	0.335	F_{PGA} :	1.566
S_{M1} :	0.131	I_e :	1
S_{DS} :	0.223	C_v :	0.719

Seismic Design Category B

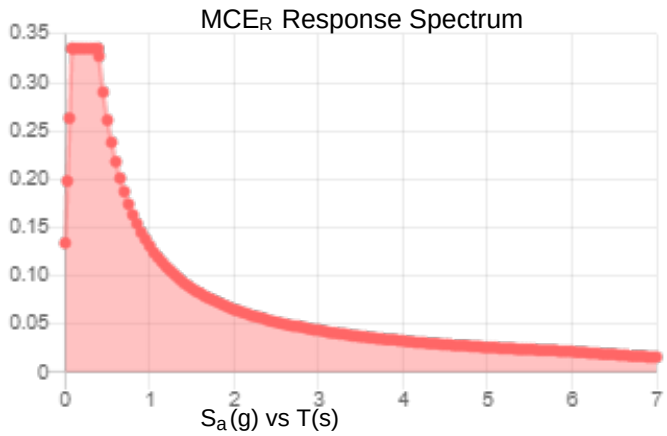

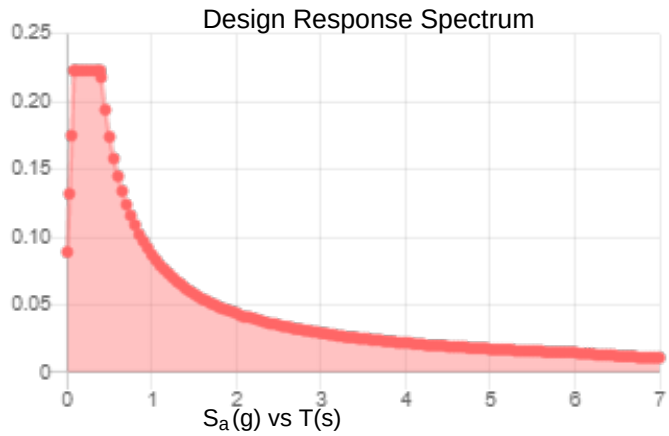

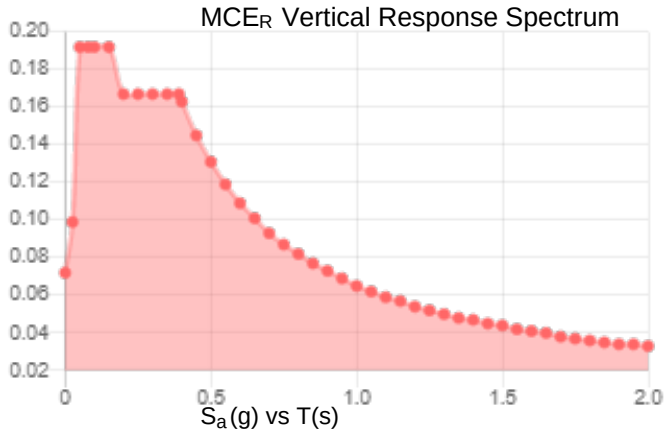

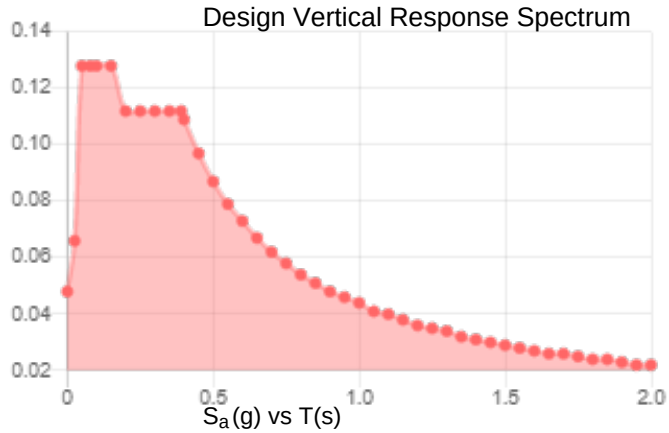

Data Accessed: **Tue May 10 2022**

Date Source:

USGS Seismic Design Maps based on ASCE/SEI 7-16 and ASCE/SEI 7-16 Table 1.5-2. Additional data for site-specific ground motion procedures in accordance with ASCE/SEI 7-16 Ch. 21 are available from USGS.

Ice

Results:

Ice Thickness:	1.00 in.
Concurrent Temperature:	15 F
Gust Speed	50 mph
Data Source:	Standard ASCE/SEI 7-16, Figs. 10-2 through 10-8
Date Accessed:	Tue May 10 2022

Ice thicknesses on structures in exposed locations at elevations higher than the surrounding terrain and in valleys and gorges may exceed the mapped values.

Values provided are equivalent radial ice thicknesses due to freezing rain with concurrent 3-second gust speeds, for a 500-year mean recurrence interval, and temperatures concurrent with ice thicknesses due to freezing rain. Thicknesses for ice accretions caused by other sources shall be obtained from local meteorological studies. Ice thicknesses in exposed locations at elevations higher than the surrounding terrain and in valleys and gorges may exceed the mapped values.

The ASCE 7 Hazard Tool is provided for your convenience, for informational purposes only, and is provided “as is” and without warranties of any kind. The location data included herein has been obtained from information developed, produced, and maintained by third party providers; or has been extrapolated from maps incorporated in the ASCE 7 standard. While ASCE has made every effort to use data obtained from reliable sources or methodologies, ASCE does not make any representations or warranties as to the accuracy, completeness, reliability, currency, or quality of any data provided herein. Any third-party links provided by this Tool should not be construed as an endorsement, affiliation, relationship, or sponsorship of such third-party content by or from ASCE.

ASCE does not intend, nor should anyone interpret, the results provided by this Tool to replace the sound judgment of a competent professional, having knowledge and experience in the appropriate field(s) of practice, nor to substitute for the standard of care required of such professionals in interpreting and applying the contents of this Tool or the ASCE 7 standard.

In using this Tool, you expressly assume all risks associated with your use. Under no circumstances shall ASCE or its officers, directors, employees, members, affiliates, or agents be liable to you or any other person for any direct, indirect, special, incidental, or consequential damages arising from or related to your use of, or reliance on, the Tool or any information obtained therein. To the fullest extent permitted by law, you agree to release and hold harmless ASCE from any and all liability of any nature arising out of or resulting from any use of data provided by the ASCE 7 Hazard Tool.

Radio Frequency Exposure Analysis Report

June 9, 2022

Centerline on behalf of T-Mobile
Centerline Communications Project Number: N/A

T-Mobile Site Name: Deep River/Rt 9
Site Number: CT11237C

Site Address: 15 Pent Rd., Deep River, CT 06417

Site Compliance Summary

T-Mobile Compliance Status:	Compliant
Cumulative Calculated Power Density (Ground Level):	2.46246 µW/cm^2
Cumulative General Population % MPE (Ground Level):	0.29270%

750 West Center Street | Suite 301 | West Bridgewater | MA | 02379

June 9, 2022

Centerline
Attn: Ryan Clark, Site Acquisition
750 W Center St, Suite 301
West Bridgewater, MA 02379

RF Exposure Analysis for Site: **Deep River/Rt 9**

Centerline Communications, LLC ("Centerline") was contracted to analyze the proposed T-Mobile facility at **15 Pent Rd., Deep River, CT 06417** for the purpose of determining whether the predictive exposure from the proposed facility is within specified federal limits.

All information used in this report was analyzed as a percentage of the Maximum Permissible Exposure (% MPE) limits as detailed in 47 CFR § 1.1310 as well as Federal Communications Commission (FCC) OET Bulletin 65 Edition 97-01. The FCC MPE limits are typically expressed in units of milliwatts per square centimeter (mW/cm^2) or microwatts per square centimeter ($\mu W/cm^2$). The exposure limits vary depending upon the frequencies being utilized. The General Population/Uncontrolled MPE limit (in mW/cm^2) for frequencies between 300 and 1500 is defined as frequency (in MHz) divided by 1500 ($f_{MHz}/1500$). Frequencies between 1500 and 100,000 MHz have a General Population/Uncontrolled MPE limit of 1 mW/cm^2 (1000 $\mu W/cm^2$). The calculated power density at each sample point divided by the limit at each calculated frequency provides a result in % MPE. Summing the calculated % MPE from all contributors provides a cumulative % MPE at a particular sample point. Wireless carriers use different frequency bands with varying MPE limits; therefore, it is useful to report results in terms of % MPE as opposed to power density.

All results were compared to the FCC radio frequency exposure rules as detailed in 47 CFR § 1.1307(b) to determine compliance with the MPE limits for General Population/Uncontrolled environments as defined below.

General population/uncontrolled exposure limits apply to situations in which the general population may be exposed or in which persons who are exposed as a consequence of their employment may not be made fully aware of the potential for exposure or cannot exercise control over their exposure. Therefore, members of the general population would always be considered under this category when exposure is not employment related, for example, in the case of a telecommunications tower that exposes persons in a nearby residential area.

Occupational/controlled exposure limits apply to situations in which persons are exposed as a consequence of their employment and in which those persons who are exposed have been made fully aware of the potential for exposure and can exercise control over their exposure. Occupational/ controlled exposure limits also apply where exposure is of a transient nature as a result of incidental passage through a location where exposure levels may be above general population/uncontrolled limits, as long as the exposed person has been made fully aware of the potential for exposure and can exercise control over his or her exposure by leaving the area or by some other appropriate means. Additional details can be found in FCC OET 65.

Calculation Methodology

Centerline Communications, LLC has performed theoretical modeling of the site using a software tool, RoofMaster®, which incorporates calculation methodologies detailed in FCC OET 65. RoofMaster® uses a cylindrical model for conservative power density predictions within the near field of the antenna where the antenna pattern has not truly formed yet. Within this area power density values tend to decrease based upon an inverse distance function. At the point where it is appropriate for modeling to change from near-field calculations to far-field calculations, the power decreases inversely with the square of the distance. The modeling is based on worst-case assumptions in terms of transmitter power and duty cycle. No losses were included in the power calculations unless they were specifically provided for the project.

In OET 65, a far field model is presented to calculate the spatial peak power density. The RoofMaster® implementation of this model incorporates antenna manufacturer's horizontal and vertical pattern data to determine the power density in all directions. This model yields the power density at a single point in space. In order to determine the spatial power density for comparison to the FCC limits, the average of several points calculated within the human profile (0-6') must be conducted. RoofMaster® calculates seven power density values between 0-6' above the specified study plane and performs a linear spatial average.

Data & Results

The following table details the antennas and operating parameters for the T-Mobile antenna system as well as any other antenna systems at the site. This is based on antenna information provided by the client and data compiled from other sources where necessary. The data below was input into Roofmaster® to perform the theoretical exposure calculations at the Ground.

The theoretical calculations performed in Roofmaster® determine the cumulative exposure at all sample points at ground level (0-6' spatial average). The results from highest cumulative sample point at ground level surrounding the site are displayed in the table below. The contribution from directional antennas to the maximum cumulative totals varies greatly depending on location; therefore, the contribution from one antenna sector at the highest calculated exposure point may be greater or less than other sectors since sectorized directional antennas are pointed in different directions and there is not much overlapping exposure.

The contribution to the cumulative power density and % MPE for each antenna/frequency band is listed in the table. The cumulative power density and cumulative % MPE are displayed at the bottom of the table.

Maximum Calculated Cumulative Power Density (Location: approximately 10' SE of site)

Antenna ID	Make / Model	Frequency Band (MHz)	Antenna Gain (dBd)	Antenna Centerline (ft)	Channel Count	TX Power/ Channel (watts)	ERP (watts)	Calculated Power Density (µW/cm²)	General Population MPE Limit (µW/cm²)	General Population % MPE
T-Mobile A 1	ERICSSON AIR6419 NR	3400	22.85	178.00	2.00	80.00	30840.40	0.00260	1000.00	0.00026
T-Mobile A 1	ERICSSON AIR6419 LTE	3400	22.85	178.00	2.00	80.00	30840.40	0.00260	1000.00	0.00026
T-Mobile A 2	RFS APXVAALL24 43-U-NA20	700	13.65	178.00	2.00	40.00	1853.92	0.00000	466.67	0.00000
T-Mobile A 2	RFS APXVAALL24 43-U-NA20	600	12.95	178.00	4.00	60.00	4733.81	0.00001	400.00	0.00000
T-Mobile A 2	RFS APXVAALL24 43-U-NA20	600	12.95	178.00	2.00	40.00	1577.94	0.00000	400.00	0.00000
T-Mobile A 2	RFS APXVAALL24 43-U-NA20	2100	16.45	178.00	2.00	140.00	12363.97	0.00004	1000.00	0.00000
T-Mobile A 2	RFS APXVAALL24 43-U-NA20	1900	15.45	178.00	2.00	140.00	9821.05	0.00001	1000.00	0.00000
T-Mobile A 2	RFS APXVAALL24 43-U-NA20	1900	15.45	178.00	1.00	15.00	526.13	0.00000	1000.00	0.00000
T-Mobile B 3	ERICSSON AIR6419 NR	3400	22.85	178.00	2.00	80.00	30840.40	0.47090	1000.00	0.04709
T-Mobile B 3	ERICSSON AIR6419 LTE	3400	22.85	178.00	2.00	80.00	30840.40	0.47090	1000.00	0.04709
T-Mobile B 4	RFS APXVAALL24 43-U-NA20	700	13.65	178.00	2.00	40.00	1853.92	0.00705	466.67	0.00151
T-Mobile B 4	RFS APXVAALL24 43-U-NA20	600	12.95	178.00	4.00	60.00	4733.81	0.03016	400.00	0.00754
T-Mobile B 4	RFS APXVAALL24 43-U-NA20	600	12.95	178.00	2.00	40.00	1577.94	0.01005	400.00	0.00251
T-Mobile B 4	RFS APXVAALL24 43-U-NA20	2100	16.45	178.00	2.00	140.00	12363.97	0.02480	1000.00	0.00248
T-Mobile B 4	RFS APXVAALL24 43-U-NA20	1900	15.45	178.00	2.00	140.00	9821.05	0.02461	1000.00	0.00246
T-Mobile B 4	RFS APXVAALL24 43-U-NA20	1900	15.45	178.00	1.00	15.00	526.13	0.00132	1000.00	0.00013
T-Mobile C 5	ERICSSON AIR6419 NR	3400	22.85	178.00	2.00	80.00	30840.40	0.00017	1000.00	0.00002
T-Mobile C 5	ERICSSON AIR6419 LTE	3400	22.85	178.00	2.00	80.00	30840.40	0.00017	1000.00	0.00002
T-Mobile C 6	RFS APXVAALL24 43-U-NA20	700	13.65	178.00	2.00	40.00	1853.92	0.00000	466.67	0.00000
T-Mobile C 6	RFS APXVAALL24 43-U-NA20	600	12.95	178.00	4.00	60.00	4733.81	0.00001	400.00	0.00000
T-Mobile C 6	RFS APXVAALL24 43-U-NA20	600	12.95	178.00	2.00	40.00	1577.94	0.00000	400.00	0.00000
T-Mobile C 6	RFS APXVAALL24 43-U-NA20	2100	16.45	178.00	2.00	140.00	12363.97	0.00001	1000.00	0.00000
T-Mobile C 6	RFS APXVAALL24 43-U-NA20	1900	15.45	178.00	2.00	140.00	9821.05	0.00001	1000.00	0.00000
T-Mobile C 6	RFS APXVAALL24 43-U-NA20	1900	15.45	178.00	1.00	15.00	526.13	0.00000	1000.00	0.00000
Verizon A 7	COMMSCOPE LNX-6514DS	850	13.85	168.00	7.00	20.00	3396.47	0.00001	566.67	0.00000
Verizon A 8	JMA MX06FRO660-02	700	12.45	168.00	2.00	40.00	1406.34	0.00017	466.67	0.00004
Verizon A 8	JMA MX06FRO660-02	850	12.15	168.00	2.00	40.00	1312.47	0.00003	566.67	0.00001
Verizon A 8	JMA MX06FRO660-02	1900	15.85	168.00	4.00	40.00	6153.47	0.00003	1000.00	0.00000
Verizon A 9	JMA MX06FRO660-02	700	12.45	168.00	2.00	40.00	1406.34	0.00021	466.67	0.00004
Verizon A 9	JMA MX06FRO660-02	850	12.15	168.00	2.00	40.00	1312.47	0.00004	566.67	0.00001
Verizon A 9	JMA MX06FRO660-02	2100	15.45	168.00	4.00	40.00	5612.03	0.00013	1000.00	0.00001
Verizon A 10	SAMSUNG MT6407	3700	23.34	168.00	4.00	50.00	43154.89	0.00428	1000.00	0.00043
Verizon B 11	COMMSCOPE LNX-6514DS	850	13.85	168.00	7.00	20.00	3396.47	0.04911	566.67	0.00867
Verizon B 12	JMA MX06FRO660-02	700	12.45	168.00	2.00	40.00	1406.34	0.03251	466.67	0.00697
Verizon B 12	JMA MX06FRO660-02	850	12.15	168.00	2.00	40.00	1312.47	0.03454	566.67	0.00610

Antenna ID	Make / Model	Frequency Band (MHz)	Antenna Gain (dBd)	Antenna Centerline (ft)	Channel Count	TX Power/ Channel (watts)	ERP (watts)	Calculated Power Density (µW/cm²)	General Population MPE Limit (µW/cm²)	General Population % MPE
Verizon B 12	JMA MX06FRO660-02	1900	15.85	168.00	4.00	40.00	6153.47	0.06969	1000.00	0.00697
Verizon B 13	JMA MX06FRO660-02	700	12.45	168.00	2.00	40.00	1406.34	0.03245	466.67	0.00695
Verizon B 13	JMA MX06FRO660-02	850	12.15	168.00	2.00	40.00	1312.47	0.03612	566.67	0.00637
Verizon B 13	JMA MX06FRO660-02	2100	15.45	168.00	4.00	40.00	5612.03	0.05806	1000.00	0.00581
Verizon B 14	SAMSUNG MT6407	3700	23.34	168.00	4.00	50.00	43154.89	0.55751	1000.00	0.05575
Verizon C 15	COMMSCOPE LNX-6514DS	850	13.85	168.00	7.00	20.00	3396.47	0.00000	566.67	0.00000
Verizon C 16	JMA MX06FRO660-02	700	12.45	168.00	2.00	40.00	1406.34	0.00005	466.67	0.00001
Verizon C 16	JMA MX06FRO660-02	850	12.15	168.00	2.00	40.00	1312.47	0.00001	566.67	0.00000
Verizon C 16	JMA MX06FRO660-02	1900	15.85	168.00	4.00	40.00	6153.47	0.00001	1000.00	0.00000
Verizon C 17	JMA MX06FRO660-02	700	12.45	168.00	2.00	40.00	1406.34	0.00006	466.67	0.00001
Verizon C 17	JMA MX06FRO660-02	850	12.15	168.00	2.00	40.00	1312.47	0.00001	566.67	0.00000
Verizon C 17	JMA MX06FRO660-02	2100	15.45	168.00	4.00	40.00	5612.03	0.00001	1000.00	0.00000
Verizon C 18	SAMSUNG MT6407	3700	23.34	168.00	4.00	50.00	43154.89	0.00029	1000.00	0.00003
AT&T A 19	POWERWAVE 7770 00	850	11.35	160.00	1.00	40.00	545.83	0.00004	566.67	0.00001
AT&T A 20	COMMSCOPE SBNH-1D6565C	700	13.65	160.00	4.00	40.00	3707.83	0.00005	466.67	0.00001
AT&T A 20	COMMSCOPE SBNH-1D6565C	1900	15.60	160.00	4.00	40.00	5809.25	0.00005	1000.00	0.00001
AT&T A 20	COMMSCOPE SBNH-1D6565C	2100	16.30	160.00	4.00	40.00	6825.27	0.00002	1000.00	0.00000
AT&T A 21	CCI TPA-65R-LCUUUU-H6	850	12.05	160.00	4.00	40.00	2565.19	0.00004	566.67	0.00001
AT&T A 21	CCI TPA-65R-LCUUUU-H6-	2300	13.55	160.00	4.00	25.00	2264.64	0.00001	1000.00	0.00000
AT&T B 22	POWERWAVE 7770 00	850	11.35	160.00	1.00	40.00	545.83	0.01539	566.67	0.00272
AT&T B 23	KMW AM-X-CD-16-65-00T	700	13.15	160.00	4.00	40.00	3304.61	0.06701	466.67	0.01436
AT&T B 23	KMW AM-X-CD-16-65-00T	1900	14.85	160.00	4.00	40.00	4887.87	0.06994	1000.00	0.00699
AT&T B 23	KMW AM-X-CD-16-65-00T	2100	15.35	160.00	4.00	40.00	5484.28	0.07332	1000.00	0.00733
AT&T B 24	CCI TPA-65R-LCUUUU-H6	850	12.05	160.00	4.00	40.00	2565.19	0.05842	566.67	0.01031
AT&T B 24	CCI TPA-65R-LCUUUU-H6-	2300	13.55	160.00	4.00	25.00	2264.64	0.03629	1000.00	0.00363
AT&T C 25	POWERWAVE 7770 00	850	11.35	160.00	1.00	40.00	545.83	0.00001	566.67	0.00000
AT&T C 26	KMW AM-X-CD-16-65-00T	700	13.15	160.00	4.00	40.00	3304.61	0.00004	466.67	0.00001
AT&T C 26	KMW AM-X-CD-16-65-00T	1900	14.85	160.00	4.00	40.00	4887.87	0.00000	1000.00	0.00000
AT&T C 26	KMW AM-X-CD-16-65-00T	2100	15.35	160.00	4.00	40.00	5484.28	0.00000	1000.00	0.00000
AT&T C 27	CCI TPA-65R-LCUUUU-H6	850	12.05	160.00	4.00	40.00	2565.19	0.00001	566.67	0.00000
AT&T C 27	CCI TPA-65R-LCUUUU-H6-	2300	13.55	160.00	4.00	25.00	2264.64	0.00000	1000.00	0.00000
Dish Wireless A 28	JMA MX08FRO665-21	600	11.35	148.00	4.00	30.00	1637.50	0.00004	400.00	0.00001
Dish Wireless A 28	JMA MX08FRO665-21	1900	15.75	148.00	4.00	40.00	6013.40	0.00002	1000.00	0.00000

Antenna ID	Make / Model	Frequency Band (MHz)	Antenna Gain (dBd)	Antenna Centerline (ft)	Channel Count	TX Power/ Channel (watts)	ERP (watts)	Calculated Power Density (µW/cm²)	General Population MPE Limit (µW/cm²)	General Population % MPE
Dish Wireless A 28	JMA MX08FRO665-21	2100	16.75	148.00	4.00	40.00	7570.42	0.00001	1000.00	0.00000
Dish Wireless B 29	JMA MX08FRO665-21	600	11.35	148.00	4.00	30.00	1637.50	0.06429	400.00	0.01607
Dish Wireless B 29	JMA MX08FRO665-21	1900	15.75	148.00	4.00	40.00	6013.40	0.08712	1000.00	0.00871
Dish Wireless B 29	JMA MX08FRO665-21	2100	16.75	148.00	4.00	40.00	7570.42	0.00000	1000.00	0.00696
Dish Wireless C 30	JMA MX08FRO665-21	600	11.35	148.00	4.00	30.00	1637.50	0.00000	400.00	0.00000
Dish Wireless C 30	JMA MX08FRO665-21	1900	15.75	148.00	4.00	40.00	6013.40	0.00000	1000.00	0.00000
Dish Wireless C 30	JMA MX08FRO665-21	2100	16.75	148.00	4.00	40.00	7570.42	0.00001	1000.00	0.00000
							Cumulative Power Density:	**2.46246 µW/cm²**	**Cumulative % MPE:**	**0.29270%**

Summary

The theoretical calculations performed for this analysis yielded cumulative power density totals in all areas at Ground that are within the allowable federal limits for public exposure to RF energy. Therefore, the site is **Compliant** with FCC rules and regulations.

Michelle Stone

Michelle Stone
RF EME Technical Writer II
Centerline Communications, LLC

T-Mobile

T-MOBILE SITE NUMBER:	**CT11237C**	**BUSINESS UNIT #:**	**823666**
T-MOBILE SITE NAME:	**DEEP RIVER/RT 9**	**SITE ADDRESS:**	**15 PENT RD. DEEP RIVER, CT 06417**
SITE TYPE:	**MONOPOLE**	**COUNTY:**	**MIDDLESEX**
TOWER HEIGHT:	**178'-0"**	**JURISDICTION:**	**CONNECTICUT SITING COUNCIL**

T-MOBILE ANCHOR SITE CONFIGURATION: 67D5D998E ODE+6160

SITE INFORMATION

CROWN CASTLE USA INC. SITE NAME:	DEEP RIVER/RT 9
SITE ADDRESS:	15 PENT RD. DEEP RIVER, CT 06417
COUNTY:	MIDDLESEX
MAP/PARCEL #:	58/32F
AREA OF CONSTRUCTION:	EXISTING
LATITUDE:	41.372825°
LONGITUDE:	-72.434436°
LAT/LONG TYPE:	NAD83
GROUND ELEVATION:	107'
CURRENT ZONING:	LOW DENSITY RESIDENTIAL DISTRICT (R-60)
JURISDICTION:	CONNECTICUT SITING COUNCIL
OCCUPANCY CLASSIFICATION:	U
TYPE OF CONSTRUCTION:	IIB
A.D.A. COMPLIANCE:	FACILITY IS UNMANNED AND NOT FOR HUMAN HABITATION
PROPERTY OWNER:	N/A
TOWER OWNER:	CROWN CASTLE 2000 CORPORATE DRIVE CANONSBURG, PA 15317
CARRIER/APPLICANT:	T-MOBILE 12920 SE 38TH STREET BELLEVUE, WA 98006
ELECTRIC PROVIDER:	NORTHEAST UTILITIES 1-800-989-0900
TELCO PROVIDER:	AT&T 1-855-637-9527

PROJECT TEAM

A&E FIRM:	B+T GROUP 1717 S. BOULDER AVE. TULSA, OK 74119 MARVIN PHILLIPS marvin.phillips@btgrp.com
CROWN CASTLE USA INC. DISTRICT CONTACTS:	3530 TORINGDON WAY, SUITE 300 CHARLOTTE, NC 28277
	TRICIA PELON - PROJECT MANAGER TRICIA.PELON@CROWNCASTLE.COM
	JASON D'AMICO - CONSTRUCTION MANAGER JASON.DAMICO@CROWNCASTLE.COM

DRAWING INDEX

SHEET #	SHEET DESCRIPTION
T-1	TITLE SHEET
T-2	GENERAL NOTES
C-1.1	OVERALL SITE PLAN
C-1.2	SITE PLAN & ENLARGED SITE PLAN
C-2	FINAL ELEVATION & ANTENNA PLANS
C-3	ANTENNA & CABLE SCHEDULE
C-4	PLUMBING DIAGRAM
C-5	EQUIPMENT SPECS
E-1	AC PANEL SCHEDULES & ONE LINE DIAGRAM
G-1	ANTENNA GROUNDING DIAGRAM
G-2	GROUNDING DETAILS
G-3	GROUNDING DETAILS
ATTACHED	MOUNT SPECIFICATIONS

ALL DRAWINGS CONTAINED HEREIN ARE FORMATTED FOR FULL SIZE. CONTRACTOR SHALL VERIFY ALL PLANS AND EXISTING DIMENSIONS AND CONDITIONS ON THE JOB SITE AND SHALL IMMEDIATELY NOTIFY THE ENGINEER IN WRITING OF ANY DISCREPANCIES BEFORE PROCEEDING WITH THE WORK OR BE RESPONSIBLE FOR SAME.

PROJECT DESCRIPTION

THE PURPOSE OF THIS PROJECT IS TO ENHANCE BROADBAND CONNECTIVITY AND CAPACITY TO THE EXISTING ELIGIBLE WIRELESS FACILITY.

TOWER SCOPE OF WORK:
- REMOVE (3) ANTENNAS
- REMOVE (6) TMAS
- REMOVE (12) 1-5/8" COAX CABLES
- REMOVE EXISTING PLATFORM MOUNT
- INSTALL (3) ANTENNAS
- INSTALL (3) RADIOS
- INSTALL (2) 6/24 4AWG HYBRID TRUNK S
- INSTALL (1) SITEPRO1 F4P-12W PLATFORM MOUNT

GROUND SCOPE OF WORK:
- REMOVE (9) RADIOS
- INSTALL (1) 6160 AC V1 CABINET
- INSTALL (1) B160 BATTERY CABINET
- INSTALL (1) RP 6651
- INSTALL (1) PSU 4813 VR4A (KIT)
- INSTALL (1) CSR IXRE V2 (GEN2)
- UPGRADE BREAKER FOR 6160 TO 125A

NOTE:
PRIOR TO ACCESSING/ENTERING THE SITE YOU MUST CONTACT THE CROWN NOC AT (800) 788-7011 & CROWN CONSTRUCTION MANAGER.

LOCATION MAP

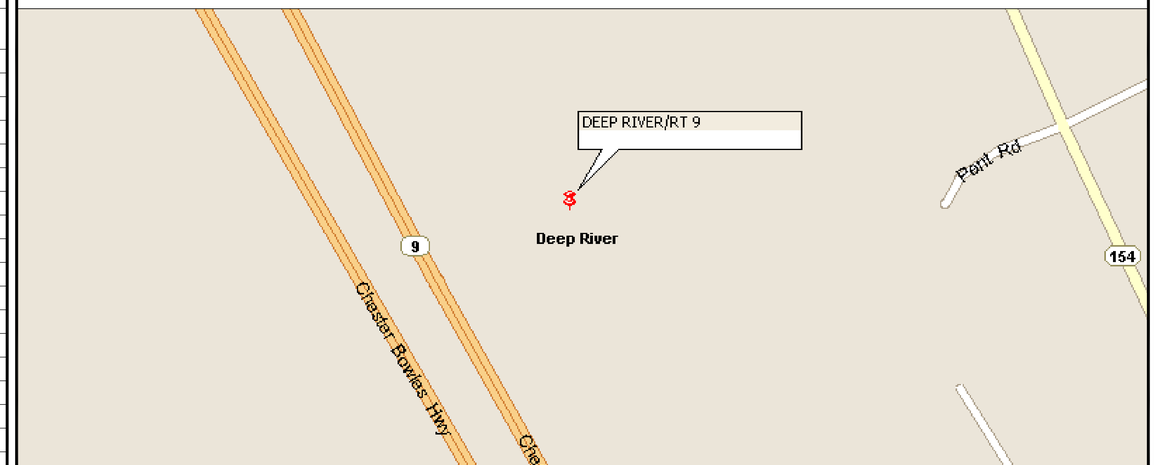

NO SCALE

APPLICABLE CODES/REFERENCE DOCUMENTS

ALL WORK SHALL BE PERFORMED AND MATERIALS INSTALLED IN ACCORDANCE WITH THE CURRENT EDITIONS OF THE FOLLOWING CODES AS ADOPTED BY THE LOCAL GOVERNING AUTHORITIES. NOTHING IN THESE PLANS IS TO BE CONSTRUED TO PERMIT WORK NOT CONFORMING TO THESE CODES:

CODE TYPE	CODE
BUILDING	2018 CONNECTICUT SBC/2015 IBC
MECHANICAL	2018 CONNECTICUT SBC/2015 IMC
ELECTRICAL	2018 CONNECTICUT SBC/2017 NEC

REFERENCE DOCUMENTS:

STRUCTURAL ANALYSIS:	B+T GROUP
DATED:	5/12/22
MOUNT ANALYSIS:	BY OTHERS
DATED:	
RFDS REVISION:	4
DATED:	4/20/22
ORDER ID:	613481
REVISION:	0

CALL CONNECTICUT ONE CALL
(800) 922-4455 CBYD.COM
CALL 2 WORKING DAYS BEFORE YOU DIG!

APPROVALS

APPROVAL	SIGNATURE	DATE
PROPERTY OWNER OR REP.		
LAND USE PLANNER		
T-MOBILE		
OPERATIONS		
RF		
NETWORK		
BACKHAUL		
CONSTRUCTION MANAGER		

THE PARTIES ABOVE HEREBY APPROVE AND ACCEPT THESE DOCUMENTS AND AUTHORIZE THE CONTRACTOR TO PROCEED WITH THE CONSTRUCTION DESCRIBED HEREIN. ALL CONSTRUCTION DOCUMENTS ARE SUBJECT TO REVIEW BY THE LOCAL BUILDING DEPARTMENT AND ANY CHANGES AND MODIFICATIONS THEY MAY IMPOSE.

T-Mobile
4 SYLVAN WAY
PARSIPPANY, NJ 07054

CROWN CASTLE
3530 TORINGDON WAY, SUITE 300
CHARLOTTE, NC 28277

B+T GRP
1717 S. BOULDER
SUITE 300
TULSA, OK 74119
PH: (918) 587-4630
www.btgrp.com

T-MOBILE SITE NUMBER: **CT11237C**

BU #: **823666**
DEEP RIVER/RT 9

15 PENT RD.
DEEP RIVER, CT 06417

EXISTING
178'-0" MONOPOLE

ISSUED FOR:

REV	DATE	DRWN	DESCRIPTION	DES./QA
A	6/6/22	MEH	PRELIMINARY REVIEW	CV
0	6/28/22	MEH	CONSTRUCTION	CV

6/28/22

B&T ENGINEERING, INC.
PEC.0001564
Expires 2/10/23

IT IS A VIOLATION OF LAW FOR ANY PERSON, UNLESS THEY ARE ACTING UNDER THE DIRECTION OF A LICENSED PROFESSIONAL ENGINEER, TO ALTER THIS DOCUMENT.

SHEET NUMBER: T-1

REVISION: 0

135998.004.01_823666_DEEP RIVER RT 9.dwg – Sheet:T-1 – User: chad.vandergraft – Jun 28, 2022 – 11:30am

CROWN CASTLE USA INC. SITE ACTIVITY REQUIREMENTS:

1. NOTICE TO PROCEED– NO WORK SHALL COMMENCE PRIOR TO CROWN CASTLE USA INC. WRITTEN NOTICE TO PROCEED (NTP) AND THE ISSUANCE OF A PURCHASE ORDER. PRIOR TO ACCESSING/ENTERING THE SITE YOU MUST CONTACT THE CROWN CASTLE USA INC. NOC AT 800–788–7011 & THE CROWN CASTLE USA INC. CONSTRUCTION MANAGER.
2. "LOOK UP" – CROWN CASTLE USA INC. SAFETY CLIMB REQUIREMENT:
   THE INTEGRITY OF THE SAFETY CLIMB AND ALL COMPONENTS OF THE CLIMBING FACILITY SHALL BE CONSIDERED DURING ALL STAGES OF DESIGN, INSTALLATION, AND INSPECTION. TOWER MODIFICATION, MOUNT REINFORCEMENTS, AND/OR EQUIPMENT INSTALLATIONS SHALL NOT COMPROMISE THE INTEGRITY OR FUNCTIONAL USE OF THE SAFETY CLIMB OR ANY COMPONENTS OF THE CLIMBING FACILITY ON THE STRUCTURE. THIS SHALL INCLUDE, BUT NOT BE LIMITED TO: PINCHING OF THE WIRE ROPE, BENDING OF THE WIRE ROPE FROM ITS SUPPORTS, DIRECT CONTACT OR CLOSE PROXIMITY TO THE WIRE ROPE WHICH MAY CAUSE FRICTIONAL WEAR, IMPACT TO THE ANCHORAGE POINTS IN ANY WAY, OR TO IMPEDE/BLOCK ITS INTENDED USE. ANY COMPROMISED SAFETY CLIMB, INCLUDING EXISTING CONDITIONS MUST BE TAGGED OUT AND REPORTED TO YOUR CROWN CASTLE USA INC. POC OR CALL THE NOC TO GENERATE A SAFETY CLIMB MAINTENANCE AND CONTRACTOR NOTICE TICKET.
3. PRIOR TO THE START OF CONSTRUCTION, ALL REQUIRED JURISDICTIONAL PERMITS SHALL BE OBTAINED. THIS INCLUDES, BUT IS NOT LIMITED TO, BUILDING, ELECTRICAL, MECHANICAL, FIRE, FLOOD ZONE, ENVIRONMENTAL, AND ZONING. AFTER ONSITE ACTIVITIES AND CONSTRUCTION ARE COMPLETED, ALL REQUIRED PERMITS SHALL BE SATISFIED AND CLOSED OUT ACCORDING TO LOCAL JURISDICTIONAL REQUIREMENTS.
4. ALL CONSTRUCTION MEANS AND METHODS; INCLUDING BUT NOT LIMITED TO, ERECTION PLANS, RIGGING PLANS, CLIMBING PLANS, AND RESCUE PLANS SHALL BE THE RESPONSIBILITY OF THE GENERAL CONTRACTOR RESPONSIBLE FOR THE EXECUTION OF THE WORK CONTAINED HEREIN, AND SHALL MEET ANSI/ASSE A10.48 (LATEST EDITION); FEDERAL, STATE, AND LOCAL REGULATIONS; AND ANY APPLICABLE INDUSTRY CONSENSUS STANDARDS RELATED TO THE CONSTRUCTION ACTIVITIES BEING PERFORMED. ALL RIGGING PLANS SHALL ADHERE TO ANSI/ASSE A10.48 (LATEST EDITION) AND CROWN CASTLE USA INC. STANDARD CED–STD–10253, INCLUDING THE REQUIRED INVOLVEMENT OF A QUALIFIED ENGINEER FOR CLASS IV CONSTRUCTION, TO CERTIFY THE SUPPORTING STRUCTURE(S) IN ACCORDANCE WITH ANSI/TIA–322 (LATEST EDITION).
5. ALL SITE WORK TO COMPLY WITH QAS–STD–10068 "INSTALLATION STANDARDS FOR CONSTRUCTION ACTIVITIES ON CROWN CASTLE USA INC. TOWER SITE," CED–STD–10294 "STANDARD FOR INSTALLATION OF MOUNTS AND APPURTENANCES," AND LATEST VERSION OF ANSI/TIA–1019–A–2012 "STANDARD FOR INSTALLATION, ALTERATION, AND MAINTENANCE OF ANTENNA SUPPORTING STRUCTURES AND ANTENNAS."
6. IF THE SPECIFIED EQUIPMENT CAN NOT BE INSTALLED AS SHOWN ON THESE DRAWINGS, THE CONTRACTOR SHALL PROPOSE AN ALTERNATIVE INSTALLATION FOR APPROVAL BY CROWN CASTLE USA INC. PRIOR TO PROCEEDING WITH ANY SUCH CHANGE OF INSTALLATION.
7. ALL MATERIALS FURNISHED AND INSTALLED SHALL BE IN STRICT ACCORDANCE WITH ALL APPLICABLE CODES, REGULATIONS AND ORDINANCES. CONTRACTOR SHALL ISSUE ALL APPROPRIATE NOTICES AND COMPLY WITH ALL LAWS, ORDINANCES, RULES, REGULATIONS AND LAWFUL ORDERS OF ANY PUBLIC AUTHORITY REGARDING THE PERFORMANCE OF THE WORK. ALL WORK CARRIED OUT SHALL COMPLY WITH ALL APPLICABLE MUNICIPAL AND UTILITY COMPANY SPECIFICATIONS AND LOCAL JURISDICTIONAL CODES, ORDINANCES AND APPLICABLE REGULATIONS.
8. THE CONTRACTOR SHALL INSTALL ALL EQUIPMENT AND MATERIALS IN ACCORDANCE WITH MANUFACTURER'S RECOMMENDATIONS UNLESS SPECIFICALLY STATED OTHERWISE.
9. THE CONTRACTOR SHALL CONTACT UTILITY LOCATING SERVICES PRIOR TO THE START OF CONSTRUCTION.
10. ALL EXISTING ACTIVE SEWER, WATER, GAS, ELECTRIC AND OTHER UTILITIES WHERE ENCOUNTERED IN THE WORK, SHALL BE PROTECTED AT ALL TIMES AND WHERE REQUIRED FOR THE PROPER EXECUTION OF THE WORK, SHALL BE RELOCATED AS DIRECTED BY CONTRACTOR. EXTREME CAUTION SHOULD BE USED BY THE CONTRACTOR WHEN EXCAVATING OR DRILLING PIERS AROUND OR NEAR UTILITIES. CONTRACTOR SHALL PROVIDE SAFETY TRAINING FOR THE WORKING CREW. THIS WILL INCLUDE BUT NOT BE LIMITED TO A) FALL PROTECTION B) CONFINED SPACE C) ELECTRICAL SAFETY D) TRENCHING AND EXCAVATION E) CONSTRUCTION SAFETY PROCEDURES.
11. ALL SITE WORK SHALL BE AS INDICATED ON THE STAMPED CONSTRUCTION DRAWINGS AND PROJECT SPECIFICATIONS, LATEST APPROVED REVISION.
12. CONTRACTOR SHALL KEEP THE SITE FREE FROM ACCUMULATING WASTE MATERIAL, DEBRIS, AND TRASH AT THE COMPLETION OF THE WORK. IF NECESSARY, RUBBISH, STUMPS, DEBRIS, STICKS, STONES AND OTHER REFUSE SHALL BE REMOVED FROM THE SITE AND DISPOSED OF LEGALLY.
13. ALL EXISTING INACTIVE SEWER, WATER, GAS, ELECTRIC AND OTHER UTILITIES, WHICH INTERFERE WITH THE EXECUTION OF THE WORK, SHALL BE REMOVED AND/OR CAPPED, PLUGGED OR OTHERWISE DISCONTINUED AT POINTS WHICH WILL NOT INTERFERE WITH THE EXECUTION OF THE WORK, SUBJECT TO THE APPROVAL OF CONTRACTOR, TOWER OWNER, CROWN CASTLE USA INC., AND/OR LOCAL UTILITIES.
14. THE CONTRACTOR SHALL PROVIDE SITE SIGNAGE IN ACCORDANCE WITH THE TECHNICAL SPECIFICATION FOR SITE SIGNAGE REQUIRED BY LOCAL JURISDICTION AND SIGNAGE REQUIRED ON INDIVIDUAL PIECES OF EQUIPMENT, ROOMS, AND SHELTERS.
15. THE SITE SHALL BE GRADED TO CAUSE SURFACE WATER TO FLOW AWAY FROM THE CARRIER'S EQUIPMENT AND TOWER AREAS.
16. THE SUB GRADE SHALL BE COMPACTED AND BROUGHT TO A SMOOTH UNIFORM GRADE PRIOR TO FINISHED SURFACE APPLICATION.
17. THE AREAS OF THE OWNERS PROPERTY DISTURBED BY THE WORK AND NOT COVERED BY THE TOWER, EQUIPMENT OR DRIVEWAY, SHALL BE GRADED TO A UNIFORM SLOPE, AND STABILIZED TO PREVENT EROSION AS SPECIFIED ON THE CONSTRUCTION DRAWINGS AND/OR PROJECT SPECIFICATIONS.
18. CONTRACTOR SHALL MINIMIZE DISTURBANCE TO EXISTING SITE DURING CONSTRUCTION. EROSION CONTROL MEASURES, IF REQUIRED DURING CONSTRUCTION, SHALL BE IN CONFORMANCE WITH THE LOCAL GUIDELINES FOR EROSION AND SEDIMENT CONTROL.
19. THE CONTRACTOR SHALL PROTECT EXISTING IMPROVEMENTS, PAVEMENTS, CURBS, LANDSCAPING AND STRUCTURES. ANY DAMAGED PART SHALL BE REPAIRED AT CONTRACTOR'S EXPENSE TO THE SATISFACTION OF OWNER.
20. CONTRACTOR SHALL LEGALLY AND PROPERLY DISPOSE OF ALL SCRAP MATERIALS SUCH AS COAXIAL CABLES AND OTHER ITEMS REMOVED FROM THE EXISTING FACILITY. ANTENNAS REMOVED SHALL BE RETURNED TO THE OWNER'S DESIGNATED LOCATION.
21. CONTRACTOR SHALL LEAVE PREMISES IN CLEAN CONDITION. TRASH AND DEBRIS SHOULD BE REMOVED FROM SITE ON A DAILY BASIS.
22. NO FILL OR EMBANKMENT MATERIAL SHALL BE PLACED ON FROZEN GROUND. FROZEN MATERIALS, SNOW OR ICE SHALL NOT BE PLACED IN ANY FILL OR EMBANKMENT.

GENERAL NOTES:

1. FOR THE PURPOSE OF CONSTRUCTION DRAWING, THE FOLLOWING DEFINITIONS SHALL APPLY:
   CONTRACTOR: GENERAL CONTRACTOR RESPONSIBLE FOR CONSTRUCTION
   CARRIER: T–MOBILE
   TOWER OWNER: CROWN CASTLE USA INC.
2. THESE DRAWINGS HAVE BEEN PREPARED USING STANDARDS OF PROFESSIONAL CARE AND COMPLETENESS NORMALLY EXERCISED UNDER SIMILAR CIRCUMSTANCES BY REPUTABLE ENGINEERS IN THIS OR SIMILAR LOCALITIES. IT IS ASSUMED THAT THE WORK DEPICTED WILL BE PERFORMED BY AN EXPERIENCED CONTRACTOR AND/OR WORKPEOPLE WHO HAVE A WORKING KNOWLEDGE OF THE APPLICABLE CODE STANDARDS AND REQUIREMENTS AND OF INDUSTRY ACCEPTED STANDARD GOOD PRACTICE. AS NOT EVERY CONDITION OR ELEMENT IS (OR CAN BE) EXPLICITLY SHOWN ON THESE DRAWINGS, THE CONTRACTOR SHALL USE INDUSTRY ACCEPTED STANDARD GOOD PRACTICE FOR MISCELLANEOUS WORK NOT EXPLICITLY SHOWN.
3. THESE DRAWINGS REPRESENT THE FINISHED STRUCTURE. THEY DO NOT INDICATE THE MEANS OR METHODS OF CONSTRUCTION. THE CONTRACTOR SHALL BE SOLELY RESPONSIBLE FOR THE CONSTRUCTION MEANS, METHODS, TECHNIQUES, SEQUENCES, AND PROCEDURES. THE CONTRACTOR SHALL PROVIDE ALL MEASURES NECESSARY FOR PROTECTION OF LIFE AND PROPERTY DURING CONSTRUCTION. SUCH MEASURES SHALL INCLUDE, BUT NOT BE LIMITED TO, BRACING, FORMWORK, SHORING, ETC. SITE VISITS BY THE ENGINEER OR HIS REPRESENTATIVE WILL NOT INCLUDE INSPECTION OF THESE ITEMS AND IS FOR STRUCTURAL OBSERVATION OF THE FINISHED STRUCTURE ONLY.
4. NOTES AND DETAILS IN THE CONSTRUCTION DRAWINGS SHALL TAKE PRECEDENCE OVER GENERAL NOTES AND TYPICAL DETAILS. WHERE NO DETAILS ARE SHOWN, CONSTRUCTION SHALL CONFORM TO SIMILAR WORK ON THE PROJECT, AND/OR AS PROVIDED FOR IN THE CONTRACT DOCUMENTS. WHERE DISCREPANCIES OCCUR BETWEEN PLANS, DETAILS, GENERAL NOTES, AND SPECIFICATIONS, THE GREATER, MORE STRICT REQUIREMENTS, SHALL GOVERN. IF FURTHER CLARIFICATION IS REQUIRED CONTACT THE ENGINEER OF RECORD.
5. SUBSTANTIAL EFFORT HAS BEEN MADE TO PROVIDE ACCURATE DIMENSIONS AND MEASUREMENTS ON THE DRAWINGS TO ASSIST IN THE FABRICATION AND/OR PLACEMENT OF CONSTRUCTION ELEMENTS BUT IT IS THE SOLE RESPONSIBILITY OF THE CONTRACTOR TO FIELD VERIFY THE DIMENSIONS, MEASUREMENTS, AND/OR CLEARANCES SHOWN IN THE CONSTRUCTION DRAWINGS PRIOR TO FABRICATION OR CUTTING OF ANY NEW OR EXISTING CONSTRUCTION ELEMENTS. IF IT IS DETERMINED THAT THERE ARE DISCREPANCIES AND/OR CONFLICTS WITH THE CONSTRUCTION DRAWINGS THE ENGINEER OF RECORD IS TO BE NOTIFIED AS SOON AS POSSIBLE.
6. PRIOR TO THE SUBMISSION OF BIDS, THE BIDDING CONTRACTOR SHALL VISIT THE CELL SITE TO FAMILIARIZE WITH THE EXISTING CONDITIONS AND TO CONFIRM THAT THE WORK CAN BE ACCOMPLISHED AS SHOWN ON THE CONSTRUCTION DRAWINGS. ANY DISCREPANCY FOUND SHALL BE BROUGHT TO THE ATTENTION OF CROWN CASTLE.
7. ALL MATERIALS FURNISHED AND INSTALLED SHALL BE IN STRICT ACCORDANCE WITH ALL APPLICABLE CODES, REGULATIONS AND ORDINANCES. CONTRACTOR SHALL ISSUE ALL APPROPRIATE NOTICES AND COMPLY WITH ALL LAWS, ORDINANCES, RULES, REGULATIONS AND LAWFUL ORDERS OF ANY PUBLIC AUTHORITY REGARDING THE PERFORMANCE OF THE WORK. ALL WORK CARRIED OUT SHALL COMPLY WITH ALL APPLICABLE MUNICIPAL AND UTILITY COMPANY SPECIFICATIONS AND LOCAL JURISDICTIONAL CODES, ORDINANCES AND APPLICABLE REGULATIONS.
8. UNLESS NOTED OTHERWISE, THE WORK SHALL INCLUDE FURNISHING MATERIALS, EQUIPMENT, APPURTENANCES AND LABOR NECESSARY TO COMPLETE ALL INSTALLATIONS AS INDICATED ON THE DRAWINGS.
9. THE CONTRACTOR SHALL INSTALL ALL EQUIPMENT AND MATERIALS IN ACCORDANCE WITH MANUFACTURER'S RECOMMENDATIONS UNLESS SPECIFICALLY STATED OTHERWISE.
10. IF THE SPECIFIED EQUIPMENT CAN NOT BE INSTALLED AS SHOWN ON THESE DRAWINGS, THE CONTRACTOR SHALL PROPOSE AN ALTERNATIVE INSTALLATION FOR APPROVAL BY THE CARRIER AND CROWN CASTLE PRIOR TO PROCEEDING WITH ANY SUCH CHANGE OF INSTALLATION.
11. CONTRACTOR IS TO PERFORM A SITE INVESTIGATION AND IS TO DETERMINE THE BEST ROUTING OF ALL CONDUITS FOR POWER, AND TELCO AND FOR GROUNDING CABLES AS SHOWN IN THE POWER, TELCO, AND GROUNDING PLAN DRAWINGS.
12. THE CONTRACTOR SHALL PROTECT EXISTING IMPROVEMENTS, PAVEMENTS, CURBS, LANDSCAPING AND STRUCTURES. ANY DAMAGED PART SHALL BE REPAIRED AT CONTRACTOR'S EXPENSE TO THE SATISFACTION OF CROWN CASTLE USA INC.
13. CONTRACTOR SHALL LEGALLY AND PROPERLY DISPOSE OF ALL SCRAP MATERIALS SUCH AS COAXIAL CABLES AND OTHER ITEMS REMOVED FROM THE EXISTING FACILITY. ANTENNAS REMOVED SHALL BE RETURNED TO THE OWNER'S DESIGNATED LOCATION.
14. CONTRACTOR SHALL LEAVE PREMISES IN CLEAN CONDITION. TRASH AND DEBRIS SHOULD BE REMOVED FROM SITE ON A DAILY BASIS.

CONCRETE, FOUNDATIONS, AND REINFORCING STEEL:

1. ALL CONCRETE WORK SHALL BE IN ACCORDANCE WITH THE ACI 301, ACI 318, ACI 336, ASTM A184, ASTM A185 AND THE DESIGN AND CONSTRUCTION SPECIFICATION FOR CAST–IN–PLACE CONCRETE.
2. UNLESS NOTED OTHERWISE, SOIL BEARING PRESSURE USED FOR DESIGN OF SLABS AND FOUNDATIONS IS ASSUMED TO BE 1000 psf.
3. ALL CONCRETE SHALL HAVE A MINIMUM COMPRESSIVE STRENGTH (f'c) OF 3000 psi AT 28 DAYS, UNLESS NOTED OTHERWISE. NO MORE THAN 90 MINUTES SHALL ELAPSE FROM BATCH TIME TO TIME OF PLACEMENT UNLESS APPROVED BY THE ENGINEER OF RECORD. TEMPERATURE OF CONCRETE SHALL NOT EXCEED 90°f AT TIME OF PLACEMENT.
4. CONCRETE EXPOSED TO FREEZE–THAW CYCLES SHALL CONTAIN AIR ENTRAINING ADMIXTURES. AMOUNT OF AIR ENTRAINMENT TO BE BASED ON SIZE OF AGGREGATE AND F3 CLASS EXPOSURE (VERY SEVERE). CEMENT USED TO BE TYPE II PORTLAND CEMENT WITH A MAXIMUM WATER–TO–CEMENT RATIO (W/C) OF 0.45.
5. ALL STEEL REINFORCING SHALL CONFORM TO ASTM A615. ALL WELDED WIRE FABRIC (WWF) SHALL CONFORM TO ASTM A185. ALL SPLICES SHALL BE CLASS "B" TENSION SPLICES, UNLESS NOTED OTHERWISE. ALL HOOKS SHALL BE STANDARD 90 DEGREE HOOKS, UNLESS NOTED OTHERWISE. YIELD STRENGTH (Fy) OF STANDARD DEFORMED BARS ARE AS FOLLOWS:
   #4 BARS AND SMALLER....................40 ksi
   #5 BARS AND LARGER....................60 ksi
6. THE FOLLOWING MINIMUM CONCRETE COVER SHALL BE PROVIDED FOR REINFORCING STEEL UNLESS SHOWN OTHERWISE ON DRAWINGS:
   CONCRETE CAST AGAINST AND PERMANENTLY EXPOSED TO EARTH....................3"
   CONCRETE EXPOSED TO EARTH OR WEATHER:
   #6 BARS AND LARGER....................2"
   #5 BARS AND SMALLER....................1–1/2"
   CONCRETE NOT EXPOSED TO EARTH OR WEATHER:
   SLAB AND WALLS....................3/4"
   BEAMS AND COLUMNS....................1–1/2"
7. A TOOLED EDGE OR A 3/4" CHAMFER SHALL BE PROVIDED AT ALL EXPOSED EDGES OF CONCRETE, UNLESS NOTED OTHERWISE, IN ACCORDANCE WITH ACI 301 SECTION 4.2.4.

ELECTRICAL INSTALLATION NOTES:

1. ALL ELECTRICAL WORK SHALL BE PERFORMED IN ACCORDANCE WITH THE PROJECT SPECIFICATIONS, NEC AND ALL APPLICABLE FEDERAL, STATE, AND LOCAL CODES/ORDINANCES.
2. CONDUIT ROUTINGS ARE SCHEMATIC. CONTRACTOR SHALL INSTALL CONDUITS SO THAT ACCESS TO EQUIPMENT IS NOT BLOCKED AND TRIP HAZARDS ARE ELIMINATED.
3. WIRING, RACEWAY AND SUPPORT METHODS AND MATERIALS SHALL COMPLY WITH THE REQUIREMENTS OF THE NEC.
4. ALL CIRCUITS SHALL BE SEGREGATED AND MAINTAIN MINIMUM CABLE SEPARATION AS REQUIRED BY THE NEC.
   4.1. ALL EQUIPMENT SHALL BEAR THE UNDERWRITERS LABORATORIES LABEL OF APPROVAL, AND SHALL CONFORM TO REQUIREMENT OF THE NATIONAL ELECTRICAL CODE.
   4.2. ALL OVERCURRENT DEVICES SHALL HAVE AN INTERRUPTING CURRENT RATING THAT SHALL BE GREATER THAN THE SHORT CIRCUIT CURRENT TO WHICH THEY ARE SUBJECTED, 22,000 AIC MINIMUM. VERYIFY AVAILABLE SHORT CIRCUIT CURRENT DOES NOT EXCEED THE RATING OF ELECTRICAL EQUIPMENT IN ACCORDANCE WITH ARTICLE 110.24 NEC OR THE MOST CURRENT ADOPTED CODE PRE THE GOVERNING JURISDICTION.
5. EACH END OF EVERY POWER PHASE CONDUCTOR, GROUNDING CONDUCTOR, AND TELCO CONDUCTOR OR CABLE SHALL BE LABELED WITH COLOR–CODED INSULATION OR ELECTRICAL TAPE (3M BRAND, 1/2" PLASTIC ELECTRICAL TAPE WITH UV PROTECTION, OR EQUAL). THE IDENTIFICATION METHOD SHALL CONFORM WITH NEC AND OSHA.
6. ALL ELECTRICAL COMPONENTS SHALL BE CLEARLY LABELED WITH LAMICOID TAGS SHOWING THEIR RATED VOLTAGE, PHASE CONFIGURATION, WIRE CONFIGURATION, POWER OR AMPACITY RATING AND BRANCH CIRCUIT ID NUMBERS (i.e. PANEL BOARD AND CIRCUIT ID'S).
7. PANEL BOARDS (ID NUMBERS) SHALL BE CLEARLY LABELED WITH PLASTIC LABELS.
8. ALL TIE WRAPS SHALL BE CUT FLUSH WITH APPROVED CUTTING TOOL TO REMOVE SHARP EDGES.
9. ALL POWER AND EQUIPMENT GROUND WIRING IN TUBING OR CONDUIT SHALL BE SINGLE COPPER CONDUCTOR (#14 OR LARGER) WITH TYPE THHW, THWN, THWN–2, XHHW, XHHW–2, THW, THW–2, RHW, OR RHW–2 INSULATION UNLESS OTHERWISE SPECIFIED.
10. SUPPLEMENTAL EQUIPMENT GROUND WIRING LOCATED INDOORS SHALL BE SINGLE COPPER CONDUCTOR (#6 OR LARGER) WITH TYPE THHW, THWN, THWN–2, XHHW, XHHW–2, THW, THW–2, RHW, OR RHW–2 INSULATION UNLESS OTHERWISE SPECIFIED.
11. POWER AND CONTROL WIRING IN FLEXIBLE CORD SHALL BE MULTI–CONDUCTOR, TYPE SOOW CORD (#14 OR LARGER) UNLESS OTHERWISE SPECIFIED.
12. POWER AND CONTROL WIRING FOR USE IN CABLE TRAY SHALL BE MULTI–CONDUCTOR, TYPE TC CABLE (#14 OR LARGER), WITH TYPE THHW, THWN, THWN–2, XHHW, XHHW–2, THW, THW–2, RHW, OR RHW–2 INSULATION UNLESS OTHERWISE SPECIFIED.
13. ALL POWER AND GROUNDING CONNECTIONS SHALL BE CRIMP–STYLE, COMPRESSION WIRE LUGS AND WIRE NUTS BY THOMAS AND BETTS (OR EQUAL). LUGS AND WIRE NUTS SHALL BE RATED FOR OPERATION NOT LESS THAN 75° C (90° C IF AVAILABLE).
14. RACEWAY AND CABLE TRAY SHALL BE LISTED OR LABELED FOR ELECTRICAL USE IN ACCORDANCE WITH NEMA, UL, ANSI/IEEE AND NEC.
15. ELECTRICAL METALLIC TUBING (EMT), INTERMEDIATE METAL CONDUIT (IMC), OR RIGID METAL CONDUIT (RMC) SHALL BE USED FOR EXPOSED INDOOR LOCATIONS.
16. ELECTRICAL METALLIC TUBING (EMT) OR METAL–CLAD CABLE (MC) SHALL BE USED FOR CONCEALED INDOOR LOCATIONS.
17. SCHEDULE 40 PVC UNDERGROUND ON STRAIGHTS AND SCHEDULE 80 PVC FOR ALL ELBOWS/90s AND ALL APPROVED ABOVE GRADE PVC CONDUIT.
18. LIQUID–TIGHT FLEXIBLE METALLIC CONDUIT (LIQUID–TITE FLEX) SHALL BE USED INDOORS AND OUTDOORS, WHERE VIBRATION OCCURS OR FLEXIBILITY IS NEEDED.
19. CONDUIT AND TUBING FITTINGS SHALL BE THREADED OR COMPRESSION–TYPE AND APPROVED FOR THE LOCATION USED. SET SCREW FITTINGS ARE NOT ACCEPTABLE.
20. CABINETS, BOXES AND WIRE WAYS SHALL BE LABELED FOR ELECTRICAL USE IN ACCORDANCE WITH NEMA, UL, ANSI/IEEE AND THE NEC.
21. WIREWAYS SHALL BE METAL WITH AN ENAMEL FINISH AND INCLUDE A HINGED COVER, DESIGNED TO SWING OPEN DOWNWARDS (WIREMOLD SPECMATE WIREWAY).
22. SLOTTED WIRING DUCT SHALL BE PVC AND INCLUDE COVER (PANDUIT TYPE E OR EQUAL).
23. CONDUITS SHALL BE FASTENED SECURELY IN PLACE WITH APPROVED NON–PERFORATED STRAPS AND HANGERS. EXPLOSIVE DEVICES (i.e. POWDER–ACTUATED) FOR ATTACHING HANGERS TO STRUCTURE WILL NOT BE PERMITTED. CLOSELY FOLLOW THE LINES OF THE STRUCTURE, MAINTAIN CLOSE PROXIMITY TO THE STRUCTURE AND KEEP CONDUITS IN TIGHT ENVELOPES. CHANGES IN DIRECTION TO ROUTE AROUND OBSTACLES SHALL BE MADE WITH CONDUIT OUTLET BODIES. CONDUIT SHALL BE INSTALLED IN A NEAT AND WORKMANLIKE MANNER. PARALLEL AND PERPENDICULAR TO STRUCTURE WALL AND CEILING LINES. ALL CONDUIT SHALL BE FISHED TO CLEAR OBSTRUCTIONS. ENDS OF CONDUITS SHALL BE TEMPORARILY CAPPED FLUSH TO FINISH GRADE TO PREVENT CONCRETE, PLASTER OR DIRT FROM ENTERING. CONDUITS SHALL BE RIGIDLY CLAMPED TO BOXES BY GALVANIZED MALLEABLE IRON BUSHING ON INSIDE AND GALVANIZED MALLEABLE IRON LOCKNUT ON OUTSIDE AND INSIDE.
24. EQUIPMENT CABINETS, TERMINAL BOXES, JUNCTION BOXES AND PULL BOXES SHALL BE GALVANIZED OR EPOXY–COATED SHEET STEEL. SHALL MEET OR EXCEED UL 50 AND BE RATED NEMA 1 (OR BETTER) FOR INTERIOR LOCATIONS AND NEMA 3R (OR BETTER) FOR EXTERIOR LOCATIONS.
25. METAL RECEPTACLE, SWITCH AND DEVICE BOXES SHALL BE GALVANIZED, EPOXY–COATED OR NON–CORRODING; SHALL MEET OR EXCEED UL 514A AND NEMA OS 1 AND BE RATED NEMA 1 (OR BETTER) FOR INTERIOR LOCATIONS AND WEATHER PROTECTED (WP OR BETTER) FOR EXTERIOR LOCATIONS.
26. NONMETALLIC RECEPTACLE, SWITCH AND DEVICE BOXES SHALL MEET OR EXCEED NEMA OS 2 (NEWEST REVISION) AND BE RATED NEMA 1 (OR BETTER) FOR INTERIOR LOCATIONS AND WEATHER PROTECTED (WP OR BETTER) FOR EXTERIOR LOCATIONS.
27. THE CONTRACTOR SHALL NOTIFY AND OBTAIN NECESSARY AUTHORIZATION FROM THE CARRIER AND/OR CROWN CASTLE USA INC. BEFORE COMMENCING WORK ON THE AC POWER DISTRIBUTION PANELS.
28. THE CONTRACTOR SHALL PROVIDE NECESSARY TAGGING ON THE BREAKERS, CABLES AND DISTRIBUTION PANELS IN ACCORDANCE WITH THE APPLICABLE CODES AND STANDARDS TO SAFEGUARD LIFE AND PROPERTY.
29. INSTALL LAMICOID LABEL ON THE METER CENTER TO SHOW "T–MOBILE".
30. ALL EMPTY/SPARE CONDUITS THAT ARE INSTALLED ARE TO HAVE A METERED MULE TAPE PULL CORD INSTALLED.

CONDUCTOR COLOR CODE		
SYSTEM	CONDUCTOR	COLOR
120/240V, 1Ø	A PHASE	BLACK
	B PHASE	RED
	NEUTRAL	WHITE
	GROUND	GREEN
120/208V, 3Ø	A PHASE	BLACK
	B PHASE	RED
	C PHASE	BLUE
	NEUTRAL	WHITE
	GROUND	GREEN
277/480V, 3Ø	A PHASE	BROWN
	B PHASE	ORANGE OR PURPLE
	C PHASE	YELLOW
	NEUTRAL	GREY
	GROUND	GREEN
DC VOLTAGE	POS (+)	RED**
	NEG (–)	BLACK**

* SEE NEC 210.5(C)(1) AND (2)
** POLARITY MARKED AT TERMINATION

APWA UNIFORM COLOR CODE:

WHITE	PROPOSED EXCAVATION
PINK	TEMPORARY SURVEY MARKINGS
RED	ELECTRIC POWER LINES, CABLES, CONDUIT, AND LIGHTING CABLES
YELLOW	GAS, OIL, STEAM, PETROLEUM, OR GASEOUS MATERIALS
ORANGE	COMMUNICATION, ALARM OR SIGNAL LINES, CABLES, OR CONDUIT AND TRAFFIC LOOPS
BLUE	POTABLE WATER
PURPLE	RECLAIMED WATER, IRRIGATION, AND SLURRY LINES
GREEN	SEWERS AND DRAIN LINES

ABBREVIATIONS:

ANT	ANTENNA
(E)	EXISTING
FIF	FACILITY INTERFACE FRAME
GEN	GENERATOR
GPS	GLOBAL POSITIONING SYSTEM
GSM	GLOBAL SYSTEM FOR MOBILE
LTE	LONG TERM EVOLUTION
MGB	MASTER GROUND BAR
MW	MICROWAVE
(N)	NEW
NEC	NATIONAL ELECTRIC CODE
(P)	PROPOSED
PP	POWER PLANT
QTY	QUANTITY
RECT	RECTIFIER
RBS	RADIO BASE STATION
RET	REMOTE ELECTRIC TILT
RFDS	RADIO FREQUENCY DATA SHEET
RRH	REMOTE RADIO HEAD
RRU	REMOTE RADIO UNIT
SIAD	SMART INTEGRATED DEVICE
TMA	TOWER MOUNTED AMPLIFIER
TYP	TYPICAL
UMTS	UNIVERSAL MOBILE TELECOMMUNICATIONS SYSTEM
W.P.	WORK POINT

GREENFIELD GROUNDING NOTES:

1. ALL GROUND ELECTRODE SYSTEMS (INCLUDING TELECOMMUNICATION, RADIO, LIGHTNING PROTECTION AND AC POWER GES'S) SHALL BE BONDED TOGETHER AT OR BELOW GRADE, BY TWO OR MORE COPPER BONDING CONDUCTORS IN ACCORDANCE WITH THE NEC.
2. THE CONTRACTOR SHALL PERFORM IEEE FALL–OF–POTENTAL RESISTANCE TO EARTH TESTING (PER IEEE 1100 AND 81) FOR GROUND ELECTRODE SYSTEMS, THE CONTRACTOR SHALL FURNISH AND INSTALL SUPPLEMENTAL GROUND ELECTRODES AS NEEDED TO ACHIEVE A TEST RESULT OF 5 OHMS OR LESS.
3. THE CONTRACTOR IS RESPONSIBLE FOR PROPERLY SEQUENCING GROUNDING AND UNDERGROUND CONDUIT INSTALLATION AS TO PREVENT ANY LOSS OF CONTINUITY IN THE GROUNDING SYSTEM OR DAMAGE TO THE CONDUIT AND PROVIDE TESTING RESULTS.
4. METAL CONDUIT AND TRAY SHALL BE GROUNDED AND MADE ELECTRICALLY CONTINUOUS WITH LISTED BONDING FITTINGS OR BY BONDING ACROSS THE DISCONTINUITY WITH #6 COPPER WIRE UL APPROVED GROUNDING TYPE CONDUIT CLAMPS.
5. METAL RACEWAY SHALL NOT BE USED AS THE NEC REQUIRED EQUIPMENT GROUND CONDUCTOR. STRANDED COPPER CONDUCTORS WITH GREEN INSULATION, SIZED IN ACCORDANCE WITH THE NEC, SHALL BE FURNISHED AND INSTALLED WITH THE POWER CIRCUITS TO BTS EQUIPMENT.
6. EACH CABINET FRAME SHALL BE DIRECTLY CONNECTED TO THE MASTER GROUND BAR WITH GREEN INSULATED SUPPLEMENTAL EQUIPMENT GROUND WIRES, #6 STRANDED COPPER OR LARGER FOR INDOOR BTS; #2 BARE SOLID TINNED COPPER FOR OUTDOOR BTS.
7. CONNECTIONS TO THE GROUND BUS SHALL NOT BE DOUBLED UP OR STACKED BACK TO BACK CONNECTIONS ON OPPOSITE SIDE OF THE GROUND BUS ARE PERMITTED.
8. ALL EXTERIOR GROUND CONDUCTORS BETWEEN EQUIPMENT/GROUND BARS AND THE GROUND RING SHALL BE #2 SOLID TINNED COPPER UNLESS OTHERWISE INDICATED.
9. ALUMINUM CONDUCTOR OR COPPER CLAD STEEL CONDUCTOR SHALL NOT BE USED FOR GROUNDING CONNECTIONS.
10. USE OF 90° BENDS IN THE PROTECTION GROUNDING CONDUCTORS SHALL BE AVOIDED WHEN 45° BENDS CAN BE ADEQUATELY SUPPORTED.
11. EXOTHERMIC WELDS SHALL BE USED FOR ALL GROUNDING CONNECTIONS BELOW GRADE.
12. ALL GROUND CONNECTIONS ABOVE GRADE (INTERIOR AND EXTERIOR) SHALL BE FORMED USING HIGH PRESS CRIMPS.
13. COMPRESSION GROUND CONNECTIONS MAY BE REPLACED BY EXOTHERMIC WELD CONNECTIONS.
14. ICE BRIDGE BONDING CONDUCTORS SHALL BE EXOTHERMICALLY BONDED OR BOLTED TO THE BRIDGE AND THE TOWER GROUND BAR.
15. APPROVED ANTIOXIDANT COATINGS (i.e. CONDUCTIVE GEL OR PASTE) SHALL BE USED ON ALL COMPRESSION AND BOLTED GROUND CONNECTIONS.
16. ALL EXTERIOR GROUND CONNECTIONS SHALL BE COATED WITH A CORROSION RESISTANT MATERIAL.
17. MISCELLANEOUS ELECTRICAL AND NON–ELECTRICAL METAL BOXES, FRAMES AND SUPPORTS SHALL BE BONDED TO THE GROUND RING, IN ACCORDANCE WITH THE NEC.
18. BOND ALL METALLIC OBJECTS WITHIN 6 ft OF MAIN GROUND RING WITH (1) #2 BARE SOLID TINNED COPPER GROUND CONDUCTOR.
19. GROUND CONDUCTORS USED FOR THE FACILITY GROUNDING AND LIGHTNING PROTECTION SYSTEMS SHALL NOT BE ROUTED THROUGH METALLIC OBJECTS THAT FORM A RING AROUND THE CONDUCTOR, SUCH AS METALLIC CONDUITS, METAL SUPPORT CLIPS OR SLEEVES THROUGH WALLS OR FLOORS. WHEN IT IS REQUIRED TO BE HOUSED IN CONDUIT TO MEET CODE REQUIREMENTS OR LOCAL CONDITIONS, NON–METALLIC MATERIAL SUCH AS PVC CONDUIT SHALL BE USED. WHERE USE OF METAL CONDUIT IS UNAVOIDABLE (i.e., NONMETALLIC CONDUIT PROHIBITED BY LOCAL CODE) THE GROUND CONDUCTOR SHALL BE BONDED TO EACH END OF THE METAL CONDUIT.
20. ALL GROUNDS THAT TRANSITION FROM BELOW GRADE TO ABOVE GRADE MUST BE #2 BARE SOLID TINNED COPPER IN 3/4" NON–METALLIC, FLEXIBLE CONDUIT FROM 24" BELOW GRADE TO WITHIN 3" TO 6" OF CAD–WELD TERMINATION POINT. THE EXPOSED END OF THE CONDUIT MUST BE SEALED WITH SILICONE CAULK. (ADD TRANSITIONING GROUND STANDARD DETAIL AS WELL).
21. BUILDINGS WHERE THE MAIN GROUNDING CONDUCTORS ARE REQUIRED TO BE ROUTED TO GRADE, THE CONTRACTOR SHALL ROUTE TWO GROUNDING CONDUCTORS FROM THE ROOFTOP, TOWERS, AND WATER TOWERS GROUNDING RING, TO THE EXISTING GROUNDING SYSTEM, THE GROUNDING CONDUCTORS SHALL NOT BE SMALLER THAN 2/0 COPPER. ROOFTOP GROUNDING RING SHALL BE BONDED TO THE EXISTING GROUNDING SYSTEM, THE BUILDING STEEL COLUMNS, LIGHTNING PROTECTION SYSTEM, AND BUILDING MAIN WATER LINE (FERROUS OR NONFERROUS METAL PIPING ONLY).

T-Mobile
4 SYLVAN WAY
PARSIPPANY, NJ 07054

CROWN CASTLE
3530 TORINGDON WAY, SUITE 300
CHARLOTTE, NC 28277

B+T GRP
1717 S. BOULDER
SUITE 300
TULSA, OK 74119
PH: (918) 587-4630
www.btgrp.com

T-MOBILE SITE NUMBER: **CT11237C**

BU #: **823666**
DEEP RIVER/RT 9

15 PENT RD.
DEEP RIVER, CT 06417

EXISTING
178'-0" MONOPOLE

ISSUED FOR:

REV	DATE	DRWN	DESCRIPTION	DES./QA
A	6/6/22	MEH	PRELIMINARY REVIEW	CV
0	6/28/22	MEH	CONSTRUCTION	CV

STATE OF CONNECTICUT
CHAD TUTTLE
No. 23924
LICENSED
PROFESSIONAL ENGINEER
6/28/22

B&T ENGINEERING, INC.
PEC.0001564
Expires 2/10/23

IT IS A VIOLATION OF LAW FOR ANY PERSON, UNLESS THEY ARE ACTING UNDER THE DIRECTION OF A LICENSED PROFESSIONAL ENGINEER, TO ALTER THIS DOCUMENT.

SHEET NUMBER: T-2
REVISION: 0

135998.004.01_823666_DEEP RIVER RT 9.dwg – Sheet:T-2 – User: chad.vandergraft – Jun 28, 2022 – 11:30am

SITE PLAN DISCLAIMER:

PROPERTY LINES AND STRUCTURES HAVE BEEN DIGITIZED FROM PREVIOUS PLAN SETS. CROWN CASTLE USA INC. HAS NOT COMPLETED A SITE SURVEY AND THEREFORE MAKES NO CLAIMS AS TO THE ACCURACY OF INFORMATION DEPICTED ON THIS SHEET.

1 OVERALL SITE PLAN

SCALE: 80' 40' 0 80' 1" = 80'-0" (FULL SIZE) 1" = 160'-0" (11x17)

N

T-Mobile

4 SYLVAN WAY
PARSIPPANY, NJ 07054

CROWN CASTLE

3530 TORINGDON WAY, SUITE 300
CHARLOTTE, NC 28277

B+T GRP

1717 S. BOULDER
SUITE 300
TULSA, OK 74119
PH: (918) 587-4630
www.btgrp.com

T-MOBILE SITE NUMBER: **CT11237C**

BU #: **823666**
DEEP RIVER/RT 9

15 PENT RD.
DEEP RIVER, CT 06417

EXISTING
178'-0" MONOPOLE

ISSUED FOR:

REV	DATE	DRWN	DESCRIPTION	DES./QA
A	6/6/22	MEH	PRELIMINARY REVIEW	CV
0	6/28/22	MEH	CONSTRUCTION	CV

STATE OF CONNECTICUT
CHRIS VIE
No. 23924
LICENSED
PROFESSIONAL ENGINEER
6/28/22

B&T ENGINEERING, INC.
PEC.0001564
Expires 2/10/23

IT IS A VIOLATION OF LAW FOR ANY PERSON, UNLESS THEY ARE ACTING UNDER THE DIRECTION OF A LICENSED PROFESSIONAL ENGINEER, TO ALTER THIS DOCUMENT.

SHEET NUMBER: C-1.1

REVISION: 0

135998.004.01_823666_DEEP RIVER RT 9.dwg – Sheet:C-1.1 – User: chad.vandergraft – Jun 28, 2022 – 11:32am

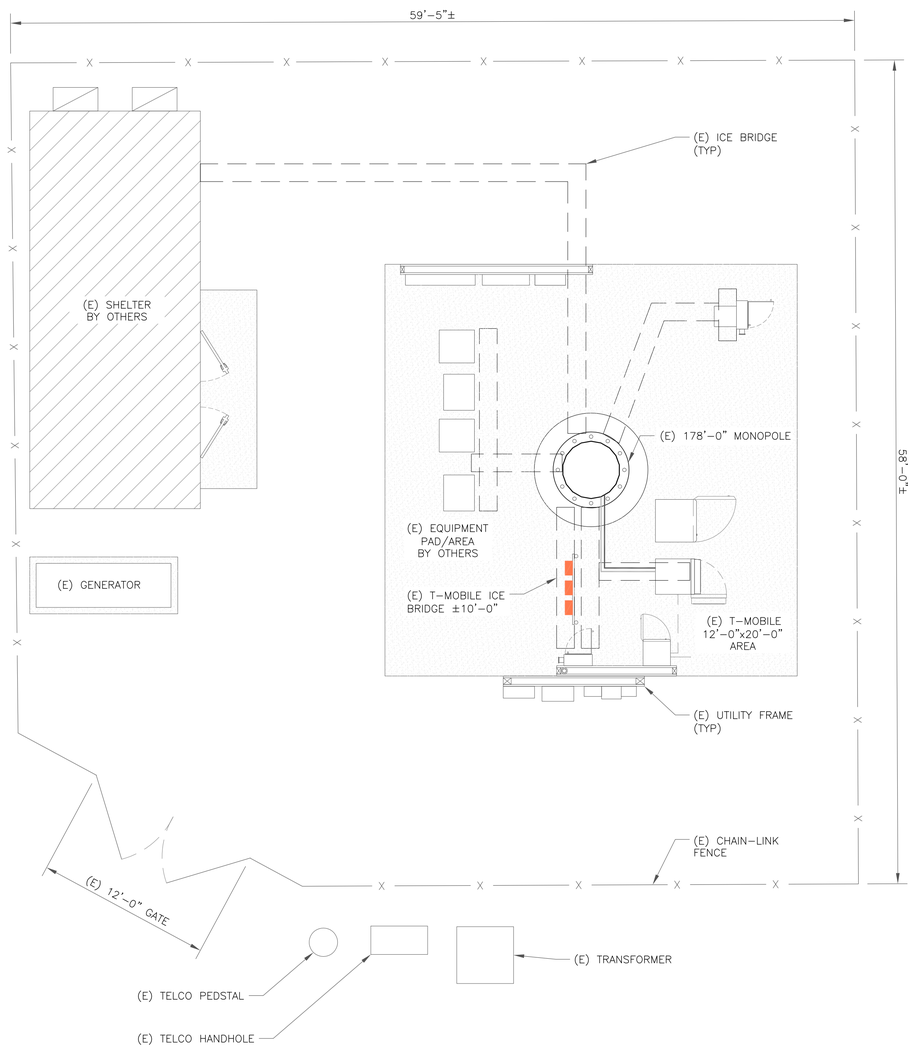

1 SITE PLAN
SCALE: 4' 2' 0 4' 3/16"=1'-0" (FULL SIZE) 3/32"=1'-0" (11x17)

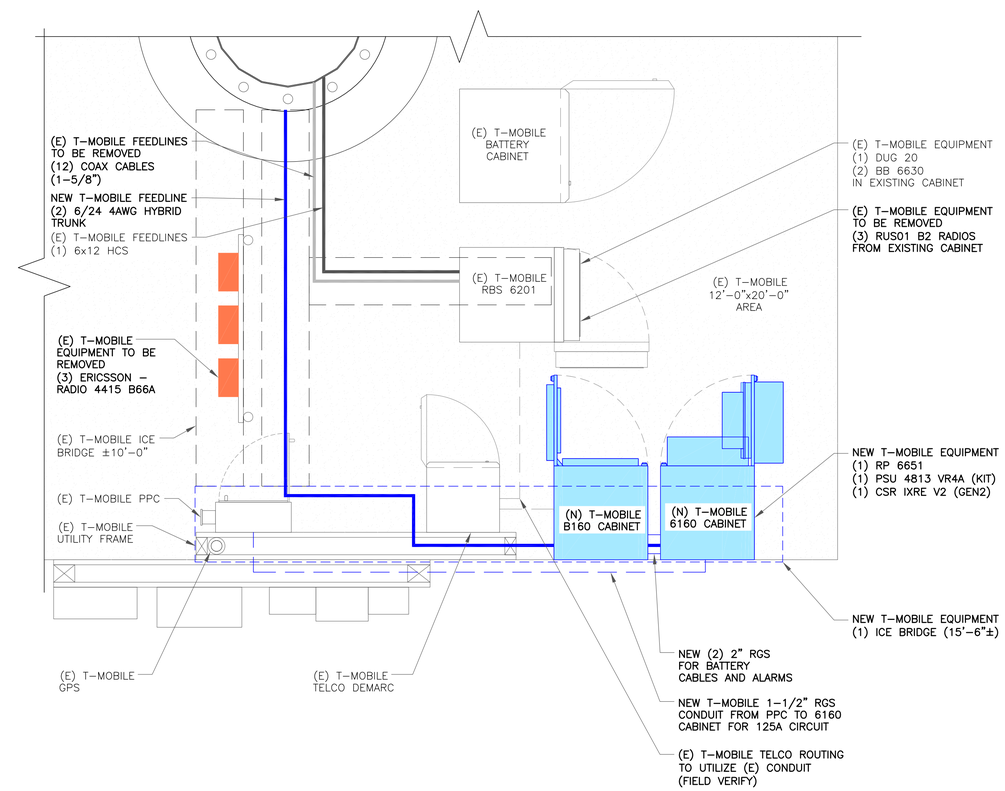

2 ENLARGED SITE PLAN
SCALE: 2' 1' 0 2' 1/2"=1'-0" (FULL SIZE) 1/4"=1'-0" (11x17)

NOTES:

THE POWER DESIGN FOR ANY AC ELECTRICAL POWER CHANGES IS TO BE PERFORMED BY OTHERS AND IS SHOWN HERE FOR REFERENCE PURPOSES ONLY. T-MOBILE IS SOLELY RESPONSIBLE FOR THE ELECTRICAL POWER DESIGN.

T-Mobile
4 SYLVAN WAY
PARSIPPANY, NJ 07054

CROWN CASTLE
3530 TORINGDON WAY, SUITE 300
CHARLOTTE, NC 28277

B+T GRP
1717 S. BOULDER
SUITE 300
TULSA, OK 74119
PH: (918) 587-4630
www.btgrp.com

T-MOBILE SITE NUMBER: **CT11237C**

BU #: **823666**
DEEP RIVER/RT 9

15 PENT RD.
DEEP RIVER, CT 06417

EXISTING
178'-0" MONOPOLE

ISSUED FOR:

REV	DATE	DRWN	DESCRIPTION	DES./QA
A	6/6/22	MEH	PRELIMINARY REVIEW	CV
0	6/28/22	MEH	CONSTRUCTION	CV

STATE OF CONNECTICUT
CHRISTOPHER VANDERGRAFT
No. 23924
LICENSED
PROFESSIONAL ENGINEER
6/28/22

B&T ENGINEERING, INC.
PEC.0001564
Expires 2/10/23

IT IS A VIOLATION OF LAW FOR ANY PERSON, UNLESS THEY ARE ACTING UNDER THE DIRECTION OF A LICENSED PROFESSIONAL ENGINEER, TO ALTER THIS DOCUMENT.

SHEET NUMBER: C-1.2
REVISION: 0

135998.004.01_823666_DEEP RIVER RT 9.dwg - Sheet:C-1.2 - User: chad.vandergraft - Jun 28, 2022 - 11:32am

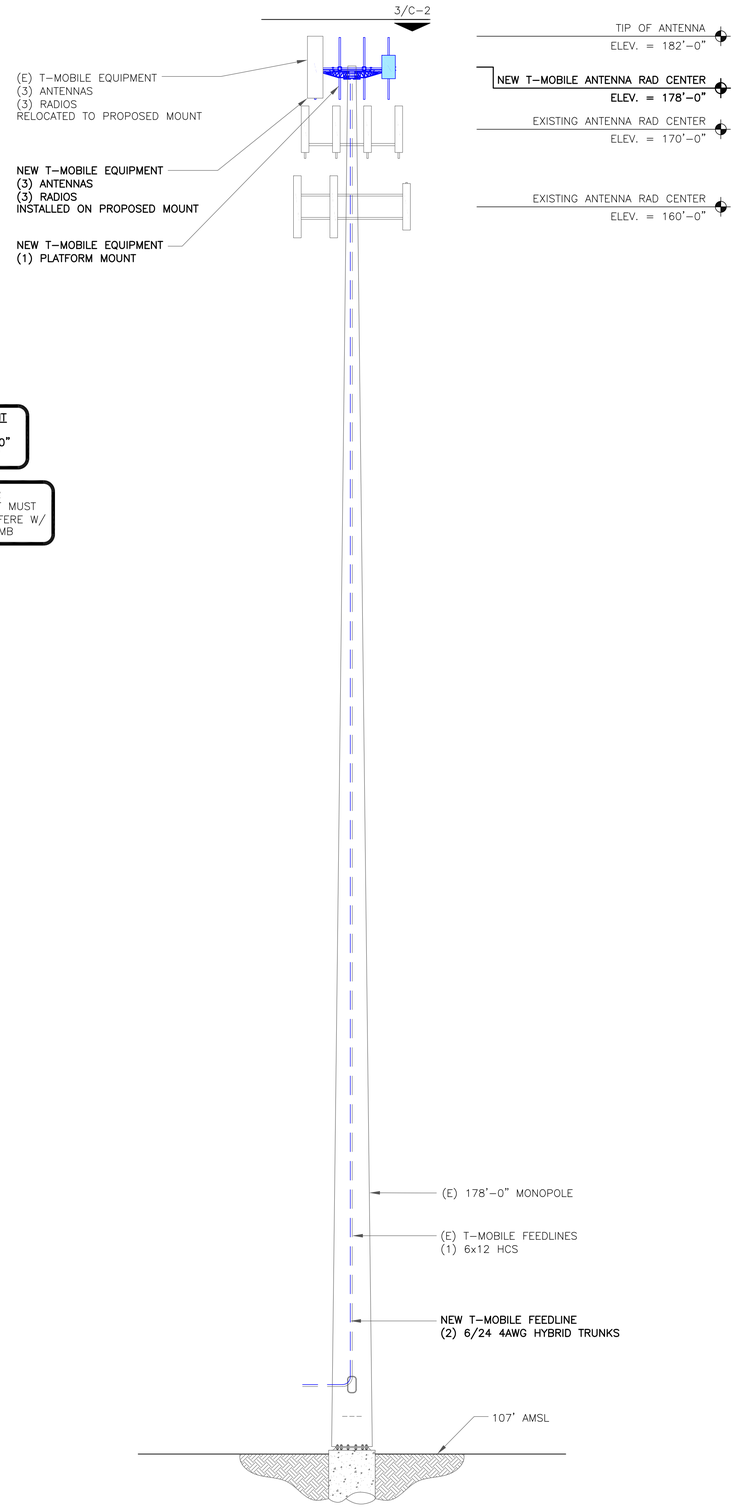

T-MOBILE EQUIPMENT

ANTENNA CL: 178'-0"
MOUNT CL: 178'-0"

ANY AND ALL TOWER MOUNTED EQUIPMENT MUST NOT TRAP OR INTERFERE W/ EXISTING SAFETY CLIMB

1 FINAL ELEVATION
SCALE: NOT TO SCALE

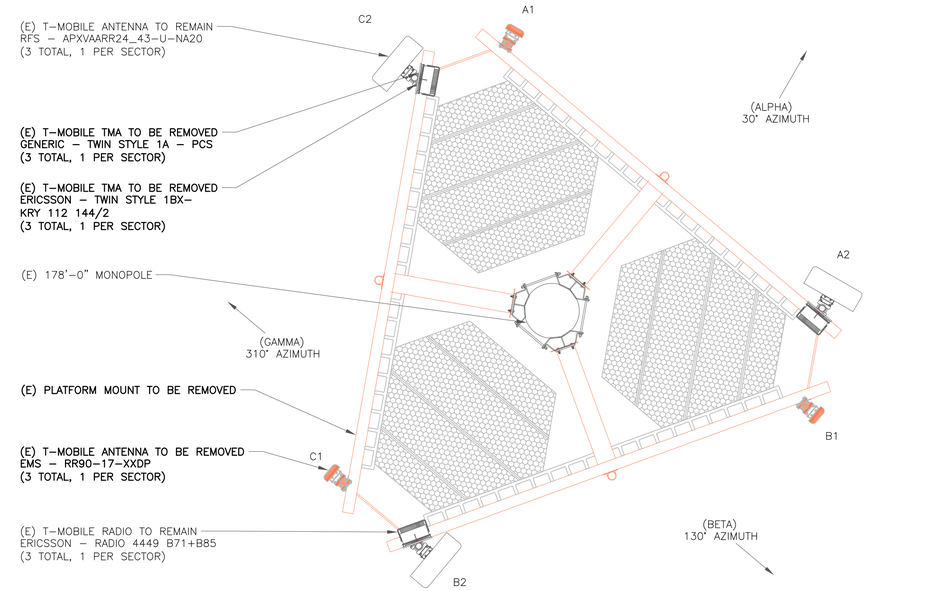

2 EXISTING ANTENNA LAYOUT
SCALE: NOT TO SCALE

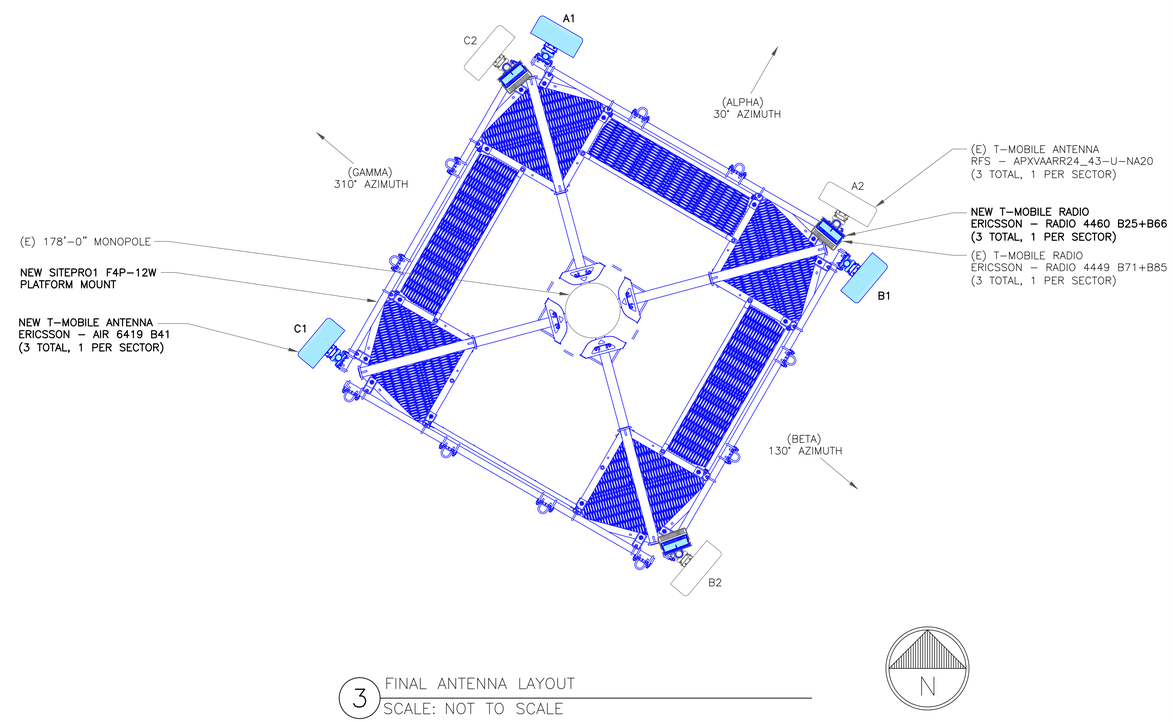

3 FINAL ANTENNA LAYOUT
SCALE: NOT TO SCALE

T-Mobile
4 SYLVAN WAY
PARSIPPANY, NJ 07054

CROWN CASTLE
3530 TORINGDON WAY, SUITE 300
CHARLOTTE, NC 28277

B+T GRP
1717 S. BOULDER
SUITE 300
TULSA, OK 74119
PH: (918) 587-4630
www.btgrp.com

T-MOBILE SITE NUMBER: **CT11237C**

BU #: **823666**
DEEP RIVER/RT 9

15 PENT RD.
DEEP RIVER, CT 06417

EXISTING
178'-0" MONOPOLE

ISSUED FOR:

REV	DATE	DRWN	DESCRIPTION	DES./QA
A	6/6/22	MEH	PRELIMINARY REVIEW	CV
0	6/28/22	MEH	CONSTRUCTION	CV

STATE OF CONNECTICUT
CHRISTOPHER VIGUE
No. 23924
LICENSED
PROFESSIONAL ENGINEER
6/28/22

B&T ENGINEERING, INC.
PEC.0001564
Expires 2/10/23

IT IS A VIOLATION OF LAW FOR ANY PERSON, UNLESS THEY ARE ACTING UNDER THE DIRECTION OF A LICENSED PROFESSIONAL ENGINEER, TO ALTER THIS DOCUMENT.

SHEET NUMBER: C-2
REVISION: 0

135998.004.01_823666_DEEP RIVER RT 9.dwg - Sheet:C-2 - User: chad.vandergraft - Jun 28, 2022 - 11:32am

RF SYSTEM SCHEDULE

SECTOR	ANTENNA	TECH	MANUFACTURER	ANTENNA MODEL	AZIMUTH	M-TILT	E-TILT	RAD CENTER	TMA/RRU	FEEDLINE TYPE
ALPHA	A1	L2500/N2500	ERICSSON	AIR 6419 B41	30°	0°	2°/2°	178'-0"	–	(1) 1 5/8" HYBRID
	–	–	–	–	–	–	–	–	–	–
	A2	N600/L700/L600/ L1900/G1900/L2100	RFS	APXVAARR24_43-U-NA20	30°	0°	2°/2°/2°/ 2°	178'-0"	(1) ERICSSON – RADIO 4449 B71+B85 (1) ERICSSON – RADIO 4460 B25+B66	(2) 1 5/8" HYBRID
BETA	B1	L2500/N2500	ERICSSON	AIR 6419 B41	130°	0°	2°/2°	178'-0"	–	–
	–	–	–	–	–	–	–	–	–	–
	B2	N600/L700/L600/ L1900/G1900/L2100	RFS	APXVAARR24_43-U-NA20	130°	0°	2°/2°/2°/ 2°	178'-0"	(1) ERICSSON – RADIO 4449 B71+B85 (1) ERICSSON – RADIO 4460 B25+B66	–
GAMMA	C1	L2500/N2500	ERICSSON	AIR 6419 B41	310°	0°	2°/2°	178'-0"	–	–
	–	–	–	–	–	–	–	–	–	–
	C2	N600/L700/L600/ L1900/G1900/L2100	RFS	APXVAARR24_43-U-NA20	310°	0°	2°/2°/2°/ 2°	178'-0"	(1) ERICSSON – RADIO 4449 B71+B85 (1) ERICSSON – RADIO 4460 B25+B66	–

1 ANTENNA AND CABLE SCHEDULE
SCALE: NOT TO SCALE

INSTALLER NOTES:

1. COMPLY WITH MANUFACTURERS INSTRUCTIONS TO ENSURE THAT ALL RRHs RECEIVE ELECTRICAL POWER WITHIN 24 HOURS OF BEING REMOVED FROM THE MANUFACTURER'S PACKAGING.
2. DO NOT OPEN RRH PACKAGES IN THE RAIN.
3. ALL PIPES, BRACKETS, AND MISCELLANEOUS HARDWARE TO BE GALVANIZED UNLESS NOTED OTHERWISE.

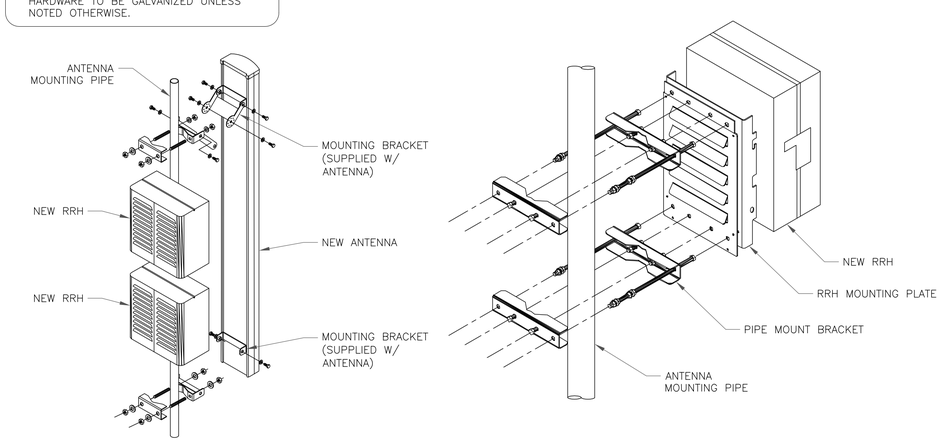

2 ANTENNA WITH RRHs MOUNTING DETAIL
SCALE: NOT TO SCALE

T-Mobile

4 SYLVAN WAY
PARSIPPANY, NJ 07054

CROWN CASTLE

3530 TORINGDON WAY, SUITE 300
CHARLOTTE, NC 28277

B+T GRP

1717 S. BOULDER
SUITE 300
TULSA, OK 74119
PH: (918) 587-4630
www.btgrp.com

T-MOBILE SITE NUMBER: **CT11237C**

BU #: **823666**
DEEP RIVER/RT 9

15 PENT RD.
DEEP RIVER, CT 06417

EXISTING
178'-0" MONOPOLE

ISSUED FOR:

REV	DATE	DRWN	DESCRIPTION	DES./QA
A	6/6/22	MEH	PRELIMINARY REVIEW	CV
0	6/28/22	MEH	CONSTRUCTION	CV

STATE OF CONNECTICUT
CHRISTOPHER VANDERGRAFT
No. 23924
LICENSED
PROFESSIONAL ENGINEER
6/28/22

B&T ENGINEERING, INC.
PEC.0001564
Expires 2/10/23

IT IS A VIOLATION OF LAW FOR ANY PERSON, UNLESS THEY ARE ACTING UNDER THE DIRECTION OF A LICENSED PROFESSIONAL ENGINEER, TO ALTER THIS DOCUMENT.

SHEET NUMBER: C-3

REVISION: 0

135998.004.01_823666_DEEP RIVER RT 9.dwg – Sheet:C-3 – User: chad.vandergraft – Jun 28, 2022 – 11:32am

67D5D998E .jpg

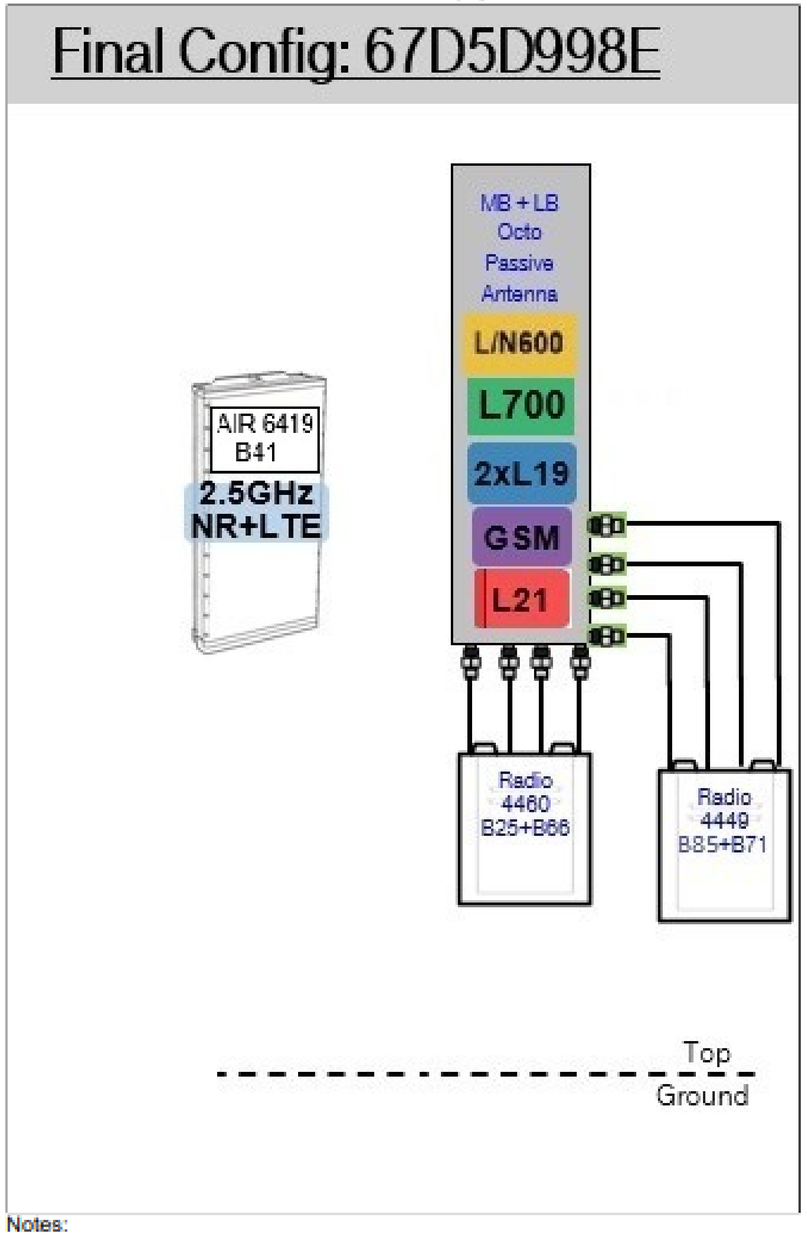

Notes:

1 PLUMBING DIAGRAM
SCALE: NOT TO SCALE

T-Mobile
4 SYLVAN WAY
PARSIPPANY, NJ 07054

CROWN CASTLE
3530 TORINGDON WAY, SUITE 300
CHARLOTTE, NC 28277

B+T GRP
1717 S. BOULDER
SUITE 300
TULSA, OK 74119
PH: (918) 587-4630
www.btgrp.com

T-MOBILE SITE NUMBER: **CT11237C**

BU #: **823666**
DEEP RIVER/RT 9

15 PENT RD.
DEEP RIVER, CT 06417

EXISTING
178'-0" MONOPOLE

ISSUED FOR:

REV	DATE	DRWN	DESCRIPTION	DES./QA
A	6/6/22	MEH	PRELIMINARY REVIEW	CV
0	6/28/22	MEH	CONSTRUCTION	CV

STATE OF CONNECTICUT
CHRISTOPHER VANDERGRAFT
No. 23924
LICENSED
PROFESSIONAL ENGINEER
6/28/22

B&T ENGINEERING, INC.
PEC.0001564
Expires 2/10/23

IT IS A VIOLATION OF LAW FOR ANY PERSON, UNLESS THEY ARE ACTING UNDER THE DIRECTION OF A LICENSED PROFESSIONAL ENGINEER, TO ALTER THIS DOCUMENT.

SHEET NUMBER: C-4
REVISION: 0

135998.004.01_823666_DEEP RIVER RT 9.dwg – Sheet:C-4 – User: chad.vandergraft – Jun 28, 2022 – 11:32am

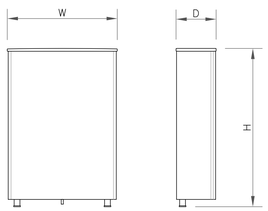

ANTENNA SPECS	
MANUFACTURER	ERICSSON
MODEL #	AIR 6419 B41
WIDTH	20.91"
DEPTH	9.02"
HEIGHT	36.25"
WEIGHT	96.50 LBS

1 ANTENNA SPECS
SCALE: NOT TO SCALE

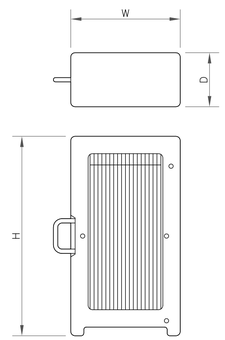

RRU SPECIFICATIONS	
MANUFACTURER	NOKIA
MODEL #	RADIO 4460 B25+ B66
WIDTH	15.1"
DEPTH	11.9"
HEIGHT	17"
WEIGHT	109 LBS

2 RADIO SPECS
SCALE: NOT TO SCALE

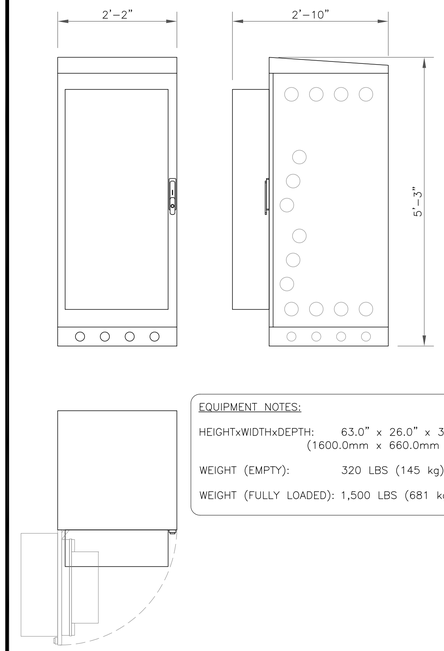

EQUIPMENT NOTES:

HEIGHTxWIDTHxDEPTH: 63.0" x 26.0" x 34.0" (1600.0mm x 660.0mm x 864.0mm)

WEIGHT (EMPTY): 320 LBS (145 kg)

WEIGHT (FULLY LOADED): 1,500 LBS (681 kg)

3 ERICSSON – 6160
SCALE: NOT TO SCALE

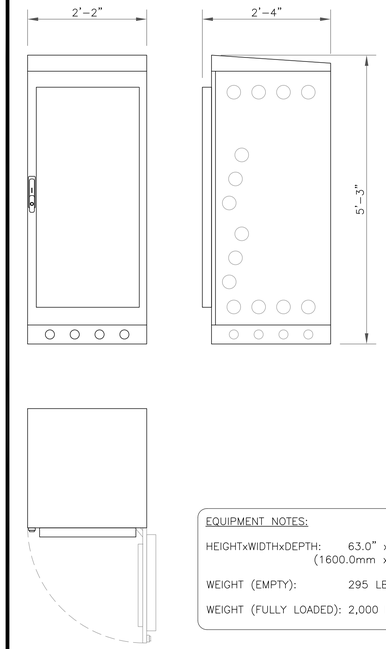

EQUIPMENT NOTES:

HEIGHTxWIDTHxDEPTH: 63.0" x 26.0" x 28.0" (1600.0mm x 660.0mm x 711.0mm)

WEIGHT (EMPTY): 295 LBS (134 kg)

WEIGHT (FULLY LOADED): 2,000 LBS (908 kg)

4 ERICSSON – B160
SCALE: NOT TO SCALE

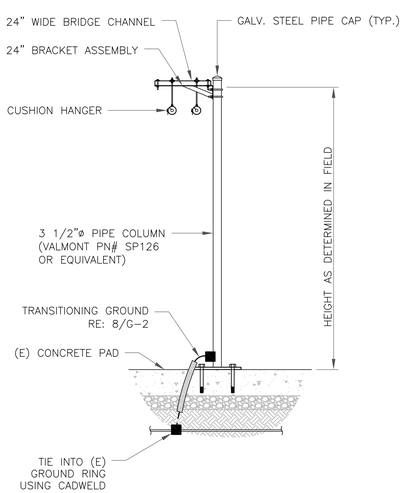

5 ICE BRIDGE DETAIL
SCALE: NOT TO SCALE

6 NOT USED
SCALE: NOT TO SCALE

7 NOT USED
SCALE: NOT TO SCALE

8 NOT USED
SCALE: NOT TO SCALE

T-Mobile
4 SYLVAN WAY
PARSIPPANY, NJ 07054

CROWN CASTLE
3530 TORINGDON WAY, SUITE 300
CHARLOTTE, NC 28277

B+T GRP
1717 S. BOULDER
SUITE 300
TULSA, OK 74119
PH: (918) 587-4630
www.btgrp.com

T-MOBILE SITE NUMBER: **CT11237C**

BU #: **823666**
DEEP RIVER/RT 9

15 PENT RD.
DEEP RIVER, CT 06417

EXISTING
178'-0" MONOPOLE

ISSUED FOR:

REV	DATE	DRWN	DESCRIPTION	DES./QA
A	6/6/22	MEH	PRELIMINARY REVIEW	CV
0	6/28/22	MEH	CONSTRUCTION	CV

B&T ENGINEERING, INC.
PEC.0001564
Expires 2/10/23

IT IS A VIOLATION OF LAW FOR ANY PERSON, UNLESS THEY ARE ACTING UNDER THE DIRECTION OF A LICENSED PROFESSIONAL ENGINEER, TO ALTER THIS DOCUMENT.

SHEET NUMBER: C-5
REVISION: 0

135998.004.01_823666_DEEP RIVER RT 9.dwg – SheetC-5 – User: chad.vandergraft – Jun 28, 2022 – 11:32am

NOTES:

1. PANEL SCHEDULE PENDING FIELD VERIFICATION.

FINAL PANEL SCHEDULE							
LOAD	POLES	AMPS	BUS L1	BUS L2	AMPS	POLES	LOAD
6160 AC V1 CABINET	2	125A	1	2			
			3	4			
B160 BATTERY CABINET	1	20A	5	6			
			7	8			
			9	10			
			11	12			
			13	14			
			15	16			
			17	18			
			19	20			
			21	22			
			23	24			
			25	26			
			27	28			
			29	30			

RATED VOLTAGE: ■120/240 □_____, 1 PHASE, 3 WIRE	BRANCH POLES: □12 □24 ■30 □42	APPROVED MF'RS
RATED AMPS: □100 ■200 □400 □_____,	CABINET: ■SURFACE □FLUSH	NEMA □1 ■3R □4X
□MAIN LUGS ONLY | MAIN 200 AMPS ■BREAKER □FUSED SWITCH	■HINGED DOOR	■KEYED DOOR LATCH
□FUSED ■CIRCUIT BREAKER BRANCH DEVICES	□_____ TO BE GFCI BREAKERS	FULL NEUTRAL BUS | GROUND BAR
ALL BREAKERS MUST BE RATED TO INTERRUPT A SHORT CIRCUIT ISC OF 10,000 AMPS SYMMETRICAL		

REPLACE EXISTING BREAKER IN POSITION 1 AND 3 WITH A NEW 2P 125A BREAKER
REPLACE EXISTING BREAKER IN POSITION 5 WITH A NEW 1P 20A BREAKER
REPLACE EXISTING WIRES FOR EXISTING XXXX CABINET WITH (3) 1/0 AWG THWN (COPPER) AND (1) #2G AWG. MINIMUM CONDUIT SIZE TO BE 2".
IF XXXA BREAKER WILL NOT PROPERLY FIT IN EXISTING PANEL, REPLACE (E) PANEL WITH SQUARE D PANEL QO12040M200RB (OR APPROVED EQUAL).
UPGRADE FEEDER WIRES TO MEET AMPACITY IF NEW PANEL IS REQUIRED.
FINAL PANEL DESIGN AND CALCULATIONS FOR WIRE SIZE WERE BASED OFF OF EXISTING DOCUMENTS AND PHOTOS

1 FINAL T–MOBILE PANEL DETAIL
SCALE: NOT TO SCALE

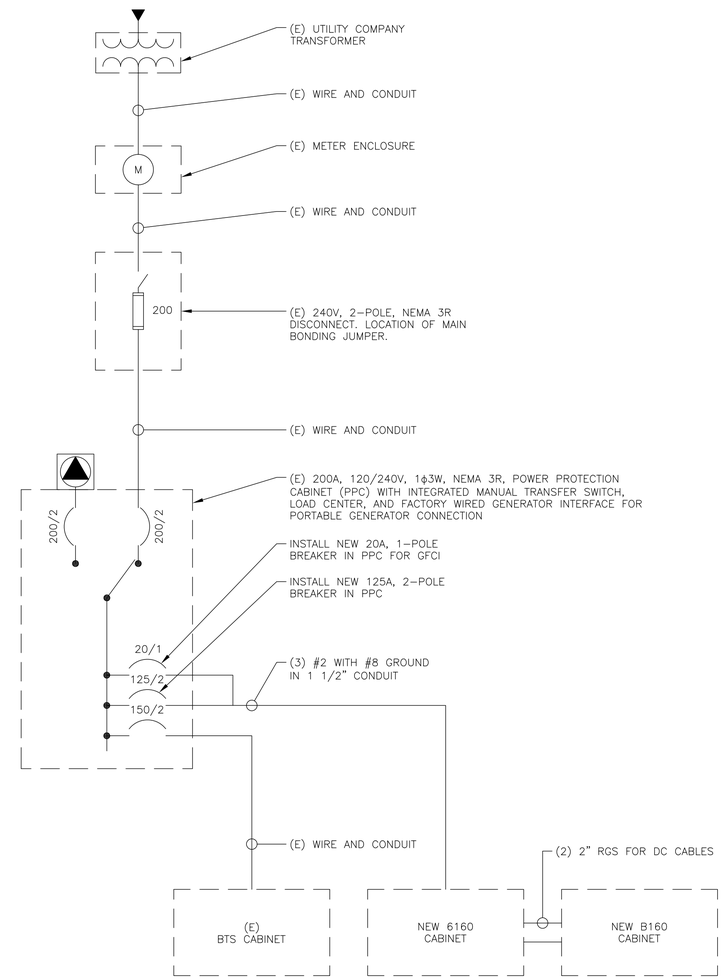

NOTES:

1. ALL NEW CONDUCTORS TO BE INSTALLED SHALL BE COPPER. ALL CONDUCTORS SHALL BE THHW, THWN, THWN–2, XHHW, XHHW–2, THW, THW–2, RHW, OR RHW–2 UNLESS NOTED OTHERWISE.
2. CONTRACTOR IS TO FIELD VERIFY ALL EXISTING ITEMS SHOWN ON THE ELECTRICAL ONE–LINE DIAGRAM AND NOTIFY THE ENGINEER OF ANY DISCREPANCIES.
3. ALL GROUNDING AND BONDING PER THE NEC.

2 ONE LINE DIAGRAM
SCALE: NOT TO SCALE

T-Mobile
4 SYLVAN WAY
PARSIPPANY, NJ 07054

CROWN CASTLE
3530 TORINGDON WAY, SUITE 300
CHARLOTTE, NC 28277

B+T GRP
1717 S. BOULDER
SUITE 300
TULSA, OK 74119
PH: (918) 587-4630
www.btgrp.com

T-MOBILE SITE NUMBER: **CT11237C**

BU #: **823666**
DEEP RIVER/RT 9

15 PENT RD.
DEEP RIVER, CT 06417

EXISTING
178'-0" MONOPOLE

ISSUED FOR:

REV	DATE	DRWN	DESCRIPTION	DES./QA
A	6/6/22	MEH	PRELIMINARY REVIEW	CV
0	6/28/22	MEH	CONSTRUCTION	CV

STATE OF CONNECTICUT
CHRISTOPHER VANDERGRAFT
No. 23024
LICENSED
PROFESSIONAL ENGINEER
6/28/22

B&T ENGINEERING, INC.
PEC.0001564
Expires 2/10/23

IT IS A VIOLATION OF LAW FOR ANY PERSON, UNLESS THEY ARE ACTING UNDER THE DIRECTION OF A LICENSED PROFESSIONAL ENGINEER, TO ALTER THIS DOCUMENT.

SHEET NUMBER: E-1
REVISION: 0

135998.004.01_823666_DEEP RIVER RT 9.dwg – Sheet:E-1 – User: chad.vandergraft – Jun 28, 2022 – 11:32am

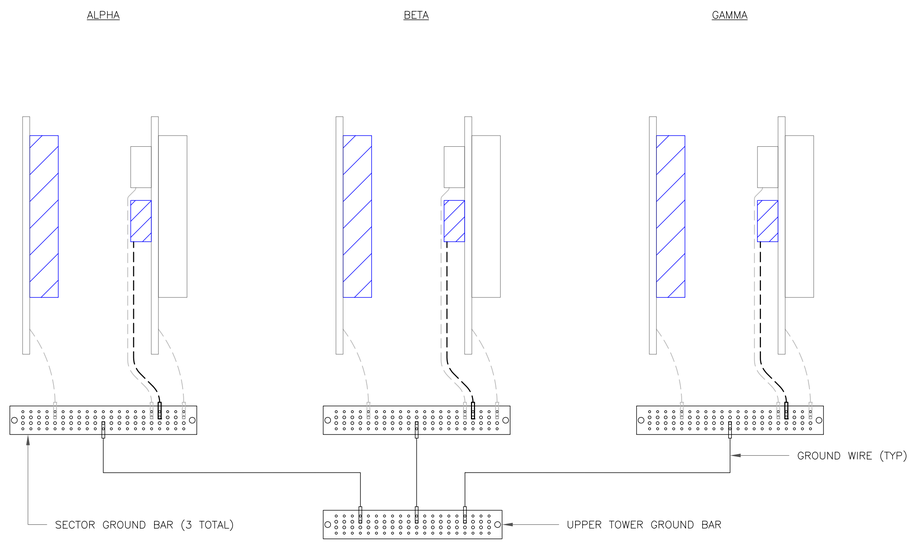

NOTE:

ALL NEW GROUNDS TO BE #6 STRANDED COPPER WITH GREEN INSULATION UNLESS NOTED OTHERWISE.

1 ANTENNA GROUNDING DIAGRAM
SCALE: NOT TO SCALE

T-Mobile

4 SYLVAN WAY
PARSIPPANY, NJ 07054

CROWN CASTLE

3530 TORINGDON WAY, SUITE 300
CHARLOTTE, NC 28277

B+T GRP

1717 S. BOULDER
SUITE 300
TULSA, OK 74119
PH: (918) 587-4630
www.btgrp.com

T-MOBILE SITE NUMBER: **CT11237C**

BU #: **823666**
DEEP RIVER/RT 9

15 PENT RD.
DEEP RIVER, CT 06417

EXISTING
178'-0" MONOPOLE

ISSUED FOR:

REV	DATE	DRWN	DESCRIPTION	DES./QA
A	6/6/22	MEH	PRELIMINARY REVIEW	CV
0	6/28/22	MEH	CONSTRUCTION	CV

STATE OF CONNECTICUT
CHRISTOPHER VANDERGRAFT
No. 23924
LICENSED
PROFESSIONAL ENGINEER
6/28/22

B&T ENGINEERING, INC.
PEC.0001564
Expires 2/10/23

IT IS A VIOLATION OF LAW FOR ANY PERSON, UNLESS THEY ARE ACTING UNDER THE DIRECTION OF A LICENSED PROFESSIONAL ENGINEER, TO ALTER THIS DOCUMENT.

SHEET NUMBER: G-1

REVISION: 0

135998.004.01_823666_DEEP RIVER RT 9.dwg – Sheet:G-1 – User: chad.vandergraft – Jun 28, 2022 – 11:32am

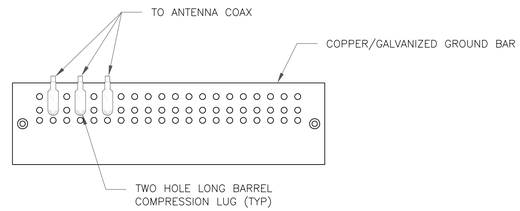

NOTES:

1. DOUBLING UP "OR STACKING" OF CONNECTIONS IS NOT PERMITTED.
2. EXTERIOR ANTIOXIDANT JOINT COMPOUND TO BE USED ON ALL EXTERIOR CONNECTIONS.
3. GROUND BAR SHALL NOT BE ISOLATED FROM TOWER. MOUNT DIRECTLY TO ANTENNA MOUNT STEEL.

1 ANTENNA SECTOR GROUND BAR DETAIL
SCALE: NOT TO SCALE

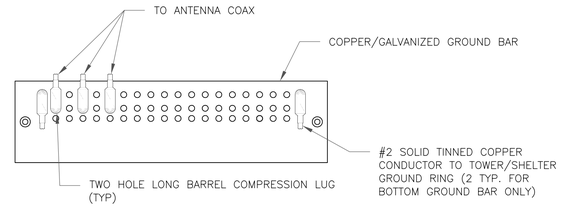

NOTES:

1. EXTERIOR ANTIOXIDANT JOINT COMPOUND TO BE USED ON ALL EXTERIOR CONNECTIONS.
2. GROUND BAR SHALL NOT BE ISOLATED FROM TOWER. MOUNT DIRECTLY TO TOWER STEEL (TOWER ONLY).
3. GROUND BAR SHALL BE ISOLATED FROM BUILDING OR SHELTER.

2 TOWER/SHELTER GROUND BAR DETAIL
SCALE: NOT TO SCALE

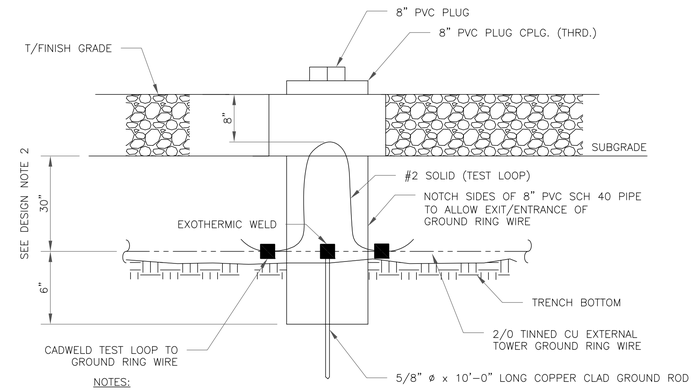

NOTES:

1. GROUND ROD SHALL BE DRIVEN VERTICALLY, NOT TO EXCEED 45 DEGREES FROM THE VERTICAL
2. GROUND WIRE SHALL BE MIN. 30" BELOW GRADE OR 6" BELOW FROST LINE. (WHICH EVER IS GREATER) AS PER N.E.C. ARTICLE 250-50(D)

3 INSPECTION WELL DETAIL
SCALE: NOT TO SCALE

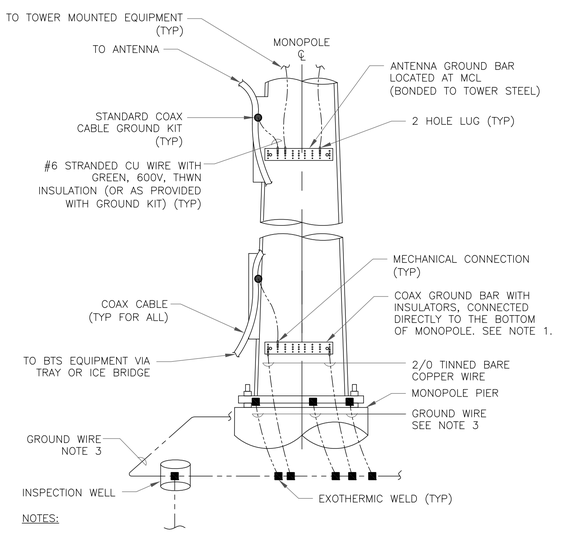

NOTES:

1. NUMBER OF GROUNDING BARS MAY VARY DEPENDING ON THE TYPE OF TOWER, ANTENNA LOCATIONS AND CONNECTION ORIENTATION. COAXIAL CABLES EXCEEDING 200 FEET ON THE TOWER SHALL HAVE GROUND KITS AT THE MIDPOINT. PROVIDE AS REQUIRED.
2. ONLY MECHANICAL CONNECTIONS ARE ALLOWED TO BE MADE TO CROWN CASTLE USA INC. TOWERS. ALL MECHANICAL CONNECTIONS SHALL BE TREATED WITH AN ANTI-OXIDANT COATING.
3. ALL TOWER GROUNDING SYSTEMS SHALL COMPLY WITH THE REQUIREMENTS OF THE RECOGNIZED EDITION OF ANSI/TIA 222 AND NFPA 780.

4 TYPICAL ANTENNA CABLE GROUNDING
SCALE: NOT TO SCALE

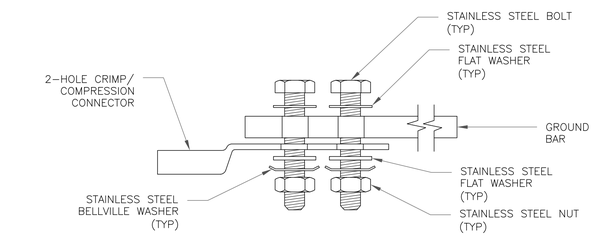

SINGLE CONNECTOR AT GROUND BARS

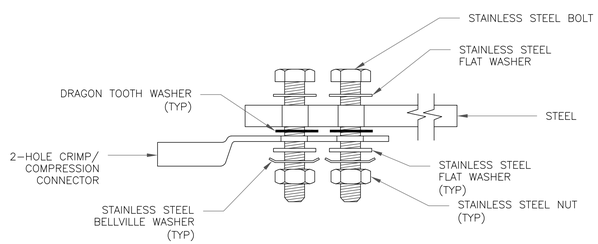

SINGLE CONNECTOR AT STEEL OBJECTS

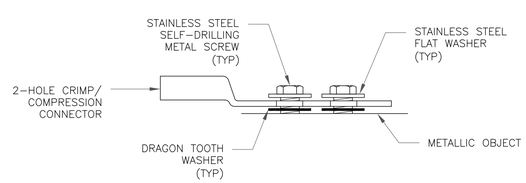

SINGLE CONNECTOR AT METALLIC/STEEL OBJECTS

5 HARDWARE DETAIL FOR EXTERIOR CONNECTIONS
SCALE: NOT TO SCALE

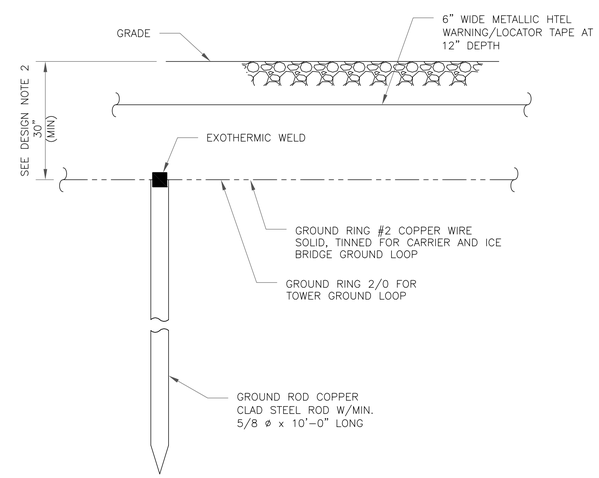

NOTES:

1. GROUND ROD SHALL BE DRIVEN VERTICALLY, NOT TO EXCEED 45 DEGREES FROM THE VERTICAL
2. GROUND WIRE SHALL BE MIN. 30" BELOW GRADE OR 6" BELOW FROST LINE. (WHICH EVER IS GREATER) AS PER N.E.C. ARTICLE 250-50(D)

6 GROUND ROD DETAIL
SCALE: NOT TO SCALE

T-Mobile
4 SYLVAN WAY
PARSIPPANY, NJ 07054

CROWN CASTLE
3530 TORINGDON WAY, SUITE 300
CHARLOTTE, NC 28277

B+T GRP
1717 S. BOULDER
SUITE 300
TULSA, OK 74119
PH: (918) 587-4630
www.btgrp.com

T-MOBILE SITE NUMBER: **CT11237C**

BU #: **823666**
DEEP RIVER/RT 9

15 PENT RD.
DEEP RIVER, CT 06417

EXISTING
178'-0" MONOPOLE

ISSUED FOR:

REV	DATE	DRWN	DESCRIPTION	DES./QA
A	6/6/22	MEH	PRELIMINARY REVIEW	CV
0	6/28/22	MEH	CONSTRUCTION	CV

B&T ENGINEERING, INC.
PEC.0001564
Expires 2/10/23

IT IS A VIOLATION OF LAW FOR ANY PERSON, UNLESS THEY ARE ACTING UNDER THE DIRECTION OF A LICENSED PROFESSIONAL ENGINEER, TO ALTER THIS DOCUMENT.

SHEET NUMBER: G-2
REVISION: 0

135998.004.01_823666_DEEP RIVER RT 9.dwg – Sheet:G-2 – User: chad.vandergraft – Jun 28, 2022 – 11:32am

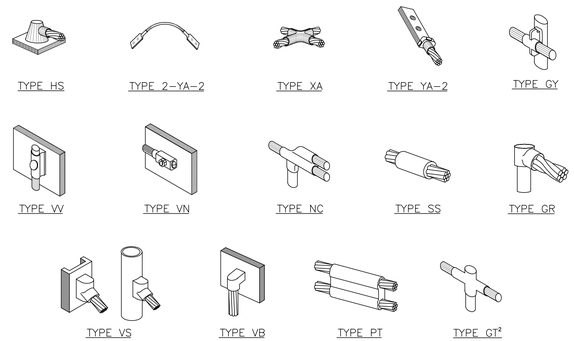

NOTE:

1. ERICO EXOTHERMIC "MOLD TYPES" SHOWN HERE ARE EXAMPLES. CONSULT WITH CONSTRUCTION MANAGER FOR SPECIFIC MOLDS TO BE USED FOR THIS PROJECT.
2. MOLD TYPE ONLY TO BE USED BELOW GRADE WHEN CONNECTING GROUND RING TO GROUND ROD.

1 CADWELD GROUNDING CONNECTIONS
SCALE: NOT TO SCALE

WIRE SIZE	BURNDY LUG	BOLT SIZE
#6 AWG GREEN INSULATED	YA6C-2TC38	3/8" - 16 NC S 2 BOLT
#2 AWG SOLID TINNED	YA3C-2TC38	3/8" - 16 NC S 2 BOLT
#2 AWG STRANDED	YA2C-2TC38	3/8" - 16 NC S 2 BOLT
#2/0 AWG STRANDED	YA26-2TC38	3/8" - 16 NC S 2 BOLT
#4/0 AWG STRANDED	YA28-2N	1/2" - 16 NC S 2 BOLT

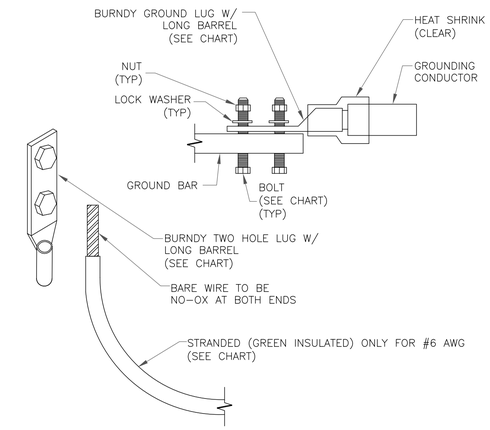

NOTES:

1. ALL GROUNDING LUGS ARE TO BE INSTALLED PER MANUFACTURER'S SPECIFICATIONS. ALL HARDWARE BOLTS, NUTS, LOCK WASHERS SHALL BE STAINLESS STEEL. ALL HARDWARE ARE TO BE AS FOLLOWS: BOLT, FLAT WASHER,GROUND BAR, GROUND LUG, FLAT WASHER AND NUT.

2 MECHANICAL LUG CONNECTION
SCALE: NOT TO SCALE

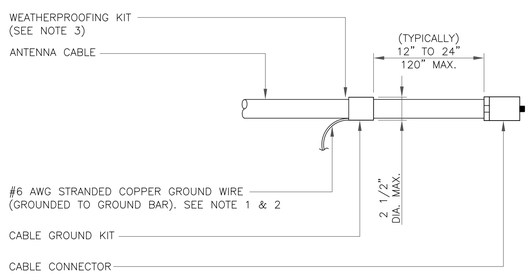

NOTES:

1. DO NOT INSTALL CABLE GROUND KIT AT A BEND AND ALWAYS DIRECT GROUND WIRE DOWN TO GROUND BAR.
2. GROUNDING KIT SHALL BE TYPE AND PART NUMBER AS SUPPLIED OR RECOMMENDED BY CABLE MANUFACTURER.
3. WEATHER PROOFING SHALL BE TWO-PART TAPE KIT, COLD SHRINK SHALL NOT BE USED.

3 CABLE GROUND KIT CONNECTION
SCALE: NOT TO SCALE

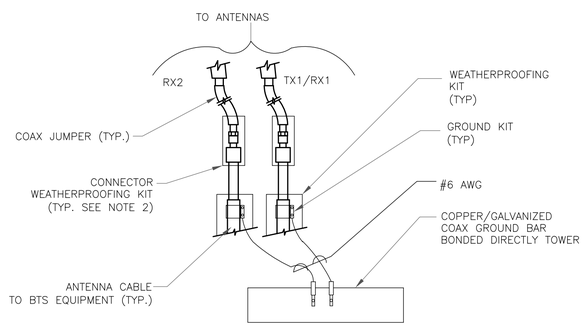

NOTES:

1. DO NOT INSTALL CABLE GROUND KIT AT A BEND AND ALWAYS DIRECT GROUND WIRE DOWN TO ANTENNA GROUND BAR.
2. WEATHER PROOFING SHALL BE TWO-PART TAPE KIT. COLD SHRINK SHALL NOT BE USED.

4 GROUND CABLE CONNECTION
SCALE: NOT TO SCALE

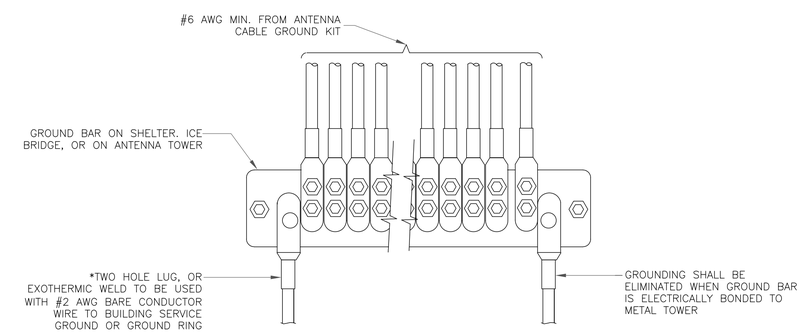

5 GROUNDWIRE INSTALLATION
SCALE: NOT TO SCALE

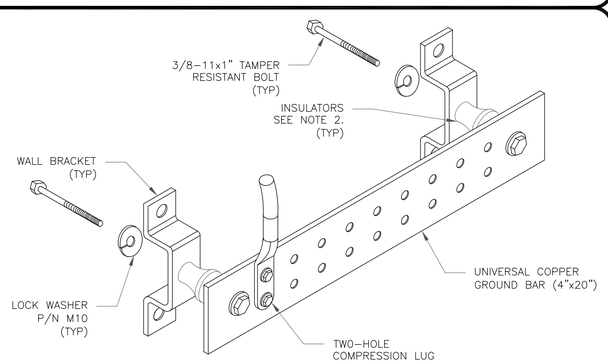

NOTES:

1. DOWN LEAD (HOME RUN) CONDUCTORS ARE NOT TO BE INSTALLED ON CROWN CASTLE USA INC. TOWER, PER THE GROUNDING DOWN CONDUCTOR POLICY QAS-STD-10091. NO MODIFICATION OR DRILLING TO TOWER STEEL IS ALLOWED IN ANY FORM OR FASHION, CAD-WELDING ON THE TOWER AND/OR IN THE AIR ARE NOT PERMITTED.
2. OMIT INSULATOR WHEN MOUNTING TO TOWER STEEL OR PLATFORM STEEL USE INSULATORS WHEN ATTACHING TO BUILDING OR SHELTERS.

6 GROUND BAR DETAIL
SCALE: NOT TO SCALE

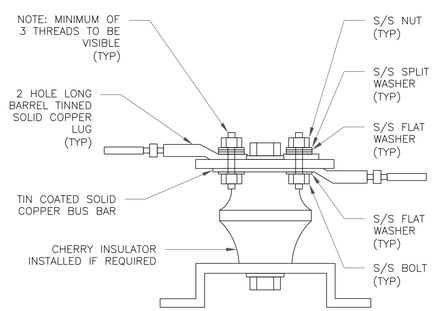

7 LUG DETAIL
SCALE: NOT TO SCALE

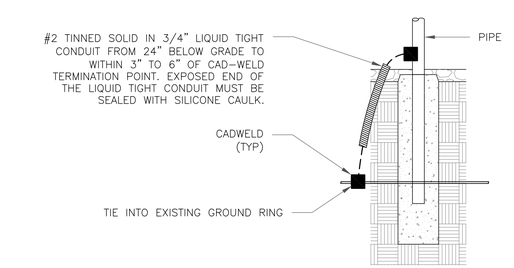

8 TRANSITIONING GROUND DETAIL
SCALE: NOT TO SCALE

T-Mobile
4 SYLVAN WAY
PARSIPPANY, NJ 07054

CROWN CASTLE
3530 TORINGDON WAY, SUITE 300
CHARLOTTE, NC 28277

B+T GRP
1717 S. BOULDER
SUITE 300
TULSA, OK 74119
PH: (918) 587-4630
www.btgrp.com

T-MOBILE SITE NUMBER: **CT11237C**

BU #: **823666**
DEEP RIVER/RT 9

15 PENT RD.
DEEP RIVER, CT 06417

EXISTING
178'-0" MONOPOLE

ISSUED FOR:

REV	DATE	DRWN	DESCRIPTION	DES./QA
A	6/6/22	MEH	PRELIMINARY REVIEW	CV
0	6/28/22	MEH	CONSTRUCTION	CV

B&T ENGINEERING, INC.
PEC.0001564
Expires 2/10/23

IT IS A VIOLATION OF LAW FOR ANY PERSON, UNLESS THEY ARE ACTING UNDER THE DIRECTION OF A LICENSED PROFESSIONAL ENGINEER, TO ALTER THIS DOCUMENT.

SHEET NUMBER: G-3
REVISION: 0

135998.004.01_823666_DEEP RIVER RT 9.dwg - Sheet:G-3 - User: chad.vandergraft - Jun 28, 2022 - 11:32am

PARTS LIST						
ITEM	QTY	PART NO.	PART DESCRIPTION	LENGTH	UNIT WT.	NET WT.
1	4	X-LPP-CW	LOW PROFILE PLATFORM CORNER WELDMENT		198.75	795.01
2	4	X-LPP-SA12	SIDE ARM WELDMENT FOR 12' LOW PROFILE PLATFORMS		119.21	476.84
3	4	X-RM4HD	WELDMENT FOR 4-SIDED HEAVY DUTY RING MOUNT		71.27	285.08
4	4	X-LPP-W12	WALKWAY FOR 12' LOW PROFILE PLATFORM		86.48	345.92
5	16	X-LPP-PC	FACE PIPE CONNECTION BRACKET FORTRESS PLATFORM		7.01	112.15
6	16	X-SCX3-FR	FORTRESS CROSSOVER PLATE		6.61	105.82
7	16	X-LPP-A7	CORNER WELDMENT ATTACHMENT ANGLE	2 1/2 in	1.27	20.33
8	8	X-LPP-H	HINGE FOR LOW PROFILE PLATFORM WALKWAY		2.78	22.22
9	4	P30150	2-7/8" X 150" (2-1/2" SCH. 40) GALVANIZED PIPE	150 in	76.94	307.75
10	16	G58R-48	5/8" x 48" THREADED ROD (HDG.)	48 in	0.40	6.38
10	16	G58R-24	5/8" x 24" THREADED ROD (HDG.)	24 in	0.40	6.38
11	8	G58R-8	5/8" x 8" THREADED ROD (HDG.)		0.70	5.58
12	64	X-UB5300	5/8" X 3" X 5-1/4" X 2-1/2" U-BOLT (HDG.)		1.15	73.56
13	32	X-UB5258	5/8" X 2-5/8" X 4-1/2" X 2" U-BOLT (HDG.)		1.00	32.00
14	16	X-UB5304	5/8" X 3" X 4-1/4" X 2-1/2" U-BOLT (HDG.)		0.98	15.60
15	64	G58214	5/8" x 2-1/4" HDG HEX BOLT GR5		0.29	18.66
16	256	G58FW	5/8" HDG USS FLATWASHER	1/8 in	0.07	18.04
17	272	G58LW	5/8" HDG LOCKWASHER		0.03	7.10
18	272	G58NUT	5/8" HDG HEAVY 2H HEX NUT		0.13	35.33
					TOTAL WT. #	2777.35

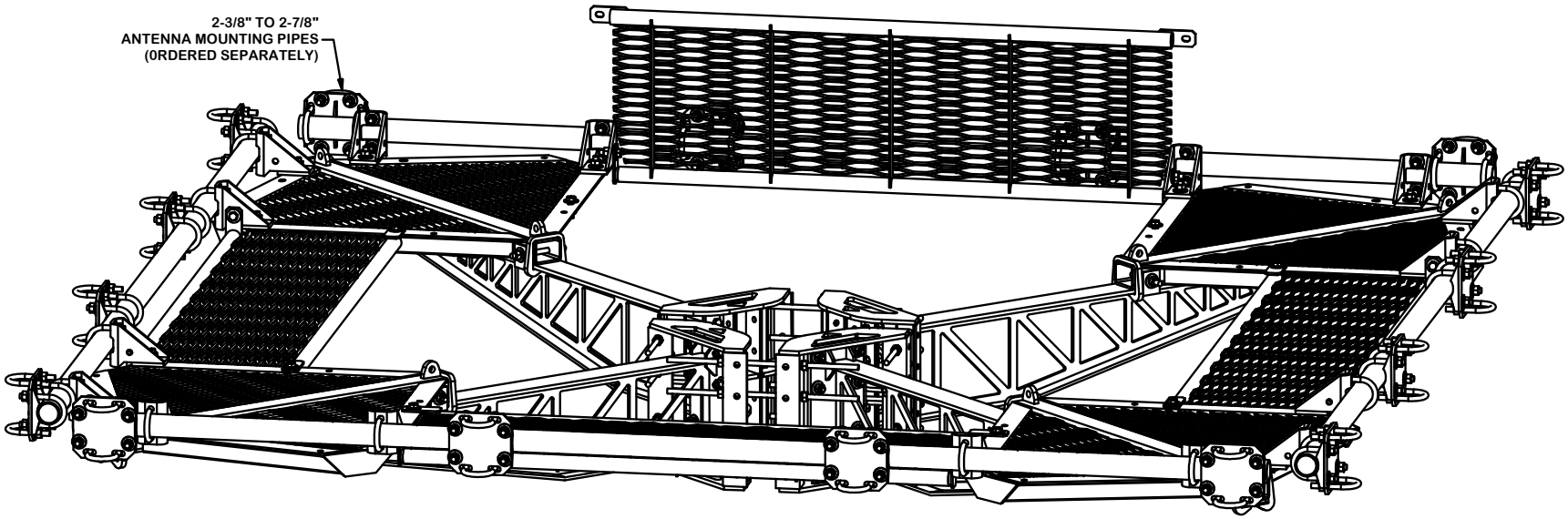

TOLERANCE NOTES

TOLERANCES ON DIMENSIONS, UNLESS OTHERWISE NOTED ARE:
SAWED, SHEARED AND GAS CUT EDGES *(± 0.030")*
DRILLED AND GAS CUT HOLES *(± 0.030")* - NO CONING OF HOLES
LASER CUT EDGES AND HOLES *(± 0.010")* - NO CONING OF HOLES
BENDS ARE ± 1/2 DEGREE
ALL OTHER MACHINING *(± 0.030")*
ALL OTHER ASSEMBLY *(± 0.060")*

PROPRIETARY NOTE:
THE DATA AND TECHNIQUES CONTAINED IN THIS DRAWING ARE PROPRIETARY INFORMATION OF VALMONT INDUSTRIES AND CONSIDERED A TRADE SECRET. ANY USE OR DISCLOSURE WITHOUT THE CONSENT OF VALMONT INDUSTRIES IS STRICTLY PROHIBITED.

DESCRIPTION
12' FORTRESS™
QUAD-PLATFORM MOUNT
WITH WALKWAYS

SITE PRO 1
A valmont COMPANY

Engineering Support Team:
1-888-753-7446

Locations:
New York, NY
Atlanta, GA
Los Angeles, CA
Plymouth, IN
Salem, OR
Dallas, TX

CPD NO.	DRAWN BY	ENG. APPROVAL	PART NO.
	CEK 8/9/2017		F4P-12W

CLASS	SUB	DRAWING USAGE	CHECKED BY	DWG. NO.
81	02	CUSTOMER	BMC 8/30/2017	F4P-12W

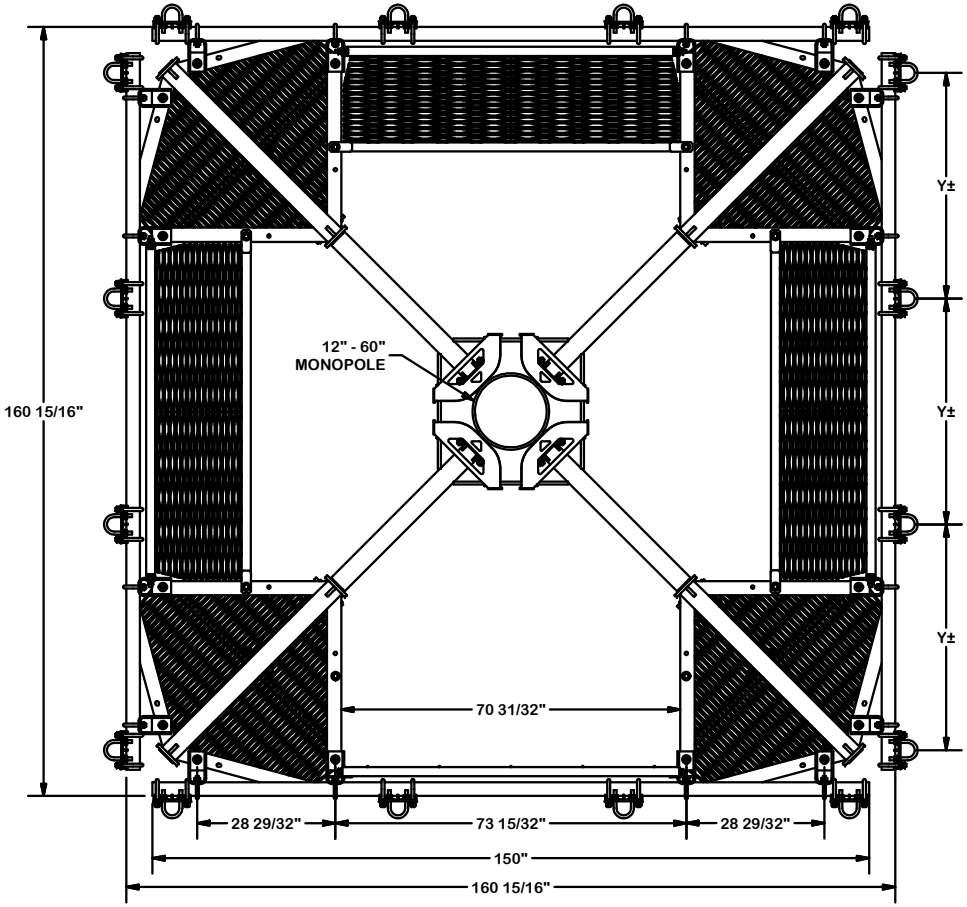

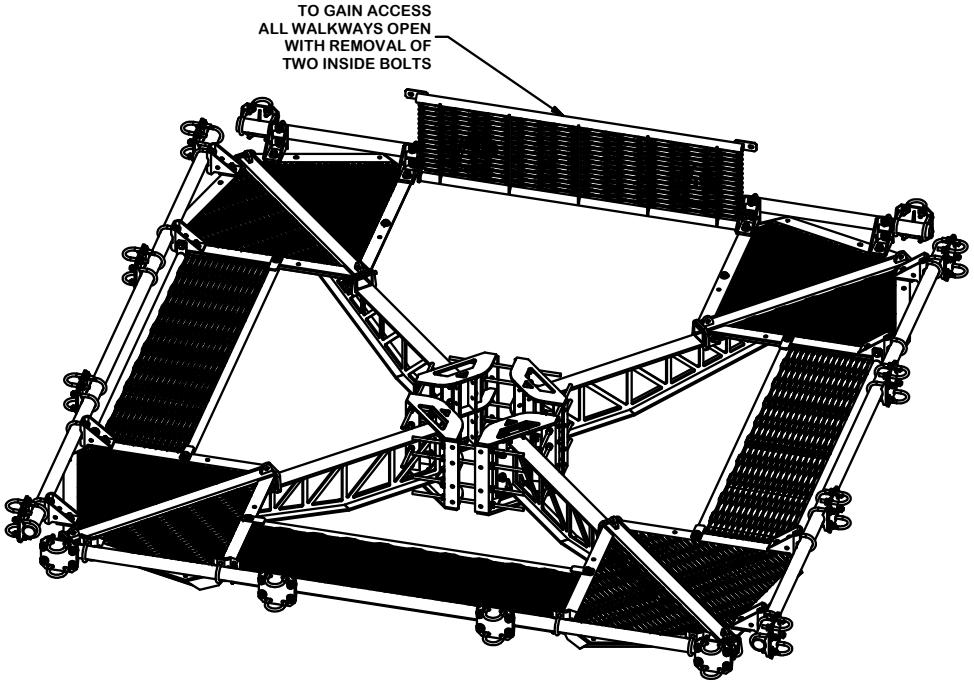

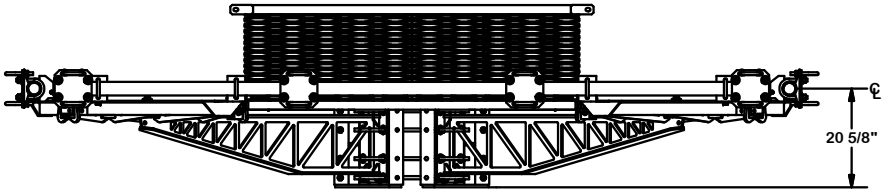

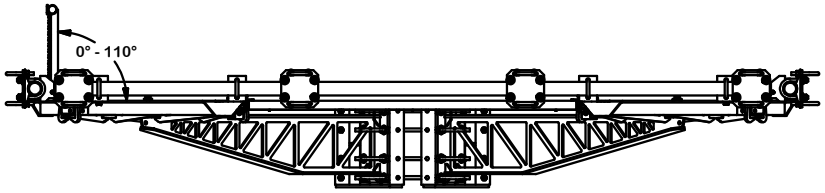

TOLERANCE NOTES

TOLERANCES ON DIMENSIONS, UNLESS OTHERWISE NOTED ARE:
SAWED, SHEARED AND GAS CUT EDGES *(± 0.030")*
DRILLED AND GAS CUT HOLES *(± 0.030")* - NO CONING OF HOLES
LASER CUT EDGES AND HOLES *(± 0.010")* - NO CONING OF HOLES
BENDS ARE ± 1/2 DEGREE
ALL OTHER MACHINING *(± 0.030")*
ALL OTHER ASSEMBLY *(± 0.060")*

PROPRIETARY NOTE:
THE DATA AND TECHNIQUES CONTAINED IN THIS DRAWING ARE PROPRIETARY INFORMATION OF VALMONT INDUSTRIES AND CONSIDERED A TRADE SECRET. ANY USE OR DISCLOSURE WITHOUT THE CONSENT OF VALMONT INDUSTRIES IS STRICTLY PROHIBITED.

DESCRIPTION
12' FORTRESS™
QUAD-PLATFORM MOUNT
WITH WALKWAYS

SITE PRO 1
A valmont COMPANY

Engineering Support Team:
1-888-753-7446

Locations:
New York, NY
Atlanta, GA
Los Angeles, CA
Plymouth, IN
Salem, OR
Dallas, TX

CPD NO.	DRAWN BY	ENG. APPROVAL	PART NO.
	CEK 8/9/2017		F4P-12W

CLASS	SUB	DRAWING USAGE	CHECKED BY	DWG. NO.
81	02	CUSTOMER	BMC 8/30/2017	F4P-12W

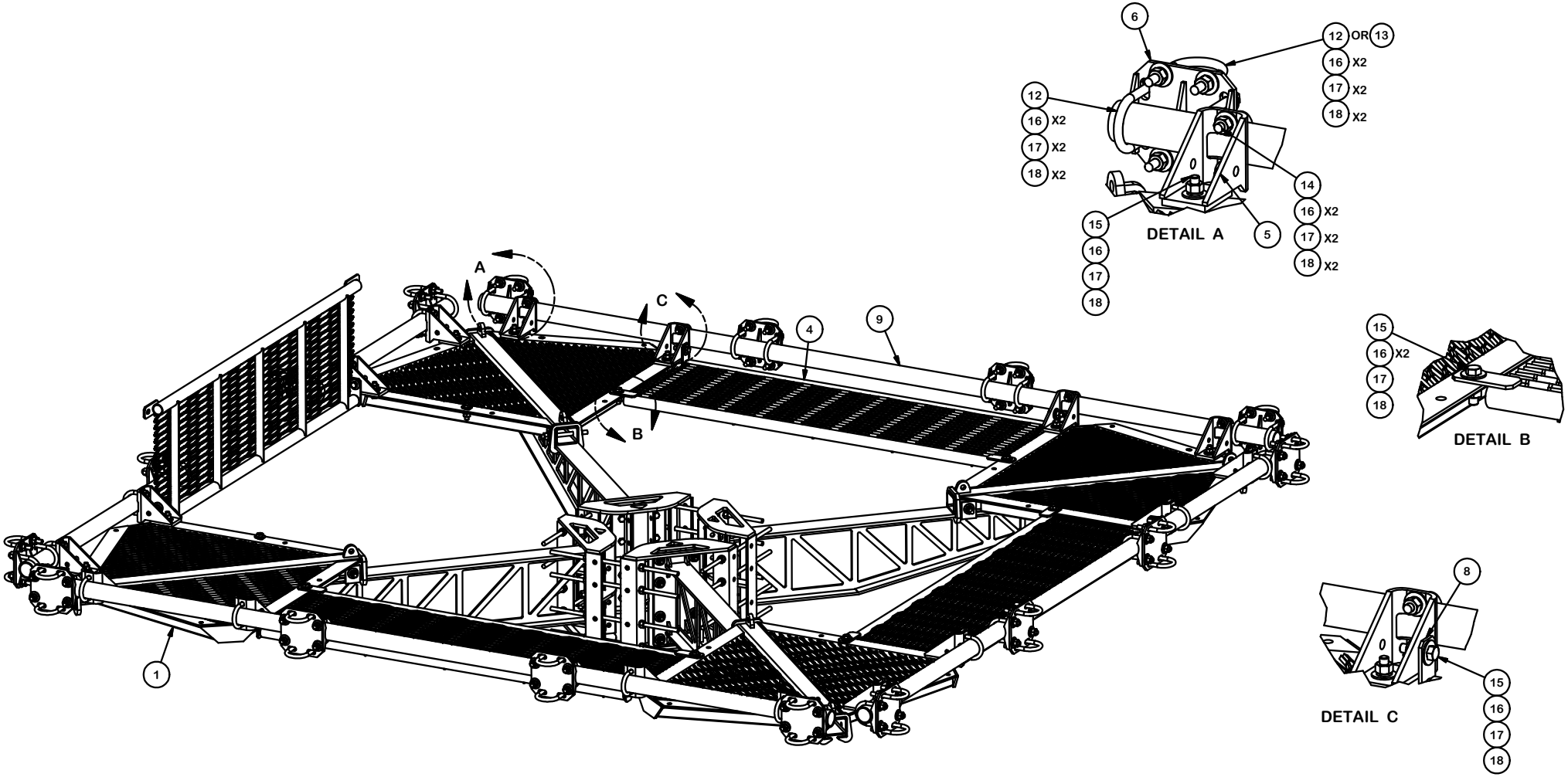

TOLERANCE NOTES

TOLERANCES ON DIMENSIONS, UNLESS OTHERWISE NOTED ARE:
SAWED, SHEARED AND GAS CUT EDGES *(± 0.030")*
DRILLED AND GAS CUT HOLES *(± 0.030")* - NO CONING OF HOLES
LASER CUT EDGES AND HOLES *(± 0.010")* - NO CONING OF HOLES
BENDS ARE ± 1/2 DEGREE
ALL OTHER MACHINING *(± 0.030")*
ALL OTHER ASSEMBLY *(± 0.060")*

PROPRIETARY NOTE:
THE DATA AND TECHNIQUES CONTAINED IN THIS DRAWING ARE PROPRIETARY INFORMATION OF VALMONT INDUSTRIES AND CONSIDERED A TRADE SECRET. ANY USE OR DISCLOSURE WITHOUT THE CONSENT OF VALMONT INDUSTRIES IS STRICTLY PROHIBITED.

DESCRIPTION
12' FORTRESS™
QUAD-PLATFORM MOUNT
WITH WALKWAYS

SITE PRO 1
A valmont COMPANY

Engineering Support Team:
1-888-753-7446

Locations:
New York, NY
Atlanta, GA
Los Angeles, CA
Plymouth, IN
Salem, OR
Dallas, TX

CPD NO.	DRAWN BY	ENG. APPROVAL	PART NO.
	CEK 8/9/2017		F4P-12W

CLASS	SUB	DRAWING USAGE	CHECKED BY	DWG. NO.
81	02	CUSTOMER	BMC 8/30/2017	F4P-12W

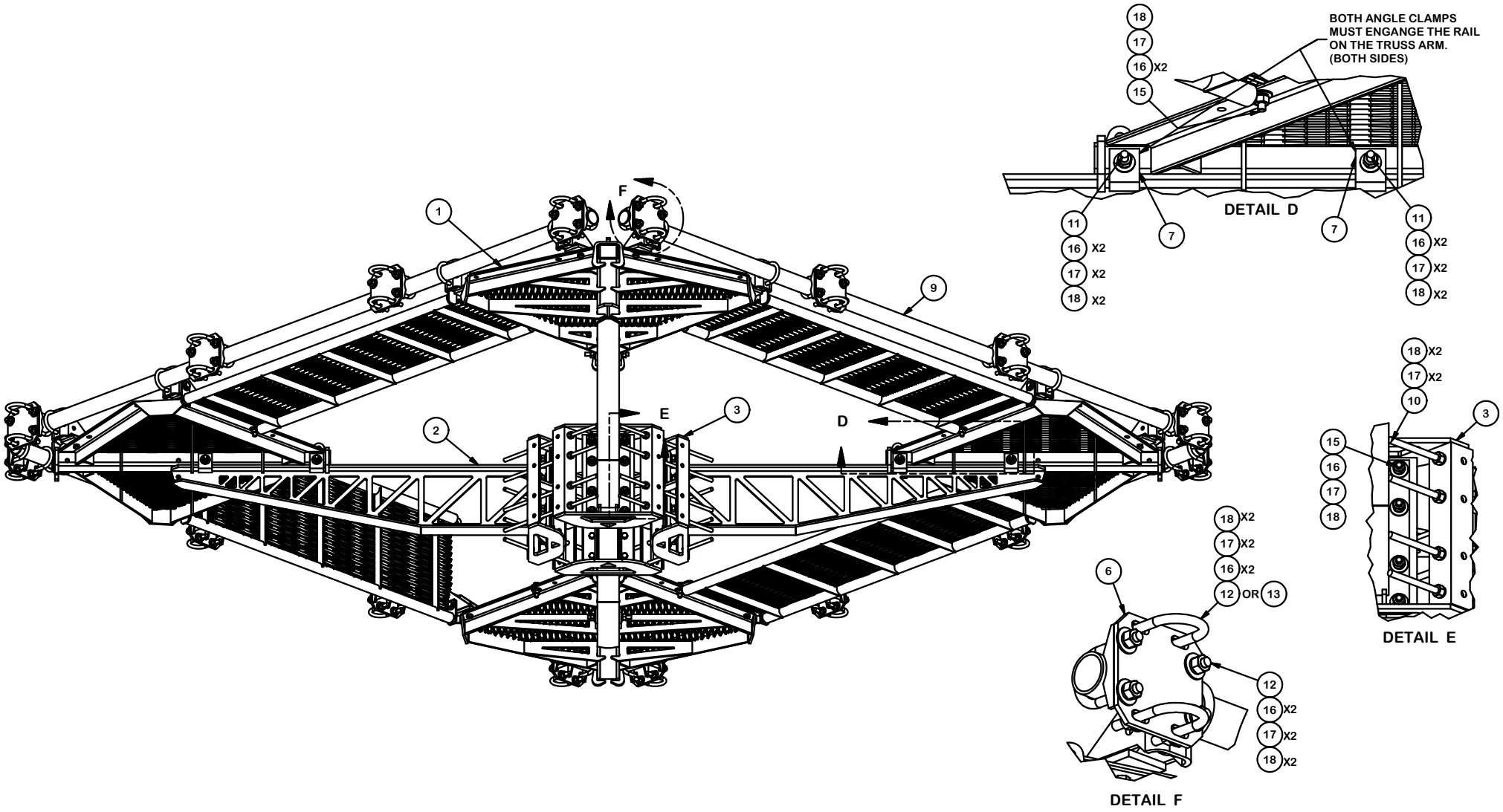

TOLERANCE NOTES

TOLERANCES ON DIMENSIONS, UNLESS OTHERWISE NOTED ARE:
SAWED, SHEARED AND GAS CUT EDGES *(± 0.030")*
DRILLED AND GAS CUT HOLES *(± 0.030")* - NO CONING OF HOLES
LASER CUT EDGES AND HOLES *(± 0.010")* - NO CONING OF HOLES
BENDS ARE ± 1/2 DEGREE
ALL OTHER MACHINING *(± 0.030")*
ALL OTHER ASSEMBLY *(± 0.060")*

PROPRIETARY NOTE:
THE DATA AND TECHNIQUES CONTAINED IN THIS DRAWING ARE PROPRIETARY INFORMATION OF VALMONT INDUSTRIES AND CONSIDERED A TRADE SECRET. ANY USE OR DISCLOSURE WITHOUT THE CONSENT OF VALMONT INDUSTRIES IS STRICTLY PROHIBITED.

DESCRIPTION
12' FORTRESS™
QUAD-PLATFORM MOUNT
WITH WALKWAYS

SITE PRO 1
A valmont COMPANY

Engineering Support Team:
1-888-753-7446

Locations:
New York, NY
Atlanta, GA
Los Angeles, CA
Plymouth, IN
Salem, OR
Dallas, TX

CPD NO.	DRAWN BY	ENG. APPROVAL	PART NO.
	CEK 8/9/2017		F4P-12W

CLASS	SUB	DRAWING USAGE	CHECKED BY	DWG. NO.
81	02	CUSTOMER	BMC 8/30/2017	F4P-12W