Inspection Type: Fracture Critical and Routine

BRIDGE NO. 03819

52350 - NEW LONDON

INTERSTATE 95 NORTHBOUND

over

THAMES RV,RR,LOCAL ROADS

Fracture Critical and Routine Inspection

7/26/2021

Inspected by: PRIME AE

TABLE OF CONTENTS

Section	Page Number
Report Title Page	1
Location Map	2
In-Depth Components	3
Structure Inventory and Appraisal (BRI-19)	6
Inspection Data (BRI-18)	11
National Bridge Elements	37
Rocker Bearing Measurement sheet (BRI-15)	40
Fracture Critical Data (BRI-12)	66
Work item lists	70
Stringer Section Losses	73
Girder Section Losses	80
Floorbeam Section Losses	81
Truss Member Section Losses	84
Truss Gusset Plate Section Losses	85
2021 Ultrasonic Testing Report	94
2019 Ultrasonic Testing Report	99

TABLE OF CONTENTS

Section	Page Number
Sketches	114
Pictures	674
Highway Bridge Work Items	788

Wethersfield Office
100 Great Meadow Road | 6th Floor | Wethersfield, Connecticut 06109
P: 860.436.5600 | F: 860.436.5601

Report Title Page

Bridge No. 03819, I-95 NB over Thames River, Railroads and Local Roads, New London, CT

Date of Inspection: 07/26/2021

STATE OF CONNECTICUT
NAVNIT R. NAKRANI
No. 20458
REGISTERED
PROFESSIONAL ENGINEER

Professional Certification: I hereby certify that this report, including all its contents, has been approved by me, and that I am a duly licensed professional engineer under the laws of the State of Connecticut.

Signature:

Navnit R Nakrani Digitally signed by Navnit R Nakrani
Date: 2022.01.20 08:15:39 -05'00'

License No.: 20458

Date: 01/20/2022

Form: Location
Inspection type: Fracture Critical,Routine
Inspection Date: 7/26/2021
Inspected by: PRIME AE

:Bridge No 03819

Town: NEW LONDON
Carried: INTERSTATE 95 NORTHBOUND
Crossed: THAMES RV,RR,LOCAL ROADS
Inventory Route: NHS

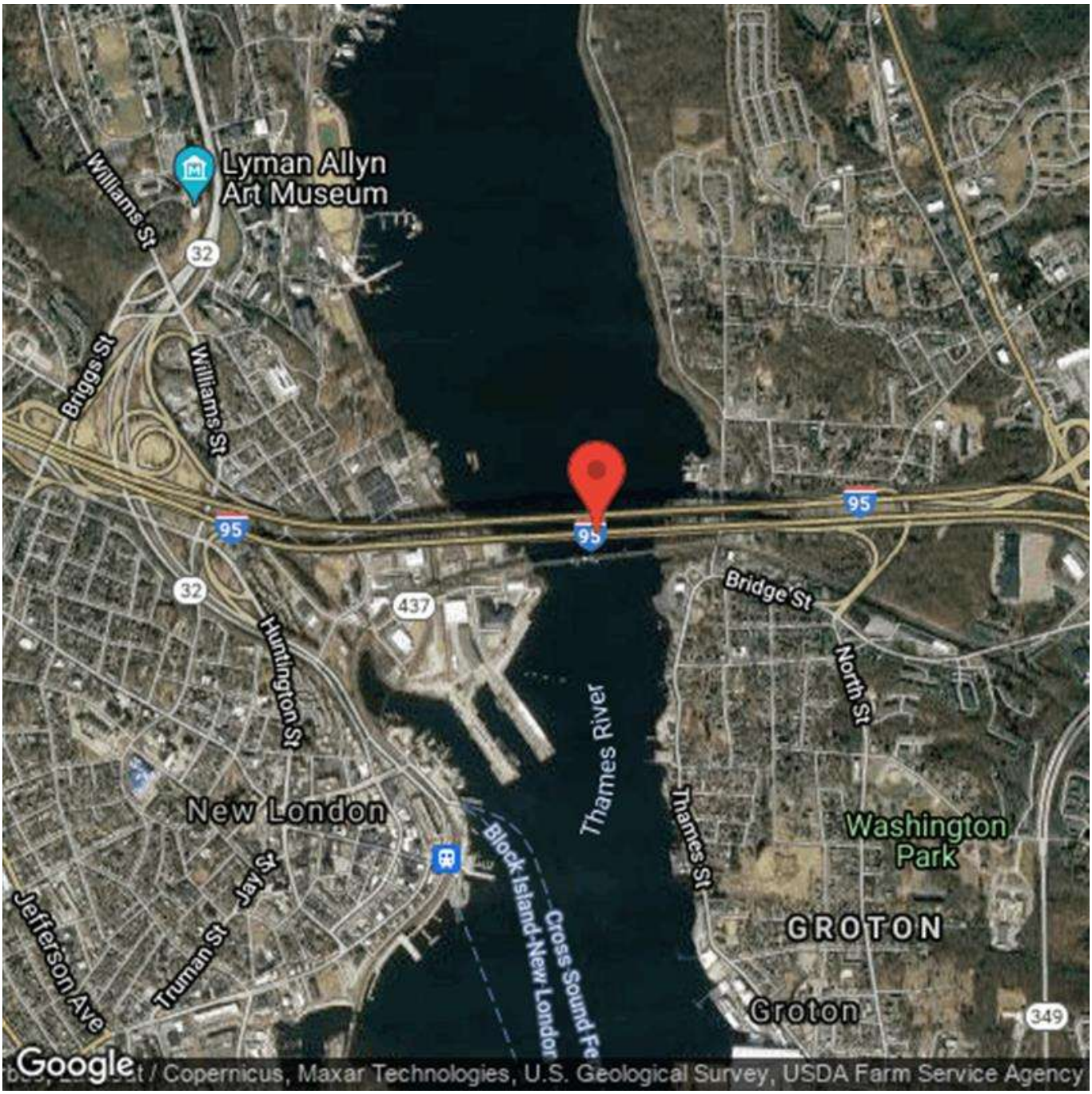

Location Map # 1

Bridge No. 03819.
I-95 NB over the Thames
River, RR, Local Roads, New London, CT
Latitude: 41° 21' 50"
Longitude: -72° 5' 14"

In-Depth Components

Bridge: 03819

Town: 52350 - NEW LONDON

Carried: INTERSTATE 95 NORTHBOUND

Crossed: THAMES RV,RR,LOCAL ROADS

In-Depth - 1

Component: Concrete Deck

Comments: Spans 26-28 bare concrete deck over the waterway:

- Sound 100% of suspect areas and 25% of areas with no apparent deterioration in the deck underside.
- Sound 100% of concrete deck haunches along stringers.

Access Requirements: 60' snooper, lane closures and state police assistance.

Last Inspected: 07/26/2021 Frequency: 120 Inspection Due Date: 07/26/2031

In-Depth - 2

Component: Metal Decks

Comments: Steel grid deck in Spans 6-25 and 29-36 shall be inspected 100% hands-on, regardless of whether over key feature.

Access Requirements: 45' bucket truck, 60' snooper, lane closures, state trooper, local police, and/or RR flagman.

Last Inspected: 07/26/2021 Frequency: 120 Inspection Due Date: 07/26/2031

In-Depth - 3

Component: Steel Expansion Bearings

Comments: Expansion bearing measurements will be taken in all spans.

Access Requirements: 45' bucket truck, catwalk, 60' snooper, lane closures using police, and/or RR flagman.

Last Inspected: 07/26/2021 Frequency: 120 Inspection Due Date: 07/26/2031

In-Depth - 4

Component: Steel Floorbeam

Comments: Previously noted floorbeam flange transition welds for UT testing at the following locations were verified and they doesn't exist:
- Truss end FBs in Span 26 and 28 over Piers 25 & 28.
- Span 27, FBs 20A&B, 26A&B.
- Span 32, FBs 10 thru 6.

Access Requirements: 60' snooper, lane closures with state police assistance.

Last Inspected: 07/26/2021 Frequency: 120 Inspection Due Date: 07/26/2031

In-Depth - 5

Component: Other

Comments: Concrete parapets: Sound 100% of suspect areas and 25% of areas with no apparent deterioration in outside faces of parapets over key features in applicable spans.

Access Requirements: 45' bucket truck, 60' snooper, lane closures, state trooper, local police, and/or RR flagman.

Last Inspected: 07/26/2021 Frequency: 120 Inspection Due Date: 07/26/2031

In-Depth - 6

Component: Steel Girders

Comments:
- Ultrasonic testing of all girder flange transition welds in tension zones in Spans 33-36.
- All girder transitions in tension zone except Span 33, Girders G1 & G2, west bottom flange transition were UT tested and found acceptable.

Access Requirements: 60' snooper, lane closures, RR flagman (for Span 33) and state police assistance.

Last Inspected: 07/26/2021 Frequency: 120 Inspection Due Date: 07/26/2031

In-Depth - 7

Component: Steel Pins

Comments: Span 27, steel pins:
- Truss pins (6" diameter) at Nodes L18, L19, U19, U20, L27, L28, U26, U27 per truss should be UT tested.
- All 6" diameter pins were UT tested during this inspection and limited inspections for design services in 11/11/2019.

Access Requirements: Catwalk access and 60' snooper, lane closures and state police assistance.

Last Inspected: 07/26/2021 Frequency: 120 Inspection Due Date: 07/26/2031

In-Depth - 8

Component: Steel Pins

Comments: Span 27, steel pins:
- 10" diameter at Nodes L19, U19, U27, L27 per truss should be UT tested.
- Not tested this inspection per CTDOT directive.
- Last tested in 11/10/2010.

Access Requirements: 60' snooper, lane closures and state police assistance

Last Inspected: 11/10/2010 Frequency: 120 Inspection Due Date: 11/10/2020

In-Depth - 9

Component: Other

Comments: Inspect all suspect areas and random sampling of at least 20% of areas with no apparent defects along the following piers over roadways, sidewalks, storage areas and waterways: Piers 9 thru 11, 17 thru 19 and 24 thru 30.

Access Requirements: 60' snooper w/ lane closures & Police, rope climbers for piers in water.

Last Inspected: 07/26/2021 Frequency: 120 Inspection Due Date: 07/26/2031

Form: BRI-19, Rev. 2/15
Inspection type: Fracture Critical,Routine
Inspection Date: 7/26/2021
Inspected by: PRIME AE

:Bridge No 03819

Town: NEW LONDON
Carried: INTERSTATE 95 NORTHBOUND
Crossed: THAMES RV,RR,LOCAL ROADS
Inventory Route: NHS

STRUCTURE INVENTORY & APPRAISAL

INSPECTION

Structurally Deficient Y **Functionally Obsolete** N

Sufficiency Rating 54.8

(90) Inspection Date 07/26/2021 **(91) Frequency** 24

Indepth Insp No **Proposed next Indepth Year**

Deck Survey Date 1/1/1900 **Class** 03

Access 38 - >40 ft. U.B.I. and >50 ft.lift required **Flagman** 5

	Frequency	Date	Type
Fracture	24	07/26/2021	G Truss Systems, riveted trusses
Underwater	24		B Underwater Only
Special			

IDENTIFICATION

Bridge Name: GOLD STAR MEMORIAL BRIDGE

Town Code - Name: 52350 - NEW LONDON

(5) Inventory Route

(A) Record Type: 1: Route carried "on" the structure

(B) Signing Prefix: 1 - INTERSTATE HIGHWAY

(C) Level of Service: 1 - MAINLINE

(D) Route Number.: 00095

(E) Dir Suffix: 1 - NORTH

(6A) Featured Intersected: THAMES RV,RR,LOCAL ROADS

(6B) Critical Facility Indicator:

(7) Facility Carried: INTERSTATE 95 NORTHBOUND

(9) Location: 1.04 MI S OF N JCT US1 EB

(11) Mile Post: 93.59 Miles

(16) Latitude: 41 Deg. 21 Min. 50 Sec.

(17) Longitude: -72 Deg. 5 Min. 14 Sec.

(98) Border Bridge

(A) State Code: (B) Percent Responsibility: %

(C) Border Town Name:

(99) Border Bridge Structure No.:

STRUCTURE TYPE & MATERIALS

(43) Structure Type, Main

A) Material: 4 - Steel continuous

B) Design Type: 09 - Truss - Deck

(44) Structure Type, Approach

A) Material: 3 - Steel

B) Design Type: 03 - Girder and Floorbeam System

(45) Number of Spans, Main Unit: 011

(46) Number of Approach Spans: 0020

(107) Deck Structure Type: 4 - Closed Grating

(108) Wearing Surface/Protection Systems

A) Type of Wearing Surface: 6 - Bituminous

B) Type of Membrane: 2 - Preformed Fabric

C) Type of Deck Protection: 9 - Other

Substructure

A) Material: 2 - CONCRETE

B) Design Type: 1 - FULL HEIGHT STEM

Paint

Type: 3 - Non-Lead Paint

Year: 1971

Comment:

GEOMETRIC DATA

(48) Length of Maximum Span: 540 ft.

(49) Structure Length: 5931 ft.

(50) Curb or Sidewalk Widths

A) Left 0 ft. 0 in. B) Right 0 ft. 0 in.

(51) Bridge Roadway Width Curb to Curb 80 ft. 0 in.

(52) Deck Width, Out to Out 83 ft. 10 in.

(32) Approach Roadway Width 80 ft.

Form: BRI-19, Rev. 2/15
Inspection type: Fracture Critical,Routine
Inspection Date: 7/26/2021
Inspected by: PRIME AE

:Bridge No 03819

Town: NEW LONDON
Carried: INTERSTATE 95 NORTHBOUND
Crossed: THAMES RV,RR,LOCAL ROADS
Inventory Route: NHS

(33) Bridge Median: 0 - No median

Deck Area: 506615 sq. ft.

(34) Skew Angle: 99 deg.

(35) Structure Flared: 1 - Yes, flared

(10) Inv. Rte. Min. Vert. Clearance: 19 ft. 6 in.

(47) Inv. Rte. Total Horiz. Clr.: 80 ft. 0 in.

Log Inv. Rte. Total Horiz. Clr.: 80 ft. 0 in.

RLog Inv. Rte. Total Horiz. Clr.: 0 ft. 0 in.

(53) Min. Vert. Clearance Over Bridge: 17 ft. 10 in.

(54) Log-Min. Vert. Underclearance: H ref. 22 ft. 3 in.

(55) Min. Lat Underclearance on Right: H ref. 7 ft. 9 in.

(56) Min. Lat Underclearance on Left: 3 ft. 6 in.

AGE AND SERVICE

Year Built: 1943 (106) Year Reconstructed: 1975

(42) Type of Service

A) On: 1 - Highway

B) Under: 8 - Highway - waterway - railroad

(28) Number of Lanes

A) On: 05 B) Under: 12

(29) Average Daily Traffic: 42600

Is Above Half ADT?: Yes

(109) Precent Truck: 14 %

(30) Years of ADT: 2020

(19) Bypass, Detour Length: 1 Miles

CONDITION

(58) Deck: 4

(59) Superstructure: 4

(60) Substructure: 5

(61) Channel & Channel Protections: 6

(62) Culverts: N

(36) Traffic Safety Features

A) Bridge Railings: 0

B) Transitions: 1

C) Approach Guardrail: 1

D) Approach Guardrail Ends: 1

APPRAISALS

(67) Structural Evaluation: 4

(68) Deck Geometry: 6

(69) Underclearances, Vert. & Horiz.: 5

(71) Waterway Adequacy: 9

(72) Approach Roadway Alignment: 8

(113) Scour Critical: 5

COMMENTS

Fracture Critical Inspection: F (Crack Growth), G (Riveted Truss System) & H (Trusses with suspended spans).

Project #0094-0235; ADV:11/25/2020

Items 10 & 53: Controls at OHSS 21192 in span 32.

Items 55 & 56: Controls in span 8 at Mill Street.

WATERWAY

Drainage Basin Waterway: 3000 - Thames River

(38) Navigation Control: 1 - Navigation control on waterway (bridge permit required)

(39) Navigation Vertical Clearance: 135 ft.

(40) Navigation Horiz. Clr.: 200 ft.

CLASSIFICATION

(112) NBIS Bridge Length: Yes

(104) Highway System: 1 - Structure/Route is on NHS

(26) Functional Class: 11 - Urban - Principal Arterial - Interstate

(100) Defense Highway: 1 - Is on an Interstate STRAHNET route

Form: BRI-19, Rev. 2/15
Inspection type: Fracture Critical,Routine
Inspection Date: 7/26/2021
Inspected by: PRIME AE

:Bridge No 03819

Town: NEW LONDON
Carried: INTERSTATE 95 NORTHBOUND
Crossed: THAMES RV,RR,LOCAL ROADS
Inventory Route: NHS

(111) Pier/Abutment Navigation	2 - In place and functioning	(101) Parallel Structure	R - Right structure (North or East)
(116) Vert-Lift Brg Nav Min	ft. In.	(102) Direction of Traffic	1 - 1-way traffic

Form: BRI-19, Rev. 2/15
Inspection type: Fracture Critical,Routine
Inspection Date: 7/26/2021
Inspected by: PRIME AE

:Bridge No 03819

Town: NEW LONDON
Carried: INTERSTATE 95 NORTHBOUND
Crossed: THAMES RV,RR,LOCAL ROADS
Inventory Route: NHS

(103) Temporary Structure	
(110) Designated National Network	1 - Inventory route on National Truck Network
(20) Toll	3 - On Free Road
(21) Maintain	01 - State Highway Agency
(22) Owner	01 - State Highway Agency
Report Class	S - STATE
(37) Historical Significance	5 - Not eligible for National Register

POSTED SIGNS

Other Posted Sign 1	3 - Directional & Route information signs
Other Posted Sign 2	

	Actual	Recomended	
Posted Load Single Unit Truck			tons
Posted Load Semi-Trailer Truck			tons
Posted Load 4 Axle Truck			tons
Posted Load 3S2 Truck			tons
All Vehicles			tons
Posted Vert. Clearance on Bridge	ft.	in.	
Posted Vert. Underclearance	ft.	in.	
Posted Speed Limit on Bridge	55 m.p.h.		

OTHER FEATURES

Fence Required	Yes
Fence Present	Yes
Fence Type	5
Fence Height	8
Fence Material	1
Fence Top Type	1
Barrel Ladders	Yes
Stand Pipes	No
Catwalks	Yes
Moveable Inspection System	No
Haunches Present over Roadway	YES
Utilities	3 | Electric

PROPOSED IMPROVEMENTS

(75A) Type of Work Proposed	35 - Rehabilitation - Deterioration
(75B) Work Done By	1 - Work to be done by contract
(76) Length of Structure Improvement	ft.
(94) Bridge Improvement Cost	$
(95) Roadway Improvement Cost	$
(96) Total Project Cost	$ 135000
(97) Year of Improvement Estimate	2013
(114) Future ADT	63299
(115) Year of Future ADT	2040
DOT Bridge Program List No	23
Project No	0094-0235
Advertised Date	11/30/2022

LOAD RATING & POSTING

(31) Design Load	5 - HS 20
(63) Operating Rating Type	1 - Load Factor (LF)
(64) Operating Rating	47.8
(65) Inventory Rating Type	1 - Load Factor (LF)
(66) Inventory Rating	28.7
Evaluation Code	L - Load Factor
Year of Evaluation	2000
(70) Bridge Posting	5 - Equal to or above legal loads
(41) Structure Status	A - Open

Form: BRI-19, Rev. 2/15
Inspection type: Fracture Critical,Routine
Inspection Date: 7/26/2021
Inspected by: PRIME AE

:Bridge No 03819

Town: NEW LONDON
Carried: INTERSTATE 95 NORTHBOUND
Crossed: THAMES RV,RR,LOCAL ROADS
Inventory Route: NHS

INSPECTOR'S SIGNATURES:

1) Date: 12/28/2021

2) Date: 01/06/2022

3) Date: 01/17/2022

4) Date: 01/18/2022

P.E. SIGNATURE: Date: 01/20/2022

P.E. # PEN.0020458

Reviewed By: AMIT KC Date: 02/18/2022

Form: BRI-18, Rev. 1/14
Inspection type: Fracture Critical,Routine
Inspection Date: 7/26/2021
Inspected by: PRIME AE

:Bridge No 03819

Town: NEW LONDON
Carried: INTERSTATE 95 NORTHBOUND
Crossed: THAMES RV,RR,LOCAL ROADS
Inventory Route: NHS

FIELD INSPECTION REPORT

Location:	1.04 MI S OF N JCT US1 EB	Year Built:	1943	Snooper Required:	☑
Main Material:	4 - Steel continuous	Year Rebuilt	1975	Snooper Used:	☑
Main Design:	09 - Truss - Deck				

Inspectors:

Lead Inspector:	Balaji Mahalingam
Inspector:	Task:
Agolli,Elvis	BSE - Inspector Rail - Inspector
Begolli,Eriol	BSE - Inspector Rail - Inspector
Donepudi,Sai	BSE - Inspector Rail - Inspector
Greener,Edward	BSE - Inspector Rail - Inspector
Mahalingam,Balaji	BSE - Inspector Rail - Inspector
Mohammed,Muqtadar	BSE - Inspector Rail - Inspector
Nyei,Anwar	BSE - Inspector Rail - Inspector
Regan, Jr.,Christopher	BSE - Inspector Rail - Inspector
Rossi,Nathan	BSE - Inspector Rail - Inspector
Spahiu,Igli	BSE - Inspector Rail - Inspector

Visits:

Visit Date:	Temp:	Start Time:	End Time:
07/26/2021	85	08:30 AM	03:00 PM
07/27/2021	82	08:30 AM	03:00 PM
08/02/2021	75	08:30 AM	03:00 PM
08/03/2021	75	08:30 AM	03:00 PM
08/04/2021	72	08:30 AM	03:00 PM
08/05/2021	70	08:30 AM	03:00 PM
08/09/2021	70	08:30 AM	03:00 PM
08/10/2021	70	08:30 AM	03:00 PM
08/11/2021	85	08:30 AM	03:00 PM
08/12/2021	85	08:30 AM	03:00 PM
08/16/2021	75	08:30 AM	03:15 PM
08/17/2021	75	08:30 AM	03:15 PM
08/18/2021	75	08:30 AM	02:30 PM
08/24/2021	85	08:30 AM	02:30 PM
08/25/2021	90	08:30 AM	02:30 PM
08/26/2021	94	08:30 AM	02:30 PM
08/30/2021	85	08:30 AM	02:30 PM
08/31/2021	85	08:30 AM	02:30 PM
09/09/2021	70	08:30 AM	03:30 PM
09/13/2021	75	08:30 AM	02:30 PM
09/14/2021	73	08:30 AM	02:30 PM
09/15/2021	75	08:30 AM	02:30 PM
09/16/2021	70	08:30 AM	02:30 PM
09/20/2021	75	08:30 AM	02:30 PM
09/21/2021	70	08:30 AM	02:30 PM
10/18/2021	55	08:30 AM	03:00 PM
10/19/2021	55	08:30 AM	02:30 PM
10/20/2021	68	08:30 AM	02:30 PM
10/21/2021	68	08:30 AM	02:30 PM
10/28/2022	50	08:30 AM	01:00 PM

58. DECK:

- Concrete filled steel grid deck with stay-in-place forms (SIP forms) in Spans 6-25 and 29-36.
- Reinforced concrete bare deck on the underside in Spans 26-28.
- Bituminous concrete wearing surface with a waterproofing membrane.

Overall Rating: 4

Rating

Overlay:	5	- Random longitudinal, transverse and map cracks up to 1/4" wide (typically in the shoulders), raveling up to 1/2" deep, gouges up to 1" deep and wheel line rutting up to 1/2" deep in travel lanes. - Random bituminous patches in the travel lanes, some are settled up to 1" deep. - Bituminous along the curbs/scuppers is hollow sounding up to 1' wide, typical throughout. - Random potholes up to 4" deep with exposed deck/deck grid bars (typically 2" deep or less) in the shoulders. - Previously noted spalls, potholes or holes in the deck in the shoulders especially adjacent to the scupper grates were repaired at several locations since the last inspection. - Few potholes up to 2' long x 1' wide x 1.5" deep in the travel lanes (Span 32, middle lane at mid-span). - Bituminous along north parapet in Spans 6 and 8 is breaking up/spalled up to 35' long x up to 10" wide x 4" deep with exposed rebars. - More significant deterioration of the overlay is mostly in the shoulders. - Overlay adjacent to random deck joints has cracking and spalling/raveling up to 1.5" deep (Pier 30 joint). - See "Deck - Str. Condition" below for additional details. Above noted conditions could warrant a '4' rating; however since these conditions are mostly in the shoulders, the rating will remain a '5'. See Top of Deck Sketches and Photos 12-17.
Deck - Str. Condition:	4	Bare concrete deck underside in Spans 26-28: - Random hairline longitudinal, transverse and map cracks (up to 100% of panel area) with random efflorescence/rust/dampness. - Random hollow areas (tight) up to 15" long x 4" wide (Span 28, Bay 1, between FB's 43 & 44). Previous Work Item ID:03819-2020-0017 has been updated. - Previously noted hollow areas and hollow haunches were removed at several locations and the resulting spalls with exposed rebars were epoxy coated since the last inspection. Epoxy coated rebars are re-rusting. - There are isolated concrete patches with hairline cracks (Span 28, Bay 1 at Floorbeam FB46). - Random spalls with exposed rebar up to 40" wide x 20" long x 2" deep (Span 28, Bay 1, between FB's 35 & 36). - Random haunch spalls along the stringer up to full length between floorbeams. - Up to 3/8" pack rust / gap between the stringer top flange and haunch (Span 28, Stringer S9 between Floorbeams FB38 and FB39). - Isolated light honeycombing areas up to 16" long x 12" wide (Span 28, Bay 1, between Floorbeams FB38 and FB39). - Total concrete deck deterioration for Spans 26-28 is approximately 25%. Concrete filled steel grid deck with stay-in-place forms (SIP forms) (Spans 6-25 and 29-36): - SIP forms have random areas of heavy to laminated rust and areas of bent/pushed down forms up to 5' long x 4". - Rusted through holes with exposed deck up to 4' long x 3' wide (Span 6, Bay 13, Panel 2). - Exposed deck has spalls/scale up to full depth (Span 22, Bay 1 between Floorbeams FB5 and FB6) with exposed rebar with punky concrete. - Exposed deck grid bar bottom flanges & webs have areas of laminated rust/rusted through holes up to 4" long x 1.5" wide (Span 17, Bay 1 between Floorbeams FB16-6 and FB17-1). - Active leakage at these random locations. - Previously noted full depth holes through the deck at five (5) locations adjacent to scuppers (Critical B deficiency) has been repaired since the last inspection. - Most/random repair locations on the underside of deck below the scuppers have form work left in place. - Deck ends at several piers have random hollow areas and spalls up to 6" deep (Span 35 over Pier 35). Spans 34-36, the underside of the longitudinal joint between the mainline and ramp is inaccessible due to wooden planks and metal sheet paneling. Also, see "Parapet" item below for spalling/hollow areas along each outside fascia.

		See Underside of Deck & Framing Plan Sketches, General Notes Sheets and Photos 8-11 & 16-26.
Curbs:	6	Sloped Granite Curbs: - Random vertical cracks open up to 1/8" wide, isolated efflorescence, minor scrapes, chips and rust stains. - Mortar in joints between sections is loose, missing and/or deteriorated or has vegetation growth. - Mortar beds below the curbs (where visible) are deteriorated and spalled up to 5" deep (Span 26, south curb near Pier 25 joint) Concrete Curbs (at deck joints): - Random hairline cracks, light scale and minor edge spalls. - Random spalls/scale areas up to 18" high x 10" long x 3" deep (Span 36 at Abutment 2). - Isolated hollow areas up to 14" long x 10" wide (Span 13 at Pier 13). Curb Reveal: - The average curb reveal on the north side is approximately 3.25" and on the south side is approximately 3.5". Approach Granite Curbs: - Transition curbs at the east approach are settled up to 4" and laterally misaligned up to 2". - Southwest approach has full length x up to 3" wide separation between approach slab and edge of curb. See Top of Deck Sketches and Photos 13, 16-17 and 27-30.
Median:	N	
Sidewalks:	N	
Parapet:	4	Reinforced Concrete Parapets: Inside face: - Random vertical hairline cracks with efflorescence, light-moderate scaling, gouges/scrapes up to 1.5" deep, shallow rebar and random 6" diameter popouts. - Above curbs have longitudinal cracks up to 1/8" wide with adjacent hollow areas/spalls up to 12" high (typically 10" high) x up to 3" deep. This condition extends for approximately 25% of the bridge length, worst cases in the approach spans. Top of Parapet: - Spalls up to 16" long x 3" high x 3" deep (Span 12) and hollow areas up to 12" long x 8" high (Span 26). There is undermining of the fence post base plates due to spalls at the following locations: - Span 12, South parapet at Pier 12S: undermining up to 6" long x 3/4" deep. - Span 26, north parapet near Pier 26: 1/4" wide crack which extends below the fence post base plate. - Span 27, south parapet near Joint A: undermined at the northwest corner up to 1/2" wide x 1/2" long. - Span 31, south parapet near Pier 31: slightly undermined up to 1/4" wide x 1/4" long. Outside face: - Random hairline cracks with isolated efflorescence. - Bottom edges have numerous hollow areas up to 20' long x 2' high (Span 6, south parapet, west end over abutment slope). - Several previously noted hollow areas in Spans 17-33 have been removed since the last inspection and the outstanding/new hollow areas have been noted. - Scale/spalls with exposed rebar up to 35' long x up to 3' high x up to 4" deep. Isolated exposed rebars are debonded. There is random punky concrete at these spalls. Hollow areas in parapets over roadways, sidewalks, parking lots, stockpile areas, railway tracks are listed out following the Underside of Deck General Notes and the previous Work Item ID:03819-2020-0017 regarding the same has been updated. See Top of Deck Sketches, Underside of Deck & Framing Plan Sketches, General Notes Sheets and

	Photos 27, 31-34.
Railing: 7	The top and bottom railings are part of fence and noted under the "Fence" item below. The middle railing behind the fence is noted under this section and has no notable deficiencies - Along the south parapet, the light standards rub against the rails at isolated locations. - Southwest approach railing has (1) one rail post missing/broken off. - Also, see “Fence” item below. See Top of Deck Sketches and Photos 27 & 35-37.
Paint: 7	Stay-in-place forms at the underside of deck in Spans 6-25 and 29-36: - Less than 10% of the painted surfaces are deteriorated. See "Deck - Structural Condition" item above.
Fence: 5	Aluminum picket fences: - Numerous pickets have random scrapes/bents/detached/tears/gouges due to impact damage. - Most impact damage areas are typically secure, or secured with wire or plastic ties. Isolated detached pickets are not tied but secure. - Top and bottom rail of fence are disconnected at isolated locations. - Random disconnected/broken/missing fence pickets with gaps up to 9" wide x 30" high (Span 11, north fence near Pier 11). The previously noted damaged/missing pickets with gaps opened up to 14" wide x 30" high has been repaired since the last inspection. - Random top and bottom post brackets at the back of the fence posts are missing (1 of 2) bolts and isolated brackets are missing. - Random post bases are slightly undermined due to parapet spalls (secure). See item "Parapet" above. - Isolated fence post anchor bolts are backed off up to 1/8" (tight) and isolated ones are missing. Rail/fence post to base welds are cracked at the following locations: - Span 10, north fence, 4th and 5th post from OHSS: 40% of perimeter cracked (old). - Span 11, north fence, two (2) posts adjacent to OHSS: 50% of perimeter cracked (old). - Span 11, north fence, two (2) posts adjacent to Pier 11: 50% of perimeter cracked (old). - Span 34, north fence, at Pier 34: cracked with repair welds re-cracked (old). - Span 35, north fence at 2nd post from Pier 34 fully cracked and separated (old, secure). - Span 27, north fence post base plate between Joint E and Pier 27 has (1 of 4) anchor bolts sheared off. Speed Limit Posting Signs: - Span 21, south parapet Speed Limit sign is tipped south 1/2" over 9" (no change). There is a 1/8" gap at the bottom of the base plate at the north side and concrete base is uneven (no change). See Top of Deck Sketches and Photos 27 & 36-41.
Drains: 4	Scupper Grates: - Several scupper grates are clogged between 10%-75%. - Isolated scupper grates have been cleared since the last inspection. - Several scupper grates are missing their hold down bolts (secure) and have laminated rust. - Scupper grate basins show evidence of leakage below with adjacent deteriorated concrete and steel at isolated locations Holes in scupper drain troughs/downspouts at the following locations: - Span 8, north scupper trough near Pier 7 has a 1/2" diameter hole. - Spans 30 and 32 troughs have through holes up to 4.5" x 1" (Span 32), (4) total locations. - Isolated downspouts have small rusted through holes (Pier 18 at Column 2, south truss at Pier 22). Scupper drain troughs/downspouts are clogged at the following locations: - Span 6, south trough near Abutment 1 is fully clogged. - Span 19, south trough near Pier 18 is partially clogged. - Span 20, north trough near Pier 19 is fully clogged.

- Previously noted Pier 21, pipe clogged at top of Column 2, east elevation couldn't be verified as it was dry at the time of inspection.
- Scupper pipe at west elevation of Pier 29, bottom of Column 1; 8" long x 1" wide void at weld to angle connection.
- Span 29, north scupper pipe at Floorbeam FB 5 has a 6" long crack at elbow with no leakage.
- Span 31, south trough between Floorbeams FB 7 and FB 8 is 25% filled with debris.
- Scupper clean-out covers missing in Span 31, at FB 5, north side and Span 32, at FB 0, south side.
- Previously noted Span 33, clogged south trough near Pier 33 has been cleaned since the last inspection.
- Scupper discharge pipes at Abutment 2 are rusted out/missing at the bottom 8".

Scupper bracket connections have the following deficiencies:
- Span 6, southwest scupper bracket connection has (1) cracked (1.75" long), (1) broken leg and (2) broken brackets.
- Previously disconnected scupper pipe at Pier 9, Column 1 at the bottom has been repaired.
- Span 12, scupper end plate in Bay 1 has (1 of 6) nuts missing.
- Span 20, south scupper at Floorbeam FB20-1 has (1) broken bracket. Scupper pipe with section loss.
- Span 21, (3 of 6) connection bolts are not fully engaged at scupper supports.
- Span 22, south and north trusses at L0U0 has broken brackets.
- Span 22, north scupper pipe at Floorbeam FB 0 has (3) broken brackets.
- Span 22, south scupper pipe at Floorbeam FB 5; 1-7/8" long crack in weld between scupper bracket and support.
- Span 23, between Floorbeams FB 7 & FB 6, north brackets have (2) cracked welds and 1/2" gap at west side.
- Pier 23, PVC pipe disconnected to base of Column 1, east side.
- Span 23, north scupper support angle near Floorbeam FB 5 has a 2¾" long crack at stringer 1 connection.
- Span 24, north scupper support bracket near Floorbeam FB 5 has a 3" long cracked weld.
- Span 25, south bracket to Floorbeam FB 10 with a 1-1/4" long crack.
- Span 28, north scupper near FB 46 has (1 of 3) connection bolts missing the support connection clamp (secure).
- Span 28, south scupper near FB 46 has (1 of 2) connection bolts missing (secure).
- Broken bracket in Span 29, north truss at the bottom of L10U10 and drain pipe clogged at the top of pier at bell connection.
- Span 30, north scupper pipe has a broken tack weld between Floorbeam FB 0 bottom flange and trough bracket.
- Span 30, south scupper pipe, 3rd support bracket from top of L0U0 is broken.
- Pier 33, disconnected pipe anchor bolt near top of Column 2, west elevation (secure).

Trough support connections have the following deficiencies:
- Random broken, disconnected or loose drain trough hanger rods.
- Trough support welds are cracked at random locations in Spans 6, 19, 22, 23, 24, 25 and 31.
- Span 24 west, trough support channel with 10" long x 3/16" loss of width and 1/16" remaining in top flange.
- Span 30, south trough support east of Floorbeam FB 5 is missing (2 of 2) bolts with cracked welds at lower connection.
- Previously noted, Span 33, southeast drainage trough with broken (3 out of 5) hanger rods has been repaired since the last inspection. The trough has been cleared of debris.

Weep Pipes:
- Most active PVC weep pipes extend below the stringer bottom flanges.
- Random abandoned/plugged weeps actively leak onto the stay-in-place forms and superstructure.
- Dampness at the underside of the bare deck around random cut off weep pipes in Spans 26-28.
- Span 24, Bay 1 between Floorbeams FB 1 & FB 2, one (1) weep with 1" diameter hole.
- Span 32, Bay 1 between Floorbeams FB 6 & FB 5, one (1) weep with 1" diameter hole.

Active leakage from the weep on to the stringers below with section loss was noted at the following locations:

- Span 6, Bay 1 between Floorbeams FB 7-2 & FB 7-4 has two (2) abandoned/short weeps.
- Span 7, Bay 1 between Floorbeams FB 7-6 & FB 7-7.
- Span 8, Bay 1 between Floorbeams FB 9-2 & FB 9-3.
- Span 9, Bay 1 between Floorbeams FB 9-5 & FB 9-6
- Span 25, Bay 12 between Floorbeams FB 2 & FB 1 with evidence of leakage. Previously noted as active leakage.
- Span 28, Bay 1 between Floorbeams FB 36 & FB 37.
- Span 31, Bay 12 between Floorbeams FB 1 & FB 2.
- Span 32, Bay 1 between Floorbeams FB 10 & FB 9.
- Span 35 Bay 1 between Floorbeams FB 0 & FB 1, short weep leaks onto diaphragm causing rust (no section loss).

See Top of Deck Sketches, Underside of Deck & Framing Plan Sketches, Truss Sketches, Pier Sketches and Photos 42-54.

Lighting Standard: 4

Lighting Standards (south parapet only):
- Missing anchor bolt covers with isolated light rust on the anchor bolts and nuts.
- Random light standards in contact with bridge/fence rails with signs of wear (12 total locations).
- Span 6 light standard base plate, (1 of 4) anchor bolts is short 1/4".
- Span 12 light standard has been removed since the previous inspection.
- Span 14, south fence, top rail rubbing against the light standard.
- Span 20 light standard has been removed in the past.
- Span 23 light standard hand hole cover is partially broken with (1 of 2) screws in place.
- Span 26 and 29 light standards are missing the vibration dampeners.
- Span 27 light standards near Piers 26 & 27 are missing hand hole covers; inaccessible to the public.
- Span 30 light standard conduit near Pier 29 is disconnected with exposed wires (outside face).

Light standards have cracks and/or broken areas at the base plates at the following locations:
- Span 12, previously noted light standard with cracked base plate has been removed since the last inspection.
- Span 16, 1.5” x 1” broken off area at NE corner (no change), NW corner with full height crack. Crack may extend under anchor bolt washer at this location.
- Span 18, full height crack at the northwest corner.
- Span 24, full height crack at the northwest, northeast and southwest corners.
- Span 27 near mid-span, 3” x 1” broken off area at northwest corner.
- Span 28, full height crack at the northwest corner.
- Span 30 near Pier 29, full height crack at the northwest corner.
- BS&E notified of these conditions via email 12/15/2021.

Junction Box Covers:
- Random covers have up to (9 of 10) screws missing/sheared off (covers are secure, but some loose).
- Covers have random scrapes, dents, tears and cracks up to 13" long (Span 26 near Pier 25).
- Span 6 at the south parapet, cover with one screw in place and cover is loose.
- Span 21 replaced cover in the past has (8 of 10) screws missing, secure in place.
- Spans 26, 27 and 31 at the south parapet, covers are fractured up to 6" long x 10" high (Span 27 near Joint B) with exposed wires.
- Span 29, south parapet near Pier 29, all cover screws are sheared off but cover secure.
- BS&E was notified of these conditions via email dated 12/15/2021.

See "Fender - System" item below for information for navigation lights and conduits.

See Top of Deck Sketches and Photos 55-59.

Overall Utility Condition Rating: 5 - Fair

Utility Type/Size

3 | Electric	The south fascia conduit/flex conduit has the following deficiencies: - Span 28, between Floorbeam FB 41

and FB 42 has a broken support bracket and 2" long x 1/2" rusted through hole in cover with exposed wires.
- Span 29, near Pier 28 has a disconnected conduit with exposed wires.
- Span 29, near Floorbeam FB 3 has a missing clip to the parapet due to spall.
- Span 29, near Floorbeam FB 7 has a missing conduit bracket but there is a tie wire in place.
- Span 29, near Floorbeam FB 8 has a missing conduit bracket due to a parapet spall.
- Span 30, near Floorbeam FB 10, two (2) locations disconnected with rusted thru holes and exposed wires.
- Span 30, near Floorbeam FB 3 has a disconnected bracket due to a parapet spall.
- Span 31, between Floorbeams FB 9 and FB 10 has a 1' long rusted through hole with exposed wire.
- Span 32, between Floorbeams FB 5 and FB 6 has a missing clamp.
- Span 32, at Floorbeam FB 0, the flex conduit has splits up to ½" wide with exposed wires.

- There are (2) conduits attached to Abutment 2 and Wingwalls 2A and 2B, with no deficiencies.

See "Fender - System" item below for information for navigation lights and conduits.

See Top of Deck Sketches, Underside of Deck & Framing Plan Sketches and Photo 60.

Construction Joints:	N	
Expansion Joint:	4	Strip seal joints with steel extrusions and elastomeric concrete headers (Span 27 at intermediate joint D) or reinforced concrete headers (Piers 9, 15 & 21): - Headers have random transverse hairline cracks, light scale, random patches and minor edge spalls. - Seals have an accumulation of light to heavy sand/dirt debris, worse in the shoulders. - Span 27 intermediate joint (D), east side is up 1/2" higher than west and has 5" long broken extrusion. Work Item ID: 03819-2019-0015 is still outstanding, however it has been reviewed by the CTDOT Maintenance and was not repaired at this time. - Steel extrusions have plow scrapes, gouges and tears up to 5" long. WabloFlex SR 4A plank seal joints with elastomeric concrete and concrete headers at Abutment 1 and Pier 32: - Light to heavy accumulation of sand/dirt debris in the joints and missing rubber bolt covers. - Rubber edges have random plow scrapes and gouges.

- Abutment 1 headers have multiple hollow areas up to 8' long x full width.
- Abutment 1 headers also have cracks up to 1/4" wide.
- Abutment 1 deck joint has a loud banging noise under live load.
- Abutment 1 deck joint, bridge overlay adjacent to joint is settled up to 1/2".
- Pier 32 headers have hollow areas up to 12' long x full width. Previously noted spalls have been patched since the last inspection.

Modular joints with elastomeric concrete headers (Piers 23, 25, 28, 30 and in Span 27 at intermediate joint B):
- Seals have light to heavy sand/dirt debris, worse in the shoulders.
- Pier 23 has bulging/broken seal for 1' long in north shoulder.
- Piers 23 and 25 steel extrusions and/or sliding plates at the parapets have scrapes and gouges.
- Piers 23 and 30 seals are separated up to 40% of the joint length (visible from below).
- Span 27, Joint B headers have mapcracking/hollow area & breaking up areas up to 3" wide x 1" deep. There is a 3' diameter area of ponding water in north shoulder adjacent to north parapet.
- Headers at Pier 28 have seven (7) hollow areas up to 3' long x full width with hairline cracks and a 25' long x 1" wide separation between header and overlay in right lanes and shoulder.
- Pier 30 has a 4' long tear in seal at south shoulder.
- Pier 30 east header has a area 2.5' long x 5" wide area with 1/4" wide map cracking and is depressed 1/2".

Compression seal joint (Pier 11, 17, 19, 34 & 34B) with elastomeric/concrete headers:
- Seals have an accumulation of light to heavy sand/dirt debris, worse in the shoulders.
- Pier 11 with 6" long tear in joint seal in the north shoulder (daylight visible through joint).
- Pier 17 seal has three (3) separations from the concrete header up to 8' long and 6' long damage to seal.
- Pier 19 concrete headers have random hairline cracks and three (3) tears in the seal up to 4' long.
- Pier 19 south joint curb/steel extrusion is broken off for 16" high x 6" wide x 3" deep.

Asphaltic plug joints (Piers 7, 13, 26, 27, 33, 35B, Abutment 2 and at intermediate joints in Spans 26-28):
- Random areas of exposed aggregates.
- Pier 13 has roadway debris embedded in the joint material in the right lane.
- Span 27, Joint C has a 1 square foot x ¾" depression in the right ramp lane.
- Pier 27 joint has a 1 foot diameter x 1" deep depression in the 2nd left lane.
- Span 28, Joint A has two (2) 8" diameter x 1.5" deep potholes with exposed steel plates in left middle lane/center lane.
- Span 28, Joint B has a 6" diameter x 1" deep pothole in the right shoulder and a 1' long x 1.5' wide depressed patch in the center lane.
- Pier 33 has a 3' long x 1/4" wide cohesion crack and a 3' long x 1/4" wide adhesion crack.
- Abutment 2 joint in the mainline/ramp lanes has ±50% adhesion cracks up to 1/4" wide (2" wide in shoulder).

Longitudinal median asphaltic plug joints (Spans 34-36):
- Underside of the joint is not visible due to planks in place below the joint.
- Top of the joint has a 3' long x 3" wide x 1" deep spall with exposed steel plate (not loose) and a 15' long x 1/2" wide cohesion crack in Span 34.

- Evidence of, and active leakage was noted at random joints throughout the inspection.

See Top of Deck Sketches and Photos 61-70.

Haunches Present over travelway? YES

APPROACH CONDITION:

- Reinforced concrete slab with bituminous wearing surface at east approach. West approach has a bare reinforced concrete slab followed by a bituminous wearing surface.
- Continuous concrete barriers on the west approach (leading end)
- Metal beam guide rail on the southeast approach (ramp lane) (trailing end)

Overall Rating: 6

- No guide rail in place on the northeast approach (main line) (trailing end)

Rating

Approach Slab:	6	West Approach: - Concrete slab has random patches, cracks up to 1/16" wide, light to moderate scaling and edge spalling up to 5' long x 3" wide x 2" deep. - Sealed joints between concrete sections are deteriorated/missing for ±50% of the length. - The left shoulder has a 1' long x 1/2" wide crack extending from the catch basin. - Full length x 3" wide separation between south edge of slab and curb. - Scale area adjacent to catch basin at north shoulder up to full length x 3" wide x 1" deep and 2 square foot adjacent hollow areas. East Approach: - Slabs are paved over except for the concrete headers. See item "Approach Pavement" below. - Headers have random hairline cracks, light scale and scrapes. See Top of Deck Sketches and Photos 4, 7, 71 & 72.
Relief Joints:	6	None per plans. West approach at the transition area: - Bituminous has patches, minor potholes <1/2" deep, cracks and uneven areas. See Top of Deck Sketches and Photos 71 & 72.
Approach Guide Rail:	6	Continuous concrete barriers at the west approach (leading edge): - Approach barrier at the northwest at the end of the concrete approach slab is settled up to 2.5". East Approach (trailing edge): - Southeast approach metal beam rail has random areas of impact damage with minor scrapes/dents. - Northeast approach has no guide rail in place. See Top of Deck Sketches and Photos 4-7, 30 & 73.
Approach Pavement:	6	West Approach: Bituminous pavement leading up to the bare concrete approach slab: - Random transverse and longitudinal cracks up to 1" wide and minor rutting in the wheel lines. - Right shoulder bituminous breaking and potholes have been patched since previous inspection. - Loose access cover in the slightly raised median/gore area. - Longitudinal paving seams are open up to 1/2". East Approach: - New approach pavement was installed after the inspection of the east approach was completed. Comments below will be kept until they are verified in the next inspection cycle. - Random cracks up to 1" wide and light to moderate raveling. - Separations between the bituminous and joint headers up to 2" wide. - Approach pavement is settled up to 1/2" along the concrete header. See Top of Deck Sketches and Photos 4, 7, 70 & 71.
Approach Embankment:	8	

Trafic Safety Features

Bridge Railings:	0	Do not meet R-B 350 standards (<42" high solid concrete).
Transitions:	1	Leading edge concrete barriers meet current standards.
Approach Guardrails:	1	Leading edge concrete barriers meet current standards.
Approach Guardrail Ends:	1	Leading edge barriers are continuous with highway barriers.

59. SUPERSTRUCTURE:

- Eight (8) 2 span continuous, 2 Girder (riveted)-Floorbeam- Stringer system (Spans 6-21). Overall Rating: 4

- Four (4) 2 span continuous, 2 Truss (riveted)-Floorbeam-Stringer system (Spans 22-25 & 29-32).
- One (1) 3 span continuous, 2 Truss (welded)-Floorbeam-Stringer system over the Thames River (Spans 26-28).
- Two (2) simply supported spans and one (1) 2 span continuous, 2 Girder (welded)-Floorbeam-Stringer system (Spans 33-36).

Rating

Bearing Devices: 4

Girder/Truss Expansion Rocker Bearings:
- Rocker bearings have areas of peeling paint with laminated rust and pitting up to 1/4" deep (Span 25, Pier 25, South Truss)
- Random masonry plates are undermined up to full length x up to 1/4" - 2" deep due to grout pad spalls (Span 30, North Truss at Pier 30) (<5% bearing loss area).
- There is up to 1/2" thick pack rust between bearing plates, typically at the edges.
- There is light to heavy debris up to 5" high around random bearings potentially affecting movement at isolated locations.
- Some of the rockers have abrasion rust at the bearing pins and up to 1/8" pitting loss on pins (Spans 28 & 29 rocker bearings at Pier 28).
- Random anchor bolt nuts are missing up to (3 of 4), backed off and/or have up to 50% section loss. There are welds in place of anchor bolt nuts at random locations.
- Spans 17 & 18, Girder G2 bearings at Pier 17, each bearing has (1 of 8) drop bolts missing.
- Span 18, Girder G2 bearing at Pier 17 has (1 of 4) anchor bolts loose (moves when hit).
- Span 25, South Truss bearing at Pier 25, south keeper is broken with 2" thick pack rust and the north keeper is missing.
- Span 26, North and South Truss bearings at Pier 25 are missing cotter pins at pin nuts.
- Span 28, Pier 28 bearings; up to (16 of 16) drop bolt nuts above the rocker are backed off up to 3/4" (N. Truss)

Newer Rocker Bearings at Piers 23 & 30:
- Stainless steel pins are starting to rust (Span 30 only).
- Bearing pin end cover plate bolt nuts are tight and cannot be removed by hand.

All Truss/Girder Expansion Rocker Bearings:
- Bearings typically show evidence of movement at various temperatures.
- Random bearing movements not as much as expected based on temperature differences.
- Random bearings are not in expected mode at a given temperature (for example contraction mode at 93°F - Span 30, S. Truss).

Girder/Truss Fixed Bearings:
- Fixed bearings have areas of peeling paint with light to heavy rust and pitting up to 3/16" deep (some areas are painted over).
- There are random areas of pack rust up to 1" thick (Span 17, Girder G2) between bearing plates typically at outside edges.
- Bearings have welds in place of anchor bolt nuts at random locations.
- Isolated masonry plates are undermined up to 3" long x 3" deep (Pier 31, south truss) due to grout pad spalls (<5% loss).
- Random anchor bolts have section loss up to 50% (some of which have been re-painted).
- Isolated drop bolts are missing the nut, not fully engaged or have up to 10% section loss (Span 7, Girder G2).
- Span 13, Girder G1 bearing at Pier 13, south anchor bolts nuts are missing.
- Span 33, Girder G33-1 bearing is missing (1 of 8) drop bolt nuts.

Floorbeam Bearings:
- Bearing/shim plates have areas of pack rust up to 1-1/4" thick (worst in truss spans).
- The short keeper type plates (tab plates) adjacent to the floorbeam bearings have pack rust up to 2" thick.
- Tab plates have isolated rusted through holes up to full Width x 1.5" (Span 28, Floorbeam FB 33 at north truss).

- Random tack welds along the bearings plates are partially cracked/broken or poorly fused.
- Span 18, Floorbeam 18-5 at Girder G1, northwest bolt is loose and undersized.
- Span 29, North and South Trusses at Floorbeam FB0, the bearing plates are not centered (±4") below the floorbeam.

Stringer Teflon Bonded Stainless Steel Plates Bearings (Span 27 at Floorbeams 20 & 26):
- Bearings have areas of pack rust between stringer bottom flanges and shim plates up to 1”, typically at edges.
- Most tack welds between bearing shim plates are broken due to the previously mentioned pack rust.
- Span 27, Stringer S4 connection to Floorbeam FB20B, northwest connection bolt is sheared off.

Also, see "Welds - Cracks" item below.

See Underside of Deck & Framing Plan Sketches, Truss Elevation Sketches, General Notes Sheets, Rocker Bearing Measurements Sheets BRI-15 and Photos 74 - 89.

Stringers: 4

- Random areas of peeling paint with varying degrees of rust, up to laminated with negligible section loss.

Flanges:
- Top and bottom flanges have areas of heavy laminated rust and section loss, typically along the fascia stringers.
- Up to 55% loss of flange (Span 12, Stringer S1 between Floorbeams 13-1 & 13-2).
- Between quarter points of panels (critical areas), flange section loss totals are as follows:
- (167) locations with greater than or equal 5% loss, previously (162) locations.
- Of those, there are (14) locations between 25% and 35%, previously (12) locations.
- (12) locations greater than 35%, previously (12) locations.

Webs:
- Webs have areas of heavy laminated rust and section loss, typically at the floorbeam connections.
- Up to 74.4% loss of web in shear (Span 25, Stringer 13 at east side of Floorbeam FB 7 at coped area).
- (31) locations of over 25% loss of web section in critical areas, previously (29) locations.
- (9) of these locations result in over 50% loss of web section, previously (8) locations.

Stringer bolsters in Spans 26-28:
- Heavy abrasion dust between stringer bottom flanges and tops of the bolsters.
- Areas of pack rust up to 1/4" thick between stringer bottom flanges and seat plates.
- Random stringer bottom flanges are laterally misaligned and overhang the seat plates up to 1/2".
- Laminated rust with section loss to knife edge remaining (typically up to 3/16" deep at the floorbeam cantilever sections)
- Scattered rusted through holes in bolster flanges and web up to 4" x 2" (Span 28, Stringer S13 at west side of Floorbeam FB 37).
- Random gaps/pack rust up to 1/4" thick between the stringer webs and floorbeam connection plates.

- Diaphragms below deteriorated deck areas have laminated rust with section loss up to 3/16" deep with perforations up to 1-1/2" diameter (Span 26, Bay 12 between Floorbeams FB9 & FB10 at Floorbeam FB9).

- Overhead sign structure support tie plates in Spans 11, 26 and 32 in contact with stringer webs.

Also, see "Rivets & Bolts", "Welds-Cracks" and "Member Alignment" items below.

See Underside of Deck & Framing Plan Sketches, Stringer Section Detail Sketches, General Notes Sheets, Stringer Section Losses Table and Photos 52 - 54 and 90 - 103.

Overall rating could be lowered to a "2" per CTDOT BIM Section 10.5 due to flange losses greater than 35% in critical areas. However, per directive by BS&E, rating remained a "4" since worst case losses are typically at the fascia stringers. Stringer load ratings should be updated using all section losses noted in this inspection report. Condition coding should be updated pending the rating results.

Girders: 5

Riveted Girders (Spans 6-21):
- Random areas of peeling paint with varying degrees of rusting up to laminated rust with negligible section loss.
- Top flange cover plates have random areas of painted over pitting up to 6" diameter x 1/4" deep with pockets up to 5/16" deep (Span 6).
- Top flange cover plates with isolated areas up to full width x up to 1/4" deep section loss, painted over with laminated rust at isolated locations.
- Up to 9.9% loss of top flange area with rusting at isolated locations (Span 10, G2 between floorbeams 10-3 and 10-5).
- (9) locations of top flange section loss greater than or equal to 5% within critical areas.

- Isolated areas of loss along bottom flange cover plates up to 3/16" deep (Span 12, Girder G2, between Floorbeams FB 13-3 & FB 13-4 (<5% flange loss).
- No significant areas of loss along bottom flanges in critical areas.

- Bottom of webs typically near riveted splices have areas of section loss/pitting up to 1/4" deep (Span 12, Girder G2 at west splice).
- These areas are away from the girder ends and caused by trapped water, typically painted over with isolated areas of recurring rust.
- Isolated areas of painted over pitting on the webs up to 3/16” deep section loss near the lateral brace connection.

- Near the ends, bottom flange angle vertical legs have random areas of painted over loss.
- These losses are up to 1/4"-5/16" deep (Span 9, G1 at Pier 9) with areas of re-occurring laminated rust at isolated locations.
- Bearing stiffener angle legs with painted over section loss up to 5/16" deep (Span 9, G2 at Pier 9).
- Bearing losses are <25%.

- Pack rust up to 1-7/8" thick (Span 8, Girder G2 between Floorbeams FB 9-2 & FB 9-3) between flange splice plates and back-to-back vertical web bearing stiffener angles. The flange splice plates and vertical web bearing stiffener angles are bent due to the pack rust.
- Pack rust between vertical web bearing stiffener angles have caused several cracked tack welds between outstanding legs.
- Similar pack rust between top cover plate and tab plates.
- Pack rust up to 3/4" thick between the webs and bottom flange angles (Span 21, Girder G2 between Floorbeams FB 21-1 & 21-2).
- Pack rust between floorbeam to girder knee brace connection at isolated locations.

Sway bracing between the girders:
- Random areas of pitting up to 1/4" deep along the diagonal members (worse at the piers).
- Vertical and horizontal gusset plates have up to 1/4" deep pitting, random areas of section loss down to knife edge remaining.
- Gusset plates also have random rusted through holes up to 9" x 2” (Span 12, Girder G1 bottom gusset plate at Floorbeam FB 13-3).
- Bottom horizontal strut webs and flanges have random areas of pitting up to 5/16" deep.
- Strut webs have random rusted through holes up to 14" long x full width (Span 12 at Pier 11), typically at drain holes.
- Areas of sand/dirt/concrete and pigeon debris along members with areas of laminated rust.
- Pack rust up to 2" thick between members and the gusset plate corners are typically bent up.

Welded Steel Plate Girders with Bolted Connections (Spans 33-36):
- Random areas of peeling paint with varying degrees of rusting especially below the deck joints.
- Areas of pack rust up to 3/4" thick at FB connections (Span 34, Girder 34B-2 at FB 3) and filler plates.
- Random gaps/pack rust up to 9/16" (Span 34, Girder G34B-2 at Floorbeam FB1) between the girder top flanges and the horizontal gusset plates.
- Girder bearing stiffeners have isolated areas of section loss up to full width x 2" high x 1/4" deep (Span 33, Girder G2 at Pier 32).
- Girder webs have isolated areas of loss up to 3" diameter x 1/8" deep (Span 33, Girder G1 at Pier 32).

- Web/bearing losses are <5%.
- Isolated girder top flanges have losses up to 4" wide x 3/16" deep (<5% loss) in non-critical areas (Span 34, Girder G34-2 at Pier 33).

Also, see "Rivets & Bolts", "Welds - Cracks" and "Member Alignment" items below.

Overall rating could be lowered to a "4" due to above noted section loss in critical areas per CTDOT BIM Section 10.5. However, rating left as a "5" since these areas are isolated and mostly past cleaned and painted.

See Underside of Deck & Framing Plan Sketches, Section Loss Detail Sketches, General Notes Sheets, Girder Section Losses Table and Photos 104 - 114.

Floor Beams: 4

Welded Steel Floorbeams (all spans):
- Random areas of peeling paint with varying degrees of rust, up to laminated rust with negligible section loss.
- Top and bottom flanges, have areas of laminated rust and section loss, typically at the cantilever sections and at joints.
- Up to 24.3% loss of flange (Span 36, Floorbeam FB 3 at Bays 1-2).
- (63) locations of flange section loss greater than or equal to 5%, (63) previous.
- Webs have random areas of section loss have up to 3/16" deep (non-critical areas).
- Isolated floorbeam webs at critical areas have up to 1' high x 3/16" deep loss (<5% loss) (Span 36, FB 3).
- The vertical end plates at the ends of the cantilever sections (non-critical) especially at the joints have up to 1/4" deep section loss

- Vertical web stiffeners have random areas of pitting and section loss up to 3/8" deep.
- Vertical web stiffeners also have random rusted through holes up to 6" wide x 6" high (Span 36, FB 3).
- Vertical web stiffeners also have random areas of abrasion rust at floorbeam web and flanges.

- Pack rust up to 7/8" thick between FB bottom flanges and horizontal gusset plates (Span 25, FB 2).

- Bottom flanges below deck joints have sand/concrete debris up to 4" high.

See Underside of Deck & Framing Plan Sketches, Section Loss Detail Sketches, General Notes Sheets, Floorbeam Section Losses Table and Photos 114 - 120.

Trusses - General: 4

Riveted Truss (Spans 22-25 and 29-32):
The truss members have random areas of peeling paint with varying degrees of rust, up to laminated, with negligible section loss.

Top Chords:
- Areas of painted over pitting and section loss up to 1/4" deep (isolated areas up to 5/16"-3/8" deep, <5% loss). (Span 22, South Truss, U7U8)
- Batten plates and lacing bars have areas of painted over section loss up to 5/16" deep and bowed/bent at random locations up to 1/2" due to pack rust.
- Isolated areas of re-occurring rust ranging from light to laminated.
- Pack rust up to 1" thick between chord members, fill plates, splice plates, lacing bars and gusset plates (Span 24, North Truss, U0U1). Random plates are bent along the edges due to the pack rust.
- Below deck joints, up to 2-3/8" thick pack rust between web/fill plates, angles or vertical gusset plates. (Span 22, South Truss top chord at Node U0).
- Web plate corners are bent at these areas, and web plate/angles have perforations up to 2" x 2" (Span 22, South Truss top chord at Node U0).
- Random broken tack welds between top chord seat angle and top of vertical back-to-back angles.
- Random broken tack welds between lacing bars/batten plates/splice plates and chords.
- Span 29, North Truss, Member U8U9 near Node U9, at the splice plate has up to 5/8" pack rust between the chord bottom flange angle and splice plates resulting in three (3) broken tack welds and one (1) partially cracked tack weld.

Bottom Chords:
- Random areas of pitting and/or section loss up to 3/8" deep, typically 1/4" deep.
- Typical losses are on all members of the built-up section, however are typically intermittent.
- Worst-case loss assuming these typical losses are in the same plane is 9.4% at L6L8 (typical).
- (16) bottom chord tension members have >=5% section loss, previously (16). Maximum loss is 12.4% in Span 23, North Truss Member L0L1.
- Lacing bars and batten plates have areas of section loss up to 5/16" deep.
- Lattice bars and batten plates have rusted through holes up to 90% loss with down to knife edge remaining (Span 24, North truss, L3L4).
- Pack rust up to 1-1/8" thick between random connections throughout (Span 25, North truss, L9L10).
- Numerous cracked/broken tack welds between bottom flange angles and lacing bars/batten plates.
- Random missing rivets at lacing bars throughout.

Diagonals:
- Truss diagonals have section loss up to 1/4” deep typically (Isolated areas with 5/16” deep at Span 31, North Truss, L0U1) which results in less than 5% section loss near the lower nodes.
- Span 25, both trusses, Members L4U3 have up to 15.0% section loss (painted over) above L4 gusset plate (worst case at South Truss).
- There is pack rust up to 1/4" thick between random connections throughout.
- Random cracked tack welds between lattice bars/batten plates and diagonal angles.
- Random missing rivets.

Verticals:
- Vertical members at even nodes typically have section loss less than 5%.
- (22) members with section loss >=5%, maximum of 15.9% (Span 25, North Truss Member U0L0), previously (21) locations.
- Stiffeners & channel legs at ends within bottom nodes with perforations up to full width x 6" high.
- Worst case of these areas is in Span 32, North truss at L8.
- Also, up to 100% section loss to the bottom row of rivets (non-critical areas) at these locations.
- Odd node vertical members (zero force members) with pitting and/or section loss up to 3/16" deep.
- Up to 7/8" thick pack rust between vertical member and plates at top and bottom connections (Span 22, North Truss, U0L0).

Truss Vertical Members at Node L9 (zero force members):
- Cover plates added to the angles (16 locations).
- Pack rust up to 3/4" thick between the cover plate and angles (Span 23, North truss, U9L9).
- Up to 2" wide x 1/4" deep pitting at the inside face of the cover plate along the pack rust (Span 23, North Truss, U9L9 at Node L9).
- Isolated cracks and voids along weld lines in these cover plates.

Gusset Plates in Spans 22-25 and 29-32:
- Bottom chord vertical gusset plates have pitting and/or section loss up to 3/8” deep, (typically 1/8" deep).
- Losses are typically adjacent to truss members and along the horizontal plane, vertical plane and at the bottom of gusset plates adjacent to the batten plates.
- Up to 1" thick pack rust between vertical gusset plates at random locations (Span 31, North Truss at Node L0).
- Almost all even numbered nodes have (1) of (2) vertical gusset plates with greater than 5% loss.
- Losses are calculated along their vertical and/or horizontal axis.
- Worst case of up to 33.3% loss (Span 23, North Truss, Node L2, south plate).
- Five (5) gusset plates have 25% or greater section loss in the horizontal failure plane.
- The bottom zero force member gusset plates have pitting and/or section loss up to 1/4" deep.
- These losses are adjacent to vertical truss members and/or along top angle of the bottom chord.

Welded Truss (Spans 26-28):
- Truss members and gusset plates have peeling paint with up to laminated rust and pitting and/or section loss up to 3/8" deep (Span 26, South Truss, Member L0L1 at Node L0).
- Random smooth minor construction gouges and scrapes throughout.

- Truss member section losses are less than 5% (gross or net).

- The bottom chord splice plates at the lower nodes have areas of section loss up to 1/8" deep.
- Random heavy pigeon debris typically inside the lower members, which cover the connection bolts.
- Span 27, South Truss at Node L33 and Span 28, North Truss at Node L33 have plugged drain holes inside the bottom chord with ponding water (Span 28, North Truss bottom chord was dry at the time of this inspection).
- Up to 1" thick pack rust at the floorbeam shim plate to top chord connections.
- Up to 1/2” thick pack rust between bottom chord members and splice plates.
- Random partially cracked and fully broken tack welds with no propagation into the base metal noted.

- Vertical gusset plates have pack rust up to 5/8" thick (Span 26, North Truss, Node L1) and pitting and/or section loss up to 3/16" deep.
- All gusset plate section losses are <5% except as noted below.
- Span 27, North Truss, Node L21 north gusset plate has 8.4% section loss in the horizontal failure plane.
- Span 26, North Truss, Node L1 north gusset plate is bent/buckled 5/8” due to pack rust.

Truss Pins in Span 27 for Hung Span:
- Truss pin depth measurements at the brass plugs have no changes since the last inspection.
- There are (3) stripped brass plugs, where measurements were unable to be taken.
- There are random areas of light to heavy rust on bolts, nuts and washers.
- North truss, L19 and U20 interior web plates have flame cuts and abrasion rust.
- Several web plates are wearing into the pin up to 1/4" with abrasion rust (Span 27, North Truss U26).
- North truss, U26 chord top plate at the connection is bowed down full width x 18” long x 5/8” deep.
- Two (2) truss pins (South Truss, U20 & U26) were ultrasonic tested during the 2021 inspection. Fourteen (14) truss pins (South Truss- L18, L19, U19, L27, U27, L28 & North Truss- L18, L19, U19, U20, U26, L27, U27, L28) were ultrasonic tested in 2019 during special inspection.
- Note that all pins tested in 2019 & 2021 are 6” diameter. Ultrasonic testing showed all pins as acceptable.
- The 10” diameter pins at Nodes U19, L19, U27, L27 per truss were not ultrasonic tested this time per CTDOT directive as it require temporary pin clamping /restrainer device to avoid lateral movement of pins during the temporary removal of the pin retainer caps during testing.
- The 10" diameter pins were last tested in November 2010.

Hanger Retrofits at Nodes L19 and L27 in Span 27 for Hung Span:
- The hanger rods typically have moderate vibration and light to moderate rust.
- North Truss at Node L19 has gaps, 3/8" (north) and 7/8" (south) between elastomeric pad and bottom chord, with up to 1/8” gap between pad and sling plate.
- South Truss at Node L19 elastomeric bearing has the following deficiencies:
- No gaps at the elastomeric bearing at either side, but the east side of the pad has a 1/2" bulge and the keeper is bent.
- Three (3) tears up to 4" long x 1/4" high x 1" deep.
- Pad overhangs the edge of the assembly by up to 1" at the southwest corner.
- South Truss at Node L19, secondary nut at northwest rod is loose.
- North Truss at Node L27 has one (1) hanger rod missing (1 of 2) nuts at the bottom and remaining nut is loose.
- South Truss at Node L27 has (4 of 4) hanger rods at northeast corner with up to 1/16" deep section loss at the end threads on half of the perimeter.
- South Truss at L27 elastomeric pad has less than 1/16" gap with the bottom chord at east side.

Also, see "Rivets & Bolts" and "Welds-Cracks" items below.

See Truss Elevation Sketches, Truss General Notes Sheets, Truss Section Loss Detail Sketches, Truss Member and Gusset Plate Section Losses Table, Truss Pin Measurement Sketches and Photos 121 - 163.

Trusses - Portals: N

Trusses - Bracing: 5

Sway Bracing (Riveted Truss Spans 22-25 & 29-32):
- Sway bracings have random areas of peeling paint and isolated areas of light to laminated rust.
- There is up to 1-1/4" thick pack rust between back-to-back angles.
- There is up to 1/2" thick pack rust between the clip angles and vertical gusset plates, and between the vertical gusset plates and sway brace members.
- There are gaps up to 1/4" between the sway bracings and floorbeam bottom flanges.
- Random vertical gusset plates have up to 3/16" deep painted over pitting.
- Struts have up to 1” thick pack rust between top and bottom flange angles, and up to 1/8” thick pack rust at random lacing bar connections.
- There is moderate vibration of the sway bracings at random locations in the riveted spans.

Sway Bracing in Spans 26-28 (Main Truss Spans):
- Sway bracings have random areas of peeling paint and isolated areas of light rust.
- Sway bracing connections have random areas of pack rust up to 3/8" thick.
- Struts have evidence of water ponding with laminated rust and section losses up to 3/16" deep on web and flanges.

Top Lateral Bracing (Riveted Truss Spans 22-25 & 29-32):
- Lateral bracings have up to 1.5" thick pack rust between the back-to-back angles.
- There is up to 1-5/16" thick pack rust between the horizontal gusset plates and lateral bracing members (Span 25, Floorbeam FB 8 at centerline of the bridge).
- Horizontal gusset plates have section loss up to 1/4" deep and rusted through holes up to 1-1/8" diameter (Span 25, Floorbeam FB 2 at centerline of the bridge).
- Horizontal gusset plates have random rivet heads with up to 75% section loss.
- Lateral gusset plates and lateral bracing members have light to moderate sag at random locations.

Top Lateral Bracing in Spans 26-28 (Main Truss Spans):
- Lateral bracings have random areas of peeling paint and isolated areas of light to laminated rust.
- There are random painted over pitting losses along members up to 1/4" deep.
- There is pack rust up to 1/4" thick between the lateral bracing gusset plates and floorbeam bottom flanges.
- Random gusset plates and members are bent/deformed up to 1” (construction related).

Bottom Lateral Bracing (Riveted Truss Spans 22-25 & 29-32):
- Bottom lateral bracings have random areas of peeling paint and isolated areas of light to laminated rust.
- There is up to 5/16" deep pitting/section loss on gusset plates and members (Span 23, Bottom Lateral Brace L4L6, top of gusset plate at Node L6), and rivet heads have up to 80% loss.
- There is up to 1-1/4" thick pack rust between lateral bracing members and bottom horizontal gusset plates (Span 32, North Truss at Node L8).
- Horizontal gusset plates have rusted through holes up to 6" long x 2" wide (Span 22, South Truss at Node L8).
- There are isolated rusted through holes at members up to 4" x 2" (Span 24, South Truss at Node L0), typically at ends.
- There are random bends and dents in the members up to 1” (construction related).

Bottom Lateral Bracing in Spans 26-28 (Main Truss Spans):
- Bottom lateral bracings have random areas of peeling paint and isolated areas of light to laminated rust.
- There is up to 3/4" thick pack rust between bracing members and gusset plates.
- There are random bends in the gusset plates and member flanges up to 1” (Span 27, bottom bracing member at Node L26).
- There is up to 1/4" deep pitting in the gusset plates and bracing members.
- Random connection bolts and nuts with peeling paint and rose-budding with up to 30% section loss.
- Random fasteners are loose, missing or not snug.
- Span 27, Node L24, lower horizontal gusset plate at the centerline of bridge has a 1" long x 1" wide tear at northeast corner.

		See Underside of Deck & Framing Plans Sketches, Truss Sketches, General Notes Sheets and Photos 164 - 175.
Paint:	5	- Less than 25% of the total painted surfaces are deteriorated. - Most notably in the truss spans and at the fascia stringers. See items above and below.
Rust:	3	See above items.
Machinery Movable Span:	N	
Rivets & Bolts:	5	Rivets: - Random painted over rivet heads have section loss, typically up to 50% and 100% at isolated locations. - Random rivets at the lower connections and bottom chords have up to laminated rust. - Random missing/sheared rivets throughout, some locations with drift pins or short bolts in place (no nuts). Bolts: - Inside random truss members at the nodes, bolt heads and nuts have rose-budding (up to 75% loss). Some of these nodes are covered by heavy pigeon debris or ponding water. - Random connection bolts are not fully engaged. - Random bolted connections have loose, not fully engaged/seated, short or missing bolts. - Random missing bolts due to interference with other members and random misdrilled/oversized holes. Stringer connection bolts: - There is up to (6 out of 6) loose connection bolts between stringer web and floorbeam web stiffener. - There is heavy abrasion dust at these locations. - Some of these locations have slotted holes at the connection. - Most of these deficiencies are in Span 27. Missing/backed off rivets/bolts at girder/FB connections or truss vertical gusset plates as follows: - Span 7, Floorbeam FB 7-9 connection to Girder G1 has one (1) missing bolt (misdrilled hole). - Span 8, Floorbeam FB 9-1 connection to Girder G1 and G2 has one (1) missing bolt (misdrilled hole). - Span 14, Floorbeam FB 15-5 connection to Girder G2 has one (1) missing bolt (misdrilled hole). - Span 22, North Truss, Diagonal L4U5, north web to vertical gusset plate has one (1) missing rivet. - Span 26, North Truss, Horizontal U0U1, vertical stiffener connection to Floorbeam FB0 has (5 of 5) connection bolts short. - Span 26, South Truss, Diagonal L12U13 at U13, sway bracing connection to gusset plate has one (1) backed off nut at north plate. - Span 27, North Truss at Node U29, north vertical gusset plate has three (3) missing bolts. - Span 27, North Truss at Node L27 has one (1) missing nut at hanger rod (redundant system) and one (1) loose nut. - Span 28, South Truss at Node U35, south vertical gusset plate has one (1) missing bolt. - Span 28, North Truss at Node L44, south web (inside) has one (1) missing bolt. - Span 28, North Truss at Node L45, north vertical gusset plate has one (1) missing bolt due to abandoned steel plate. - Span 28, South Truss at Node L45, south vertical gusset plate has one (1) missing bolt. - Span 29, North Truss at Node U7 has one (1) missing rivet at the top chord to the vertical gusset plate to the east of Floorbeam FB 7. - Span 31, North Truss at Node U6, top chord connection to floorbeam has (2 of 12) bolts missing. - Span 31, North Truss at Node U10, top chord connection to floorbeam has (1 of 12) bolts backed off. - Span 32, North Truss at Node U9, north vertical gusset plate has two (2) bolts not fully engaged (bolts are tilted with one edge in contact with gusset plate). - Span 32, South Truss at Node U2, top chord connection to floorbeam has one (1) short bolt at top chord connection, three (3) flush bolt nuts, four (4) misdrilled holes at the top plate, one (1) backed off nut inside chord connection and the north vertical gusset plate is missing one (1) bolt. See above items, Underside of Deck & Framing Plan Sketches, Truss Elevation Sketches, General

	Notes Sheets, and Photos 150, 176 - 183.
Welds - Cracks: 5	Girder/Floorbeam Spans (6-21 & 33-36): - Vertical back-to-back angles of the girder bearing/web stiffeners have pack rust. - Pack rust has caused broken tack welds between the outstanding angle legs at numerous girder locations. - Random cracked tack welds between the girder top flange and floorbeam shim plates. Truss Spans (22-32) numerous tack welds broken/cracked at the follow areas: - Between the truss member flanges, web plates, lacing bars and/or batten plates. - Between top chord vertical back-to-back angles and top chord seat angle at the inside of the nodes. - Between the truss top chord and floorbeam shim/load plates. - Between sway bracing members and fill plates. - Span 26, North Truss, Diagonal U9L10 (inside) has three (3) broken, two (2) partially cracked and two (2) poorly fused tack welds between the web and top plate. - Span 26, North Truss, Node U0 top chord plate connection to the vertical stiffener has three (3) broken tack welds on the inside face. Span 27, stringers at Floorbeams FB 20A and FB 26B: - Most tack welds are broken between the stringer bottom flanges and shim plates due to pack rust. - Broken tack welds between the shim plates and floorbeam top flanges due to pack rust. Floorbeam vertical web stiffener base welds, below Stringer S7 at catwalk connections: Welds which wrap around the base of the FB web stiffener are cracked at: - Span 29, FB 8, east elevation, cracked 2-1/16” long, propagates into FB web (repaired in 2019 with stop holes at the ends of the crack). No evidence of further propagation at the time of this inspection. - Span 31, FB 8, east elevation, cracked 1-5/8” long, propagates into FB web (repaired in 2019 with stop holes at the ends of the crack). No evidence of further propagation at the time of this inspection. - Span 32, FB 4, east elevation, cracked 2-1/8” long, propagates into FB web (repaired in 2019 with stop holes at the ends of the crack). No evidence of further propagation at the time of this inspection. - Bridge maintenance repaired these cracked areas by drilling stop holes during the 2019 inspection. - Random other welds are undercut, UT testing revealed no cracks during the 2019 inspection. Truss verticals at Node 9 in the riveted spans have cover plates added to the angles (16 locations). Cover plates have a weld approximately 4' from the top of the bottom chord: - Span 22, North Truss, Vertical U9L9 south cover plate has a 1-1/4" long x 1/4" high x 1/8" deep gouge (old) (previously noted as a crack). - Span 22, South Truss, Vertical U9L9 north cover plate weld has a 10.25” long crack/defect (old) and a 1/8" diameter void in the weld at edge. - Span 22, South Truss, Vertical U9L9 south gusset plate has a 3/4" wide x 1/8" deep void along the weld (old). - Span 23, South Truss, Vertical U9L9 north cover plate weld has a 2-3/8" long crack/defect (old). - Span 23, South Truss, Vertical U9L9 south cover plate weld has an 11-1/4" long crack (old). - Note these are zero force members. - Span 25, South Truss at Node U7, west side of node at shim plate between vertical clip angles at centerline of vertical member inside the connection has a 4-3/4" long defect and a tack weld at the top is broken due to pack rust. - Trough support brackets and connection welds are cracked in random locations. See "Drains" item above for additional information. - Transverse catwalk stairs in Span 27 at Floorbeams FB20, FB24 and FB26 have cracks in welds at tops of the stairs. See "Catwalks" item below for additional information. - Piers 21 and 32, steel bent vertical angles have welded splices at mid-height (A-36 steel). - No visible deficiencies.

		- Floorbeam top and bottom transition welds in Spans 26, 27, 28 and 32 (Category "B" welds). - Flange transition welds in the main girders in Spans 33-36 (tension flanges, Category "B" welds). - All transition welds in the tension flanges were inspected 100% hands-on with no deficiencies noted. - Ultrasonic testing of welded flange transitions on tension zone in Spans 33-36 (except Span 33 Girders G1 & G2, west bottom flange transition) was performed by Team Inc. this inspection and found as acceptable. Partial length bottom flange cover plates (Category E welds) at overhead sign support locations: - Span 11, Stringer S1 (rolled beam) and Stringer S13 (welded plate girder) between Floorbeams FB0 and FB1. - Span 26, Stringers S1 and S13 (rolled beams) between Floorbeams FB0 and FB1. - Span 32, Stringers S1 (rolled beam) and Stringer S14 (welded plate girder) between Floorbeams FB0 and FB1. - All partial length bottom flange cover plate ends were inspected 100% hands-on with no deficiencies noted. - Areas of laminated rust at the end welds with negligible loss. Also, see above items. See Underside of Deck & Framing Plan Sketches, Truss Elevation Sketches, General Notes Sheets, and Photos 109, 122, 123, 132, 184 - 192.
Timber Decay:	N	
Concrete Cracking:	N	
Collision Damage:	7	- Random bends, dents and gouges in the superstructure elements from construction. Also, see above items. See General Notes Sheets.
Member Alignment:	6	- Built-up members and connections have random gaps and swelling due to pack rust. - Random girder webs (typically at riveted splices) have minor bows up to ±3/8" over their full height. - Span 27, Stringer S1 at FB 20A, web end is slightly bowed. - Span 27, Stringer S13 between Floorbeams FB 19 and FB 20A is bent ±1/2" out of plane due to 1-1/4" pack rust. - Span 27, stringers at the east face of Floorbeam FB23 overhang the seat plate 1/2" on the south side. - Span 27, stringers at the west face of Floorbeam FB33 overhang the seat plate 1/2" on the north side. - Span 34, Girder 34B-2 at Pier 34, web end is bowed 1/4" north over 8" high at the bottom. - Also, see above items. See Underside of Deck & Framing Plan Sketches, Truss Elevation Sketches and Photos 108, 109, 121, 122, 134, 151, 164 - 167, 175, 192 & 193.
Deflection Under Load:	N	- Normal. - The superstructure steel emits creaking sound under heavy live load. - Random girders and floorbeams in Spans 7-16 noticeably deflect under heavy live load. - Random stringers (typically Stringers S1 and S13) deflect up to ±1/2" under heavy live load. See General Notes Sheets.
Vibration Under Load:	N	Normal. - Span 23, vibration of the superstructure elements was noted to be slightly more than other spans. - Sway bracing and lateral bracing members have moderate vibration at random locations. - Span 27 hanger rods (redundant support system) have moderate vibration. - Catwalk cross-frame supports have light to moderate vibration at random locations. See General Notes Sheets.

Stand Pipes:	N	
Catwalks:	4	Catwalk framing and tread plates in Spans 22-32 (truss spans): - Areas of peeling paint, moderate rust and abrasion rust at random connections. - Up to 1/2" thick pack rust (3/8" typical) at post-rail connections and up to 1/4" thick at the tread plates. - Random missing/loose bolts. - Post and railing angles at interface typically have 1/8” deep section loss. Isolated railing angles at these locations have 1/16” remaining. Tread plates: - Tread plates have laminated rust up to 1/4" thick with random areas of section loss up to 1/8” deep (1/16" deep typically). - Span 27, there are isolated rusted through holes up to 1/8" diameter. - Spans 22, 25 & 27 have isolated larger rusted through holes in the tread plates up to 8" x 4" (Span 25) at Piers 21 & 25. - Random plates are vertically misaligned up to 2" (1/2" typically) (Span 27 at the ends of the suspended span) - Span 26, random vertical tread legs have full height x 6" long perforations with laminated rust. - Span 27, South Truss at Node L19 lower side catwalk, first tread plate above gusset plate has broken tack welds and is lifted up 4” high. Span 21, transverse catwalk near Pier 21: - Catwalk connection plate to bracing is disconnected at two (2) locations. Span 27, transverse catwalk stairs at Floorbeams FB 20, FB 24 & FB 26: - Pack rust up to 1" thick between vertical plate and sidewalk stringer channel is causing welds to crack up to 5.5" long at eight (8) locations. - Expansion plate at Floorbeam FB20 has a 1' long x 2' wide area with perforations and knife edge remaining. Span 27, South Truss at Node L19: - Catwalks have up to (8 of 10) rusted out tread plate tie down bolts with up to 1" pack rust. - Missing (1 of 2) bolts at underside. - Two gates at north picket fence that allow access to ladders for the catwalks at Piers 26 and 28. - These fence gates are held in place with locks since the last inspection and CTDOT Maintenance has the keys. Span 31, center of Panel 10: - Missing welds at the north and south vertical support angle connections to the horizontal gusset plate. Inspection platforms and hand bars in Spans 33-36 of the main girders: - Inspection platforms have been previously removed in Span 33 (over the railroad). - Platforms and hand bars are only in place along the mainline girders and not along the ramp girders. - The chain is missing at the platform under Girder G1 at Pier 33 in Span 34. See Catwalk Notes Sheets, Underside of Deck & Framing Plan Sketches and Photos 194 - 198.
Movable Inspection System:	N	
Barrel Ladders:	4	Fixed ladders with and without barrels: - Random areas of peeling and chipped paint with light to heavy rust. - Random rungs with laminated rust and up to 1/8” deep section loss. - Random minor bends/dents at barrel ladder cages. - Safety cables are frayed & fall arrestors attached to safety cables have heavy rust and do not work. - Barrel ladder at Pier 21 has one (1) rail section broken near the top. - Span 27, Piers 26 & 27, the bases of the fixed ladders have no hand rails. Pier 27 barrel ladder platform at mid-height of sway bracing: - One (1) plate loose with all connection bolts missing/broken & adjacent plate can be lifted up at edge.

Ladders are not OSHA compliant.

See Catwalk Notes Sheets and Photo 199.

Are Barrel Ladders OSHA Compliant? No

60. SUBSTRUCTURE:

- Reinforced concrete abutments and wingwalls supported on spread footings and piles.
- Abutment 2 has no stem, instead concrete pedestals are supporting the girder bearings.
- Piers with steel columns (Piers 6, 8, 12, 14), reinforced concrete hammer head pier caps (Piers 33-35) and reinforced concrete pier columns with reinforced concrete pier struts (rest of the piers).
- Piers are supported on spread footings and piles.

Overall Rating: 5

	Rating	
Abutments - Stem:	6	Reinforced Concrete Abutment 1 Stem: - Random vertical cracks up to full height x up to 1/16" wide with isolated efflorescence. - Random areas of light scaling and minor honeycombing and minor pop-outs up to 3" diameter x 1/2" deep. - Isolated 3' wide x 2' high x 2” deep spall with and without exposed rebar and isolated up to 3' x 2' hollow areas (North face). - Abutment seat has ponding water between bearings and active leakage on the stem. - Painted over graffiti with minor areas of newer graffiti at bottom. Concrete Pedestals: - Abutment 1 pedestals have random vertical hairline cracks with random efflorescence. - Abutment 2, north face of Girder G2 pedestal has three (3) spalls up to 12" long x 10" wide x 1/2" deep. See Abutment Sketches and Photos 200 - 203.
Abutments - Backwall:	6	Reinforced Concrete Backwalls: - Random vertical and diagonal cracks up to full height x up to 1/16" wide with isolated efflorescence and rust (Abutment 1). - Random areas of light scale, with one (1) isolated 10" wide x 1' high x 1/2" deep area of scaling (Abutment 1 at north end). - Abutment 2, one (1) isolated 3' high shallow rebar at the north end. - Random hollow areas up to 18" diameter (Abutment 1). - Abutment 2 backwall has an isolated 1' diameter x 1" deep spall with exposed rebar at the north end. - Area of hairline map cracking up to 2' x 4' with rust (Abutment 2). - Active leakage (Abutment 1) and damp areas (Abutment 2) with silt stains. - Painted over graffiti with random areas of newer graffiti. See Abutment Sketches and Photos 200 - 203.
Abutments - Footings:	N	Not visible.
Abutments - Settlement:	7	Wingwall 1B: - Joint at Abutment 1 backwall is 1/2" wider at the top (2”) than near the base (1.5”) of the backwall (no change). - Measured at previously made chisel marks (no change). See Abutment Sketches.
Abutments - Wingwalls:	6	Reinforced Concrete Wingwalls: - Random horizontal, vertical and hairline map cracking with isolated efflorescence. Wingwall 1A: - Two (2) spalls up to 4' high x 4" wide x 1" deep. - At the base there is a 1' wide x 3" high x 6" deep spall with exposed wood buried in the concrete. - Active leakage noted on the wingwall.

		Wingwall 1B: - Five (5) hollow areas up to 3' wide x 5' wide (along expansion joint) with damp areas. - Two (2) spalls up to 2' wide x 16" high x 2" deep with exposed and broken rebar within 3' x 5' hollow area along expansion joint. Wingwall 2B: - Up to 50% mapcracking at architectural face with random efflorescence. Also, see "Abutments - Settlement" item above. See Abutment Sketches and Photos 203 - 205.
Piers/Bents - Caps:	5	Concrete struts between the columns: - Random areas of light to moderate scale, minor honeycomb, shallow rebar up to 1' long and minor spalls/pop-outs up to 6" diameter and 1" deep, exposed rebar chairs, rust stains (typically under bearings) and stains from past leakage. - Random vertical and horizontal cracks up to 6' long x up to 1/8" wide (Pier 11, east elevation) and areas of hairline map cracking with isolated efflorescence and rust. - Isolated piers have evidence/active leakage up to full length of pier cap (Pier 7). - Random concrete patches from the past sound hollow at random locations and random hairline and mapcracking with isolated efflorescence. - Hollow areas/patches up to 10' wide x 8' high (Pier 32, west elevation). - Pier 9 and Pier 11 struts have hollow areas up to 12' wide x full length over the stock pile area. (Work item ID: 03819-2018-0008 has been updated). - Pier 30 strut has two (2) hollow areas up to 8' x 3' over boat launch area (Work item ID: 03819-2018-0008). - Spalls with exposed rebar up to 3' wide x 2' high x 4" deep (Pier 32, west elevation). - Pier 32 west elevation has a spall with one (1) main rebar exposed with 1/8" deep section loss. - Pier 32 underside has a spall with one (1) secondary rebar exposed with up to 50% section loss. Hammerhead Pier Caps (Piers 33-35): - Random areas of joint debris. - Random areas of light to moderate scale and minor honeycomb and isolated pop-outs. - Isolated areas of shallow rebar and linear cracks up to 1/8" wide, some with efflorescence. - Pier 33 cap has two (2) hollow areas up to 8’ long x 1' high (west elevation). - Pier 33 cap has a 5.5' wide x 1' high x 3" deep spall with exposed rebar and 25% section loss on the rebar (west elevation). - Pier 35 cap has random vertical hairline (possible tension) cracks up to 2' long. - Pedestals have hairline cracks and the top of Pier 34 pedestal for Girder 34B-4 has hollow areas up to full width x 8” long along the west edge. Steel Pier Bents at Piers 21 & 32: - Peeling paint with areas of up to laminated rust and up to 1/2" thick pack rust at random connections (Pier 21). - Random lattice bars have up to 3/16" deep section loss or/ are fully severed/rusted out. - Batten plates have rusted through holes up to 9” x 8” (North Bent at Pier 32). - Random rivet heads have up to 100% section loss. Pier 21 bent: - Horizontal member channels at top and bottom have isolated areas of 3/16" to 1/4" deep pitting. - Horizontal member channel at the bottom has up to full height x 3/16" deep section loss. - Diagonal angles at the connections adjacent to the gusset plates have up to full width x up to 3/16" deep section loss. - Vertical gusset plates at the base of the columns have up to full width x 3/16" remaining (west elevation of the south bent). - South bearing masonry plate is undermined up to 1/2" deep x 3" long due to a spall in the grout pad. Pier 32 bent:

- Horizontal members channels at the bottom have up to full height x 3/16" deep section loss.
- Diagonal members at connections adjacent to gusset plates have up to full width x up to 1/4" deep section loss.
- Vertical gusset plates at the base of the columns have up to 3/8" deep section loss.
- North bent, west bottom vertical gusset plate has a 5" diameter knife edge with a 3” diameter rusted through hole.

Post tensioning at tops of Piers 22, 26 & 27 (I-beams with post tension rods):
- Steel I-beams have areas of up to 4" deep debris accumulation (Pier 22), clogging drain holes and causing water ponding.
- Random pitting and laminated rust with up to 1/4" deep section losses (Pier 26).

See Pier Sketches, General Notes Sheet, Hollow areas in Substructure Sheet and Photos 206 - 214.

Piers/Bents - Pile Bent: N

Piers/Bents - Columns: 5

Steel Columns with Concrete Pedestals at Piers 6, 8, 12 & 14:
- The base of the columns on the interior along the interface with concrete filled bases have laminated rust with up to 5/16" deep section loss.
- These losses result in up to 23.6% section loss of total cross section area (Pier 12N).
- Built-up members also have up to 1" thick pack rust between the members (worst at Pier 12).
- Grout pads at Piers 6S, 6N, 12S and 12N have hairline cracks and spalled up to 60% (Pier 12S grout pad) of the perimeter.

Steel Column Bearings at Piers 6, 8, 12, 14, 21 & 32:
- Bearing plates have light to moderate rust and up to 1/4" deep pack rust between connections.
- Random bearing plates have up to 1/4" deep section loss at isolated locations (Pier 12S).
- Random anchor bolts and nuts have up to 100% section loss (Pier 21).
- Pier 12S, bottom bearing all four (4) drop bolts have 20% section loss.
- Pier 21, north column, top bearing south keeper vertical tack welds are broken up to full height (horizontal welds are ok).
- Pier 21, south column, bottom bearing masonry plate is undermined 3" long x up to 1/2" deep due to spall.

Steel Bent Columns at Piers 21 & 32:
- Base of column flanges and webs have laminated rust with section loss up to 1/4" deep of the total cross sectional area and isolated 3/8" deep pitting resulting in up to 10.6% section loss (south column at Pier 21).
- Random rivet heads have up to 50% section loss.
- There is up to 5/8" pack rust between the vertical gusset plate and vertical member at the bottom connections. (north column at Pier 21).
- Steel pier bent verticals have welded splices at mid-height with no notable deficiencies.
- Pier 21, north steel bent column, back-back angle weld, south side is cracked 9” long at the top (no change since last inspection).

Reinforced Concrete Columns:
- Columns have areas of scaling up to 1" deep, random pop-outs and shallow rebar.
- Concrete repair patches have random cracks with isolated efflorescence.
- Random horizontal and vertical cracks opened up to 1/4" wide and areas of map cracking with efflorescence.
- Random hollow areas up to 8' long x 10' high (Pier 28, south elevation of Column C1)
- Random spalls up to 2' high x 1' long x 6" deep (Pier 32, northeast corner of Column C1) with and without exposed rebar.
- Some of the hollow areas are over the New London DPW parking lot, boat launch parking lot and sidewalk (all intact). (Work Item ID: 03819-2018-0008 has been updated).

Pedestals/Grout Pads at the Tops of Columns:
- Grout pads and pedestals have random vertical hairline cracks, some extend to bearing masonry plates and random minor popouts/spalls.

		- There are random hollow areas/patches up to full width x 8" long (Pier 34, top of G34B-4 pedestal). - There are random spalls up to 57" long x full height x 2" deep (Pier 28, north truss bearing pedestal). - Pedestal spalls at Piers 21, 25, 28, 30, 31 and 32 undermine bearing masonry plates up to 4' long x up to 3" deep (Pier 28, north truss bearing) (<5% bearing loss). Granite Facing and Concrete at Pier 24-28 Bases: - Mortar joints above the waterline have random areas (<5%) of loose/missing/deteriorated mortar with penetration up to 12" deep. - There are random cracks in the stones up to 3/8" wide (Pier 28, south face of Column C2) and spalls up to 1' diameter x 1' deep (Pier 27, Column C1). - There are epoxy repairs with isolated hollow areas up to 3' wide x 6" long (Pier 27, Column C1). - Pier 24 & 28 bases have isolated stones that are shifted out up to 1-1/4", (no change) (Pier 28, Column C1). See Pier Sketches, General Notes Sheet, Hollow areas in Substructure Sheet and Photos 81, 215 - 223. Also, see Underwater Inspection Report dated 6/15/2021.
Piers/Bents - Footings:	5	The following tops of footings were exposed at the time of inspection: - Previously noted, 4' long x 4' wide x 2" high exposed footing at the northeast corner of Pier 7 was not found during the 2021 inspection. - Pier 31, northwest corner is exposed for 2' wide x 1.5' long x 6" high (no change). - Pier 33, southwest corner of north column footing is exposed 4' long x 4' wide x up to 6" high and has a 2' wide x 1" long x up to 1/2" deep edge spall. See Pier Sketches, General Notes Sheet, Photo 224. Also, per Underwater Inspection Report dated 6/15/2021: - Only Pier 27 is exposed up to 6' high inside sheet piling (no change). - Intermittent voids with up to 7' penetration into footing adjacent to steel beams (no change).
Piers/Bents - Settlement:	8	None noted.
Erosion - Scour:	6	- Concrete block slope protection at both abutments with cracks up to 3/8" wide (Abutment 2). - Bituminous section below Abutment 2 block slope with settled areas up to 10' x 8' x 14" deep. - Pier 31 & 33 footings are partially exposed up to 4' long x 4' wide x up to 6" high. - Embankment near Pier 33 has erosion along the slope up to 3' wide x 6" deep (no change). Also, see "Piers/Bents - Footings" item above. See Pier Sketches, General Notes Sheet and Photos 224 & 225. Also, see Underwater Inspection Report dated 6/15/2021.
Concrete Crack - Spall:	5	See above items.
Steel Corrosion:	5	See "Piers/Bents - Columns" item above.
Paint:	5	Steel columns at Piers 6, 8, 12 and 14: - Less than 5% of the paint on the steel is deteriorated. Steel pier bents at Piers 21 and 32: - Approximately 25% of the paint on the steel is deteriorated. Also, see above items.
Timber Decay:	N	
Collision Damage:	8	
Debris:	5	- Abutment bridge seats and piers have light to moderate debris. - Heavy accumulation of debris at Piers 9, 11, 17 and 34; debris extend under rocker bearings. - Pier 21, top of bottom concrete strut between columns has light to moderate dirt and debris.

- Piers 6N, 8N, 9 (Column C1), 10 (Column C1), 12N, 12S & 16 have up to heavy vegetation growth for full height.

See Substructure Sketches and Photo 226.

61. CHANNEL AND CHANNEL PROTECTION:

See Underwater Inspection Report dated 6/15/2021. Overall Rating: 6

	Rating	
Channel - Scour:	6	See Underwater Inspection Report dated 6/15/2021.
Embankment - Erosion:	7	See Underwater Inspection Report dated 6/15/2021.
Debris:	6	See Underwater Inspection Report dated 6/15/2021.
Vegetation:	8	
Channel Change:	6	See Underwater Inspection Report dated 6/15/2021.
Fender - System:	N	Fender System: N/A Navigation lights on bottom chord of south truss in Span 27 and on south pier columns 26 and 27: - Off at the time of inspection during the day. - Newer with sensors to detect light. - The navigation lights were checked at night. - The lights attached to the superstructure in Span 27 were not functioning at night. - The lights on the south column of Piers 26 and 27 were on at night. - CTDOT was notified via email on 08/16/2021, regarding non-functioning navigation lights on the superstructure in Span 27. - A Critical B Work Item ID: 03819-2021-0022 was created for this condition. Spans 27 & 28, south parapet has three abandoned/damaged navigation light switches. Electrical conduit for the navigation lights are deteriorated at following locations (possibly abandoned): - Span 27, Bay 12 near Floorbeam FB 23, conduit rusted out 5" x 1" with exposed wire. - Span 27, south truss near Node L23 has a 15' long exposed wire carried by rusted out conduit. - Span 27, Bay 12 near Floorbeam FB 27, conduit has full circumference rusted through hole. - Span 27, south truss inside Node L19, conduit rusted out 1' long with exposed wires. - Span 28, Bay 12 near Floorbeam FB 33, conduit rusted out 2" x 1" with exposed wires. - The ladders at the south noses of Piers 26 and 27 are heavily deteriorated and the ladder at Pier 26 is non-functional. See Underside of Deck and Framing Plan Sketches and Photos 227 & 228.
Spur Dikes and Jetties:	N	
Rip Rap:	7	See Underwater Inspection Report dated 6/15/2021.

62. CULVERTS AND RETAINING WALLS:

Overall Rating: N

	Rating	
Barrel:	N	
Concrete:	N	
Steel:	N	
Timber:	N	
Headwall:	N	
Cutoff Wall:	N	
Debris:	N	

Retaining Wall System:	N	
Footing:	N	

LOAD POSTING:

	Rating	
Single Unit (Tons):		
Semi Trailer (Tons):		
4 Axle (Tons):		
3S2 (Tons):		
All Vechicles:		
Advanced Warning:		
Warning At Bridge:		
Legibility:		
Visibility:		

VERTICAL CLEARANCE POSTING

Min. Vert Under Clearance:	22	Ft	3	In	The minimum vertical underclearance is 22'-3" measured from Girder G1 in Span 6 to the west assumed edge of travelway (12' from double yellow line) of State Pier Road. See Clearance Diagram Sketches.
Posted Clearance Under Bridge:		Ft		In	
Posted Clearance On Bridge:		Ft		In	

Advanced Warning:		
Warning At Bridge:		
Legibility:		
Visibility:		

NOTES / COMMENTS:

Character of Traffic: Moderate to heavy and mixed.

Additional Notes:

- Bridge ID is in good condition.
- Bridge is labeled from west to east, with Girder G1 at the north, North Truss and South Truss, consistent with previous reports and plans, however inconsistent with log direction of I-95 (south to north). Per BS&E, the labeling of the bridge was not changed.
- A 60' snooper, 75' snooper, rope climbers (for haunched truss sections in Spans 26-28) and safety boat were used to inspect the structure, along with vendor provided lane closures on I-95 NB with state police assistance and local lanes closures below with local police assistance.
- New England Central Railroad and P&W RR flagmen assisted in spans over railroads (Spans 22, 23, 32 & 33).
- Bridge is in a high potential threat category. Bridgeport Highway Operations is to be notified on a daily basis.
- US Coast Guard is to be notified prior to the start of the inspection.

Additional Comments:

- Catwalk access from gates in the north fence in Span 27 have locks for which CTDOT Maintenance has the keys.
- A falcon was sighted once on the catwalk railing in Span 23 at the time of inspection.
- Bridge is scheduled for a major rehabilitation project under Projects 0094-0235 & 0094-0256.
- There are three (3) existing work items that are outstanding and one (1) new work item created with this report in SMS.
- Other work items list noted in the word document to incorporate in the major rehabilitation project has been updated.

National Bridge Elements
Inspection type: Fracture Critical,Routine
Inspection Date: 7/26/2021
Inspected by: PRIME AE

:Bridge No 03819

Town: NEW LONDON
Carried: INTERSTATE 95 NORTHBOUND
Crossed: THAMES RV,RR,LOCAL ROADS
Inventory Route: NHS

	Environment	Total Quantity	Units	Condition State 1	Condition State 2	Condition State 3	Condition State 4
12 - Reinforced Concrete Deck	Mod.	104368	sq. ft.	71266	31599	1488	15
1080 - Delamination/Spall/Patched Area		673		0	213	445	15
1090 - Exposed Rebar		77		0	77	0	0
1120 - Efflorescence/Rust Staining		11479		0	10436	1043	0
1130 - Cracking (RC and Other)		20873		0	20873	0	0
510 - Wearing Surfaces		483700	sq. ft.	289547	121138	73000	15
	Added overlay for entire bridge under this element per BS&E (unable to enter under item 29)						
3210 - Delamination/Spall/Patched Area/Pothole (Wearing Surfaces)		658		0	213	445	0
3230 - Effectiveness (Wearing Surface)		193495		0	120925	72555	15
29 - Steel Deck with Concrete Filled Grid	Mod.	402247	sq. ft.	394077	6034	2011	125
1000 - Corrosion		8170		0	6034	2011	125
515 - Steel Protective Coating		402247	sq. ft.	321797	0	40225	40225
3440 - Effectiveness (Steel Protective Coatings)		80450		0	0	40225	40225
107 - Steel Open Girder/Beam	Mod.	4902	ft.	4224	500	165	13
1000 - Corrosion		668		0	490	165	13
1020 - Connection		10		0	10	0	0
515 - Steel Protective Coating		141500	sq. ft.	123105	0	14150	4245
3440 - Effectiveness (Steel Protective Coatings)		18395		0	0	14150	4245
113 - Steel Stringer	Mod.	79144	ft.	68593	3984	6342	225
1000 - Corrosion		10505		0	3958	6322	225
1020 - Connection		41		0	21	20	0
1900 - Distortion		5		0	5	0	0
515 - Steel Protective Coating		522350	sq. ft.	470114	0	26118	26118
3440 - Effectiveness (Steel Protective Coatings)		52236		0	0	26118	26118
120 - Steel Truss	Mod.	7460	ft.	5934	766	685	75
1000 - Corrosion		1492		0	746	671	75
1010 - Cracking		4		0	0	4	0
1020 - Connection		30		0	20	10	0
515 - Steel Protective Coating		321000	sq. ft.	224700	32100	32100	32100
3440 - Effectiveness (Steel Protective Coatings)		96300		0	32100	32100	32100
152 - Steel Floor Beam	Mod.	18075	ft.	16698	914	329	134
1000 - Corrosion		1364		0	904	326	134
1010 - Cracking		3		0	3	0	0
1020 - Connection		10		0	7	3	0
515 - Steel Protective Coating		288300	sq. ft.	259469	0	21623	7208
3440 - Effectiveness (Steel Protective Coatings)		28831		0	0	21623	7208
161 - Steel Pin and Pin & Hanger Assembly or both	Mod.	4	each	1	1	2	0
1000 - Corrosion		2		0	1	1	0

1020 - Connection		1		0	0	1	0
515 - Steel Protective Coating		4	sq. ft.	0	0	0	4
3440 - Effectiveness (Steel Protective Coatings)		4		0	0	0	4
162 - Steel Gusset Plate	Mod.	524	each	303	5	210	6
1000 - Corrosion		213		0	1	206	6
1020 - Connection		4		0	0	4	0
7000 - Damage		4		0	4	0	0
515 - Steel Protective Coating		15200	sq. ft.	11440	0	760	3000
3440 - Effectiveness (Steel Protective Coatings)		3760		0	0	760	3000
202 - Steel Column	Mod.	12	each	0	0	11	1
1000 - Corrosion		12		0	0	11	1
515 - Steel Protective Coating		10500	sq. ft.	10371	0	105	24
3440 - Effectiveness (Steel Protective Coatings)		129		0	0	105	24
205 - Reinforced Concrete Column	Mod.	63	each	12	24	27	0
1080 - Delamination/Spall/Patched Area		45		0	21	24	0
1130 - Cracking (RC and Other)		6		0	3	3	0
210 - Reinforced Concrete Pier Wall	Mod.	356	ft.	204	44	108	0
1080 - Delamination/Spall/Patched Area		152		0	44	108	0
215 - Reinforced Concrete Abutment	Mod.	210	ft.	177	16	17	0
1080 - Delamination/Spall/Patched Area		14		0	10	4	0
1090 - Exposed Rebar		3		0	1	2	0
1120 - Efflorescence/Rust Staining		11		0	5	6	0
1130 - Cracking (RC and Other)		5		0	0	5	0
220 - Reinforced Concrete Pile Cap/Footing	Mod.	89	ft.	0	84	5	0
1080 - Delamination/Spall/Patched Area		5		0	0	5	0
1190 - Abrasion/Wear (PSC/RC)		48		0	48	0	0
6000 - Scour		36		0	36	0	0
234 - Reinforced Concrete Pier Cap	Mod.	949	ft.	767	138	44	0
1080 - Delamination/Spall/Patched Area		118		0	96	22	0
1090 - Exposed Rebar		16		0	13	3	0
1120 - Efflorescence/Rust Staining		22		0	19	3	0
1130 - Cracking (RC and Other)		26		0	10	16	0
300 - Strip Seal Expansion Joint	Mod.	423	ft.	242	176	5	0
2330 - Seal Damage		0		0	0	0	0
2350 - Debris Impaction		6		0	6	0	0
2360 - Adjacent Deck or Header		160		0	160	0	0
2370 - Metal Deterioration or Damage		15		0	10	5	0
302 - Compression Joint Seal	Mod.	340	ft.	300	13	26	1
2320 - Seal Adhesion		15		0	0	15	0
2330 - Seal Damage		12		0	0	11	1
2350 - Debris Impaction		13		0	13	0	0
303 - Assembly Joint with Seal	Mod.	565	ft.	283	152	66	64
2320 - Seal Adhesion		25		0	0	25	0
2330 - Seal Damage		90		0	0	26	64
2350 - Debris Impaction		20		0	20	0	0

2360 - Adjacent Deck or Header		142		0	127	15	0
2370 - Metal Deterioration or Damage		5		0	5	0	0
306 - Other Joint	Mod.	1145	ft.	1094	37	14	0
2310 - Leakage		42		0	30	12	0
2350 - Debris Impaction		3		0	3	0	0
2360 - Adjacent Deck or Header		3		0	1	2	0
7000 - Damage		3		0	3	0	0
310 - Elastomeric Bearing	Mod.	4	each	3	0	1	0
2230 - Bulging, Splitting, or Tearing		1		0	0	1	0
311 - Movable Bearing	Mod.	58	each	4	3	51	0
1000 - Corrosion		40		0	0	40	0
1020 - Connection		6		0	3	3	0
2210 - Movement		8		0	0	8	0
515 - Steel Protective Coating		58	sq. ft.	18	0	0	40
3440 - Effectiveness (Steel Protective Coatings)		40		0	0	0	40
313 - Fixed Bearing	Mod.	40	each	5	25	10	0
1000 - Corrosion		31		0	23	8	0
1020 - Connection		3		0	1	2	0
2240 - Loss Bearing Area		1		0	1	0	0
515 - Steel Protective Coating		40	sq. ft.	9	0	0	31
3440 - Effectiveness (Steel Protective Coatings)		31		0	0	0	31
330 - Metal Bridge Railing	Mod.	11864	ft.	11711	33	113	7
1020 - Connection		49		0	10	39	0
7000 - Damage		104		0	23	74	7
331 - Reinforced Concrete Bridge Railing	Mod.	11864	ft.	9545	1943	376	0
1080 - Delamination/Spall/Patched Area		543		0	167	376	0
1090 - Exposed Rebar		1064		0	1064	0	0
1120 - Efflorescence/Rust Staining		356		0	356	0	0
1130 - Cracking (RC and Other)		356		0	356	0	0

FIELD NOTES	BRIDGE NO.: 03819	DATE: 12/8/2017
	CREW: SW, JG	SHEET: 1

ROCKER BEARING MEASUREMENTS

Form BRI-15, Rev. 9/97

Span No. : 6

Substructure Unit = Abut. 1

Temp. = 40 °F

$\Theta = \sin^{-1} (F-B)/W$

$Y = R \tan \Theta$

The "Front" of the bearing is the side facing the fixed bearing.

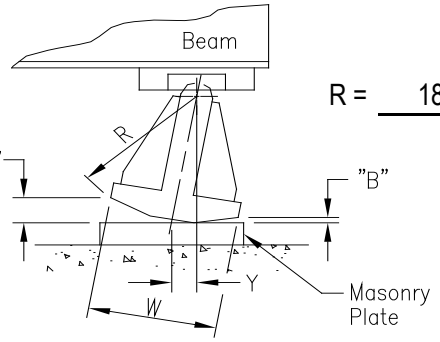

R = 18.5 in

W = 12 in

NOTE:
"F" & "B" should be measured at the left side corners of the rocker or on the side closest to the front face of the substructure on skewed bridges.

Beam	"F"	"B"	Y	Cont. Or Exp.	Comments
G1	1	1 1/8	- 3/16	C	Light to moderate debris under rocker, areas of laminated rust, missing 2 of 4 AB nuts at masonry plate, but welded.
G2	1 1/16	1 5/16	- 6/16	C	1/4" pack rust under rocker, light rust at top of bearing, missing 3 of 4 AB nuts at masonry plate, but welded. NE AB washer is loose, nut backed off slightly.
10/3/2019 BH, JG (Baker) 55°F					
G1	1 1/8	7/8	6/16	E	See above
G2	1 1/16	1 3/16	- 3/16	C	See above
9/9/21 EG, IS, NH (Prime AE) 72°F Rainy					
G1	1	7/8	3/16	E	See above
G2	1 1/8	1 1/8	0	N	See above

General Notes:
- 1/16" deep pitting on masonry plate at random locations and light rust on rockers and masonry plates.

FIELD NOTES	BRIDGE NO.: 03819	DATE: 12/6/2017
	CREW: SW, JG	SHEET: 2

ROCKER BEARING MEASUREMENTS

Form BRI-15, Rev. 9/97

Span No. : 9

Substructure Unit = Pier 9

Temp. = 45 °F

$\Theta = \sin^{-1} (F-B)/W$

$Y = R \tan \Theta$

The "Front" of the bearing is the side facing the fixed bearing.

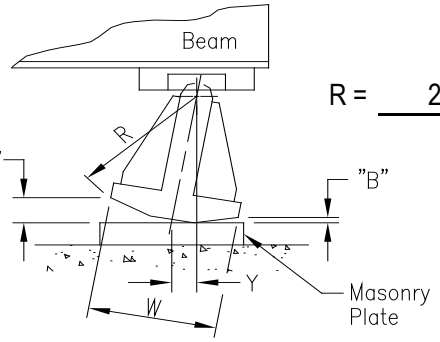

R = 20 in

W = 12 in

NOTE:
"F" & "B" should be measured at the left side corners of the rocker or on the side closest to the front face of the substructure on skewed bridges.

Beam	"F"	"B"	Y	Cont. Or Exp.	Comments
G1	1 3/8	1	10/16	E	Up to 1/8" thick pack rust and debris under rocker, heavy vegetation growth. Up to 2" high asphalt/concrete debris on and around bearing.
G2	1 5/8	3/4	1 7/16	E	50% SL at SE AB nut, 1/4" thick pack rust under rocker, up to 2" high asphalt/concrete debris on and around bearing.
10/3/19 BH, JG (Baker) 55°F					
G1	1 7/16	1	12/16	E	See above
G2	1 5/8	7/8	1 4/16	E	See above
10/7/21 EG, AN (Prime AE) 72° F					
G1	1 1/2	1	13/16	E	See above
10/12/21 BM, IS (Prime AE) 70° F					
G2	1 5/8	7/8	1 4/16	E	See above

General Notes:
- 1/16" deep pitting on masonry plate at random locations and light rust on rockers and masonry plates.

FIELD NOTES	BRIDGE NO.: 03819	DATE: 11/28/2017
	CREW: SW, JG	SHEET: 3

ROCKER BEARING MEASUREMENTS

Form BRI-15, Rev. 9/97

Span No. : 10

Substructure Unit = Pier 9

Temp. = 35 °F

$\Theta = \sin^{-1} (F-B)/W$

$Y = R \tan \Theta$

The "Front" of the bearing is the side facing the fixed bearing.

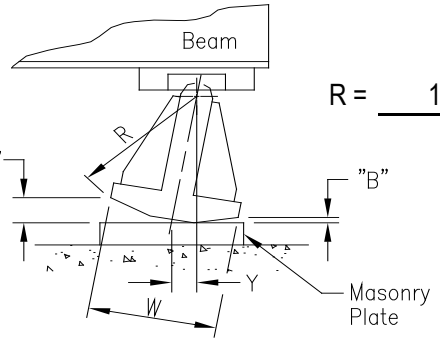

R = 17 in

W = 12 in

NOTE:
"F" & "B" should be measured at the left side corners of the rocker or on the side closest to the front face of the substructure on skewed bridges.

Beam	"F"	"B"	Y	Cont. Or Exp.	Comments
G1	1 3/8	1 1/4	3/16	E	Up to 1/4" thick pack rust under rocker, abrasion rust at pin, ±10% SL at AB nuts, vine growth.
G2	1 1/16	1 3/4	-1	C	Up to 1/4" thick pack rust under rocker, up to 25% SL at 2 of 4 AB nuts, 1 of 8 drop bolt nuts is backed off.
10/4/19 AH, BF (Baker) 55°F					
G1	1 1/2	1 3/16	7/16	E	See above.
G2	1 1/8	1 13/16	-1	C	See above.
10/7/21 EG, AN (Prime AE) 72° F					
G1	1 1/2	1 3/16	7/16	E	See above.
10/12/21 BM, IS (Prime AE) 70° F					
G2	1 1/8	1 5/8	- 11/16	C	See above.

General Notes:
- 1/16" deep pitting on masonry plate at random locations and light rust on rockers and masonry plates.

FIELD NOTES	BRIDGE NO.: 03819	DATE: 11/27/2017
	CREW: SW, EN	SHEET: 4

ROCKER BEARING MEASUREMENTS

Form BRI-15, Rev. 9/97

Span No. : 11

Substructure Unit = Pier 11

Temp. = 35 °F

$\Theta = \sin^{-1} (F-B)/W$

$Y = R \tan \Theta$

The "Front" of the bearing is the side facing the fixed bearing.

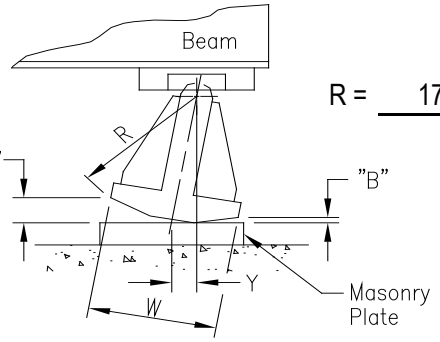

R = 17.5 in

W = 12 in

NOTE:
"F" & "B" should be measured at the left side corners of the rocker or on the side closest to the front face of the substructure on skewed bridges.

Beam	"F"	"B"	Y	Cont. Or Exp.	Comments
G1	1 1/4	1 9/16	- 7/16	C	Up to 1/2" thick pack rust under rocker, up to 5" high asphalt/concrete debris around bearing (~~measurement taken at right side of rocker due to debris~~ left), concrete debris could affect movement.
G2	1 3/8	1 1/2	- 3/16	C	Up to 1/2" thick pack rust under rocker.
10/4/19 AH, JG (Baker) 55°F					
G1	1 1/2	1 9/16	- 1/16	C	See above
G2	1 3/8	1 1/2	- 3/16	C	See above
10/14/21 EG, SD (Prime AE) 75°F					
G1	1 1/2	1 9/16	- 1/16	C	See above
10/13/21 BM, IS (Prime AE) 69°F					
G2	1 3/8	1 1/4	3/16	E	See above

General Notes:
- 1/16" deep pitting on masonry plate at random locations and light rust on rockers and masonry plates.

FIELD NOTES	BRIDGE NO.: 03819	DATE: 11/28/2017
	CREW: SW, JG	SHEET: 5

ROCKER BEARING MEASUREMENTS

Form BRI-15, Rev. 9/97

Span No. : 12

Substructure Unit = Pier 11

Temp. = 40 °F

$\Theta = \sin^{-1} (F-B)/W$

$Y = R \tan \Theta$

The "Front" of the bearing is the side facing the fixed bearing.

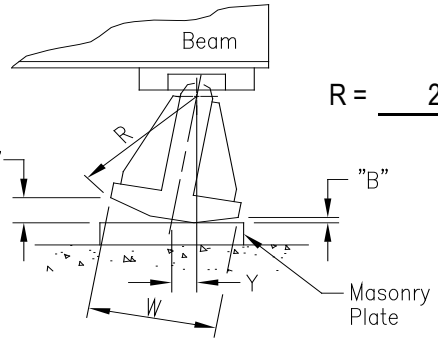

R = 20 in

W = 12 in

NOTE:
"F" & "B" should be measured at the left side corners of the rocker or on the side closest to the front face of the substructure on skewed bridges.

Beam	"F"	"B"	Y	Cont. Or Exp.	Comments
G1	1 1/8	1	3/16	E	Up to 3/16" thick pack rust under rocker, AB nuts w/up to 20% SL, up to 5" high asphalt/concrete debris on and around bearing.
G2	1	1 1/2	- 13/16	C	Up to 1/8" thick pack rust under rocker, AB nuts w/up to 20% SL, up to 5" high asphalt/concrete debris on and around bearing.
10/2/19 BH, JG (Baker) 75°F					
G1	1 3/8	13/16	15/16	E	See above
G2	1 1/16	1 3/8	- 8/16	C	See above
10/14/21 EG, SD (Pime AE) 75°F					
G1	1 1/4	1 1/16	5/16	E	See above
10/19/21 EG, SD (Pime AE) 54°F					
G2	1 1/16	1 1/2	- 12/16	C	See above

General Notes:
- 1/8" deep pitting on masonry plate at random locations and light rust on rockers and masonry plates.

FIELD NOTES	BRIDGE NO.: 03819	DATE: 11/30/2017
	CREW: SW, JG	SHEET: 6

ROCKER BEARING MEASUREMENTS

Form BRI-15, Rev. 9/97

Span No. : 15

Substructure Unit = Pier 15

Temp. = 30 °F

$\Theta = \sin^{-1} (F-B)/W$

$Y = R \tan \Theta$

The "Front" of the bearing is the side facing the fixed bearing.

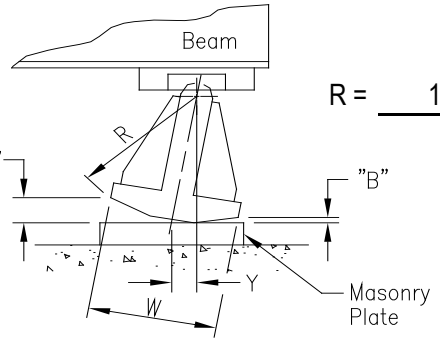

R = 19 in

W = 12 in

NOTE:
"F" & "B" should be measured at the left side corners of the rocker or on the side closest to the front face of the substructure on skewed bridges.

Beam	"F"	"B"	Y	Cont. Or Exp.	Comments
G1	1 3/16	1 1/4	- 2/16	C	Minor pack rust under rocker.
G2	1 1/8	1 3/4	-1	C	Up to 1/8" thick pack rust under rocker, AB nuts with up to 25% SL.
10/1/19 BH, JG (Baker) 65°F					
G1	1 1/8	1	3/16	E	See above
G2	1 1/4	1 1/2	- 6/16	C	See above
10/14/21 NPR, MM (Prime AE) 60°F					
G1	1 1/4	1	6/16	E	See above
10/19/21 NPR, MM (Prime AE) 60°F					
G2	1 1/4	1 5/8	- 10/16	C	See above

General Notes:
- 1/8" deep pitting on masonry plate at random locations and light rust on rockers and masonry plates.

FIELD NOTES	BRIDGE NO.: 03819	DATE: 11/28/2017
	CREW: SW, JG	SHEET: 7

ROCKER BEARING MEASUREMENTS

Form BRI-15, Rev. 9/97

Span No. : 16

Substructure Unit = Pier 15

Temp. = 40 °F

The "Front" of the bearing is the side facing the fixed bearing.

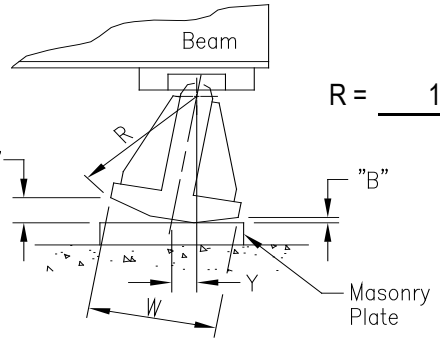

R = 19 in

$\Theta = \sin^{-1} (F-B)/W$

$Y = R \tan \Theta$

W = 14 in

NOTE:
"F" & "B" should be measured at the left side corners of the rocker or on the side closest to the front face of the substructure on skewed bridges.

Beam	"F"	"B"	Y	Cont. Or Exp.	Comments
G1	1 5/8	1 7/8	- 5/16	C	Up to 1/4" pack rust under rocker, AB nuts with up to 10% SL.
G2	1 15/16	1 15/16	0	N	Up to 1/4" pack rust under rocker, AB nuts with up to 30% SL.
10/1/19 BH, JG (Baker) 65°F					
G1	1 3/4	1 7/8	- 3/16	C	See above
G2	1 15/16	1 13/16	3/16	E	See above
10/6/21 NR, EB (Prime AE) 63°F					
G1	1 13/16	1 7/8	- 1/16	C	See above
10/12/21 CMR, SD (Prime AE) 60°F					
G2	1 15/16	1 13/16	3/16	E	See above

General Notes:
- 1/8" deep pitting on masonry plate at random locations and light rust on rockers and masonry plates.

FIELD NOTES	BRIDGE NO.: 03819	DATE: 12/5/2017
	CREW: SW, JG	SHEET: 8

ROCKER BEARING MEASUREMENTS

Form BRI-15, Rev. 9/97

Span No. : 17

Substructure Unit = Pier 17

Temp. = 45 °F

The "Front" of the bearing is the side facing the fixed bearing.

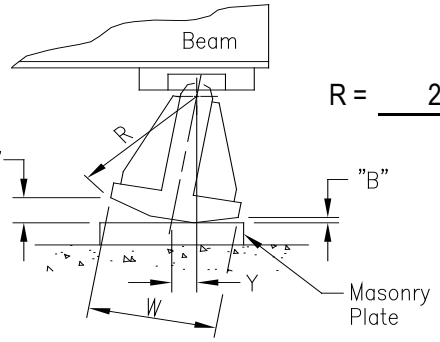

R = 20 in

$\Theta = \sin^{-1} (F-B)/W$

$Y = R \tan \Theta$

W = 14 in

NOTE:
"F" & "B" should be measured at the left side corners of the rocker or on the side closest to the front face of the substructure on skewed bridges.

Beam	"F"	"B"	Y	Cont. Or Exp.	Comments
G1	1 7/8	2	- 3/16	C	Up to 1/2" thick pack rust/debris under rocker, abrasion rust at top of rocker, AB nuts with up to 25% SL. Up to 5" high asphalt/concrete debris on and around bearing.
G2	1 1/4	2 7/16	-1 11/16	C	Up to 1/2" thick pack rust under rocker, abrasion rust at top of rocker, up to 5" high asphalt/concrete debris on and around bearing. One drop bolt missing at SW.
10/2/19 BH, JG (Baker) 75°F					
G1	1 7/8	2	- 3/16	C	See above
G2	1 9/16	2 3/16	- 14/16	C	See above
10/6/21 NR, EB (Prime AE) 68°F					
G1	1 7/8	1 7/8	0	N	See above
10/12/21 CMR, SD (Prime AE) 69°F					
G2	1 7/16	2 1/8	-1	C	See above

General Notes:
- 1/8" deep pitting and light laminated rust on masonry plate at random locations and light rust on rockers and masonry

FIELD NOTES	BRIDGE NO.: 03819	DATE: 12/4/2017
	CREW: SW, JG	SHEET: 9

ROCKER BEARING MEASUREMENTS

Form BRI-15, Rev. 9/97

Span No. : 18

Substructure Unit = Pier 17

Temp. = 45 °F

The "Front" of the bearing is the side facing the fixed bearing.

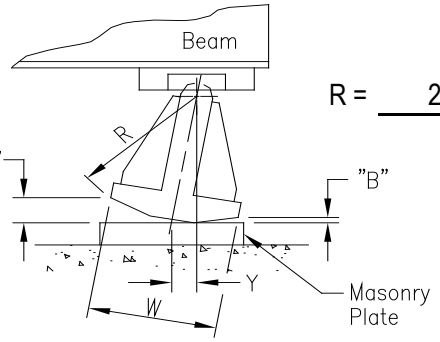

R = 20 in

$\Theta = \sin^{-1} (F-B)/W$

$Y = R \tan \Theta$

W = 14 in

NOTE:
"F" & "B" should be measured at the left side corners of the rocker or on the side closest to the front face of the substructure on skewed bridges.

Beam	"F"	"B"	Y	Cont. Or Exp.	Comments
G1	1 13/16	1 3/4	1/16	E	Up to 1/4" thick pack rust under rocker, up to 5" high asphalt/concrete debris on and around bearing (no impact on movement).
G2	1 5/8	1 7/8	- 6/16	C	1 of 8 drop bolts missing at sole PL, abrasion rust at top of rocker, up to 5" high asphalt/concrete debris on and around bearing. SE AB is loose, possibly broken, moves when hit with hammer.
9/30/19 BH, JG (Baker) 65°F					
G1	1 13/16	1 3/4	1/16	E	See above
G2	1 5/8	1 7/8	- 6/16	C	See above
10/06/21 NR, EB (Prime AE) 64°F					
G1	1 7/8	1 11/16	4/16	E	See above
10/12/21 CMR, SD (Prime AE) 70°F					
G2	1 1/2	1 3/4	- 6/16	C	See above

General Notes:
- 1/8" deep pitting on masonry plate at random locations and light rust on rockers and masonry plates.

FIELD NOTES	BRIDGE NO.: 03819	DATE: 12/1/2017
	CREW: SW, JG	SHEET: 10

ROCKER BEARING MEASUREMENTS

Form BRI-15, Rev. 9/97

Span No. : 19

Substructure Unit = Pier 19

Temp. = 45 °F

The "Front" of the bearing is the side facing the fixed bearing.

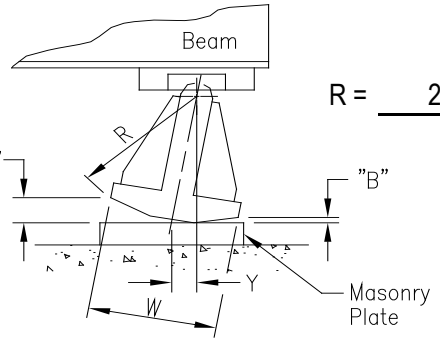

R = 20 in

$\Theta = \sin^{-1} (F-B)/W$

$Y = R \tan \Theta$

W = 14 in

NOTE:
"F" & "B" should be measured at the left side corners of the rocker or on the side closest to the front face of the substructure on skewed bridges.

Beam	"F"	"B"	Y	Cont. Or Exp.	Comments
G1	1 13/16	1 3/4	1/16	E	Up to 3/16" pack rust under rocker, weld replaces all AB nuts.
G2	1 3/16	2 3/8	-1 11/16	C	Up to 3/16" pack rust under rocker, weld replaces all AB nuts.
9/30/19 BH, JG (Baker) 65°F					
G1	1 7/8	1 3/4	3/16	E	See above
G2	1 3/16	2 1/4	-1 8/16	C	See above
10/7/21 NR, EB (Prime AE) 72°F					
G1	1 15/16	1 3/4	4/16	E	See above
10/13/21 CMR, SD (Prime AE) 68°F					
G2	1 1/4	2 1/16	-1 3/16	C	See above

General Notes:
- 1/8" deep pitting on masonry plate at random locations and light rust on rockers and masonry plates.

FIELD NOTES	BRIDGE NO.: 03819	DATE: 12/1/2017
	CREW: SW, JG	SHEET: 11

ROCKER BEARING MEASUREMENTS

Form BRI-15, Rev. 9/97

Span No. : 20

Substructure Unit = Pier 19

Temp. = 45 °F

$\Theta = \sin^{-1} (F-B)/W$

$Y = R \tan \Theta$

The "Front" of the bearing is the side facing the fixed bearing.

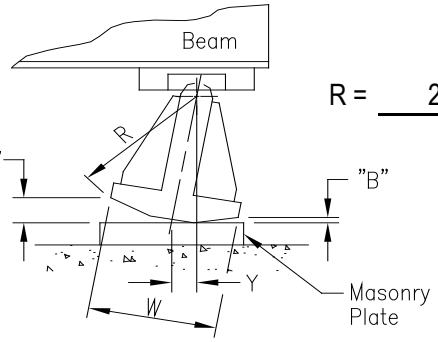

R = 20 in

W = 14 in

NOTE:
"F" & "B" should be measured at the left side corners of the rocker or on the side closest to the front face of the substructure on skewed bridges.

Beam	"F"	"B"	Y	Cont. Or Exp.	Comments
G1	1 7/16	2 1/8	-1	C	Up to 3/16" thick pack rust under rocker, weld replaces all AB nuts, light rust at top of rocker bearing.
G2	1 13/16	1 7/8	- 1/16	C	Up to 3/16" thick pack rust under rocker, weld replaces all AB nuts, light rust at top of rocker bearing.
9/30/19 BH, JG (Baker) 65°F					
G1	1 1/2	2 3/16	-1	C	See above
G2	1 13/16	1 7/8	- 1/16	C	See above
10/7/21 NPR, EB (Prime AE) 72°F					
G1	1 1/2	2 3/16	-1	C	See above
10/13/21 CMR, SD (Prime AE) 69°F					
G2	1 13/16	1 13/16	0	N	See above

General Notes:
- 1/16" deep pitting on masonry plate at random locations and light to lam rust on rockers and masonry plates.

FIELD NOTES	BRIDGE NO.: 03819	DATE: See below
	CREW: SW, MW	SHEET: 12

ROCKER BEARING MEASUREMENTS

Form BRI-15, Rev. 9/97

Span No. : 22

Substructure Unit = Pier 21

Temp. = see below °F

$\Theta = \sin^{-1} (F-B)/W$

$Y = R \tan \Theta$

The "Front" of the bearing is the side facing the fixed bearing.

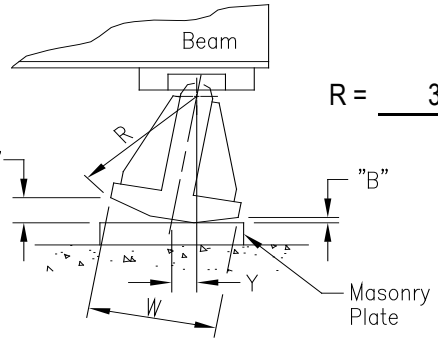

R = 31 in

W = 30 in

NOTE:
"F" & "B" should be measured at the left side corners of the rocker or on the side closest to the front face of the substructure on skewed bridges.

Beam	"F"	"B"	Y	Cont. Or Exp.	Comments
N Truss	4	3 3/4	4/16	E	Up to 3/16" thick lam rust under rocker. 1/8"D SL on rocker
S Truss	3 15/16	3 3/4	3/16	E	Up to 3/16" thick pack rust under rocker.
N Truss	3 7/8	3 3/4	2/16	E	9/9/19 BH, JG (Baker) 70°F. See above.
S Truss	3 15/16	3 3/4	3/16	E	9/11/19 BH, JG (Baker) 80°F. See above.
N Truss	4	3 3/4	4/16	E	8/2/21 BM, IS (Prime AE) 75°F. See above.
S Truss	4	3 3/4	4/16	E	8/4/21 BM, IS (Prime AE) 72°F. See above.

General Notes:
- G1 meas taken 8/2/21 at 75°F & G2 meas taken 8/4/21 at 72°F.
- 1/16" deep pitting on masonry plate at random locations and light to lam rust on rockers and masonry plates.

FIELD NOTES	BRIDGE NO.: 03819	DATE: See below
	CREW: SW, BF	SHEET: 13

ROCKER BEARING MEASUREMENTS

Form BRI-15, Rev. 9/97

Span No. = 23

Substructure Unit = Pier 23

Temp. = See below °F

$\Theta = \sin^{-1} (F-B)/W$

$Y = R \tan \Theta$

The "Front" of the bearing is the side facing the fixed bearing.

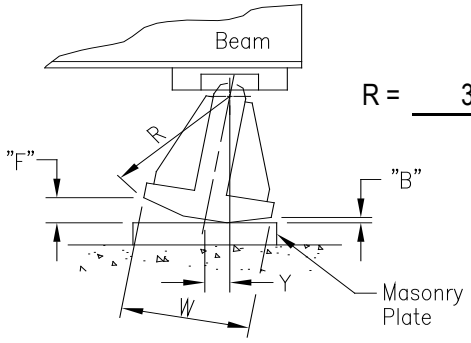

R = 31 in

W = 30 in

NOTE:
"F" & "B" should be measured at the left side corners of the rocker or on the side closest to the front face of the substructure on skewed bridges.

Beam	"F"	"B"	Y	Cont. Or Exp.	Comments
N.Truss L	3 15/16	3 1/2	7/16	E	
N.Truss R	4	3 7/8	2/16	E	
S.Truss L	4 5/16	3 1/4	1 2/16	E	
S.Truss R	4 5/16	3 1/2	13/16	E	
N.Truss L	3 7/8	3 9/16	5/16	E	9/10/19 BH, JG (Baker) 70°F.
N.Truss R	3 3/4	3 7/8	- 2/16	C	
S.Truss L	4 3/8	3 3/16	1 4/16	E	8/9/19 BH, JG (Baker) 85°F
S.Truss R	4 7/16	3 1/4	1 4/16	E	
N.Truss L	4	3 1/2	8/16	E	9/15/21 BM, EB (Prime AE) 81°F.
N.Truss R	4 1/8	3 3/4	6/16	E	
S.Truss L	4 7/16	3 1/2	1	E	9/14/21 BM, IS (Prime AE) 73°F
S.Truss R	4 1/2	3 1/2	1 1/16	E	

General Notes:
- North truss meas taken 9/15/21 at 81°F & South truss meas taken 9/14/21 at 73°F.
- Meas taken at left and right side of rocker (consistent with previous report).

FIELD NOTES	BRIDGE NO.: 03819	DATE: See below
	CREW: SW, BF	SHEET: 14

ROCKER BEARING MEASUREMENTS

Form BRI-15, Rev. 9/97

Span No. : 24

Substructure Unit = Pier 23

Temp. = See below °F

$\Theta = \sin^{-1} (F-B)/W$

$Y = R \tan \Theta$

The "Front" of the bearing is the side facing the fixed bearing.

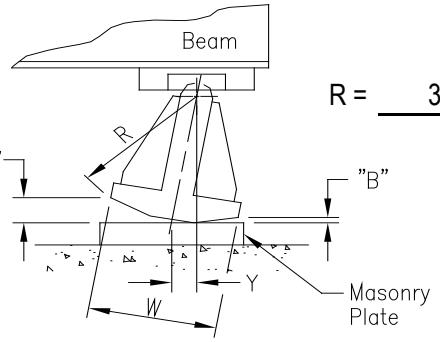

R = 31 in

W = 30 in

NOTE:
"F" & "B" should be measured at the left side corners of the rocker or on the side closest to the front face of the substructure on skewed bridges.

Beam	"F"	"B"	Y	Cont. Or	Comments
N.Truss L	3 13/16	4 1/4	- 7/16	C	
N.Truss R	3 5/8	4 5/16	- 11/16	C	
S.Truss L	3 3/4	4 3/16	- 7/16	C	
S.Truss R	3 9/16	4 1/4	- 11/16	C	
N.Truss L	3 11/16	4 1/16	- 6/16	C	9/10/19 BH, JG (Baker) 70°F.
N.Truss R	3 9/16	4 3/16	- 10/16	C	
S.Truss L	3 11/16	4 3/16	- 8/16	C	9/11/19 BH, JG (Baker) 75°F
S.Truss R	3 1/2	4 3/16	- 11/16	C	
					~~Pin nuts are only hand tight with no restraint (typical cond)~~
N.Truss L	4	4 1/16	- 1/16	C	9/15/21 BM, EB (Prime AE) 81°F.
N.Truss R	3 11/16	4 1/4	- 9/16	C	
S.Truss L	3 3/4	4 1/8	- 6/16	C	9/14/21 BM, IS (Prime AE) 73°F
S.Truss R	3 9/16	4 1/4	- 11/16	C	
					Pin nuts can't be rotated by hand

General Notes:
- North truss meas taken 9/15/21 at 81°F & South truss meas taken 9/14/21 at 73°F.
- Meas taken at left and right side of rocker (consistent with previous report).

FIELD NOTES	BRIDGE NO.: 03819	DATE: See below
	CREW: SW, KT	SHEET: 15

ROCKER BEARING MEASUREMENTS

Form BRI-15, Rev. 9/97

Span No. : 25

Substructure Unit = Pier 25

Temp. = See below °F

$\Theta = \sin^{-1} (F-B)/W$

$Y = R \tan \Theta$

The "Front" of the bearing is the side facing the fixed bearing.

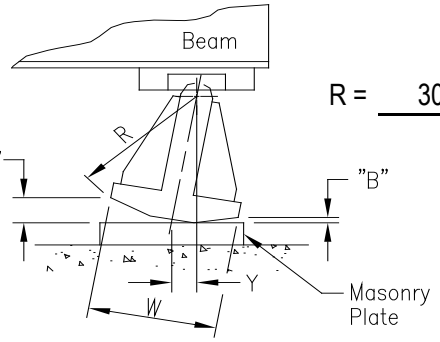

R = 30.5 in

W = 30 in

NOTE:
"F" & "B" should be measured at the left side corners of the rocker or on the side closest to the front face of the substructure on skewed bridges.

Beam	"F"	"B"	Y	Cont. Or	Comments
N.Truss	4 3/16	3 3/4	7/16	E	1/8" deep pitting at plates, 1/4" thick pack rust under rocker, NW corner of mas plate is undermined 5"L x 1¾"W x 1/4"D due to mas pad spall. Grout pad spalled thru-out. Rand LR.
S.Truss	4	3 1/2	8/16	E	1/4" deep pitting at plates, up to 3/16" thick pack rust at bottom half of pin washers at both sides, S. keeper is broken and has 2" thick pack rust. N. keeper missing.
N Truss	4 1/8	3 5/8	8/16	E	9/4/19 BH, JG (Baker) 75°F. See above.
S Truss	4	3 7/16	9/16	E	8/20/19 BH, JG (Baker) 85°F. See above.
N Truss	4 1/8	3 5/8	8/16	E	8/31/21 EG, AN (Prime AE) 83°F. See above.
S Truss	4	3 7/16	9/16	E	9/14/21 EG, NH (Prime AE) 73°F. See above.

General Notes:
- North truss meas taken 8/31/21 at 83°F & South truss meas taken 9/14/21 at 73°F.

FIELD NOTES	BRIDGE NO.: 03819	DATE: See below
	CREW: SW, BF	SHEET: 16

ROCKER BEARING MEASUREMENTS

Form BRI-15, Rev. 9/97

Span No. : 26

Substructure Unit = Pier 25

Temp. = See below °F

$\Theta = \sin^{-1} (F-B)/W$

$Y = R \tan \Theta$

The "Front" of the bearing is the side facing the fixed bearing.

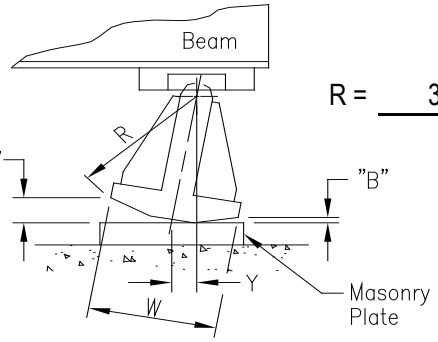

R = 31 in

W = 20 in

NOTE:
"F" & "B" should be measured at the left side corners of the rocker or on the side closest to the front face of the substructure on skewed bridges.

Beam	"F"	"B"	Y	Cont. Or	Comments
N.Truss	1 1/2	1 1/2	0	N	Minor pack rust and debris under rocker, rand areas of peeling paint, missing cotter pins at pin nuts (pin nuts in place). All 4 AB nuts are missing, but welded.
S.Truss	2	1 1/4	1 3/16	E	Minor pack rust and debris under rocker, spotty areas of peeling paint, missing cotter pins at pin nuts. All 4 AB nuts are missing, but welded. ~~Inside above rocker, 8 of 8 AB heads have 20% SL.~~
N Truss	1 5/8	1 1/4	9/16	E	8/29/19 AH, BF (Baker) 75°F. See above.
S Truss	1 1/2	1 3/8	3/16	E	8/21/19 BH, JG (Baker) 75°F. See above.
N Truss	1 5/8	1 1/4	9/16	E	8/2/21 EG, SD (Prime AE) 73°F. See above.
S Truss	1 1/2	1 3/8	3/16	E	8/4/21 EG, SD (Prime AE) 71°F. See above.

General Notes:
- North truss meas taken 8/2/21 at 73°F & South truss meas taken 8/4/21 at 71°F.

FIELD NOTES	BRIDGE NO.: 03819	DATE: See below
	CREW: SW, BF	SHEET: 17

ROCKER BEARING MEASUREMENTS

Form BRI-15, Rev. 9/97

Span No. : 28

Substructure Unit = Pier 28

Temp. = See below °F

$\Theta = \sin^{-1} (F-B)/W$

$Y = R \tan \Theta$

The "Front" of the bearing is the side facing the fixed bearing.

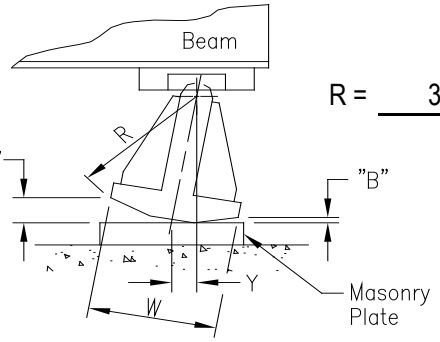

R = 31 in

W = 20 in

NOTE:
"F" & "B" should be measured at the left side corners of the rocker or on the side closest to the front face of the substructure on skewed bridges.

Beam	"F"	"B"	Y	Cont. Or	Comments
N.Truss	1 7/8	1	1 6/16	E	Abrasion rust at pin, up to 3/16" thick pack rust between NW corner of masonry plate. All 16 drop bolt nuts above rocker backed off up to 3/4".
S.Truss	2	1	1 9/16	E	Abrasion rust at pin and rocker, areas of peeling paint with light surface rust, 7 of 16 AB nuts above rocker backed off up to 1/8". Inside above rocker, 8 of 8 AB heads have 20% SL.
N Truss	1 3/4	1 1/8	1	E	9/16/19 BH, JG (Baker) 70°F. See above.
S Truss	1 13/16	1 3/16	1	E	8/26/19 BH, JG (Baker) 70°F. See above.
N Truss	1 3/4	1	1 3/16	E	8/26/21 EG, AN (Prime AE) 75°F. See above.
S Truss	2	1	1 9/16	E	8/25/21 EG, AN (Prime AE) 80°F. See above.

General Notes:
- North truss meas taken 8/26/21 at 75°F & South truss meas taken 8/25/21 at 80°F.

FIELD NOTES	BRIDGE NO.: 03819	DATE: See below
	CREW: SW, BF	SHEET: 18

ROCKER BEARING MEASUREMENTS

Form BRI-15, Rev. 9/97

Span No. : 29

Substructure Unit = Pier 28

Temp. = See below °F

$\Theta = \sin^{-1} (F-B)/W$

$Y = R \tan \Theta$

The "Front" of the bearing is the side facing the fixed bearing.

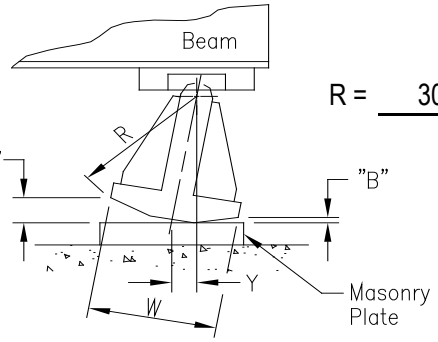

R = 30.5

W = 30

NOTE:
"F" & "B" should be measured at the left side corners of the rocker or on the side closest to the front face of the substructure on skewed bridges.

Beam	"F"	"B"	Y	Cont. Or	Comments
N.Truss	3 7/8	3 9/16	5/16	E	1/2" thick pack rust between keeper and bearing, abrasion rust at pin and rocker, no cotter pins or holes, keeper angle in place, areas of peeling paint with light surface rust, painted over 1/8" deep pitting, N. edge of mas plate undermined 27"L x 1"D due to pedestal spall (<5% brg loss).
S.Truss	3 3/4	3 3/8	6/16	E	1/4" thick pack rust b/w keeper and bearing, abrasion rust at pin and rocker, areas of peeling paint with light rust, painted over pitting, E. edge of masonry plate undermined up to 40"L x 1"D due to pedestal spall (<5% brg loss). 1/8"D SL's on pin nuts and mas PL.
N Truss	3 7/8	3 9/16	5/16	E	9/16/19 BH, JG (Baker) 70°F. See above.
S Truss	3 15/16	3 7/16	8/16	E	8/26/19 BH, JG (Baker) 70°F. See above.
N Truss	4	3 1/2	8/16	E	8/24/21 NR, SD (Prime AE) 78°F. See above.
S Truss	3 13/16	3 3/8	7/16	E	8/25/21 NR, SD (Prime AE) 82°F. See above.

General Notes:
- North truss meas taken 8/24/21 at 78°F & South truss meas taken 8/25/21 at 82°F.

FIELD NOTES	BRIDGE NO.: 03819	DATE: See below
	CREW: SW, BF	SHEET: 19

ROCKER BEARING MEASUREMENTS

Form BRI-15, Rev. 9/97

Span No. : 30

Substructure Unit = Pier 30

Temp. = See below °F

$\Theta = \sin^{-1} (F-B)/W$

$Y = R \tan \Theta$

The "Front" of the bearing is the side facing the fixed bearing.

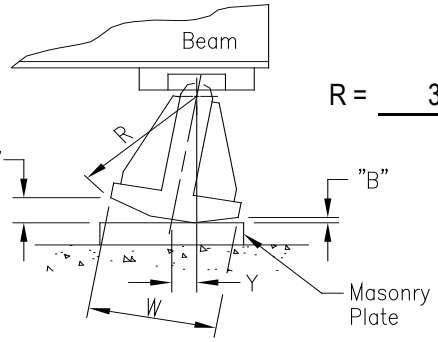

R = 31 in

W = 30 in

NOTE:
"F" & "B" should be measured at the left side corners of the rocker or on the side closest to the front face of the substructure on skewed bridges.

Beam	"F"	"B"	Y	Cont. Or	Comments
N.Truss L	3 11/16	4	- 5/16	C	North side of bearing undermined FL x up to 1/4"-2"W (<5% brg loss). LR at mas PL w/ 1/8"D SL's.
N.Truss R	3 1/2	4 1/4	- 12/16	C	
S.Truss L	3 1/8	4 9/16	-1 8/16	C	Peeling epoxy coating w/ mod-hvy rust at rocker and LR at mas PL w/ 1/8"D SL's.
S.Truss R	3 1/8	4 5/8	-1 9/16	C	
N.Truss L	3 5/8	4 1/8	- 8/16	C	9/17/19 BH, JG (Baker) 70°F. See above.
N.Truss R	3 5/8	4 1/8	- 8/16	C	
S.Truss L	3 5/8	4 1/16	- 7/16	C	9/23/19 BH, JG (Baker) 80°F. See above.
S.Truss R	3 5/8	4 3/16	- 9/16	C	
					- Pins are starting to rust between vertical plates
N.Truss L	3 5/8	4 1/8	- 8/16	C	8/10/21 CMR, NH (Prime AE) 74°F. See above.
N.Truss R	3 5/8	4 1/8	- 8/16	C	
S.Truss L	3 11/16	4 1/16	- 6/16	C	8/12/21 CMR, NH (Prime AE) 93°F. See above.
S.Truss R	3 11/16	4 1/16	- 6/16	C	

General Notes:
- North truss meas taken 8/10/21 at 74°F & South truss meas taken 8/12/21 at 93°F.
- Meas taken at left and right side of rocker (consistent with previous report).

FIELD NOTES	BRIDGE NO.: 03819	DATE: See below
	CREW: SW, BF	SHEET: 20

ROCKER BEARING MEASUREMENTS

Form BRI-15, Rev. 9/97

Span No. : 31

Substructure Unit = Pier 30

Temp. = See below °F

$\Theta = \sin^{-1} (F-B)/W$

$Y = R \tan \Theta$

The "Front" of the bearing is the side facing the fixed bearing.

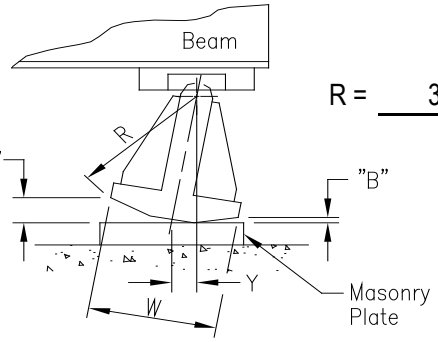

R = 31 in

W = 30 in

NOTE:
"F" & "B" should be measured at the left side corners of the rocker or on the side closest to the front face of the substructure on skewed bridges.

Beam	"F"	"B"	Y	Cont. Or	Comments
N.Truss L	3 7/8	4	- 2/16	C	LR at mas PL w/ 1/8"D SL's
N.Truss R	4	4	0	N	
S.Truss L	3 11/16	4 5/16	- 10/16	C	LR at mas PL w/ 1/8"D SL's. 1/4" pack rust at pin cover plate, pin
S.Truss R	3 5/8	4 1/4	- 10/16	C	plate has 1/8"D SL, and vertical bearing plate has 1/8"D pitting.
N.Truss L	3 13/16	3 7/8	- 1/16	C	9/17/19 BH, JG (Baker) 70°F. See above.
N.Truss R	3 15/16	3 7/8	1/16	E	
S.Truss L	3 11/16	4 1/8	- 7/16	C	9/13/19 BH, JG (Baker) 75°F. See above.
S.Truss R	3 11/16	4 1/16	- 6/16	C	
N.Truss L	3 15/16	3 7/8	1/16	E	8/18/21 CMR, NH (Prime AE) 78°F. See above.
N.Truss R	3 15/16	3 7/8	1/16	E	
S.Truss L	4	3 7/8	2/16	E	9/20/21 NR, NH (Prime AE) 75°F. See above.
S.Truss R	3 15/16	3 7/8	1/16	E	

General Notes:
- North truss meas taken 8/18/21 at 78°F & South truss meas taken 9/20/21 at 75°F.
- Meas taken at left and right side of rocker (consistent with previous report).

FIELD NOTES	BRIDGE NO.: 03819	DATE: See below
	CREW: SW, BF	SHEET: 21

ROCKER BEARING MEASUREMENTS

Form BRI-15, Rev. 9/97

Span No. : 32

Substructure Unit = Pier 32

Temp. = See below °F

$\Theta = \sin^{-1} (F-B)/W$

$Y = R \tan \Theta$

The "Front" of the bearing is the side facing the fixed bearing.

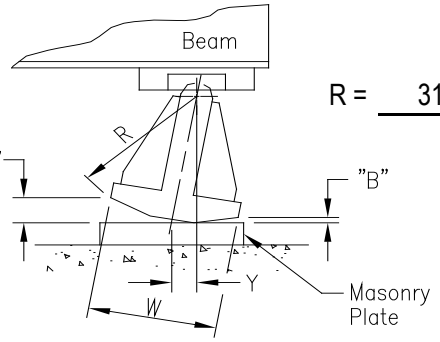

R = 31.5 in

W = 30 in

NOTE:
"F" & "B" should be measured at the left side corners of the rocker or on the side closest to the front face of the substructure on skewed bridges.

Beam	"F"	"B"	Y	Cont. Or	Comments
N.Truss	3 7/8	3 5/8	4/16	E	Up to 1/4" thick pack rust under rocker, 1/8" deep painted over pitting at pin, lam rust, NE and SE corners undermined up to 6" x 6" x 1" deep (L-shaped; <1% brg loss). Top of pin w/ 1/16"D pitt/LR
S.Truss	4	3 1/2	8/16	E	Up to 1/4" thick pack rust under rocker, 1/8" deep painted over pitting, laminated rust.
N Truss	3 7/8	3 1/2	6/16	E	9/18/19 BH, JG (Baker) 70°F. See above.
S Truss	3 15/16	3 1/2	7/16	E	9/23/19 BH, JG (Baker) 80°F. See above.
N Truss	3 7/8	3 1/2	6/16	E	10/5/21 BM, IS (Prime AE) 63°F. See above.
S Truss	3 15/16	3 1/2	7/16	E	9/28/21 EG, MM (Prime AE) 68°F. See above.

General Notes:
- North truss meas taken 10/5/21 at 63°F & South truss meas taken 9/28/21 at 68°F.

FIELD NOTES	BRIDGE NO.: 03819	DATE: See below
	CREW: MRJ, JG	SHEET: 22

ROCKER BEARING MEASUREMENTS

Form BRI-15, Rev. 9/97

Span No. : 34

Substructure Unit = Pier 34

Temp. = See below °F

$\Theta = \sin^{-1} (F-B)/W$

$Y = R \tan \Theta$

The "Front" of the bearing is the side facing the fixed bearing.

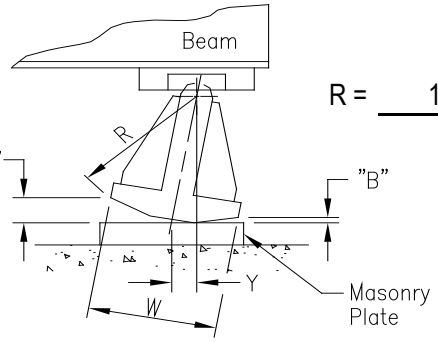

R = 16 in

W = 10 in

NOTE:
"F" & "B" should be measured at the left side corners of the rocker or on the side closest to the front face of the substructure on skewed bridges.

Beam	"F"	"B"	Y	Cont. Or	Comments
G34-1	7/8	1	- 3/16	C	3/16" thick pack rust between rocker and masonry plate, NE AB nut backed off 1/4", missing double nut and AB sounds dull when hammer tapped.
G34-2	3/4	1	- 6/16	C	3/16" thick pack rust under rocker and btwn masonry plate and pedestal.
G34-1	7/8	1 1/16	- 5/16	C	8/28/19 SW, BF (Baker) 70°F. See above.
G34-2	13/16	15/16	- 3/16	C	8/26/19 SW, BF (Baker) 65°F. See above.
G34-1	7/8	1 1/16	- 5/16	C	9/23/21 BM, SD (Prime AE) 81°F. See above.
G34-2	13/16	13/16	0	N	9/29/21 CMR, EB (Prime AE) 55°F. See above.

General Notes:
- G1 meas taken 9/23/21 at 81°F & G2 meas taken 9/29/21 at 55°F.

FIELD NOTES	BRIDGE NO.: 03819	DATE: 10/2/2017
	CREW: SW, BF	SHEET: 23

ROCKER BEARING MEASUREMENTS

Form BRI-15, Rev. 9/97

Span No. : 34

Substructure Unit = Pier 34B

Temp. = 65 °F

$\Theta = \sin^{-1} (F-B)/W$

$Y = R \tan \Theta$

The "Front" of the bearing is the side facing the fixed bearing.

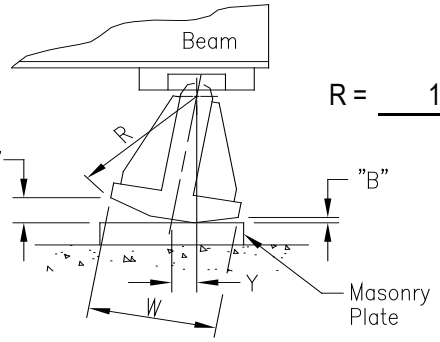

R = 16 in

W = 10 in

NOTE:
"F" & "B" should be measured at the left side corners of the rocker or on the side closest to the front face of the substructure on skewed bridges.

Beam	"F"	"B"	Y	Cont. Or	Comments
G34 B-1	1	7/8	3/16	E	Light rust at underside of rocker.
G34 B-2	1 5/16	1	8/16	E	Up to 1/8" thick pack rust between masonry plate and rocker, light rust at underside of rocker.
G34B-1	1	15/16	2/16	E	8/26/19 SW, BF (Baker) 65°F. See above.
G34B-2	1 3/8	7/8	13/16	E	8/26/19 SW, BF (Baker) 65°F. See above.
G34B-1	1	15/16	2/16	E	9/29/21 CMR, EB (Prime AE) 55°F. See above.
G34B-2	1 1/4	7/8	10/16	E	9/29/21 CMR, EB (Prime AE) 55°F. See above.

General Notes:

FIELD NOTES	BRIDGE NO.: 03819	DATE: See below
	CREW: MRJ, JG	SHEET: 24

ROCKER BEARING MEASUREMENTS

Form BRI-15, Rev. 9/97

Span No. : 35

Substructure Unit = Pier 34

Temp. = See below °F

$\Theta = \sin^{-1} (F-B)/W$

$Y = R \tan \Theta$

The "Front" of the bearing is the side facing the fixed bearing.

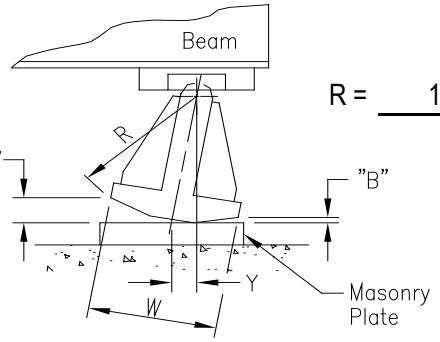

R = 16 in

W = 10 in

NOTE:
"F" & "B" should be measured at the left side corners of the rocker or on the side closest to the front face of the substructure on skewed bridges.

Beam	"F"	"B"	Y	Cont. Or	Comments
G35-1	11/16	1 1/8	- 11/16	C	1/8" thick pack rust between rocker and masonry plate.
G35-2	5/8	3/4	- 3/16	C	1/16" thick pack rust between rocker and masonry plate.
G35-1	3/4	1 1/8	- 10/16	C	8/28/19 SW, BF (Baker) 70°F. See above.
G35-2	13/16	15/16	- 3/16	C	8/26/19 SW, BF (Baker) 70°F. See above.
G35-1	7/8	15/16	- 2/16	C	9/23/21 BM, SD (Prime AE) 81°F. See above.
G35-2	5/8	3/4	- 3/16	C	9/29/21 CMR, EB (Prime AE) 55°F. See above.

General Notes:
- G1 meas taken 9/23/21 at 81°F & G2 meas taken 9/29/21 at 55°F.

FIELD NOTES	BRIDGE NO.: 03819	DATE: 10/2/2017
	CREW: SW, BF	SHEET: 25

ROCKER BEARING MEASUREMENTS

Form BRI-15, Rev. 9/97

Span No. : 35

Substructure Unit = Pier 34B

Temp. = 65 °F

$\Theta = \sin^{-1} (F-B)/W$

$Y = R \tan \Theta$

The "Front" of the bearing is the side facing the fixed bearing.

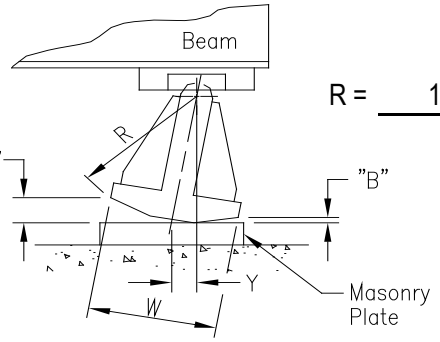

R = 16 in

W = 10 in

NOTE:
"F" & "B" should be measured at the left side corners of the rocker or on the side closest to the front face of the substructure on skewed bridges.

Beam	"F"	"B"	Y	Cont. Or	Comments
G35 B-1	1 1/8	1	3/16	E	1/16" thick pack rust under rocker.
G35 B-2	1	3/4	6/16	E	Light debris and 1/16" thick pack rust under rocker.
G35B-1	1 3/16	15/16	6/16	E	8/26/19 SW, BF (Baker) 70°F. See above.
G35B-2	7/8	7/8	0	N	8/26/19 SW, BF (Baker) 70°F. See above.
G35B-1	1 1/8	1	3/16	E	9/29/21 CMR, EB (Prime AE) 55°F. See above.
G35B-2	7/8	7/8	0	N	9/29/21 CMR, EB (Prime AE) 55°F. See above.

General Notes:

FIELD NOTES	BRIDGE NO.: 03819	DATE: 10/2/2017
	CREW: SW, BF	SHEET: 26

ROCKER BEARING MEASUREMENTS

Form BRI-15, Rev. 9/97

Span No. : 36

Substructure Unit = Abut. 2

Temp. = 70 °F

The "Front" of the bearing is the side facing the fixed bearing.

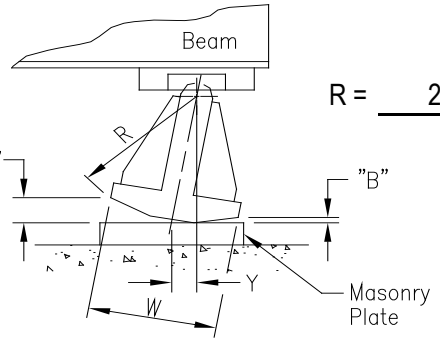

R = 23 in

$\Theta = \sin^{-1} (F-B)/W$

$Y = R \tan \Theta$

W = 12 in

NOTE:
"F" & "B" should be measured at the left side corners of the rocker or on the side closest to the front face of the substructure on skewed bridges.

Beam	"F"	"B"	Y	Cont. Or	Comments
G36-1	1 1/4	7/8	12/16	E	3/16" pack rust under rocker, light debris under rocker.
G36-2	1 1/4	1	8/16	E	1/8" pack rust under rocker, areas of peeling paint and light rust.
G36B-1	1	1 1/8	- 4/16	C	3/8" pack rust under rocker.
G36B-2	1	1 3/16	- 6/16	C	1/8" pack rust under rocker.
8/26/2019 SW, BF (Baker) 70°F					
G36-1	1 1/4	7/8	12/16	E	See above
G36-2	1 1/4	1 1/16	6/16	E	See above
G36B-1	1	1 1/8	- 4/16	C	See above
G36B-2	15/16	1 1/4	- 10/16	C	See above
10/5/2021 CMR, NH (Prime AE) 60°F					
G36-1	1 1/4	7/8	12/16	E	1/4" thick pack rust under rocker bearing.
G36-2	1 1/4	1 1/16	6/16	E	See above
G36B-1	1	1 1/4	- 8/16	C	See above
G36B-2	15/16	1 5/16	- 12/16	C	See above

General Notes:
- Rockers have areas of lam rust.

Form: BRI-12, Rev. 1/14
Inspection type: Fracture Critical,Routine
Inspection Date: 7/26/2021
Inspected by: PRIME AE

:Bridge No 03819

Town: NEW LONDON
Carried: INTERSTATE 95 NORTHBOUND
Crossed: THAMES RV,RR,LOCAL ROADS
Inventory Route: NHS

FRACTURE CRITICAL MEMBERS / FRACTURE PRONE DETAILS

Inspectors:

Lead Inspector:	Balaji Mahalingam
Inspector:	Task:
Agolli,Elvis	BSE - Inspector Rail - Inspector
Begolli,Eriol	BSE - Inspector Rail - Inspector
Donepudi,Sai	BSE - Inspector Rail - Inspector
Greener,Edward	BSE - Inspector Rail - Inspector
Mahalingam,Balaji	BSE - Inspector Rail - Inspector
Mohammed,Muqtadar	BSE - Inspector Rail - Inspector
Nyei,Anwar	BSE - Inspector Rail - Inspector
Regan, Jr.,Christopher	BSE - Inspector Rail - Inspector
Rossi,Nathan	BSE - Inspector Rail - Inspector
Spahiu,Igli	BSE - Inspector Rail - Inspector

Visits:

Visit Date:	Temp:	Start Time:	End Time:
07/26/2021	85	08:30 AM	03:00 PM
07/27/2021	82	08:30 AM	03:00 PM
08/02/2021	75	08:30 AM	03:00 PM
08/03/2021	75	08:30 AM	03:00 PM
08/04/2021	72	08:30 AM	03:00 PM
08/05/2021	70	08:30 AM	03:00 PM
08/09/2021	70	08:30 AM	03:00 PM
08/10/2021	70	08:30 AM	03:00 PM
08/11/2021	85	08:30 AM	03:00 PM
08/12/2021	85	08:30 AM	03:00 PM
08/16/2021	75	08:30 AM	03:15 PM
08/17/2021	75	08:30 AM	03:15 PM
08/18/2021	75	08:30 AM	02:30 PM
08/24/2021	85	08:30 AM	02:30 PM
08/25/2021	90	08:30 AM	02:30 PM
08/26/2021	94	08:30 AM	02:30 PM
08/30/2021	85	08:30 AM	02:30 PM
08/31/2021	85	08:30 AM	02:30 PM
09/09/2021	70	08:30 AM	03:30 PM
09/13/2021	75	08:30 AM	02:30 PM
09/14/2021	73	08:30 AM	02:30 PM
09/15/2021	75	08:30 AM	02:30 PM
09/16/2021	70	08:30 AM	02:30 PM
09/20/2021	75	08:30 AM	02:30 PM
09/21/2021	70	08:30 AM	02:30 PM
10/18/2021	55	08:30 AM	03:00 PM
10/19/2021	55	08:30 AM	02:30 PM
10/20/2021	68	08:30 AM	02:30 PM
10/21/2021	68	08:30 AM	02:30 PM
10/28/2022	50	08:30 AM	01:00 PM

Fracture Critical Inspection Frequency: 24 Months

Fracture Critical Type Code: G Truss Systems, riveted trusses

Structure Type: Highway Bridges **Year Built:** 1943 **ADT:** 42600 **Year of ADT:** 2020 **% Truck:** 14

Access Equipment Needed: 62' & 75' snoopers and 45' bucket truck.

Traffic Control Required: Alternating right and left lane closures on I-95 northbound and local lane closures.

Reference to Plans: Project No. 94-10 Year 1940; (Rehab) Project No. 94-107 Year 1971; (Rehab) Project No. 94-170 Year 1992

MEMBER/DETAIL TYPE # 1

Member/Details Type: A One or two steel girder systems **Fracture Critical:** Yes

Fatigue Category: D **Steel Type:** A-7 **Fatigue Prone:** Yes

Description: Spans 6-21 and 33-36. Two girder system. Floorbeams with spacings >14'. The girder is riveted in tension zone. Per plans, Spans 6-15 are A-7 steel, Spans 16-21 are A-94 steel and Spans 33-36 are A36 steel.

Inspection Procedure: 100% hands-on.

Condition Comments: See BRI-18 "Superstructure" item.

Procedure Followed This Inspection? Yes **If No please explain:**

MEMBER/DETAIL TYPE # 2

Member/Details Type: D Steel trusses **Fracture Critical:** Yes

Fatigue Category: D **Steel Type:** A-7 **Fatigue Prone:** Yes

Description: Spans 22-25 and 29-32. Two riveted built-up deck trusses. Rivets in tension zone. Per Project No. 94-107, 1971 plans, steel type is A-7 and A-94.

Inspection Procedure: 100% hands-on.

Condition Comments: See BRI-18 "Superstructure" item.

Procedure Followed This Inspection? Yes **If No please explain:**

MEMBER/DETAIL TYPE # 3

Member/Details Type: D Steel trusses **Fracture Critical:** Yes

Fatigue Category: B' **Steel Type:** A-36 **Fatigue Prone:** Yes

Description: Spans 26-28. Two welded built-up deck trusses with backer bars in place. Per Project No. 94-107, 1971 plans, steel type is A-36 and A-588.

Inspection Procedure: 100% hands-on.

Condition Comments: See BRI-18 "Superstructure" item.

Procedure Followed This Inspection? Yes **If No please explain:**

MEMBER/DETAIL TYPE # 4

Member/Details Type: D Steel trusses **Fracture Critical:** Yes

Fatigue Category: C **Steel Type:** A-36 **Fatigue Prone:** Yes

Description: Spans 22-32. Floorbeams with spacing >14' in truss spans.

Inspection Procedure: 100% hands-on.

Condition Comments: See BRI-18 "Superstructure" item.

Procedure Followed This Inspection? Yes **If No please explain:**

MEMBER/DETAIL TYPE # 5

Member/Details Type: H Highly fatique prone details in tension areas **Fracture Critical:** No

Fatigue Category: **Steel Type:** **Fatigue Prone:** Yes

Description: Spans 6-36. Steel members with tack welds in tension zones throughout entire bridge.
Note: There is no fatigue category for tack welds.
Steel types vary.

Inspection Procedure: 100% hands-on.

Condition Comments: See BRI-18 "Superstructure" item.

Procedure Followed This Inspection? Yes **If No please explain:**

MEMBER/DETAIL TYPE # 6

Member/Details Type: M Partial length welded cover plates **Fracture Critical:** No

Fatigue Category: E **Steel Type:** A-36 **Fatigue Prone:** Yes

Description: There are partial length bottom flange cover plates with end welds near the bearings (Category E Fatigue Prone Detail; flange thickness <0.8"). Locations are listed below:
- Span 11, Stringers S1 (rolled beam) and Stringer S13 (welded plate girder) between Floorbeams FB 0 and FB 1.
- Span 26, Stringers S1 and S13 (rolled beams) between Floorbeams FB 0 and FB 1.
- Span 32, Stringers S1 (rolled beam) and Stringer S14 (welded plate girder) between Floorbeams FB 0 and FB 1.

Inspection Procedure: Inspect 100% hands-on.

Condition Comments: See BRI-18 "Superstructure" item.

Procedure Followed This Inspection? Yes **If No please explain:**

03819 Work Items List

The below list are items that should be incorporated into the upcoming major rehabilitation project, 94-235 & 94-256.

1. **Priority** - Weep pipes have holes at the following locations:
    - Span 24, Bay 1 between Floorbeams FB 1 and FB 2 has a weep with a 1" diameter hole.
    - Span 32, Bay 1 between Floorbeams FB 5 and FB 6 has a weep with a 1" diameter hole.

2. **Priority** - Weep pipes are short and draining onto the superstructure at the following locations:

    - Span 6, Bay 1 between Floorbeams FB 7-2 & FB 7-4 has two (2) abandoned/short weeps.
    - Span 7, Bay 1 between Floorbeams FB 7-6 & FB 7-7.
    - Span 8, Bay 1 between Floorbeams FB 9-2 & FB 9-3.
    - Span 9, Bay 1 between Floorbeams FB 9-5 & FB 9-6
    - Span 25, Bay 12 between Floorbeams FB 2 & FB 1 with evidence of leakage. Previously noted as active leakage.
    - Span 28, Bay 1 between Floorbeams FB 36 & FB 37.
    - Span 31, Bay 12 between Floorbeams FB 1 & FB 2.
    - Span 32, Bay 1 between Floorbeams FB 10 & FB 9.
    - Span 35 Bay 1 between Floorbeams FB 0 & FB 1, short weep leaks onto diaphragm causing rust (no section loss).
    - There are also random abandoned/plugged weeps that are actively leaking onto the stay-in-place forms and adjacent structural steel causing rust and section loss.

3. **Priority** - The drainage troughs/downspouts have accumulation of debris/damaged at the following locations:
    - Span 6, south trough near abutment 1.
    - Span 19, south trough near Pier 18.
    - Span 20, north trough near Pier 19.
    - Span 29, north scupper pipe at Floorbeam FB5 has a 6-inch-long crack at elbow with no leakage.
    - Span 31, south trough between Floorbeams FB 7 and FB 8 is 25% filled with debris.
    - Scupper clean-out covers missing in Span 31, at Floorbeam FB 5, north side and Span 32, at Floorbeam FB 0, south side.
    - Scupper discharge pipes at Abutment 2 are rusted out/missing at the bottom 8 inch.

4. **Routine** – There are numerous locations of bent, damaged, disconnected and/or single missing pickets at the fence above the parapet with gaps up to 9" wide x 30" high (Span 11, north fence near Pier 11).

5. **Routine** - The undersides of the troughs have through holes at following locations

    - Span 8, Bay 1, north scupper trough near Pier 7 has a ½" diameter hole
    - Spans 30 and 32 have through holes up to 4.5" x 1" (Span 32) for total (4) locations.

6. **Routine** – Trough/scupper support connection welds are cracked/missing at numerous locations and there are random broken trough hanger rods and brackets. Also, random missing bolts at connections.

7. **Routine** – Evidence of and active leakage was noted below all deck joints.

8. **Routine** - The rocker bearings have up to 1/2" thick pack rust between the rockers and masonry plates.

9. **Routine** - Stringer top and bottom flanges, typically at the fascia stringers, have areas of section loss resulting in up to 55% loss of flange. Between quarter points of panels (critical areas), there are

approximately (167) locations of section loss resulting in greater than or equal to 5% loss of flange section, (14) of these locations result in between 25% to 35% loss of flange, and (12) locations result in over 35% loss of flange. See attached spreadsheet for more information. Clean and paint areas of section loss and strengthen as required after analysis.

10. **Routine** - Stringer webs, typically at the fascia stringers near the connections to the floorbeams, have areas of section loss resulting in up to 74.4% loss of web. There are (31) locations of section loss resulting in over 25% loss of web section and (9) of these locations result in over 50% loss of web section in critical areas. See attached spreadsheet for more information. Clean and paint areas of section loss and strengthen as required after analysis.

11. **Routine** - Floorbeam top and bottom flanges, typically at the cantilever sections, have areas of section loss resulting in up to 24.3% loss of flange (Span 36, Floorbeam FB 3). There are approximately (63) locations of section loss resulting in greater than or equal to 5% loss of flange section within critical areas. See attached spreadsheet for more information. Clean and paint areas of section loss and strengthen as required after analysis.

12. **Routine** - The girder top flange cover plates typically have random areas section loss resulting in up to 9.9% loss of flange. There are (9) locations of section loss resulting in greater than or equal to 5% loss of flange section within in critical areas. Clean and paint areas of section loss and strengthen as required after analysis.

13. **Routine** - Riveted truss spans (Spans 22-25 & 29-32), the truss top and bottom chords, vertical and diagonal members have random areas of section loss resulting in up to 15.9% section loss. There are (40) truss members with section loss greater than or equal to 5%. Clean and paint areas of section loss and strengthen as required after analysis.

14. **Routine** - Riveted truss spans (Spans 22-25 & 29-32), almost all bottom chord gusset plates at even numbered nodes have at least (1) of (2) vertical gusset plates with greater than 5% section loss to their vertical and/or horizontal axis (up to 33.3% section loss) and (5) of these locations have 25% loss or greater. See attached spreadsheet for more information. Clean and paint areas of section loss and strengthen as required after analysis.

15. **Routine** – Welded truss spans (Spans 26-28). Span 27, South truss at Node L33, bottom chord has clogged drain holes and ponding water inside at Span 28. Span 28, North Truss at Node L33, bottom chord has plugged drain holes (dry at the time of inspection with build up of debris).

16. **Routine** - There are numerous tack welds throughout the structure. Several of these tack welds are cracked and/or broken at the vertical back-to-back angles of the girder bearing/web stiffeners, between the truss member flanges, web plates, lacing bars and/or batten plates, and between the top chord vertical back-to-back angles and top chord seat angle at the inside of the nodes.

17. **Routine** – Plates are typically wearing into the pins up to ¼" deep with abrasion rust at nodes L19, U20 and U26 for both trusses.

18. **Routine** – The brass plug bolts at the Span 27 truss pins are deteriorated and some stripped to the point they couldn't be removed for measurements.

19. **Routine** - The riveted connections throughout the structure have random rivet heads with up to 90%-100% loss.

20. **Routine** - There are isolated missing bolts at girder to floorbeam connections and at the truss vertical gusset plates.

21. **Routine** - Span 27, transverse catwalk stairs at floorbeams 20 and 26 have pack rust up to 7/8" thick at the tops of the stairs causing several welds to crack. Catwalk tread plates and expansion tread plates also have isolated rusted through holes up to 8" x 4".

22. **Routine** - Fixed ladders at piers have frayed safety cables and the fall arrestor attached to the safety cables have areas of heavy rust and are non-functional. These ladders also do not have cages around them.

23. **Routine** - The abutments, pier columns, horizontal struts between pier columns and hammerhead pier caps have random hollow areas and spalls with exposed rebar.

24. **Routine** - There is heavy accumulation of debris at Piers 9, 11, 17 and 34. Some of the debris extends below and around rocker bearings, which can affect movement.

25. **Routine** - Steel columns at Piers 6, 8, 12 & 14 and steel bent columns at Piers 21 and 32 near the bases have section loss up to 23.6%. Clean and paint areas of section loss and strengthen as required after analysis.

Note: The fascia of both parapets along the entire length of bridge have numerous hollow areas and spalls with exposed rebar. The deck and parapets are scheduled to be replaced in the near future.

Calculated By: EB & SD

Bridge No: 03819 Checked By: JK

Stringer Web Shear Section Losses

Span	Stringer	Location	Section Loss									Original Web Size				SL %	Comments
			Area 1		Area 2		Area 3		Area 4		Area (in^2)	Beam Size	Height (in)	Thick. (in)	Area (in^2)		
			Height (in)	Depth (in)	Height (in)	Depth (in)	Height (in)	Depth (in)	Height (in)	Depth (in)							
6	S1	East side of FB 7-1	4.00	0.31	1.00	0.38	5.00	0.13	4.00	0.19	3.00	Plate Girder	20.00	0.38	7.50	40.0%	At coped area
6	S1	East side of FB 7-2	3.00	0.13	5.00	0.19					1.31	Plate Girder	20.00	0.38	7.50	17.5%	At coped area
6	S1	East side of FB 7-5	22.00	0.03	22.00	0.06					2.06	Plate Girder	22.00	0.38	8.25	25.0%	At coped area
6	S14	West side of FB 7-3	1.00	0.13	2.00	0.06	1.00	0.13	4.00	0.16	1.00	Plate Girder	21.00	0.38	7.88	12.7%	At coped area
6	S14	East side of FB 7-3	1.50	0.13							0.19	Plate Girder	20.00	0.38	7.50	2.5%	At coped area
7	S14	East side of FB 7-7	2.00	0.25							0.50	Plate Girder	20.00	0.38	7.50	6.7%	
8	S1	West side of FB 9-4	6.00	0.06	4.00	0.13					0.88	Plate Girder	21.00	0.38	7.88	11.1%	
8	S1	East side of FB 9-4	20.00	0.03	20.00	0.03					1.25	Plate Girder	20.00	0.38	7.50	16.7%	At coped area
9	S1	9.5' East of FB 9-5	10.00	0.09							0.94	Plate Girder	24.00	0.38	9.00	10.4%	
9	S1	East side of FB 9-6	4.00	0.09	3.00	0.13	4.00	0.13	6.00	0.16	2.19	Plate Girder	22.50	0.38	8.44	25.9%	At coped area
9	S1	West side of FB 9-7	3.00	0.13							0.38	Plate Girder	24.00	0.38	9.00	4.2%	
10	S1	3' east of FB 10-1	3.00	0.25							0.75	Plate Girder	24.00	0.38	9.00	8.3%	
10	S12	West side of FB 10-5	4.00	0.06	5.00	0.13	5.00	0.06	2.00	0.06	1.31	Plate Girder	24.00	0.38	9.00	14.6%	
11	S1	East side of FB 11-1	3.00	0.09	3.00	0.09					0.56	Plate Girder	20.00	0.38	7.50	7.5%	At coped area
11	S12	East side of FB 10-5	24.00	0.13	5.50	0.13	3.00	0.19			4.25	Plate Girder	24.00	0.38	9.00	47.2%	
11	S13	East side of FB 10-5	4.25	0.16	8.00	0.13	4.00	0.19	0.13	0.38	2.93	Plate Girder	24.00	0.38	9.00	32.6%	
			2.50	0.19													
11	S13	West side of FB 11-2	1.00	0.06							0.06	Plate Girder	20.00	0.38	7.50	0.8%	At coped area
11	S13	East side of FB 11-2	1.00	0.06							0.06	Plate Girder	20.00	0.38	7.50	0.8%	At coped area
12	S1	East side of FB 13-1	4.00	0.13							0.50	Plate Girder	20.00	0.38	7.50	6.7%	At coped area
12	S1	East side of FB 13-2	5.00	0.13							0.63	Plate Girder	20.00	0.38	7.50	8.3%	At coped area
12	S13	West side of FB 13-3	2.00	0.19	2.00	0.13					0.63	Plate Girder	24.00	0.38	9.00	6.9%	
12	S12	East side of FB 13-5	6.00	0.03	2.00	0.13	2.00	0.06			0.56	Plate Girder	24.00	0.38	9.00	6.3%	At coped area
12	S13	West side of FB 13-6	7.00	0.22	3.00	0.31	1.00	0.38			2.84	Plate Girder	24.00	0.38	9.00	31.6%	
13	S12	East side of FB 13-6	2.00	0.06							0.13	Plate Girder	20.00	0.38	7.50	1.7%	At coped area
14	S1	East side of FB 15-1	2.00	0.13	4.00	0.09	5.00	0.13	3.00	0.13	1.63	Plate Girder	21.00	0.38	7.88	20.6%	At coped area
14	S13	East side of FB 15-1	2.00	0.13							0.25	Plate Girder	20.00	0.38	7.50	3.3%	At coped area
14	S1	West side of FB 15-6	3.00	0.06							0.19	Plate Girder	20.00	0.38	7.50	2.5%	At coped area
17	S1	East side of FB 16-6	5.00	0.19							0.94	24WF61	20.00	0.42	8.38	11.2%	At coped area
17	S13	West side of FB 17-5	20.00	0.13							2.50	24WF61	20.00	0.42	8.38	29.8%	At coped area
18	S13	East side of FB 18-1	4.00	0.25							1.00	24WF61	20.00	0.42	8.38	11.9%	At coped area
19	S1	East side of FB 19-1	4.50	0.05							0.21	24WF61	20.00	0.42	8.38	2.5%	At coped area
21	S13	West side of FB 21-1	2.00	0.13							0.25	24WF61	20.00	0.42	8.38	3.0%	At coped area
21	S13	West side of FB 21-2	15.00	0.19							2.81	24WF61	20.00	0.42	8.38	33.6%	At coped area
21	S13	East side of FB 21-3	3.00	0.16	12.00	0.03	1.50	0.19			1.13	24WF61	20.00	0.42	8.38	13.4%	
22	S1	East side of FB 0	2.00	0.19	3.00	0.09	10.00	0.08	1.00	0.08	1.86	24WF61	22.54	0.42	9.44	19.7%	
			11.00	0.03													
22	S13	East side of FB 0	3.00	0.19	6.00	0.09	10.00	0.06			1.75	24WF61	22.54	0.42	9.44	18.5%	
22	S13	East side of FB 2	8.00	0.13	2.00	0.09					1.19	24WF61	20.00	0.42	8.38	14.2%	At coped area
22	S13	West side of FB 5	6.00	0.19	5.00	0.06					1.44	24WF61	20.00	0.42	8.38	17.2%	At coped area
22	S13	8" East of FB 7	1.50	0.13	2.00	0.13					0.44	24WF61	22.54	0.42	9.44	4.6%	
23	S1	East side of FB 5	4.00	0.13							0.50	24WF61	20.00	0.42	8.38	6.0%	At coped area
23	S1	West side of FB 0	17.00	0.13	1.00	0.19					2.31	24WF61	17.00	0.42	7.12	32.5%	At coped area
23	S13	West side of FB 0	10.00	0.25	7.00	0.13	5.00	0.13			4.00	24WF61	17.00	0.42	7.12	56.2%	At coped area
24	S1	East side of FB 0	17.00	0.06	17.00	0.16					3.72	24WF61	17.00	0.42	7.12	52.2%	At coped area
24	S13	East side of FB 0	13.00	0.25	4.00	0.19					4.00	24WF61	17.00	0.42	7.12	56.2%	At coped area
24	S13	West side of FB 3	3.00	0.22	11.00	0.13					2.03	24WF61	20.00	0.42	8.38	24.2%	At coped area
24	S13	East side of FB 7	1.50	0.06							0.09	24WF61	20.00	0.42	8.38	1.1%	At coped area
24	S13	West side of FB 9	16.00	0.09							1.50	24WF61	20.00	0.42	8.38	17.9%	At coped area
25	S13	West side of FB 9	12.00	0.22							2.63	24WF61	20.00	0.42	8.38	31.3%	At coped area
25	S13	East side of FB 9	9.00	0.13	2.00	0.06					1.25	24WF61	20.00	0.42	8.38	14.9%	At coped area
25	S13	West side of FB 7	20.00	0.13							2.50	24WF61	20.00	0.42	8.38	29.8%	At coped area
25	S13	East side of FB 7	4.00	0.42	16.00	0.19	10.00	0.16			6.24	24WF61	20.00	0.42	8.38	74.4%	At coped area
25	S1	East side of FB 5	11.00	0.22							2.41	24WF61	22.54	0.42	9.44	25.5%	
25	S13	East side of FB 4	19.00	0.13	1.50	0.19	1.00	0.42			3.08	24WF61	20.00	0.42	8.38	36.7%	At coped area
25	S1	West side of FB 2	3.00	0.13	2.00	0.13					0.63	24WF61	20.00	0.42	8.38	7.5%	At coped area
26	S1	East side of FB 5	3.00	0.13	20.00	0.13					2.88	24WF76	20.00	0.44	8.80	32.7%	At coped area
26	S13	East side of FB 5	12.00	0.13							1.50	24WF76	20.00	0.44	8.80	17.0%	At coped area
26	S13	West side of FB 6	3.00	0.19							0.56	24WF76	20.00	0.44	8.80	6.4%	At coped area
26	S1	East side of FB 9	4.00	0.16	3.00	0.13					1.00	24WF76	20.00	0.44	8.80	11.4%	At coped area
26	S13	East side of FB 9	9.00	0.13							1.13	24WF76	20.00	0.44	8.80	12.8%	At coped area
27	S1	East side of FB 13	1.00	0.13							0.13	24WF76	20.00	0.44	8.80	1.4%	At coped area
27	S6	East side of FB 13	3.00	0.13							0.38	24WF84	20.00	0.47	9.40	4.0%	At coped area
27	S10	East side of FB 13	6.00	0.13	10.00	0.13					2.00	24WF84	20.00	0.47	9.40	21.3%	At coped area
27	S13	East side of FB 13	10.00	0.13	6.00	0.16	6.00	0.22			3.50	24WF76	20.00	0.44	8.80	39.8%	At coped area
27	S1	East side of FB 17	7.00	0.16	3.50	0.19	2.00	0.13	2.50	0.19	2.47	24WF76	20.00	0.44	8.80	28.1%	At coped area
27	S4	East side of FB 17	1.00	0.06							0.06	24WF84	20.00	0.47	9.40	0.7%	At coped area
27	S5	East side of FB 17	1.00	0.06							0.06	24WF84	20.00	0.47	9.40	0.7%	At coped area
27	S6	East side of FB 17	2.00	0.13							0.25	24WF84	20.00	0.47	9.40	2.7%	At coped area
27	S7	East side of FB 17	1.00	0.06							0.06	24WF84	20.00	0.47	9.40	0.7%	At coped area

Calculated By: EB & SD

Bridge No: 03819

Checked By: JK

Stringer Web Shear Section Losses

Span	Stringer	Location	Section Loss									Original Web Size				SL %	Comments
			Area 1		Area 2		Area 3		Area 4		Area (in^2)	Beam Size	Height (in)	Thick. (in)	Area (in^2)		
			Height (in)	Depth (in)	Height (in)	Depth (in)	Height (in)	Depth (in)	Height (in)	Depth (in)							
27	S8	East side of FB 17	1.00	0.06							0.06	24WF84	20.00	0.47	9.40	0.7%	At coped area
27	S13	East side of FB 17	19.00	0.16	3.00	0.13					3.34	24WF76	20.00	0.44	8.80	38.0%	At coped area
27	S1	East side of FB 20B	20.00	0.13							2.50	24WF77	20.00	0.44	8.80	28.4%	At coped area
27	S13	East side of FB 20B	1.50	0.13							0.19	24WF77	20.00	0.44	8.80	2.1%	
27	S1	East side of FB 23	5.00	0.13							0.63	24WF76	20.00	0.44	8.80	7.1%	At coped area
27	S13	East side of FB 23	10.00	0.13							1.25	24WF76	20.00	0.44	8.80	14.2%	At coped area
27	S13	West side of FB 29	6.00	0.16	6.00	0.06	2.00	0.06			1.44	24WF76	20.00	0.44	8.80	16.3%	At coped area
27	S1	West side of FB 33	7.00	0.16							1.09	24WF76	20.00	0.44	8.80	12.4%	At coped area
27	S13	West side of FB 33	2.00	0.13	16.00	0.22					3.75	24WF76	20.00	0.44	8.80	42.6%	At coped area
28	S13	West side of FB 37	20.00	0.25	3.00	0.13					5.38	24WF76	20.00	0.44	8.80	61.1%	At coped area
28	S1	West side of FB 41	6.00	0.16							0.94	24WF76	20.00	0.44	8.80	10.7%	At coped area
28	S13	West side of FB 41	18.00	0.25							4.50	24WF76	20.00	0.44	8.80	51.1%	At coped area
28	S13	West side of FB 43	2.00	0.13							0.25	24WF76	20.00	0.44	8.80	2.8%	At coped area
29	S13	East side of FB 0	13.00	0.13	3.00	0.13					2.00	24WF61	20.00	0.42	8.38	23.9%	At coped area
29	S13	West side of FB 3	3.00	0.13							0.38	24WF61	20.00	0.42	8.38	4.5%	At coped area
29	S13	East side of FB 8	3.00	0.25							0.75	24WF61	20.00	0.42	8.38	8.9%	At coped area
30	S13	East side of FB 6	3.00	0.08	3.00	0.08	1.00	0.13			0.59	24WF61	20.00	0.42	8.38	7.1%	
30	S13	West side of FB 8	6.00	0.13							0.75	24WF61	20.00	0.42	8.38	8.9%	At coped area
30	S1	East side of FB 6	2.00	0.13							0.25	24WF61	20.00	0.42	8.38	3.0%	At coped area
30	S1	East side of FB 2	20.00	0.06							1.25	24WF61	20.00	0.42	8.38	14.9%	At coped area
30	S1	West side of FB 0	13.00	0.03	7.00	0.13	20.00	0.03			1.91	24WF61	20.00	0.42	8.38	22.7%	At coped area
30	S13	West side of FB 0	2.00	0.09	1.50	0.13	10.00	0.06	10.00	0.13	2.25	24WF61	20.00	0.42	8.38	26.8%	At coped area
31	S1	East side of FB 0	7.00	0.09	3.00	0.09	2.00	0.19			1.31	24WF61	22.54	0.42	9.44	13.9%	
31	S13	East side of FB 0	4.00	0.16	5.00	0.22					1.72	24WF61	22.54	0.42	9.44	18.2%	
31	S13	West side of FB 1	1.50	0.42	1.50	0.19	14.00	0.06	1.50	0.06	5.46	24WF61	20.00	0.42	8.38	65.2%	At coped area
			3.50	0.38	8.00	0.09	7.00	0.19	0.50	0.42							
31	S1	West side of FB 4	2.00	0.13							0.25	24WF61	22.54	0.42	9.44	2.6%	
31	S1	West side of FB 8	2.00	0.13	15.00	0.13	5.00	0.16	15.00	0.13	4.78	24WF61	20.00	0.42	8.38	57.1%	At coped area
31	S1	East side of FB 8	3.00	0.19	20.00	0.19					4.31	24WF61	20.00	0.42	8.38	51.5%	At coped area
32	S1	West side of FB 0	2.00	0.13	1.00	0.13	1.50	0.13			0.56	24WF61	17.00	0.42	7.12	7.9%	At coped area
32	S13	West side of FB 2	20.00	0.06							1.25	Plate Girder	20.00	0.38	7.50	16.7%	At coped area
32	S13	East side of FB 2	21.00	0.06	21.00	0.03					1.97	Plate Girder	21.00	0.38	7.88	25.0%	At coped area
~~32~~	~~S14~~	~~West side of FB 0~~	~~20.00~~	~~0.22~~							~~4.38~~	~~Plate Girder~~	~~20.00~~	~~0.38~~	~~7.50~~	~~58.3%~~	~~At coped area~~
~~32~~	~~S13~~	~~West side of FB 5~~	~~2.00~~	~~0.05~~							~~0.09~~	~~Plate Girder~~	~~20.00~~	~~0.38~~	~~7.50~~	~~1.3%~~	
33	S1	East side of FB 0	1.00	0.13	1.00	0.13					0.25	24WF61	22.54	0.42	9.44	2.6%	
33	S1	West side of FB 3	1.00	0.13							0.13	24WF61	20.00	0.42	8.38	1.5%	At coped area
33	S16	West side of FB 3	5.00	0.13	2.00	0.13					0.88	Plate Girder	24.00	0.38	9.00	9.7%	
34	S1	West side of FB 3	20.00	0.09	2.00	0.13					2.13	24WF61	20.00	0.42	8.38	25.4%	At coped area
35	S1	East side of FB 0	3.00	0.19	15.00	0.03					1.03	24WF61	22.54	0.42	9.44	10.9%	

Notes:

1. Spans 6-21 stringers consist of 24WF61 (for superelevation≤1/8"/ft) and welded plate girders with 8¼" x ½" top flange, 9" x ¾" bottom flange and 24" x ⅜" web plate (for superelevation >1/8"/ft).
2. Spans 22-25 and 29-32 stringers consist of 24WF61 (for superelevation≤1/8"/ft) and welded plate girders with 8⅛" x ½" top flange, 9" x ¾" bottom flange and 24" x ⅜" web plate (for superelevation >1/8"/ft).
3. Spans 26-28 fascia stringers consist of 24WF76 and interior stringers consist of 24WF84.
4. Spans 33-36 and 35B stringers consist of 24WF61 (for superelevation≤1/8"/ft) and welded plate girders with 8¼" x ½" top flange, 9" x ¾" bottom flange and 24" x ⅜" web plate (for superelevation >1/8"/ft).
5. Spans 34B and 36B stringers consist of 24WF68 (for superelevation≤1/8"/ft) and welded plate girders with 8¼" x ½" top flange, 9" x ⅞" bottom flange and 24" x ⅜" web plate (for superelevation >1/8"/ft).
6. Height of web at cope is approximately 20" (field measured at a few locations).Height of web at cope at Floorbeam FB0 connection for the approach truss spans is approximately 17" due to concrete haunches (field measured at a few locations).
7. Section loss areas between 25% and 50% are highlighted yellow and greater than or equal to 50% are highlighted red.
8. Losses only shown if located within 3' of stringer end.
9. Pitting loss depth multiplied by 1/2 to get average section loss depth.

Calculated By: EB & SD

Bridge No: 03819

Checked By: JK

Stringer Top and Bottom Flange Section Losses

Span	Stringer	Between Floorbeams	Location	Top or Bottom Flange	Section Loss							Original Flange Size				SL %
					Area 1		Area 2		Area 3		Area (in^2)	Beam Size	Width (in)	Thick. (in)	Area (in^2)	
					Width (in)	Depth (in)	Width (in)	Depth (in)	Width (in)	Depth (in)						
6	S1	FB 7-2 & FB 7-3	8' West of FB 7-3 & gen note	Top	1.00	0.25	0.19	0.50	3.50	0.18	0.97	Plate Girder	8.25	0.50	4.13	23.5%
				Bottom	4.25	0.19					0.80		9.00	0.75	6.75	11.8%
6	S1	FB 7-3 & FB 7-4	At mid-panel	Top	2.00	0.13	3.94	0.13			0.74	Plate Girder	8.25	0.50	4.13	18.0%
				Bottom	4.31	0.16	4.31	0.13			1.21		9.00	0.75	6.75	18.0%
6	S13	FB 7-1 & FB 7-2	At mid-panel	Bottom	2.00	0.13					0.25	Plate Girder	9.00	0.75	6.75	3.7%
6	S14	FB 7-1 & FB 7-2	7' East of FB 7-1	Top	3.94	0.19	1.50	0.13			0.93	Plate Girder	8.25	0.50	4.13	22.4%
				Bottom	4.31	0.19					0.81		9.00	0.75	6.75	12.0%
6	S14	FB 7-2 & FB 7-3	6' West of FB 7-3	Top	3.00	0.25					0.75	Plate Girder	8.25	0.50	4.13	18.2%
				Bottom	4.31	0.22					0.94		9.00	0.75	6.75	14.0%
6	S14	FB 7-3 & FB 7-4	8' East of FB 7-3	Top	2.00	0.13					0.25	Plate Girder	8.25	0.50	4.13	6.1%
				Bottom	4.00	0.13					0.50		9.00	0.75	6.75	7.4%
6	S14	FB 7-4 & FB 7-5	5' East of FB 7-4	Top	3.94	0.13					0.49	Plate Girder	8.25	0.50	4.13	11.9%
6	S14	FB 7-5 & FB 7-6	10' West of FB 7-6	Top	3.94	0.09	3.94	0.06			0.62	Plate Girder	8.25	0.50	4.13	14.9%
				Bottom	1.50	0.25	2.81	0.13			0.73		9.00	0.75	6.75	10.8%
7	S1	FB 7-6 & FB 7-7	12' West of FB 7-7	Top	3.00	0.16					0.47	Plate Girder	8.25	0.50	4.13	11.4%
				Bottom	4.31	0.13	4.50	0.06			0.82	Plate Girder	9.00	0.75	6.75	12.2%
7	S1	FB 7-8 & FB 7-9	At mid-panel	Top	3.00	0.13					0.38	Plate Girder	8.25	0.50	4.13	9.1%
				Bottom	3.50	0.03					0.11	Plate Girder	9.00	0.75	6.75	1.6%
7	S14	FB 7-7 & FB 7-8	3' East of FB7-7	Top	3.94	0.19					0.74	Plate Girder	8.25	0.50	4.13	17.9%
				Bottom	4.00	0.44	0.13	0.75			1.84	Plate Girder	9.00	0.75	6.75	27.3%
7	S14	FB 7-8 & FB 7-9	At mid-panel	Top	3.94	0.19					0.74	Plate Girder	8.25	0.50	4.13	17.9%
8	S1	FB 9-1 & FB 9-2	5.5' East of FB 9-1	Top	2.50	0.13	3.00	0.06			0.50	Plate Girder	8.25	0.50	4.13	12.1%
				Bottom	3.00	0.38					1.13		9.00	0.75	6.75	16.7%
8	S1	FB 9-1 & FB 9-2	12' East of FB 9-1	Top	3.94	0.03					0.12	Plate Girder	8.25	0.50	4.13	3.0%
				Bottom	0.13	0.75	4.19	0.31			1.40		9.00	0.75	6.75	20.8%
8	S1	FB 9-2 & FB 9-3	At mid-panel	Top	3.94	0.16					0.62	Plate Girder	8.25	0.50	4.13	14.9%
				Bottom	4.31	0.31					1.35		9.00	0.75	6.75	20.0%
8	S1	FB 9-3 & FB 9-4	At 1/4-panel	Top	3.50	0.13					0.44	Plate Girder	8.25	0.50	4.13	10.6%
				Bottom	3.50	0.13					0.44		9.00	0.75	6.75	6.5%
8	S1	FB 9-3 & FB 9-4	16" West of FB 9-4	Top	3.94	0.13					0.49	Plate Girder	8.25	0.50	4.13	11.9%
				Bottom	0.09	0.75	4.22	0.25			1.13		9.00	0.75	6.75	16.7%
8	S13	FB 9-3 & FB 9-4	6' West of FB 9-4	Top	3.00	0.19					0.56	Plate Girder	8.25	0.50	4.13	13.6%
				Bottom	3.00	0.03	0.13	0.75	1.88	0.25	0.66		9.00	0.75	6.75	9.7%
8	S13	FB 9-4 & FB 9-5	4' West of FB 9-5	Top	3.00	0.19	0.13	0.50	1.88	0.31	1.21	Plate Girder	8.25	0.50	4.13	29.4%
				Bottom	3.00	0.03					0.09		9.00	0.75	6.75	1.4%
9	S1	FB 9-5 & FB 9-6	9.5' East of FB 9-5	Top	3.94	0.25					0.98	Plate Girder	8.25	0.50	4.13	23.9%
				Bottom	0.25	0.75	4.06	0.53			2.35		9.00	0.75	6.75	34.8%
10	S1	FB 10-1 & FB 10-2	3' East of FB 10-1	Top	3.94	0.25					0.98	Plate Girder	8.25	0.50	4.13	23.9%
				Bottom	2.50	0.38	1.50	0.25			1.31		9.00	0.75	6.75	19.4%
10	S13	FB 10-1 & FB 10-2	7' West of FB 10-2	Bottom	4.00	0.19					0.75	Plate Girder	9.00	0.75	6.75	11.1%
10	S1	FB 10-2 & FB 10-3	8' West of FB 10-3	Top	1.25	0.13					0.16	Plate Girder	8.25	0.50	4.13	3.8%
10	S13	FB 10-4 & FB 10-5	At mid-panel	Top	3.94	0.19					0.74	Plate Girder	8.25	0.50	4.13	17.9%
				Bottom	4.00	0.09					0.38		9.00	0.75	6.75	5.6%
11	S1	FB 10-5 & FB 11-1	At mid-panel	Top	3.00	0.19	3.00	0.13			0.94	Plate Girder	8.25	0.50	4.13	22.7%
				Bottom	0.63	0.56	4.00	0.56	4.00	0.19	3.35		9.00	0.75	12.38	27.1%
Span 11, S1 bottom flange has a 10" x 9/16" cover plate																
11	S1	FB 11-2 & FB 11-3	8' West of FB 11-3	Top	3.94	0.19					0.74	Plate Girder	8.25	0.50	4.13	17.9%
				Bottom	4.31	0.13					0.54		9.00	0.75	6.75	8.0%
12	S1	FB 13-1 & FB 13-2	4.5' East of FB 13-1	Top	2.00	0.13	3.94	0.19			0.99	Plate Girder	8.25	0.50	4.13	24.0%
				Bottom	1.13	0.75	3.19	0.56	4.31	0.25	3.71		9.00	0.75	6.75	55.0%
12	S1	FB 13-2 & FB 13-3	4' East of FB 13-2	Top	3.94	0.19					0.74	Plate Girder	8.25	0.50	4.13	17.9%
				Bottom	3.50	0.06	4.00	0.31	0.13	0.75	1.56		9.00	0.75	6.75	23.1%
12	S1	FB 13-3 & FB 13-4	At mid-panel	Top	2.00	0.09					0.19	Plate Girder	8.25	0.50	4.13	4.5%
				Bottom	4.31	0.09					0.40		9.00	0.75	6.75	6.0%
12	S1	FB 13-4 & FB 13-5	2' East of FB 13-4	Top	3.94	0.13					0.49	Plate Girder	8.25	0.50	4.13	11.9%
				Bottom	4.31	0.13					0.54		9.00	0.75	6.75	8.0%
12	S1	FB 13-4 & FB 13-5	2' West of FB 13-5	Top	3.94	0.13					0.49	Plate Girder	8.25	0.50	4.13	11.9%
				Bottom	4.31	0.25					1.08		9.00	0.75	6.75	16.0%
12	S13	FB 13-4 & FB 13-5	6' East of FB 13-4	Bottom	3.00	0.19	1.00	0.25			0.81	Plate Girder	9.00	0.75	6.75	12.0%
12	S13	FB 13-4 & FB 13-5	At mid-panel	Top	3.00	0.13					0.38	Plate Girder	8.25	0.50	4.13	9.1%
				Bottom	3.00	0.13					0.38		9.00	0.75	6.75	5.6%
12	S1	FB 13-5 & FB 13-6	At mid-panel	Bottom	4.31	0.13					0.54	Plate Girder	9.00	0.75	6.75	8.0%
13	S1	FB 13-6 & FB 13-7	12' East of FB 13-6	Top	3.94	0.13	1.00	0.13			0.62	Plate Girder	8.25	0.50	4.13	15.0%
				Bottom	3.00	0.19	1.00	0.44	4.00	0.06	1.25		9.00	0.75	6.75	18.5%
14	S1	FB 15-1 & FB 15-2	4' East of FB 15-1	Top	3.94	0.06					0.25	Plate Girder	8.25	0.50	4.13	6.0%
				Bottom	4.31	0.22					0.94		9.00	0.75	6.75	14.0%
15	S1	FB 15-6 & FB 15-7	At mid-panel	Top	2.00	0.13					0.25	Plate Girder	8.25	0.50	4.13	6.1%
				Bottom	3.50	0.16					0.55		9.00	0.75	6.75	8.1%
15	S1	FB 15-7 & FB 15-8	At mid-panel	Top	1.00	0.06					0.06	Plate Girder	8.25	0.50	4.13	1.5%
				Bottom	4.00	0.13					0.50		9.00	0.75	6.75	7.4%

Calculated By: EB & SD

Bridge No: 03819

Checked By: JK

Stringer Top and Bottom Flange Section Losses

Span	Stringer	Between Floorbeams	Location	Top or Bottom Flange	Section Loss							Original Flange Size				SL %
					Area 1		Area 2		Area 3		Area (in^2)	Beam Size	Width (in)	Thick. (in)	Area (in^2)	
					Width (in)	Depth (in)	Width (in)	Depth (in)	Width (in)	Depth (in)						
~~16~~	~~S1~~	~~FB 16-1 & FB 16-2~~	~~6' East of FB 16-1~~	~~Bottom~~	~~4.31~~	~~0.63~~					~~2.70~~	~~Plate Girder~~	~~9.00~~	~~0.75~~	~~6.75~~	~~39.9%~~
16	S1	FB 16-2 & FB 16-3	At mid-panel	Bottom	2.50	0.25	1.50	0.13			0.81	Plate Girder	9.00	0.75	6.75	12.0%
16	S13	FB 16-4 & FB 16-5	9' East of FB 16-4	Top	3.94	0.08					0.31	Plate Girder	8.25	0.50	4.13	7.5%
				Bottom	3.50	0.25					0.88		9.00	0.75	6.75	13.0%
17	S1	FB 16-6 & FB 17-1	6.5' East of FB 16-6	Top	3.30	0.19					0.62	24WF61	7.02	0.59	4.15	14.9%
				Bottom	3.30	0.12					0.40		7.02	0.59	4.15	9.7%
17	S13	FB 17-3 & FB 17-4	At mid-panel	Top	3.30	0.06					0.21	24WF61	7.02	0.59	4.15	5.0%
				Bottom	1.00	0.03					0.03		7.02	0.59	4.15	0.7%
18	S1	FB 18-1 & FB 18-2	4' East of FB 18-1	Top	3.30	0.19					0.62	24WF61	7.02	0.59	4.15	14.9%
				Bottom	3.30	0.15					0.51		7.02	0.59	4.15	12.2%
18	S13	FB 18-1 & FB 18-2	4' East of FB 18-1	Top	1.00	0.16	2.30	0.06			0.30	24WF61	7.02	0.59	4.15	7.2%
				Bottom	3.30	0.15					0.51		7.02	0.59	4.15	12.2%
18	S1	FB 18-3 & FB 18-4	5' West of FB 18-4	Top	2.25	0.06					0.14	24WF61	7.02	0.59	4.15	3.4%
				Bottom	3.30	0.06	3.30	0.09			0.50		7.02	0.59	4.15	12.0%
18	S13	FB 18-3 & FB 18-4	7' East of FB 18-3	Top	3.30	0.06	3.30	0.25			1.03	24WF61	7.02	0.59	4.15	24.9%
				Bottom	1.50	0.59	1.80	0.34			1.50		7.02	0.59	4.15	36.2%
18	S1	FB 18-5 & FB 18-6	At mid-panel	Top	3.30	0.06					0.21	24WF61	7.02	0.59	4.15	5.0%
				Bottom	3.30	0.15					0.51		7.02	0.59	4.15	12.2%
19	S1	FB 18-6 & FB 19-1	5' East of FB 18-6	Top	3.30	0.13					0.41	24WF61	7.02	0.59	4.15	9.9%
				Bottom	3.30	0.22					0.71		7.02	0.59	4.15	17.2%
19	S13	FB 18-6 & FB 19-1	5' East of FB 18-6	Bottom	3.30	0.09					0.30	24WF61	7.02	0.59	4.15	7.2%
20	S13	FB 20-1 & FB 20-2	4' East of FB 20-1	Top	3.30	0.22					0.72	24WF61	7.02	0.59	4.15	17.4%
				Bottom	1.00	0.28	2.30	0.09			0.49		7.02	0.59	4.15	11.8%
20	S13	FB 20-3 & FB 20-4	At mid-panel	Bottom	2.00	0.09					0.18	24WF61	7.02	0.59	4.15	4.4%
21	S1	FB 20-6 & FB 21-1	5' East of FB 20-6	Bottom	3.30	0.09	3.30	0.28			1.22	24WF61	7.02	0.59	4.15	29.4%
21	S1	FB 20-6 & FB 21-1	7' East of FB 20-6	Top	3.30	0.16					0.52	24WF61	7.02	0.59	4.15	12.4%
				Bottom	3.00	0.28					0.84		7.02	0.59	4.15	20.1%
21	S13	FB 20-6 & FB 21-1	7' East of FB 20-6	Top	3.30	0.16					0.52	24WF61	7.02	0.59	4.15	12.4%
				Bottom	3.30	0.47	1.50	0.13			1.73		7.02	0.59	4.15	41.6%
21	S13	FB 21-3 & FB 21-4	2' East of FB 21-3	Top	2.00	0.13					0.25	24WF61	7.02	0.59	4.15	6.0%
				Bottom	3.30	0.28					0.92		7.02	0.59	4.15	22.2%
22	S1	FB 0 & FB 1	6' East of FB 0	Top	3.30	0.06	3.30	0.09			0.52	24WF61	7.02	0.59	4.15	12.4%
				Bottom	3.30	0.22					0.71		7.02	0.59	4.15	17.2%
22	S13	FB 0 & FB 1	7.5' East of FB 0	Bottom	3.30	0.15					0.51	24WF61	7.02	0.59	4.15	12.2%
22	S13	FB 4 & FB 5	At mid-panel	Top	2.00	0.13					0.25	24WF61	7.02	0.59	4.15	6.0%
				Bottom	2.50	0.15					0.38		7.02	0.59	4.15	9.2%
22	S1	FB 5 & FB 6	4' East of FB 5	Top	2.00	0.13					0.25	24WF61	7.02	0.59	4.15	6.0%
				Bottom	2.00	0.13	3.30	0.22			0.96		7.02	0.59	4.15	23.2%
22	S13	FB 5 & FB 6	5.5' East of FB 5	Top	3.30	0.13					0.41	24WF61	7.02	0.59	4.15	9.9%
				Bottom	3.30	0.09					0.30		7.02	0.59	4.15	7.2%
22	S13	FB 6 & FB 7	At mid-panel	Top	2.00	0.06					0.13	24WF61	7.02	0.59	4.15	3.0%
22	S13	FB 7 & FB 8	32" East of FB 7	Top	3.30	0.19					0.62	24WF61	7.02	0.59	4.15	14.9%
				Bottom	2.00	0.40	1.00	0.09			0.90		7.02	0.59	4.15	21.6%
22	S13	FB 8 & FB 9	At 3/4-panel	Bottom	2.00	0.13					0.25	24WF61	7.02	0.59	4.15	6.0%
23	S1	FB 10 & FB 9	5' East of FB 10	Top	3.30	0.09					0.30	24WF61	7.02	0.59	4.15	7.2%
				Bottom	3.30	0.47					1.54		7.02	0.59	4.15	37.1%
23	S13	FB 10 & FB 9	4.5' East of FB 10	Top	3.30	0.09					0.31	24WF61	7.02	0.59	4.15	7.5%
				Bottom	3.00	0.15					0.46		7.02	0.59	4.15	11.1%
23	S1	FB 7 & FB 6	At mid-panel	Top	3.30	0.13					0.41	24WF61	7.02	0.59	4.15	9.9%
				Bottom	3.30	0.03					0.09		7.02	0.59	4.15	2.3%
23	S13	FB 7 & FB 6	8' West of FB 6	Top	3.30	0.13					0.41	24WF61	7.02	0.59	4.15	9.9%
				Bottom	3.30	0.15					0.51		7.02	0.59	4.15	12.2%
23	S1	FB 5 & FB 4	4.5' East of FB 5	Top	3.30	0.28					0.92	24WF61	7.02	0.59	4.14	22.1%
				Bottom	3.30	0.22					0.71		7.02	0.59	4.14	17.1%
23	S13	FB 5 & FB 4	4' East of FB 5	Top	3.30	0.09					0.30	24WF61	7.02	0.59	4.15	7.2%
				Bottom	3.30	0.09					0.30		7.02	0.59	4.15	7.2%
23	S12	FB 4 & FB 3	At mid-panel	Top	1.00	0.13	3.30	0.13			0.54	24WF61	7.02	0.59	4.15	12.9%
				Bottom	3.30	0.03	3.30	0.03			0.21		7.02	0.59	4.15	5.0%
23	S13	FB 4 & FB 3	5.5' West of FB 3	Top	3.30	0.06					0.20	24WF61	7.02	0.59	4.15	4.8%
				Bottom	3.30	0.09					0.30		7.02	0.59	4.15	7.2%
24	S1	FB 0 & FB 1	6.5' East of FB 0	Top	3.30	0.13					0.41	24WF61	7.02	0.59	4.15	9.9%
				Bottom	3.30	0.03	3.30	0.28			1.01		7.02	0.59	4.15	24.4%
24	S1	FB 5 & FB 6	4' East of FB 5	Top	3.30	0.22					0.71	24WF61	7.02	0.59	4.15	17.2%
				Bottom	3.00	0.22					0.65		7.02	0.59	4.15	15.6%
24	S13	FB 0 & FB 1	5' East of FB 0	Top	3.30	0.13					0.41	24WF61	7.02	0.59	4.15	9.9%
				Bottom	3.30	0.28					0.92		7.02	0.59	4.15	22.2%
24	S13	FB 5 & FB 6	At 1/4 of panel	Top	2.00	0.06					0.13	24WF61	7.02	0.59	4.15	3.0%
				Bottom	3.00	0.13					0.38		7.02	0.59	4.15	9.0%
24	S13	FB 7 & FB 8	8' East of FB 7	Bottom	3.30	0.18					0.61	24WF61	7.02	0.59	4.15	14.7%
24	S13	FB 7 & FB 8	16' East of FB 7	Top	3.30	0.13					0.41	24WF61	7.02	0.59	4.15	9.9%
				Bottom	3.30	0.34					1.13		7.02	0.59	4.15	27.1%
24	S13	FB 8 & FB 9	14' East of FB 8	Top	3.30	0.06	3.30	0.15			0.71	24WF61	7.02	0.59	4.15	17.2%
				Bottom	3.30	0.03	3.00	0.15			0.55		7.02	0.59	4.15	13.4%
24	S13	FB 8 & FB 9	8' West of FB 9	Bottom	3.30	0.06					0.21	24WF61	7.02	0.59	4.15	5.0%

Calculated By: EB & SD

Bridge No: 03819

Checked By: JK

Stringer Top and Bottom Flange Section Losses

Span	Stringer	Between Floorbeams	Location	Top or Bottom Flange	Section Loss							Original Flange Size				SL %
					Area 1		Area 2		Area 3		Area (in^2)	Beam Size	Width (in)	Thick. (in)	Area (in^2)	
					Width (in)	Depth (in)	Width (in)	Depth (in)	Width (in)	Depth (in)						
25	S1	FB 10 & FB 9	3.5' East of FB 10	Top	3.30	0.03					0.10	24WF61	7.02	0.59	4.15	2.5%
				Bottom	3.30	0.34					1.13		7.02	0.59	4.15	27.1%
25	S1	FB 10 & FB 9	6' West of FB 9	Top	2.00	0.25					0.50	24WF61	7.02	0.59	4.15	12.0%
				Bottom	3.30	0.22					0.71		7.02	0.59	4.15	17.2%
25	S13	FB 10 & FB 9	7' East of FB 10	Top	3.30	0.19					0.62	24WF61	7.02	0.59	4.15	14.9%
				Bottom	3.30	0.25					0.82		7.02	0.59	4.15	19.7%
25	S13	FB 6 & FB 5	1.5' East of mid-panel	Top	3.30	0.13	2.00	0.13			0.66	24WF61	7.02	0.59	4.15	16.0%
				Bottom	3.30	0.15	1.00	0.59	2.00	0.40	1.90		7.02	0.59	4.15	45.9%
25	S1	FB 5 & FB 4	1' to 2' East of FB 5	Top	3.30	0.13					0.41	24WF61	7.02	0.59	4.15	9.9%
				Bottom	3.30	0.15					0.51		7.02	0.59	4.15	12.2%
25	S13	FB 5 & FB 4	5' East of FB 5	Top	3.30	0.13					0.41	24WF61	7.02	0.59	4.15	9.9%
				Bottom	3.30	0.28					0.92		7.02	0.59	4.15	22.2%
25	S1	FB 4 & FB 3	8.5' West of FB 3	Top	3.30	0.06					0.21	24WF61	7.02	0.59	4.15	5.0%
				Bottom	3.30	0.34					1.13		7.02	0.59	4.15	27.1%
25	S13	FB 4 & FB 3	3' West of mid-panel	Top	3.30	0.13	3.30	0.13			0.83	24WF61	7.02	0.59	4.15	19.9%
				Bottom	3.30	0.28					0.92		7.02	0.59	4.15	22.2%
25	S1	FB 2 & FB 1	2' East of FB 2	Top	2.00	0.19	0.13	0.59			0.45	24WF61	7.02	0.59	4.15	10.8%
25	S1	FB 2 & FB 1	7' East from FB 2	Top	3.30	0.09					0.31	24WF61	7.02	0.59	4.15	7.5%
25	S13	FB 2 & FB 1	At mid-panel	Bottom	3.30	0.09					0.30	24WF61	7.02	0.59	4.15	7.2%
25	S12	FB 1 & FB 0	7' West of FB 0	Bottom	3.30	0.09					0.30	24WF61	7.02	0.59	4.15	7.2%
25	S13	FB 1 & FB 0	4' West of FB 0	Bottom	3.30	0.09					0.30	24WF61	7.02	0.59	4.15	7.2%
26	S1	FB 1 & FB 2	18' East of FB 1	Bottom	4.27	0.24					1.04	24WF76	8.99	0.68	6.13	17.0%
26	S1	FB 2 & FB 3	5' East of FB 2	Top	3.00	0.19					0.56	24WF76	8.99	0.68	6.13	9.2%
26	S1	FB 6 & FB 7	2.5' West of FB 7	Top	1.00	0.25					0.25	24WF76	8.99	0.68	6.13	4.1%
				Bottom	4.27	0.24					1.04		8.99	0.68	6.13	17.0%
26	S1	FB 9 & FB 10	3.5' East of FB 9	Top	3.00	0.19					0.56	24WF76	8.99	0.68	6.13	9.2%
				Bottom	4.00	0.18					0.73		8.99	0.68	6.13	11.9%
26	S1	FB 9 & FB 10	5' West of FB 10	Top	1.50	0.38					0.56	24WF76	8.99	0.68	6.13	9.2%
				Bottom	4.27	0.24					1.04		8.99	0.68	6.13	17.0%
26	S1	FB 10 & FB 11	At mid-panel	Bottom	4.27	0.24					1.04	24WF76	8.99	0.68	6.13	17.0%
27	S1	FB 13 & FB 14	±8' East of FB 13	Top	4.27	0.25					1.07	24WF76	8.99	0.68	6.13	17.4%
				Bottom	4.27	0.12					0.51		8.99	0.68	6.13	8.3%
27	S13	FB 19 & FB 20A	±8' West of FB 20A	Top	4.00	0.13					0.50	24WF76	8.99	0.68	6.13	8.2%
				Bottom	4.00	0.06					0.25		8.99	0.68	6.13	4.1%
27	S1	FB 20A & FB 21	4' East of FB 20B	Top	4.27	0.06					0.27	24WF76	8.99	0.68	6.13	4.4%
				Bottom	4.27	0.09					0.40		8.99	0.68	6.13	6.5%
27	S13	FB 20B & FB 21	3' East of FB 20B	Top	2.00	0.19					0.38	24WF76	8.99	0.68	6.13	6.1%
				Bottom	4.00	0.13					0.50		8.99	0.68	6.13	8.2%
27	S1	FB 21 & FB 22	10.5' West of FB 22	Top	2.00	0.25					0.50	24WF76	8.99	0.68	6.13	8.2%
				Bottom	4.00	0.06					0.25		8.99	0.68	6.13	4.1%
27	S1	FB 22 & FB 23	6' East of FB 22	Top	2.00	0.25					0.50	24WF76	8.99	0.68	6.13	8.2%
				Bottom	4.27	0.06					0.27		8.99	0.68	6.13	4.4%
27	S1	FB 23 & FB 24	5' East of FB 23	Bottom	4.27	0.18					0.78	24WF76	8.99	0.68	6.13	12.7%
27	S1	FB 23 & FB 24	3' West of FB 24	Bottom	4.27	0.12					0.51	24WF76	8.99	0.68	6.13	8.3%
27	S1	FB 24 & FB 25	At mid-panel	Bottom	4.27	0.05	4.27	0.05			0.40	24WF76	8.99	0.68	6.13	6.5%
27	S1	FB 26B & FB 27	West of mid-panel	Bottom	2.00	0.13					0.25	24WF76	8.99	0.68	6.13	4.1%
28	S1	FB 33 & FB 34	1' East of FB 33	Bottom	4.27	0.24					1.04	24WF76	8.99	0.68	6.13	17.0%
28	S1	FB 36 & FB 37	7' West of FB 37	Bottom	4.27	0.25					1.07	24WF76	8.99	0.68	6.13	17.4%
28	S13	FB 36 & FB 37	7' East of FB 36	Bottom	4.00	0.18					0.73	24WF76	8.99	0.68	6.13	11.9%
29	S1	FB 4 & FB 5	10' East of FB 4	Top	3.30	0.09	0.19	0.59	3.11	0.09	0.69	24WF61	7.02	0.59	4.15	16.7%
				Bottom	3.30	0.09	3.30	0.03			0.39		7.02	0.59	4.15	9.5%
29	S1	FB 4 & FB 5	4' West of FB 5	Top	1.50	0.19					0.28	24WF61	7.02	0.59	4.15	6.8%
				Bottom	3.30	0.15					0.51		7.02	0.59	4.15	12.2%
29	S13	FB 0 & FB 1	At mid-panel	Bottom	2.50	0.13					0.31	24WF61	7.02	0.59	4.15	7.5%
29	S13	FB 0 & FB 1	At 1/4 panel	Bottom	3.30	0.15					0.51	24WF61	7.02	0.59	4.15	12.2%
29	S13	FB 4 & FB 5	7.5' West of FB 5	Top	3.30	0.37					1.23	24WF61	7.02	0.59	4.15	29.6%
				Bottom	1.50	0.34	1.80	0.13	2.00	0.09	0.92		7.02	0.59	4.15	22.3%
29	S1	FB 6 & FB 7	At mid-panel	Bottom	2.00	0.22					0.43	24WF61	7.02	0.59	4.15	10.4%
29	S13	FB 8 & FB 9	9' West of FB 9	Top	3.30	0.16					0.52	24WF61	7.02	0.59	4.15	12.4%
				Bottom	3.30	0.12					0.40		7.02	0.59	4.15	9.7%
30	S1	FB 10 & FB 9	At mid-panel	Top	3.00	0.06					0.19	24WF61	7.02	0.59	4.15	4.5%
				Bottom	3.00	0.06					0.19		7.02	0.59	4.15	4.5%
30	S13	FB 10 & FB 9	6' West of FB 9	Top	3.30	0.03	2.50	0.16			0.49	24WF61	7.02	0.59	4.15	11.9%
				Bottom	0.75	0.59	2.55	0.47			1.63		7.02	0.59	4.15	39.3%
30	S1	FB 9 & FB 8	5' East of FB 9	Top	2.00	0.13					0.25	24WF61	7.02	0.59	4.15	6.0%
				Bottom	3.30	0.22					0.71		7.02	0.59	4.15	17.2%
30	S13	FB 9 & FB 8	5' East of diaph	Top	1.00	0.13	3.30	0.16			0.64	24WF61	7.02	0.59	4.15	15.4%
30	S13	FB 9 & FB 8	4' West of FB 8	Top	3.30	0.09					0.31	24WF61	7.02	0.59	4.15	7.5%
				Bottom	3.00	0.34					1.02		7.02	0.59	4.15	24.6%
30	S13	FB 8 & FB 7	At mid-panel	Top	3.30	0.22					0.72	24WF61	7.02	0.59	4.15	17.4%
				Bottom	2.50	0.15					0.38		7.02	0.59	4.15	9.2%
30	S1	FB 7 & FB 6	4' East of FB 7	Top	3.30	0.06					0.21	24WF61	7.02	0.59	4.15	5.0%
				Bottom	0.25	0.59	3.05	0.40			1.38		7.02	0.59	4.15	33.2%

Calculated By: EB & SD

Bridge No: 03819

Checked By: JK

Stringer Top and Bottom Flange Section Losses

Span	Stringer	Between Floorbeams	Location	Top or Bottom Flange	Section Loss							Original Flange Size				SL %
					Area 1		Area 2		Area 3		Area (in^2)	Beam Size	Width (in)	Thick. (in)	Area (in^2)	
					Width (in)	Depth (in)	Width (in)	Depth (in)	Width (in)	Depth (in)						
30	S1	FB 7 & FB 6	12' West of FB 6	Top	3.30	0.16	3.30	0.16			1.03	24WF61	7.02	0.59	4.15	24.9%
				Bottom	3.30	0.06					0.21		7.02	0.59	4.15	5.0%
30	S13	FB 7 & FB 6	11.5' East of FB 7	Top	3.00	0.06					0.19	24WF61	7.02	0.59	4.15	4.5%
				Bottom	3.00	0.15					0.46		7.02	0.59	4.15	11.1%
30	S13	FB 7 & FB 6	14' West of FB 6	Top	3.00	0.09	2.00	0.06			0.41	24WF61	7.02	0.59	4.15	9.8%
				Bottom	0.19	0.59	3.11	0.28	3.30	0.22	1.69		7.02	0.59	4.15	40.8%
30	S1	FB 6 & FB 5	5.5' West of FB 5	Top	3.30	0.09	2.00	0.16			0.62	24WF61	7.02	0.59	4.15	15.0%
				Bottom	3.30	0.37					1.23		7.02	0.59	4.15	29.6%
30	S13	FB 6 & FB 5	1' East of FB 6	Top	3.30	0.13	1.50	0.13			0.60	24WF61	7.02	0.59	4.15	14.5%
				Bottom	3.30	0.22	3.30	0.09			1.01		7.02	0.59	4.15	24.4%
30	S13	FB 6 & FB 5	8' West of FB 5	Top (5' W)	3.30	0.09					0.31	24WF61	7.02	0.59	4.15	7.5%
				Bottom	3.30	0.09					0.30		7.02	0.59	4.15	7.2%
30	S1	FB 5 & FB 4	8' West of FB 4	Top	1.00	0.13	2.00	0.13			0.38	24WF61	7.02	0.59	4.15	9.0%
				Bottom	3.00	0.09					0.27		7.02	0.59	4.15	6.6%
30	S13	FB 5 & FB 4	9' West of FB 4	Top	3.30	0.13					0.41	24WF61	7.02	0.59	4.15	9.9%
				Bottom	0.19	0.59	3.11	0.22			0.78		7.02	0.59	4.15	18.9%
30	S1	FB 4 & FB 3	At mid-panel	Top	3.00	0.06	3.00	0.03			0.28	24WF61	7.02	0.59	4.15	6.8%
				Bottom	1.50	0.06	3.30	0.03			0.20		7.02	0.59	4.15	4.7%
30	S13	FB 4 & FB 3	6' East of FB 4	Top	3.30	0.19					0.62	24WF61	7.02	0.59	4.15	14.9%
				Bottom	0.25	0.59	3.05	0.37			1.28		7.02	0.59	4.15	30.9%
30	S13	FB 4 & FB 3	10.5' East of FB 4	Top	3.30	0.03	3.30	0.13			0.52	24WF61	7.02	0.59	4.15	12.4%
				Bottom	0.19	0.59	1.00	0.40	2.11	0.28	1.10		7.02	0.59	4.15	26.6%
30	S13	FB 4 & FB 3	7.5' West of FB 3	Top	3.30	0.19					0.62	24WF61	7.02	0.59	4.15	14.9%
				Bottom	0.19	0.59	1.00	0.34	2.11	0.18	0.84		7.02	0.59	4.15	20.3%
30	S13	FB 2 & FB 1	At mid-panel	Top	2.00	0.03	3.30	0.13			0.48	24WF61	7.02	0.59	4.15	11.5%
				Bottom	0.13	0.59	3.18	0.22			0.76		7.02	0.59	4.15	18.3%
30	S13	FB 2 & FB 1	6.5' West of FB 1	Top	3.30	0.13					0.41	24WF61	7.02	0.59	4.15	9.9%
				Bottom	3.30	0.12					0.40		7.02	0.59	4.15	9.7%
30	S1	FB 1 & FB 0	5' from FB 0	Top	3.30	0.19					0.62	24WF61	7.02	0.59	4.15	14.9%
				Bottom	3.00	0.22					0.65		7.02	0.59	4.15	15.6%
30	S13	FB 1 & FB 0	At mid-panel	Top	3.30	0.09	3.30	0.13			0.72	24WF61	7.02	0.59	4.15	17.4%
				Bottom	3.30	0.15	0.19	0.59	3.11	0.40	1.87		7.02	0.59	4.15	45.2%
31	S1	FB 0 & FB 1	4' West of FB 1	Top	2.00	0.13	3.00	0.13			0.63	24WF61	7.02	0.59	4.15	15.1%
				Bottom	2.00	0.13	3.00	0.06			0.44		7.02	0.59	4.15	10.5%
31	S1	FB 1 & FB 2	8' East of FB 1	Top	1.00	0.13	2.00	0.03			0.19		7.02	0.59	4.15	4.5%
				Bottom	2.00	0.06	2.00	0.06			0.25	24WF61	7.02	0.59	4.15	6.0%
31	S13	FB 1 & FB 2	11.5' East of FB 1	Top	3.30	0.06					0.21	24WF61	7.02	0.59	4.15	5.0%
				Bottom	3.30	0.12					0.40		7.02	0.59	4.15	9.7%
31	S13	FB 1 & FB 2	7' West of FB 2	Top	2.00	0.13					0.25	24WF61	7.02	0.59	4.15	6.0%
				Bottom	3.30	0.09					0.30		7.02	0.59	4.15	7.2%
31	S1	FB 2 & FB 3	7' West of FB 3	Top	3.00	0.19					0.56	24WF61	7.02	0.59	4.15	13.6%
				Bottom	3.30	0.28					0.92		7.02	0.59	4.15	22.2%
31	S13	FB 2 & FB 3	14' East of FB 2	Top	3.30	0.13	3.30	0.09			0.72	24WF61	7.02	0.59	4.15	17.4%
				Bottom	0.19	0.59	3.11	0.40	3.30	0.17	1.93		7.02	0.59	4.15	46.5%
31	S1	FB 4 & FB 5	4' West of FB 5	Top	3.30	0.19					0.62	24WF61	7.02	0.59	4.15	14.9%
				Bottom	2.00	0.06					0.13		7.02	0.59	4.15	3.0%
31	S13	FB 4 & FB 5	5' West of FB 5	Top	2.00	0.13					0.25	24WF61	7.02	0.59	4.15	6.0%
				Bottom	3.00	0.22					0.65		7.02	0.59	4.15	15.6%
31	S13	FB 6 & FB 7	3.5' West of FB 7	Top	2.00	0.13	3.30	0.13			0.66	24WF61	7.02	0.59	4.15	16.0%
				Bottom	3.30	0.15	0.13	0.59	3.18	0.37	1.76		7.02	0.59	4.15	42.5%
31	S1	FB 8 & FB 9	4' East of FB 8	Bottom	3.30	0.09	2.00	0.12			0.54	24WF61	7.02	0.59	4.15	13.1%
31	S1	FB 9 & FB 10	5' West of FB 10	Top	3.00	0.19					0.56	24WF61	7.02	0.59	4.15	13.6%
				Bottom	3.30	0.09					0.30		7.02	0.59	4.15	7.2%
31	S13	FB 9 & FB 10	5.5' West of FB 10	Top	3.30	0.13					0.41	24WF61	7.02	0.59	4.15	9.9%
				Bottom	3.30	0.15					0.51		7.02	0.59	4.15	12.2%
32	S1	FB 10 & FB 9	At mid-panel	Bottom	3.30	0.09					0.30	24WF61	7.02	0.59	4.15	7.2%
32	S13	FB 10 & FB 9	5.5' West of FB 9	Top	3.30	0.03	3.30	0.06			0.31	24WF61	7.02	0.59	4.15	7.5%
				Bottom	3.30	0.22					0.71		7.02	0.59	4.15	17.2%
32	S1	FB 6 & FB 5	5' West of FB 5	Top	3.30	0.19					0.62	24WF61	7.02	0.59	4.15	14.9%
				Bottom	3.30	0.09					0.30		7.02	0.59	4.15	7.2%
32	S13	FB 6 & FB 5	3' West of FB 5	Top	3.30	0.16					0.52	24WF61	7.02	0.59	4.15	12.4%
32	S1	FB 4 & FB 3	8' East of FB 4	Top	3.30	0.09					0.31	24WF61	7.02	0.59	4.15	7.5%
				Bottom	2.00	0.15	1.30	0.06			0.39		7.02	0.59	4.15	9.4%
32	S13	FB 3 & FB 2	10' East of FB 3	Top	2.00	0.13					0.25	Plate Girder	8.13	0.50	4.06	6.2%
				Bottom	3.00	0.25					0.75		9.00	0.75	6.75	11.1%
32	S1	FB 1 & FB 0	4' East of FB 1	Top	3.30	0.06	3.30	0.06			0.41	24WF61	7.02	0.59	4.15	9.9%
				Bottom	3.30	0.13	3.30	0.08			0.67		7.02	0.59	10.90	6.2%
Span 32, S1 bottom flange has a 9" x 3/4" cover plate																
32	S1	FB 1 & FB 0	At mid-panel	Top	3.30	0.08	3.00	0.09			0.54	24WF61	7.02	0.59	4.15	13.0%
				Bottom	3.30	0.11	2.00	0.13	1.00	0.31	1.02		7.02	0.59	10.90	9.3%
					3.00	0.03										
Span 32, S1 bottom flange has a 9" x 3/4" cover plate																
32	S1	FB 1 & FB 0	4' West of FB 0	Top	3.00	0.19					0.56	24WF61	7.02	0.59	4.15	13.6%
				Bottom	3.00	0.19	1.25	0.06	4.00	0.06	0.89		7.02	0.59	10.90	8.2%
Span 32, S1 bottom flange has a 9" x 3/4" cover plate																

Calculated By: EB & SD

Bridge No: 03819

Checked By: JK

Stringer Top and Bottom Flange Section Losses

Span	Stringer	Between Floorbeams	Location	Top or Bottom Flange	Section Loss							Original Flange Size				SL %
					Area 1		Area 2		Area 3		Area (in^2)	Beam Size	Width (in)	Thick. (in)	Area (in^2)	
					Width (in)	Depth (in)	Width (in)	Depth (in)	Width (in)	Depth (in)						
33	S1	FB 2 & FB 3	4' West of FB 3	Top	3.00	0.22					0.66	24WF61	7.02	0.59	4.15	15.8%
				Bottom	1.50	0.40	1.50	0.59			1.49		7.02	0.59	4.15	35.9%
34	S1	FB 1 & FB 2	At mid-panel	Top	3.00	0.13					0.38	24WF61	7.02	0.59	4.15	9.0%
				Bottom	3.30	0.22					0.71		7.02	0.59	4.15	17.2%
34	S1	FB 1 & FB 2	2' East of diaph	Top	3.00	0.09					0.28	24WF61	7.02	0.59	4.15	6.8%
				Bottom	3.00	0.15					0.46		7.02	0.59	4.15	11.1%
34	S1	FB 1 & FB 2	±7' West of FB 2	Top	2.00	0.13					0.25	24WF61	7.02	0.59	4.15	6.0%
34	S1	FB 2 & FB 3	4' West of FB 3	Top	3.30	0.13					0.41	24WF61	7.02	0.59	4.15	9.9%
				Bottom	3.30	0.22					0.71		7.02	0.59	4.15	17.2%
35	S1	FB 0 & FB 1	3' East of FB 0	Bottom	3.30	0.22					0.71	24WF61	7.02	0.59	4.15	17.2%
35	S1	FB 1 & FB 2	5' East of FB 1	Top	3.30	0.15	3.30	0.15			1.01	24WF61	7.02	0.59	4.15	24.4%
				Bottom	3.30	0.09	3.30	0.15			0.81		7.02	0.59	4.15	19.4%
35	S1	FB 1 & FB 2	4' West of FB 2	Top	1.50	0.19					0.28	24WF61	7.02	0.59	4.15	6.8%
				Bottom	3.30	0.12					0.40		7.02	0.59	4.15	9.7%
36	S1	FB 2 & FB 3	4' West of FB 3	Bottom	1.00	0.40	2.30	0.28			1.04	24WF61	7.02	0.59	4.15	25.2%
36	SB9	FB 0 & FB 1	6.5' West of FB 1	Top	3.94	0.19	3.94	0.13			1.23	Plate Girder	8.25	0.63	5.16	23.9%
				Bottom	4.31	0.13	3.69	0.44	0.63	0.63	2.55		9.00	0.63	5.63	45.3%
Span 36, SB9 top and bottom flanges field measured to be 5/8" thick																

Notes:

1. Spans 6-21 stringers consist of 24WF61 (for superelevation ≤1/8"/ft) and welded plate girders with 8¼" x ½" top flange, 9" x ¾" bottom flange and 24" x ⅜" web plate (for superelevation >1/8"/ft).
2. Spans 22-25 and 29-32 stringers consist of 24WF61 (for superelevation ≤1/8"/ft) and welded plate girders with 8⅛" x ½" top flange, 9" x ¾" bottom flange and 24" x ⅜" web plate (for superelevation >1/8"/ft).
3. Spans 26-28 fascia stringers consist of 24WF76 and interior stringers consist of 24WF84.
4. Spans 33-36 and 35B stringers consist of 24WF61 (for superelevation ≤1/8"/ft) and welded plate girders with 8¼" x ½" top flange, 9" x ¾" bottom flange and 24" x ⅜" web plate (for superelevation >1/8"/ft).
5. Spans 34B and 36B stringers consist of 24WF68 (for superelevation ≤1/8"/ft) and welded plate girders with 8¼" x ½" top flange, 9" x ⅞" bottom flange and 24" x ⅜" web plate (for superelevation >1/8"/ft).
6. Section losses that do not extend between quarter points between floorbeams are less critical and were not included unless section loss to either top or bottom flange is greater than 10%.
7. Section loss areas between 5% and 25% are highlighted yellow and greater than or equal to 25% are highlighted red

Calculated By: BM
Checked By: EG

Bridge No:	03819

Note: Section loss areas greater than 5% are included in this table.
Pitting loss depth multiplied by 1/2 to get average section loss depth. Blue denotes changes since the 2019 inspection.

Girder Top Flange Section Losses

Span	Girder	Location	Section Loss			Original Size				SL %
						Cover Plates		Angles		
			Width (in)	Depth (in)	Area (in^2)	Width (in)	Thickness (in)	Area (in^2)	Total Area (in^2)	
8	1	East of FB 9-3	20.00	0.19	3.75	20	1.88	22.80	60.3	6.2%
9	2	East of FB 9-6	15.00	0.22	4.03	20	2.00	22.80	62.8	6.4%
			4.00	0.19						
10	2	Between FB 10-1 & FB 10-2	20.00	0.16	3.13	20	0.75	22.80	37.8	8.3%
10	2	East of FB 10-2	20.00	0.13	2.50	20	1.25	22.80	47.8	5.2%
10	2	West of FB 10-3	20.00	0.13	2.50	20	1.25	22.80	47.8	5.2%
10	2	Between FB 10-3 & FB 10-4	15.00	0.25	3.75	20	0.75	22.80	37.8	9.9%
10	2	Between FB 10-4 & FB 10-5	15.00	0.25	3.75	20	0.75	22.80	37.8	9.9%
12	2	West of FB 13-3	17.50	0.19	3.28	20	0.75	30.00	45.0	7.3%
12	2	East of FB 13-4	12.00	0.25	3.00	20	2.88	30.00	87.5	3.4%
18	2	West of FB 18-6	14.00	0.16	2.19	20	0.69	22.80	36.55	6.0%

Calculated By: SD, EB, IS
Checked By: JK

Bridge No: 03819

Note: Section loss areas greater than 5% are highlighted.
Pitting loss depth multiplied by 1/2 to get average section loss depth.

Floorbeam Top and Bottom Flange Section Losses

Span	Floorbeam	Bay	Top or Bot Flange	Section Loss Width (in)	Section Loss Depth (in)	Section Loss Area (in^2)	Original Size Width (in)	Original Size Thickness (in)	Original Size Area (in^2)	SL %	Comments
6-21	Random	Cantilever	Bottom	9.00	0.19	1.69	18	1.00	18.00	9.4%	General note adj to stiff's; worst case
6	7-1	1-3	Bottom	8.81	0.25	2.20	18	1.38	24.75	8.9%	
6	7-1	2	Bottom	17.63	0.13	2.20	18	1.38	24.75	8.9%	At elbow
6	7-1	4-9	Top	6.00	0.13	0.75	18	1.38	24.75	3.0%	General note
6	7-1	4-9	Bottom	8.81	0.13	1.10	18	1.38	24.75	4.5%	General note
6	7-3	12	Bottom	18.00	0.13	2.25	18	1.50	27	8.3%	At elbow
6	7-3	13	Top	8.81	0.19	1.65	18	1.50	27.00	6.1%	
6	7-4	13	Top	8.81	0.13	1.10	18	1.38	24.75	4.5%	
6	7-4	12	Bottom	18.00	0.13	2.25	18	1.38	24.75	9.1%	At elbow
7	7-8	12	Bottom	18.00	0.06	1.13	18	1.13	20.25	5.6%	
7	7-9	7	Bottom	4.00	0.06	0.25	18	1.13	20.25	1.2%	
7	7-9	11-12	Top	6.00	0.09	0.56	18	1.13	20.25	2.8%	
7	7-9	11-12	Bottom	4.00	0.13	0.50	18	1.13	20.25	2.5%	
8	9-1	2	Bottom	9.00 9.00	0.09 0.13	1.97	18	1.38	24.75	8.0%	
8	9-1	11-12	Top	4.00	0.09	0.38	18	1.38	24.75	1.5%	
8	9-1	11-12	Bottom	4.50	0.13	0.56	18	1.38	24.75	2.3%	
9	9-5	1-2	Bottom	8.81	0.06	0.55	18	1.25	22.50	2.4%	At elbow
9	9-7	1-2	Top	4.00	0.13	0.50	18	1.38	24.75	2.0%	
9	9-7	1-3	Bottom	8.81	0.03	0.28	18	1.38	24.75	1.1%	Random areas of 1/16"D pitting
9	9-7	12	Top	4.00	0.13	0.50	18	1.38	24.75	2.0%	
10	10-1	1	Bottom	6.00	0.19	1.13	18	1.25	22.50	5.0%	
10	10-1	2	Bottom	8.81	0.06	0.55	18	1.25	22.50	2.4%	At elbow
10	10-1	4-9	Top	17.63	0.06	1.10	18	1.25	22.50	4.9%	
10	10-1	12	Top	4.00	0.13	0.50	18	1.25	22.50	2.2%	
11	11-4	2-3	Top	7.00	0.19	1.31	18	1.25	22.50	5.8%	
11	11-4	12	Top	3.50	0.13	0.44	18	1.25	22.50	1.9%	
12	13-1	1-2	Top	5.00	0.13	0.63	18	1.25	22.50	2.8%	
12	13-1	1	Bottom	6.00	0.13	0.75	18	1.25	22.50	3.3%	
12	13-1	2	Bottom	6.00 7.00	0.13 0.25	2.50	18	1.25	22.50	11.1%	At Stringer S2
12	13-4	10	Bottom	8.81	0.25	2.20	18	1.00	18.00	12.2%	(2) areas, worst case
12	13-4	11-12	Top	2.50 8.00	0.31 0.41	4.03	18	1.00	18.00	22.4%	
12	13-6	1	Top	2.00	0.13	0.25	18	1.00	18.00	1.4%	
15	15-7	10-12	Bottom	8.00	0.03	0.25	18	1.25	22.50	1.1%	
15	15-9	1-3	Bottom	8.50	0.06	0.53	18	1.38	24.75	2.1%	Random areas of 1/8"D pitting
15	15-9	12	Bottom	8.00	0.25	2.00	18	1.38	24.75	8.1%	
16	16-1	4-9	Bottom	8.81	0.06	0.55	18	1.38	24.75	2.2%	Areas of 1/8"D pitting
16	16-1	11-12	Bottom	8.81	0.06	0.55	18	1.38	24.75	2.2%	Areas of 1/8"D pitting
16	16-4	12	Bottom	8.00	0.13	1.00	18	1.38	24.75	4.0%	
17	16-6	2	Bottom	9.00	0.13	1.13	18	1.38	24.75	4.5%	
17	17-5	4	Top	2.50	0.16	0.39	18	1.38	24.75	1.6%	
17	17-5	4-9	Bottom	8.81	0.06	0.55	18	1.38	24.75	2.2%	General Note
18	18-1	4	Top	3.00	0.22	0.66	18	1.38	24.75	2.7%	
18	18-1	5	Top	2.00	0.31	0.63	18	1.38	24.75	2.5%	
18	18-1	12	Bottom	4.00 6.00	0.22 0.13	0.88 0.75	18	1.38	24.75	6.6%	
21	21-5	5 & 8	Top	18.00	0.13	2.25	18	1.38	24.75	9.1%	
22-25, 29-32	Random	Cantilever	Bottom	9.00	0.19	1.69	18	1.50	27.00	6.3%	General note adj to stiff's; worst case
22	0	11	Bottom	5.00	0.19	0.94	18	1.63	29.25	3.2%	***Spans 22-32 FB sizes taken from 2000 Load Rating Report except for span 27 FB's 20A/B and 26A/B which were taken from the 1971 rehab plans**
22	0	12	Top	3.00	0.13	0.38	18	1.63	29.25	1.3%	
22	0	12	Bottom	5.00	0.38	1.88	18	1.63	29.25	6.4%	
22	6	5	Bottom	2.00	0.25	0.50	18	1.50	27.00	1.9%	
23	10	1	Top	2.00	0.19	0.38	18	1.50	27.00	1.4%	
23	10	2	Bottom	7.00	0.13	0.88	18	1.50	27.00	3.2%	
23	10	11	Bottom	7.00	0.08	0.55	18	1.50	27.00	2.0%	
23	5	1	Bottom	8.81	0.25	2.20	18	1.50	27.00	8.2%	
23	0	2	Bottom	6.00	0.13	0.75	18	1.63	29.25	2.6%	
24	0	1	Bottom	6.00	0.25	1.50	18	1.63	29.25	5.1%	
24	0	7-8	Bottom	7.00	0.13	0.88	18	1.63	29.25	3.0%	
24	0	12	Bottom	17.63	0.25	4.41	18	1.63	29.25	15.1%	
24	7	8	Bottom	8.81	0.13	1.10	18	1.50	27.00	4.1%	
~~24~~	~~8~~	~~7~~	~~Bottom~~	~~8.81~~	~~0.06~~	~~0.55~~	~~18~~	~~1.50~~	~~27.00~~	~~2.0%~~	Not found this inspection
25	10	1	Bottom	8.75	0.31	2.73	18	1.50	27.00	10.1%	
25	9	12	Top	8.81	0.06	0.55	18	1.50	27.00	2.0%	
25	9	12	Bottom	8.81	0.25	2.20	18	1.50	27.00	8.2%	
25	7	12	Bottom	17.63	0.06	1.10	18	1.50	27.00	4.1%	Underside of the bottom flange at the end of cantilever
25	2	7	Bottom	14.00	0.19	2.63	18	1.50	27.00	9.7%	
25	1	3	Bottom	5.00	0.06	0.31	18	1.50	27.00	1.2%	
25	0	1	Top	3.00	0.13	0.38	18	1.63	29.25	1.3%	

Calculated By: SD, EB, IS
Checked By: JK

Bridge No: 03819

Note: Section loss areas greater than 5% are highlighted.
Pitting loss depth multiplied by 1/2 to get average section loss depth.

Floorbeam Top and Bottom Flange Section Losses

Span	Floorbeam	Bay	Top or Bot Flange	Section Loss Width (in)	Section Loss Depth (in)	Section Loss Area (in^2)	Original Size Width (in)	Original Size Thickness (in)	Original Size Area (in^2)	SL %	Comments
26-28	Random	Cantilever	Bottom	9.00	0.19	1.69	18	1.63	29.25	5.8%	General note adj to stiff's; worst case
26	0	10	Bottom	5.00	0.13	0.63	18	1.63	29.25	2.1%	
26	1	9	Bottom	8.00	0.22	1.75	18	1.63	29.25	6.0%	
26	4	5	Bottom	5.50	0.13	0.69	18	1.63	29.25	2.4%	
26	4	10	Bottom	2.00	0.19	0.38	18	1.63	29.25	1.3%	
26	5	1	Top	2.00	0.16	0.3125	18	1.63	29.25	1.1%	On Stringer Detail
26	5	1	Bottom	8.81	0.13	1.10	18	1.63	29.25	3.8%	
26	5	2	Bottom	8.00	0.06	0.50	18	1.63	29.25	1.7%	Below Stringer S2
26	5	12	Bottom	8.00	0.25	2.00	18	1.63	29.25	6.8%	
26	6	11	Bottom	1.50	0.13	0.19	18	1.63	29.25	0.6%	
26	6	12	Top	3.00	0.13	0.38	18	1.63	29.25	1.3%	
26	7	10	Bottom	1.50	0.13	0.19	18	1.63	29.25	0.6%	
26	9	1	Top	3.50	0.19	1.27	18	1.63	29.25	4.3%	
				0.38	1.63						
26	9	1	Bottom	8.81	0.19	1.65	18	1.63	29.25	5.6%	
26	9	11	Bottom	8.50	0.13	1.06	18	1.63	29.25	3.6%	
26	9	12	Bottom	8.50	0.19	1.59	18	1.63	29.25	5.4%	
26	10	9	Bottom	7.00	0.13	0.88	18	1.63	29.25	3.0%	
27	13	1	Top	2.00	0.13	0.25	18	1.63	29.25	0.9%	
27	13	1	Bottom	6.00	0.13	0.75	18	1.63	29.25	2.6%	
27	13	9-10	Bottom	9.00	0.13	1.13	18	1.63	29.25	3.8%	
27	13	12-13	Top	2.50	0.19	0.67	18	1.63	29.25	2.3%	
				0.13	1.63						
27	13	12-13	Bottom	9.00	0.16	1.41	18	1.63	29.25	4.8%	
~~27~~	~~14~~	~~6~~	~~Bottom~~	~~3.00~~	~~0.13~~	~~0.38~~	~~18~~	~~1.63~~	~~29.25~~	~~1.3%~~	Not found this inspection
27	17	1	Bottom	8.44	0.19	2.19	18	1.63	29.25	7.5%	
				0.38	1.63						
27	17	Random	Bottom	8.00	0.13	1.00	18	1.63	29.25	3.4%	
27	17	12	Top	3.00	0.13	0.58	18	1.63	29.25	2.0%	
				0.13	1.63						
27	17	12	Bottom	8.81	0.13	1.10	18	1.63	29.25	3.8%	
27	20A	10-12	Bottom	11.75	0.25	2.94	24	1.00	24.00	12.2%	
27	20B	1	Bottom	11.63	0.25	3.03	24	1.00	24.00	12.6%	
				0.13	1.00						
27	20B	1	Top	22.00	0.25	5.50	24	1.63	39.00	14.1%	
27	20B	10-12	Bottom	11.75	0.25	2.94	24	1.00	24.00	12.2%	
27	23	12	Bottom	9.00	0.13	1.94	18	1.63	29.25	6.6%	
				0.50	1.63						
27	26A	1	Top	14.00	0.19	2.63	24	1.63	39.00	6.7%	
27	26A	6-8	Top	20.00	0.06	1.25	24	1.63	39.00	3.2%	Random areas of 1/8"D pitting
27	26A & B	Random	Bottom	11.00	0.13	1.38	24	1.00	24.00	5.7%	Random areas of 1/8" section loss
27	29	1	Top	0.13	1.63	0.33	18	1.63	29.25	1.1%	
				1.00	0.13						
27	29	12	Top	2.00	0.13	0.25	18	1.63	29.25	0.9%	
27	29	12	Bottom	0.19	1.63	0.87	18	1.63	29.25	3.0%	
				3.00	0.19						
27	33	1	Top	0.13	1.63	0.20	18	1.63	29.25	0.7%	
27	33	12	Top	4.00	0.19	0.95	18	1.63	29.25	3.3%	
				0.13	1.63						
28	37	11	Bottom	0.13	1.63	0.33	18	1.63	29.25	1.1%	
				1.00	0.13						
28	37	12	Bottom	9.00	0.19	1.69	18	1.63	29.25	5.8%	
28	37	12	Top	2.00	0.19	1.19	18	1.63	29.25	4.1%	
				0.50	1.63						
28	39	12	Bottom	8.00	0.31	2.50	18	1.63	29.25	8.5%	
28	41	1	Top	1.00	0.13	0.13	18	1.63	29.25	0.4%	
28	41	11	Bottom	10.00	0.25	3.56	18	1.63	29.25	12.2%	
				8.50	0.13						
28	41	12	Top	1.00	0.13	0.33	18	1.63	29.25	1.1%	
				0.13	1.63						
28	46	6-7	Bottom	0.19	1.63	0.30	18	1.63	29.25	1.0%	
29	0	12	Bottom	8.81	0.25	2.20	18	1.63	29.25	7.5%	
29	3	12	Bottom	8.81	0.25	2.20	18	1.50	27.00	8.2%	
30	8	12	Top	8.81	0.06	0.55	18	1.50	27.00	2.0%	
30	2	1	Top	5.00	0.19	1.50	18	1.50	27.00	5.6%	
				0.13	1.50						
				1.00	0.19						
				0.13	1.50						
30	2	1	Bottom	8.81	0.06	0.55	18	1.50	27.00	2.0%	

Calculated By: SD, EB, IS
Checked By: JK

Bridge No: 03819

Note: Section loss areas greater than 5% are highlighted.
Pitting loss depth multiplied by 1/2 to get average section loss depth.

Floorbeam Top and Bottom Flange Section Losses

Span	Floorbeam	Bay	Top or Bot Flange	Section Loss Width (in)	Section Loss Depth (in)	Section Loss Area (in^2)	Original Size Width (in)	Original Size Thickness (in)	Original Size Area (in^2)	SL %	Comments
31	8	1-2	Top	4.00	0.31	2.47	18	1.50	27.00	9.1%	
				0.19	1.50						
				3.00	0.25						
				0.13	1.50						
31	8	1-2	Bottom	9.00	0.28	3.28	18	1.50	27.00	12.2%	
				6.00	0.13						
32	5	2	Bottom	8.81	0.31	2.75	18	1.63	29.25	9.4%	
32	5	11	Bottom	8.81	0.38	3.30	18	1.63	29.25	11.3%	
32	2	12	Top	4.00	0.13	0.94	18	1.63	29.25	3.2%	
				14.00	0.03						
32	0	1	Bottom	8.81	0.06	0.55	18	0.88	15.75	3.5%	
32	0	2	Top	3.00	0.06	0.19	18	0.88	15.75	1.2%	
32	0	Random	Bottom	6.00	0.13	0.75	18	1.63	29.25	2.6%	General Note
32	0	Random	Top	6.00	0.13	0.75	18	1.63	29.25	2.6%	General Note
32	0	11	Bottom	18.00	0.25	4.50	18	1.63	29.25	15.4%	At elbow
32	0	13	Bottom	8.00	0.13	1.00	18	0.88	15.75	6.3%	
32	0	13	Top	8.00	0.13	1.00	18	0.88	15.75	6.3%	
33-36	Random	Cantilever	Bottom	9.00	0.19	1.69	18	0.88	15.75	10.7%	General note adj to stiff's; worst case
33	0	1	Top	3.00	0.44	1.31	24	1.00	24.00	5.5%	
33	0	2-4	Top	5.00	0.13	0.63	24	1.00	24.00	2.6%	
33	0	1, 3-4	Bottom	9.00	0.13	1.13	24	1.00	24.00	4.7%	
33	0	2	Bottom	6.00	0.13	0.75	24	1.00	24.00	3.1%	
33	0	11-13	Top	5.00	0.13	0.63	24	1.00	24.00	2.6%	
33	0	13	Bottom	23.50	0.19	4.41	24	1.00	24.00	18.4%	
33	0	13	Bottom	12.00	0.06	3.00	24	1.00	24.00	12.5%	At end of horiz G PL
				12.00	0.19						
33	0	South end	Bottom	4.00	0.44	1.75	24	1.00	24.00	7.3%	
33	1	North end	Bottom	5.00	0.06	0.31	24	1.00	24.00	1.3%	
33	3	2	Top	3.00	0.06	0.19	24	1.75	42.00	0.4%	
33	3	2	Bottom	3.00	0.06	0.19	24	1.75	42.00	0.4%	
33	3	14	Bottom	24.00	0.25	6.00	24	1.75	42.00	14.3%	Full width at bottom (24")
34	0	9-10	Top	8.00	0.31	2.50	18	0.88	15.75	15.9%	
34	3	1	Bottom	8.75	0.25	2.19	18	0.88	15.75	13.9%	
34	3	3	Top	5.00	0.03	0.16	18	0.88	15.75	1.0%	
34	3	3	Bottom	8.75	0.25	2.19	18	0.88	15.75	13.9%	
34	3	4	Top	3.00	0.06	0.19	18	0.88	15.75	1.2%	
34	3	4	Bottom	8.75	0.06	0.55	18	0.88	15.75	3.5%	
34	3	10	Bottom	3.00	0.06	0.19	18	0.88	15.75	1.2%	
34	3	SB4	Bottom	4.00	0.06	0.25	16	0.75	12.00	2.1%	
34	3	SB5	Bottom	4.00	0.13	0.50	16	0.75	12.00	4.2%	Near bend
35	0	3	Top	4.00	0.03	0.13	18	0.88	15.75	0.8%	
35	0	3	Bottom	8.75	0.06	2.19	18	0.88	15.75	13.9%	
				8.75	0.19						
35	3	SB7	Top	2.00	0.06	0.13	16	0.75	12.00	1.0%	
36	0	SB8	Top	2.00	0.13	0.25	16	0.75	12.00	2.1%	
36	3	1-2	Top	8.75	0.19	1.64	18	1.00	18.00	9.1%	
36	3	1-2	Bottom	8.75	0.50	4.38	18	1.00	18.00	24.3%	
36	3	3-4	Top	4.00	0.13	0.50	18	1.00	18.00	2.8%	
36	3	3-4	Bottom	7.00	0.38	2.63	18	1.00	18.00	14.6%	
36	3	10-13	Top	8.75	0.06	0.55	18	1.00	18.00	3.0%	
36	3	10-13	Bottom	8.75	0.06	0.55	18	1.00	18.00	3.0%	
36	3	SB6	Bottom	3.00	0.06	0.19	16	0.75	12.00	1.6%	Random areas of 1/8"D pitting
36	3	SB8	Top	2.00	0.06	0.13	16	0.75	12.00	1.0%	
36	3	SB8	Bottom	7.00	0.13	0.88	16	0.75	12.00	7.3%	

Calculated By: EB,IS,SD,MM

Bridge No: 03819

Checked By: JK

Riveted Truss Spans 22-25 & 29-32

Truss Member Section Loss Summary for Losses Greater Than 5% (Zero Force Members Not Included)

Span	Truss	Member	Section Loss Area (in^2)	Original Gross Area (in^2)	Gross Area SL %	Net Area (in^2)	Net Area SL %	Comments
22	North	U0L0	1.56	23.40	6.7%	N/A	N/A	Above L0 gusset plate
22	North	L0L1	3.38	48.80	6.9%	39.30	8.6%	Section 1-1
22	North	L6L7	2.06	43.00	4.8%	35.00	5.9%	Section 3-3
22	North	L8L9	4.06	66.15	6.1%	N/A	N/A	Section 4-4
22	North	L9L10	3.45	66.15	5.2%	N/A	N/A	Section 5-5
22	South	L0L1	3.06	48.80	6.3%	39.30	7.8%	Note 5 on truss elevation sheet
22	South	U0L0	2.81	23.40	12.0%	N/A	N/A	Above L0 gusset plate
22	South	L7L8	2.56	43.00	6.0%	35.00	7.3%	Adjacent to L7 gusset plate
23	North	U0L0	1.41	23.40	6.0%	N/A	N/A	Above L0 gusset plate
23	North	U0L0	2.25	23.40	9.6%	N/A	N/A	Near L0 gusset plate
23	North	L0L1	4.87	48.80	10.0%	39.30	12.4%	Section 2-2
23	North	U6L6	1.25	23.40	5.3%	N/A	N/A	Above L6 gusset plate
23	North	U8L8	2.63	23.40	11.2%	N/A	N/A	Above L8 gusset plate
24	North	U0L0	1.19	23.40	5.1%	N/A	N/A	Section 1-1 (inside node)
24	North	U2L2	1.88	23.40	8.0%	N/A	N/A	Above L2 gusset plate
24	North	U4L4	1.88	23.40	8.0%	N/A	N/A	Above L4 gusset plate
24	North	U6L6	2.38	23.40	10.1%	N/A	N/A	Above L6 gusset plate
24	South	L6L7	3.00	43.00	7.0%	35.00	8.6%	Along L7 gusset plate
25	North	L0L1	2.59	48.80	5.3%	39.30	6.6%	Section 2-2
25	North	U0L0	3.72	23.40	15.9%	N/A	N/A	Above L0 gusset plate
25	North	U2L2	1.41	23.40	6.0%	N/A	N/A	Above L2 gusset plate
25	North	U4L4	1.41	23.40	6.0%	N/A	N/A	Above L4 gusset plate
25	North	U3L4	1.13	19.80	5.7%	17.30	6.5%	Above L4 gusset plate
25	South	U0L0	1.88	23.40	8.0%	N/A	N/A	Above L0 gusset plate
25	South	L0L1	2.80	48.80	5.7%	39.30	7.1%	Section 1-1
25	South	U3L4	2.59	19.80	13.1%	17.30	15.0%	Above L4 gusset plate
25	South	L4L5	3.31	72.80	4.6%	59.30	5.6%	Adjacent to L5 gusset plate
25	South	L5L6	5.97	72.80	8.2%	59.30	10.1%	Adjacent to L5 gusset plate
25	South	U6L6	1.44	23.40	6.1%	N/A	N/A	Above L6 gusset plate
25	South	L6L7	2.44	43.00	5.7%	35.00	7.0%	Adjacent to L7 gusset plate
29	North	U0L0	1.22	23.40	5.2%	N/A	N/A	Above L0 gusset plate
29	North	L3L4	2.50	72.80	3.4%	59.30	4.2%	Adjacent to L4 gusset plate
29	North	L4L5	2.25	72.80	3.1%	59.30	3.8%	Adjacent to L4 gusset plate
29	South	U0L0	1.94	23.40	8.3%	N/A	N/A	Above L0 gusset plate
30	North	U0L0	2.34	23.4	10.0%	N/A	N/A	Adjacent to L0 gusset plate at stiffened area for past bearing replacement
30	North	L0L1	2.72	48.80	5.6%	39.30	6.9%	Adjacent to L1 gusset plate
30	North	L6L7	4.02	72.80	5.5%	59.30	6.8%	Adjacent to L7 gusset plate
30	North	U8L8	1.88	23.40	8.0%	N/A	N/A	Above L8 gusset plate
30	South	U0L0	1.41	23.40	6.0%	N/A	N/A	Above L0 gusset plate
30	South	L1L2	2.25	48.80	4.6%	39.30	5.7%	Adjacent to L1 gusset plate
31	North	U0L0	1.19	23.40	5.1%	N/A	N/A	Above L0 gusset plate
31	North	L0L1	0.61	48.80	1.2%	39.30	1.6%	At 4'-7" west of L0 gusset plate
31	South	L0L1	2.48	48.80	5.1%	39.30	6.3%	Section 1-1 Adjacent to L0 gusset plate
31	South	U0L0	1.97	23.40	8.4%	N/A	N/A	Above L0 gusset plate At stiffened area for past bearing replacement
32	North	U0L0	2.38	23.40	10.1%	N/A	N/A	Below U0 gusset plate
32	North	U0L0	1.31	23.40	5.6%	N/A	N/A	Above L0 gusset plate
32	North	L1L2	2.09	48.80	4.3%	39.30	5.3%	Adjacent to L1 gusset plate
32	South	U0L0	2.50	23.40	10.7%	N/A	N/A	Above L0 gusset plate
32	South	U0L0	1.38	23.40	5.9%	N/A	N/A	Below U0 gusset plate

The following losses are for typical areas at random locations throughout the bottom chord. The percentages are for worst case assuming all typical losses are in the same plane. However, these losses are intermittent and typically not in the same plane. See Spans 22-25 & 29-32 - Typical Truss Bottom Chord Section Losses field sheet for further information.

Note: Pitting loss depth multiplied by 1/2 to get average section loss depth. Blue denotes changes since the 2019 inspection.

22-25 & 29-32	North & South	L0L2	3.23	48.80	6.6%	39.30	8.2%	
22-25 & 29-32	North & South	L2L6	3.23	72.80	4.4%	59.30	5.5%	
22-25 & 29-32	North & South	L6L8	3.28	43.00	7.6%	35.00	9.4%	
22-25 & 29-32	North & South	L8L10	3.11	66.15	4.7%	N/A	N/A	

Calculated By: EB
Checked By: JK

Bridge No: 03819

Truss Bottom Chord Gusset Plate Section Loss Summary for Even Numbered Nodes (Riveted Truss Spans 22-25 & 29-32)

Span	Truss	Node	Plate	Axis	Section Loss									Original Gusset Plate Size			SL %
					Area 1		Area 2		Area 3		Area 4		Area (in^2)	Length (in)	Thickness (in)	Area (in^2)	
					Length / Height (in)	Depth (in)	Length / Height (in)	Depth (in)	Length / Height (in)	Depth (in)	Length / Height (in)	Depth (in)					
22	North	L0	North	Horiz.	54.25	3/32	1.00	1/16					5.15	Multiple	Multiple	59.17	8.7%
22	North	L0	North	Vert.	1.00	1/8	2.00	3/32	37.00	1/16			2.63	Multiple	Multiple	65.84	4.0%
22	North	L0	South	Horiz.	31.00	1/16	1.00	1/16	25.00	1/8			5.13	Multiple	Multiple	59.17	8.7%
22	North	L0	South	Vert.	36.00	1/16	11.00	1/16	3.00	1/16			3.13	Multiple	Multiple	65.84	4.7%
22	North	L2	North	Horiz.	34.00	1/8	0.50	1/16	2.00	5/64			4.44	76.00	1/2	38.00	11.7%
22	North	L2	North	Vert.	61.50	5/64							4.80	61.50	1/2	30.75	15.6%
22	North	L2	South	Horiz.	76.00	1/16	0.50	1/16					4.78	76.00	1/2	38.00	12.6%
22	North	L2	South	Vert.	40.00	1/16	3.00	1/16	4.00	1/8			3.19	61.50	1/2	30.75	10.4%
22	North	L4	North	Horiz.	6.00	1/8	6.00	1/8					1.50	63.50	1/2	31.75	4.7%
22	North	L4	North	Vert.	24.00	1/16	4.00	1/8					2.00	53.50	1/2	26.75	7.5%
22	North	L4	South	Horiz.	63.50	1/16	0.50	3/64					3.99	63.50	1/2	31.75	12.6%
22	North	L4	South	Vert.	24.00	1/16	4.00	1/8	3.00	1/16			2.19	53.50	1/2	26.75	8.2%
22	North	L6	North	Horiz.	12.00	3/64	48.00	3/64	1.00	1/16	1.00	1/16	2.94	74.50	9/16	41.91	7.0%
22	North	L6	North	Vert.	40.00	1/16	2.50	3/64	4.00	1/8			3.12	57.50	9/16	32.34	9.6%
22	North	L6	South	Horiz.	74.50	1/16							4.66	74.50	9/16	41.91	11.1%
22	North	L6	South	Vert.	32.00	1/16	3.00	1/16	5.00	5/32			2.97	57.50	9/16	32.34	9.2%
22	North	L8	North	Horiz.	18.00	3/64	1.50	3/32	1.00	1/16	35.00	1/8	7.11	91.75	3/4	68.81	10.3%
					18.00	3/32											
22	North	L8	North	Vert.	69.50	3/32	3.00	1/8	9.00	1/16			7.45	69.50	3/4	52.13	14.3%
22	North	L8	South	Horiz.	3.00	3/8	39.00	5/32	30.00	3/32	17.00	1/32	10.56	91.75	3/4	68.81	15.3%
22	North	L8	South	Vert.	69.50	1/16	4.00	5/32					4.97	69.50	3/4	52.13	9.5%
22	North	L10	North	Horiz.	44.00	7/64	2.00	3/32	44.00	5/32	5.00	1/8	13.13	Multiple	Multiple	168.78	7.8%
					10.00	1/16											
22	North	L10	North	Vert.	10.00	1/8	4.00	5/32	2.50	1/16			2.03	Multiple	Multiple	110.98	1.8%
22	North	L10	South	Horiz.	44.00	1/4	23.00	1/16	44.00	5/64	18.00	1/16	18.33	Multiple	Multiple	168.78	10.9%
					17.00	5/64											
22	North	L10	South	Vert.	1.00	1/16	4.00	1/4					1.06	Multiple	Multiple	110.98	1.0%
22	South	L0	North	Horiz.	54.25	5/64	3.00	3/32	1	3/16			4.71	Multiple	Multiple	59.17	8.0%
22	South	L0	North	Vert.	36.00	3/32	5.00	3/32	2.00	5/64			4.00	Multiple	Multiple	65.84	6.1%
22	South	L0	South	Horiz.	3.00	7/32	38.00	3/32	12.00	1/4	2.00	1/16	7.34	Multiple	Multiple	59.17	12.4%
22	South	L0	South	Vert.	36.00	1/16	2.50	5/64	2.00	3/32			2.63	Multiple	Multiple	65.84	4.0%
22	South	L2	North	Horiz.	69.00	1/16	1.00	5/32	3.00	1/16			4.66	76.00	1/2	38.00	12.3%
22	South	L2	North	Vert.	35.00	5/32	4.00	1/16	6.00	1/8			6.47	61.50	1/2	30.75	21.0%
22	South	L2	South	Horiz.	76.00	1/16	1.00	1/16	1.00	1/16			4.88	76.00	1/2	38.00	12.8%
22	South	L2	South	Vert.	61.50	1/16	1.00	1/16					3.91	61.50	1/2	30.75	12.7%
22	South	L4	North	Horiz.	8.00	7/32	55.50	3/64	0.50	1/16	1.00	1/16	4.45	63.50	1/2	31.75	14.0%
22	South	L4	North	Vert.	40.00	1/16	3.00	7/32	4.00	1/8			3.66	53.50	1/2	26.75	13.7%
22	South	L4	South	Horiz.	63.50	3/64	1.00	1/16	0.50	1/16			3.07	63.50	1/2	31.75	9.7%
22	South	L4	South	Vert.	36.00	1/16	4.00	3/16	0.50	3/64			3.02	53.50	1/2	26.75	11.3%
22	South	L6	North	Horiz.	59.50	1/16	15.00	1/8					5.59	74.50	9/16	41.91	13.3%
22	South	L6	North	Vert.	30.00	1/16	4.00	1/16	2.00	1/16			2.25	57.50	9/16	32.34	7.0%
22	South	L6	South	Horiz.	4.00	1/8	15.00	1/16					1.44	74.50	9/16	41.91	3.4%
22	South	L6	South	Vert.	15.00	1/16	4.00	1/16					1.19	57.50	9/16	32.34	3.7%
22	South	L8	North	Horiz.	91.75	3/32	1.00	1/16	1.00	1/16			8.73	91.75	3/4	68.81	12.7%
22	South	L8	North	Vert.	69.50	1/16	5.00	3/32					4.81	69.50	3/4	52.13	9.2%
22	South	L8	South	Horiz.	81.75	1/16	1.00	1/32	0.50	1/16	10.00	3/16	7.05	91.75	3/4	68.81	10.2%
22	South	L8	South	Vert.	58.00	1/16	3.00	1/16					3.81	69.50	3/4	52.13	7.3%
22	South	L10	North	Horiz.	44.00	3/32	5.00	3/32	44.00	5/64	22.00	3/32	10.09	Multiple	Multiple	168.78	6.0%
22	South	L10	North	Vert.	18.00	1/16	23.00	1/16	3.00	5/64	2.50	3/32	3.03	Multiple	Multiple	110.98	2.7%
22	South	L10	South	Horiz.	44.00	7/32	44.00	7/64					14.44	Multiple	Multiple	168.78	8.6%
22	South	L10	South	Vert.	24.00	1/32	5.00	7/64	1.50	3/64			1.37	Multiple	Multiple	110.98	1.2%

Notes:

1. Node L0 consists of (2) vertical gusset plates; 1st plate is 54¼"L x 60-7/8"H x 3/4"D and 2nd plate is 42¼"L x 46-1/8"H x 7/16"D (Length and width are reversed at bill of material in plans. Height of plates are taken from top of plate to bottom of bottom chord; i.e. ignored area that extends to bearing pin).
2. Node L10 consists of (3) vertical gusset plates; 1st plate is 104"L x 74¼"H x 3/4"D, 2nd plate is 80"L x 52¼"H x 5/8"D and 3rd plate is 72½"L x 40¼"H x 9/16"D (Height of plates are taken from top of plate to bottom of bottom chord; i.e. ignored area that extends to bearing pin).
3. If loss 'H' section loss dimensions are not noted in sketches, then the typical section loss is used for this area (4" high x 1/4" deep pitting).
4. The worst case vertical plane section loss for each gusset plate is input into this table.
5. Section loss areas between 5% and 25% are highlighted yellow and greater than or equal to 25% are highlighted red.
6. Original gusset plate sizes are taken from the truss shop drawings dated 1941.
7. Pitting loss depth multiplied by 1/2 to get average section loss depth.

Calculated By: EB
Checked By: JK

Bridge No: 03819

Truss Bottom Chord Gusset Plate Section Loss Summary for Even Numbered Nodes (Riveted Truss Spans 22-25 & 29-32)

Span	Truss	Node	Plate	Axis	Section Loss									Original Gusset Plate Size			SL %
					Area 1		Area 2		Area 3		Area 4		Area (in^2)	Length (in)	Thickness (in)	Area (in^2)	
					Length / Height (in)	Depth (in)	Length / Height (in)	Depth (in)	Length / Height (in)	Depth (in)	Length / Height (in)	Depth (in)					
23	North	L0	North	Horiz.	24.00	1/8	4.00	3/32	2.00	1/32	1.00	1/32	3.47	Multiple	Multiple	59.17	5.9%
23	North	L0	North	Vert.	37.00	1/32	5.00	1/8	2.00	1/16			1.91	Multiple	Multiple	65.84	2.9%
23	North	L0	South	Horiz.	40.00	1/16	1.50	1/8	1.50	3/32			2.83	Multiple	Multiple	59.17	4.8%
23	North	L0	South	Vert.	37.00	1/8	2.00	1/8	2.00	1/16			5.00	Multiple	Multiple	65.84	7.6%
23	North	L2	North	Horiz.	76.00	3/32	0.50	1/16	1.00	1/16			7.22	76.00	1/2	38.00	19.0%
23	North	L2	North	Vert.	48.00	1/16	2.00	3/32	5.00	3/32			3.66	61.50	1/2	30.75	11.9%
23	North	L2	South	Horiz.	67.00	3/16	1.00	5/64					12.64	76.00	1/2	38.00	33.3%
23	North	L2	South	Vert.	61.50	5/64	3.00	3/16					5.37	61.50	1/2	30.75	17.5%
23	North	L4	North	Horiz.	61.50	1/16							3.84	63.50	1/2	31.75	12.1%
23	North	L4	North	Vert.	30.00	1/16	1.50	1/16	4.00	1/8			2.47	53.50	1/2	26.75	9.2%
23	North	L4	South	Horiz.	29.00	1/32	28.00	3/32					3.53	63.50	1/2	31.75	11.1%
23	North	L4	South	Vert.	20.00	1/32	2.00	3/32	4.00	1/8			1.31	53.50	1/2	26.75	4.9%
23	North	L6	North	Horiz.	16.00	1/8	1.00	5/64					2.08	74.50	9/16	41.91	5.0%
23	North	L6	North	Vert.	55.00	5/64							4.30	57.50	9/16	32.34	13.3%
23	North	L6	South	Horiz.	67.00	3/32	0.50	1/16	0.50	3/32			6.36	74.50	9/16	41.91	15.2%
23	North	L6	South	Vert.	54.00	3/32	4.00	3/32	8.00	3/16			6.94	57.50	9/16	32.34	21.4%
23	North	L8	North	Horiz.	3.00	3/32	88.75	1/16	0.50	1/16			5.86	91.75	3/4	68.81	8.5%
23	North	L8	North	Vert.	69.50	1/16	1.00	1/16	4.00	5/32			5.03	69.50	3/4	52.13	9.7%
23	North	L8	South	Horiz.	91.75	7/64	0.50	1/16					10.07	91.75	3/4	68.81	14.6%
23	North	L8	South	Vert.	43.00	1/16	3.00	7/64	4.00	1/8			3.52	69.50	3/4	52.13	6.7%
23	South	L0	North	Horiz.	54.25	7/64							5.93	Multiple	Multiple	59.17	10.0%
23	South	L0	North	Vert.	33.00	1/8	1.00	1/16	3.00	7/64			4.52	Multiple	Multiple	65.84	6.9%
23	South	L0	South	Horiz.	54.25	3/32	54.25	1/16					8.48	Multiple	Multiple	59.17	14.3%
23	South	L0	South	Vert.	28.00	1/16	3.00	3/32	4.00	5/32	4.00	1/32	2.78	Multiple	Multiple	65.84	4.2%
23	South	L2	North	Horiz.	76.00	1/8	1.00	1/16	1.00	1/16			9.63	76.00	1/2	38.00	25.3%
23	South	L2	North	Vert.	61.50	1/16	2.00	1/8					4.09	61.50	1/2	30.75	13.3%
23	South	L2	South	Horiz.	76.00	1/32	2.00	3/64					2.47	76.00	1/2	38.00	6.5%
23	South	L2	South	Vert.	45.00	3/64	1.00	1/32	4.00	3/16			2.89	61.50	1/2	30.75	9.4%
23	South	L4	North	Horiz.	63.50	1/32	2.00	3/32					2.17	63.50	1/2	31.75	6.8%
23	South	L4	North	Vert.	44.00	3/32	2.00	1/32					4.19	53.50	1/2	26.75	15.7%
23	South	L4	South	Horiz.	35.00	3/32							3.28	63.50	1/2	31.75	10.3%
23	South	L4	South	Vert.	32.00	1/16	6.00	3/32	2.00	1/4			3.06	53.50	1/2	26.75	11.4%
23	South	L6	North	Horiz.	65.00	1/16	1.00	1/32	1.00	1/16			4.16	74.50	9/16	41.91	9.9%
23	South	L6	North	Vert.	31.00	1/32	1.00	1/16	15.00	1/8			2.91	57.50	9/16	32.34	9.0%
23	South	L6	South	Horiz.	58.00	1/8	0.50	3/64					7.27	74.50	9/16	41.91	17.4%
23	South	L6	South	Vert.	42.00	3/64	1.00	1/8	4.00	1/8			2.59	57.50	9/16	32.34	8.0%
23	South	L8	North	Horiz.	2.00	1/8	77.00	5/64	1.00	1/16	1.00	1/16	6.39	91.75	3/4	68.81	9.3%
23	South	L8	North	Vert.	69.50	1/16	2.00	5/64					4.50	69.50	3/4	52.13	8.6%
23	South	L8	South	Horiz.	91.75	1/16							5.73	91.75	3/4	68.81	8.3%
23	South	L8	South	Vert.	30.00	1/16	7.00	1/16	3.00	1/16	6.00	1/4	4.00	69.50	3/4	52.13	7.7%

Notes:
1. Node L0 consists of (2) vertical gusset plates; 1st plate is 54¼"L x 60-7/8"H x 3/4"D and 2nd plate is 42¼"L x 46-1/8"H x 7/16"D (Length and width are reversed at bill of material in plans. Height of plates are taken from top of plate to bottom of bottom chord; i.e. ignored area that extends to bearing pin).
2. Node L10 consists of (3) vertical gusset plates; 1st plate is 104"L x 74¼"H x 3/4"D, 2nd plate is 80"L x 52¼"H x 5/8"D and 3rd plate is 72½"L x 40¼"H x 9/16"D (Height of plates are taken from top of plate to bottom of bottom chord; i.e. ignored area that extends to bearing pin).
3. If loss 'H' section loss dimensions are not noted in sketches, then the typical section loss is used for this area (4" high x 1/4" deep pitting).
4. The worst case vertical plane section loss for each gusset plate is input into this table.
5. Section loss areas between 5% and 25% are highlighted yellow and greater than or equal to 25% are highlighted red.
6. Original gusset plate sizes are taken from the truss shop drawings dated 1941.
7. Pitting loss depth multiplied by 1/2 to get average section loss depth.

Calculated By: SD
Checked By: JK

Bridge No: 03819

Truss Bottom Chord Gusset Plate Section Loss Summary for Even Numbered Nodes (Riveted Truss Spans 22-25 & 29-32)

Span	Truss	Node	Plate	Axis	Section Loss									Original Gusset Plate Size			SL %
					Area 1		Area 2		Area 3		Area 4		Area (in^2)	Length (in)	Thickness (in)	Area (in^2)	
					Length / Height (in)	Depth (in)	Length / Height (in)	Depth (in)	Length / Height (in)	Depth (in)	Length / Height (in)	Depth (in)					
24	North	L0	North	Horiz.	54.25	5/64	3.00	3/32	2.5	3/32			4.75	Multiple	Multiple	59.17	8.0%
24	North	L0	North	Vert.	36.00	3/32	2.00	1/16	2.00	5/64	3.00	3/16	4.22	Multiple	Multiple	65.84	6.4%
24	North	L0	South	Horiz.	41.00	5/64	6.00	3/32	1.00	3/32	3.00	1/8	4.23	Multiple	Multiple	59.17	7.2%
24	North	L0	South	Vert.	36.00	3/32	3.00	5/64	6.00	3/16			4.73	Multiple	Multiple	65.84	7.2%
24	North	L2	North	Horiz.	76.00	1/16							4.75	76.00	1/2	38.00	12.5%
24	North	L2	North	Vert.	19.00	5/64	3.00	1/16	5.00	5/16			3.23	61.50	1/2	30.75	10.5%
24	North	L2	South	Horiz.	76.00	3/32	1.00	3/32	2.00	1/16			7.34	76.00	1/2	38.00	19.3%
24	North	L2	South	Vert.	61.50	3/32	4.00	3/32					6.14	61.50	1/2	30.75	20.0%
24	North	L4	North	Horiz.	47.50	1/16	16.00	1/8					4.97	63.50	1/2	31.75	15.6%
24	North	L4	North	Vert.	25.00	5/64	3.00	1/16	5.00	1/4			3.39	53.50	1/2	26.75	12.7%
24	North	L4	South	Horiz.	63.50	3/32							5.95	63.50	1/2	31.75	18.8%
24	North	L4	South	Vert.	30.00	1/32	5.00	3/32	4.00	1/8			1.91	53.50	1/2	26.75	7.1%
24	North	L6	North	Horiz.	71.50	3/16	3.00	3/32	1.00	1/32			13.72	74.50	9/16	41.91	32.7%
24	North	L6	North	Vert.	57.50	3/32	4.00	3/16					6.14	57.50	9/16	32.34	19.0%
24	North	L6	South	Horiz.	74.50	3/32	2.00	3/32	1.00	5/64			7.25	74.50	9/16	41.91	17.3%
24	North	L6	South	Vert.	57.50	5/64	3.00	3/32					4.77	57.50	9/16	32.34	14.8%
24	North	L8	North	Horiz.	13.00	1/8	35.00	1/16					3.81	91.75	3/4	68.81	5.5%
24	North	L8	North	Vert.	28.00	1/32	6.00	3/32	4.00	1/8			1.94	69.50	3/4	52.13	3.7%
24	North	L8	South	Horiz.	91.75	3/32	1.50	1/16	1.00	5/64			8.77	91.75	3/4	68.81	12.7%
24	North	L8	South	Vert.	69.50	5/64	3.00	3/32					5.71	69.50	3/4	52.13	11.0%
24	North	L10	North	Horiz.	44.00	3/32	44.00	1/16					6.88	Multiple	Multiple	168.78	4.1%
24	North	L10	North	Vert.	20.00	1/16	3.50	1/16	3.00	1/8			1.84	Multiple	Multiple	110.98	1.7%
24	North	L10	South	Horiz.	44.00	5/64	36.25	1/16	44.00	3/32	16.00	7/64	11.58	Multiple	Multiple	168.78	6.9%
24	North	L10	South	Vert.	5.00	3/32	12.00	1/16	5.00	3/32	3.00	7/64	2.02	Multiple	Multiple	110.98	1.8%
24	South	L0	North	Horiz.	54.25	1/16	30.00	1/16	2	1/16	1	1/16	5.45	Multiple	Multiple	59.17	9.2%
24	South	L0	North	Vert.	36.00	1/16	3.00	1/16	1.00	1/16			2.50	Multiple	Multiple	65.84	3.8%
24	South	L0	South	Horiz.	54.25	1/16	36.00	1/32	1.50	3/32	2.00	3/32	4.84	Multiple	Multiple	59.17	8.2%
24	South	L0	South	Vert.	36.00	3/32	1.00	1/8	2.00	1/16	2.00	1/32	3.69	Multiple	Multiple	65.84	5.6%
24	South	L2	North	Horiz.	36.00	1/16	2.00	7/64	14.00	1/8	12.00	1/16	4.97	76.00	1/2	38.00	13.1%
24	South	L2	North	Vert.	53.50	7/64	4.00	1/8					6.35	61.50	1/2	30.75	20.7%
24	South	L2	South	Horiz.	76.00	1/16							4.75	76.00	1/2	38.00	12.5%
24	South	L2	South	Vert.	24.00	3/32	1.50	1/16	4.00	1/4			3.34	61.50	1/2	30.75	10.9%
24	South	L4	North	Horiz.	36.00	1/16	19.00	3/32					4.03	63.50	1/2	31.75	12.7%
24	South	L4	North	Vert.	18.00	1/16	2.00	3/32	4.00	1/8			1.81	53.50	1/2	26.75	6.8%
24	South	L4	South	Horiz.	24.00	1/16	28.00	1/16					3.25	63.50	1/2	31.75	10.2%
24	South	L4	South	Vert.	12.00	1/16	4.00	1/8					1.25	53.50	1/2	26.75	4.7%
24	South	L6	North	Horiz.	70.50	1/16	6.00	7/64	3.00	3/32			5.34	74.50	9/16	41.91	12.8%
24	South	L6	North	Vert.	57.50	7/64	3.00	1/16					6.48	57.50	9/16	32.34	20.0%
24	South	L6	South	Horiz.	74.50	1/16	1.00	1/16					4.72	74.50	9/16	41.91	11.3%
24	South	L6	South	Vert.	57.50	1/16	4.00	1/16	4.00	1/16			4.09	57.50	9/16	32.34	12.7%
24	South	L8	North	Horiz.	91.75	5/64							7.17	91.75	3/4	68.81	10.4%
24	South	L8	North	Vert.	36.00	1/32	3.00	5/64	4.00	1/8			1.86	69.50	3/4	52.13	3.6%
24	South	L8	South	Horiz.	60.00	1/16							3.75	91.75	3/4	68.81	5.4%
24	South	L8	South	Vert.	2.00	1/16	4.00	1/8	30.00	1/32	7.00	1/32	1.78	69.50	3/4	52.13	3.4%
24	South	L10	North	Horiz.	27.00	1/4	17.00	5/32	36.25	1/16	1.00	1/16	16.59	Multiple	Multiple	168.78	9.8%
					44.00	1/16	22.50	3/32									
24	South	L10	North	Vert.	50.00	1/16	3.00	1/16	5.00	3/32			3.78	Multiple	Multiple	110.98	3.4%
24	South	L10	South	Horiz.	44.00	1/8	23.00	3/8	21.00	1/8	14.50	1/16	17.66	Multiple	Multiple	168.78	10.5%
24	South	L10	South	Vert.	46.00	1/16	4.00	3/8	4.00	1/16			4.63	Multiple	Multiple	110.98	4.2%

Notes:

1. Node L0 consists of (2) vertical gusset plates; 1st plate is 54¼"L x 60-7/8"H x 3/4"D and 2nd plate is 42¼"L x 46-1/8"H x 7/16"D (Length and width are reversed at bill of material in plans. Height of plates are taken from top of plate to bottom of bottom chord; i.e. ignored area that extends to bearing pin).
2. Node L10 consists of (3) vertical gusset plates; 1st plate is 104"L x 74¼"H x 3/4"D, 2nd plate is 80"L x 52¼"H x 5/8"D and 3rd plate is 72½"L x 40¼"H x 9/16"D (Height of plates are taken from top of plate to bottom of bottom chord; i.e. ignored area that extends to bearing pin).
3. If loss 'H' section loss dimensions are not noted in sketches, then the typical section loss is used for this area (4" high x 1/4" deep pitting).
4. The worst case vertical plane section loss for each gusset plate is input into this table.
5. Section loss areas between 5% and 25% are highlighted yellow and greater than or equal to 25% are highlighted red.
6. Original gusset plate sizes are taken from the truss shop drawings dated 1941.
7. Pitting loss depth multiplied by 1/2 to get average section loss depth.

Calculated By: SD
Checked By: JK

Bridge No: 03819

Truss Bottom Chord Gusset Plate Section Loss Summary for Even Numbered Nodes (Riveted Truss Spans 22-25 & 29-32)

Span	Truss	Node	Plate	Axis	Section Loss									Original Gusset Plate Size			SL %
					Area 1		Area 2		Area 3		Area 4		Area (in^2)	Length (in)	Thickness (in)	Area (in^2)	
					Length / Height (in)	Depth (in)	Length / Height (in)	Depth (in)	Length / Height (in)	Depth (in)	Length / Height (in)	Depth (in)					
25	North	L0	North	Horiz.	36.00	1/8	11.00	1/4					7.25	Multiple	Multiple	59.17	12.3%
25	North	L0	North	Vert.	28.00	1/16	2.00	1/8	1.50	3/32	6.00	5/16	4.02	Multiple	Multiple	65.84	6.1%
25	North	L0	South	Horiz.	11.00	1/16	22.00	3/16	24.00	1/16	9.00	1/16	6.88	Multiple	Multiple	59.17	11.6%
25	North	L0	South	Vert.	18.00	1/8	4.00	1/8	4.00	3/32	2.00	1/16	3.63	Multiple	Multiple	65.84	5.5%
					2.00	3/16											
25	North	L2	North	Horiz.	63.00	1/16	1.00	3/64					3.98	76.00	1/2	38.00	10.5%
25	North	L2	North	Vert.	39.00	3/64	3.00	1/16	8.00	1/8			3.02	61.50	1/2	30.75	9.8%
25	North	L2	South	Horiz.	76.00	5/64	1.00	1/16	1.00	1/16			6.06	76.00	1/2	38.00	16.0%
25	North	L2	South	Vert.	61.50	1/16	2.50	5/64					4.04	61.50	1/2	30.75	13.1%
25	North	L4	North	Horiz.	21.00	1/16	18.00	3/16	3.00	5/64			4.92	63.50	1/2	31.75	15.5%
25	North	L4	North	Vert.	53.50	5/64	2.00	3/16					4.55	53.50	1/2	26.75	17.0%
25	North	L4	South	Horiz.	63.50	3/32	1.00	3/32					6.05	63.50	1/2	31.75	19.0%
25	North	L4	South	Vert.	53.50	3/32	4.00	3/32					5.39	53.50	1/2	26.75	20.2%
25	North	L6	North	Horiz.	28.00	1/16	1.00	3/32					1.84	74.50	9/16	41.91	4.4%
25	North	L6	North	Vert.	45.00	3/32							4.22	57.50	9/16	32.34	13.0%
25	North	L6	South	Horiz.	74.50	7/64	1.00	1/16					8.21	74.50	9/16	41.91	19.6%
25	North	L6	South	Vert.	48.00	1/16	5.00	7/64	4.00	1/8			4.05	57.50	9/16	32.34	12.5%
25	North	L8	North	Horiz.	89.00	3/32	1.00	1/16	0.19	3/4			8.55	91.75	3/4	68.81	12.4%
25	North	L8	North	Vert.	48.00	1/16	11.00	1/16	4.00	3/32			4.06	69.50	3/4	52.13	7.8%
25	North	L8	South	Horiz.	91.75	3/32	1.00	1/16					8.66	91.75	3/4	68.81	12.6%
25	North	L8	South	Vert.	52.00	1/16	10.00	1/32	5.00	3/32			4.03	69.50	3/4	52.13	7.7%
25	South	L0	North	Horiz.	52.25	1/16	2.00	5/32	1.00	3/32	2.00	3/32	3.86	Multiple	Multiple	59.17	6.5%
25	South	L0	North	Vert.	36.00	3/32	4.00	1/16	2.00	3/32			3.81	Multiple	Multiple	65.84	5.8%
25	South	L0	South	Horiz.	54.25	5/64	0.50	1/16	1.00	1/16			4.33	Multiple	Multiple	59.17	7.3%
25	South	L0	South	Vert.	35.00	1/16	1.00	5/64	2.00	3/32	3.00	1/8	3.02	Multiple	Multiple	65.84	4.6%
					1.00	3/32	1.00	3/32									
25	South	L2	North	Horiz.	76.00	5/64	1.50	3/32	1.00	1/16			6.14	76.00	1/2	38.00	16.2%
25	South	L2	North	Vert.	61.50	3/32	5.00	5/64					6.16	61.50	1/2	30.75	20.0%
25	South	L2	South	Horiz.	76.00	3/32	1.00	1/16	1.50	1/16			7.28	76.00	1/2	38.00	19.2%
25	South	L2	South	Vert.	61.50	1/16	2.00	3/32					4.03	61.50	1/2	30.75	13.1%
25	South	L4	North	Horiz.	63.50	1/16	2.00	3/32	2.00	3/32			4.34	63.50	1/2	31.75	13.7%
25	South	L4	North	Vert.	53.50	3/32	5.00	1/16					5.33	53.50	1/2	26.75	19.9%
25	South	L4	South	Horiz.	63.50	5/64	1.00	1/16					5.02	63.50	1/2	31.75	15.8%
25	South	L4	South	Vert.	53.50	1/16	2.00	5/64					3.50	53.50	1/2	26.75	13.1%
25	South	L6	North	Horiz.	32.00	5/64	1.00	1/16	1.50	5/64	32.00	1/8	6.68	74.50	9/16	41.91	15.9%
25	South	L6	North	Vert.	57.50	5/64	2.50	5/64					4.69	57.50	9/16	32.34	14.5%
25	South	L6	South	Horiz.	74.50	5/32	0.50	1/32	0.50	1/16			11.69	74.50	9/16	41.91	27.9%
25	South	L6	South	Vert.	42.00	1/16	3.00	5/32					3.09	57.50	9/16	32.34	9.6%
25	South	L8	North	Horiz.	91.75	5/64	1.00	1/16	2.00	1/16			7.36	91.75	3/4	68.81	10.7%
25	South	L8	North	Vert.	69.50	1/16	6.00	5/64					4.81	69.50	3/4	52.13	9.2%
25	South	L8	South	Horiz.	7.00	3/64	68.00	5/64	1.00	1/16			5.70	91.75	3/4	68.81	8.3%
25	South	L8	South	Vert.	69.50	1/16	3.00	5/64					4.58	69.50	3/4	52.13	8.8%

Notes:
1. Node L0 consists of (2) vertical gusset plates; 1st plate is 54¼"L x 60-7/8"H x 3/4"D and 2nd plate is 42¼"L x 46-1/8"H x 7/16"D (Length and width are reversed at bill of material in plans. Height of plates are taken from top of plate to bottom of bottom chord; i.e. ignored area that extends to bearing pin).
2. Node L10 consists of (3) vertical gusset plates; 1st plate is 104"L x 74¼"H x 3/4"D, 2nd plate is 80"L x 52¼"H x 5/8"D and 3rd plate is 72½"L x 40¼"H x 9/16"D (Height of plates are taken from top of plate to bottom of bottom chord; i.e. ignored area that extends to bearing pin).
3. If loss 'H' section loss dimensions are not noted in sketches, then the typical section loss is used for this area (4" high x 1/4" deep pitting).
4. The worst case vertical plane section loss for each gusset plate is input into this table.
5. Section loss areas between 5% and 25% are highlighted yellow and greater than or equal to 25% are highlighted red.
6. Original gusset plate sizes are taken from the truss shop drawings dated 1941.
7. Pitting loss depth multiplied by 1/2 to get average section loss depth.

Calculated By: SD
Checked By: JK

Bridge No: 03819

Truss Bottom Chord Gusset Plate Section Loss Summary for Even Numbered Nodes (Riveted Truss Spans 22-25 & 29-32)

Span	Truss	Node	Plate	Axis	Section Loss									Original Gusset Plate Size			SL %
					Area 1		Area 2		Area 3		Area 4		Area (in^2)	Length (in)	Thickness (in)	Area (in^2)	
					Length / Height (in)	Depth (in)	Length / Height (in)	Depth (in)	Length / Height (in)	Depth (in)	Length / Height (in)	Depth (in)					
29	North	L0	North	Horiz.	54.25	5/64	1.50	1/16					4.33	Multiple	Multiple	59.17	7.3%
29	North	L0	North	Vert.	36.00	1/16	2.00	5/64	1	1/16			2.47	Multiple	Multiple	65.84	3.7%
29	North	L0	South	Horiz.	54.25	3/32	1.50	1/16					5.18	Multiple	Multiple	59.17	8.8%
29	North	L0	South	Vert.	36.00	1/16	2.00	3/32	3.00	3/32	1.00	1/16	2.78	Multiple	Multiple	65.84	4.2%
29	North	L2	North	Horiz.	76.00	1/16	2.00	1/16					4.88	76.00	1/2	38.00	12.8%
29	North	L2	North	Vert.	36.00	1/16	1.50	1/16					2.34	61.50	1/2	30.75	7.6%
29	North	L2	South	Horiz.	76.00	1/16	1.00	1/16					4.81	76.00	1/2	38.00	12.7%
29	North	L2	South	Vert.	36.00	1/16	4.00	1/16	4.00	1/8			3.00	61.50	1/2	30.75	9.8%
29	North	L4	North	Horiz.	42.00	1/16	12.00	1/16					3.38	63.50	1/2	31.75	10.6%
29	North	L4	North	Vert.	12.00	3/32	6.00	3/32	1.00	1/16	6.00	3/16	2.88	53.50	1/2	26.75	10.7%
29	North	L4	South	Horiz.	6.00	1/8	57.50	1/16	1.50	3/32			4.48	63.50	1/2	31.75	14.1%
29	North	L4	South	Vert.	53.50	3/32	5.00	1/8					5.64	53.50	1/2	26.75	21.1%
29	North	L6	North	Horiz.	74.50	3/32							6.98	74.50	9/16	41.91	16.7%
29	North	L6	North	Vert.	12.00	1/16	3.00	3/32					1.03	57.50	9/16	32.34	3.2%
29	North	L6	South	Horiz.	74.50	5/64							5.82	74.50	9/16	41.91	13.9%
29	North	L6	South	Vert.	9.00	1/16	3.00	5/64	1.00	1/16			0.86	57.50	9/16	32.34	2.7%
29	North	L8	North	Horiz.	16.00	1/16	60.00	3/32	4.00	1/16			6.88	91.75	3/4	68.81	10.0%
29	North	L8	North	Vert.	30.00	1/16	3.00	3/32					2.16	69.50	3/4	52.13	4.1%
29	North	L8	South	Horiz.	40.00	1/16	44.00	1/16	1.00	1/16			5.31	91.75	3/4	68.81	7.7%
29	North	L8	South	Vert.	69.50	1/16	5.00	1/16					4.66	69.50	3/4	52.13	8.9%
29	North	L10	North	Horiz.	44.00	5/32	44.00	1/8					12.38	Multiple	Multiple	168.78	7.3%
29	North	L10	North	Vert.	30.00	3/32	3.50	3/32	4.00	5/32	3.00	3/32	4.05	Multiple	Multiple	110.98	3.6%
29	North	L10	South	Horiz.	88.00	1/8	18.00	1/16	18.00	1/16	1.00	1/8	13.38	Multiple	Multiple	168.78	7.9%
29	North	L10	South	Vert.	49.00	1/8	3.00	5/32	4.00	1/16	4.00	1/8	7.34	Multiple	Multiple	110.98	6.6%
29	South	L0	North	Horiz.	54.25	7/64	2.00	1/16	1	1/8			6.18	Multiple	Multiple	59.17	10.5%
29	South	L0	North	Vert.	36.00	1/8	4.00	7/64					4.94	Multiple	Multiple	65.84	7.5%
29	South	L0	South	Horiz.	54.25	1/8	0.50	3/64					6.80	Multiple	Multiple	59.17	11.5%
29	South	L0	South	Vert.	36.00	3/64	2.00	1/16					1.81	Multiple	Multiple	65.84	2.8%
29	South	L2	North	Horiz.	76.00	3/32	1.00	1/16	2.00	3/32			7.38	76.00	1/2	38.00	19.4%
29	South	L2	North	Vert.	42.00	3/32	4.00	3/32	9.00	1/8			5.44	61.50	1/2	30.75	17.7%
29	South	L2	South	Horiz.	76.00	3/64	1.00	1/16	1.00	1/16			3.69	76.00	1/2	38.00	9.7%
29	South	L2	South	Vert.	36.00	1/16	6.00	1/16					2.63	61.50	1/2	30.75	8.5%
29	South	L4	North	Horiz.	63.50	3/32	1.00	1/16					6.02	63.50	1/2	31.75	18.9%
29	South	L4	North	Vert.	36.00	1/16	2.00	3/32	6.00	5/32			3.38	53.50	1/2	26.75	12.6%
29	South	L4	South	Horiz.	16.00	1/16							1.00	63.50	1/2	31.75	3.1%
29	South	L4	South	Vert.	1.00	1/16	6.00	5/16					1.94	53.50	1/2	26.75	7.2%
29	South	L6	North	Horiz.	62.00	3/64	12.00	3/32	1.00	1/16			4.09	74.50	9/16	41.91	9.8%
29	South	L6	North	Vert.	30.00	3/32	3.00	3/64	4.00	1/8			3.45	57.50	9/16	32.34	10.7%
29	South	L6	South	Horiz.	74.50	5/64	0.50	1/32					5.84	74.50	9/16	41.91	13.9%
29	South	L6	South	Vert.	36.00	1/32	1.00	5/64					1.20	57.50	9/16	32.34	3.7%
29	South	L8	North	Horiz.	6.00	1/16	28.00	3/32	12.00	1/8	21.00	3/64	5.48	91.75	3/4	68.81	8.0%
29	South	L8	North	Vert.	69.50	3/32	6.00	1/8					7.27	69.50	3/4	52.13	13.9%
29	South	L8	South	Horiz.	29.00	1/16	30.00	1/16	1.00	1/16			3.75	91.75	3/4	68.81	5.4%
29	South	L8	South	Vert.	40.00	1/16	2.00	1/16	4.00	3/32			3.00	69.50	3/4	52.13	5.8%
29	South	L10	North	Horiz.	88.00	1/8	22.00	3/32	19.00	5/64	9.00	1/16	15.11	Multiple	Multiple	168.78	9.0%
29	South	L10	North	Vert.	26.00	1/32	1.50	1/16	4.00	1/8	3.00	3/32	1.69	Multiple	Multiple	110.98	1.5%
29	South	L10	South	Horiz.	44.00	1/8	44.00	7/64					10.31	Multiple	Multiple	168.78	6.1%
29	South	L10	South	Vert.	30.00	1/16	2.00	5/64	3.00	1/8			2.41	Multiple	Multiple	110.98	2.2%

Notes:

1. Node L0 consists of (2) vertical gusset plates; 1st plate is 54¼"L x 60-7/8"H x 3/4"D and 2nd plate is 42¼"L x 46-1/8"H x 7/16"D (Length and width are reversed at bill of material in plans. Height of plates are taken from top of plate to bottom of bottom chord; i.e. ignored area that extends to bearing pin).
2. Node L10 consists of (3) vertical gusset plates; 1st plate is 104"L x 74¼"H x 3/4"D, 2nd plate is 80"L x 52¼"H x 5/8"D and 3rd plate is 72½"L x 40¼"H x 9/16"D (Height of plates are taken from top of plate to bottom of bottom chord; i.e. ignored area that extends to bearing pin).
3. If loss 'H' section loss dimensions are not noted in sketches, then the typical section loss is used for this area (4" high x 1/4" deep pitting).
4. The worst case vertical plane section loss for each gusset plate is input into this table.
5. Section loss areas between 5% and 25% are highlighted yellow and greater than or equal to 25% are highlighted red.
6. Original gusset plate sizes are taken from the truss shop drawings dated 1941.
7. Pitting loss depth multiplied by 1/2 to get average section loss depth.

Calculated By: SD
Checked By: JK

Bridge No: 03819

Truss Bottom Chord Gusset Plate Section Loss Summary for Even Numbered Nodes (Riveted Truss Spans 22-25 & 29-32)

Span	Truss	Node	Plate	Axis	Section Loss									Original Gusset Plate Size			SL %
					Area 1		Area 2		Area 3		Area 4		Area (in^2)	Length (in)	Thickness (in)	Area (in^2)	
					Length / Height (in)	Depth (in)	Length / Height (in)	Depth (in)	Length / Height (in)	Depth (in)	Length / Height (in)	Depth (in)					
30	North	L0	North	Horiz.	39.00	1/16	12.00	1/8	1.50	5/64	3.00	3/32	4.34	Multiple	Multiple	59.17	7.3%
30	North	L0	North	Vert.	36.00	3/32	1.00	1/8	1.00	1/16			3.56	Multiple	Multiple	65.84	5.4%
30	North	L0	South	Horiz.	54.25	3/32	12.00	3/32	1.00	3/32	1.00	1/16	6.37	Multiple	Multiple	59.17	10.8%
30	North	L0	South	Vert.	37.00	3/32	4.00	3/32	1.00	3/32	2.00	1/8	4.19	Multiple	Multiple	65.84	6.4%
30	North	L2	North	Horiz.	20.00	1/16	10.00	1/16	24.00	5/64	1.00	3/64	3.80	76.00	1/2	38.00	10.0%
30	North	L2	North	Vert.	4.00	3/16	28.00	3/64	5.00	5/32			2.84	61.50	1/2	30.75	9.2%
30	North	L2	South	Horiz.	76.00	1/16	1.00	5/64					4.83	76.00	1/2	38.00	12.7%
30	North	L2	South	Vert.	42.00	5/64	3.00	1/16	5.00	3/32			3.94	61.50	1/2	30.75	12.8%
30	North	L4	North	Horiz.	63.50	3/64							2.98	63.50	1/2	31.75	9.4%
30	North	L4	North	Vert.	2.00	3/64	4.00	1/8	8.00	1/16	2.00	3/64	1.19	53.50	1/2	26.75	4.4%
30	North	L4	South	Horiz.	63.50	3/32							5.95	63.50	1/2	31.75	18.8%
30	North	L4	South	Vert.	3.00	3/32	4.00	1/8					0.78	53.50	1/2	26.75	2.9%
30	North	L6	North	Horiz.	59.00	1/16	1.00	3/32					3.78	74.50	9/16	41.91	9.0%
30	North	L6	North	Vert.	36.00	3/32	1.00	1/16	4.00	1/8	3.00	1/16	4.13	57.50	9/16	32.34	12.8%
30	North	L6	South	Horiz.	28.00	1/16	25.00	1/8	1.00	1/16			4.94	74.50	9/16	41.91	11.8%
30	North	L6	South	Vert.	2.00	1/16	5.00	1/8					0.75	57.50	9/16	32.34	2.3%
30	North	L8	North	Horiz.	70.00	5/64							5.47	91.75	3/4	68.81	7.9%
30	North	L8	North	Vert.	8.00	1/16	12.00	1/16	4.00	1/8	3.00	5/64	1.98	69.50	3/4	52.13	3.8%
30	North	L8	South	Horiz.	27.00	1/16	1.00	1/16	28.00	1/16			3.50	91.75	3/4	68.81	5.1%
30	North	L8	South	Vert.	48.00	1/16	1.00	1/16					3.06	69.50	3/4	52.13	5.9%
30	South	L0	North	Horiz.	54.25	5/64	2.00	5/64	1.00	5/64	30.00	5/64	6.82	Multiple	Multiple	59.17	11.5%
30	South	L0	North	Vert.	36.00	5/64	2.00	5/64	2.00	5/64			3.13	Multiple	Multiple	65.84	4.7%
30	South	L0	South	Horiz.	51.00	3/32	2.00	5/64	1.00	5/64	30.00	3/32	7.83	Multiple	Multiple	59.17	13.2%
30	South	L0	South	Vert.	36.00	5/64	1.00	3/32	1.00	3/32	3.00	3/32	3.28	Multiple	Multiple	65.84	5.0%
30	South	L2	North	Horiz.	68.00	3/32	1.00	1/16	1.00	5/64			6.52	76.00	1/2	38.00	17.1%
30	South	L2	North	Vert.	48.00	5/64	2.00	3/32	7.00	7/64			4.70	61.50	1/2	30.75	15.3%
30	South	L2	South	Horiz.	16.00	1/16	36.00	1/16	1.00	1/16			3.31	76.00	1/2	38.00	8.7%
30	South	L2	South	Vert.	36.00	1/16	2.00	1/16	5.00	3/32			2.84	61.50	1/2	30.75	9.2%
30	South	L4	North	Horiz.	63.50	5/32							9.92	63.50	1/2	31.75	31.3%
30	South	L4	North	Vert.	2.00	5/32	4.00	1/8					0.81	53.50	1/2	26.75	3.0%
30	South	L4	South	Horiz.	38.00	3/64	16.00	1/16					2.78	63.50	1/2	31.75	8.8%
30	South	L4	South	Vert.	0.50	1/32	4.00	1/8					0.52	53.50	1/2	26.75	1.9%
30	South	L6	North	Horiz.	5.00	7/64	16.00	1/16	4.00	1/8	1.00	3/32	4.95	74.50	9/16	41.91	11.8%
					36.00	5/64											
30	South	L6	North	Vert.	57.50	3/32	3.00	5/64					5.63	57.50	9/16	32.34	17.4%
30	South	L6	South	Horiz.	70.00	5/64	1.00	1/16					5.53	74.50	9/16	41.91	13.2%
30	South	L6	South	Vert.	53.50	1/16	1.50	1/8	4.00	1/8			4.03	57.50	9/16	32.34	12.5%
30	South	L8	North	Horiz.	29.00	1/16	46.00	1/16	1.00	1/16	5.00	1/8	5.38	91.75	3/4	68.81	7.8%
30	South	L8	North	Vert.	53.00	1/16	6.00	7/64	4.00	1/16			4.22	69.50	3/4	52.13	8.1%
30	South	L8	South	Horiz.	2.00	1/16	36.00	1/16	16.00	3/64			3.13	91.75	3/4	68.81	4.5%
30	South	L8	South	Vert.	18.00	1/32	1.00	1/16					0.63	69.50	3/4	52.13	1.2%

Notes:
1. Node L0 consists of (2) vertical gusset plates; 1st plate is 54¼"L x 60-7/8"H x 3/4"D and 2nd plate is 42¼"L x 46-1/8"H x 7/16"D (Length and width are reversed at bill of material in plans. Height of plates are taken from top of plate to bottom of bottom chord; i.e. ignored area that extends to bearing pin).
2. Node L10 consists of (3) vertical gusset plates; 1st plate is 104"L x 74¼"H x 3/4"D, 2nd plate is 80"L x 52¼"H x 5/8"D and 3rd plate is 72½"L x 40¼"H x 9/16"D (Height of plates are taken from top of plate to bottom of bottom chord; i.e. ignored area that extends to bearing pin).
3. If loss 'H' section loss dimensions are not noted in sketches, then the typical section loss is used for this area (4" high x 1/4" deep pitting).
4. The worst case vertical plane section loss for each gusset plate is input into this table.
5. Section loss areas between 5% and 25% are highlighted yellow and greater than or equal to 25% are highlighted red.
6. Original gusset plate sizes are taken from the truss shop drawings dated 1941.
7. Pitting loss depth multiplied by 1/2 to get average section loss depth.

Calculated By: MM
Checked By: JK

Bridge No: 03819

Truss Bottom Chord Gusset Plate Section Loss Summary for Even Numbered Nodes (Riveted Truss Spans 22-25 & 29-32)

Span	Truss	Node	Plate	Axis	Section Loss									Original Gusset Plate Size			SL %
					Area 1		Area 2		Area 3		Area 4		Area (in^2)	Length (in)	Thickness (in)	Area (in^2)	
					Length / Height (in)	Depth (in)	Length / Height (in)	Depth (in)	Length / Height (in)	Depth (in)	Length / Height (in)	Depth (in)					
31	North	L0	North	Horiz.	54.25	1/8	3.00	1/8	3.00	1/16	12.00	1/8	8.84	Multiple	Multiple	59.17	14.9%
31	North	L0	North	Vert.	37.00	1/8	1.00	1/8	2.00	1/8	4.00	1/8	5.50	Multiple	Multiple	65.84	8.4%
31	North	L0	South	Horiz.	54.25	3/32	12.00	3/32	4.00	1/16	2.00	1/8	6.79	Multiple	Multiple	59.17	11.5%
					1.00	5/64											
31	North	L0	South	Vert.	37.00	1/8	1.00	1/8	2.00	3/32	2.00	3/32	5.13	Multiple	Multiple	65.84	7.8%
31	North	L2	North	Horiz.	54.00	5/64							4.22	76.00	1/2	38.00	11.1%
31	North	L2	North	Vert.	30.00	3/32	1.00	5/64	4.00	1/8			3.39	61.50	1/2	30.75	11.0%
31	North	L2	South	Horiz.	60.00	1/16							3.75	76.00	1/2	38.00	9.9%
31	North	L2	South	Vert.	28.00	1/16	1.00	1/16	4.00	1/8			2.31	61.50	1/2	30.75	7.5%
31	North	L4	North	Horiz.	40.00	5/64	16.00	1/16					4.13	63.50	1/2	31.75	13.0%
31	North	L4	North	Vert.	1.50	5/64	3.00	11/64	1.00	1/32			0.66	53.50	1/2	26.75	2.5%
31	North	L4	South	Horiz.	62.00	1/16							3.88	63.50	1/2	31.75	12.2%
31	North	L4	South	Vert.	12.00	1/16	12.00	1/8	1.00	1/16			2.31	53.50	1/2	26.75	8.6%
31	North	L6	North	Horiz.	63.00	3/64							2.95	74.50	9/16	41.91	7.0%
31	North	L6	North	Vert.	12.00	1/16	1.00	3/64					0.80	57.50	9/16	32.34	2.5%
31	North	L6	South	Horiz.	74.50	1/16							4.66	74.50	9/16	41.91	11.1%
31	North	L6	South	Vert.	12.00	3/64	2.00	1/16					0.69	57.50	9/16	32.34	2.1%
31	North	L8	North	Horiz.	3.00	7/32	81.00	1/16	1.00	1/16			5.78	91.75	3/4	68.81	8.4%
31	North	L8	North	Vert.	48.00	1/16	3.50	1/16	5.00	7/64			3.77	69.50	3/4	52.13	7.2%
31	North	L8	South	Horiz.	80.00	5/64	1.00	1/16					6.31	91.75	3/4	68.81	9.2%
31	North	L8	South	Vert.	6.00	1/16	69.50	1/16	2.00	5/64			4.88	69.50	3/4	52.13	9.4%
31	North	L10	North	Horiz.	44.00	3/32	44.00	3/32					8.25	Multiple	Multiple	168.78	4.9%
31	North	L10	North	Vert.	2.00	3/32							0.19	Multiple	Multiple	110.98	0.2%
31	North	L10	South	Horiz.	88.00	1/8	18.00	3/32	23.00	3/32			14.84	Multiple	Multiple	168.78	8.8%
31	North	L10	South	Vert.	2.00	3/32	31.00	1/16	3.50	1/8	3.00	3/32	2.84	Multiple	Multiple	110.98	2.6%
31	South	L0	North	Horiz.	54.25	3/32	14.00	1/8	5.00	5/64	1.5	3/32	7.37	Multiple	Multiple	59.17	12.5%
31	South	L0	North	Vert.	36.00	3/32	3.00	3/32					3.66	Multiple	Multiple	65.84	5.6%
31	South	L0	South	Horiz.	41.00	3/32	18.00	1/16	5.00	7/32	2.00	3/32	7.56	Multiple	Multiple	59.17	12.8%
					10.50	1/8											
31	South	L0	South	Vert.	36.00	7/32	8.00	5/32	9.00	1/16	3.00	3/32	10.34	Multiple	Multiple	65.84	15.7%
					6.00	1/16											
31	South	L2	North	Horiz.	35.00	5/64	17.00	3/64	1.00	1/16	1.00	3/32	3.69	76.00	1/2	38.00	9.7%
31	South	L2	North	Vert.	45.00	3/32	1.50	5/64	4.00	1/8			4.84	61.50	1/2	30.75	15.7%
31	South	L2	South	Horiz.	76.00	1/32							2.38	76.00	1/2	38.00	6.3%
31	South	L2	South	Vert.	0.50	1/32	4.00	1/8					0.52	61.50	1/2	30.75	1.7%
31	South	L4	North	Horiz.	3.00	1/16	4.00	1/16	20.00	5/32			3.56	63.50	1/2	31.75	11.2%
31	South	L4	North	Vert.	4.00	1/16	4.00	1/8	20.00	1/32			1.38	53.50	1/2	26.75	5.1%
31	South	L4	South	Horiz.	16.00	1/32	6.00	1/16	6.00	3/64			1.16	63.50	1/2	31.75	3.6%
31	South	L4	South	Vert.	4.00	1/8	0.50	1/32					0.52	53.50	1/2	26.75	1.9%
31	South	L6	North	Horiz.	72.00	5/64							5.63	74.50	9/16	41.91	13.4%
31	South	L6	North	Vert.	24.00	5/64	2.00	5/64					2.03	57.50	9/16	32.34	6.3%
31	South	L6	South	Horiz.	18.00	7/64	6.00	1/16					2.34	74.50	9/16	41.91	5.6%
31	South	L6	South	Vert.	0.50	1/16							0.03	57.50	9/16	32.34	0.1%
31	South	L8	North	Horiz.	2.00	1/8	62.00	1/16	1.50	3/32			4.27	91.75	3/4	68.81	6.2%
31	South	L8	North	Vert.	45.00	3/32	2.00	1/16					4.34	69.50	3/4	52.13	8.3%
31	South	L8	South	Horiz.	75.00	1/16							4.69	91.75	3/4	68.81	6.8%
31	South	L8	South	Vert.	30.00	1/16	3.50	1/16					2.09	69.50	3/4	52.13	4.0%
31	South	L10	North	Horiz.	44.00	3/32	22.50	1/16	44.00	1/8	19.00	1/8	13.41	Multiple	Multiple	168.78	7.9%
31	South	L10	North	Vert.	18.00	1/16	3.00	1/8	3.00	1/8			1.88	Multiple	Multiple	110.98	1.7%
31	South	L10	South	Horiz.	44.00	1/4	44.00	7/32					20.63	Multiple	Multiple	168.78	12.2%
31	South	L10	South	Vert.	2.00	1/32	4.00	1/4					1.06	Multiple	Multiple	110.98	1.0%

Notes:

1. Node L0 consists of (2) vertical gusset plates; 1st plate is 54¼"L x 60-7/8"H x 3/4"D and 2nd plate is 42¼"L x 46-1/8"H x 7/16"D (Length and width are reversed at bill of material in plans. Height of plates are taken from top of plate to bottom of bottom chord; i.e. ignored area that extends to bearing pin).
2. Node L10 consists of (3) vertical gusset plates; 1st plate is 104"L x 74¼"H x 3/4"D, 2nd plate is 80"L x 52¼"H x 5/8"D and 3rd plate is 72½"L x 40¼"H x 9/16"D (Height of plates are taken from top of plate to bottom of bottom chord; i.e. ignored area that extends to bearing pin).
3. If loss 'H' section loss dimensions are not noted in sketches, then the typical section loss is used for this area (4" high x 1/4" deep pitting).
4. The worst case vertical plane section loss for each gusset plate is input into this table.
5. Section loss areas between 5% and 25% are highlighted yellow and greater than or equal to 25% are highlighted red.
6. Original gusset plate sizes are taken from the truss shop drawings dated 1941.
7. Pitting loss depth multiplied by 1/2 to get average section loss depth.

Calculated By: MM
Checked By: JK

Bridge No: 03819

Truss Bottom Chord Gusset Plate Section Loss Summary for Even Numbered Nodes (Riveted Truss Spans 22-25 & 29-32)

Span	Truss	Node	Plate	Axis	Section Loss									Original Gusset Plate Size			SL %
					Area 1		Area 2		Area 3		Area 4		Area (in^2)	Length (in)	Thickness (in)	Area (in^2)	
					Length / Height (in)	Depth (in)	Length / Height (in)	Depth (in)	Length / Height (in)	Depth (in)	Length / Height (in)	Depth (in)					
32	North	L0	North	Horiz.	54.25	5/64	6.00	1/16	3.00	1/16	3.00	3/32	5.08	Multiple	Multiple	59.17	8.6%
32	North	L0	North	Vert.	36.00	3/32	4.00	3/32	3.00	5/64			3.98	Multiple	Multiple	65.84	6.1%
32	North	L0	South	Horiz.	9.00	1/16	10.00	1/8	12.00	5/64	6.00	1/16	6.43	Multiple	Multiple	59.17	10.9%
					35.25	3/32											
32	North	L0	South	Vert.	36.00	1/16	2.00	3/32	3.50	3/32	6.00	1/16	3.14	Multiple	Multiple	65.84	4.8%
32	North	L2	North	Horiz.	76.00	1/16							4.75	76.00	1/2	38.00	12.5%
32	North	L2	North	Vert.	18.00	1/16	1.00	1/16	6.00	5/32			2.13	61.50	1/2	30.75	6.9%
32	North	L2	South	Horiz.	66.00	5/64	2.00	3/32	6.00	1/16			5.72	76.00	1/2	38.00	15.0%
32	North	L2	South	Vert.	40.00	3/32	3.00	5/64	8.00	5/64			4.61	61.50	1/2	30.75	15.0%
32	North	L4	North	Horiz.	24.00	3/32	12.00	1/32					2.63	63.50	1/2	31.75	8.3%
32	North	L4	North	Vert.	18.00	3/32	1.50	3/32	4.00	1/8			2.33	53.50	1/2	26.75	8.7%
32	North	L4	South	Horiz.	63.50	1/16							3.97	63.50	1/2	31.75	12.5%
32	North	L4	South	Vert.	8.00	1/16	1.50	1/16	2.00	1/8			0.84	53.50	1/2	26.75	3.2%
32	North	L6	North	Horiz.	30.00	1/16	15.00	1/16					2.81	74.50	9/16	41.91	6.7%
32	North	L6	North	Vert.	1.00	1/16	4.00	1/8	1.00	1/16			0.63	57.50	9/16	32.34	1.9%
32	North	L6	South	Horiz.	61.00	5/64							4.77	74.50	9/16	41.91	11.4%
32	North	L6	South	Vert.	12.00	3/32	2.00	5/64	4.00	1/8			1.78	57.50	9/16	32.34	5.5%
32	North	L8	North	Horiz.	6.00	3/32	64.00	3/32	5.00	3/64	2.50	3/32	7.03	91.75	3/4	68.81	10.2%
32	North	L8	North	Vert.	36.00	3/32	2.00	3/32	7.00	11/32			5.97	69.50	3/4	52.13	11.5%
32	North	L8	South	Horiz.	87.00	3/32	1.00	5/64					8.23	91.75	3/4	68.81	12.0%
32	North	L8	South	Vert.	69.50	5/64	3.00	3/32					5.71	69.50	3/4	52.13	11.0%
32	South	L0	North	Horiz.	12.00	7/32	12.00	1/16	2.00	1/16	3.00	1/8	3.88	Multiple	Multiple	59.17	6.5%
32	South	L0	North	Vert.	36.00	1/16	21.25	1/8	1.00	1/16			4.97	Multiple	Multiple	65.84	7.5%
32	South	L0	South	Horiz.	54.25	1/16							3.39	Multiple	Multiple	59.17	5.7%
32	South	L0	South	Vert.	34.00	3/32	4.00	5/64	1.00	1/16			3.56	Multiple	Multiple	65.84	5.4%
32	South	L2	North	Horiz.	56.00	5/64	1.00	5/32	1.00	1/8			4.66	76.00	1/2	38.00	12.3%
32	South	L2	North	Vert.	48.00	1/8	2.00	5/64	5.00	3/32			6.63	61.50	1/2	30.75	21.5%
32	South	L2	South	Horiz.	36.00	11/64	1.00	1/16					6.25	76.00	1/2	38.00	16.4%
32	South	L2	South	Vert.	44.00	1/16	2.00	11/64	4.00	1/8			3.59	61.50	1/2	30.75	11.7%
32	South	L4	North	Horiz.	49.50	1/16	1.00	3/32					3.19	63.50	1/2	31.75	10.0%
32	South	L4	North	Vert.	48.00	3/32	1.00	1/16	3.00	3/16			5.13	53.50	1/2	26.75	19.2%
32	South	L4	South	Horiz.	12.00	3/32							1.13	63.50	1/2	31.75	3.5%
32	South	L4	South	Vert.	1.00	3/32	4.00	1/8					0.59	53.50	1/2	26.75	2.2%
32	South	L6	North	Horiz.	74.50	3/32							6.98	74.50	9/16	41.91	16.7%
32	South	L6	North	Vert.	24.00	1/32	3.00	3/32	4.00	1/8			1.53	57.50	9/16	32.34	4.7%
32	South	L6	South	Horiz.	18.00	1/16	22.00	3/64					2.16	74.50	9/16	41.91	5.1%
32	South	L6	South	Vert.	4.00	1/8	1.00	3/64	0.50	3/64			0.57	57.50	9/16	32.34	1.8%
32	South	L8	North	Horiz.	26.00	1/16	48.00	1/16					4.63	91.75	3/4	68.81	6.7%
32	South	L8	North	Vert.	2.00	1/16	26.00	1/8					3.38	69.50	3/4	52.13	6.5%
32	South	L8	South	Horiz.	91.75	1/16							5.73	91.75	3/4	68.81	8.3%
32	South	L8	South	Vert.	38.00	3/64	5.00	1/16	5.00	1/8			2.72	69.50	3/4	52.13	5.2%

Notes:
1. Node L0 consists of (2) vertical gusset plates; 1st plate is 54¼"L x 60-7/8"H x 3/4"D and 2nd plate is 42¼"L x 46-1/8"H x 7/16"D (Length and width are reversed at bill of material in plans. Height of plates are taken from top of plate to bottom of bottom chord; i.e. ignored area that extends to bearing pin).
2. Node L10 consists of (3) vertical gusset plates; 1st plate is 104"L x 74¼"H x 3/4"D, 2nd plate is 80"L x 52¼"H x 5/8"D and 3rd plate is 72½"L x 40¼"H x 9/16"D (Height of plates are taken from top of plate to bottom of bottom chord; i.e. ignored area that extends to bearing pin).
3. If loss 'H' section loss dimensions are not noted in sketches, then the typical section loss is used for this area (4" high x 1/4" deep pitting).
4. The worst case vertical plane section loss for each gusset plate is input into this table.
5. Section loss areas between 5% and 25% are highlighted yellow and greater than or equal to 25% are highlighted red.
6. Original gusset plate sizes are taken from the truss shop drawings dated 1941.
7. Pitting loss depth multiplied by 1/2 to get average section loss depth.

Calculated By: JK

Bridge No: 03819

Checked By: BM

Truss Bottom Chord Gusset Plate Section Loss Summary (Welded Truss Spans 26-28)													
					Section Loss					Original Gusset Plate Size			
					Area 1		Area 2						
Span	Truss	Node	Plate	Axis	Length / Height (in)	Depth (in)	Length / Height (in)	Depth (in)	Area (in^2)	Length (in)	Thickness (in)	Area (in^2)	SL %
26	North	L2	North	Horiz.	7.00	1/16			0.44	96.00	7/8	84.00	0.5%
26	North	L2	South	Horiz.	11.00	3/32			1.03	96.00	7/8	84.00	1.2%
26	North	L6	South	Horiz.	18.00	3/32			1.69	104.40	1	104.40	1.6%
26	North	L6	North	Horiz.	18.00	3/32			1.69	104.40	1	104.40	1.6%
27	South	L18	North	Horiz.	18.00	3/16			3.38	122.40	1	122.40	2.8%
27	North	L21	North	Horiz.	27.00	1/8	26.00	1/8	6.63	105.60	3/4	79.20	8.4%
27	North	L23	North	Horiz.	10.00	1/8			1.25	94.80	1 1/2	142.20	0.9%
27	South	L27	South	Horiz.	36.00	3/64			1.69	117.60	1	117.60	1.4%
27	South	L27	North	Horiz.	12.00	1/8	21.00	3/64	4.23	117.60	1	117.60	3.6%
					7.00	1/4							
27	North	L28	North	Horiz.	27.00	1/8			3.38	122.40	1	122.40	2.8%
27	North	L28	South	Horiz.	22.00	3/64			1.03	122.40	1	122.40	0.8%
27	North	L32	North	Horiz.	24.00	1/16			1.50	123.60	7/8	108.15	1.4%
27	North	L32	South	Horiz.	13.50	1/16			0.84	123.60	7/8	108.15	0.8%
27	North	L32	South	Vert.	8.00	1/16			0.50	94.80	7/8	82.95	0.6%
28	North	L40	North	Horiz.	10.00	1/8			1.25	104.40	1	104.40	1.2%
28	North	L40	South	Horiz.	24.00	1/16	8.00	1/8	2.50	104.40	1	104.40	2.4%

Notes:

1. Gusset plate lengths are taken from the Gusset Plate Load Rating Report dated January 6, 2009.
2. Section loss areas greater than 5% are highlighted.
3. Pitting loss depth multiplied by 1/2 to get average section loss depth.

TEAM®	Test and Inspection Procedure Supplement Corporate	FORM UT.1
		Rev: 0
		Page 1 of 1

ULTRASONIC INSPECTION REPORT

Project No.: 1103-000803-02 Page 1 of 3

Customer	Location	Date	S/O #
PRIME AE	I95 NEW LONDON CT GOLD STAR BRIDGE	10/20/21	CTDOT J/N 170-3413

Sold To: PRIME AE
Part Number: N/A
Customer Order No: 16090-1
S/N(s): SEE ATTACHED
Procedure: 22.H.800-46 REV.0 AND BRIDGE PIN PROC.
Description: BRIDGE PINS
Specification: ASME V
ACC: REPORT FINDINGS
Scope of Examination: UT OF BRIDGE PINS
Material: STL
Heat Number: N/A
Quantity: (2)
Heat Code: N/A

Test Parameters

Instrument: KB USN 60 Serial No.: 00R286 Date of Calibration: 8/12/21

Longitudinal Frequency: 2.25 MHZ Size: 1/2" Ø Type UTX CX-352 Serial No.: 0708222

~~Shear Wave~~ Frequency: 15°L 2.25 MHZ Size: 1/2" Ø Type KB GAMMA Serial No.: 42746

Shear Wave Frequency: 45° 2.25 MHZ Size: 1/2" Ø Type TECHNISONICS ABFQ0204CMP Serial No.: 32286

Shear Wave Frequency: N/A MHZ Size: N/A Type N/A Serial No.: N/A

Couplant: SONOTECH ULTRAGEL II BATCH #20C037 Calibration Standard(s): ACTUAL PIN W/ NOTCHES

Surface Condition 250 RA

	0°	30°	35°	45°	60°	70°
Calibration Reference Level (dB)	72	N/A	N/A	50	N/A	N/A
Other Reference Levels (dB) 15°L ~~0°~~	68	N/A	N/A	N/A	N/A	N/A

Inspection Results

Acceptable: 2 PINS Unacceptable:

Remarks NO REJECTABLE INDICATIONS NOTED.
(2) PINS UT INSPECTED SEE ATTACHED SHEETS.
NOTE: PINS INSPECTED THRU PAINTED END SURFACE.

GREG BENNAY
TECHNICIAN (PRINT)

TECHNICIAN SIGNATURE LEVEL ☒ II ☐ III

N/A
ASSISTANT SIGNATURE LEVEL ☐ I ☐ II

THIS REPORT IS EXPRESSLY LIMITED TO TEAM INTERPRETATION OF THE RESULTS OBTAINED FROM THE TEST SPECIFIED AND DOES NOT CONSTITUTE A RESPRESENTATION WARRANTY OR GUARANTY OF THE ACTUAL CONDITION OF THE MATERIALS TESTED. TEAM expressly disclaims any responsibility for any loss cost damage or expense including personal injury or death caused by or attributed to TEAM misinterpretation of conditions or the performance of any test.

Bridge Pin Indication Diagram

Bridge # GOLD STAR Location I-95 NEW LONDON/GROTON

Pin I.D. U20 Truss – Span –

Circumfriential Location

0 Deg. (TDC)

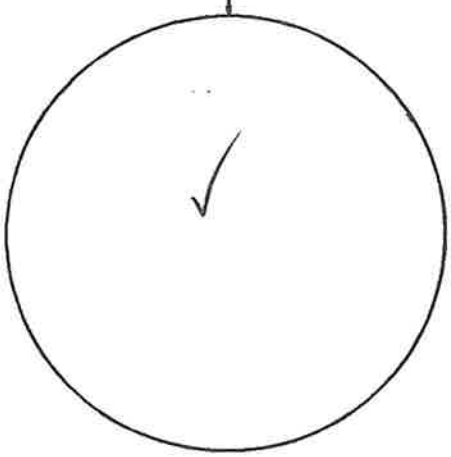

S End

Pin Dia. 6"

Pin Length 35.75"

Axial Location

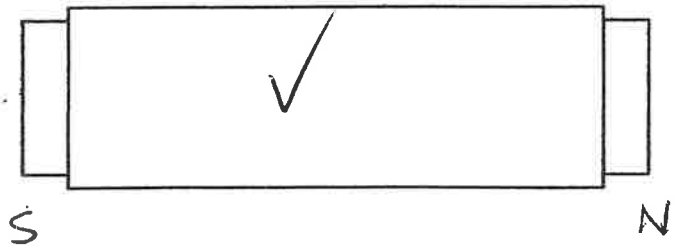

0 Deg. (TDC)

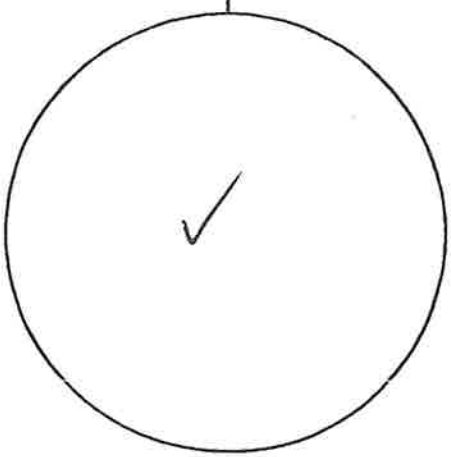

N End

Comments: ACCEPTABLE

Bridge Pin Indication Diagram

Bridge # GOLD STAR Location I-95 NEW LONDON/GROTON

Pin I.D. U26 Truss – Span –

Circumfriential Location

0 Deg. (TDC)

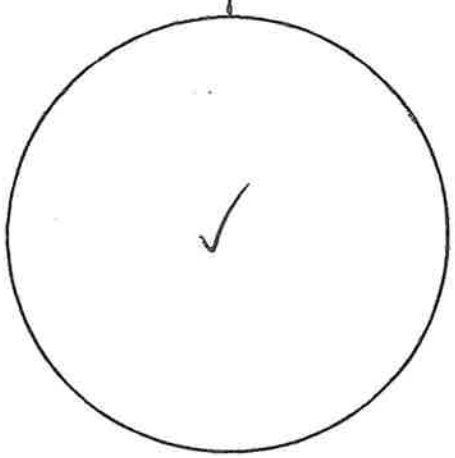

S End

Pin Dia. 6"

Pin Length 35.75"

Axial Location

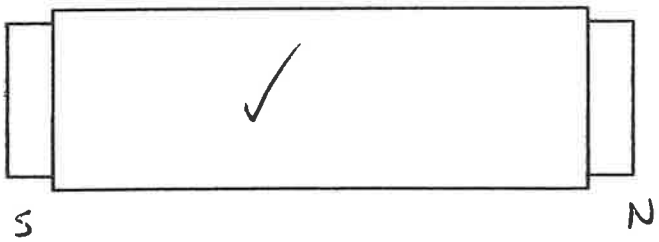

0 Deg. (TDC)

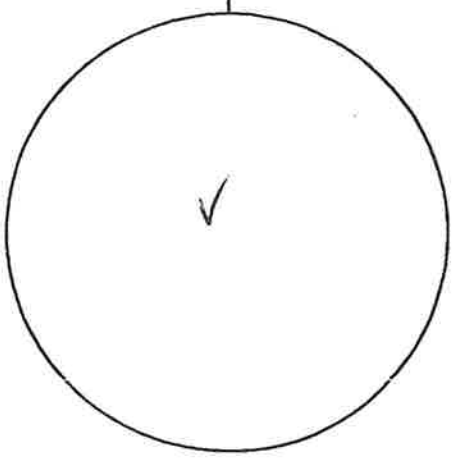

N End

Comments: ACCEPTABLE

TEAM®	Test and Inspection Procedure Supplement Corporate	FORM UT.1 Rev: 0 Page 1 of 1

ULTRASONIC INSPECTION REPORT

Project No.: 1103 - 000803 - 02 Page 1 of 2

Customer	Location	Date	S/O #
PRIME AE	I-95 NEW LONDON, CT GOLD STAR BRIDGE	10/21/21	CT DOT J/N 170-3413

Sold To: PRIME AE Part Number: GOLD STAR BRIDGE

Customer Order No: 16090-1 S/N(s): — SEE ATTACHED LIST —

Procedure: UT. AWS. 3 REV. 2 Description: GIRDER TRANSITION WELDS

Specification: AWS D1.5 ACC: AWS D1.5 (TENSION)

Scope of Examination: UT INSPECTION OF FULL PEN. GROOVE WELDS Material: STL

Heat Number: N/A

Quantity: 24 WELD LOCATIONS Heat Code: N/A

Test Parameters

Instrument: KB USN 60 Serial No.: 00R286 Date of Calibration: 8/12/21

Longitudinal Frequency: 2.25 MHZ Size: 1.0" ø Type KB GAMMA Serial No.: 00M6JW

Shear Wave Frequency: 2.25 MHZ Size: .625" x .750" Type HARISONIC AB021012 Serial No.: 90C140

Shear Wave Frequency: N/A MHZ Size: N/A Type N/A Serial No.: N/A

Shear Wave Frequency: N/A MHZ Size: N/A Type N/A Serial No.: N/A

Couplant: SONOTECH ULTRAGEL II BATCH # 20C037 Calibration Standard(s): IIW BLOCK S/N 37144

Surface Condition < 250 ra

Calibration Reference Level (dB) 0° 28-34 30° N/A 35° N/A 45° N/A 60° N/A 70° 56

Other Reference Levels (dB) 0° N/A 30° N/A 35° N/A 45° N/A 60° N/A 70° N/A

Inspection Results

Acceptable: 24 WELD AREAS Unacceptable:

Remarks NO REJECTABLE INDICATIONS NOTED.
ALL UT SCANNED THRU PAINTED GIRDER SURFACES.
SEE ATTACHMENT FOR LOCATION INFO AND DATA.

GREG BENWAY
TECHNICIAN (PRINT)

TECHNICIAN SIGNATURE LEVEL ☒ II ☐ III

N/A
ASSISTANT SIGNATURE LEVEL ☐ I ☐ II

THIS REPORT IS EXPRESSLY LIMITED TO TEAM INTERPRETATION OF THE RESULTS OBTAINED FROM THE TEST SPECIFIED AND DOES NOT CONSTITUTE A RESPRESENTATION WARRANTY OR GUARANTY OF THE ACTUAL CONDITION OF THE MATERIALS TESTED. TEAM expressly disclaims any responsibility for any loss cost damage or expense including personal injury or death caused by or attributed to TEAM misinterpretation of conditions or the performance of any test.

TEAM® Industrial Services, Inc.

TCM Div.
196 Woodlawn Road
Berlin CT 06037

(860) 828-6333
(860) 828-7488 FAX

UT TESTING LOCATIONS

REPORT OF NON-DESTRUCTIVE EXAMINATION

PRIME AE **Report #** 1103-000803-02

GOLD STAR BRIDGE - TRANSITION WELDS -

GIRDER LOCATION / FLANGE	DIMENSIONS		UT	INSP.
1) SPAN 33 G2 EAST BTM	28" W	2 3/8" - 1 7/8"	ACC.	MB
2) SPAN 34B G2 WEST BTM	20" W	2" - 1 7/16"	ACC.	MB
3) SPAN 34B G1 WEST BTM	20" W	2" - 1 7/16"	ACC.	MB
4) SPAN 34B G1 EAST BTM	20" W	2" - 1 7/16"	ACC.	MB
5) SPAN 34B G2 EAST BTM	20" W	2" - 1 7/16"	ACC.	MB
6) SPAN 35B G2 WEST BTM	20" W	2 1/8" - 1 1/2"	ACC.	MB
7) SPAN 35B G1 WEST BTM	20" W	2 1/8" - 1 1/2"	ACC.	MB
8) SPAN 35 G2 WEST BTM	24" W	1 3/8" - 1"	ACC.	MB
9) SPAN 35B G1 EAST BTM	20" W	2 1/8 - 1 1/2"	ACC.	MB
10) SPAN 35B G2 EAST BTM	20" W	2 1/8 - 1 1/2"	ACC.	MB
11) SPAN 33 G1 EAST BTM	24" W	1 7/8" - 1 3/8"	ACC.	MB
12) SPAN 34 G1 WEST BTM	24" W	2 1/4" - 1 5/8"	ACC.	MB
13) SPAN 34 G1 EAST BTM	24" W	2 1/4 - 1 5/8"	ACC.	MB
14) SPAN 35 G1 WEST BTM	24" W	1 5/8" - 1"	ACC.	MB
15) SPAN 35 G1 EAST BTM	24" W	1 5/8" - 1"	ACC.	MB
16) SPAN 35 G1 - TOP	24" W	1 3/4" - 1"	ACC	MB
17) SPAN 36 G1 - TOP	24" W	1 3/4" - 1"	ACC.	MB
18) SPAN 36 G1 WEST BTM	24" W	1 5/8 - 1"	ACC.	MB
19) SPAN 36 G1 EAST BTM	24" W	1 5/8" - 1"	ACC.	MB
20) SPAN 36 G2 EAST BTM	24" W	1 3/8 - 1"	ACC.	MB
21) SPAN 36B G1 EAST BTM	24" W	2" - 1 1/2"	ACC.	MB
22) SPAN 36B G2 EAST BTM	24" W	2" - 1 1/2"	ACC.	MB
23) SPAN 36B G2 WEST BTM	24" W	2" - 1 1/2"	ACC.	MB
24) SPAN 36B G1 WEST BTM	24" W	2" - 1 1/2"	ACC.	MB

TEAM	Test and Inspection Procedure Supplement	FORM UT.1 Rev: 0 Page 1 of 1

ULTRASONIC INSPECTION REPORT

Job/Order No: 1103-000803 Page 1 of 15

Customer	Location	Date	S/O #
PRIME AE	GOLD STAR BRIDGE	11/15/19 11/11/19	N/A

Sold To: PRIME AE
Part Number: BRIDGE PINS
Customer Order Number: TBD
S/N(s): SEE ATTACHED
Procedure: 22.H.800-46 REV. 0
Description: BRIDGE PINS
Specification: ASME V
ACC: REPORT FINDINGS
Scope of Examination: UT BRIDGE PINS
Material: STL
Heat Number: N/A
Quantity: 14 TOTAL
Heat Code: N/A

TEST PARAMETERS

Instrument: KB USN 60 Serial No. 00R286 Date of Calibration 11/12/19

Longitudinal Frequency	2.25	MHZ	Size	1/2" Ø	Type	UTX CX 352	Serial No.	0708222
Shear Wave Frequency	15°L 2.25	MHZ	Size	1/2" Ø	Type	GAMMA	Serial No.	42746
Shear Wave Frequency	45° 2.25	MHZ	Size	1/2	Type	ABFQ 0204-CMP	Serial No.	32286
Shear Wave Frequency	N/A	MHZ	Size	N/A	Type	N/A	Serial No.	N/A

Couplant: ECHO ULTRASONICS # 506-16
Calibration Standard(s): NOTCH IN PIN

Surface Condition: ≤ 250 Ra

Calibration Reference Level (dB)	0° 72	30°	35°	45° 65	60°	70°
Other Reference Levels (dB)	15°L 68	30°	35°	45°	60°	70°

INSPECTION RESULTS

Acceptable: X
Unacceptable:

Remarks: NO REJECTABLE INDICATIONS NOTED.
ALL PINS PAINTED END SURFACES.

GREG BONNAY
TECHNICIAN (PRINT)

TECHNICIAN SIGNATURE — LEVEL ☒ II ☐ III

N/A
ASSISTANT — LEVEL ☐ I ☐ II

THIS REPORT IS EXPRESSLY LIMITED TO TEAM INDUSTRIAL SERVICES INTERPRETATION OF THE RESULTS OBTAINED FROM THE TEST SPECIFIED AND DOES NOT CONSTITUTE A RESPRESENTATION WARRANTY OR GUARANTY OF THE ACTUAL CONDITION OF THE MATERIALS TESTED. TISI expressly disclaims any responsibility for any loss cost damage or expense including personal injury or death caused by or attributed to TISI misinterpretation of conditions or the performance of any test.

Bridge Pin Indication Diagram

Bridge # GOLD STAR Location GROTON CT

Pin I.D. U19 Truss S Span 27

Circumfriential Location

0 Deg. (TDC)

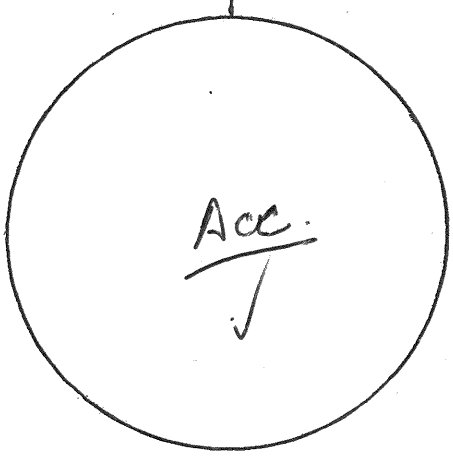

S End

Pin Dia. 6"

Pin Length 36"

Axial Location

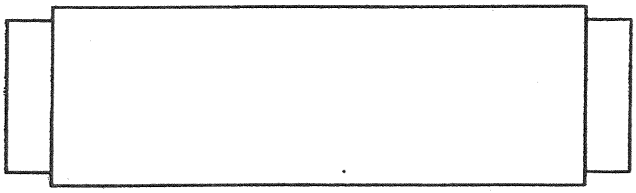

0 Deg. (TDC)

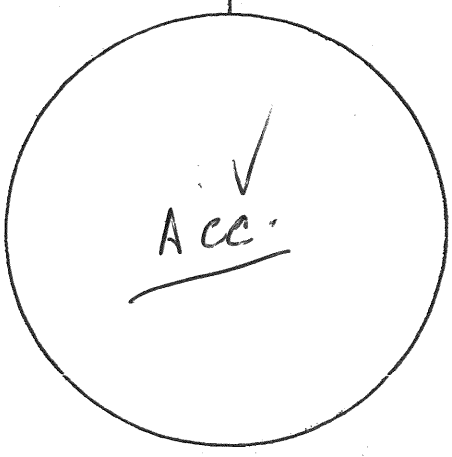

N End

Comments: ACCEPTABLE.

Bridge Pin Indication Diagram

Bridge # GOLD STAR Location GROTON CT

Pin I.D. L18 Truss 27 Span S

Circumfriential Location

0 Deg. (TDC)

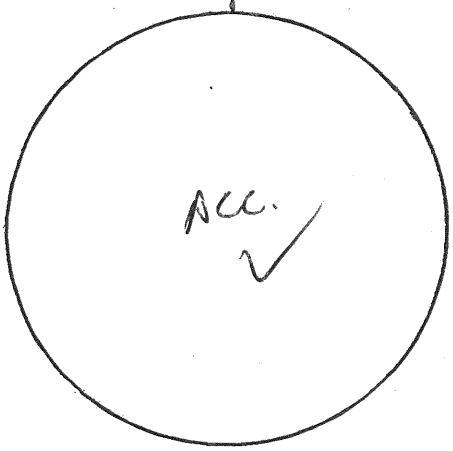

S End

Pin Dia. 6"

Pin Length 36"

Axial Location

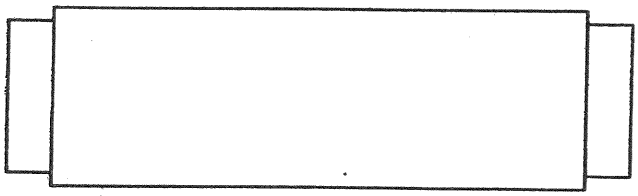

0 Deg. (TDC)

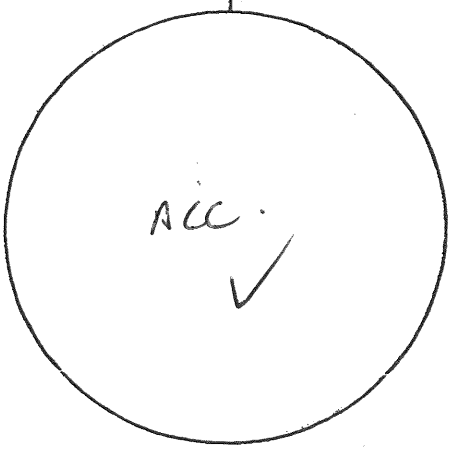

N End

Comments: ACCEPTABLE

Bridge Pin Indication Diagram

Bridge # GOLD STAR Location GROTON CT

Pin I.D. L19 Truss 27 Span S

Circumfriential Location

0 Deg. (TDC)

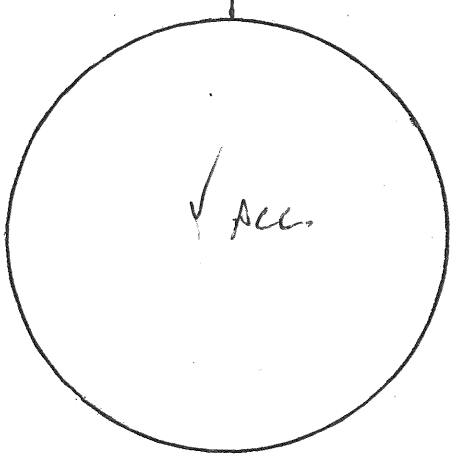

S End

Pin Dia. 6"

Pin Length 36"

Axial Location

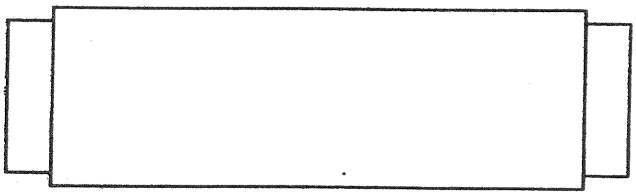

0 Deg. (TDC)

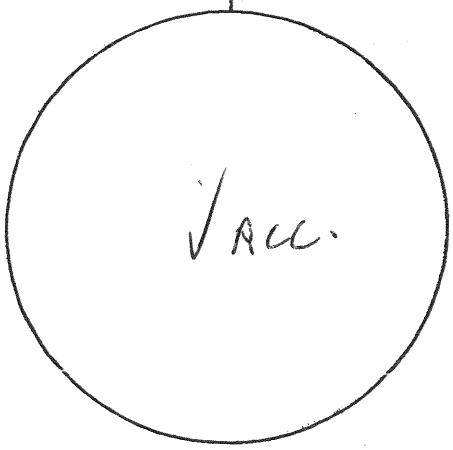

N End

Comments: ACCEPTABLE

Bridge Pin Indication Diagram

Bridge # GOLD STAR Location GROTON CT

Pin I.D. L27 Truss 27 Span 5

Circumfriential Location

0 Deg. (TDC)

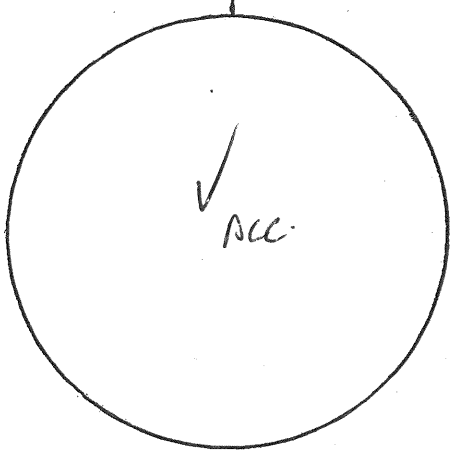

5 End

Pin Dia. 6"

Pin Length 36"

Axial Location

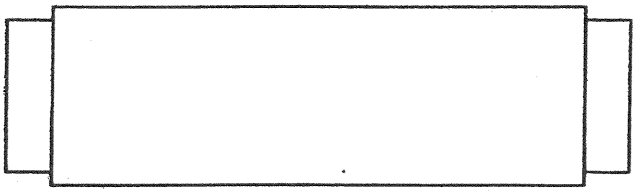

0 Deg. (TDC)

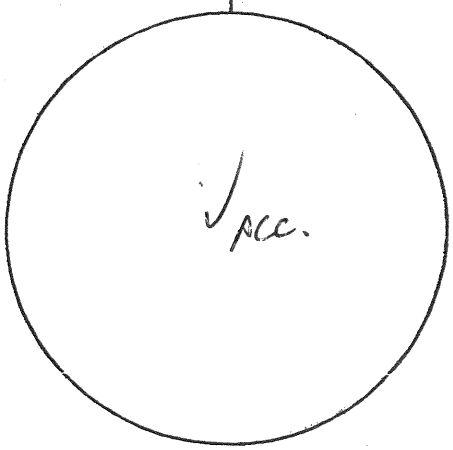

N End

Comments: ACCEPTABLE

Bridge Pin Indication Diagram

Bridge # GOLD STAR Location GROTON CT

Pin I.D. U27 Truss S Span 27

Circumfriential Location

0 Deg. (TDC)

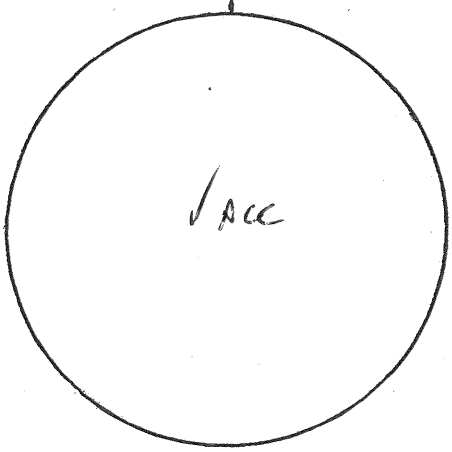

S End

Pin Dia. 6"

Pin Length 36"

Axial Location

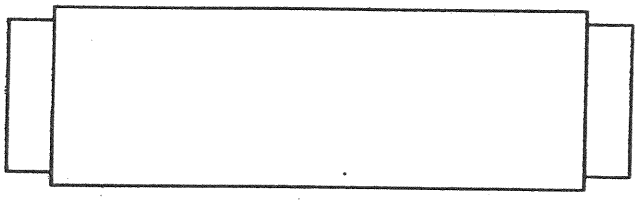

0 Deg. (TDC)

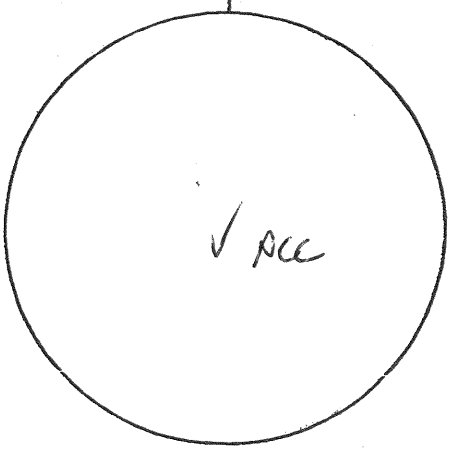

N End

Comments: ACCEPTABLE

Bridge Pin Indication Diagram

Bridge # GOLD STAR Location GROTON CT

Pin I.D. L-28 Truss S Span 27

Circumfriential Location

0 Deg. (TDC)

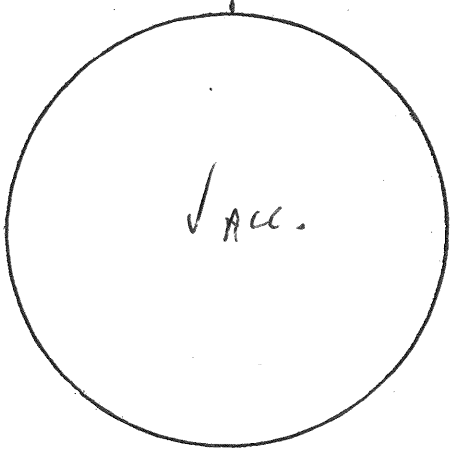

S End

Pin Dia. 6"

Pin Length 36"

Axial Location

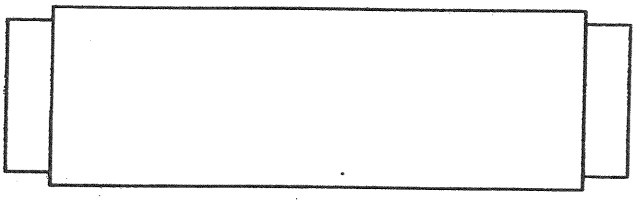

0 Deg. (TDC)

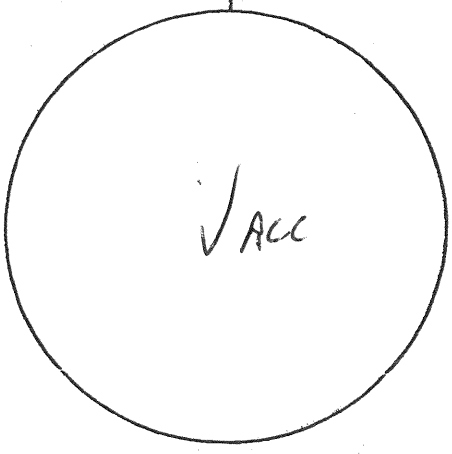

N End

Comments: ACCEPTABLE

Bridge Pin Indication Diagram

Bridge # GOLD STAR Location GROTON CT

Pin I.D. L18 Truss N Span 27

Circumfriential Location

0 Deg. (TDC)

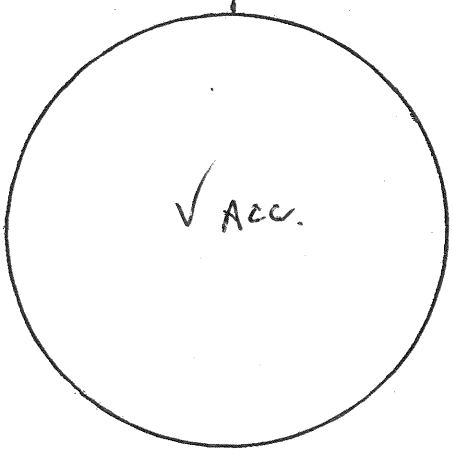

N End

Pin Dia. 6"

Pin Length 36"

Axial Location

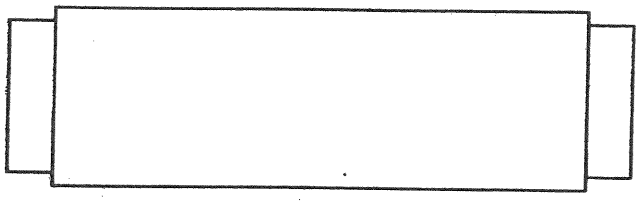

0 Deg. (TDC)

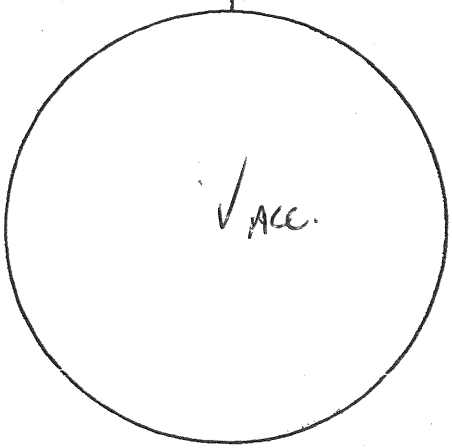

S End

Comments: ACCEPTABLE

Bridge Pin Indication Diagram

Bridge # GOLD STAR Location GROTON, CT

Pin I.D. L19 Truss 27 Span N

Circumfriential Location

0 Deg. (TDC)

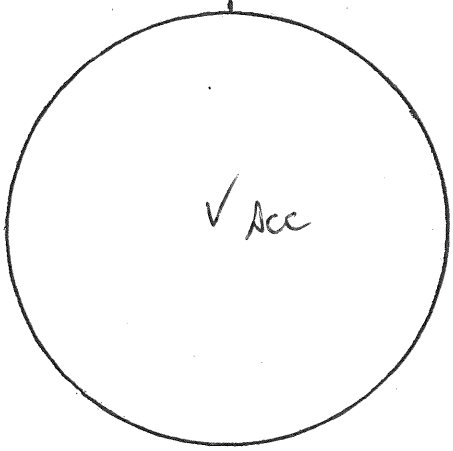

N End

Pin Dia. 6"

Pin Length 36"

Axial Location

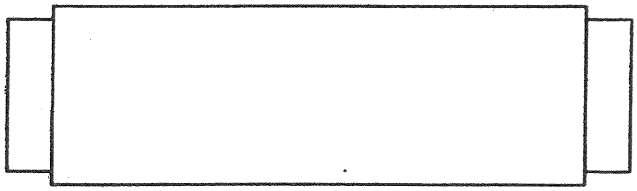

0 Deg. (TDC)

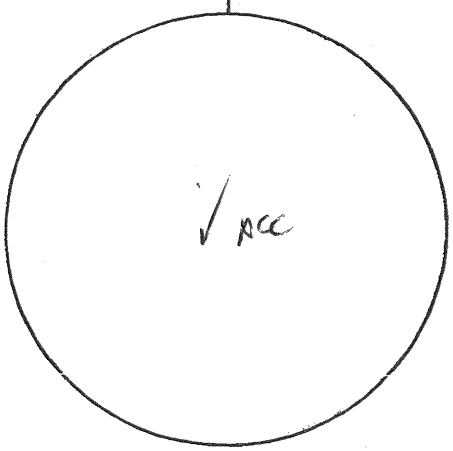

S End

Comments: ACCEPTABLE

Bridge Pin Indication Diagram

Bridge # GOLD STAR Location GROTON CT

Pin I.D. U19 Truss N Span 27

Circumfriential Location

0 Deg. (TDC)

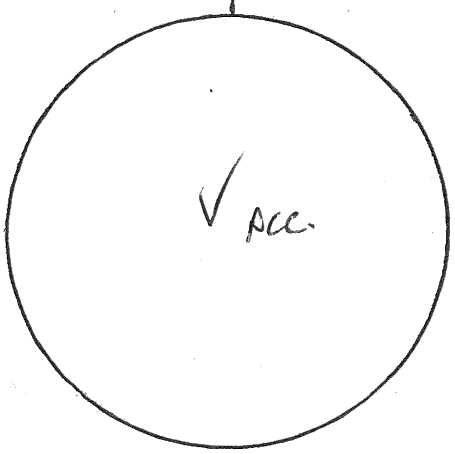

N End

Pin Dia. 6"

Pin Length 36"

Axial Location

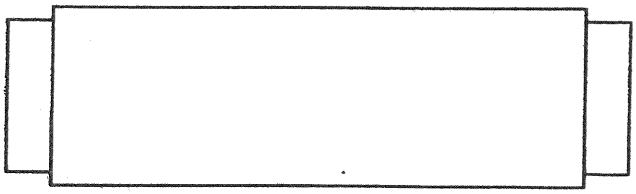

0 Deg. (TDC)

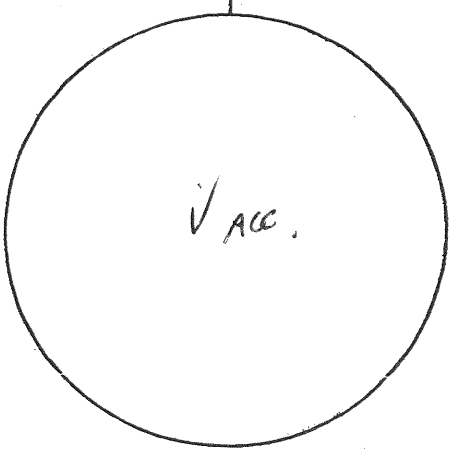

S End

Comments: ACCEPTABLE

Bridge Pin Indication Diagram

Bridge # GOLD STAR Location GROTON CT

Pin I.D. U20 Truss N Span 27

Circumfriential Location

0 Deg. (TDC)

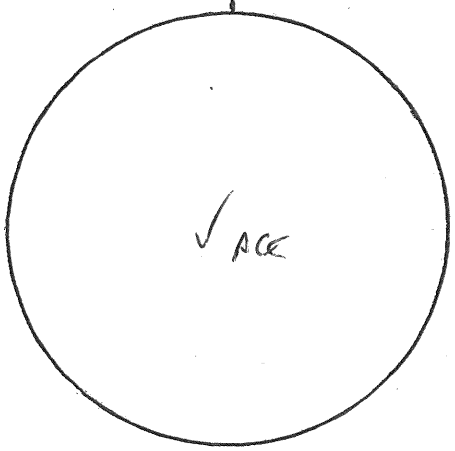

N End

Pin Dia. 6"

Pin Length 36"

Axial Location

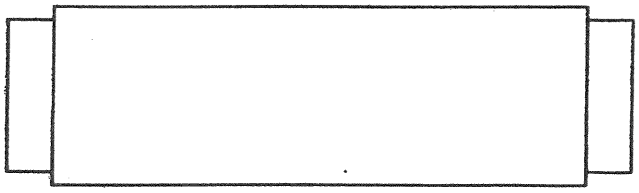

0 Deg. (TDC)

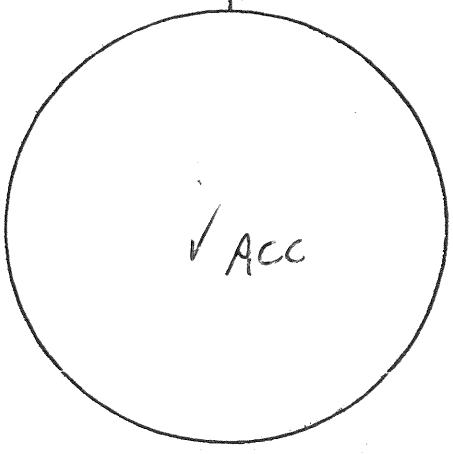

S End

Comments: ACCEPTABLE

Bridge Pin Indication Diagram

Bridge # GOLD STAR Location GROTON, CT

Pin I.D. U26 Truss N Span 27

Circumfriential Location

0 Deg. (TDC)

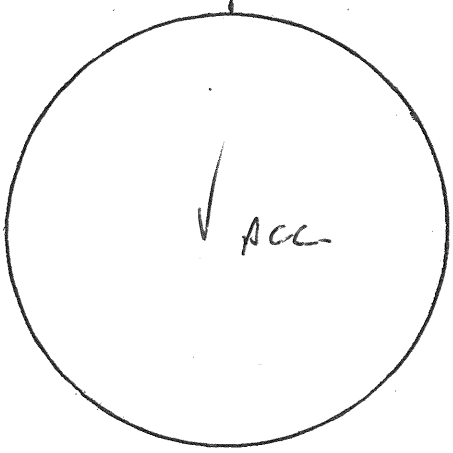

N End

Pin Dia. 6"

Pin Length 36"

Axial Location

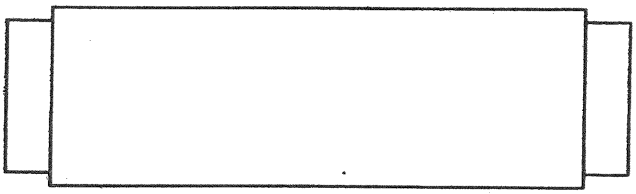

0 Deg. (TDC)

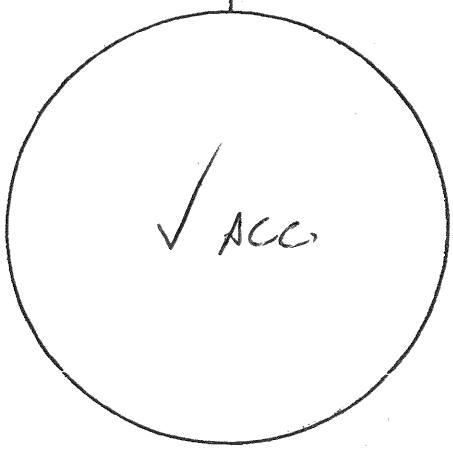

S End

Comments: ACCEPTABLE

Bridge Pin Indication Diagram

Bridge # GOLD STAR Location GROTON CT

Pin I.D. U27 Truss N Span 27

Circumfriential Location

0 Deg. (TDC)

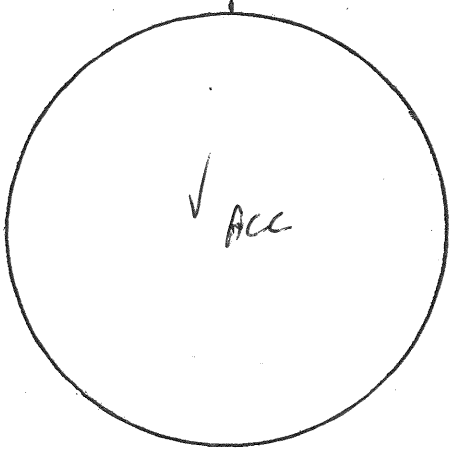

N End

Pin Dia. 6"

Pin Length 36"

Axial Location

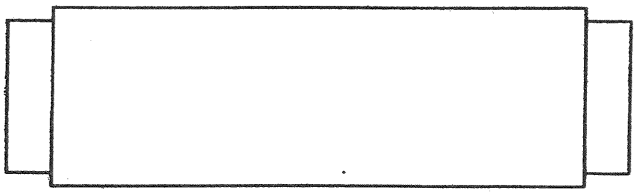

0 Deg. (TDC)

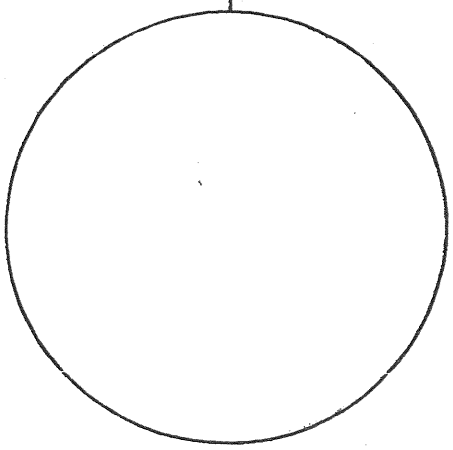

S End

Comments: ACCEPTABLE

Bridge Pin Indication Diagram

Bridge # GOLD STAR Location GROTON CT

Pin I.D. L27 Truss N Span 27

Circumfriential Location

0 Deg. (TDC)

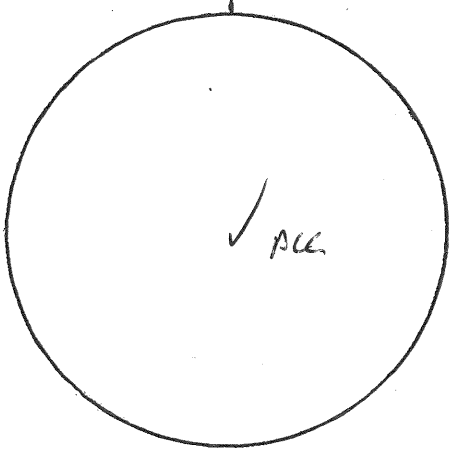

N End

Pin Dia. 6"

Pin Length 36"

Axial Location

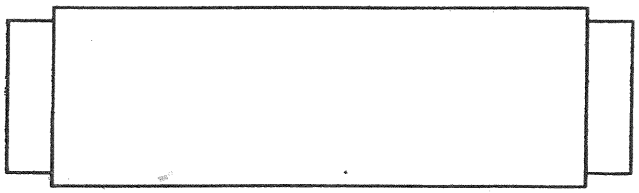

0 Deg. (TDC)

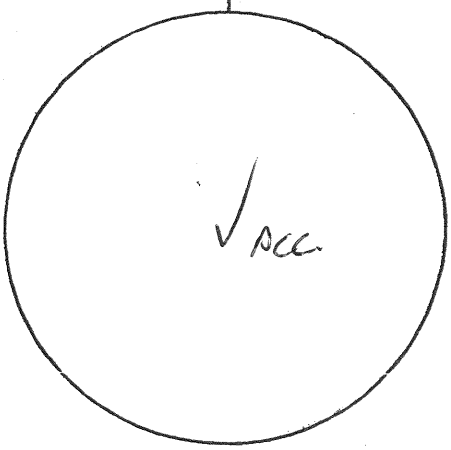

S End

Comments: ACCEPTABLE

Bridge Pin Indication Diagram

Bridge # GOLD STAR Location GROTON, CT

Pin I.D. L28 Truss N Span 27

Circumfriential Location

0 Deg. (TDC)

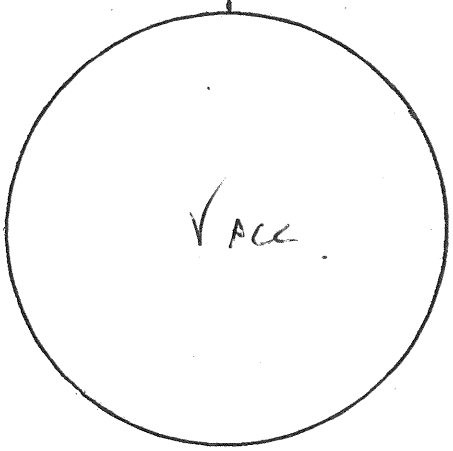

N End

Pin Dia. 6"

Pin Length 36"

Axial Location

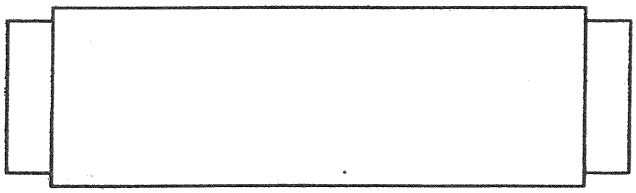

0 Deg. (TDC)

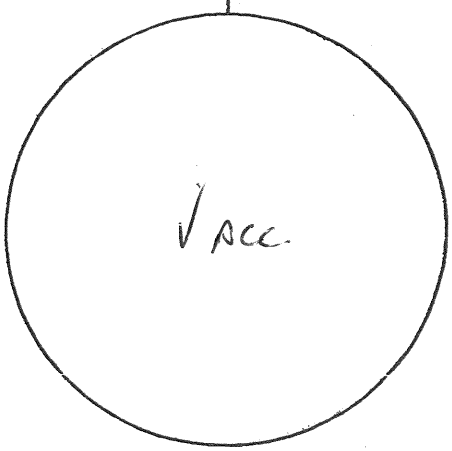

S End

Comments: ACCEPTABLE

Sketches
Inspection type: Fracture Critical,Routine
Inspection Date: 7/26/2021
Inspected by: PRIME AE

:Bridge No 03819

Town: NEW LONDON
Carried: INTERSTATE 95 NORTHBOUND
Crossed: THAMES RV,RR,LOCAL ROADS
Inventory Route: NHS

CREW: SW, KT	DATE: 8/22/17	BRIDGE NO.: 03819

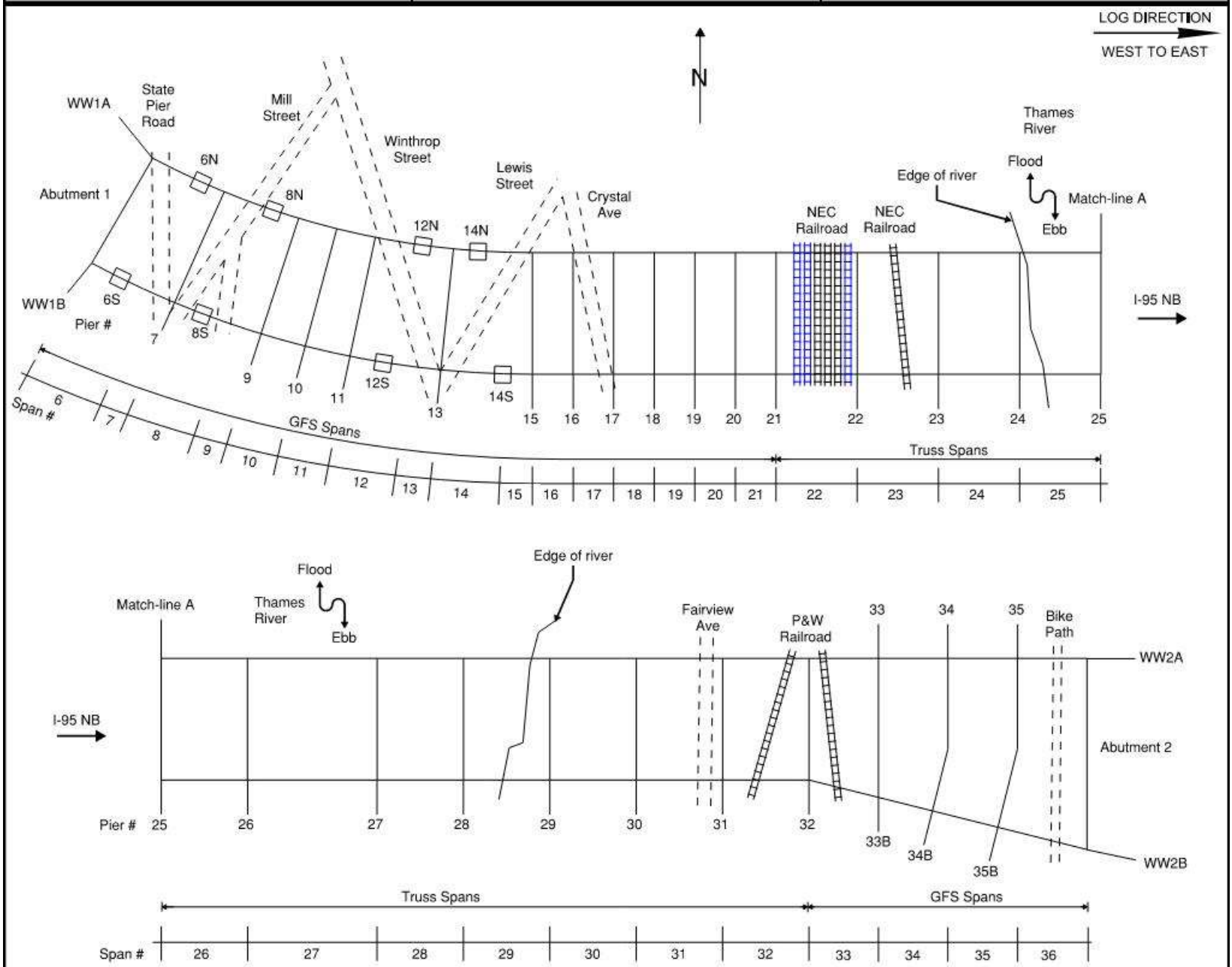

Key Plan

REVISION 1	DATE: 8/19/19	CREW: BH, JG (Baker) - No change	REVISION 3	DATE:	CREW:
REVISION 2	DATE: 7/26/2021	CREW: BM, IS, NH (PRIME)	REVISION 4	DATE:	CREW:

Sketches
Inspection type: Fracture Critical,Routine
Inspection Date: 7/26/2021
Inspected by: PRIME AE

:Bridge No 03819

Town: NEW LONDON
Carried: INTERSTATE 95 NORTHBOUND
Crossed: THAMES RV,RR,LOCAL ROADS
Inventory Route: NHS

CREW: BH, SW, BF	DATE: 11/7/17	BRIDGE NO.: 03819

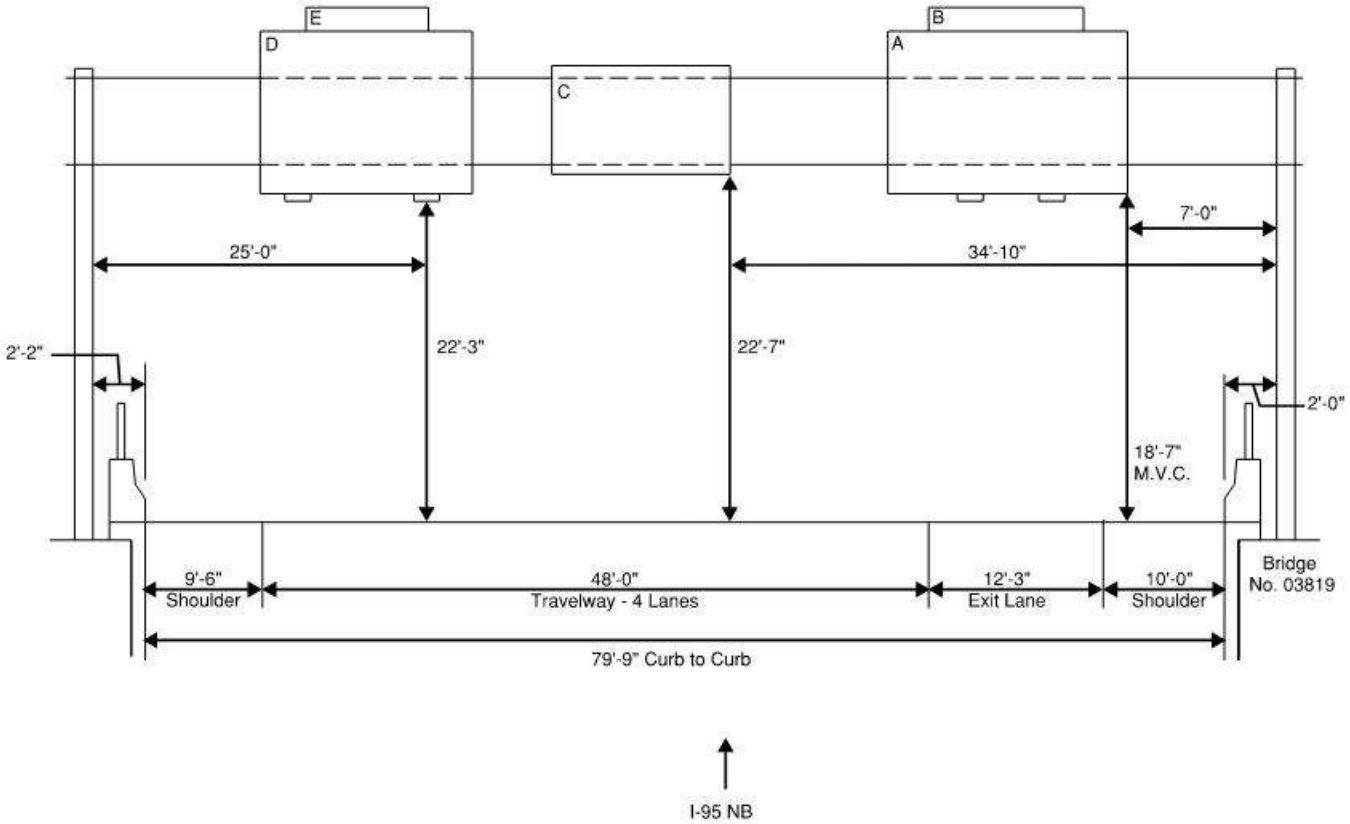

Note:
- Minimum vertical clearance measured to sign panels C & D were not measured this inspection (taken from previous inspection); Lanes not closed this inspection

Overhead Clearance - Sign Structure No. 21190 - Span 11

REVISION 1	DATE: 9/25/19	CREW: AH, BH, JG (Baker) - No change	REVISION 3	DATE:	CREW:
REVISION 2	DATE: 10/7/2021	CREW: BM, NH (PRIME) - No change	REVISION 4	DATE:	CREW:

CREW: BH, SW, BF	DATE: 11/7/17	BRIDGE NO.: 03819

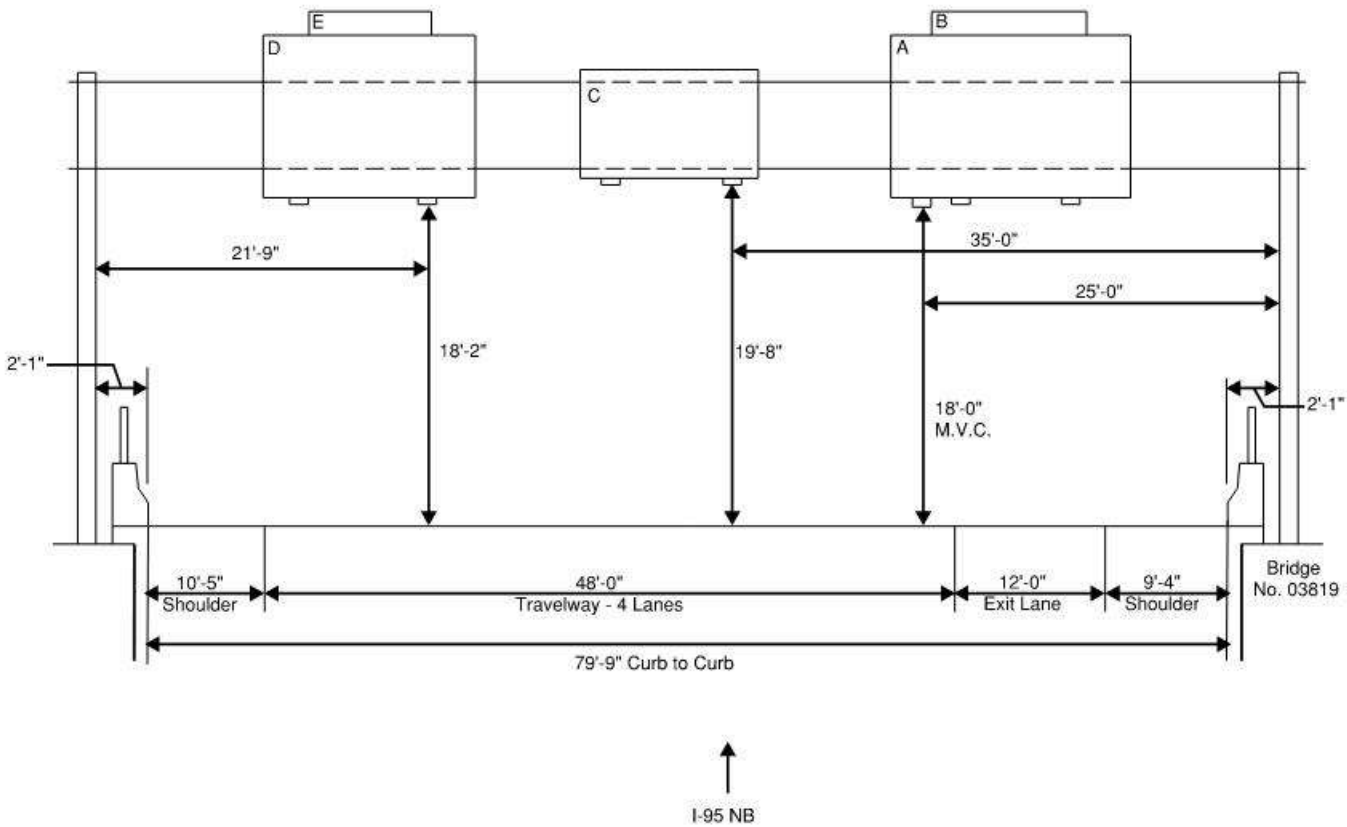

Note:
- Minimum vertical clearance measured to sign panels A, C & D were not measured this inspection (taken from previous inspections); Lanes not closed this inspection

Overhead Clearance - Sign Structure No. 21191 - Span 26

REVISION 1	DATE: 9/26/19	CREW: AH, BH, JG (Baker)	REVISION 3	DATE:	CREW:
REVISION 2	DATE: 9/28/2021	CREW: BM, NH (PRIME) - No change	REVISION 4	DATE:	CREW:

Sketches
Inspection type: Fracture Critical,Routine
Inspection Date: 7/26/2021
Inspected by: PRIME AE

:Bridge No 03819

Town: NEW LONDON
Carried: INTERSTATE 95 NORTHBOUND
Crossed: THAMES RV,RR,LOCAL ROADS
Inventory Route: NHS

CREW: BH, SW, BF	DATE: 11/7/17	BRIDGE NO.: 03819

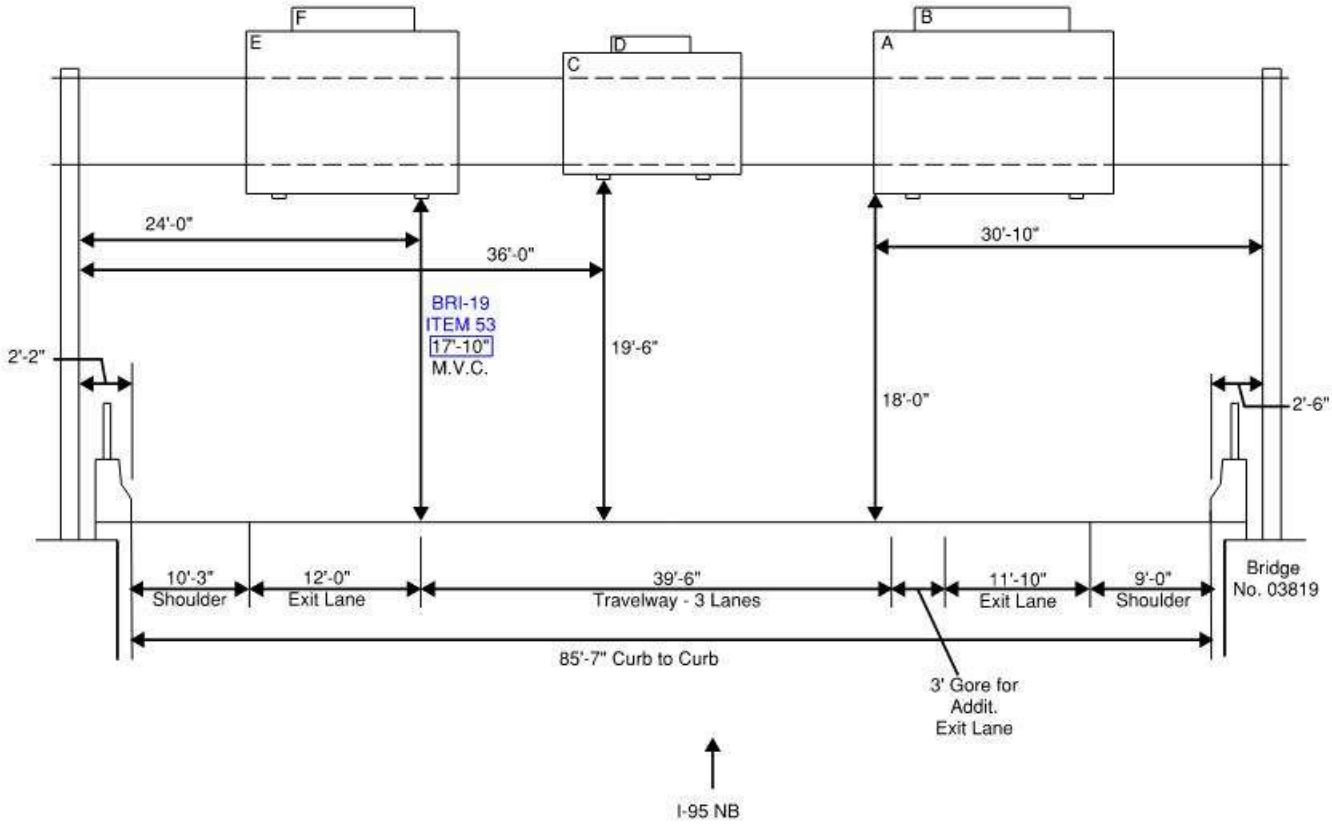

Note:
- Minimum vertical clearance measured to sign panels A, C & D were not measured this inspection (taken from previous inspection); Lanes not closed this inspection

Overhead Clearance - Sign Structure No. 21192 - Span 32

REVISION 1	DATE: 9/26/19	CREW: AH, BH, JG (Baker)	REVISION 3	DATE:	CREW:
REVISION 2	DATE: 9/28/2021	CREW: BM, NH (PRIME) - No change	REVISION 4	DATE:	CREW:

Sketches
Inspection type: Fracture Critical,Routine
Inspection Date: 7/26/2021
Inspected by: PRIME AE

:Bridge No 03819

Town: NEW LONDON
Carried: INTERSTATE 95 NORTHBOUND
Crossed: THAMES RV,RR,LOCAL ROADS
Inventory Route: NHS

CREW: SW, JG	DATE: 12/8/17	BRIDGE NO.: 03819

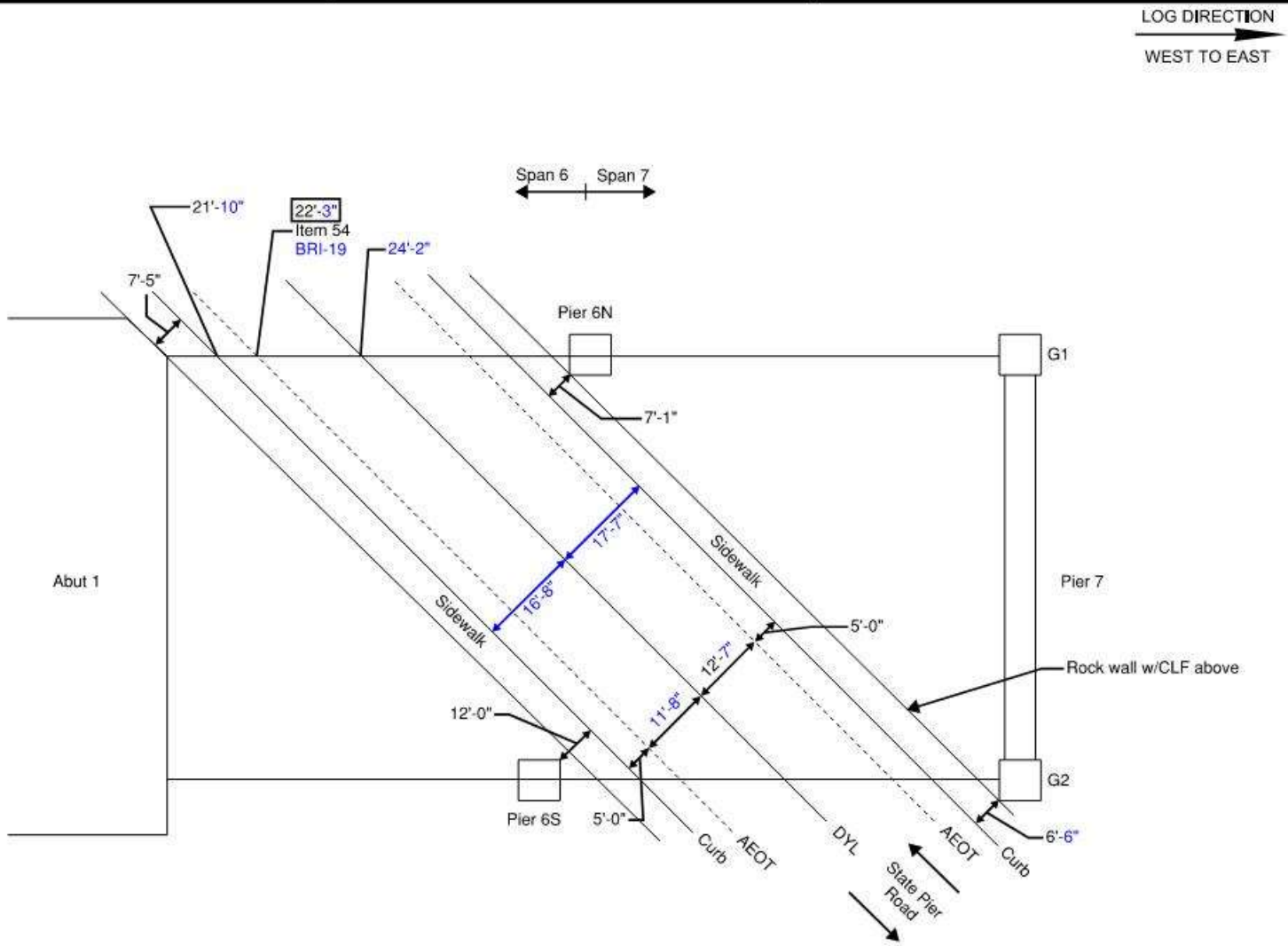

General Notes:
- Curbs are vert faced granite w/±5" reveal
- All vertical clearances >25' unless otherwise noted

Legend:
DYL Double Yellow Line
AEOT Assumed Edge of Travel

Spans 6 & 7 Clearance Diagram over State Pier Road

REVISION 1	DATE: 10/7/19	CREW: JG, BH (Baker)	REVISION 3	DATE:	CREW:
REVISION 2	DATE: 9/9/2021	CREW: EG, IS, NH (PRIME)	REVISION 4	DATE:	CREW:

Sketches
Inspection type: Fracture Critical,Routine
Inspection Date: 7/26/2021
Inspected by: PRIME AE

:Bridge No 03819

Town: NEW LONDON
Carried: INTERSTATE 95 NORTHBOUND
Crossed: THAMES RV,RR,LOCAL ROADS
Inventory Route: NHS

CREW: SW, JG	DATE: 12/8/17	BRIDGE NO.: 03819

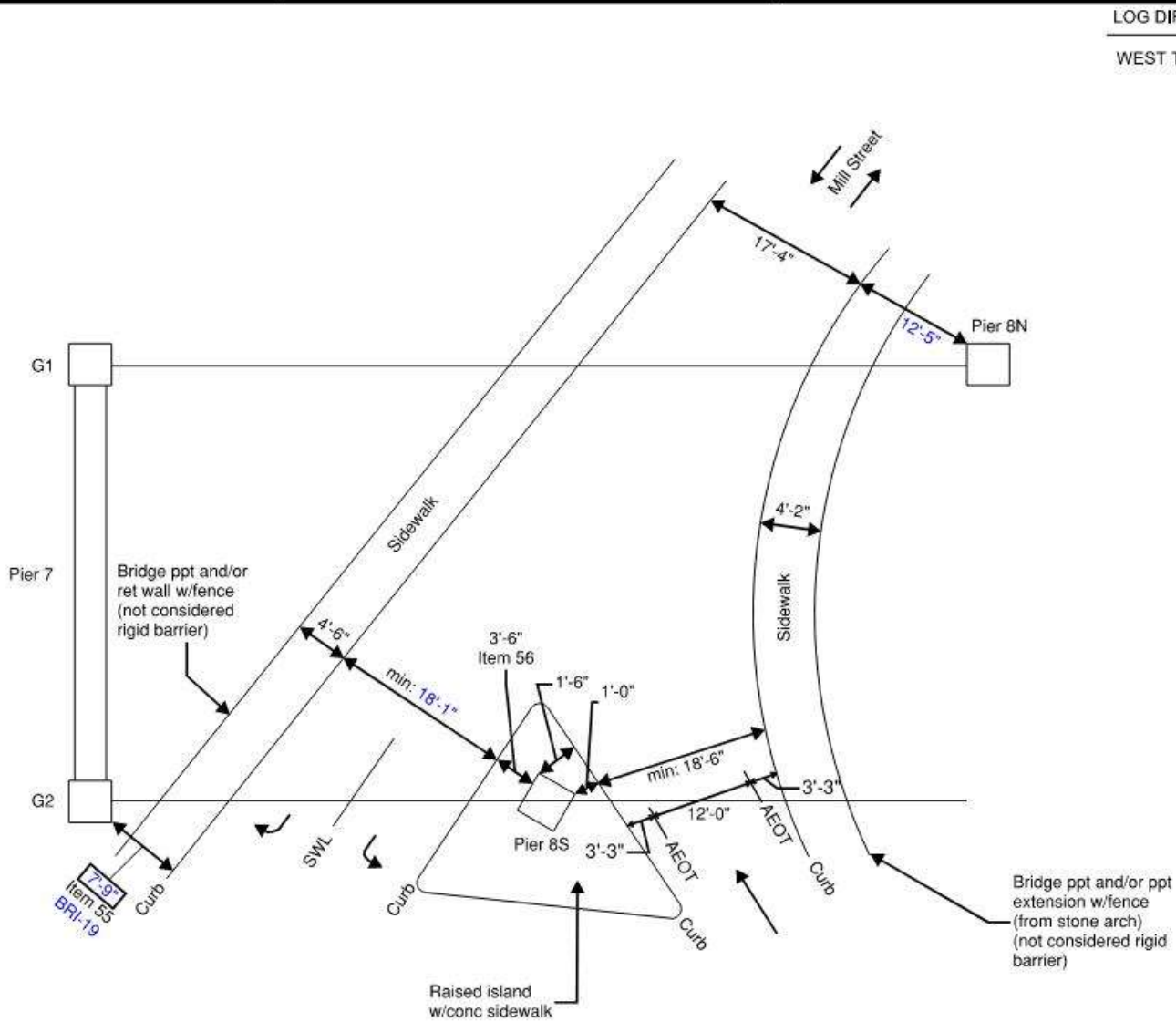

General Notes:
- Curbs are vert faced granite w/±5" reveal
- All vertical clearances >25'
- Traffic on Mill Street was blocked off with a concrete barrier at the time of inspection.

Legend:
SWL Solid White Line
AEOT Assumed Edge of Travel

Span 8 Clearance Diagram over Mill Street

REVISION 1	DATE: 10/7/19	CREW: JG, BH (Baker)	REVISION 3	DATE:	CREW:
REVISION 2	DATE: 10/28/2021	CREW: BM, MM (PRIME)	REVISION 4	DATE:	CREW:

Sketches
Inspection type: Fracture Critical,Routine
Inspection Date: 7/26/2021
Inspected by: PRIME AE

:Bridge No 03819

Town: NEW LONDON
Carried: INTERSTATE 95 NORTHBOUND
Crossed: THAMES RV,RR,LOCAL ROADS
Inventory Route: NHS

CREW: SW, JG	DATE: 12/8/17	BRIDGE NO.: 03819

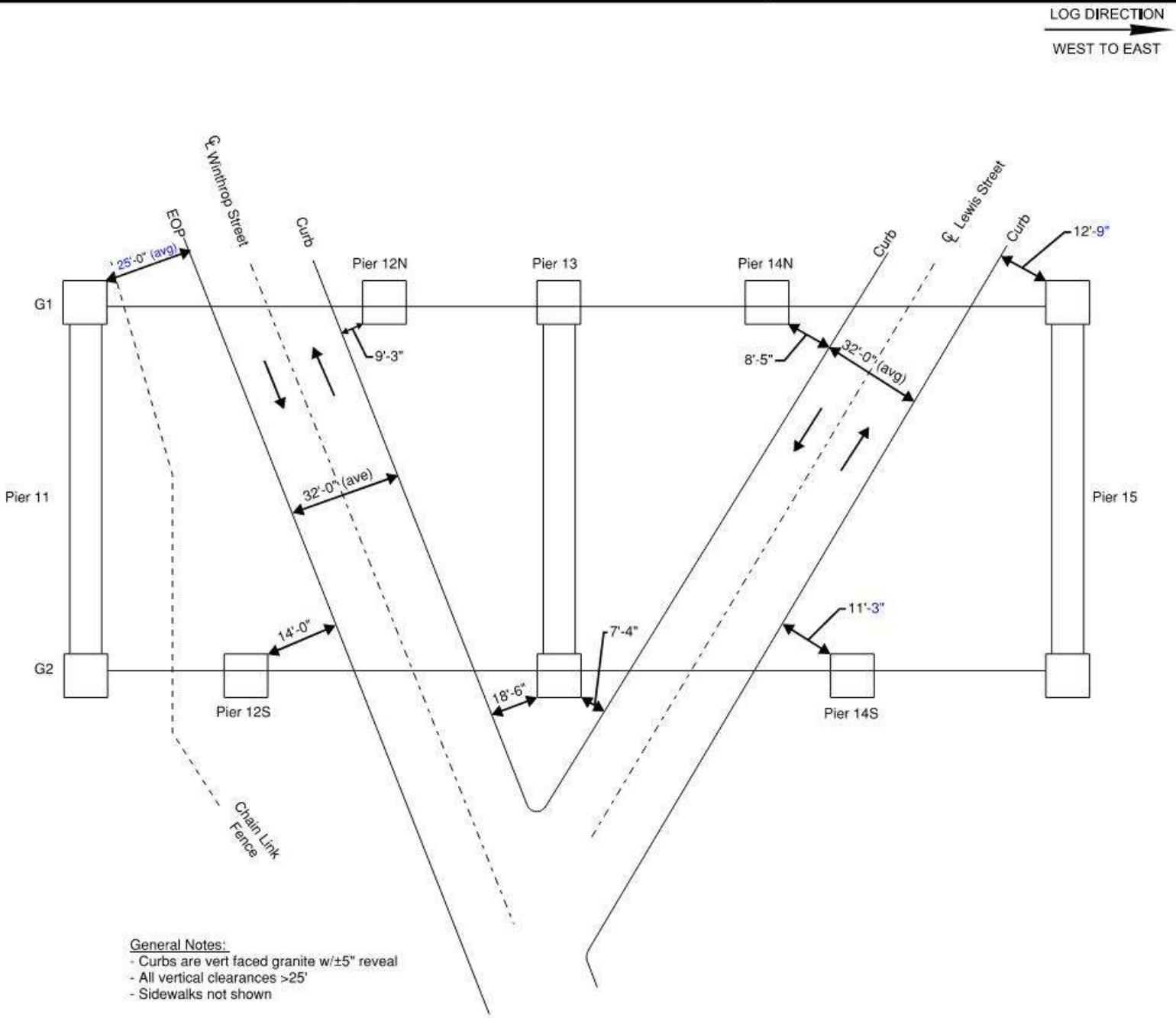

General Notes:
- Curbs are vert faced granite w/±5" reveal
- All vertical clearances >25'
- Sidewalks not shown

Legend:
EOP Edge of Pavement

Spans 13 & 15 Clearance Diagram over Winthrop and Lewis Street

REVISION 1	DATE: 10/7/19	CREW: JG, BH (Baker)	REVISION 3	DATE:	CREW:
REVISION 2	DATE: 10/28/2021	CREW: BM, MM (PRIME)	REVISION 4	DATE:	CREW:

CREW: SW, JG	DATE: 12/8/17	BRIDGE NO.: 03819

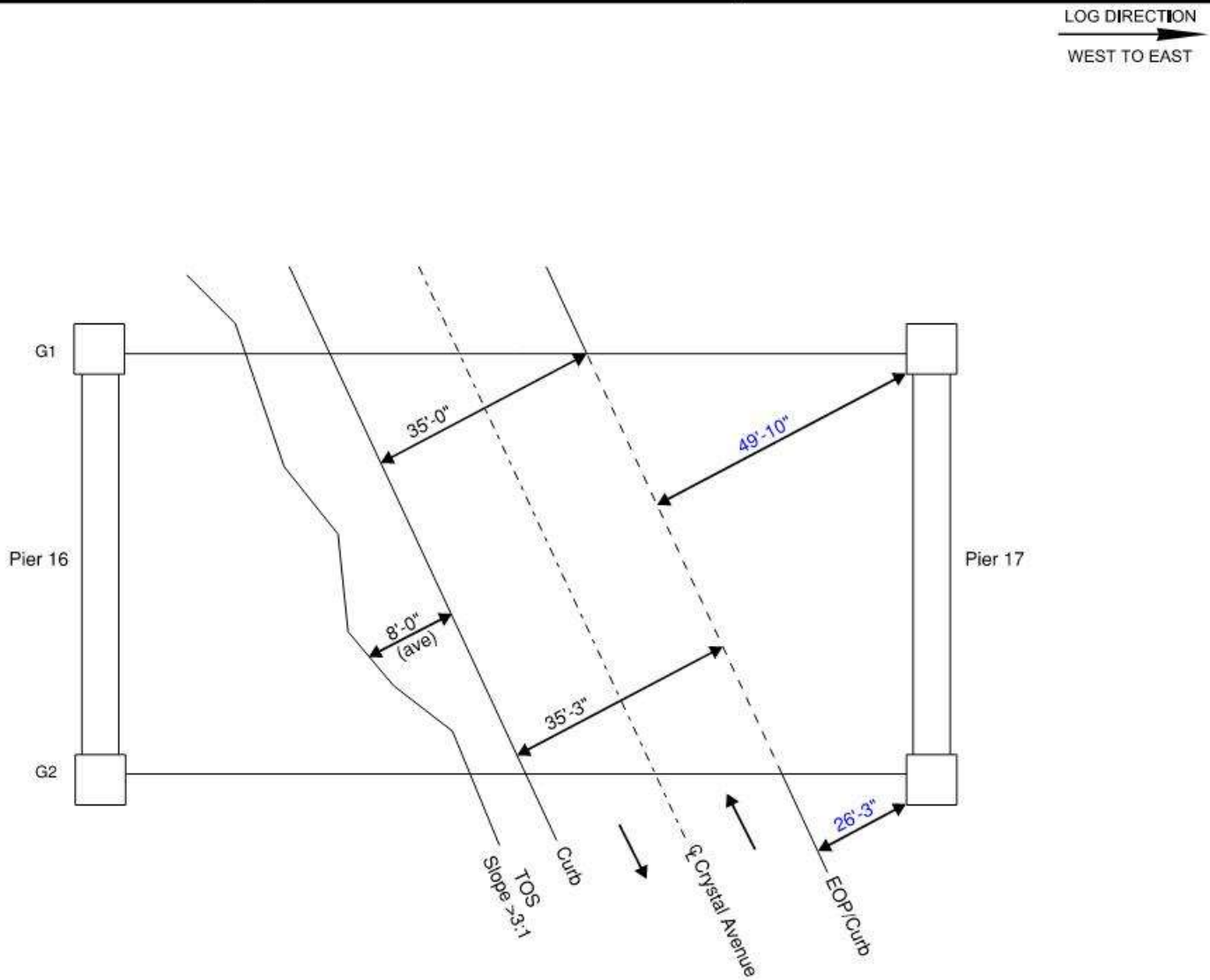

General Notes:
- Curbs are vert faced granite w/±5" reveal
- All vertical clearances >25'
- No curb at east side below structure
- Sidewalk at west side of Crystal Avenue not shown

Legend:
TOS Toe of Slope
EOP Edge of Pavement

Span 17 Clearance Diagram over Crystal Avenue

REVISION 1	DATE: 10/7/19	CREW: JG, BH (Baker) - No change	REVISION 3	DATE:	CREW:
REVISION 2	DATE: 10/28/2021	CREW: BM, MM (PRIME)	REVISION 4	DATE:	CREW:

Sketches
Inspection type: Fracture Critical,Routine
Inspection Date: 7/26/2021
Inspected by: PRIME AE

:Bridge No 03819

Town: NEW LONDON
Carried: INTERSTATE 95 NORTHBOUND
Crossed: THAMES RV,RR,LOCAL ROADS
Inventory Route: NHS

CREW: BH, BF	DATE: 8/22/17	BRIDGE NO.: 03819

LOG DIRECTION
WEST TO EAST

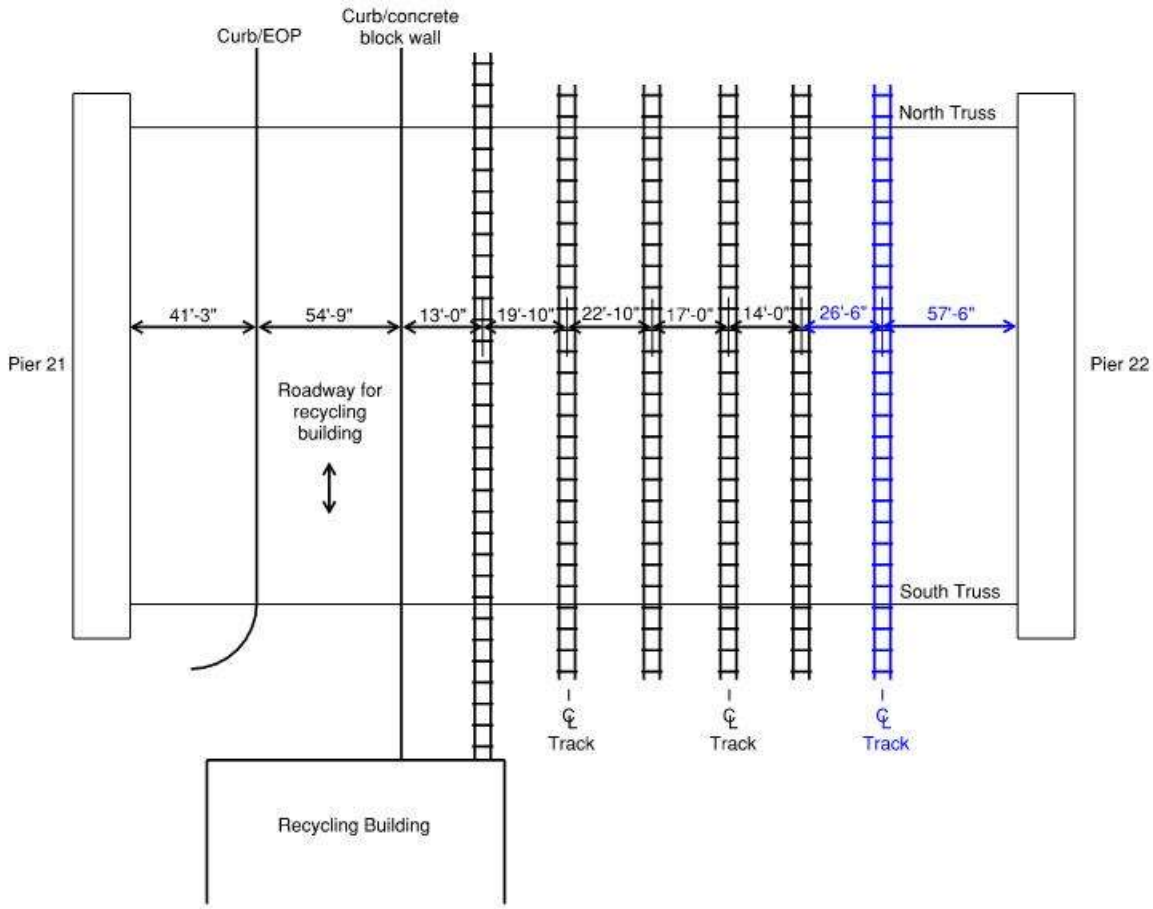

General Notes:
- All Vertical clearances >25'
- New track installed since last inspection.

Legend:
EOP Edge of Pavement

Span 22 Clearance Diagram over Railroad

REVISION 1	DATE: 10/30/19	CREW: BH, JG (Baker)	REVISION 3	DATE:	CREW:
REVISION 2	DATE: 8/16/2021	CREW: CMR, AN (PRIME)	REVISION 4	DATE:	CREW:

Sketches
Inspection type: Fracture Critical,Routine
Inspection Date: 7/26/2021
Inspected by: PRIME AE

:Bridge No 03819

Town: NEW LONDON
Carried: INTERSTATE 95 NORTHBOUND
Crossed: THAMES RV,RR,LOCAL ROADS
Inventory Route: NHS

CREW: BH, BF	DATE: 8/22/17	BRIDGE NO.: 03819

LOG DIRECTION
WEST TO EAST

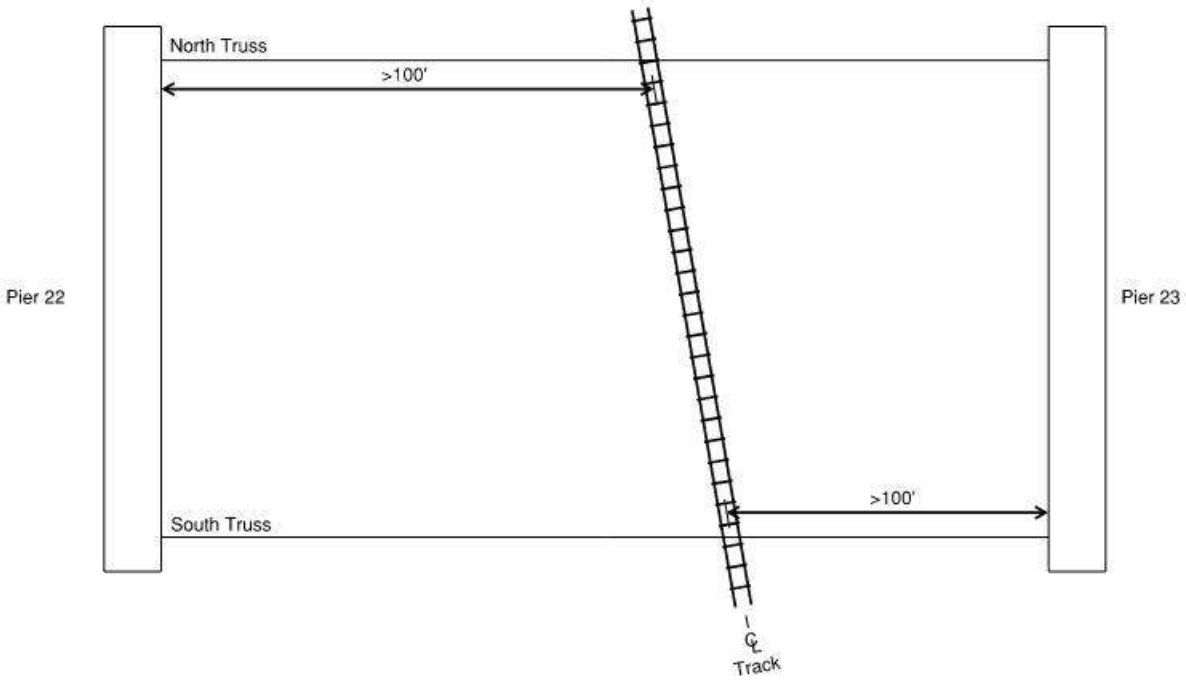

General Notes:
- All Vertical clearances >25'

Span 23 Clearance Diagram over Railroad

REVISION 1	DATE: 10/30/19	CREW: BH, JG (Baker) - No change	REVISION 3	DATE:	CREW:
REVISION 2	DATE: 8/16/2021	CREW: CMR, AN (PRIME) - No change	REVISION 4	DATE:	CREW:

CREW: SW, JG	DATE: 2/6/18	BRIDGE NO.: 03819

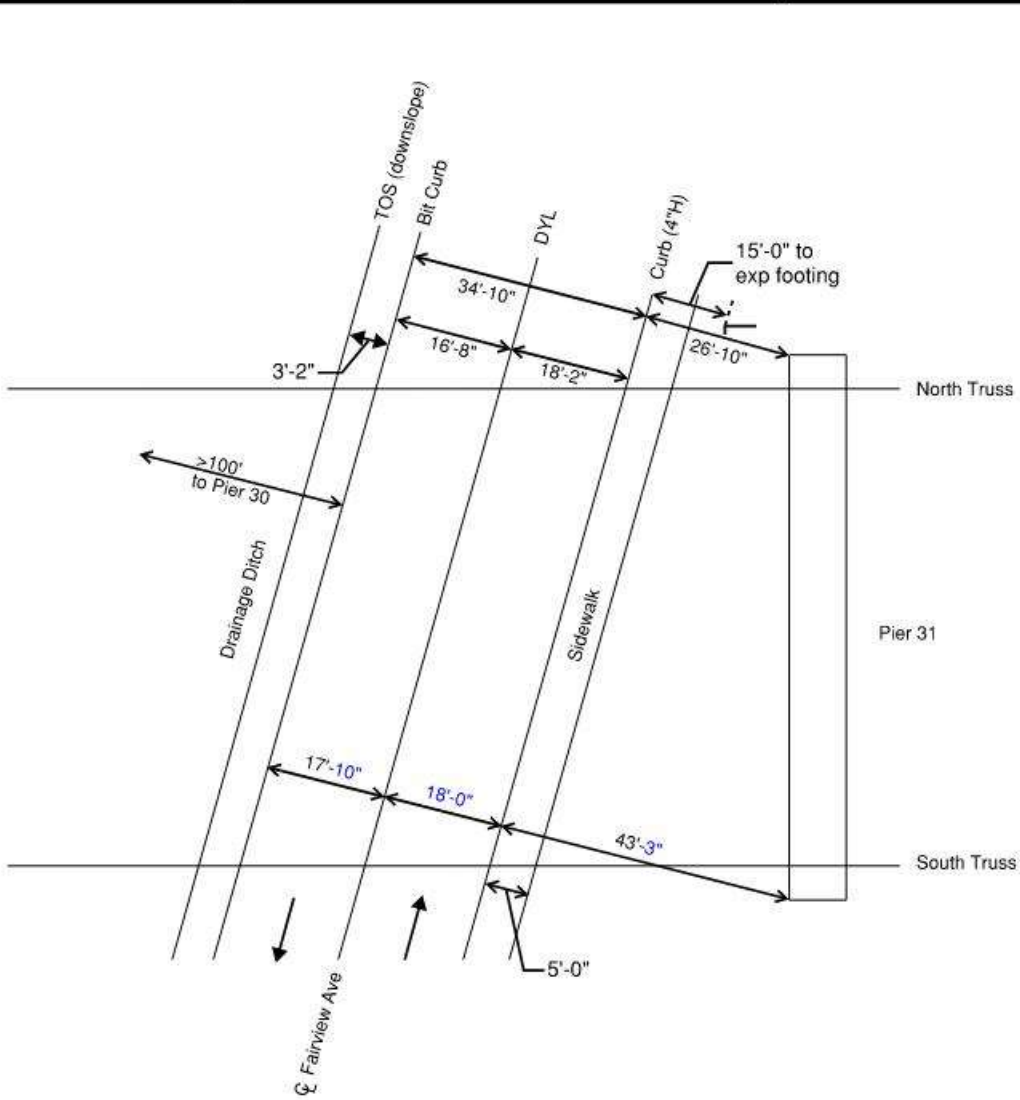

General Notes:
- All vertical clearances >25'

Legend:
DYL Double Yellow Line
TOS Top of Slope

Span 31 Clearance Diagram over Fairview Avenue

REVISION 1	DATE: 10/7/19	CREW: JG, BH (Baker)	REVISION 3	DATE:	CREW:
REVISION 2	DATE: 10/18/2021	CREW: NPR, IS (PRIME)	REVISION 4	DATE:	CREW:

Sketches
Inspection type: Fracture Critical,Routine
Inspection Date: 7/26/2021
Inspected by: PRIME AE

:Bridge No 03819

Town: NEW LONDON
Carried: INTERSTATE 95 NORTHBOUND
Crossed: THAMES RV,RR,LOCAL ROADS
Inventory Route: NHS

CREW: BH, BF	DATE: 8/23/17	BRIDGE NO.: 03819

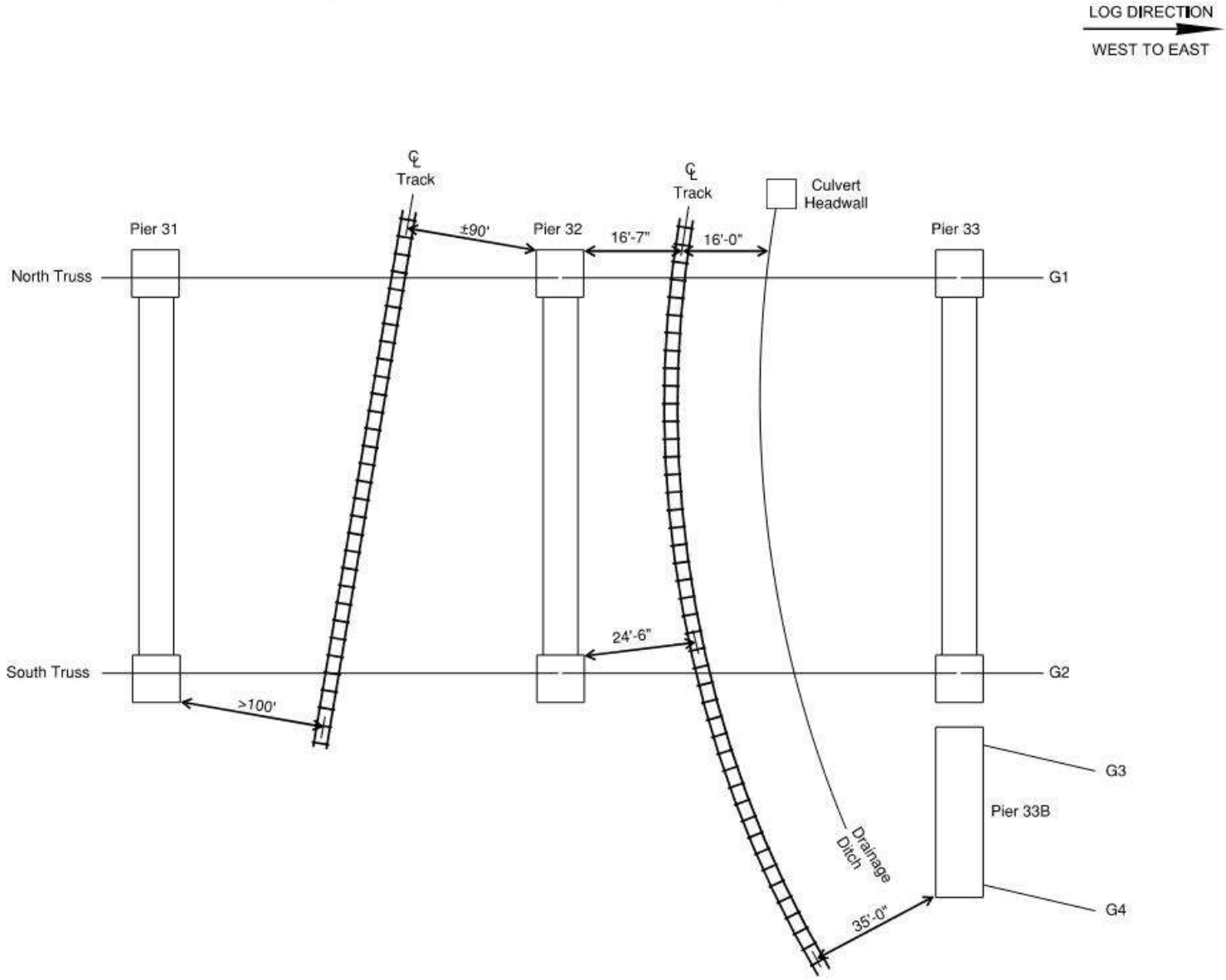

General Notes:
- All vertical clearances >25'

Spans 32-33 Clearance Diagram over Railroad

REVISION 1	DATE: 11/20/19	CREW: BH, JG (Baker) - No change	REVISION 3	DATE:	CREW:
REVISION 2	DATE: 7/26/2021	CREW: BM, IS (PRIME) - No change	REVISION 4	DATE:	CREW:

CREW: SW, BH, BF	DATE: 11/7/2017	BRIDGE NO.: 03819

Top of Deck General Notes

Overlay:

- ~~The bituminous overlay in the travel lanes has been previously repaved.~~
- The overlay has random longitudinal, transverse and map cracks up to 1/4" wide with random rust stains (typically in the shoulders), light to moderate raveling in the shoulders up to 1/2" deep, isolated gouges in the bituminous up to 1" deep and minor wheel line rutting up to 1/2" deep in the travel lanes.
- The shoulders have random depressions from previous snooper outriggers.
- There are isolated bituminous patches, some of which are slightly settled up to 1" deep, and sand/debris in the shoulders up to 6" high.
- North and south edges of overlay along curb typically sounds hollow for 6"-12" wide and 1' perimeter around scupper grates.
- Previously noted spalls/potholes/holes in the deck in the shoulders especially adjacent to scupper grates were repaired at several locations since the last inspection.

Curbs:

- The sloped granite curbs have minor scrapes, edge chips, rust stains and random vertical cracks up to 1/8" wide with isolated efflorescence.
- The mortar in the joints between adjacent curb sections are loose/missing/deteriorated with isolated areas of vegetation growth in the joints.
- The mortar beds below the curbs (where visible) are deteriorated and spalled up to 5" deep; deeper areas noted at sketches.
- The concrete sections of curb adjacent to the bridge joints have light scale, random hairline cracks and minor edge spalls.
- The southeast and northeast approach curb transitions are settled for 4" and laterally misaligned up to 2".
- Light to moderate vegetation growth at approach curbs.
- Average curb reveals: north curb=3.25" and south curb = 3.5".

Parapet:

- The concrete parapets have random vertical hairline cracks with random efflorescence, light to moderate scale, random gouges/scrapes up to 1.5" deep, shallow rebar and random pop-outs up to 6" diameter with isolated exposed rebar.
- The parapets just above the curb have random horizontal cracks up to 1/8" wide with adjacent hollow areas/spalls up to 10" high x up to 3" deep (some areas with punky concrete remaining). This condition extends approximately 25% of the bridge length with the worst cases being in the approach spans (only more extensive locations shown on sketches).
- The outside faces near the bottom have random horizontal hairline cracks and hairline map cracks, both with isolated efflorescence.
- Random exposed rebar in the spalls at the bottom outside faces of the parapets have been coated since the last inspection (some areas have rust re-occurring).

Railing:

- The railing behind the picket fence has no notable deficiencies.

Fence:

- The aluminum picket fences have random scrapes and areas of impact damage throughout with bent and/or detached pickets and isolated tears and gouges in the pickets. All impact damage areas are typically secure, or secured with wire or plastic ties U.O.N. Openings in between the pickets typically are less than 6" wide U.O.N. Missing pickets are noted in the field sheets.
- Random top and bottom post brackets at the backsides of the posts are missing 1 of 2 bolts and isolated brackets are missing.
- Isolated fence post anchor bolts are backed off up to 1/8" (tight) and isolated missing.

REVISION 1	DATE: 9/25/19	CREW: AH, BH, JG (Baker)	REVISION 3	DATE:	CREW:
REVISION 2	DATE: 7/26/2021	CREW: BM, IS, NH (PRIME)	REVISION 4	DATE:	CREW:

CREW: SW, BH, BF	DATE: 11/7/2017	BRIDGE NO.: 03819

Top of Deck General Notes (cont.)

Drains:

- Scuppers: The scupper grates have areas of laminated rust and missing hold down bolts (secure). Isolated clogged scupper grates were cleaned since the last inspection. Areas where the scupper grates are clogged at the south side of the bridge, the downspout is also typically clogged.
- Several scupper grates are missing hold down bolts and have laminated rust.
- Several areas with evidence of leaking onto adjacent superstructure.

Light Standards:

- The light standards along the south parapet are missing the anchor bolt covers throughout with isolated areas of light rust on the bolts and nuts.
- The junction box covers in the parapet have random missing screws up to 9 out of 10 and areas of impact damage, but are still secure U.O.N.

Deck Joints:

- The asphaltic plug joints with areas of exposed aggregate.
- The strip seal, compression seal, modular joints and plank seal joints all have light to heavy accumulation of sand and debris along/on the seal between headers (typically worse in the shoulders).
- Random previously noted hollow areas in headers could not be verified this inspection (lanes not closed this inspection).
- Steel joint plates have areas of light to heavy rust.

West Approach Pavement:

- The west approach concrete slab is bare concrete with random patches, random cracks up to 1/16" wide, light to moderate scale, edge spalls between sections up to 5' long x 3" wide x 2" deep and sand debris in the shoulders.
- Sealed joints between concrete sections are deteriorated/missing for ±50% of the length.
- The bituminous pavement beyond the bare concrete slab has random transverse and longitudinal cracks up to 1" wide and minor rutting in the wheel lines.
- Relief joint with random bituminous patches, minor potholes, cracks and uneven areas.

East Approach Pavement:

- The east approach pavement is bituminous with random cracks up to 1" wide (mostly in ramp lanes), light to moderate raveling and separations between the bituminous and joint headers up to 2" wide.

REVISION 1	DATE: 9/25/19	CREW: AH, BH, JG (Baker) - No Change	REVISION 3	DATE:	CREW:
REVISION 2	DATE: 7/26/2021	CREW: BM, IS, NH (PRIME)	REVISION 4	DATE:	CREW:

Sketches
Inspection type: Fracture Critical,Routine
Inspection Date: 7/26/2021
Inspected by: PRIME AE

:Bridge No 03819

Town: NEW LONDON
Carried: INTERSTATE 95 NORTHBOUND
Crossed: THAMES RV,RR,LOCAL ROADS
Inventory Route: NHS

CREW: SW, BH, BF	DATE: 11/7/2017	BRIDGE NO.: 03819

Deterioration Legend:

(1) Abut 1 deck joint has random (most) missing rubber bolt covers; bridge overlay is settled up to 1/2" along joint; east elast header in right lane has 3'L x 4"W HA w/cracks; ~~east elast header in left two lanes has been partially paved over w/ hollow bit.~~, cracks up to 1/4"W and HA's up to 3'L x 6"W; left shldr, west and east elast headers w/ 8'L x FW HA's; rubber edges have plow scrapes and gouges. Abutment 1 joint west concrete header has random HLC's

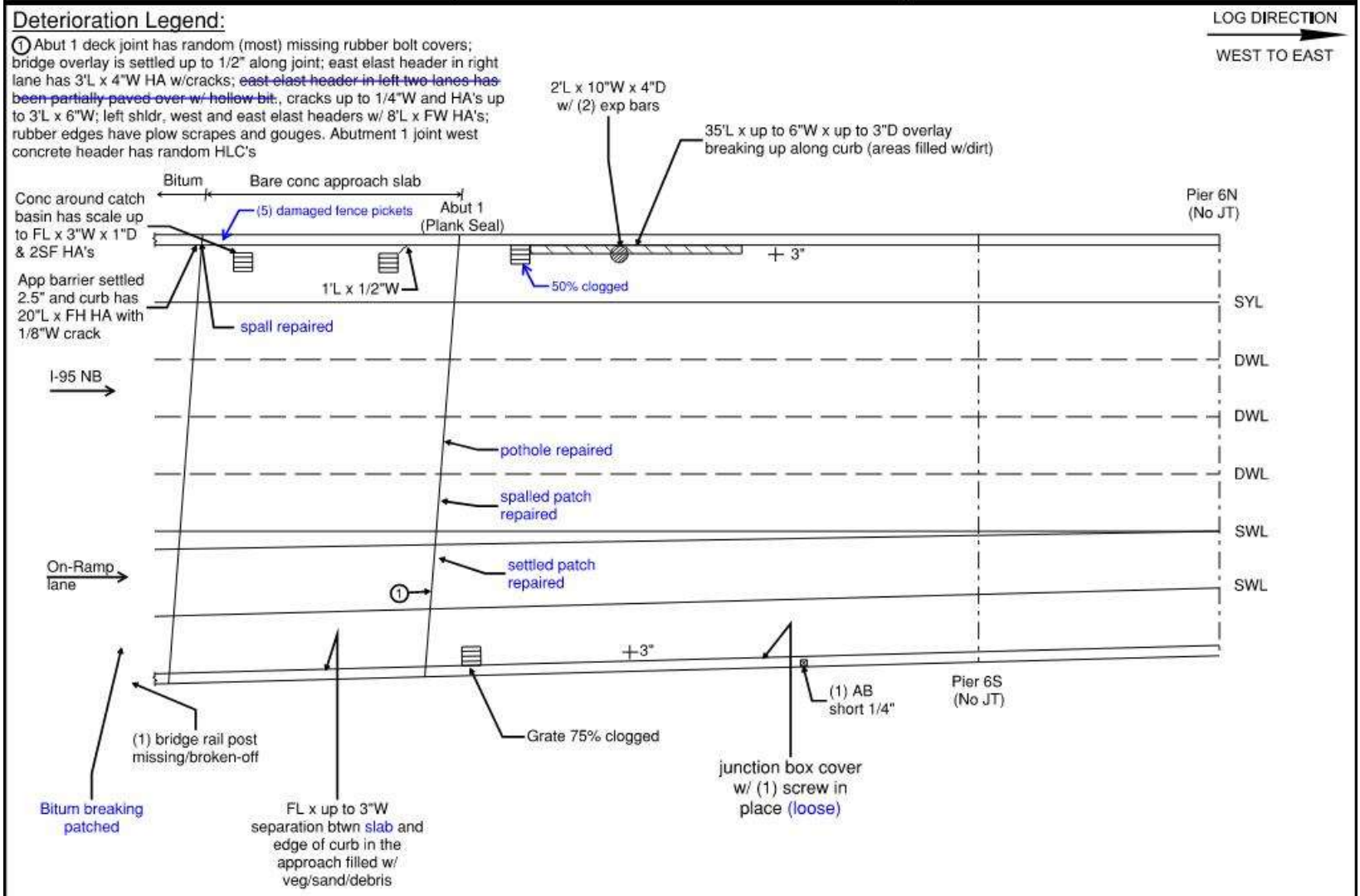

General Notes:

- See Top of Deck General Notes sheet
- West approach gore area ±200' from bridge has a loose access cover w/ broken screws
- West approach at transition area between bare concrete and bitum pavement has bitum patches, minor potholes, cracks and uneven areas along the full length

LEGEND:
- HOLLOW AREA
- SHALLOW REBAR
- SPALL AREA
- SPALL AREA WITH EXPOSED REBAR
- MAPCRACKS
- HAIRLINE CRACKS
- HONEYCOMB AREA
- SCALE AREA
- EFFLORESCENCE PRESENT
- SCUPPER GRATE
- LIGHT STANDARD
- CURB REVEAL

Top of Deck - Span 6

REVISION 1	DATE: 9/25/19	CREW: AH, BH, JG (Baker)	REVISION 3	DATE:	CREW:
REVISION 2	DATE: 10/7/2021	CREW: EG, NH (PRIME)	REVISION 4	DATE:	CREW:

Sketches
Inspection type: Fracture Critical,Routine
Inspection Date: 7/26/2021
Inspected by: PRIME AE

:Bridge No 03819

Town: NEW LONDON
Carried: INTERSTATE 95 NORTHBOUND
Crossed: THAMES RV,RR,LOCAL ROADS
Inventory Route: NHS

CREW: SW, BH, BF	DATE: 11/7/2017	BRIDGE NO.: 03819

LOG DIRECTION
WEST TO EAST

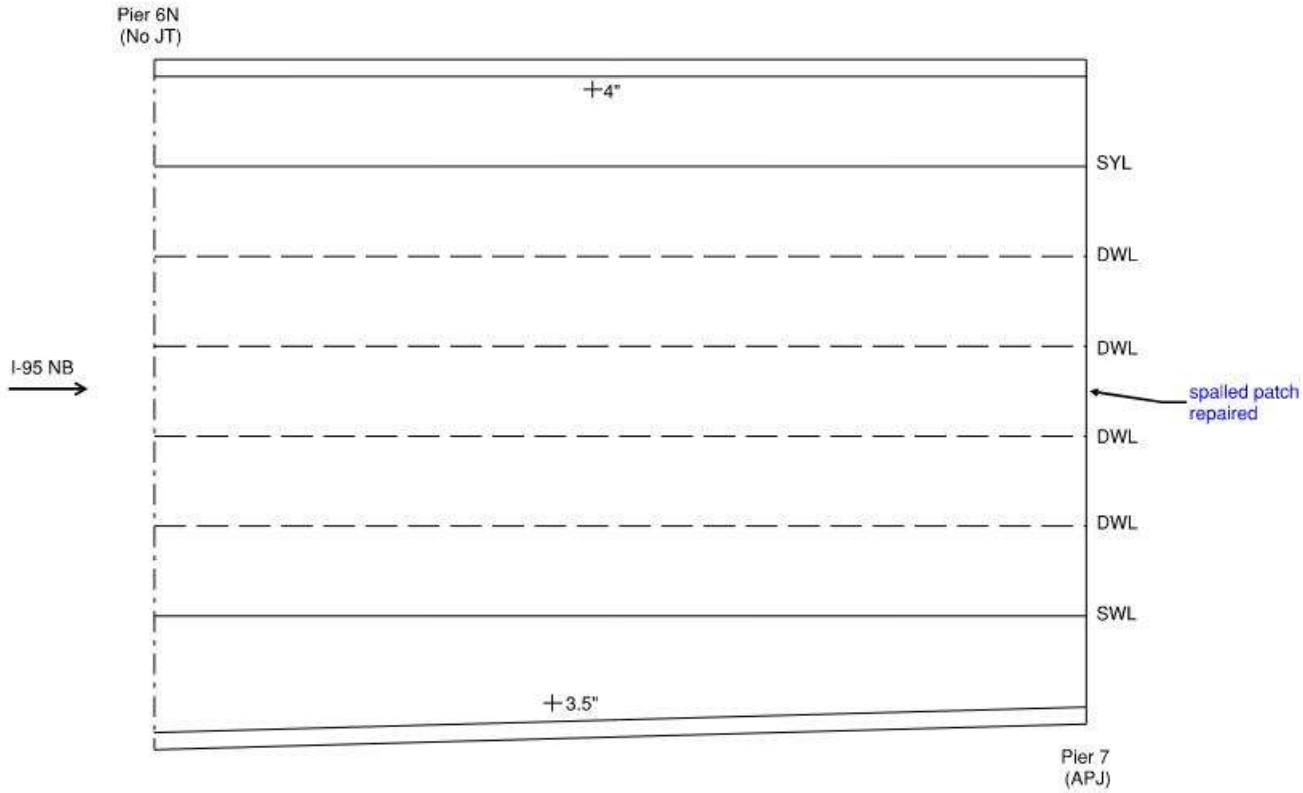

General Notes:
- See Top of Deck General Notes sheet

LEGEND:
- HOLLOW AREA
- SHALLOW REBAR
- SPALL AREA
- SPALL AREA WITH EXPOSED REBAR
- MAPCRACKS
- HAIRLINE CRACKS
- HONEYCOMB AREA
- SCALE AREA
- EFFLORESCENCE PRESENT
- SCUPPER GRATE
- LIGHT STANDARD
- CURB REVEAL

Top of Deck - Span 7

REVISION 1	DATE: 9/25/19	CREW: AH, BH, JG (Baker)	REVISION 3	DATE:	CREW:
REVISION 2	DATE: 10/7/2021	CREW: EG, NH (PRIME)	REVISION 4	DATE:	CREW:

Sketches
Inspection type: Fracture Critical,Routine
Inspection Date: 7/26/2021
Inspected by: PRIME AE

:Bridge No 03819

Town: NEW LONDON
Carried: INTERSTATE 95 NORTHBOUND
Crossed: THAMES RV,RR,LOCAL ROADS
Inventory Route: NHS

CREW: SW, BH, BF	DATE: 11/7/2017	BRIDGE NO.: 03819

LOG DIRECTION
WEST TO EAST

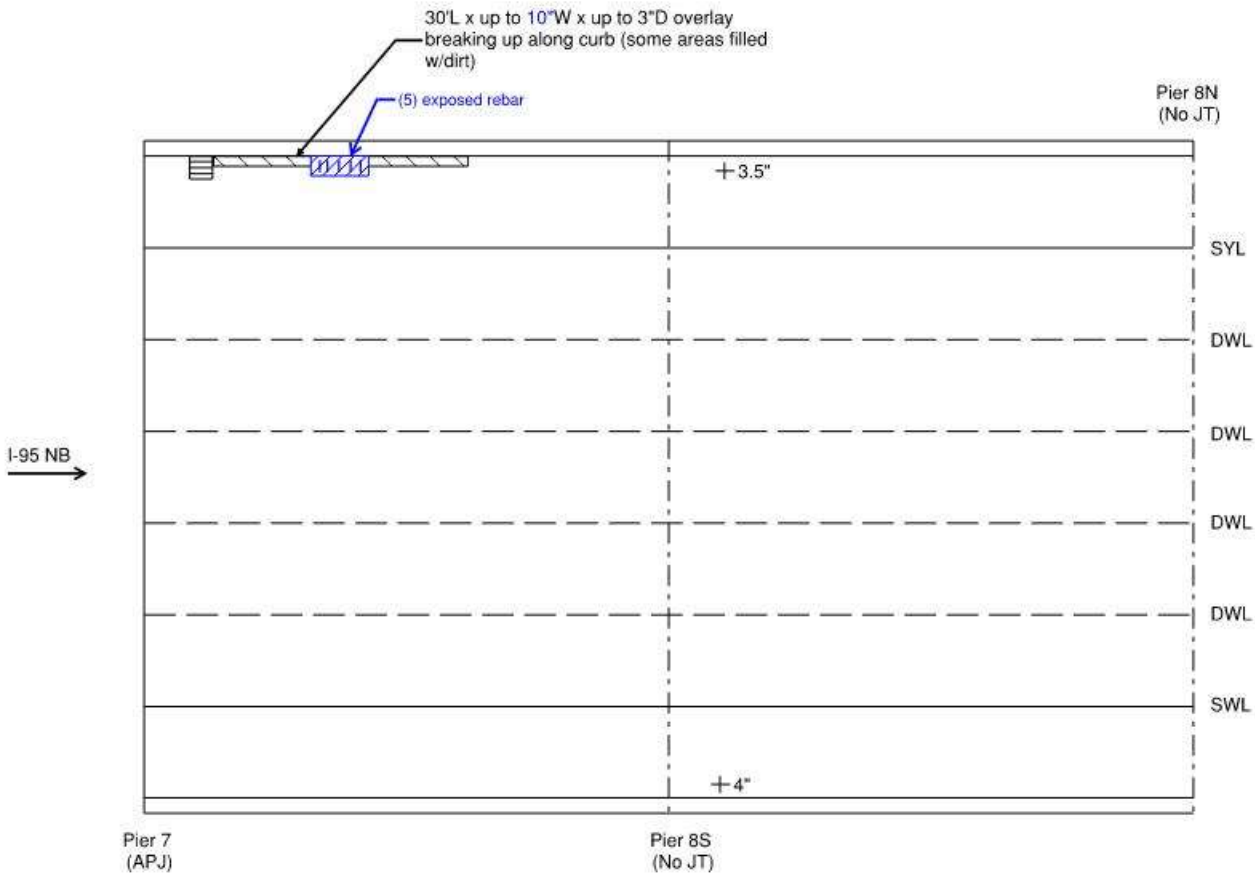

General Notes:
- See Top of Deck General Notes sheet

LEGEND:
- HOLLOW AREA
- SHALLOW REBAR
- SPALL AREA
- SPALL AREA WITH EXPOSED REBAR
- MAPCRACKS
- HAIRLINE CRACKS
- HONEYCOMB AREA
- SCALE AREA
- EFFLORESCENCE PRESENT
- SCUPPER GRATE
- LIGHT STANDARD
- CURB REVEAL

Top of Deck - Span 8

REVISION 1	DATE: 9/25/19	CREW: AH, BH, JG (Baker)	REVISION 3	DATE:	CREW:
REVISION 2	DATE: 10/7/2021	CREW: EG, NH (PRIME)	REVISION 4	DATE:	CREW:

Sketches
Inspection type: Fracture Critical,Routine
Inspection Date: 7/26/2021
Inspected by: PRIME AE

:Bridge No 03819

Town: NEW LONDON
Carried: INTERSTATE 95 NORTHBOUND
Crossed: THAMES RV,RR,LOCAL ROADS
Inventory Route: NHS

CREW: SW, BH, BF	DATE: 11/7/2017	BRIDGE NO.: 03819

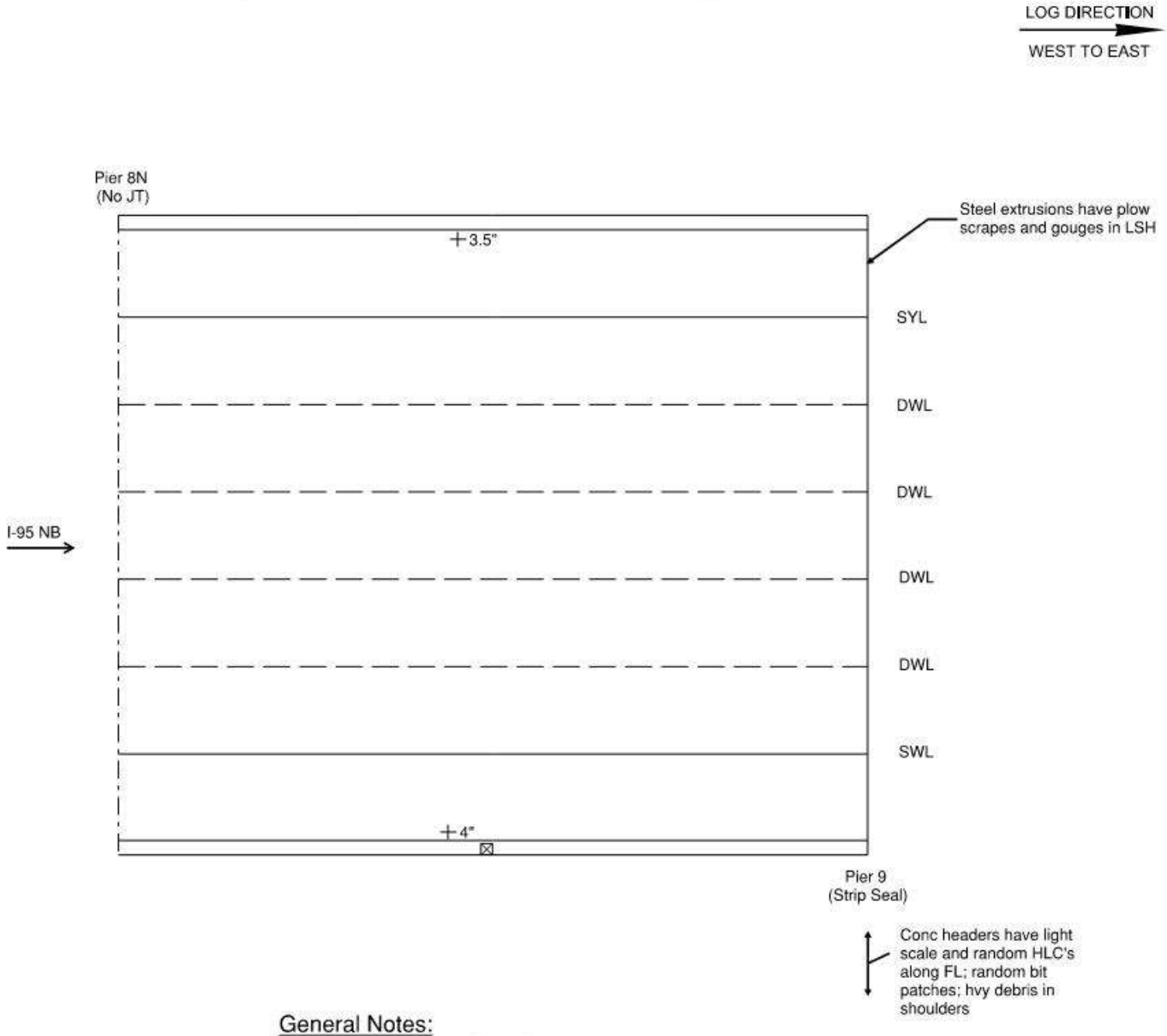

General Notes:
- See Top of Deck General Notes sheet

LEGEND:
- HOLLOW AREA
- SHALLOW REBAR
- SPALL AREA
- SPALL AREA WITH EXPOSED REBAR
- MAPCRACKS
- HAIRLINE CRACKS
- HONEYCOMB AREA
- SCALE AREA
- EFFLORESCENCE PRESENT
- SCUPPER GRATE
- LIGHT STANDARD
- CURB REVEAL

Top of Deck - Span 9

REVISION 1	DATE: 9/25/19	CREW: AH, BH, JG (Baker)	REVISION 3	DATE:	CREW:
REVISION 2	DATE: 10/7/2021	CREW: EG, NH (PRIME) - No Change	REVISION 4	DATE:	CREW:

Sketches
Inspection type: Fracture Critical,Routine
Inspection Date: 7/26/2021
Inspected by: PRIME AE

:Bridge No 03819

Town: NEW LONDON
Carried: INTERSTATE 95 NORTHBOUND
Crossed: THAMES RV,RR,LOCAL ROADS
Inventory Route: NHS

CREW: SW, BH, BF	DATE: 11/7/2017	BRIDGE NO.: 03819

Deterioration Notes:

(1) 4th & 5th post from OHSS w/ ~~cracks at base of posts~~ NF up to 40% of perimeter; (1) picket missing; (3) pickets loose at bot

LOG DIRECTION → WEST TO EAST

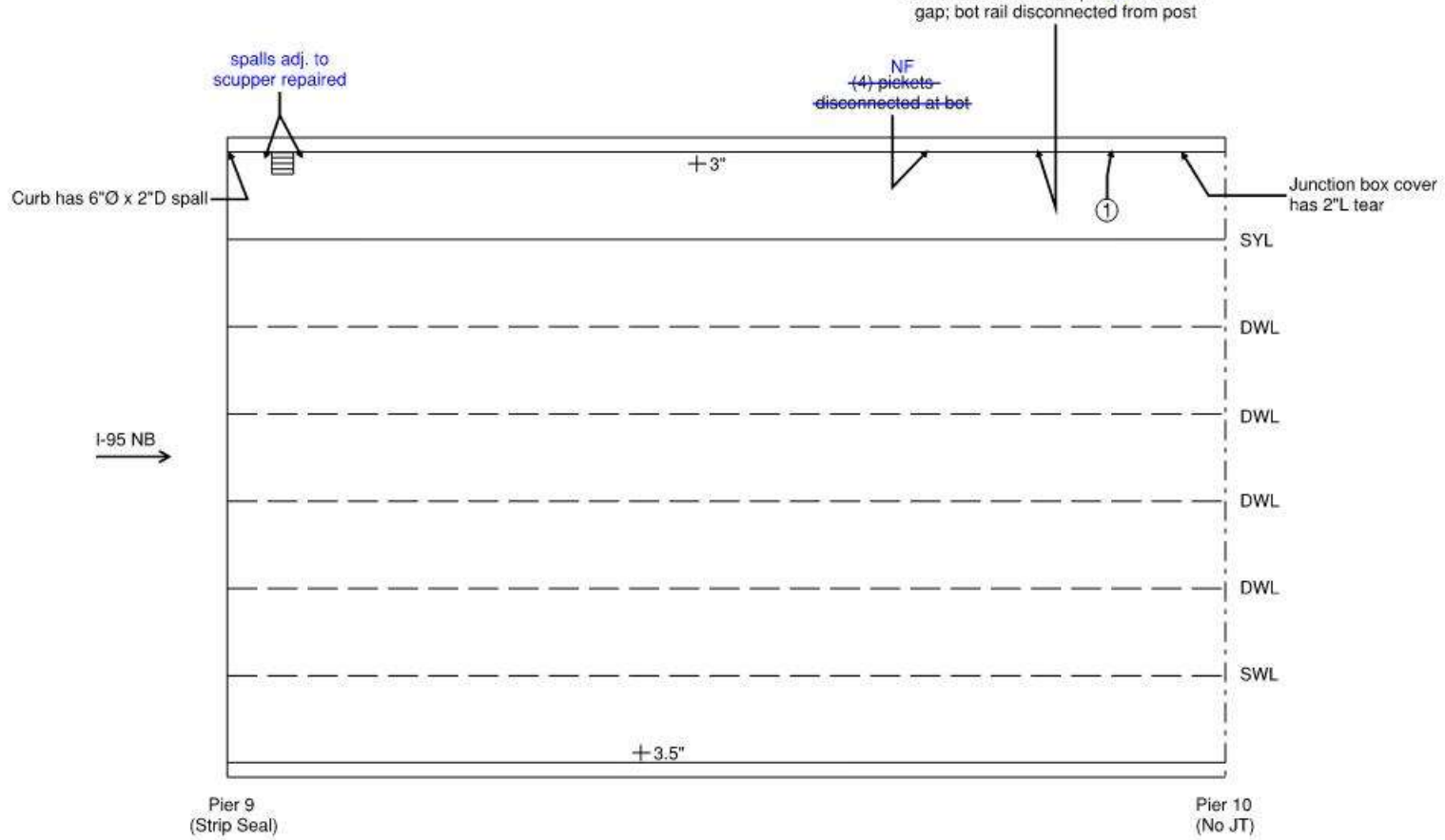

General Notes:

- See Top of Deck General Notes sheet

LEGEND:
- HOLLOW AREA
- SHALLOW REBAR
- SPALL AREA
- SPALL AREA WITH EXPOSED REBAR
- MAPCRACKS
- HAIRLINE CRACKS
- HONEYCOMB AREA
- SCALE AREA
- EFFLORESCENCE PRESENT
- SCUPPER GRATE
- LIGHT STANDARD
- CURB REVEAL

Top of Deck - Span 10

REVISION 1	DATE: 9/25/19	CREW: AH, BH, JG (Baker)	REVISION 3	DATE:	CREW:
REVISION 2	DATE: 10/7/2021	CREW: EG, NH (PRIME)	REVISION 4	DATE:	CREW:

Sketches
Inspection type: Fracture Critical,Routine
Inspection Date: 7/26/2021
Inspected by: PRIME AE

:Bridge No 03819

Town: NEW LONDON
Carried: INTERSTATE 95 NORTHBOUND
Crossed: THAMES RV,RR,LOCAL ROADS
Inventory Route: NHS

CREW: SW, BH, BF	DATE: 11/7/2017	BRIDGE NO.: 03819

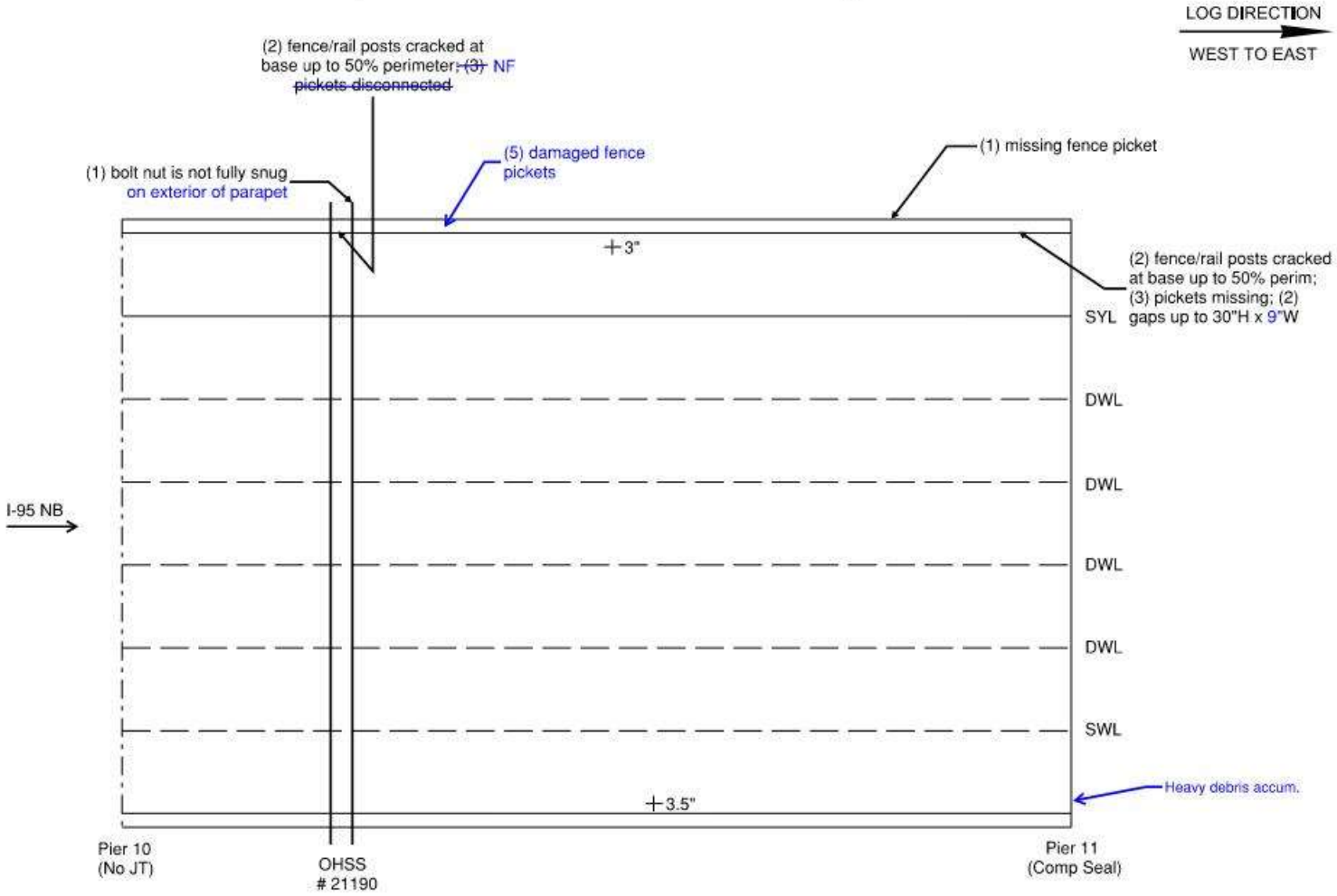

General Notes:
- See Top of Deck General Notes sheet

LEGEND:
- HOLLOW AREA
- SHALLOW REBAR
- SPALL AREA
- SPALL AREA WITH EXPOSED REBAR
- MAPCRACKS
- HAIRLINE CRACKS
- HONEYCOMB AREA
- SCALE AREA
- EFFLORESCENCE PRESENT
- SCUPPER GRATE
- LIGHT STANDARD
- CURB REVEAL

Top of Deck - Span 11

REVISION 1	DATE: 9/25/19	CREW: AH, BH, JG (Baker)	REVISION 3	DATE:	CREW:
REVISION 2	DATE: 10/7/2021	CREW: EG, NH (PRIME)	REVISION 4	DATE:	CREW:

Sketches
Inspection type: Fracture Critical,Routine
Inspection Date: 7/26/2021
Inspected by: PRIME AE

:Bridge No 03819

Town: NEW LONDON
Carried: INTERSTATE 95 NORTHBOUND
Crossed: THAMES RV,RR,LOCAL ROADS
Inventory Route: NHS

CREW: SW, BH, BF	DATE: 11/7/2017	BRIDGE NO.: 03819

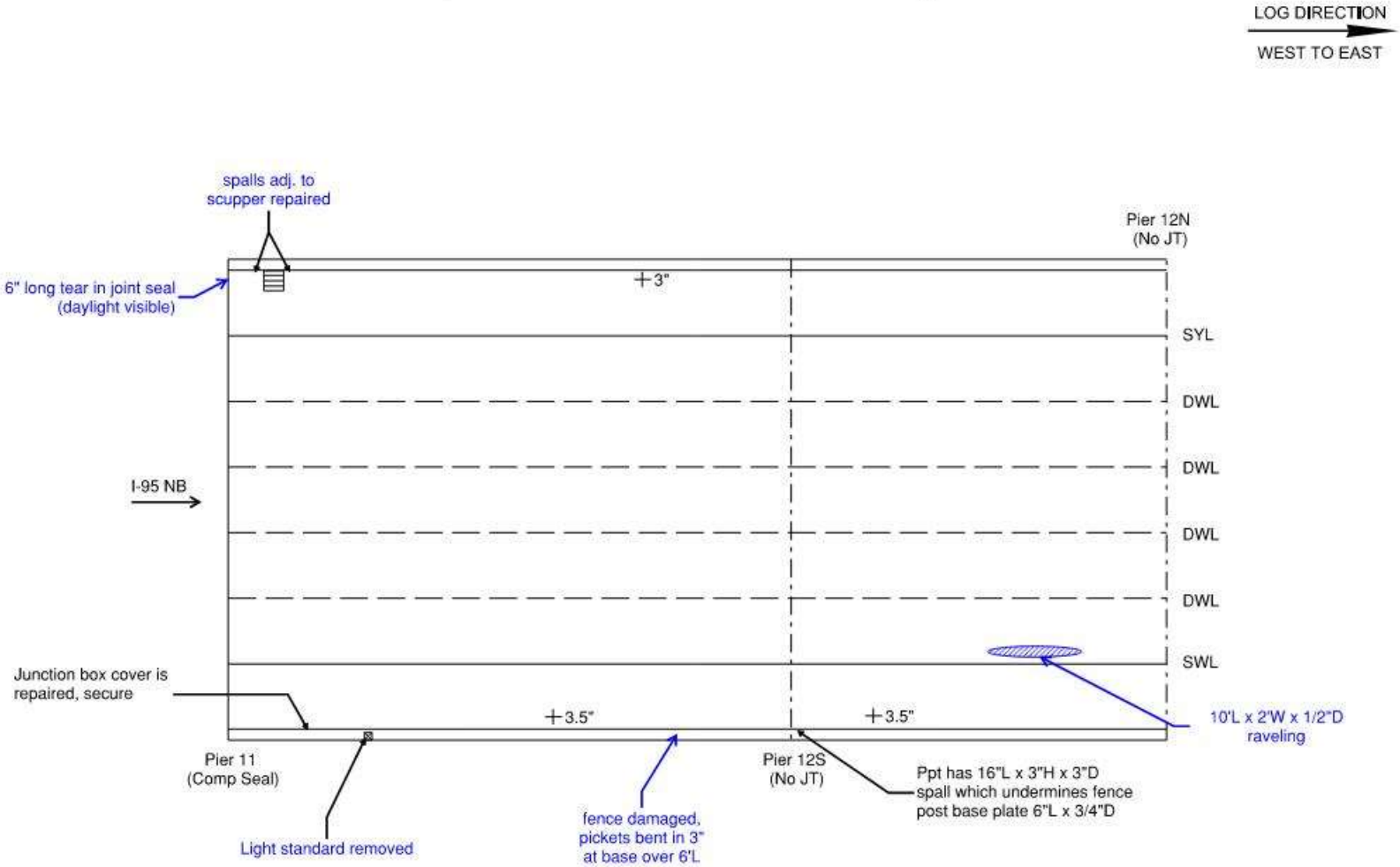

General Notes:
- See Top of Deck General Notes sheet

LEGEND:
- HOLLOW AREA
- SHALLOW REBAR
- SPALL AREA
- SPALL AREA WITH EXPOSED REBAR
- MAPCRACKS
- HAIRLINE CRACKS
- HONEYCOMB AREA
- SCALE AREA
- EFFLORESCENCE PRESENT
- SCUPPER GRATE
- LIGHT STANDARD
- CURB REVEAL

Top of Deck - Span 12

REVISION 1	DATE: 9/25/19	CREW: AH, BH, JG (Baker)	REVISION 3	DATE:	CREW:
REVISION 2	DATE: 10/7/2021	CREW: EG, NH (PRIME)	REVISION 4	DATE:	CREW:

Sketches
Inspection type: Fracture Critical,Routine
Inspection Date: 7/26/2021
Inspected by: PRIME AE

:Bridge No 03819

Town: NEW LONDON
Carried: INTERSTATE 95 NORTHBOUND
Crossed: THAMES RV,RR,LOCAL ROADS
Inventory Route: NHS

CREW: SW, BH, BF	DATE: 11/7/2017	BRIDGE NO.: 03819

LOG DIRECTION
WEST TO EAST

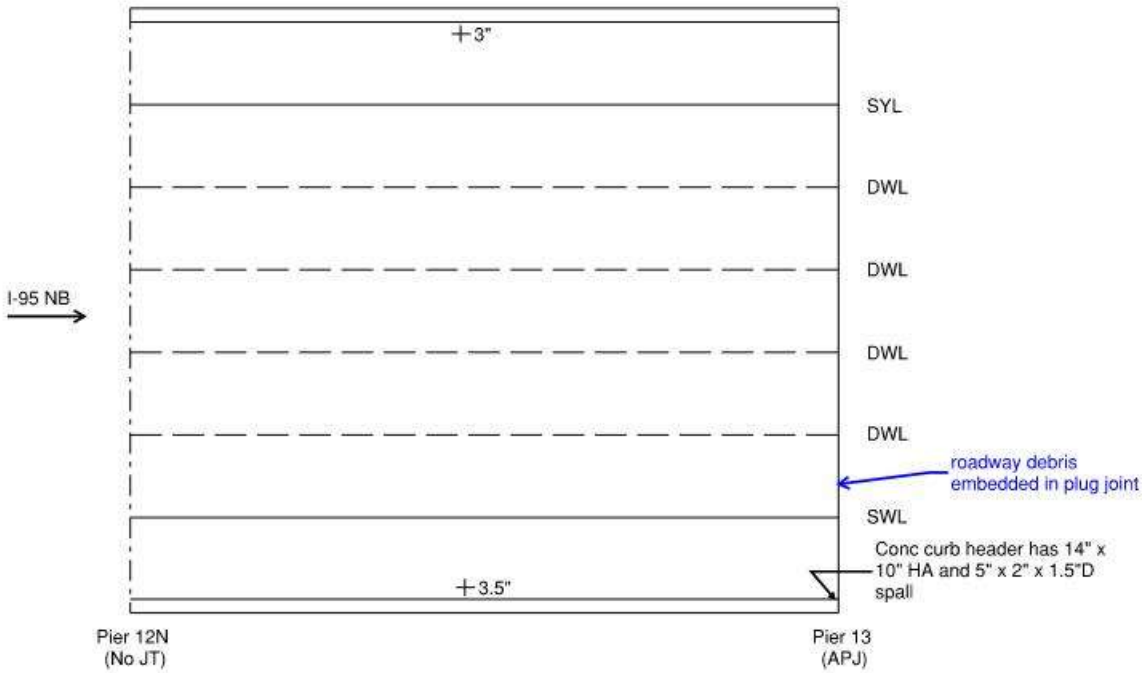

General Notes:
- See Top of Deck General Notes sheet

LEGEND:
- HOLLOW AREA
- SHALLOW REBAR
- SPALL AREA
- SPALL AREA WITH EXPOSED REBAR
- MAPCRACKS
- HAIRLINE CRACKS
- HONEYCOMB AREA
- SCALE AREA
- EFFLORESCENCE PRESENT
- SCUPPER GRATE
- LIGHT STANDARD
- CURB REVEAL

Top of Deck - Span 13

REVISION 1	DATE: 9/25/19	CREW: AH, BH, JG (Baker)	REVISION 3	DATE:	CREW:
REVISION 2	DATE: 10/7/2021	CREW: EG, NH (PRIME)	REVISION 4	DATE:	CREW:

Sketches
Inspection type: Fracture Critical,Routine
Inspection Date: 7/26/2021
Inspected by: PRIME AE

:Bridge No 03819

Town: NEW LONDON
Carried: INTERSTATE 95 NORTHBOUND
Crossed: THAMES RV,RR,LOCAL ROADS
Inventory Route: NHS

CREW: SW, BH, BF	DATE: 11/7/2017	BRIDGE NO.: 03819

LOG DIRECTION
WEST TO EAST

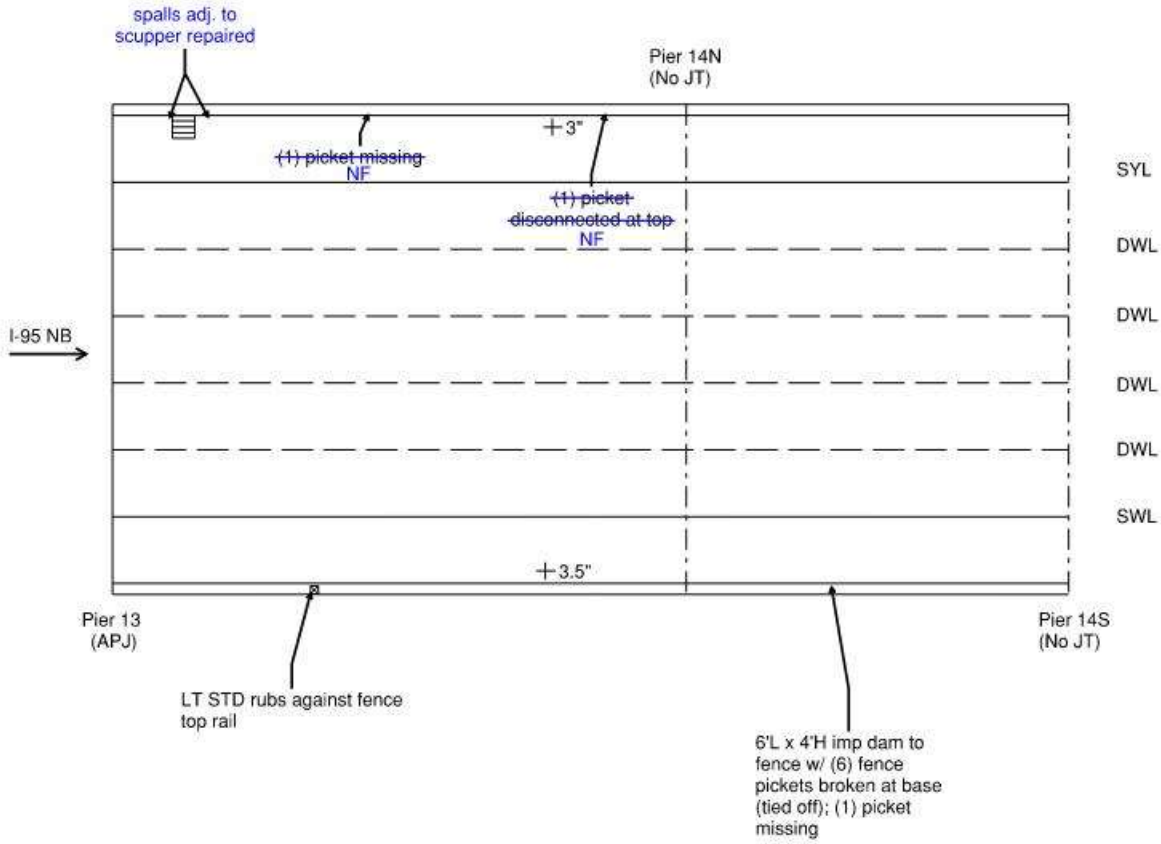

General Notes:

- See Top of Deck General Notes sheet

LEGEND:
- HOLLOW AREA
- SHALLOW REBAR
- SPALL AREA
- SPALL AREA WITH EXPOSED REBAR
- MAPCRACKS
- HAIRLINE CRACKS
- HONEYCOMB AREA
- SCALE AREA
- EFFLORESCENCE PRESENT
- SCUPPER GRATE
- LIGHT STANDARD
- CURB REVEAL

Top of Deck - Span 14

REVISION 1	DATE: 9/25/19	CREW: AH, BH, JG (Baker)	REVISION 3	DATE:	CREW:
REVISION 2	DATE: 10/7/2021	CREW: EG, NH (PRIME)	REVISION 4	DATE:	CREW:

Sketches
Inspection type: Fracture Critical,Routine
Inspection Date: 7/26/2021
Inspected by: PRIME AE

:Bridge No 03819

Town: NEW LONDON
Carried: INTERSTATE 95 NORTHBOUND
Crossed: THAMES RV,RR,LOCAL ROADS
Inventory Route: NHS

CREW: SW, BH, BF	DATE: 11/7/2017	BRIDGE NO.: 03819

LOG DIRECTION
WEST TO EAST

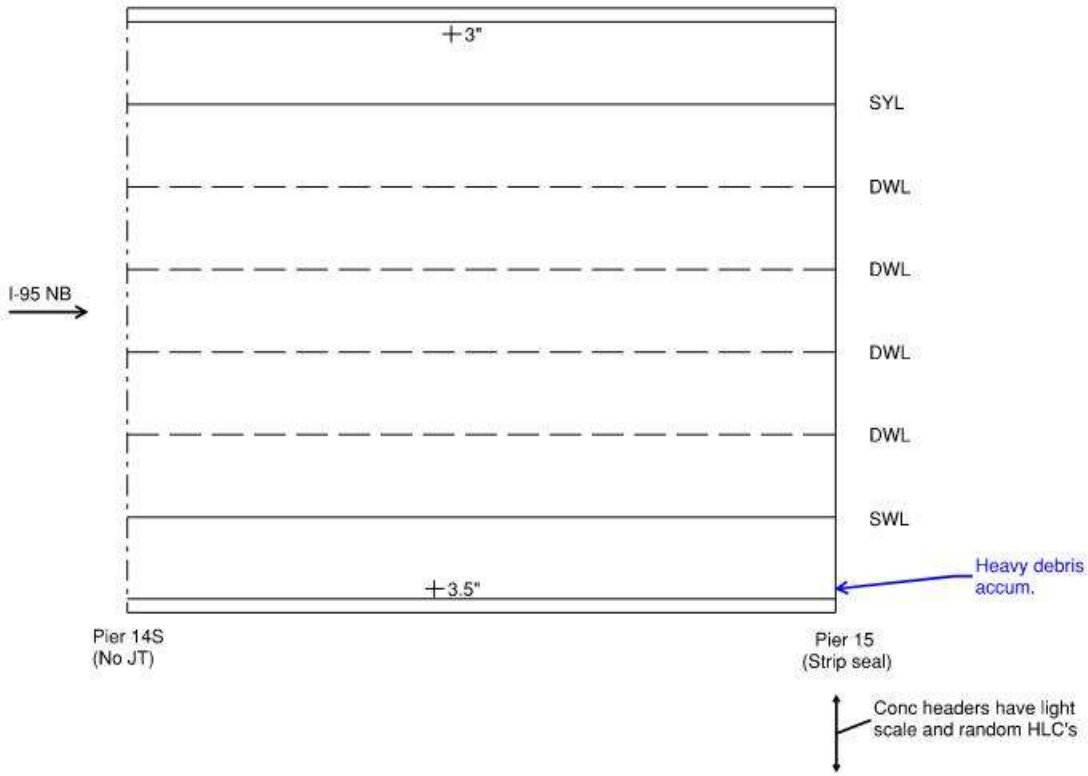

General Notes:
- See Top of Deck General Notes sheet

LEGEND:
- HOLLOW AREA
- SHALLOW REBAR
- SPALL AREA
- SPALL AREA WITH EXPOSED REBAR
- MAPCRACKS
- HAIRLINE CRACKS
- HONEYCOMB AREA
- SCALE AREA
- EFFLORESCENCE PRESENT
- SCUPPER GRATE
- LIGHT STANDARD
- CURB REVEAL

Top of Deck - Span 15

REVISION 1	DATE: 9/25/19	CREW: AH, BH, JG (Baker) - No Change	REVISION 3	DATE:	CREW:
REVISION 2	DATE: 10/7/2021	CREW: EG, NH (PRIME)	REVISION 4	DATE:	CREW:

Sketches
Inspection type: Fracture Critical,Routine
Inspection Date: 7/26/2021
Inspected by: PRIME AE

:Bridge No 03819

Town: NEW LONDON
Carried: INTERSTATE 95 NORTHBOUND
Crossed: THAMES RV,RR,LOCAL ROADS
Inventory Route: NHS

CREW: SW, BH, BF	DATE: 11/7/2017	BRIDGE NO.: 03819

LOG DIRECTION
WEST TO EAST

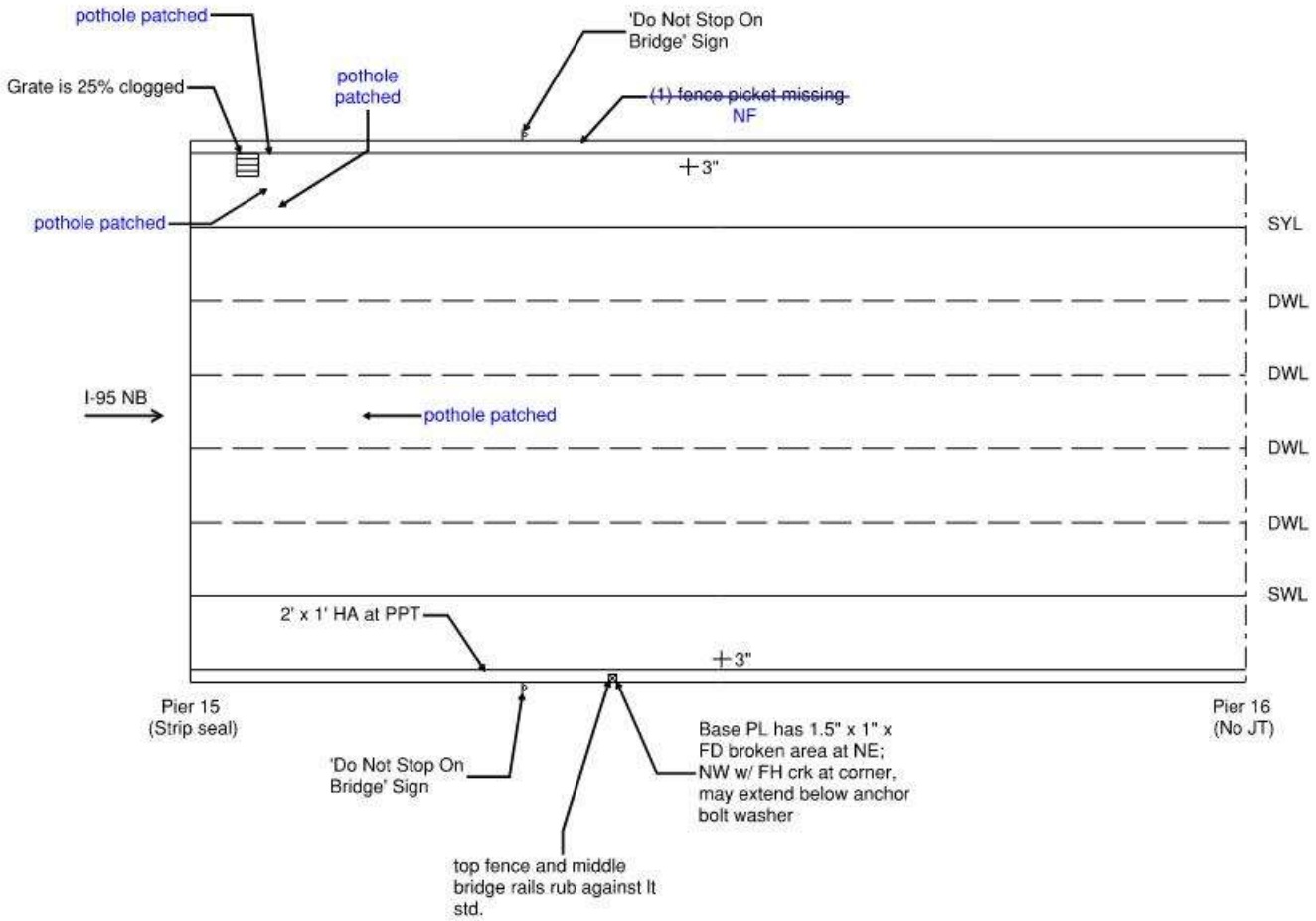

General Notes:

- See Top of Deck General Notes sheet

LEGEND:
- HOLLOW AREA
- SHALLOW REBAR
- SPALL AREA
- SPALL AREA WITH EXPOSED REBAR
- MAPCRACKS
- HAIRLINE CRACKS
- HONEYCOMB AREA
- SCALE AREA
- EFFLORESCENCE PRESENT
- SCUPPER GRATE
- LIGHT STANDARD
- CURB REVEAL

Top of Deck - Span 16

REVISION 1	DATE: 9/25/19	CREW: AH, BH, JG (Baker)	REVISION 3	DATE:	CREW:
REVISION 2	DATE: 10/7/2021	CREW: EG, NH (PRIME)	REVISION 4	DATE:	CREW:

Sketches
Inspection type: Fracture Critical,Routine
Inspection Date: 7/26/2021
Inspected by: PRIME AE

:Bridge No 03819

Town: NEW LONDON
Carried: INTERSTATE 95 NORTHBOUND
Crossed: THAMES RV,RR,LOCAL ROADS
Inventory Route: NHS

CREW: SW, BH, BF	DATE: 11/7/2017	BRIDGE NO.: 03819

LOG DIRECTION
WEST TO EAST

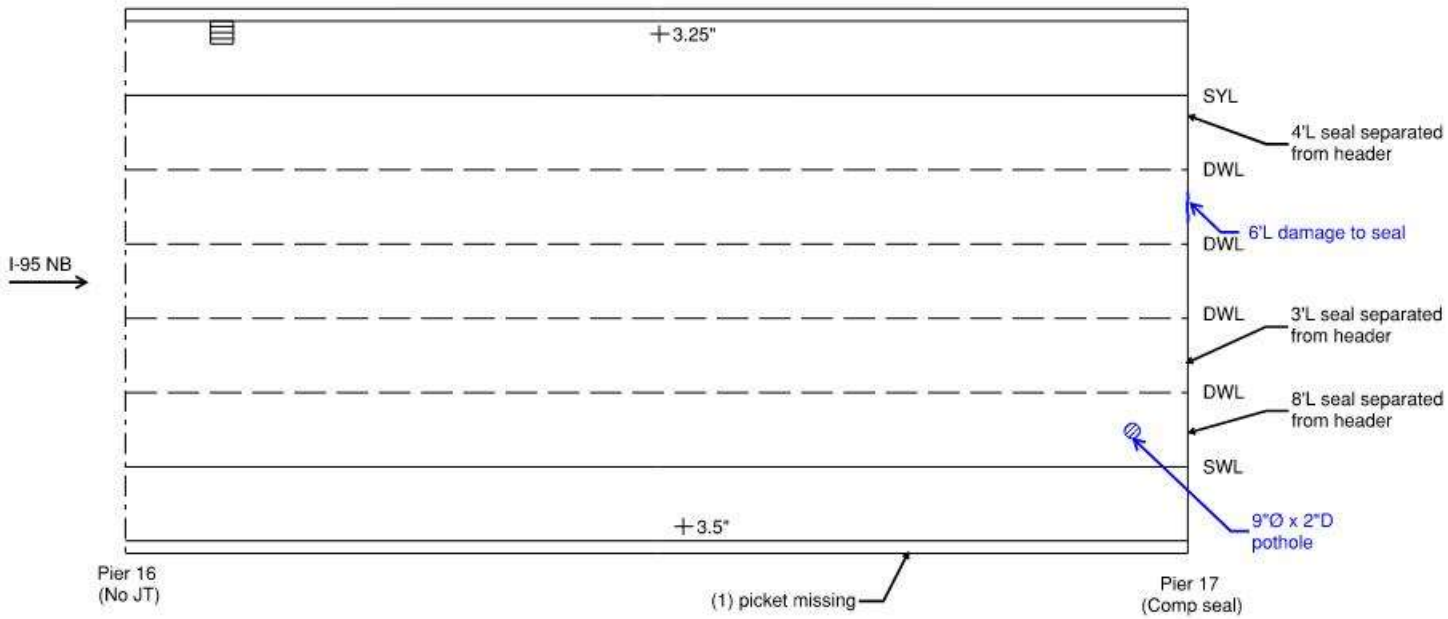

General Notes:
- See Top of Deck General Notes sheet

LEGEND:
- HOLLOW AREA
- SHALLOW REBAR
- SPALL AREA
- SPALL AREA WITH EXPOSED REBAR
- MAPCRACKS
- HAIRLINE CRACKS
- HONEYCOMB AREA
- SCALE AREA
- EFFLORESCENCE PRESENT
- SCUPPER GRATE
- LIGHT STANDARD
- CURB REVEAL

Top of Deck - Span 17

REVISION 1	DATE: 9/25/19	CREW: AH, BH, JG (Baker)	REVISION 3	DATE:	CREW:
REVISION 2	DATE: 10/7/2021	CREW: EG, NH (PRIME)	REVISION 4	DATE:	CREW:

CREW: SW, BH, BF	DATE: 11/7/2017	BRIDGE NO.: 03819

LOG DIRECTION
WEST TO EAST

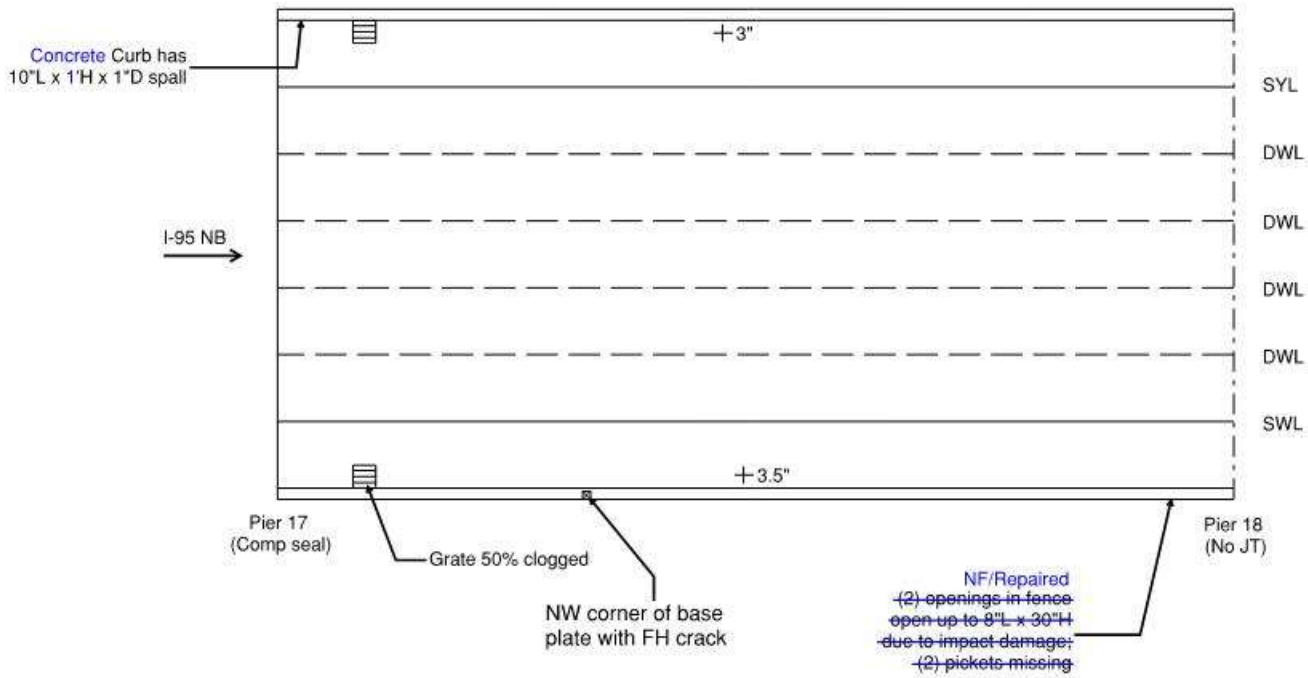

General Notes:
- See Top of Deck General Notes sheet

LEGEND:
- HOLLOW AREA
- SHALLOW REBAR
- SPALL AREA
- SPALL AREA WITH EXPOSED REBAR
- MAPCRACKS
- HAIRLINE CRACKS
- HONEYCOMB AREA
- SCALE AREA
- EFFLORESCENCE PRESENT
- SCUPPER GRATE
- LIGHT STANDARD
- CURB REVEAL

Top of Deck - Span 18

REVISION 1	DATE: 9/25/19	CREW: AH, BH, JG (Baker)	REVISION 3	DATE:	CREW:
REVISION 2	DATE: 10/7/2021	CREW: EG, NH (PRIME)	REVISION 4	DATE:	CREW:

Sketches
Inspection type: Fracture Critical,Routine
Inspection Date: 7/26/2021
Inspected by: PRIME AE

:Bridge No 03819

Town: NEW LONDON
Carried: INTERSTATE 95 NORTHBOUND
Crossed: THAMES RV,RR,LOCAL ROADS
Inventory Route: NHS

CREW: SW, BH, BF	DATE: 11/7/2017	BRIDGE NO.: 03819

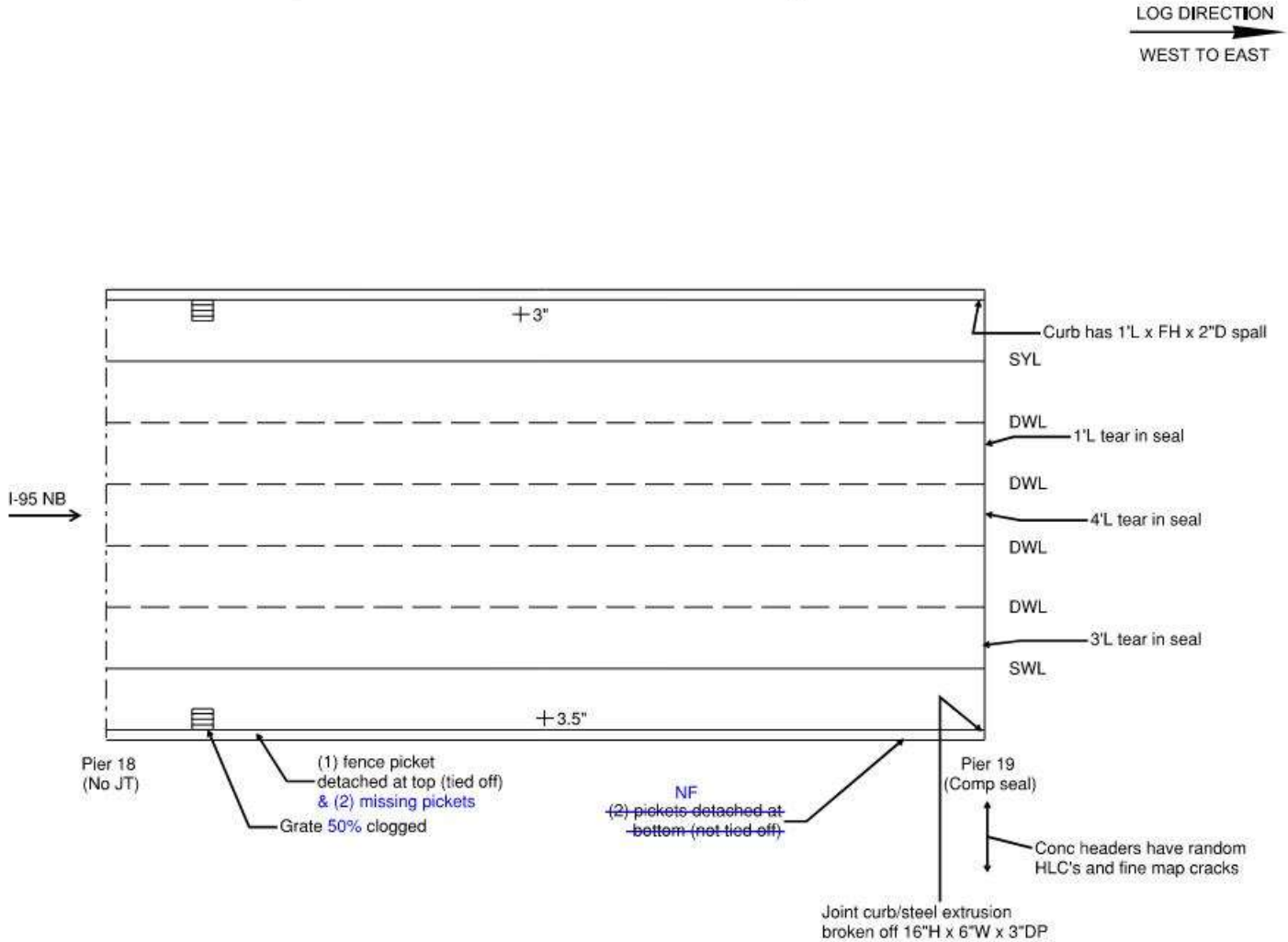

General Notes:
- See Top of Deck General Notes sheet

LEGEND:
- HOLLOW AREA
- SHALLOW REBAR
- SPALL AREA
- SPALL AREA WITH EXPOSED REBAR
- MAPCRACKS
- HAIRLINE CRACKS
- HONEYCOMB AREA
- SCALE AREA
- EFFLORESCENCE PRESENT
- SCUPPER GRATE
- LIGHT STANDARD
- CURB REVEAL

Top of Deck - Span 19

REVISION 1	DATE: 9/25/19	CREW: AH, BH, JG (Baker)	REVISION 3	DATE:	CREW:
REVISION 2	DATE: 10/7/2021	CREW: EG, NH (PRIME)	REVISION 4	DATE:	CREW:

Sketches
Inspection type: Fracture Critical,Routine
Inspection Date: 7/26/2021
Inspected by: PRIME AE

:Bridge No 03819

Town: NEW LONDON
Carried: INTERSTATE 95 NORTHBOUND
Crossed: THAMES RV,RR,LOCAL ROADS
Inventory Route: NHS

CREW: SW, BH, BF	DATE: 11/7/2017	BRIDGE NO.: 03819

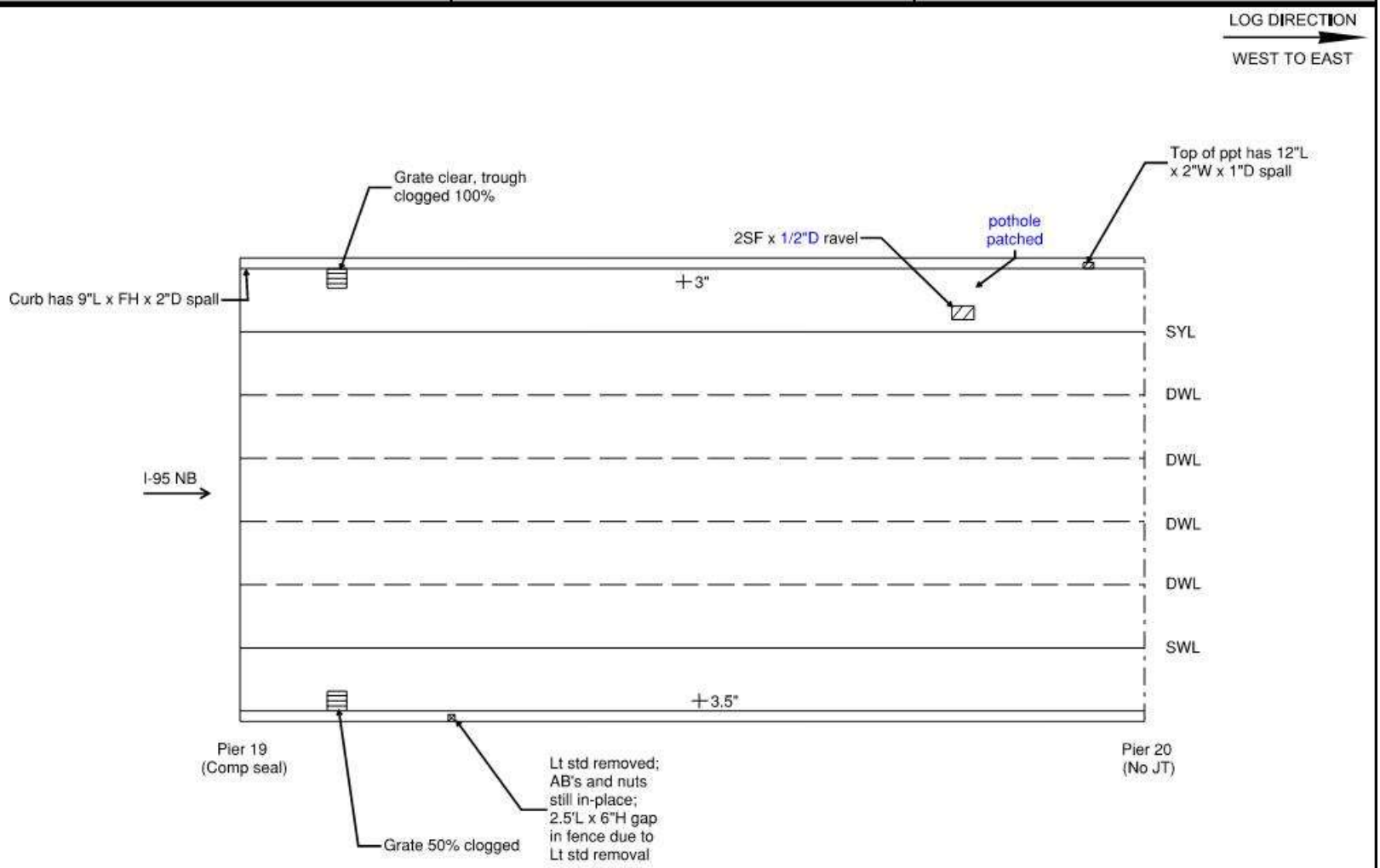

General Notes:

- See Top of Deck General Notes sheet

LEGEND:
- HOLLOW AREA
- SHALLOW REBAR
- SPALL AREA
- SPALL AREA WITH EXPOSED REBAR
- MAPCRACKS
- HAIRLINE CRACKS
- HONEYCOMB AREA
- SCALE AREA
- EFFLORESCENCE PRESENT
- SCUPPER GRATE
- LIGHT STANDARD
- CURB REVEAL

Top of Deck - Span 20

REVISION 1	DATE: 9/25/19	CREW: AH, BH, JG (Baker)	REVISION 3	DATE:	CREW:
REVISION 2	DATE: 10/7/2021	CREW: EG, NH (PRIME)	REVISION 4	DATE:	CREW:

Sketches
Inspection type: Fracture Critical,Routine
Inspection Date: 7/26/2021
Inspected by: PRIME AE

:Bridge No 03819

Town: NEW LONDON
Carried: INTERSTATE 95 NORTHBOUND
Crossed: THAMES RV,RR,LOCAL ROADS
Inventory Route: NHS

CREW: SW, BH, BF	DATE: 11/7/2017	BRIDGE NO.: 03819

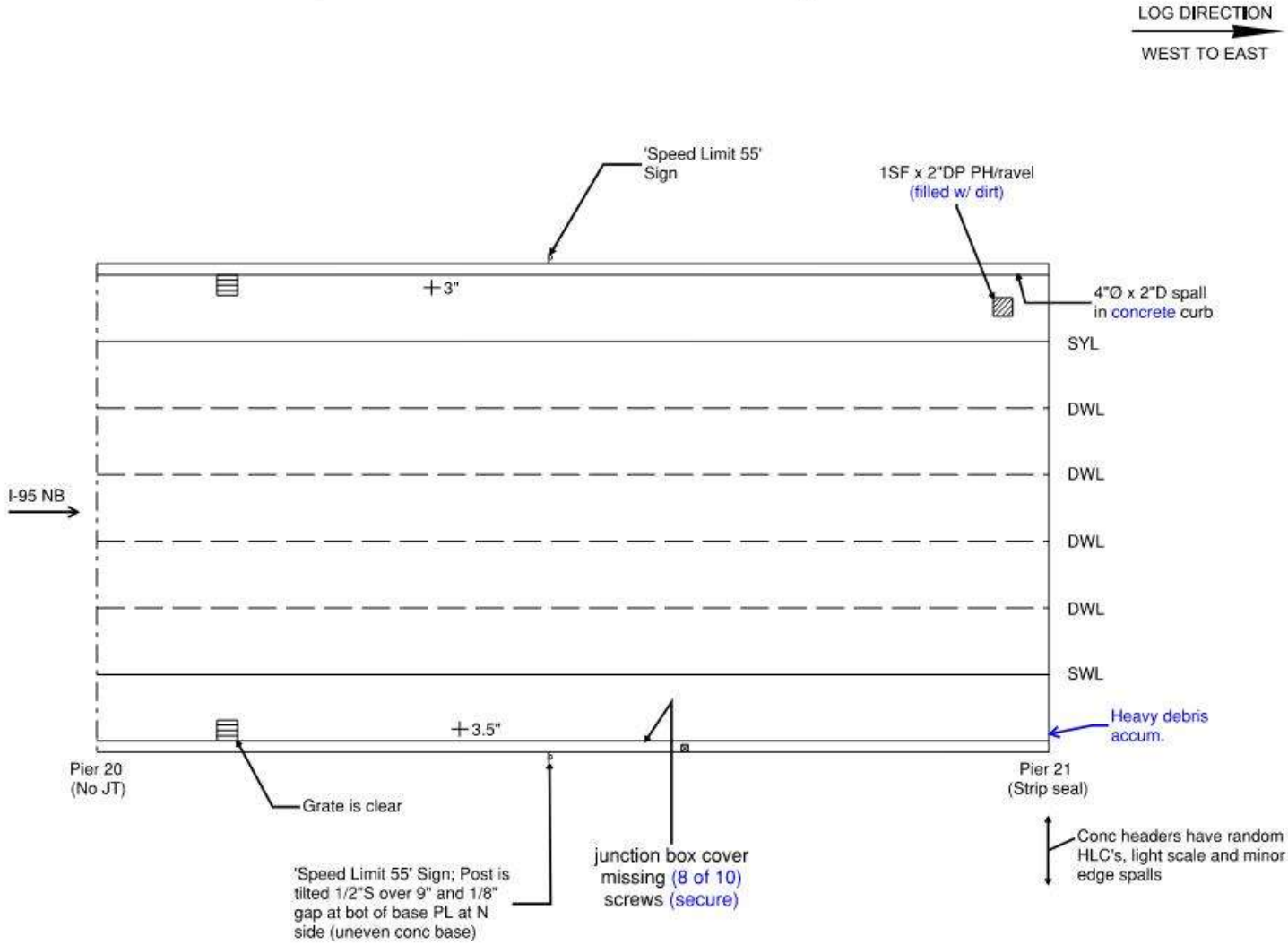

General Notes:
- See Top of Deck General Notes sheet

LEGEND:
- HOLLOW AREA
- SHALLOW REBAR
- SPALL AREA
- SPALL AREA WITH EXPOSED REBAR
- MAPCRACKS
- HAIRLINE CRACKS
- HONEYCOMB AREA
- SCALE AREA
- EFFLORESCENCE PRESENT
- SCUPPER GRATE
- LIGHT STANDARD
- CURB REVEAL

Top of Deck - Span 21

REVISION 1	DATE: 9/25/19	CREW: AH, BH, JG (Baker)	REVISION 3	DATE:	CREW:
REVISION 2	DATE: 10/7/2021	CREW: EG, NH (PRIME)	REVISION 4	DATE:	CREW:

Sketches
Inspection type: Fracture Critical,Routine
Inspection Date: 7/26/2021
Inspected by: PRIME AE

:Bridge No 03819

Town: NEW LONDON
Carried: INTERSTATE 95 NORTHBOUND
Crossed: THAMES RV,RR,LOCAL ROADS
Inventory Route: NHS

CREW: SW, BH, BF	DATE: 11/7/2017	BRIDGE NO.: 03819

LOG DIRECTION
WEST TO EAST

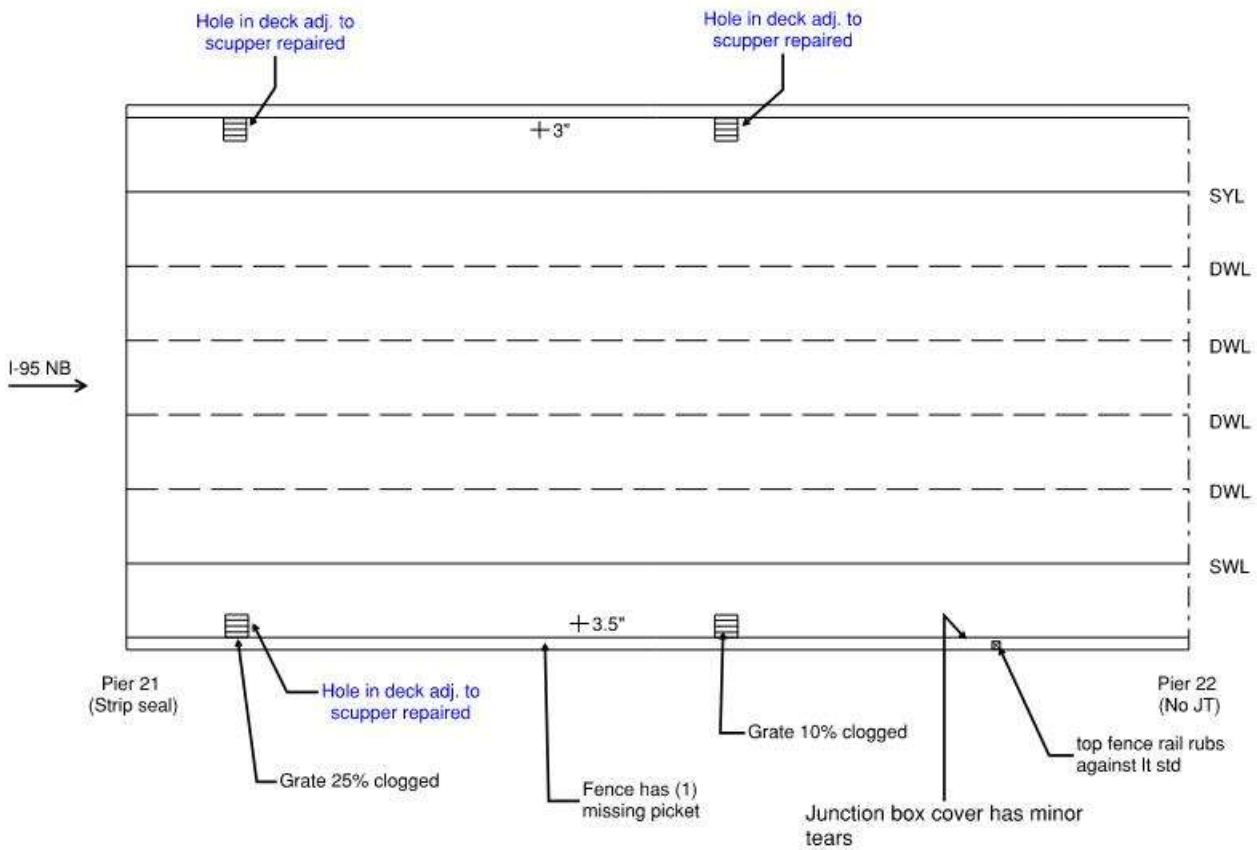

General Notes:
- See Top of Deck General Notes sheet

LEGEND:
- HOLLOW AREA
- SHALLOW REBAR
- SPALL AREA
- SPALL AREA WITH EXPOSED REBAR
- MAPCRACKS
- HAIRLINE CRACKS
- HONEYCOMB AREA
- SCALE AREA
- EFFLORESCENCE PRESENT
- SCUPPER GRATE
- LIGHT STANDARD
- CURB REVEAL

Top of Deck - Span 22

REVISION 1	DATE: 9/25/19	CREW: AH, BH, JG (Baker)	REVISION 3	DATE:	CREW:
REVISION 2	DATE: 10/7/2021	CREW: EG, NH (PRIME)	REVISION 4	DATE:	CREW:

Sketches
Inspection type: Fracture Critical,Routine
Inspection Date: 7/26/2021
Inspected by: PRIME AE

:Bridge No 03819

Town: NEW LONDON
Carried: INTERSTATE 95 NORTHBOUND
Crossed: THAMES RV,RR,LOCAL ROADS
Inventory Route: NHS

CREW: SW, BH, BF	DATE: 11/7/2017	BRIDGE NO.: 03819

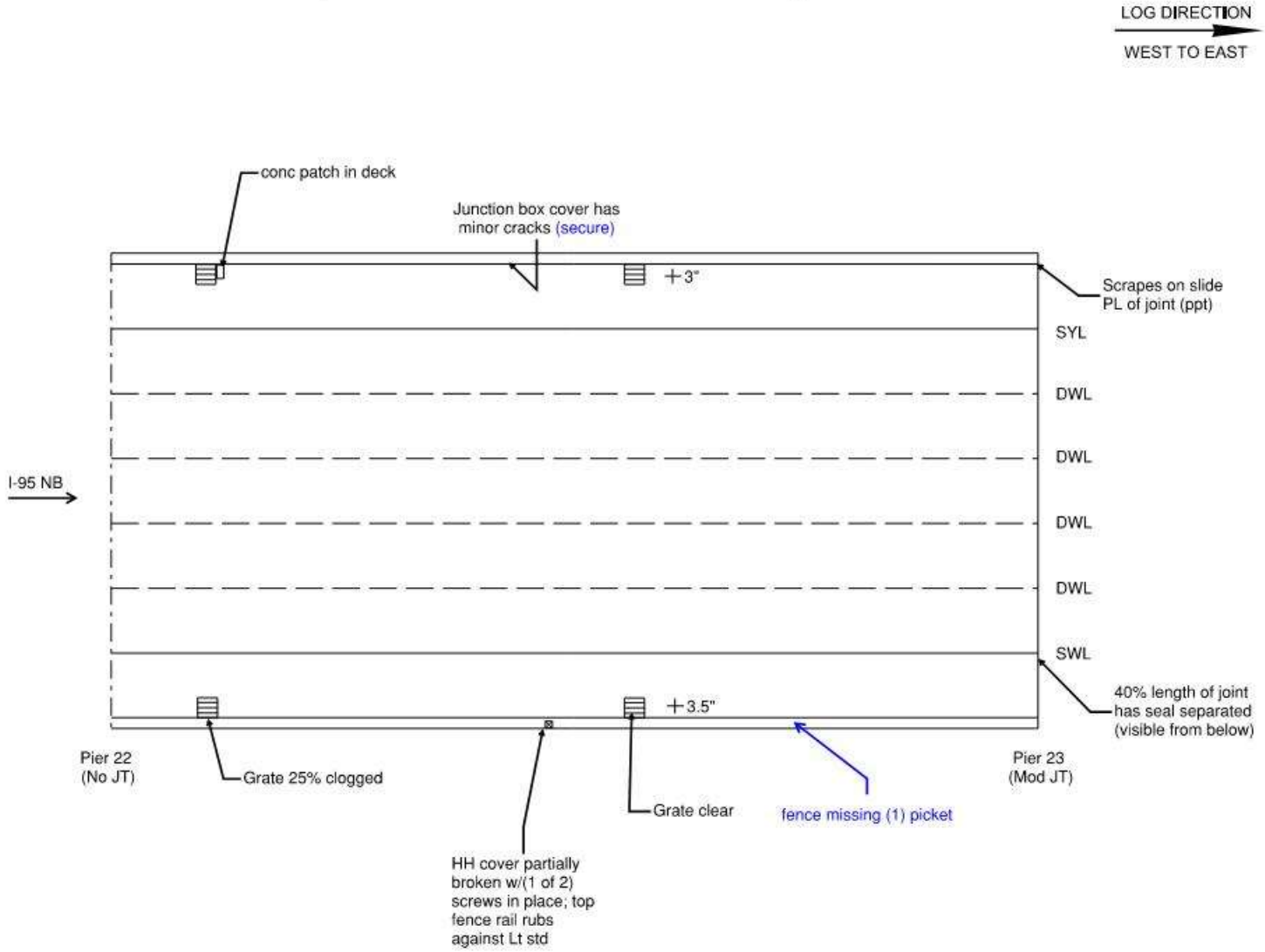

General Notes:
- See Top of Deck General Notes sheet

LEGEND:
- HOLLOW AREA
- SHALLOW REBAR
- SPALL AREA
- SPALL AREA WITH EXPOSED REBAR
- MAPCRACKS
- HAIRLINE CRACKS
- HONEYCOMB AREA
- SCALE AREA
- EFFLORESCENCE PRESENT
- SCUPPER GRATE
- LIGHT STANDARD
- CURB REVEAL

Top of Deck - Span 23

REVISION 1	DATE: 9/25/19	CREW: AH, BH, JG (Baker)	REVISION 3	DATE:	CREW:
REVISION 2	DATE: 10/7/2021	CREW: EG, NH (PRIME)	REVISION 4	DATE:	CREW:

Sketches
Inspection type: Fracture Critical,Routine
Inspection Date: 7/26/2021
Inspected by: PRIME AE

:Bridge No 03819

Town: NEW LONDON
Carried: INTERSTATE 95 NORTHBOUND
Crossed: THAMES RV,RR,LOCAL ROADS
Inventory Route: NHS

CREW: SW, BH, BF	DATE: 11/7/2017	BRIDGE NO.: 03819

LOG DIRECTION
WEST TO EAST

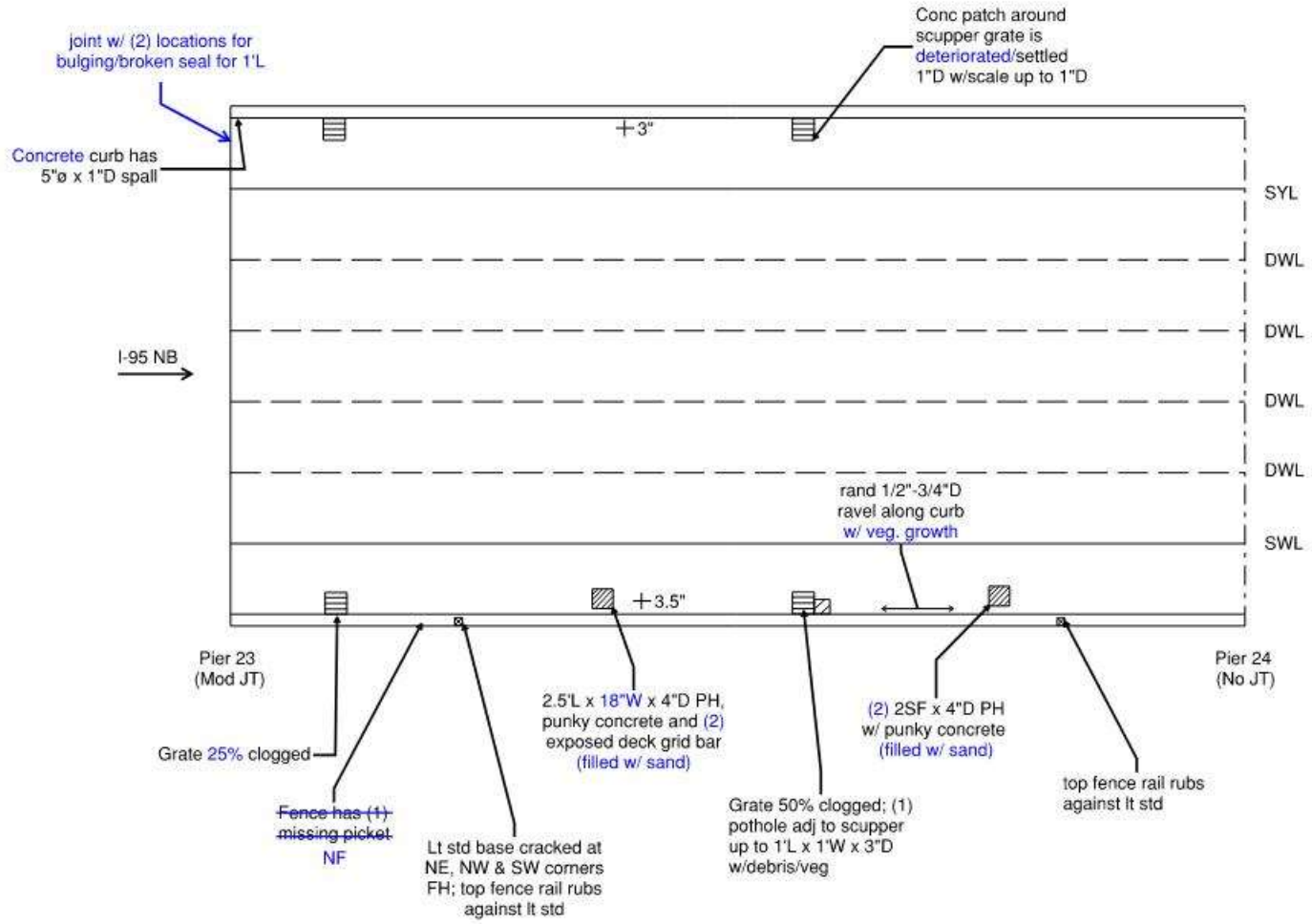

General Notes:

- See Top of Deck General Notes sheet

LEGEND:
- HOLLOW AREA
- SHALLOW REBAR
- SPALL AREA
- SPALL AREA WITH EXPOSED REBAR
- MAPCRACKS
- HAIRLINE CRACKS
- HONEYCOMB AREA
- SCALE AREA
- EFFLORESCENCE PRESENT
- SCUPPER GRATE
- LIGHT STANDARD
- CURB REVEAL

Top of Deck - Span 24

REVISION 1	DATE: 9/25/19	CREW: AH, BH, JG (Baker)	REVISION 3	DATE:	CREW:
REVISION 2	DATE: 10/7/2021	CREW: EG, NH (PRIME)	REVISION 4	DATE:	CREW:

Sketches
Inspection type: Fracture Critical,Routine
Inspection Date: 7/26/2021
Inspected by: PRIME AE

:Bridge No 03819

Town: NEW LONDON
Carried: INTERSTATE 95 NORTHBOUND
Crossed: THAMES RV,RR,LOCAL ROADS
Inventory Route: NHS

CREW: SW, BH, BF	DATE: 11/7/2017	BRIDGE NO.: 03819

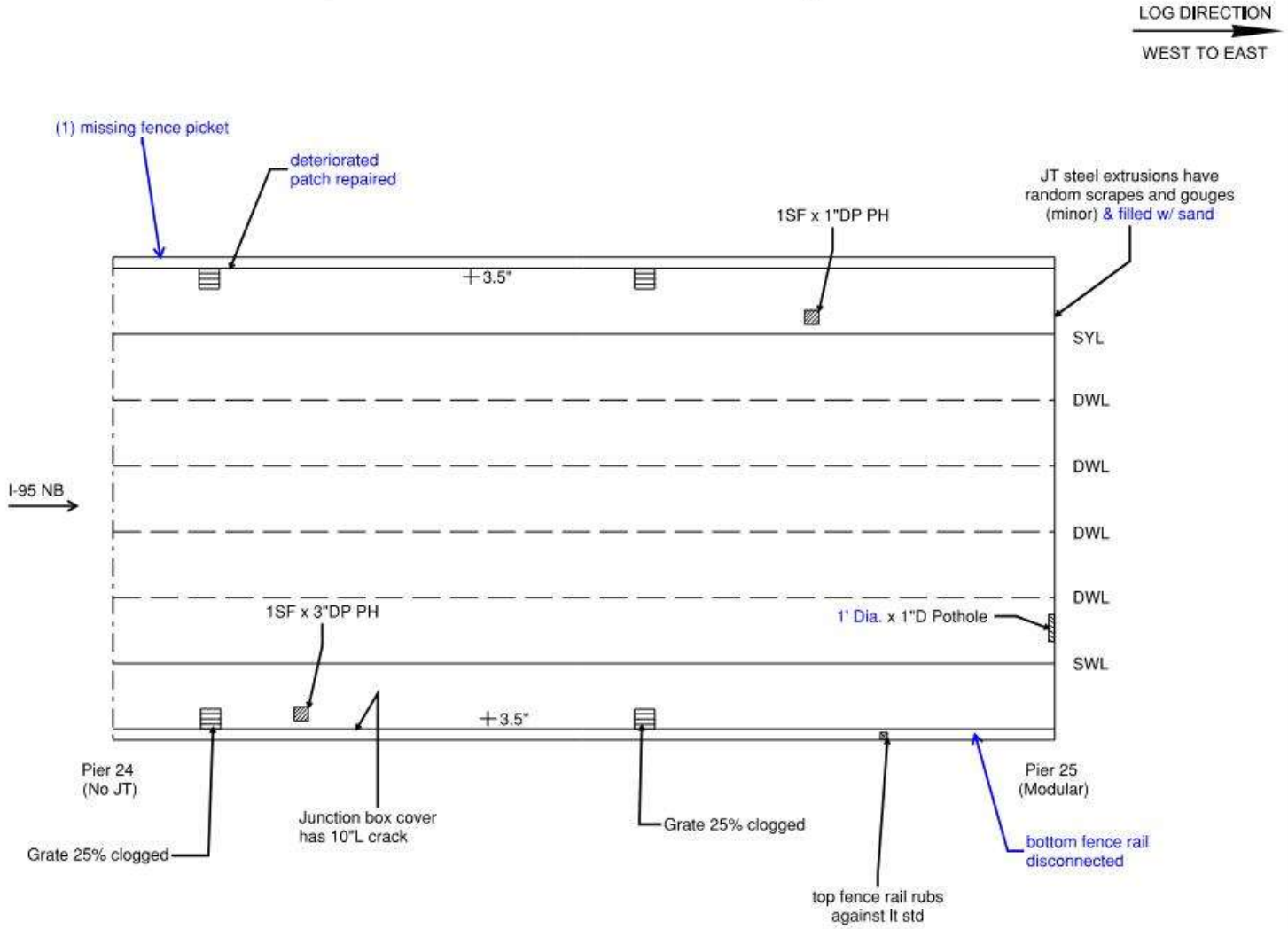

General Notes:
- See Top of Deck General Notes sheet

LEGEND:
- HOLLOW AREA
- SHALLOW REBAR
- SPALL AREA
- SPALL AREA WITH EXPOSED REBAR
- MAPCRACKS
- HAIRLINE CRACKS
- HONEYCOMB AREA
- SCALE AREA
- EFFLORESCENCE PRESENT
- SCUPPER GRATE
- LIGHT STANDARD
- CURB REVEAL

Top of Deck - Span 25

REVISION 1	DATE: 9/25/19	CREW: AH, BH, JG (Baker)	REVISION 3	DATE:	CREW:
REVISION 2	DATE: 10/7/2021	CREW: EG, NH (PRIME)	REVISION 4	DATE:	CREW:

Sketches
Inspection type: Fracture Critical,Routine
Inspection Date: 7/26/2021
Inspected by: PRIME AE

:Bridge No 03819

Town: NEW LONDON
Carried: INTERSTATE 95 NORTHBOUND
Crossed: THAMES RV,RR,LOCAL ROADS
Inventory Route: NHS

CREW: SW, BH, BF	DATE: 11/7/2017	BRIDGE NO.: 03819

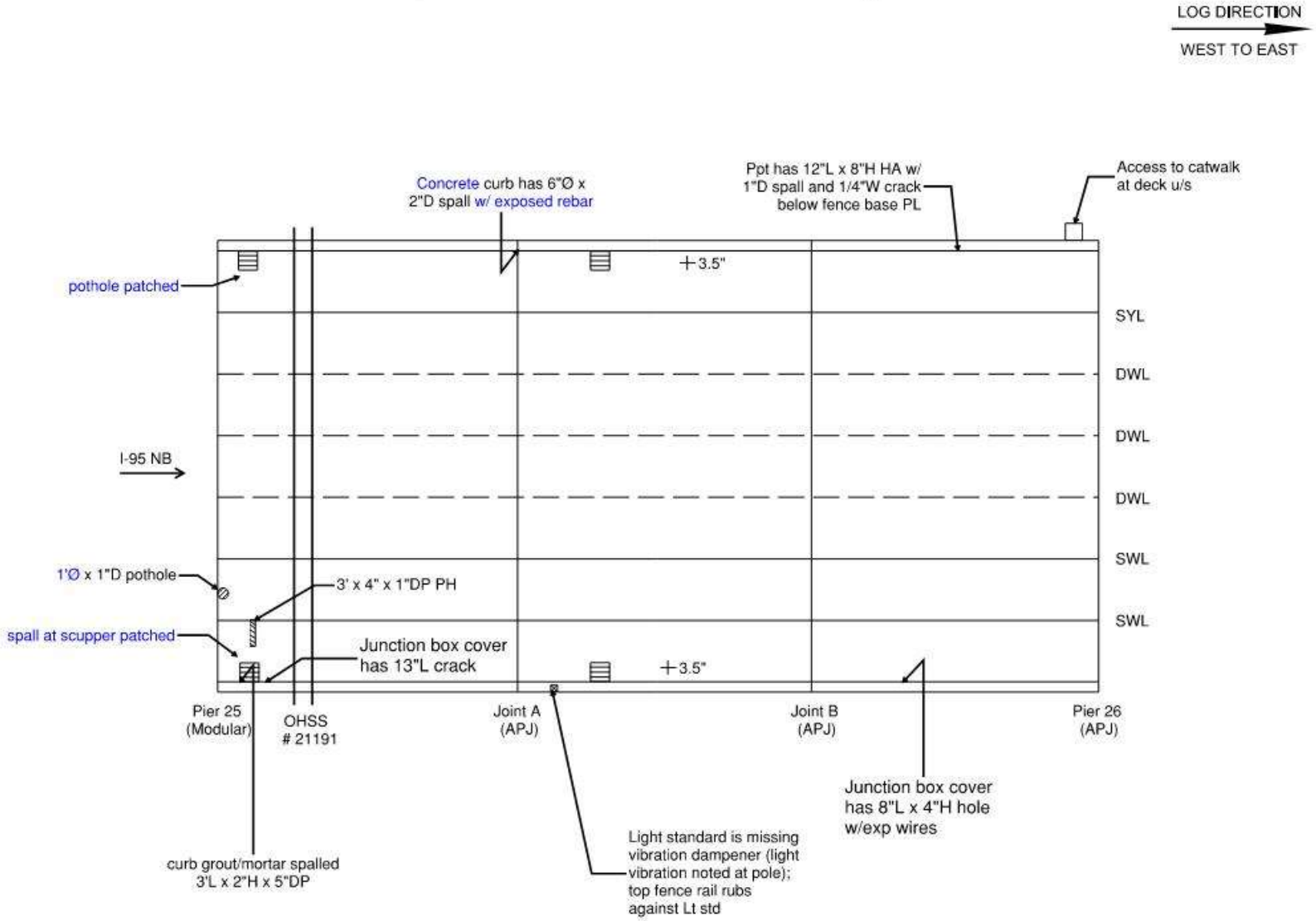

General Notes:
- See Top of Deck General Notes sheet

LEGEND:
- HOLLOW AREA
- SHALLOW REBAR
- SPALL AREA
- SPALL AREA WITH EXPOSED REBAR
- MAPCRACKS
- HAIRLINE CRACKS
- HONEYCOMB AREA
- SCALE AREA
- EFFLORESCENCE PRESENT
- SCUPPER GRATE
- LIGHT STANDARD
- CURB REVEAL

Top of Deck - Span 26

REVISION 1	DATE: 9/25/19	CREW: AH, BH, JG (Baker)	REVISION 3	DATE:	CREW:
REVISION 2	DATE: 9/28/2021	CREW: BM, NH (PRIME)	REVISION 4	DATE:	CREW:

Sketches
Inspection type: Fracture Critical,Routine
Inspection Date: 7/26/2021
Inspected by: PRIME AE

:Bridge No 03819

Town: NEW LONDON
Carried: INTERSTATE 95 NORTHBOUND
Crossed: THAMES RV,RR,LOCAL ROADS
Inventory Route: NHS

CREW: SW, BH, BF	DATE: 11/7/2017	BRIDGE NO.: 03819

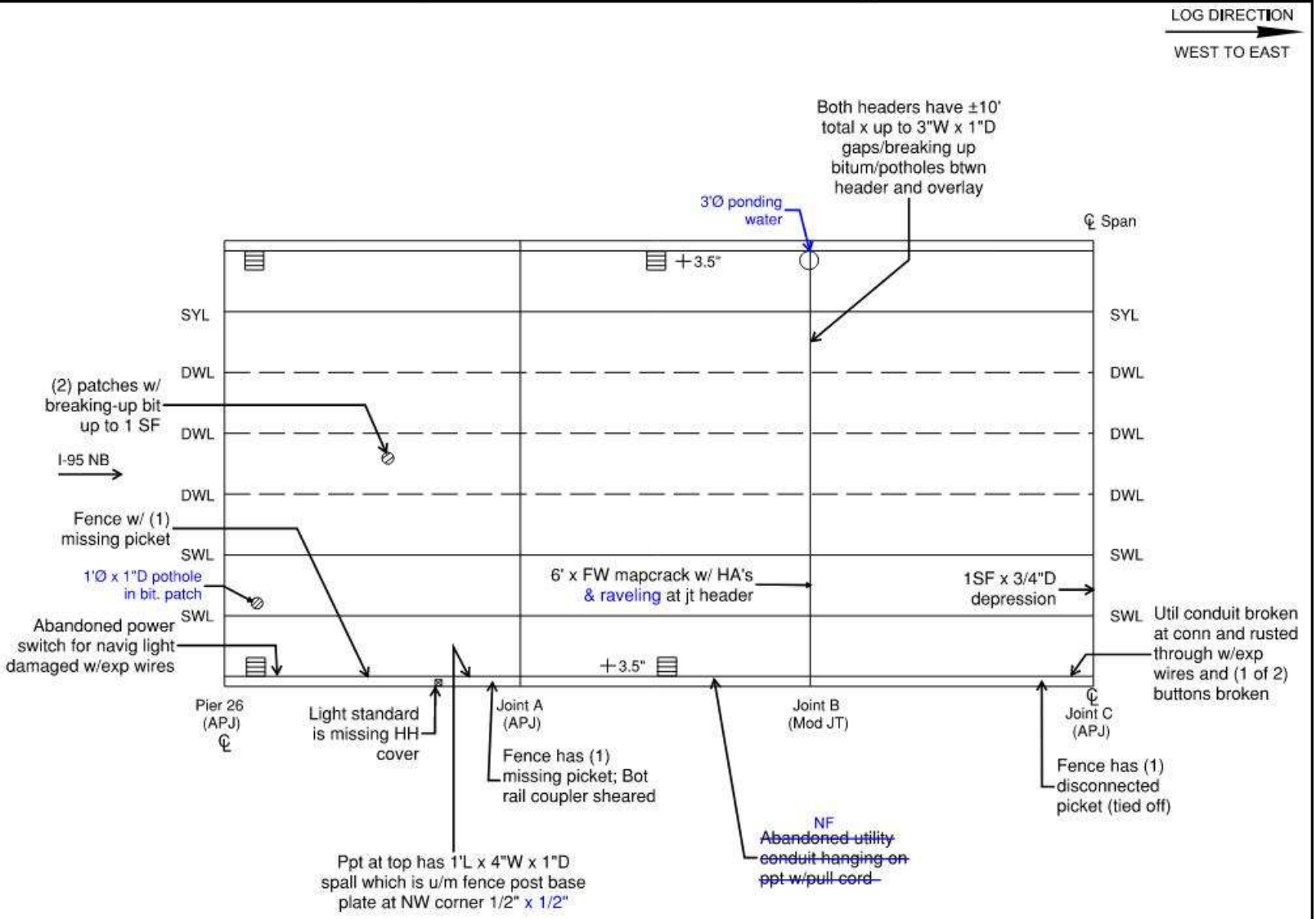

General Notes:
- See Top of Deck General Notes sheet

LEGEND:
- HOLLOW AREA
- SHALLOW REBAR
- SPALL AREA
- SPALL AREA WITH EXPOSED REBAR
- MAPCRACKS
- HAIRLINE CRACKS
- HONEYCOMB AREA
- SCALE AREA
- EFFLORESCENCE PRESENT
- SCUPPER GRATE
- LIGHT STANDARD
- CURB REVEAL

Top of Deck - Span 27 (West Half)

REVISION 1	DATE: 9/25/19	CREW: AH, BH, JG (Baker)	REVISION 3	DATE:	CREW:
REVISION 2	DATE: 7/26/2021	CREW: BM, IS, NH (PRIME)	REVISION 4	DATE:	CREW:

Sketches
Inspection type: Fracture Critical,Routine
Inspection Date: 7/26/2021
Inspected by: PRIME AE

:Bridge No 03819

Town: NEW LONDON
Carried: INTERSTATE 95 NORTHBOUND
Crossed: THAMES RV,RR,LOCAL ROADS
Inventory Route: NHS

CREW: SW, BH, BF	DATE: 11/7/2017	BRIDGE NO.: 03819

Deterioration Notes:
(1)- Bottom clamp broken at utility box
(2)- 'Groton Town Line' sign post; isol reflective buttons missing

LOG DIRECTION
WEST TO EAST

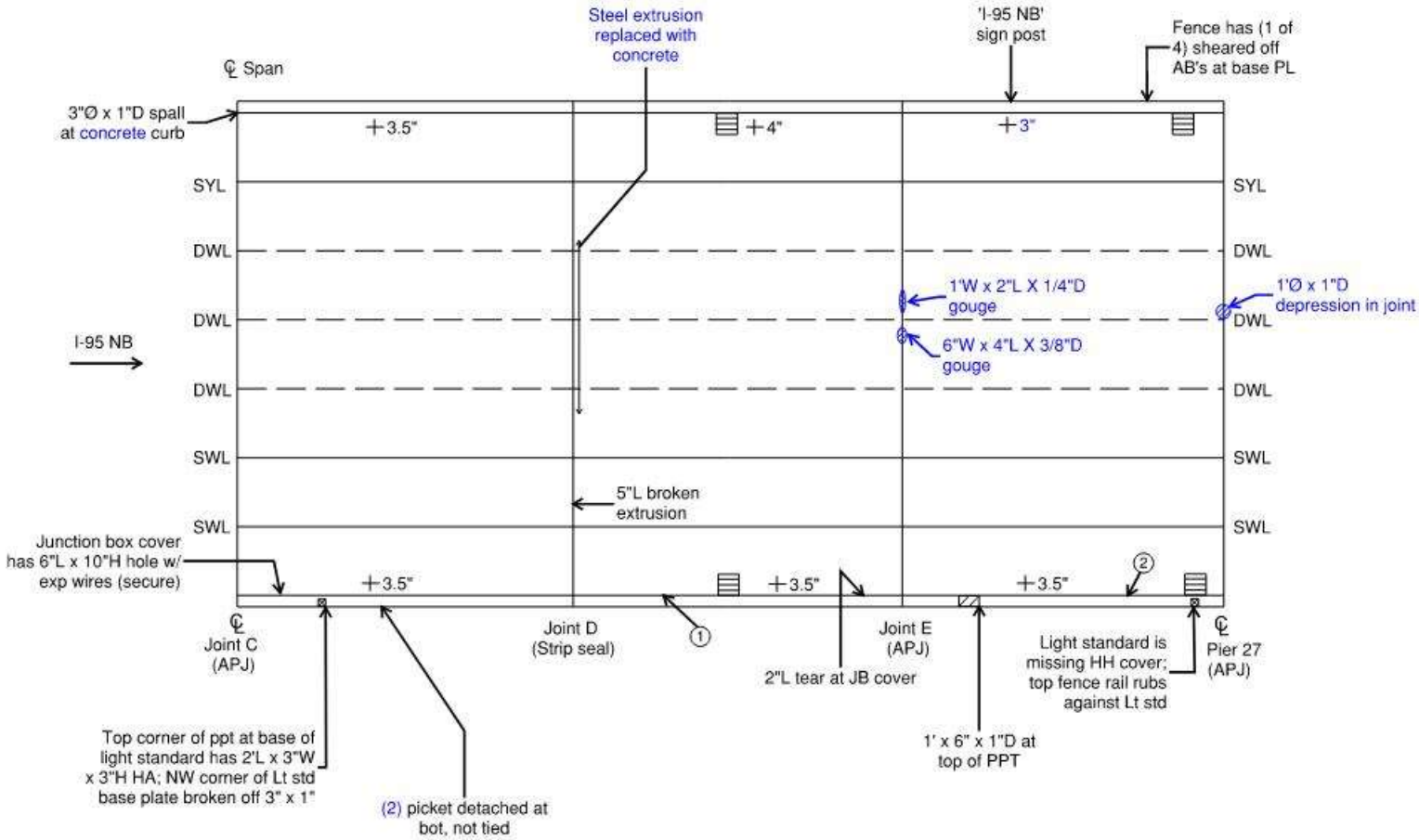

General Notes:
- See Top of Deck General Notes sheet

LEGEND:
- HOLLOW AREA
- SHALLOW REBAR
- SPALL AREA
- SPALL AREA WITH EXPOSED REBAR
- MAPCRACKS
- HAIRLINE CRACKS
- HONEYCOMB AREA
- SCALE AREA
- EFFLORESCENCE PRESENT
- SCUPPER GRATE
- LIGHT STANDARD
- CURB REVEAL

Top of Deck - Span 27 (East Half)

REVISION 1	DATE: 9/25/19	CREW: AH, BH, JG (Baker)	REVISION 3	DATE:	CREW:
REVISION 2	DATE: 7/26/2021	CREW: BM, IS, NH (PRIME)	REVISION 4	DATE:	CREW:

Sketches
Inspection type: Fracture Critical,Routine
Inspection Date: 7/26/2021
Inspected by: PRIME AE

:Bridge No 03819

Town: NEW LONDON
Carried: INTERSTATE 95 NORTHBOUND
Crossed: THAMES RV,RR,LOCAL ROADS
Inventory Route: NHS

CREW: SW, BH, BF	DATE: 11/7/2017	BRIDGE NO.: 03819

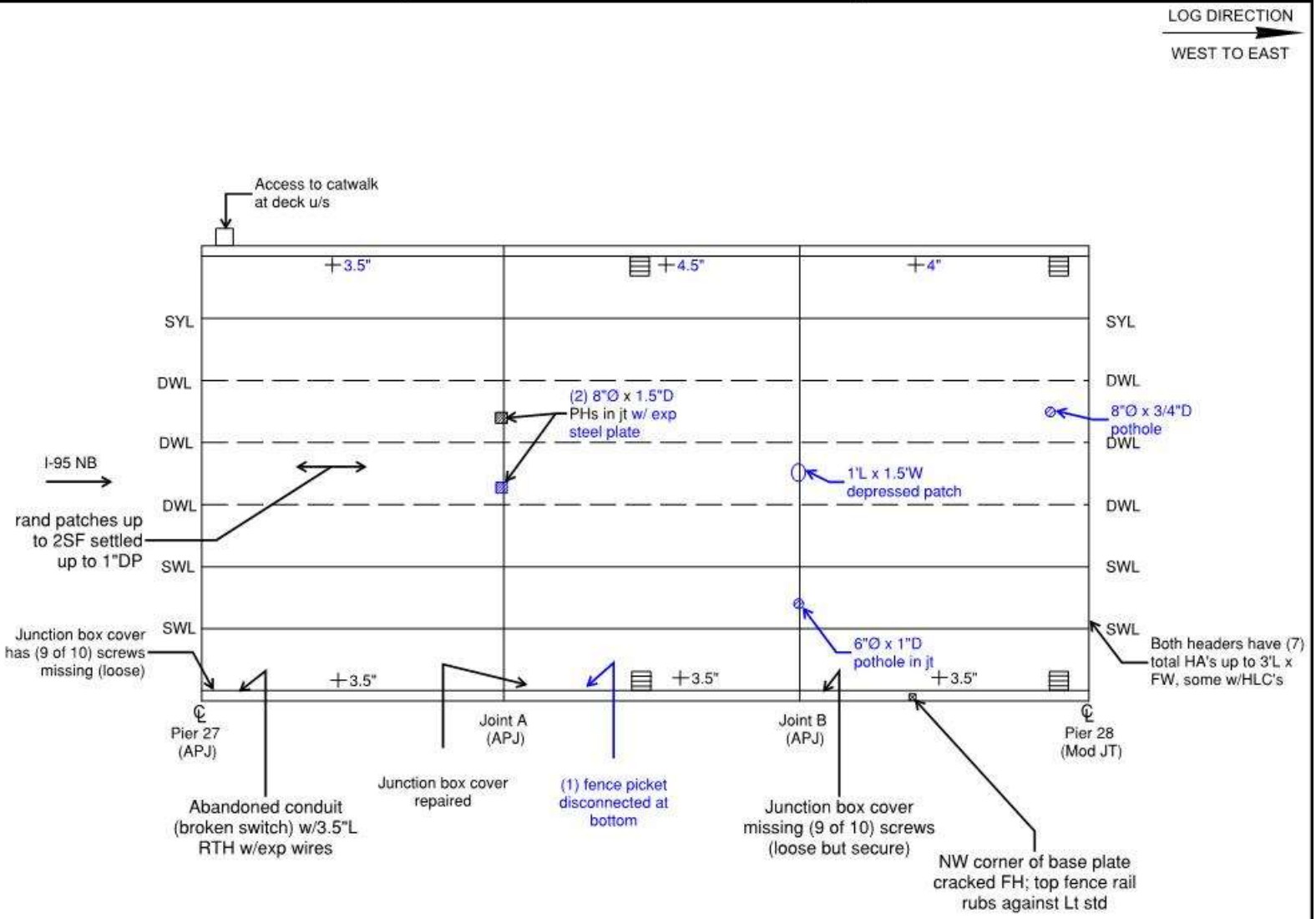

General Notes:
- See Top of Deck General Notes sheet

LEGEND:
- HOLLOW AREA
- SHALLOW REBAR
- SPALL AREA
- SPALL AREA WITH EXPOSED REBAR
- MAPCRACKS
- HAIRLINE CRACKS
- HONEYCOMB AREA
- SCALE AREA
- EFFLORESCENCE PRESENT
- SCUPPER GRATE
- LIGHT STANDARD
- CURB REVEAL

Top of Deck - Span 28

REVISION 1	DATE: 9/25/19	CREW: AH, BH, JG (Baker)	REVISION 3	DATE:	CREW:
REVISION 2	DATE: 7/26/2021	CREW: BM, IS, NH (PRIME)	REVISION 4	DATE:	CREW:

Sketches
Inspection type: Fracture Critical,Routine
Inspection Date: 7/26/2021
Inspected by: PRIME AE

:Bridge No 03819

Town: NEW LONDON
Carried: INTERSTATE 95 NORTHBOUND
Crossed: THAMES RV,RR,LOCAL ROADS
Inventory Route: NHS

CREW: SW, BH, BF	DATE: 11/7/2017	BRIDGE NO.: 03819

LOG DIRECTION
WEST TO EAST

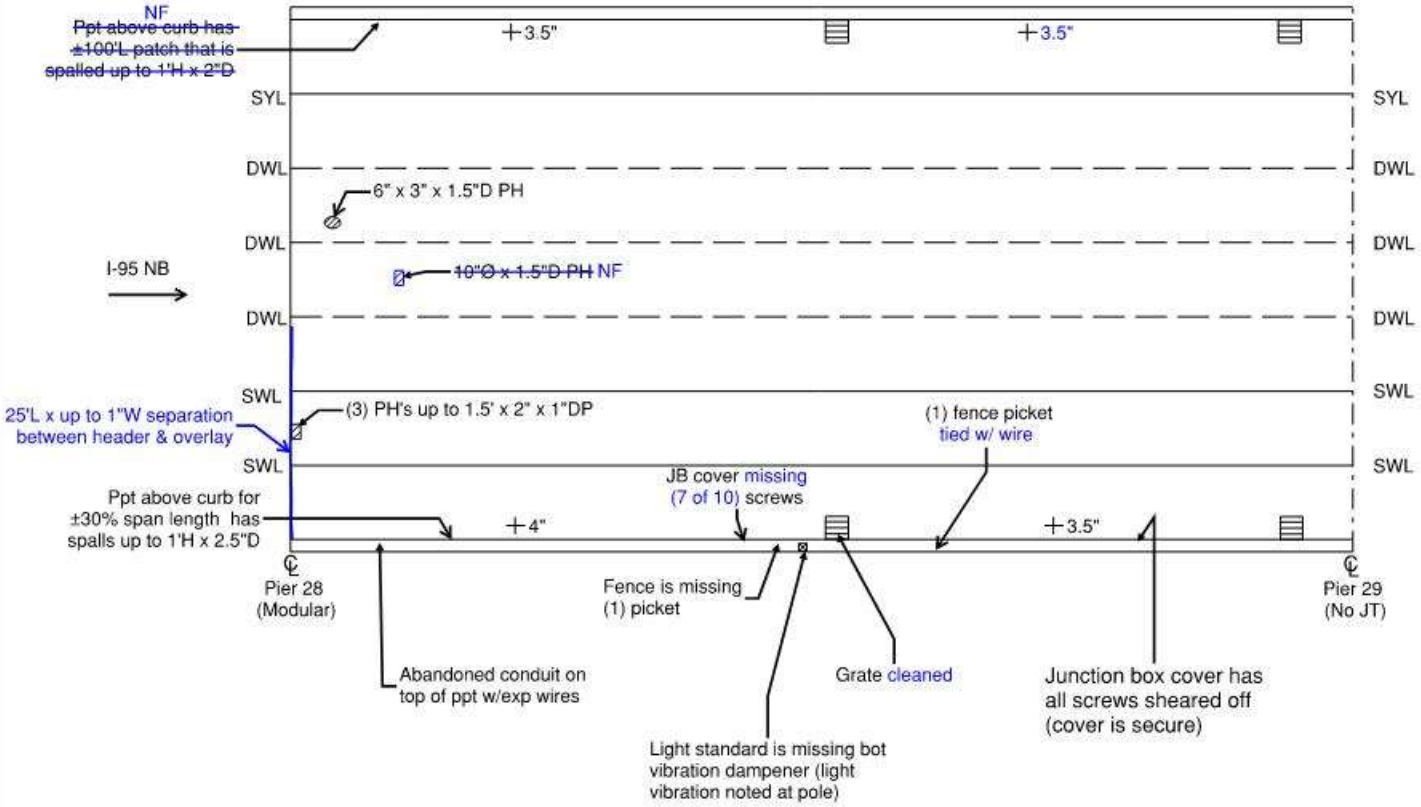

General Notes:
- See Top of Deck General Notes sheet

LEGEND:
- HOLLOW AREA
- SHALLOW REBAR
- SPALL AREA
- SPALL AREA WITH EXPOSED REBAR
- MAPCRACKS
- HAIRLINE CRACKS
- HONEYCOMB AREA
- SCALE AREA
- EFFLORESCENCE PRESENT
- SCUPPER GRATE
- LIGHT STANDARD
- CURB REVEAL

Top of Deck - Span 29

REVISION 1	DATE: 9/25/19	CREW: AH, BH, JG (Baker)	REVISION 3	DATE:	CREW:
REVISION 2	DATE: 7/26/2021	CREW: BM, IS, NH (PRIME)	REVISION 4	DATE:	CREW:

Sketches
Inspection type: Fracture Critical,Routine
Inspection Date: 7/26/2021
Inspected by: PRIME AE

:Bridge No 03819

Town: NEW LONDON
Carried: INTERSTATE 95 NORTHBOUND
Crossed: THAMES RV,RR,LOCAL ROADS
Inventory Route: NHS

CREW: SW, BH, BF	DATE: 11/7/2017	BRIDGE NO.: 03819

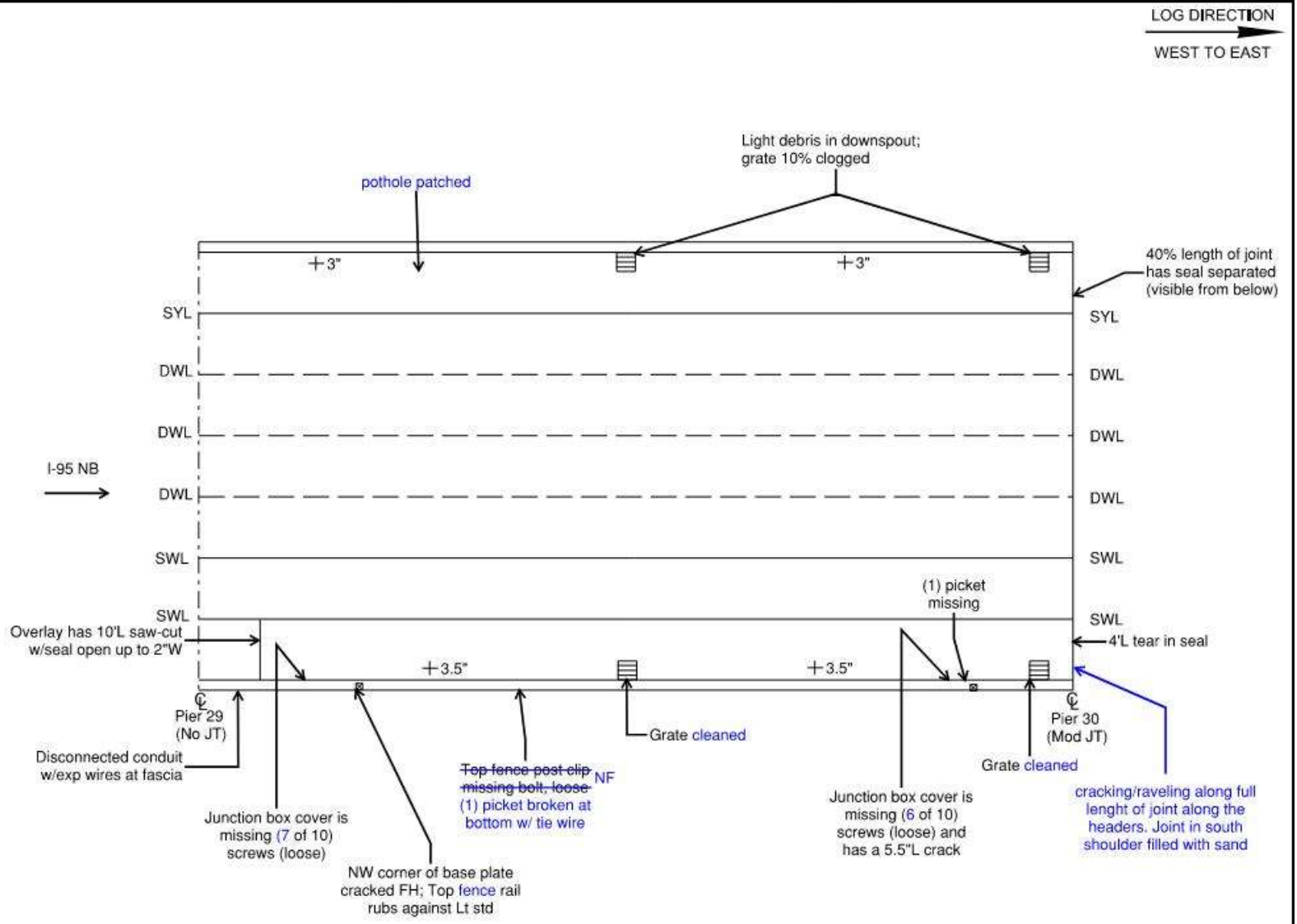

General Notes:
- See Top of Deck General Notes sheet

LEGEND:
- HOLLOW AREA
- SHALLOW REBAR
- SPALL AREA
- SPALL AREA WITH EXPOSED REBAR
- MAPCRACKS
- HAIRLINE CRACKS
- HONEYCOMB AREA
- SCALE AREA
- EFFLORESCENCE PRESENT
- SCUPPER GRATE
- LIGHT STANDARD
- CURB REVEAL

Top of Deck - Span 30

REVISION 1	DATE: 9/25/19	CREW: AH, BH, JG (Baker)	REVISION 3	DATE:	CREW:
REVISION 2	DATE: 7/26/2021	CREW: BM, IS, NH (PRIME)	REVISION 4	DATE:	CREW:

Sketches
Inspection type: Fracture Critical,Routine
Inspection Date: 7/26/2021
Inspected by: PRIME AE

:Bridge No 03819

Town: NEW LONDON
Carried: INTERSTATE 95 NORTHBOUND
Crossed: THAMES RV,RR,LOCAL ROADS
Inventory Route: NHS

CREW: SW, BH, BF	DATE: 11/7/2017	BRIDGE NO.: 03819

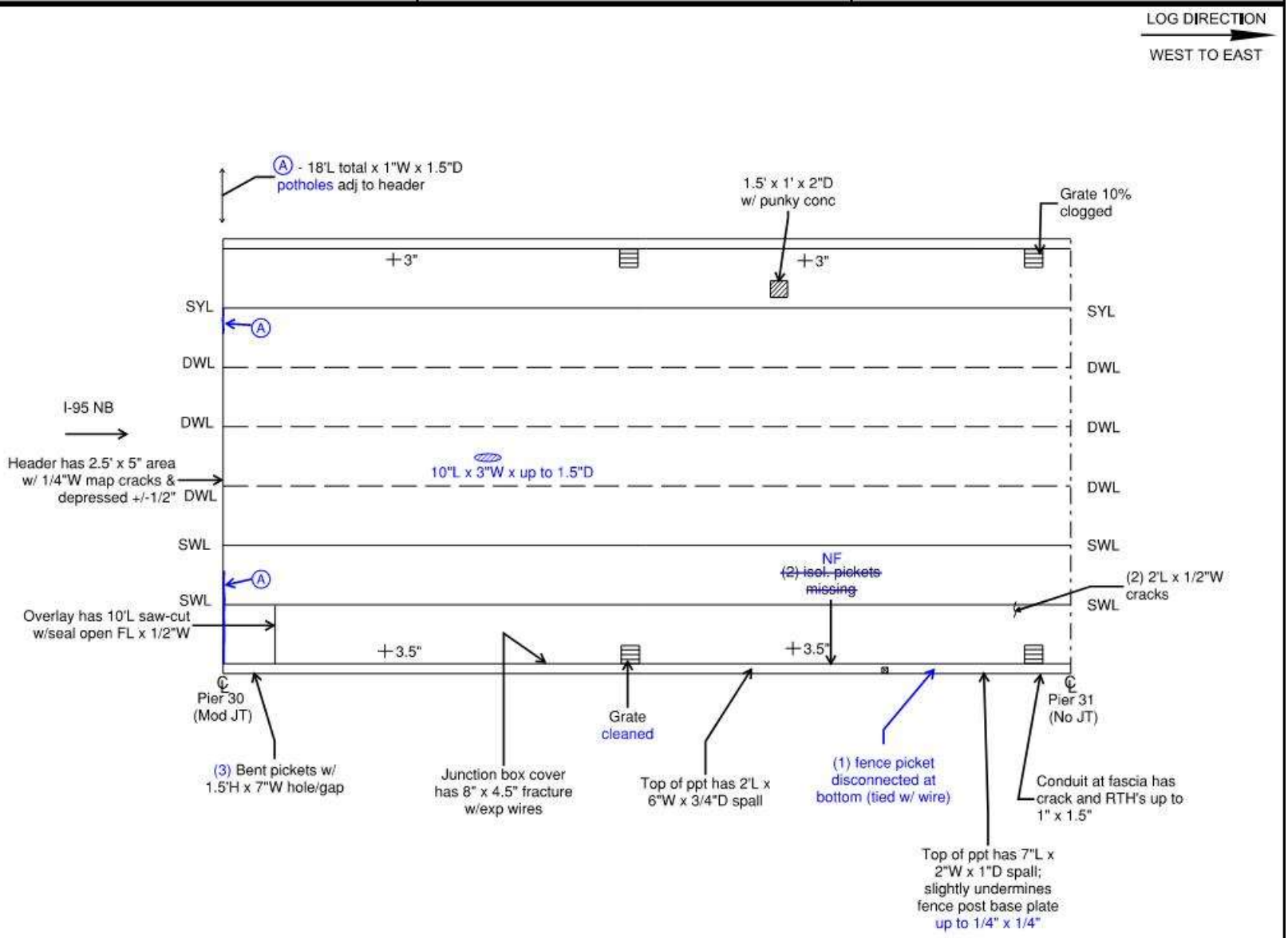

General Notes:
- See Top of Deck General Notes sheet

LEGEND:
- HOLLOW AREA
- SHALLOW REBAR
- SPALL AREA
- SPALL AREA WITH EXPOSED REBAR
- MAPCRACKS
- HAIRLINE CRACKS
- HONEYCOMB AREA
- SCALE AREA
- EFFLORESCENCE PRESENT
- SCUPPER GRATE
- LIGHT STANDARD
- CURB REVEAL

Top of Deck - Span 31

REVISION 1	DATE: 9/25/19	CREW: AH, BH, JG (Baker)	REVISION 3	DATE:	CREW:
REVISION 2	DATE: 7/26/2021	CREW: BM, IS, NH (PRIME)	REVISION 4	DATE:	CREW:

Sketches
Inspection type: Fracture Critical,Routine
Inspection Date: 7/26/2021
Inspected by: PRIME AE

:Bridge No 03819

Town: NEW LONDON
Carried: INTERSTATE 95 NORTHBOUND
Crossed: THAMES RV,RR,LOCAL ROADS
Inventory Route: NHS

CREW: SW, BH, BF	DATE: 11/7/2017	BRIDGE NO.: 03819

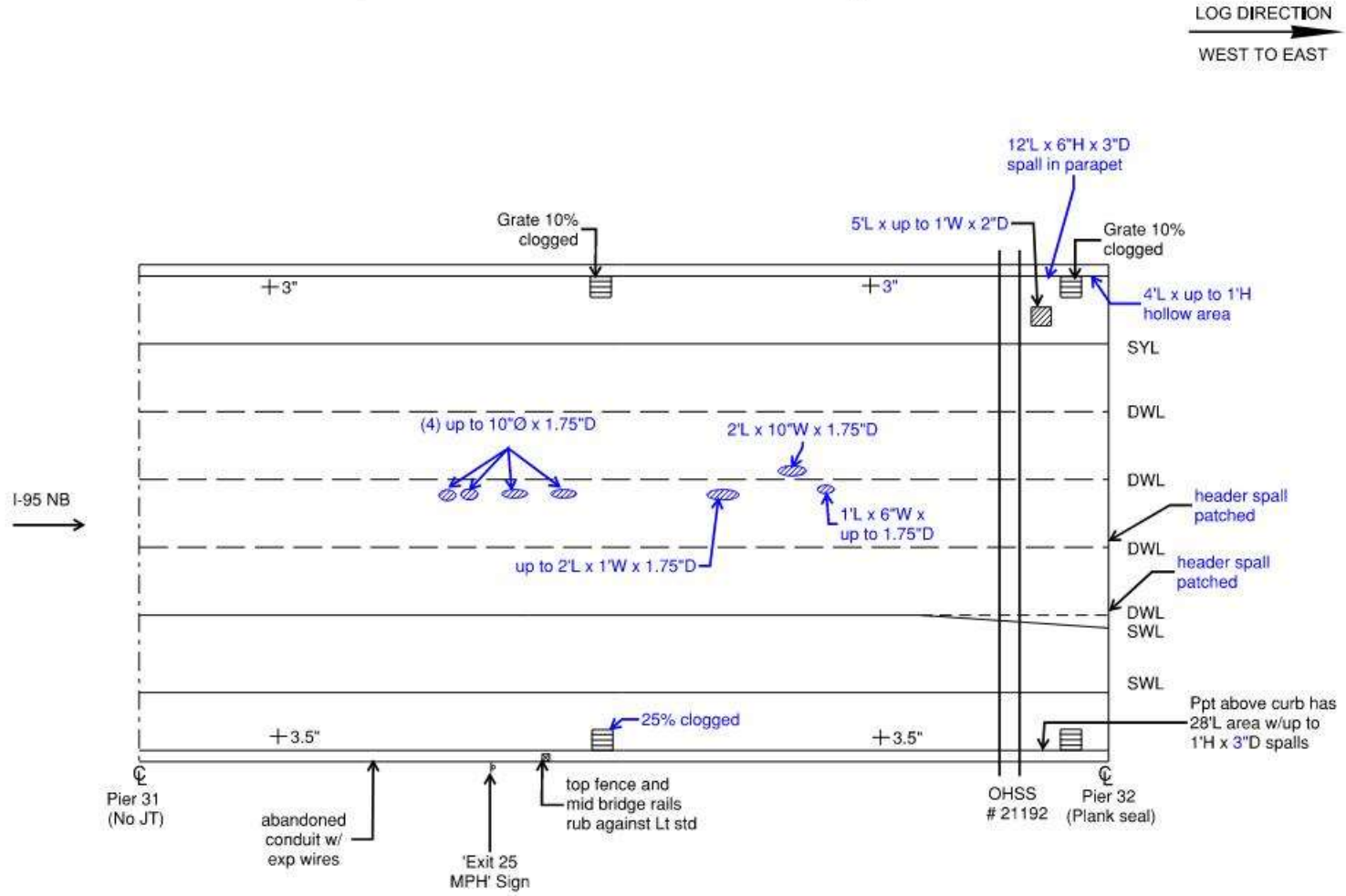

General Notes:

- See Top of Deck General Notes sheet
- Overlay in shoulders (80% of span) has heavy map cracks w/rust stains

LEGEND:
- HOLLOW AREA
- SHALLOW REBAR
- SPALL AREA
- SPALL AREA WITH EXPOSED REBAR
- MAPCRACKS
- HAIRLINE CRACKS
- HONEYCOMB AREA
- SCALE AREA
- EFFLORESCENCE PRESENT
- SCUPPER GRATE
- LIGHT STANDARD
- CURB REVEAL

Top of Deck - Span 32

REVISION 1	DATE: 9/25/19	CREW: AH, BH, JG (Baker)	REVISION 3	DATE:	CREW:
REVISION 2	DATE: 7/26/2021	CREW: BM, IS, NH (PRIME)	REVISION 4	DATE:	CREW:

Sketches
Inspection type: Fracture Critical,Routine
Inspection Date: 7/26/2021
Inspected by: PRIME AE

:Bridge No 03819

Town: NEW LONDON
Carried: INTERSTATE 95 NORTHBOUND
Crossed: THAMES RV,RR,LOCAL ROADS
Inventory Route: NHS

CREW: SW, BH, BF	DATE: 11/7/2017	BRIDGE NO.: 03819

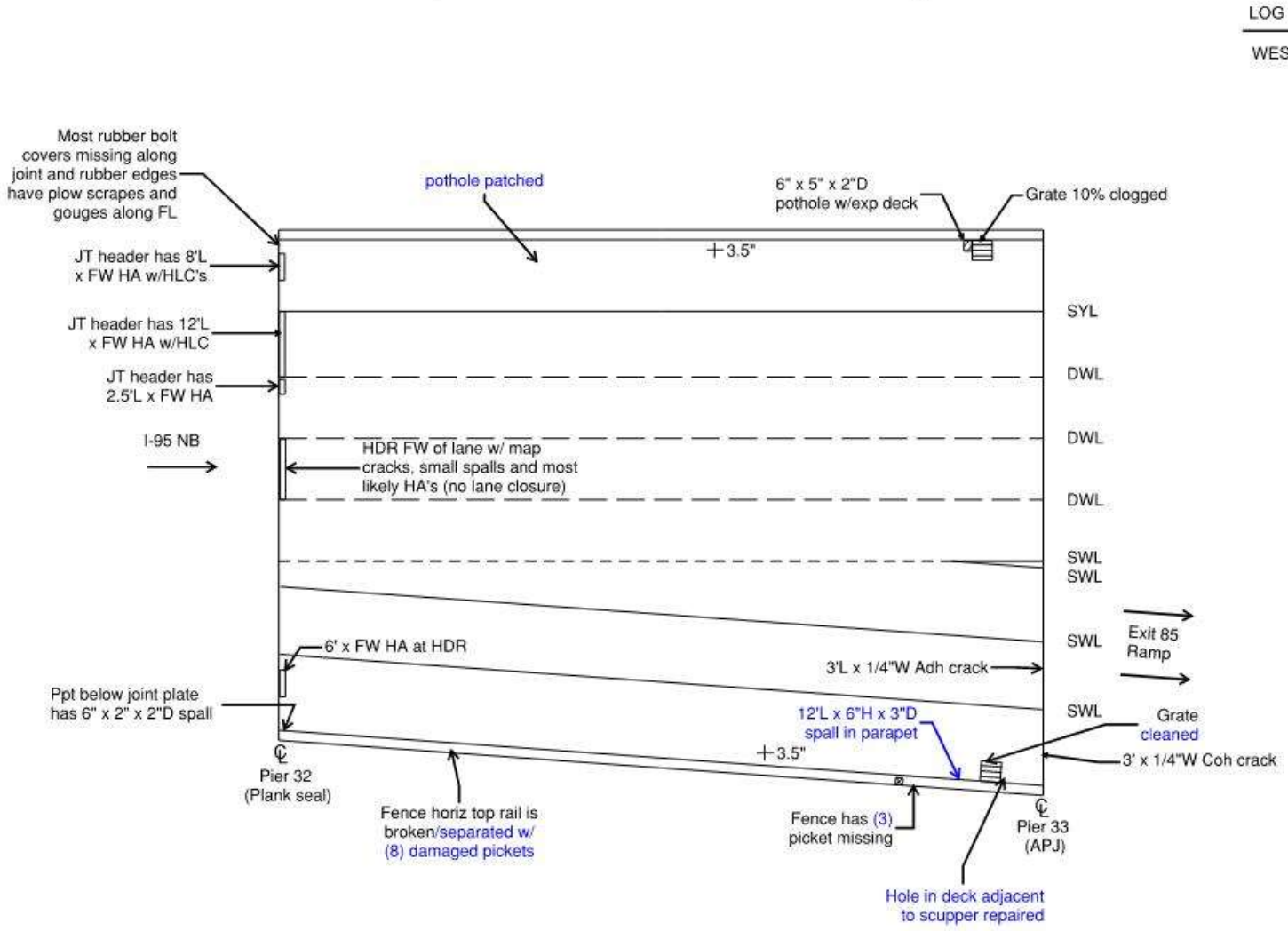

General Notes:

- See Top of Deck General Notes sheet
- Overlay ~~in shoulders~~ (80% of span) has heavy map cracks w/rust stains

LEGEND:
- HOLLOW AREA
- SHALLOW REBAR
- SPALL AREA
- SPALL AREA WITH EXPOSED REBAR
- MAPCRACKS
- HAIRLINE CRACKS
- HONEYCOMB AREA
- SCALE AREA
- EFFLORESCENCE PRESENT
- SCUPPER GRATE
- LIGHT STANDARD
- CURB REVEAL

Top of Deck - Span 33

REVISION 1	DATE: 9/25/19	CREW: AH, BH, JG (Baker)	REVISION 3	DATE:	CREW:
REVISION 2	DATE: 7/26/2021	CREW: BM, IS, NH (PRIME)	REVISION 4	DATE:	CREW:

Sketches
Inspection type: Fracture Critical,Routine
Inspection Date: 7/26/2021
Inspected by: PRIME AE

:Bridge No 03819

Town: NEW LONDON
Carried: INTERSTATE 95 NORTHBOUND
Crossed: THAMES RV,RR,LOCAL ROADS
Inventory Route: NHS

CREW: SW, BH, BF	DATE: 11/7/2017	BRIDGE NO.: 03819

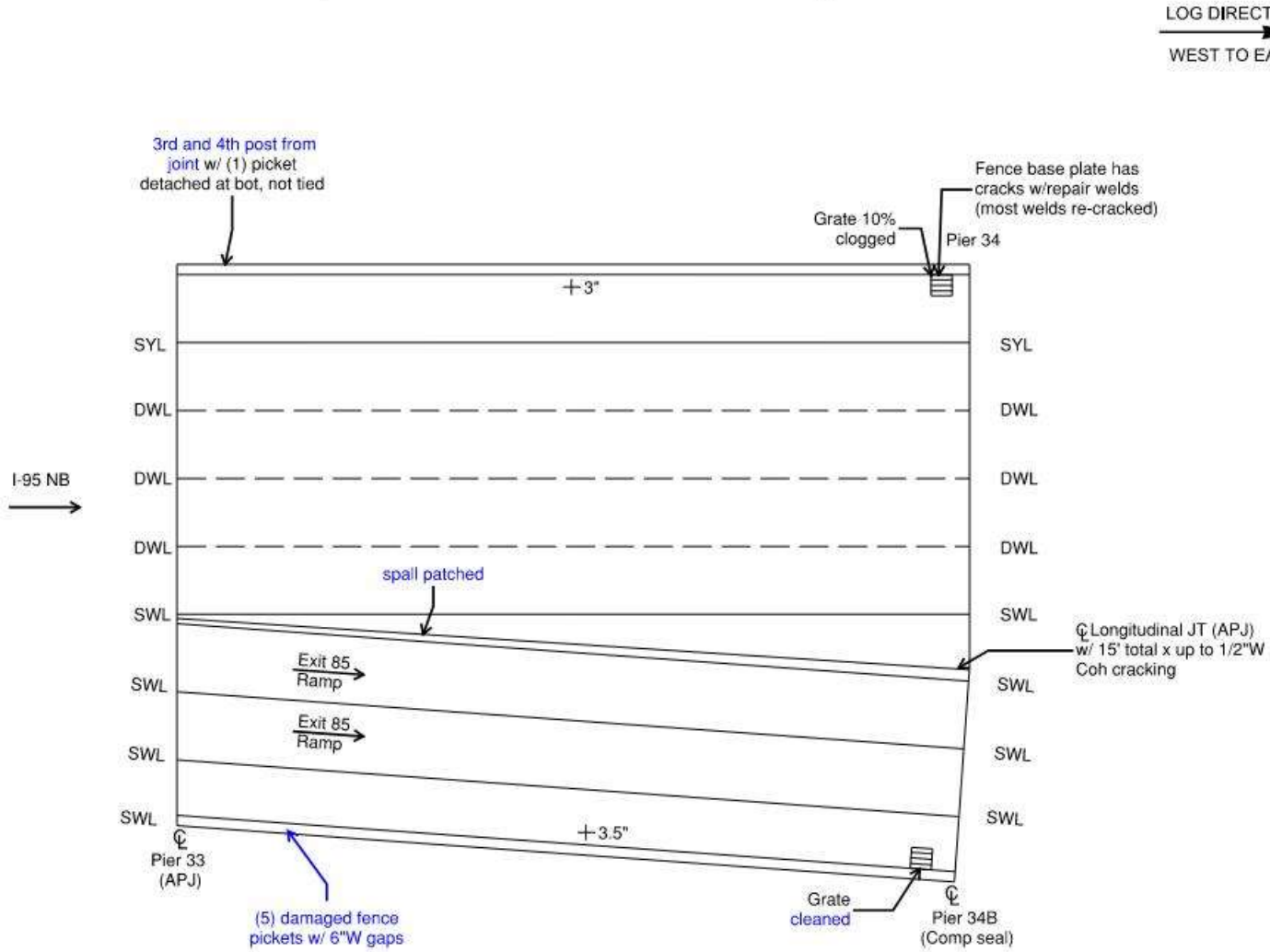

General Notes:

- See Top of Deck General Notes sheet
- Overlay in shoulders (80% of span) has heavy map cracks w/rust stains

LEGEND:
- HOLLOW AREA
- SHALLOW REBAR
- SPALL AREA
- SPALL AREA WITH EXPOSED REBAR
- MAPCRACKS
- HAIRLINE CRACKS
- HONEYCOMB AREA
- SCALE AREA
- EFFLORESCENCE PRESENT
- SCUPPER GRATE
- LIGHT STANDARD
- CURB REVEAL

Top of Deck - Span 34

REVISION 1	DATE: 9/25/19	CREW: AH, BH, JG (Baker)	REVISION 3	DATE:	CREW:
REVISION 2	DATE: 7/26/2021	CREW: BM, IS, NH (PRIME)	REVISION 4	DATE:	CREW:

Sketches
Inspection type: Fracture Critical,Routine
Inspection Date: 7/26/2021
Inspected by: PRIME AE

:Bridge No 03819

Town: NEW LONDON
Carried: INTERSTATE 95 NORTHBOUND
Crossed: THAMES RV,RR,LOCAL ROADS
Inventory Route: NHS

CREW: SW, BH, BF	DATE: 11/7/2017	BRIDGE NO.: 03819

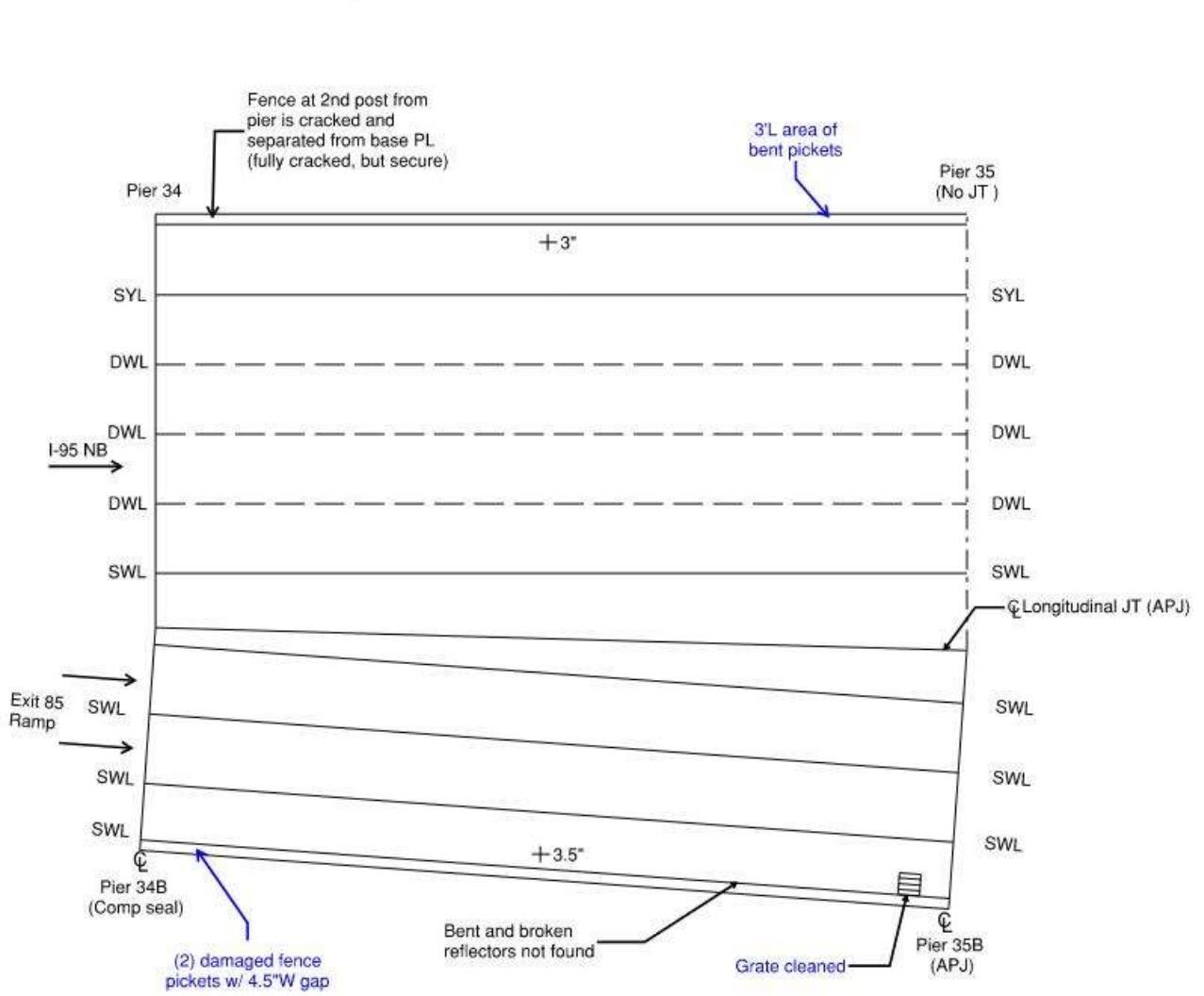

General Notes:

- See Top of Deck General Notes sheet
- Overlay in shoulder and ramp lanes has 25% area of map cracks w/rust stains

LEGEND:
- HOLLOW AREA
- SHALLOW REBAR
- SPALL AREA
- SPALL AREA WITH EXPOSED REBAR
- MAPCRACKS
- HAIRLINE CRACKS
- HONEYCOMB AREA
- SCALE AREA
- EFFLORESCENCE PRESENT
- SCUPPER GRATE
- LIGHT STANDARD
- CURB REVEAL

Top of Deck - Span 35

REVISION 1	DATE: 9/25/19	CREW: AH, BH, JG (Baker)	REVISION 3	DATE:	CREW:
REVISION 2	DATE: 7/26/2021	CREW: BM, IS, NH (PRIME)	REVISION 4	DATE:	CREW:

Sketches
Inspection type: Fracture Critical,Routine
Inspection Date: 7/26/2021
Inspected by: PRIME AE

:Bridge No 03819

Town: NEW LONDON
Carried: INTERSTATE 95 NORTHBOUND
Crossed: THAMES RV,RR,LOCAL ROADS
Inventory Route: NHS

CREW: SW, BH, BF	DATE: 11/7/2017	BRIDGE NO.: 03819

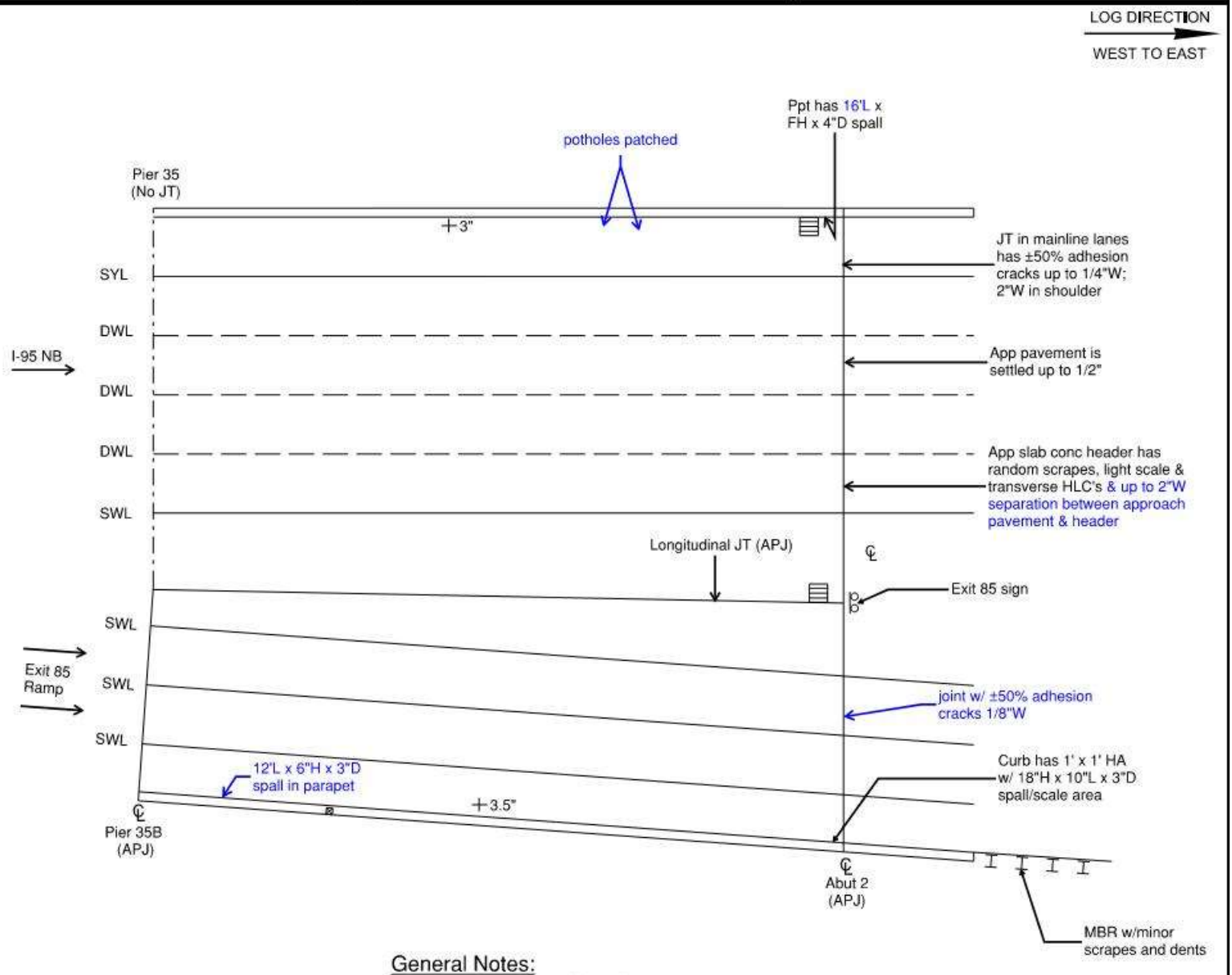

General Notes:
- See Top of Deck General Notes sheet

LEGEND:
- HOLLOW AREA
- SHALLOW REBAR
- SPALL AREA
- SPALL AREA WITH EXPOSED REBAR
- MAPCRACKS
- HAIRLINE CRACKS
- HONEYCOMB AREA
- SCALE AREA
- EFFLORESCENCE PRESENT
- SCUPPER GRATE
- LIGHT STANDARD
- CURB REVEAL

Top of Deck - Span 36

REVISION 1	DATE: 9/25/19	CREW: AH, BH, JG (Baker)	REVISION 3	DATE:	CREW:
REVISION 2	DATE: 7/26/2021	CREW: BM, IS, NH (PRIME)	REVISION 4	DATE:	CREW:

CREW: SW, JG	DATE: 11/28/2017	BRIDGE NO.: 03819

Underside of Deck and Steel Framing General Notes - Spans 6-21

Underside of Deck:

- Underside of the stay-in-place (SIP) forms typically have random areas of spotty light reoccurring rust, peeling paint and isolated areas of heavy to laminated rust.
- Random SIP forms are bent and/or pushed down up to 5' long x up to 4" (as-built condition).
- SIP forms along both overhangs and near the scuppers have random areas of moderate to heavy rust, efflorescence and active leakage with random rusted through holes up to 16" diameter. Also, SIP forms are rusted out up to 1' diameter around the weeps with deck spalls up to 1.5" deep at isolated locations.
- Deck grid bars at each fascia have random locations of laminated rust with 1/16"-1/8" deep section loss & up to 5/16" LOW, especially adjacent to parapet spall locations.
- Deck grid bars adjacent to scuppers have laminated rust with up to 1/16"-1/8" deep section loss & up to 5/16" LOW.
- Deck grid bars adjacent to rusted out SIP forms have bottom flanges with laminated rust with negligible to 1/16"D SL & up to 5/16" LOW.
- Most PVC weeps extend below stringer bottom flanges. Several abandoned and plugged short weeps are actively leaking onto the deck and structural steel.
- Scuppers not shown on sketches unless deficient.
- Drainage troughs are clear of heavy debris, unless otherwise noted.

Ø - ~~Hollow concrete removed by contractor after 2019 inspection (per Hammonasset list, to be verified next inspection)~~ Previously removed hollow areas since the last inspection with the resulting spalls have been verified and noted this inspection.

Stringers:

- Random areas of peeling paint with varying degrees of rusting, up to laminated with negligible section loss.
- Fascia stringer top flanges at old/plugged weeps have section loss up to 12" long x 2" wide x up to 1/4" deep (up to 12% loss) and bottom flanges have <1/16"D SL.
- Fascia stringer top and bottom flanges at scupper locations have section loss up to 3' long x full width x 1/8" deep (typically less-critical areas U.O.N.).
- Stringer to floorbeam connections have up to 5/8" gaps/pack rust at random locations.
- Stringer to floorbeam connections have abrasion rust. Connection bolts are tight unless otherwise noted.
- Random stringers deflect up to ±1/2" under heavy live load (mainly fascia stringers).

Girders:

- Random areas of peeling paint with varying degrees of rusting, up to laminated with negligible section loss.
- Girders have random areas up to 5/8" pack rust between top and bottom cover plates (thicker areas are noted on sketches).
- Girder top flange cover plates have random areas of painted over pitting up to 6" diameter x up to 1/4" deep (<5% loss).
- There is up to 1-5/8" thick pack rust between top flange cover plates and tab plates and the tab plates are bent due to the pack rust (call-outs removed).
- Random girder splice plates have up to 1.5" thick sealant at bottom flange angles with gaps due to pack rust. Some of the sealant is deteriorated.
- Web plates near riveted splices above bottom flange angle vert legs have up to 5'L x 2"H x 1/8"D SL (worse areas noted on sketches).
- There is pack rust up to 3/8" thick between the webs and bottom flange angles at random locations.
- Webs at riveted splices have minor bows up to ±3/8" over their full height at random locations.
- All section losses along the girder webs are <25% in shear and/or bearing and along flanges are typically <5% U.O.N.
- Random fall arrest bars are bent/rattle under live load (previous call-outs removed from sketches
- Top flanges adjacent to knee brace lower angle with up to 1" away LR/SL up to 1/8"D.

Floorbeams:

- Random areas of peeling paint with varying degrees of rusting, up to laminated with negligible section loss.
- Floorbeam end plates have up to 1/4" deep section loss.
- Top flange ends at cantilever sections typically have up to 2' long x 3" wide x 1/8" deep section loss (non-critical areas).
- Bottom flanges adjacent to random vertical stiffeners have areas of section loss up to 9" diameter x 3/16" deep (typically in cantilever sections), up to 9% loss.
- Webs in the cantilever sections have random areas of section loss up to 8" long x 8" high x 1/8" deep (typically less critical areas U.O.N).
- Vertical stiffeners at cantilever sections at deck joint locations have full width x 4" high x 1/4" deep section loss at the base (similar at random non-deck joint floorbeams).
- Up to 3/4" thick pack rust between floorbeam shim plates.

REVISION 1	DATE: 9/30/19	CREW: BH, JG (Baker)	REVISION 3	DATE:	CREW:
REVISION 2	DATE: 09/09/2021	CREW: EG, NR, BM, CMR, EB, IS, SD (PRIME AE)	REVISION 4	DATE:	CREW:

CREW: SW, JG	DATE: 11/28/2017	BRIDGE NO.: 03819

Underside of Deck and Steel Framing General Notes - Spans 6-21 (cont.)

General:

- Specific areas of section loss and/or pitting losses shown on the field sheets are typically painted with some minor re-rusting, U.O.N.
- Superstructure creaks under heavy live load.
- Random girders and floorbeams in spans 7-16 deflect up to ±3/8" under heavy live load.
- Isolated mis-drilled holes in various bridge components.
- Scupper support framing has heavy to laminated rust at random locations with up to 3/16" deep section loss to both flanges and web.
- Diaphragms below deteriorated areas in the deck and/or adjacent to scuppers have random areas of heavy to laminated rust with up to 3/16" deep section loss.
- Random rivet heads have up to 20% section loss.
- Fixed bearings have random areas of peeling paint with light to heavy rust and pitting up to 3/16" deep (some areas are painted over).
- Random fixed bearings have welds in place of anchor bolt nuts.
- LR = Laminated rust; PO = Painted over; RR = painted over with re-rusting; LOW= Loss of width; B-B= Back to Back

Sway and Lateral Bracing:

- Horizontal bracing gusset plates have minor bows with random pitting up to 3/16" deep, isolated areas up to 5/16" deep with rusted through holes and random rivet heads have up to 30% section loss.
- There are random areas of light to heavy pigeon debris at the sway bracing connections and in the bottom horizontal struts.
- There is up to 2" thick pack rust between the bracing members and horizontal gusset plates at the corners of the panel and at the centerline of the floorbeams. The gusset plate corners are typically bent up at these locations.
- Sway struts and diagonals have random painted over pitting up to 1/8" deep at random locations.
- Isolated lateral bracing members have minor bends/dents up to 1/2" (as-built condition).
- Lateral bracing members have random pitting up to 1/8" deep, painted, U.O.N.

REVISION 1	DATE: 9/30/19	CREW: BH, JG (Baker)	REVISION 3	DATE:	CREW:
REVISION 2	DATE: 09/09/2021	CREW: EG, NR, BM, CMR, EB, IS, SD (PRIME AE)	REVISION 4	DATE:	CREW:

CREW: SW, BF	DATE: 8/22/2017	BRIDGE NO.: 03819

Hollow Areas in Deck/Haunches Over Roadways, RR Tracks, Channel and Accessible Areas

Hollow areas in concrete deck and stringer haunches in Spans 26-28 over the channel:

- Per Project 0171-0423 & 0172-0491 all previous hollow areas in these spans were removed by Hammonasset Construction after the 2019 inspection was completed. These areas were marked with a circled R, indicating they were repaired/removed in the 2019 inspection notes, has been confirmed and revised during this 2021 inspection. Previously noted hollow areas and haunch spall over the channel were removed and the resulting spalls with exposed rebars were epoxy coated.

New hollow areas (tight) on the underside of deck over the Thames River.

- Span 26, Bay 12, between floorbeams FB 9 and FB 10 has a 6"L x 8"W adjacent to Stringer S12.
- Span 28, Bay 1, between floorbeams FB 43 and FB 44 has a 15"L x 4"W adjacent to Stringer S1.

REVISION 1	DATE: 9/30/19	CREW: BH, JG (Baker)	REVISION 3	DATE:	CREW:
REVISION 2	DATE: 09/09/2021	CREW: EG, NR, BM, CMR, EB, IS, SD (PRIME AE)	REVISION 4	DATE:	CREW:

CREW: SW, BF	DATE: 8/22/2017	BRIDGE NO.: 03819

Hollow Areas in Parapets Over Roadways, Sidewalks and Stock Pile Areas

- Span 6, south fascia near abutment 1 & FB 7-2, (2) up to 20' x 2' (homeless seen walking in this area)
- Span 7, south fascia, east of FB 7-7, 2' x 1' over sidewalk and road
- Span 7, north fascia, between FB 7-8 & FB 7-9, 20"L x 4"H over path
- Span 8, south fascia, between FB 9-1 & 9-2, 2'L x 7"H and 16"L x 4"H over roadway
- Span 10, north fascia at FB 10-2, 1 square foot over stock pile area
- Span 10, north fascia at pier 10, 3' x 2.5' over stock pile area
- Span 11, north fascia, east of FB 11-2, 3 square feet over stock pile area
- Span 11, south fascia, between pier 10 & FB 11-1, (3) up to 4' x 1' over stock pile area
- Span 12, north fascia, between FB 13-1 & 13-2, 1 square foot over stock pile area
- Span 12, south fascia, west of FB 13-3, 3' x 1.5' over stock pile area
- Span 12, south fascia, between FB 13-3 & 13-4, 2.5' x 1' over stock pile area
- Span 13, south fascia at pier 13, 2' x 10" over sidewalk and road
- Span 16, north fascia, between FB 16-3 & 16-4, (2) up to 4' x 10" over stock pile area

Per Project 0171-0423 & 0172-0491 all hollow areas at outside/underside of parapets in spans 17-33 were removed by Hammonasset Construction after 2019 inspection was completed. These areas were marked with a circled R, indicating they were repaired/removed in the 2019 inspection notes, has been confirmed and revised during this 2021 inspection.

Hollow Areas in Parapets over Roadways, Sidewalks, Parking Lot and Railway Tracks in Spans 17-33

- Span 17, south fascia, west of FB 17-5, 2'L x 18"H over sidewalk
- Span 18, south fascia, between FB 18-3 & 18-4, 3'L x 10"H over DPW parking lot
- Span 18, south fascia, between FB 18-5 & 18-6, 4'L x 1'H over DPW parking lot
- Span 19, south fascia, between FB 19-3 & 19-4, 6'L x 1'H over DPW parking lot
- Span 20, north fascia, between FB 20-2 & 20-3, 2.5'L x 9"H over DPW parking lot
- Span 21, south fascia, between FB 21-3 & 21-4, 1' x 1' over DPW parking lot
- Span 22, north fascia, between FB 5 & FB 6, 20"L x 9"H over RR Tracks
- Span 33, north fascia, between FB 0 & FB 1, (2) up to 14"L x 6"H over RR Tracks
- Span 33, south fascia, east of FB 1, 3'L x 1.5'H over RR Tracks

REVISION 1	DATE: 9/30/19	CREW: BH, JG (Baker)	REVISION 3	DATE:	CREW:
REVISION 2	DATE: 09/09/2021	CREW: EG, NR, BM, CMR, EB, IS, SD (PRIME AE)	REVISION 4	DATE:	CREW:

Sketches
Inspection type: Fracture Critical,Routine
Inspection Date: 7/26/2021
Inspected by: PRIME AE

:Bridge No 03819

Town: NEW LONDON
Carried: INTERSTATE 95 NORTHBOUND
Crossed: THAMES RV,RR,LOCAL ROADS
Inventory Route: NHS

CREW: SW, JG	DATE: 12/8/2017	BRIDGE NO.: 03819

Deterioration Legend:
1. RTH in SIP form (size given)
2. G1 TF cover PL edge bent down at both sides 1" over 1'L
3. Stiff bent 1" over 1'H
4. Lat brace TF has 1'L x 1/2" dent w/1/8"D gouge
5. ~~G1 TF has (2) loose bolts~~ NF
6. 5/16" PR at FB to girder knee brace
7. (2) tack welds b/w shim PL's below FB BF are broken/have poor porosity/difficult to see
8. S13 BF near mid-panel has 22"L x 2"W x 1/8"D SL & web has 22"L x 1"H x 1/8"D SL
9. S14 TF 5' from FB 7-4 has 3'L x up to FW x 1/8"D SL/LR
10. G2 web has 42"L x up to 5"H area w/pitting areas up to 4"ø x 3/16"D PO
11. Bot of BF w/ 18"W x 1"L x 1/8" SL/LR at end of horiz G PL at elbow
12. Scupper downspout clear. Trough 100% clogged.
13. Weep hole actively draining (Abandoned)

LOG DIRECTION → WEST TO EAST

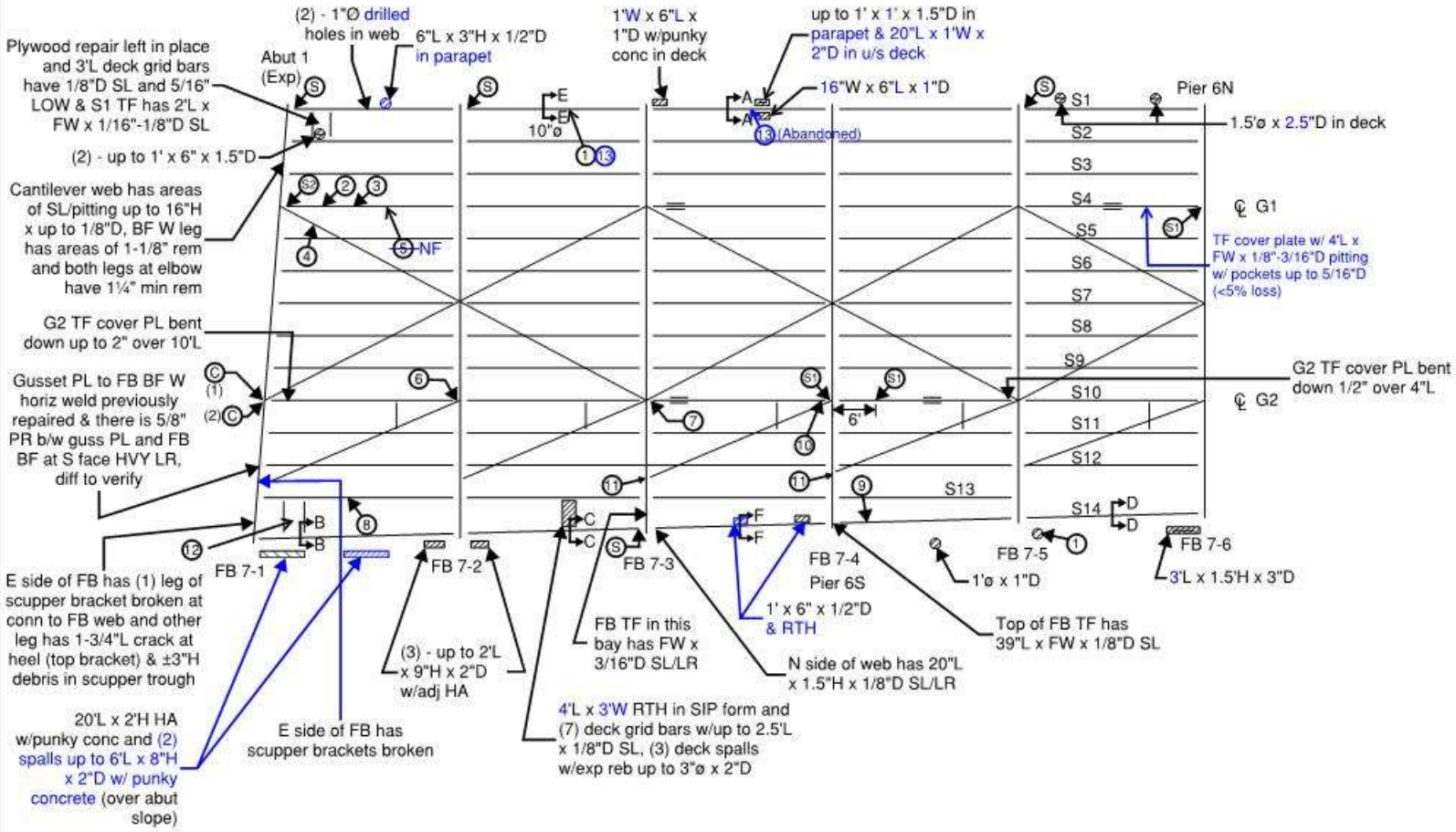

General Notes:

- See Underside of Deck and Steel Framing General Notes (Spans 6-21) sheet
- Fascia spalls are typically in bottom of parapet U.O.N.
- FB 7-1 W side between girders, TF has random areas of up to 6"W x 1/8"D SL (est), BF W leg has ±1-1/4" rem, web has isol areas of up to 6"H x 1/8"D SL and vert stiff's have FW x 4"H x 1/16"-1/8"D SL (all areas have lam rust throughout)
- Abut 1 deck joint had loud banging noise under live load
- (S1) are special shear and buckling locations (checked 100% hands-on w/no SL found)
- (S2) are special shear and buckling locations (see sketch, checked 100% hands-on)

LEGEND:
- HOLLOW AREA
- SHALLOW REBAR
- SPALL AREA
- SPALL AREA WITH EXPOSED REBAR
- MAPCRACKS
- HAIRLINE CRACKS
- HONEYCOMB AREA
- SCALE AREA
- EFFLORESCENCE PRESENT
- RIVETED FIELD SPLICE
- (C) # OF CRACKED/BROKEN TACK WELDS BTWN B-B STIFF ANGLES
- (S) SEE SKETCH

Span 6 - Underside of Deck and Framing

REVISION 1	DATE: 10/3/19	CREW: BH, JG (Baker)	REVISION 3	DATE:	CREW:
REVISION 2	DATE: 9/9/2021	CREW: EG, IS, NH, SD (PRIME)	REVISION 4	DATE:	CREW:

CREW: SW, JG	DATE: 12/8/2017	BRIDGE NO.: 03819

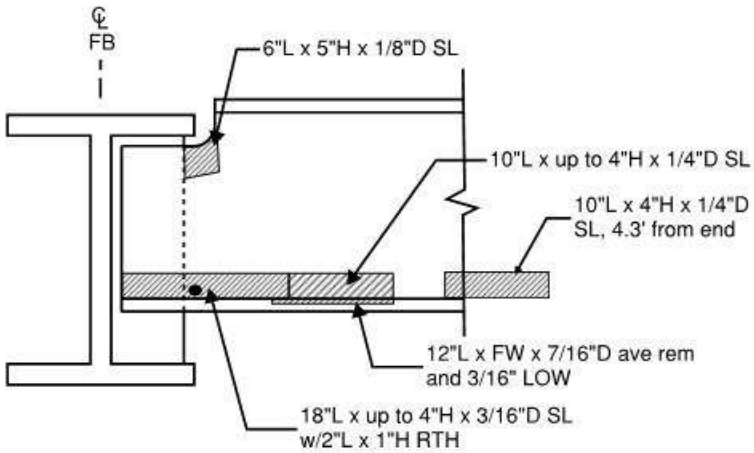

Span 6 - S1 at East Side of FB 7-1
South Elevation

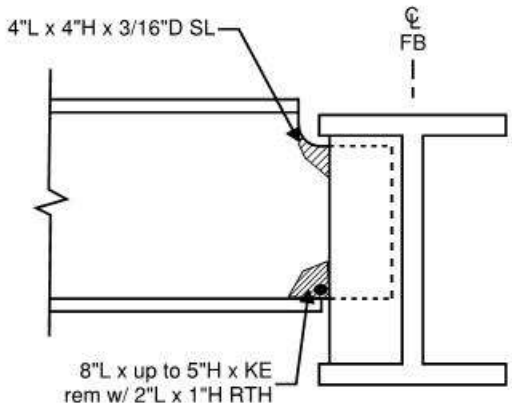

Span 6 - S1 at East Side of FB 7-1
North Elevation

- HVY LR at all locations

REVISION 1	DATE: 10/3/19	CREW: BH, JG (Baker)	REVISION 3	DATE:	CREW:
REVISION 2	DATE: 9/9/2021	CREW: EG, IS, NH (PRIME)	REVISION 4	DATE:	CREW:

Sketches
Inspection type: Fracture Critical,Routine
Inspection Date: 7/26/2021
Inspected by: PRIME AE

:Bridge No 03819

Town: NEW LONDON
Carried: INTERSTATE 95 NORTHBOUND
Crossed: THAMES RV,RR,LOCAL ROADS
Inventory Route: NHS

CREW: SW, JG	DATE: 12/8/2017	BRIDGE NO.: 03819

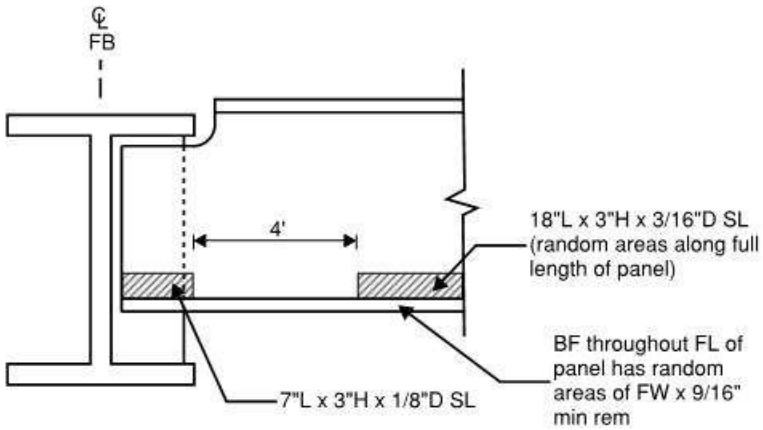

Span 6 - S1 at East Side of FB 7-2
South Elevation

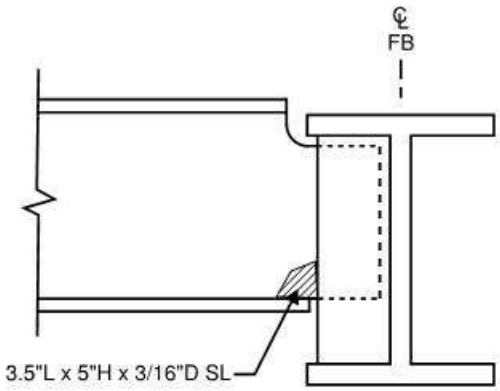

Span 6 - S1 at East Side of FB 7-2
North Elevation

- HVY LR throughout

REVISION 1	DATE: 10/3/19	CREW: BH, JG (Baker)	REVISION 3	DATE:	CREW:
REVISION 2	DATE: 9/9/2021	CREW: EG, IS, NH (PRIME)	REVISION 4	DATE:	CREW:

Sketches
Inspection type: Fracture Critical,Routine
Inspection Date: 7/26/2021
Inspected by: PRIME AE

:Bridge No 03819

Town: NEW LONDON
Carried: INTERSTATE 95 NORTHBOUND
Crossed: THAMES RV,RR,LOCAL ROADS
Inventory Route: NHS

CREW: SW, JG	DATE: 12/8/2017	BRIDGE NO.: 03819

Web depth at cope = 22"

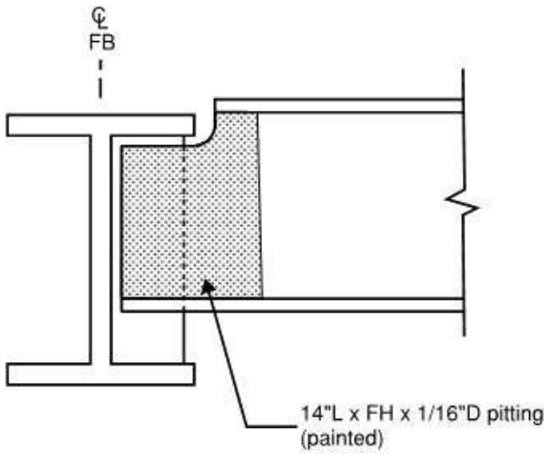

Span 6 - S1 at East Side of FB 7-5
South Elevation

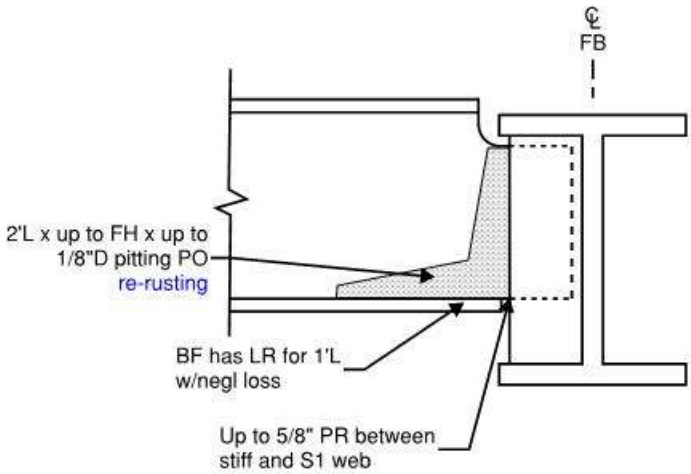

Span 6 - S1 at East Side of FB 7-5
North Elevation

REVISION 1	DATE: 10/3/19	CREW: BH, JG (Baker)	REVISION 3	DATE:	CREW:
REVISION 2	DATE: 9/9/2021	CREW: EG, IS, NH (PRIME)	REVISION 4	DATE:	CREW:

Sketches
Inspection type: Fracture Critical,Routine
Inspection Date: 7/26/2021
Inspected by: PRIME AE

:Bridge No 03819

Town: NEW LONDON
Carried: INTERSTATE 95 NORTHBOUND
Crossed: THAMES RV,RR,LOCAL ROADS
Inventory Route: NHS

CREW: SW, JG	DATE: 12/8/2017	BRIDGE NO.: 03819

Web depth at cope = 21"

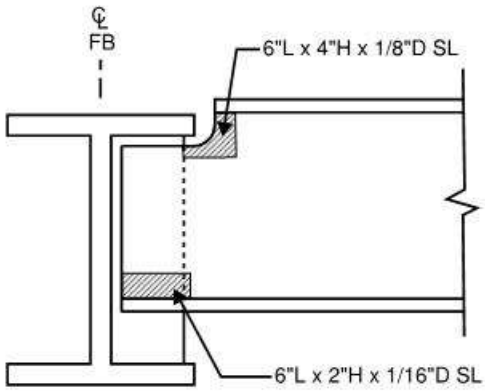

Span 6 - S14 at West Side of FB 7-3
North Elevation

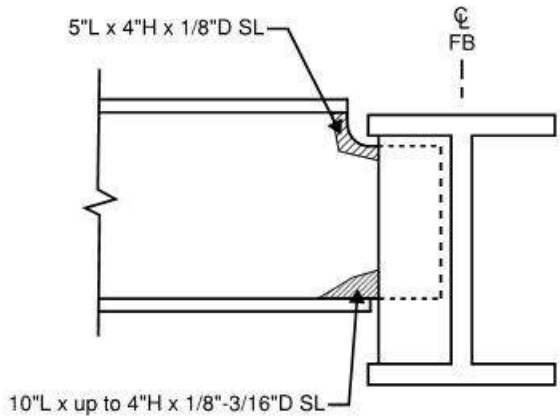

Span 6 - S14 at West Side of FB 7-3
South Elevation

- LR at all locations

REVISION 1	DATE: 10/3/19	CREW: BH, JG (Baker)	REVISION 3	DATE:	CREW:
REVISION 2	DATE: 10/18/2021	CREW: EG, SD (PRIME)	REVISION 4	DATE:	CREW:

CREW: SW, JG	DATE: 12/8/2017	BRIDGE NO.: 03819

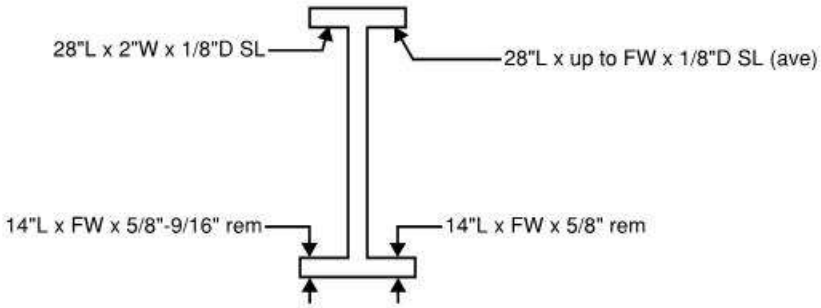

Span 6 - S1 at Mid-Panel East of FB 7-3
Section A-A (looking east)

- Cleaned, Moderate laminated rust.

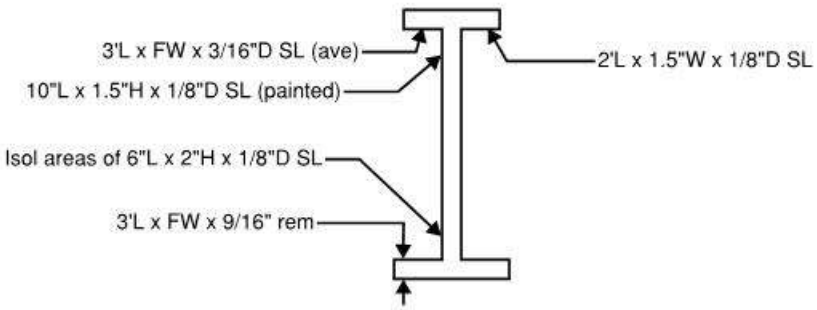

Span 6 - S14 at 7' East of FB 7-1
Section B-B (looking east)

- LR at all locations U.O.N.

REVISION 1	DATE: 10/3/19	CREW: BH, JG (Baker)	REVISION 3	DATE:	CREW:
REVISION 2	DATE: 9/9/2021	CREW: EG, IS, NH (PRIME)	REVISION 4	DATE:	CREW:

CREW: SW, JG	DATE: 12/8/2017	BRIDGE NO.: 03819

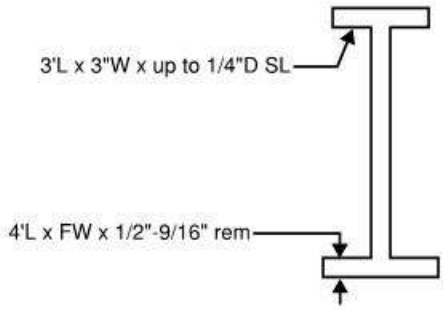

Span 6 - S14 at 6' West of FB 7-3
Section C-C (looking east)

- LR at all locations

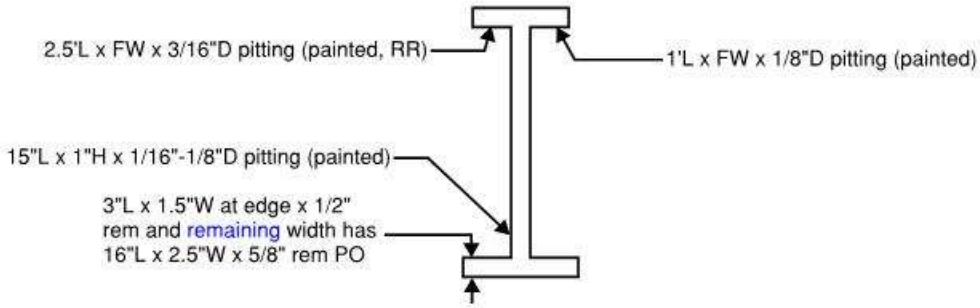

Span 6 - S14 at 10' West of FB 7-6
Section D-D (looking east)

REVISION 1	DATE: 10/3/19	CREW: BH, JG (Baker)	REVISION 3	DATE:	CREW:
REVISION 2	DATE: 10/18/2021	CREW: EG, SD (PRIME)	REVISION 4	DATE:	CREW:

CREW: BH, JG	DATE: 10/3/2019	BRIDGE NO.: 03819

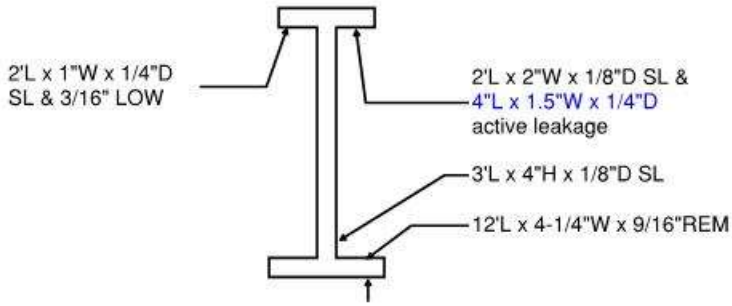

Span 6 - S1 at 8' west of FB 7-3
Section E-E (looking east)

- LR at all locations

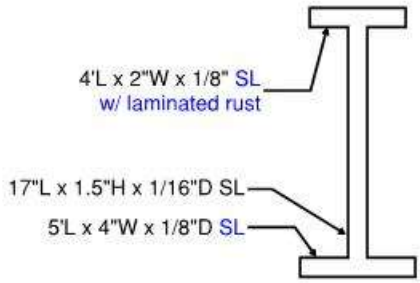

Span 6 - S14 at 8' east of FB 7-3
Section F-F (looking east)

- LR at all locations

REVISION 1	DATE: 10/3/19	CREW: BH, JG (Baker)	REVISION 3	DATE:	CREW:
REVISION 2	DATE: 10/19/2021	CREW: EG, SD (PRIME)	REVISION 4	DATE:	CREW:

Sketches
Inspection type: Fracture Critical,Routine
Inspection Date: 7/26/2021
Inspected by: PRIME AE

:Bridge No 03819

Town: NEW LONDON
Carried: INTERSTATE 95 NORTHBOUND
Crossed: THAMES RV,RR,LOCAL ROADS
Inventory Route: NHS

CREW: SW, JG	DATE: 12/8/2017	BRIDGE NO.: 03819

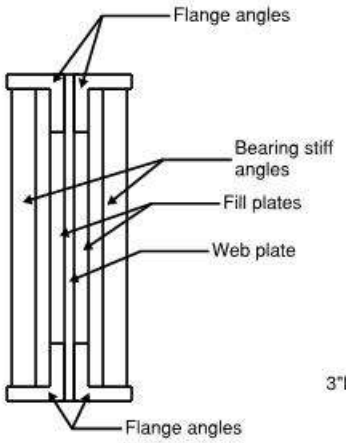

Typical Vertical Section

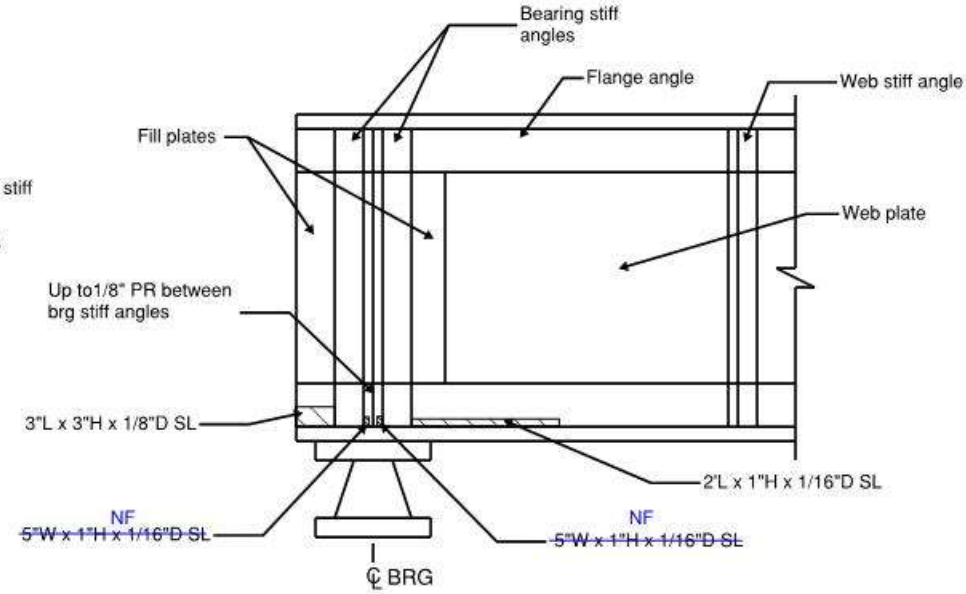

South Elevation

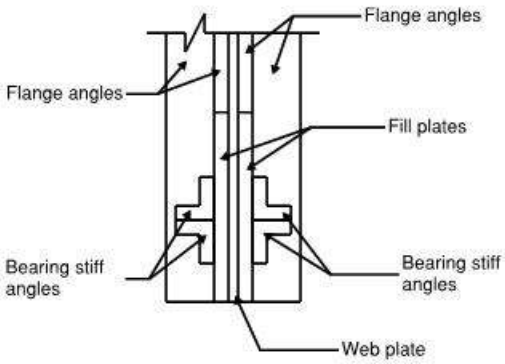

Typical Bearing Section

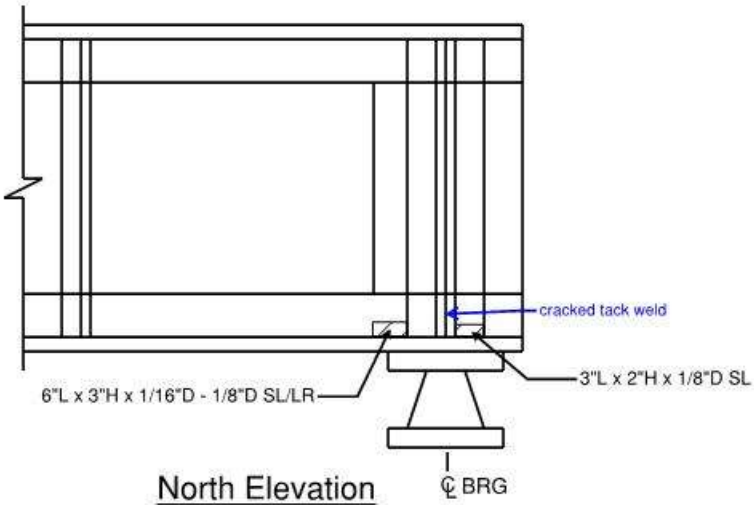

North Elevation

General Notes:
- Areas of peeling paint w/mod to heavy rust re-occurring

Span 6 - Girder 1 at Abutment 1 - Note S2

REVISION 1	DATE: 10/3/19	CREW: BH, JG (Baker)	REVISION 3	DATE:	CREW:
REVISION 2	DATE: 9/9/2021	CREW: EG, IS, NH (PRIME)	REVISION 4	DATE:	CREW:

CREW: SW, JG	DATE: 12/8/2017	BRIDGE NO.: 03819

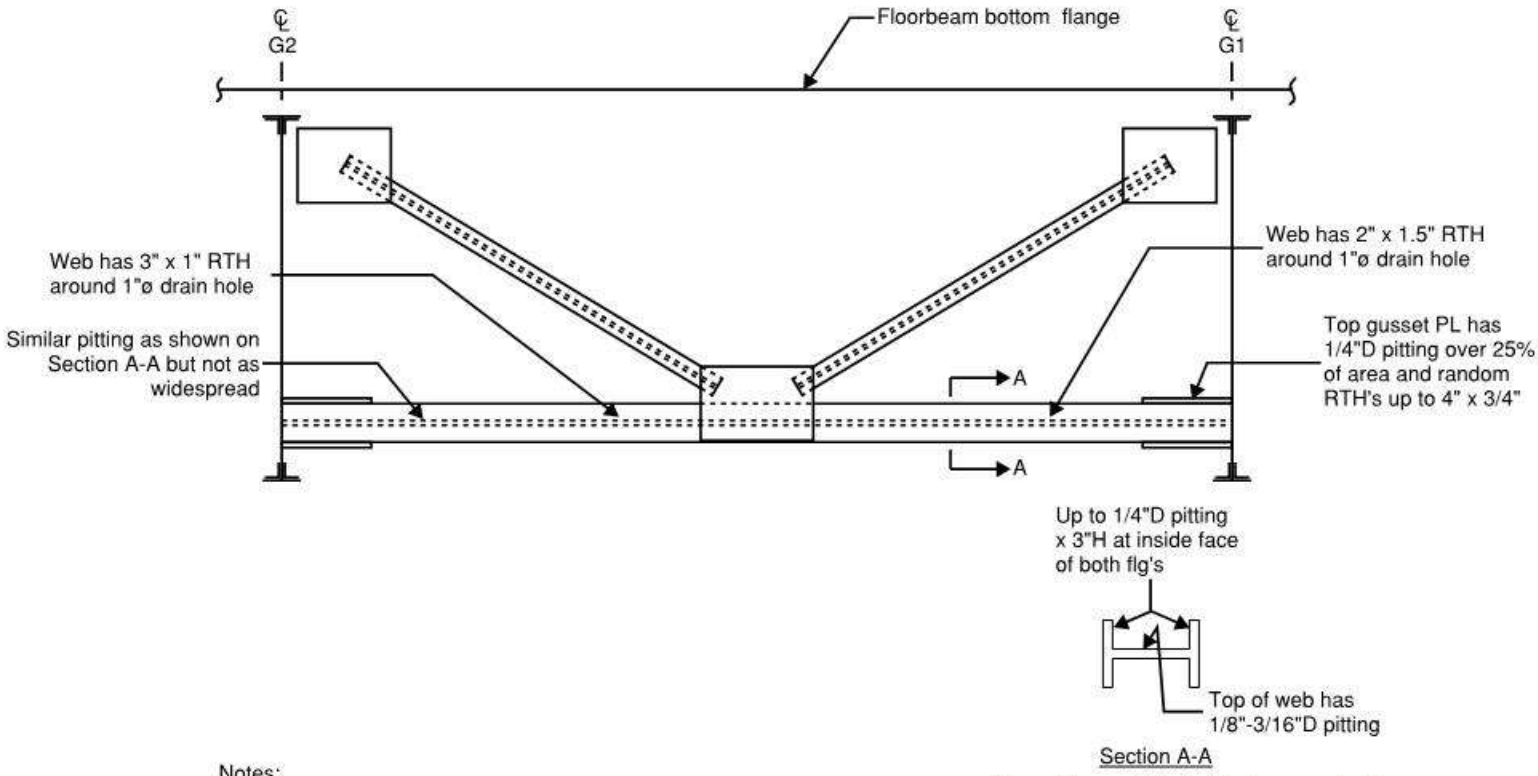

Notes:
- Spotty light to moderate debris on bottom and diagonal members
- All losses are painted over

End Diaphragm Between Main Girders
Span 6 at Abutment 1

REVISION 1	DATE: 10/3/19	CREW: BH, JG (Baker) - No change	REVISION 3	DATE:	CREW:
REVISION 2	DATE: 9/9/2021	CREW: EG, IS, NH (PRIME) - No change	REVISION 4	DATE:	CREW:

Sketches
Inspection type: Fracture Critical,Routine
Inspection Date: 7/26/2021
Inspected by: PRIME AE

:Bridge No 03819

Town: NEW LONDON
Carried: INTERSTATE 95 NORTHBOUND
Crossed: THAMES RV,RR,LOCAL ROADS
Inventory Route: NHS

CREW: SW, JG	DATE: 12/7/2017	BRIDGE NO.: 03819

Deterioration Legend:
1 - RTH in SIP form
2 - TF and web with section loss at 12' from FB 7-7 (See Sec. A-A),under weep hole with active leakage
3 - ~~Base of vert stiff has missing bot horiz weld up to 3/4"L w/ LR~~ NF
4 - G1 BF angle vert leg has 2'L x 3"H x 1/8"D SL & both legs of brg stiff angles have 3"H x FW x 1/8"D SL/PO & ±1-1/8" Impact rust between lateral brace & gusset
5 - NE & SE AB nut has 50% SL and drop bolts have up to 10% SL
6 - Top end PL has KE rem and 1.5" gap at end PL (abandoned plate)
7 - G2 BF has missing rivet & abandoned plate
8 - 2"ø flame cut hole (location given)
9 - Bot of FB BF w/ 10"L x 18"W x 1/8"D pitt, PO

LOG DIRECTION
WEST TO EAST

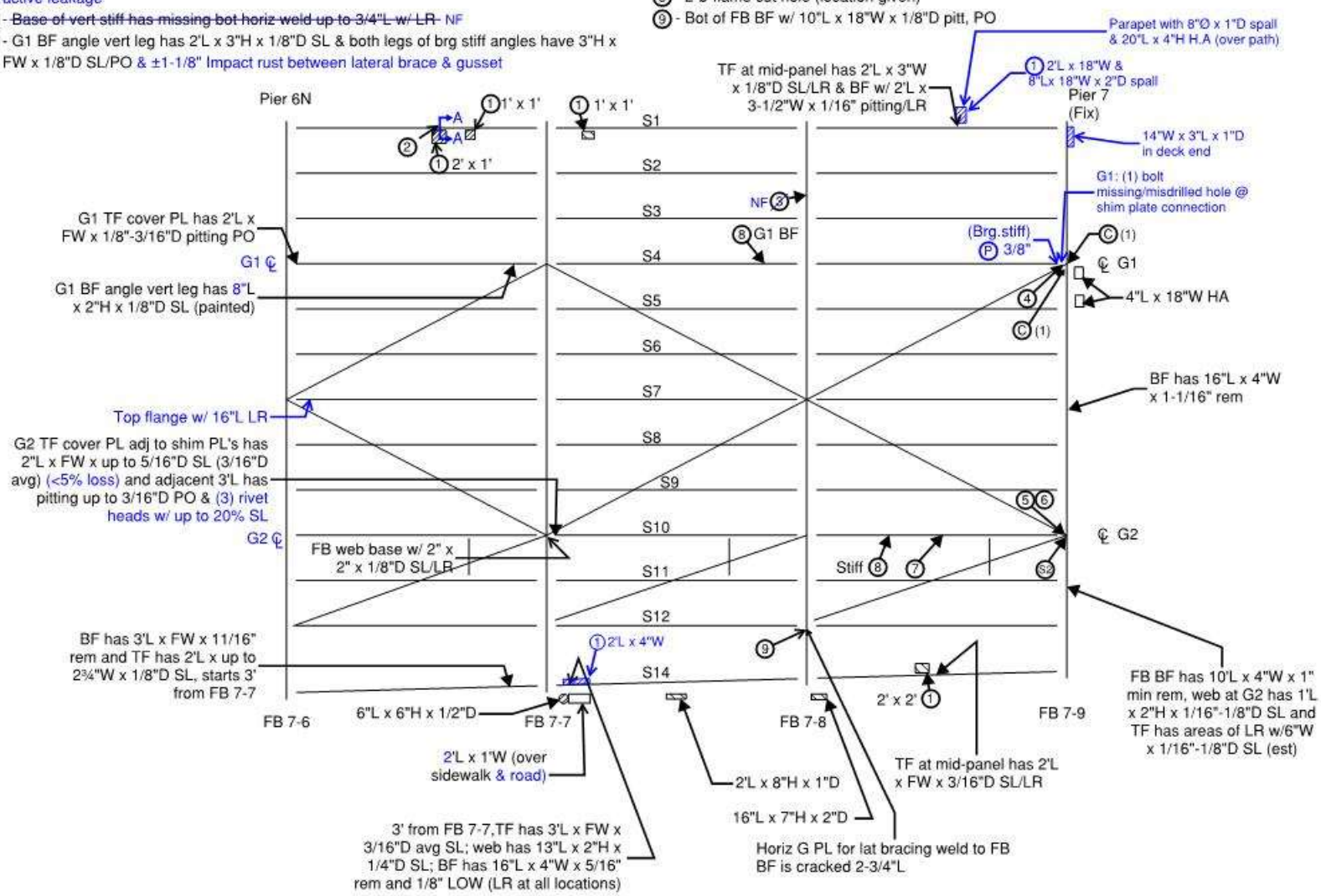

LEGEND:
- HOLLOW AREA
- SHALLOW REBAR
- SPALL AREA
- SPALL AREA WITH EXPOSED REBAR
- MAPCRACKS
- HAIRLINE CRACKS
- HONEYCOMB AREA
- SCALE AREA
- EFFLORESCENCE PRESENT
- © # OF CRACKED/BROKEN TACK WELDS BTWN B-B STIFF ANGLES
- Ⓟ UP TO __" THK PR BTWN B-B STIFF ANGLES

General Notes:

- See Underside of Deck and Steel Framing General Notes (Spans 6-21) sheet
- Fascia spalls are typically in bottom of parapet U.O.N.
- Deck end at pier 7 has random spalls up to 10 SF x up to full depth w/ steel PL's exposed
- Fixed brg's at pier 7 have light to mod rust & AB nuts have up to 20% SL (painted w/recurring rust)
- (S2) are special shear and buckling locations (see sketch, checked 100% hands-on)

Span 7 - Underside of Deck and Framing

REVISION 1	DATE: 9/26/19	CREW: BH, BF (Baker)	REVISION 3	DATE:	CREW:
REVISION 2	DATE: 9/9/2021	CREW: EG, IS, NH, AN, SD (PRIME)	REVISION 4	DATE:	CREW:

CREW: EG, IS, NH (PRIME)	DATE: 9/9/2021	BRIDGE NO.: 03819

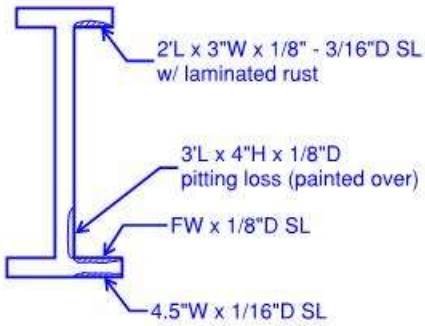

Span 7 - S1 at 12' West of FB 7-7
Section A-A (looking east)

REVISION 1	DATE:	CREW:	REVISION 3	DATE:	CREW:
REVISION 2	DATE:	CREW:	REVISION 4	DATE:	CREW:

Sketches
Inspection type: Fracture Critical,Routine
Inspection Date: 7/26/2021
Inspected by: PRIME AE

:Bridge No 03819

Town: NEW LONDON
Carried: INTERSTATE 95 NORTHBOUND
Crossed: THAMES RV,RR,LOCAL ROADS
Inventory Route: NHS

CREW: SW, JG	DATE: 12/7/2017	BRIDGE NO.: 03819

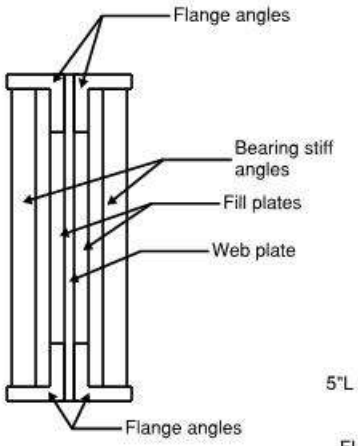

Typical Vertical Section

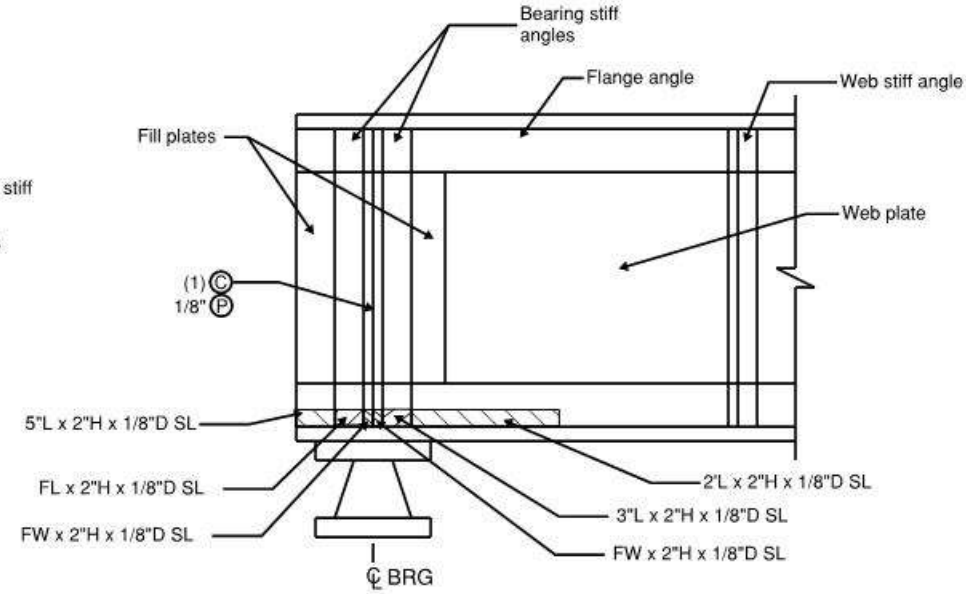

North Elevation

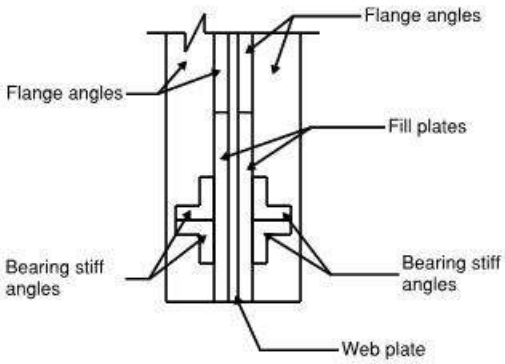

Typical Bearing Section

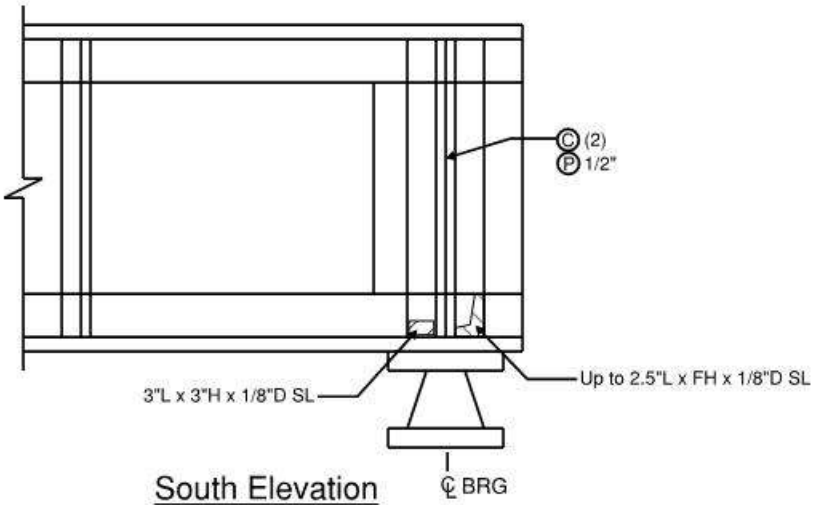

South Elevation

General Notes:
- Areas of peeling paint w/mod to heavy and up to laminated rust re-occurring

Legend:
C # OF CRACKED/FULLY BROKEN TACK WELDS BTWN B-B STIFF ANGLES
P UP TO __" THK PR BTWN B-B STIFF ANGLES

Span 7 - Girder 2 at Pier 7 - Note S2

REVISION 1	DATE: 10/3/19	CREW: BH, JG (Baker)	REVISION 3	DATE:	CREW:
REVISION 2	DATE: 9/9/2021	CREW: EG, IS, NH (PRIME)	REVISION 4	DATE:	CREW:

CREW: SW, JG	DATE: 12/7/2017	BRIDGE NO.: 03819

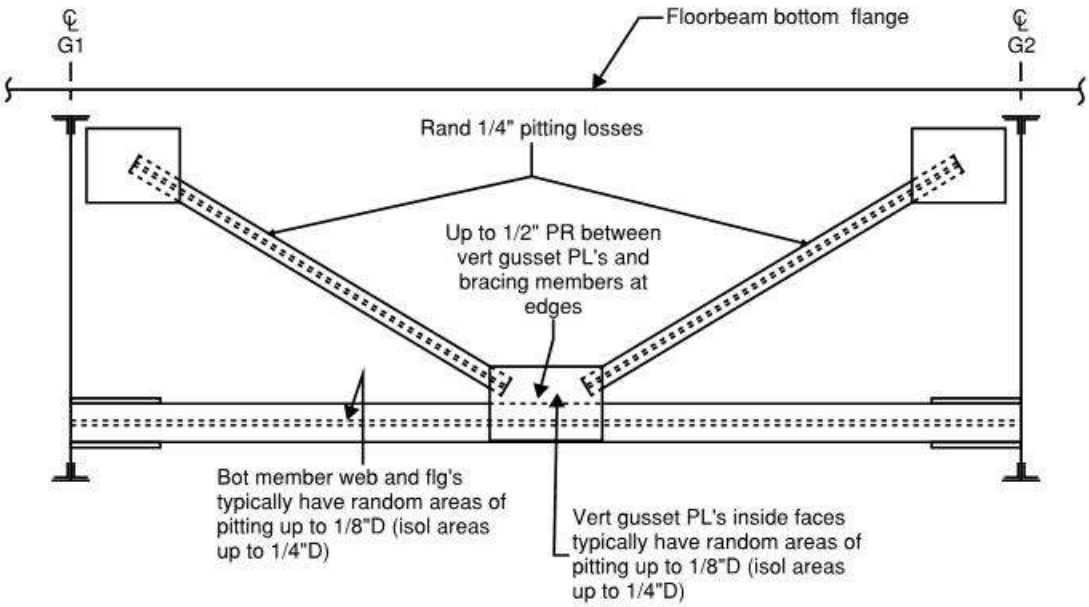

Notes:
- Similar condition at span 8 end diaphragm at pier 7
- All losses are painted over

End Diaphragm Between Main Girders
Span 7 at Pier 7

REVISION 1	DATE: 10/3/19	CREW: BH, JG (Baker)	REVISION 3	DATE:	CREW:
REVISION 2	DATE: 9/9/2021	CREW: EG, IS, NH (PRIME) - No Change	REVISION 4	DATE:	CREW:

Sketches
Inspection type: Fracture Critical,Routine
Inspection Date: 7/26/2021
Inspected by: PRIME AE

:Bridge No 03819

Town: NEW LONDON
Carried: INTERSTATE 95 NORTHBOUND
Crossed: THAMES RV,RR,LOCAL ROADS
Inventory Route: NHS

CREW: SW, JG	DATE: 12/7/2017	BRIDGE NO.: 03819

Deterioration Legend:
1 - RTH in SIP form
2 - Bot of stiff weld is undercut
3 - BF W side has 14"L x up to 9"W x up to 3/16"D pitting/LR & adj stiff w/ FW x 1"H x 1/8" REM & E side has 9"W x 1' L x up to 1/8"D SL (painted)
4 - G1 TF cover PL has 1"L x FW x 3/16"D SL along shim PL's (6.2% loss)
5 - Bot gusset PL has 1/4"ø RTH PO
6 - Girder BF has (7) R/H's w/up to 25% SL
7 - G1 BF angle vert leg has 13"L x 1.5"H x 1/8"D pitting
8 - Top and bot FL w/ 2'L x 3-1/2"W x 1/8"D SL/LR
9 - Gird VT stiff bases w/ 1/8" pitt PO & W. web w/ rand 1/16" pitt PO
10 - Trough with 1/2"Ø hole
11 - Active leakage from weep hole
12 - 7/16" impact rust between G1 cover plates

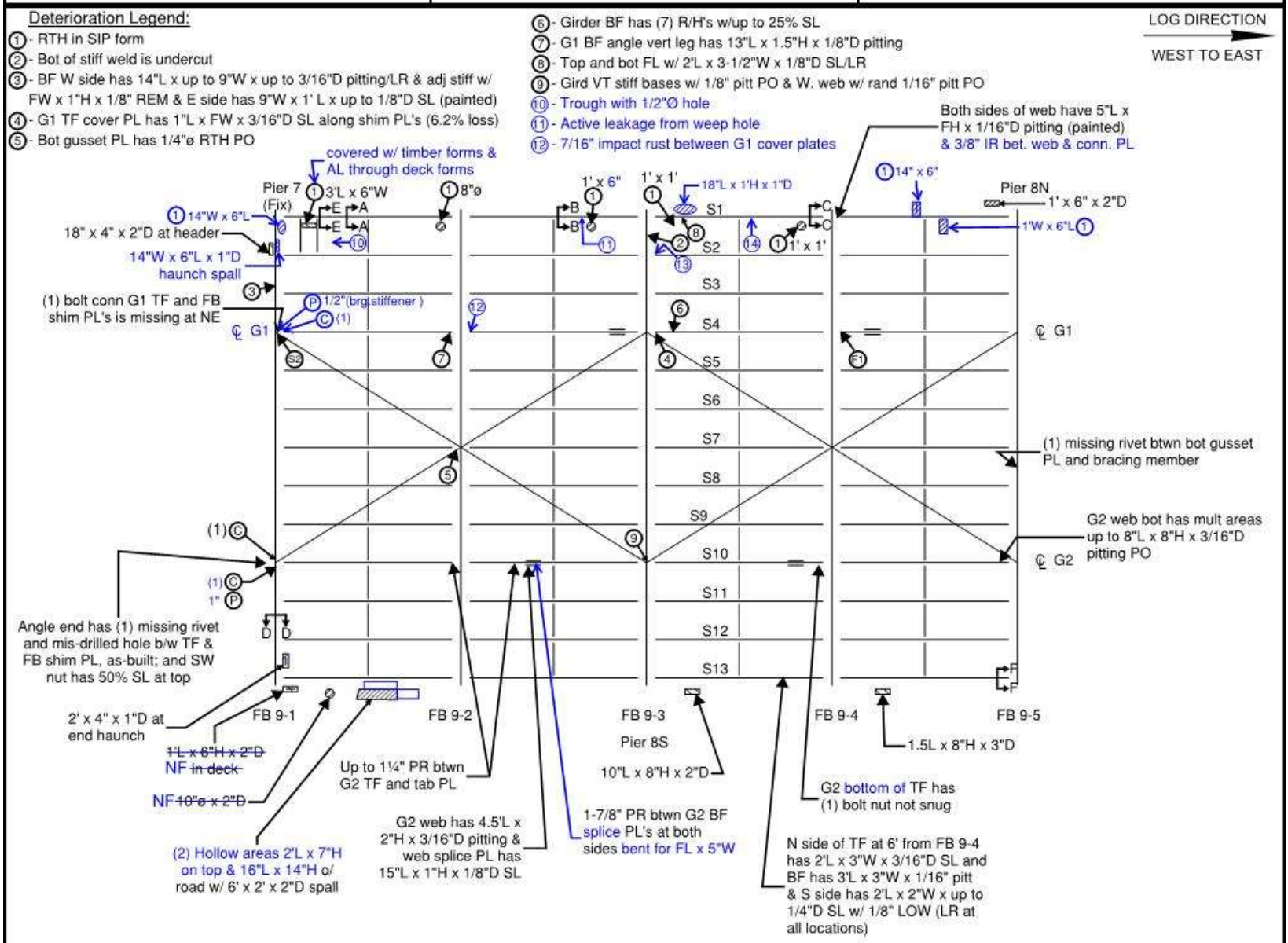

LEGEND:
- HOLLOW AREA
- SHALLOW REBAR
- SPALL AREA
- SPALL AREA WITH EXPOSED REBAR
- MAPCRACKS
- HAIRLINE CRACKS
- HONEYCOMB AREA
- SCALE AREA
- EFFLORESCENCE PRESENT
- RIVETED FIELD SPLICE
- C # OF CRACKED/BROKEN TACK WELDS BTWN B-B STIFF ANGLES
- P UP TO __" THK PR BTWN B-B STIFF ANGLES

General Notes:
- See Underside of Deck and Steel Framing General Notes (Spans 6-21) sheet
- Fascia spalls are typically in bottom of parapet U.O.N.
- Girder ends at pier 7 have up to 3/8" PR between girder top flange cover plate ends
- Deck joint headers have random HLC's and 4SF x 2"D spalling
- F1 are special flexure locations (checked 100% hands-on w/no SL found)
- S2 are special shear and buckling locations (see sketch, checked 100% hands-on)
- Fix brgs at pier 7 w/ up to hvy rust
- 13 - Stringer S2 stiffener base with FW x 2"H x 1/4"D SL (PO)
- 14 - ±15'L LR on BF w/ ±1/16"D SL.

Span 8 - Underside of Deck and Framing

REVISION 1	DATE: 9/26/19	CREW: BH, BF (Baker)	REVISION 3	DATE:	CREW:
REVISION 2	DATE: 10/12/2021	CREW: BM, EG, IS, AN (PRIME)	REVISION 4	DATE:	CREW:

CREW: SW, JG	DATE: 12/7/2017	BRIDGE NO.: 03819

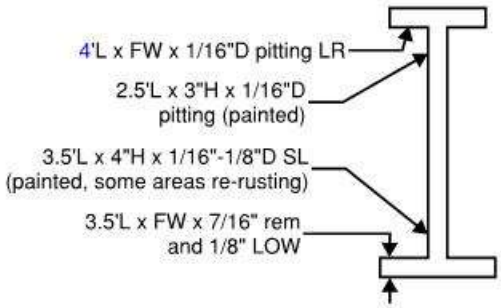

Span 8 - S1 at 12' East of FB 9-1
Section A-A (looking east)

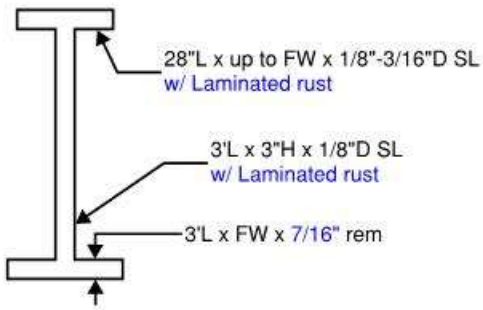

Span 8 - S1 at Mid-Panel East of FB 9-2
Section B-B (looking east)

- LR at all locations (cleaned at Bottom flange)

REVISION 1	DATE: 9/26/19	CREW: BH, BF (Baker)	REVISION 3	DATE:	CREW:
REVISION 2	DATE: 10/7/2021	CREW: EG, AN (PRIME)	REVISION 4	DATE:	CREW:

CREW: SW, JG	DATE: 12/7/2017	BRIDGE NO.: 03819

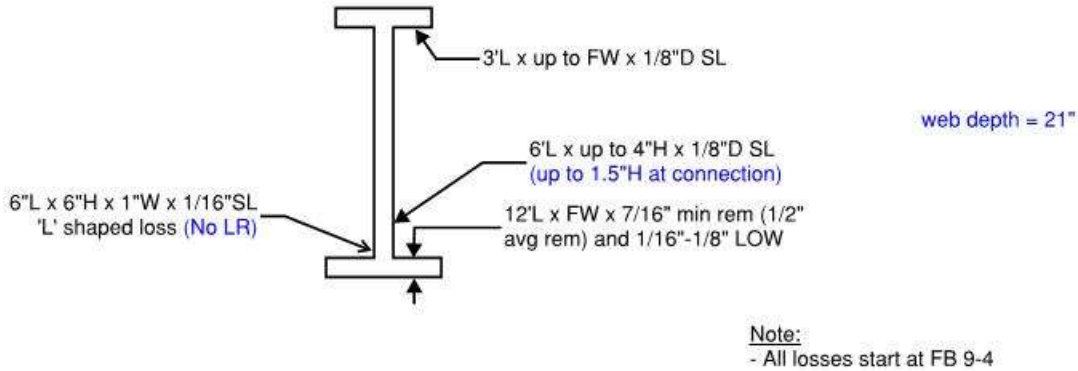

Note:
- All losses start at FB 9-4

Span 8 - S1 at 16" West of FB 9-4
Section C-C (looking east)

- LR at all locations

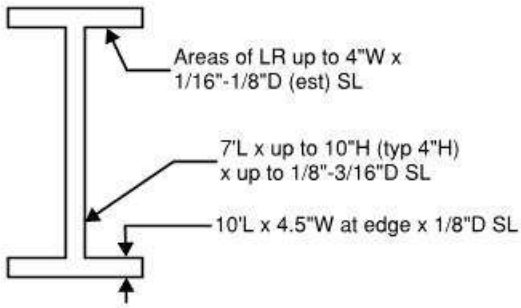

Span 8 - FB 9-1 Between S11 & S12
Section D-D (looking south)

- LR at all locations

REVISION 1	DATE: 10/3/19	CREW: BH, JG (Baker)	REVISION 3	DATE:	CREW:
REVISION 2	DATE: 10/12/2021	CREW: BM, EG, AN, IS (PRIME)	REVISION 4	DATE:	CREW:

CREW: SW, JG	DATE: 12/7/2017	BRIDGE NO.: 03819

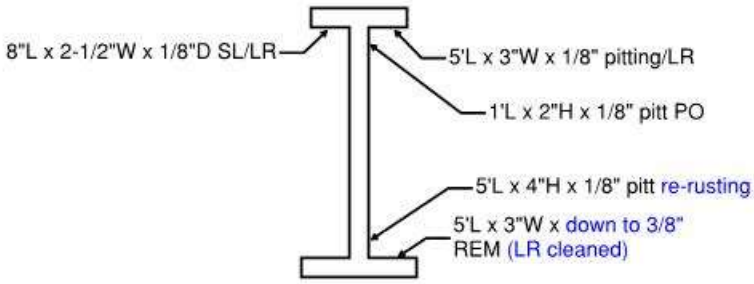

Span 8 - S1 at 5.5' East of FB 9-1
Section E-E (looking east)

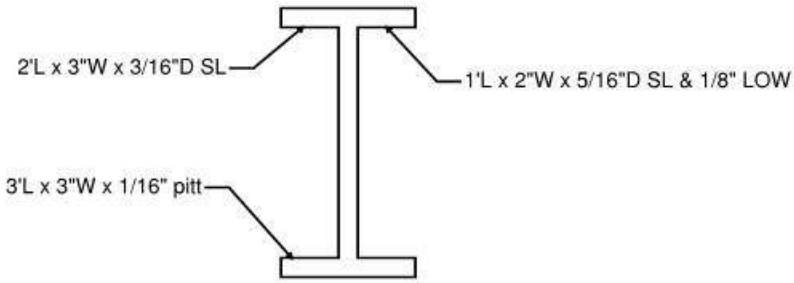

Span 8 - S13 at 4' West of FB 9-5
Section F-F (looking east)

- LR at all locations

REVISION 1	DATE: 10/3/19	CREW: BH, JG (Baker)	REVISION 3	DATE:	CREW:
REVISION 2	DATE: 10/12/2021	CREW: BM, IS (PRIME)	REVISION 4	DATE:	CREW:

Sketches
Inspection type: Fracture Critical,Routine
Inspection Date: 7/26/2021
Inspected by: PRIME AE

:Bridge No 03819

Town: NEW LONDON
Carried: INTERSTATE 95 NORTHBOUND
Crossed: THAMES RV,RR,LOCAL ROADS
Inventory Route: NHS

CREW: SW, JG	DATE: 12/7/2017	BRIDGE NO.: 03819

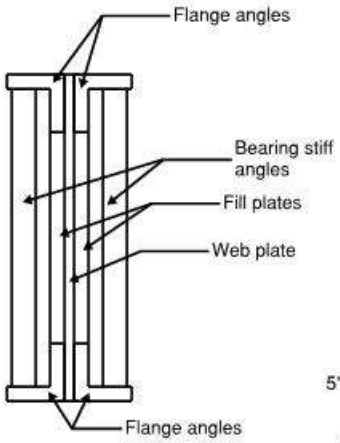

Typical Vertical Section

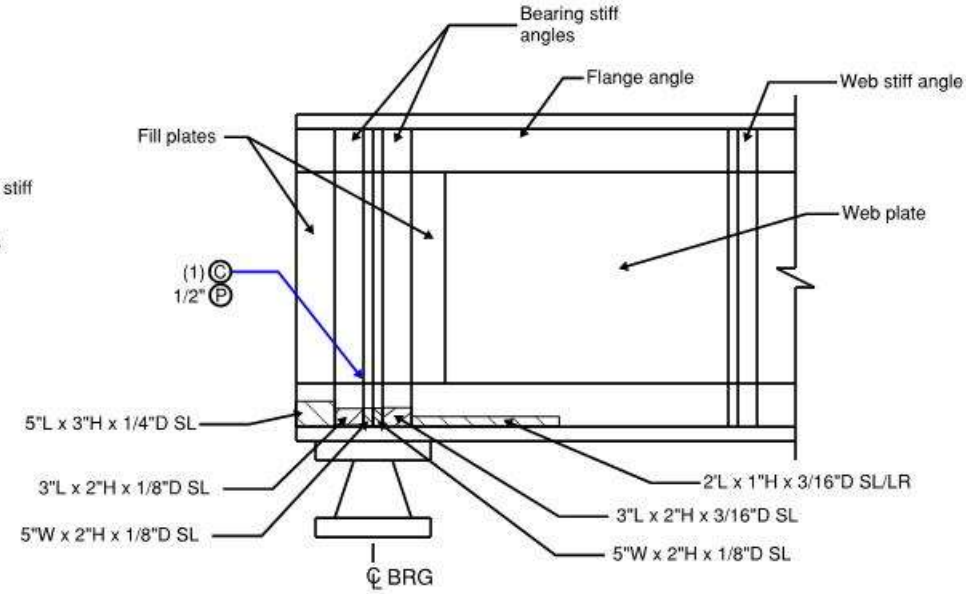

South Elevation

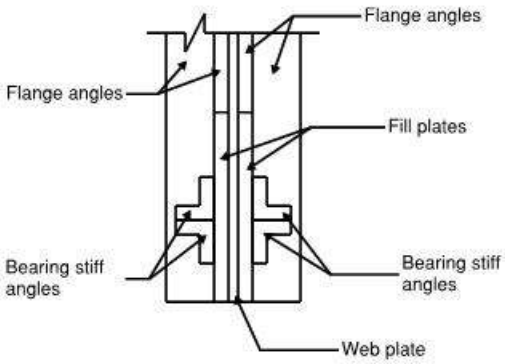

Typical Bearing Section

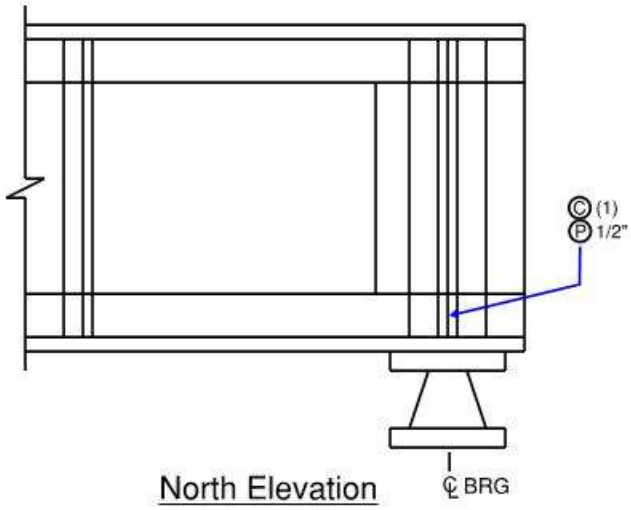

North Elevation

General Notes:
- Areas of peeling paint w/mod to heavy rust re-occurring, U.O.N.

Legend:
C # OF CRACKED/BROKEN TACK WELDS BTWN B-B STIFF ANGLES
P UP TO __" THK PR BTWN B-B STIFF ANGLES

Span 8 - Girder 1 at Pier 7 - Note S2

REVISION 1	DATE: 10/3/19	CREW: BH, JG (Baker)	REVISION 3	DATE:	CREW:
REVISION 2	DATE: 10/7/2021	CREW: EG, AN (PRIME)	REVISION 4	DATE:	CREW:

Sketches
Inspection type: Fracture Critical,Routine
Inspection Date: 7/26/2021
Inspected by: PRIME AE

:Bridge No 03819

Town: NEW LONDON
Carried: INTERSTATE 95 NORTHBOUND
Crossed: THAMES RV,RR,LOCAL ROADS
Inventory Route: NHS

CREW: SW, JG	DATE: 12/6/2017	BRIDGE NO.: 03819

Deterioration Legend:
1 - G1 BF has (4) rivets w/25% SL
2 - G2 BF has (1) missing rivet
3 - S4 south bottom flange w/ 6'L x FW area w/ random pitting up to 1/8"D
4 - 2'W x 6"L x 1/2"D spall around plugged weep w/ active leakage through spall/TF
5 - ~~Top FL cov PL w/ 10"W x 1"L x 1/8"D SL/LR (<5%)~~ NF

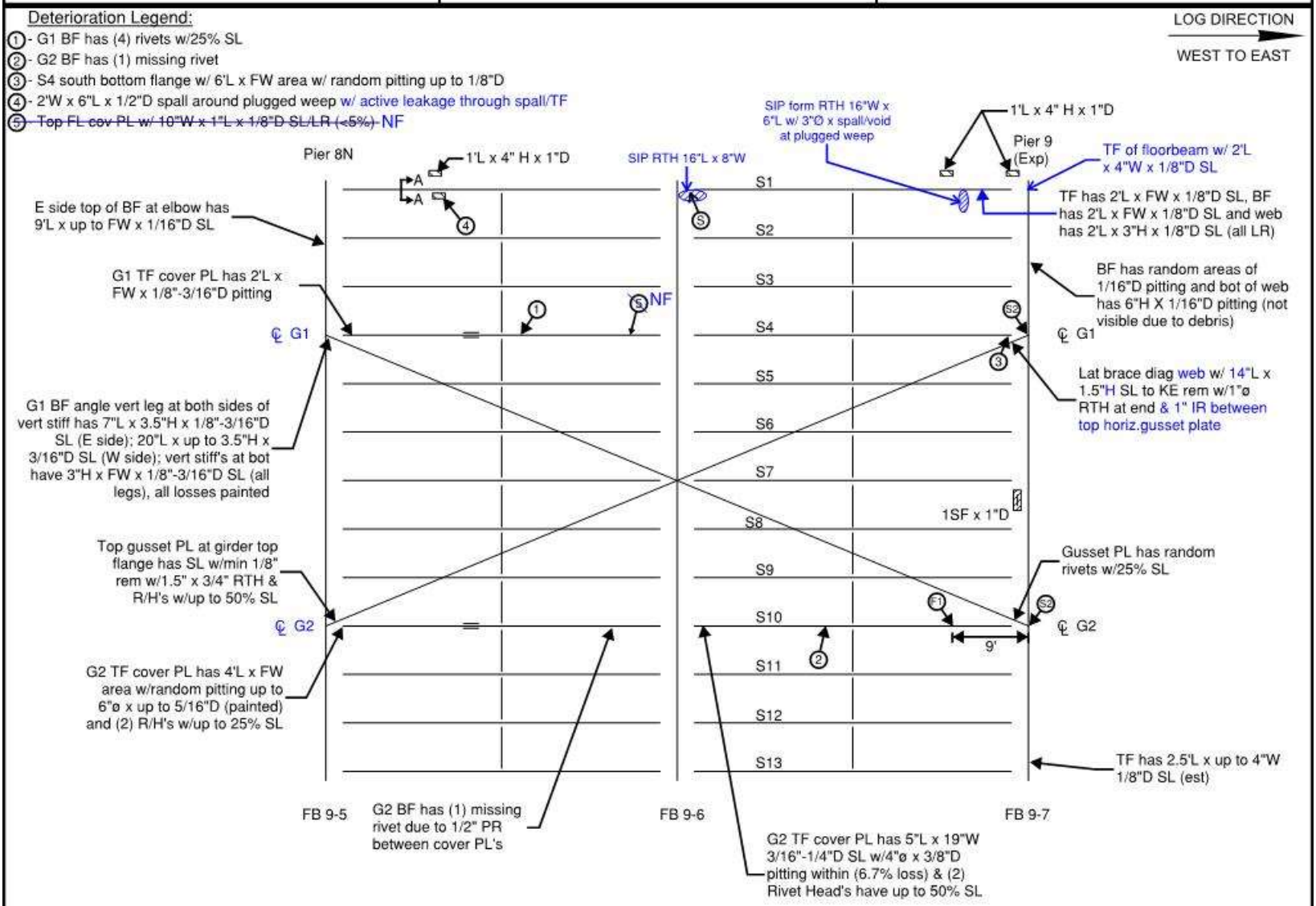

LEGEND:
- HOLLOW AREA
- SHALLOW REBAR
- SPALL AREA
- SPALL AREA WITH EXPOSED REBAR
- MAPCRACKS
- HAIRLINE CRACKS
- HONEYCOMB AREA
- SCALE AREA
- EFFLORESCENCE PRESENT
- RIVETED FIELD SPLICE
- C # OF CRACKED/BROKEN TACK WELDS BTWN B-B STIFF ANGLES
- P UP TO __" THK PR BTWN B-B STIFF ANGLES
- S SEE SKETCH

General Notes:
- See Underside of Deck and Steel Framing General Notes (Spans 6-21) sheet
- Fascia spalls are typically in bottom of parapet U.O.N.
- FB9-7 BF has conc debris up to 4"H from previous deck joint repair
- Mod to hvy vine growth at G1 at pier 9 up to the superstructure
- Up to 10% SL to random R/H's
- F1 are special flexure locations (checked 100% hands-on w/no SL found)
- S2 are special shear and buckling locations (see sketch, checked 100% hands-on)

Span 9 - Underside of Deck and Framing

REVISION 1	DATE: 9/26/19	CREW: BH, BF (Baker)	REVISION 3	DATE:	CREW:
REVISION 2	DATE: 10/7/2021	CREW: BM, EG, AN, IS (PRIME)	REVISION 4	DATE:	CREW:

Sketches
Inspection type: Fracture Critical,Routine
Inspection Date: 7/26/2021
Inspected by: PRIME AE

:Bridge No 03819

Town: NEW LONDON
Carried: INTERSTATE 95 NORTHBOUND
Crossed: THAMES RV,RR,LOCAL ROADS
Inventory Route: NHS

CREW: SW, JG	DATE: 11/28/2017	BRIDGE NO.: 03819

Web depth = 22.5"

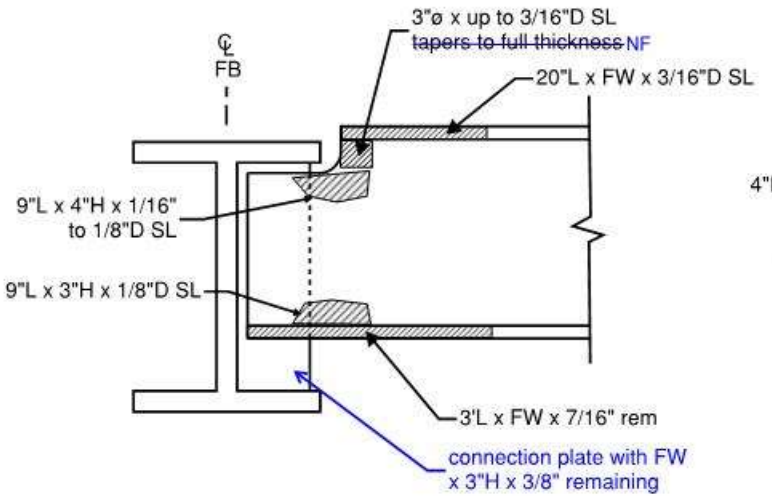

Span 9 - S1 at East Side of FB 9-6
South Elevation

- LR at all locations

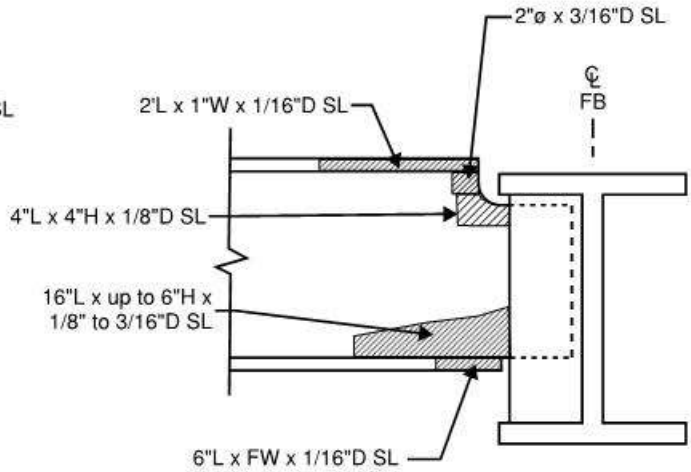

Span 9 - S1 at East Side of FB 9-6
North Elevation

- LR at all locations

REVISION 1	DATE: 9/26/19	CREW: BH, BF (Baker)	REVISION 3	DATE:	CREW:
REVISION 2	DATE: 10/7/2021	CREW: EG, AN (PRIME)	REVISION 4	DATE:	CREW:

Sketches
Inspection type: Fracture Critical,Routine
Inspection Date: 7/26/2021
Inspected by: PRIME AE

:Bridge No 03819

Town: NEW LONDON
Carried: INTERSTATE 95 NORTHBOUND
Crossed: THAMES RV,RR,LOCAL ROADS
Inventory Route: NHS

CREW: SW, JG	DATE: 12/6/2017	BRIDGE NO.: 03819

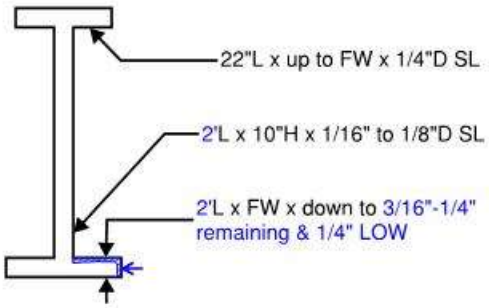

Span 9 - S1 at 9.5' East of FB 9-5
Section A-A (looking east)

- LR at all locations

REVISION 1	DATE: 9/26/19	CREW: BH, BF (Baker)	REVISION 3	DATE:	CREW:
REVISION 2	DATE: 10/7/2021	CREW: BM, EG, AN (PRIME)	REVISION 4	DATE:	CREW:

Sketches
Inspection type: Fracture Critical,Routine
Inspection Date: 7/26/2021
Inspected by: PRIME AE

:Bridge No 03819

Town: NEW LONDON
Carried: INTERSTATE 95 NORTHBOUND
Crossed: THAMES RV,RR,LOCAL ROADS
Inventory Route: NHS

CREW: SW, JG	DATE: 12/6/2017	BRIDGE NO.: 03819

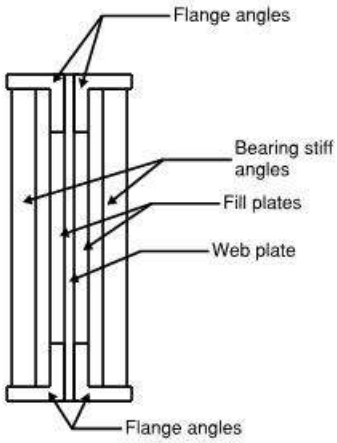

Typical Vertical Section

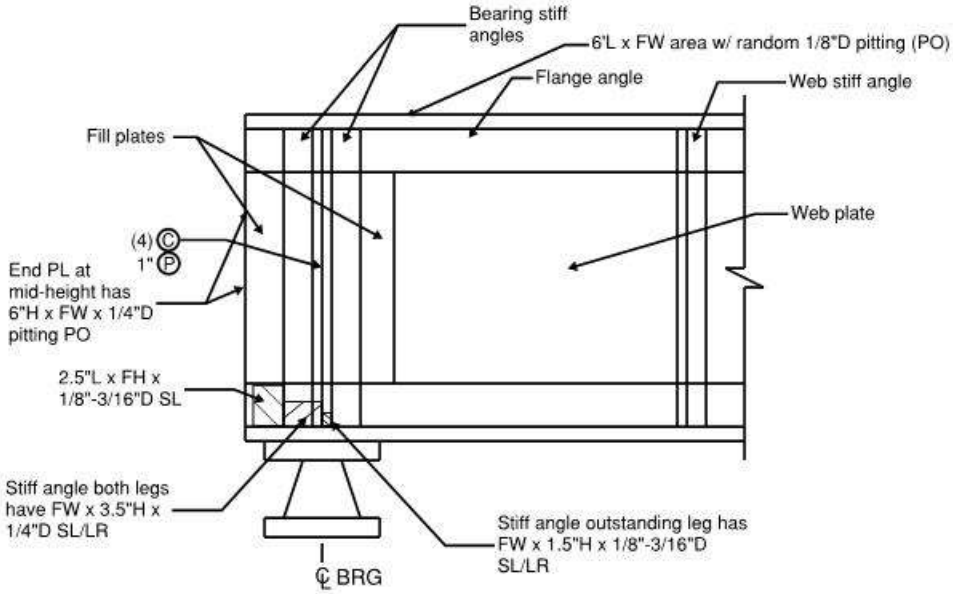

North Elevation

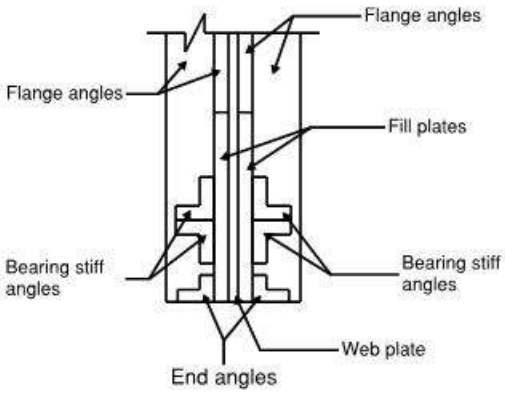

Typical Bearing Section

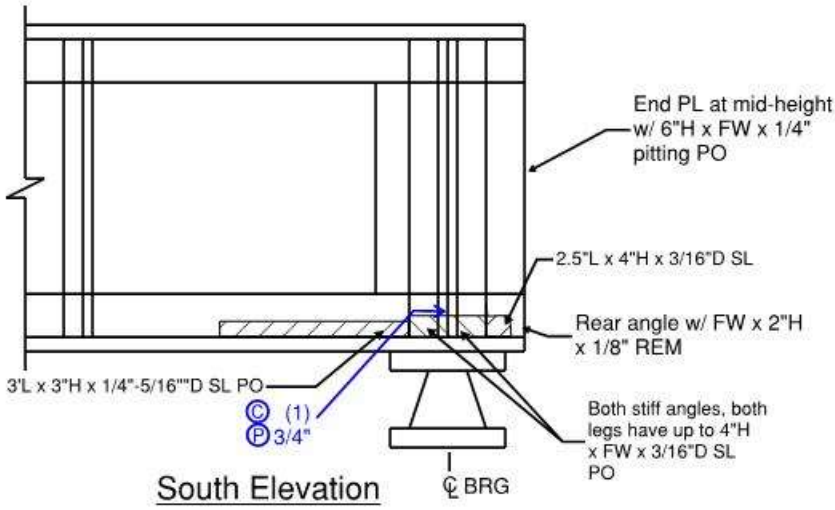

South Elevation

General Notes:
- Areas of peeling paint w/hvy to lam rust re-occurring

Legend:
Ⓒ # OF CRACKED/BROKEN TACK WELDS BTWN B-B STIFF ANGLES
Ⓟ UP TO __" THK PR BTWN B-B STIFF ANGLES

Span 9 - Girder 1 at Pier 9 - Note S2

REVISION 1	DATE: 10/3/19	CREW: BH, JG (Baker)	REVISION 3	DATE:	CREW:
REVISION 2	DATE: 10/7/2021	CREW: EG, AN (PRIME)	REVISION 4	DATE:	CREW:

Sketches
Inspection type: Fracture Critical,Routine
Inspection Date: 7/26/2021
Inspected by: PRIME AE

:Bridge No 03819

Town: NEW LONDON
Carried: INTERSTATE 95 NORTHBOUND
Crossed: THAMES RV,RR,LOCAL ROADS
Inventory Route: NHS

CREW: JG, SW	DATE: 12/6/2017	BRIDGE NO.: 03819

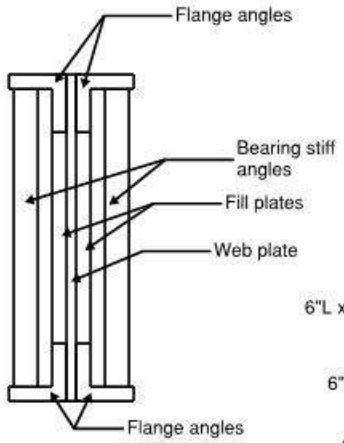

Typical Vertical Section

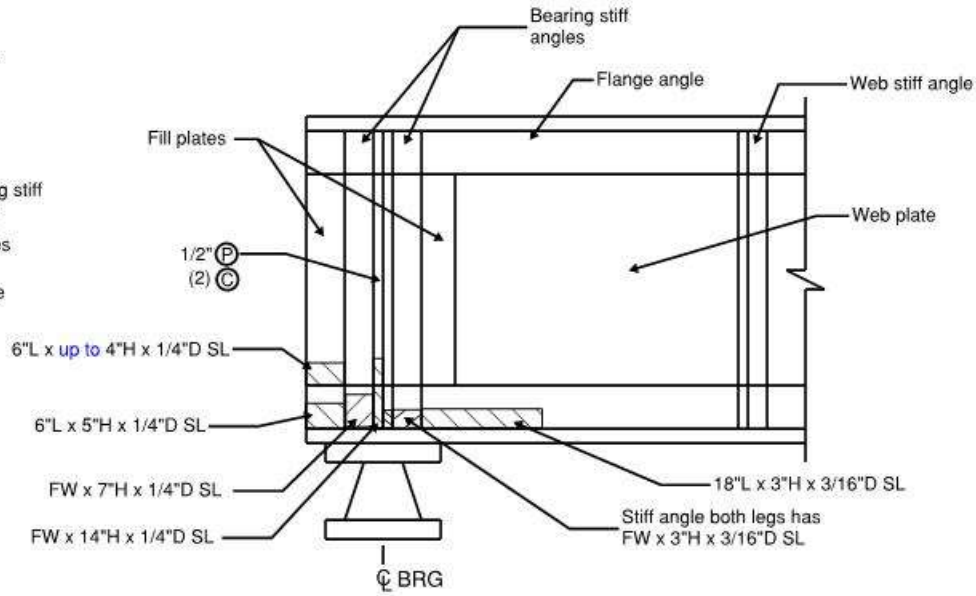

North Elevation

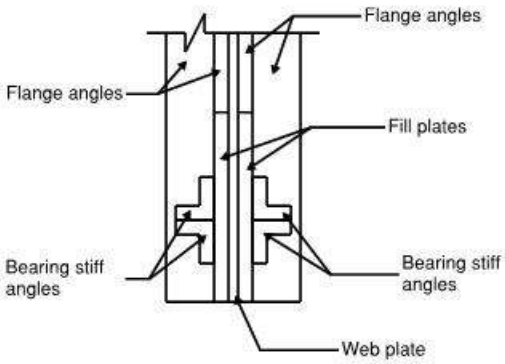

Typical Bearing Section

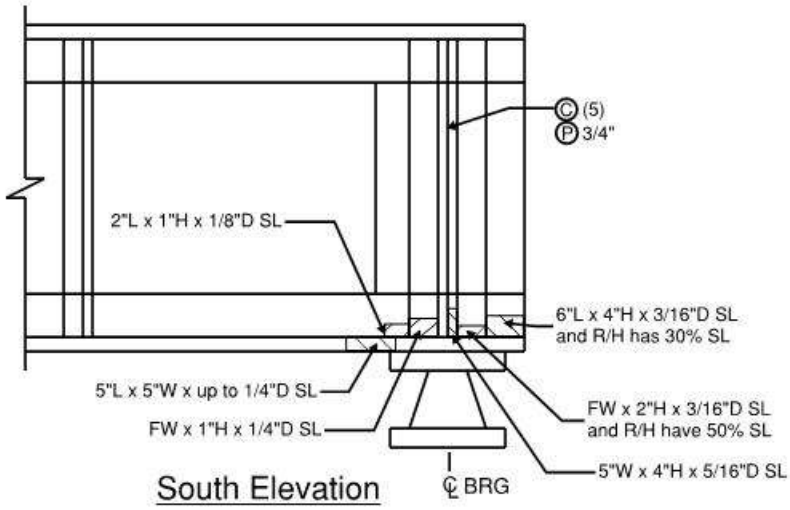

South Elevation

General Notes:
- All areas are painted over

Legend:
(C) # OF CRACKED/BROKEN TACK WELDS BTWN B-B STIFF ANGLES
(P) UP TO __" THK PR BTWN B-B STIFF ANGLES

Span 9 - Girder 2 at Pier 9 - Note (S2)

REVISION 1	DATE: 9/27/19	CREW: BH, BF (Baker)	REVISION 3	DATE:	CREW:
REVISION 2	DATE: 10/12/2021	CREW: BM, IS (PRIME)	REVISION 4	DATE:	CREW:

CREW: SW, JG	DATE: 12/6/2017	BRIDGE NO.: 03819

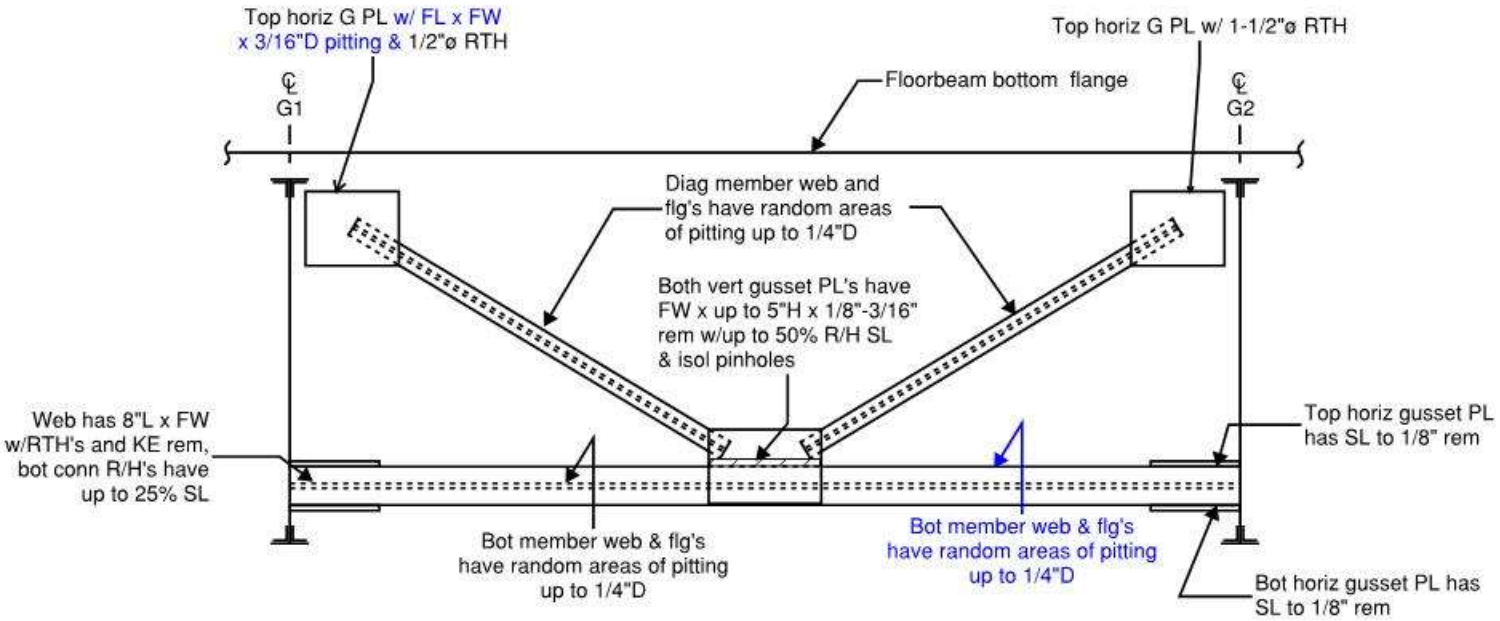

Notes:
- Conc and asphalt debris on top of steel members from previous deck joint repairs
- All losses are painted over

End Diaphragm Between Main Girders
Span 9 at Pier 9

REVISION 1	DATE: 10/3/19	CREW: BH, JG (Baker)	REVISION 3	DATE:	CREW:
REVISION 2	DATE: 10/7/2021	CREW: BM, EG, AN, IS (PRIME)	REVISION 4	DATE:	CREW:

Sketches
Inspection type: Fracture Critical,Routine
Inspection Date: 7/26/2021
Inspected by: PRIME AE

:Bridge No 03819

Town: NEW LONDON
Carried: INTERSTATE 95 NORTHBOUND
Crossed: THAMES RV,RR,LOCAL ROADS
Inventory Route: NHS

CREW: SW, JG	DATE: 11/28/2017	BRIDGE NO.: 03819

Deterioration Legend:
1 - Up to __" thick pack rust between girder top or bottom flange cover plates
2 - SIP forms have 1'ø RTH's
3 - TF starting at 8' from FB 10-3 has 3'L x 1¼"W x up to 1/8"D SL, SIP w/ 16"W x 6"L RTH & 16"W x 6"L x 1"D spall
4 - G2 TF cover PL at both sides of tab PL has up to 4"L x FW x 1/8"-3/16"D SL/LR (8.3% loss)
5 - G2 TF cover PL has 4'L x 20"W x 1/4"D pitting PO & 8 R/H's w/ 25% SL

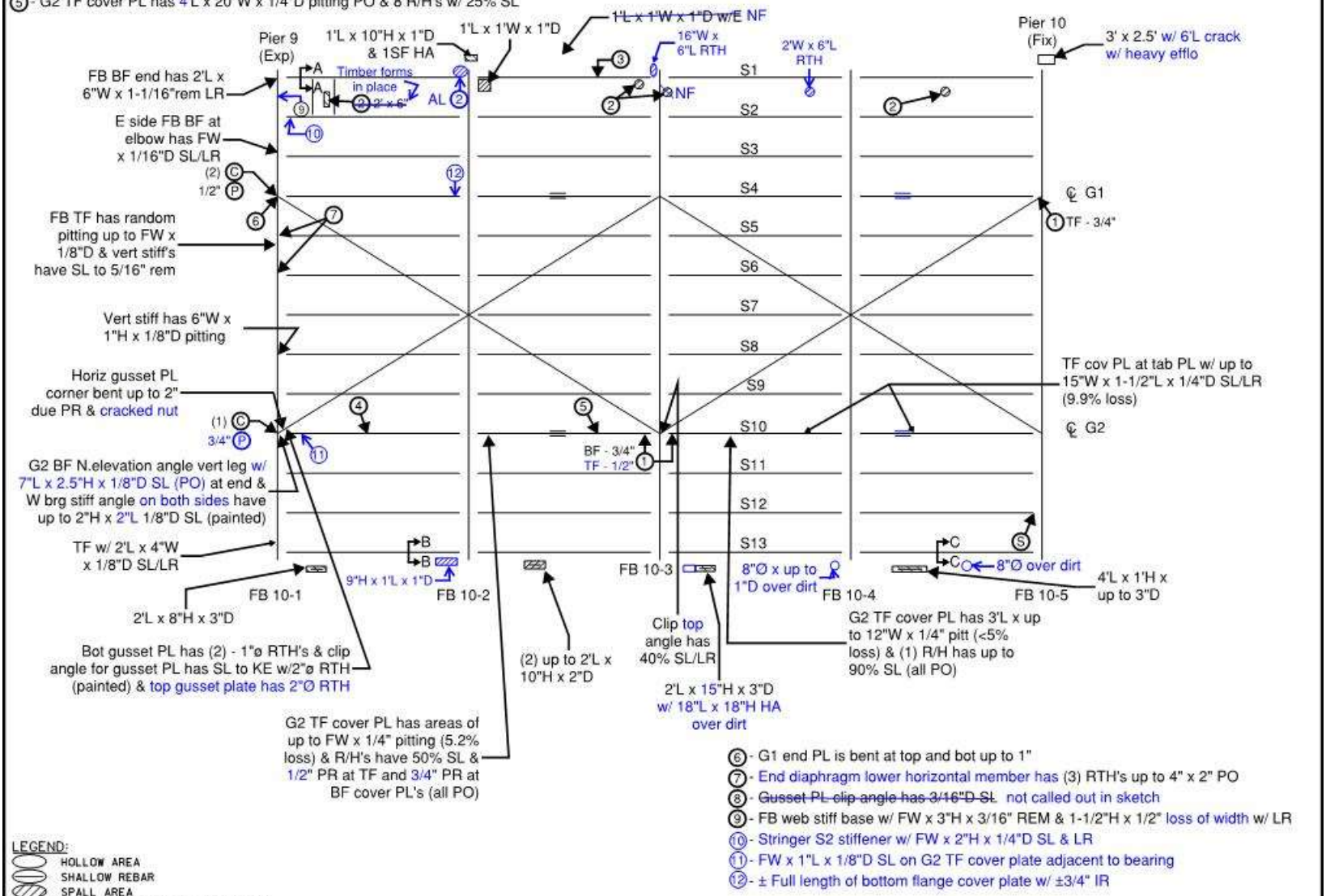

6 - G1 end PL is bent at top and bot up to 1"
7 - End diaphragm lower horizontal member has (3) RTH's up to 4" x 2" PO
8 - ~~Gusset PL clip angle has 3/16"D SL~~ not called out in sketch
9 - FB web stiff base w/ FW x 3"H x 3/16" REM & 1-1/2"H x 1/2" loss of width w/ LR
10 - Stringer S2 stiffener w/ FW x 2"H x 1/4"D SL & LR
11 - FW x 1"L x 1/8"D SL on G2 TF cover plate adjacent to bearing
12 - ± Full length of bottom flange cover plate w/ ±3/4" IR

LEGEND:
- HOLLOW AREA
- SHALLOW REBAR
- SPALL AREA
- SPALL AREA WITH EXPOSED REBAR
- MAPCRACKS
- HAIRLINE CRACKS
- HONEYCOMB AREA
- SCALE AREA
- EFFLORESCENCE PRESENT
- RIVETED FIELD SPLICE
- C # OF CRACKED/BROKEN TACK WELDS BTWN B-B STIFF ANGLES
- P UP TO __" THK PR BTWN B-B STIFF ANGLES
- S SEE SKETCH
- AL - ACTIVE LEAKAGE

General Notes:
- See Underside of Deck and Steel Framing General Notes (Spans 6-21) sheet
- Fascia spalls/hollow areas are typically in bottom of parapet U.O.N.
- FB 10-1 west side of BF has conc debris along FL at random locations

Span 10 - Underside of Deck and Framing

REVISION 1	DATE: 9/27/19	CREW: BH, BF (Baker)	REVISION 3	DATE:	CREW:
REVISION 2	DATE: 10/7/2021	CREW: BM, EG, IS, NH (PRIME)	REVISION 4	DATE:	CREW:

Sketches
Inspection type: Fracture Critical,Routine
Inspection Date: 7/26/2021
Inspected by: PRIME AE

:Bridge No 03819

Town: NEW LONDON
Carried: INTERSTATE 95 NORTHBOUND
Crossed: THAMES RV,RR,LOCAL ROADS
Inventory Route: NHS

CREW: SW, JG	DATE: 11/28/2017	BRIDGE NO.: 03819

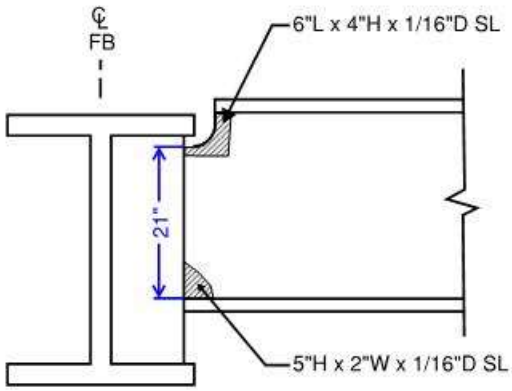

Span 10 - S12 at West Side of FB 10-5
North Elevation

- LR at all locations

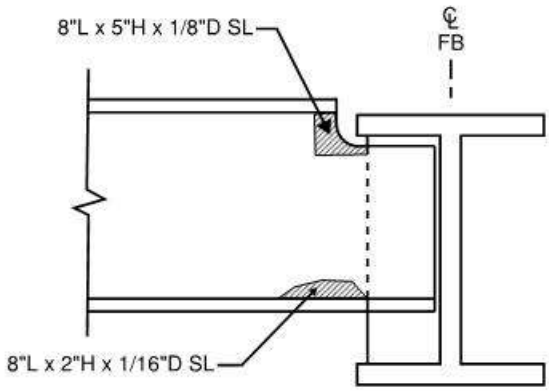

Span 10 - S12 at West Side of FB 10-5
South Elevation

- LR at all locations

REVISION 1	DATE: 9/27/19	CREW: BH, BF (Baker)	REVISION 3	DATE:	CREW:
REVISION 2	DATE: 10/13/2021	CREW: BM, IS (PRIME)	REVISION 4	DATE:	CREW:

CREW: SW, JG	DATE: 11/28/2017	BRIDGE NO.: 03819

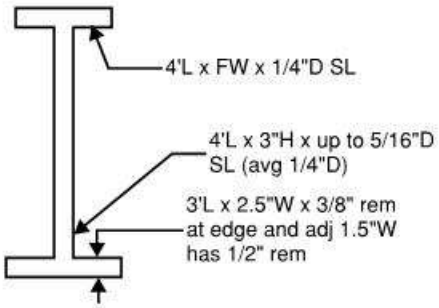

Span 10 - S1 at 3' East of FB 10-1
Section A-A (looking east)

- LR at all locations

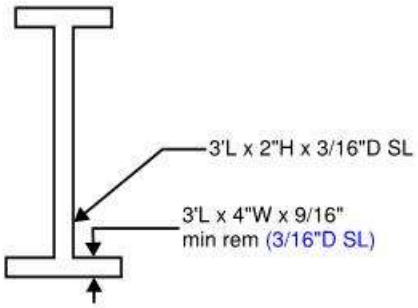

Span 10 - S13 at 7' West of FB 10-2
Section B-B (looking east)

- LR at all locations

REVISION 1	DATE: 9/27/19	CREW: BH, BF (Baker)	REVISION 3	DATE:	CREW:
REVISION 2	DATE: 10/7/2021	CREW: BM, EG, IS, AN (PRIME)	REVISION 4	DATE:	CREW:

CREW: SW, JG	DATE: 11/28/2017	BRIDGE NO.: 03819

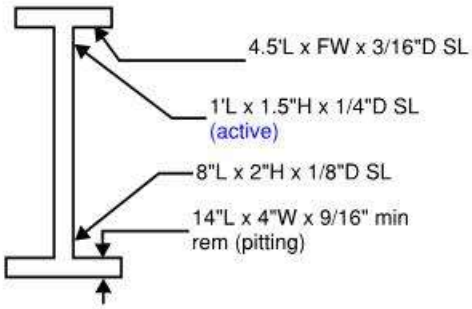

Note:
- BF has other isolated areas w/similar loss (total 6'L section)
- Web has two (2) isolated areas with similar loss west of noted locations.

Span 10 - S13 at Mid-Panel West of FB 10-5
Section C-C (looking east)

- LR at all locations, U.O.N.

REVISION 1	DATE: 9/27/19	CREW: BH, BF (Baker)	REVISION 3	DATE:	CREW:
REVISION 2	DATE: 10/13/2021	CREW: BM, IS (PRIME)	REVISION 4	DATE:	CREW:

Sketches
Inspection type: Fracture Critical,Routine
Inspection Date: 7/26/2021
Inspected by: PRIME AE

:Bridge No 03819

Town: NEW LONDON
Carried: INTERSTATE 95 NORTHBOUND
Crossed: THAMES RV,RR,LOCAL ROADS
Inventory Route: NHS

CREW: SW, EN	DATE: 11/27/2017	BRIDGE NO.: 03819

Deterioration Legend:
1 - Up to __" thick pack rust between girder top or bottom flange cover plates
2 - Web around cope has 5"L x 3"H x 1/16"-1/8"D SL (at top & bot)
3 - G1 BF at 2nd vertical stiffener from FB11-2 has void btwn cover PL's up to 16"L x 1¼" w/ 15'L x 3/4" PR & (2) R/H's w/40% SL
4 - Up to 1/4" PR between G1 TF PL and FB vert leg knee brace conn
5 - 1"W x 1/2"L RTH at lower lateral G PL w/ LR
6 - Girder N elev web around lat brace connection w/ 2' x 1' x 1/8"D pitt PO

LOG DIRECTION
WEST TO EAST

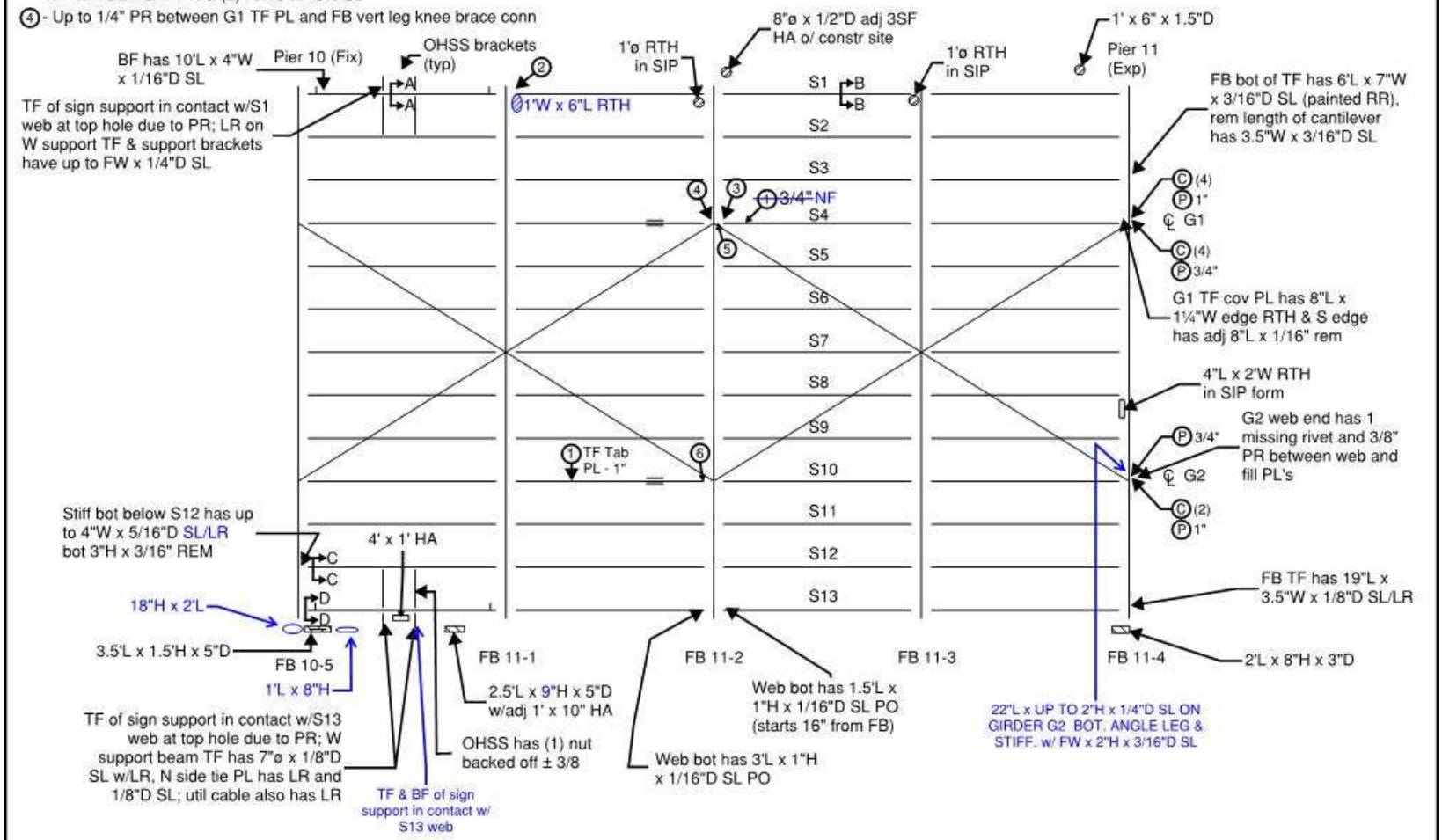

LEGEND:
- HOLLOW AREA
- SHALLOW REBAR
- SPALL AREA
- SPALL AREA WITH EXPOSED REBAR
- MAPCRACKS
- HAIRLINE CRACKS
- HONEYCOMB AREA
- SCALE AREA
- EFFLORESCENCE PRESENT
- RIVETED FIELD SPLICE
- BF COVER PLATE END WELD
- © # OF CRACKED/BROKEN TACK WELDS BTWN B-B STIFF ANGLES
- Ⓟ UP TO __" THK PR BTWN B-B STIFF ANGLES

General Notes:
- See Underside of Deck and Steel Framing General Notes (Spans 6-21) sheet
- Fascia spalls/hollow areas over the stock pile area are typically in bottom of parapet U.O.N.
- S1 & S13 between FB 10-5 & FB 11-1 have BF cover PL's w/end welds near FB's w/lam rust (negl loss)

Span 11 - Underside of Deck and Framing

REVISION 1	DATE: 10/4/19	CREW: AH, JG (Baker)	REVISION 3	DATE:	CREW:
REVISION 2	DATE: 10/7/2021	CREW: BM, EG, IS, AN (PRIME)	REVISION 4	DATE:	CREW:

CREW: SW, EN	DATE: 11/27/2017	BRIDGE NO.: 03819

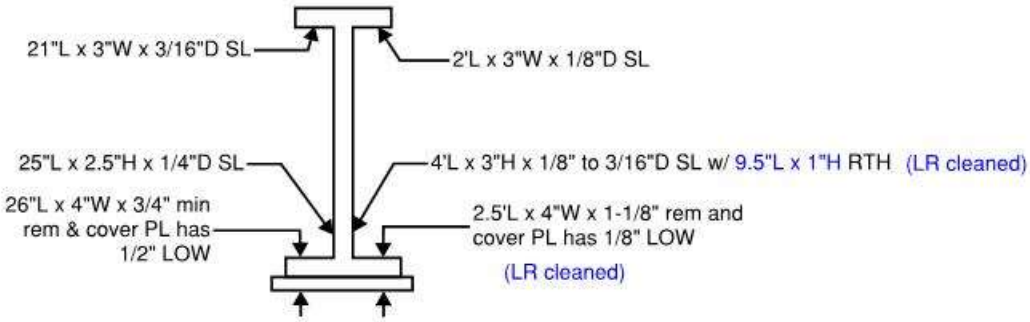

Span 11 - S1 at Mid-Panel East of FB 10-5
Section A-A (looking east)

LR at all locations UON

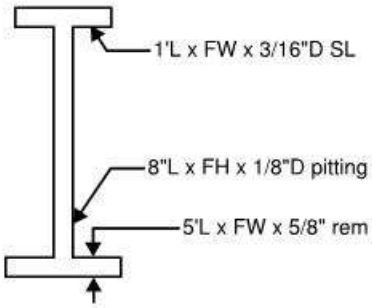

Span 11 - S1 at 8' West of FB 11-3
Section B-B (looking east)

- LR at all locations

REVISION 1	DATE: 10/4/19	CREW: AH, JG (Baker)	REVISION 3	DATE:	CREW:
REVISION 2	DATE: 10/7/2021	CREW: EG, AN (PRIME)	REVISION 4	DATE:	CREW:

CREW: SW, EN	DATE: 11/27/2017	BRIDGE NO.: 03819

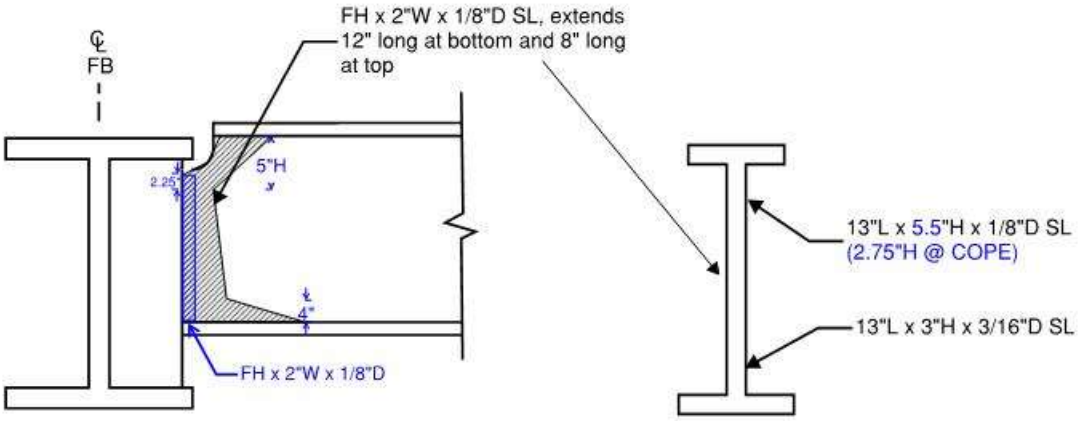

North Elevation

Span 11 - S12 at East Side of FB 10-5
Section C-C (looking east)

- LR at all locations

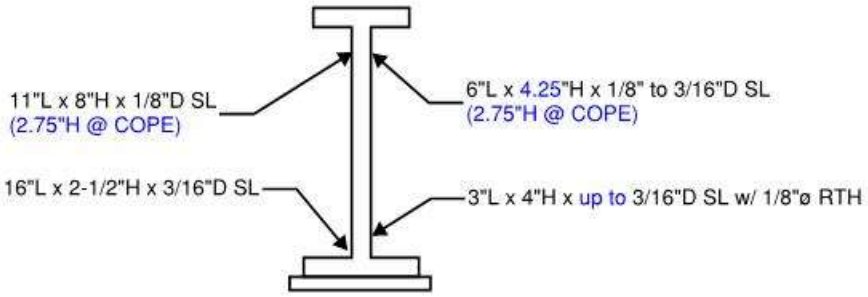

Span 11 - S13 at East Side of FB 10-5
Section D-D (looking east)

- LR at all locations

REVISION 1	DATE: 10/4/19	CREW: AH, JG (Baker)	REVISION 3	DATE:	CREW:
REVISION 2	DATE: 10/13/2021	CREW: BM, IS (PRIME)	REVISION 4	DATE:	CREW:

CREW: SW, EN	DATE: 11/27/2017	BRIDGE NO.: 03819

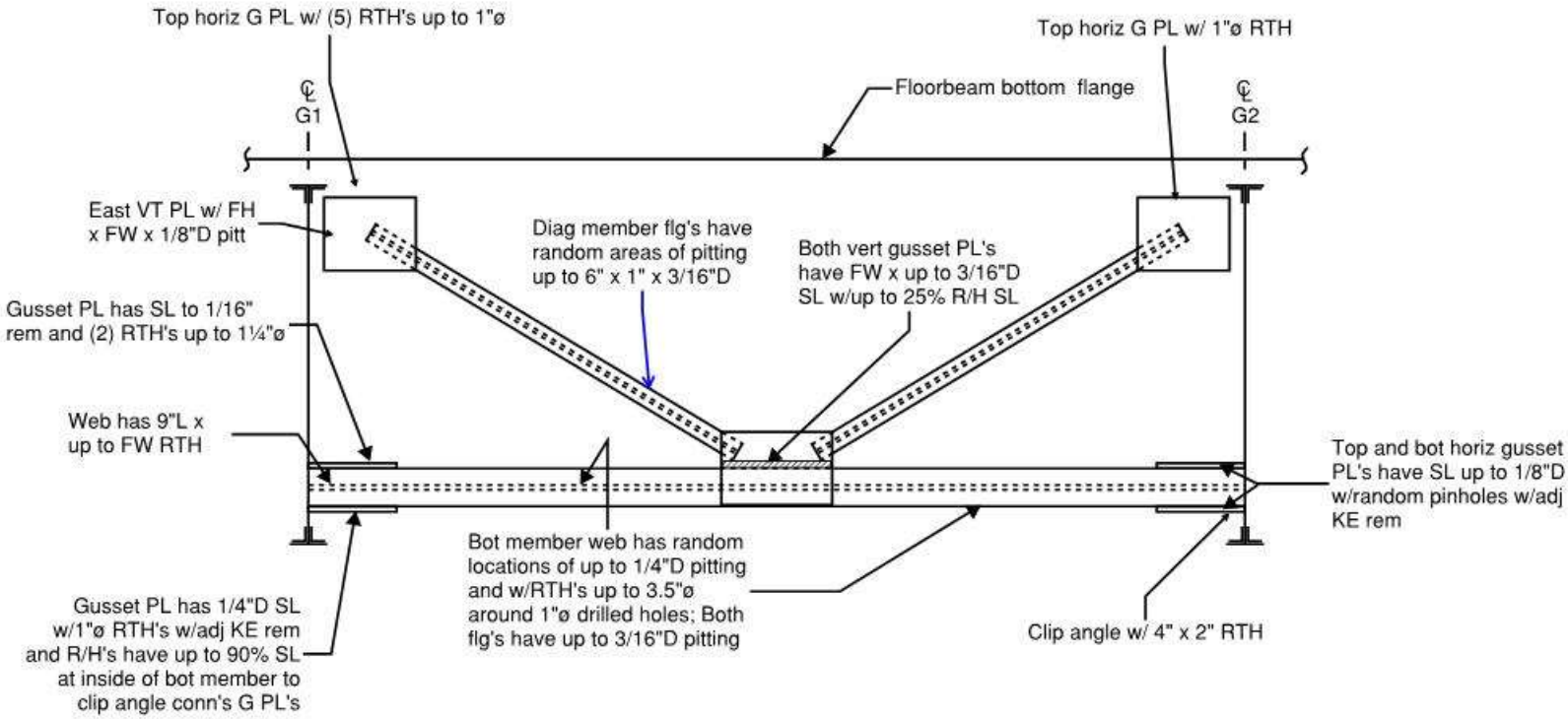

Notes:
- Conc and asphalt debris on top of steel members from previous deck joint repairs
- All losses are painted over

End Diaphragm Between Main Girders
Span 11 at Pier 11

REVISION 1	DATE: 10/4/19	CREW: AH, JG (Baker)	REVISION 3	DATE:	CREW:
REVISION 2	DATE: 10/13/2021	CREW: BM, IS (PRIME)	REVISION 4	DATE:	CREW:

Sketches
Inspection type: Fracture Critical,Routine
Inspection Date: 7/26/2021
Inspected by: PRIME AE

:Bridge No 03819

Town: NEW LONDON
Carried: INTERSTATE 95 NORTHBOUND
Crossed: THAMES RV,RR,LOCAL ROADS
Inventory Route: NHS

CREW: SW, JG	DATE: 11/28/2017	BRIDGE NO.: 03819

Deterioration Legend:
1 - Up to __" thick pack rust between girder top or bottom flange cover plates
2 - Web bot has 1"L x 4"H x 1/8"D SL at end, LR
3 - Web bot has 2"L x 5"H x 1/8"D SL at end, LR
4 - FB stiff has 6"W x 9"H x 3/16"D SL PO
5 - Scupper end plate has (1 of 6) nuts missing
6 - FB BF has 10"L x 7"W x 1" rem PO at stringer S2 stiffener & stiffener W/ FW x 3"H x 3/16"D SL
7 - Bot horiz gusset PL has 3/16" ave rem & is bent up 1/4"H for 8"L w/ 9" x 2" RTH & (2) up to 2"L x 1"H RTH & 12" x 8" area of KE w/ RTH's b/w strut (re-rusting)
8 - Top horiz G PL has 8" x 1" RTH; bot G PL w/ 3" x 1" RTH, Horiz strut & flg's have SL up to 3/16"D w/LR
9 - Diaph lower bracing bot horiz G PL has 3" x 1" RTH; top horiz G PL below FB w/ 1.5"ø RTH/ LR
10 - G2 TF cover PL has 16"L x FW area of 3" x 5" x 1/4"D random pitting (<5% loss)

LOG DIRECTION → WEST TO EAST

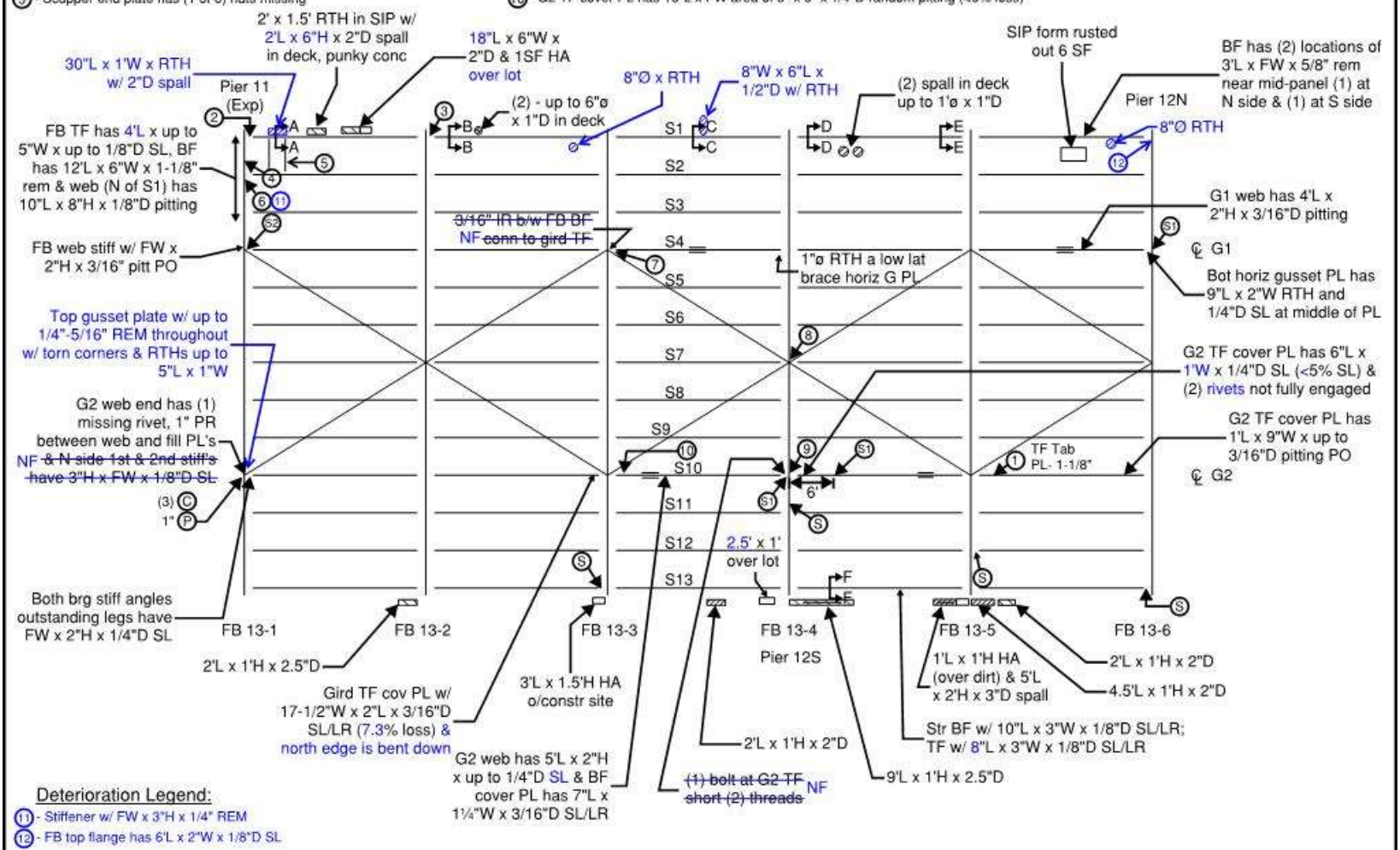

Deterioration Legend:
11 - Stiffener w/ FW x 3"H x 1/4" REM
12 - FB top flange has 6'L x 2"W x 1/8"D SL

LEGEND:
- HOLLOW AREA
- SHALLOW REBAR
- SPALL AREA
- SPALL AREA WITH EXPOSED REBAR
- MAPCRACKS
- HAIRLINE CRACKS
- HONEYCOMB AREA
- SCALE AREA
- EFFLORESCENCE PRESENT
- RIVETED FIELD SPLICE
- C # OF CRACKED/BROKEN TACK WELDS BTWN B-B STIFF ANGLES
- P UP TO __" THK PR BTWN B-B STIFF ANGLES
- S SEE SKETCH

General Notes:
- See Underside of Deck and Steel Framing General Notes (Spans 6-21) sheet
- Fascia spalls/hollow areas are typically in bottom of parapet U.O.N.
- G2 TF cover PL in panel 2 has random bends up to 9"L x 1/2"
- S1 are special shear and buckling locations (checked 100% hands-on w/no SL found)
- S2 are special shear and buckling locations (see sketch, checked 100% hands-on)

Span 12 - Underside of Deck and Framing

REVISION 1	DATE: 10/2/19	CREW: BH, JG (Baker)	REVISION 3	DATE:	CREW:
REVISION 2	DATE: 10/14/2021	CREW: EG, SD (PRIME)	REVISION 4	DATE:	CREW:

Sketches
Inspection type: Fracture Critical,Routine
Inspection Date: 7/26/2021
Inspected by: PRIME AE

:Bridge No 03819

Town: NEW LONDON
Carried: INTERSTATE 95 NORTHBOUND
Crossed: THAMES RV,RR,LOCAL ROADS
Inventory Route: NHS

CREW: SW, JG	DATE: 11/28/2017	BRIDGE NO.: 03819

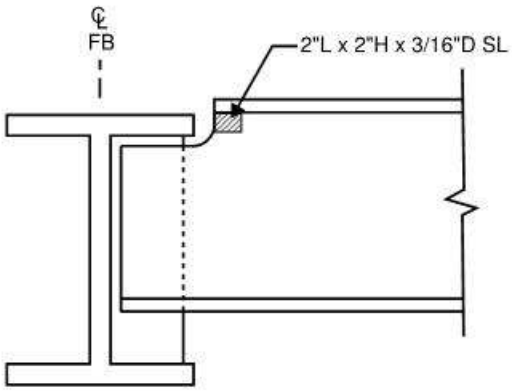

Span 12 - S13 at West Side of FB 13-3
North Elevation

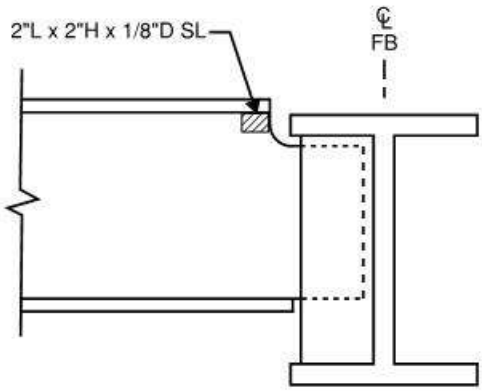

Span 12 - S13 at West Side of FB 13-3
South Elevation

- LR at all locations
- Web depth at coping= 21"H

REVISION 1	DATE: 10/4/19	CREW: AH, JG (Baker)	REVISION 3	DATE:	CREW:
REVISION 2	DATE: 10/19/2021	CREW: EG, SD (PRIME)	REVISION 4	DATE:	CREW:

CREW: SW, JG	DATE: 11/28/2017	BRIDGE NO.: 03819

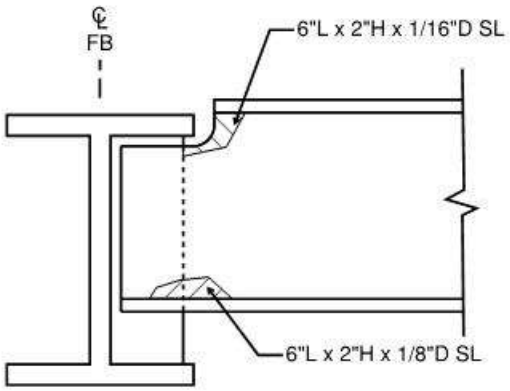

Span 12 - S12 at East Side of FB 13-5
South Elevation

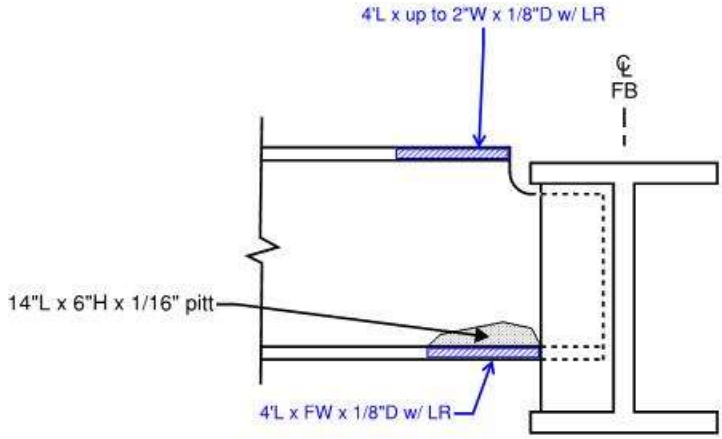

- LR at all locations
- Web depth at coping = 21"H

Span 12 - S12 at East Side of FB 13-5
North Elevation

REVISION 1	DATE: 10/2/19	CREW: JG, BH (Baker)	REVISION 3	DATE:	CREW:
REVISION 2	DATE: 10/19/2021	CREW: EG, SD (PRIME)	REVISION 4	DATE:	CREW:

CREW: SW, JG	DATE: 11/28/2017	BRIDGE NO.: 03819

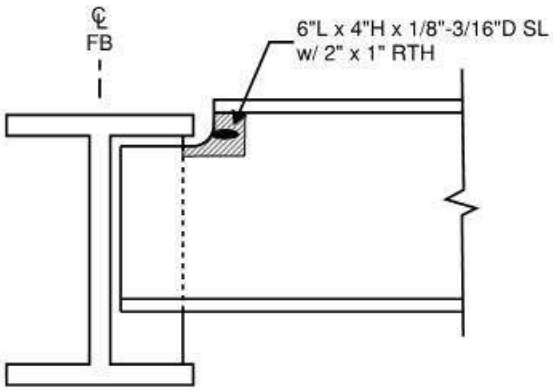

Span 12 - S13 at West Side of FB 13-6
North Elevation

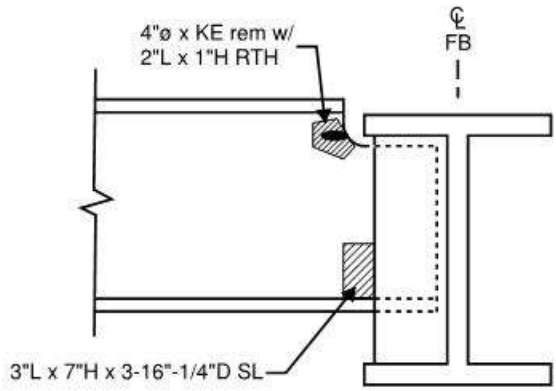

- LR at all locations
- Web depth at coping = 21"H

Span 12 - S13 at West Side of FB 13-6
South Elevation

REVISION 1	DATE: 10/2/19	CREW: JG, BH (Baker)	REVISION 3	DATE:	CREW:
REVISION 2	DATE: 10/19/2021	CREW: EG, SD (PRIME)	REVISION 4	DATE:	CREW:

CREW: SW, JG	DATE: 11/28/2017	BRIDGE NO.: 03819

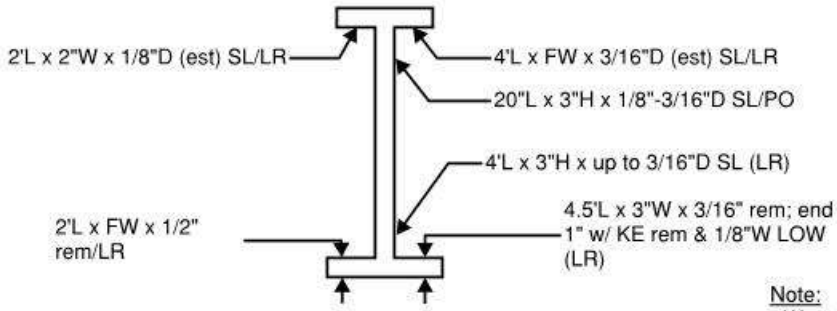

Note:
- West scupper diaphragm conn PL has 1/4"D pitting w/4"H x FW RTH at base w/LR
- Web adj to scupper diaph conn PL has up to 14"H x 1/8"D SL PO

Span 12 - S1 at 4.5' East of FB 13-1
Section A-A (looking east)

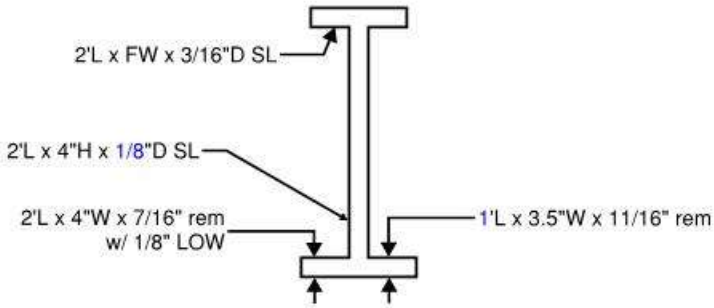

Span 12 - S1 at 4' East of FB 13-2
Section B-B (looking east)

- LR at all locations

REVISION 1	DATE: 10/2/19	CREW: BH, JG (Baker)	REVISION 3	DATE:	CREW:
REVISION 2	DATE: 10/14/2021	CREW: EG, SD (PRIME)	REVISION 4	DATE:	CREW:

CREW: SW, JG	DATE: 11/28/2017	BRIDGE NO.: 03819

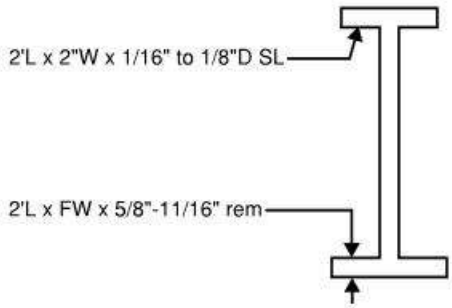

Span 12 - S1 at Mid-Panel East of FB 13-3
Section C-C (looking east)

- LR at all locations

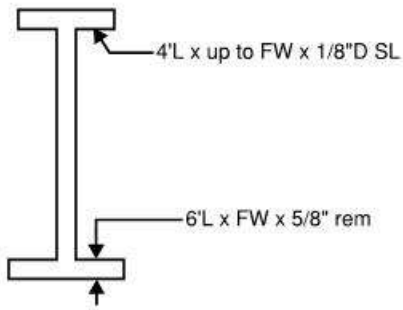

Span 12 - S1 at 2' East of FB 13-4
Section D-D (looking east)

- LR at all locations

REVISION 1	DATE: 10/1/19	CREW: BH, JG (Baker)	REVISION 3	DATE:	CREW:
REVISION 2	DATE: 10/14/2021	CREW: EG, SD (PRIME)	REVISION 4	DATE:	CREW:

CREW: SW, JG	DATE: 12/6/2017	BRIDGE NO.: 03819

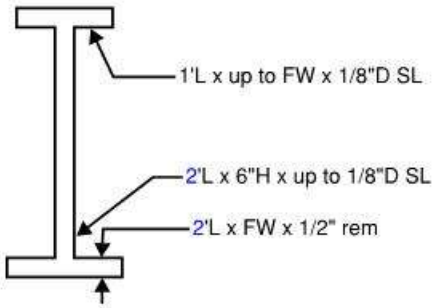

Span 12 - S1 at 2' West of FB 13-5
Section E-E (looking east)

- LR at all locations

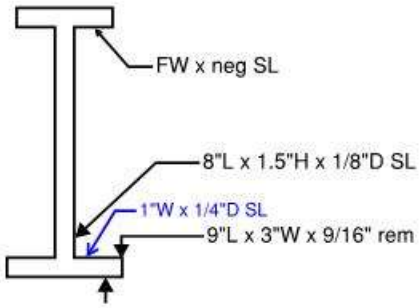

Span 12 - S13 at ±6' East of FB 13-4
Section F-F (looking east)

- LR at all locations

REVISION 1	DATE: 10/2/19	CREW: BH, JG (Baker)	REVISION 3	DATE:	CREW:
REVISION 2	DATE: 10/14/2021	CREW: EG, SD (PRIME)	REVISION 4	DATE:	CREW:

Sketches
Inspection type: Fracture Critical,Routine
Inspection Date: 7/26/2021
Inspected by: PRIME AE

:Bridge No 03819

Town: NEW LONDON
Carried: INTERSTATE 95 NORTHBOUND
Crossed: THAMES RV,RR,LOCAL ROADS
Inventory Route: NHS

CREW: SW, JG	DATE: 11/28/2017	BRIDGE NO.: 03819

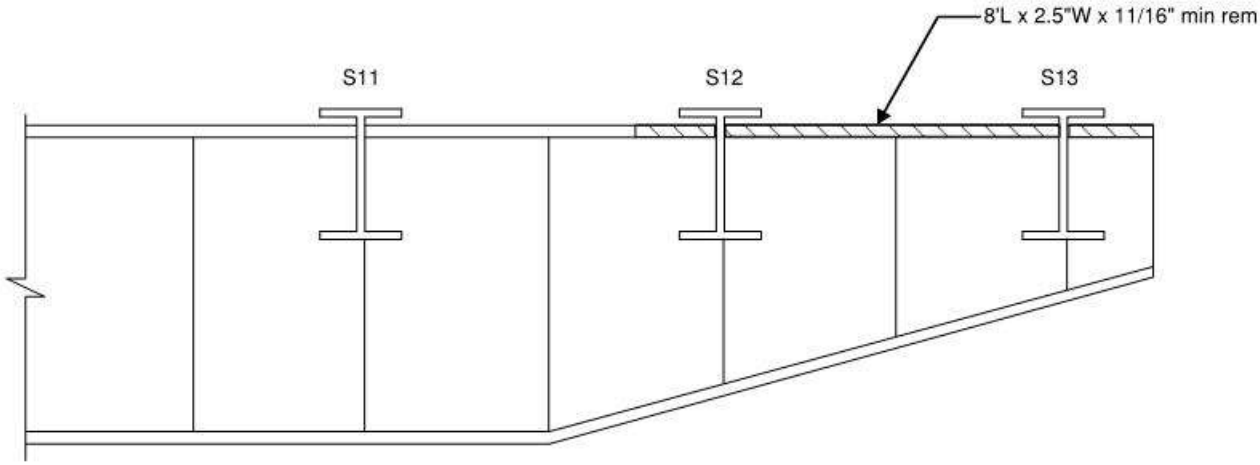

Span 12 - Floorbeam 13-4 South Cantilever
West Elevation

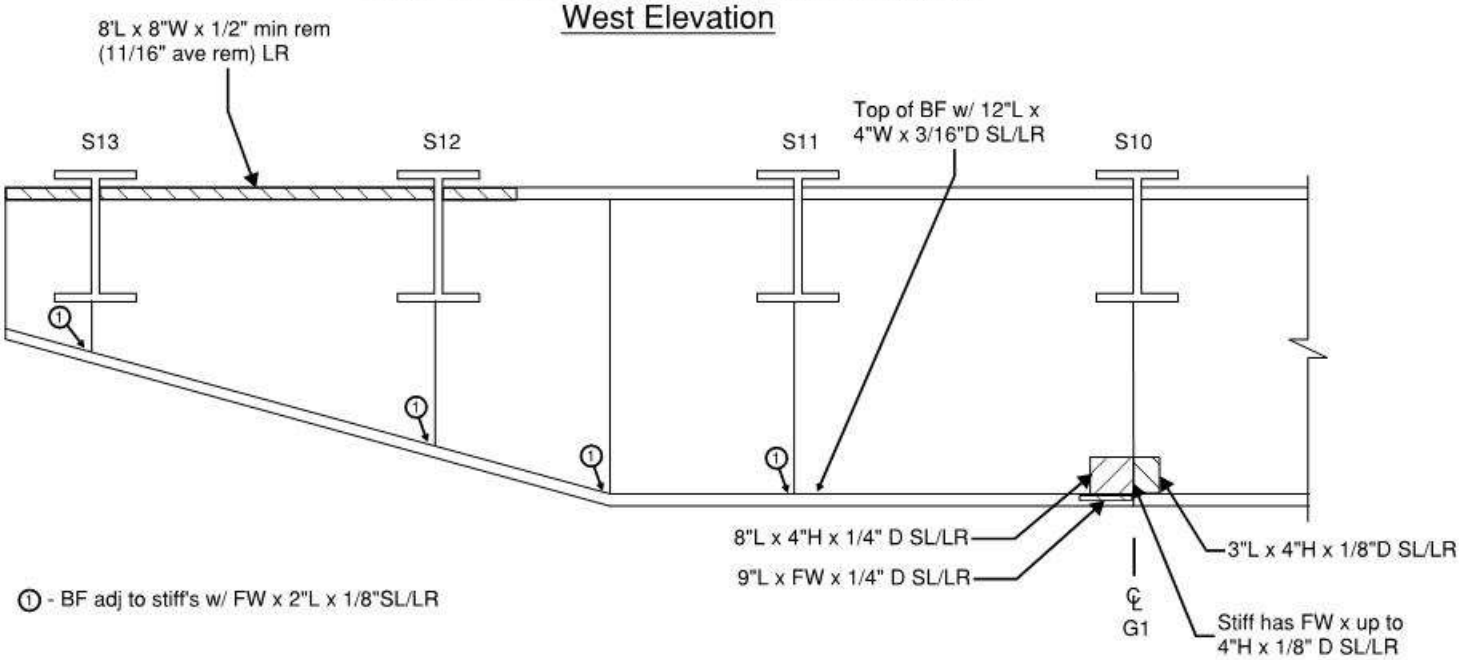

Span 12 - Floorbeam 13-4 South Cantilever
East Elevation

REVISION 1	DATE: 10/2/19	CREW: BH, JG (Baker)	REVISION 3	DATE:	CREW:
REVISION 2	DATE: 10/19/2021	CREW: EG, SD (PRIME)	REVISION 4	DATE:	CREW:

Sketches
Inspection type: Fracture Critical,Routine
Inspection Date: 7/26/2021
Inspected by: PRIME AE

:Bridge No 03819

Town: NEW LONDON
Carried: INTERSTATE 95 NORTHBOUND
Crossed: THAMES RV,RR,LOCAL ROADS
Inventory Route: NHS

CREW: SW, JG	DATE: 11/28/2017	BRIDGE NO.: 03819

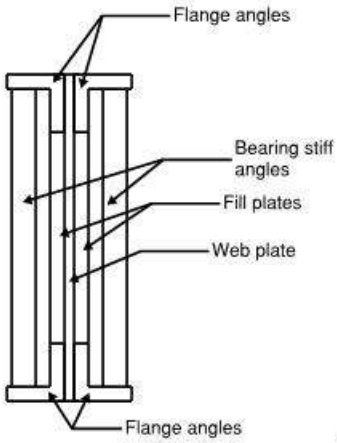

Typical Vertical Section

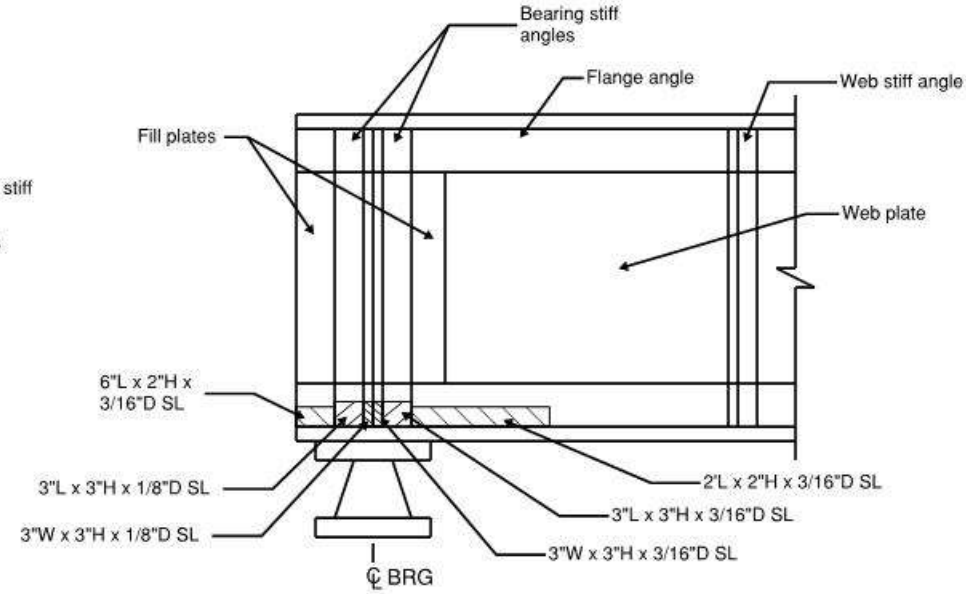

South Elevation

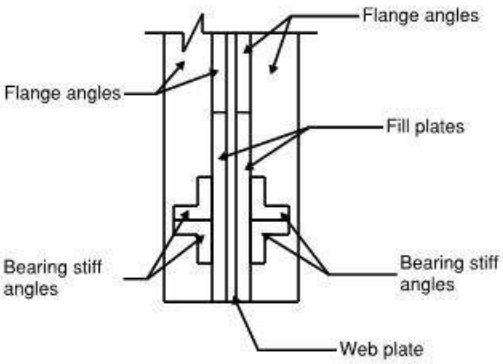

Typical Bearing Section

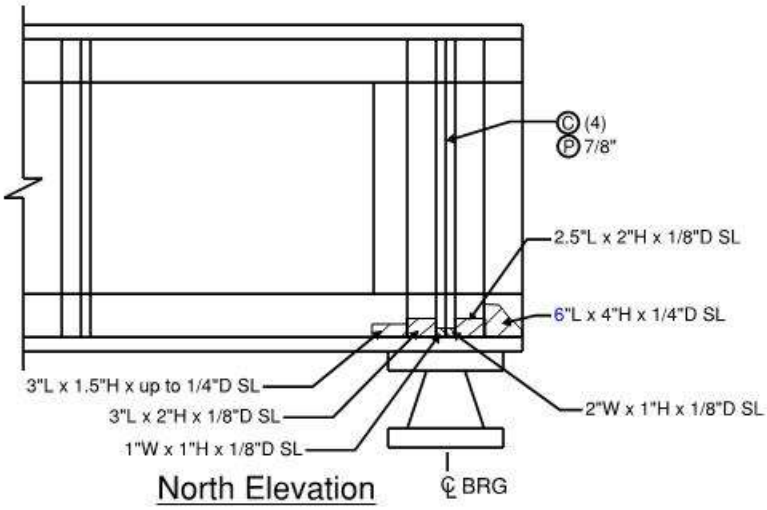

North Elevation

General Notes:
- Areas of peeling paint w/hvy to lam rust re-occurring

Legend:
Ⓒ # OF CRACKED/BROKEN TACK WELDS BTWN B-B STIFF ANGLES
Ⓟ UP TO __" THK PR BTWN B-B STIFF ANGLES

Span 12 - Girder 1 at Pier 11 - Note (S2)

REVISION 1	DATE: 10/2/19	CREW: BH, JG (Baker)	REVISION 3	DATE:	CREW:
REVISION 2	DATE: 10/14/2021	CREW: EG, SD (PRIME)	REVISION 4	DATE:	CREW:

CREW: SW, JG	DATE: 11/28/2017	BRIDGE NO.: 03819

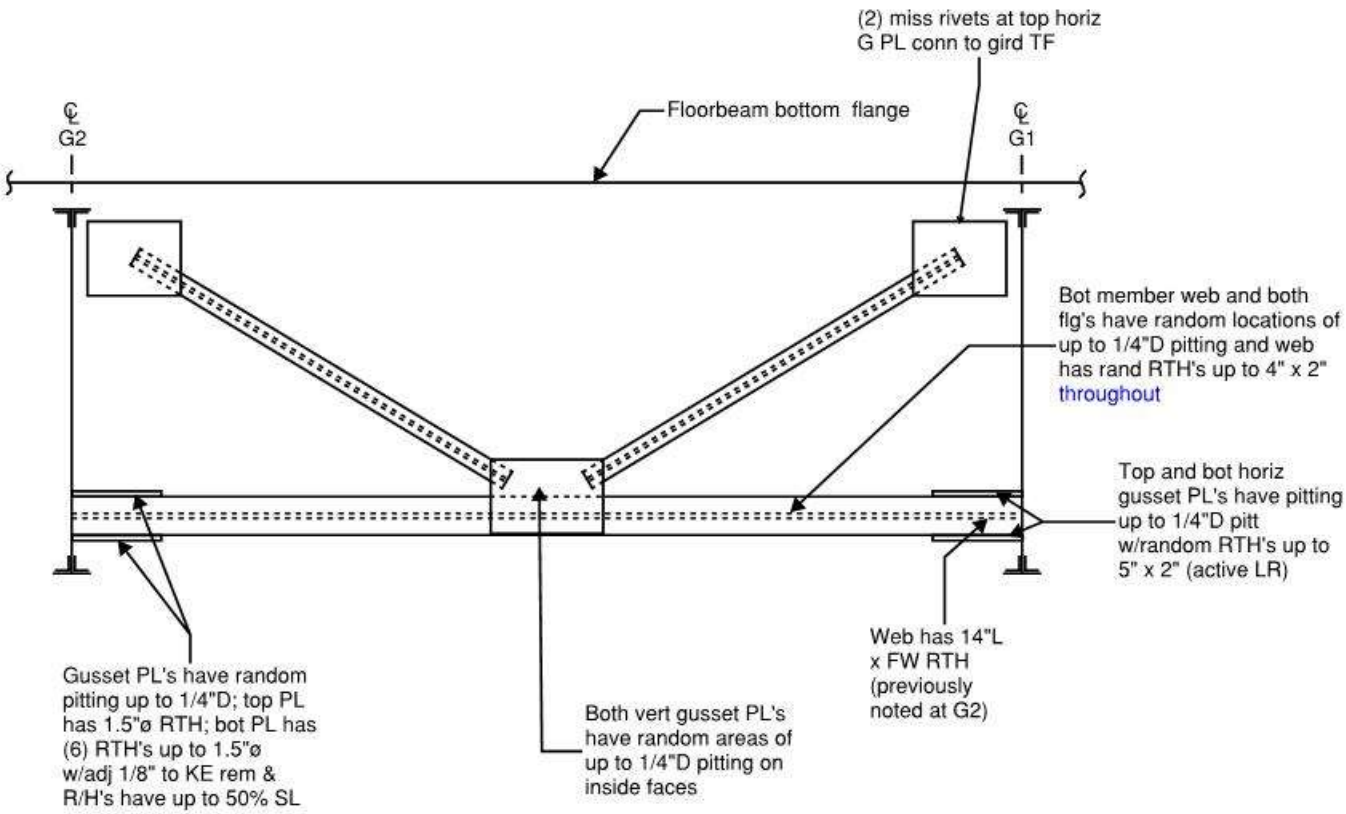

Notes:
- Conc debris on top of steel members from previous deck joint repairs
- All losses are painted over, U.O.N.

End Diaphragm Between Main Girders
Span 12 at Pier 11

REVISION 1	DATE: 10/2/19	CREW: BH, JG (Baker)	REVISION 3	DATE:	CREW:
REVISION 2	DATE: 10/14/2021	CREW: EG, SD (PRIME)	REVISION 4	DATE:	CREW:

Sketches
Inspection type: Fracture Critical,Routine
Inspection Date: 7/26/2021
Inspected by: PRIME AE

:Bridge No 03819

Town: NEW LONDON
Carried: INTERSTATE 95 NORTHBOUND
Crossed: THAMES RV,RR,LOCAL ROADS
Inventory Route: NHS

CREW: SW, JG	DATE: 12/5/2017	BRIDGE NO.: 03819

Deterioration Legend:

1. - Bot horiz gusset PL has 1¾" x 7/8" RTH & middle of PL has FW x 1/8"D SL ~~w/ 1/2"ø RTH~~ NF; bot strut vert legs have 1'L x 4"H x 1/8"D SL (painted)
2. - Abrasion dust at 1 of 6 nuts conn S7 to FB (loose)
3. - G2 TF cover PL has 1'L x FW area w/areas up to 5"L x 4"W x up to 5/16"D pitting at E side of FB and 1/8"D at W side of FB (PO)
4. - G1 BF angle vert leg has up to 4"H x 1/8"-3/16"D SL (17"L at W side of stiff and 29"L at E side of stiff); also base of stiff has 2"H x FW x 1/8"D-3/16"D SL (all painted)
5. - Lower lat bracing G PL w/ 1"ø RTH & strut web w/ (3) 1"ø RTHs, FL w/ 3"H x 1/4" pitt on flanges (PO)

LOG DIRECTION
WEST TO EAST

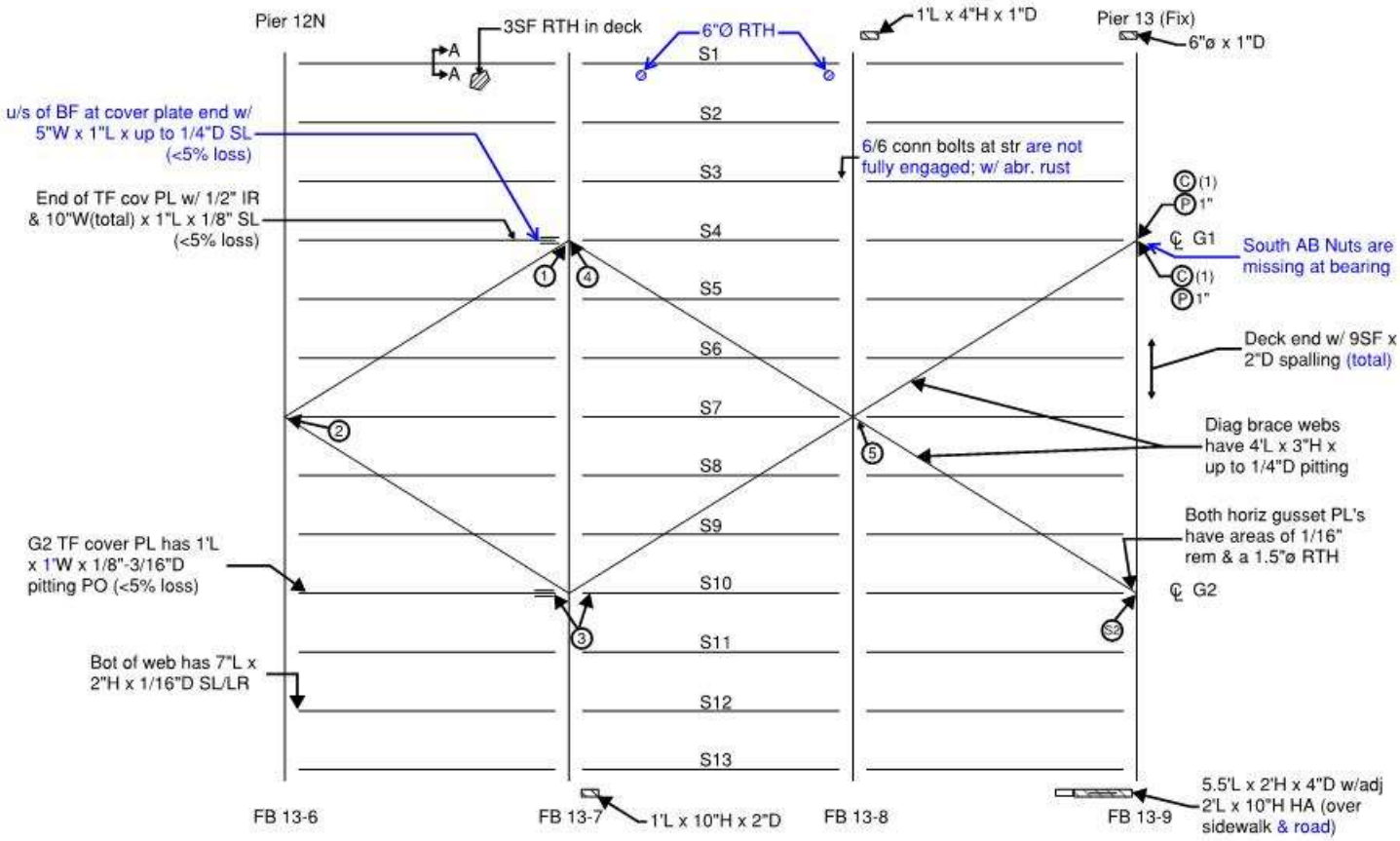

General Notes:

- See Underside of Deck and Steel Framing General Notes (Spans 6-21) sheet
- Fascia spalls/hollow areas are typically in bottom of parapet U.O.N.
- See Span 14 - Underside of Deck and Framing General Notes
- (S2) are special shear and buckling locations (see sketch, checked 100% hands-on)

LEGEND:
- HOLLOW AREA
- SHALLOW REBAR
- SPALL AREA
- SPALL AREA WITH EXPOSED REBAR
- MAPCRACKS
- HAIRLINE CRACKS
- HONEYCOMB AREA
- SCALE AREA
- EFFLORESCENCE PRESENT
- (C) # OF CRACKED/BROKEN TACK WELDS BTWN B-B STIFF ANGLES
- (P) UP TO __" THK PR BTWN B-B STIFF ANGLES

Span 13 - Underside of Deck and Framing

REVISION 1	DATE: 9/26/19	CREW: BH, BF (Baker)	REVISION 3	DATE:	CREW:
REVISION 2	DATE: 10/14/2021	CREW: EG, SD (PRIME)	REVISION 4	DATE:	CREW:

Sketches
Inspection type: Fracture Critical,Routine
Inspection Date: 7/26/2021
Inspected by: PRIME AE

:Bridge No 03819

Town: NEW LONDON
Carried: INTERSTATE 95 NORTHBOUND
Crossed: THAMES RV,RR,LOCAL ROADS
Inventory Route: NHS

CREW: SW, JG	DATE: 12/5/2017	BRIDGE NO.: 03819

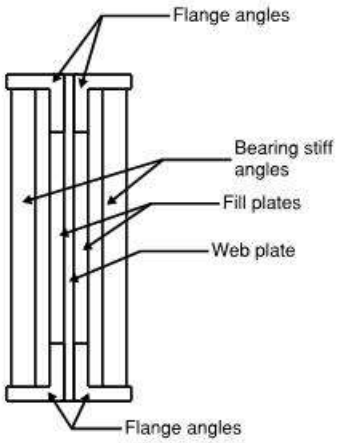

Typical Vertical Section

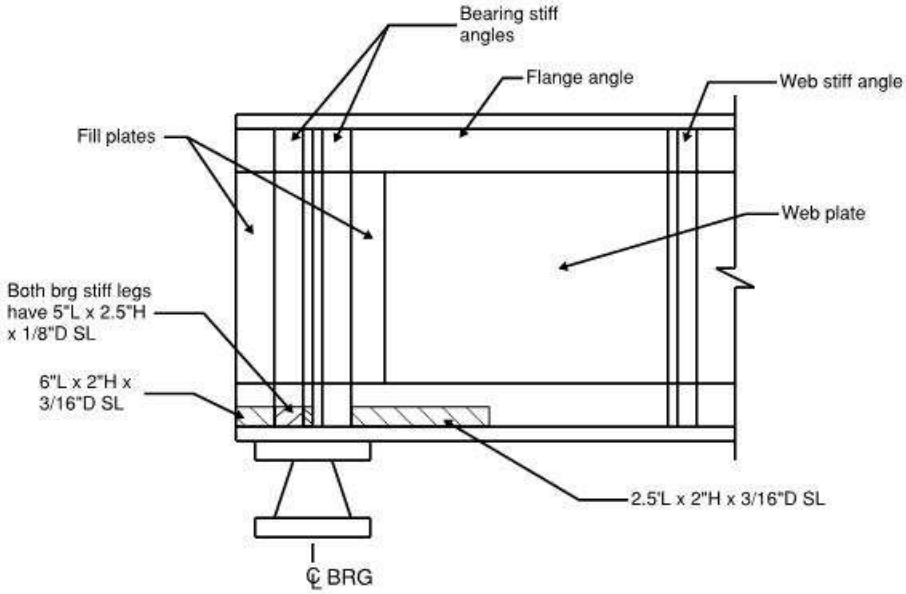

North Elevation

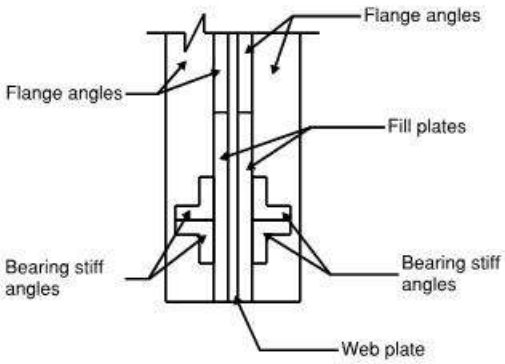

Typical Bearing Section

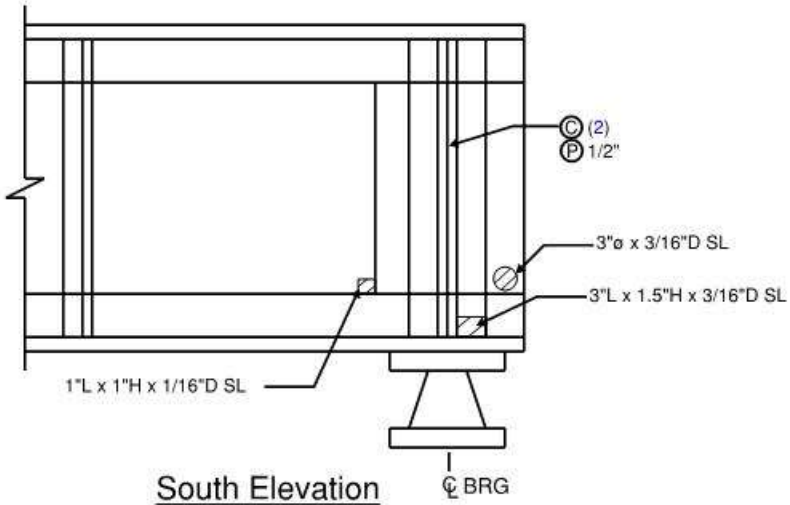

South Elevation

General Notes:
- Areas of peeling paint w/hvy to lam rust re-occurring

Legend:
Ⓒ # OF CRACKED/BROKEN TACK WELDS BTWN B-B STIFF ANGLES
Ⓟ UP TO __" THK PR BTWN B-B STIFF ANGLES

Span 13 - Girder 2 at Pier 13 - Note (S2)

REVISION 1	DATE: 10/2/19	CREW: BH, JG (Baker)	REVISION 3	DATE:	CREW:
REVISION 2	DATE: 10/19/2021	CREW: EG, SD (PRIME)	REVISION 4	DATE:	CREW:

CREW: SW, JG	DATE: 12/5/2017	BRIDGE NO.: 03819

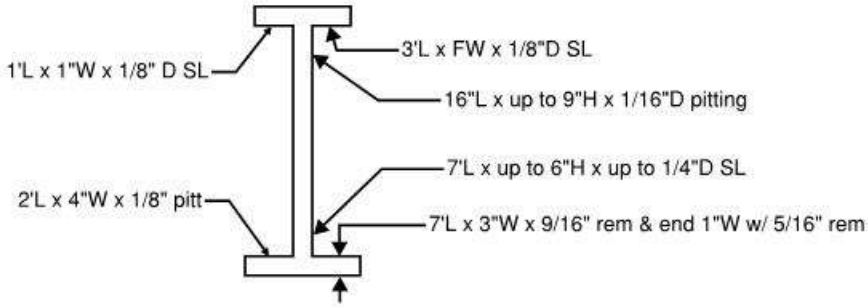

Span 13 - S1 at ±12' East of FB 13-6
Section A-A (looking east)

- LR at all locations
- Active leakage

REVISION 1	DATE: 9/26/19	CREW: BH, BF (Baker)	REVISION 3	DATE:	CREW:
REVISION 2	DATE: 10/14/2021	CREW: EG, SD (PRIME) - No Change	REVISION 4	DATE:	CREW:

Sketches
Inspection type: Fracture Critical,Routine
Inspection Date: 7/26/2021
Inspected by: PRIME AE

:Bridge No 03819

Town: NEW LONDON
Carried: INTERSTATE 95 NORTHBOUND
Crossed: THAMES RV,RR,LOCAL ROADS
Inventory Route: NHS

CREW: SW, JG	DATE: 12/5/2017	BRIDGE NO.: 03819

Deterioration Legend:
1 - G1 vert stiff is bent FH x 1"
2 - G1 TF cover PL is bent down 6"L x 1/2" at both north and south sides
3 - Girder web above BF angle vert leg has 2'L x 2"H x 3/16"-1/4"D pitting
4 - Lat bracing lower horiz G PL w/ (2) RTH's up to 2"ø w/ 6"ø KE

LOG DIRECTION
WEST TO EAST

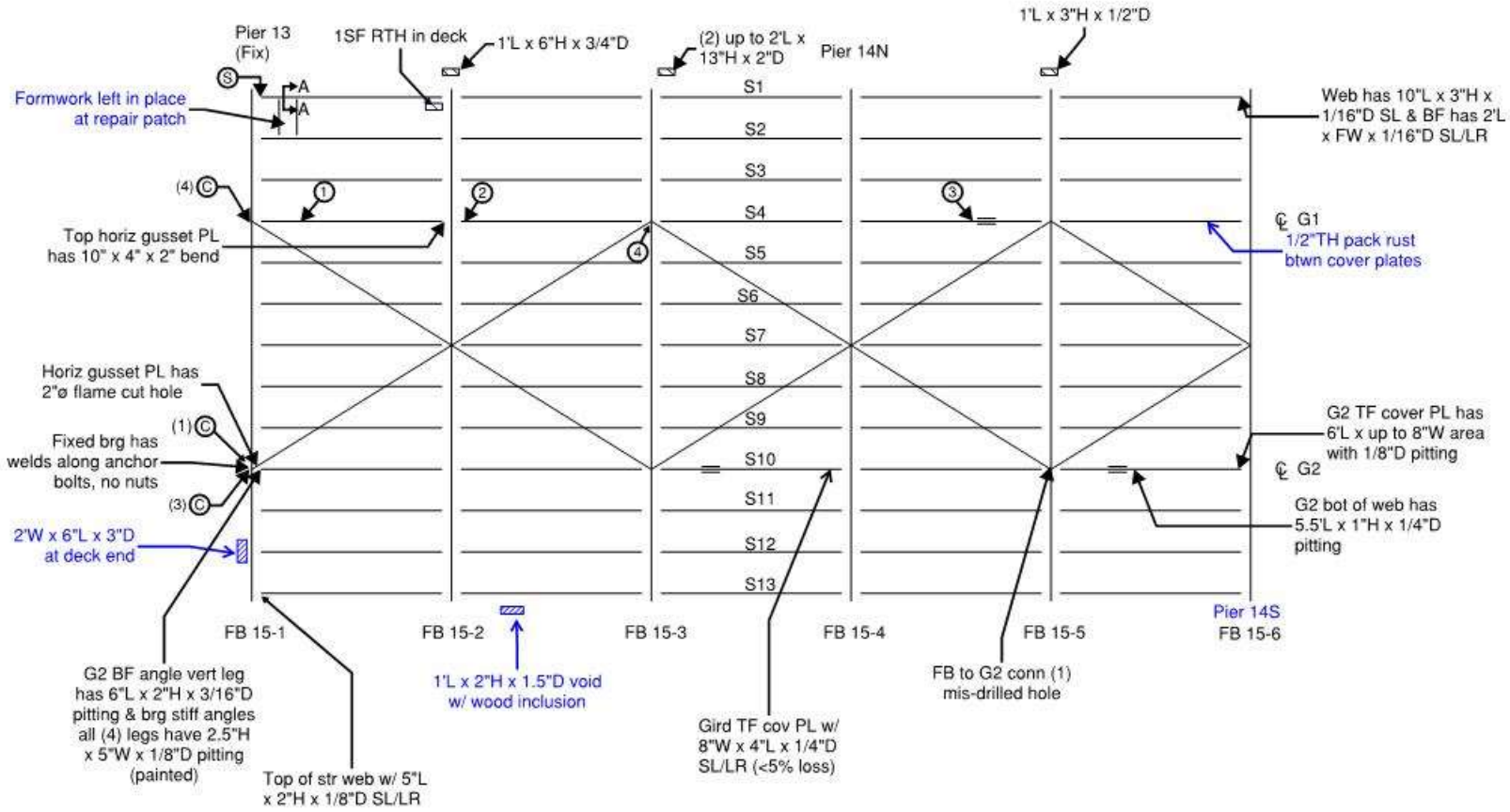

General Notes:

- See Underside of Deck and Steel Framing General Notes (Spans 6-21) sheet
- Fascia spalls are typically in bottom of parapet U.O.N.
- Underside of deck joint at pier 13 in spans 13 and 14 have (11) total spalls up to 1.5SF x up to 3"D

LEGEND:
- HOLLOW AREA
- SHALLOW REBAR
- SPALL AREA
- SPALL AREA WITH EXPOSED REBAR
- MAPCRACKS
- HAIRLINE CRACKS
- HONEYCOMB AREA
- SCALE AREA
- EFFLORESCENCE PRESENT
- RIVETED FIELD SPLICE
- (C) # OF CRACKED/BROKEN TACK WELDS BTWN B-B STIFF ANGLES
- (S) SEE SKETCH

Span 14 - Underside of Deck and Framing

REVISION 1	DATE: 9/26/19	CREW: BH, BF (Baker)	REVISION 3	DATE:	CREW:
REVISION 2	DATE: 10/14/2021	CREW: NR, MM (PRIME)	REVISION 4	DATE:	CREW:

CREW: SW, JG	DATE: 12/5/2017	BRIDGE NO.: 03819

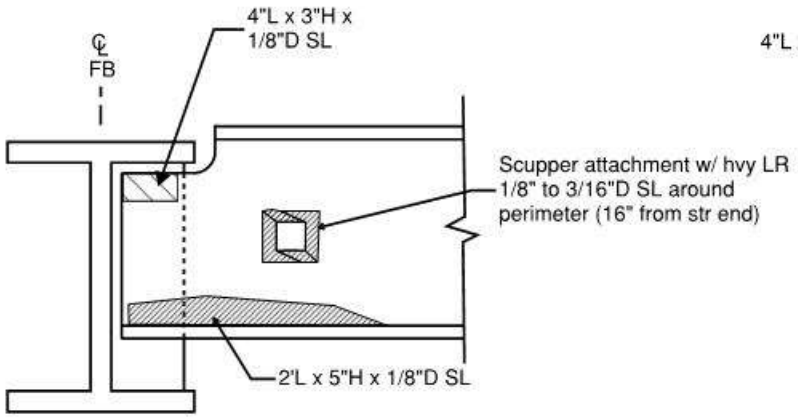

Span 14 - S1 at East Side of FB 15-1
South Elevation

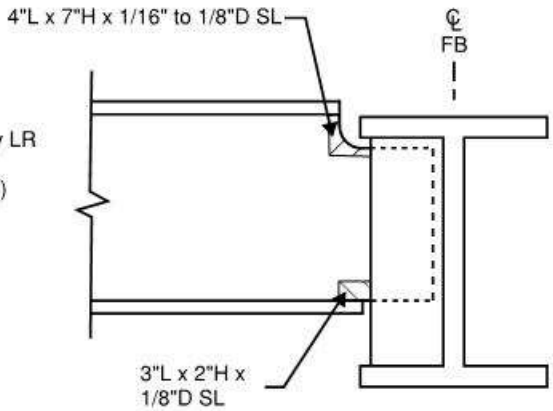

- LR at all locations

Span 14 - S1 at East Side of FB 15-1
North Elevation

REVISION 1	DATE: 9/26/19	CREW: BH, BF (Baker)	REVISION 3	DATE:	CREW:
REVISION 2	DATE: 10/14/2021	CREW: NR, MM (PRIME) - No Change	REVISION 4	DATE:	CREW:

CREW: SW, JG	DATE: 12/5/2017	BRIDGE NO.: 03819

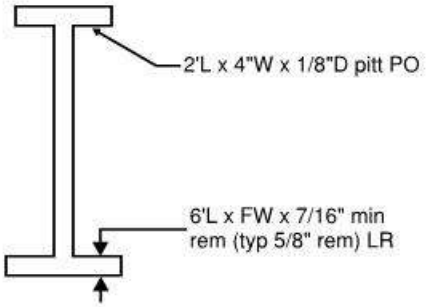

Span 14 - S1 at ±4' East of FB 15-1
Section A-A (looking east)

REVISION 1	DATE: 9/26/19	CREW: BH, BF (Baker)	REVISION 3	DATE:	CREW:
REVISION 2	DATE: 10/14/2021	CREW: NR, MM (PRIME) - No Change	REVISION 4	DATE:	CREW:

Sketches
Inspection type: Fracture Critical,Routine
Inspection Date: 7/26/2021
Inspected by: PRIME AE

:Bridge No 03819

Town: NEW LONDON
Carried: INTERSTATE 95 NORTHBOUND
Crossed: THAMES RV,RR,LOCAL ROADS
Inventory Route: NHS

CREW: SW, JG	DATE: 11/30/2017	BRIDGE NO.: 03819

Deterioration Legend:
1 - G2 end has 1" PR between web and fill PL's and up to 1" PR between G2 TF and TF cov PL
2 - G2 TF cover PL has 1/2"L X 16"W x 1/8"D pitting and adj areas w/up to 3"ø x 1/8"D pitting adj FB shim PL's
3 - G2 bearing stiff angles all (4) legs have FW x 2"H x 3/16"D SL (painted) & N web end past brg w/ FH x 5"L x 3/16"D pitt PO
4 - Girder BF ±1' from bearing has 1¾"ø fine cut
5 - G1 TF cover PL's have up to 3/4" PR at end

LOG DIRECTION
WEST TO EAST

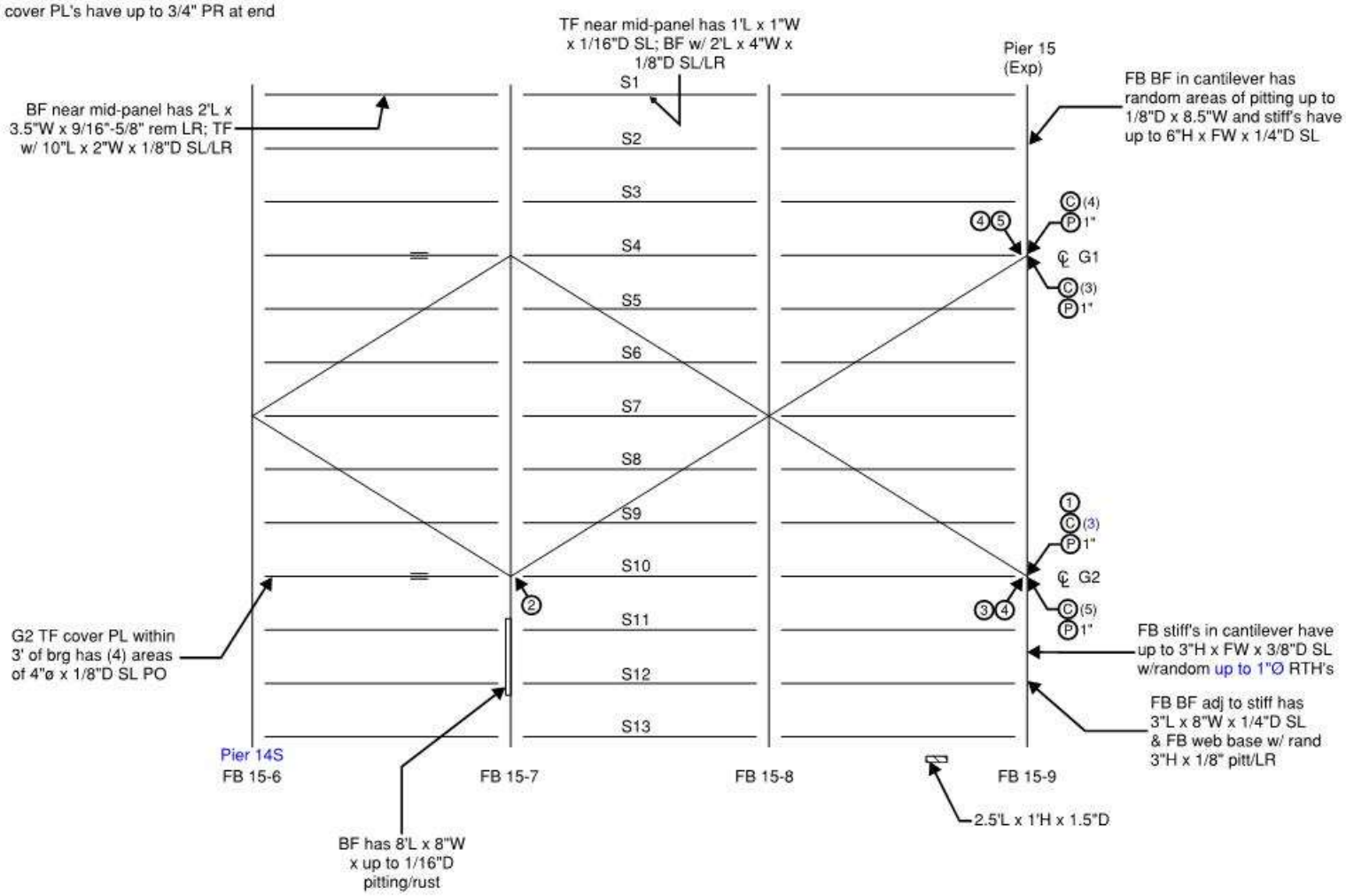

General Notes:
- See Underside of Deck and Steel Framing General Notes (Spans 6-21) sheet
- Fascia spalls are typically in bottom of parapet U.O.N.
- Underside of deck joint at pier 15 has sections of wood forms left in place
- FB15-9 east stiff bases w/ rand FW x 2"H x 1/8"D SL/PO

LEGEND:
- HOLLOW AREA
- SHALLOW REBAR
- SPALL AREA
- SPALL AREA WITH EXPOSED REBAR
- MAPCRACKS
- HAIRLINE CRACKS
- HONEYCOMB AREA
- SCALE AREA
- EFFLORESCENCE PRESENT
- RIVETED FIELD SPLICE
- C # OF CRACKED/BROKEN TACK WELDS BTWN B-B STIFF ANGLES
- P UP TO __" THK PR BTWN B-B STIFF ANGLES

Span 15 - Underside of Deck and Framing

REVISION 1	DATE: 9/26/19	CREW: BH, BF (Baker)	REVISION 3	DATE:	CREW:
REVISION 2	DATE: 10/14/2021	CREW: NR, MM (PRIME)	REVISION 4	DATE:	CREW:

CREW: SW, JG	DATE: 11/30/2017	BRIDGE NO.: 03819

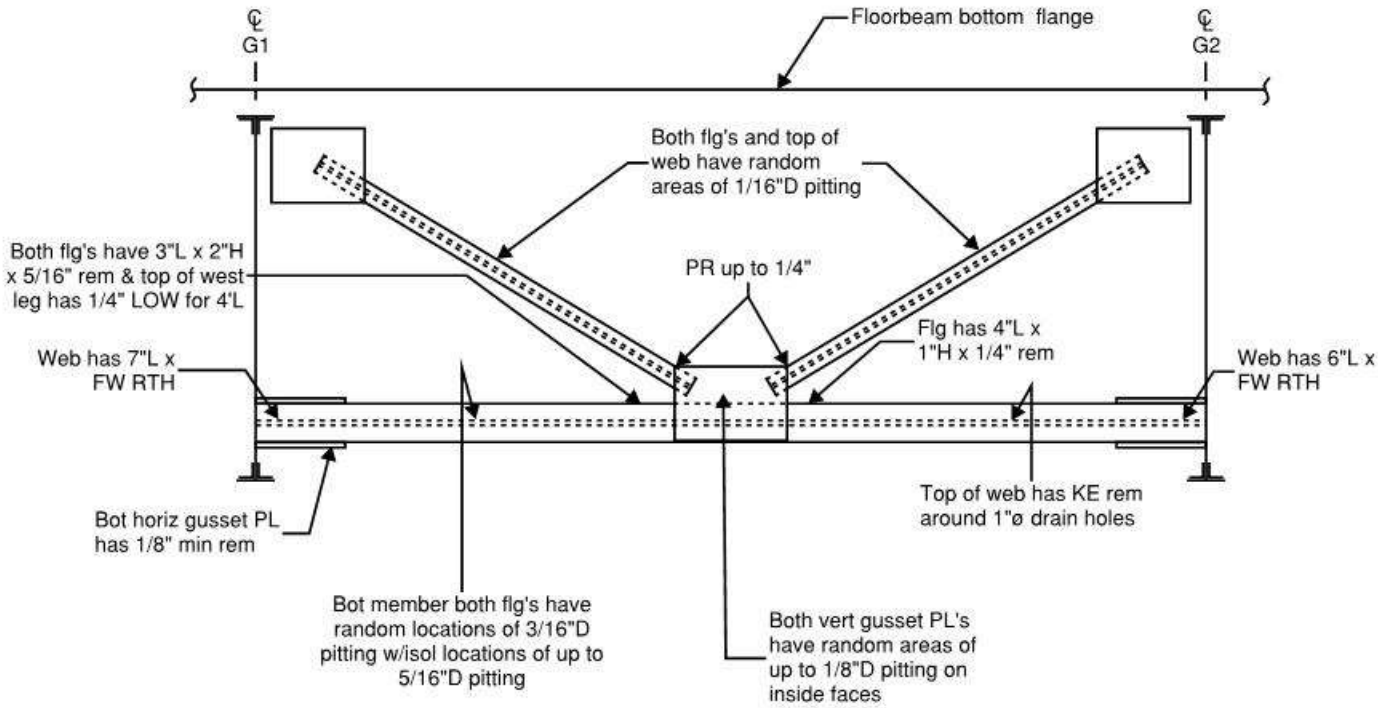

Notes:
- Conc debris on top of steel members from previous deck joint repairs
- All losses are painted over

End Diaphragm Between Main Girders
Span 15 at Pier 15

REVISION 1	DATE: 9/26/19	CREW: BH, BF (Baker) - No change	REVISION 3	DATE:	CREW:
REVISION 2	DATE: 10/14/2021	CREW: NR, MM (PRIME)	REVISION 4	DATE:	CREW:

Sketches
Inspection type: Fracture Critical,Routine
Inspection Date: 7/26/2021
Inspected by: PRIME AE

:Bridge No 03819

Town: NEW LONDON
Carried: INTERSTATE 95 NORTHBOUND
Crossed: THAMES RV,RR,LOCAL ROADS
Inventory Route: NHS

CREW: SW, JG	DATE: 11/28/2017	BRIDGE NO.: 03819

Deterioration Legend:
1 - Up to __" thick pack rust between girder top or bottom flange cover plates
2 - Up to 7/16" PR btwn bot angle of FB knee brace and girder top flange
3 - Lat gusset PL has pitting to 1/4" rem
4 - G2 BF, 1' from brg has 1¾"ø hole drilled through and adj 4"ø x 1/4"D pitting (painted)
5 - Girder web above bot angle w/ 5'L x 1"H x 3/16"D SL w/ LR

LOG DIRECTION
WEST TO EAST

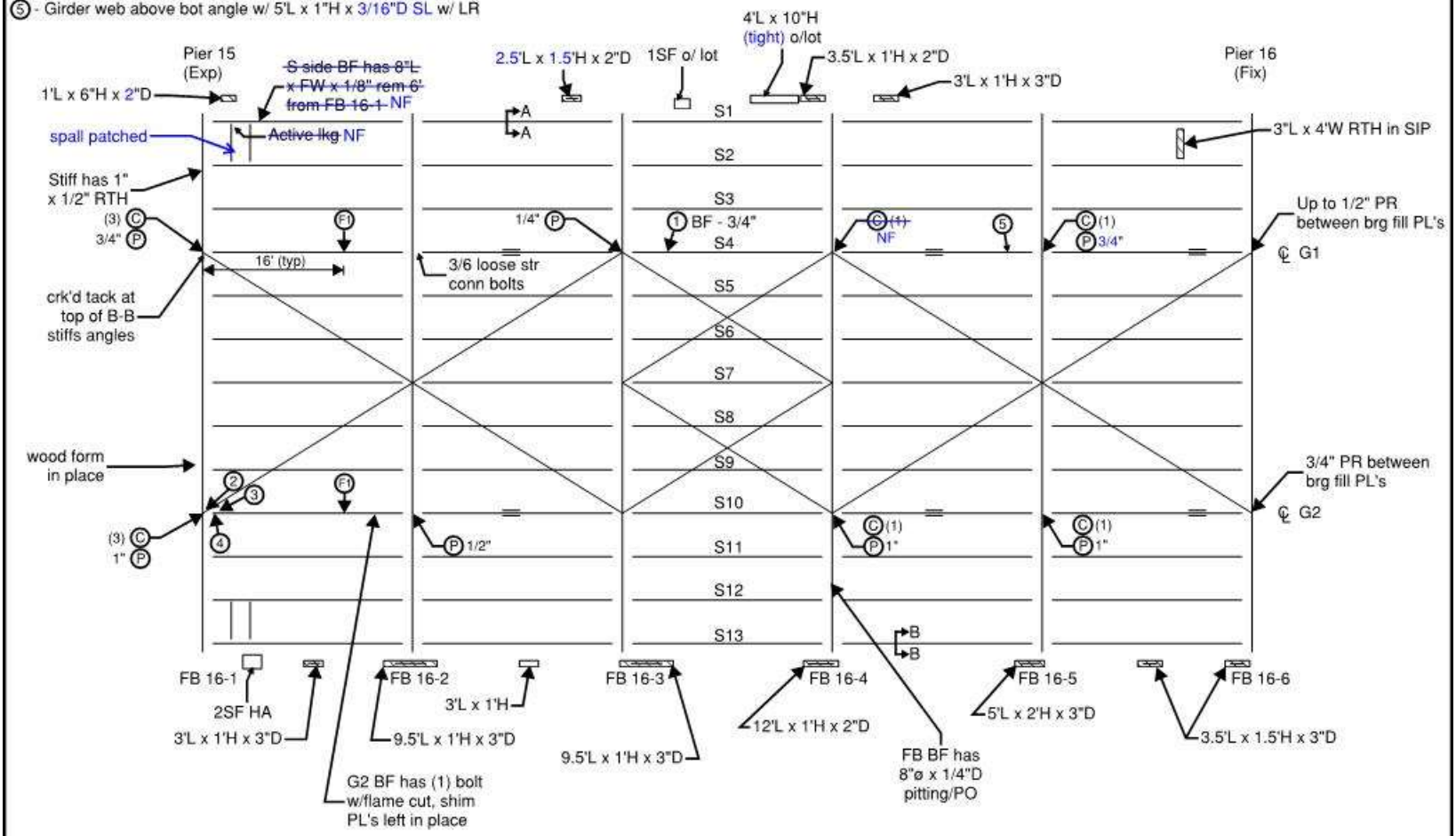

LEGEND:
- HOLLOW AREA
- SHALLOW REBAR
- SPALL AREA
- SPALL AREA WITH EXPOSED REBAR
- MAPCRACKS
- HAIRLINE CRACKS
- HONEYCOMB AREA
- SCALE AREA
- EFFLORESCENCE PRESENT
- RIVETED FIELD SPLICE
- C # OF CRACKED/BROKEN TACK WELDS BTWN B-B STIFF ANGLES
- P UP TO __" THK PR BTWN B-B STIFF ANGLES

General Notes:

- See Underside of Deck and Steel Framing General Notes (Spans 6-21) sheet
- Fascia spalls/hollow areas are typically in bottom of parapet U.O.N.
- F1 are special flexure locations (checked 100% hands-on w/no SL found)
- Underside of pier 15 deck joint has random transverse HLC's w/isol efflo & evidence of previous leakage, there is also random timber form-work left in place.
- FB 16-1 joint side between girders and at south cantilever, vert stiff's have up to 4"H x FW x 1/8" min rem w/random pinholes and top of BF has isolated areas of 1/8"D pitting x FW; webs with up to 4"H x 1/8" pitt

Span 16 - Underside of Deck and Framing

REVISION 1	DATE: 9/27/19	CREW: BH, BF (Baker)	REVISION 3	DATE:	CREW:
REVISION 2	DATE: 10/6/2021	CREW: CMR, NR, EB, SD (PRIME)	REVISION 4	DATE:	CREW:

CREW: SW, JG	DATE: 11/28/2017	BRIDGE NO.: 03819

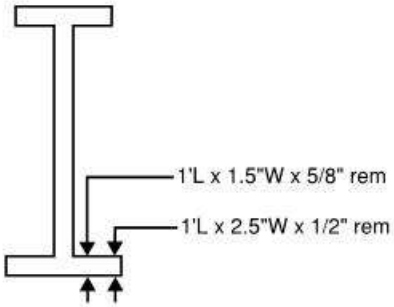

Span 16 - S1 at Mid-Panel East of FB 16-2
Section A-A (looking east)

- LR at all locations

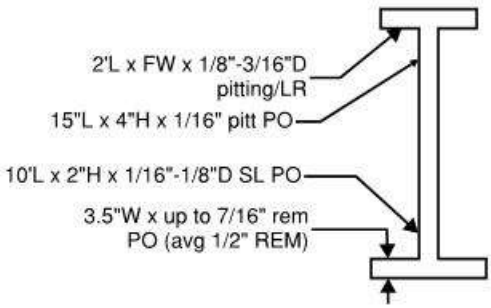

Span 16 - S13 at 9' East of FB 16-4
Section B-B (looking east)

REVISION 1	DATE: 9/27/19	CREW: BH, BF (Baker)	REVISION 3	DATE:	CREW:
REVISION 2	DATE: 10/6/2021	CREW: CMR, NR, EB, SD (PRIME) - No Change	REVISION 4	DATE:	CREW:

CREW: SW, JG	DATE: 11/28/2017	BRIDGE NO.: 03819

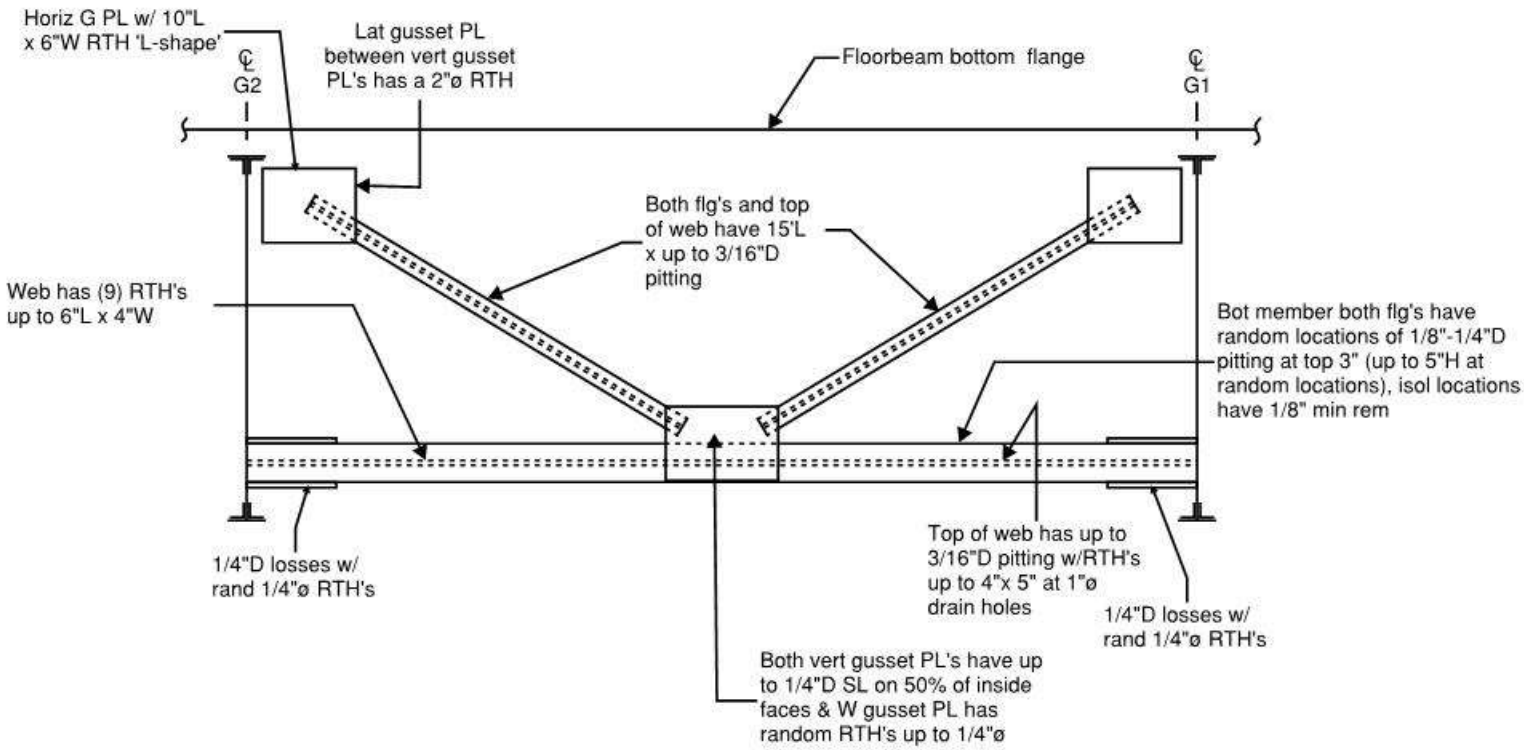

Notes:
- Conc debris on top of steel members from previous deck joint repairs
- All losses are painted over

End Diaphragm Between Main Girders
Span 16 at Pier 15

REVISION 1	DATE: 10/1/19	CREW: BH, JG (Baker)	REVISION 3	DATE:	CREW:
REVISION 2	DATE: 10/6/2021	CREW: CMR, NR, EB, SD (PRIME) - No Change	REVISION 4	DATE:	CREW:

Sketches
Inspection type: Fracture Critical,Routine
Inspection Date: 7/26/2021
Inspected by: PRIME AE

:Bridge No 03819

Town: NEW LONDON
Carried: INTERSTATE 95 NORTHBOUND
Crossed: THAMES RV,RR,LOCAL ROADS
Inventory Route: NHS

CREW: SW, JG	DATE: 11/28/2017	BRIDGE NO.: 03819

Deterioration Legend:
1 - G1 S BF angle vert leg has 18"L x 4"H x 1/4"D SL and bot of stiff has FW x 4"H x 1/4"D SL (painted), (2) loc's, both sides
2 - FB TF has 18"L x 2.5"W x 1/8"-3/16"D SL/LR
3 - Girder web above BF angle vert leg has up to 5'L x 1"H x up to 5/16"D pitting (w/ LR)
4 - Girder BF angle vert leg has 3'L x 3"H x 1/8"D SL & 80% SL to R/H's; south B-B angle VT stiffs w/ FL (both sides of angle) x 3"H x 1/8"D SL PO
5 - Str N web at conn w/ 5"H x 1-1/2"L x 3/16"D SL/LR; 3/16" IR b/w str web & conn PL

LOG DIRECTION
WEST TO EAST

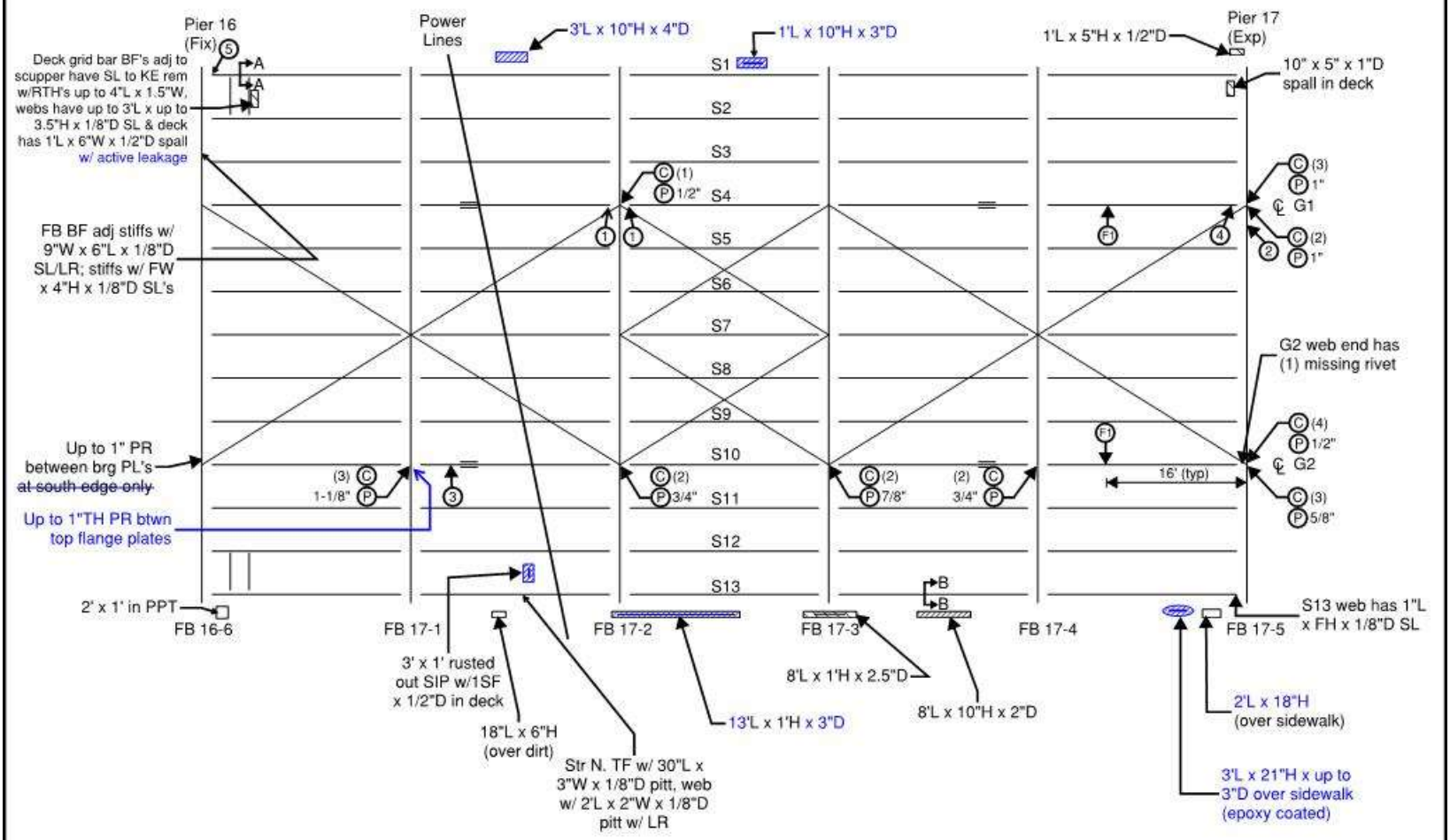

General Notes:
- See Underside of Deck and Steel Framing General Notes (Spans 6-21) sheet
- Fascia spalls/hollow areas are typically in bottom of parapet U.O.N.
- F1 are special flexure locations (checked 100% hands-on w/no SL found)
- FB17-5 at east: stiffs w/ up to 6"H x FW x up to 3/16" rem PO; BF w/ areas of FW (e. leg) x 9"L x 1/8" pitt/LR (<5% loss)

LEGEND:
- HOLLOW AREA
- SHALLOW REBAR
- SPALL AREA
- SPALL AREA WITH EXPOSED REBAR
- MAPCRACKS
- HAIRLINE CRACKS
- HONEYCOMB AREA
- SCALE AREA
- EFFLORESCENCE PRESENT
- RIVETED FIELD SPLICE
- C # OF CRACKED/BROKEN TACK WELDS BTWN B-B STIFF ANGLES
- P UP TO __" THK PR BTWN B-B STIFF ANGLES

Span 17 - Underside of Deck and Framing

REVISION 1	DATE: 9/12/19	CREW: BH, JG (Baker)	REVISION 3	DATE:	CREW:
REVISION 2	DATE: 10/6/2021	CREW: CMR, NR, EB, SD (PRIME)	REVISION 4	DATE:	CREW:

CREW: SW, JG	DATE: 11/28/2017	BRIDGE NO.: 03819

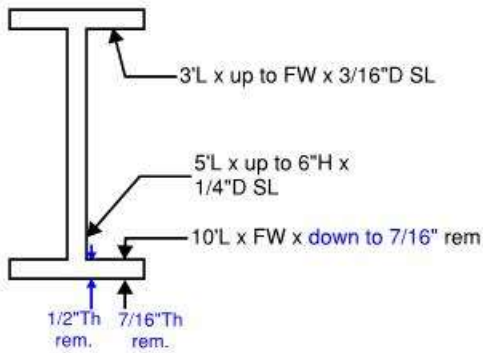

Span 17 - S1 at 6.5' East of FB 16-6
Section A-A (looking east)

- LR at all locations

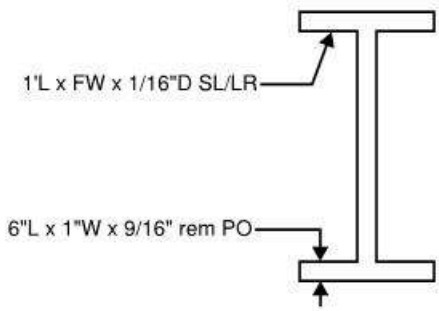

Span 17 - S13 at Mid-Panel East of FB 17-3
Section B-B (looking east)

REVISION 1	DATE: 9/12/19	CREW: BH, JG (Baker)	REVISION 3	DATE:	CREW:
REVISION 2	DATE: 10/6/2021	CREW: NR, EB (PRIME)	REVISION 4	DATE:	CREW:

CREW: SW, JG	DATE: 12/5/2017	BRIDGE NO.: 03819

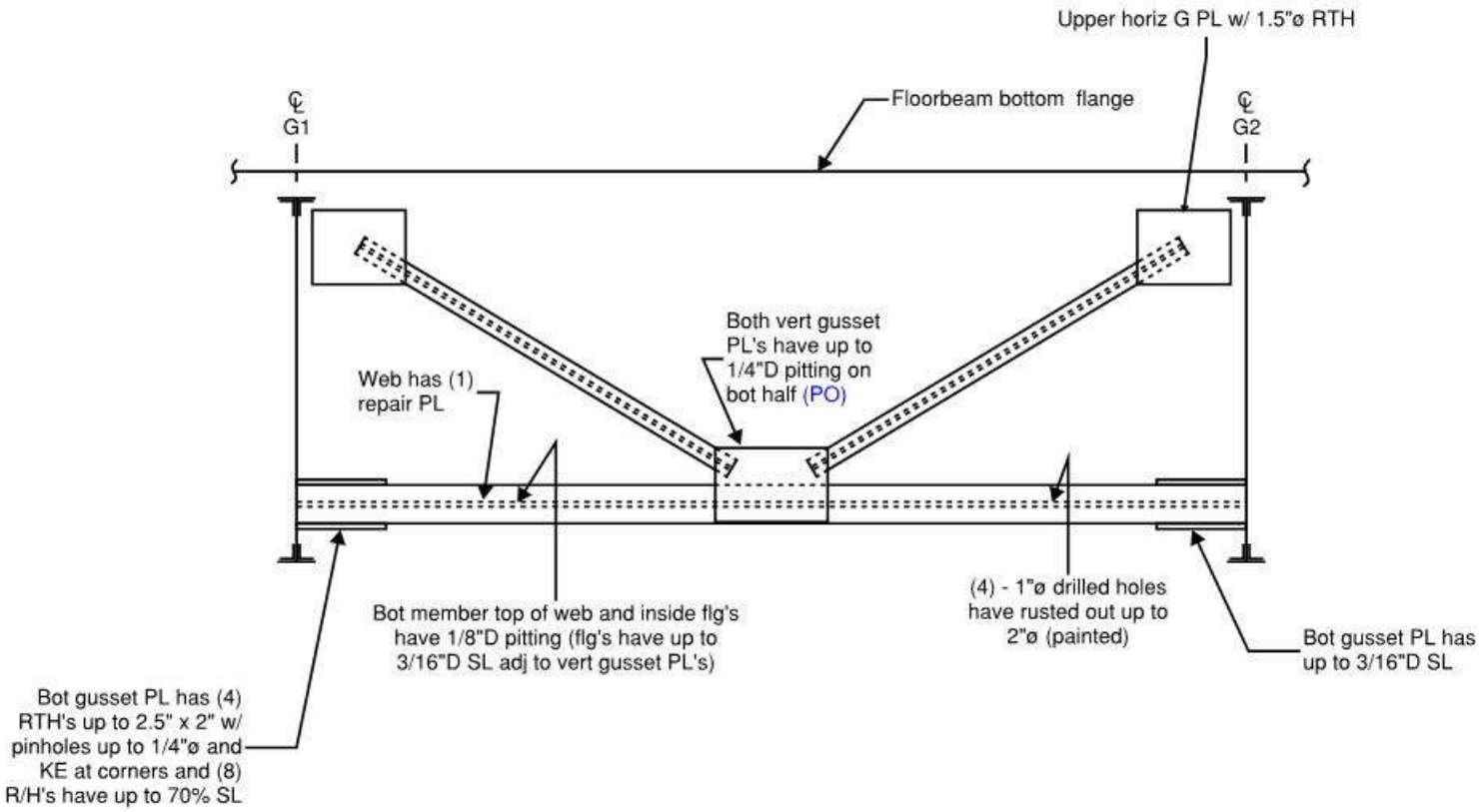

End Diaphragm Between Main Girders
Span 17 at Pier 17

REVISION 1	DATE: 10/2/19	CREW: BH, JG (Baker)	REVISION 3	DATE:	CREW:
REVISION 2	DATE: 10/6/2021	CREW: CMR, NR, EB, SD (PRIME)	REVISION 4	DATE:	CREW:

Sketches
Inspection type: Fracture Critical,Routine
Inspection Date: 7/26/2021
Inspected by: PRIME AE

:Bridge No 03819

Town: NEW LONDON
Carried: INTERSTATE 95 NORTHBOUND
Crossed: THAMES RV,RR,LOCAL ROADS
Inventory Route: NHS

CREW: SW, JG	DATE: 12/4/2017	BRIDGE NO.: 03819

Deterioration Legend:
1. - Base of stiff has (2) miss-drilled holes up to 1"ø
2. - Top of G1 BF in front of brg has 6"L x 3"W x 5/16"D pitting
3. - Up to 1/2" PR btwn bot angle of FB knee brace and girder top flange
4. - W side of FB BF has 6'L x 4"W x 3/16"-1/4"D SL/LR; E. side BF w/ 6"W x 1'L x 1/8"D SL/LR
5. - S13 BF at 5' from FB18-2 has 3"L x 1"W x 3/16"D pitting (PO)

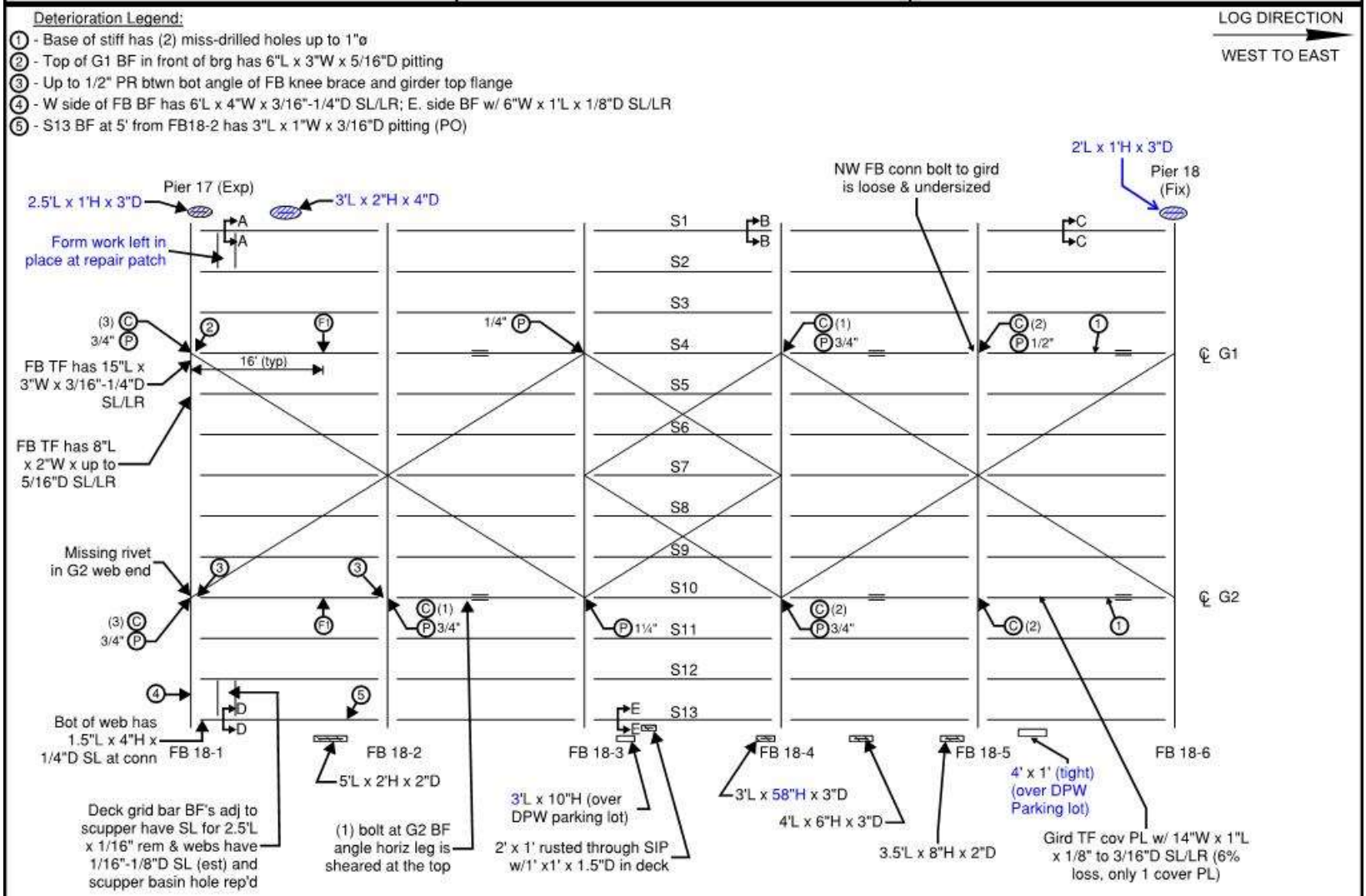

General Notes:
- See Underside of Deck and Steel Framing General Notes (Spans 6-21) sheet
- Fascia spalls/hollow areas are typically in bottom of parapet U.O.N.
- (F1) are special flexure locations (checked 100% hands-on w/no SL found)

LEGEND:
- HOLLOW AREA
- SHALLOW REBAR
- SPALL AREA
- SPALL AREA WITH EXPOSED REBAR
- MAPCRACKS
- HAIRLINE CRACKS
- HONEYCOMB AREA
- SCALE AREA
- EFFLORESCENCE PRESENT
- RIVETED FIELD SPLICE
- (C) # OF CRACKED/BROKEN TACK WELDS BTWN B-B STIFF ANGLES
- (P) UP TO __" THK PR BTWN B-B STIFF ANGLES

Span 18 - Underside of Deck and Framing

REVISION 1	DATE: 9/30/19	CREW: BH, JG (Baker)	REVISION 3	DATE:	CREW:
REVISION 2	DATE: 10/6/2021	CREW: CMR, NR, EB, SD (PRIME)	REVISION 4	DATE:	CREW:

CREW: SW, JG	DATE: 12/4/2017	BRIDGE NO.: 03819

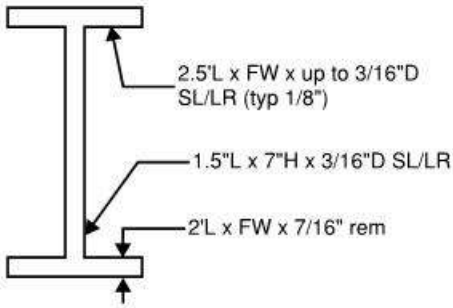

- Active leakage from the scupper above

Span 18 - S1 at 4' East of FB 18-1
Section A-A (looking east)

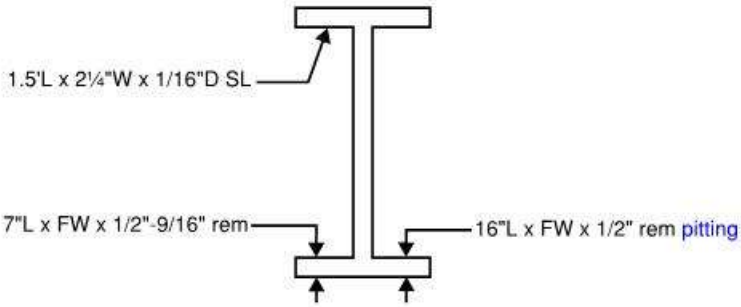

- Active laminate rust

Span 18 - S1 at 5' West of FB 18-4
Section B-B (looking east)

REVISION 1	DATE: 9/30/19	CREW: BH, JG (Baker)	REVISION 3	DATE:	CREW:
REVISION 2	DATE: 10/6/2021	CREW: CMR, NR, EB, SD (PRIME)	REVISION 4	DATE:	CREW:

CREW: SW, JG	DATE: 12/4/2017	BRIDGE NO.: 03819

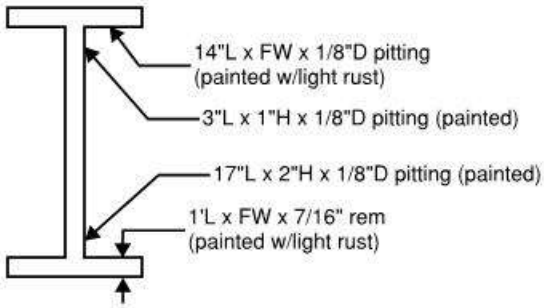

Span 18 - S1 at Mid-Panel East of FB 18-5
Section C-C (looking east)

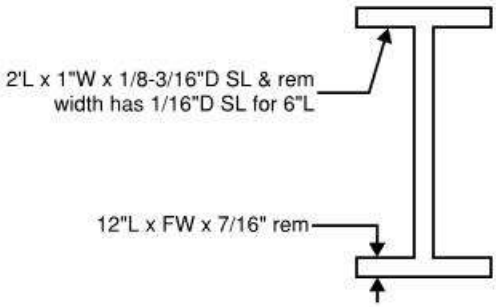

Span 18 - S13 at 4' East of FB 18-1
Section D-D (looking east)

- LR at all locations

REVISION 1	DATE: 9/12/19	CREW: BH, JG (Baker)	REVISION 3	DATE:	CREW:
REVISION 2	DATE: 10/7/2021	CREW: CMR, SD (PRIME) - No Change	REVISION 4	DATE:	CREW:

Sketches
Inspection type: Fracture Critical,Routine
Inspection Date: 7/26/2021
Inspected by: PRIME AE

:Bridge No 03819

Town: NEW LONDON
Carried: INTERSTATE 95 NORTHBOUND
Crossed: THAMES RV,RR,LOCAL ROADS
Inventory Route: NHS

CREW: SW, JG	DATE: 12/4/2017	BRIDGE NO.: 03819

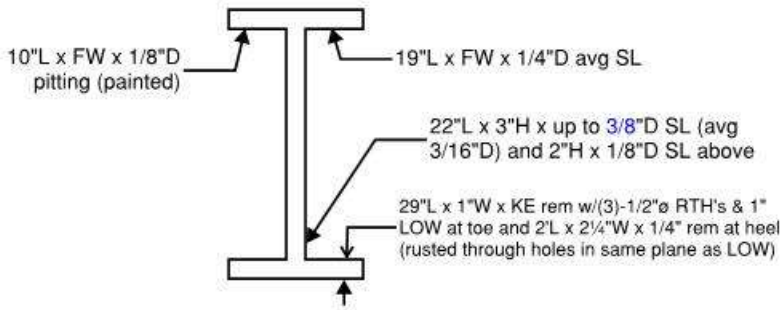

Span 18 - S13 at 7' East of FB 18-3
Section E-E (looking east)

- LR at all locations U.O.N.

REVISION 1	DATE: 9/12/19	CREW: BH, JG (Baker)	REVISION 3	DATE:	CREW:
REVISION 2	DATE: 10/13/2021	CREW: BM, CMR, SD (PRIME)	REVISION 4	DATE:	CREW:

CREW: SW, JG	DATE: 12/4/2017	BRIDGE NO.: 03819

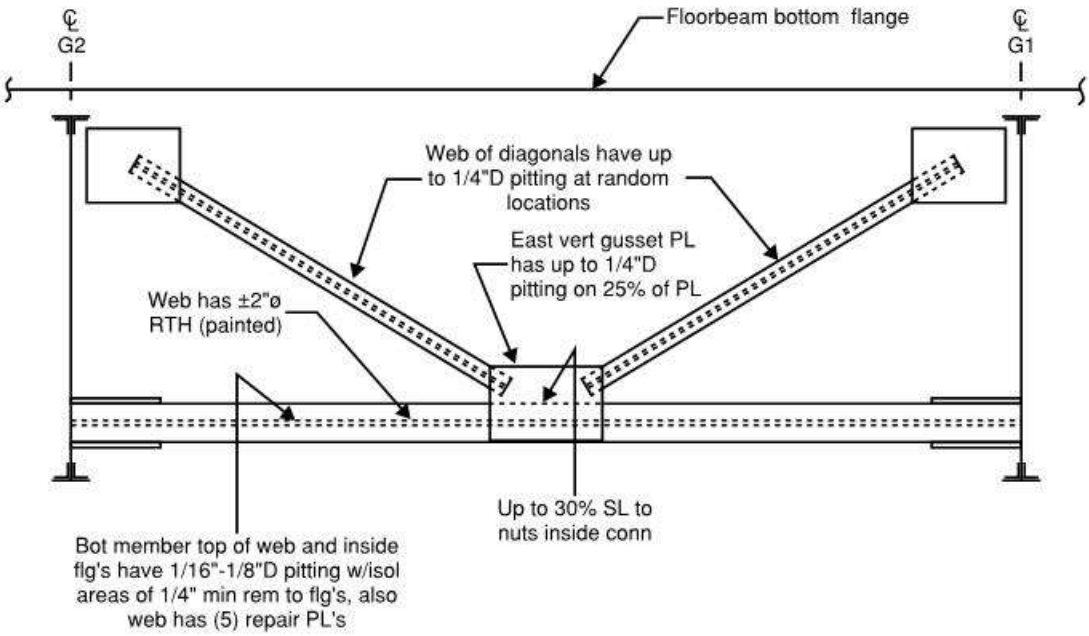

- Losses typically painted with re-rusting.

End Diaphragm Between Main Girders
Span 18 at Pier 17

REVISION 1	DATE: 9/30/19	CREW: BH, JG (Baker)	REVISION 3	DATE:	CREW:
REVISION 2	DATE: 10/6/2021	CREW: CMR, NR, EB, SD (PRIME) - No Change	REVISION 4	DATE:	CREW:

Sketches
Inspection type: Fracture Critical,Routine
Inspection Date: 7/26/2021
Inspected by: PRIME AE

:Bridge No 03819

Town: NEW LONDON
Carried: INTERSTATE 95 NORTHBOUND
Crossed: THAMES RV,RR,LOCAL ROADS
Inventory Route: NHS

CREW: SW, JG	DATE: 12/1/2017	BRIDGE NO.: 03819

Deterioration Legend:
1. - Up to __" thick pack rust between girder top or bottom flange cover plates
2. - Girder web above BF angle vert leg has up to 5'L x 1"H x up to 1/4"D pitting/LR
3. - Cracked tack weld between B-B stiff angles and girder TF or BF
4. - Top of web around cope has 5"L x 4.5"H x 1/16"-1/8"D pitting (painted)
5. - G2 TF cover PL has 2"L x 12"W x 1/8"D SL/LR; up to 1-1/8"Tk. PR btwn plates
6. - FB web o/ gird w/ 10"L x 3"H x 1/8"D SL/LR; stiff w/ 6"W x 3"H x 1/8"D SL/LR

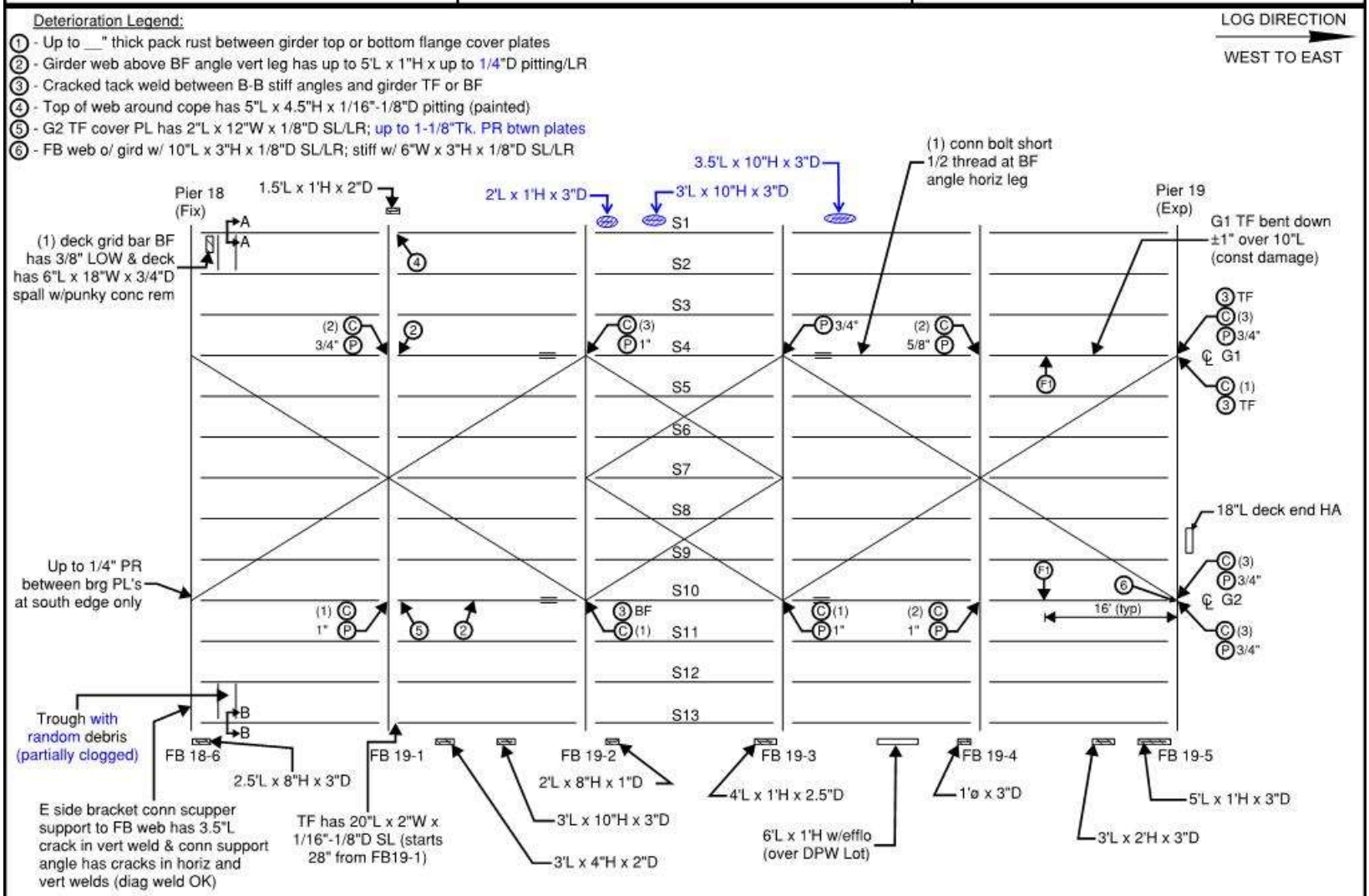

General Notes:

- See Underside of Deck and Steel Framing General Notes (Spans 6-21) sheet
- Fascia spalls/hollow areas are typically in bottom of parapet U.O.N.
- Wood form-work left in place at underside of deck joint at pier 19
- (F1) are special flexure locations (checked 100% hands-on w/no SL found)
- Horiz sway bracing at FB 19-3 has evid of lkg & silt stains at top of horiz bracing btwn girders

LEGEND:
- HOLLOW AREA
- SHALLOW REBAR
- SPALL AREA
- SPALL AREA WITH EXPOSED REBAR
- MAPCRACKS
- HAIRLINE CRACKS
- HONEYCOMB AREA
- SCALE AREA
- EFFLORESCENCE PRESENT
- RIVETED FIELD SPLICE
- (C) # OF CRACKED/BROKEN TACK WELDS BTWN B-B STIFF ANGLES
- (P) UP TO __" THK PR BTWN B-B STIFF ANGLES

Span 19 - Underside of Deck and Framing

REVISION 1	DATE: 9/12/19	CREW: BH, JG (Baker)	REVISION 3	DATE:	CREW:
REVISION 2	DATE: 10/7/2021	CREW: CMR, NR, EB, SD (PRIME)	REVISION 4	DATE:	CREW:

CREW: SW, JG	DATE: 12/1/2017	BRIDGE NO.: 03819

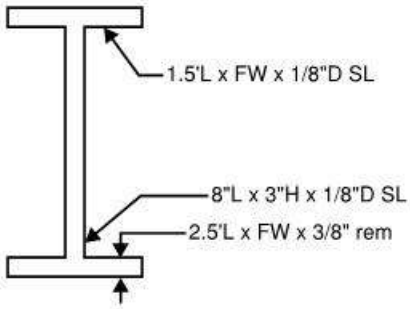

Span 19 - S1 at 5' East of FB 18-6
Section A-A (looking east)

- LR at all locations

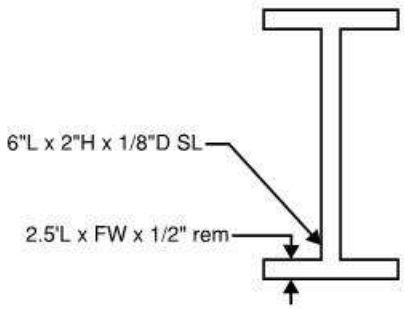

Span 19 - S13 at 5' East of FB 18-6
Section B-B (looking east)

- LR at all locations

REVISION 1	DATE: 9/12/19	CREW: BH, JG (Baker)	REVISION 3	DATE:	CREW:
REVISION 2	DATE: 10/7/2021	CREW: CMR, NR, EB, SD (PRIME) - No Change	REVISION 4	DATE:	CREW:

CREW: SW, JG	DATE: 12/1/2017	BRIDGE NO.: 03819

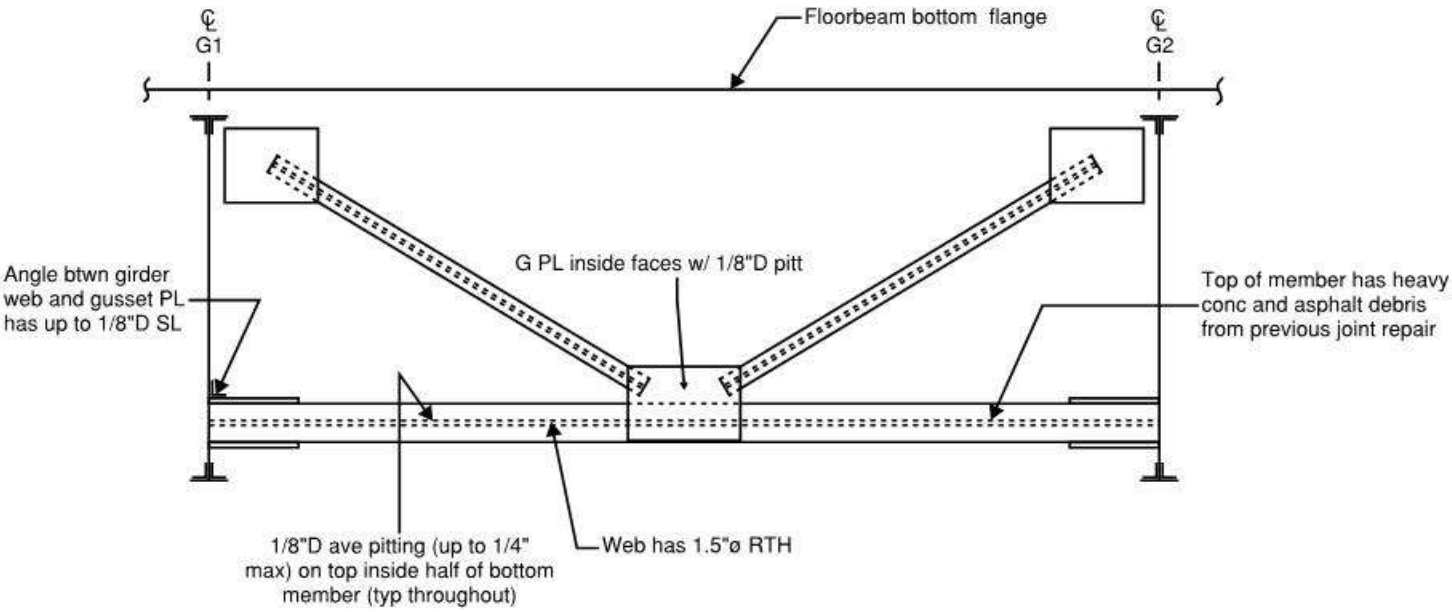

General Notes:
- All above noted losses are painted.

End Diaphragm Between Main Girders
Span 19 at Pier 19

REVISION 1	DATE: 9/30/19	CREW: BH, JG (Baker)	REVISION 3	DATE:	CREW:
REVISION 2	DATE: 10/7/2021	CREW: CMR, NR, EB, SD (PRIME) - No Change	REVISION 4	DATE:	CREW:

Sketches
Inspection type: Fracture Critical,Routine
Inspection Date: 7/26/2021
Inspected by: PRIME AE

:Bridge No 03819

Town: NEW LONDON
Carried: INTERSTATE 95 NORTHBOUND
Crossed: THAMES RV,RR,LOCAL ROADS
Inventory Route: NHS

CREW: SW, JG	DATE: 12/1/2017	BRIDGE NO.: 03819

Deterioration Legend:
1 - Up to __" thick pack rust between girder top or bottom flange cover plates
2 - Girder web above BF angle vert leg has up to 5'L x up to 2"H x up to 1/4"D SL (ave 3/16"D)/LR
3 - Cracked tack weld between B-B stiff angles and girder top flange
4 - 5/8" PR between girder TF and FB knee brace conn
5 - (1) broken rivet at clip angle at gird TF/knee brace due to IR

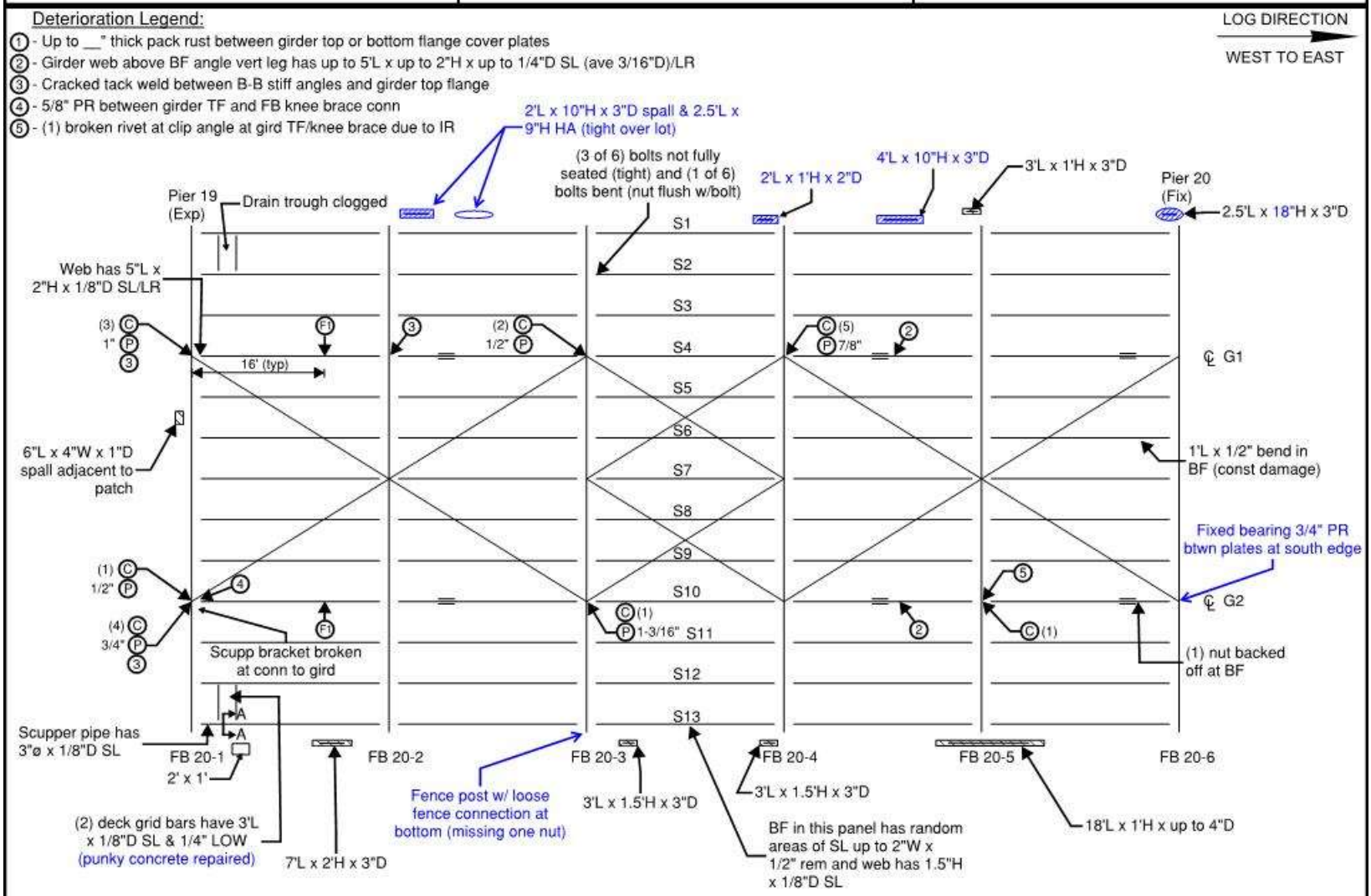

General Notes:
- See Underside of Deck and Steel Framing General Notes (Spans 6-21) sheet
- Fascia spalls are typically in bottom of parapet U.O.N.
- Wood form-work left in place at underside of deck joint at pier 19
- F1 are special flexure locations (checked 100% hands-on w/no SL found)

LEGEND:
- HOLLOW AREA
- SHALLOW REBAR
- SPALL AREA
- SPALL AREA WITH EXPOSED REBAR
- MAPCRACKS
- HAIRLINE CRACKS
- HONEYCOMB AREA
- SCALE AREA
- EFFLORESCENCE PRESENT
- RIVETED FIELD SPLICE
- C # OF CRACKED/BROKEN TACK WELDS BTWN B-B STIFF ANGLES
- P UP TO __" THK PR BTWN B-B STIFF ANGLES

Span 20 - Underside of Deck and Framing

REVISION 1	DATE: 9/12/19	CREW: BH, JG (Baker)	REVISION 3	DATE:	CREW:
REVISION 2	DATE: 10/7/2021	CREW: CMR, NR, EB, SD (PRIME)	REVISION 4	DATE:	CREW:

CREW: SW, JG	DATE: 12/1/2017	BRIDGE NO.: 03819

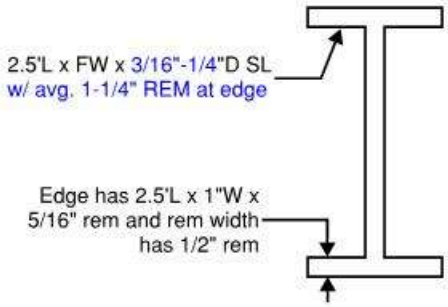

Span 20 - S13 at 4' East of FB 20-1
Section A-A (looking east)

- LR at all locations

REVISION 1	DATE: 9/12/19	CREW: BH, JG (Baker)	REVISION 3	DATE:	CREW:
REVISION 2	DATE: 10/13/2021	CREW: CMR, SD (PRIME)	REVISION 4	DATE:	CREW:

Sketches
Inspection type: Fracture Critical,Routine
Inspection Date: 7/26/2021
Inspected by: PRIME AE

:Bridge No 03819

Town: NEW LONDON
Carried: INTERSTATE 95 NORTHBOUND
Crossed: THAMES RV,RR,LOCAL ROADS
Inventory Route: NHS

CREW: SW, JG	DATE: 12/1/2017	BRIDGE NO.: 03819

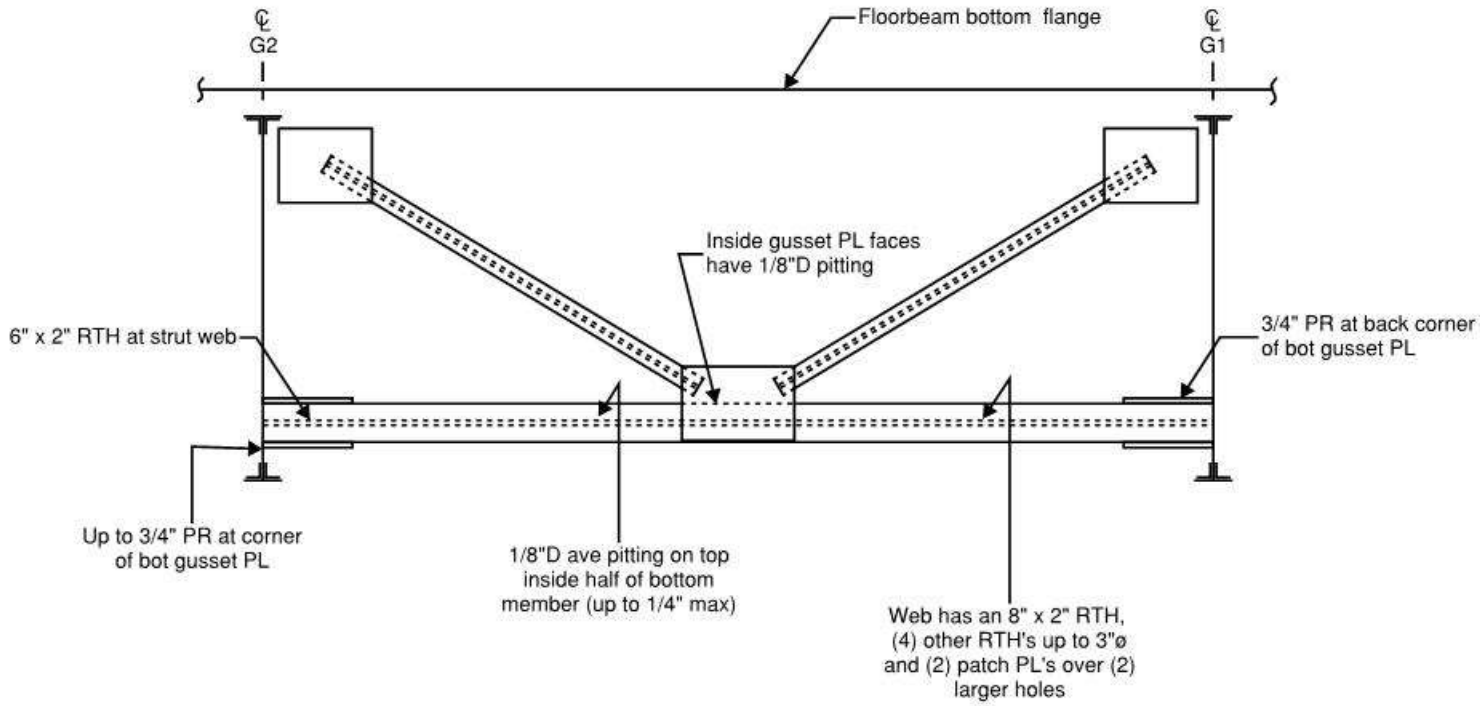

End Diaphragm Between Main Girders
Span 20 at Pier 19

REVISION 1	DATE: 9/30/19	CREW: BH, JG (Baker) - No change	REVISION 3	DATE:	CREW:
REVISION 2	DATE: 10/7/2021	CREW: CMR, NR, EB, SD (PRIME) - No Change	REVISION 4	DATE:	CREW:

Sketches
Inspection type: Fracture Critical,Routine
Inspection Date: 7/26/2021
Inspected by: PRIME AE

:Bridge No 03819

Town: NEW LONDON
Carried: INTERSTATE 95 NORTHBOUND
Crossed: THAMES RV,RR,LOCAL ROADS
Inventory Route: NHS

CREW: SW, JG	DATE: 11/30/2017	BRIDGE NO.: 03819

Deterioration Legend:
1 - Up to __" thick pack rust between girder top or bottom flange cover plates
2 - Girder web above BF angle vert leg has up to 5.5'L x up to 2"H x up to 3/16"D pitting/LR and up to 3/4" PR btwn BF angle vert leg and web
3 - Inspector rail adj to splice PL rattles under live load
4 - Lat bracing top horiz gusset PL has SL on 50% of the area with 1/8" min rem
5 - Lateral bracing has 3/16"D SL up to 2" away from top and bot gusset PL's (T & B FL's)
6 - TF w/ (2) areas w/ 18"W x 4"L x 1/8"D SL; top of web w/ 4"ø x 1/8"D pitt; BF w/ 1/16" pitt (all PO)
7 - Lateral bracing gusset plate w/ corners bent up to 2" due to pack rust

LOG DIRECTION → WEST TO EAST

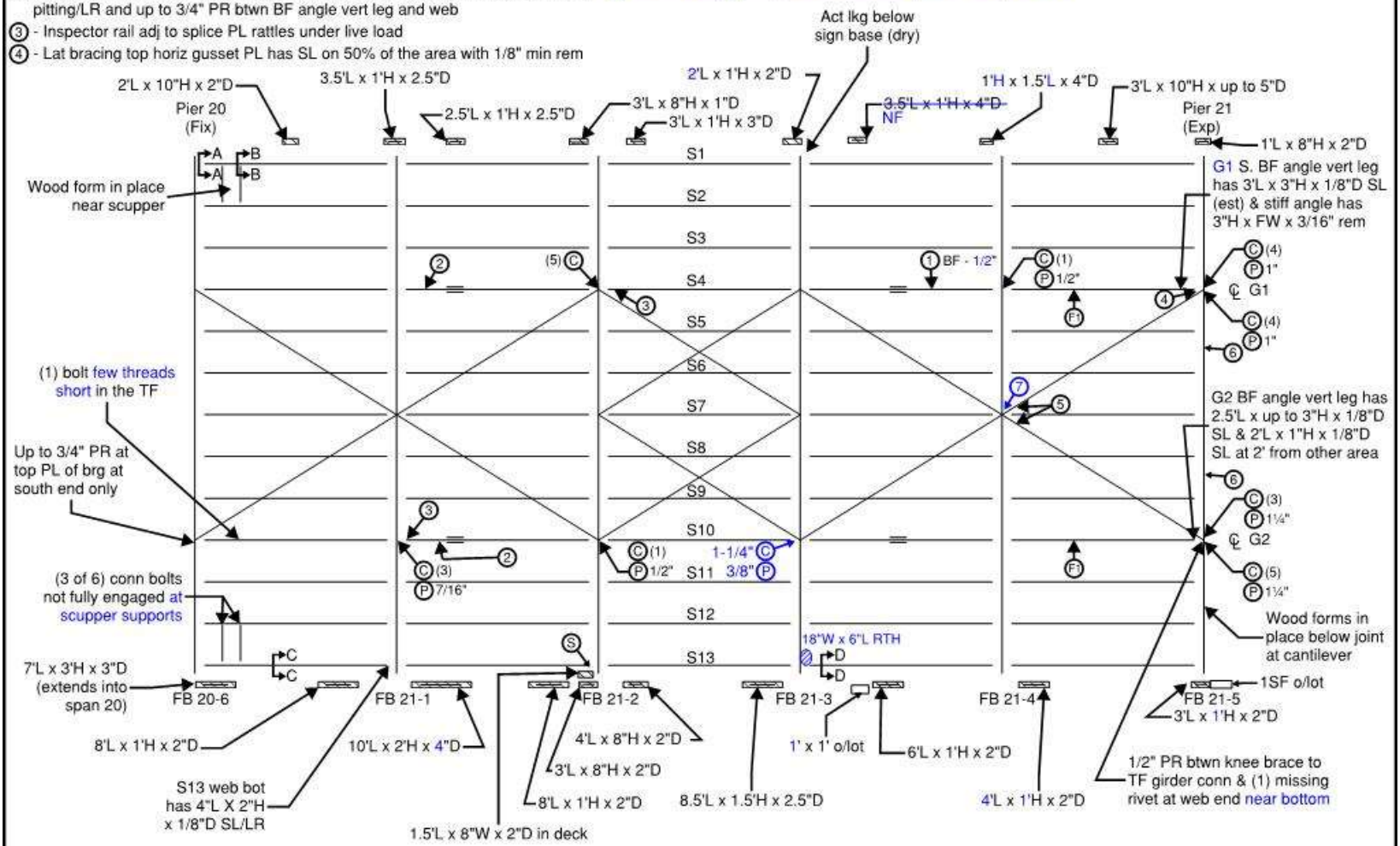

LEGEND:
- HOLLOW AREA
- SHALLOW REBAR
- SPALL AREA
- SPALL AREA WITH EXPOSED REBAR
- MAPCRACKS
- HAIRLINE CRACKS
- HONEYCOMB AREA
- SCALE AREA
- EFFLORESCENCE PRESENT
- RIVETED FIELD SPLICE
- C # OF CRACKED/BROKEN TACK WELDS BTWN B-B STIFF ANGLES
- P UP TO __" THK PR BTWN B-B STIFF ANGLES
- S SEE SKETCH

General Notes:
- See Underside of Deck and Steel Framing General Notes (Spans 6-21) sheet
- Fascia spalls are typically in bottom of parapet U.O.N.
- G1 BF at pier 21 has (3) missing rivets replaced w/plug welds
- F1 are special flexure locations (checked 100% hands-on w/no SL found)
- Barrel ladder at Pier 21 has (1) rail section broken near the top

Span 21 - Underside of Deck and Framing

REVISION 1	DATE: 9/12/19	CREW: BH, JG (Baker)	REVISION 3	DATE:	CREW:
REVISION 2	DATE: 10/14/2021	CREW: EG, NR, MM, SD (PRIME)	REVISION 4	DATE:	CREW:

Sketches
Inspection type: Fracture Critical,Routine
Inspection Date: 7/26/2021
Inspected by: PRIME AE

:Bridge No 03819

Town: NEW LONDON
Carried: INTERSTATE 95 NORTHBOUND
Crossed: THAMES RV,RR,LOCAL ROADS
Inventory Route: NHS

CREW: BH, JG (Baker)	DATE: 9/12/2019	BRIDGE NO.: 03819

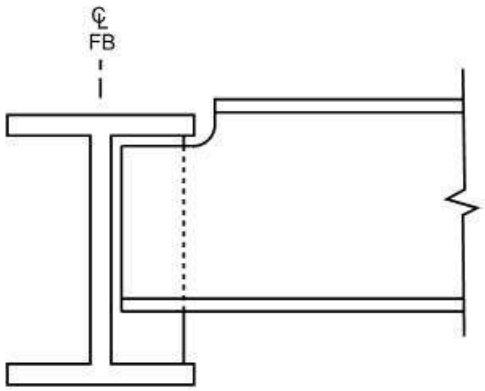

Span 21 - S13 at West Side of FB 21-2
North Elevation

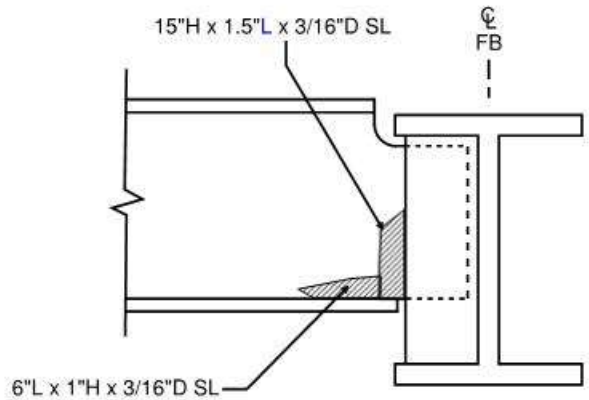

- LR at all locations
- Web depth at coping = 20"

Span 21 - S13 at West Side of FB 21-2
South Elevation

REVISION 1	DATE: 9/12/19	CREW: BH, JG (Baker)	REVISION 3	DATE:	CREW:
REVISION 2	DATE: 10/18/2021	CREW: EG, SD (PRIME)	REVISION 4	DATE:	CREW:

CREW: SW, JG	DATE: 11/30/2017	BRIDGE NO.: 03819

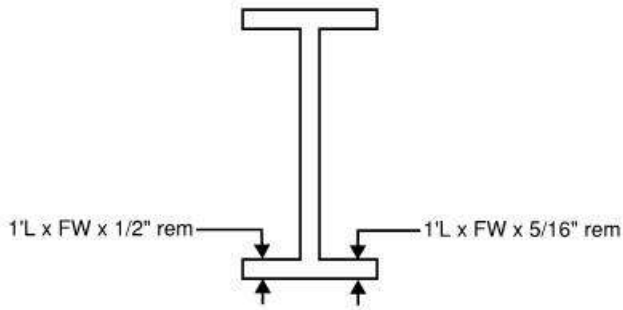

Span 21 - S1 at 5' East of FB 20-6
Section A-A (looking east)

- LR at all locations

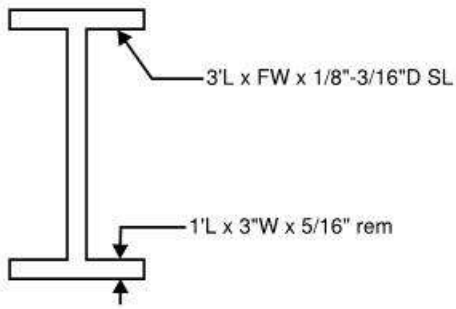

Span 21 - S1 at 7' East of FB 20-6
Section B-B (looking east)

- LR at all locations

REVISION 1	DATE: 9/26/19	CREW: BH, BF (Baker)	REVISION 3	DATE:	CREW:
REVISION 2	DATE: 10/14/2021	CREW: NR, MM (PRIME) - No Change	REVISION 4	DATE:	CREW:

CREW: SW, JG	DATE: 11/30/2017	BRIDGE NO.: 03819

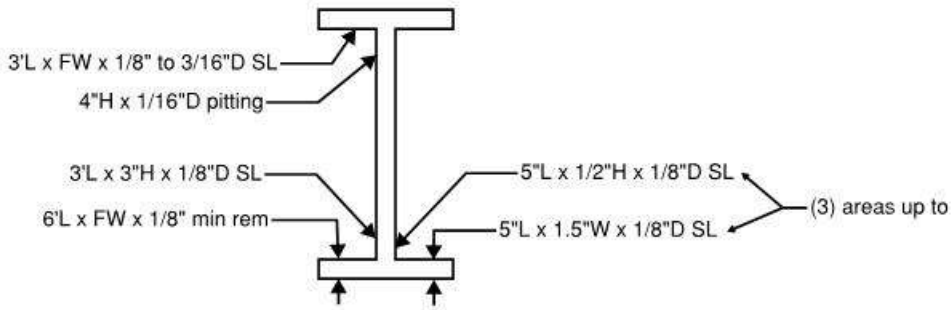

Span 21 - S13 at 7' East of FB 20-6
Section C-C (looking east)

- LR at all locations

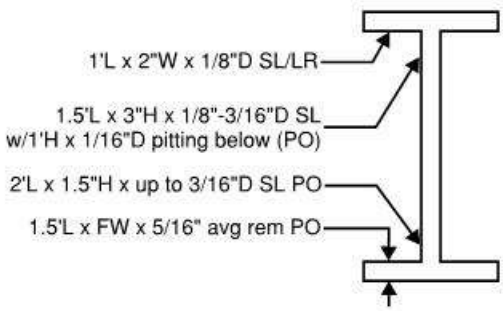

Span 21 - S13 at 2' East of FB 21-3
Section D-D (looking east)

REVISION 1	DATE: 9/12/19	CREW: BH, JG (Baker)	REVISION 3	DATE:	CREW:
REVISION 2	DATE: 10/18/2021	CREW: EG, SD (PRIME) - No Change	REVISION 4	DATE:	CREW:

CREW: SW, JG	DATE: 11/30/2017	BRIDGE NO.: 03819

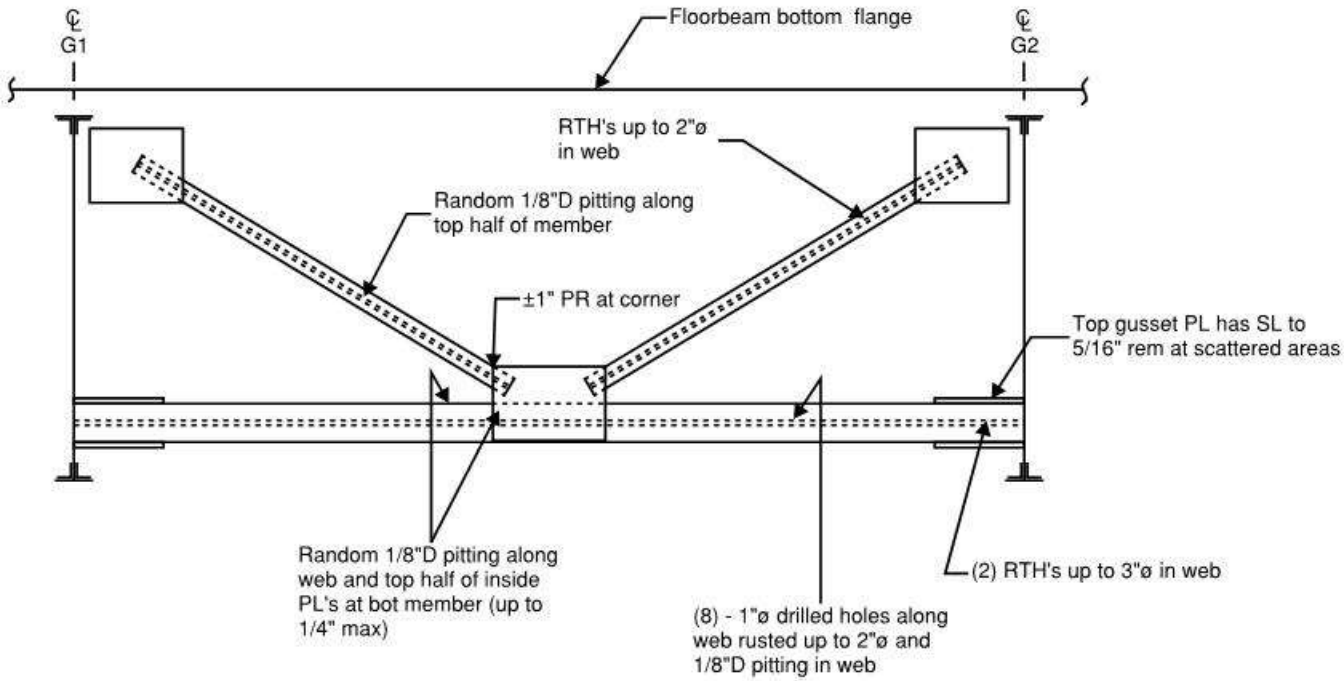

End Diaphragm Between Main Girders
Span 21 at Pier 21

REVISION 1	DATE: 10/1/19	CREW: BH, JG (Baker) - No change	REVISION 3	DATE:	CREW:
REVISION 2	DATE: 10/14/2021	CREW: EG, NR, MM, SD (PRIME) - No Change	REVISION 4	DATE:	CREW:

CREW: SW, BF	DATE: 9/27/2017	BRIDGE NO.: 03819

Underside of Deck and Steel Framing General Notes - Spans 22-25 & 29-32

Underside of Deck:
- Underside of the stay-in-place (SIP) forms typically have random areas of light reoccurring rust, peeling paint and isolated areas of heavy to laminated rust.
- Random SIP forms are bent and/or pushed down up to 4' long x up to 4" (as-built condition).
- SIP forms along both overhangs and near the scuppers have random areas of moderate to heavy rust, efflorescence and active leakage with random rusted through holes up to 16" diameter. Also SIP forms are rusted out up to 1' diameter around the weeps with deck spalls at isolated locations.
- Deck grid bars at each fascia have random locations of laminated rust with up to 1/16"-1/8" deep section loss, especially adjacent to parapet spall locations.
- Deck grid bars adjacent to scuppers have laminated rust with up to 1/16"-1/8" deep section loss.
- Deck grid bars adjacent to rusted out SIP forms have bottom flanges with laminated rust with negligible to 1/16"D SL.
- Most PVC weeps extend below stringer bottom flanges. Several abandoned and plugged short weeps are actively leaking onto the deck and structural steel.
- Scuppers not shown on sketches unless deficient.
- Drainage troughs are clear of heavy debris, unless otherwise noted.
- ~~Hollow concrete removed by contractor after 2019 inspection (per Hammonassett list, to be verified next inspection)~~ Previously removed hollow areas since the last inspection with the resulting spalls have been verified and noted this inspection.
- Random rebar within spalls along the underside of the parapet are coated with spray paint.

Stringers:
- Random areas of peeling paint with varying degrees of rusting, up to laminated with negligible section loss.
- Fascia stringer top flanges at old/plugged weeps have section loss up to 12" long x 2" wide x up to 1/4" deep (up to 12% loss).
- Fascia stringer top and bottom flanges at scupper locations have section loss up to 3' long x full width x 1/8" deep (typically less-critical areas U.O.N.).
- Stringer to floorbeam connections have up to 1/4" gaps/pack rust at random locations.
- Stringer to floorbeam connections have light to moderate abrasion rust with isolated locations of heavy abrasion rust. Connection bolts are tight unless otherwise noted.

Floorbeams:
- Random areas of peeling paint with varying degrees of rusting, up to laminated with negligible section loss.
- Random abrasion dust between the vertical web stiffeners and floorbeam flanges.
- Floorbeam end plates have up to 1/4" deep section loss.
- Bottom flanges adjacent to random vertical stiffeners have areas of section loss up to 9" diameter x 3/16" deep (typically in cantilever sections), up to 6% loss.
- Top flanges at ends have up to 2.5' long x 3" wide x 1/8"-3/16" deep section loss (non-critical areas).
- Webs in the cantilever sections have random areas of section loss up to 8" long x 8" high x 1/8" deep (typically less critical areas U.O.N).
- Vertical stiffeners at cantilever sections at deck joint locations have full width x 3" high x 1/4" deep section loss at the base.
- Up to 1/2" thick pack rust between the floorbeam bottom flange and horizontal gusset plates at random locations.
- Up to 3/4" thick pack rust between the fill plates below the floorbeam bottom flange and top of the truss top chord at random locations and between the floorbeam shim plates. Also random shim plates are bent due to pack rust.
- Up to 1/4" edge gaps between sway brace and floorbeam bottom flange connection.

General:
- Specific areas of section loss and/or pitting losses shown on the field sheets are typically painted with some minor re-rusting, U.O.N.
- Superstructure creaks under heavy live load. Vibration in span 23 was noted to be slightly more than in other spans.
- Isolated mis-drilled holes in various bridge components.
- Scupper support framing has heavy to laminated rust at random locations with up to 3/16" deep section loss to both flanges and web.
- LR = Laminated rust; PO = Painted over; RR = painted over with re-rusting; LOW= Loss of width; B-B= Back to Back

Lateral Bracing and Sway Bracing:
- See truss section for these general notes.

REVISION 1	DATE: 8/19/19	CREW: BH, JG (Baker)	REVISION 3	DATE:	CREW:
REVISION 2	DATE: 07/26/2021	CREW: BM, NR, EG, CMR, EB, NH, IS, SD (PRIME AE)	REVISION 4	DATE:	CREW:

CREW: SW, JG	DATE: 2/6/2018	BRIDGE NO.: 03819

Catwalk Notes

General Notes:
- There are areas of peeling paint with moderate rust.
- Tread plates have laminated rust up to 1/4" thick with random areas of section loss up to 1/16" deep, isolated 1/8"D.
- There is up to 3/8" thick pack rust (isolated locations up to 1/2") at the post, diagonal angles to railing connections at random locations.
- Post angles and railing angles typically have 1/8" deep section loss at interface. Isolated railing angles at these locations have 1/16" remaining.
- Random connections have abrasion rust.
- Light to moderate vibration at random locations.
- Random tread plate interfaces with up to 1/2" high vertical misalignment.
- Areas of section loss typically have laminated rust.

Barrel Ladder General Notes:
- Random peeling paint with laminated rust on the rungs.
- Random rungs with up to 1/8" deep section losses.
- Random ladders with heavy vibration.
- Random minor bends/dents at barrel ladder cages.
- Ladders in contact with T-hangers at random floorbeam locations.

Span 21:
- Near pier 21, transverse catwalk connection plate to bracing is disconnected at (2) locations.

Span 22:
- Tread plates between longitudinal and transverse platform at pier 21 has 3" x 1" RTH and heavy rust at welds.
- Chain at barrel ladder access disconnected, missing hook.

Span 23:
- See general notes.

Span 24:
- South side end post at pier 23 has 3/16"D SL, tread plate is missing (1) bolt and connection bolts to south stringer channel are rose-budded with negligible section loss.

Span 25:
- Panel 10 expansion plate (pier 25) at southeast corner has 8" x 4" (L-shape) RTH (hole is through tread plate and expansion plate) w/ LR
- ~~Panel 9, south top rail with 1"ø RTH adj to vertical angle w/ LR~~. (NF)
- ~~Panel 8, north top rail with 1"ø RTH adj to vertical angle w/ LR~~. (NF)

Span 26:
- Transverse catwalk stairs at diagonal support channel and horizontal channel at north side at pier 26 have up to 3/4" thick pack rust.
- Transverse catwalk at pier 26 at vertical connection, below north truss top chord has (2) mis-drilled holes.
- Random tread vertical legs w/ up to full height x 6"L RTH's w/ LR

REVISION 1	DATE: 11/20/19	CREW: AH, BF (Baker)	REVISION 3	DATE:	CREW:
REVISION 2	DATE: 10/14/2021	CREW: EA, IS (PRIME)	REVISION 4	DATE:	CREW:

CREW: SW, JG	DATE: 2/6/2018	BRIDGE NO.: 03819

Catwalk Notes

Span 27:
- Catwalk expansion plates at the west and east pins have up to 2" and 1/2" vertical misalignment respectively. Catwalk plates adjacent to expansion plates have up to 1.5" pack rust along the edges.
- Tread plates have isolated areas of section loss up to 1/8" deep w/RTH's up to 1/8"ø.
- Expansion plate at FB 20 has 12"L x 2"W area w/RTH's and KE remaining.
- Top of stairs at FB 20 has up to 1" thick pack rust between vertical plate and sidewalk stringer channels with cracks in welds; 1"L at NW, 4¾"L at NE, & 4"L at SE.
- Top of stairs at FB 24 has up to 7/8" thick pack rust between vertical PL and sidewalk stringer channels with cracks in welds: 2"L at NE, 3.5"L at SW and 5"L at SE.
- Top of stairs at FB 26 has up to 1" thick pack rust between vertical plate and sidewalk stringer channels with cracks in welds; 5.5"L at NW & 4"L at NE.
- FB 26 stair ~~railing top post at west side and~~ (NF) top railing angle at east side are wearing into bracing members up to 3/8".
- FB 26 stair top railing at east side at bottom of stairs has a 3/8"ø RTH.
- East of FB 26, 1st diagonal angle at north side has (2) loose bolts at bottom and angle is loose.
- Tread PLs at FB 26 at gap w/ FW x 6"L x 1/8"-3/16"D avg remaining with numerous RTH's w/ LR: expansion plate is loose.
- Pier 27 barrel ladder platform at mid-height of sway bracing has one plate loose with all connection bolts missing/broken and adj plate at east edge can be lifted up.
- South truss at L19 catwalk support for navigation light has (8) of (10) bolts rusted out connecting catwalk plate to support angles and pack rust up to 1" thick.
- South truss at L19 catwalk is missing 1/2 bolts at the underside.
- South truss L19 lower side catwalk, first tread plate just above gusset plate with broken tack welds & lifted up 4" high,
- South truss at L23 has broken tack welds between catwalk floor plate and bracket at west side, south connection.
- South truss at L23 catwalk floor plate has (3) of (4) bolts missing at west edge and (4) of (4) bolts missing at east edge and floor plate is loose.
- ~~South truss at L27 catwalk platform for navigation light has (10) of (10) bolts rusted out with up to 1/2" thick pack rust. Platform is not secure with 2" gaps between plates and support plate angles~~. (NF)
- North truss at L19 platform support at bottom east side is missing 7 of 9 bolts between angle and channel at underside with up to 1/4" thick pack rust (plate is secure).
- Bases of fixed ladders at piers 26 & 27 have no hand rails.

Span 28:
- Panel 1 transverse catwalk at support has (2) mis-drilled holes.
- Panel 13 expansion tread plate is vertically misaligned with adjacent catwalk up to 1-1/2" with (2) of (4) bolts missing (plate secure).

Span 29:
- Isolated loose bolts between the stringer diaphragms and the catwalk sway brace angles.

Span 30:
- See general notes.
- Expansion/slide PL at Pier 30 w/ (4) missing bolts, secure at underside.

Span 31:
- FB 2 catwalk support angle at connection to FB bottom flange, vertical leg is torch cut.
- Panel 10 at the north and south vertical support angle connections to the horizontal gusset plate at the center of the panel are missing welds.

Span 32:
- Panel 10 (b/w U1 & U0) north railing post to stringer channel has (1) bolt backed off and loose.

Span 33:
- Inspection platforms have been previously removed in span 33 (over railroad).
- The platforms and hand bars are only in place along the mainline girders, not along the ramp girders.
- The chain is missing at the platform below girder 1 at pier 33.

REVISION 1	DATE: 11/20/19	CREW: AH, BF (Baker)	REVISION 3	DATE:	CREW:
REVISION 2	DATE: 10/14/2021	CREW: EA, IS (PRIME)	REVISION 4	DATE:	CREW:

Sketches
Inspection type: Fracture Critical,Routine
Inspection Date: 7/26/2021
Inspected by: PRIME AE

:Bridge No 03819

Town: NEW LONDON
Carried: INTERSTATE 95 NORTHBOUND
Crossed: THAMES RV,RR,LOCAL ROADS
Inventory Route: NHS

CREW: MW, SW	DATE: 8/30/2017	BRIDGE NO.: 03819

Deterioration Legend:
1 - FB0 bot flg has 1'L x 5"W x 3/16"D SL/LR & web stiff has FW x 1.5"H RTH/LR
2 - ~~S6 conn to FB0 has 1 of 7 bolts not fully engaged~~ NF
3 - (2) 6"L x 3'W SIP's rusted through w/spall in deck adjacent to west end of scupper grating. Hole in the deck to the east side of scupper grating has been repaired; Deck grid bars adj to scupper have up to 2"Ø RTH's in web end and 1/8" rem to BF w/ LR
P - Pack rust btwn lateral bracing member and horizontal gusset plates.

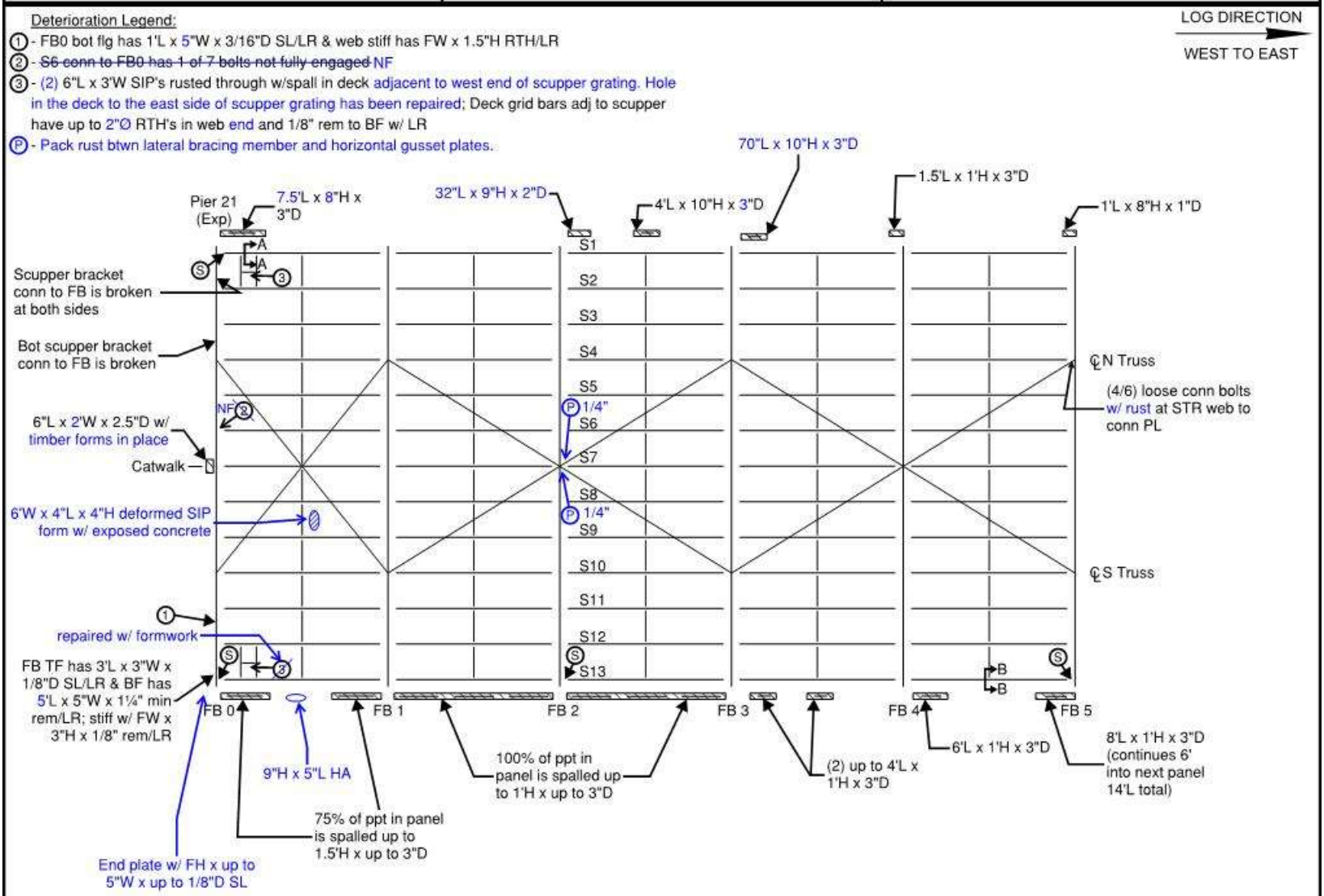

General Notes:

- See Underside of Deck and Steel Framing General Notes (Spans 22-25 & 29-32) sheet
- Fascia spalls are typically in bottom of parapet U.O.N.
- Random exposed rebar at south fascia have up to 1/8"D SL (coated since last inspection)
- Random wood forms left in place below Pier 21 joint FL

LEGEND:
- HOLLOW AREA
- SHALLOW REBAR
- SPALL AREA
- SPALL AREA WITH EXPOSED REBAR
- MAPCRACKS
- HAIRLINE CRACKS
- HONEYCOMB AREA
- SCALE AREA
- EFFLORESCENCE PRESENT
- SEE SKETCH

Span 22 - Underside of Deck and Framing West Half

REVISION 1	DATE: 9/10/19	CREW: AH, BF (Baker)	REVISION 3	DATE:	CREW:
REVISION 2	DATE: 10/14/2021	CREW: BM, CMR, IS, NH, AN, EA (PRIME)	REVISION 4	DATE:	CREW:

CREW: MW, SW	DATE: 8/30/2017	BRIDGE NO.: 03819

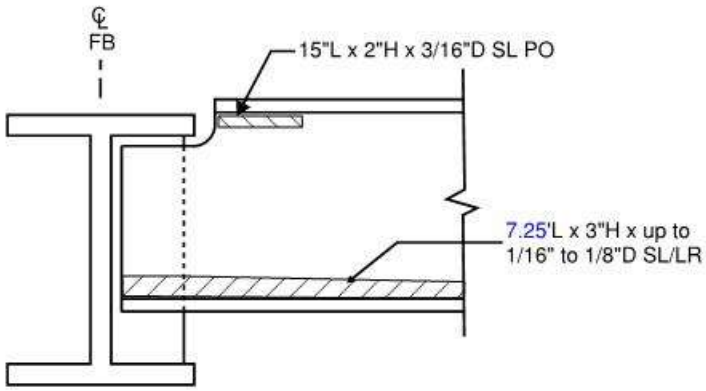

Span 22 - S1 at East Side of FB 0
South Elevation

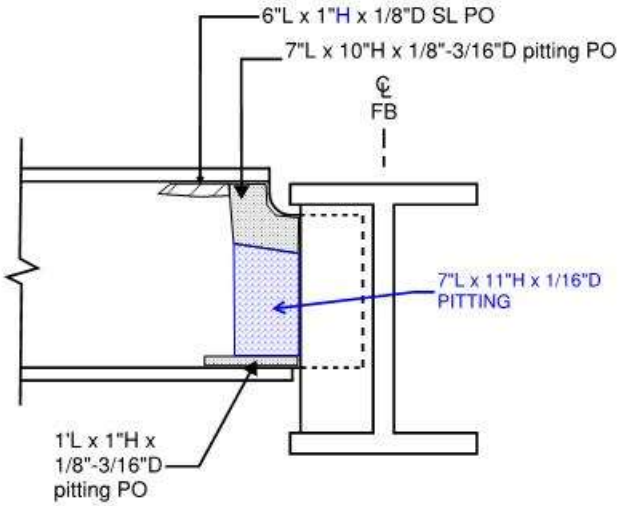

Span 22 - S1 at East Side of FB 0
North Elevation

REVISION 1	DATE: 9/10/19	CREW: AH, BF (Baker)	REVISION 3	DATE:	CREW:
REVISION 2	DATE: 8/2/2021	CREW: BM, IS (PRIME)	REVISION 4	DATE:	CREW:

Sketches
Inspection type: Fracture Critical,Routine
Inspection Date: 7/26/2021
Inspected by: PRIME AE

:Bridge No 03819

Town: NEW LONDON
Carried: INTERSTATE 95 NORTHBOUND
Crossed: THAMES RV,RR,LOCAL ROADS
Inventory Route: NHS

CREW: SW, BF	DATE: 11/7/2017	BRIDGE NO.: 03819

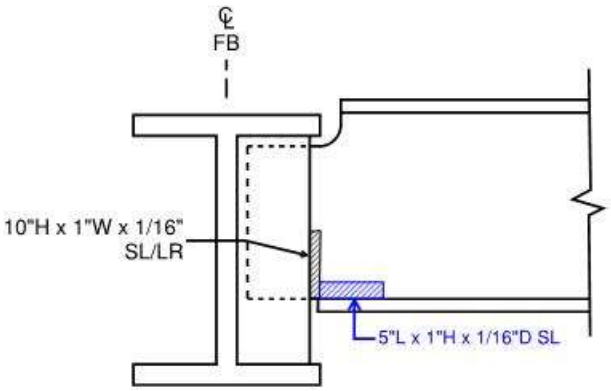

Span 22 - S13 at East Side of FB 0
South Elevation

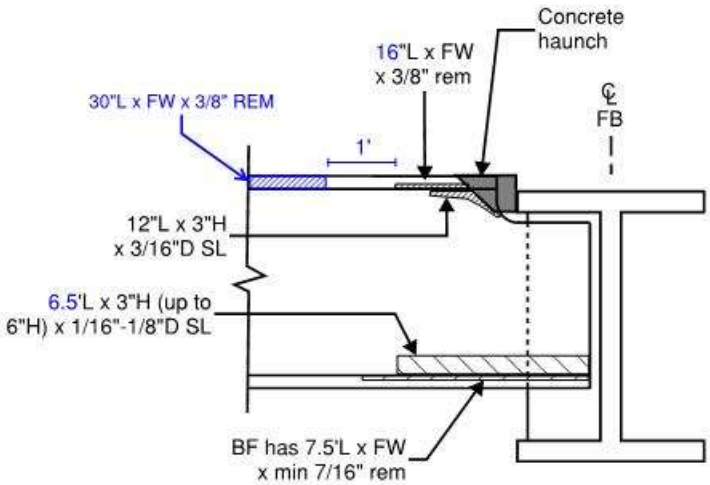

- LR at all locations

Span 22 - S13 at East Side of FB 0
North Elevation

REVISION 1	DATE: 9/11/19	CREW: AH, BF (Baker)	REVISION 3	DATE:	CREW:
REVISION 2	DATE: 8/4/2021	CREW: BM, NH (PRIME)	REVISION 4	DATE:	CREW:

CREW: SW, BF	DATE: 11/7/2017	BRIDGE NO.: 03819

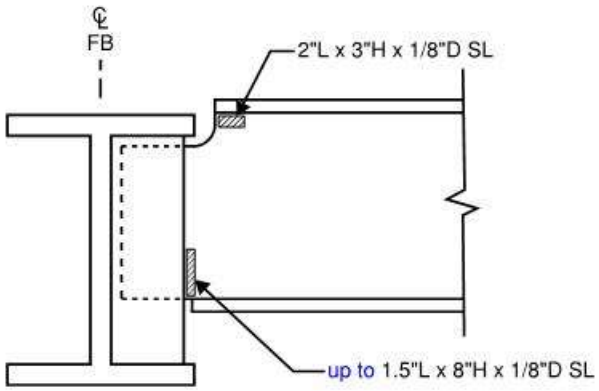

Span 22 - S13 at East Side of FB 2
South Elevation

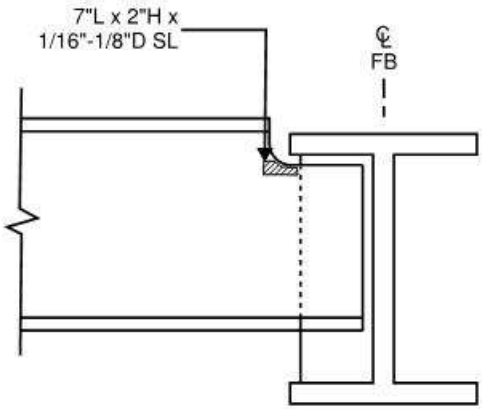

Span 22 - S13 at East Side of FB 2
North Elevation

- LR at all locations

REVISION 1	DATE: 9/11/19	CREW: AH, BF (Baker)	REVISION 3	DATE:	CREW:
REVISION 2	DATE: 8/4/2021	CREW: BM, NH (PRIME)	REVISION 4	DATE:	CREW:

CREW: SW, BF	DATE: 11/7/2017	BRIDGE NO.: 03819

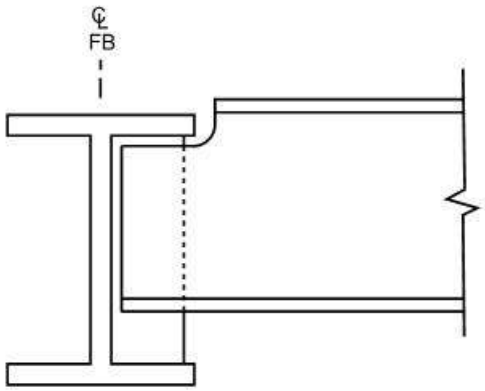

Span 22 - S13 at West Side of FB 5
North Elevation

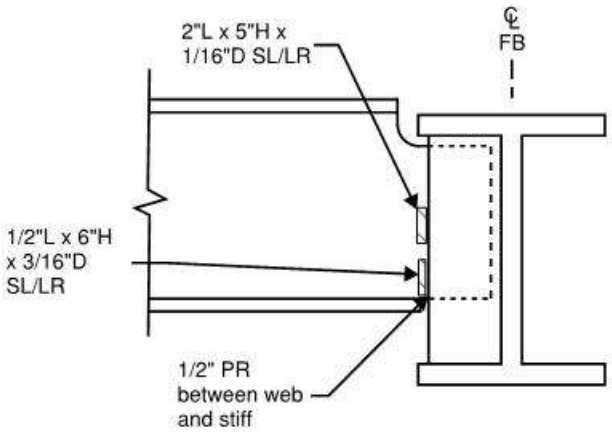

Span 22 - S13 at West Side of FB 5
South Elevation

REVISION 1	DATE: 11/19/19	CREW: BH, JG (Baker)	REVISION 3	DATE:	CREW:
REVISION 2	DATE: 8/16/2021	CREW: CMR, AN (PRIME) - No Change	REVISION 4	DATE:	CREW:

CREW: MW, SW	DATE: 8/30/2017	BRIDGE NO.: 03819

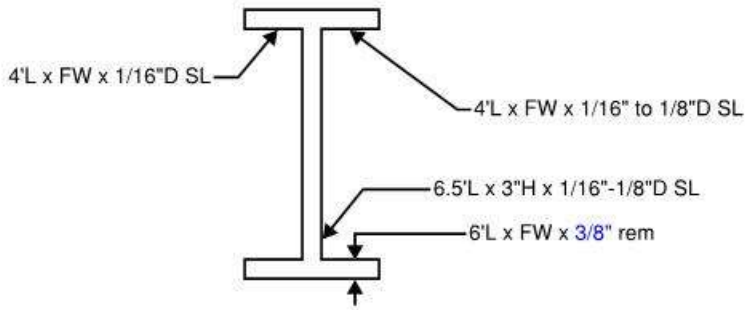

Span 22 - S1 at ±6' East of FB 0
Section A-A (looking east)

- LR at all locations

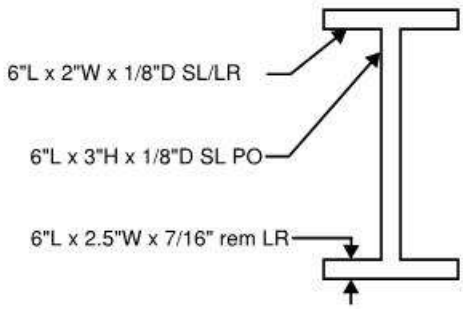

Span 22 - S13 at Mid-Panel West of FB 5
Section B-B (looking east)

REVISION 1	DATE: 9/11/19	CREW: AH, BF (Baker)	REVISION 3	DATE:	CREW:
REVISION 2	DATE: 8/16/2021	CREW: BM, CMR, AN, IS (PRIME)	REVISION 4	DATE:	CREW:

Sketches
Inspection type: Fracture Critical,Routine
Inspection Date: 7/26/2021
Inspected by: PRIME AE

:Bridge No 03819

Town: NEW LONDON
Carried: INTERSTATE 95 NORTHBOUND
Crossed: THAMES RV,RR,LOCAL ROADS
Inventory Route: NHS

CREW: MW, SW	DATE: 8/30/2017	BRIDGE NO.: 03819

Deterioration Legend:
1 - 2.5'L x 9"H x 3"D spall w/exp reb w/adj 5'L x 9"H x 3"D spall & adj 20"L x 9"H HA over RR tracks
2 - 6"L x 3'W SIP's rusted through w/spalls in deck up to 2"D w/exp reb; Deck grid bars adj to scupper have min 1/16"-1/8" rem to BF (active leakage)
3 - Str BF S. leg w/ 16"L x 2"W x 1/8"D SL/LR
4 - Undercut weld at base of FB VT stiff (ground out & UT tested by CTDOT in 2019, no cracking)
5 - Gusset plate is bent up for 14"L x up to 1"H
P - Pack rust btwn lateral bracing member and horizontal gusset plates.

LOG DIRECTION → WEST TO EAST

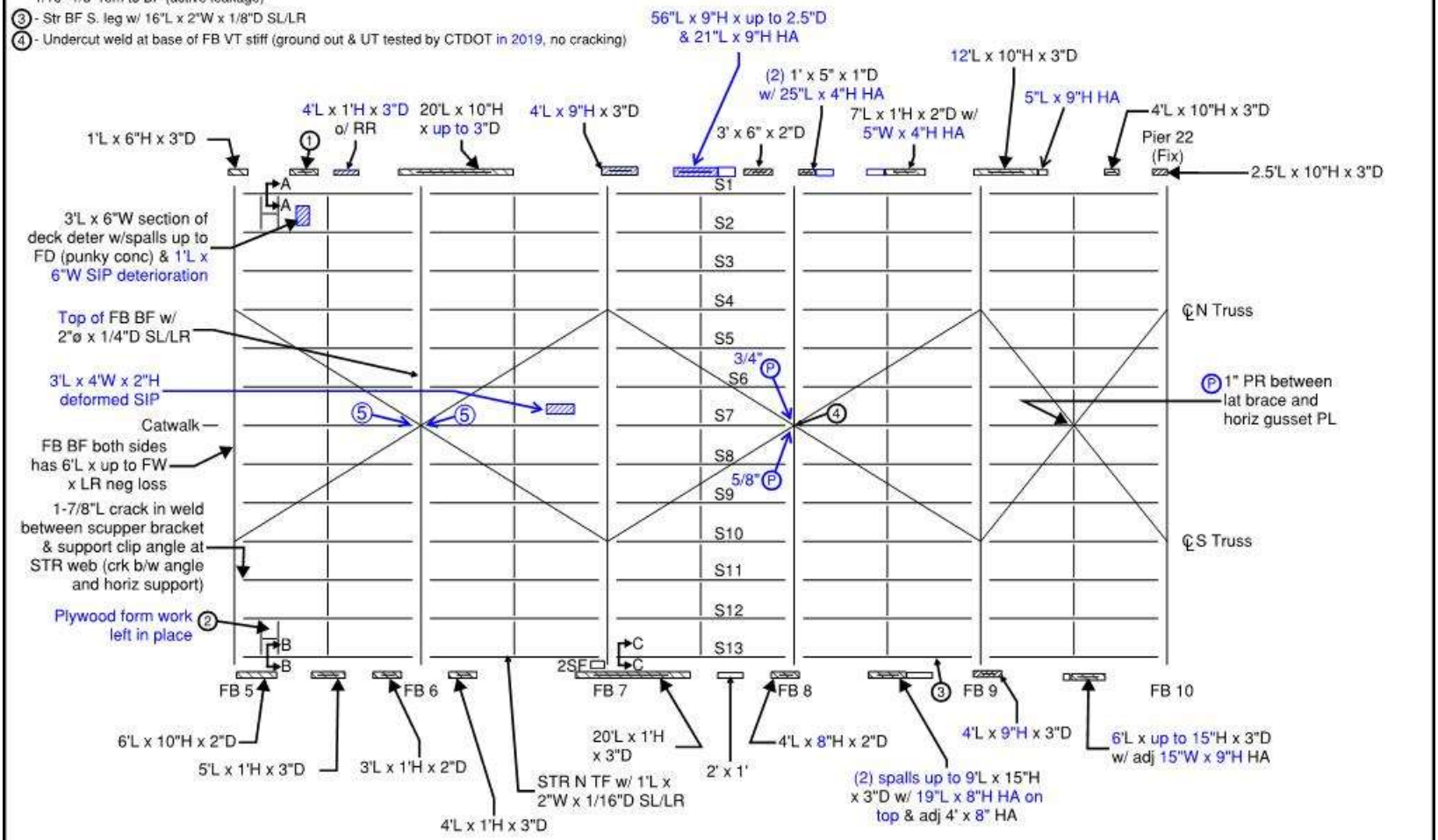

General Notes:

- See Underside of Deck and Steel Framing General Notes (Spans 22-25 & 29-32) sheet
- Fascia spalls are typically in bottom of parapet U.O.N.
- Random exposed rebar at south fascia have up to 1/8"D SL (coated since last inspection)

LEGEND:
- HOLLOW AREA
- SHALLOW REBAR
- SPALL AREA
- SPALL AREA WITH EXPOSED REBAR
- MAPCRACKS
- HAIRLINE CRACKS
- HONEYCOMB AREA
- SCALE AREA
- EFFLORESCENCE PRESENT

Span 22 - Underside of Deck and Framing East Half

REVISION 1	DATE: 9/10/19	CREW: AH, BF (Baker)	REVISION 3	DATE:	CREW:
REVISION 2	DATE: 7/27/2021	CREW: BM, CMR, AN, IS, NH, EA (PRIME)	REVISION 4	DATE:	CREW:

CREW: MW, SW	DATE: 8/30/2017	BRIDGE NO.: 03819

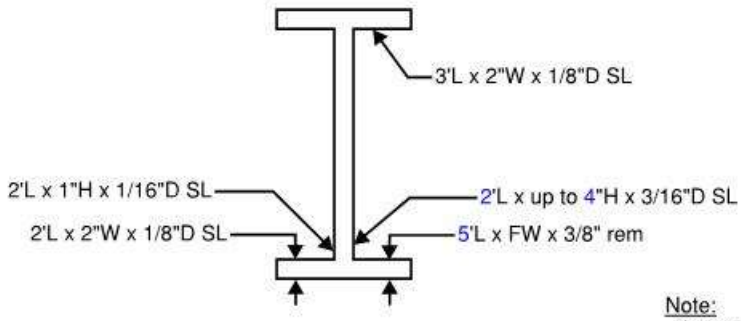

Note:
- S side stiff (for scupper framing) also has 4"H x FW x 1/8"D SL w/(1) RTH 2"ø

Span 22 - S1 at ±4' East of FB 5
Section A-A (looking east)

- LR at all locations

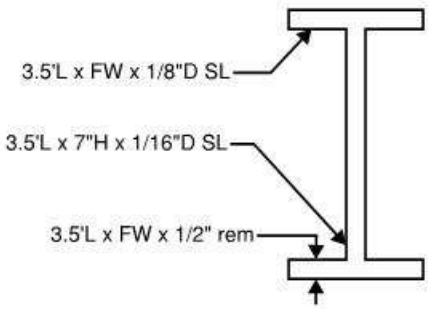

Span 22 - S13 at 5.5' East of FB 5
Section B-B (looking east)

- LR at all locations

REVISION 1	DATE: 11/19/19	CREW: BH, JG (Baker)	REVISION 3	DATE:	CREW:
REVISION 2	DATE: 7/27/2021	CREW: BM, CMR, AN, NH (PRIME)	REVISION 4	DATE:	CREW:

CREW: MW, SW	DATE: 8/30/2017	BRIDGE NO.: 03819

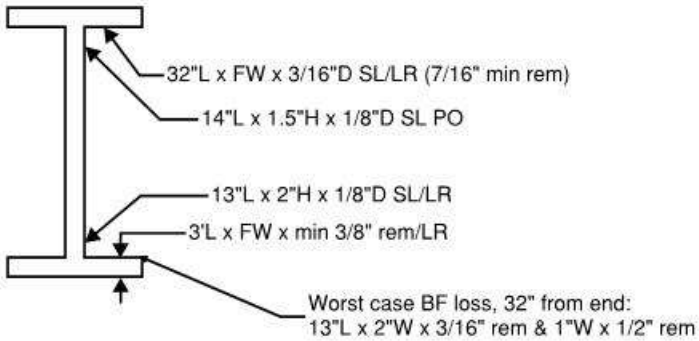

Span 22 - S13 at 8" East of FB 7
Section C-C (looking east)

REVISION 1	DATE: 9/11/19	CREW: AH, BF (Baker)	REVISION 3	DATE:	CREW:
REVISION 2	DATE: 8/16/2021	CREW: CMR, AN (PRIME) - No Change	REVISION 4	DATE:	CREW:

Sketches
Inspection type: Fracture Critical,Routine
Inspection Date: 7/26/2021
Inspected by: PRIME AE

:Bridge No 03819

Town: NEW LONDON
Carried: INTERSTATE 95 NORTHBOUND
Crossed: THAMES RV,RR,LOCAL ROADS
Inventory Route: NHS

CREW: AH, EN	DATE: 11/2/2017	BRIDGE NO.: 03819

Deterioration Legend:
1 - Cracked horiz weld between trough support angle and clip angle to stringer web (location and length given)
2 - Deck has been repaired, formwork left in place
3 - Lat bracing member has 3/4"L x 1/2"W x 3/16"D gouge (not ground smooth)
4 - Scupper support brackets have cracked welds at W and E sides up to FL, 1/2" gap at W side
5 - ~~2"L x 5"W Sl/P's rusted through w/spall in deck up to 1"D; BF for deck grid bar W of scupper has KE min rem width to BF and deck grid bar E of scupper has KE rem (all LR)~~ Repaired by placing wooden formworks in place, deck grid bars are not visible.
6 - Undercut weld at base of FB VT stiff (ground out and UT tested by CTDOT in 2019, no cracking)
P - Pack rust btwn lateral bracing member and horizontal gusset plates

LOG DIRECTION → WEST TO EAST

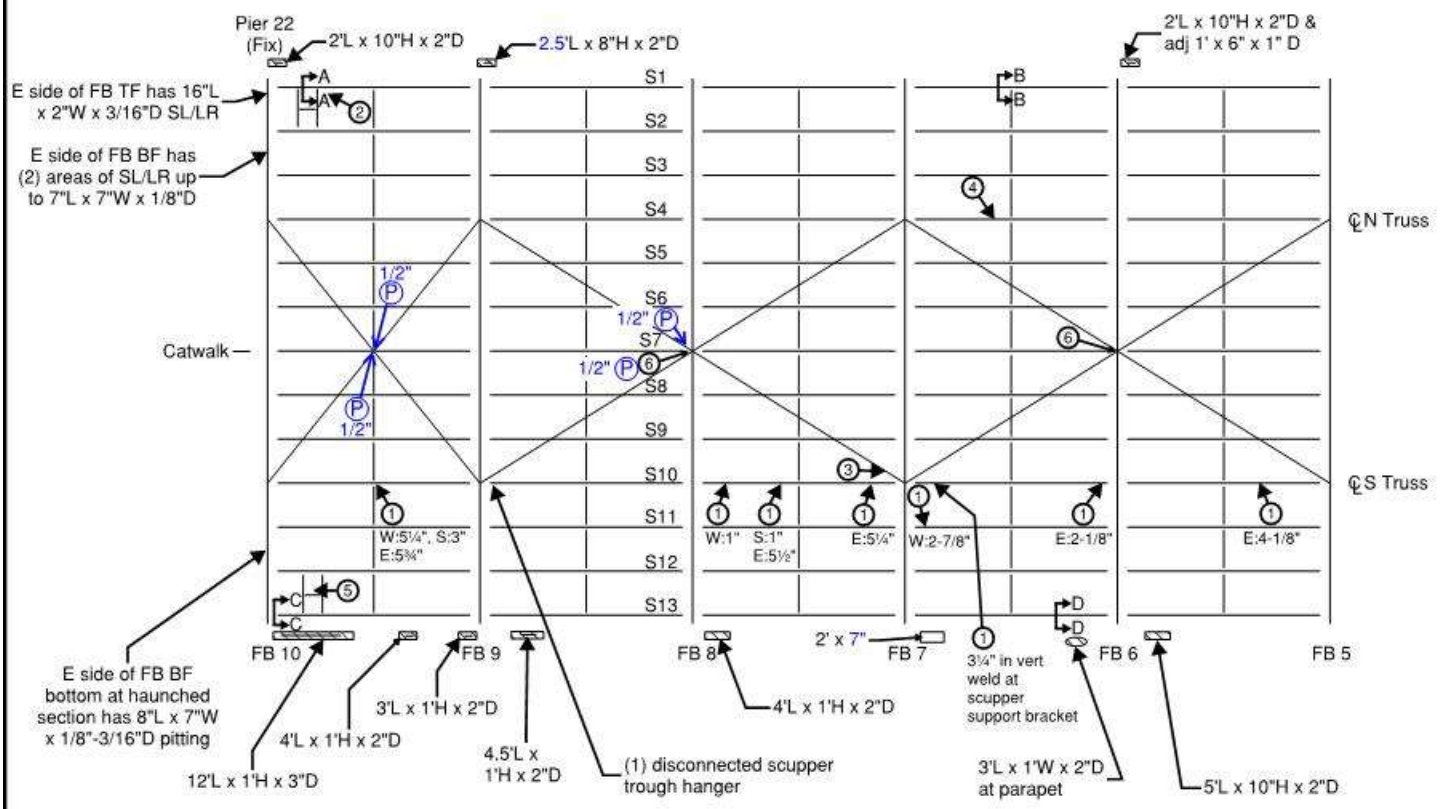

General Notes:

- See Underside of Deck and Steel Framing General Notes (Spans 22-25 & 29-32) sheet
- Fascia spalls/hollow areas are typically in bottom of parapet U.O.N.

LEGEND:
- HOLLOW AREA
- SHALLOW REBAR
- SPALL AREA
- SPALL AREA WITH EXPOSED REBAR
- MAPCRACKS
- HAIRLINE CRACKS
- HONEYCOMB AREA
- SCALE AREA
- EFFLORESCENCE PRESENT

Span 23 - Underside of Deck and Framing
West Half

REVISION 1	DATE: 9/9/19	CREW: AH, BF (Baker)	REVISION 3	DATE:	CREW:
REVISION 2	DATE: 8/3/2021	CREW: BM, CMR, IS, AN, EB, EA (PRIME)	REVISION 4	DATE:	CREW:

CREW: AH, EN	DATE: 11/2/2017	BRIDGE NO.: 03819

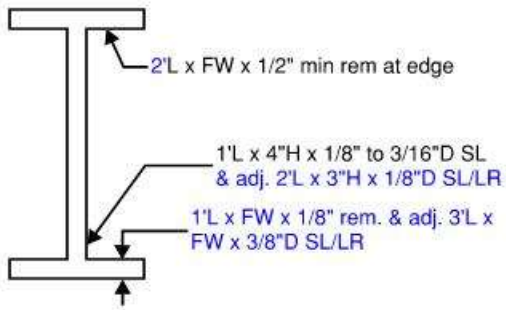

Span 23 - S1 at 5' East of FB 10
Section A-A (looking east)

- LR at all locations

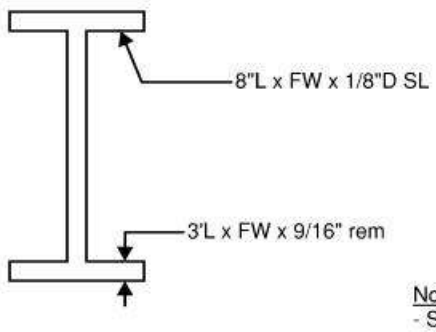

Note:
- S diaph conn PL has FW x FH x 1/8"D SL

Span 23 - S1 at Mid-Panel West of FB 6
Section B-B (looking east)

- LR at all locations

REVISION 1	DATE: 9/9/19	CREW: AH, BF (Baker)	REVISION 3	DATE:	CREW:
REVISION 2	DATE: 8/3/2021	CREW: BM, EB (PRIME)	REVISION 4	DATE:	CREW:

CREW: SW, BF	DATE: 10/26/2017	BRIDGE NO.: 03819

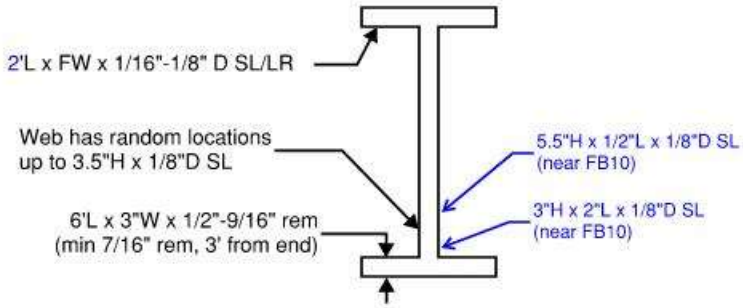

Note:
- N scupper diaph conn PL's has FW x 3"H x 1/8"D pitting/LR

Span 23 - S13 at 4.5' East of FB 10
Section C-C (looking east)

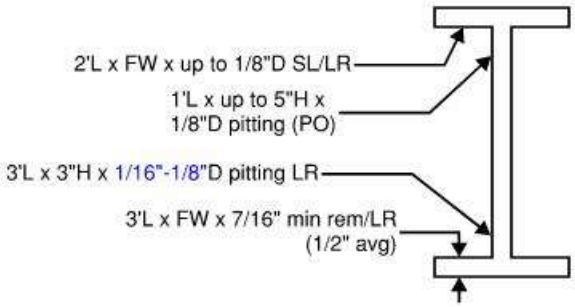

Span 23 - S13 at ±8' West of FB 6
Section D-D (looking east)

REVISION 1	DATE: 9/11/19	CREW: AH, BF (Baker)	REVISION 3	DATE:	CREW:
REVISION 2	DATE: 9/13/2021	CREW: BM, IS (PRIME)	REVISION 4	DATE:	CREW:

CREW: AH, EN	DATE: 11/2/2017	BRIDGE NO.: 03819

Deterioration Legend:
1. - (2 of 6) bolts are short & missing washers; Scupper support angle has a 2¾"L crack at str 1 conn
2. - TF has 1'L x 1"W x 1/16"D SL/LR
3. - 6"L x 2'W x up to 1"D spall in deck; BF of deck grid bar at W side of scupper has KE rem w/ LR
4. - 1'L x 4'W SIP's rusted through w/spall in deck up to 1/2"D; (3) deck grid bars have 1/8"D SL/LR to BF's
5. - 3'L x 1"W x 1/8"D SL at top flange

(P) Pack rust btwn lateral bracing member and horizontal gusset plates

LOG DIRECTION → WEST TO EAST

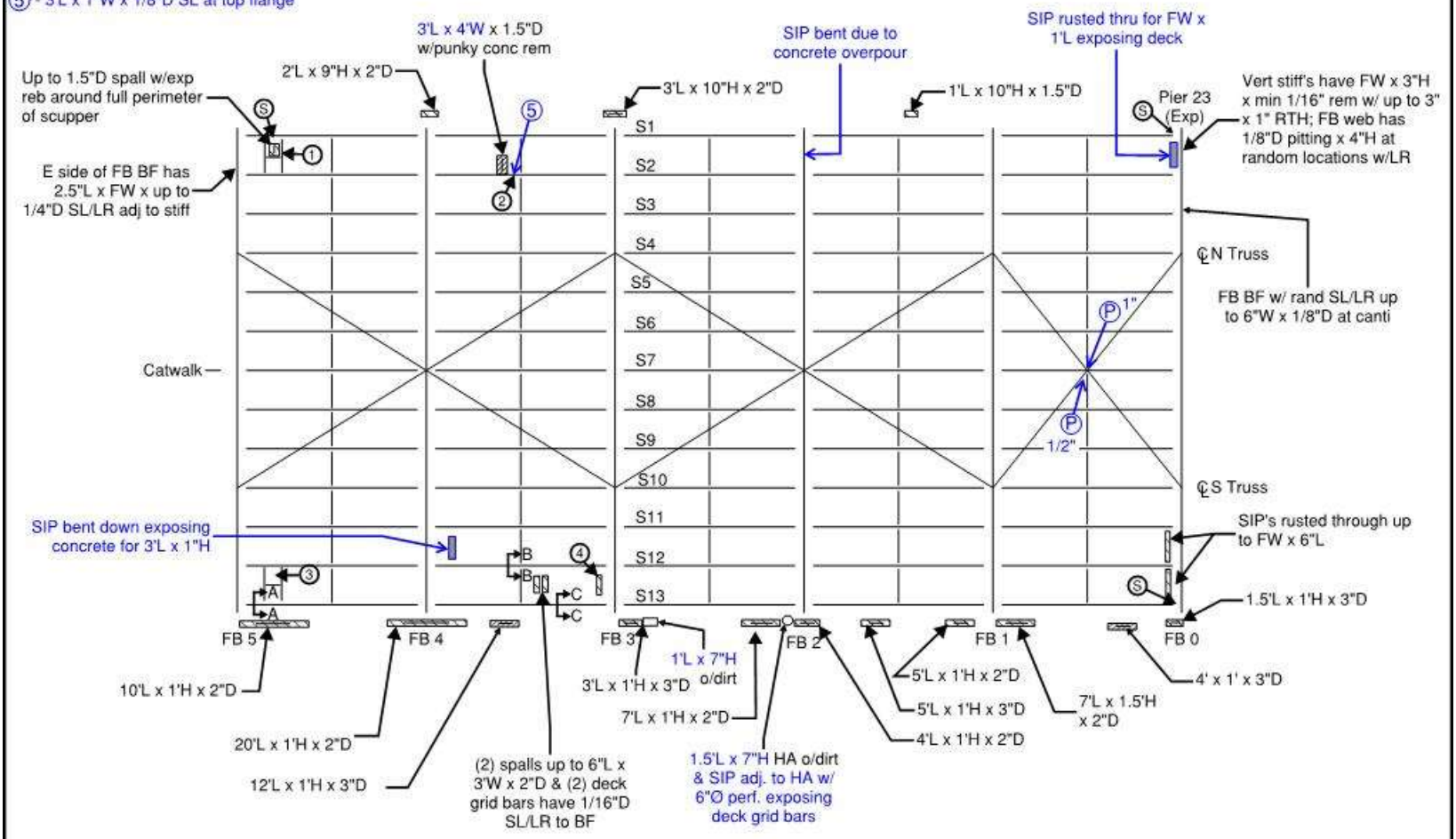

General Notes:

- See Underside of Deck and Steel Framing General Notes (Spans 22-25 & 29-32) sheet
- Fascia spalls/hollow areas are typically in bottom of parapet U.O.N.
- Random exposed rebar at south fascia have up to 1/8"D SL (random spalls coated)
- FB0 top flange at pier 23 has random mis-drilled holes filled w/bolts and foam material
- Random HLC's in concrete haunches at pier 23
- ~~Random active leakage through pier 23 joint~~ (NF)

LEGEND:
- HOLLOW AREA
- SHALLOW REBAR
- SPALL AREA
- SPALL AREA WITH EXPOSED REBAR
- MAPCRACKS
- HAIRLINE CRACKS
- HONEYCOMB AREA
- SCALE AREA
- EFFLORESCENCE PRESENT
- (S) SEE SKETCH

Span 23 - Underside of Deck and Framing East Half

REVISION 1	DATE: 9/9/19	CREW: AH, BF (Baker)	REVISION 3	DATE:	CREW:
REVISION 2	DATE: 7/27/2021	CREW: BM, CMR, IS, AN, EB, NH, EA (PRIME)	REVISION 4	DATE:	CREW:

Sketches
Inspection type: Fracture Critical,Routine
Inspection Date: 7/26/2021
Inspected by: PRIME AE

:Bridge No 03819

Town: NEW LONDON
Carried: INTERSTATE 95 NORTHBOUND
Crossed: THAMES RV,RR,LOCAL ROADS
Inventory Route: NHS

CREW: AH, EN	DATE: 11/2/2017	BRIDGE NO.: 03819

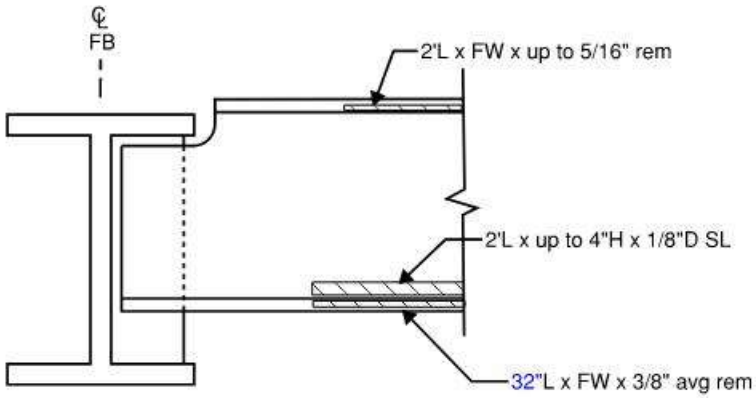

Span 23 - S1 at East Side of FB 5
South Elevation

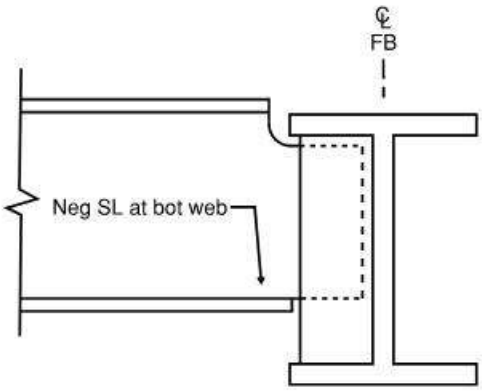

Span 23 - S1 at East Side of FB 5
North Elevation

- LR at all locations
- Losses start 4.5' from STR end

REVISION 1	DATE: 9/9/19	CREW: AH, BF (Baker)	REVISION 3	DATE:	CREW:
REVISION 2	DATE: 7/27/2021	CREW: BM, NH (PRIME)	REVISION 4	DATE:	CREW:

CREW: SW, BF	DATE: 11/2/2017	BRIDGE NO.: 03819

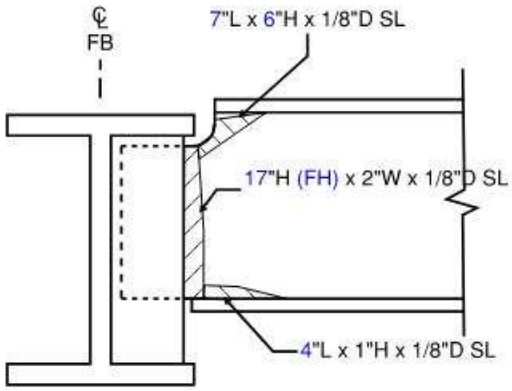

Span 23 - S1 at West Side of FB 0
North Elevation

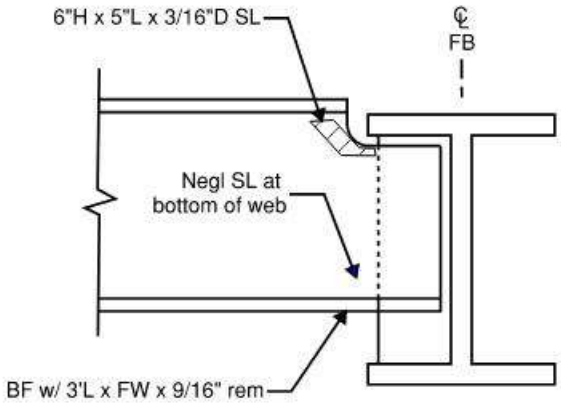

- LR at all locations

Span 23 - S1 at West Side of FB 0
South Elevation

Web depth at cope = 17"

REVISION 1	DATE: 9/9/19	CREW: AH, BF (Baker)	REVISION 3	DATE:	CREW:
REVISION 2	DATE: 9/15/2021	CREW: BM, EB (PRIME)	REVISION 4	DATE:	CREW:

CREW: SW, BF	DATE: 10/13/2017	BRIDGE NO.: 03819

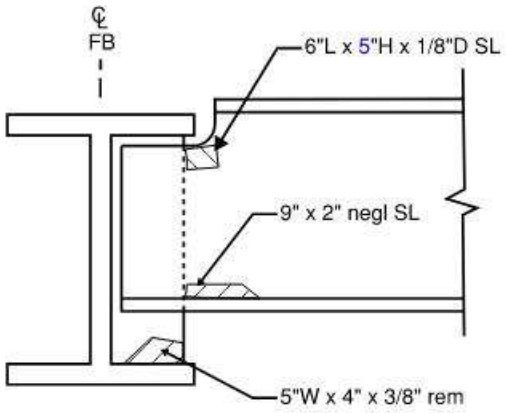

Span 23 - S13 at West Side of FB 0
North Elevation

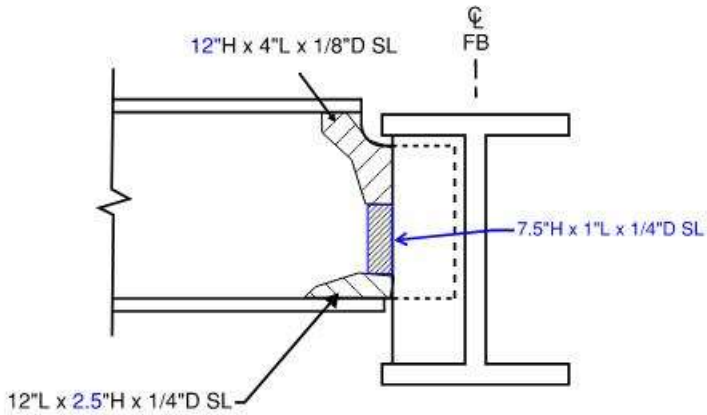

- LR at all locations

Span 23 - S13 at West Side of FB 0
South Elevation

Web depth at cope = 17"

REVISION 1	DATE: 9/12/19	CREW: AH, BF (Baker)	REVISION 3	DATE:	CREW:
REVISION 2	DATE: 9/14/2021	CREW: BM, IS (PRIME)	REVISION 4	DATE:	CREW:

CREW: SW, BF	DATE: 10/26/2017	BRIDGE NO.: 03819

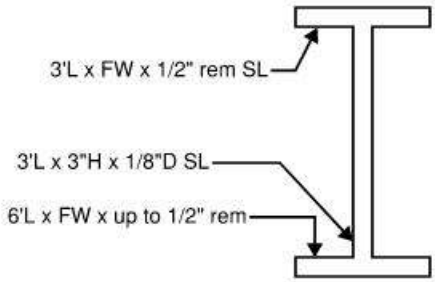

Span 23 - S13 at ±4' East of FB 5
Section A-A (looking east)

- LR at all locations

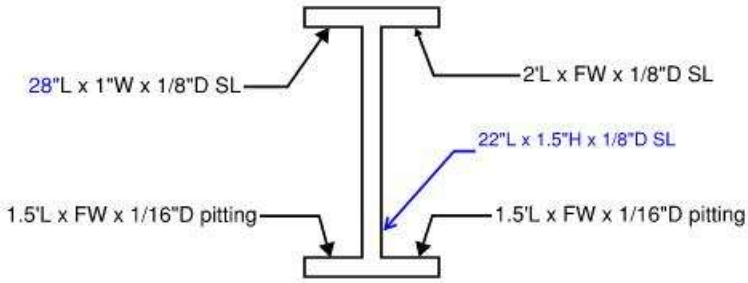

Span 23 - S12 at Mid-Panel West of FB 3
Section B-B (looking east)

- LR at all locations

REVISION 1	DATE: 9/11/19	CREW: AH, BF (Baker)	REVISION 3	DATE:	CREW:
REVISION 2	DATE: 8/16/2021	CREW: BM, CMR, IS, AN (PRIME)	REVISION 4	DATE:	CREW:

CREW: SW, BF	DATE: 10/26/2017	BRIDGE NO.: 03819

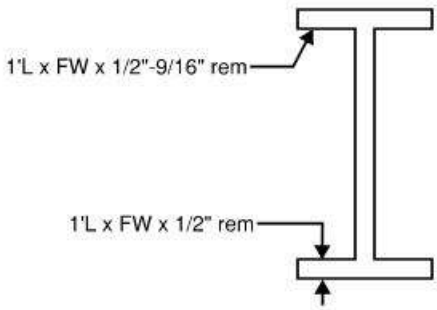

Span 23 - S13 at 5.5' West of FB 3
Section C-C (looking east)

- LR at all locations

REVISION 1	DATE: 9/12/19	CREW: AH, BF (Baker)	REVISION 3	DATE:	CREW:
REVISION 2	DATE: 9/13/2021	CREW: BM, IS (PRIME)	REVISION 4	DATE:	CREW:

Sketches
Inspection type: Fracture Critical,Routine
Inspection Date: 7/26/2021
Inspected by: PRIME AE

:Bridge No 03819

Town: NEW LONDON
Carried: INTERSTATE 95 NORTHBOUND
Crossed: THAMES RV,RR,LOCAL ROADS
Inventory Route: NHS

CREW: MRJ, JG	DATE: 9/27/2017	BRIDGE NO.: 03819

Deterioration Legend:
1 - Drainage trough support rods are sheared off (# in panel)
2 - Loose trough connection bolts (3 total in panel)
3 - Cracked weld at scupper support bracket to clip angle (# in panel)
4 - Deck adj to scupper w/ 3'W x 2"L x up to 2.5"D spall & grid bars have 2.5'L x1/8" min rem at BF & east trough support channel has 10"L x 3/16" LOW & TF has 1/16" rem

LOG DIRECTION
WEST TO EAST

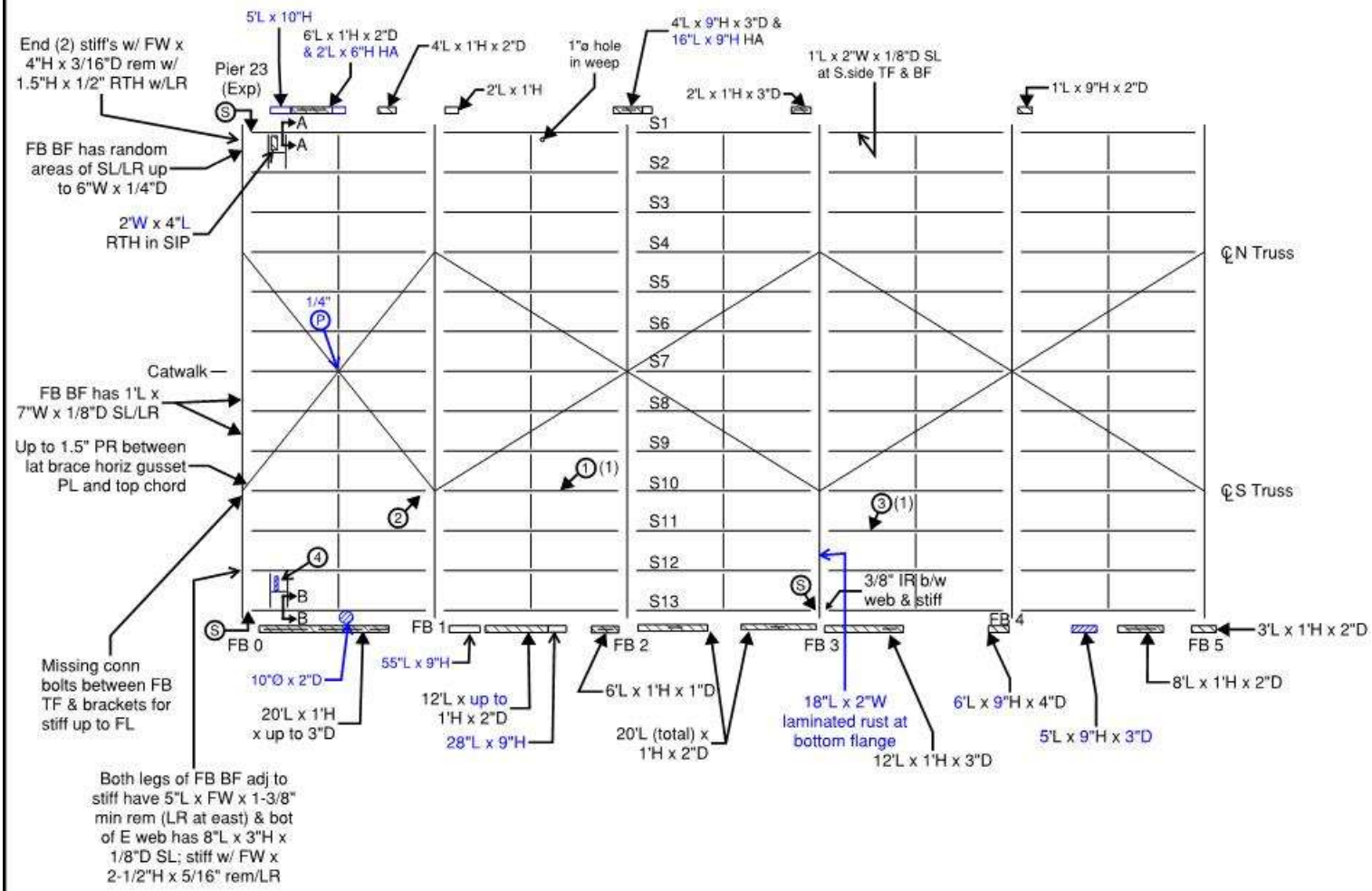

General Notes:
- See Underside of Deck and Steel Framing General Notes (Spans 22-25 & 29-32) sheet
- Fascia spalls/hollow areas are typically in bottom of parapet U.O.N.
- Up to 1/2" pack rust at scupper trough connections at random locations
- Hollow areas over dirt U.O.N (tight).
- FB0 w/ isol mis-drilled holes in BF, VT stiff bases in way of bolts (as-built).

LEGEND:
- HOLLOW AREA
- SHALLOW REBAR
- SPALL AREA
- SPALL AREA WITH EXPOSED REBAR
- MAPCRACKS
- HAIRLINE CRACKS
- HONEYCOMB AREA
- SCALE AREA
- EFFLORESCENCE PRESENT
- S SEE SKETCH
- P UP TO __" THK PR BTWN LATERAL BRACING MEMBER & HORIZ GUSSET PLATE

Span 24 - Underside of Deck and Framing
West Half

REVISION 1	DATE: 9/9/19	CREW: AH, BF (Baker)	REVISION 3	DATE:	CREW:
REVISION 2	DATE: 9/14/2021	CREW: BM, EA, IS, AN, EB (PRIME)	REVISION 4	DATE:	CREW:

CREW: AH, EN	DATE: 11/3/2017	BRIDGE NO.: 03819

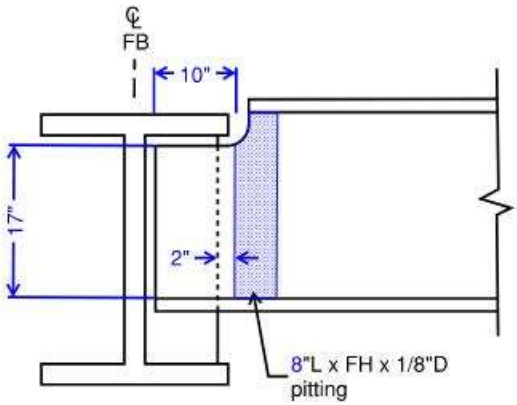

Span 24 - S1 at East Side of FB 0
South Elevation

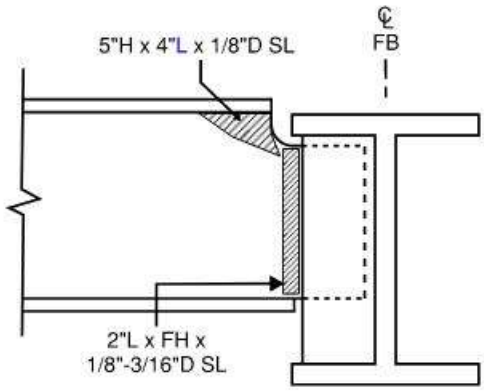

Span 24 - S1 at East Side of FB 0
North Elevation

- LR at all locations

- Web depth at cope = 17"

REVISION 1	DATE: 9/9/19	CREW: AH, BF (Baker)	REVISION 3	DATE:	CREW:
REVISION 2	DATE: 9/14/2021	CREW: BM, EB (PRIME)	REVISION 4	DATE:	CREW:

Sketches
Inspection type: Fracture Critical,Routine
Inspection Date: 7/26/2021
Inspected by: PRIME AE

:Bridge No 03819

Town: NEW LONDON
Carried: INTERSTATE 95 NORTHBOUND
Crossed: THAMES RV,RR,LOCAL ROADS
Inventory Route: NHS

CREW: JG, MRJ	DATE: 9/27/2017	BRIDGE NO.: 03819

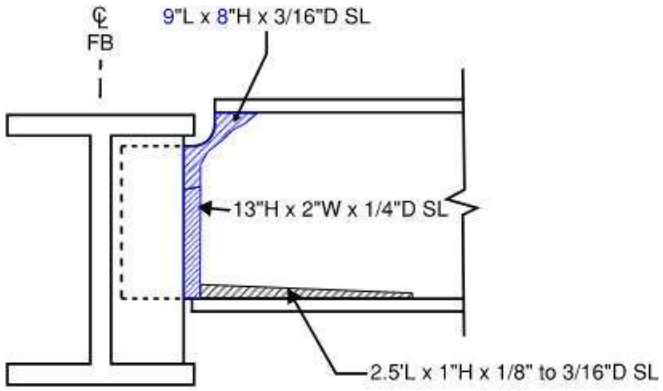

Span 24 - S13 at East Side of FB 0
South Elevation

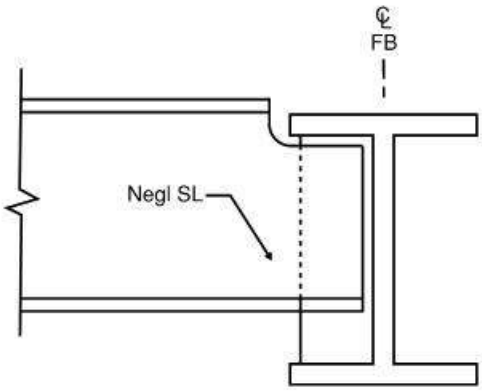

Span 24 - S13 at East Side of FB 0
North Elevation

- LR at all locations

- Web depth at cope = 17"

REVISION 1	DATE: 9/12/19	CREW: AH, BF (Baker)	REVISION 3	DATE:	CREW:
REVISION 2	DATE: 9/14/2021	CREW: BM, IS (PRIME)	REVISION 4	DATE:	CREW:

CREW: JG, MRJ	DATE: 9/27/2017	BRIDGE NO.: 03819

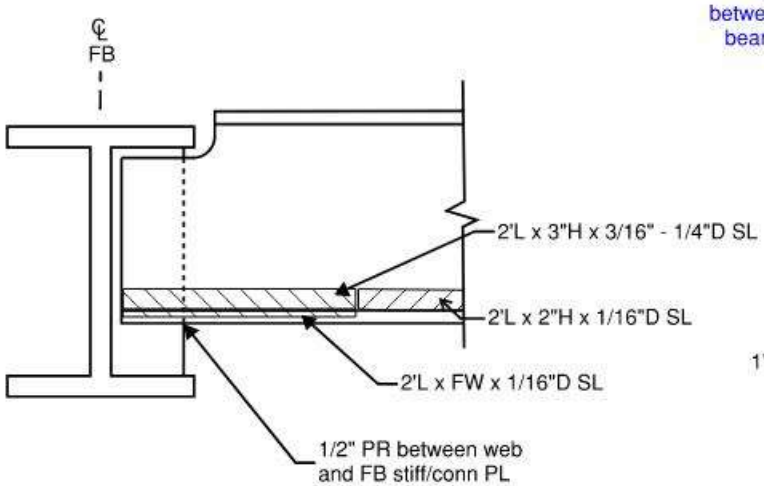

Span 24 - S13 at West Side of FB 3
North Elevation

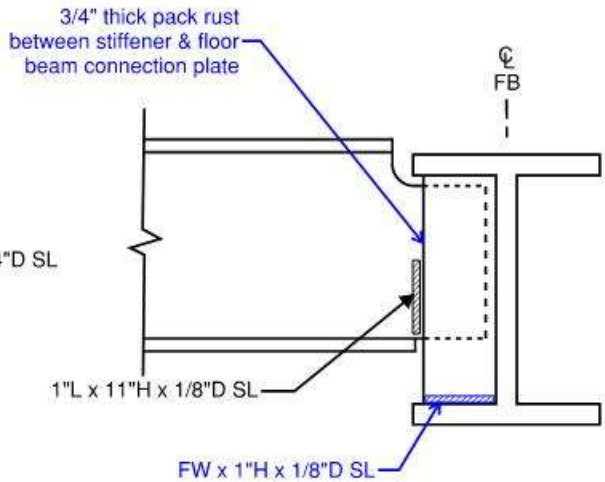

Span 24 - S13 at West Side of FB 3
South Elevation

- LR at all locations

REVISION 1	DATE: 9/12/19	CREW: AH, BF (Baker)	REVISION 3	DATE:	CREW:
REVISION 2	DATE: 9/20/2021	CREW: BM, AN (PRIME)	REVISION 4	DATE:	CREW:

CREW: AH, EN	DATE: 11/3/2017	BRIDGE NO.: 03819

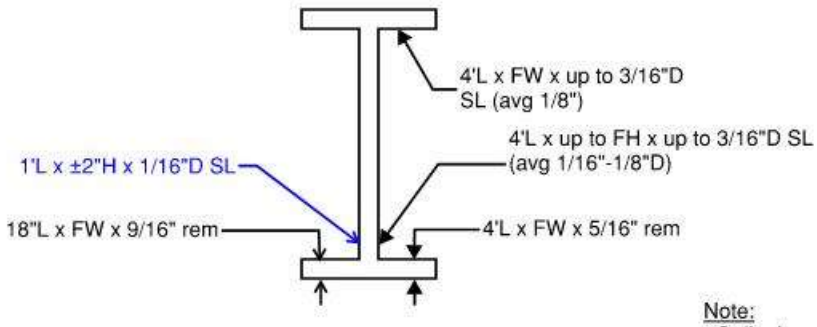

Note:
- S diaph conn PL has SL to 3/16" rem

Span 24 - S1 at 6.5' East of FB 0
Section A-A (looking east)

- LR at all locations

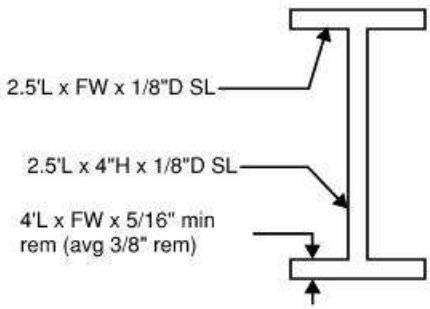

Span 24 - S13 at 5' East of FB 0
Section B-B (looking east)

- LR at all locations

REVISION 1	DATE: 9/10/19	CREW: AH, BF (Baker)	REVISION 3	DATE:	CREW:
REVISION 2	DATE: 9/14/2021	CREW: BM, IS, EB (PRIME)	REVISION 4	DATE:	CREW:

Sketches
Inspection type: Fracture Critical,Routine
Inspection Date: 7/26/2021
Inspected by: PRIME AE

:Bridge No 03819

Town: NEW LONDON
Carried: INTERSTATE 95 NORTHBOUND
Crossed: THAMES RV,RR,LOCAL ROADS
Inventory Route: NHS

CREW: MRJ, JG	DATE: 9/27/2017	BRIDGE NO.: 03819

Deterioration Legend:
1. - 3"L cracked weld at scupper support bracket, up to 3/4" IR b/w str 1 TF & grid bars in the deck
2. - FB BF has 1"L x FW x 1/8"D SL/LR
3. - Bot of S13 web has 6"L x 1.5"H x 1/16"D SL w/ hvy rust
4. ~~- Up to 1" PR between lat brace member & horiz gusset PL at all 4 corners~~
5. - S13 BF ±8' from FB 9 has 6"L x FW x 1/16"D SL
6. - Undercut weld at base of FB VT stiff (ground out and UT tested by CTDOT in 2019, no cracking)
7. - FW x 3"H SIP form bent due to concrete overpour w/ up to 3'W x FL lam rust on SIP
8. - 4'W x 3"H SIP form bent due to concrete overpour

LOG DIRECTION → WEST TO EAST

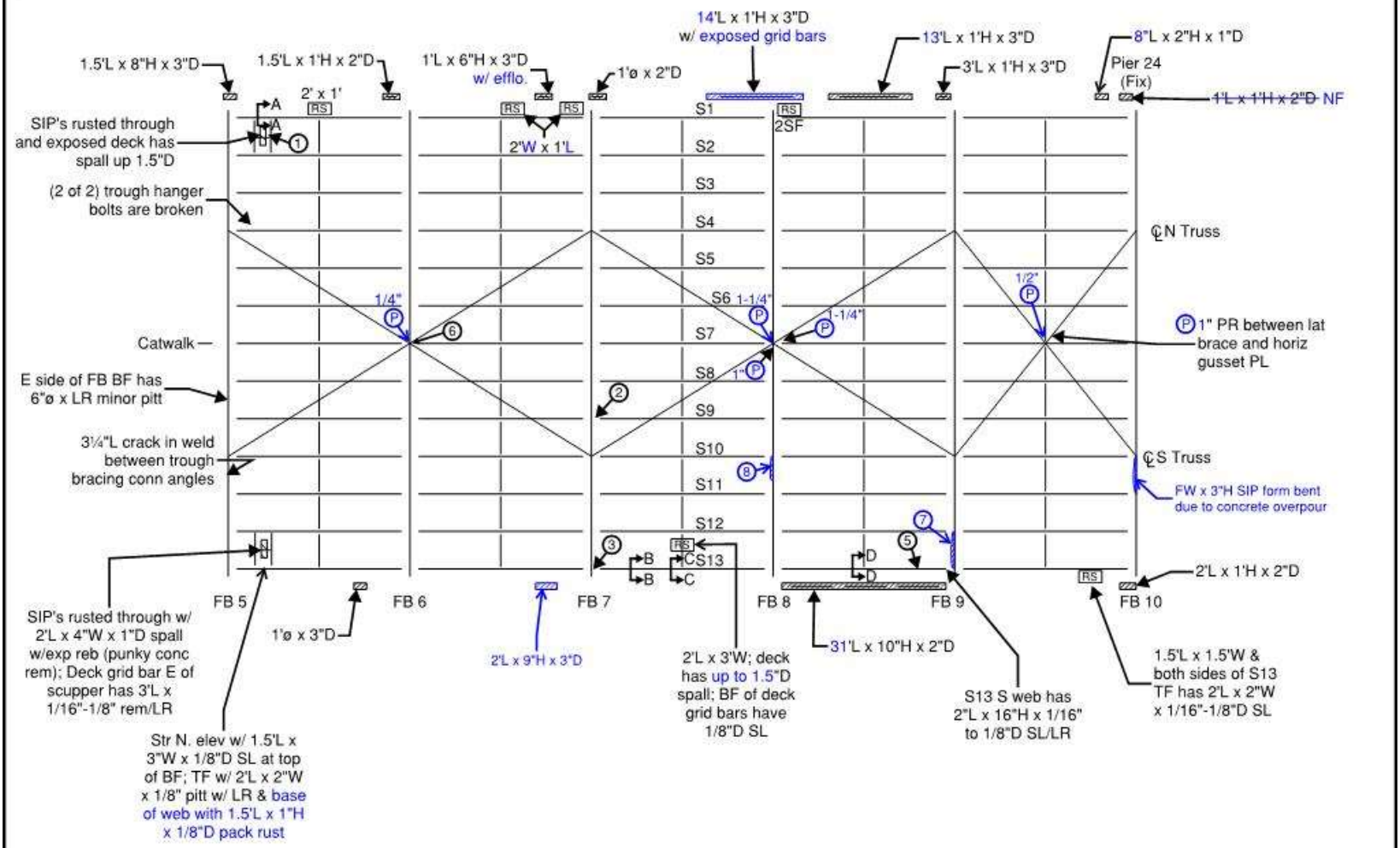

General Notes:
- See Underside of Deck and Steel Framing General Notes (Spans 22-25 & 29-32) sheet
- Fascia spalls/hollow areas are typically in bottom of parapet U.O.N.

LEGEND:
- HOLLOW AREA
- SHALLOW REBAR
- SPALL AREA
- SPALL AREA WITH EXPOSED REBAR
- MAPCRACKS
- HAIRLINE CRACKS
- HONEYCOMB AREA
- SCALE AREA
- EFFLORESCENCE PRESENT
- RS RUSTED OUT STAY-IN-PLACE FORM (SIZE GIVEN)
- P UP TO __" THK PR BTWN LATERAL BRACING MEMBER & HORIZ.GUSSET PLATE

Span 24 - Underside of Deck and Framing East Half

REVISION 1	DATE: 9/9/19	CREW: AH, BF (Baker)	REVISION 3	DATE:	CREW:
REVISION 2	DATE: 8/30/2021	CREW: BM, EG, EA, AN, EB, IS, SD (PRIME)	REVISION 4	DATE:	CREW:

CREW: MRJ, JG	DATE: 9/27/2017	BRIDGE NO.: 03819

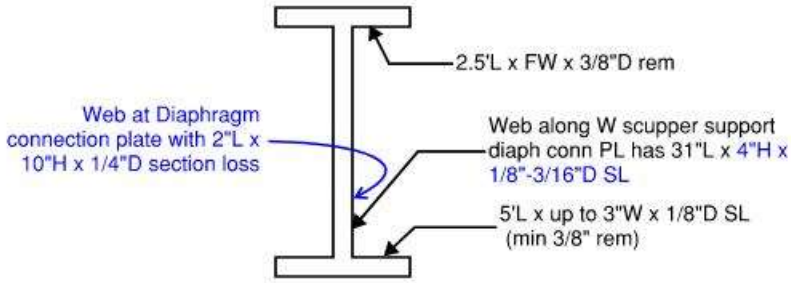

Span 24 - S1 at ±4' East of FB 5
Section A-A (looking east)

- LR at all locations

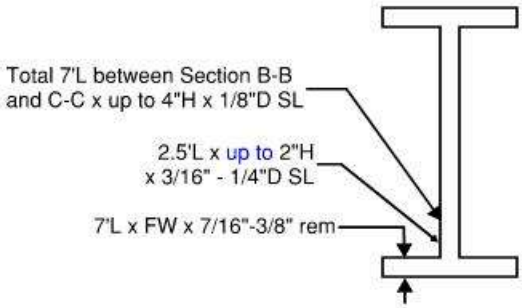

Span 24 - S13 at 8' East of FB 7
Section B-B (looking east)

- LR at all locations

REVISION 1	DATE: 9/12/19	CREW: AH, BF (Baker)	REVISION 3	DATE:	CREW:
REVISION 2	DATE: 9/16/2021	CREW: BM, EB, AN (PRIME)	REVISION 4	DATE:	CREW:

CREW: MRJ, JG	DATE: 9/27/2017	BRIDGE NO.: 03819

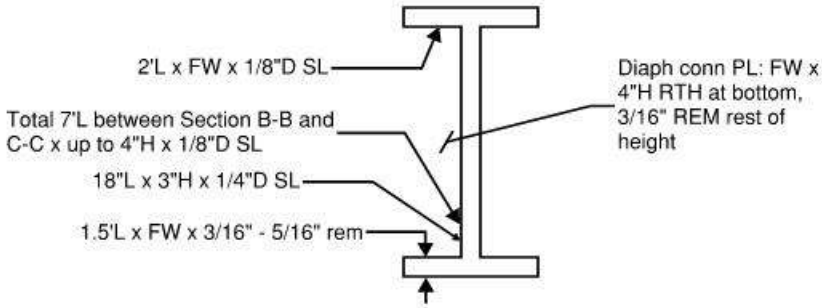

Span 24 - S13 at 16' East of FB 7
Section C-C (looking east)

- LR at all locations

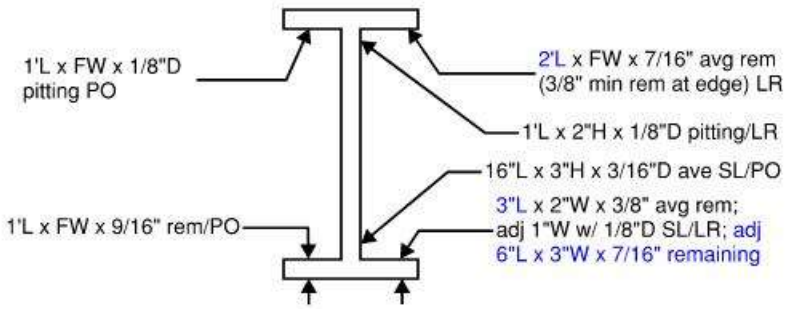

Span 24 - S13 at 14' East of FB 8
Section D-D (looking east)

REVISION 1	DATE: 9/12/19	CREW: AH, BF (Baker)	REVISION 3	DATE:	CREW:
REVISION 2	DATE: 9/21/2021	CREW: BM, AN (PRIME)	REVISION 4	DATE:	CREW:

Sketches
Inspection type: Fracture Critical,Routine
Inspection Date: 7/26/2021
Inspected by: PRIME AE

:Bridge No 03819

Town: NEW LONDON
Carried: INTERSTATE 95 NORTHBOUND
Crossed: THAMES RV,RR,LOCAL ROADS
Inventory Route: NHS

CREW: AH, KT	DATE: 9/29/2017	BRIDGE NO.: 03819

Deterioration Legend:
1 - Wood form left in place from previous spall repair
2 - 1' x 2' RTH in SIP around weep with 2.5' x 1' x 1"D spall
3 - Horiz gusset PL has 1/4"D SL w/min 1/8" rem at edge with (3) 1/2"ø RTH's ; Also up to 2" PR between lat brace member and gusset PL
4 - Up to __" thick PR between stringer web and FB stiff
5 - W side FB TF has 1'L x FW x 1/8"D pitting and BF has 1"L x FW x 1/4"D SL/LR
6 - Stiffener with FW x 1"H x down to 5/16" remaining
7 - FB BF has FW x 4.5"L x 1/8"D pitting on underside at end of cantilever

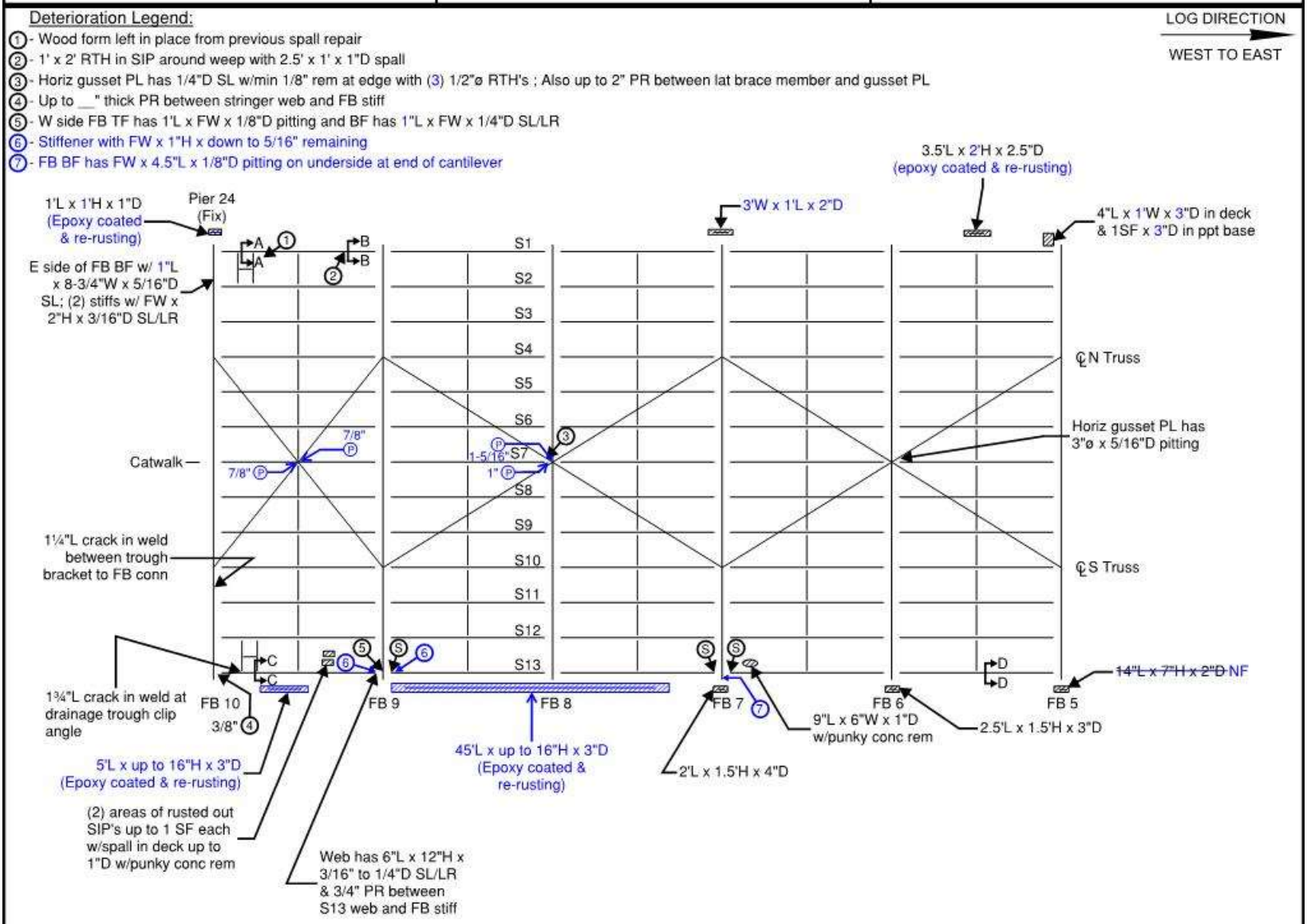

General Notes:
- See Underside of Deck and Steel Framing General Notes (Spans 22-25 & 29-32) sheet
- Fascia spalls/hollow areas are typically in bottom of parapet U.O.N.

LEGEND:
- HOLLOW AREA
- SHALLOW REBAR
- SPALL AREA
- SPALL AREA WITH EXPOSED REBAR
- MAPCRACKS
- HAIRLINE CRACKS
- HONEYCOMB AREA
- SCALE AREA
- EFFLORESCENCE PRESENT
- S SEE SKETCH
- P UP TO __" THK PR BTWN LATERAL BRACING MEMBER & HORIZ.GUSSET PLATE

Span 25 - Underside of Deck and Framing West Half

REVISION 1	DATE: 8/19/19	CREW: AH, BF (Baker)	REVISION 3	DATE:	CREW:
REVISION 2	DATE: 8/30/2021	CREW: EG, AN, NH, EA (PRIME)	REVISION 4	DATE:	CREW:

Sketches
Inspection type: Fracture Critical,Routine
Inspection Date: 7/26/2021
Inspected by: PRIME AE

:Bridge No 03819

Town: NEW LONDON
Carried: INTERSTATE 95 NORTHBOUND
Crossed: THAMES RV,RR,LOCAL ROADS
Inventory Route: NHS

CREW: AH, KT	DATE: 9/29/2017	BRIDGE NO.: 03819

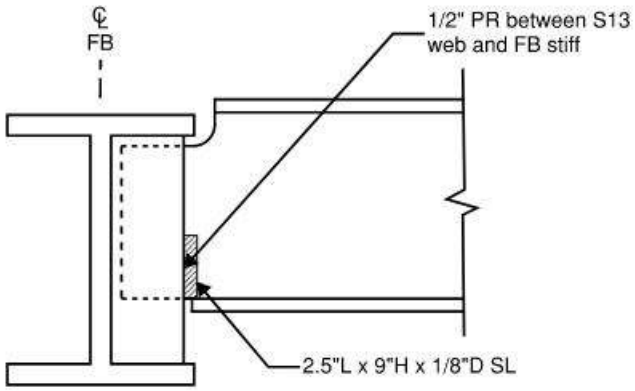

Span 25 - S13 at East Side of FB 9
South Elevation

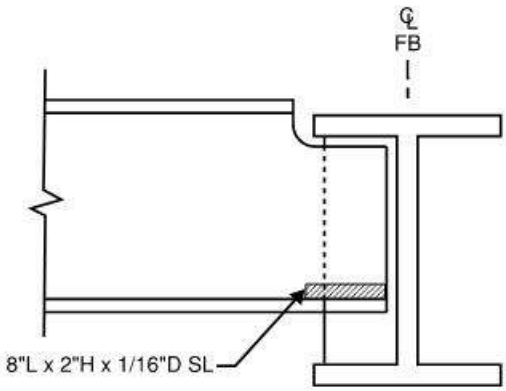

Span 25 - S13 at East Side of FB 9
North Elevation

- LR at all locations

REVISION 1	DATE: 8/19/19	CREW: AH, BF (Baker)	REVISION 3	DATE:	CREW:
REVISION 2	DATE: 9/13/2021	CREW: EG, NH (PRIME) - No Change	REVISION 4	DATE:	CREW:

CREW: AH, KT	DATE: 9/29/2017	BRIDGE NO.: 03819

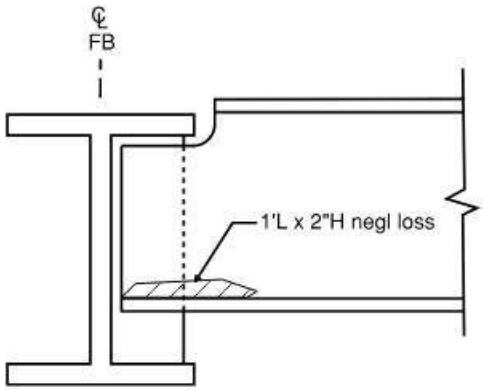

Span 25 - S13 at West Side of FB 7
North Elevation

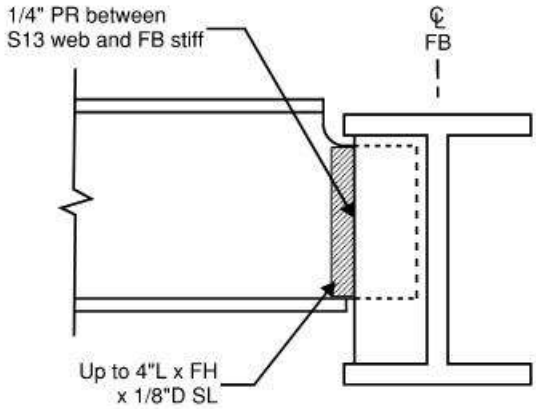

Span 25 - S13 at West Side of FB 7
South Elevation

- LR at all locations

REVISION 1	DATE: 8/19/19	CREW: AH, BF (Baker)	REVISION 3	DATE:	CREW:
REVISION 2	DATE: 9/13/2021	CREW: EG, NH (PRIME) - No Change	REVISION 4	DATE:	CREW:

Sketches
Inspection type: Fracture Critical,Routine
Inspection Date: 7/26/2021
Inspected by: PRIME AE

:Bridge No 03819

Town: NEW LONDON
Carried: INTERSTATE 95 NORTHBOUND
Crossed: THAMES RV,RR,LOCAL ROADS
Inventory Route: NHS

CREW: AH, KT	DATE: 9/29/2017	BRIDGE NO.: 03819

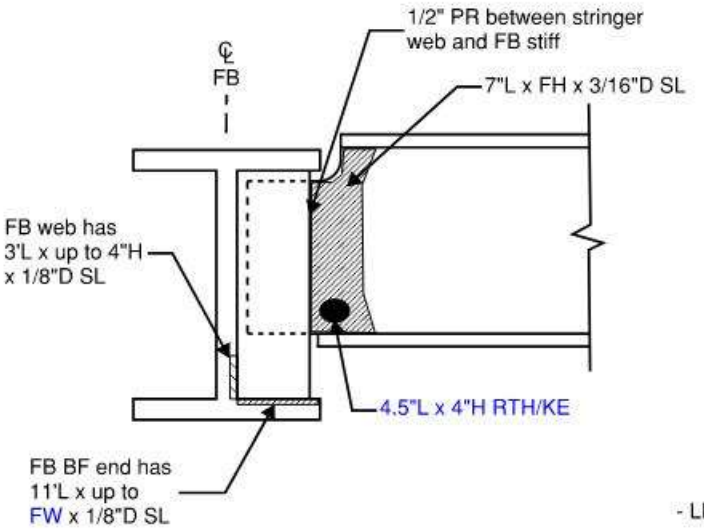

Span 25 - S13 at East Side of FB 7
South Elevation

- LR at all locations

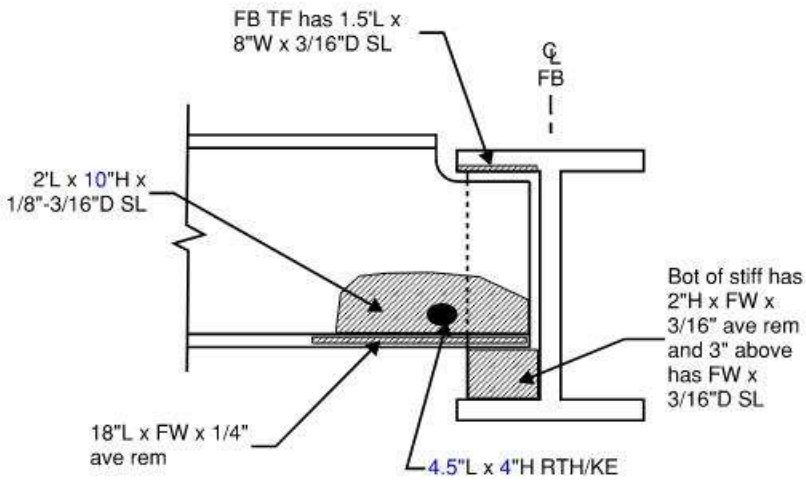

Span 25 - S13 at East Side of FB 7
North Elevation

REVISION 1	DATE: 8/19/19	CREW: AH, BF (Baker)	REVISION 3	DATE:	CREW:
REVISION 2	DATE: 9/13/2021	CREW: EG, NH (PRIME)	REVISION 4	DATE:	CREW:

CREW: AH, KT	DATE: 9/29/2017	BRIDGE NO.: 03819

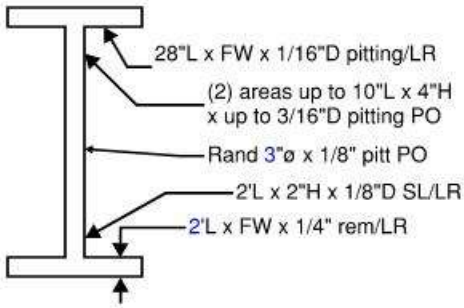

Span 25 - S1 at 3.5' East of FB 10
Section A-A (looking east)

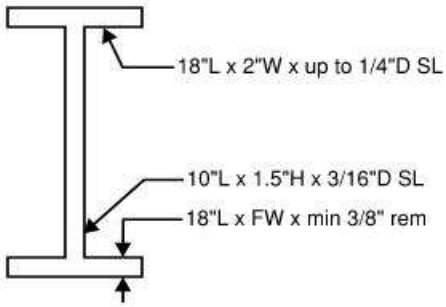

Span 25 - S1 at 6' West of FB 9
Section B-B (looking east)

- LR at all locations

REVISION 1	DATE: 9/16/19	CREW: BH, JG (Baker)	REVISION 3	DATE:	CREW:
REVISION 2	DATE: 8/30/2021	CREW: EG, AN (PRIME)	REVISION 4	DATE:	CREW:

CREW: AH, KT	DATE: 9/29/2017	BRIDGE NO.: 03819

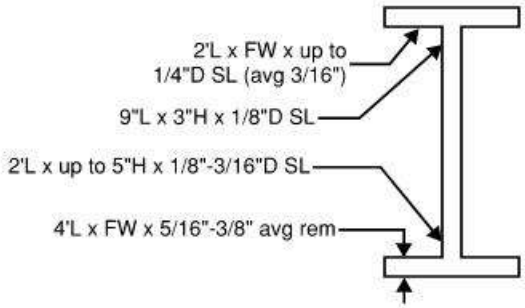

Span 25 - S13 at 7' East of FB 10
Section C-C (looking east)

- LR at all locations

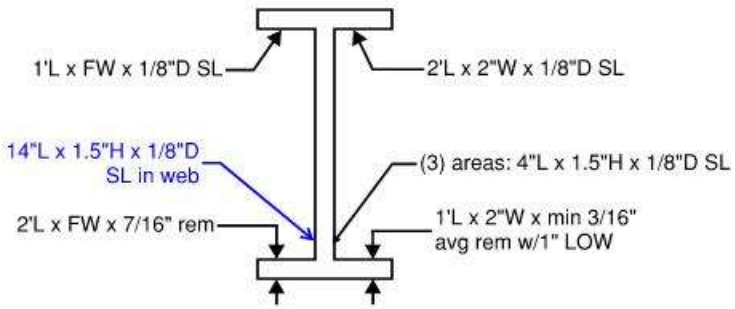

Span 25 - S13 at 1.5' East of Diaph Between FB 6 & FB 5
Section D-D (looking east)

- LR at all locations

REVISION 1	DATE: 8/19/19	CREW: AH, BF (Baker)	REVISION 3	DATE:	CREW:
REVISION 2	DATE: 9/13/2021	CREW: EG, NH (PRIME)	REVISION 4	DATE:	CREW:

CREW: AH, KT	DATE: 9/29/2017	BRIDGE NO.: 03819

Deterioration Legend:

1. Abandoned storm drain outlet W/LR & up to 1/8"D SL/LR to diaph hardware and w/(4) spalls up to 1'ø x 1"D w/ punky conc
2. TF has 2'L x FW x 1/16" to 1/8"D SL/LR (starts 7' from FB 2) & 2' from FB 2 w/ 6"L x 2"W x 3/16"D w/ 1/8" LOW at TF w/ LR & (3) spalls up to 8"Ø x 2"D
3. FB BF adj to gusset PL has 1.5"L x 14"W x 3/16"D SL/LR; Horiz gusset PL has FL x 5"W x 1/4"D SL w/1-1/8"ø RTH & 7/8" PR between FB BF & gusset PL
4. BF N leg has 8"L x FW x 1/2" rem and weep has evidence of drainage onto BF, LR
5. BF S leg has 1'L x FW x 1/2" rem (starts 7' from FB 0), LR
6. BF N leg has 6"L x FW x 1/2" rem (starts 4' from FB 0), LR
7. STR web at top cope: N. elev w/ 3"ø x 1/8"D SL/LR, S. Elev w/ 2"ø x 1/8"D SL/LR

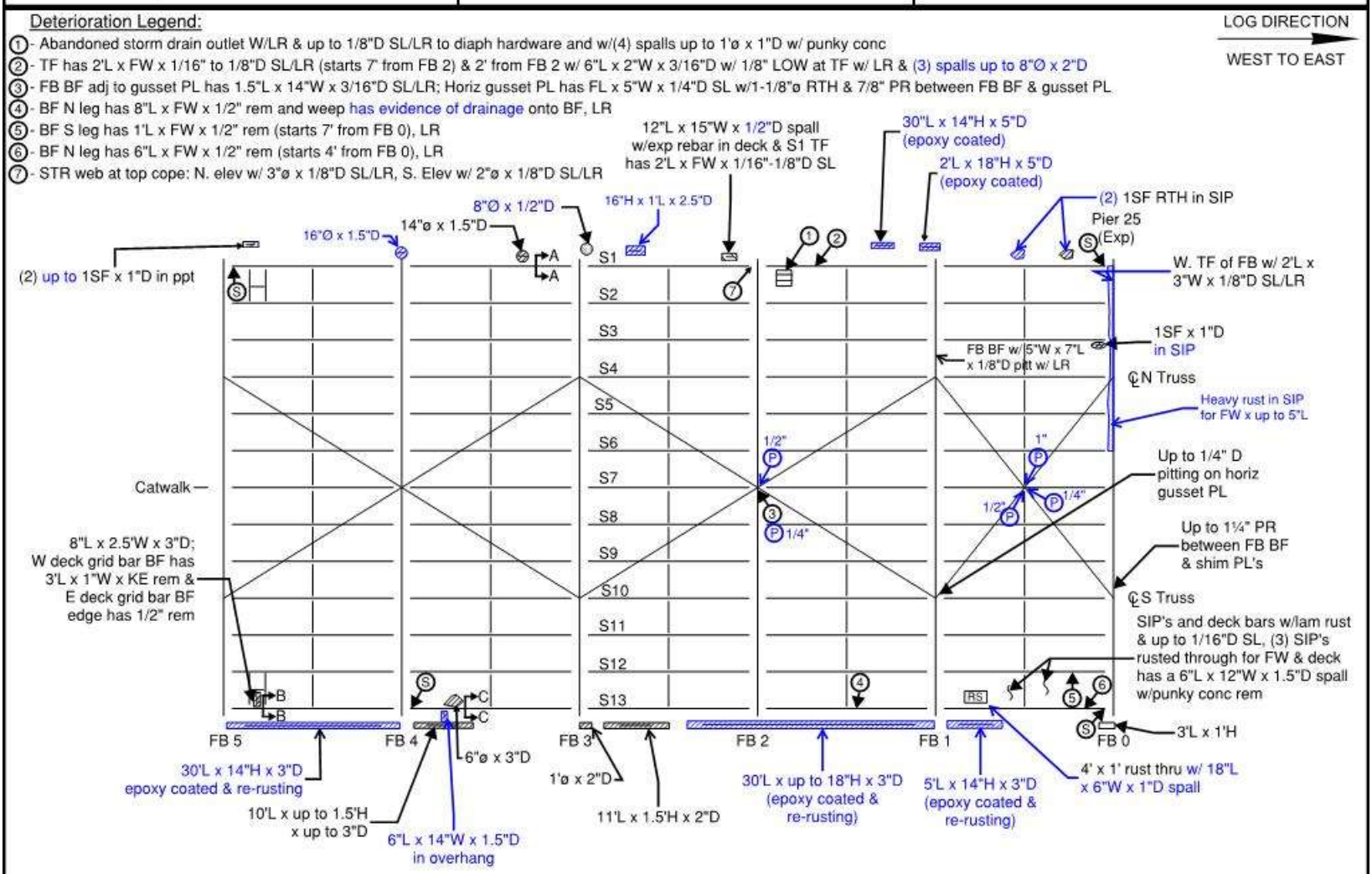

General Notes:

- See Underside of Deck and Steel Framing General Notes (Spans 22-25 & 29-32) sheet
- Fascia spalls/hollow areas are typically in bottom of parapet U.O.N.

LEGEND:

- HOLLOW AREA
- SHALLOW REBAR
- SPALL AREA
- SPALL AREA WITH EXPOSED REBAR
- MAPCRACKS
- HAIRLINE CRACKS
- HONEYCOMB AREA
- SCALE AREA
- EFFLORESCENCE PRESENT
- SEE SKETCH
- RUSTED OUT STAY-IN-PLACE FORM (SIZE GIVEN)
- UP TO __" THK PR BTWN LATERAL BRACING MEMBER & HORIZ.GUSSET PLATE

Span 25 - Underside of Deck and Framing
East Half

REVISION 1	DATE: 8/19/19	CREW: AH, BF (Baker)	REVISION 3	DATE:	CREW:
REVISION 2	DATE: 9/13/2021	CREW: EG, AN, NH, EA (PRIME)	REVISION 4	DATE:	CREW:

CREW: SW, BF	DATE: 10/18/2017	BRIDGE NO.: 03819

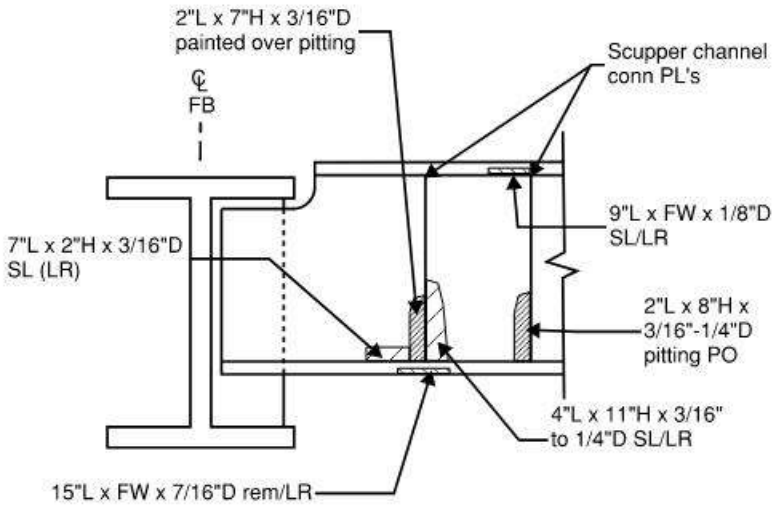

Span 25 - S1 at East Side of FB 5
South Elevation

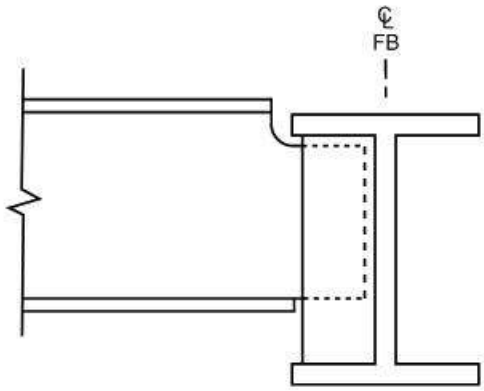

Span 25 - S1 at East Side of FB 5
North Elevation

REVISION 1	DATE: 9/16/19	CREW: BH, JG (Baker)	REVISION 3	DATE:	CREW:
REVISION 2	DATE: 8/31/2021	CREW: EG, AN (PRIME) - No Change	REVISION 4	DATE:	CREW:

CREW: SW, BF	DATE: 10/18/2017	BRIDGE NO.: 03819

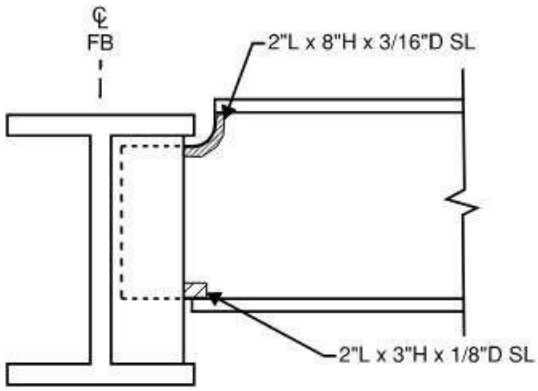

Span 25 - S1 at West Side of FB 0
North Elevation

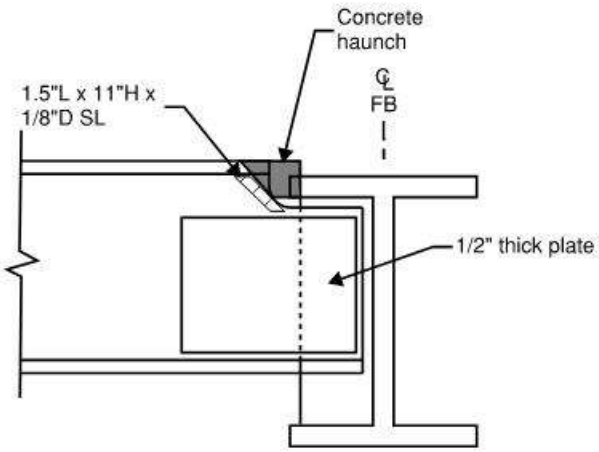

Span 25 - S1 at West Side of FB 0
South Elevation

- LR at all locations

REVISION 1	DATE: 9/4/19	CREW: BH, JG (Baker)	REVISION 3	DATE:	CREW:
REVISION 2	DATE: 8/31/2021	CREW: EG, AN (PRIME) - No Change	REVISION 4	DATE:	CREW:

Sketches
Inspection type: Fracture Critical,Routine
Inspection Date: 7/26/2021
Inspected by: PRIME AE

:Bridge No 03819

Town: NEW LONDON
Carried: INTERSTATE 95 NORTHBOUND
Crossed: THAMES RV,RR,LOCAL ROADS
Inventory Route: NHS

CREW: AH, KT	DATE: 9/29/2017	BRIDGE NO.: 03819

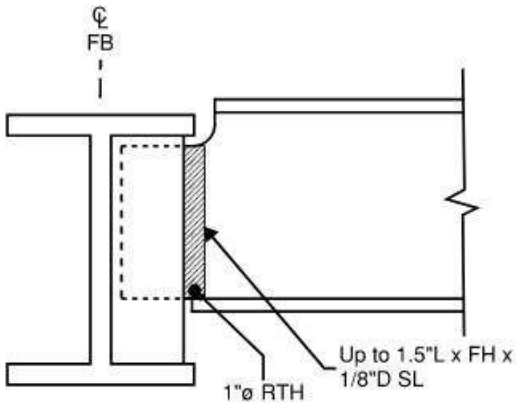

Span 25 - S13 at East Side of FB 4
South Elevation

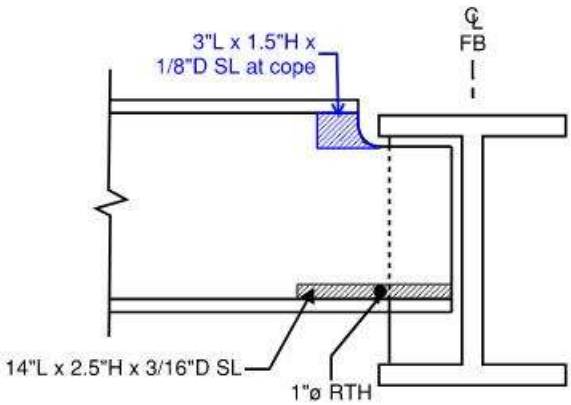

- LR at all locations

Span 25 - S13 at East Side of FB 4
North Elevation

REVISION 1	DATE: 8/19/19	CREW: AH, BF (Baker)	REVISION 3	DATE:	CREW:
REVISION 2	DATE: 9/14/2021	CREW: EG, NH (PRIME)	REVISION 4	DATE:	CREW:

CREW: SW, BF	DATE: 10/18/2017	BRIDGE NO.: 03819

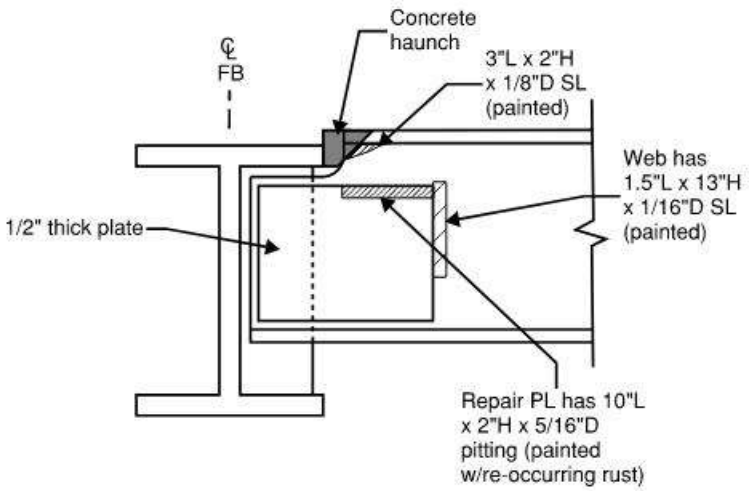

Span 25 - S13 at West Side of FB 0
North Elevation

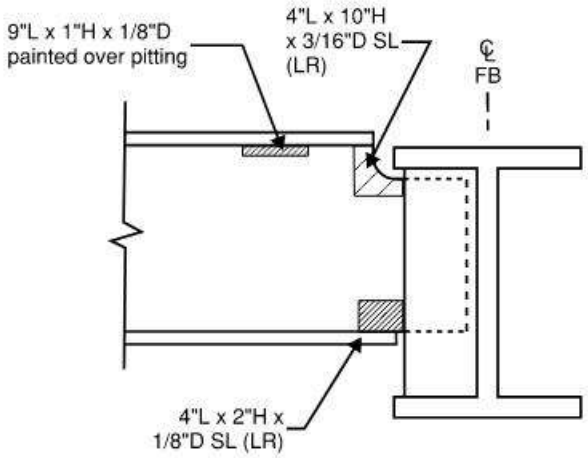

Span 25 - S13 at West Side of FB 0
South Elevation

REVISION 1	DATE: 8/19/19	CREW: AH, BF (Baker) - No change	REVISION 3	DATE:	CREW:
REVISION 2	DATE: 9/14/2021	CREW: EG, NH (PRIME) - No Change	REVISION 4	DATE:	CREW:

CREW: AH, KT	DATE: 9/29/2017	BRIDGE NO.: 03819

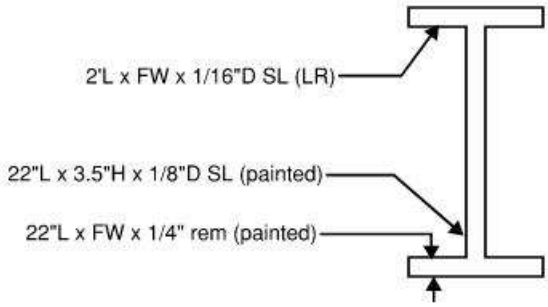

Span 25 - S1 at 8.5' West of FB 3
Section A-A (looking east)

- Previously noted losses on wrong elevation

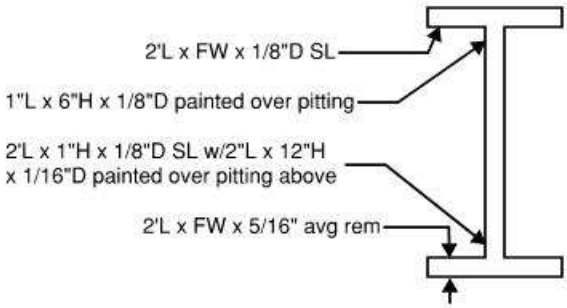

Span 25 - S13 at 5' East of FB 5
Section B-B (looking east)

- LR at all locations

REVISION 1	DATE: 8/19/19	CREW: AH, BF (Baker)	REVISION 3	DATE:	CREW:
REVISION 2	DATE: 8/31/2021	CREW: EG, AN (PRIME) - No Change	REVISION 4	DATE:	CREW:

CREW: AH, KT	DATE: 9/29/2017	BRIDGE NO.: 03819

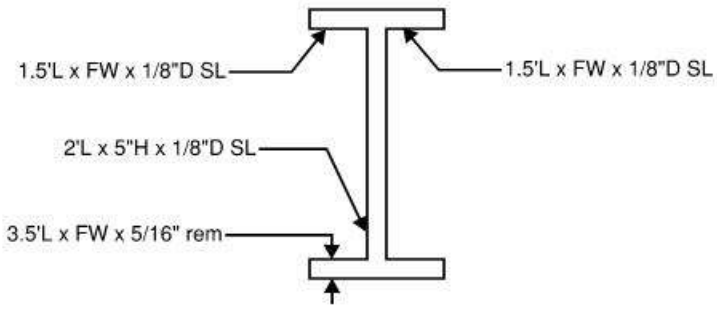

Span 25 - S13 at 3' West of diaphragm between FB 3 & FB 4
Section C-C (looking east)
- LR at all locations

REVISION 1	DATE: 8/19/19	CREW: AH, BF (Baker)	REVISION 3	DATE:	CREW:
REVISION 2	DATE: 9/14/2021	CREW: EG, NH (PRIME)	REVISION 4	DATE:	CREW:

CREW: SW, BF	DATE: 9/27/2017	BRIDGE NO.: 03819

Underside of Deck and Steel Framing General Notes - Spans 26-28

Underside of Deck:
- Random linear hairline cracks without efflorescence (assumed condition state 1).
- Random deck areas adjacent to cracks are damp and/or discolored.
- Isolated areas of light scale.
- Isolated areas of light honeycombing.
- Random areas of gaps/pack rust up to 1/2" thick between the floorbeam top flanges and deck end haunches.
- Random shallow rusted rebar chairs.
- Random exposed rebar in spalls has been coated & re-rusting (noted in the framing plan).
- PVC weeps extend below stringer bottom flanges. Several abandoned and plugged short weeps have past and present leakage onto the deck and structural steel at random locations.
- Scuppers not shown on sketches unless deficient.
- There is dampness at the underside of deck around random cut-off weeps.
- Drainage troughs are clear of heavy debris, unless otherwise noted.
- HS = Haunch Spall
- ~~Hollow concrete removed by contractor after 2019 inspection (per Hammonasset list, to be verified next inspection)~~ Previously removed hollow areas since the last inspection with the resulting spalls have been verified and noted this inspection.

Stringers:
- Random areas of peeling paint with varying degrees of rusting, up to laminated with negligible section loss.
- Fascia stringer top flanges at old/plugged weeps has section loss up to 12" long x 2" wide x up to 1/4" deep (up to 8% loss).
- Stringer bottom flanges are laterally misaligned from the stringer seat plates up to 1/2" at random locations.
- Stringer bottom flange to stringer seat plates have up to 1/4" thick pack rust at random locations.
- Stringer to floorbeam connections have up to 1/4" gaps/pack rust at random locations.
- Stringer bolsters and seat plates at floorbeam cantilever sections at deck joint locations have up to full width x full height x 3/16"D SL.
- Stringer to floorbeam connections and stringer seat plates have light to moderate abrasion rust with isolated locations of heavy abrasion rust. Connection bolts are tight unless otherwise noted.
- Diaphragm to diaphragm connection plates have isolated locations of light abrasion rust.
- Stringer haunches have random rust stains and up to 1/8" impact rust between top flanges and haunches.

Floorbeams:
- Random areas of peeling paint with varying degrees of rusting, up to laminated with negligible section loss.
- Random abrasion rust between the vertical web stiffeners and floorbeam flanges.
- Floorbeam end plates have up to 1/4" deep section loss.
- Bottom flanges adjacent to random vertical stiffeners and bolsters have areas of section loss up to 9" diameter x 3/16" deep (typ in cantilever sections), up to 6% loss.
- Vertical stiffeners at cantilever sections at deck joint locations have full width x 4" high x up to 1/4" deep section loss at the base.
- Webs in the cantilever sections have random areas of section loss up to 12" long x 8" high x 1/8" deep (typically less critical areas U.O.N).
- Up to 3/4" thick pack rust between the fill plates below the floorbeam bottom flange and top of the truss top chord at random locations and between the floorbeam shim plates.

General:
- Isolated mis-drilled holes in various bridge components.
- Underside of modular joints w/ random missing spring rods throughout all joints.
- Specific areas of section loss and/or pitting losses shown on the field sheets are typically painted with some minor re-rusting, U.O.N.

Lateral Bracing and Sway Bracing:
- See truss section for these general notes.

REVISION 1	DATE: 8/23/19	CREW: BH, JG (Baker)	REVISION 3	DATE:	CREW:
REVISION 2	DATE: 8/2/2021	CREW: EG, NR, BM, EA, EB, SD (PRIME)	REVISION 4	DATE:	CREW:

Sketches
Inspection type: Fracture Critical,Routine
Inspection Date: 7/26/2021
Inspected by: PRIME AE

:Bridge No 03819

Town: NEW LONDON
Carried: INTERSTATE 95 NORTHBOUND
Crossed: THAMES RV,RR,LOCAL ROADS
Inventory Route: NHS

CREW: BF, SW	DATE: 9/27/17	BRIDGE NO.: 03819

Deterioration Legend:
1 - Bracing angle horiz leg is missing a 4.5" x 3" section at south angle conn due to laminar rust
2 - Pockets of 8"W x 5"L x 1-3/8" REM & 1/4" LOW at FB BF adj to stiffs w/ LR
3 - 20"W x 14"L x 2"D (Epoxy coated & re-rusting)
4 - Two (2) voids in lower horizontal weld between connection plate & Stringer S2
5 - Bleeding rust from stringer connections

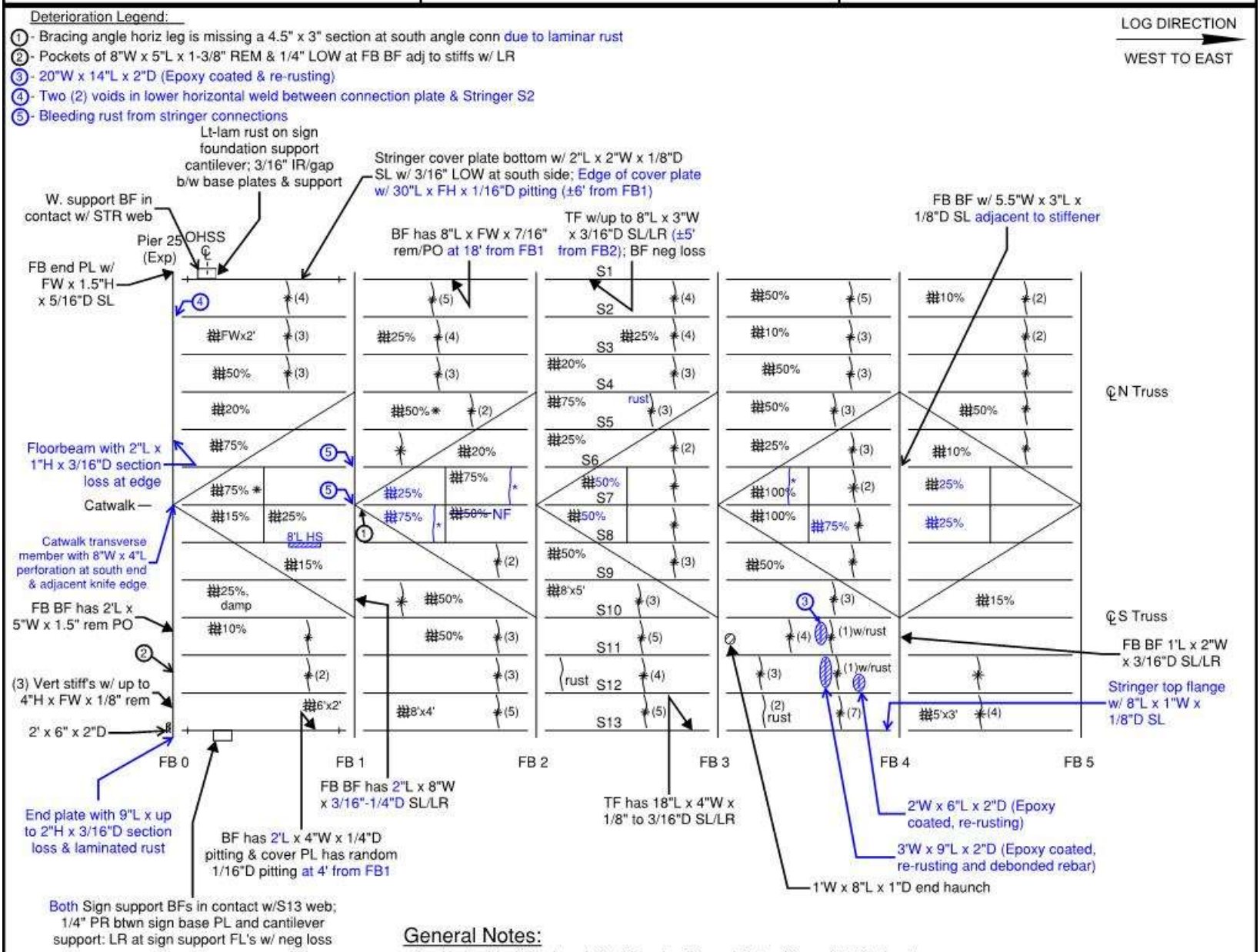

General Notes:

- See Underside of Deck and Steel Framing General Notes (Spans 26-28) sheet.
- Stringer webs at FB0 have bolted and welded retrofit plates.
- Horizontal plates at Pier 25 have missing bolts at conn to FB TF throughout FL of joint w/ up to 3/16"T impact rust between plates & TF.
- FB0 is twisted counter-clockwise (towards east) at south end for 3'L.

LEGEND:
- HOLLOW AREA
- SHALLOW REBAR
- SPALL AREA
- SPALL AREA WITH EXPOSED REBAR
- MAPCRACKS
- HAIRLINE CRACKS
- HONEYCOMB AREA
- SCALE AREA
- EFFLORESCENCE PRESENT
- BF COVER PLATE END WELD

Span 26 - Underside of Deck and Framing
Section 1

REVISION 1	DATE: 8/27/19	CREW: BH, JG (Baker)	REVISION 3	DATE:	CREW:
REVISION 2	DATE: 8/2/2021	CREW: EG, SD, EA (PRIME)	REVISION 4	DATE:	CREW:

Sketches
Inspection type: Fracture Critical,Routine
Inspection Date: 7/26/2021
Inspected by: PRIME AE

:Bridge No 03819

Town: NEW LONDON
Carried: INTERSTATE 95 NORTHBOUND
Crossed: THAMES RV,RR,LOCAL ROADS
Inventory Route: NHS

CREW: SW, BF	DATE: 9/27/17	BRIDGE NO.: 03819

Deterioration Legend:
1 - FB BF has 3'L x 1.5"W x 1/8"D SL/LR
2 - FB BF has 1.5'L x 1.5"W x 1/8"D SL/LR
3 - ~~Bolster flange has 3"H x FW x 1/8" rem~~ (NF); adj web stiff base w/ FW x 3"H x 3/16"D SL & 1/4" LOW w/ LR
4 - Up to 1/2" PR between TF and deck
5 - Floorbeam top flange w/ 1'L x 3"W x 1/8"D SL/LR

LOG DIRECTION
WEST TO EAST

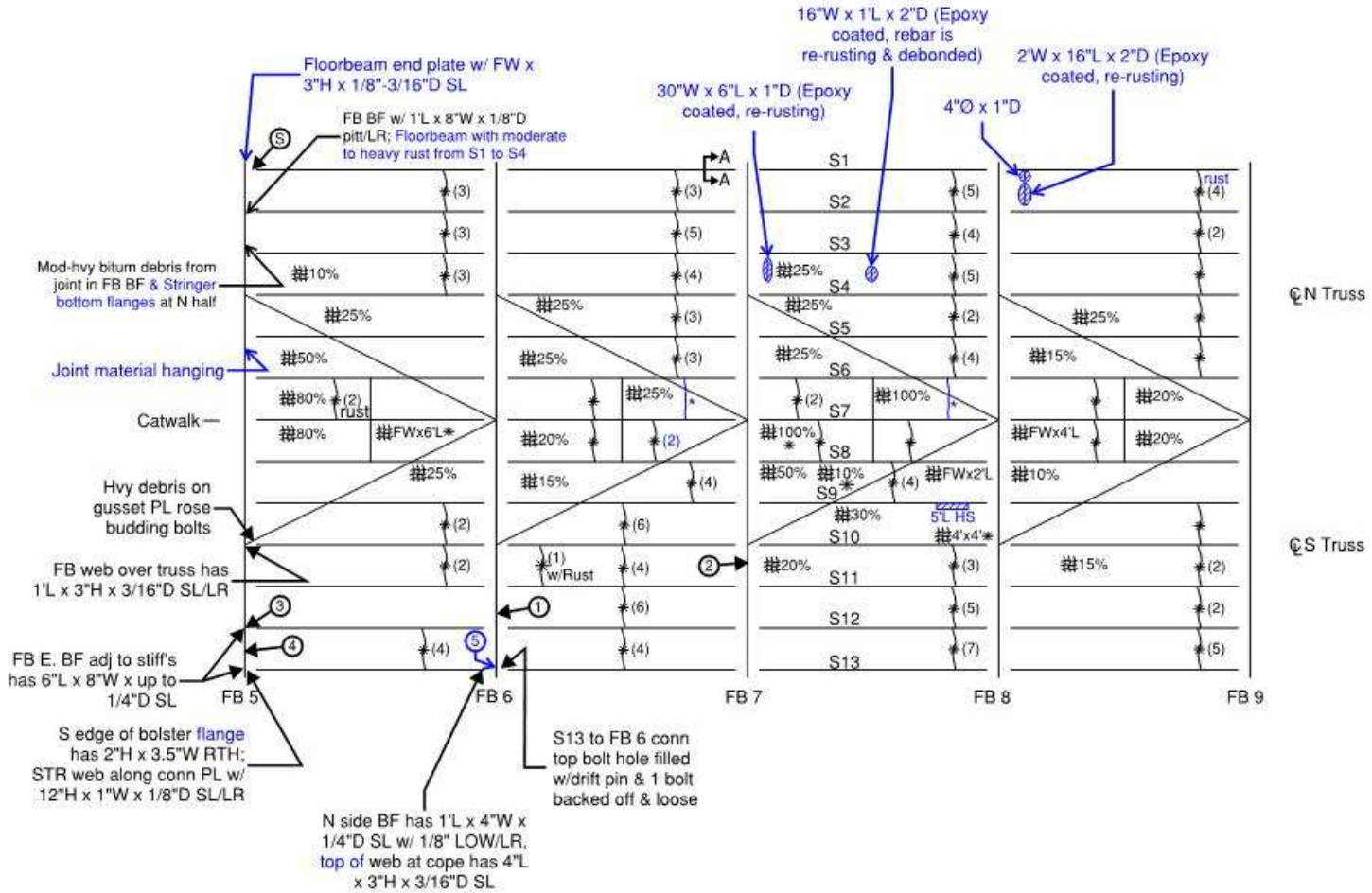

General Notes:

- See Underside of Deck and Steel Framing General Notes (Spans 26-28) sheet.
- Stringer bottom flanges at FB 6 overhang seat plate up to 1/2".

LEGEND:
- HOLLOW AREA
- SHALLOW REBAR
- SPALL AREA
- SPALL AREA WITH EXPOSED REBAR
- MAPCRACKS
- HAIRLINE CRACKS
- HONEYCOMB AREA
- SCALE AREA
- EFFLORESCENCE PRESENT
- SEE SKETCH

Span 26 - Underside of Deck and Framing Section 2

REVISION 1	DATE: 8/27/19	CREW: BH, JG (Baker)	REVISION 3	DATE:	CREW:
REVISION 2	DATE: 8/3/2021	CREW: EG, SD, EA (PRIME)	REVISION 4	DATE:	CREW:

CREW: SW, BF	DATE: 10/11/2017	BRIDGE NO.: 03819

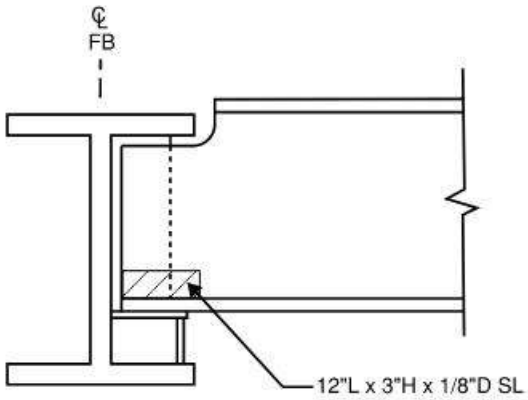

Span 26 - S1 at East Side of FB 5
South Elevation

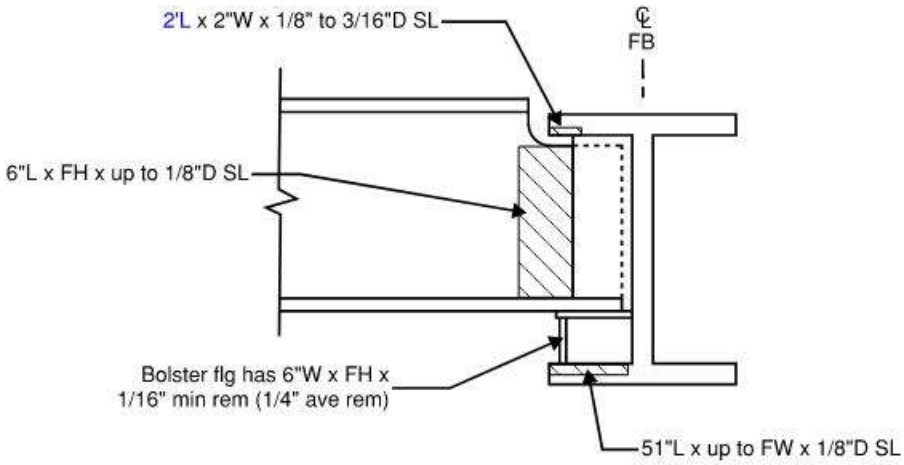

Span 26 - S1 at East Side of FB 5
North Elevation

- LR at all locations

REVISION 1	DATE: 8/28/19	CREW: BH, JG (Baker)	REVISION 3	DATE:	CREW:
REVISION 2	DATE: 8/3/2021	CREW: BM, EG, SD (PRIME)	REVISION 4	DATE:	CREW:

CREW: SW, BF	DATE: 10/11/2017	BRIDGE NO.: 03819

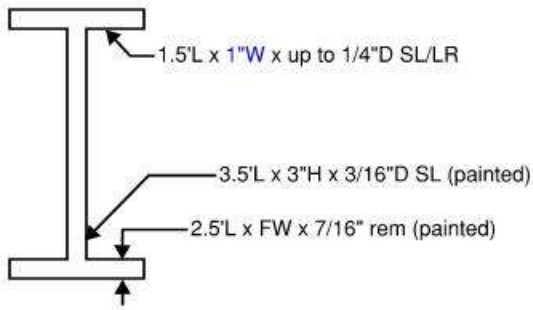

Span 26 - S1 at 2.5' West of FB 7
Section A-A (looking east)

REVISION 1	DATE: 8/28/19	CREW: BH, JG (Baker)	REVISION 3	DATE:	CREW:
REVISION 2	DATE: 8/3/2021	CREW: EG, SD (PRIME)	REVISION 4	DATE:	CREW:

Sketches
Inspection type: Fracture Critical,Routine
Inspection Date: 7/26/2021
Inspected by: PRIME AE

:Bridge No 03819

Town: NEW LONDON
Carried: INTERSTATE 95 NORTHBOUND
Crossed: THAMES RV,RR,LOCAL ROADS
Inventory Route: NHS

CREW: SW, BF	DATE: 9/27/17	BRIDGE NO.: 03819

Deterioration Legend:
1 - Bolster flg has up to FW x FH x 3/16"D SL/LR
2 - Bolster flg has 7"H x FW x 1/8" to KE rem w/2"L x 2"H RTH w/ LR and T-section has FW x 4"H x 5/16"D SL/LR
3 - FB to diag sway bracing conn missing (1 of 14) conn bolts (east)
4 - 6"Ø x 1"D spall w/ rebar (Epoxy coated, re-rusting)
5 - ~~FB web adj to bolster has 1'L x 1'H x 1/4"D pitting/LR~~ (NF); Bolster seat has 3/16"D SL/LR throughout ~~& flg of bolster has 1/4"Ø RTH~~ (NF)
6 - 15'L Haunch Spall
7 - 2'W x 10"L x 1"D (Epoxy coated, re-rusting)
8 - 1'Ø x 2"D (Epoxy coated, re-rusting)
9 - Floorbeam bottom flange with 8.5"W x 3/16"D section loss; Bolster flange with 4"W x 2"H x 1/4"D section loss & 3"W x 5/8"H perforation; Bolster web with FL x 3"H x 1/4"-5/16"D section loss

LOG DIRECTION
WEST TO EAST

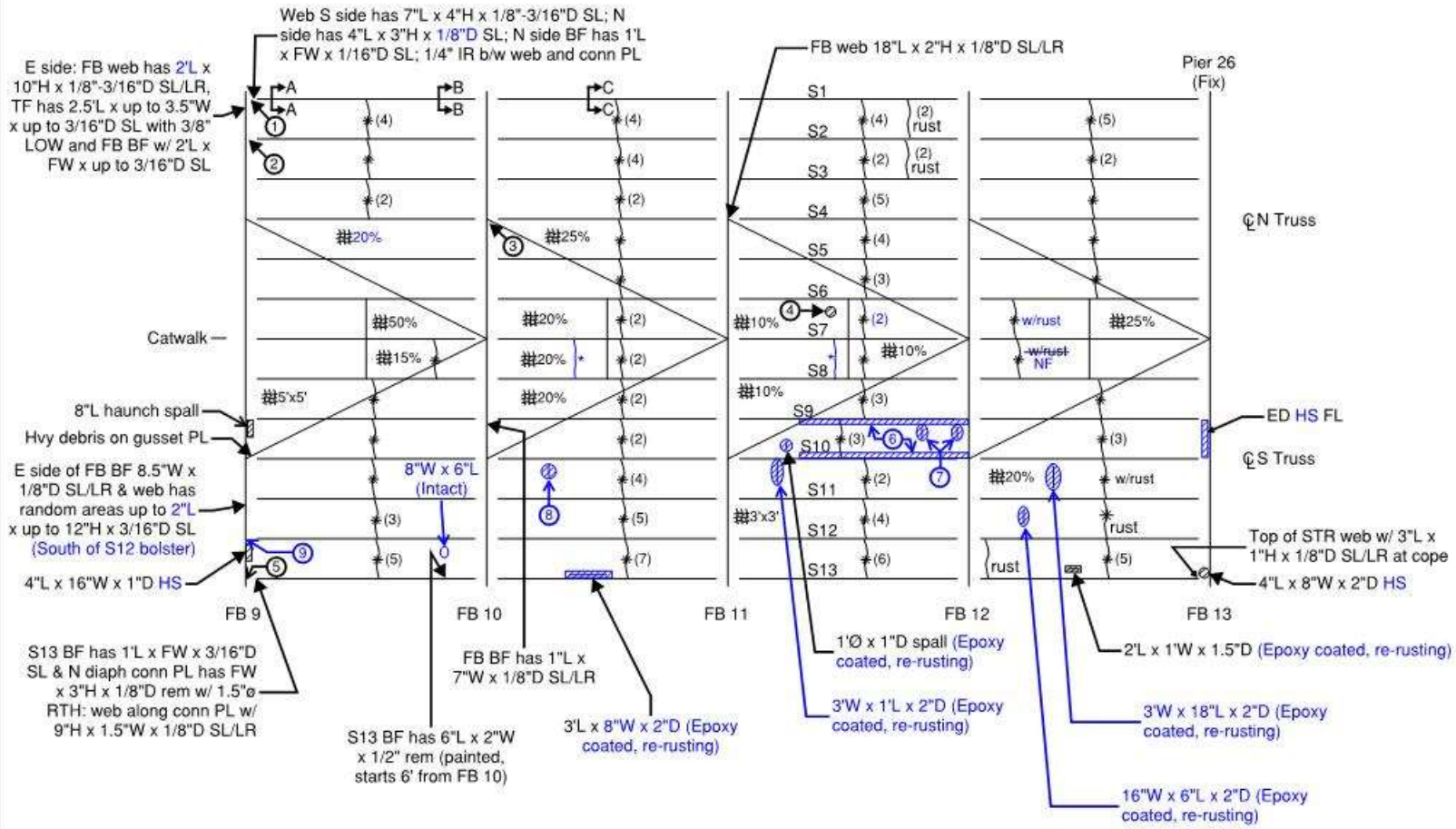

General Notes:

- See Underside of Deck and Steel Framing General Notes (Spans 26-28) sheet.
- East side of stringer connections to FB 9 have slotted bolt hole connections.
- Stringer BF's at FB9 are misaligned with the seats up to 1/2".

LEGEND:
- HOLLOW AREA
- SHALLOW REBAR
- SPALL AREA
- SPALL AREA WITH EXPOSED REBAR
- MAPCRACKS
- HAIRLINE CRACKS
- HONEYCOMB AREA
- SCALE AREA
- EFFLORESCENCE PRESENT
- SEE SKETCH

Span 26 - Underside of Deck and Framing
Section 3

REVISION 1	DATE: 8/27/19	CREW: BH, JG (Baker)	REVISION 3	DATE:	CREW:
REVISION 2	DATE: 8/3/2021	CREW: BM, EG, SD, EB, EA (PRIME)	REVISION 4	DATE:	CREW:

CREW: SW, BF	DATE: 10/11/2017	BRIDGE NO.: 03819

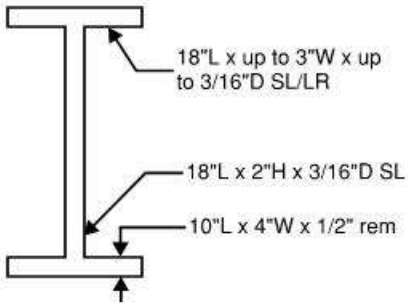

Span 26 - S1 at 3.5' East of FB 9 (at plugged weep)
Section A-A (looking east)

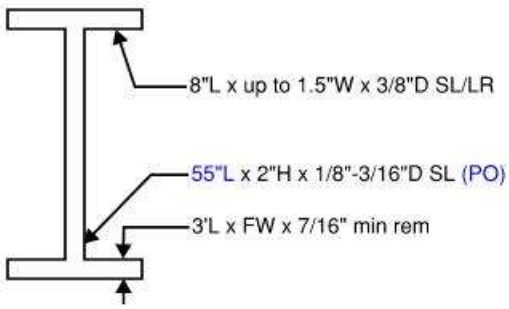

Span 26 - S1 at 5' West of FB 10
Section B-B (looking east)

REVISION 1	DATE: 8/28/19	CREW: BH, JG (Baker)	REVISION 3	DATE:	CREW:
REVISION 2	DATE: 8/3/2021	CREW: BM, EG, SD, EB (PRIME)	REVISION 4	DATE:	CREW:

CREW: SW, BF	DATE: 10/11/2017	BRIDGE NO.: 03819

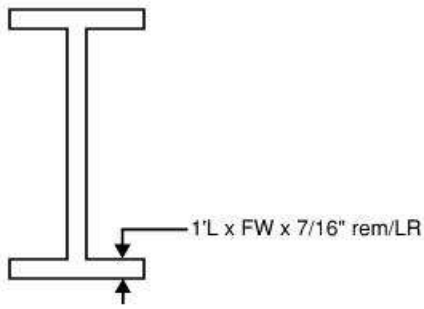

Span 26 - S1 at Mid-Panel East of FB 10
Section C-C (looking east)

REVISION 1	DATE: 8/28/19	CREW: BH, JG (Baker)	REVISION 3	DATE:	CREW:
REVISION 2	DATE: 8/18/2021	CREW: BM, EB (PRIME) - No Change	REVISION 4	DATE:	CREW:

Sketches
Inspection type: Fracture Critical,Routine
Inspection Date: 7/26/2021
Inspected by: PRIME AE

:Bridge No 03819

Town: NEW LONDON
Carried: INTERSTATE 95 NORTHBOUND
Crossed: THAMES RV,RR,LOCAL ROADS
Inventory Route: NHS

CREW: SW, BF	DATE: 9/28/17	BRIDGE NO.: 03819

Deterioration Legend:
1 - See sketch
2 - Bolster flg has FH x 4"W x 3/16" min rem
3 - 1'Ø x 1"D (Epoxy coated, re-rusting)
4 - ~~FB BF has 15"L x 3"W x 1/8"D SL/LR~~ NF
5 - FB web has (2) areas of SL/LR up to 16"L x 2"H x 1/8"D
6 - Loose conn bolts at str conn to FB ~~w/ rand abrasion rust~~ (NF) (6 total conn bolts)

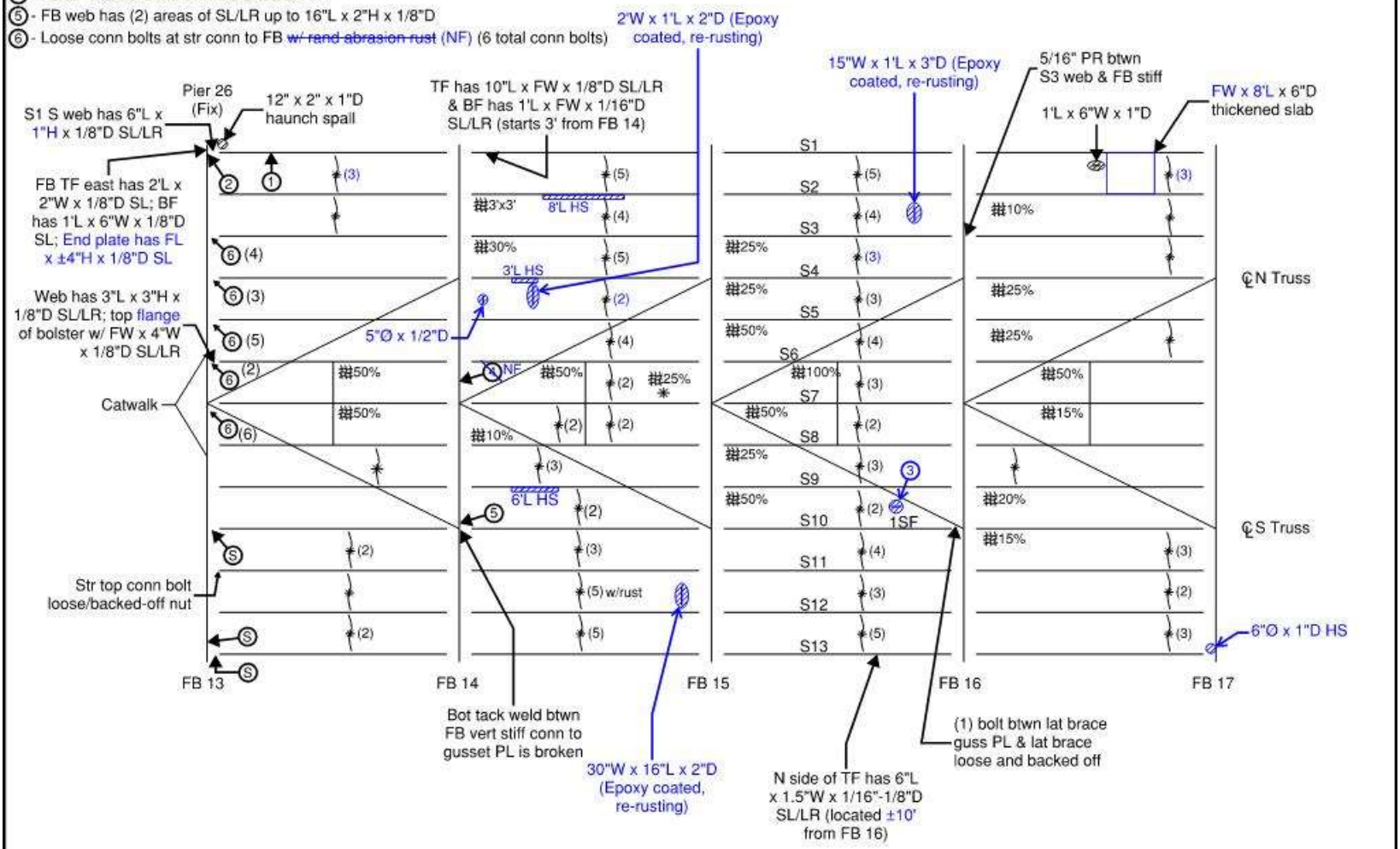

General Notes:
- See Underside of Deck and Steel Framing General Notes (Spans 26-28) sheet.
- East side of stringer connections to FB 13 have slotted bolt hole connections.
- The navigation lights in Span 27 at bottom chord were inspected at night and were not functional at the time of inspection. The navigation lights at south column of Piers 26 and 27 were functional at night.

LEGEND:
- HOLLOW AREA
- SHALLOW REBAR
- SPALL AREA
- SPALL AREA WITH EXPOSED REBAR
- MAPCRACKS
- HAIRLINE CRACKS
- HONEYCOMB AREA
- SCALE AREA
- EFFLORESCENCE PRESENT
- SEE SKETCH

Span 27 - Underside of Deck and Framing
Section 1

REVISION 1	DATE: 8/27/19	CREW: BH, JG (Baker)	REVISION 3	DATE:	CREW:
REVISION 2	DATE: 8/16/2021	CREW: BM, EB, EA (PRIME)	REVISION 4	DATE:	CREW:

CREW: SW, BF	DATE: 9/28/2017	BRIDGE NO.: 03819

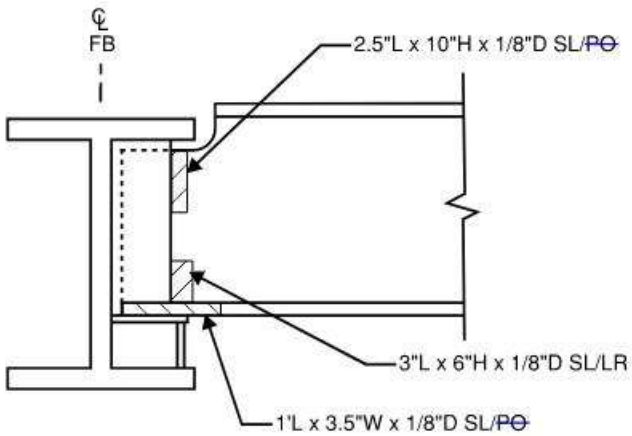

Span 27 - S10 at East Side of FB 13
South Elevation

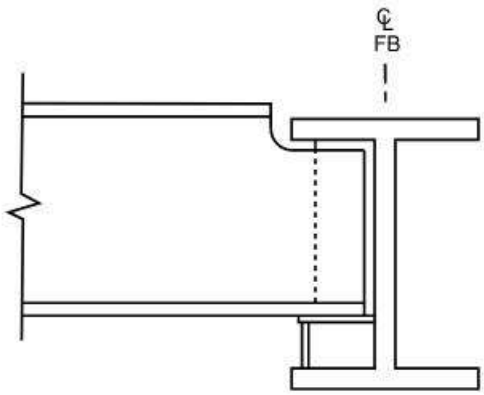

Span 27 - S10 at East Side of FB 13
North Elevation

REVISION 1	DATE: 8/27/19	CREW: BH, JG (Baker)	REVISION 3	DATE:	CREW:
REVISION 2	DATE: 8/16/2021	CREW: BM, EB (PRIME)	REVISION 4	DATE:	CREW:

Sketches
Inspection type: Fracture Critical,Routine
Inspection Date: 7/26/2021
Inspected by: PRIME AE

:Bridge No 03819

Town: NEW LONDON
Carried: INTERSTATE 95 NORTHBOUND
Crossed: THAMES RV,RR,LOCAL ROADS
Inventory Route: NHS

CREW: SW, BF	DATE: 9/28/2017	BRIDGE NO.: 03819

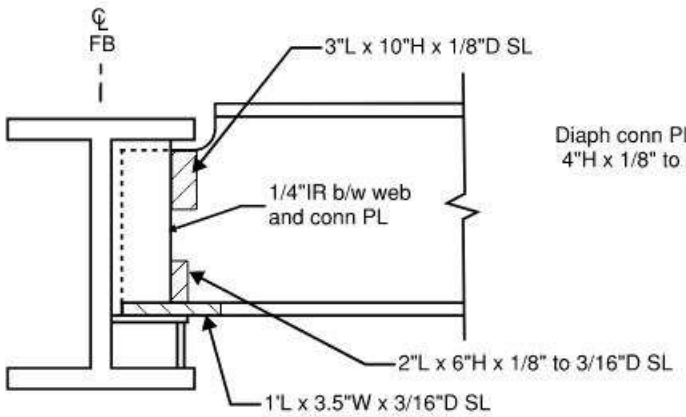

Span 27 - S13 at East Side of FB 13
South Elevation

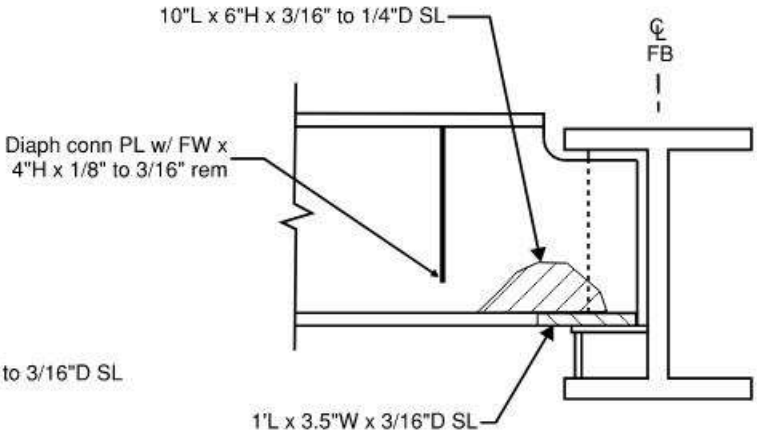

Span 27 - S13 at East Side of FB 13
North Elevation

- LR at all locations

REVISION 1	DATE: 8/27/19	CREW: BH, JG (Baker)	REVISION 3	DATE:	CREW:
REVISION 2	DATE: 8/16/2021	CREW: BM, EB (PRIME) - No Change	REVISION 4	DATE:	CREW:

Sketches
Inspection type: Fracture Critical,Routine
Inspection Date: 7/26/2021
Inspected by: PRIME AE

:Bridge No 03819

Town: NEW LONDON
Carried: INTERSTATE 95 NORTHBOUND
Crossed: THAMES RV,RR,LOCAL ROADS
Inventory Route: NHS

CREW: SW, BF	DATE: 9/28/2017	BRIDGE NO.: 03819

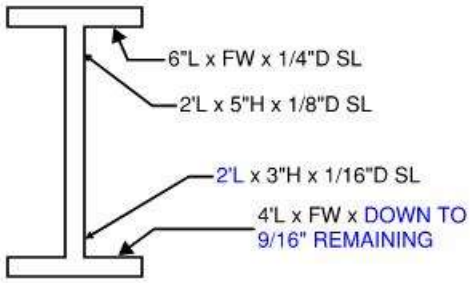

Span 27 - S1 at 8' East of FB 13
Note ①(looking east)

- LR at all locations

REVISION 1	DATE: 8/27/19	CREW: BH, JG (Baker)	REVISION 3	DATE:	CREW:
REVISION 2	DATE: 8/18/2021	CREW: BM, EB (PRIME)	REVISION 4	DATE:	CREW:

CREW: SW, BF	DATE: 9/28/2017	BRIDGE NO.: 03819

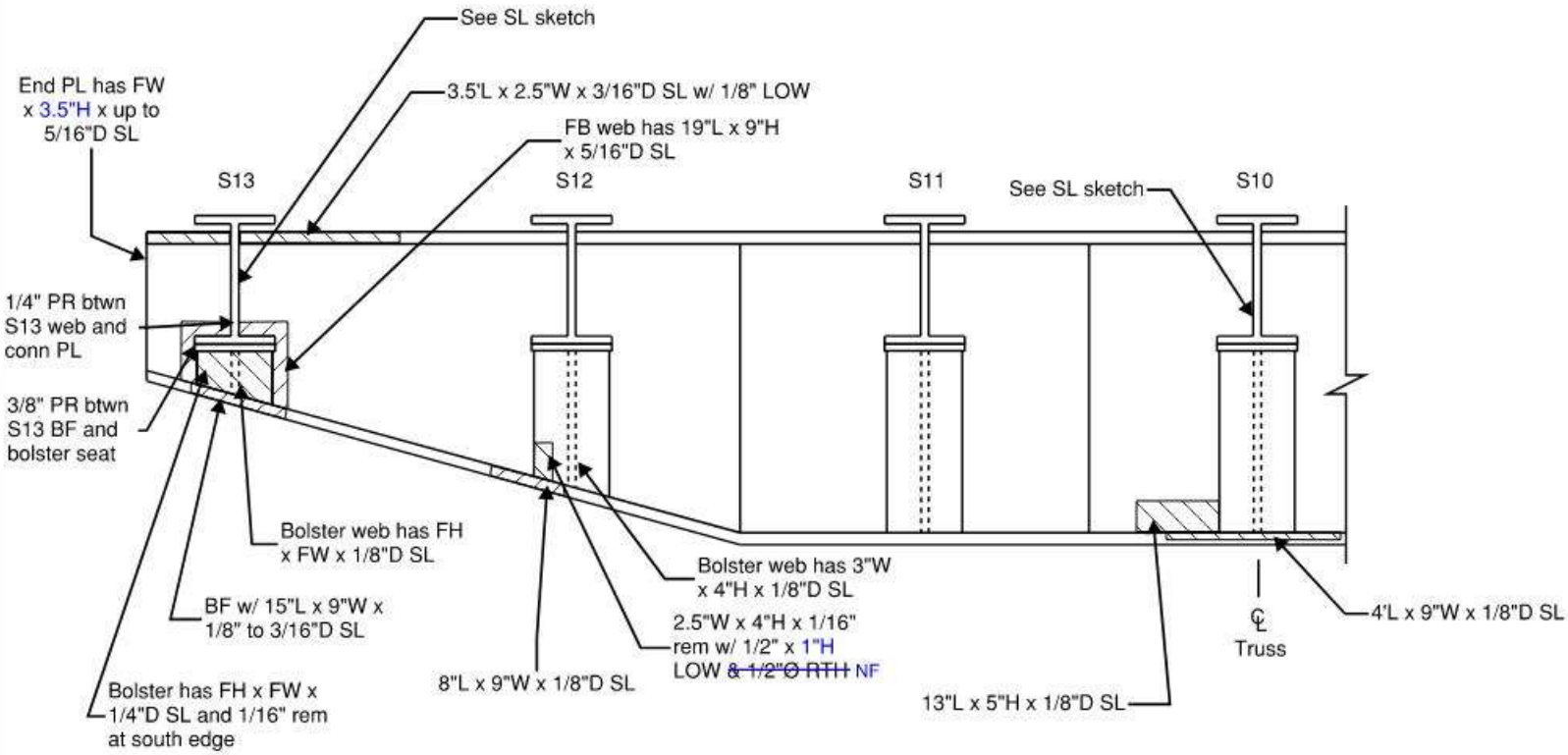

Span 27 - Floorbeam 13 South Cantilever
East Elevation

- LR at all locations

REVISION 1	DATE: 8/27/19	CREW: BH, JG (Baker)	REVISION 3	DATE:	CREW:
REVISION 2	DATE: 8/16/2021	CREW: BM, EB (PRIME)	REVISION 4	DATE:	CREW:

Sketches
Inspection type: Fracture Critical,Routine
Inspection Date: 7/26/2021
Inspected by: PRIME AE

:Bridge No 03819

Town: NEW LONDON
Carried: INTERSTATE 95 NORTHBOUND
Crossed: THAMES RV,RR,LOCAL ROADS
Inventory Route: NHS

CREW: BF, SW	DATE: 9/28/17	BRIDGE NO.: 03819

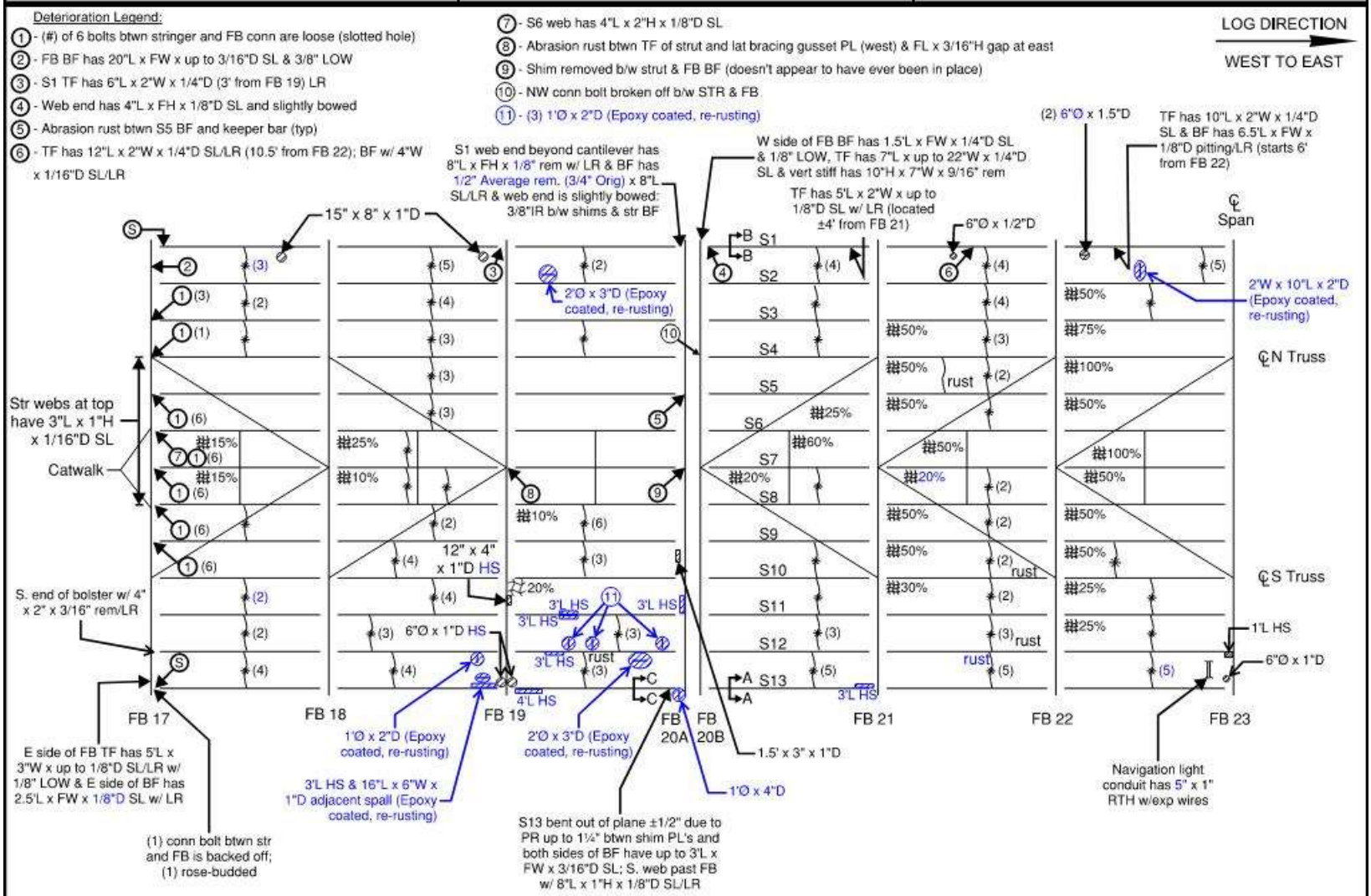

General Notes:

- See Underside of Deck and Steel Framing General Notes (Spans 26-28) sheet.
- Up to 1/2" PR between FB 17 top flange and deck at each cantilever.
- Stringers at FB 20A slide on FB top flange w/keeper PL's; shim PL's have up to 3/4" PR between PL's at random locations and most tack welds between stringer bottom flange and shim PL's are broken (also S8-S12 have up to 3/8" PR between bot FL's and conn PL's to FB).
- East side of FB 20B deck haunch has random intact concrete overpours up to 18" x 6".
- FB 20A & 20B BF at south cantilever adjacent to stiff's has areas of SL up to 2"L x FW x up to 1/4"D & stiffs have FW x 3"H x 1/4"D SL (PO).
- FB 17 east web base has up to 2"H x 1/8"D SL/PO; isol stiffs w/ FW x 1/8"D SL/PO & BF w/ up to 8"W x 1/8"D SL/PO.

LEGEND:
- HOLLOW AREA
- SHALLOW REBAR
- SPALL AREA
- SPALL AREA WITH EXPOSED REBAR
- MAPCRACKS
- HAIRLINE CRACKS
- HONEYCOMB AREA
- SCALE AREA
- EFFLORESCENCE PRESENT
- SEE SKETCH

Span 27 - Underside of Deck and Framing
Section 2

REVISION 1	DATE: 8/27/19	CREW: BH, JG (Baker)	REVISION 3	DATE:	CREW:
REVISION 2	DATE: 8/9/2021	CREW: NR, EB, EA (PRIME)	REVISION 4	DATE:	CREW:

Sketches
Inspection type: Fracture Critical,Routine
Inspection Date: 7/26/2021
Inspected by: PRIME AE

:Bridge No 03819

Town: NEW LONDON
Carried: INTERSTATE 95 NORTHBOUND
Crossed: THAMES RV,RR,LOCAL ROADS
Inventory Route: NHS

CREW: SW, BF	DATE: 9/28/2017	BRIDGE NO.: 03819

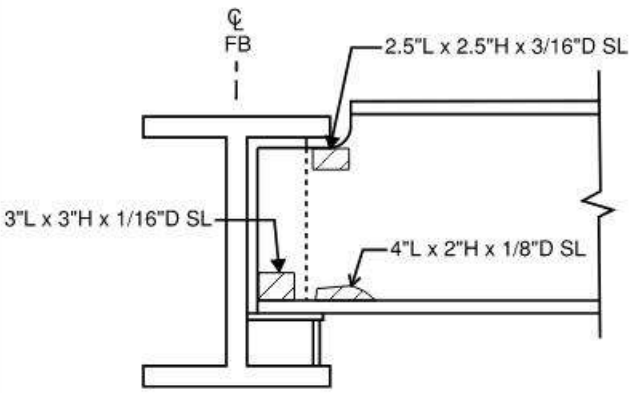

Span 27 - S1 at East Side of FB 17
South Elevation

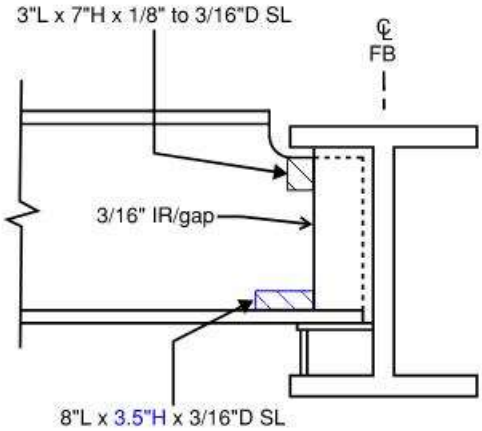

- LR at all locations

Span 27 - S1 at East Side of FB 17
North Elevation

REVISION 1	DATE: 8/29/19	CREW: BH, JG (Baker)	REVISION 3	DATE:	CREW:
REVISION 2	DATE: 8/9/2021	CREW: NR, EB (PRIME)	REVISION 4	DATE:	CREW:

Sketches
Inspection type: Fracture Critical,Routine
Inspection Date: 7/26/2021
Inspected by: PRIME AE

:Bridge No 03819

Town: NEW LONDON
Carried: INTERSTATE 95 NORTHBOUND
Crossed: THAMES RV,RR,LOCAL ROADS
Inventory Route: NHS

CREW: SW, BF	DATE: 9/28/2017	BRIDGE NO.: 03819

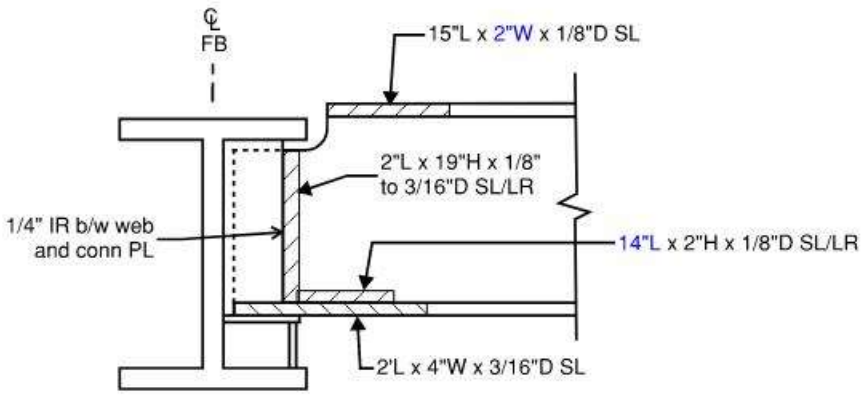

Span 27 - S13 at East Side of FB 17
South Elevation

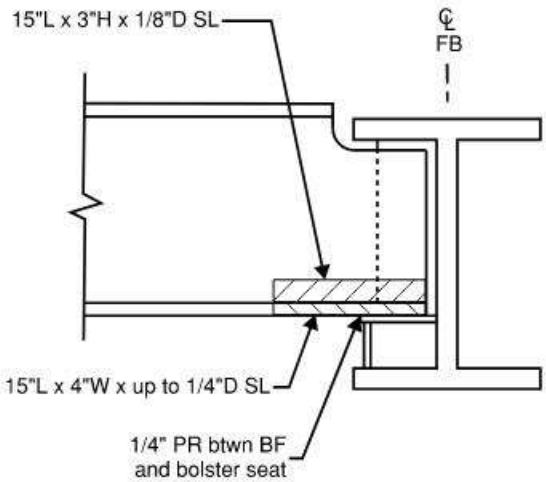

Span 27 - S13 at East Side of FB 17
North Elevation

REVISION 1	DATE: 8/27/19	CREW: BH, JG (Baker)	REVISION 3	DATE:	CREW:
REVISION 2	DATE: 8/9/2021	CREW: NR, EB (PRIME)	REVISION 4	DATE:	CREW:

Sketches
Inspection type: Fracture Critical,Routine
Inspection Date: 7/26/2021
Inspected by: PRIME AE

:Bridge No 03819

Town: NEW LONDON
Carried: INTERSTATE 95 NORTHBOUND
Crossed: THAMES RV,RR,LOCAL ROADS
Inventory Route: NHS

CREW: SW, BF	DATE: 9/28/2017	BRIDGE NO.: 03819

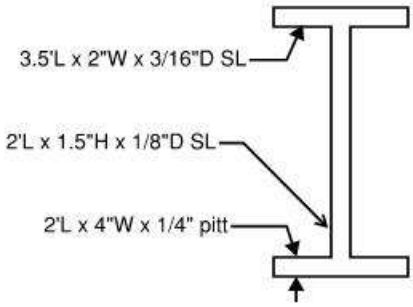

Span 27 - S13 at 3' East of FB 20B
Section A-A (looking east)
- LR at all locations

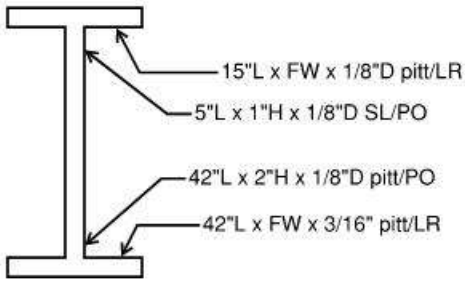

Span 27 - S1 at 4' East of FB 20B
Section B-B (looking east)

REVISION 1	DATE: 9/5/19	CREW: BH, JG (Baker)	REVISION 3	DATE:	CREW:
REVISION 2	DATE: 8/9/2021	CREW: NR, EB (PRIME) - No Change	REVISION 4	DATE:	CREW:

Sketches
Inspection type: Fracture Critical,Routine
Inspection Date: 7/26/2021
Inspected by: PRIME AE

:Bridge No 03819

Town: NEW LONDON
Carried: INTERSTATE 95 NORTHBOUND
Crossed: THAMES RV,RR,LOCAL ROADS
Inventory Route: NHS

CREW: BH, JG	DATE: 8/29/2019	BRIDGE NO.: 03819

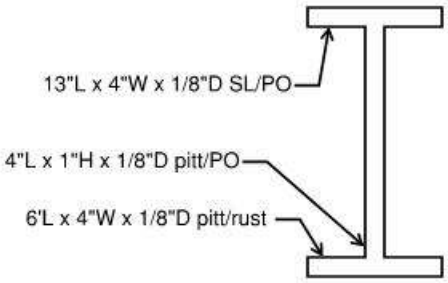

Span 27 - S13 at 8' West of FB 20A
Section C-C (looking east)

REVISION 1	DATE: 8/29/19	CREW: BH, JG (Baker)	REVISION 3	DATE:	CREW:
REVISION 2	DATE: 8/9/2021	CREW: NR, EB (PRIME)	REVISION 4	DATE:	CREW:

Sketches
Inspection type: Fracture Critical,Routine
Inspection Date: 7/26/2021
Inspected by: PRIME AE

:Bridge No 03819

Town: NEW LONDON
Carried: INTERSTATE 95 NORTHBOUND
Crossed: THAMES RV,RR,LOCAL ROADS
Inventory Route: NHS

CREW: BF, SW	DATE: 9/29/17	BRIDGE NO.: 03819

Deterioration Legend:

1. (#) of 6 bolts btwn stringer and FB conn are loose (slotted hole)
2. S1 web has 12"L x 5"H x 1/8"D SL/LR & BF has 1'L x FW x 1/8"D SL
3. S1 BF has 6'L x FW x 9/16" rem (painted, 3' from FB 24)
4. S1 BF both sides has 7"L x FW x 1/16"-1/8"D pitting/PO at mid-panel
5. S1 BF has 3'L x FW x 1/16"D pitting/PO (4' from FB 25)
6. FB TF has random areas of pitting up to 20"W x 1/8"D PO
7. Up to 1/8" PR btwn S1 BF and FB TF & FB TF has (2) areas of SL/LR up to 4"L x 14"W x 3/16"D
8. Up to 1/4" gap/PR btwn str BF and FB TF at front edge
9. S1 web ends at top have 3"L x up to 4"H x up to 5/16"D SL
10. (3) conn bolts at str diaph not tightened
11. One spall 18" x 4" x 1"D (Epoxy coated, re-rusting)
12. Vert stiff has 3"H x FW x 1/8" min rem
13. 6"Ø conc o/pour (tight)
14. 2'W x 1'L x 3"D (Epoxy coated, re-rusting)
15. (2) 1'Ø x 2"D (Epoxy coated, re-rusting)

LOG DIRECTION → WEST TO EAST

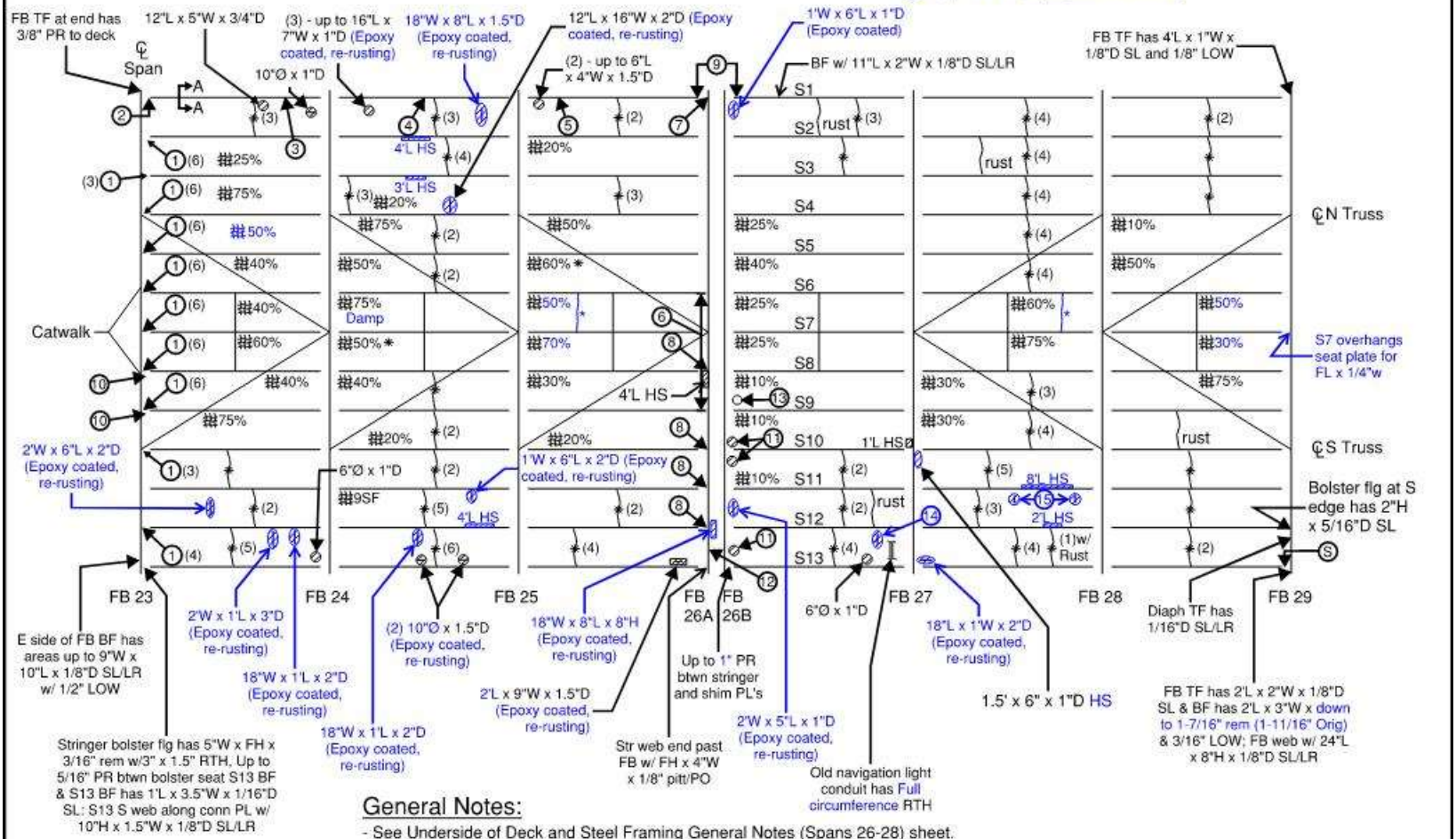

General Notes:

- See Underside of Deck and Steel Framing General Notes (Spans 26-28) sheet.
- Concrete headers between FB 26A&B along full length have transverse cracks up to 1/16" wide.
- Stringers at FB 26B slide on FB top flange w/keeper PL's; shim PL's have up to 1" PR between FB TF's and stringer shim PL's and most tack welds between stringer bottom flange and shim PL's and between shim PL's and FB top flange are broken; abrasion rust typical at most locations.
- Stringer BF ends at FB 26A have up to 1/16"-1/8"D pitting (non-critical areas).
- Spacer PL btwn stringer BF and FB TF at FB 26B have up to 5/8" PR (W side).
- Joint sides of FB 26A&B BF's adjacent to stiff's have up to 11"W x 1/8"SL each side (<5% loss).
- Loud banging sound at joint at FB 26A&B.
- Stringer 9 w/ mod vibration under live load.
- FB23 stringers overhang the seat plate up to 1/2" on the south side.

LEGEND:

- HOLLOW AREA
- SHALLOW REBAR
- SPALL AREA
- SPALL AREA WITH EXPOSED REBAR
- MAPCRACKS
- HAIRLINE CRACKS
- HONEYCOMB AREA
- SCALE AREA
- EFFLORESCENCE PRESENT
- (S) SEE SKETCH

Span 27 - Underside of Deck and Framing
Section 3

REVISION 1	DATE: 8/29/19	CREW: BH, JG (Baker)	REVISION 3	DATE:	CREW:
REVISION 2	DATE: 8/10/2021	CREW: NR, EB, EA (PRIME)	REVISION 4	DATE:	CREW:

Sketches
Inspection type: Fracture Critical,Routine
Inspection Date: 7/26/2021
Inspected by: PRIME AE

:Bridge No 03819

Town: NEW LONDON
Carried: INTERSTATE 95 NORTHBOUND
Crossed: THAMES RV,RR,LOCAL ROADS
Inventory Route: NHS

CREW: SW, BF	DATE: 9/29/2017	BRIDGE NO.: 03819

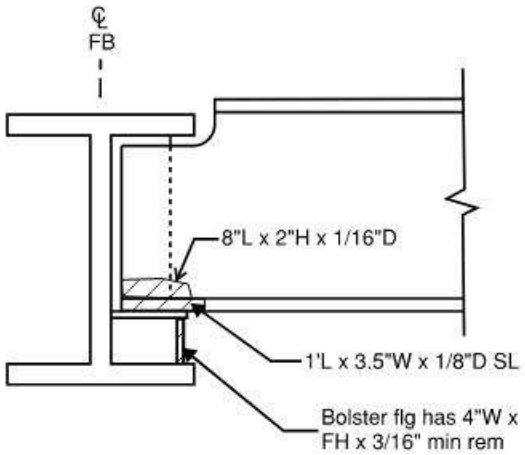

Span 27 - S13 at West Side of FB 29
North Elevation

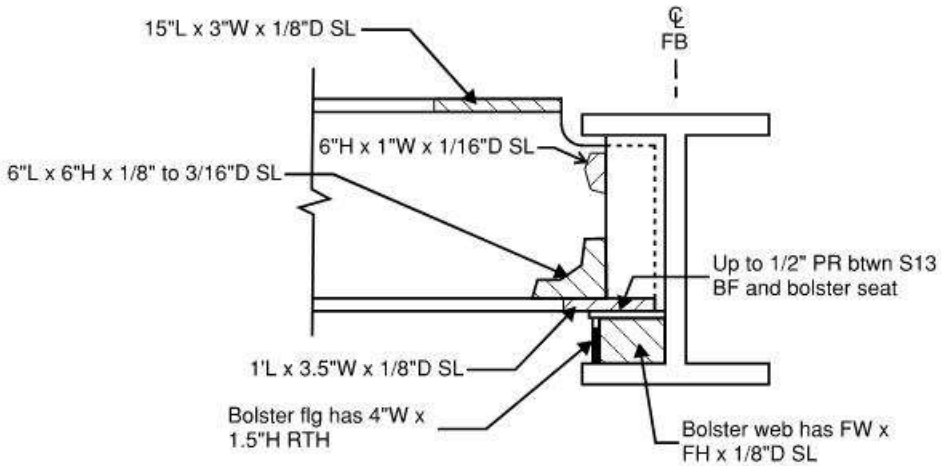

Span 27 - S13 at West Side of FB 29
South Elevation

- LR at all locations

REVISION 1	DATE: 9/5/19	CREW: BH, JG (Baker)	REVISION 3	DATE:	CREW:
REVISION 2	DATE: 8/12/2021	CREW: NR, EB (PRIME) - No Change	REVISION 4	DATE:	CREW:

CREW: SW, BF	DATE: 10/12/2017	BRIDGE NO.: 03819

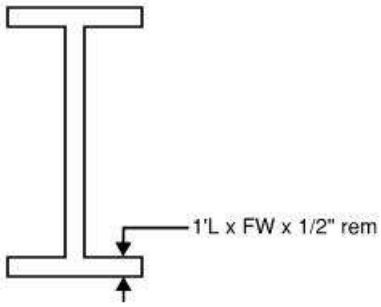

Span 27 - S1 at 5' East of FB 23
Section A-A (looking east)

REVISION 1	DATE: 8/29/19	CREW: BH, JG (Baker) - No change	REVISION 3	DATE:	CREW:
REVISION 2	DATE: 8/10/2021	CREW: NR, EB (PRIME) - No Change	REVISION 4	DATE:	CREW:

CREW: SW, BF	DATE: 9/29/17	BRIDGE NO.: 03819

Deterioration Legend:
1. - Stringer seat PL has pitting w/4"H x FW x KE min rem w/ 1.5"H x 1"W RTH w/ LR
2. - Bolster flg has 5"W x up to 3.5"H x KE min rem with 1"Ø RTH; web w/ FW x 3"H x 1/8"D SL w/LR
3. - S7 overhangs seat PL FL x 1/2" to south
4. - Bot of vert stiff has FW x 2"H RTH
5. - Bolster web has FW x 2"H x up to 3/16"D SL w/ 3" x 1" RTH/LR
6. - Bot of vert stiff has FW x 2"H x 3/8"D SL/PO

LOG DIRECTION → WEST TO EAST

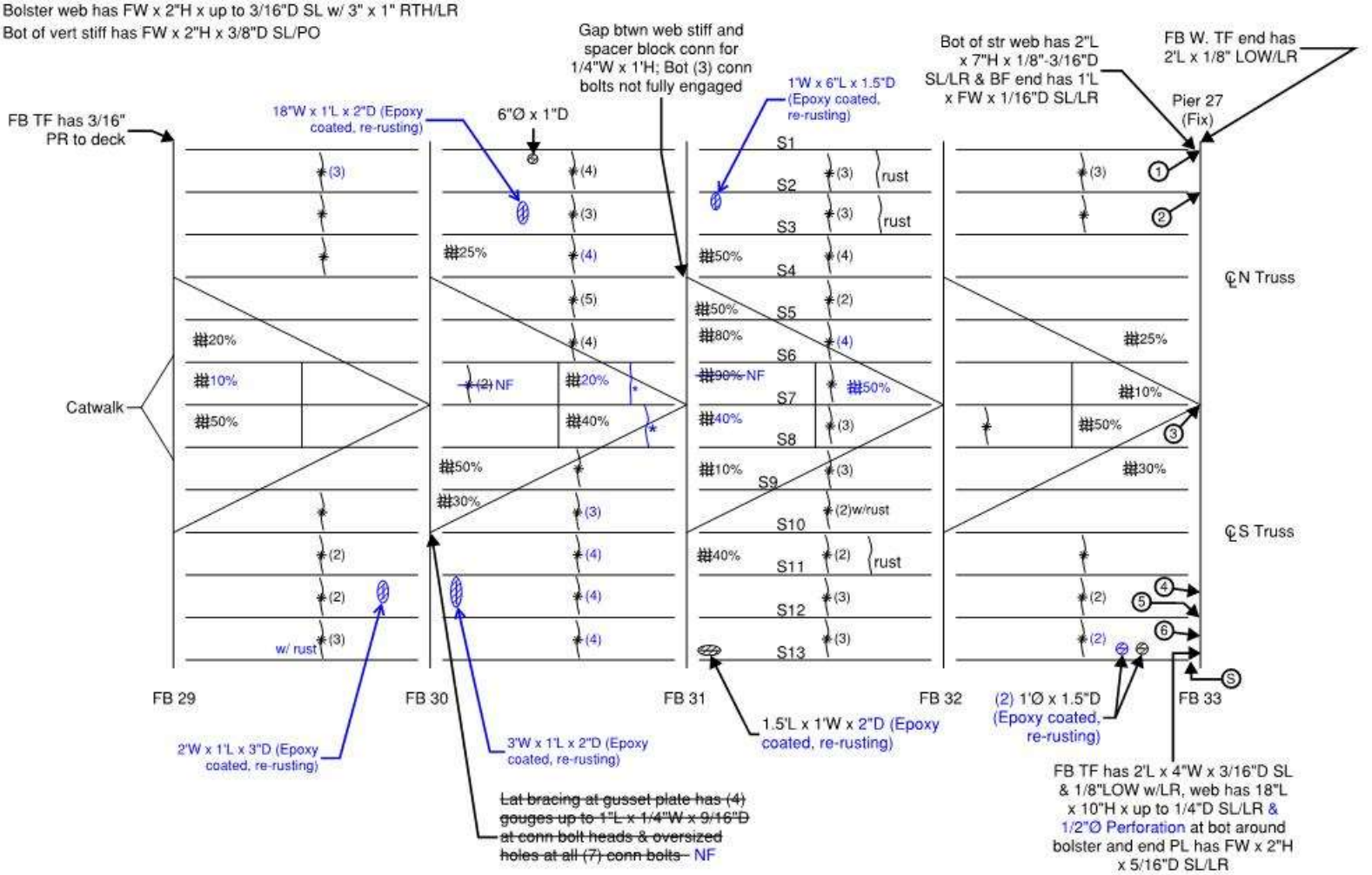

General Notes:

- See Underside of Deck and Steel Framing General Notes (Spans 26-28) sheet.
- Stringers at FB 33 overhang seat plate up to 1/2" to north.

LEGEND:
- HOLLOW AREA
- SHALLOW REBAR
- SPALL AREA
- SPALL AREA WITH EXPOSED REBAR
- MAPCRACKS
- HAIRLINE CRACKS
- HONEYCOMB AREA
- SCALE AREA
- EFFLORESCENCE PRESENT
- SEE SKETCH

Span 27 - Underside of Deck and Framing
Section 4

REVISION 1	DATE: 9/4/19	CREW: AH, BF (Baker)	REVISION 3	DATE:	CREW:
REVISION 2	DATE: 8/17/2021	CREW: BM, EB, EA (PRIME)	REVISION 4	DATE:	CREW:

Sketches
Inspection type: Fracture Critical,Routine
Inspection Date: 7/26/2021
Inspected by: PRIME AE

:Bridge No 03819

Town: NEW LONDON
Carried: INTERSTATE 95 NORTHBOUND
Crossed: THAMES RV,RR,LOCAL ROADS
Inventory Route: NHS

CREW: SW, BF	DATE: 9/29/2017	BRIDGE NO.: 03819

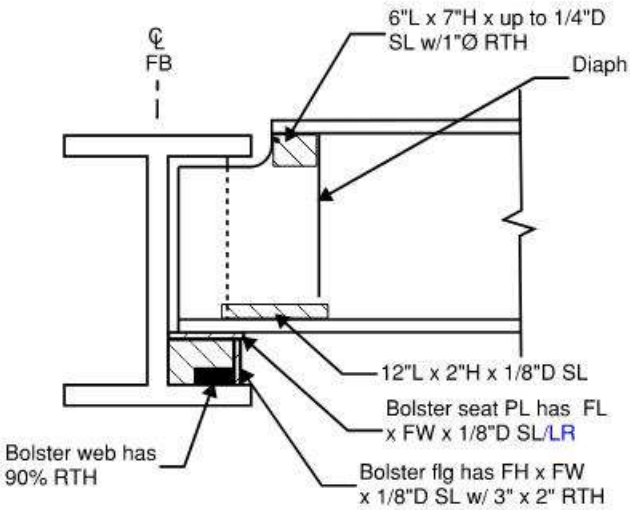

Span 27 - S13 at West Side of FB 33
North Elevation

- LR at all locations

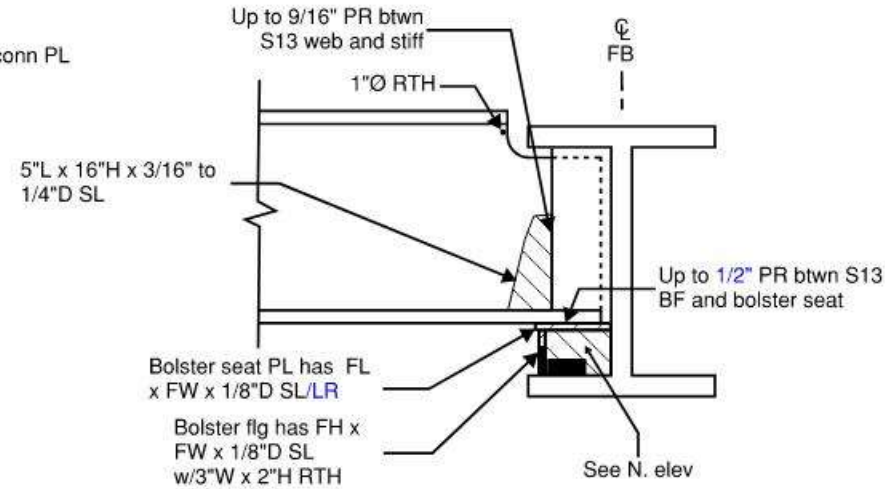

Span 27 - S13 at West Side of FB 33
South Elevation

REVISION 1	DATE: 9/5/19	CREW: AH, BF (Baker)	REVISION 3	DATE:	CREW:
REVISION 2	DATE: 08/17/2021	CREW: BM, EB (PRIME AE)	REVISION 4	DATE:	CREW:

Sketches
Inspection type: Fracture Critical,Routine
Inspection Date: 7/26/2021
Inspected by: PRIME AE

:Bridge No 03819

Town: NEW LONDON
Carried: INTERSTATE 95 NORTHBOUND
Crossed: THAMES RV,RR,LOCAL ROADS
Inventory Route: NHS

CREW: SW, BF	DATE: 10/4/17	BRIDGE NO.: 03819

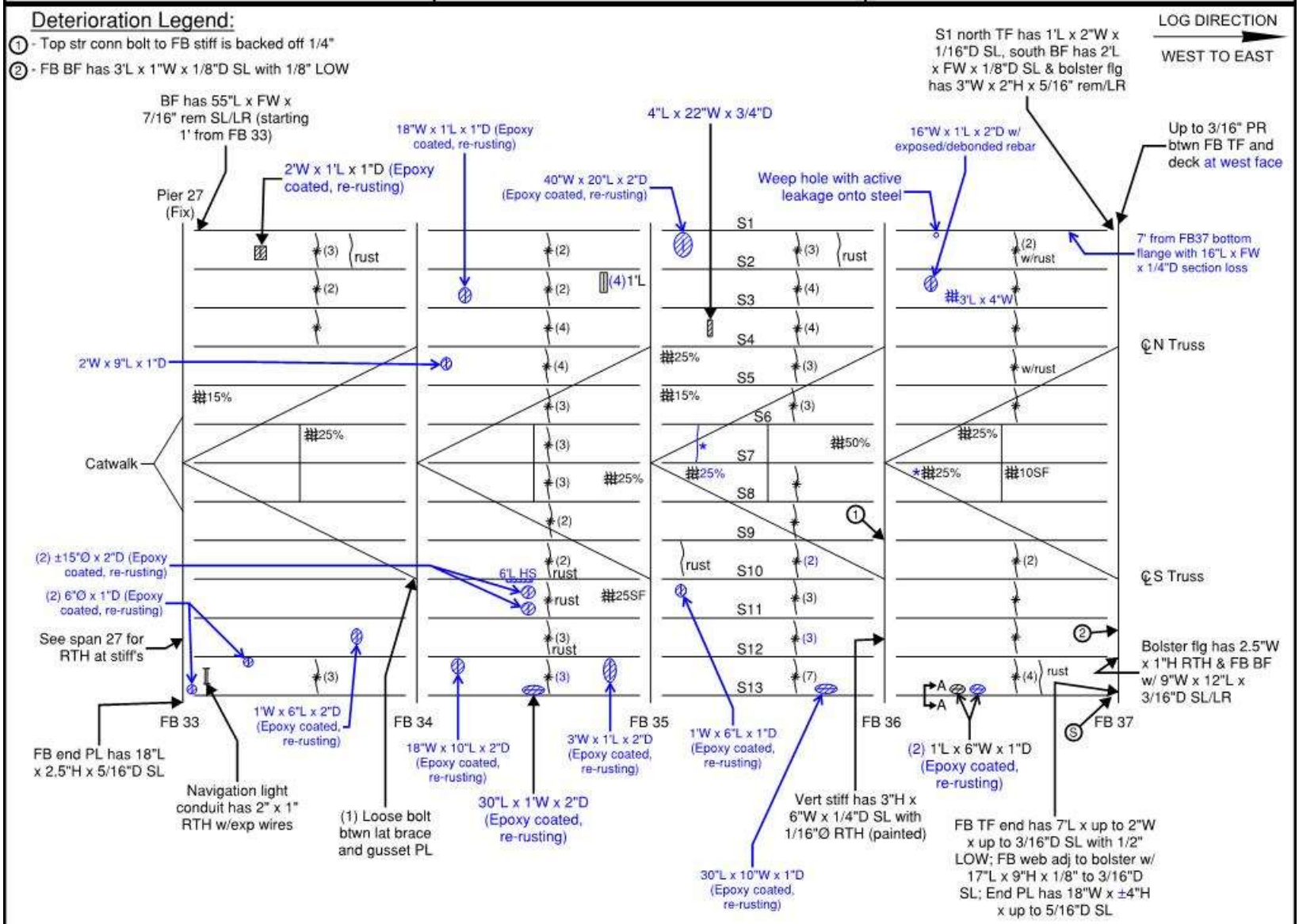

General Notes:

- See Underside of Deck and Steel Framing General Notes (Spans 26-28) sheet.
- East side of stringer connections to FB 33 have slotted bolt hole connections.
- West side of stringer connections to FB 37 have slotted bolt hole connections and no washers under nuts.
- S7-S10 at FB 37 are laterally misaligned 1/2" to the north over bolster seat.

LEGEND:
- HOLLOW AREA
- SHALLOW REBAR
- SPALL AREA
- SPALL AREA WITH EXPOSED REBAR
- MAPCRACKS
- HAIRLINE CRACKS
- HONEYCOMB AREA
- SCALE AREA
- EFFLORESCENCE PRESENT
- SEE SKETCH

Span 28 - Underside of Deck and Framing
Section 1

REVISION 1	DATE: 8/23/19	CREW: BH, JG (Baker)	REVISION 3	DATE:	CREW:
REVISION 2	DATE: 08/17/2021	CREW: BM, EG, EB, AN, EA (PRIME AE)	REVISION 4	DATE:	CREW:

Sketches
Inspection type: Fracture Critical,Routine
Inspection Date: 7/26/2021
Inspected by: PRIME AE

:Bridge No 03819

Town: NEW LONDON
Carried: INTERSTATE 95 NORTHBOUND
Crossed: THAMES RV,RR,LOCAL ROADS
Inventory Route: NHS

CREW: SW, BF	DATE: 10/4/2017	BRIDGE NO.: 03819

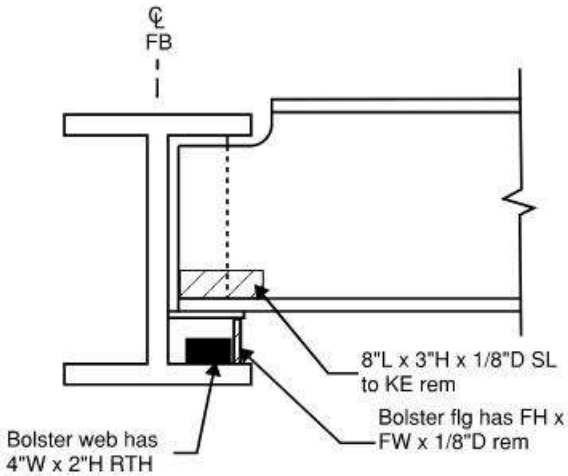

Span 28 - S13 at West Side of FB 37
North Elevation

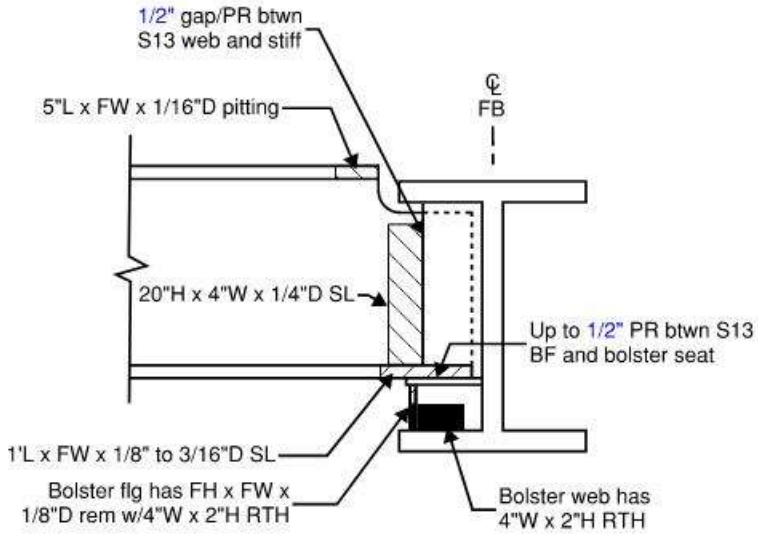

Span 28 - S13 at West Side of FB 37
South Elevation

- LR at all locations.

REVISION 1	DATE: 8/23/19	CREW: BH, JG (Baker)	REVISION 3	DATE:	CREW:
REVISION 2	DATE: 08/17/2021	CREW: BM, EB (PRIME AE)	REVISION 4	DATE:	CREW:

CREW: SW, BF	DATE: 10/4/2017	BRIDGE NO.: 03819

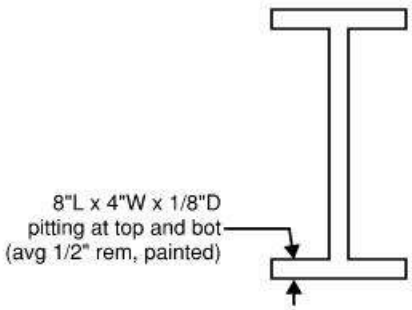

Span 28 - S13 at 7' East of FB 36
Section A-A (looking east)

REVISION 1	DATE: 8/23/19	CREW: BH, JG (Baker) - No change	REVISION 3	DATE:	CREW:
REVISION 2	DATE: 08/17/2021	CREW: BM, EB (PRIME AE)	REVISION 4	DATE:	CREW:

Sketches
Inspection type: Fracture Critical,Routine
Inspection Date: 7/26/2021
Inspected by: PRIME AE

:Bridge No 03819

Town: NEW LONDON
Carried: INTERSTATE 95 NORTHBOUND
Crossed: THAMES RV,RR,LOCAL ROADS
Inventory Route: NHS

CREW: BF, SW	DATE: 10/4/17	BRIDGE NO.: 03819

Deterioration Legend:
1. - S10 BF bent up 1/4" x 8"L
2. - Random areas of 1/8" PR btwn S9 TF and haunch w/ rand dull areas FL
3. - Vert stiff at bot has FW x 8"H x 1/8" rem and 2-1/4"W x 3/4"H perforation
4. - FB web has 12"L x 6"H x 1/8"D SL
5. - S12 bolster web has 3"Ø RTH/KE rem

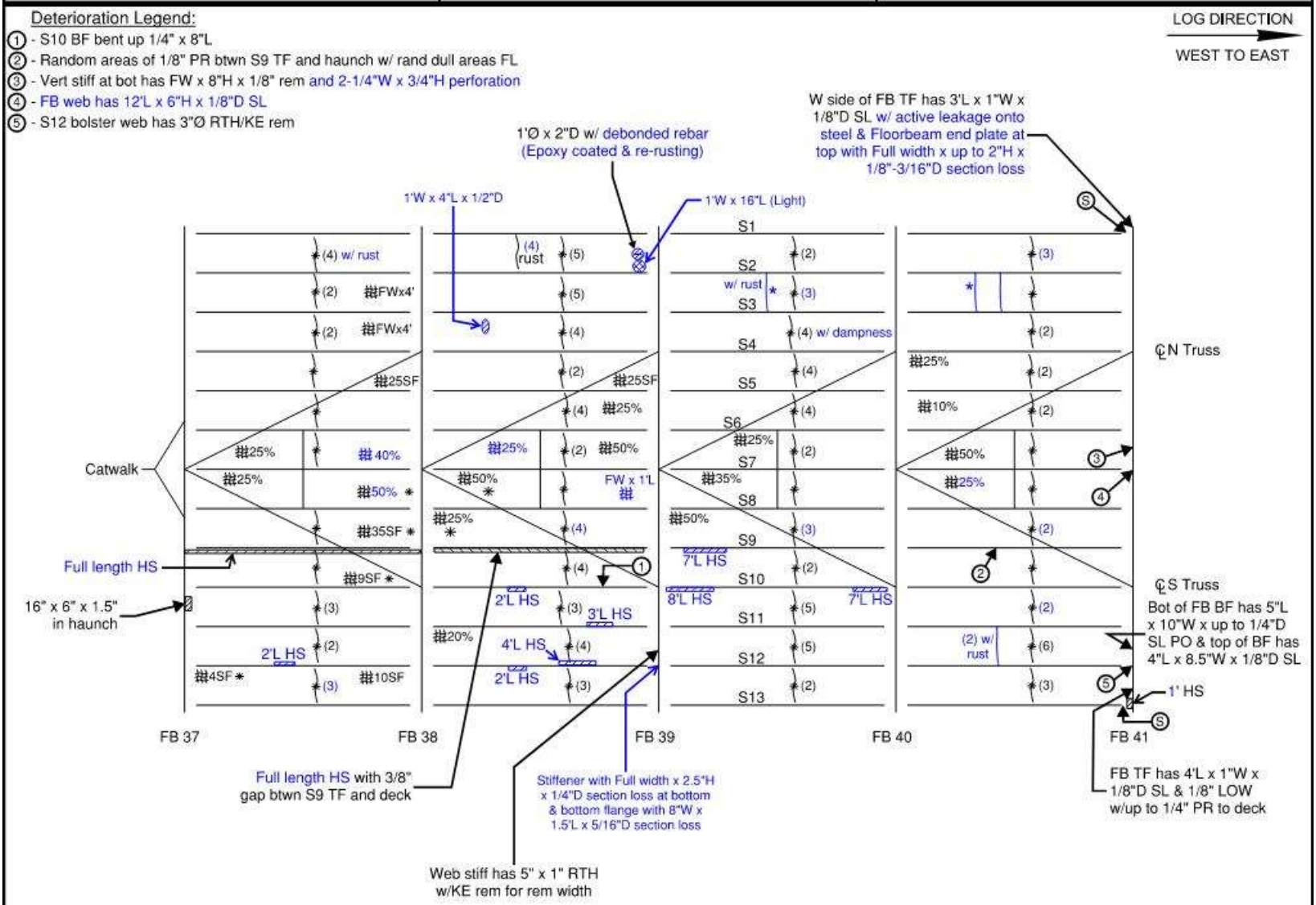

General Notes:
- See Underside of Deck and Steel Framing General Notes (Spans 26-28) sheet.
- West side of stringer connections to FB 41 have slotted bolt hole connections.

LEGEND:
- HOLLOW AREA
- SHALLOW REBAR
- SPALL AREA
- SPALL AREA WITH EXPOSED REBAR
- MAPCRACKS
- HAIRLINE CRACKS
- HONEYCOMB AREA
- SCALE AREA
- EFFLORESCENCE PRESENT
- SEE SKETCH

Span 28 - Underside of Deck and Framing
Section 2

REVISION 1	DATE: 8/23/19	CREW: BH, JG (Baker)	REVISION 3	DATE:	CREW:
REVISION 2	DATE: 08/17/2021	CREW: BM, EG, EB, AN, EA (PRIME AE)	REVISION 4	DATE:	CREW:

Sketches
Inspection type: Fracture Critical,Routine
Inspection Date: 7/26/2021
Inspected by: PRIME AE

:Bridge No 03819

Town: NEW LONDON
Carried: INTERSTATE 95 NORTHBOUND
Crossed: THAMES RV,RR,LOCAL ROADS
Inventory Route: NHS

CREW: SW, BF	DATE: 10/4/2017	BRIDGE NO.: 03819

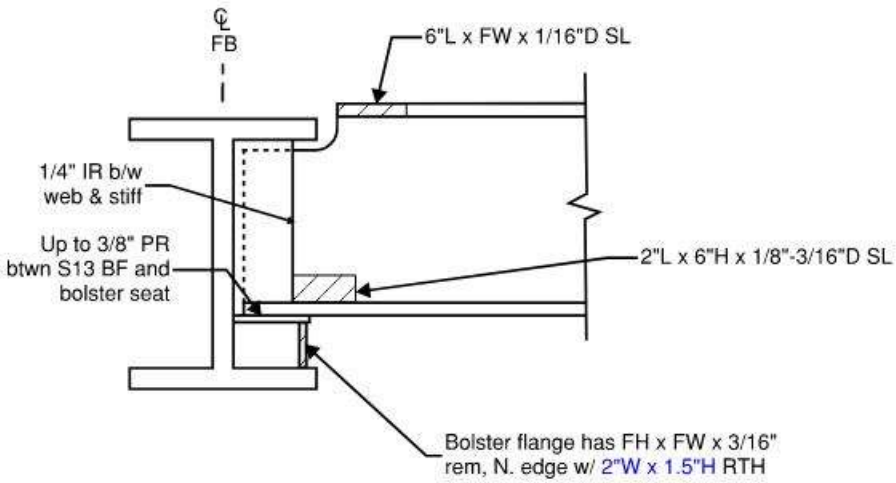

Span 28 - S1 at West Side of FB 41
North Elevation

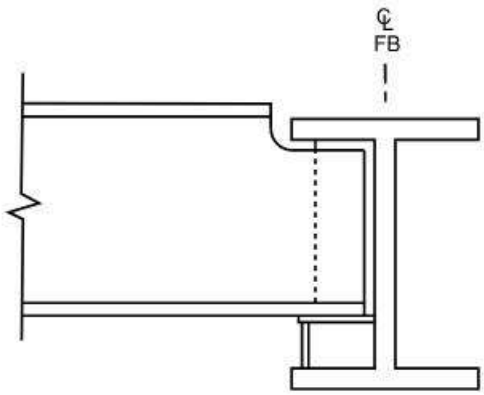

Span 28 - S1 at West Side of FB 41
South Elevation

- LR at all locations
- Active leakage through joint

REVISION 1	DATE: 9/4/19	CREW: AH, BF (Baker)	REVISION 3	DATE:	CREW:
REVISION 2	DATE: 08/24/2021	CREW: EG, AN (PRIME AE)	REVISION 4	DATE:	CREW:

Sketches
Inspection type: Fracture Critical,Routine
Inspection Date: 7/26/2021
Inspected by: PRIME AE

:Bridge No 03819

Town: NEW LONDON
Carried: INTERSTATE 95 NORTHBOUND
Crossed: THAMES RV,RR,LOCAL ROADS
Inventory Route: NHS

CREW: SW, BF	DATE: 10/4/2017	BRIDGE NO.: 03819

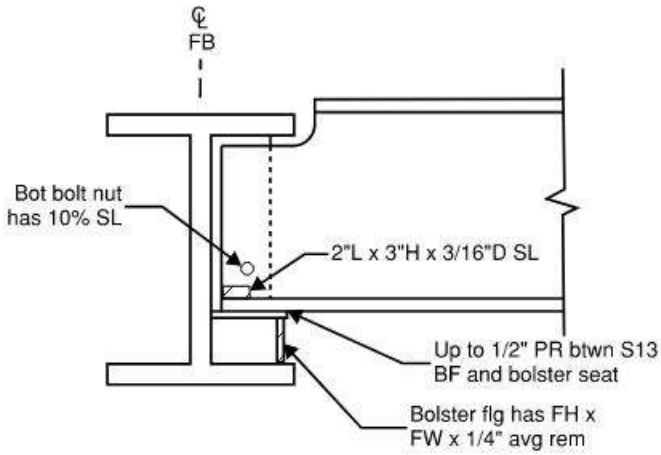

Span 28 - S13 at West Side of FB 41
North Elevation

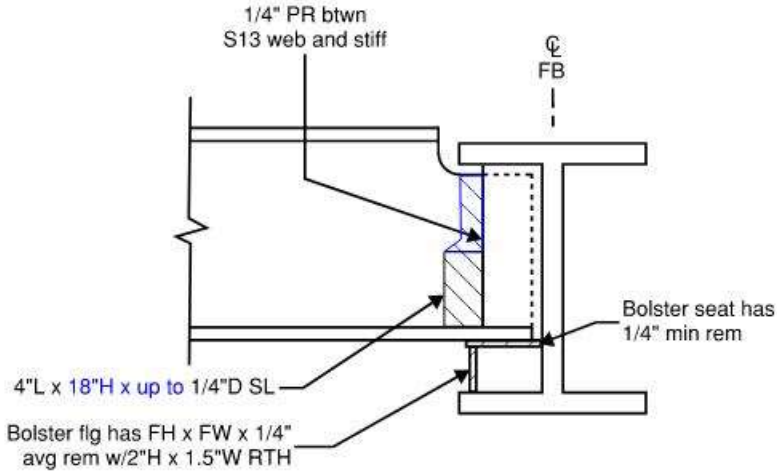

Span 28 - S13 at West Side of FB 41
South Elevation

- LR at all locations

REVISION 1	DATE: 8/23/19	CREW: BH, JG (Baker)	REVISION 3	DATE:	CREW:
REVISION 2	DATE: 08/25/2021	CREW: EG, AN (PRIME AE)	REVISION 4	DATE:	CREW:

Sketches
Inspection type: Fracture Critical,Routine
Inspection Date: 7/26/2021
Inspected by: PRIME AE

:Bridge No 03819

Town: NEW LONDON
Carried: INTERSTATE 95 NORTHBOUND
Crossed: THAMES RV,RR,LOCAL ROADS
Inventory Route: NHS

CREW: BF, SW	DATE: 10/4/17	BRIDGE NO.: 03819

Deterioration Legend:
(1) - S13 web at top has 4"L x 2"H x 1/8"D SL

LOG DIRECTION
WEST TO EAST

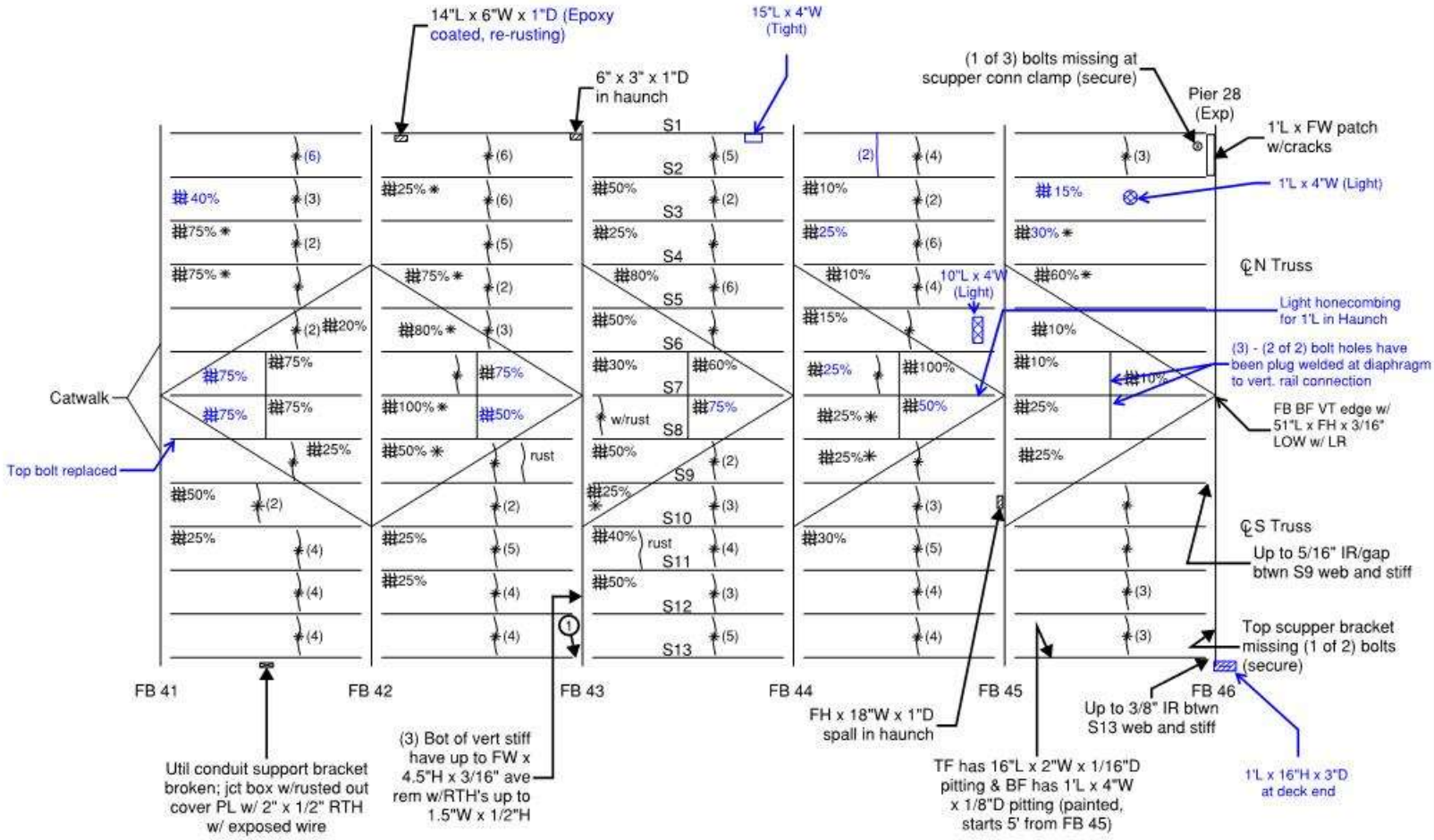

General Notes:

- See Underside of Deck and Steel Framing General Notes (Spans 26-28) sheet.
- Horiz plates at pier 28 have missing/backed off bolts at conn to FB TF throughout FL of joint.
- Additional web plates at stringer webs to FB 46 connection.

LEGEND:
- HOLLOW AREA
- SHALLOW REBAR
- SPALL AREA
- SPALL AREA WITH EXPOSED REBAR
- MAPCRACKS
- HAIRLINE CRACKS
- HONEYCOMB AREA
- SCALE AREA
- EFFLORESCENCE PRESENT

Span 28 - Underside of Deck and Framing
Section 3

REVISION 1	DATE: 8/23/19	CREW: BH, JG (Baker)	REVISION 3	DATE:	CREW:
REVISION 2	DATE:08/25/2021	CREW: EG, AN (PRIME AE)	REVISION 4	DATE:	CREW:

Sketches
Inspection type: Fracture Critical,Routine
Inspection Date: 7/26/2021
Inspected by: PRIME AE

:Bridge No 03819

Town: NEW LONDON
Carried: INTERSTATE 95 NORTHBOUND
Crossed: THAMES RV,RR,LOCAL ROADS
Inventory Route: NHS

CREW: MRJ, EN	DATE: 10/13/2017	BRIDGE NO.: 03819

Deterioration Legend:
1. Electrical conduit disconnected exposing wires
2. S13 TF & BF have 1'L x FW x 1/8"D pitting/LR & web has SL/LR 13"H x 4"W x 1/8"D (top); 3"H x 1.5"L x 1/8"D (bot)
3. Top of BF has FL lam rust w/ 6.5'L x FW (one leg) x 7/16" rem
4. S13 web bottom has 30"L x 3"H x up to 1/8"D SL/P.O & 3/8" PR between web and FB stiff
5. FB 3 BF adj to stiff has 1"L x FW x 1/4"D ave SL PO

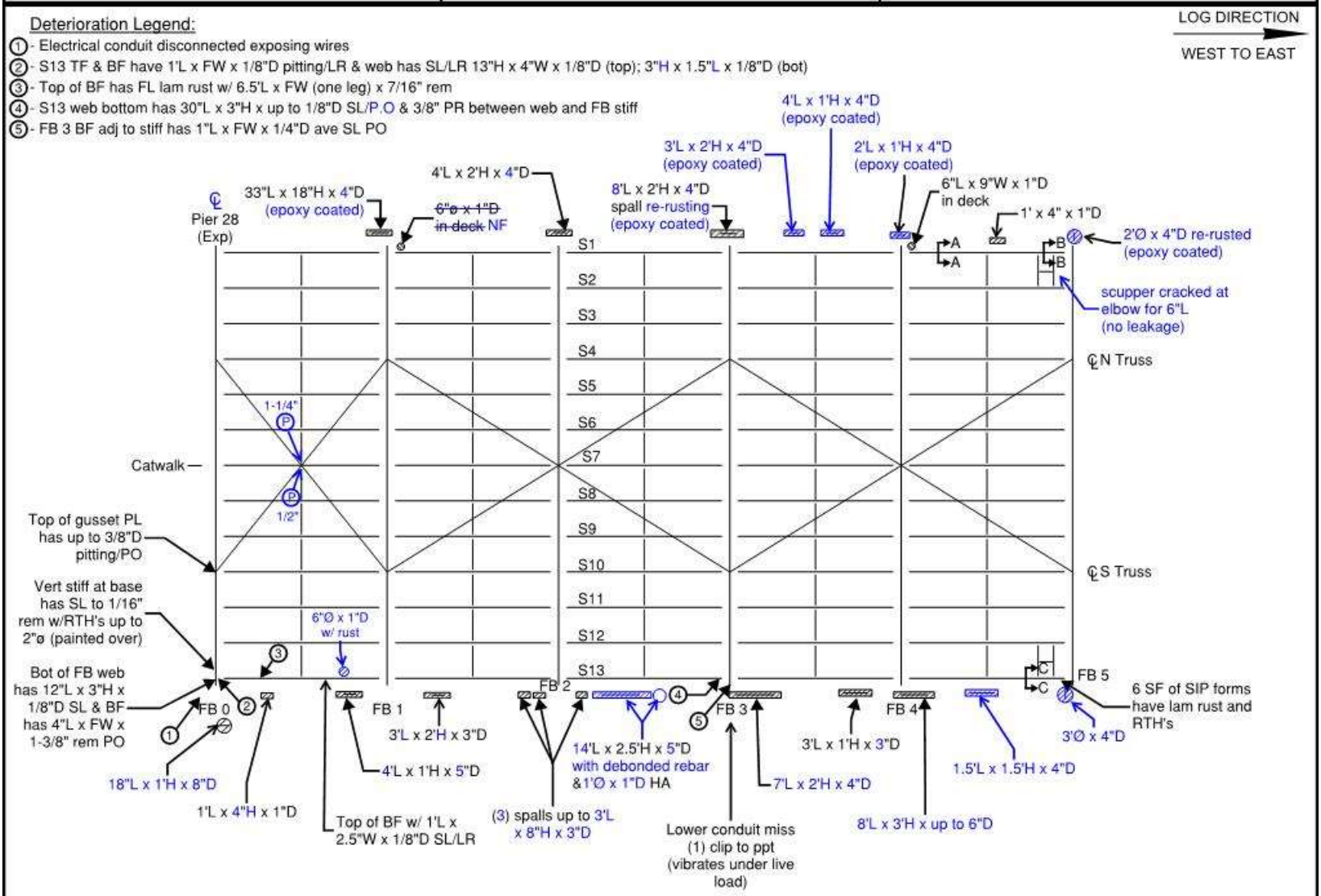

General Notes:
- See Underside of Deck and Steel Framing General Notes (Spans 22-25 & 29-32) sheet
- Fascia spalls/hollow areas are typically in bottom of parapet U.O.N.
- Bearing PL's below FB0 at N & S trusses do not extend to W edge of flange (±4" short max) with up to 1/2" PR on E side between PL's

LEGEND:
- HOLLOW AREA
- SHALLOW REBAR
- SPALL AREA
- SPALL AREA WITH EXPOSED REBAR
- MAPCRACKS
- HAIRLINE CRACKS
- HONEYCOMB AREA
- SCALE AREA
- EFFLORESCENCE PRESENT
- (P) UP TO __" THK PR BTWN LATERAL BRACING MEMBER & HORIZ.GUSSET PLATE

Span 29 - Underside of Deck and Framing
West Half

REVISION 1	DATE: 9/5/19	CREW: AH, BF (Baker)	REVISION 3	DATE:	CREW:
REVISION 2	DATE: 8/24/2021	CREW: NR, SD (PRIME)	REVISION 4	DATE:	CREW:

CREW: SW, BF	DATE: 10/18/2017	BRIDGE NO.: 03819

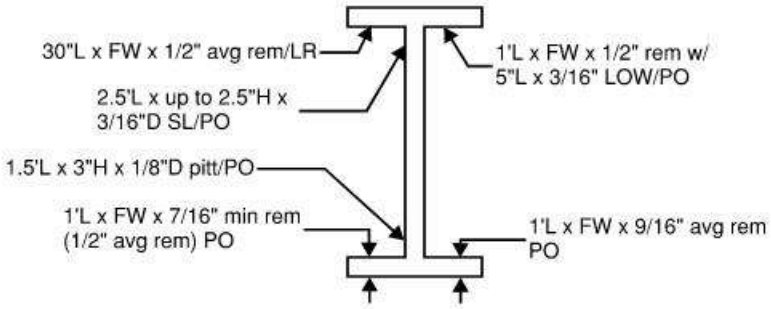

Span 29 - S1 at ±10' East of FB 4
Section A-A (looking east)

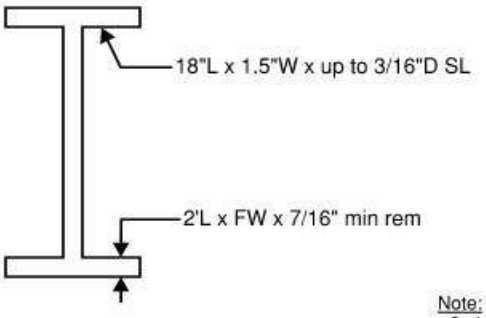

Note:
- S side stiff (for scupper framing) also has 4"H x FW x 3/16"D rem

Span 29 - S1 at 4' West of FB 5
Section B-B (looking east)

- LR at all locations

REVISION 1	DATE: 9/6/19	CREW: AH, BF (Baker)	REVISION 3	DATE:	CREW:
REVISION 2	DATE: 8/24/2021	CREW: NR, SD (PRIME) - No Change	REVISION 4	DATE:	CREW:

CREW: MRJ, EN	DATE: 10/13/2017	BRIDGE NO.: 03819

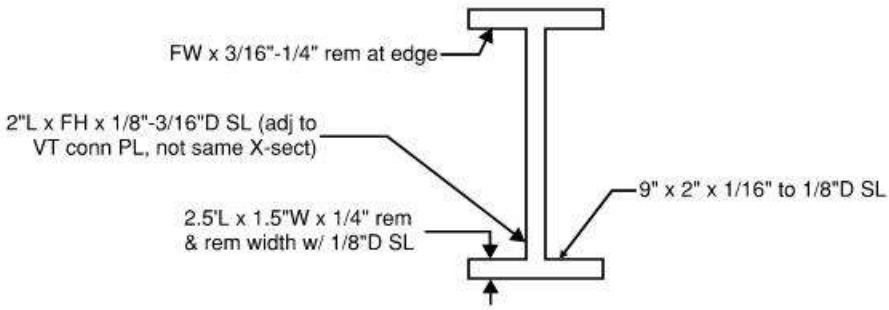

Span 29 - S13 at ±7.5' West of FB 5
Section C-C (looking east)

- LR at all locations

REVISION 1	DATE: 9/5/19	CREW: AH, BF (Baker)	REVISION 3	DATE:	CREW:
REVISION 2	DATE: 8/25/2021	CREW: NR, SD (PRIME) - No Change	REVISION 4	DATE:	CREW:

CREW: MRJ, EN	DATE: 10/13/2017	BRIDGE NO.: 03819

Deterioration Legend:

1- S1 BF has 1'L x 2"W x 3/8" min rem; Diaph conn PL has FH x FW x up to 3/16" rem; Diaph TF has 1'L x FW x 1/8" rem and BF has 1'L x FW x 1/8"D SL (all LR)
2- Up to __" thick PR between lateral brace member and horiz gusset plate
3- FB support angle for shim PL's has 2 of 6 conn bolts short (nuts fullly engaged).
4- Up to 5/8" IR b/w lat brace G PL and FB BF; 2-1/16"L crack in FB web at base of stiff weld, repaired/stop holes drilled by CTDOT in 2019
5- Undercut weld at base of FB VT stiff (ground out and UT tested by CTDOT in 2019, no cracking)

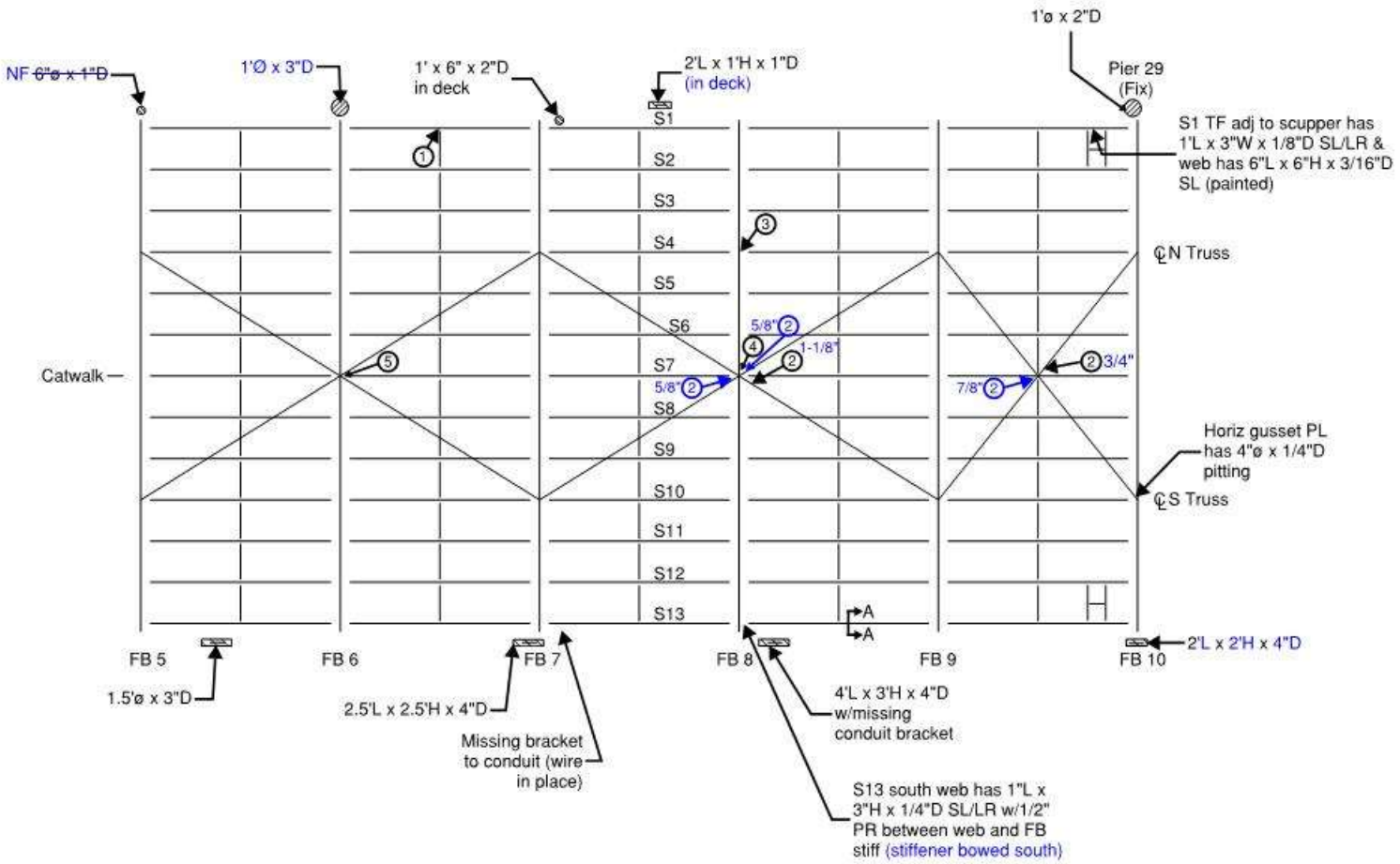

General Notes:

- See Underside of Deck and Steel Framing General Notes (Spans 22-25 & 29-32) sheet
- Fascia spalls/hollow areas are typically in bottom of parapet U.O.N.

LEGEND:
- HOLLOW AREA
- SHALLOW REBAR
- SPALL AREA
- SPALL AREA WITH EXPOSED REBAR
- MAPCRACKS
- HAIRLINE CRACKS
- HONEYCOMB AREA
- SCALE AREA
- EFFLORESCENCE PRESENT

Span 29 - Underside of Deck and Framing East Half

REVISION 1	DATE: 9/6/19	CREW: AH, BF (Baker)	REVISION 3	DATE:	CREW:
REVISION 2	DATE: 8/24/2021	CREW: NR, SD (PRIME)	REVISION 4	DATE:	CREW:

CREW: SW, BF	DATE: 10/18/2017	BRIDGE NO.: 03819

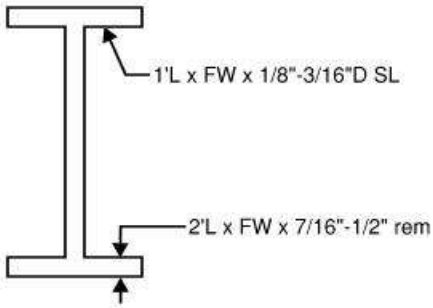

Span 29 - S13 at 9' West of FB 9
Section A-A (looking east)

- LR at all locations

REVISION 1	DATE: 9/13/19	CREW: AH, BF (Baker)	REVISION 3	DATE:	CREW:
REVISION 2	DATE: 9/20/2021	CREW: NR, NH (PRIME) - No Change	REVISION 4	DATE:	CREW:

CREW: SW, BF	DATE: 10/18/2017	BRIDGE NO.: 03819

Deterioration Legend:
1 - S1 web has 9"L x 2"H x 1/8"D SL/LR
2 - 2 out of 3 loose diaph conn PL's bolts and 1 of 3 bolts with missing washers

LOG DIRECTION
WEST TO EAST

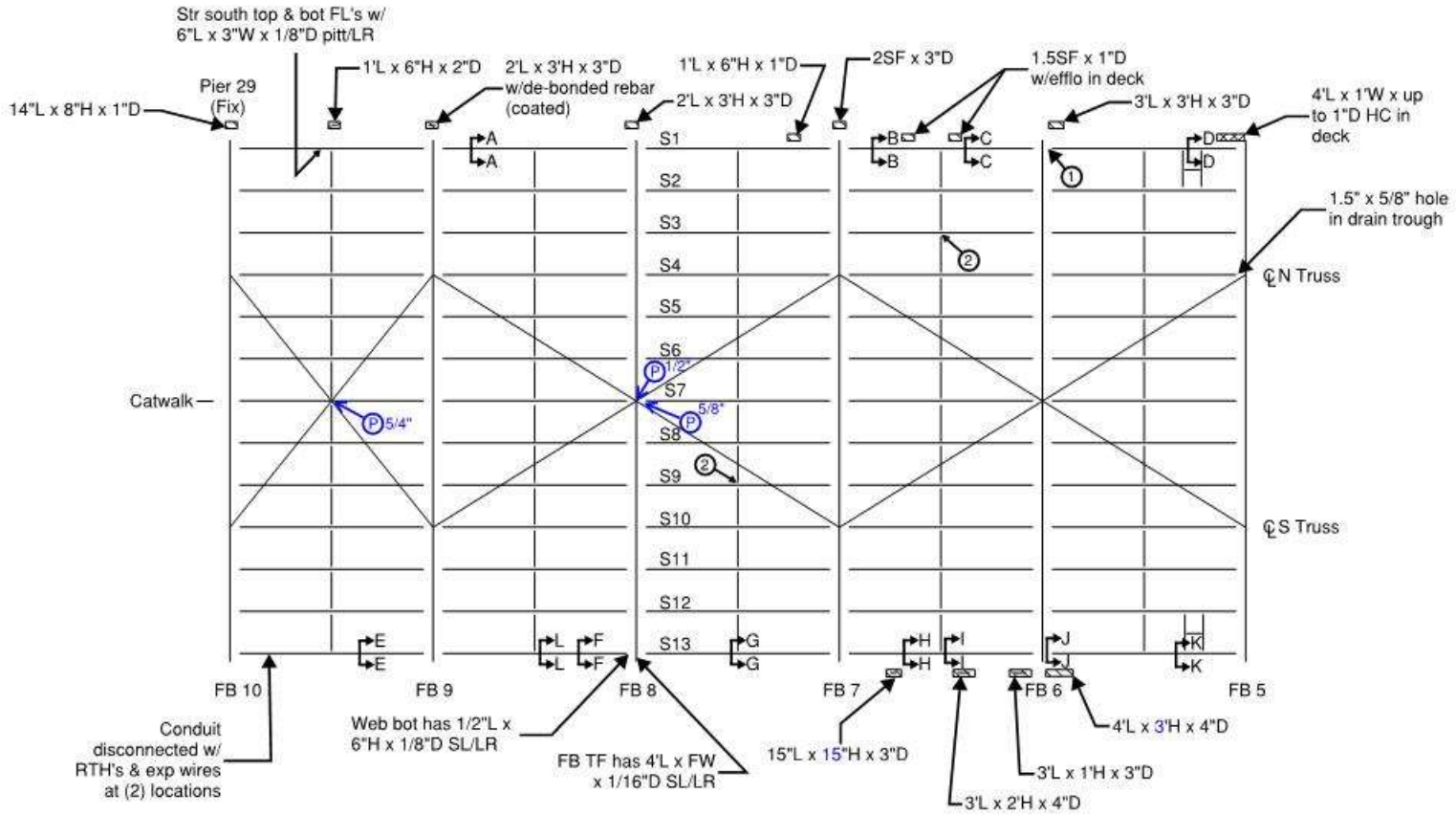

General Notes:
- See Underside of Deck and Steel Framing General Notes (Spans 22-25 & 29-32) sheet
- Fascia spalls/hollow areas are typically in bottom of parapet U.O.N.

LEGEND:
- HOLLOW AREA
- SHALLOW REBAR
- SPALL AREA
- SPALL AREA WITH EXPOSED REBAR
- MAPCRACKS
- HAIRLINE CRACKS
- HONEYCOMB AREA
- SCALE AREA
- EFFLORESCENCE PRESENT
- P UP TO __" THK PR BTWN LATERAL BRACING MEMBER & HORIZ.GUSSET PLATE

Span 30 - Underside of Deck and Framing
West Half

REVISION 1	DATE: 9/13/19	CREW: AH, BF (Baker)	REVISION 3	DATE:	CREW:
REVISION 2	DATE: 8/9/2021	CREW: CMR, NH, EA (PRIME)	REVISION 4	DATE:	CREW:

CREW: SW, BF	DATE: 10/18/2017	BRIDGE NO.: 03819

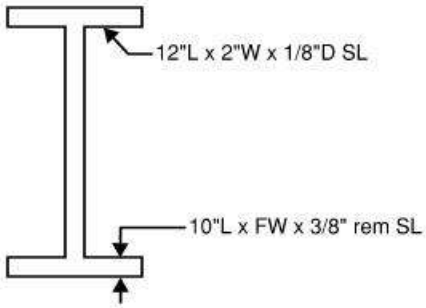

Span 30 - S1 at ±5' East of FB 9
Section A-A (looking east)

- LR at all locations

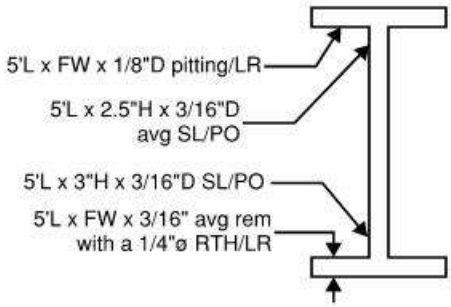

Span 30 - S1 at 4' East of FB 7
Section B-B (looking east)

REVISION 1	DATE: 9/19/19	CREW: BH, MRJ (Baker)	REVISION 3	DATE:	CREW:
REVISION 2	DATE: 8/9/2021	CREW: CMR, NH (PRIME) - No Change	REVISION 4	DATE:	CREW:

CREW: MJO, BF	DATE: 11/3/2017	BRIDGE NO.: 03819

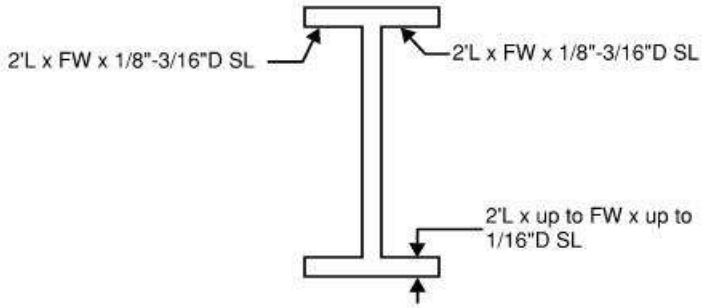

Span 30 - S1 at ±12' West of FB 6
Section C-C (looking east)

- LR at all locations

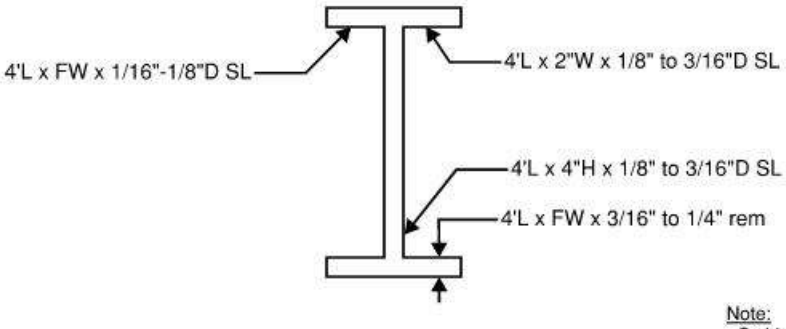

Note:
- S side stiff (for scupper framing) also has 3"H x FW RTH

Span 30 - S1 at 5.5' West of FB 5
Section D-D (looking east)

- LR at all locations

REVISION 1	DATE: 9/19/19	CREW: BH, MRJ (Baker)	REVISION 3	DATE:	CREW:
REVISION 2	DATE: 8/9/2021	CREW: CMR, NH (PRIME) - No Change	REVISION 4	DATE:	CREW:

CREW: SW, BF	DATE: 11/7/2017	BRIDGE NO.: 03819

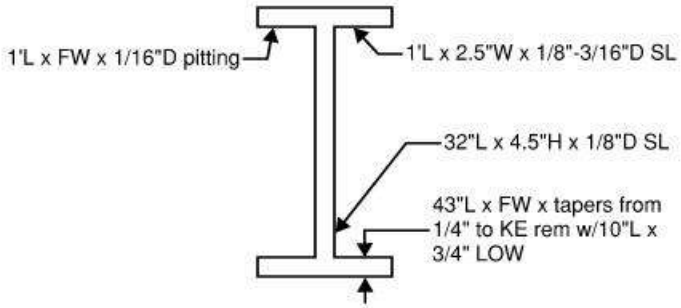

Span 30 - S13 at 6' West of FB 9
Section E-E (looking east)

- LR at all locations

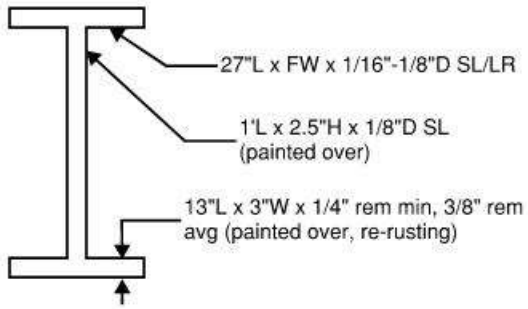

Span 30 - S13 at 4' West of FB 8
Section F-F (looking east)

REVISION 1	DATE: 9/13/19	CREW: AH, BF (Baker)	REVISION 3	DATE:	CREW:
REVISION 2	DATE: 8/11/2021	CREW: CMR, NH (PRIME) - No Change	REVISION 4	DATE:	CREW:

CREW: SW, BF	DATE: 11/7/2017	BRIDGE NO.: 03819

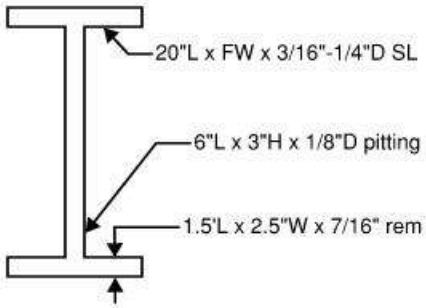

Span 30 - S13 at Mid-Panel East of FB 8
Section G-G (looking east)

- LR at all locations

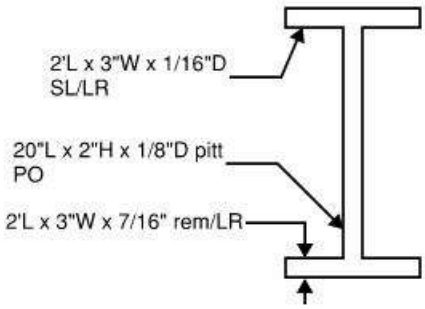

Span 30 - S13 at 11.5' East of FB 7
Section H-H (looking east)

REVISION 1	DATE: 9/13/19	CREW: AH, BF (Baker)	REVISION 3	DATE:	CREW:
REVISION 2	DATE: 8/11/2021	CREW: CMR, NH (PRIME) - No Change	REVISION 4	DATE:	CREW:

CREW: SW, BF	DATE: 11/7/2017	BRIDGE NO.: 03819

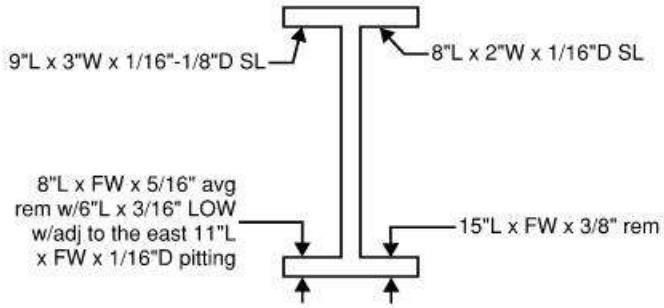

Span 30 - S13 at ±14' West of FB 6
Section I-I (looking east)

- LR at all locations

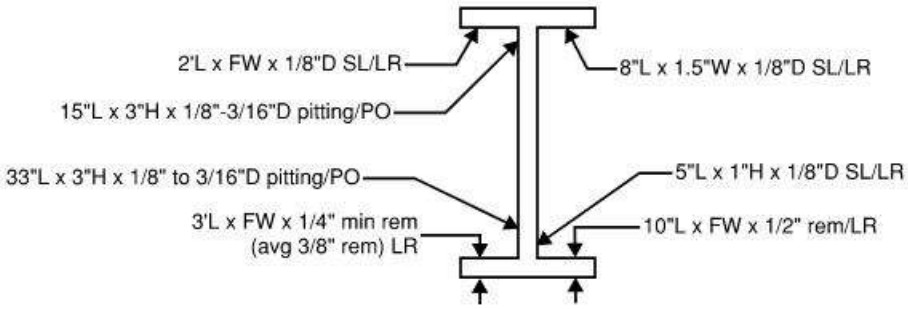

Span 30 - S13 at 1' East of FB 6
Section J-J (looking east)

REVISION 1	DATE: 9/13/19	CREW: AH, BF (Baker)	REVISION 3	DATE:	CREW:
REVISION 2	DATE: 8/11/2021	CREW: CMR, NH (PRIME) - No Change	REVISION 4	DATE:	CREW:

CREW: SW, BF	DATE: 11/7/2017	BRIDGE NO.: 03819

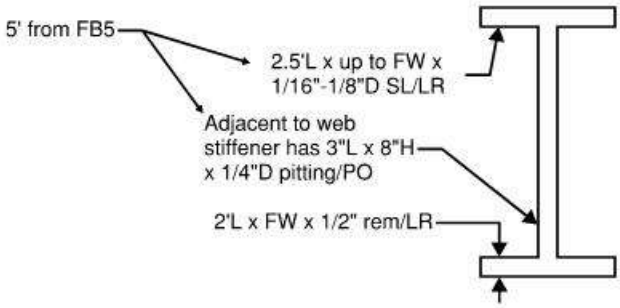

Span 30 - S13 at 8' West of FB 5
Section K-K (looking east)

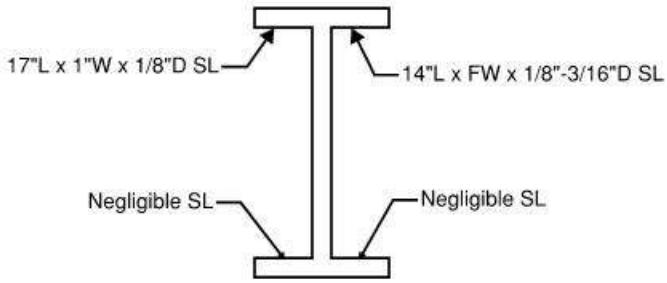

Span 30 - S13 at 5' East of diaphragm between FB 9 & FB 8
Section L-L (looking east)

- LR at all locations

REVISION 1	DATE: 9/13/19	CREW: AH, BF (Baker)	REVISION 3	DATE:	CREW:
REVISION 2	DATE: 8/11/2021	CREW: CMR, NH (PRIME) - No Change	REVISION 4	DATE:	CREW:

Sketches
Inspection type: Fracture Critical,Routine
Inspection Date: 7/26/2021
Inspected by: PRIME AE

:Bridge No 03819

Town: NEW LONDON
Carried: INTERSTATE 95 NORTHBOUND
Crossed: THAMES RV,RR,LOCAL ROADS
Inventory Route: NHS

CREW: MJO, BF	DATE: 11/3/2017	BRIDGE NO.: 03819

Deterioration Legend:
1 - 1 square inch hole in top of trough
2 - S1 web has 1"L x FH x 1/8"D pitting/PO & stiff w/ 1/8" pitt/PO
3 - Broken tack weld between FB 0 BF and trough bracket
4 - FB TF W side has 5'L x 5"W x 1-5/16" rem at edge & 1/8" LOW, E side has 5'L x up to 1"W x 1-5/16" rem at edge & 1/8" LOW w/ LR: BF at west w/ FW x 1/8" pitt
5 - N ppt in this panel has (6) spalls w/exposed reb up to 4'L x 5"H x 2"D

LOG DIRECTION
WEST TO EAST

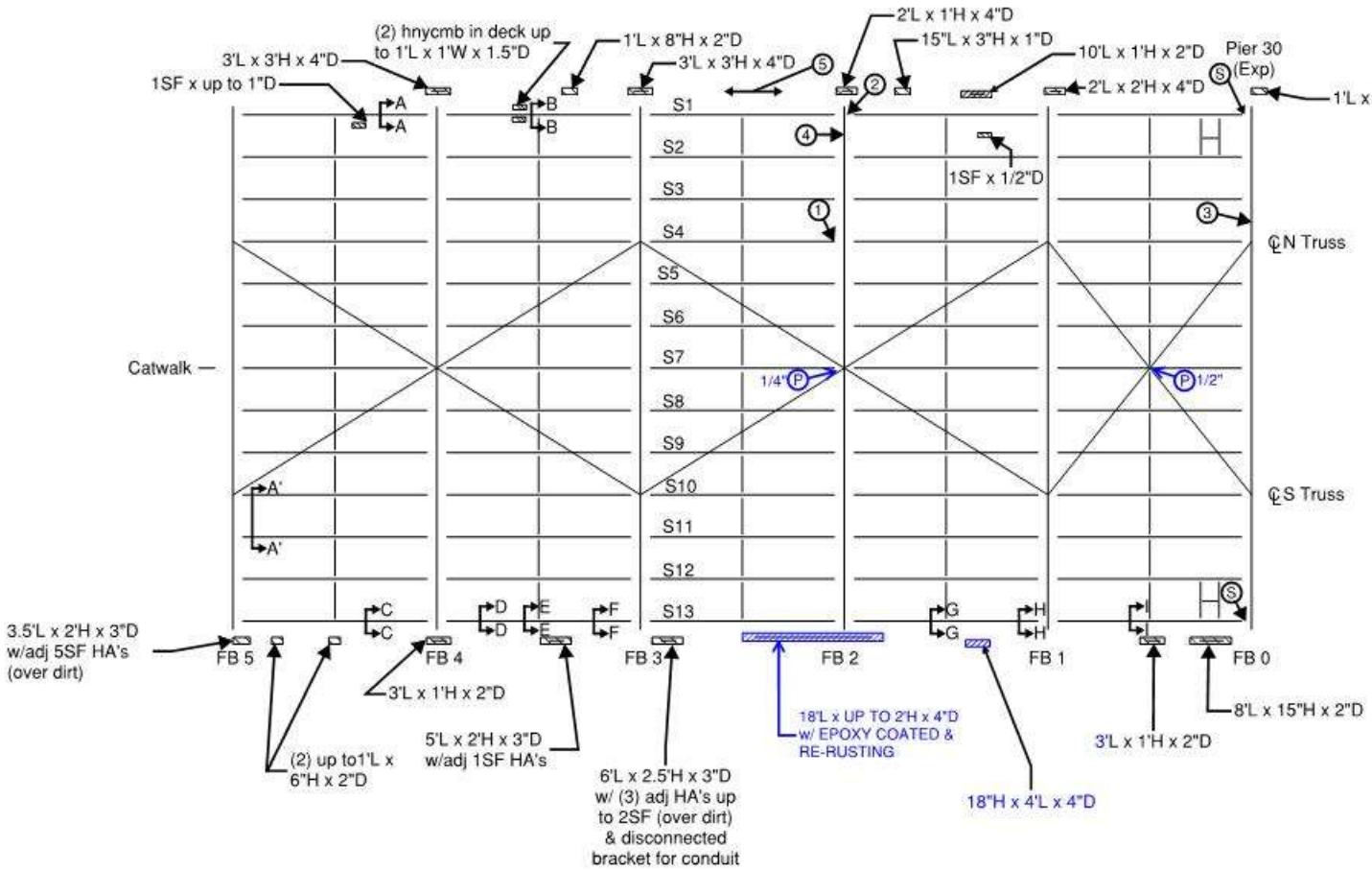

General Notes:

- See Underside of Deck and Steel Framing General Notes (Spans 22-25 & 29-32) sheet
- Fascia spalls/hollow areas are typically in bottom of parapet U.O.N.
- North parapet has (6) spalls with exposed rebar up to 4'L x 5"H x 2"D (isolated spalls up to 4"D) in addition to the spalls noted in sketch above
- Hollow areas on the south parapet are over dirt/possible parking areas

LEGEND:
- HOLLOW AREA
- SHALLOW REBAR
- SPALL AREA
- SPALL AREA WITH EXPOSED REBAR
- MAPCRACKS
- HAIRLINE CRACKS
- HONEYCOMB AREA
- SCALE AREA
- EFFLORESCENCE PRESENT
- S SEE SKETCH
- P UP TO __" THK PR BTWN LATERAL BRACING MEMBER & HORIZ GUSSET PLATE

Span 30 - Underside of Deck and Framing
East Half

REVISION 1	DATE: 9/13/19	CREW: AH, BF (Baker)	REVISION 3	DATE:	CREW:
REVISION 2	DATE: 8/10/2021	CREW: CMR, NH, EA (PRIME)	REVISION 4	DATE:	CREW:

Sketches
Inspection type: Fracture Critical,Routine
Inspection Date: 7/26/2021
Inspected by: PRIME AE

:Bridge No 03819

Town: NEW LONDON
Carried: INTERSTATE 95 NORTHBOUND
Crossed: THAMES RV,RR,LOCAL ROADS
Inventory Route: NHS

CREW: MJO, BF	DATE: 11/3/2017	BRIDGE NO.: 03819

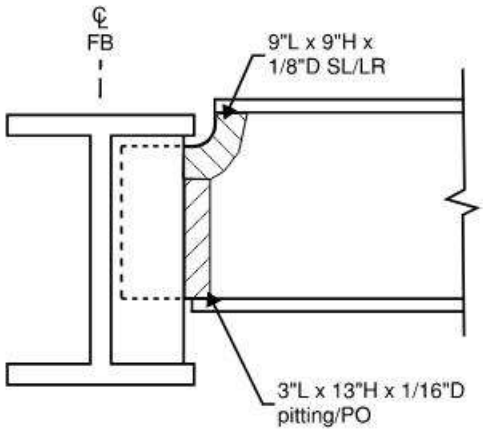

Span 30 - S1 at West Side of FB 0
North Elevation

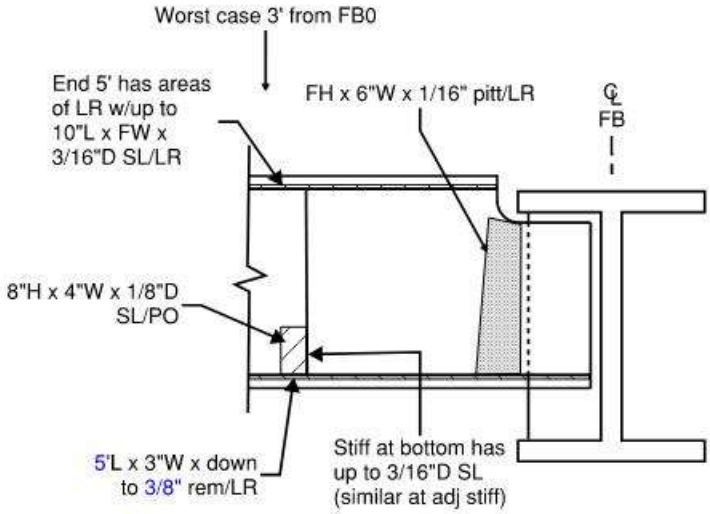

Span 30 - S1 at West Side of FB 0
South Elevation

REVISION 1	DATE: 9/19/19	CREW: BH, MRJ (Baker)	REVISION 3	DATE:	CREW:
REVISION 2	DATE: 8/18/2021	CREW: CMR, NH (PRIME)	REVISION 4	DATE:	CREW:

CREW: SW, BF	DATE: 11/9/2017	BRIDGE NO.: 03819

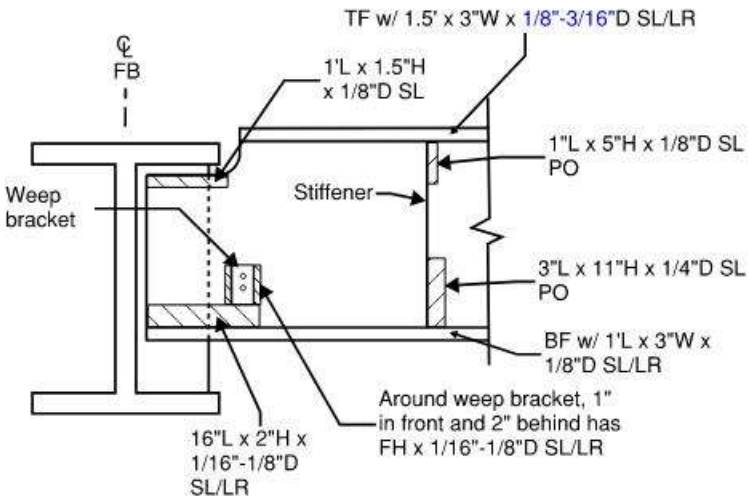

Span 30 - S13 at West Side of FB 0
North Elevation

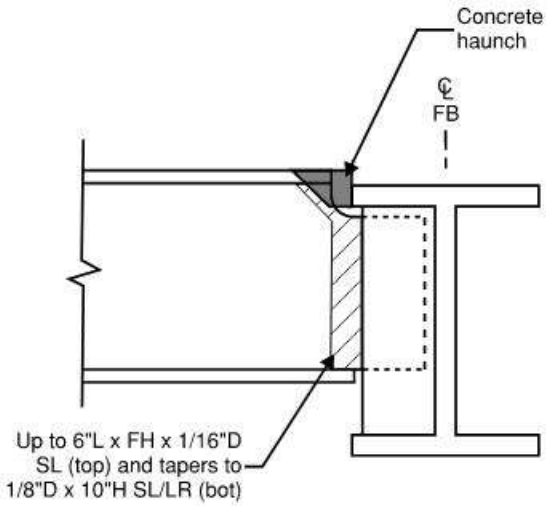

Span 30 - S13 at West Side of FB 0
South Elevation

REVISION 1	DATE: 9/20/19	CREW: BH, BF (Baker)	REVISION 3	DATE:	CREW:
REVISION 2	DATE: 8/12/2021	CREW: CMR, NH (PRIME)	REVISION 4	DATE:	CREW:

CREW: SW, BF	DATE: 11/3/2017	BRIDGE NO.: 03819

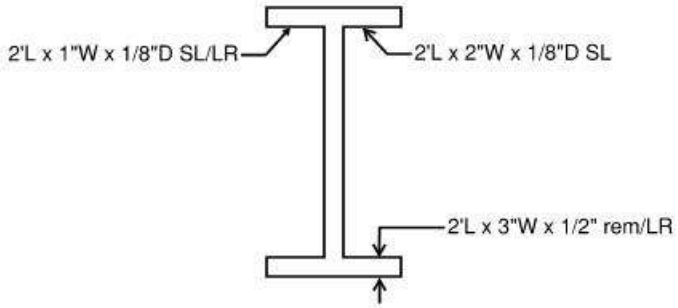

Span 30 - S1 at ±8' West of FB 4
Section A-A (looking east)

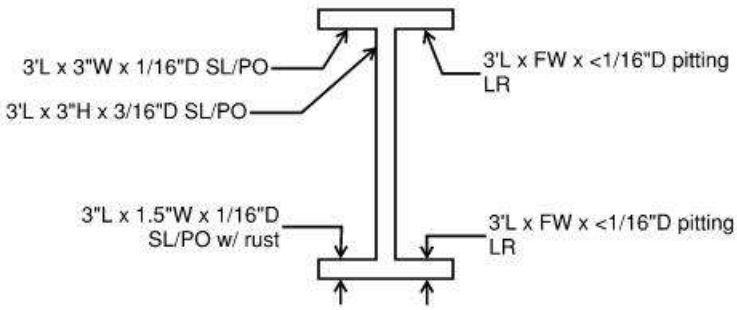

Span 30 - S1 at Mid-Panel West of FB 3
Section B-B (looking east)

REVISION 1	DATE: 9/19/19	CREW: BH, MRJ (Baker)	REVISION 3	DATE:	CREW:
REVISION 2	DATE: 8/10/2021	CREW: CMR, NH (PRIME) - No Change	REVISION 4	DATE:	CREW:

CREW: SW, BF	DATE: 11/9/2017	BRIDGE NO.: 03819

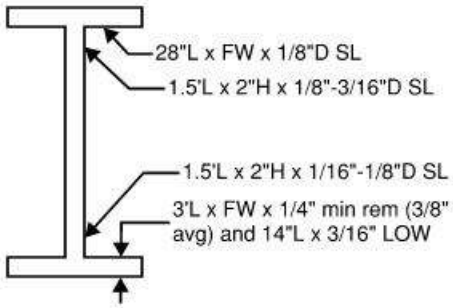

Span 30 - S13 at ±9' West of FB 4
Section C-C (looking east)

- LR at all locations

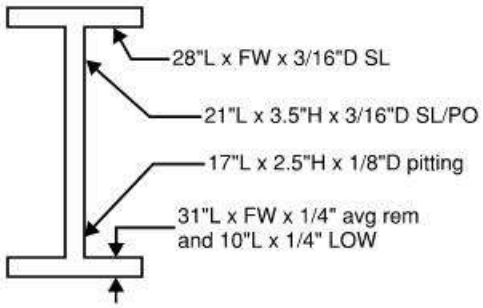

Span 30 - S13 at 6' East of FB 4
Section D-D (looking east)

- HVY/LR at all locations U.O.N.

REVISION 1	DATE: 9/13/19	CREW: AH, BF (Baker)	REVISION 3	DATE:	CREW:
REVISION 2	DATE: 8/12/2021	CREW: CMR, NH (PRIME) - No Change	REVISION 4	DATE:	CREW:

CREW: SW, BF	DATE: 11/9/2017	BRIDGE NO.: 03819

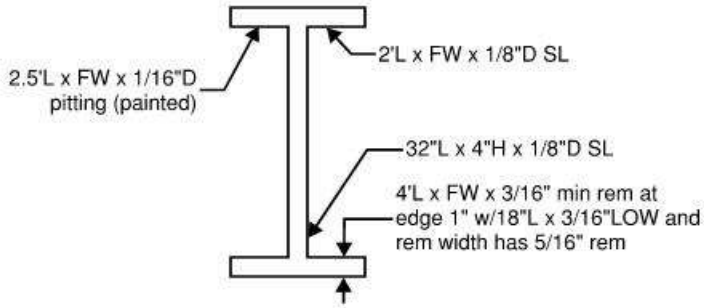

Span 30 - S13 at ±10.5' East of FB 4
Section E-E (looking east)

- LR at all locations U.O.N.

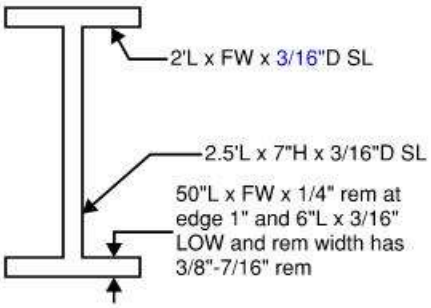

Span 30 - S13 at ±7.5' West of FB 3
Section F-F (looking east)

- LR at all locations

REVISION 1	DATE: 9/13/19	CREW: AH, BF (Baker)	REVISION 3	DATE:	CREW:
REVISION 2	DATE: 8/12/2021	CREW: CMR, NH (PRIME)	REVISION 4	DATE:	CREW:

CREW: SW, BF	DATE: 11/9/2017	BRIDGE NO.: 03819

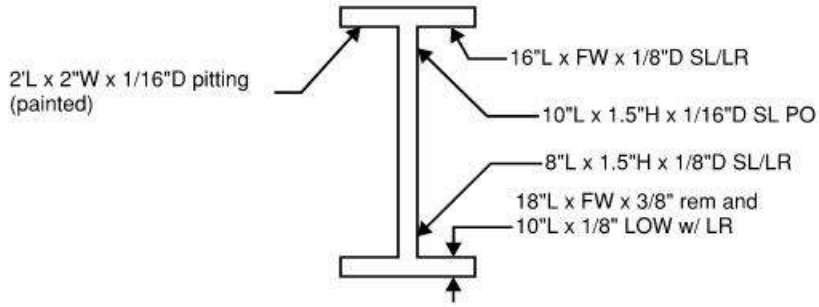

Span 30 - S13 at Mid-Panel East of FB 2
Section G-G (looking east)

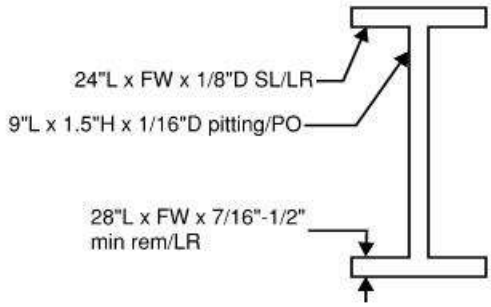

Span 30 - S13 at 6.5' West of FB 1
Section H-H (looking east)

REVISION 1	DATE: 9/20/19	CREW: BH, BF (Baker)	REVISION 3	DATE:	CREW:
REVISION 2	DATE: 8/12/2021	CREW: CMR, NH (PRIME)	REVISION 4	DATE:	CREW:

CREW: SW, BF	DATE: 11/9/2017	BRIDGE NO.: 03819

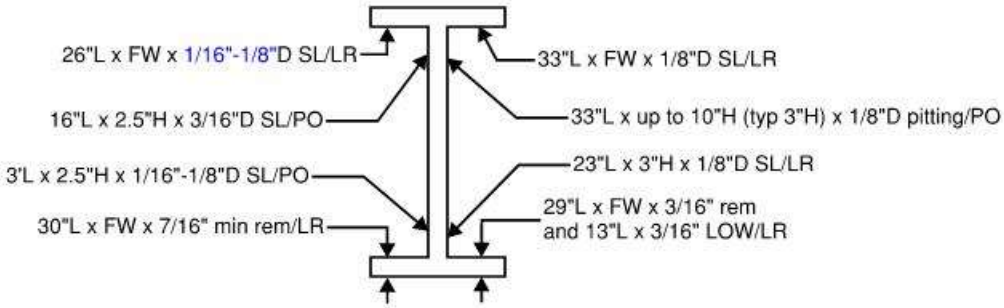

Span 30 - S13 at Mid-Panel East of FB 1
Section I-I (looking east)

REVISION 1	DATE: 9/20/19	CREW: BH, BF (Baker)	REVISION 3	DATE:	CREW:
REVISION 2	DATE: 8/12/2021	CREW: CMR, NH (PRIME)	REVISION 4	DATE:	CREW:

CREW: SW, BF	DATE: 11/9/2017	BRIDGE NO.: 03819

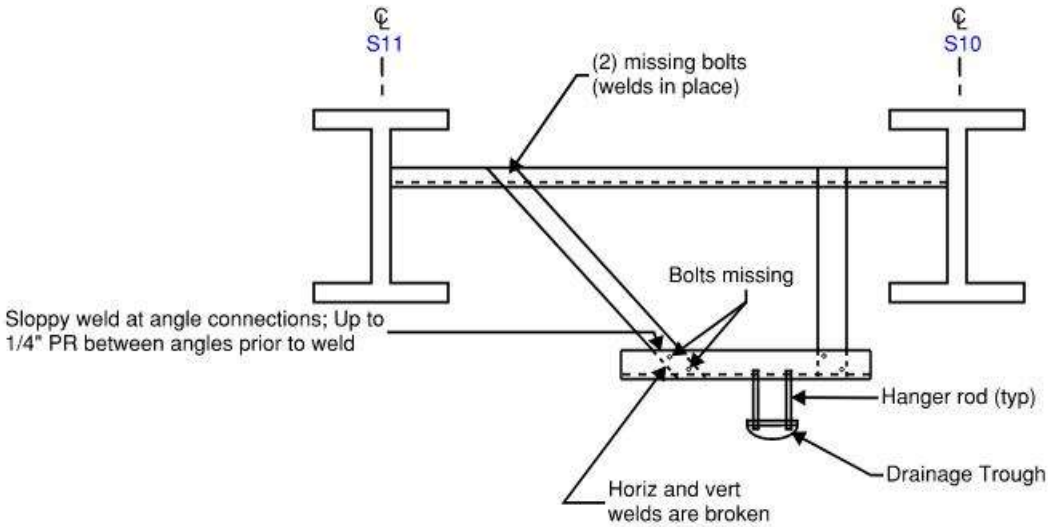

Section A'-A' - Span 30 - 1st Drainage Trough Support Bracket East of FB 5
Looking West

REVISION 1	DATE: 9/13/19	CREW: AH, BF (Baker) - No change	REVISION 3	DATE:	CREW:
REVISION 2	DATE: 8/11/2021	CREW: CMR, NH (PRIME)	REVISION 4	DATE:	CREW:

Sketches
Inspection type: Fracture Critical,Routine
Inspection Date: 7/26/2021
Inspected by: PRIME AE

:Bridge No 03819

Town: NEW LONDON
Carried: INTERSTATE 95 NORTHBOUND
Crossed: THAMES RV,RR,LOCAL ROADS
Inventory Route: NHS

CREW: MJO, BF	DATE: 11/3/2017	BRIDGE NO.: 03819

Deterioration Legend:

1. ~~S1 TF and BF have 2'L x 3"W x 1/8"D SL~~ NF
2. - Framed over scupper area has (8) missing bolts (as-built) w/gaps up to 3/8" between angles and diaph's, clip angles w/bolts w/only few threads engaged at E side (worst at NE corner), up to 1/4" PR at conn PL
3. - S1 web base has 3"L x 2"H x 1/8"D SL/LR; web has other areas of LR w/negligible SL
4. - S1 TF at 4' from FB 5 has 2'L x FW x 3/16"D SL on south leg & BF w/ 12"L x 2"W x 1/16"SL/LR
5. - Vert stiff's have RTH's up to 4" x 2" at bases

LOG DIRECTION → WEST TO EAST

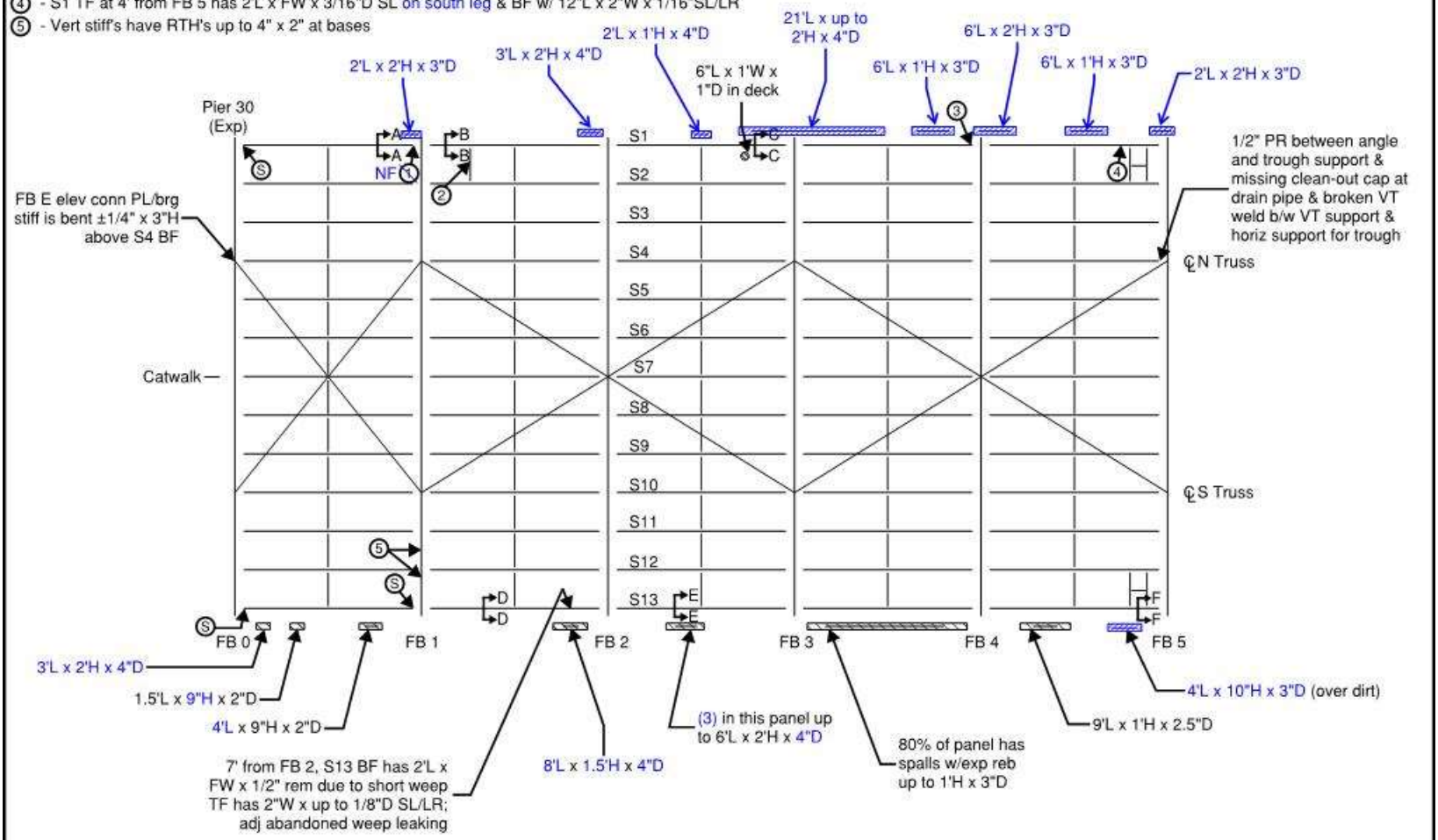

General Notes:

- See Underside of Deck and Steel Framing General Notes (Spans 22-25 & 29-32) sheet
- Fascia spalls/hollow areas are typically in bottom of parapet U.O.N.
- ~~North fascia parapet has ±95 LF of spalls w/exp rebar up to 2'H x up to 4"D~~ Spall Dimensions provided
- FB 0 west side top flange has several drilled holes with and without bolts

LEGEND:

- HOLLOW AREA
- SHALLOW REBAR
- SPALL AREA
- SPALL AREA WITH EXPOSED REBAR
- MAPCRACKS
- HAIRLINE CRACKS
- HONEYCOMB AREA
- SCALE AREA
- EFFLORESCENCE PRESENT
- SEE SKETCH

Span 31 - Underside of Deck and Framing
West Half

REVISION 1	DATE: 9/19/19	CREW: BH, MRJ (Baker)	REVISION 3	DATE:	CREW:
REVISION 2	DATE: 8/18/2021	CREW: CMR, NR, EB, NH (PRIME)	REVISION 4	DATE:	CREW:

Sketches
Inspection type: Fracture Critical,Routine
Inspection Date: 7/26/2021
Inspected by: PRIME AE

:Bridge No 03819

Town: NEW LONDON
Carried: INTERSTATE 95 NORTHBOUND
Crossed: THAMES RV,RR,LOCAL ROADS
Inventory Route: NHS

CREW: MJO, BF	DATE: 11/3/2017	BRIDGE NO.: 03819

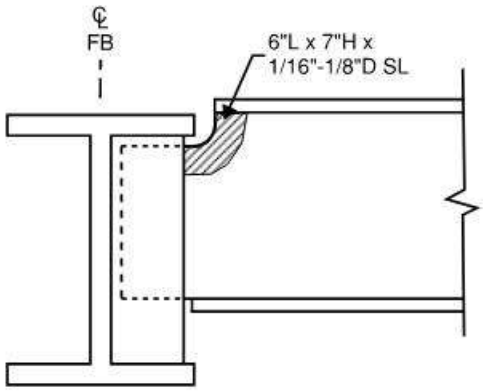

Span 31 - S1 at East Side of FB 0
South Elevation

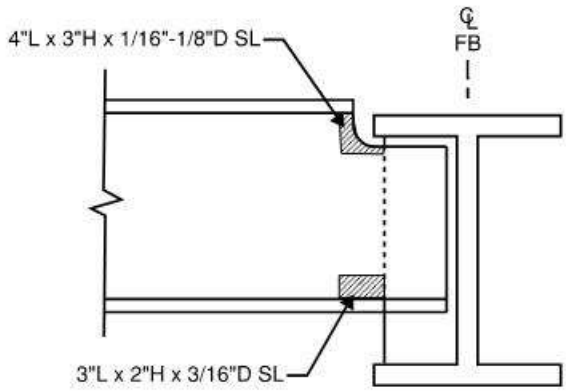

- LR at all locations

Span 31 - S1 at East Side of FB 0
North Elevation

REVISION 1	DATE: 9/19/19	CREW: BH, MRJ (Baker)	REVISION 3	DATE:	CREW:
REVISION 2	DATE: 8/18/2021	CREW: CMR, NH (PRIME) - No Change	REVISION 4	DATE:	CREW:

CREW: SW, BF	DATE: 11/9/2017	BRIDGE NO.: 03819

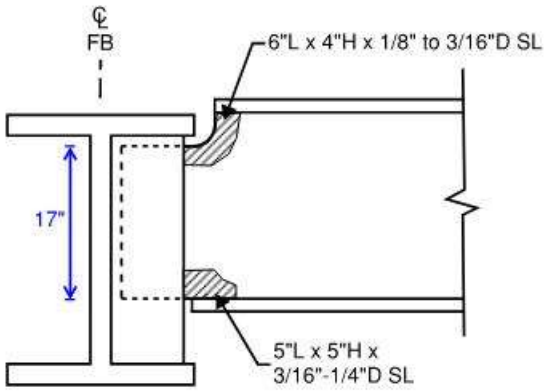

Span 31 - S13 at East Side of FB 0
South Elevation

- LR at all locations

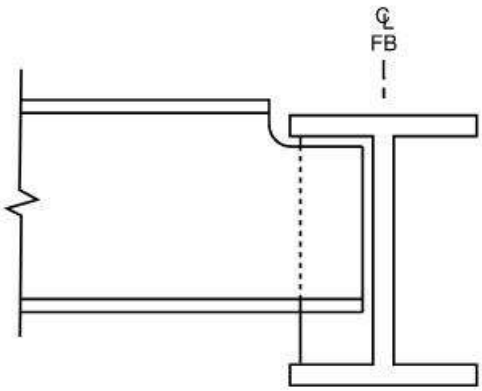

Span 31 - S13 at East Side of FB 0
North Elevation

REVISION 1	DATE: 9/20/19	CREW: BH, BF (Baker)	REVISION 3	DATE:	CREW:
REVISION 2	DATE: 9/21/2021	CREW: NR, NH (PRIME)	REVISION 4	DATE:	CREW:

CREW: SW, BF	DATE: 11/9/2017	BRIDGE NO.: 03819

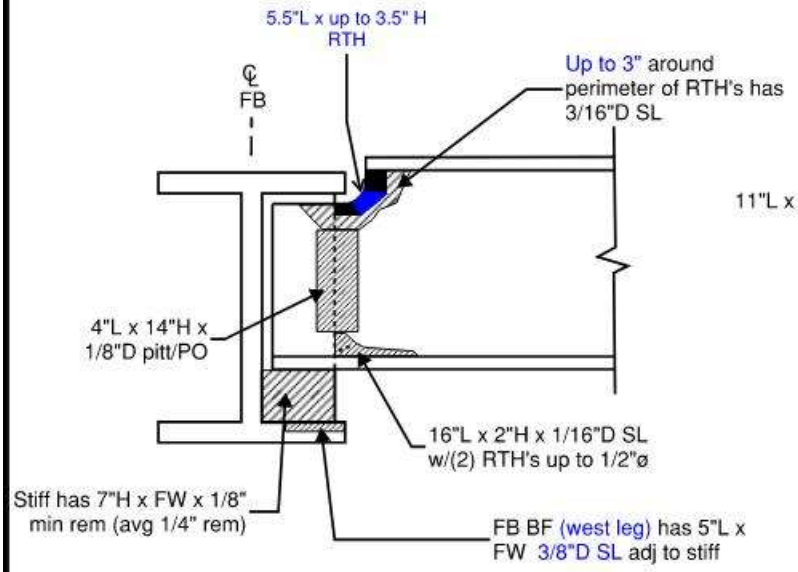

Span 31 - S13 at West Side of FB 1
North Elevation

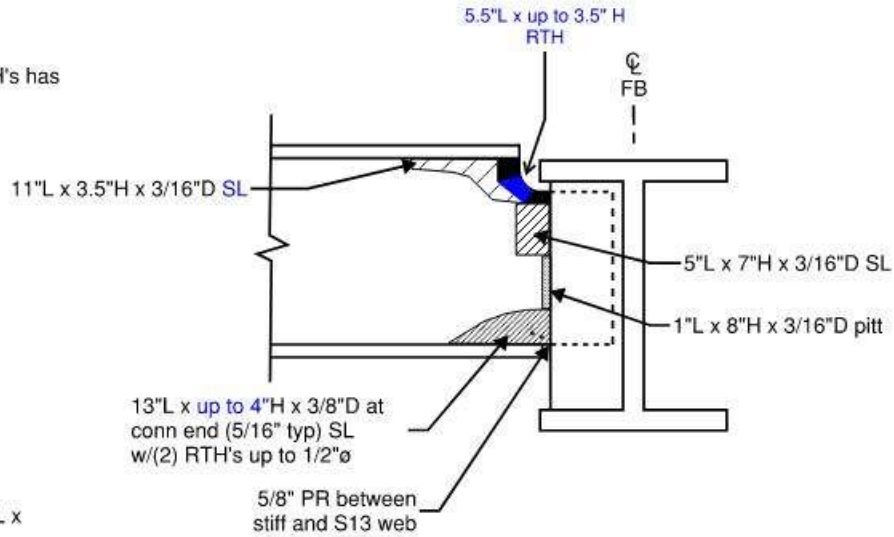

Span 31 - S13 at West Side of FB 1
South Elevation

- LR at all locations U.O.N.

REVISION 1	DATE: 9/20/19	CREW: BH, BF (Baker)	REVISION 3	DATE:	CREW:
REVISION 2	DATE: 9/21/2021	CREW: NR, NH (PRIME)	REVISION 4	DATE:	CREW:

CREW: MJO, BF	DATE: 11/3/2017	BRIDGE NO.: 03819

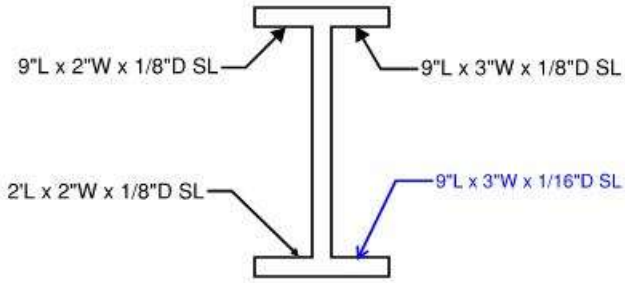

Span 31 - S1 at 4' West of FB 1
Section A-A (looking east)

- LR at all locations

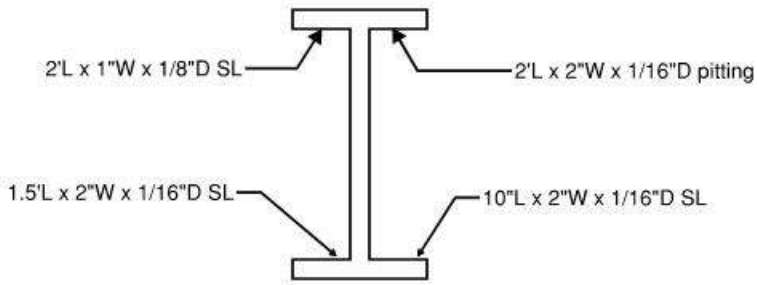

Span 31 - S1 at ±8' East of FB 1
Section B-B (looking east)

- LR at all locations

REVISION 1	DATE: 9/19/19	CREW: BH, MRJ (Baker)	REVISION 3	DATE:	CREW:
REVISION 2	DATE: 8/18/2021	CREW: CMR, NH (PRIME)	REVISION 4	DATE:	CREW:

CREW: SW, BF	DATE: 11/9/2017	BRIDGE NO.: 03819

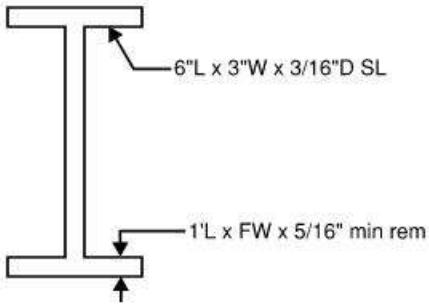

Span 31 - S1 at 7' West of FB 3
Section C-C (looking east)

- LR at all locations

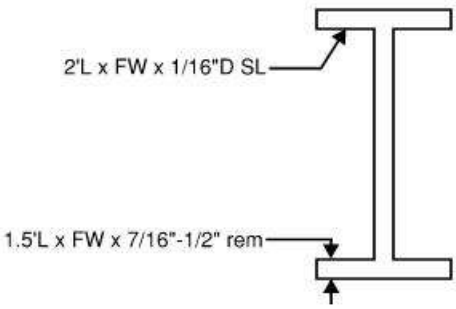

Span 31 - S13 at 11.5' East of FB 1
Section D-D (looking east)

- LR at all locations

REVISION 1	DATE: 9/19/19	CREW: BH, MRJ (Baker)	REVISION 3	DATE:	CREW:
REVISION 2	DATE: 9/21/2021	CREW: NR, NH, EB (PRIME) - No Change	REVISION 4	DATE:	CREW:

CREW: SW, BF	DATE: 11/9/2017	BRIDGE NO.: 03819

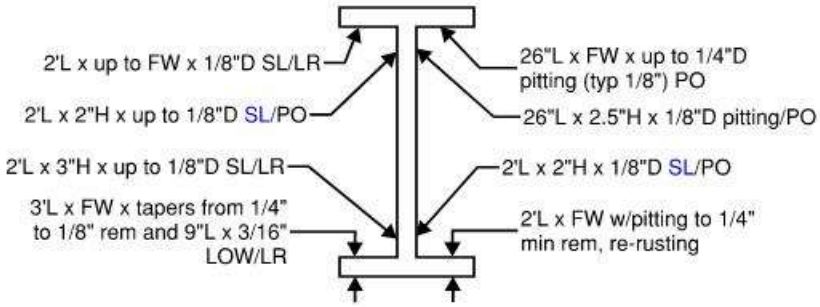

Span 31 - S13 at ±14' East of FB 2
Section E-E (looking east)

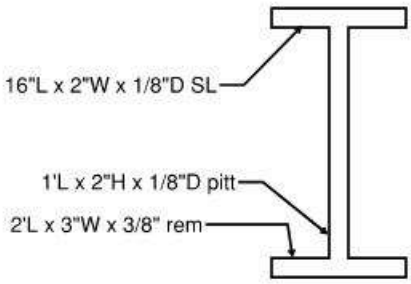

Span 31 - S13 at ±5' West of FB 5
Section F-F (looking east)

- LR at all locations

REVISION 1	DATE: 9/20/19	CREW: BH, BF (Baker)	REVISION 3	DATE:	CREW:
REVISION 2	DATE: 9/21/2021	CREW: NR, NH (PRIME) - No Change	REVISION 4	DATE:	CREW:

Sketches
Inspection type: Fracture Critical,Routine
Inspection Date: 7/26/2021
Inspected by: PRIME AE

:Bridge No 03819

Town: NEW LONDON
Carried: INTERSTATE 95 NORTHBOUND
Crossed: THAMES RV,RR,LOCAL ROADS
Inventory Route: NHS

CREW: SW, BF	DATE: 11/6/2017	BRIDGE NO.: 03819

Deterioration Legend:
1 - Trough hanger assembly (both sides) disconnected
2 - S1 BF (±5' from FB 8) has 1.5'L x FW x 1/16"D SL
3 - Trough filled with debris up to 25%
4 - Trough support angle has 1 of 2 missing bolts due to angle too short (welded conn)
5 - Base of FB stiff weld w/ 1-5/8"L crk, extends into FB web (repaired by maintenance in 2019 with drilled stop holes at the ends of the crack)

LOG DIRECTION
WEST TO EAST

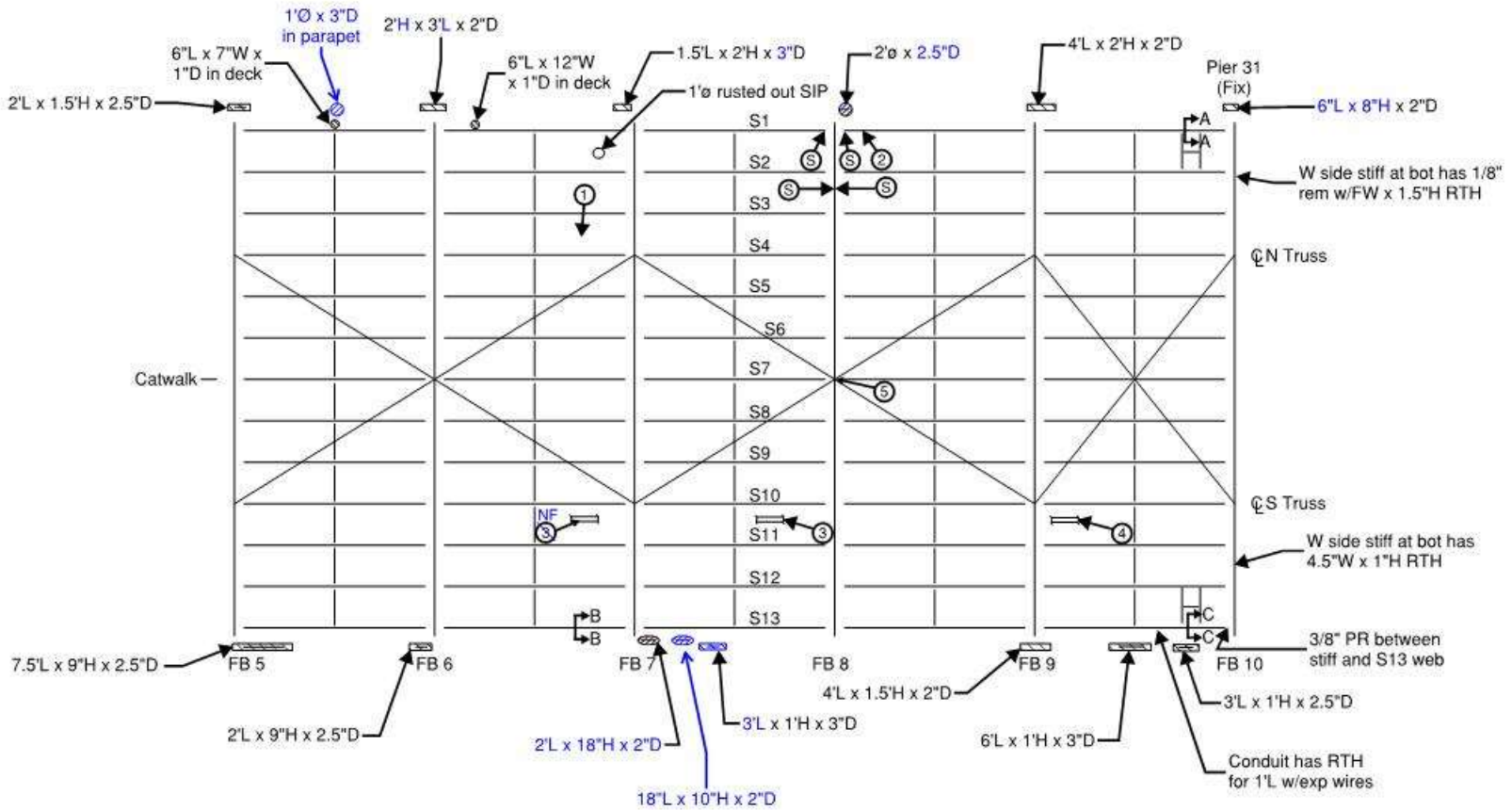

General Notes:
- See Underside of Deck and Steel Framing General Notes (Spans 22-25 & 29-32) sheet
- Fascia spalls are typically in bottom of parapet U.O.N.

LEGEND:
- HOLLOW AREA
- SHALLOW REBAR
- SPALL AREA
- SPALL AREA WITH EXPOSED REBAR
- MAPCRACKS
- HAIRLINE CRACKS
- HONEYCOMB AREA
- SCALE AREA
- EFFLORESCENCE PRESENT
- SEE SKETCH

Span 31 - Underside of Deck and Framing East Half

REVISION 1	DATE: 9/20/19	CREW: BH, BF (Baker)	REVISION 3	DATE:	CREW:
REVISION 2	DATE: 9/21/2021	CREW: NR, NH, EB, IS (PRIME)	REVISION 4	DATE:	CREW:

Sketches
Inspection type: Fracture Critical,Routine
Inspection Date: 7/26/2021
Inspected by: PRIME AE

:Bridge No 03819

Town: NEW LONDON
Carried: INTERSTATE 95 NORTHBOUND
Crossed: THAMES RV,RR,LOCAL ROADS
Inventory Route: NHS

CREW: SW, BF	DATE: 11/8/2017	BRIDGE NO.: 03819

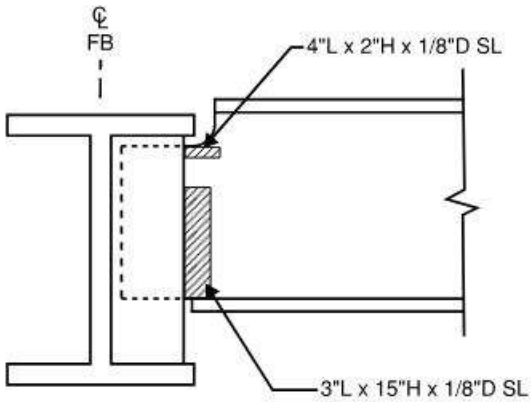

Span 31 - S1 at West Side of FB 8
North Elevation

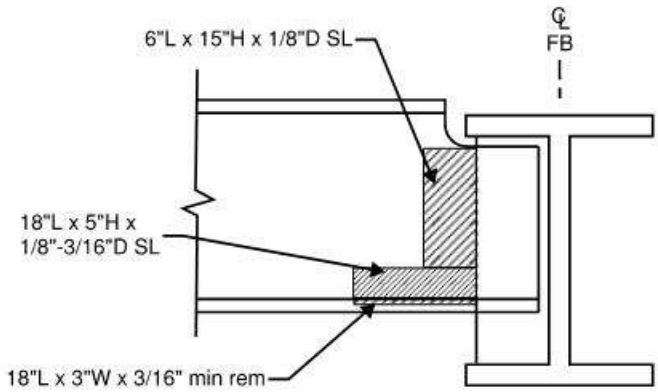

Span 31 - S1 at West Side of FB 8
South Elevation

- LR at all locations

REVISION 1	DATE: 9/24/19	CREW: BH, JG (Baker)	REVISION 3	DATE:	CREW:
REVISION 2	DATE: 10/18/2021	CREW: NR, IS (PRIME) - No Change	REVISION 4	DATE:	CREW:

Sketches
Inspection type: Fracture Critical,Routine
Inspection Date: 7/26/2021
Inspected by: PRIME AE

:Bridge No 03819

Town: NEW LONDON
Carried: INTERSTATE 95 NORTHBOUND
Crossed: THAMES RV,RR,LOCAL ROADS
Inventory Route: NHS

CREW: SW, BF	DATE: 11/8/2017	BRIDGE NO.: 03819

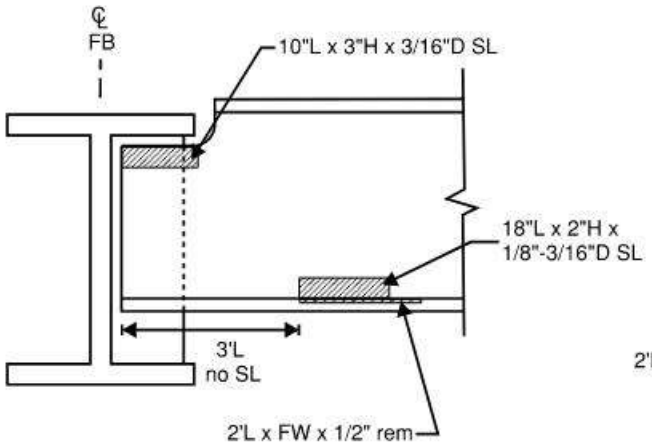

Span 31 - S1 at East Side of FB 8
South Elevation

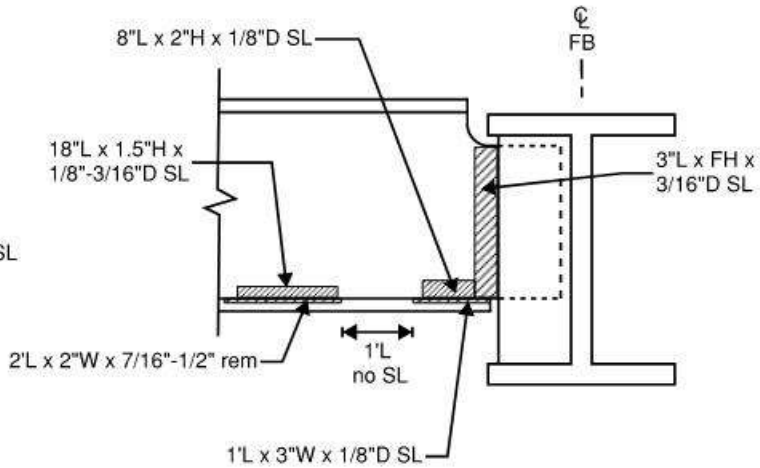

Span 31 - S1 at East Side of FB 8
North Elevation

- LR at all locations

REVISION 1	DATE: 9/24/19	CREW: BH, JG (Baker)	REVISION 3	DATE:	CREW:
REVISION 2	DATE: 10/18/2021	CREW: NR, IS (PRIME) - No Change	REVISION 4	DATE:	CREW:

CREW: SW, BF	DATE: 11/8/2017	BRIDGE NO.: 03819

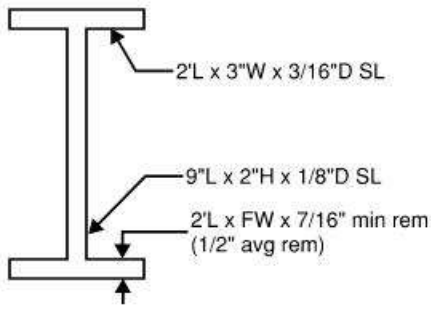

Span 31 - S1 at 5' West of FB 10
Section A-A (looking east)

- LR at all locations

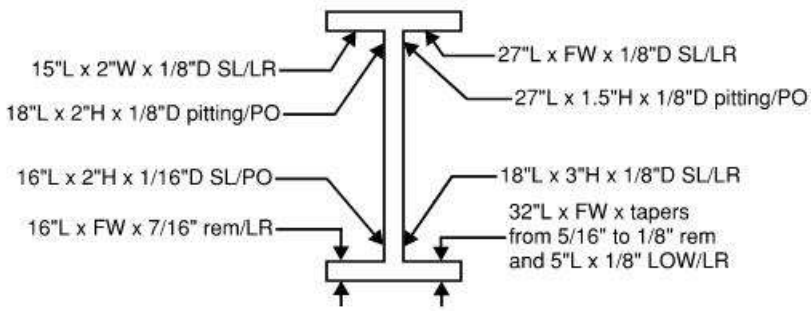

Span 31 - S13 at ±3.5' West of FB 7
Section B-B (looking east)

REVISION 1	DATE: 9/20/19	CREW: BH, BF (Baker)	REVISION 3	DATE:	CREW:
REVISION 2	DATE: 9/23/2021	CREW: NR, EB (PRIME) - No Change	REVISION 4	DATE:	CREW:

CREW: SW, BF	DATE: 11/8/2017	BRIDGE NO.: 03819

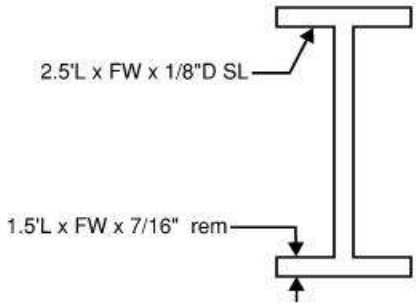

Span 31 - S13 at 5.5' West of FB 10
Section C-C (looking east)

- LR at all locations

REVISION 1	DATE: 9/20/19	CREW: BH, BF (Baker)	REVISION 3	DATE:	CREW:
REVISION 2	DATE: 10/18/2021	CREW: NR, IS (PRIME) - No Change	REVISION 4	DATE:	CREW:

CREW: SW, BF	DATE: 11/8/2017	BRIDGE NO.: 03819

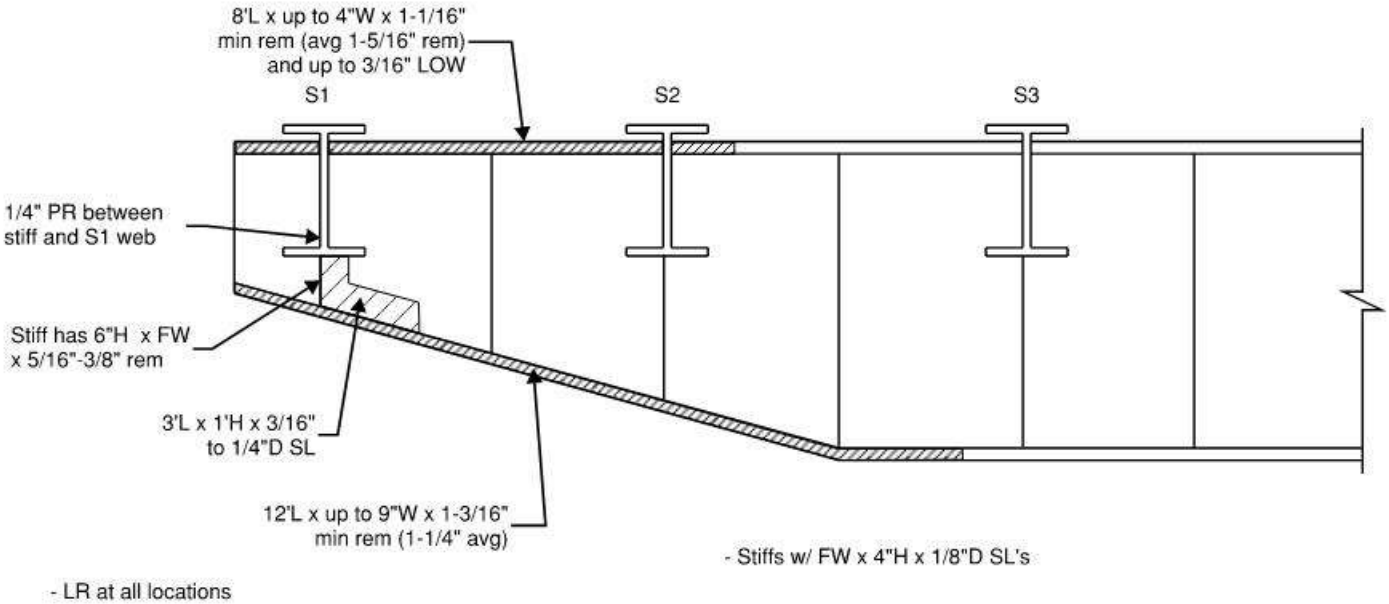

Span 31 - Floorbeam 8 North Cantilever
West Elevation

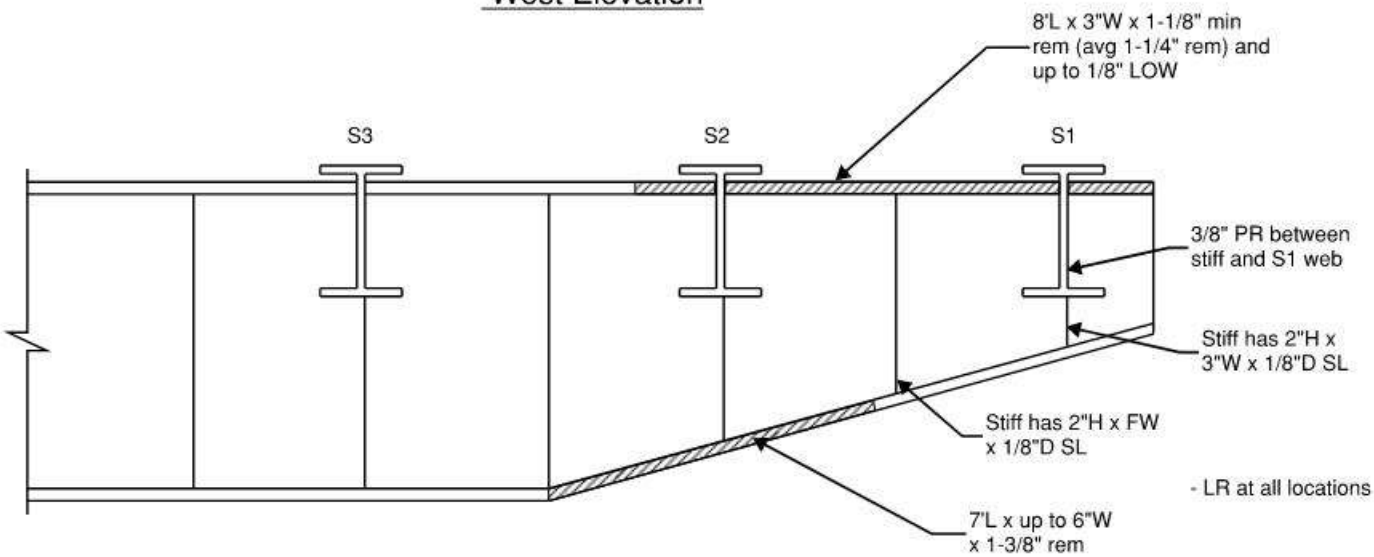

Span 31 - Floorbeam 8 North Cantilever
East Elevation

REVISION 1	DATE: 9/24/19	CREW: BH, JG (Baker)	REVISION 3	DATE:	CREW:
REVISION 2	DATE: 10/18/2021	CREW: NR, IS (PRIME) - No Change	REVISION 4	DATE:	CREW:

Sketches
Inspection type: Fracture Critical,Routine
Inspection Date: 7/26/2021
Inspected by: PRIME AE

:Bridge No 03819

Town: NEW LONDON
Carried: INTERSTATE 95 NORTHBOUND
Crossed: THAMES RV,RR,LOCAL ROADS
Inventory Route: NHS

CREW: SW, BF	DATE: 11/6/2017	BRIDGE NO.: 03819

Deterioration Legend:
1 - Bot of diaph stiff has 4"W x 4"H x 3/16" rem
2 - 7/16" PR between FB stiff and S13 web

LOG DIRECTION
WEST TO EAST

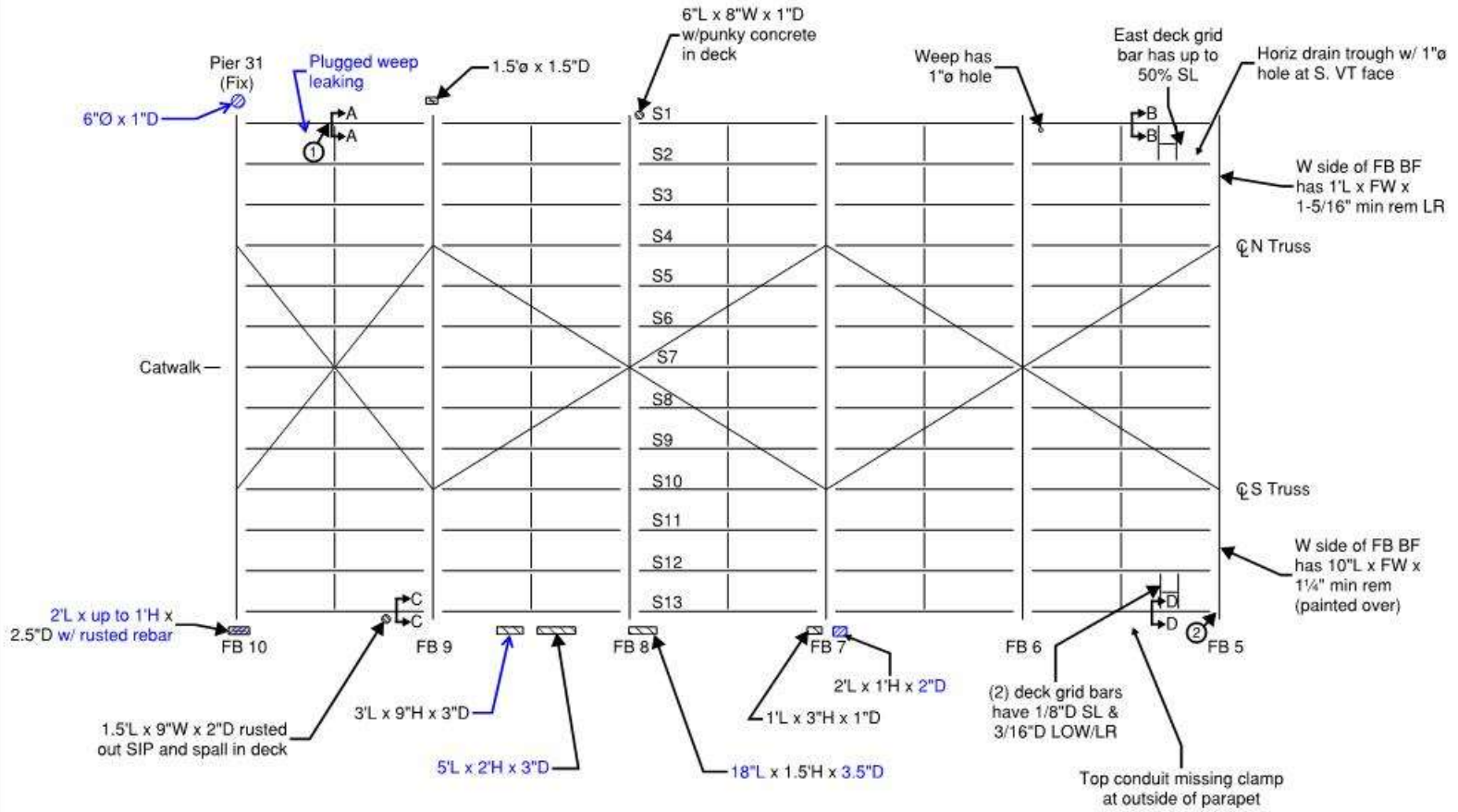

General Notes:
- See Underside of Deck and Steel Framing General Notes (Spans 22-25 & 29-32) sheet
- Fascia spalls/hollow areas are typically in bottom of parapet U.O.N.

LEGEND:
- HOLLOW AREA
- SHALLOW REBAR
- SPALL AREA
- SPALL AREA WITH EXPOSED REBAR
- MAPCRACKS
- HAIRLINE CRACKS
- HONEYCOMB AREA
- SCALE AREA
- EFFLORESCENCE PRESENT

Span 32 - Underside of Deck and Framing
West Half

REVISION 1	DATE: 9/24/19	CREW: BH, JG (Baker)	REVISION 3	DATE:	CREW:
REVISION 2	DATE: 8/17/2021	CREW: BM, CMR, IS, NH (PRIME)	REVISION 4	DATE:	CREW:

CREW: SW, BF	DATE: 11/6/2017	BRIDGE NO.: 03819

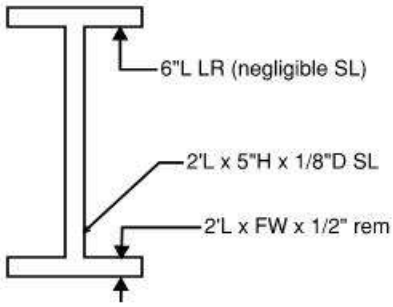

Span 32 - S1 at Mid-Panel East of FB 10
Section A-A (looking east)

- LR at all locations
- Plugged weep leaking on member

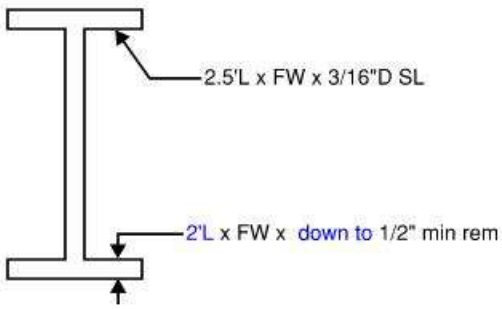

Span 32 - S1 at 5' West of FB 5
Section B-B (looking east)

- LR at all locations

REVISION 1	DATE: 9/24/19	CREW: BH, JG (Baker)	REVISION 3	DATE:	CREW:
REVISION 2	DATE: 10/5/2021	CREW: BM, IS (PRIME)	REVISION 4	DATE:	CREW:

CREW: SW, KT	DATE: 8/23/2017	BRIDGE NO.: 03819

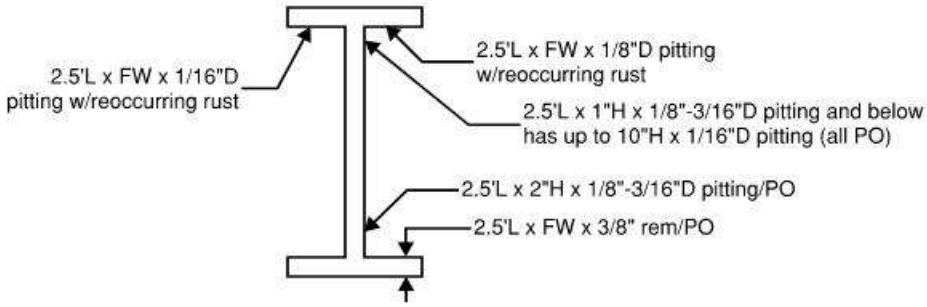

Span 32 - S13 at 5.5' West of FB 9
Section C-C (looking east)

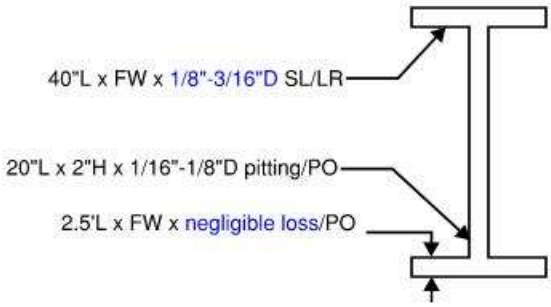

Span 32 - S13 at 3' West of FB 5
Section D-D (looking east)

REVISION 1	DATE: 9/25/19	CREW: BH, JG (Baker)	REVISION 3	DATE:	CREW:
REVISION 2	DATE: 8/17/2021	CREW: CMR, NH (PRIME)	REVISION 4	DATE:	CREW:

Sketches
Inspection type: Fracture Critical,Routine
Inspection Date: 7/26/2021
Inspected by: PRIME AE

:Bridge No 03819

Town: NEW LONDON
Carried: INTERSTATE 95 NORTHBOUND
Crossed: THAMES RV,RR,LOCAL ROADS
Inventory Route: NHS

CREW: SW, BF	DATE: 11/6/2017	BRIDGE NO.: 03819

Deterioration Legend:
1. - Hole in trough at north side (size given)
2. - 1'L x 1.5'W rusted through SIP w/1/4"D scale/punky conc & deck grid bars has 1/8"D SL/LR & S1 TF adj to deck grid bars has 1/8"D SL/LR x FW x 3'L & BF w/ 2"W x 1/8"D SL/LR; 1' from end
3. - Both sides of FB TF has 3'L x 2"W x 1/8"D SL & rem width has 1/16"D pitting/LR
4. - OHSS conn to S13 & S14 each have (1) backed off conn bolt up to 1/2" & BF support in contact w/ str web cut-out.
5. - Vert stiff for scupper framing has 1"ø RTH
6. - Bot of FB stiff weld w/ 2-1/8"L crack, extends into FB web (repaired by maint. with drilled stop holes in 2019)

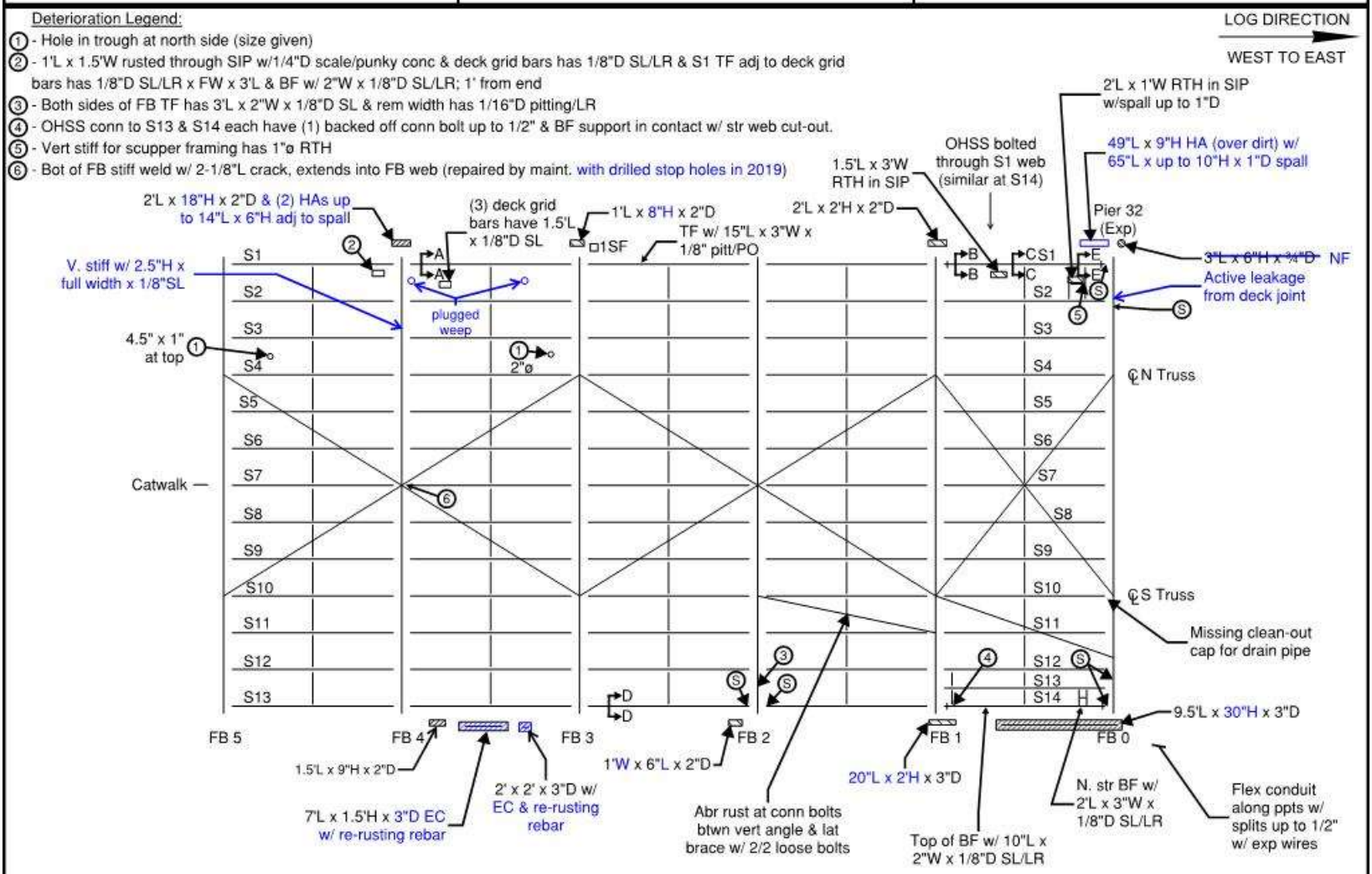

General Notes:

- See Underside of Deck and Steel Framing General Notes (Spans 22-25 & 29-32) sheet
- Fascia spalls/hollow areas are typically in bottom of parapet U.O.N.
- Random stiff's at FB0 east side have 1/8"-1/4"D pitting and isolated areas in the FB web adj to the stiff's have up to 3/16"D pitting x up to 9"H
- Underside of pier 32 deck joint has random TV HLC's w/efflo and loud noise was noted at joint
- S1 & S14 between FB0 & FB1 have BF cover PL's w/end welds near FB's w/lam rust (negl loss)
- FB0, E. elev TF & BF w/ rand 6"W x 1/8"D SL/LR thru-out

LEGEND:
- HOLLOW AREA
- SHALLOW REBAR
- SPALL AREA
- SPALL AREA WITH EXPOSED REBAR
- MAPCRACKS
- HAIRLINE CRACKS
- HONEYCOMB AREA
- SCALE AREA
- EFFLORESCENCE PRESENT
- BF COVER PLATE END WELD
- SEE SKETCH

Span 32 - Underside of Deck and Framing
East Half

REVISION 1	DATE: 9/24/19	CREW: BH, JG (Baker)	REVISION 3	DATE:	CREW:
REVISION 2	DATE: 8/17/2021	CREW: BM, CMR, NH, IS (PRIME)	REVISION 4	DATE:	CREW:

Sketches
Inspection type: Fracture Critical,Routine
Inspection Date: 7/26/2021
Inspected by: PRIME AE

:Bridge No 03819

Town: NEW LONDON
Carried: INTERSTATE 95 NORTHBOUND
Crossed: THAMES RV,RR,LOCAL ROADS
Inventory Route: NHS

CREW: SW, BF	DATE: 11/6/2017	BRIDGE NO.: 03819

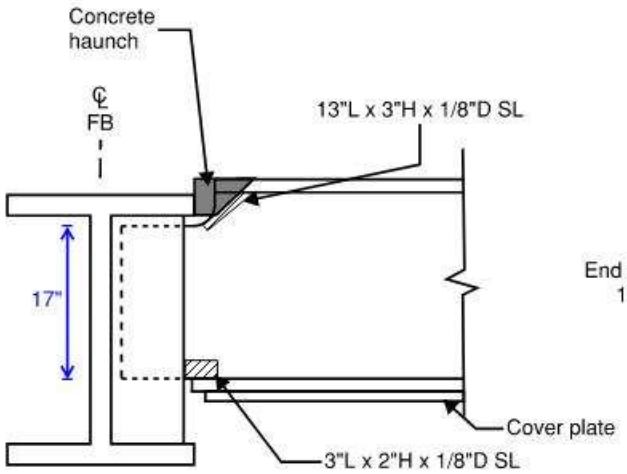

Span 32 - S1 at West Side of FB 0
North Elevation

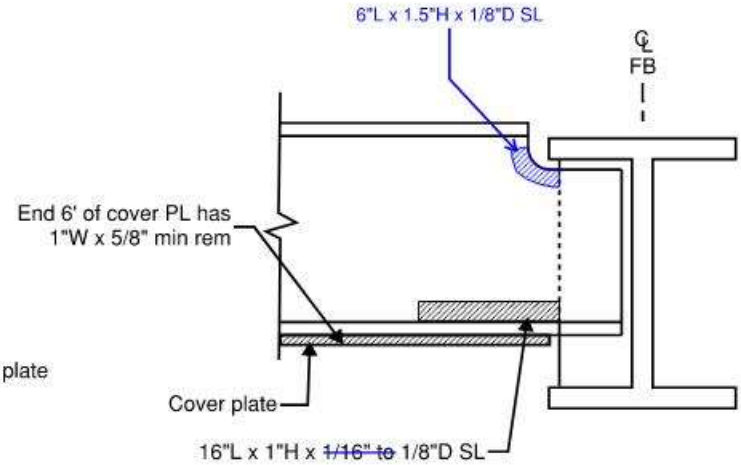

- LR at all locations

Span 32 - S1 at West Side of FB 0
South Elevation

REVISION 1	DATE: 9/24/19	CREW: BH, JG (Baker)	REVISION 3	DATE:	CREW:
REVISION 2	DATE: 10/5/2021	CREW: BM, IS (PRIME)	REVISION 4	DATE:	CREW:

Sketches
Inspection type: Fracture Critical,Routine
Inspection Date: 7/26/2021
Inspected by: PRIME AE

:Bridge No 03819

Town: NEW LONDON
Carried: INTERSTATE 95 NORTHBOUND
Crossed: THAMES RV,RR,LOCAL ROADS
Inventory Route: NHS

CREW: SW, BF	DATE: 11/6/2017	BRIDGE NO.: 03819

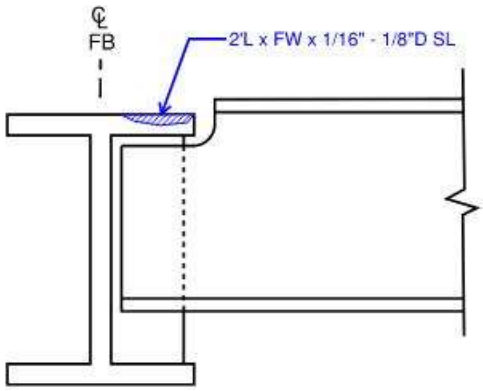

Span 32 - S13 at West Side of FB 2
North Elevation

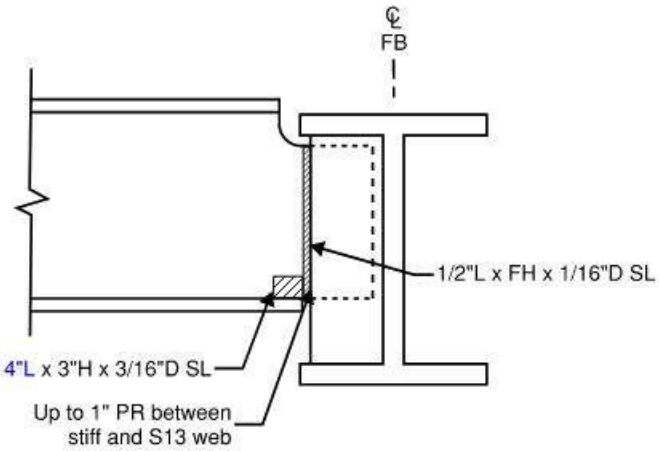

Span 32 - S13 at West Side of FB 2
South Elevation

REVISION 1	DATE: 9/25/19	CREW: BH, JG (Baker)	REVISION 3	DATE:	CREW:
REVISION 2	DATE: 9/27/2021	CREW: EG, MM (PRIME)	REVISION 4	DATE:	CREW:

Sketches
Inspection type: Fracture Critical,Routine
Inspection Date: 7/26/2021
Inspected by: PRIME AE

:Bridge No 03819

Town: NEW LONDON
Carried: INTERSTATE 95 NORTHBOUND
Crossed: THAMES RV,RR,LOCAL ROADS
Inventory Route: NHS

CREW: SW, BF	DATE: 11/6/2017	BRIDGE NO.: 03819

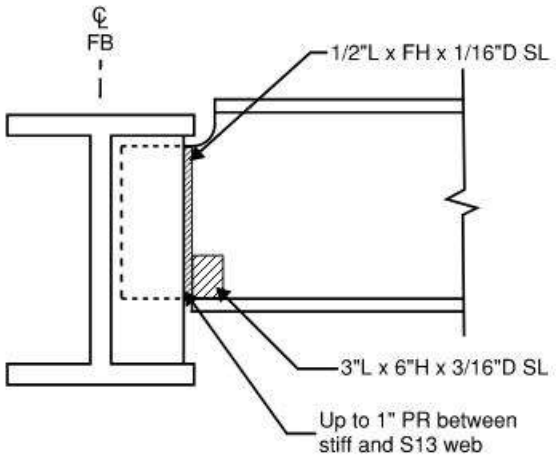

Span 32 - S13 at East Side of FB 2
South Elevation

- LR difficult to remove

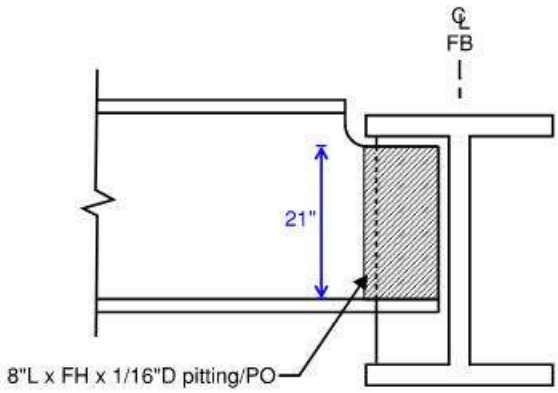

Span 32 - S13 at East Side of FB 2
North Elevation

REVISION 1	DATE: 9/25/19	CREW: BH, JG (Baker)	REVISION 3	DATE:	CREW:
REVISION 2	DATE: 9/27/2021	CREW: EG, MM (PRIME)	REVISION 4	DATE:	CREW:

CREW: SW, BF	DATE: 10/3/2017	BRIDGE NO.: 03819

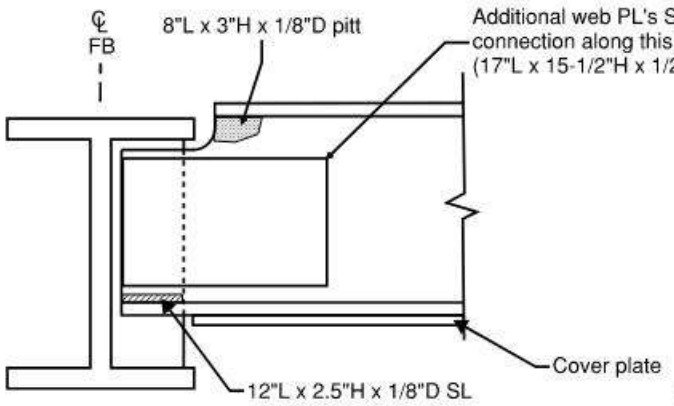

Span 32 - S14 at West Side of FB 0
North Elevation

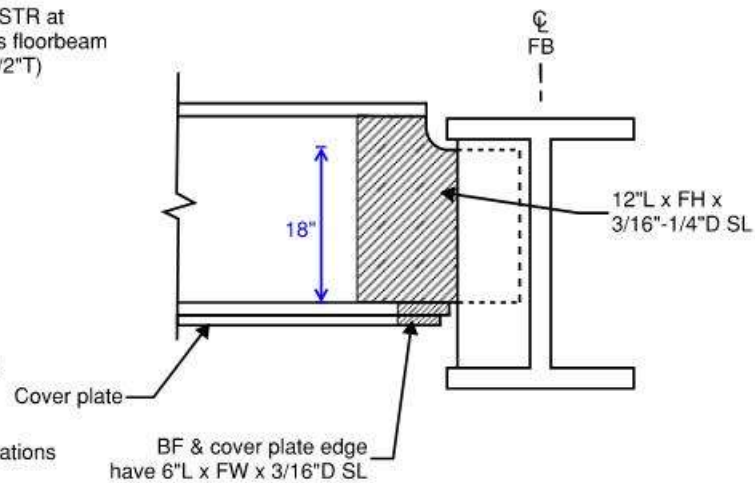

- LR at all locations

Span 32 - S14 at West Side of FB 0
South Elevation

REVISION 1	DATE: 9/25/19	CREW: BH, JG (Baker)	REVISION 3	DATE:	CREW:
REVISION 2	DATE: 9/27/2021	CREW: EG, MM (PRIME)	REVISION 4	DATE:	CREW:

CREW: SW, BF	DATE: 11/6/2017	BRIDGE NO.: 03819

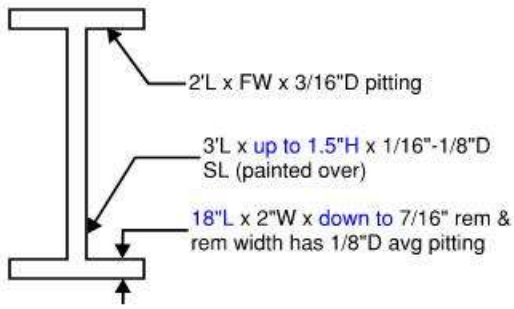

Span 32 - S1 at 8' East of FB 4
Section A-A (looking east)

- LR at all locations

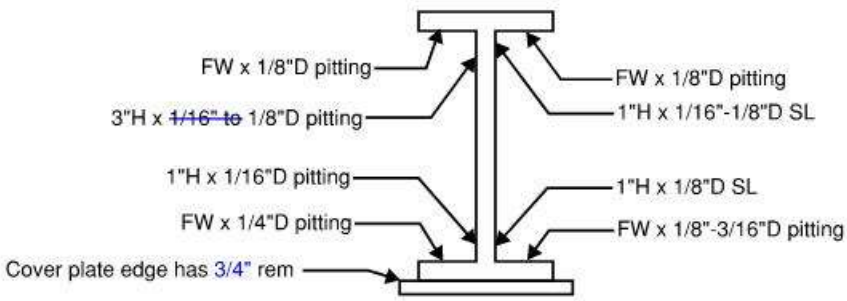

Span 32 - S1 at 4' East of FB 1
Section B-B (looking east)

- All losses painted over

REVISION 1	DATE: 9/24/19	CREW: BH, JG (Baker)	REVISION 3	DATE:	CREW:
REVISION 2	DATE: 7/26/2021	CREW: BM, NH, IS (PRIME)	REVISION 4	DATE:	CREW:

CREW: SW, BF	DATE: 11/6/2017	BRIDGE NO.: 03819

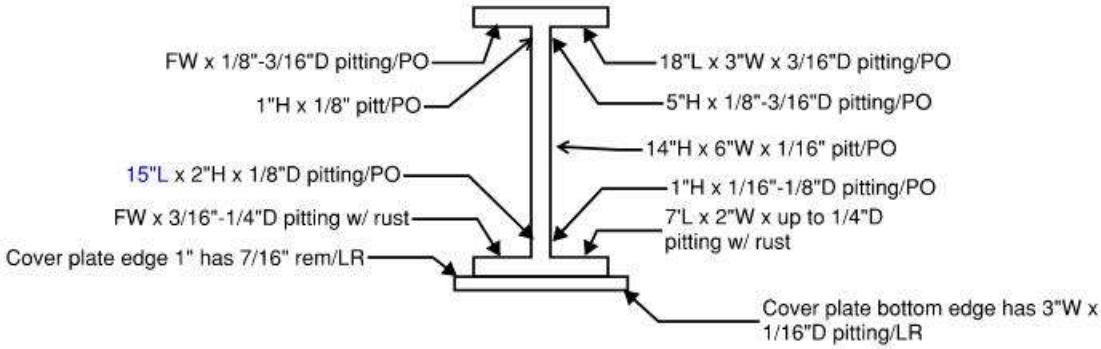

Span 32 - S1 at Mid-Panel East of FB 1
Section C-C (looking east)

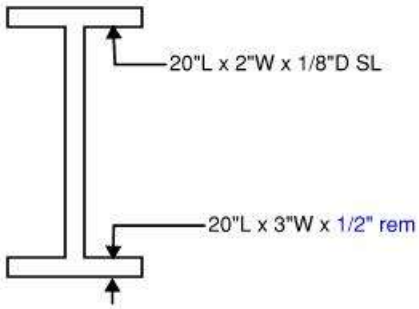

Span 32 - S13 at 10' East of FB 3
Section D-D (looking east)

- LR at all locations
- Previously noted losses on wrong elevation

REVISION 1	DATE: 9/24/19	CREW: BH, JG (Baker)	REVISION 3	DATE:	CREW:
REVISION 2	DATE: 9/27/2021	CREW: BM, EG, MM, IS (PRIME)	REVISION 4	DATE:	CREW:

CREW: BH, JG	DATE: 9/24/2019	BRIDGE NO.: 03819

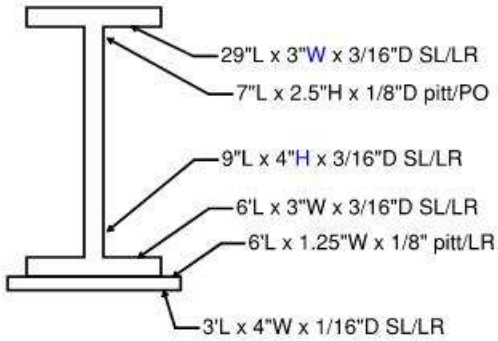

Span 32 - S1 at 4' West of FB 0
Section E-E (looking east)

REVISION 1	DATE: 9/24/19	CREW: BH, JG (Baker)	REVISION 3	DATE:	CREW:
REVISION 2	DATE: 10/5/2021	CREW: BM, IS (PRIME)	REVISION 4	DATE:	CREW:

CREW: SW, BF	DATE: 11/6/2017	BRIDGE NO.: 03819

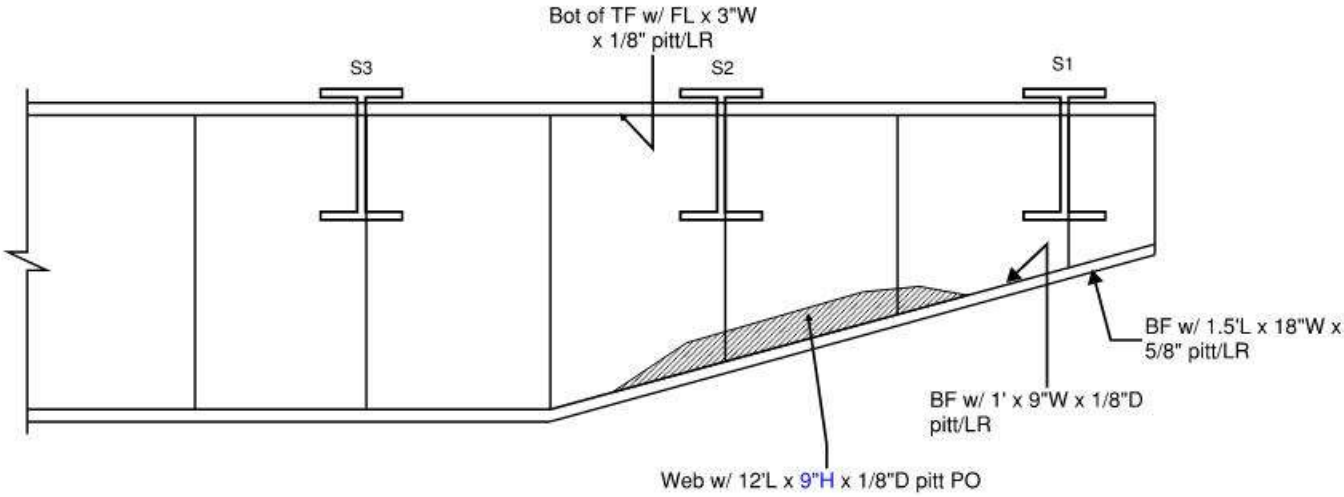

Span 32 - Floorbeam 0 North Cantilever
East Elevation

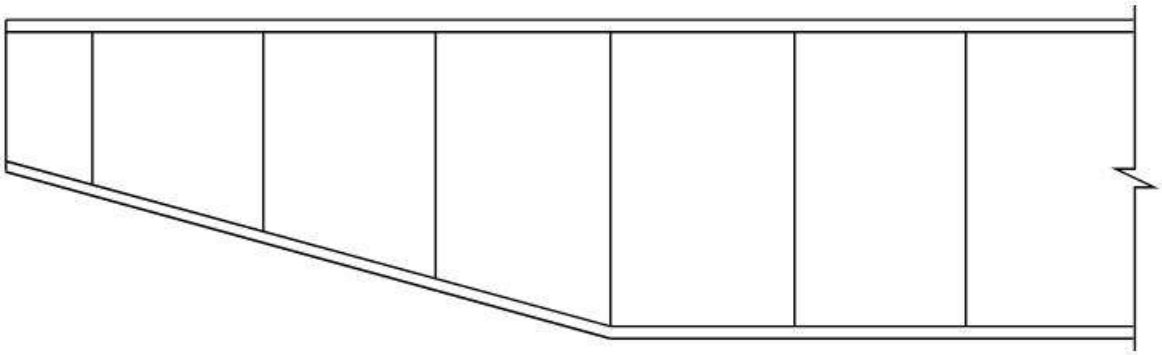

Span 32 - Floorbeam 0 North Cantilever
West Elevation

REVISION 1	DATE: 9/24/19	CREW: BH, JG (Baker)	REVISION 3	DATE:	CREW:
REVISION 2	DATE: 10/5/2021	CREW: BM, IS (PRIME)	REVISION 4	DATE:	CREW:

CREW: SW, BF	DATE: 10/3/2017	BRIDGE NO.: 03819

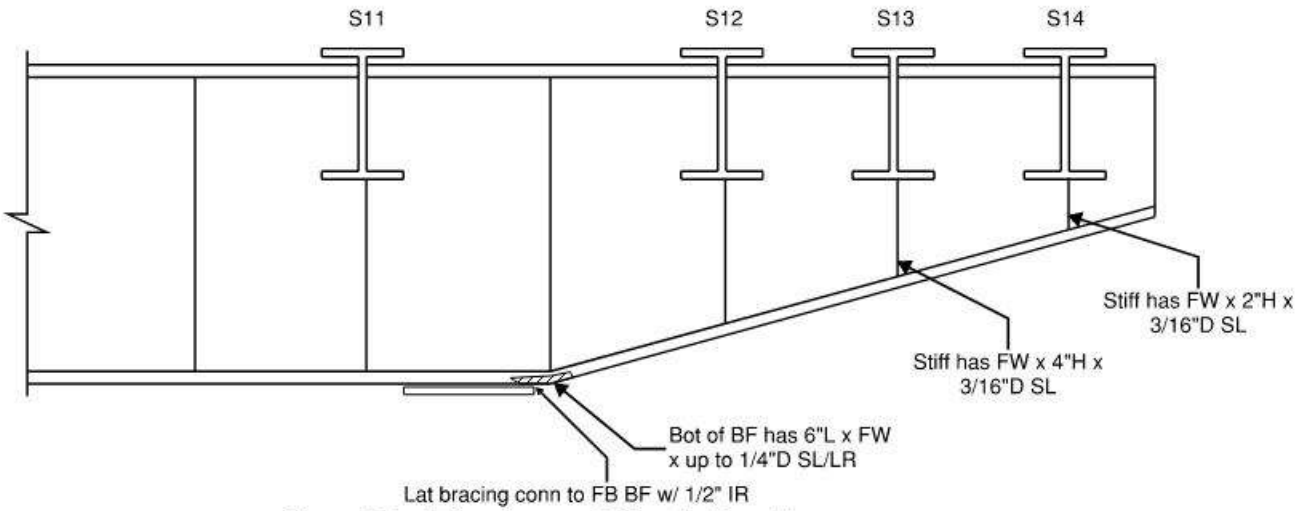

Span 32 - Floorbeam 0 South Cantilever
West Elevation

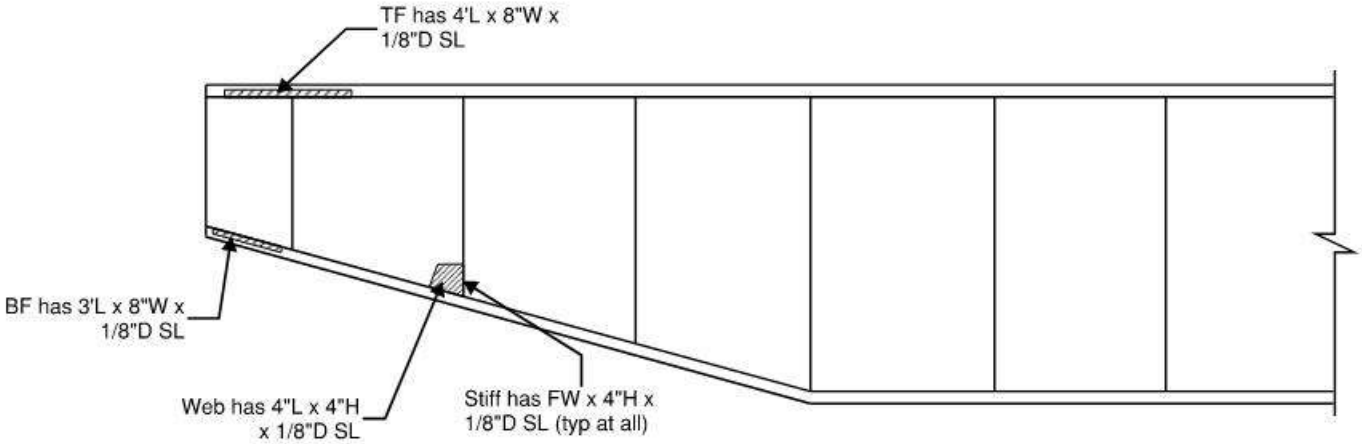

Span 32 - Floorbeam 0 South Cantilever
East Elevation

- LR at all locations

REVISION 1	DATE: 9/25/19	CREW: BH, JG (Baker)	REVISION 3	DATE:	CREW:
REVISION 2	DATE: 9/27/2021	CREW: EG, MM (PRIME) - No Change	REVISION 4	DATE:	CREW:

CREW: SW, KT	DATE: 8/23/2017	BRIDGE NO.: 03819

Underside of Deck and Steel Framing General Notes - Spans 33-36

Underside of Deck:

- Underside of the stay-in-place (SIP) forms typically have random areas of spotty light reoccurring rust, peeling paint and isolated areas of heavy to laminated rust.
- Random SIP forms are bent and/or pushed down up to 5' long x 4" (as-built condition).
- SIP forms along both overhangs and near the scuppers have random areas of moderate to heavy rust, efflorescence and active leakage with random rusted through holes up to 16" diameter. Also, SIP forms are rusted out up to 1' diameter around the weeps with deck spalls at isolated locations.
- Deck grid bars at each fascia have random locations of laminated rust with 1/16"-1/8" deep section loss, especially adjacent to parapet spall locations.
- Deck grid bars adjacent to scuppers have laminated rust with up to 1/16"-1/8" deep section loss.
- Deck grid bars adjacent to rusted out SIP forms have bottom flanges with laminated rust with negligible to 1/16"D SL.
- Most PVC weeps extend below stringer bottom flanges. Several abandoned and plugged short weeps are actively leaking onto the deck and structural steel.
- Scuppers not shown on sketches unless deficient.
- Drainage troughs are clear of heavy debris, unless otherwise noted.
- Spans 34-36, underside of the longitudinal joint is inaccessible due to timber planks and sheeting.

Stringers:

- Random areas of peeling paint with varying degrees of rusting, up to laminated with negligible section loss.
- Stringer to floorbeam connections have up to 1/4" gaps/pack rust at random locations.
- Stringer to floorbeam connections have abrasion rust. Connection bolts are tight unless otherwise noted.

Girders:

- Random areas of peeling paint with varying degrees of rusting, up to laminated with negligible section loss.
- Span 34-36 vertical stiffeners at random locations are wavy up to 1/2".

Floorbeams:

- Random areas of peeling paint with varying degrees of rusting, up to laminated with negligible section loss.
- Floorbeam end plates have up to 1/4" deep section loss.
- Top flange ends at cantilever sections typically have up to 3' long x 3" wide x 1/8" deep section loss.
- Bottom flanges adjacent to random vertical stiffeners have areas of section loss up to 9" diameter x 3/16" deep (typically in cantilever sections) up to 11% loss.
- Webs in the cantilever sections have random areas of section loss up to 8" long x 8" high x 1/8" deep (typically less critical areas U.O.N).
- Vertical stiffeners at cantilever sections at deck joint locations have full width x 6" high x 1/4" deep section loss at the base (similar at random non-deck joint floorbeams).
- Up to 3/4" thick pack rust between floorbeam shim/fill plates.
- Up to 1/4" thick pack rust between floorbeam bottom flange and knee brace.

REVISION 1	DATE: 8/26/19	CREW: SW, BF (Baker)	REVISION 3	DATE:	CREW:
REVISION 2	DATE: 07/26/2021	CREW: BM, CMR, EG, NR, EB, NH, IS, SD (PRIME AE)	REVISION 4	DATE:	CREW:

CREW: SW, KT	DATE: 8/23/2017	BRIDGE NO.: 03819

Underside of Deck and Steel Framing General Notes - Spans 33-36 (cont.)

General:

- Specific areas of section loss and/or pitting losses shown on the field sheets are typically painted with some minor re-rusting, U.O.N.
- Superstructure creaks under heavy live load.
- Isolated mis-drilled holes in various bridge components.
- Scupper support framing has heavy to laminated rust at random locations with up to 3/16" deep section loss to both flanges and web.
- LR = Laminated rust; PO = Painted over; RR = painted over with re-rusting

Lateral Bracing:

- Horizontal bracing gusset plates connections to girders and floorbeams have connection bolts that are not fully engaged with up to 3/16" gap (bolts are tight).
- There is up to 1/2" thick pack rust between the bracing members and horizontal gusset plates and between the floorbeam bottom flanges and horizontal gusset plates.
- Random bolts are short up to (3) threads.

REVISION 1	DATE: 8/26/19	CREW: SW, BF (Baker)	REVISION 3	DATE:	CREW:
REVISION 2	DATE: 07/26/2021	CREW: BM, CMR, EG, NR (PRIME AE) - No Change	REVISION 4	DATE:	CREW:

Sketches
Inspection type: Fracture Critical,Routine
Inspection Date: 7/26/2021
Inspected by: PRIME AE

:Bridge No 03819

Town: NEW LONDON
Carried: INTERSTATE 95 NORTHBOUND
Crossed: THAMES RV,RR,LOCAL ROADS
Inventory Route: NHS

CREW: SW, KT	DATE: 8/23/2017	BRIDGE NO.: 03819

Deterioration Legend:
1. Vert stiff at bot is bent east 1/2" over 6"H
2. Brg stiff East elevation w/ FW x up to 2"H x 1/4"D SL; West elevation w/ FW x up to 4"H x 1/8"D SL
3. S1 both sides of web at top has 8"L x 1"H x up to 1/8"D SL
4. Web has 3"ø x 1/8"D SL/LR and brg stiff w/5"W x 5"H x 1/8"D SL/LR, west side of bearing has 5"W x 3"H x 1/16"D SL
5. FB end PL has 1'W x 6"H x 3/8"D SL & TF has 2'L x 3"W x up to 7/16"D SL
6. Gusset PL has (1) bolt missing (drift pin in place)
7. Stringer S15 stiffener & adj. stiffener w/ FW x up to 5"H x 3/16" REM at bases

LOG DIRECTION → WEST TO EAST

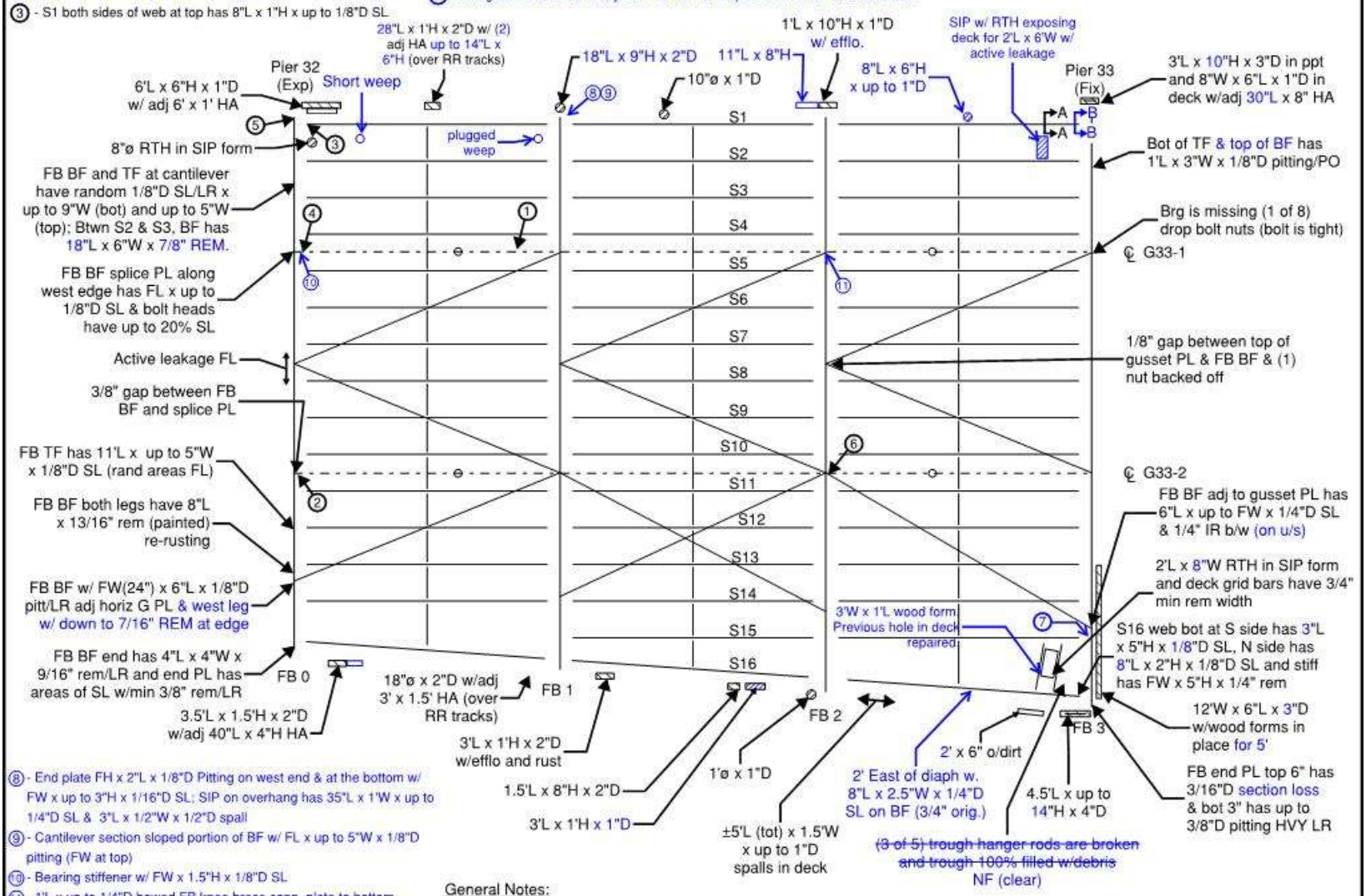

8. End plate FH x 2"L x 1/8"D Pitting on west end & at the bottom w/ FW x up to 3"H x 1/16"D SL; SIP on overhang has 35"L x 1'W x up to 1/4"D SL & 3"L x 1/2"W x 1/2"D spall
9. Cantilever section sloped portion of BF w/ FL x up to 5"W x 1/8"D pitting (FW at top)
10. Bearing stiffener w/ FW x 1.5"H x 1/8"D SL
11. 1'L x up to 1/4"D bowed FB knee brace conn. plate to bottom lateral bracing

General Notes:
- See Underside of Deck and Steel Framing General Notes (Spans 33-36) sheet
- Fascia spalls/hollow areas are typically in bottom of parapet U.O.N.
- FB 0 btwn girders west side TF edge has up to 3"W x 3/16"-1/4"D pitting, BF has up to 4"W x min 15/16" rem at random locations, web (1'H) and vert stiff's (4"H) at bot have random 1/16"-1/8"D pitting (isolated stiff's have 3"H x FW x 3/16"-1/4"D pitting) ~~and ponding water~~ (NF) and sand debris at random locations of BF
- FB 3 BF has isolated areas of sand accumulation up to 1" high & stiff bases w/ FW x 6"H x 1/8"D SL/PO
- Underside of deck joint at pier 33 has spalls w/exposed rebar, hollow areas throughout up to 4"D and active leakage at north end.
- Random girder stiff's have ±1"ø torch cut holes
- No inspection platforms in this span (over RR)

LEGEND:
- HOLLOW AREA
- SHALLOW REBAR
- SPALL AREA
- SPALL AREA WITH EXPOSED REBAR
- MAPCRACKS
- HAIRLINE CRACKS
- HONEYCOMB AREA
- SCALE AREA
- EFFLORESCENCE PRESENT
- BOTTOM AND TOP FLANGE TRANSITION WELD

Span 33 - Underside of Deck and Framing

REVISION 1	DATE: 8/28/19	CREW: SW, BF (Baker)	REVISION 3	DATE:	CREW:
REVISION 2	DATE: 9/29/2021	CREW: BM, CMR, SD, NH (PRIME)	REVISION 4	DATE:	CREW:

CREW: MRJ, JG	DATE: 10/10/2017	BRIDGE NO.: 03819

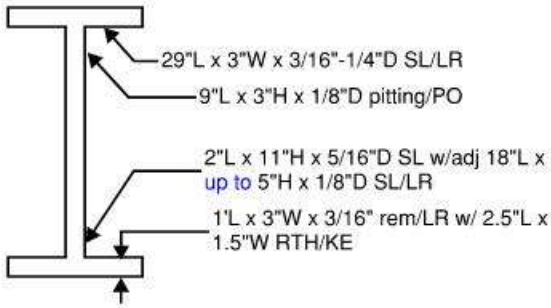

Span 33 - S1 at 4' West of FB 3
Section A-A (looking east)

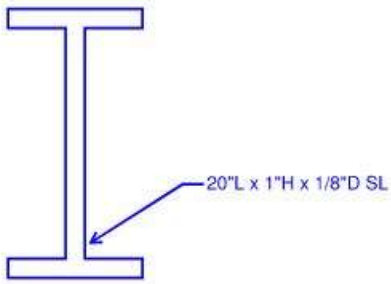

Span 33 - S1 West of FB 3
Section B-B (looking east)

REVISION 1	DATE: 8/28/19	CREW: SW, BF (Baker)	REVISION 3	DATE:	CREW:
REVISION 2	DATE: 9/23/2021	CREW: BM, SD (PRIME)	REVISION 4	DATE:	CREW:

Sketches
Inspection type: Fracture Critical,Routine
Inspection Date: 7/26/2021
Inspected by: PRIME AE

:Bridge No 03819

Town: NEW LONDON
Carried: INTERSTATE 95 NORTHBOUND
Crossed: THAMES RV,RR,LOCAL ROADS
Inventory Route: NHS

CREW: SW, BF	DATE: 10/2/2017	BRIDGE NO.: 03819

Deterioration Legend:
1. TF has 10"L x 2"W x 1/8"D SL/LR
2. Conn btwn S1 and FB 2 has 1 of 6 bolts not fully engaged
3. FB BF E leg has 5'L x 4"W x 1/8"D pitting
4. FB TF has 4'L x 3"W x 1/16"D SL (painted)
5. Up to 3/16" gap btwn FB cantilever splice PL and web at both sides
6. 1/8" gap between horiz gusset PL and FB knee brace

LOG DIRECTION → WEST TO EAST

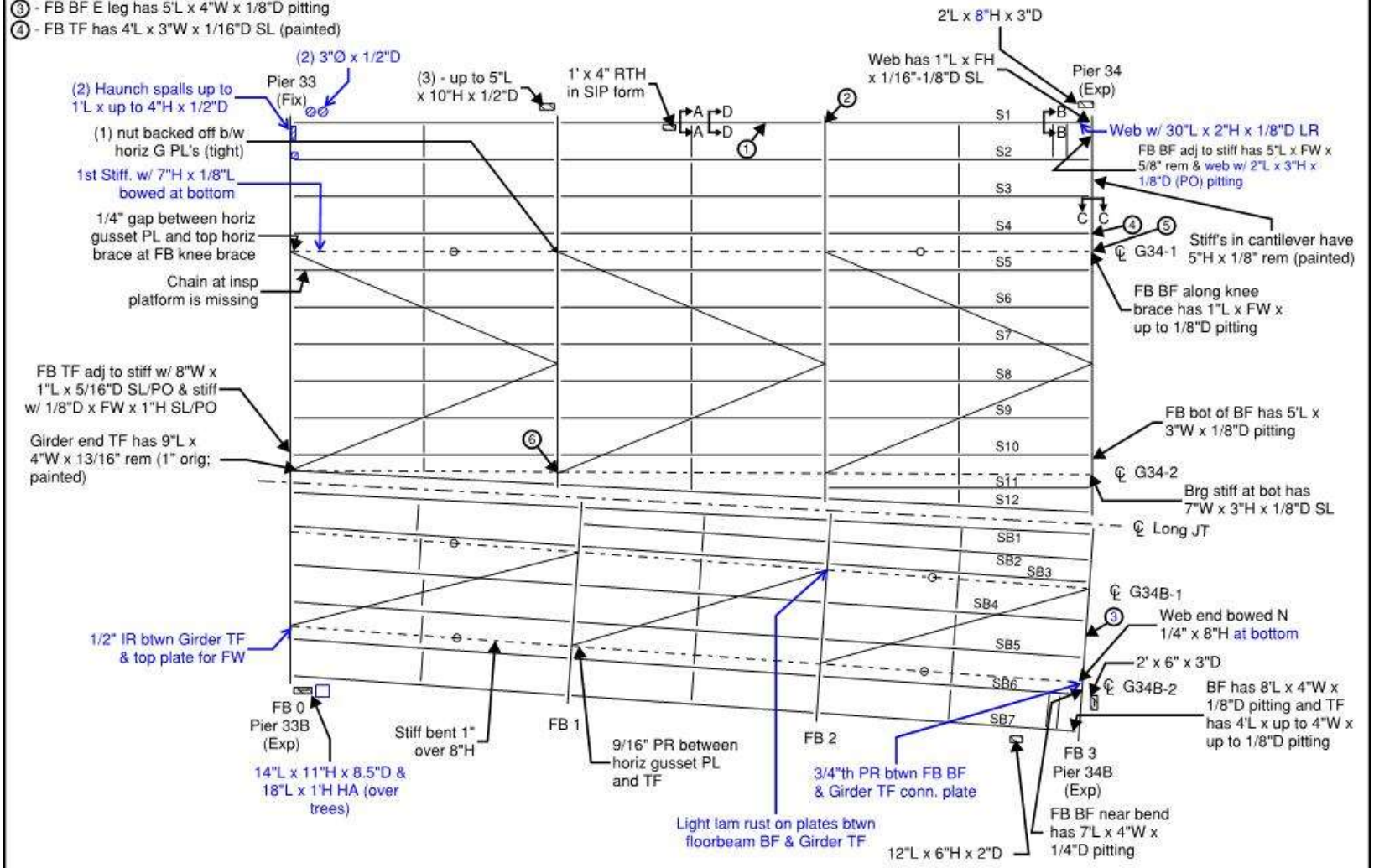

General Notes:

- See Underside of Deck and Steel Framing General Notes (Spans 33-36) sheet
- Fascia spalls are typically in bottom of parapet U.O.N.
- Underside of deck joint at pier 33 for ±60% of length has spalls w/exposed rebar and hollow areas throughout up to 5"D and up to 1/4" wide cracks
- FB 3 at pier 34B has 1/16"-1/8"D pitting on bot 4" of stiff's, BF up to 8"W adj to stiff's (<5% loss) and X-frame bot horiz angle
- Isolated deck grid bar bottom flanges have up to 1/16"D SL
- JT fill mat'l at P34 deteriorated/hanging down 50% of length w/ 2'L missing area near G34-2 (daylight visible)

LEGEND:
- HOLLOW AREA
- SHALLOW REBAR
- SPALL AREA
- SPALL AREA WITH EXPOSED REBAR
- MAPCRACKS
- HAIRLINE CRACKS
- HONEYCOMB AREA
- SCALE AREA
- EFFLORESCENCE PRESENT
- BOTTOM FLANGE TRANSITION WELD

Span 34 - Underside of Deck and Framing

REVISION 1	DATE: 8/26/19	CREW: SW, BF (Baker)	REVISION 3	DATE:	CREW:
REVISION 2	DATE: 9/23/2021	CREW: BM, CMR, SD, EB (PRIME)	REVISION 4	DATE:	CREW:

CREW: MRJ, JG	DATE: 10/10/2017	BRIDGE NO.: 03819

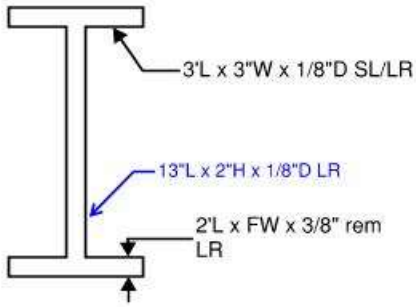

Note:
- Active leakage on stringer

Span 34 - S1 at Mid-Panel East of FB 1
Section A-A (looking east)

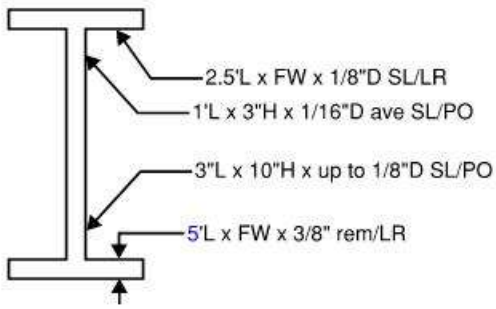

Span 34 - S1 at 4' West of FB 3
Section B-B (looking east)

REVISION 1	DATE: 8/28/19	CREW: SW, BF (Baker)	REVISION 3	DATE:	CREW:
REVISION 2	DATE: 9/23/2021	CREW: BM, SD (PRIME)	REVISION 4	DATE:	CREW:

CREW: MRJ, JG	DATE: 10/10/2017	BRIDGE NO.: 03819

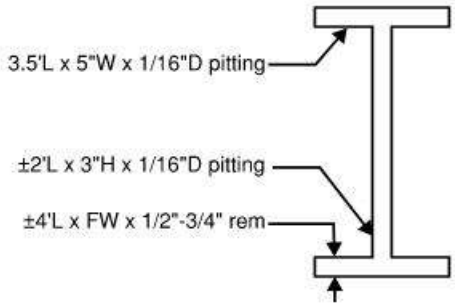

Span 34 - FB 3 at Stringer 3
Section C-C (looking south)

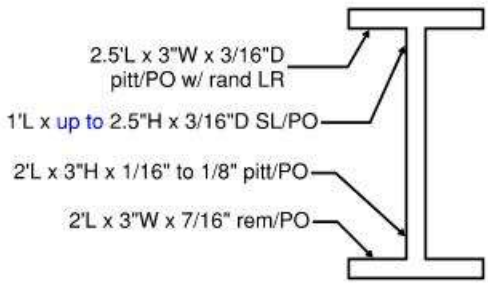

Span 34 - S1 at 2' East of mid-panel
Section D-D (looking east)

REVISION 1	DATE: 8/28/19	CREW: SW, BF (Baker)	REVISION 3	DATE:	CREW:
REVISION 2	DATE: 9/23/2021	CREW: BM, SD (PRIME)	REVISION 4	DATE:	CREW:

Sketches
Inspection type: Fracture Critical,Routine
Inspection Date: 7/26/2021
Inspected by: PRIME AE

:Bridge No 03819

Town: NEW LONDON
Carried: INTERSTATE 95 NORTHBOUND
Crossed: THAMES RV,RR,LOCAL ROADS
Inventory Route: NHS

CREW: SW, BF	DATE: 10/2/2017	BRIDGE NO.: 03819

Deterioration Legend:
1 - Stringer BF has defects and gouges up to 1/2"W x 1/16"D
2 - Short weep is draining onto diaph
3 - (1) nut with 1/8" gap (tight) at gusset plate
4 - BF has 1'L x FW x 1/2" rem
5 - N side tack weld between shim PL and girder TF (N side) is broken FL

LOG DIRECTION
WEST TO EAST

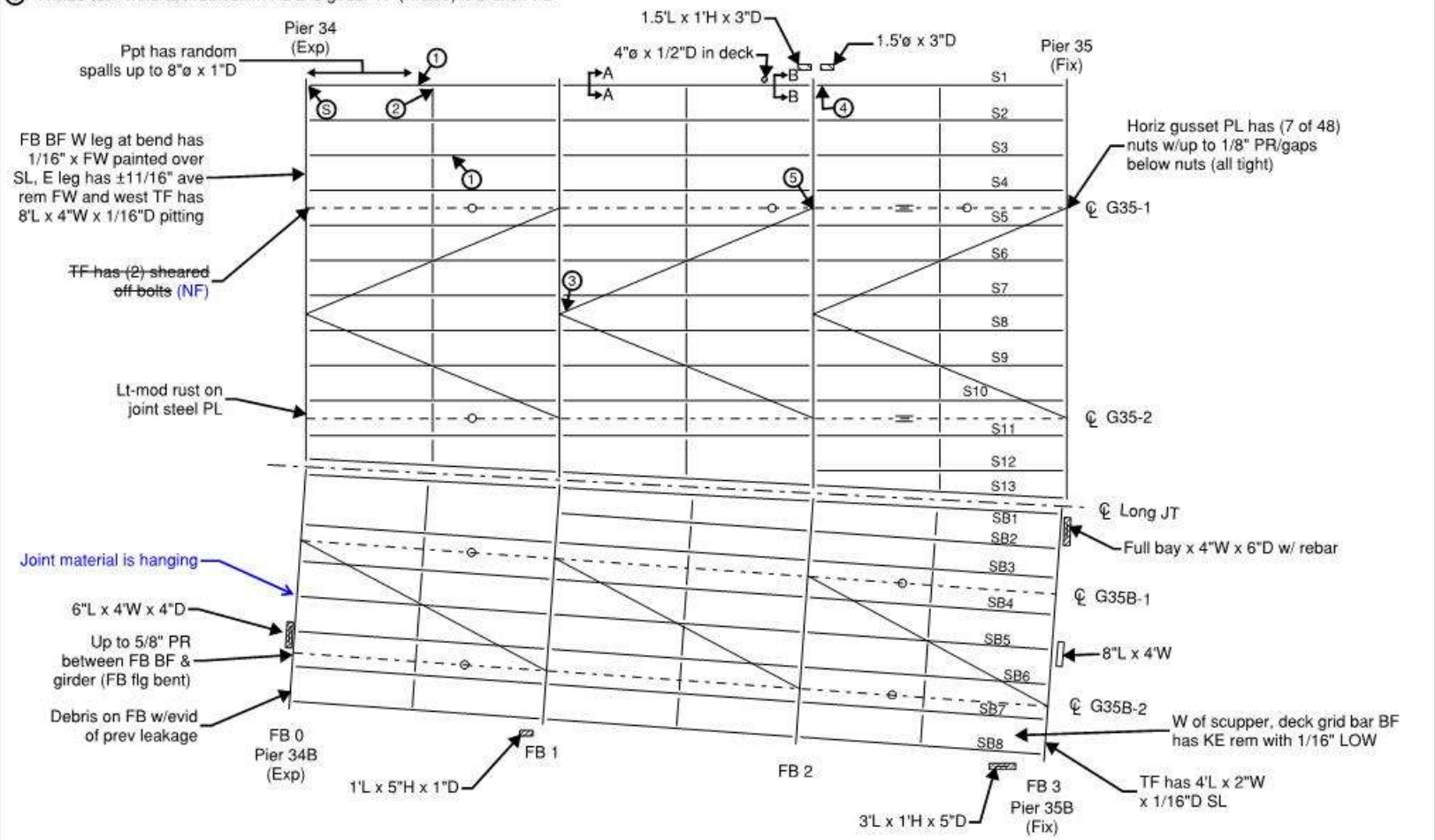

General Notes:

- See Underside of Deck and Steel Framing General Notes (Spans 33-36) sheet
- Fascia spalls are typically in bottom of parapet U.O.N.

LEGEND:
- HOLLOW AREA
- SHALLOW REBAR
- SPALL AREA
- SPALL AREA WITH EXPOSED REBAR
- MAPCRACKS
- HAIRLINE CRACKS
- HONEYCOMB AREA
- SCALE AREA
- EFFLORESCENCE PRESENT
- RIVETED FIELD SPLICE
- BOTTOM FLANGE TRANSITION WELD
- SEE SKETCH

Span 35 - Underside of Deck and Framing

REVISION 1	DATE: 8/26/19	CREW: SW, BF (Baker)	REVISION 3	DATE:	CREW:
REVISION 2	DATE: 9/29/2021	CREW: CMR, EB, NH (PRIME)	REVISION 4	DATE:	CREW:

Sketches
Inspection type: Fracture Critical,Routine
Inspection Date: 7/26/2021
Inspected by: PRIME AE

:Bridge No 03819

Town: NEW LONDON
Carried: INTERSTATE 95 NORTHBOUND
Crossed: THAMES RV,RR,LOCAL ROADS
Inventory Route: NHS

CREW: MRJ, JG	DATE: 10/10/2017	BRIDGE NO.: 03819

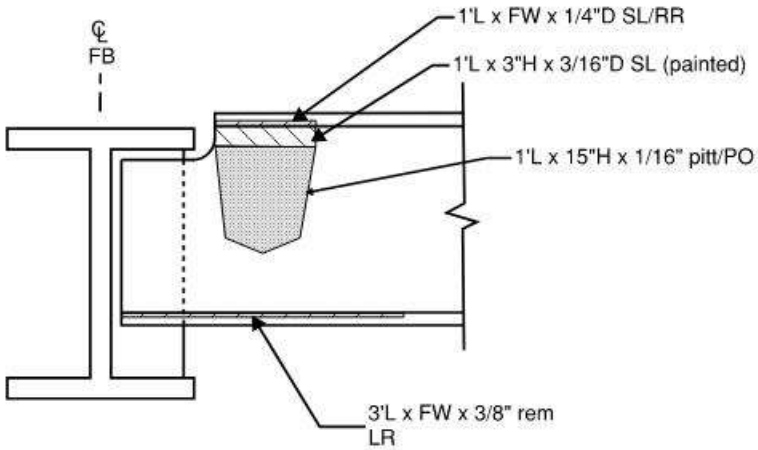

Span 35 - S1 at East Side of FB 0
South Elevation

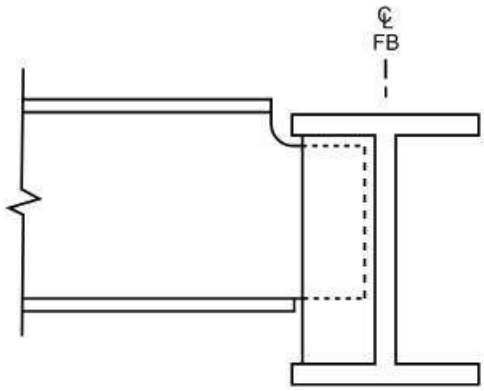

Span 35 - S1 at East Side of FB 0
North Elevation

REVISION 1	DATE: 8/28/19	CREW: SW, BF (Baker)	REVISION 3	DATE:	CREW:
REVISION 2	DATE: 10/5/2021	CREW: CMR, NH (PRIME) - No Change	REVISION 4	DATE:	CREW:

CREW: MRJ, JG	DATE: 10/10/2017	BRIDGE NO.: 03819

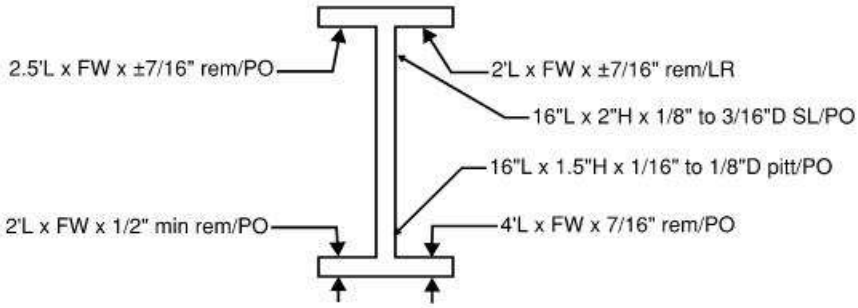

Span 35 - S1 at ±5' East of FB 1
Section A-A (looking east)

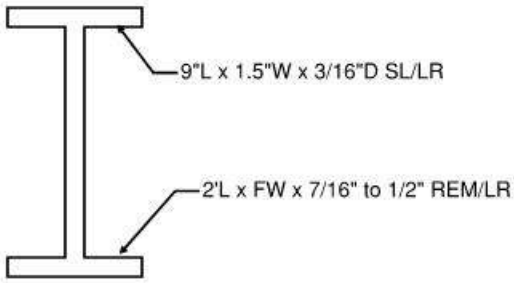

Span 35 - S1 at ±4' west of FB 2
Section B-B (looking east)

REVISION 1	DATE: 8/28/19	CREW: SW, BF (Baker)	REVISION 3	DATE:	CREW:
REVISION 2	DATE: 10/5/2021	CREW: CMR, NH (PRIME) - No Change	REVISION 4	DATE:	CREW:

Sketches
Inspection type: Fracture Critical,Routine
Inspection Date: 7/26/2021
Inspected by: PRIME AE

:Bridge No 03819

Town: NEW LONDON
Carried: INTERSTATE 95 NORTHBOUND
Crossed: THAMES RV,RR,LOCAL ROADS
Inventory Route: NHS

CREW: SW, BF	DATE: 10/2/2017	BRIDGE NO.: 03819

Deterioration Legend:
1 - Stringer BF has defects and gouges up to 1/2"W x 1/16"D
2 - Flame cut holes in vert stiff (3 total this span)
3 - Broken tack weld at FB shim PL to girder TF conn (bolt in place)
4 - Girder TF is bowed 1/2" x 5"W x 2'L

LOG DIRECTION
WEST TO EAST

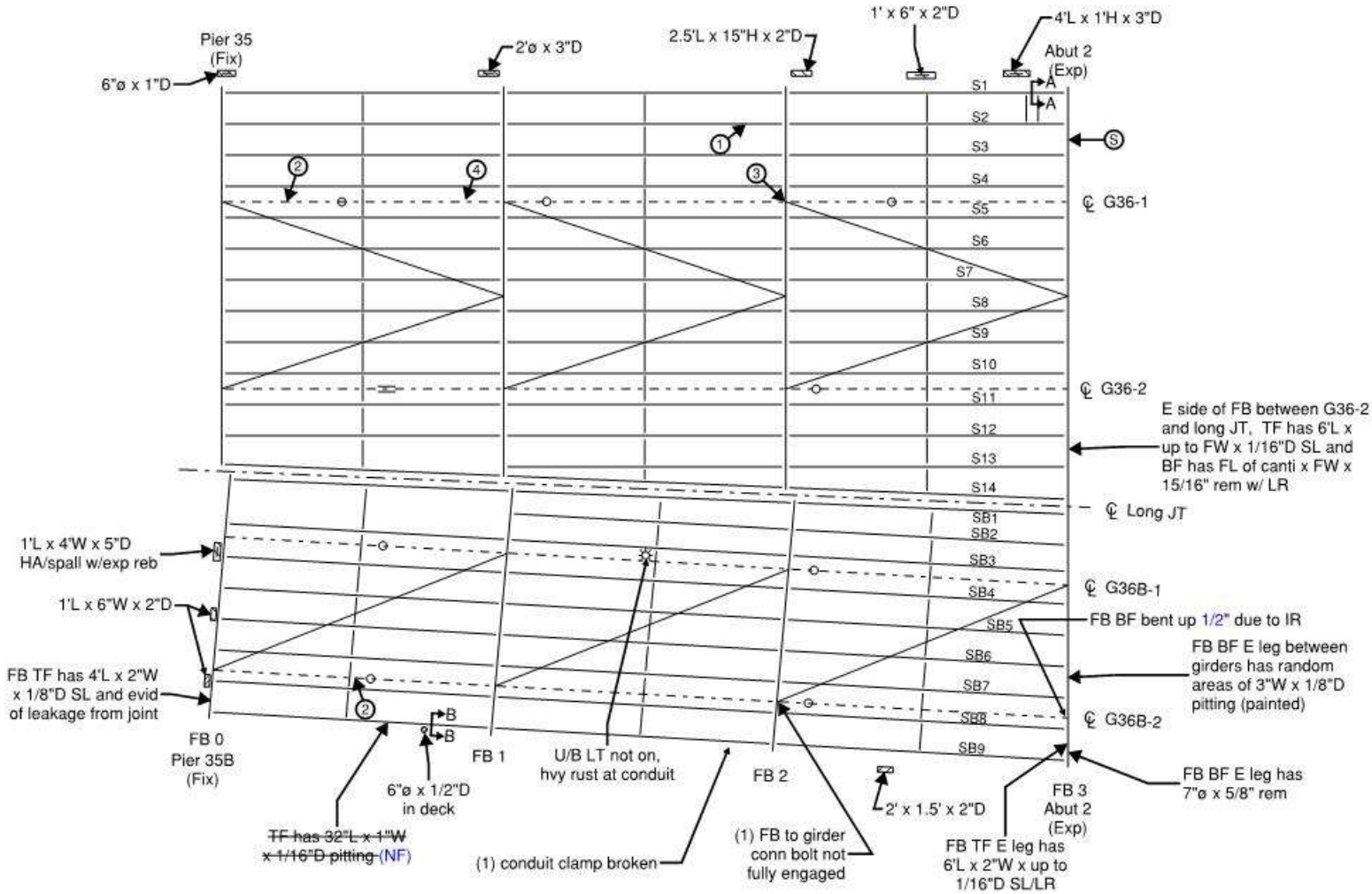

General Notes:

- See Underside of Deck and Steel Framing General Notes (Spans 33-36) sheet
- Fascia spalls/hollow areas are typically in bottom of parapet U.O.N.
- Fix brg's at Pier 35B w/LR under mas PL
- Evidence of leakage at Abut 2 joint at north fascia

LEGEND:
- HOLLOW AREA
- SHALLOW REBAR
- SPALL AREA
- SPALL AREA WITH EXPOSED REBAR
- MAPCRACKS
- HAIRLINE CRACKS
- HONEYCOMB AREA
- SCALE AREA
- EFFLORESCENCE PRESENT
- RIVETED FIELD SPLICE
- BOTTOM FLANGE TRANSITION WELD
- SEE SKETCH

Span 36 - Underside of Deck and Framing

REVISION 1	DATE: 8/26/19	CREW: SW, BF (Baker)	REVISION 3	DATE:	CREW:
REVISION 2	DATE: 9/29/2021	CREW: CMR, EB, NH (PRIME)	REVISION 4	DATE:	CREW:

CREW: SW, BF	DATE: 10/2/2017	BRIDGE NO.: 03819

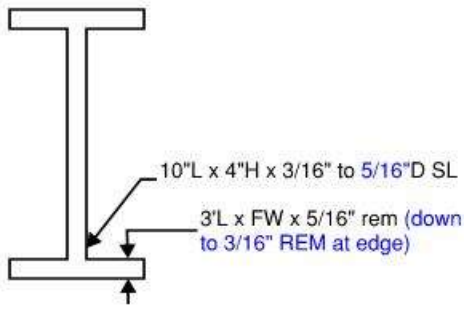

Span 36 - S1 at 4' West of FB 3
Section A-A (looking east)

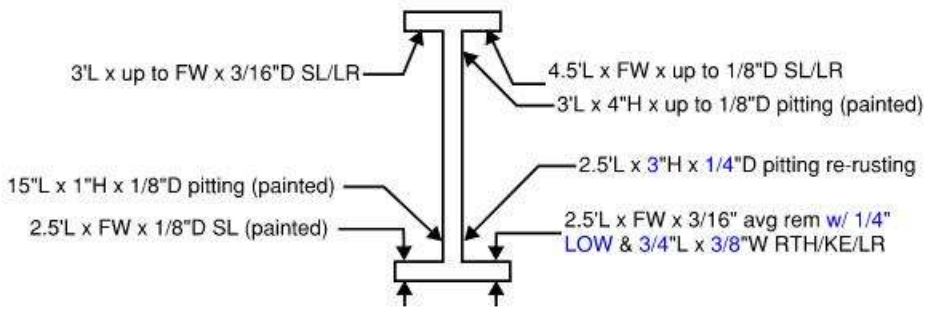

Span 36B - SB9 at ±6.5' West of FB 1
Section B-B (looking east)

REVISION 1	DATE: 8/26/19	CREW: SW, BF (Baker)	REVISION 3	DATE:	CREW:
REVISION 2	DATE: 9/29/2021	CREW: CMR, EB, NH (PRIME)	REVISION 4	DATE:	CREW:

CREW: MRJ, JG	DATE: 10/10/2017	BRIDGE NO.: 03819

Deterioration Legend:
(1) - Stiff's have up to 10"H x FW x±1/4"D SL (est)

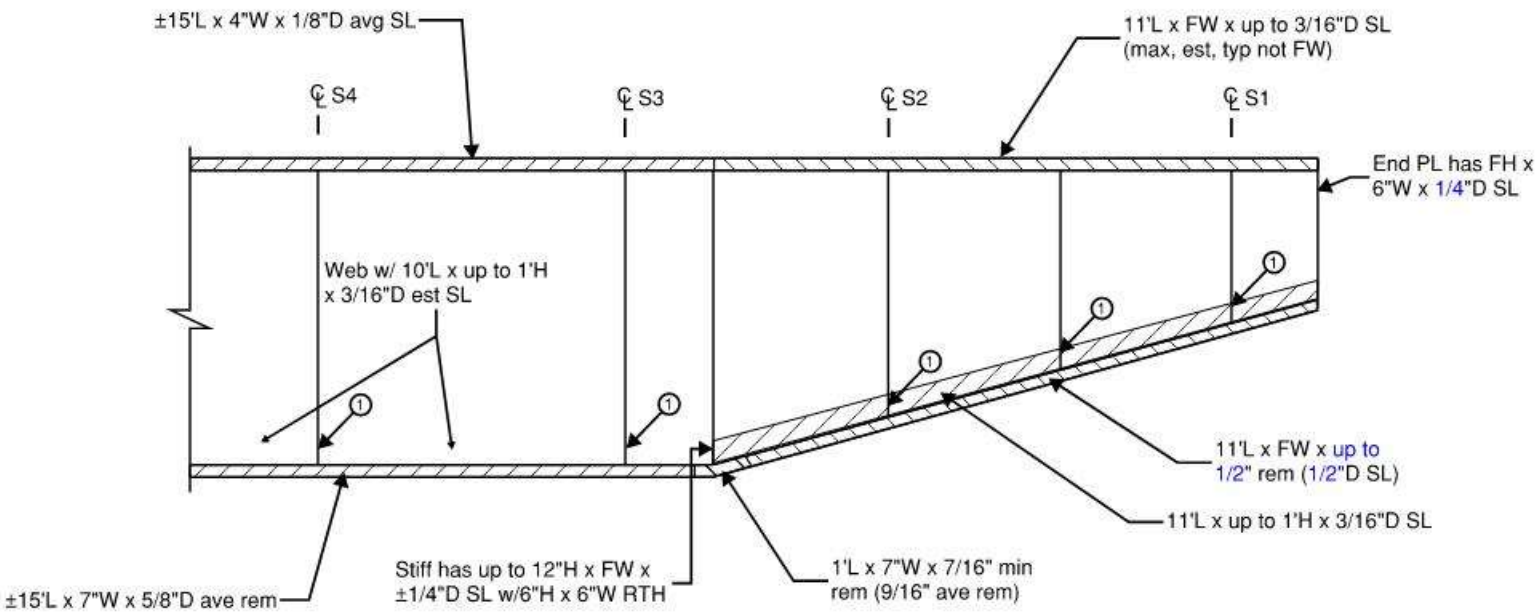

Span 36 - Floorbeam 3 North Cantilever
East Elevation

- HVY LR at all locations
- Difficult access (only 8" between FB and backwall)

REVISION 1	DATE: 8/29/19	CREW: AH, BF (Baker)	REVISION 3	DATE:	CREW:
REVISION 2	DATE: 10/5/2021	CREW: CMR, NH (PRIME)	REVISION 4	DATE:	CREW:

CREW: SW, KT	DATE: 8/22/2017	BRIDGE NO.: 03819

Riveted Truss General Notes - Spans 22-25 & 29-32

General:

- Specific areas of section loss and/or pitting losses shown on the field sheets are typically painted with some minor re-rusting, U.O.N.
- Truss members and gusset plates have random areas of peeling paint with varying degrees of rust, up to laminated (worse at bottom chord).
- There are several tack welds between truss member connection plates. Many of these welds are sloppy. Other deficiencies are noted on the field sheets.
- Lacing bars and batten plates are bowed/bent at random locations up to 1/2" (no evidence of popped rivets) and have pitting/section loss up to 5/16" deep w/ rand LR. These areas are typically worse at the truss bottom chord.
- Random truss members and connection plates have minor dents or are bent up to 1"
- Random mis-drilled holes in truss members and gusset plates (no bolts/rivets installed typically due to hole not drilled through all plates).
- Scattered connection bolts (which have replaced previous rivets) are not fully engaged with up to 1/8" gap (bolts are tight).
- Strain gauges are in place on random truss members and some wires are disconnected.
- Random rivet heads have up to 20% section loss (greater areas noted on sketches).
- All truss section losses shown on sketches are <5% U.O.N.
- Fixed bearings have random areas of peeling paint with light to heavy rust and pitting up to 3/16" deep (some areas are painted over).
- Random fixed bearings have welds in place of anchor bolt nuts.
- R/H: Rivet heads.
- Random broken tack welds are difficult to confirm due to heavy laminated rust.
- LR = Laminated rust; PO = Painted over; RR = painted over with re-rusting; LOW = Loss of width

Top Chord:

- There is up to 1/4" pack rust between the top chord web plates and top and bottom flange angles (thicker areas noted on sketches).
- There is up to 1/4" thick pack rust below top chord top flange cover plates and the edges are bent up at these locations (thicker areas noted on sketches).
- There is up to 1/4" thick pack rust below top chord bottom flange and splice plates (thicker areas noted on sketches).
- The top chord connections to lacing bars and batten plates at random areas have pack rust up to 1/2" thick, unless otherwise noted.
- There is up to 2" thick pack rust between erection angles and top chord plates.

Bottom Chords:

- There is up to 1/2" pack rust between the bottom chord web plates and top and bottom flange angles (thicker areas noted on sketches).
- There is up to 1/4" thick pack rust below bottom chord top flange cover plates and the edges are bent up at these locations (thicker areas noted on sketches).
- The bottom chord connections to lacing bars and batten plates at random areas have pack rust up to 1/2" thick, unless otherwise noted.
- The bottom chord top and bottom flange angle horizontal legs have random areas of pitting full width x 1/4" deep, especially adjacent to batten plates, lacing bars and horizontal gusset plates (unless otherwise noted). Areas are typically painted over, however there are random areas of reoccurring rust.
- The bottom chord bottom flange angle vertical legs have random areas of pitting up to full height x 3/16" deep. Areas are typically painted over however there are random areas of laminated rust.
- The bottom chord web plates above the bottom flange angle vertical legs have random areas of pitting up to 2" high x 1/8" deep. Areas are typically painted over, however there are random areas of reoccurring rust.
- Random missing rivets at lacing bars throughout.
- See typical cross section with above noted losses on next sheet.

Diagonals:

- The truss diagonal member top and bottom channel flanges and/or angle horizontal legs have random areas of pitting up to 3" long x full width x 1/8" deep, especially adjacent to batten plates and lacing bars (unless otherwise noted). Areas are typically painted over, however there are random areas of reoccurring rust.
- There is up to 1/4" thick pack rust between lacing bars/batten plates and diagonal member flanges.
- Random missing rivets.

Verticals:

- Truss vertical member L9U9 in all spans has pack rust up to 3/8" thick between the vertical angles and cover plates at random locations along the full height (these vertical members are zero force members).

REVISION 1	DATE: 8/19/19	CREW: BH, JG (Baker)	REVISION 3	DATE:	CREW:
REVISION 2	DATE: 07/26/2021	CREW: BM, NR, EG, CMR, EB, NH, IS, SD (PRIME AE)	REVISION 4	DATE:	CREW:

CREW: SW, BF	DATE: 9/25/2017	BRIDGE NO.: 03819

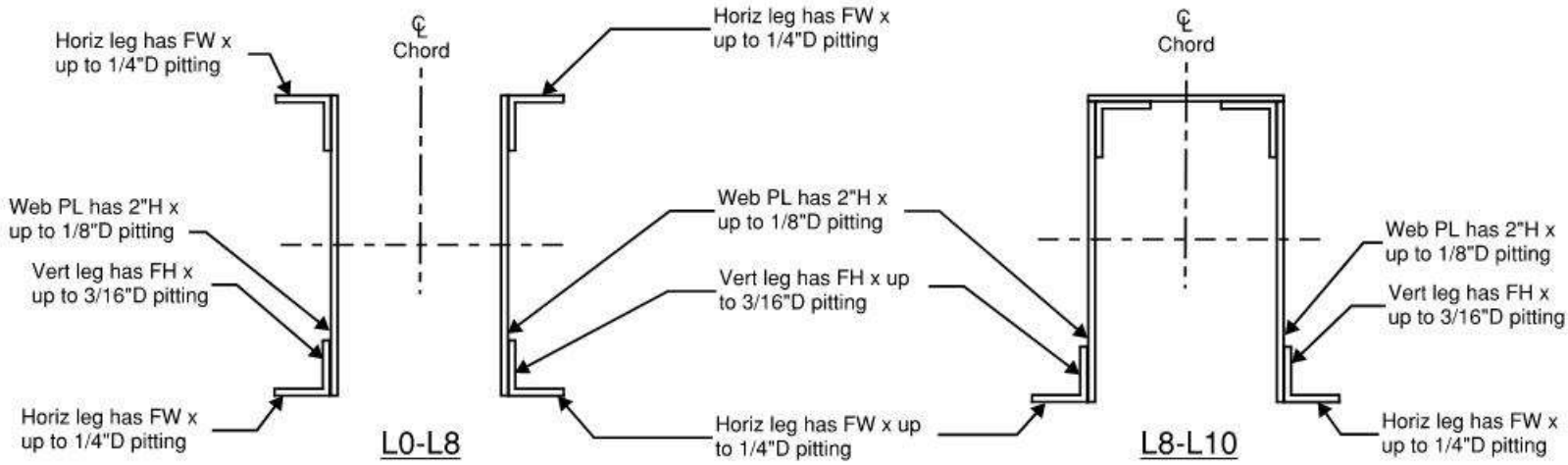

Notes:
- Losses noted above are typical at random locations throughout the bottom chord. Losses are intermittent and are not all typically in same plane. Calculations below are for worst case assuming all losses in the same plane. Additional sketches of truss sections with more than typical section losses noted above are included within the truss sheets.
- Original Gross and Net areas are from Project No. 94-107 Plans (1971) sheet 54 of 166.
- Angles shown above typically have the shorter leg in the horizontal plane.
- Losses are typically painted over with random areas of re-rusting, U.O.N on field sheets.
- Losses shown on specific X-sections are less than 5%, U.O.N.

L0-L2
Original Gross Area = 48.80in²
Original Net Area = 39.30in²
SL Area = 4(1/8)(2)+5.25(3/32)(2)+2(1/16)(2)+4(1/8)(2) = 3.23in²
Gross Area SL% = 3.23/48.80 = 6.6%
Net Area SL% = 3.23/39.30 = 8.2%

L2-L6
Original Gross Area = 72.80in²
Original Net Area = 59.30in²
SL Area = 4(1/8)(2)+5.25(3/32)(2)+2(1/16)(2)+4(1/8)(2) = 3.23in²
Gross Area SL% = 3.23/72.80 = 4.4%
Net Area SL% = 3.23/59.30 = 5.5%

L6-L8
Original Gross Area = 43.00in²
Original Net Area = 35.00in²
SL Area = 4(1/8)(2)+5.5(3/32)(2)+2(1/16)(2)+4(1/8)(2) = 3.28in²
Gross Area SL% = 3.28/43.00 = 7.6%
Net Area SL% = 3.28/35.00 = 9.4%

L8-L10
Original Gross Area = 66.15in²
SL Area = 6(1/8)(2)+7.25(3/32)(2)+2(1/16)(2) = 3.11in²
Gross Area SL% = 3.11/66.15 = 4.7%

Spans 22-25 & 29-32 - Typical Truss Bottom Chord Section Losses

REVISION 1	DATE: 8/19/19	CREW: BH, JG (Baker) - No change	REVISION 3	DATE:	CREW:
REVISION 2	DATE: 07/26/2021	CREW: BM, NR, EG, CMR (PRIME AE) - No change	REVISION 4	DATE:	CREW:

CREW: SW, BF	DATE: 8/22/2017	BRIDGE NO.: 03819

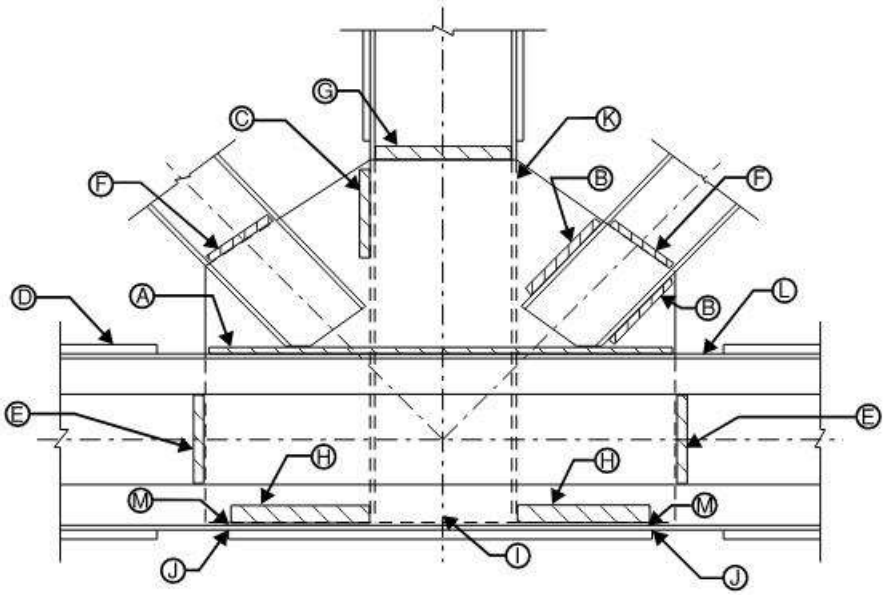

Legend:

Ⓐ Pitting to outside of vertical gusset plate along top flange of bottom chord (Node L10, pitting located along inside of vertical gusset plate).

Ⓑ Pitting to outside of vertical gusset plate along top and bottom flanges of diagonal member.

Ⓒ Pitting to inside of vertical gusset plate along edge of vertical member, typically w/ active rust.

Ⓓ Batten plates have extensive areas of pitting up to 5/16" deep (not noted on sketches unless loss is greater than 5/16" deep).

Ⓔ Pitting to inside of bottom chord web plate along edge of vertical gusset plate.

Ⓕ Pitting to diagonal member inside channel web along edge of vertical gusset plate.

Ⓖ Pitting to vertical member outside channel web along edge of vertical gusset plate.

Ⓗ Pitting to bottom inside of vertical gusset plate up to 22" wide x up to 4" high x 1/4" deep and random rivet heads have up to 75% section loss. Typically active rust. Worse area dimensions noted on sketches.

Ⓘ Pitting on bottom of vertical stiffener plate inside bottom chord up to 1/4" deep x up to 6" high with isolated rusted through holes as noted on truss node sheets. Also, vertical member at bottom with up to full width x 6" high x 1/4" deep pitting with isolated section loss to knife edge remaining & random rivet heads have section loss up to 50%. Worse area dimensions noted on sketches. Typically active rust at these areas.

Ⓙ Bottom chord bottom flange angle horizontal leg has up to 4" long x full width x up to 1/4" deep pitting at bottom along horizontal gusset plate (worse area dimensions noted on sketches). Typically active rust at these locations.

Ⓚ Pack rust between vertical gusset plate and vertical/diagonal member up to full height.

Ⓛ Pitting to bottom chord top flange angle horizontal leg (not noted on sketches unless pitting is greater than 1/4" deep).

Ⓜ Pitting to bottom of bottom chord web plates below vertical gusset plate up to 1" high x up to 1/4" deep (this is typical at all nodes, not noted on sketches unless greater than 1/4" deep). Typically active rust at this location.

Typical Section Loss at Even Numbered Truss Panel Points

REVISION 1	DATE: 8/19/19	CREW: BH, JG (Baker)	REVISION 3	DATE:	CREW:
REVISION 2	DATE: 08/02/2021	CREW: BM, EG, NR, EB, AN, SD, BC, JC (PRIME AE)	REVISION 4	DATE:	CREW:

CREW: SW, BF	DATE: 8/22/2017	BRIDGE NO.: 03819

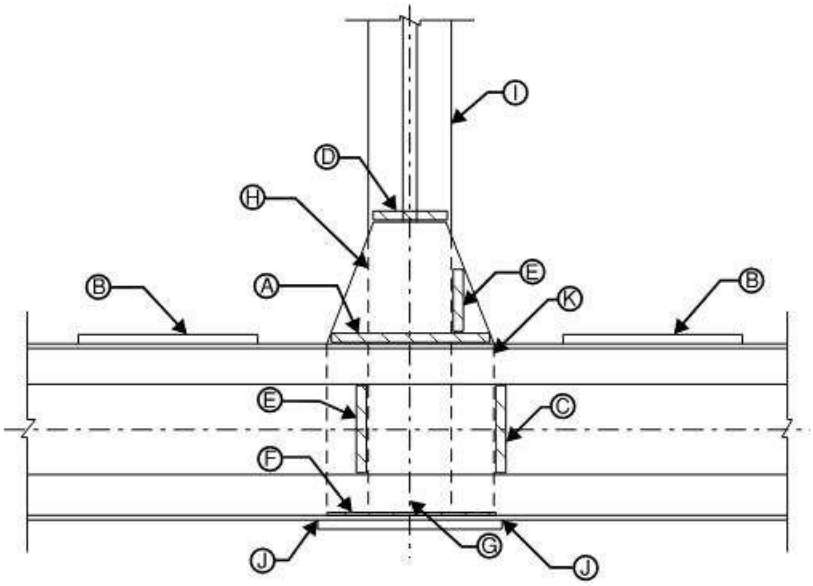

Legend:

Ⓐ Pitting to outside of vertical gusset plate along top flange of bottom chord (Node L9, pitting located along inside of vertical gusset plate).

Ⓑ Batten plates have extensive areas of pitting up to 5/16" deep (not noted on sketches unless loss is greater than 5/16" deep).

Ⓒ Pitting to inside of bottom chord web plate along edge of vertical gusset plate.

Ⓓ Pitting to vertical member angle legs along edge of vertical gusset plate.

Ⓔ Pitting to inside of vertical gusset plate along vertical member angles.

Ⓕ Pitting to bottom inside of web plate below vertical gusset plate up to 1" high x 1/4" deep. Typically active rust at these areas.

Ⓖ Pitting on bottom of vertical stiffener plate inside bottom chord up to 1/4" deep x up to 6" high with isolated rusted through holes as noted on truss node sheets. Also, pitting on vertical member at bottom with up to full width x 4" high x 1/4" deep section loss with isolated section loss to knife edge remaining & random rivet heads have section loss up to 50%. Worse area dimensions noted on sketches. Typically active rust at these areas.

Ⓗ Pack rust between vertical gusset plate and vertical member angles up to full height or between vertical cover plate and vertical member angles (node L9). Only shown on node L9 sketches if greater than 3/8" thick.

Ⓘ Node L9. Pitting to inside of cover plate along vertical member angle.

Ⓙ Bottom chord bottom flange angle horizontal leg has pitting up to 4" long x full width x up to 1/4" deep at bottom along horizontal gusset plate (worse area dimensions noted on sketches). Typically active rust at these locations.

Ⓚ Pack rust between vertical gusset plate and web plate.

Typical Section Loss at Odd Numbered Truss Panel Points

REVISION 1	DATE: 8/19/19	CREW: BH, JG (Baker) - No change	REVISION 3	DATE:	CREW:
REVISION 2	DATE: 08/02/2021	CREW: BM, EG, NR, EB, AN, SD, BC, JC (PRIME AE)	REVISION 4	DATE:	CREW:

CREW: SW, KT	DATE: 8/22/2017	BRIDGE NO.: 03819

Lateral and Sway Bracing General Notes - Spans 22-25 & 29-32

Lateral Bracing:

- Lateral bracing members and gusset plates have random areas of peeling paint and isolated areas of light to laminated rust.
- Lateral bracing members and gusset plates have random minor bends/dents up to 1" (as-built condition).
- There is pack rust between the lower lateral bracing members and the horizontal gusset plates at truss bottom chord connections and mid-strut connections up to 1/2" thick (thicker areas noted on sketches). Random gusset plate corners are bent up.
- There are areas of pack rust between the lower lateral bracing horizontal gusset plates and the truss bottom chord up to 1/2" (thicker areas noted on sketches).
- The bracing members have up to 1" thick pack rust between top and bottom flange angles and up to 1/8" thick pack rust at random lacing bar connections.
- Random lateral bracing members have painted over pitting in the top and bottom flange angles (both legs) up to FW/FH x 3/16" deep (some areas re-rusting).
- Top and bottom horizontal gusset plates at bottom chord have random areas of 3/16" deep painted over pitting (worse areas noted on sketches).
- Upper lateral bracing horizontal gusset plates along floorbeam bottom flanges have up to full length x 2" wide x up to 1/8"-3/16" deep section loss.
- There is up to 1½" thick pack rust between the back-to-back angles of the upper lateral bracing, unless otherwise noted.
- There is up to 3/4" pack rust between upper lateral bracing and horizontal gusset plates (edges and corners of plates are bent up) and between horizontal gusset plates and truss top chord (thicker areas noted on sketches).
- Upper lateral gusset plates have light to moderate sag and random locations.
- Upper lateral bracing members have moderate sag at random locations.
- Upper and lower lateral bracing has moderate vibration at random locations.
- Random light to heavy bird debris on bracing members and gusset plates.
- Random rivet heads have rose-budding and up to 20% section loss.

Sway Bracing:

- The sway bracing has random areas of peeling paint and isolated areas of light to laminated rust.
- There is up to 1¼" thick pack rust between the back-to-back angles of the vertical sway bracing.
- There is up to 1/2" pack rust between the clip angles and vertical gusset plates and between the vertical gusset plates and sway brace members (thicker areas noted on sketches).
- The sway struts have up to 1" thick pack rust between top and bottom flange angles and up to 1/8" thick pack rust at random lacing bar connections.
- Vertical gusset plates have up to 3/16" deep painted over pitting.
- Vertical sway bracing has moderate vibration at random locations.
- There are up to 1/4" gaps between the sway bracing and floorbeam bottom flanges.
- Random rivet heads have rose-budding and up to 20% section loss.

REVISION 1	DATE: 8/19/19	CREW: BH, JG (Baker) - No change	REVISION 3	DATE:	CREW:
REVISION 2	DATE: 07/26/2021	CREW: BM, NR, EG, CMR, (PRIME AE) - No change	REVISION 4	DATE:	CREW:

Sketches
Inspection type: Fracture Critical,Routine
Inspection Date: 7/26/2021
Inspected by: PRIME AE

:Bridge No 03819

Town: NEW LONDON
Carried: INTERSTATE 95 NORTHBOUND
Crossed: THAMES RV,RR,LOCAL ROADS
Inventory Route: NHS

CREW: MW, SW	DATE: 8/30/2017	BRIDGE NO.: 03819

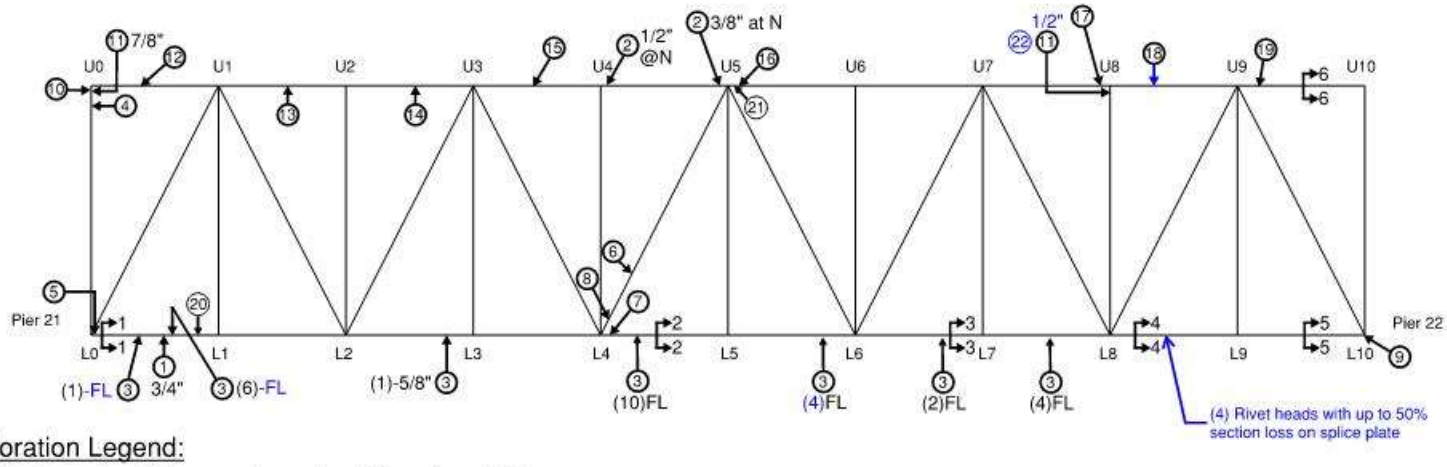

Deterioration Legend:

1. PR between chord flange angles and web PL up to __" thick
2. PR between chord flange angles and cover PL at edges up to __" thick
3. Tack welds partially cracked or broken at lacing bar or batten PL and chord; (# per panel) and up to __" long
4. Scupper bracket broken
5. Top of batten PL has R/H's w/up to 50% SL and lacing bars have RTH's up to 1/8"Ø: N web PL has 3"H x 1/8"D SL
6. Cracked tack weld between batten PL and top flg of diag member at base of batten PL
7. N top flg angle horiz leg has 3"Ø x 1/4"D SL
8. N web to gusset PL conn has (1 of 18) rivets missing at end of diag
9. N bot flg angle vert leg w/9"L x 1.5"W x 1/4"D pitting
10. Up to 2-1/4" PR between top chord web and gusset PL and up to 1" PR between ends of web PL's and top and bot flg angles; Web plate is bent for FH x 5"L & bottom angle is bent for 16"L x 1/2"H
11. PR between vert gusset PL and vert member up to __" thick
12. Drain trough hanger support has 1/2" PR between hangers; 2nd hanger support from Pier 21 has a 5"H x 3/8"W crack at bottom connection to trough
13. S bot flg angle horiz leg has 2'L x 3"W x 1/8"D SL and vert leg has 1"H x 1/8"D SL/LR
14. S bot flg angle horiz leg has 44"L x 3"W x 1/8"D SL and vert leg has 1.5"H x 1/8"D SL/LR
15. S bot flg angle horiz leg has 19"L x 2"W x 3/16"D SL/LR; VT leg w/ 8"L x 1"H x 1/8"D SL/LR
16. N side has 6"L x up to 1/2" ~~PR between top flg angle and splice PL and~~ (NF) between bot flg and splice PL
17. N web PL has 1'L x 1'H x up to 1/8"D pitting (spotty areas within 2' x 1' area PO); S web PL with 3"H x 1"H x up to 1/4"D SL
18. N web PL has lam rust w/ 7'L x 1/2"H x 1/8"D SL; South web plate with (2) locations of section loss up to 6"L x 1/2"H x 1/16"D
19. N & S side of top of bot flg angle horiz legs have spotty 3/16"-1/4"D pitting x 2"Ø at isolated spots (PO)
20. (2) Lattice bars w/ up to 1"Ø RTH's
21. S Web PL w/ 2.5" x 2.5" x 1/4"D SL/LR
22. Broken tack weld between top of vert back-to-back angles and top chord seat angle (inside)

General Notes:
- See Riveted Truss General Notes (Spans 22-25 & 29-32) sheet.
- See following gusset plate sheets for bottom chord gusset plate details.

Span 22 - North Truss South Elevation

REVISION 1	DATE: 9/9/19	CREW: BH, JG (Baker)	REVISION 3	DATE:	CREW:
REVISION 2	DATE: 7/27/2021	CREW: BM, NH, IS (PRIME)	REVISION 4	DATE:	CREW:

Sketches
Inspection type: Fracture Critical,Routine
Inspection Date: 7/26/2021
Inspected by: PRIME AE

:Bridge No 03819

Town: NEW LONDON
Carried: INTERSTATE 95 NORTHBOUND
Crossed: THAMES RV,RR,LOCAL ROADS
Inventory Route: NHS

CREW: MW, SW	DATE: 8/30/2017	BRIDGE NO.: 03819

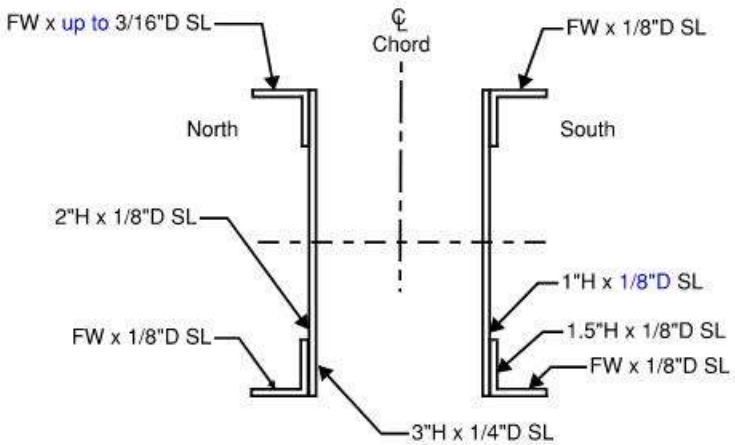

Section 1-1 (L0-L1)

(8.6% Loss)
- Section is inside top batten PL section

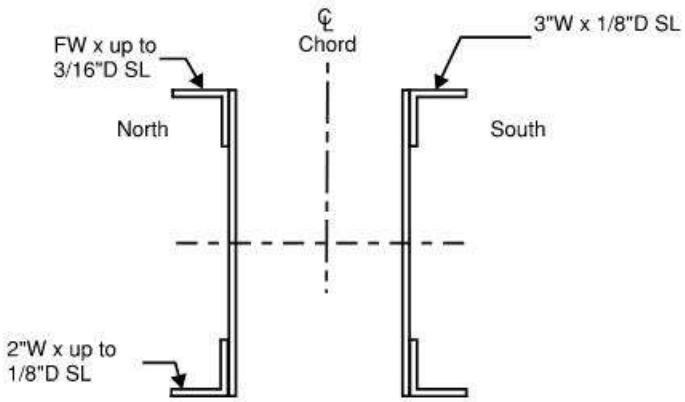

Section 2-2 (L4-L5)

- Isolated areas are PO

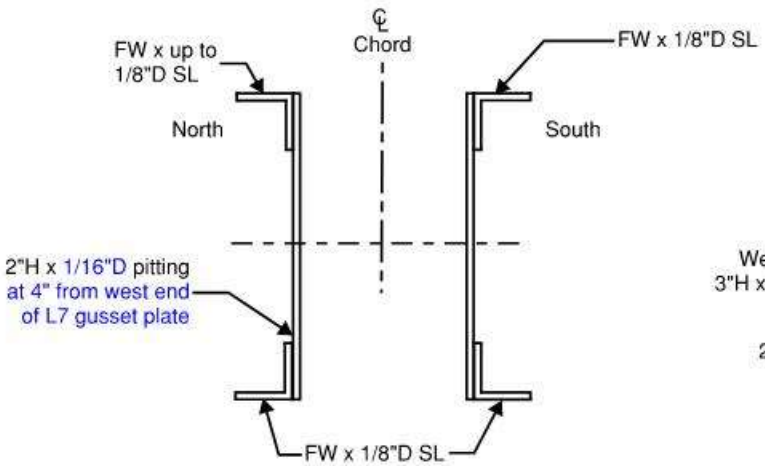

Section 3-3 (L6-L7)

(5.9% Loss)

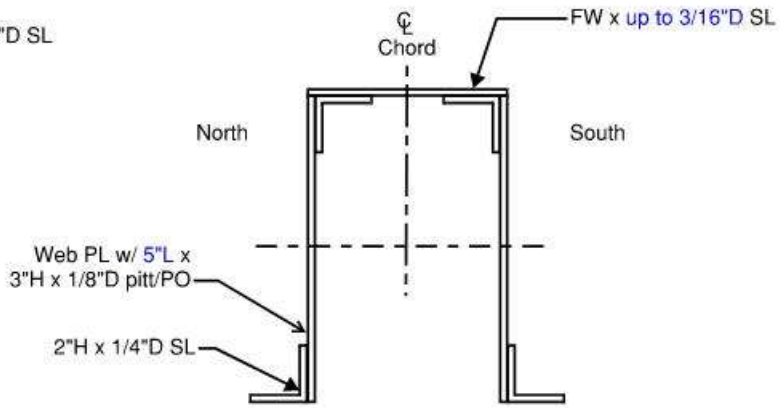

Section 4-4 (L8-L9)

(6.1% Loss)

Span 22 - North Truss Section Loss

REVISION 1	DATE: 9/9/19	CREW: BH, JG (Baker)	REVISION 3	DATE:	CREW:
REVISION 2	DATE: 7/27/2021	CREW: BM, NH, IS (PRIME)	REVISION 4	DATE:	CREW:

Sketches
Inspection type: Fracture Critical,Routine
Inspection Date: 7/26/2021
Inspected by: PRIME AE

:Bridge No 03819

Town: NEW LONDON
Carried: INTERSTATE 95 NORTHBOUND
Crossed: THAMES RV,RR,LOCAL ROADS
Inventory Route: NHS

CREW: MW, SW	DATE: 8/30/2017	BRIDGE NO.: 03819

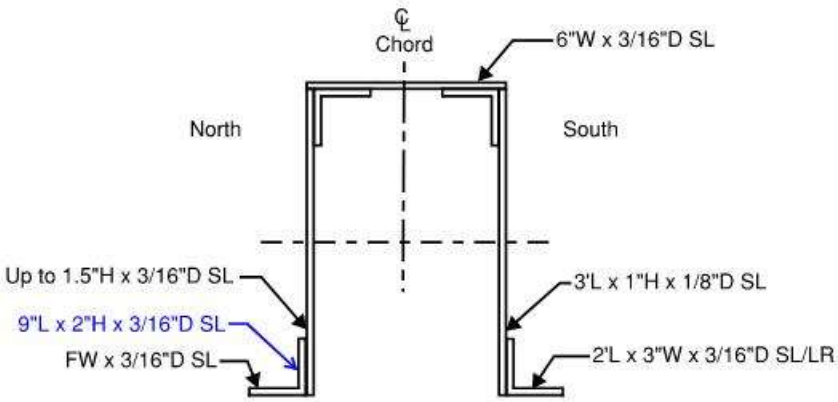

Section 5-5 (L9-L10)

(5.2% Loss)

- Random areas throughout, no specific section

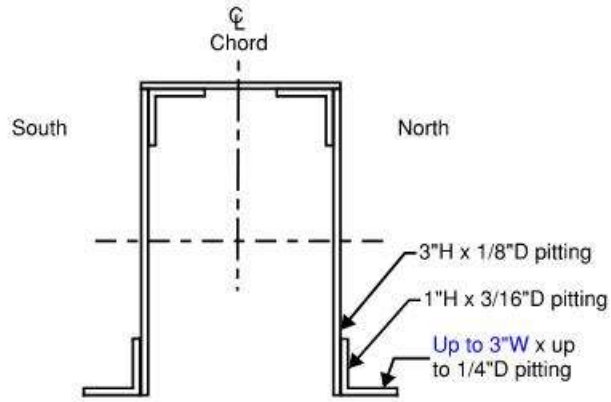

Section 6-6 (U9-U10)

- Random areas throughout.

Span 22 - North Truss Section Loss

REVISION 1	DATE: 9/10/19	CREW: BH, JG (Baker)	REVISION 3	DATE:	CREW:
REVISION 2	DATE: 8/3/2021	CREW: BM, IS (PRIME)	REVISION 4	DATE:	CREW:

CREW: MW, SW	DATE: 8/30/2017	BRIDGE NO.: 03819

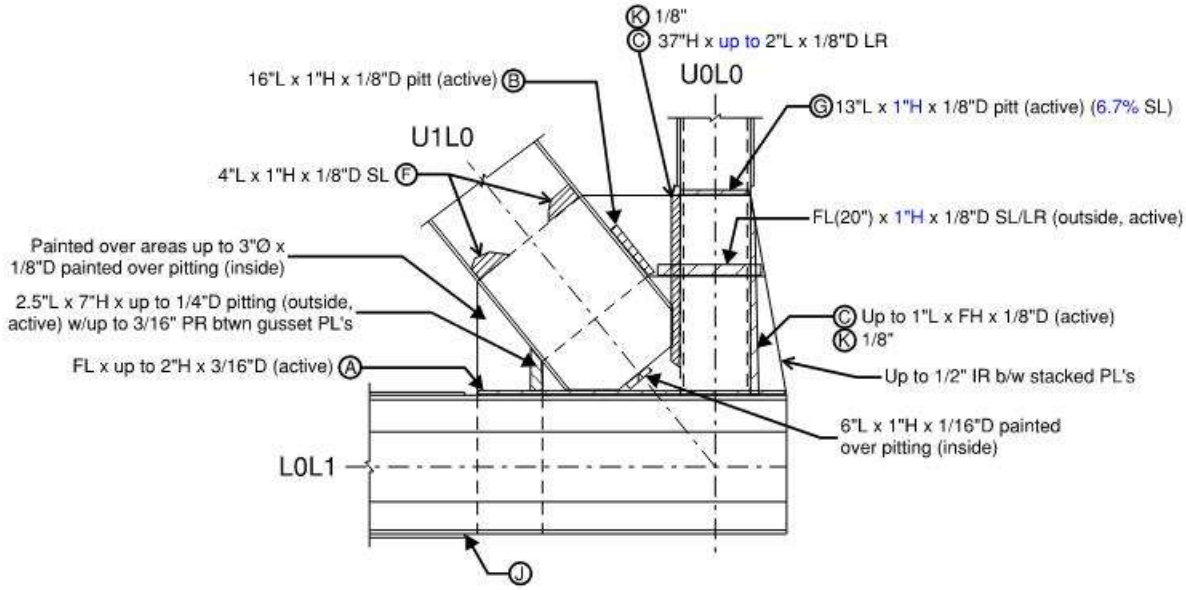

Span 22, North Truss, Node L0, North Gusset Plate, North Elevation

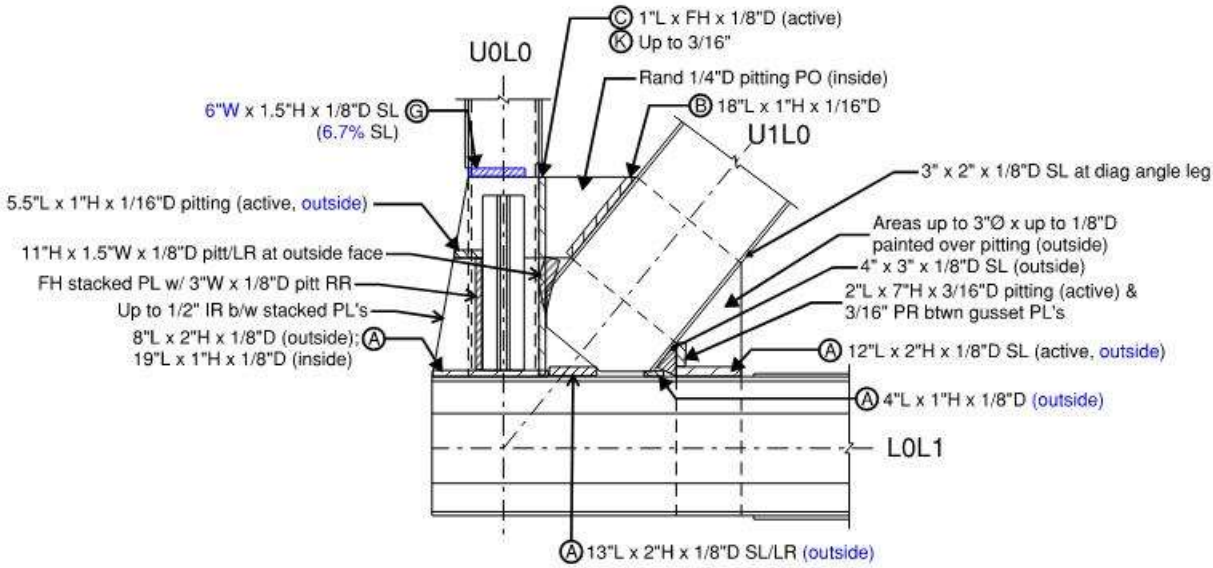

Span 22, North Truss, Node L0, South Gusset Plate, South Elevation

REVISION 1	DATE: 9/9/19	CREW: BH, JG (Baker)	REVISION 3	DATE:	CREW:
REVISION 2	DATE: 8/2/2021	CREW: BM, IS (PRIME)	REVISION 4	DATE:	CREW:

CREW: MW, SW	DATE: 8/20/2017	BRIDGE NO.: 03819

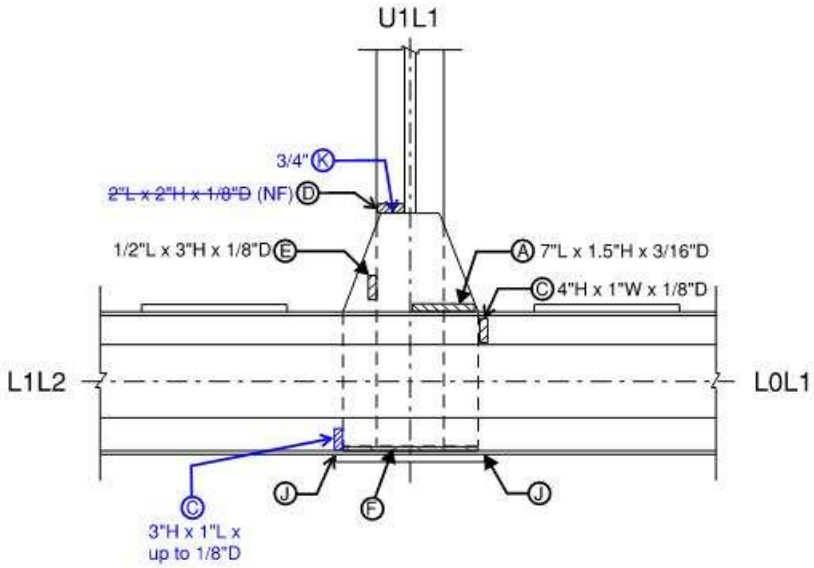

Span 22, North Truss, Node L1, North Gusset Plate, North Elevation

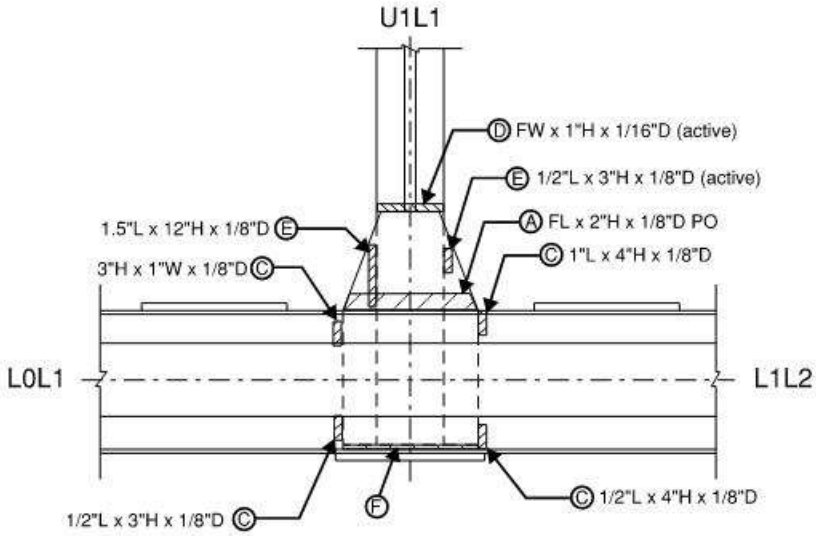

Span 22, North Truss, Node L1, South Gusset Plate, South Elevation

REVISION 1	DATE: 9/9/19	CREW: BH, JG (Baker)	REVISION 3	DATE:	CREW:
REVISION 2	DATE: 8/2/2021	CREW: BM, IS (PRIME)	REVISION 4	DATE:	CREW:

CREW: MW, SW	DATE: 8/30/2017	BRIDGE NO.: 03819

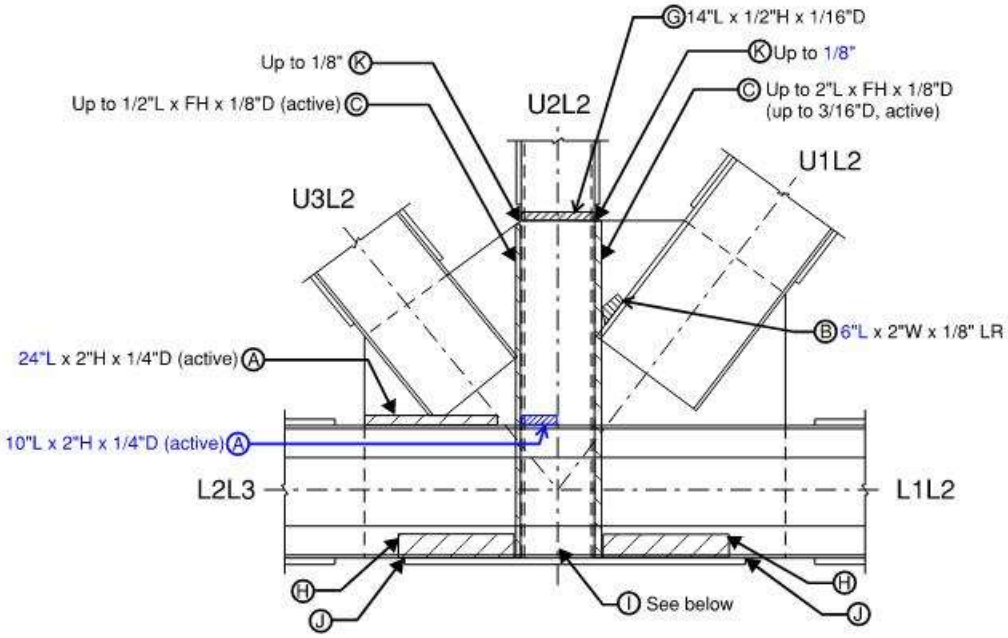

Span 22, North Truss, Node L2, North Gusset Plate, North Elevation

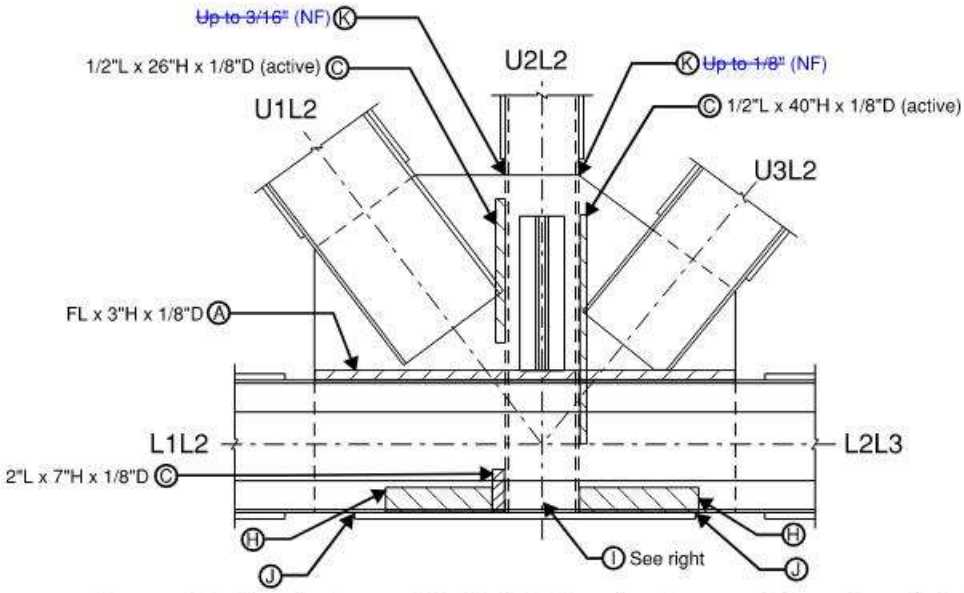

Note I:
- Vert stiff PL has FW x 6"H x 1/4"D SL to KE rem (active) w/(2)-1/2"Ø RTH's and random pinholes.
- Vert channel legs have 1/4"D pitting to KE rem w/up to 1/2" LOW.
- (4) R/H's have up to 75% SL.

Span 22, North Truss, Node L2, South Gusset Plate, South Elevation

REVISION 1	DATE: 9/9/19	CREW: BH, JG (Baker)	REVISION 3	DATE:	CREW:
REVISION 2	DATE: 8/2/2021	CREW: BM, IS (PRIME)	REVISION 4	DATE:	CREW:

CREW: MW, SW	DATE: 8/30/2017	BRIDGE NO.: 03819

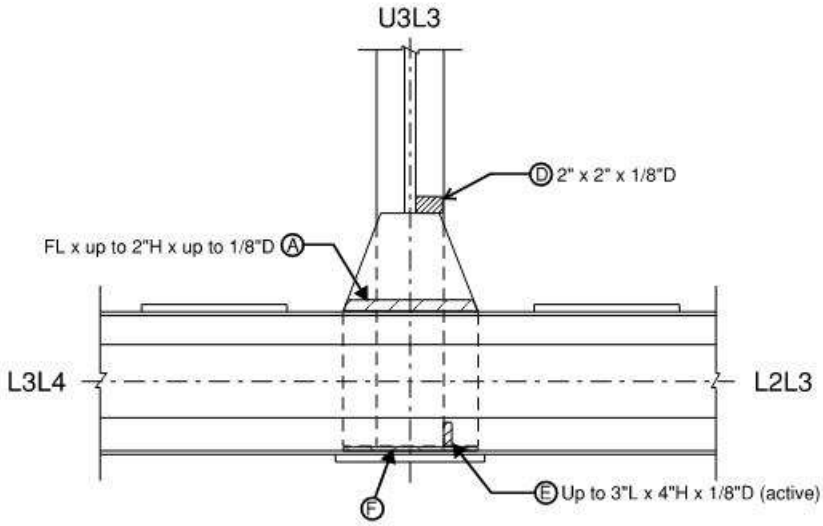

Span 22, North Truss, Node L3, North Gusset Plate, North Elevation

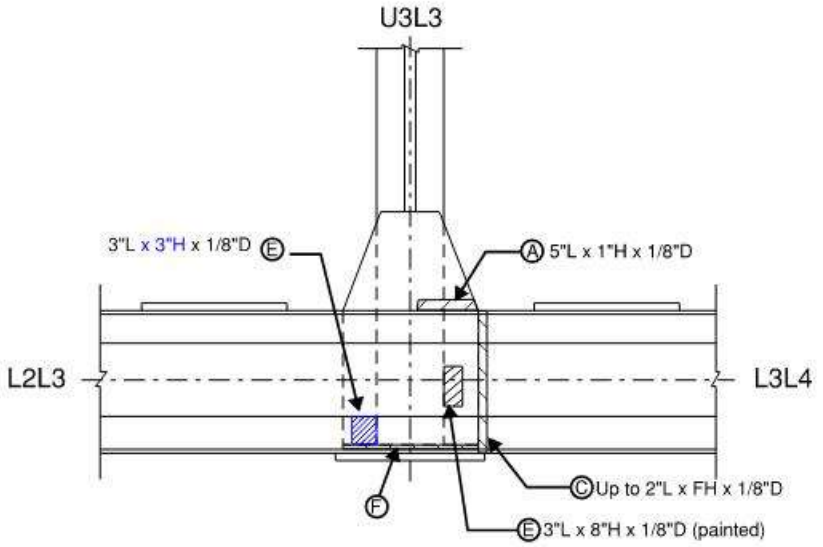

Span 22, North Truss, Node L3, South Gusset Plate, South Elevation

REVISION 1	DATE: 9/9/19	CREW: BH, JG (Baker)	REVISION 3	DATE:	CREW:
REVISION 2	DATE: 8/2/2021	CREW: BM, IS (PRIME)	REVISION 4	DATE:	CREW:

CREW: MW, SW	DATE: 8/30/2017	BRIDGE NO.: 03819

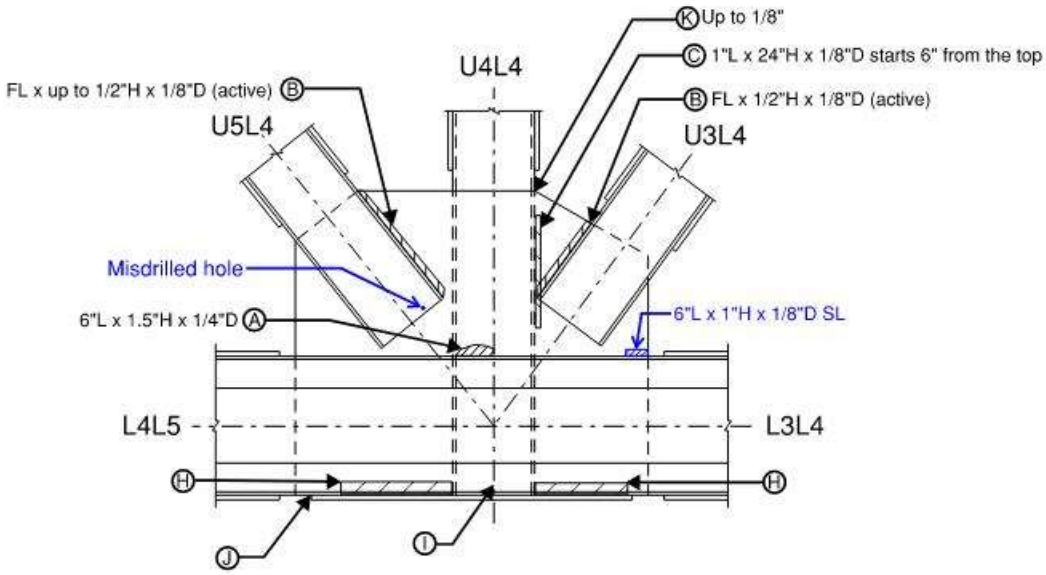

Span 22, North Truss, Node L4, North Gusset Plate, North Elevation

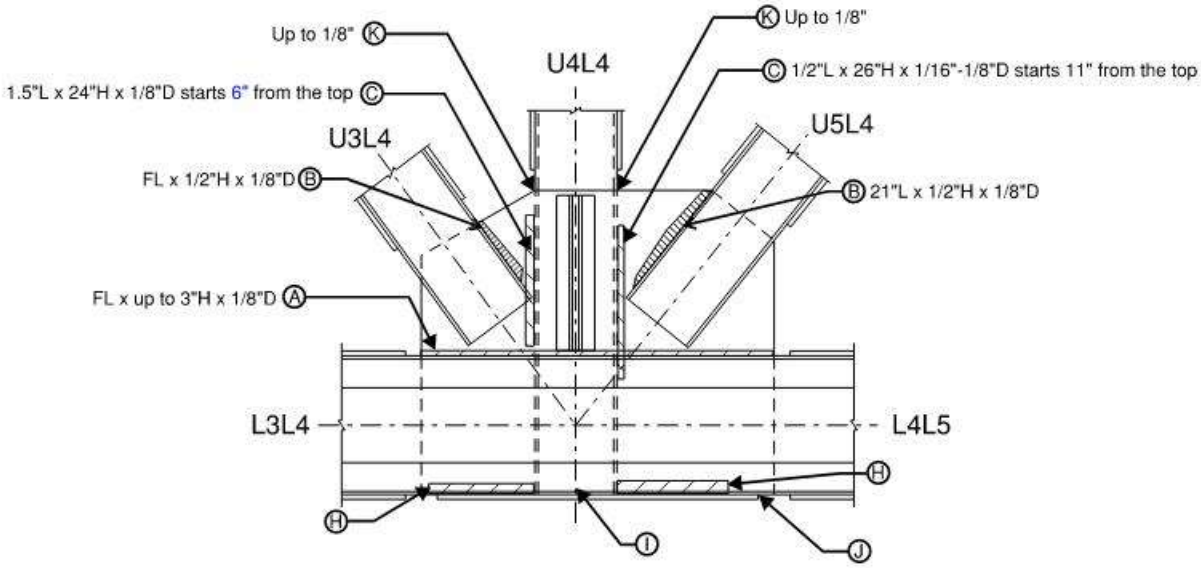

Span 22, North Truss, Node L4, South Gusset Plate, South Elevation

REVISION 1	DATE: 11/19/19	CREW: BH, JG (Baker)	REVISION 3	DATE:	CREW:
REVISION 2	DATE: 7/27/2021	CREW: BM, NH (PRIME)	REVISION 4	DATE:	CREW:

CREW: SW, KT	DATE: 8/22/2017	BRIDGE NO.: 03819

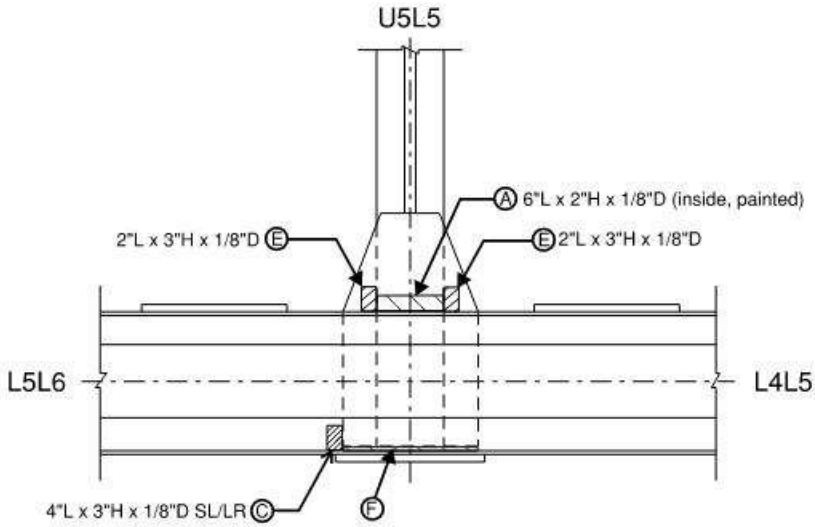

Span 22, North Truss, Node L5, North Gusset Plate, North Elevation

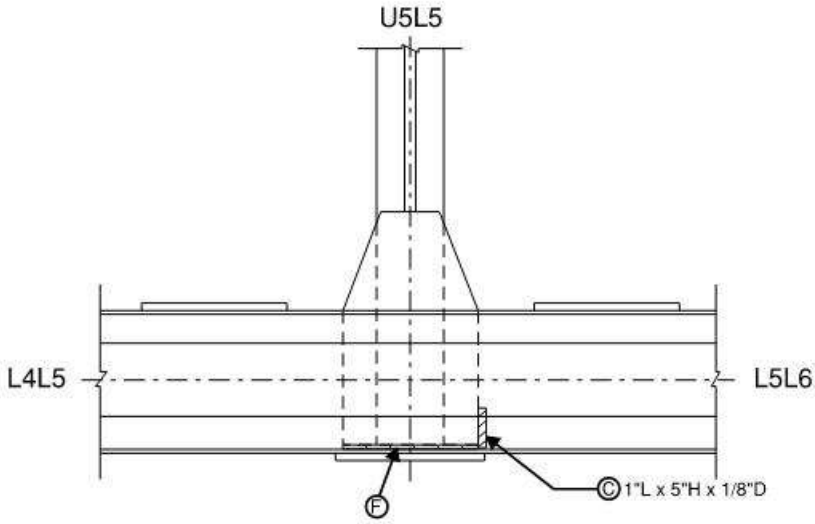

Span 22, North Truss, Node L5, South Gusset Plate, South Elevation

REVISION 1	DATE: 11/19/19	CREW: BH, JG (Baker)	REVISION 3	DATE:	CREW:
REVISION 2	DATE: 7/27/2021	CREW: BM, NH (PRIME) - No Change	REVISION 4	DATE:	CREW:

CREW: SW, KT	DATE: 8/22/2017	BRIDGE NO.: 03819

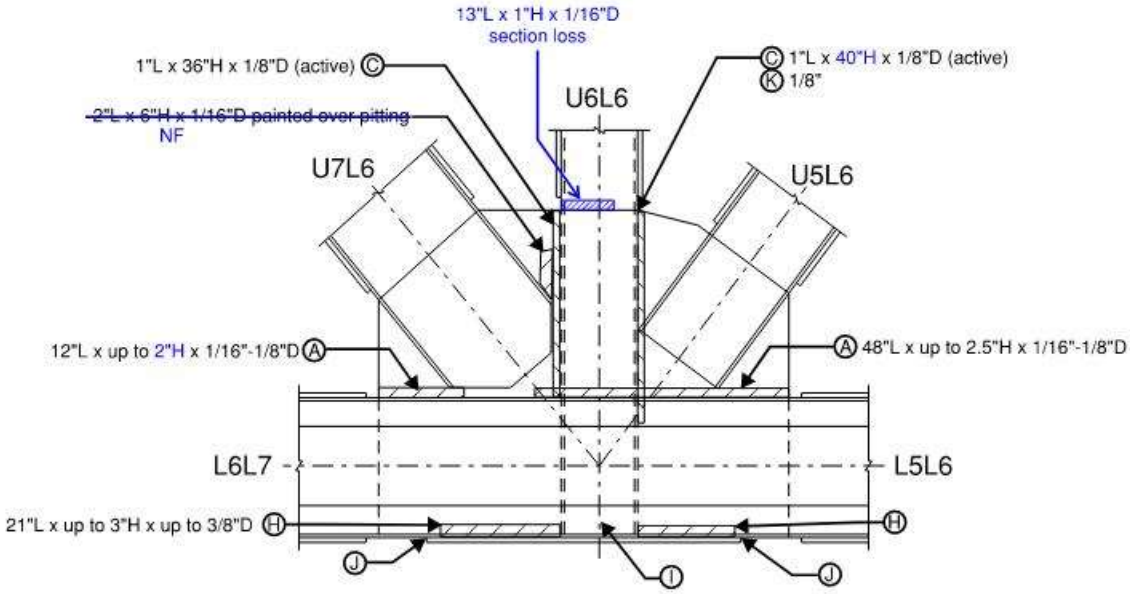

Span 22, North Truss, Node L6, North Gusset Plate, North Elevation

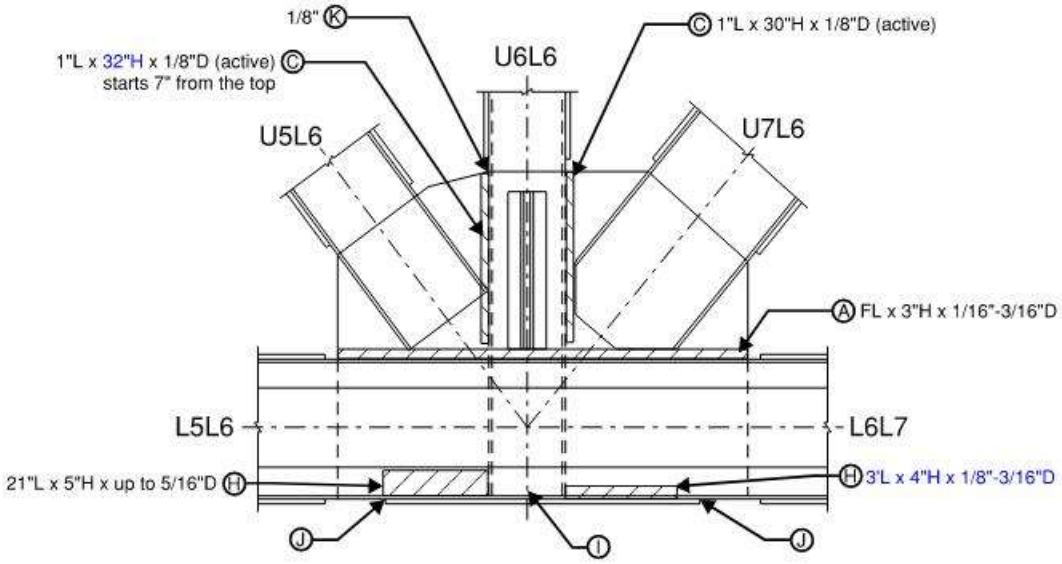

Note I:
- NE channel leg w/ 1"Ø RTH.

Span 22, North Truss, Node L6, South Gusset Plate, South Elevation

REVISION 1	DATE: 9/9/19	CREW: BH, JG (Baker)	REVISION 3	DATE:	CREW:
REVISION 2	DATE: 7/27/2021	CREW: BM, NH (PRIME)	REVISION 4	DATE:	CREW:

CREW: BF, SW	DATE: 8/30/2017	BRIDGE NO.: 03819

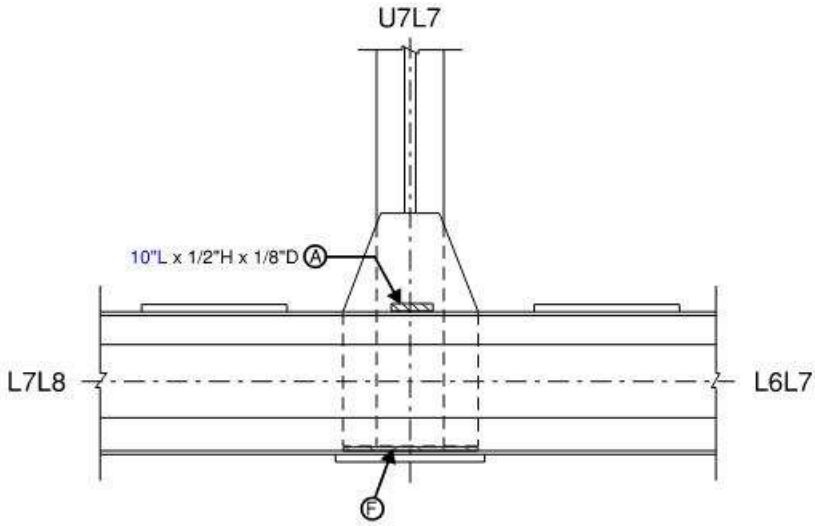

Span 22, North Truss, Node L7, North Gusset Plate, North Elevation

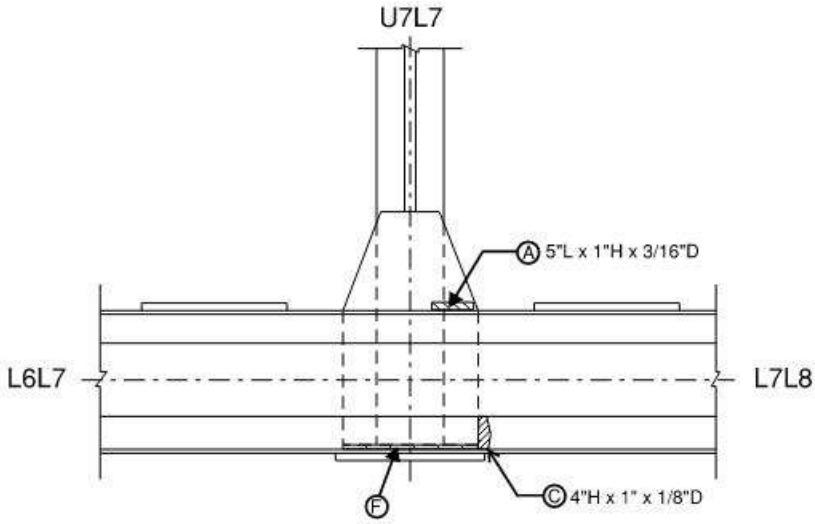

Span 22, North Truss, Node L7, South Gusset Plate, South Elevation

REVISION 1	DATE: 9/9/19	CREW: BH, JG (Baker)	REVISION 3	DATE:	CREW:
REVISION 2	DATE: 7/27/2021	CREW: BM, NH (PRIME)	REVISION 4	DATE:	CREW:

CREW: MW, SW	DATE: 8/30/2017	BRIDGE NO.: 03819

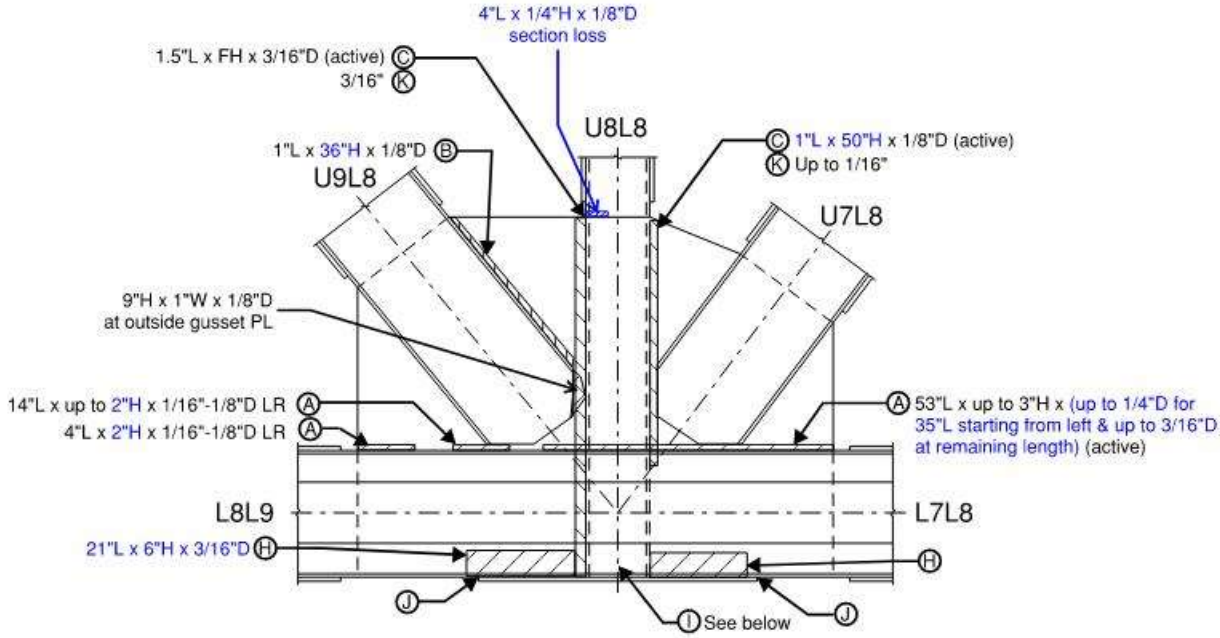

Span 22, North Truss, Node L8, North Gusset Plate, North Elevation

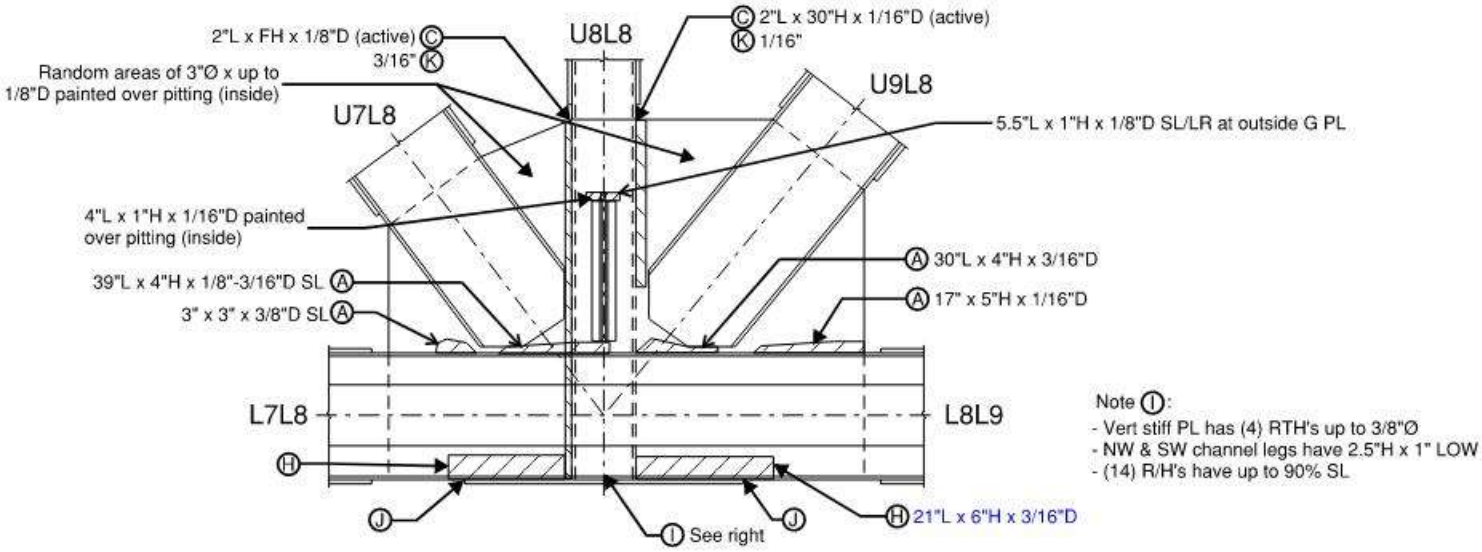

Span 22, North Truss, Node L8, South Gusset Plate, South Elevation

REVISION 1	DATE: 9/9/19	CREW: BH, JG (Baker)	REVISION 3	DATE:	CREW:
REVISION 2	DATE: 7/27/2021	CREW: BM, NH (PRIME)	REVISION 4	DATE:	CREW:

CREW: MW, SW	DATE: 8/30/2017	BRIDGE NO.: 03819

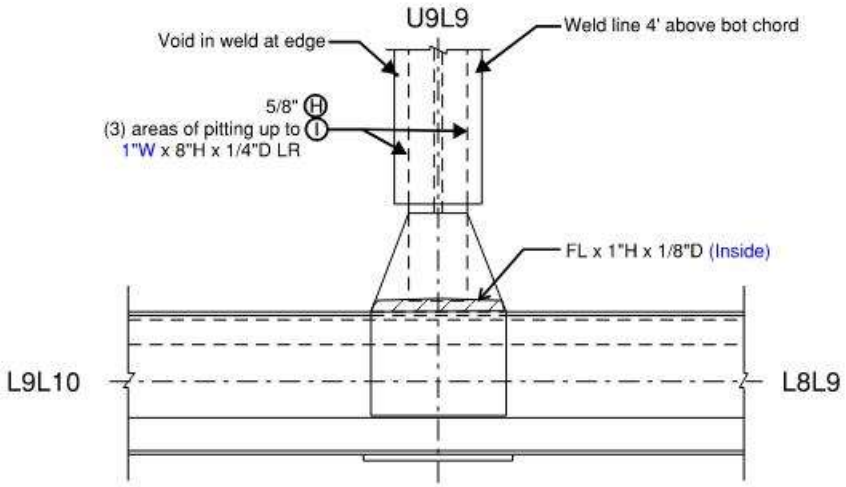

Span 22, North Truss, Node L9, North Gusset Plate, North Elevation

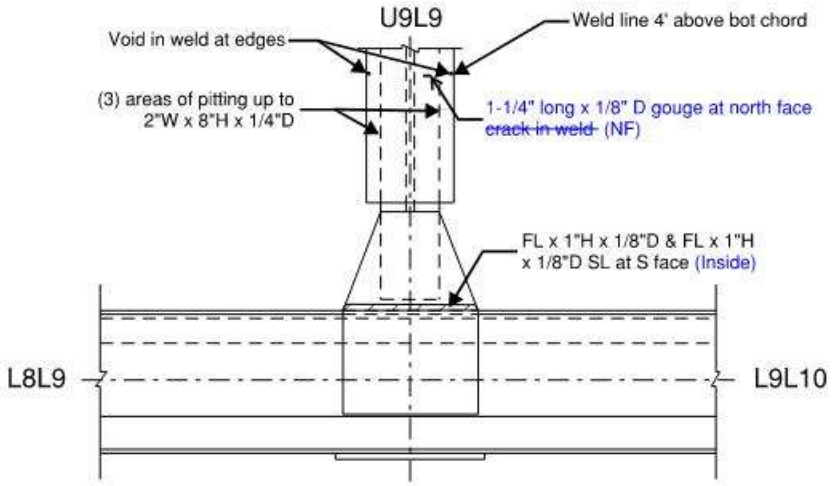

Span 22, North Truss, Node L9, South Gusset Plate, South Elevation

REVISION 1	DATE: 9/9/19	CREW: BH, JG (Baker)	REVISION 3	DATE:	CREW:
REVISION 2	DATE: 8/3/2021	CREW: BM, IS (PRIME)	REVISION 4	DATE:	CREW:

Sketches
Inspection type: Fracture Critical,Routine
Inspection Date: 7/26/2021
Inspected by: PRIME AE

:Bridge No 03819

Town: NEW LONDON
Carried: INTERSTATE 95 NORTHBOUND
Crossed: THAMES RV,RR,LOCAL ROADS
Inventory Route: NHS

CREW: MW, SW	DATE: 8/30/2017	BRIDGE NO.: 03819

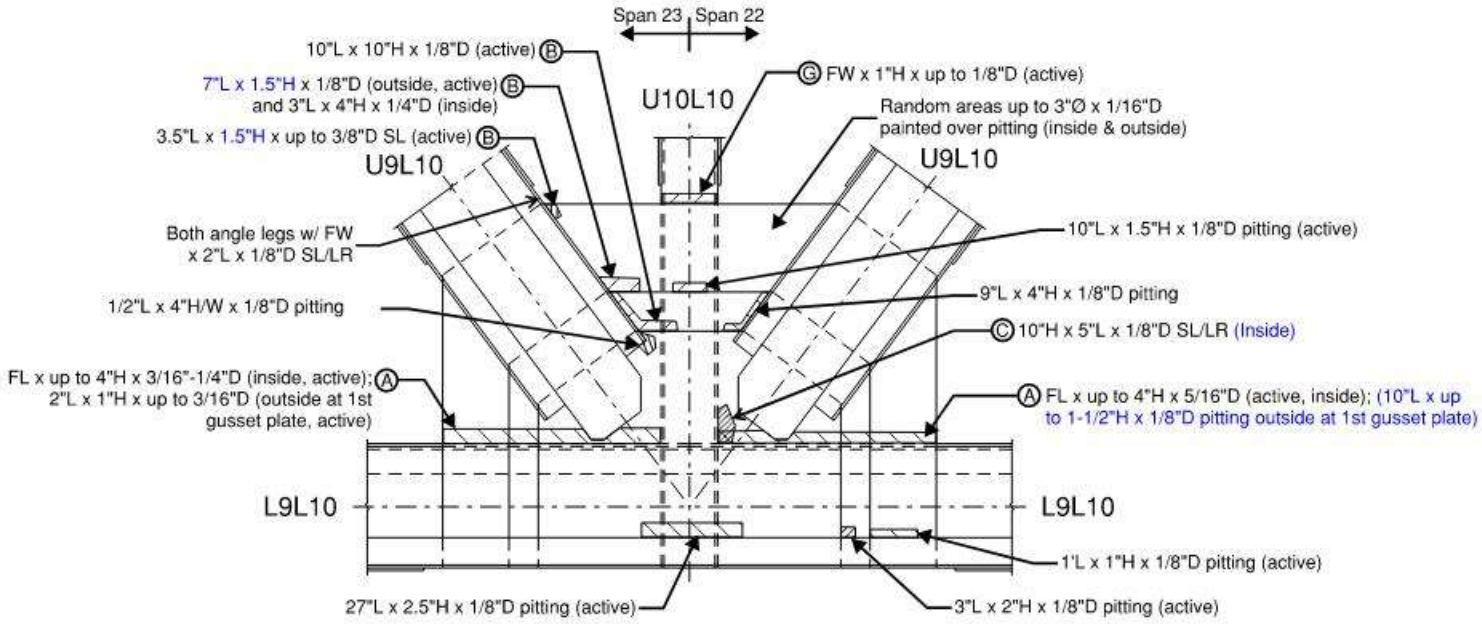

Span 22, North Truss, Node L10, North Gusset Plate, North Elevation

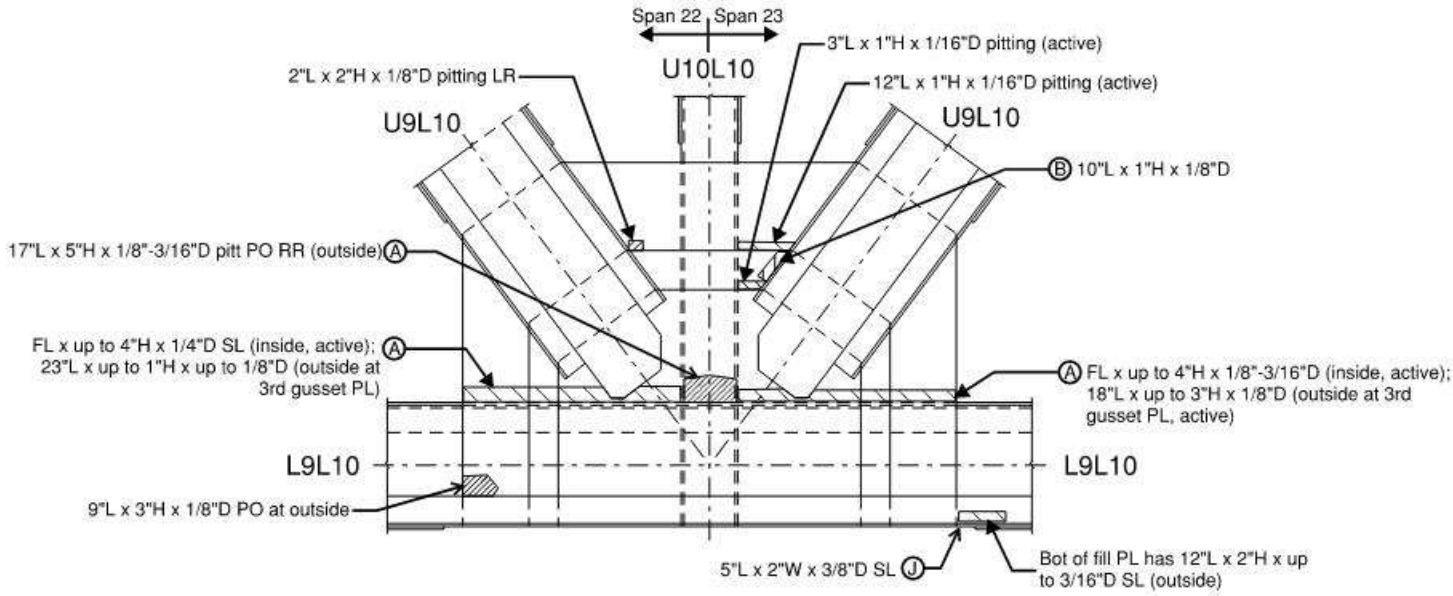

Span 22, North Truss, Node L10, South Gusset Plate, South Elevation

- Random 1/16" PO pitting areas at PL's.

REVISION 1	DATE: 9/9/19	CREW: BH, JG (Baker)	REVISION 3	DATE:	CREW:
REVISION 2	DATE: 8/3/2021	CREW: BM, IS (PRIME)	REVISION 4	DATE:	CREW:

Sketches
Inspection type: Fracture Critical,Routine
Inspection Date: 7/26/2021
Inspected by: PRIME AE

:Bridge No 03819

Town: NEW LONDON
Carried: INTERSTATE 95 NORTHBOUND
Crossed: THAMES RV,RR,LOCAL ROADS
Inventory Route: NHS

CREW: SW, BF	DATE: 10/27/2017	BRIDGE NO.: 03819

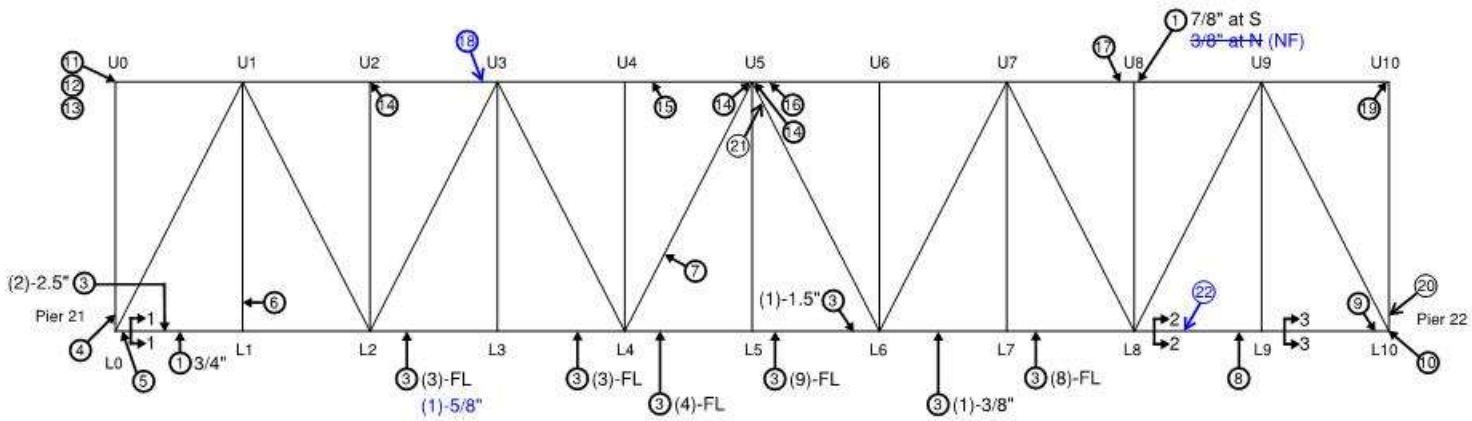

Deterioration Legend:

1. PR between chord flange angles and web PL up to __" thick
2. PR between chord flange angles and cover PL at edges up to __" thick (none on this sheet)
3. Tack welds partially cracked or broken at lacing bar or batten PL and chord; (# per panel) and up to __" long
4. E side scupper bracket broken
5. N web (inside) at top has 2.5"L x 2"H x 5/16"D SL & bot has 2"L x 6"H x 3/16"D SL; S web (inside) at top has 5"L x 7"H x 3/16"D SL; adj to G PL w/in batten PL area
6. Lacing bar cut-off at bot of vert member
7. N & S side have up to 1/8" thick PR between channel webs and web cover PL's
8. Bot chord lacing bars have R/H's w/up to 25% SL
9. Bot chord top splice PL has 1/8"D SL at random areas throughout
10. Both pin PL's have FW x 3"H x 3/16"D SL (active); South elevation with 3/16"T pack rust between the pin PL & gusset PL
11. Up to 2-3/8" PR between web PL's and angles at end and corner of web PL has 2" x 2" RTH at end of U0U1 (non-critical area)
12. South top angle vert leg has 1"L x 3"H RTH at end of U0U1 (non-critical area)
13. (2) R/H's have up to 25% SL; 1/2"IR b/w VT mem and VT G PL
14. Broken tack weld between top of vert back-to-back angles and top chord seat angle (inside)
15. Bot of chord at lacing bar has (1) missing rivet and (1) partially bolted nut at cross b/w bars
16. S web PL has 2.5"L x 2.5"H x 1/4"D SL/LR
17. S bot flg angle vert leg has (2) areas of 2.5"L x 3"W x 5/16"-3/8"D pitting PO & N web PL has (3) areas of 6"Ø x 1/8"D pitting
18. 1/4" Pack rust between the south bottom flange angle vertical leg and filler plate
19. S bot flg angle vert leg has up to FH x up to 3/16"D pitting and horiz leg has spotty 3/16"D pitting w/up to 80% SL to (8) R/H's (mostly painted)
20. Scupper angle w/ (12) RTH's up to 1"Ø
21. Cracked tack weld between diagonal south lower angle and batten PL
22. 6"L x Full width area of ponding water on top of bottom chord

General Notes:

- See Riveted Truss General Notes (Spans 22-25 & 29-32) sheet.
- See following gusset plate sheets for bottom chord gusset plate details.

Span 22 - South Truss South Elevation

REVISION 1	DATE: 9/11/19	CREW: AH, BF (Baker)	REVISION 3	DATE:	CREW:
REVISION 2	DATE: 8/4/2021	CREW: BM, CMR, NH, AN, IS (PRIME)	REVISION 4	DATE:	CREW:

Sketches
Inspection type: Fracture Critical,Routine
Inspection Date: 7/26/2021
Inspected by: PRIME AE

:Bridge No 03819

Town: NEW LONDON
Carried: INTERSTATE 95 NORTHBOUND
Crossed: THAMES RV,RR,LOCAL ROADS
Inventory Route: NHS

CREW: SW, BF	DATE: 10/27/2017	BRIDGE NO.: 03819

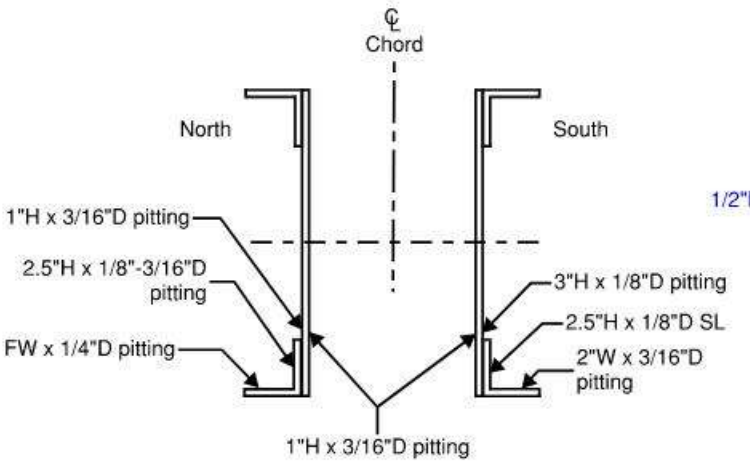

Section 1-1 (L0-L1)

- Not in the same plane.

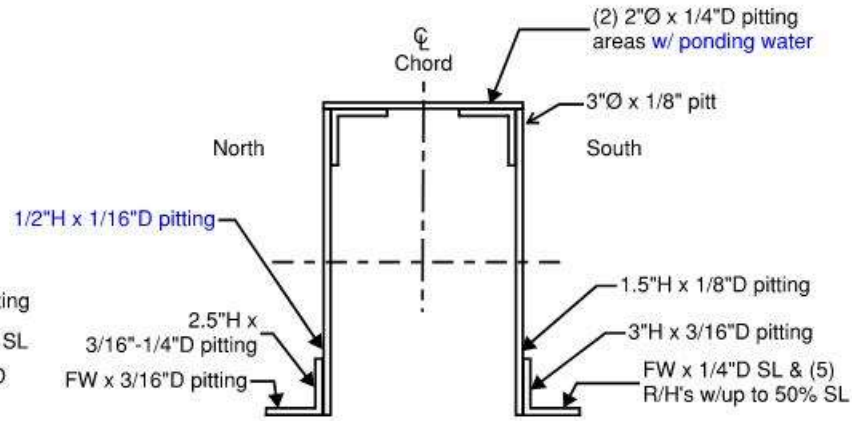

Section 2-2 (L8-L9)

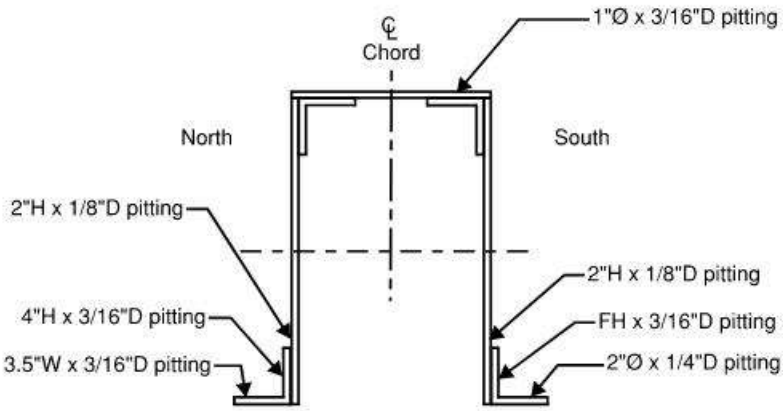

Section 3-3 (L9-L10)

- Above losses not exactly in same X-section.

- LR at all locations, U.O.N.

Span 22 - South Truss Section Loss

REVISION 1	DATE: 9/11/19	CREW: BH, JG (Baker)	REVISION 3	DATE:	CREW:
REVISION 2	DATE: 8/4/2021	CREW: BM, NH, IS (PRIME)	REVISION 4	DATE:	CREW:

Sketches
Inspection type: Fracture Critical,Routine
Inspection Date: 7/26/2021
Inspected by: PRIME AE

:Bridge No 03819

Town: NEW LONDON
Carried: INTERSTATE 95 NORTHBOUND
Crossed: THAMES RV,RR,LOCAL ROADS
Inventory Route: NHS

CREW: BF, SW	DATE: 10/27/2017	BRIDGE NO.: 03819

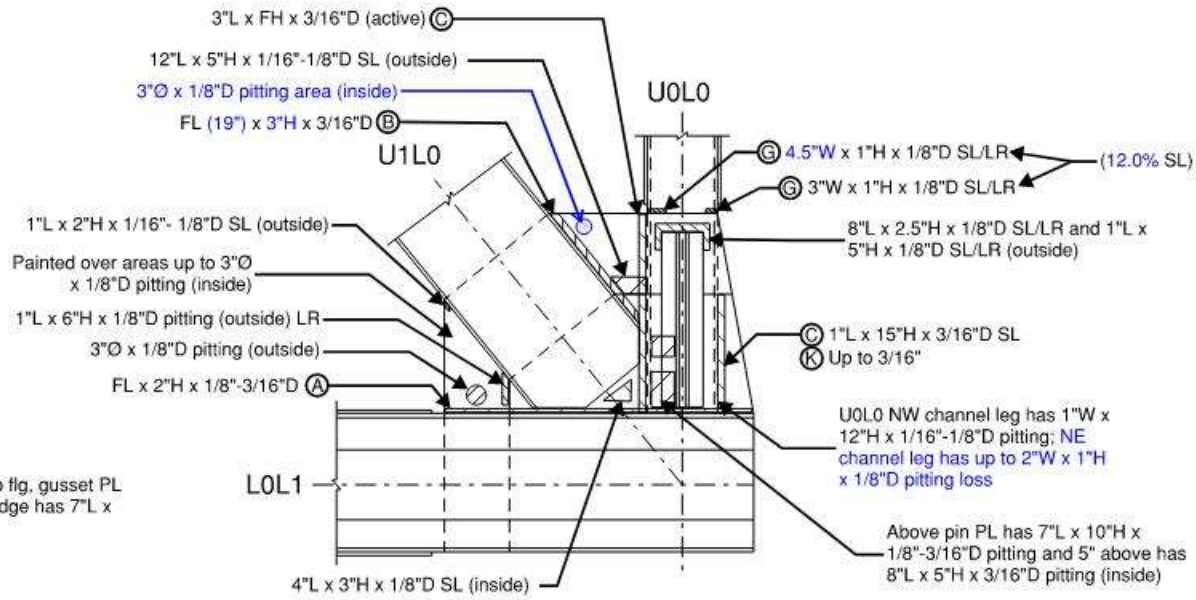

Note:
- Below bottom chord top flg, gusset PL in front of pin PL along edge has 7"L x 14"H x 1/8"D pitting.

Span 22, South Truss, Node L0, North Gusset Plate, North Elevation

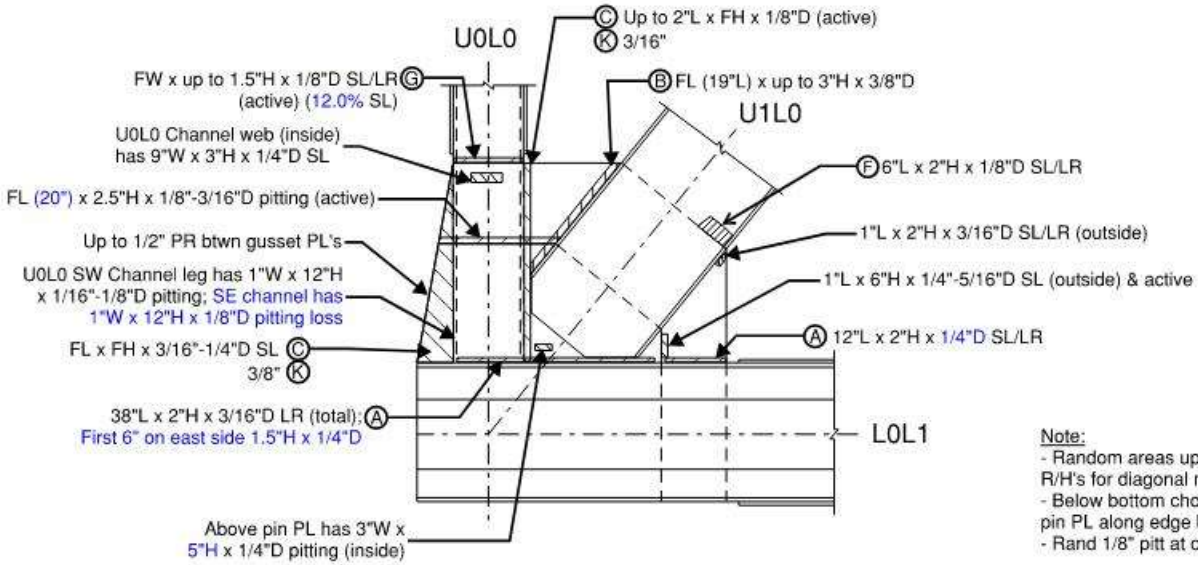

Note:
- Random areas up to 2"Ø x 1/8"D pitting around R/H's for diagonal member inside gusset PL.
- Below bottom chord top flg, gusset PL in front of pin PL along edge has 10"L x 1/2"H x 1/8"D SL.
- Rand 1/8" pitt at outside of PL.

Span 22, South Truss, Node L0, South Gusset Plate, South Elevation

REVISION 1	DATE: 9/11/19	CREW: BH, JG (Baker)	REVISION 3	DATE:	CREW:
REVISION 2	DATE: 8/4/2021	CREW: BM, NH (PRIME)	REVISION 4	DATE:	CREW:

CREW: SW, BF	DATE: 10/27/2017	BRIDGE NO.: 03819

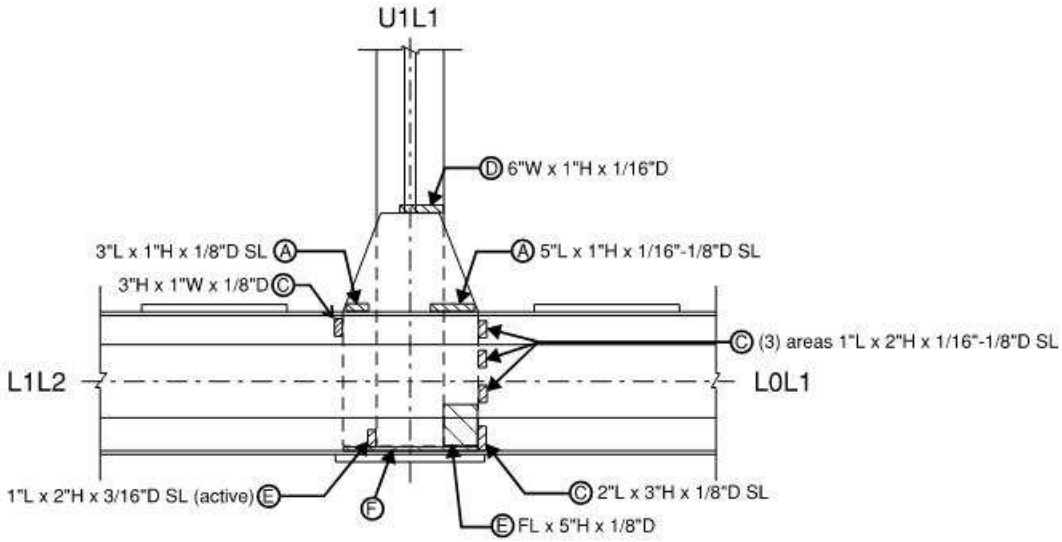

Span 22, South Truss, Node L1, North Gusset Plate, North Elevation

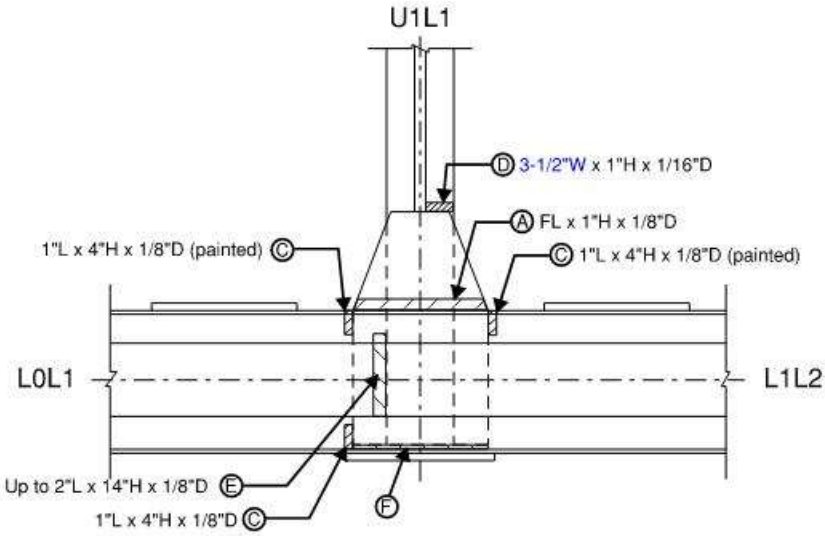

Span 22, South Truss, Node L1, South Gusset Plate, South Elevation

REVISION 1	DATE: 9/11/19	CREW: BH, JG (Baker)	REVISION 3	DATE:	CREW:
REVISION 2	DATE: 8/4/2021	CREW: BM, NH (PRIME)	REVISION 4	DATE:	CREW:

CREW: BF, SW	DATE: 10/27/2017	BRIDGE NO.: 03819

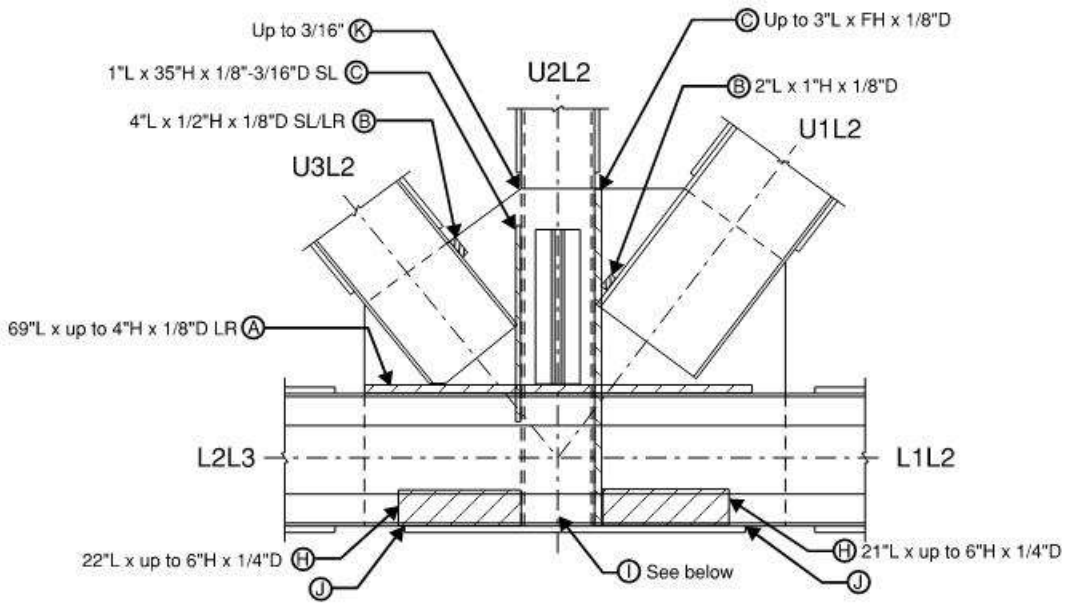

Span 22, South Truss, Node L2, North Gusset Plate, North Elevation

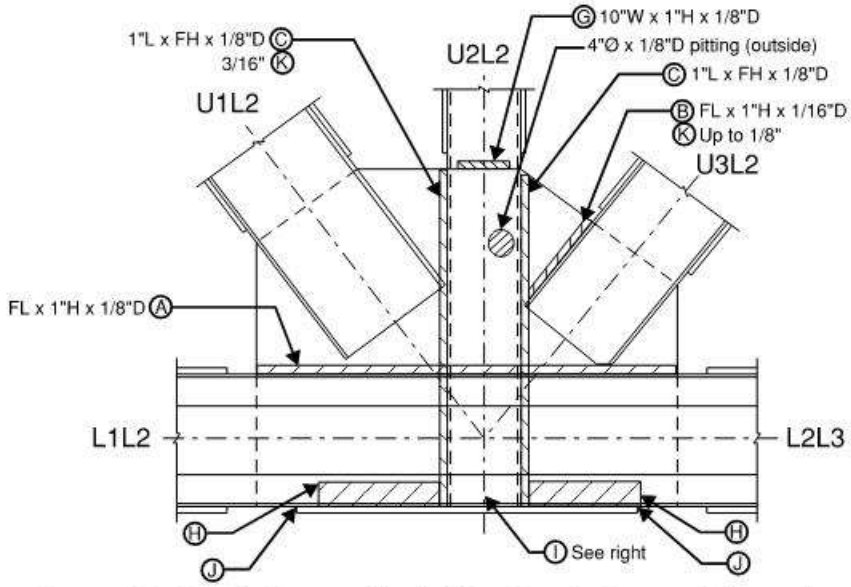

Note I:
- Vert stiff PL has 4" x 1/2" RTH
- NW & SW channel legs have 2"H x 1" LOW
- NE & SE channel legs have 3"H x 1" LOW
- (8) R/H's have up to 90% SL

Span 22, South Truss, Node L2, South Gusset Plate, South Elevation

REVISION 1	DATE: 9/11/19	CREW: BH, JG (Baker)	REVISION 3	DATE:	CREW:
REVISION 2	DATE: 8/4/2021	CREW: BM, NH (PRIME) - No Change	REVISION 4	DATE:	CREW:

CREW: BF, SW	DATE: 10/27/2017	BRIDGE NO.: 03819

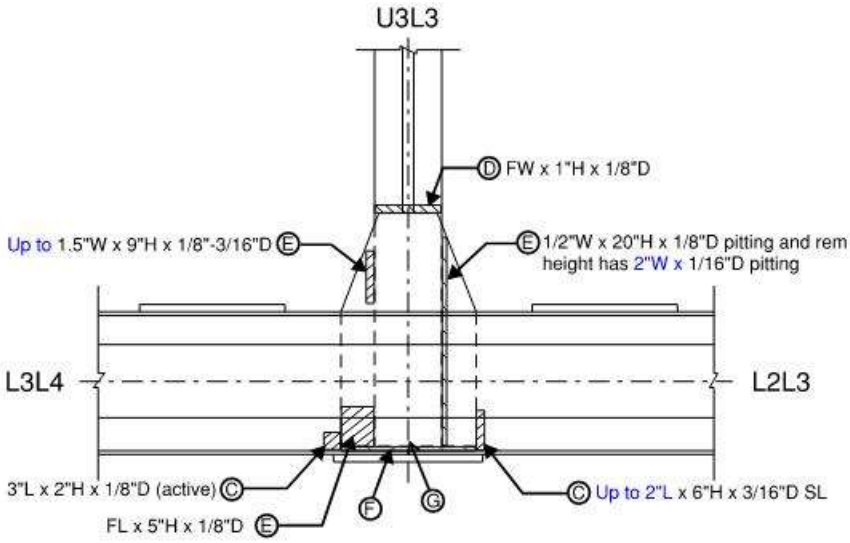

Span 22, South Truss, Node L3, North Gusset Plate, North Elevation

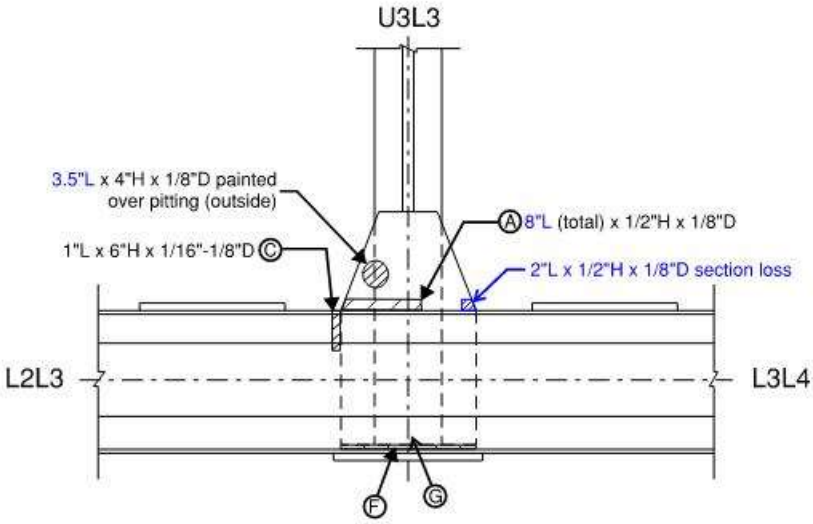

Span 22, South Truss, Node L3, South Gusset Plate, South Elevation

REVISION 1	DATE: 9/11/19	CREW: BH, JG (Baker)	REVISION 3	DATE:	CREW:
REVISION 2	DATE: 8/4/2021	CREW: BM, NH (PRIME)	REVISION 4	DATE:	CREW:

Sketches
Inspection type: Fracture Critical,Routine
Inspection Date: 7/26/2021
Inspected by: PRIME AE

:Bridge No 03819

Town: NEW LONDON
Carried: INTERSTATE 95 NORTHBOUND
Crossed: THAMES RV,RR,LOCAL ROADS
Inventory Route: NHS

CREW: BF, SW	DATE: 10/27/2017	BRIDGE NO.: 03819

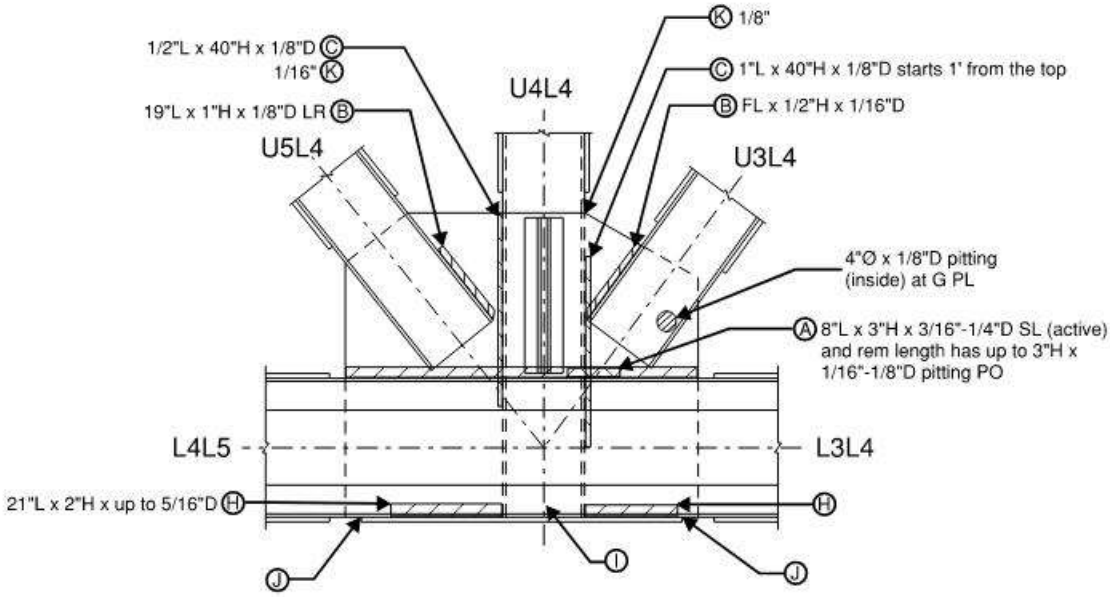

Span 22, South Truss, Node L4, North Gusset Plate, North Elevation

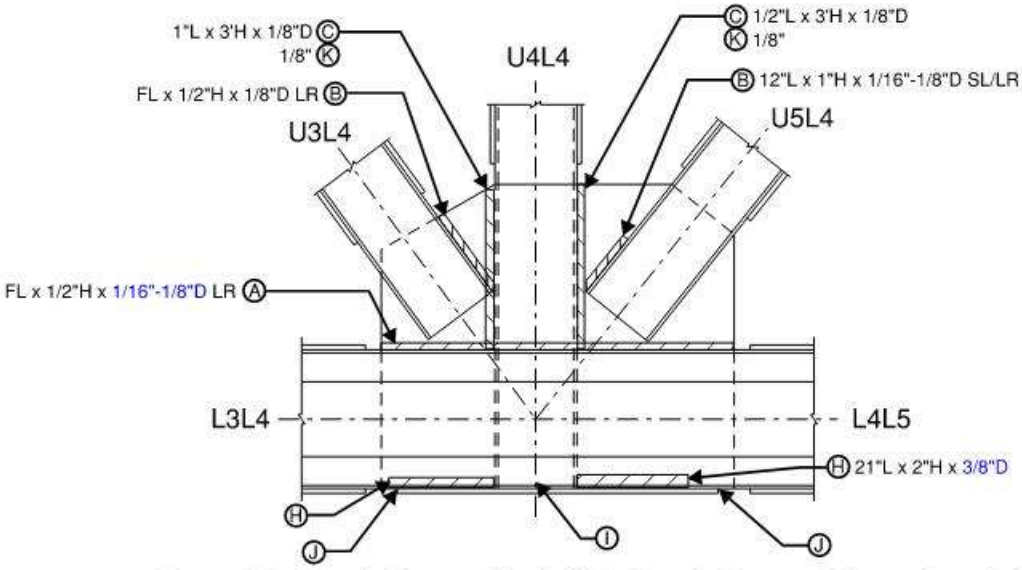

Span 22, South Truss, Node L4, South Gusset Plate, South Elevation

REVISION 1	DATE: 11/19/19	CREW: BH, JG (Baker)	REVISION 3	DATE:	CREW:
REVISION 2	DATE: 8/16/2021	CREW: CMR, AN (PRIME)	REVISION 4	DATE:	CREW:

CREW: SW, KT	DATE: 8/22/2017	BRIDGE NO.: 03819

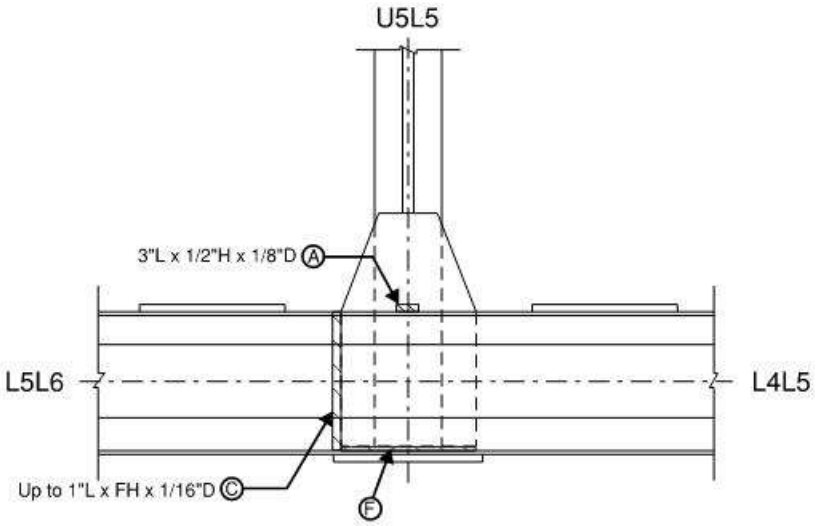

Span 22, South Truss, Node L5, North Gusset Plate, North Elevation

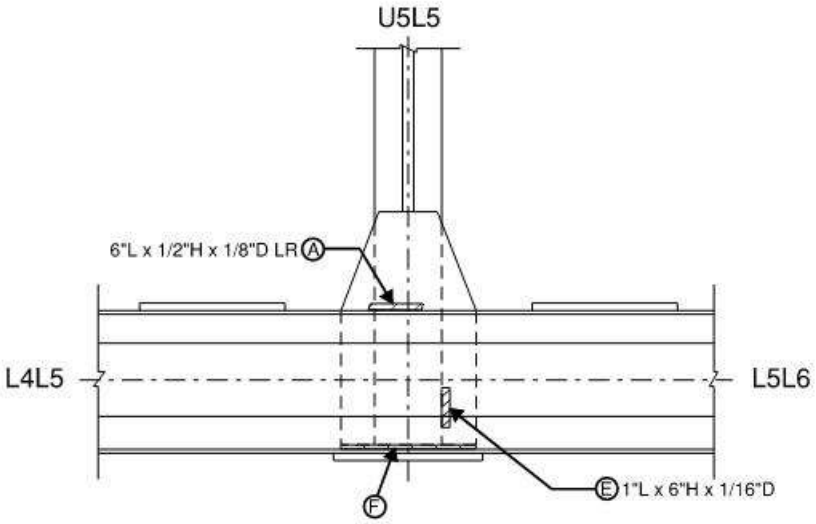

Span 22, South Truss, Node L5, South Gusset Plate, South Elevation

REVISION 1	DATE: 11/19/19	CREW: BH, JG (Baker)	REVISION 3	DATE:	CREW:
REVISION 2	DATE: 8/16/2021	CREW: CMR, AN (PRIME) - No Change	REVISION 4	DATE:	CREW:

CREW: SW, KT	DATE: 8/23/2017	BRIDGE NO.: 03819

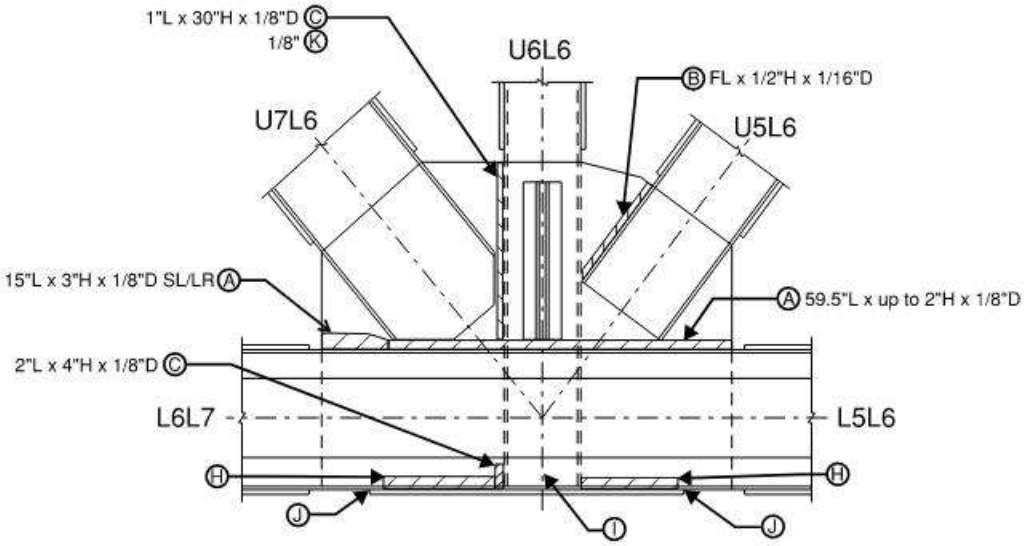

Span 22, South Truss, Node L6, North Gusset Plate, North Elevation

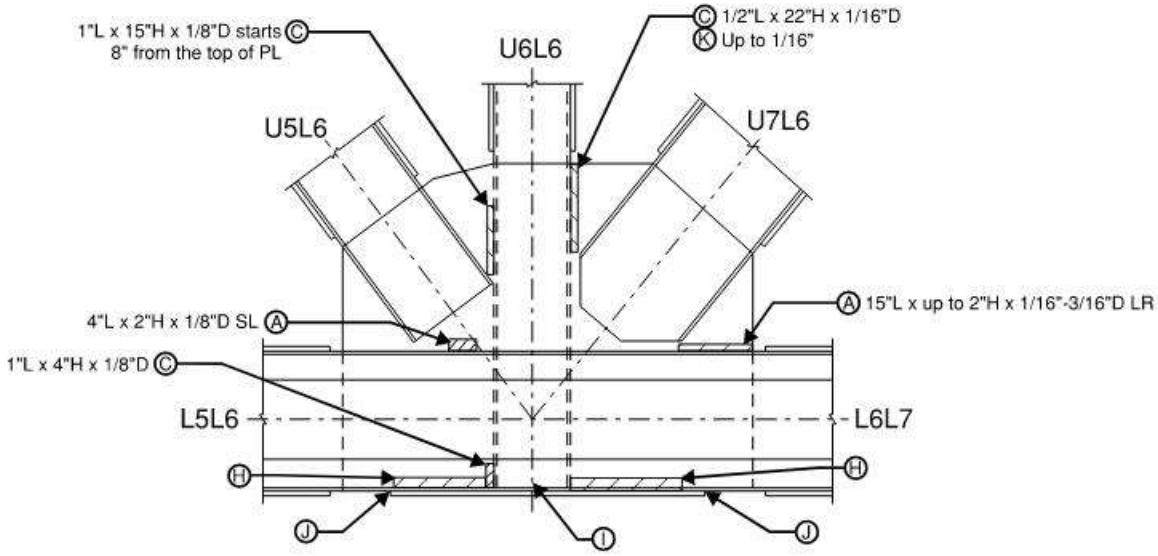

Span 22, South Truss, Node L6, South Gusset Plate, South Elevation

REVISION 1	DATE: 11/19/19	CREW: BH, JG (Baker)	REVISION 3	DATE:	CREW:
REVISION 2	DATE: 8/16/2021	CREW: CMR, AN (PRIME) - No Change	REVISION 4	DATE:	CREW:

CREW: BF, SW	DATE: 10/27/2017	BRIDGE NO.: 03819

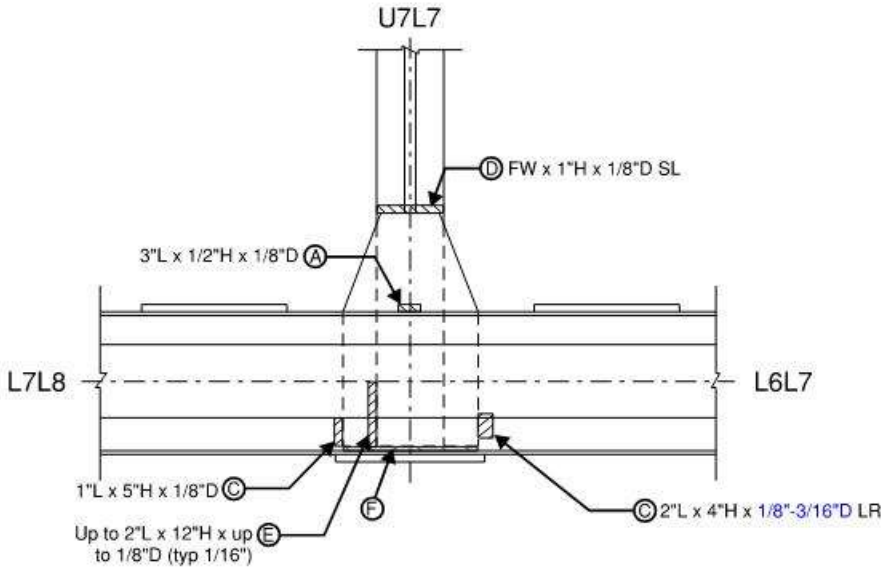

Span 22, South Truss, Node L7, North Gusset Plate, North Elevation

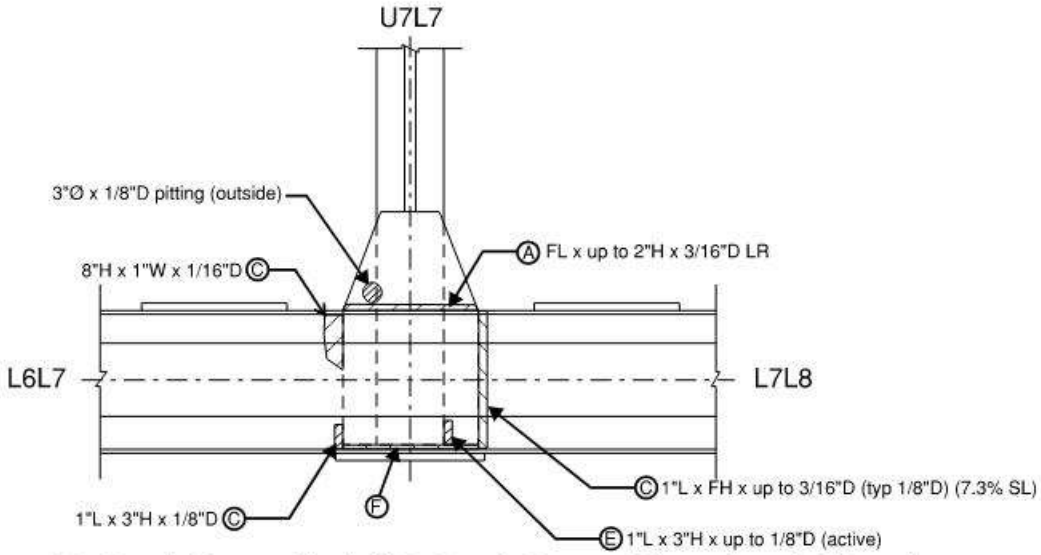

Span 22, South Truss, Node L7, South Gusset Plate, South Elevation

REVISION 1	DATE: 9/12/19	CREW: BH, JG (Baker)	REVISION 3	DATE:	CREW:
REVISION 2	DATE: 8/16/2021	CREW: CMR, AN (PRIME)	REVISION 4	DATE:	CREW:

CREW: BF, SW	DATE: 10/27/2017	BRIDGE NO.: 03819

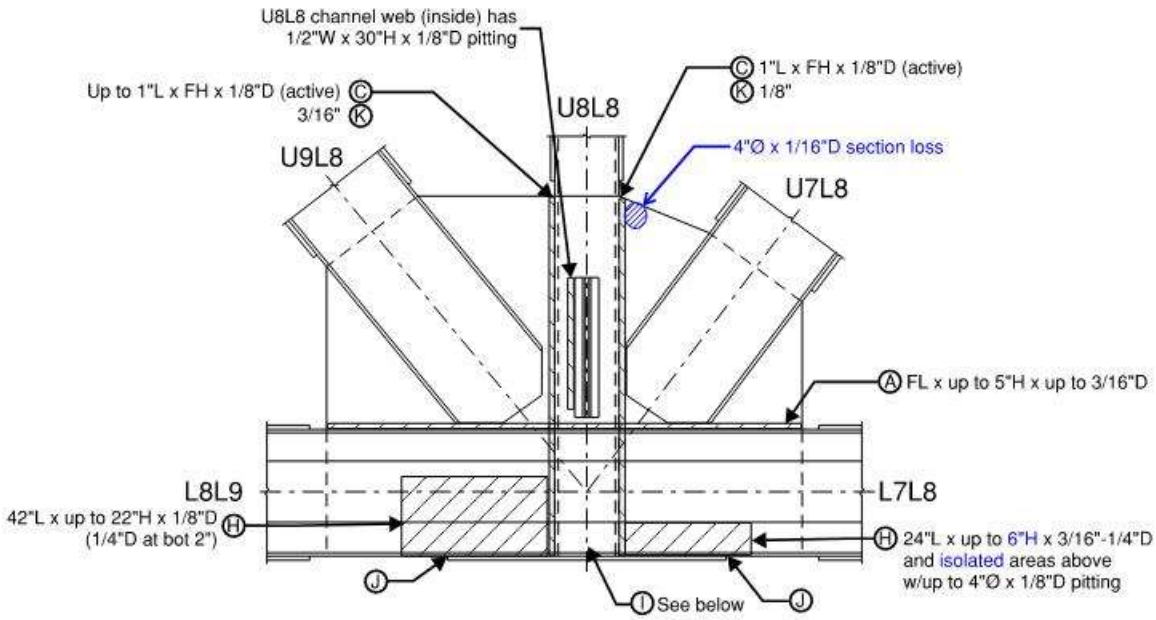

Span 22, South Truss, Node L8, North Gusset Plate, North Elevation

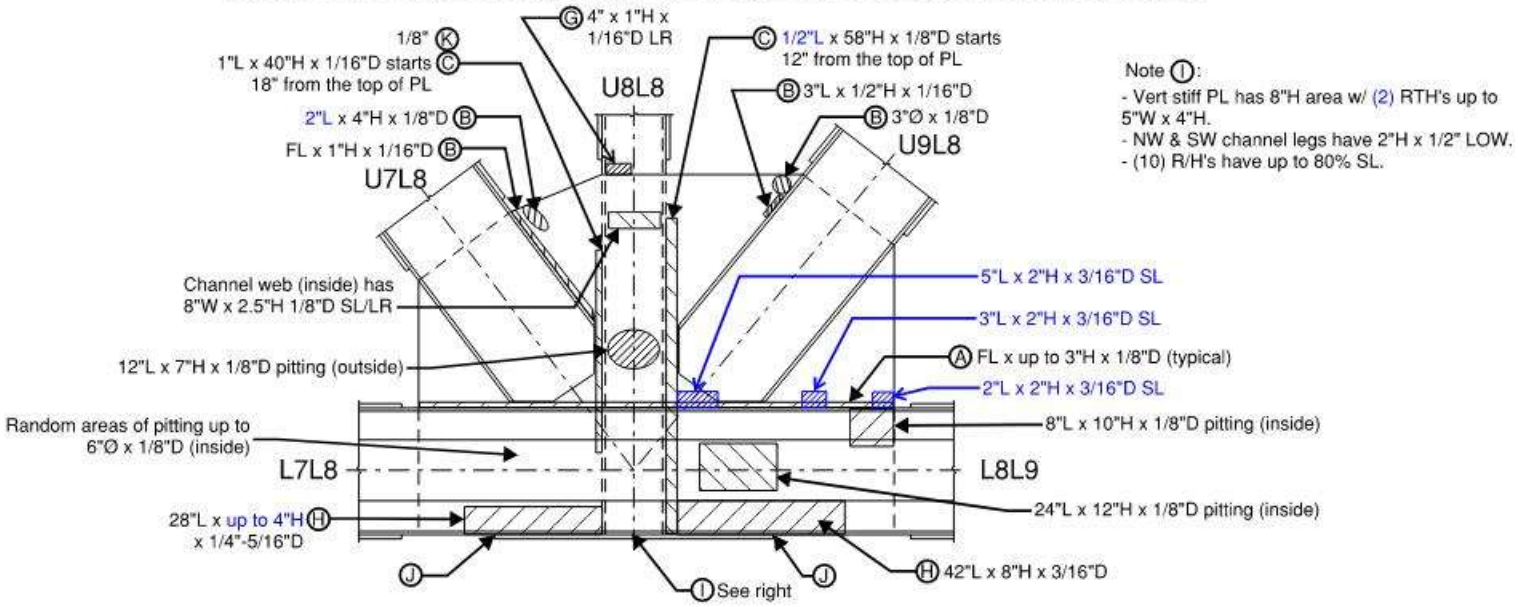

Span 22, South Truss, Node L8, South Gusset Plate, South Elevation

REVISION 1	DATE: 9/12/19	CREW: BH, JG (Baker)	REVISION 3	DATE:	CREW:
REVISION 2	DATE: 8/5/2021	CREW: BM, IS (PRIME)	REVISION 4	DATE:	CREW:

CREW: BF, SW	DATE: 10/27/2017	BRIDGE NO.: 03819

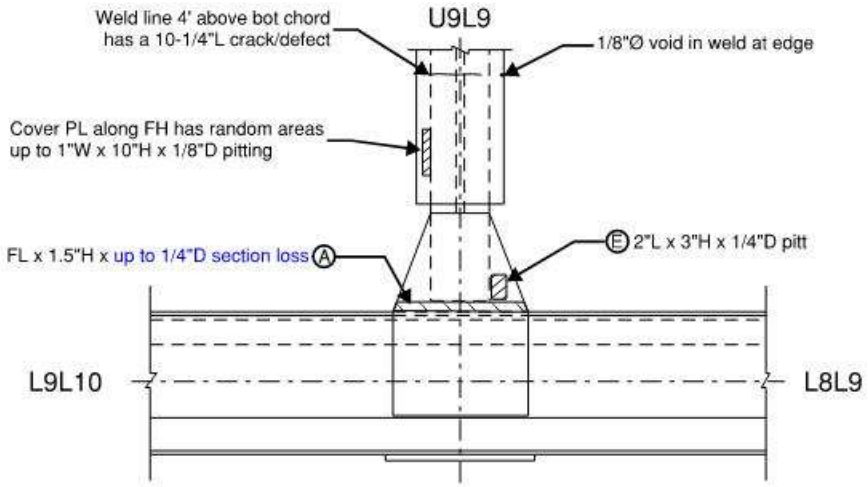

Span 22, South Truss, Node L9, North Gusset Plate, North Elevation

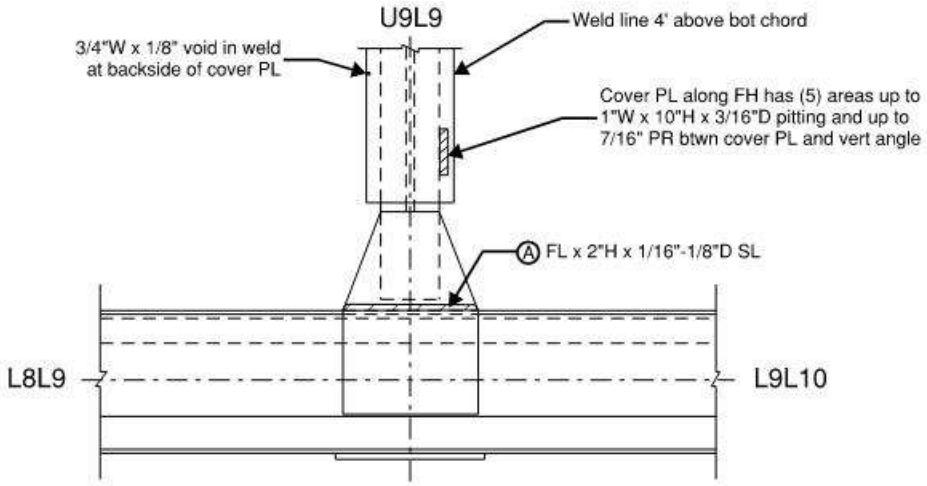

Span 22, South Truss, Node L9, South Gusset Plate, South Elevation

REVISION 1	DATE: 9/12/19	CREW: BH, JG (Baker)	REVISION 3	DATE:	CREW:
REVISION 2	DATE: 8/5/2021	CREW: BM, IS (PRIME)	REVISION 4	DATE:	CREW:

CREW: BF, SW	DATE: 10/27/2017	BRIDGE NO.: 03819

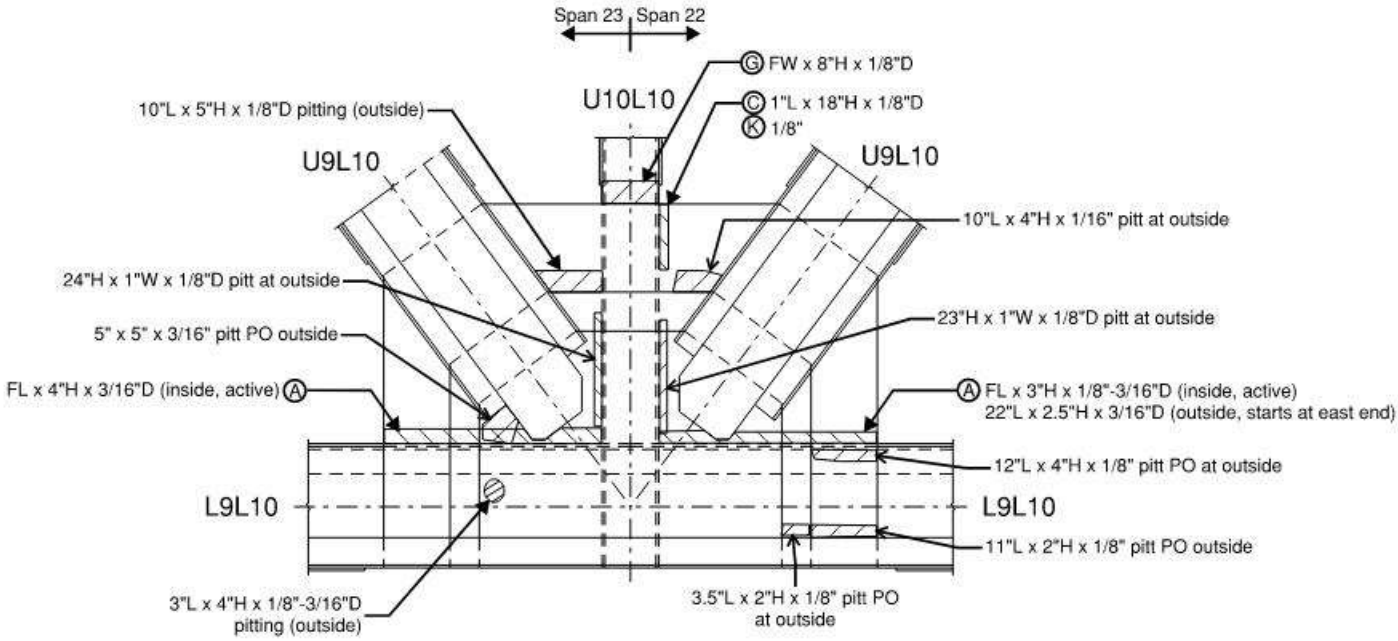

Span 22, South Truss, Node L10, North Gusset Plate, North Elevation

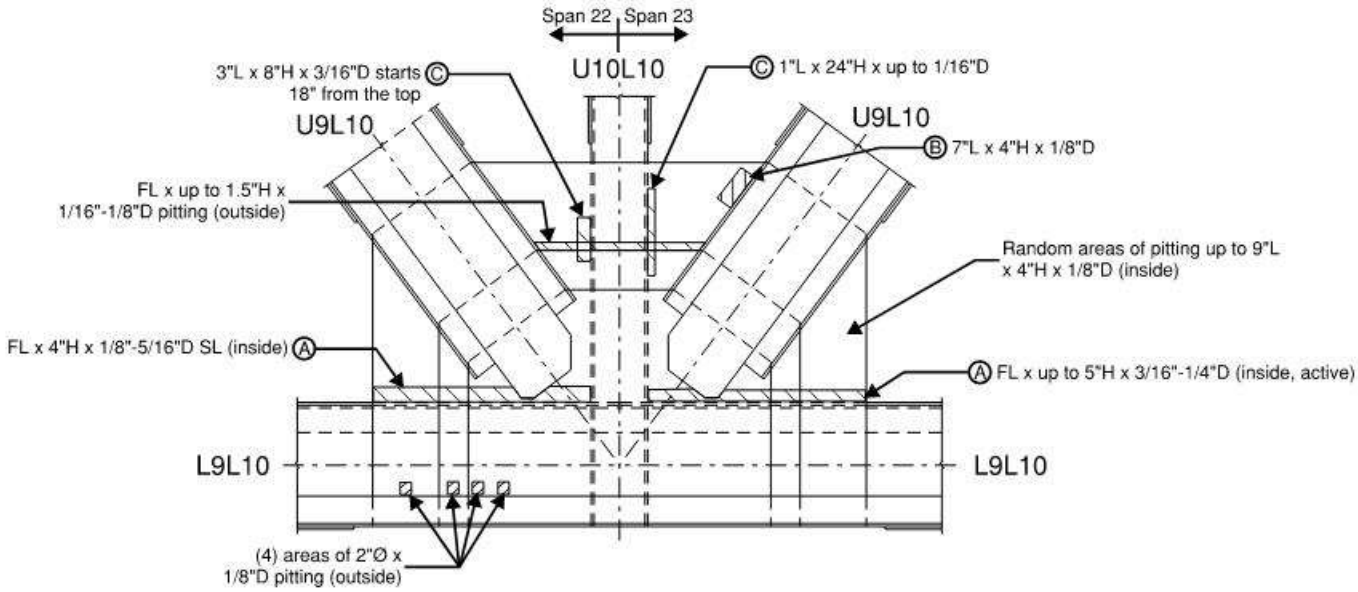

Span 22, South Truss, Node L10, South Gusset Plate, South Elevation

REVISION 1	DATE: 9/12/19	CREW: BH, JG (Baker)	REVISION 3	DATE:	CREW:
REVISION 2	DATE: 9/13/2021	CREW: BM, IS (PRIME) - No Change	REVISION 4	DATE:	CREW:

Sketches
Inspection type: Fracture Critical,Routine
Inspection Date: 7/26/2021
Inspected by: PRIME AE

:Bridge No 03819

Town: NEW LONDON
Carried: INTERSTATE 95 NORTHBOUND
Crossed: THAMES RV,RR,LOCAL ROADS
Inventory Route: NHS

CREW: SW, MW	DATE: 8/30/2017	BRIDGE NO.: 03819

LOG DIRECTION
WEST TO EAST

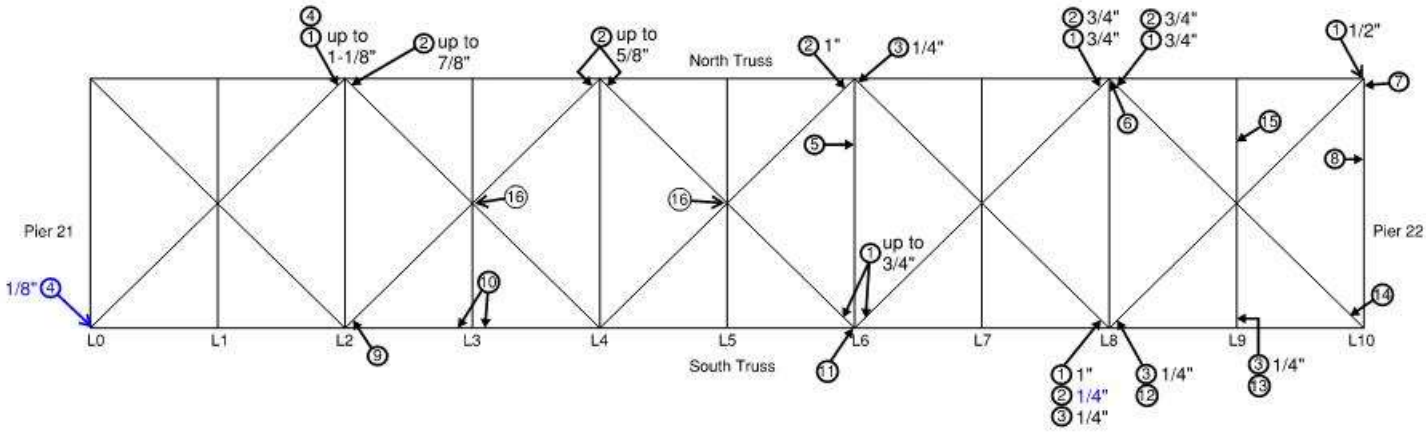

Deterioration Legend:

① - PR between top horiz gusset PL and bracing members up to __" thick
② - PR between bot horiz gusset PL and bracing members __" thick
③ - Pitting on top horiz gusset PL up to __" deep
④ - Bot gusset PL has 3.5" x 1.5" RTH & 1/2"Ø RTH
⑤ - Bot flg angle horiz leg has spotty pitting up to 1/4"D
⑥ - Bot gusset PL has 2" x 1" RTH and (4) R/H's w/up to 80% SL
⑦ - Lat bracing lower bottom angle VT legs w/ 5" x 1-1/2" RTH's
⑧ - Bot strut angle has random areas of 3/16"-1/4"D pitting on horiz leg and bot 2" of vert leg
⑨ - Bot gusset PL has 5"L x 1"W LOW
⑩ - Bot gusset PL has 5"L x 1/4"W LOW at both sides (As-built condition)
⑪ - Gusset PL has (10) R/H's w/up to 70% SL
⑫ - Edge of bot horiz gusset PL has (3) RTH's up to 6"L x 2"W & (12) R/H's w/up to 70% SL at top & bot gusset PL's
⑬ - U/S of bot horiz gusset PL has one rivet not fully seated up to 3/16"
⑭ - Lacing bar has 1" x 1/2" RTH and (3) R/H's w/ 80% SL
⑮ - Bot angle both legs have up to FW/FH x 1/8"D SL at random areas
⑯ - Bird debris on horiz G PL's

General Notes:

- See Lateral and Sway Bracing General Notes (Spans 22-25 & 29-32) sheet.

Span 22 - Bottom Laterals

REVISION 1	DATE: 9/9/19	CREW: BH, JG (Baker)	REVISION 3	DATE:	CREW:
REVISION 2	DATE: 7/29/2021	CREW: BM, CMR, NH, IS, AN (PRIME)	REVISION 4	DATE:	CREW:

CREW: SW, BF	DATE: 10/19/2017	BRIDGE NO.: 03819

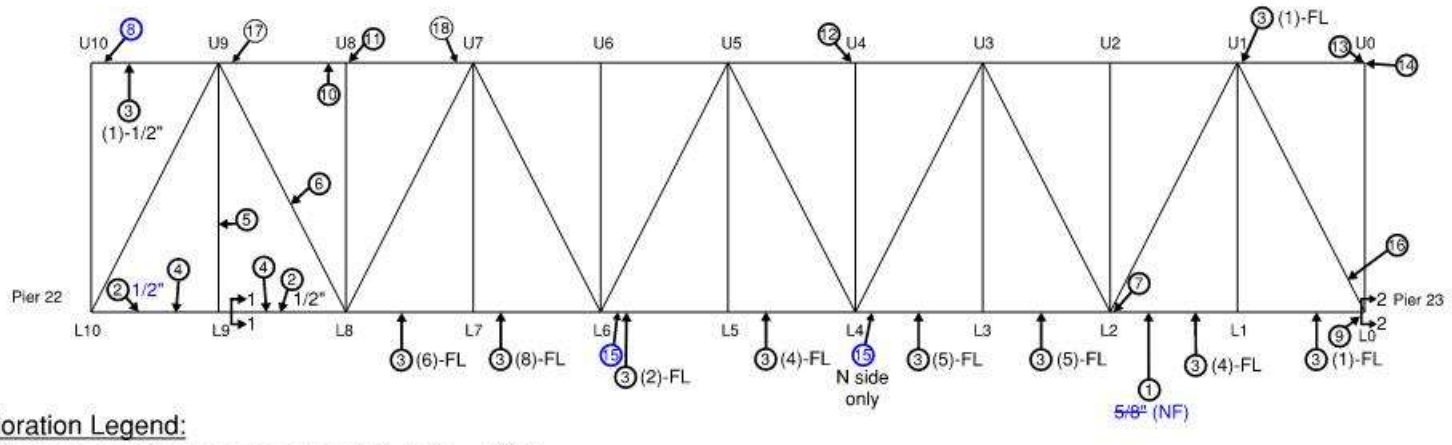

Deterioration Legend:

1. PR between chord flange angles and web PL up to __" thick
2. PR between chord flange angles and cover PL at edges up to __" thick
3. Tack welds partially cracked or broken at lacing bar or batten PL and chord; (# per panel) and up to __" long
4. Top of cover PL has areas of active pitting up to 10"Ø x 1/4"D & N. web PL w/ up to 4"H x 1/8"D SL/LR & areas of 3"Ø x up to 1/8"D section loss around rivets
5. PR up to 3/4" between vertical member and vertical cover PL at S side; (3) locations
6. N top flg angle horiz leg has random areas of SL up to 6"L x 4"W x 1/8"D & N bot flg angle horiz leg has random areas of SL up to 4"L x FW x 1/8"D (all LR)
7. ~~S web splice PL has FL x 1"H x up to 3/16"D SL/LR~~ (Noted in L2 gusset plate)
8. N. angle w/ (3) areas up to 8"L x 4"H/W x 1/8" to 3/16"D SL/LR
9. S pin PL (inside) has 1"L x 30"H x 3/16"D pitting PO
10. 10'L x 1/2" thick PR between top cover PL & top of south web plate
11. N web PL has 4"Ø x 1/4"D pitting; (3) areas, PO not in same X-sect
12. Top PL has (1) sheared R/H
13. 1/4" PR between vert gusset PL and vert member
14. Top chord at end has up to 1-1/8" PR between web PL's & angle vert legs
15. S. side of bot chord w/ 1-1/2"L crk in horiz weld b/w splice PL & spacer PL & FL broken weld at N side
16. N & S top flg angle horiz leg has 4"L x FW x 1/8" D SL, above batten PL
17. Top chord splice PL's at bottom with up to 1/2" IR at N & S sides
18. N angle horiz leg w/ 6"L x FW x 1/8"D SL/LR

General Notes:
- See Riveted Truss General Notes (Spans 22-25 & 29-32) sheet.
- See following gusset plate sheets for bottom chord gusset plate details.

Span 23 - North Truss South Elevation

REVISION 1	DATE: 9/9/19	CREW: BH, JG (Baker)	REVISION 3	DATE:	CREW:
REVISION 2	DATE: 7/27/2021	CREW: BM, NH, IS, EB (PRIME)	REVISION 4	DATE:	CREW:

CREW: SW, BF	DATE: 10/19/2017	BRIDGE NO.: 03819

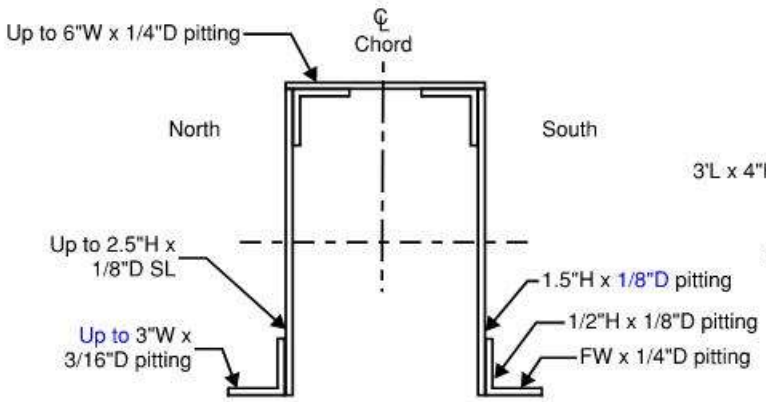

Section 1-1 (L8-L9)

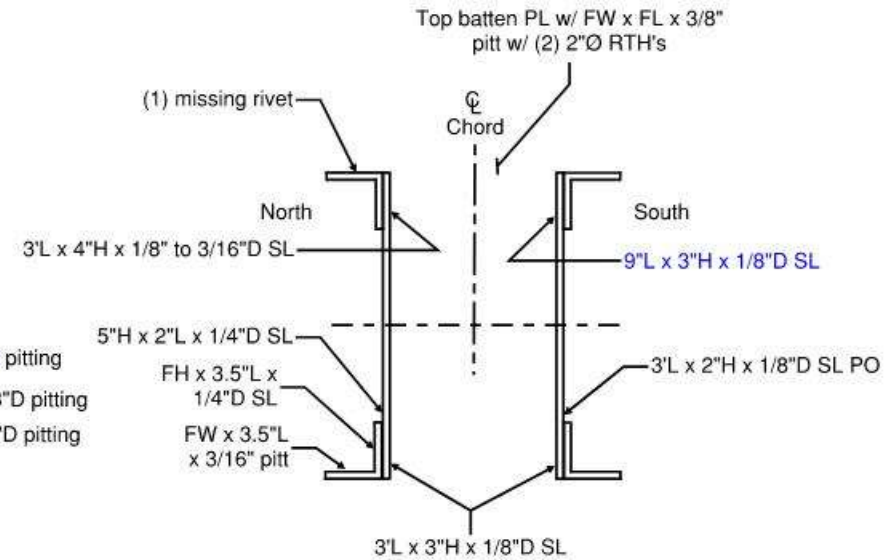

Section 2-2 (L1-L0)

(12.4% Loss)

- LR at all locations U.O.N.

Span 23 - North Truss Section Loss

REVISION 1	DATE: 9/9/19	CREW: BH, JG (Baker)	REVISION 3	DATE:	CREW:
REVISION 2	DATE: 8/3/2021	CREW: BM, IS, EB (PRIME)	REVISION 4	DATE:	CREW:

CREW: SW, BF	DATE: 10/19/2017	BRIDGE NO.: 03819

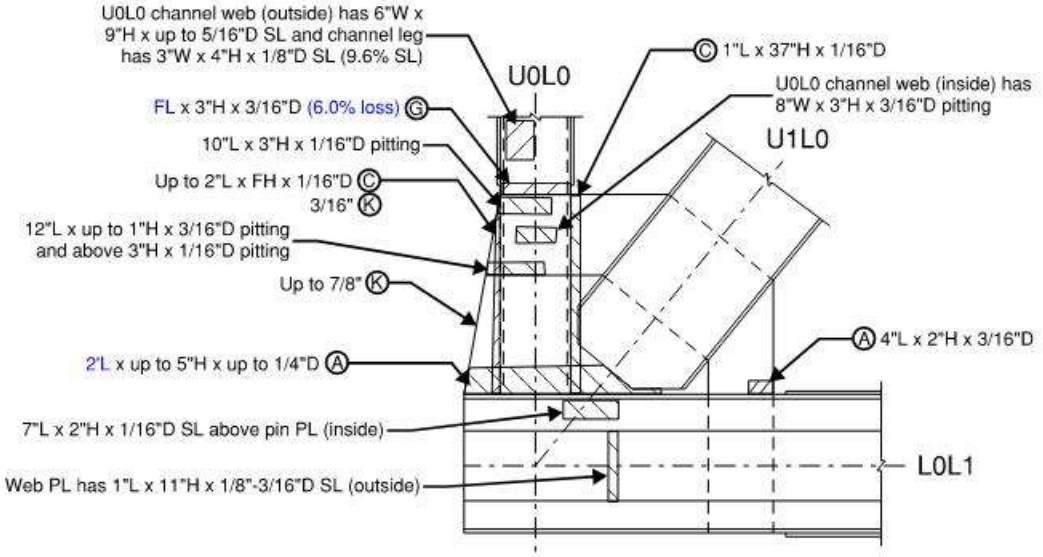

Span 23, North Truss, Node L0, North Gusset Plate, North Elevation

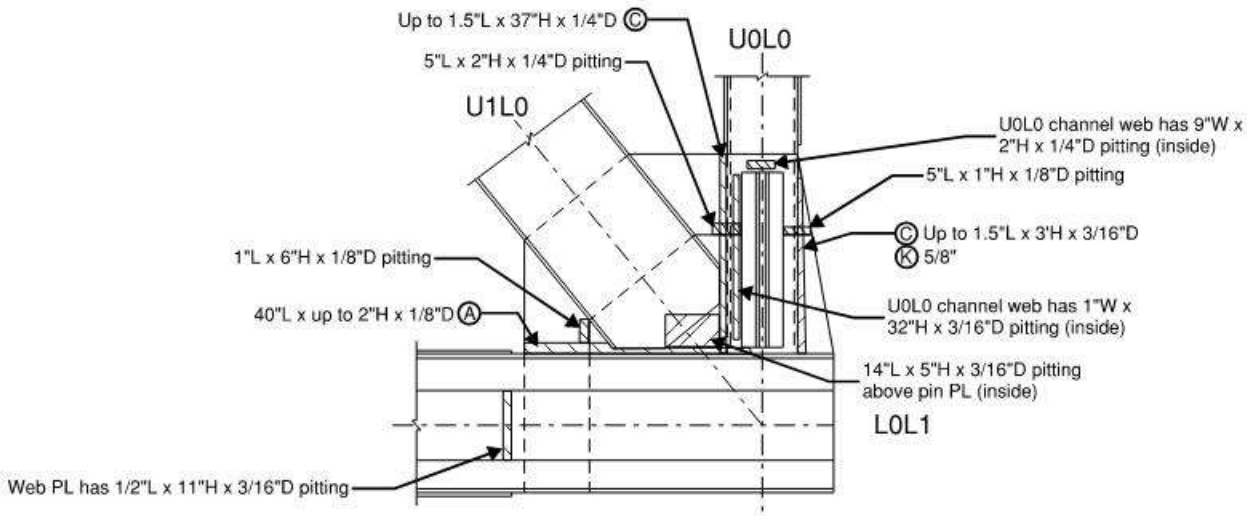

Span 23, North Truss, Node L0, South Gusset Plate, South Elevation

- PO losses at all locations.

REVISION 1	DATE: 9/10/19	CREW: BH, JG (Baker)	REVISION 3	DATE:	CREW:
REVISION 2	DATE: 9/15/2021	CREW: BM, EB (PRIME)	REVISION 4	DATE:	CREW:

CREW: SW, BF	DATE: 10/19/2017	BRIDGE NO.: 03819

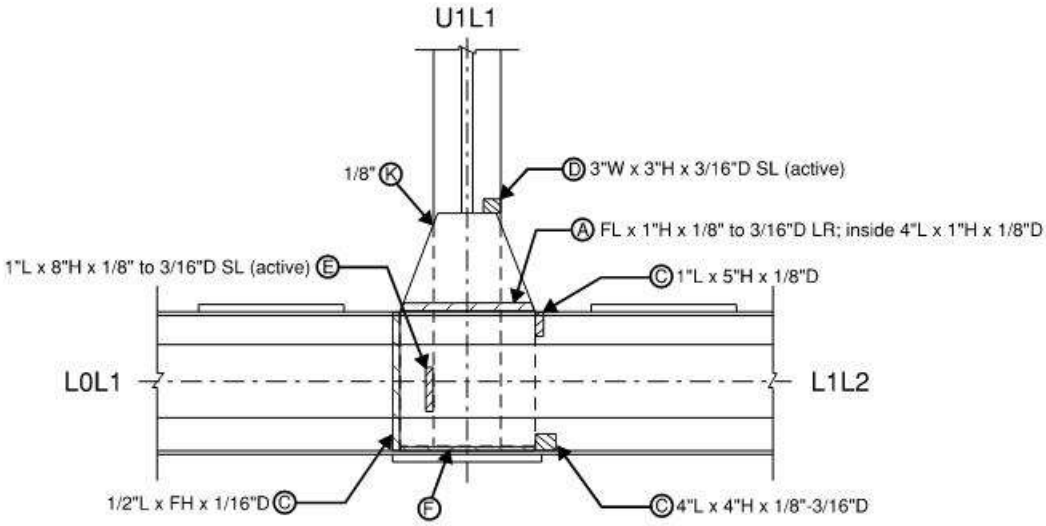

Span 23, North Truss, Node L1, North Gusset Plate, North Elevation

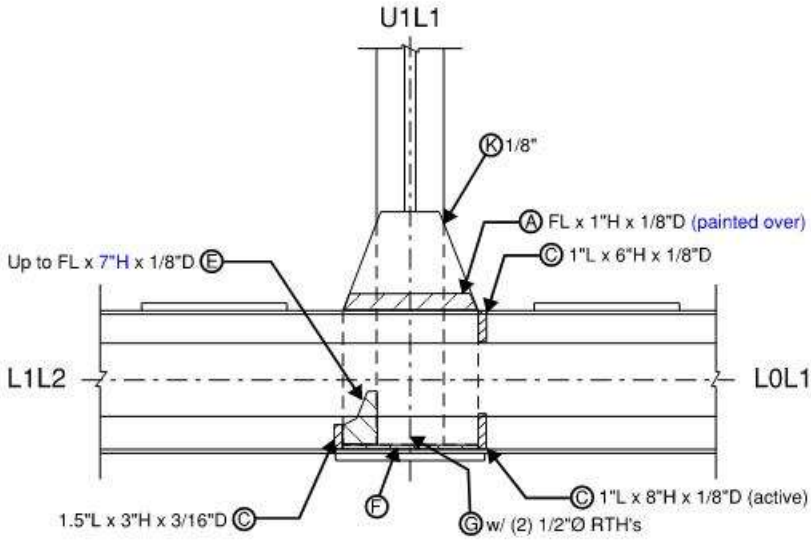

Span 23, North Truss, Node L1, South Gusset Plate, South Elevation

REVISION 1	DATE: 9/10/19	CREW: BH, JG (Baker)	REVISION 3	DATE:	CREW:
REVISION 2	DATE: 9/15/2021	CREW: BM, EB (PRIME)	REVISION 4	DATE:	CREW:

CREW: SW, BF	DATE: 10/19/2017	BRIDGE NO.: 03819

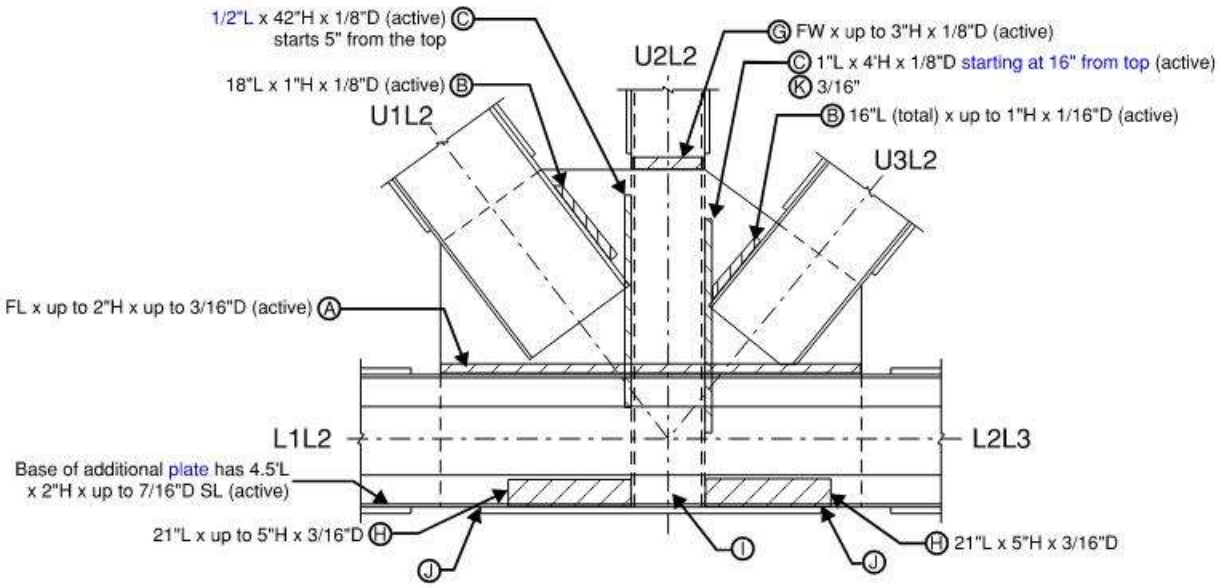

Span 23, North Truss, Node L2, North Gusset Plate, North Elevation

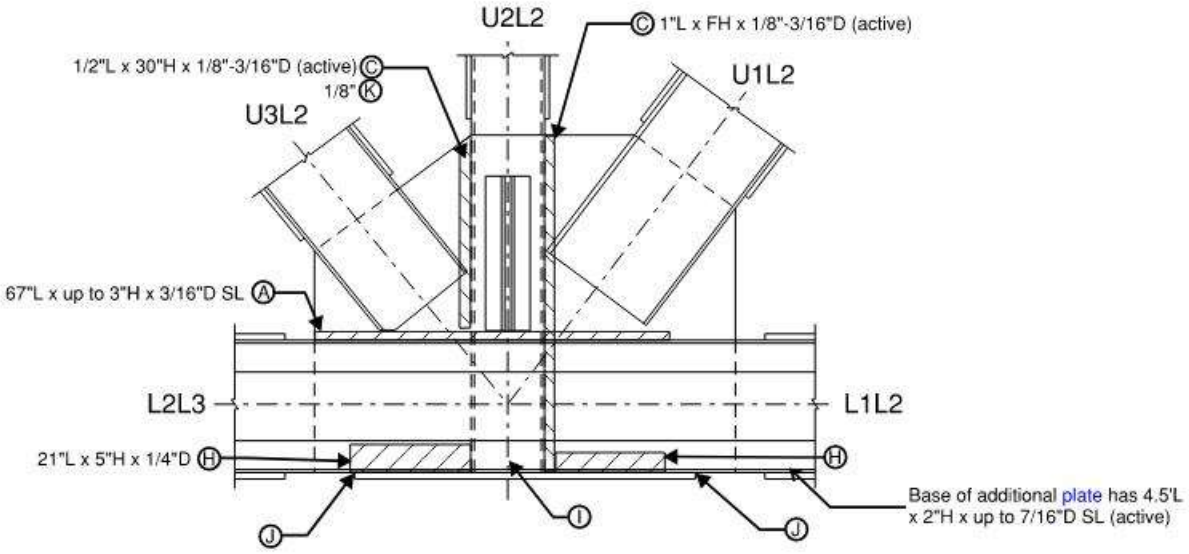

Span 23, North Truss, Node L2, South Gusset Plate, South Elevation

REVISION 1	DATE: 9/10/19	CREW: BH, JG (Baker)	REVISION 3	DATE:	CREW:
REVISION 2	DATE: 9/15/2021	CREW: BM, EB (PRIME)	REVISION 4	DATE:	CREW:

CREW: BF, SW	DATE: 10/19/2017	BRIDGE NO.: 03819

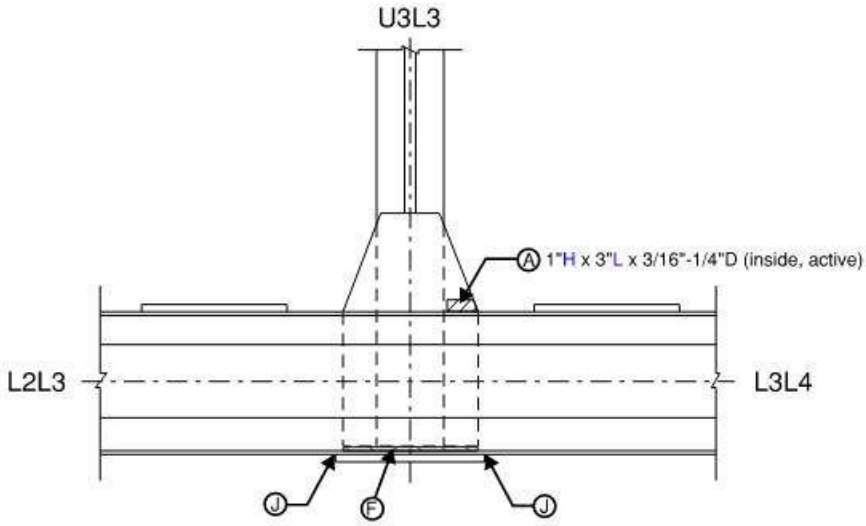

Span 23, North Truss, Node L3, North Gusset Plate, North Elevation

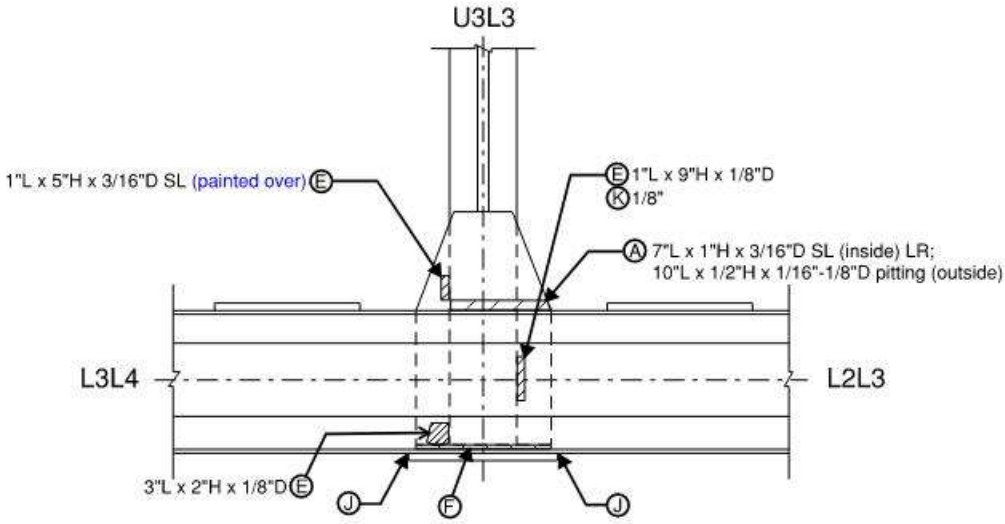

Span 23, North Truss, Node L3, South Gusset Plate, South Elevation

REVISION 1	DATE: 9/10/19	CREW: BH, JG (Baker)	REVISION 3	DATE:	CREW:
REVISION 2	DATE: 9/15/2021	CREW: BM, EB (PRIME)	REVISION 4	DATE:	CREW:

CREW: BF, SW	DATE: 10/19/2017	BRIDGE NO.: 03819

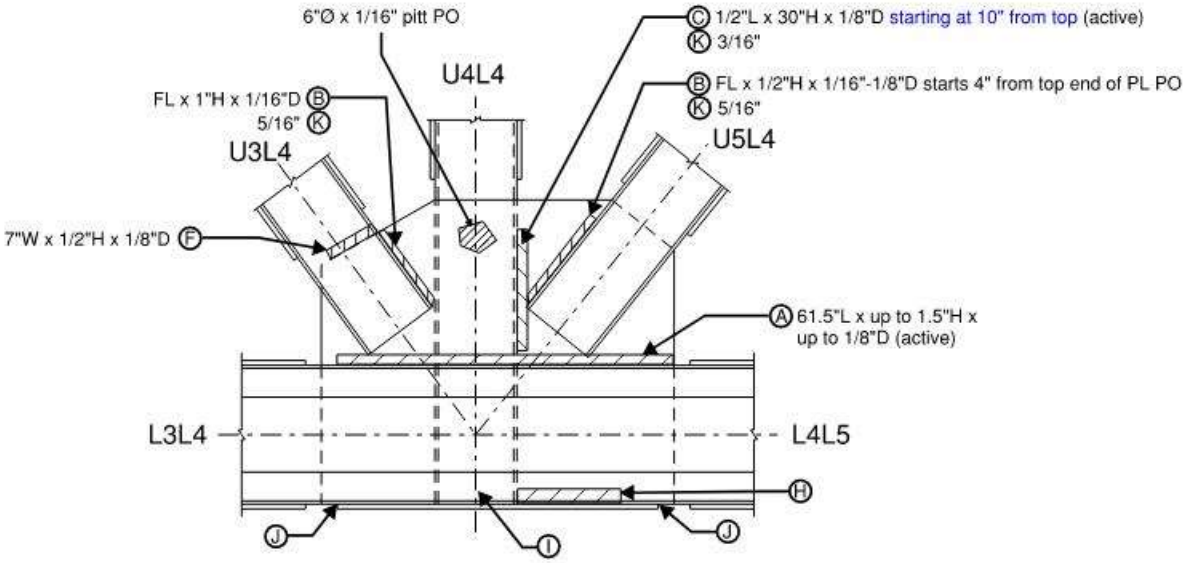

Span 23, North Truss, Node L4, North Gusset Plate, North Elevation

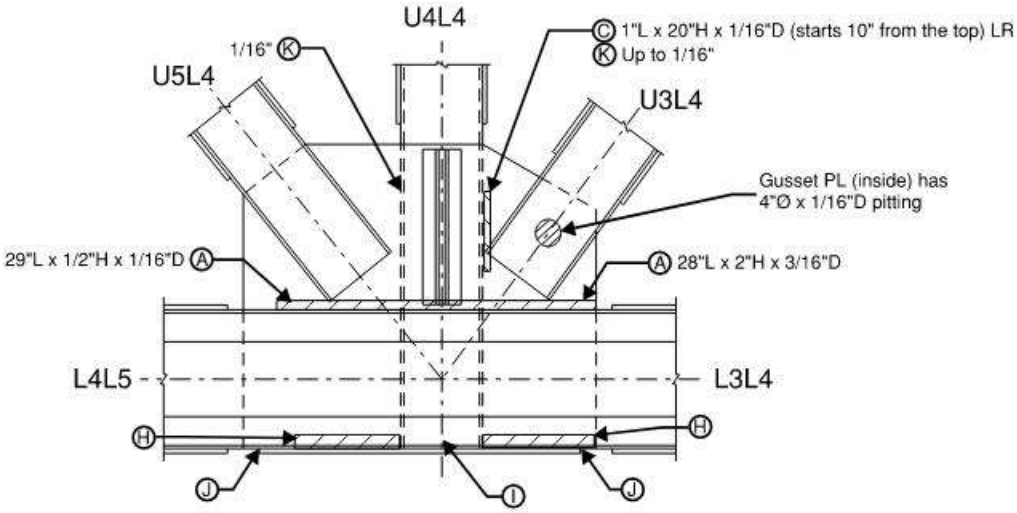

Span 23, North Truss, Node L4, South Gusset Plate, South Elevation

REVISION 1	DATE: 9/10/19	CREW: BH, JG (Baker)	REVISION 3	DATE:	CREW:
REVISION 2	DATE: 9/15/2021	CREW: BM, EB (PRIME)	REVISION 4	DATE:	CREW:

CREW: BF, SW	DATE: 10/19/2017	BRIDGE NO.: 03819

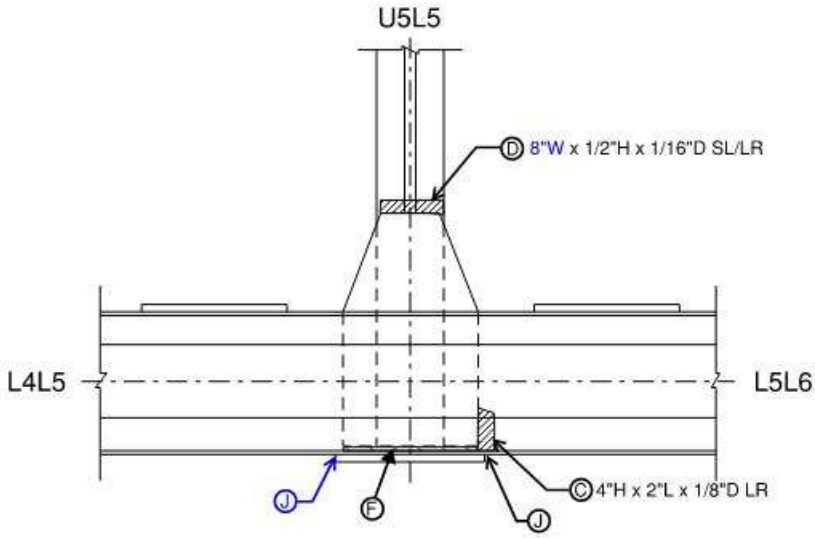

Span 23, North Truss, Node L5, North Gusset Plate, North Elevation

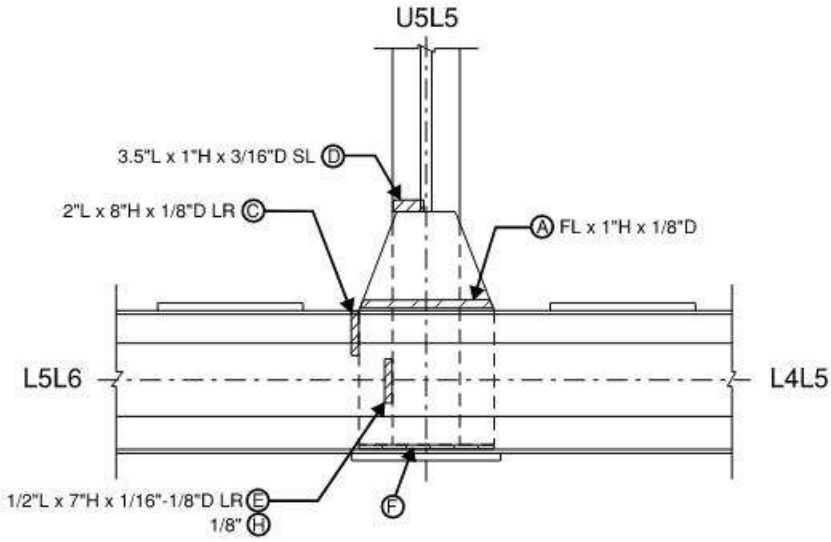

Span 23, North Truss, Node L5, South Gusset Plate, South Elevation

REVISION 1	DATE: 9/10/19	CREW: BH, JG (Baker)	REVISION 3	DATE:	CREW:
REVISION 2	DATE: 7/27/2021	CREW: BM, NH (PRIME)	REVISION 4	DATE:	CREW:

Sketches
Inspection type: Fracture Critical,Routine
Inspection Date: 7/26/2021
Inspected by: PRIME AE

:Bridge No 03819

Town: NEW LONDON
Carried: INTERSTATE 95 NORTHBOUND
Crossed: THAMES RV,RR,LOCAL ROADS
Inventory Route: NHS

CREW: BF, SW	DATE: 10/19/2017	BRIDGE NO.: 03819

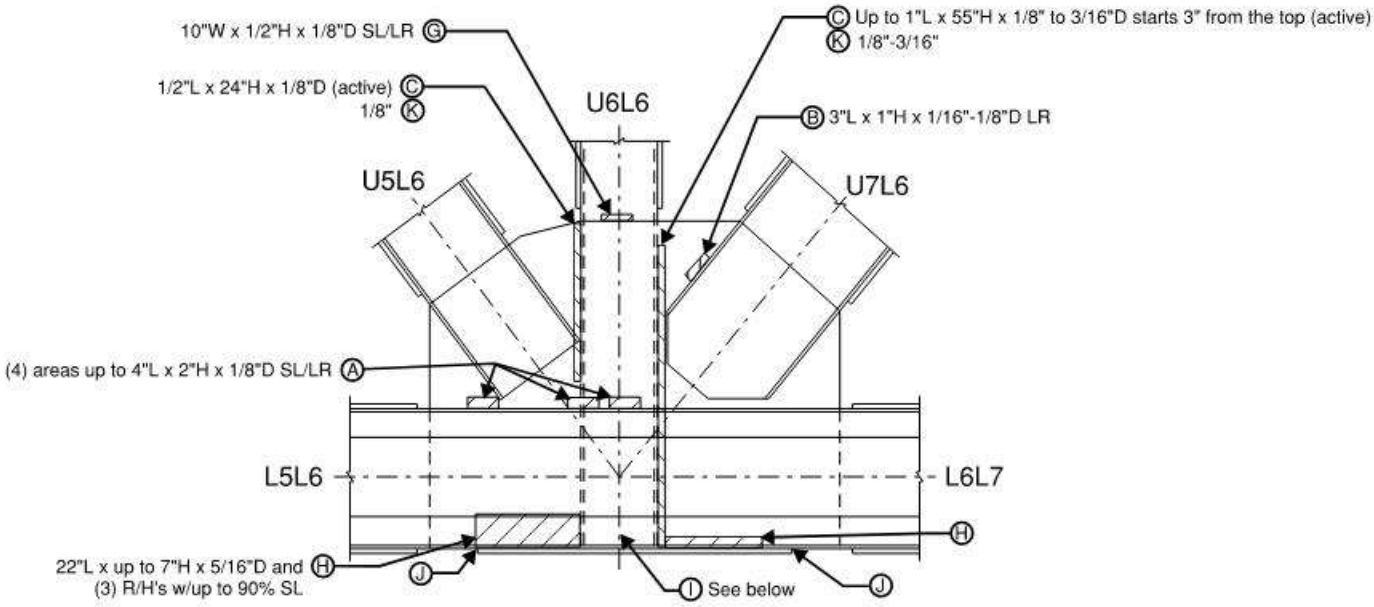

Span 23, North Truss, Node L6, North Gusset Plate, North Elevation

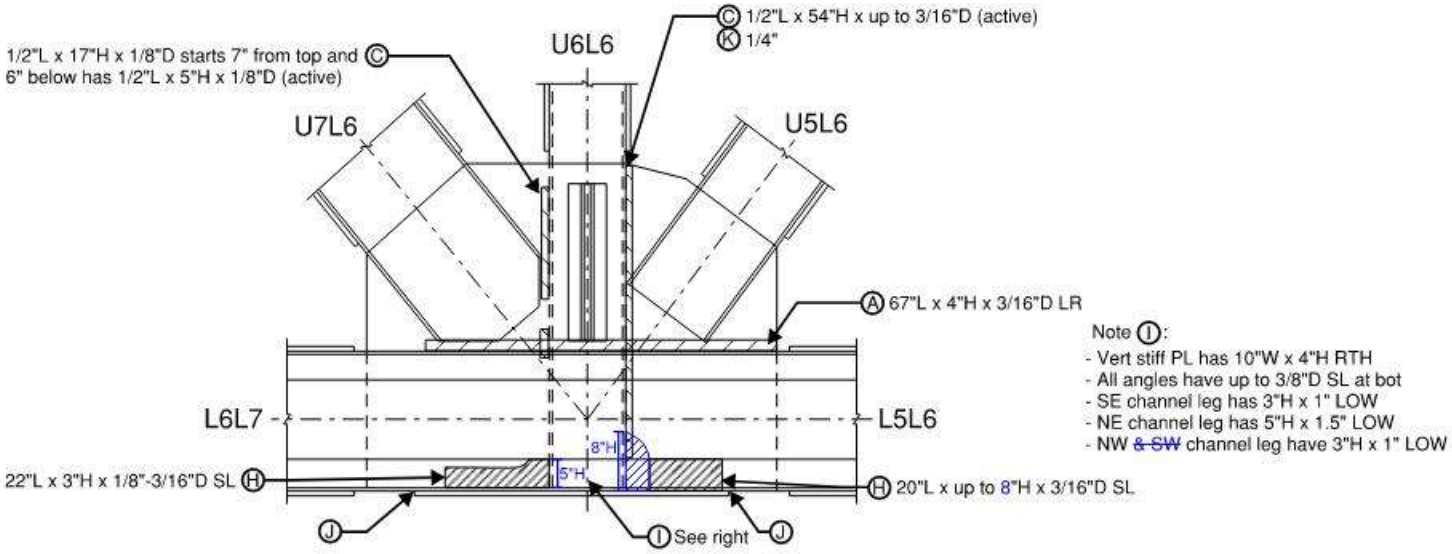

Span 23, North Truss, Node L6, South Gusset Plate, South Elevation

REVISION 1	DATE: 9/10/19	CREW: BH, JG (Baker)	REVISION 3	DATE:	CREW:
REVISION 2	DATE: 7/27/2021	CREW: BM, EB (PRIME)	REVISION 4	DATE:	CREW:

CREW: BF, SW	DATE: 10/19/2017	BRIDGE NO.: 03819

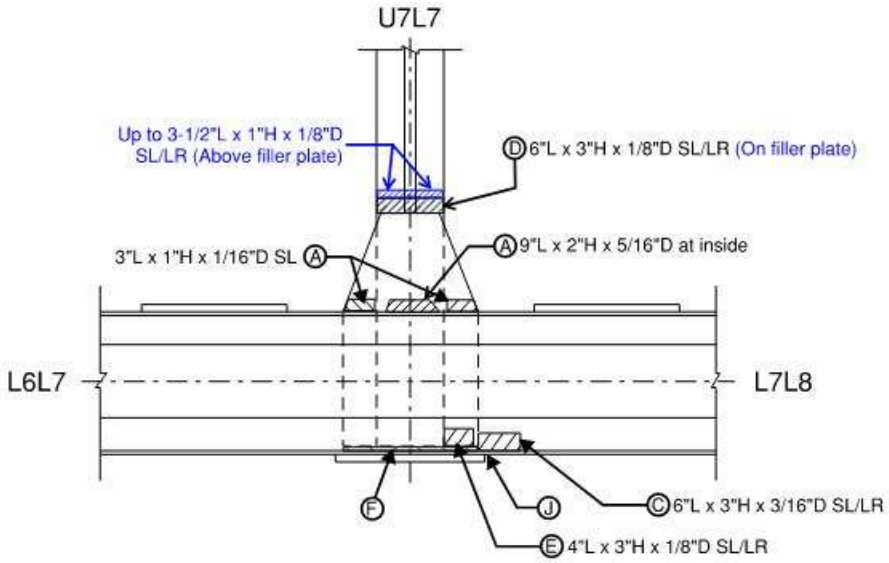

Span 23, North Truss, Node L7, North Gusset Plate, North Elevation

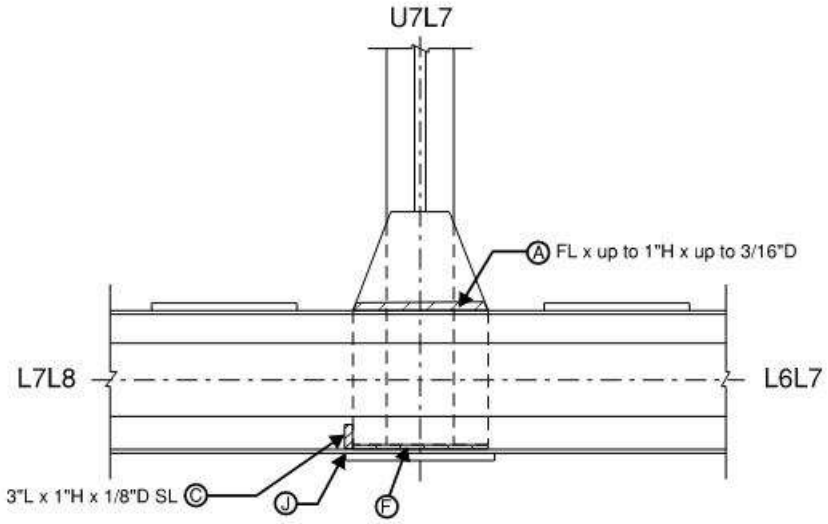

Span 23, North Truss, Node L7, South Gusset Plate, South Elevation

REVISION 1	DATE: 9/9/19	CREW: BH, JG (Baker)	REVISION 3	DATE:	CREW:
REVISION 2	DATE: 8/3/2021	CREW: BM, IS (PRIME)	REVISION 4	DATE:	CREW:

CREW: SW, BF	DATE: 10/19/2017	BRIDGE NO.: 03819

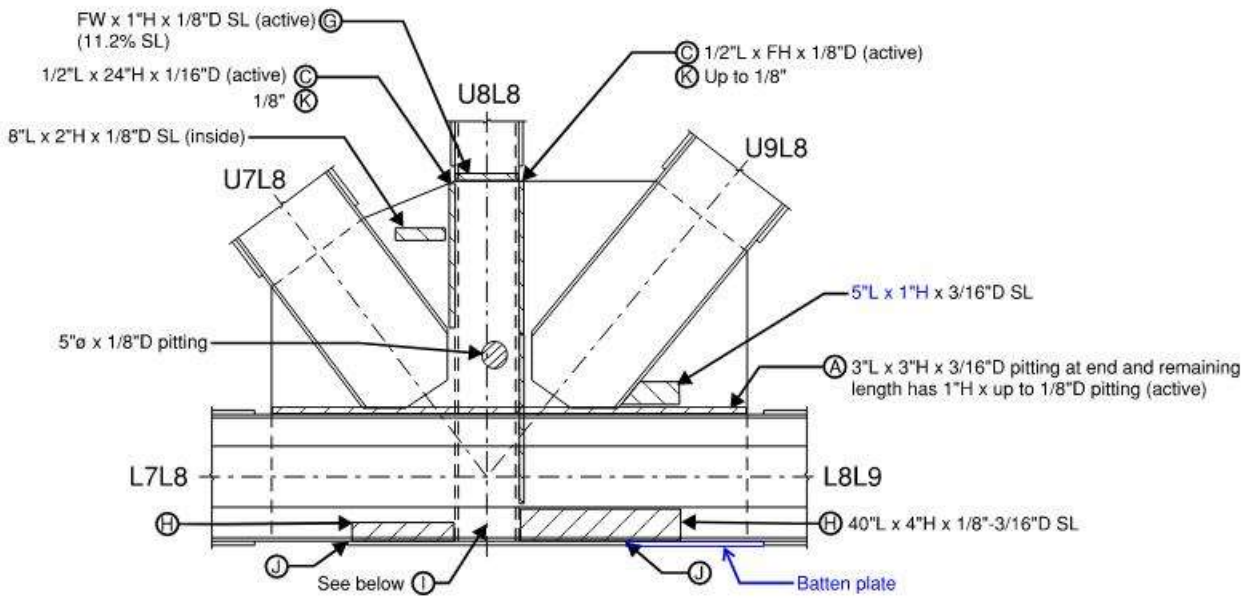

Span 23, North Truss, Node L8, North Gusset Plate, North Elevation

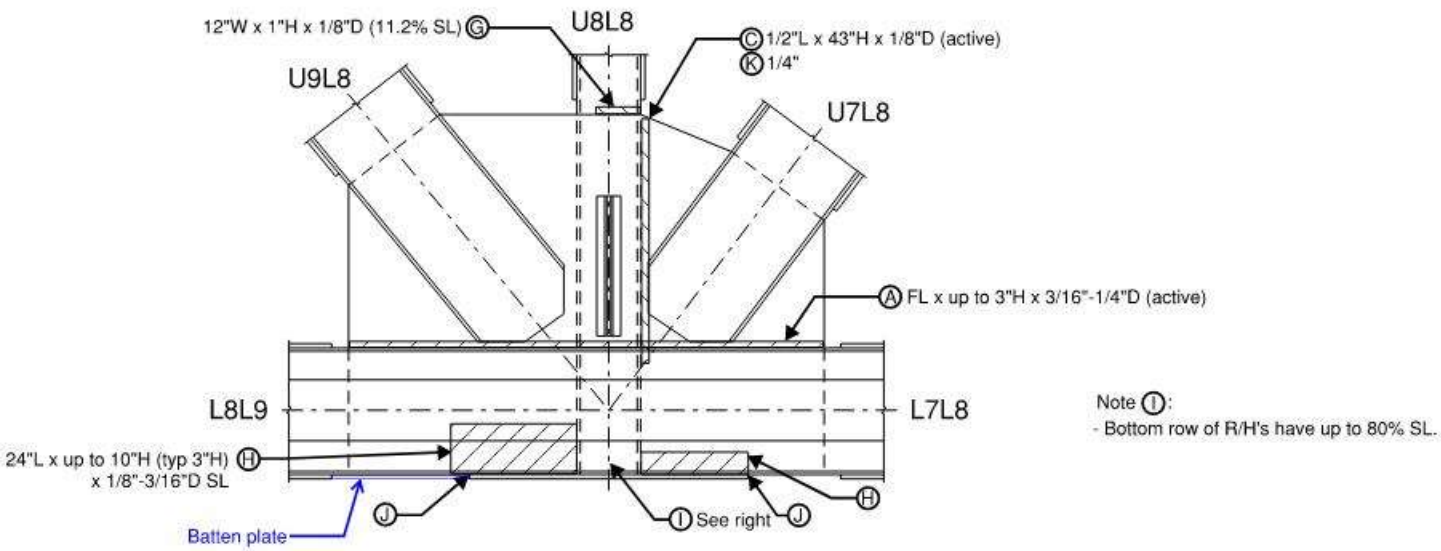

Span 23, North Truss, Node L8, South Gusset Plate, South Elevation

REVISION 1	DATE: 9/9/19	CREW: BH, JG (Baker)	REVISION 3	DATE:	CREW:
REVISION 2	DATE: 8/3/2021	CREW: BM, IS (PRIME)	REVISION 4	DATE:	CREW:

CREW: BF, SW	DATE: 10/19/2017	BRIDGE NO.: 03819

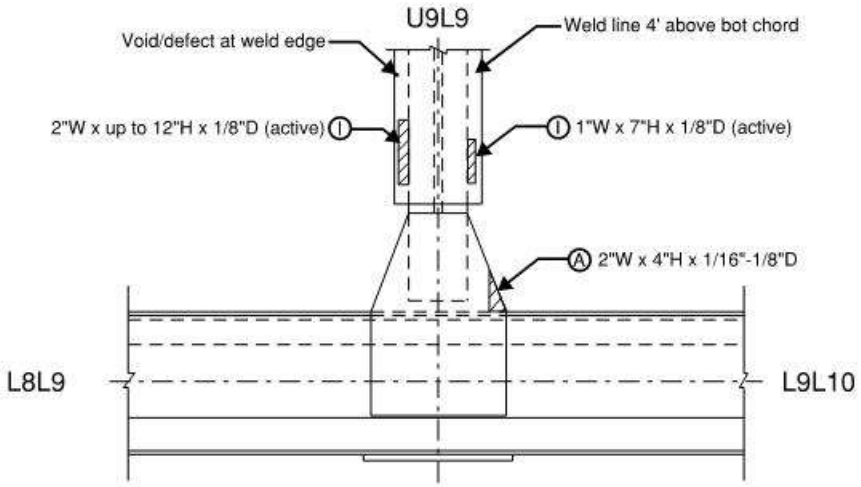

Span 23, North Truss, Node L9, North Gusset Plate, North Elevation

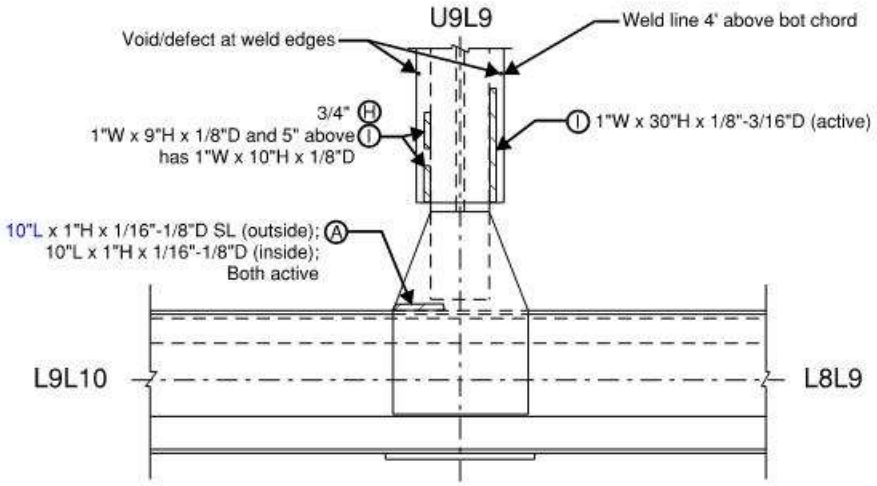

Span 23, North Truss, Node L9, South Gusset Plate, South Elevation

REVISION 1	DATE: 9/9/19	CREW: BH, JG (Baker) - No change	REVISION 3	DATE:	CREW:
REVISION 2	DATE: 8/3/2021	CREW: BM, IS (PRIME)	REVISION 4	DATE:	CREW:

Sketches
Inspection type: Fracture Critical,Routine
Inspection Date: 7/26/2021
Inspected by: PRIME AE

:Bridge No 03819

Town: NEW LONDON
Carried: INTERSTATE 95 NORTHBOUND
Crossed: THAMES RV,RR,LOCAL ROADS
Inventory Route: NHS

CREW: SW, BF	DATE: 10/13/2017	BRIDGE NO.: 03819

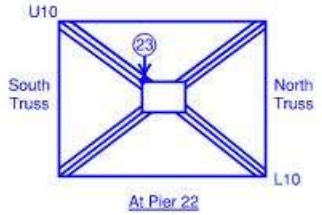

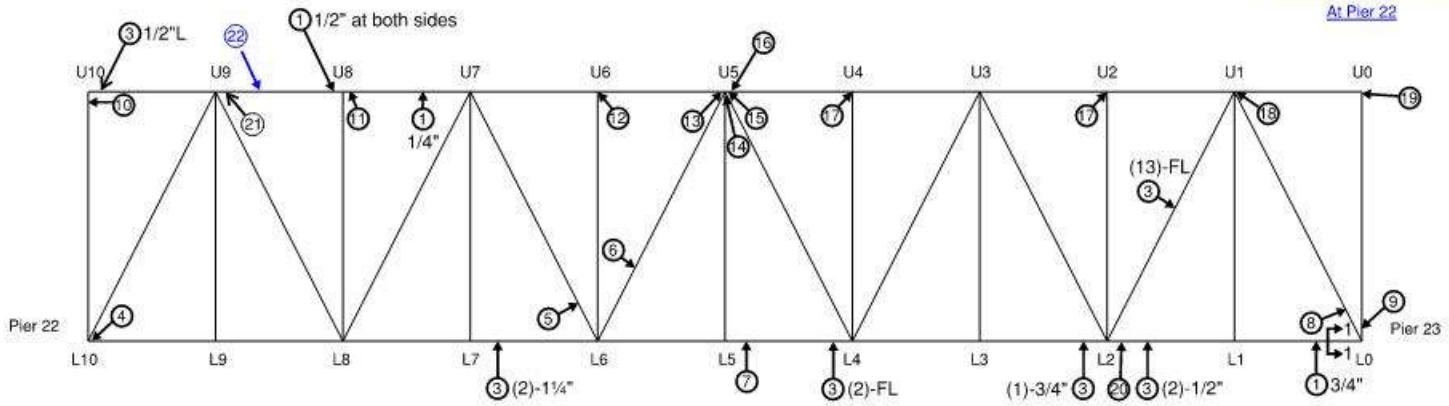

Deterioration Legend:

1. PR between chord flange angles and web PL up to __" thick
2. PR between chord flange angles and cover PL at edges up to __" thick (none on this sheet)
3. Tack welds partially cracked or broken at lacing bar or batten PL and chord; (# per panel) and up to __" long
4. Top of bottom chord with rose-budded connection bolts and rivets w/negligible loss (inside node)
5. N web PL (inside) has 18"L x 1"H x 3/16"D SL (active) along bottom
6. S channel top leg has random areas of SL up to 1"L x 4"W x 1/8"D, adj lattice bars w/ LR
7. Sheared R/H at lacing bar w/short bolt and no nut at bot of bot chord
8. Top flg angles horiz legs have SL up to 6"L x up to FW x 3/16"D; R/H's at bot lacing bars have up to 25% SL; S web PL (inside) has 7"L x7"H x 3/16"D SL
9. Vert member at both sides (inside) have (2) missing rivets at clip angles
10. Bot vert fill PL at E side is bowed out up to 5/8" over 10" due to IR
11. 1/2" PR at bot vert fill PL (outside) at both sides (plate bowed)
12. 1/8" gap between vert gusset PL and vert member at N side
13. S web PL has 1.5"ø x 1/8"-3/16"D SL/LR & 1/2" PR at SW & NW corners of vert gusset PL; (4) miss rivets/bolts at top chord
14. 6"L x 1/2" thick PR between chord bot flg and splice PL at south side
15. S web PL has 3"L x 2.5"H x 5/16"D SL & bot flg angle vert leg has 1.5"L x 1.5"H x 1/4"D SL/LR
16. Top of S bot flg splice PL has 6"L x 1/4"D SL
17. Broken tack weld between top of vert back-to-back angles and top chord seat angle (inside)
18. Up to 1/4" PR between bot flg angles and tie PL/splice (both sides); Lateral brace plate bent up 18'L x up to 1"H (as-built) on north side
19. Up to 1" PR between top chord web PL's at end
20. N side bot flg outside cover/splice PL has 54"L x 2"H x up to 3/16"D SL & S side has 4'L x up to 3"H x up to 3/8"D SL (ave 1/4"D) along bot edge
21. Bot splice PL w/ (1) broken tack a S. side due to 1/4" IR with 1/8"D section loss at location
22. S web PL has 5"L x up to 1-1/2"H x 1/8"D SL
23. Full width x up to 2"H x 3/16"D section loss (Sway bracing) with up to 1"T impact rust

General Notes:

- See Riveted Truss General Notes (Spans 22-25 & 29-32) sheet.
- See following gusset plate sheets for bottom chord gusset plate details.

Span 23 - South Truss South Elevation

REVISION 1	DATE: 8/19/19	CREW: BH, JG (Baker)	REVISION 3	DATE:	CREW:
REVISION 2	DATE: 8/16/2021	CREW: BM, CMR, AN, IS (PRIME)	REVISION 4	DATE:	CREW:

CREW: SW, BF	DATE: 10/13/2017	BRIDGE NO.: 03819

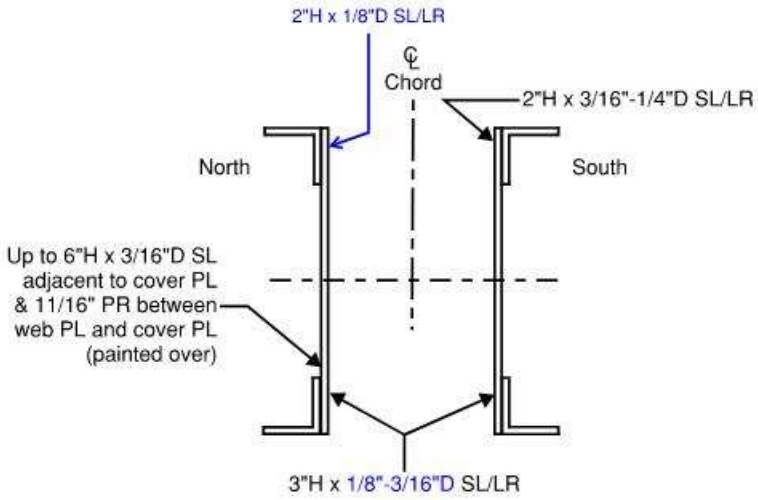

Section 1-1 (L0-L1)

Span 23 - South Truss Section Loss

REVISION 1	DATE: 8/19/19	CREW: BH, JG (Baker)	REVISION 3	DATE:	CREW:
REVISION 2	DATE: 9/14/2021	CREW: BM, IS (PRIME)	REVISION 4	DATE:	CREW:

CREW: SW, BF	DATE: 10/13/2017	BRIDGE NO.: 03819

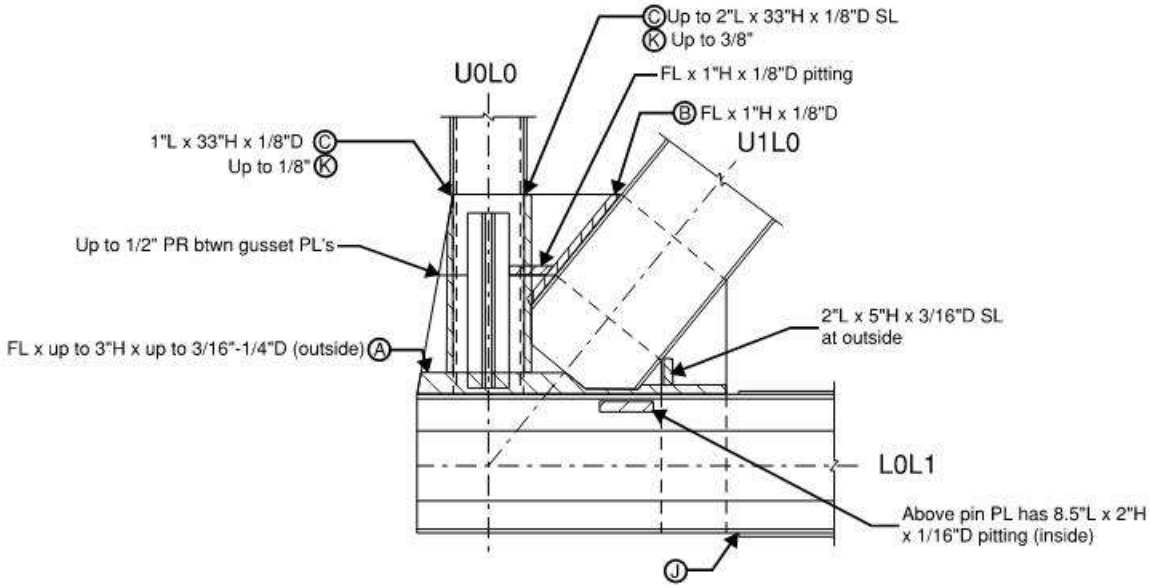

Span 23, South Truss, Node L0, North Gusset Plate, North Elevation

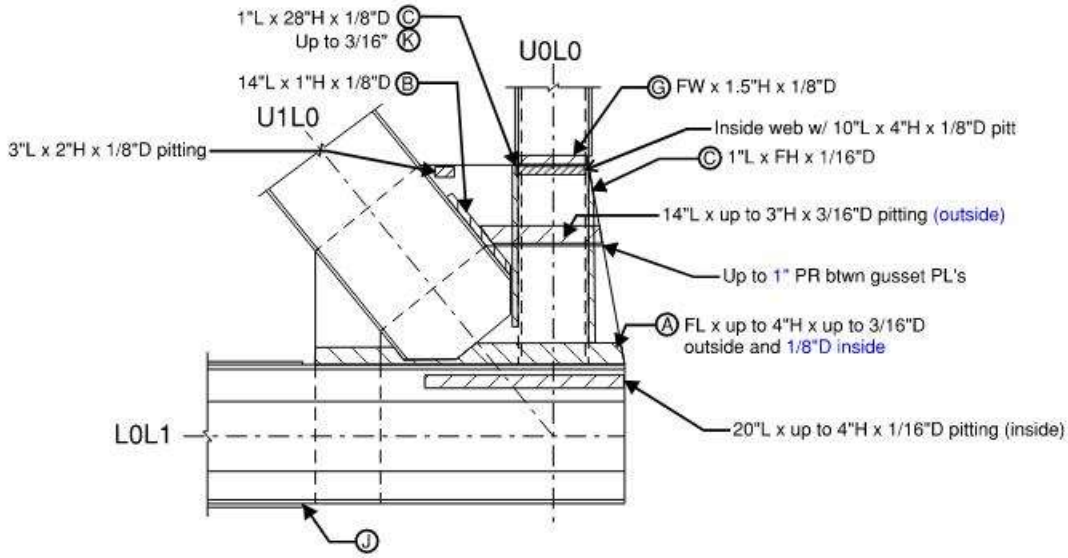

Span 23, South Truss, Node L0, South Gusset Plate, South Elevation

REVISION 1	DATE: 8/19/19	CREW: BH, JG (Baker)	REVISION 3	DATE:	CREW:
REVISION 2	DATE: 9/14/2021	CREW: BM, IS (PRIME)	REVISION 4	DATE:	CREW:

CREW: SW, BF	DATE: 10/13/2017	BRIDGE NO.: 03819

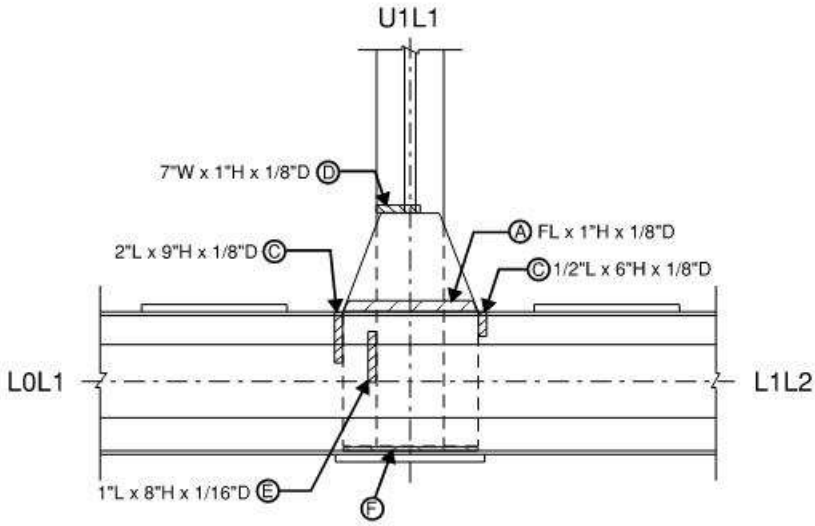

Span 23, South Truss, Node L1, North Gusset Plate, North Elevation

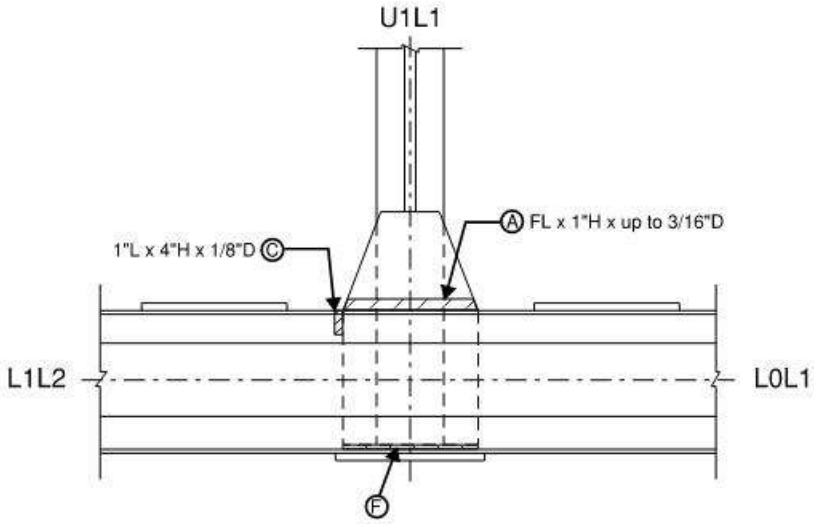

Span 23, South Truss, Node L1, South Gusset Plate, South Elevation

REVISION 1	DATE: 8/19/19	CREW: BH, JG (Baker)	REVISION 3	DATE:	CREW:
REVISION 2	DATE: 9/14/2021	CREW: BM, IS (PRIME) - No Change	REVISION 4	DATE:	CREW:

Sketches
Inspection type: Fracture Critical,Routine
Inspection Date: 7/26/2021
Inspected by: PRIME AE

:Bridge No 03819

Town: NEW LONDON
Carried: INTERSTATE 95 NORTHBOUND
Crossed: THAMES RV,RR,LOCAL ROADS
Inventory Route: NHS

CREW: SW, BF	DATE: 10/13/2017	BRIDGE NO.: 03819

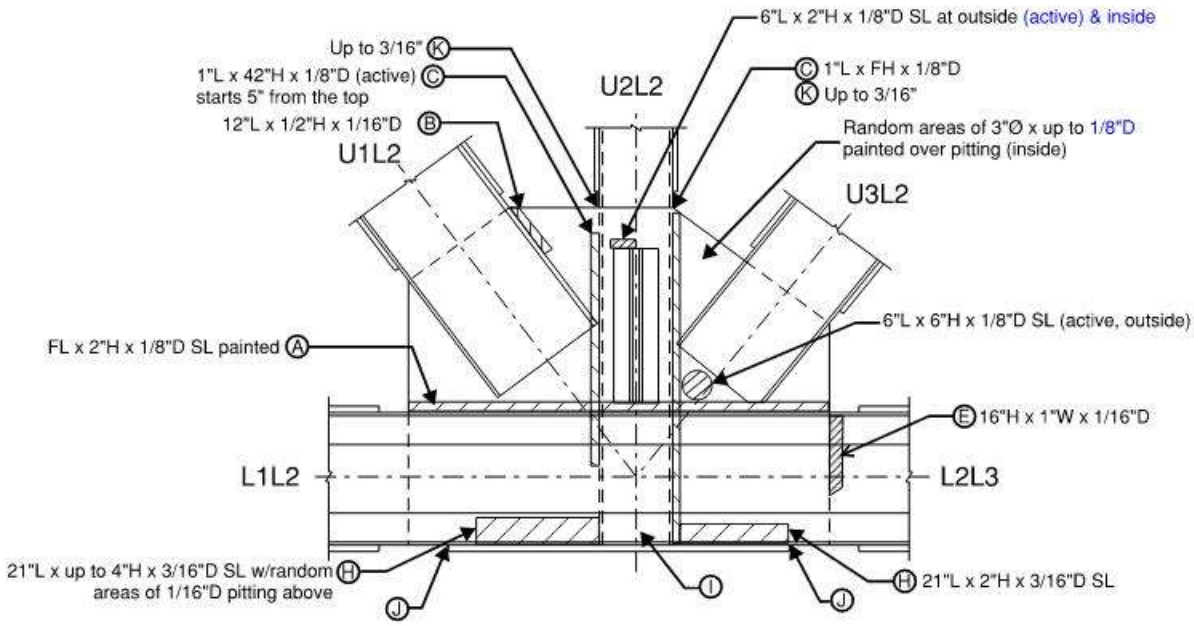

Span 23, South Truss, Node L2, North Gusset Plate, North Elevation

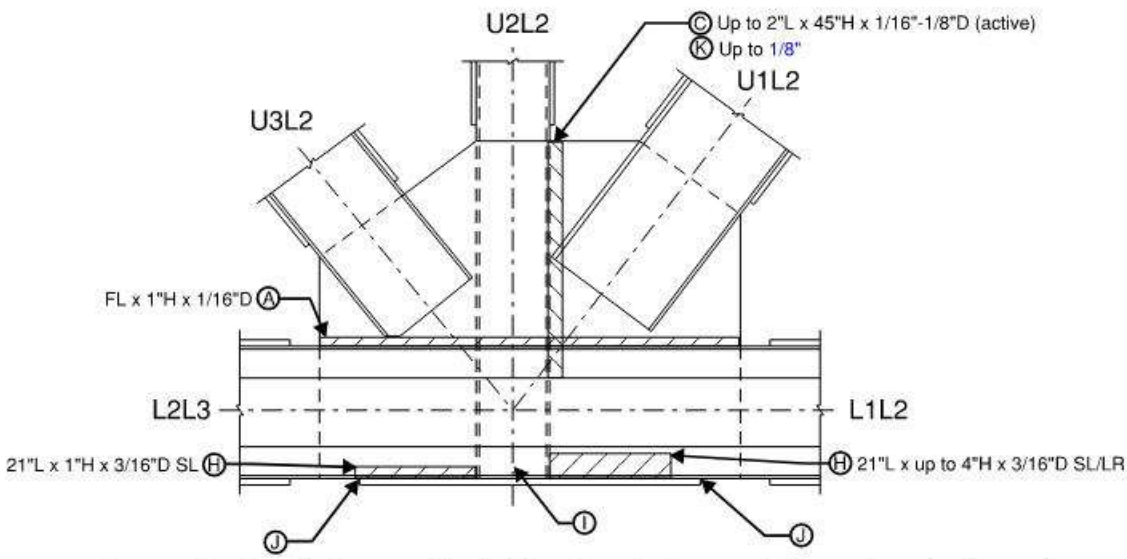

Span 23, South Truss, Node L2, South Gusset Plate, South Elevation

REVISION 1	DATE: 8/19/19	CREW: BH, JG (Baker)	REVISION 3	DATE:	CREW:
REVISION 2	DATE: 9/14/2021	CREW: BM, IS (PRIME)	REVISION 4	DATE:	CREW:

CREW: BF, SW	DATE: 10/13/2017	BRIDGE NO.: 03819

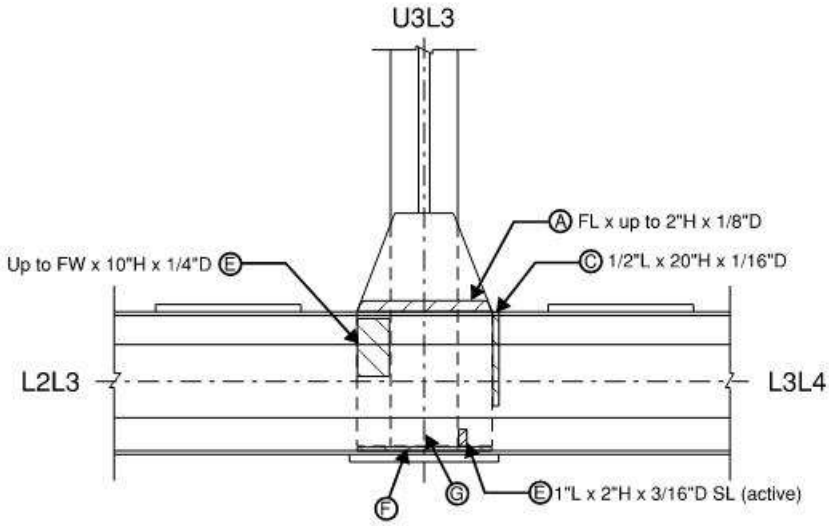

Span 23, South Truss, Node L3, North Gusset Plate, North Elevation

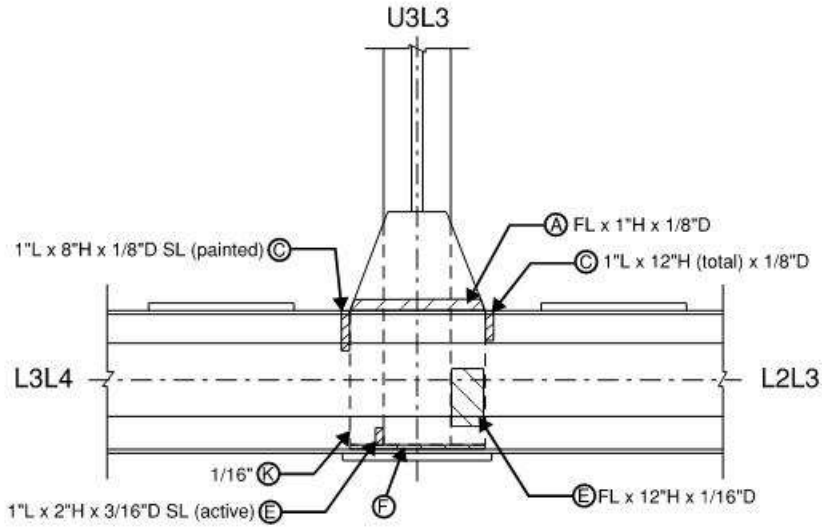

Span 23, South Truss, Node L3, South Gusset Plate, South Elevation

REVISION 1	DATE: 8/19/19	CREW: BH, JG (Baker)	REVISION 3	DATE:	CREW:
REVISION 2	DATE: 9/14/2021	CREW: BM, IS (PRIME) - No Change	REVISION 4	DATE:	CREW:

CREW: BF, SW	DATE: 10/13/2017	BRIDGE NO.: 03819

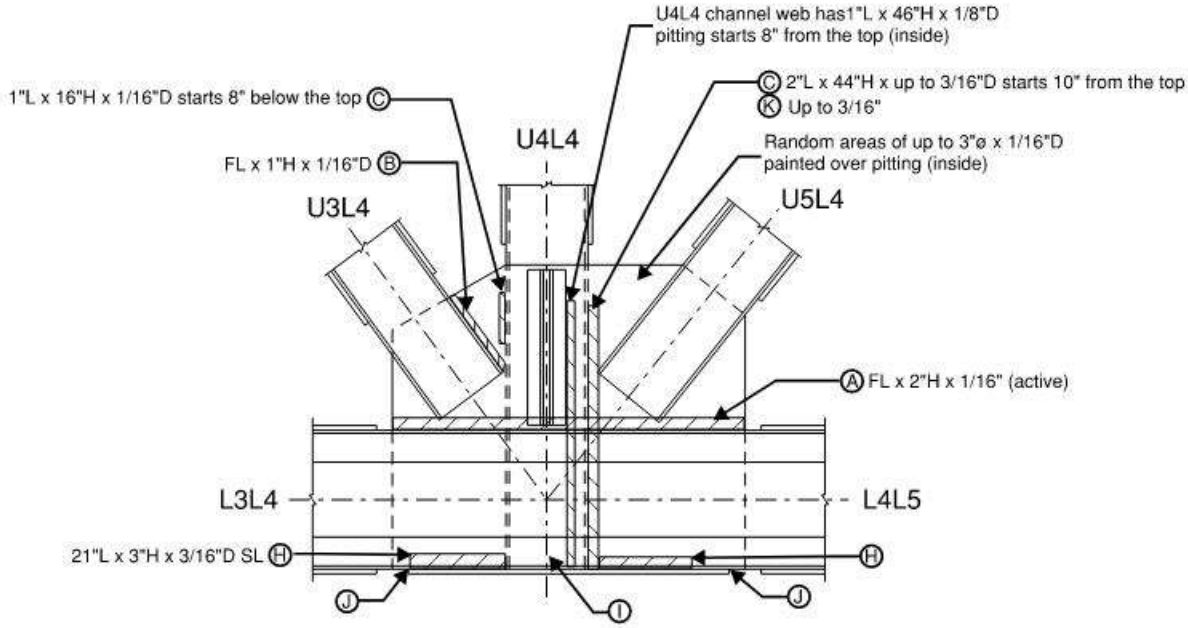

Span 23, South Truss, Node L4, North Gusset Plate, North Elevation

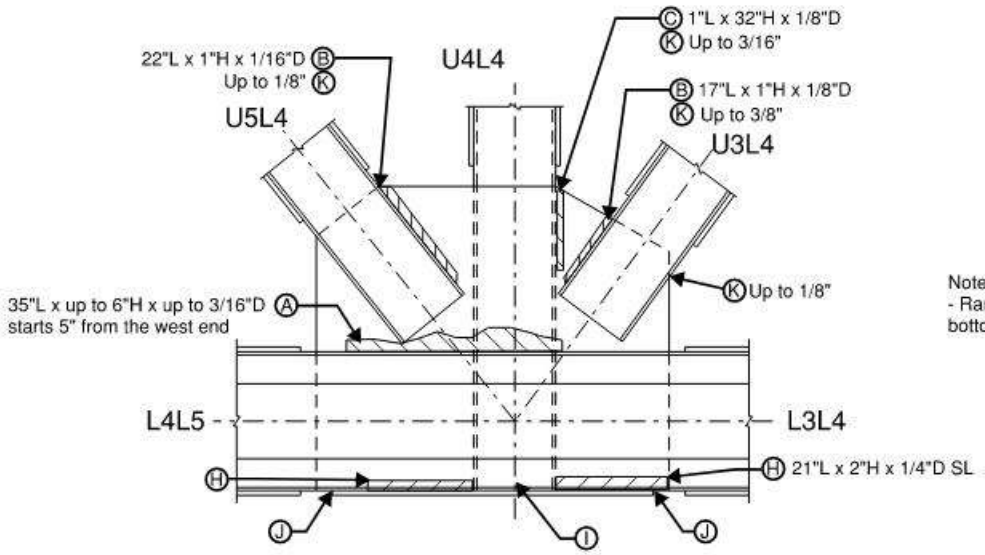

Note:
- Random areas of 1/16"D pitting throughout bottom 2' at both plates.

Span 23, South Truss, Node L4, South Gusset Plate, South Elevation

REVISION 1	DATE: 8/19/19	CREW: BH, JG (Baker)	REVISION 3	DATE:	CREW:
REVISION 2	DATE: 9/16/2021	CREW: CMR, AN (PRIME) - No Change	REVISION 4	DATE:	CREW:

CREW: SW, BF	DATE: 10/13/2017	BRIDGE NO.: 03819

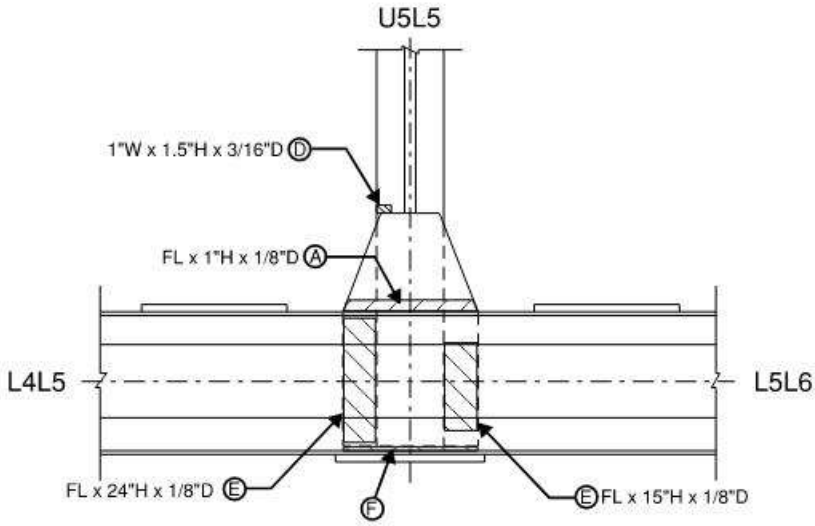

Span 23, South Truss, Node L5, North Gusset Plate, North Elevation

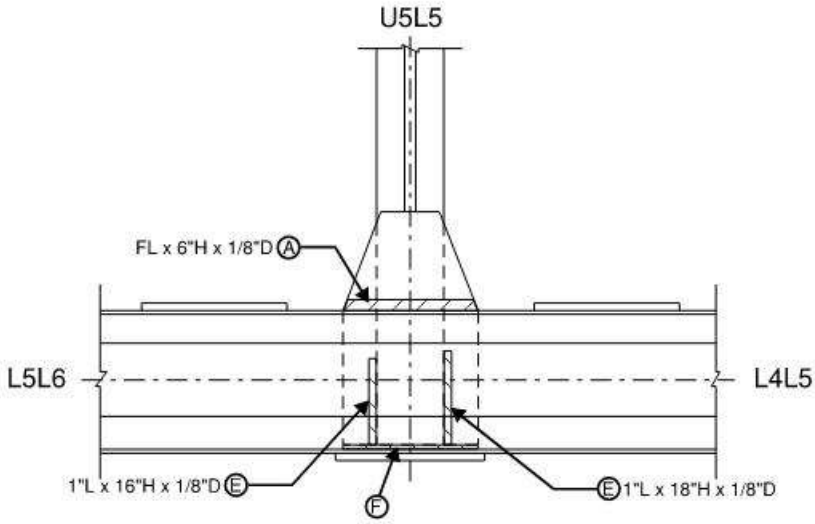

Span 23, South Truss, Node L5, South Gusset Plate, South Elevation

REVISION 1	DATE: 8/19/19	CREW: BH, JG (Baker)	REVISION 3	DATE:	CREW:
REVISION 2	DATE: 9/16/2021	CREW: CMR, AN (PRIME) - No Change	REVISION 4	DATE:	CREW:

CREW: SW, BF	DATE: 10/13/2017	BRIDGE NO.: 03819

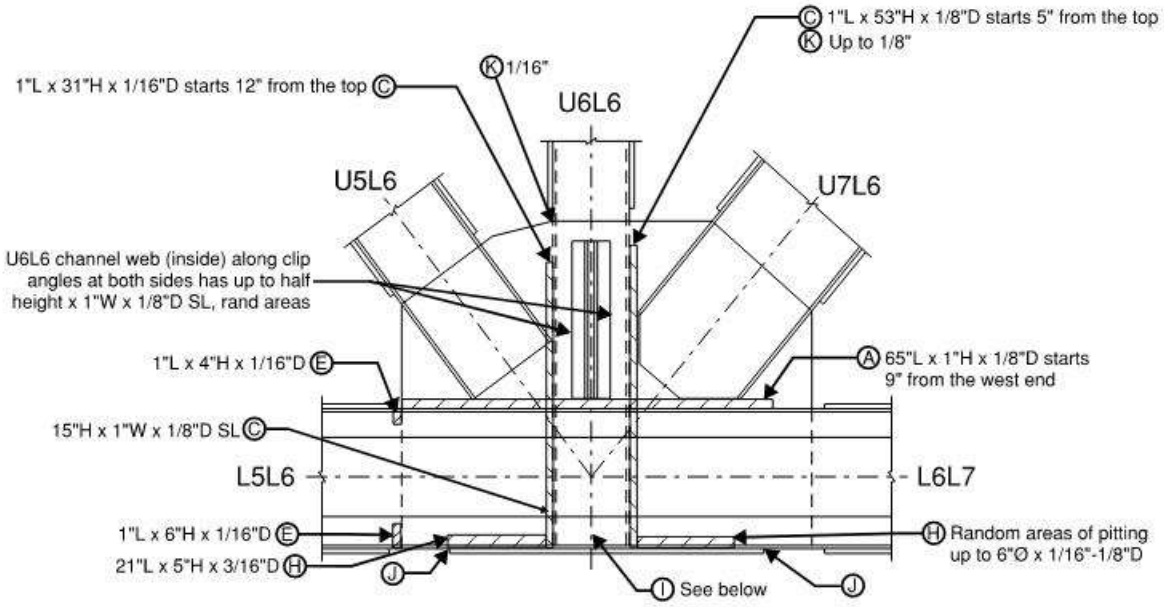

Span 23, South Truss, Node L6, North Gusset Plate, North Elevation

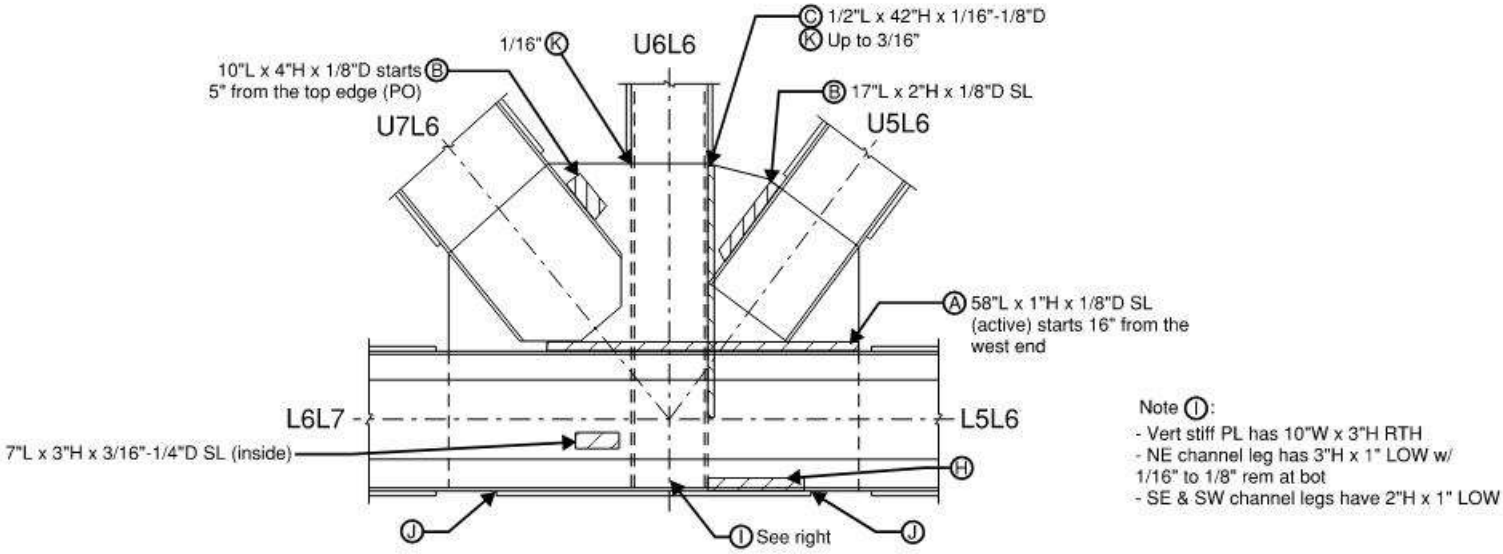

Span 23, South Truss, Node L6, South Gusset Plate, South Elevation

REVISION 1	DATE: 8/19/19	CREW: BH, JG (Baker)	REVISION 3	DATE:	CREW:
REVISION 2	DATE: 9/16/2021	CREW: CMR, AN (PRIME) - No Change	REVISION 4	DATE:	CREW:

CREW: BF, SW	DATE: 10/13/2017	BRIDGE NO.: 03819

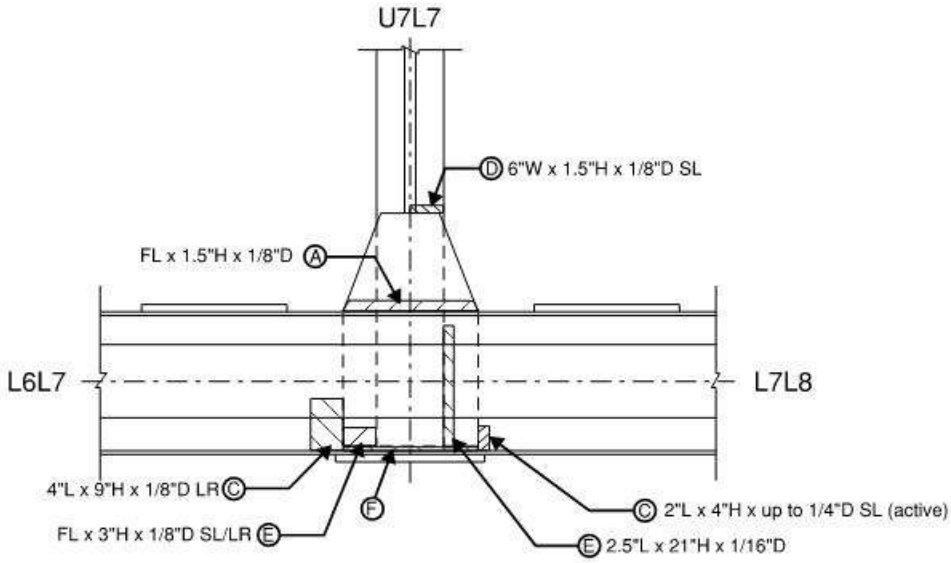

Span 23, South Truss, Node L7, North Gusset Plate, North Elevation

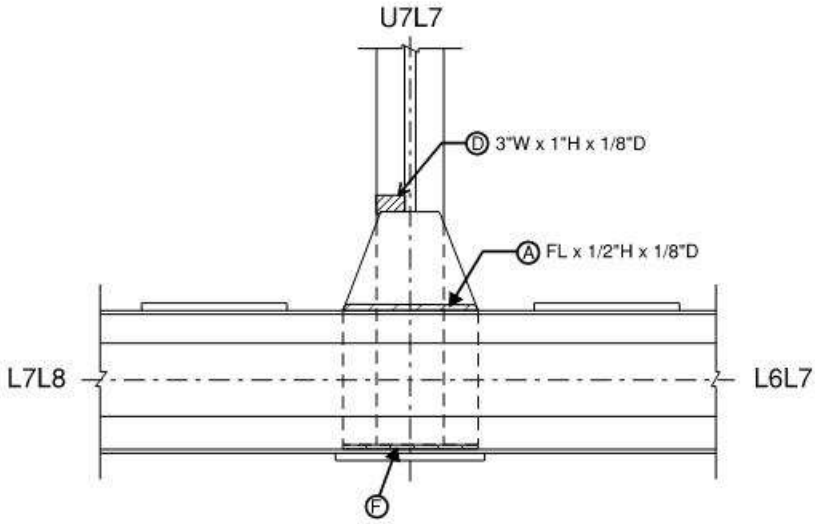

Span 23, South Truss, Node L7, South Gusset Plate, South Elevation

REVISION 1	DATE: 8/19/19	CREW: BH, JG (Baker)	REVISION 3	DATE:	CREW:
REVISION 2	DATE: 9/13/2021	CREW: BM, IS (PRIME) - No Change	REVISION 4	DATE:	CREW:

Sketches
Inspection type: Fracture Critical,Routine
Inspection Date: 7/26/2021
Inspected by: PRIME AE

:Bridge No 03819

Town: NEW LONDON
Carried: INTERSTATE 95 NORTHBOUND
Crossed: THAMES RV,RR,LOCAL ROADS
Inventory Route: NHS

CREW: SW, BF	DATE: 10/13/2017	BRIDGE NO.: 03819

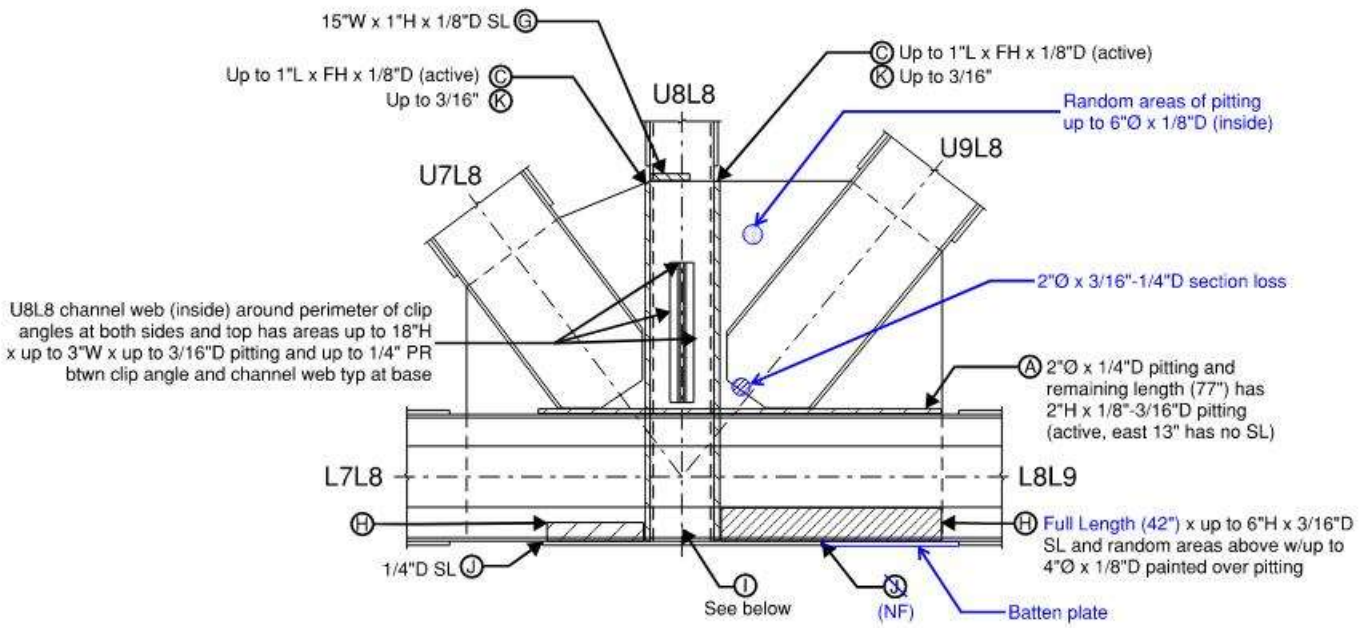

Span 23, South Truss, Node L8, North Gusset Plate, North Elevation

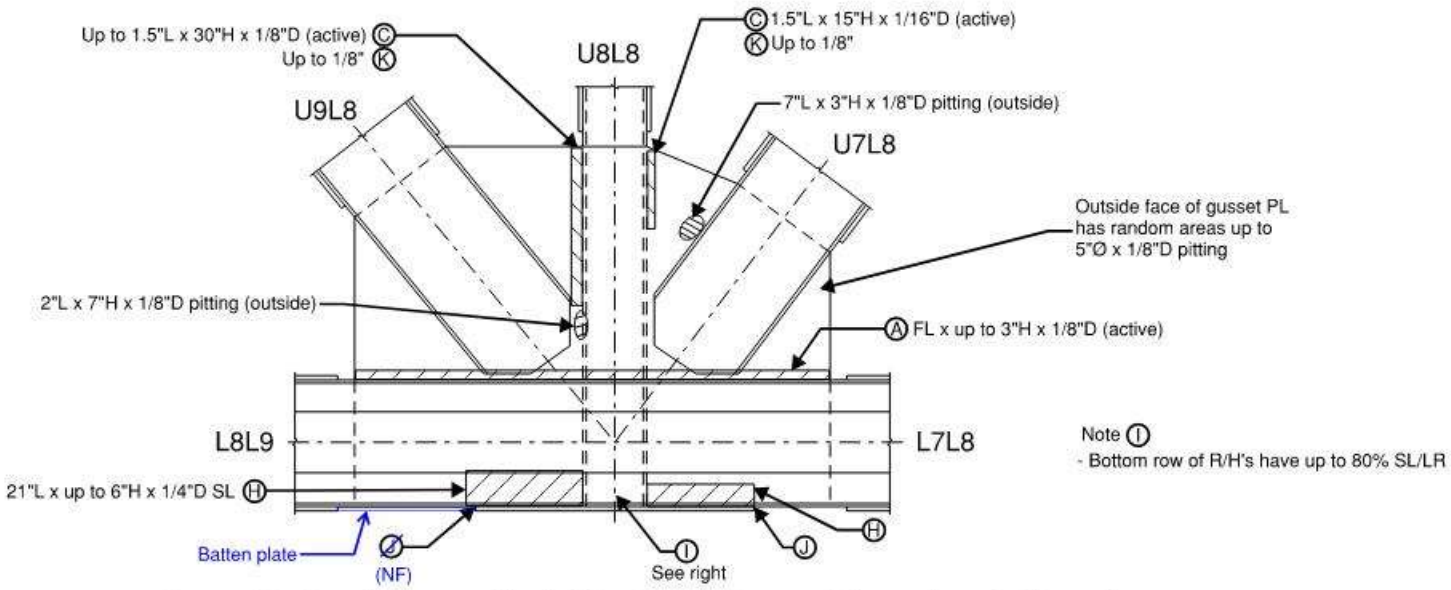

Span 23, South Truss, Node L8, South Gusset Plate, South Elevation

REVISION 1	DATE: 8/19/19	CREW: BH, JG (Baker)	REVISION 3	DATE:	CREW:
REVISION 2	DATE: 9/13/2021	CREW: BM, IS (PRIME)	REVISION 4	DATE:	CREW:

CREW: SW, BF	DATE: 10/13/2017	BRIDGE NO.: 03819

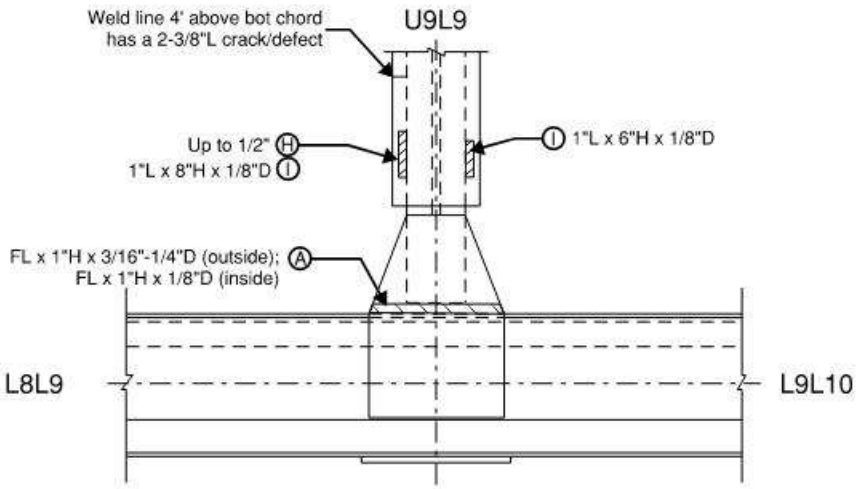

Span 23, South Truss, Node L9, North Gusset Plate, North Elevation

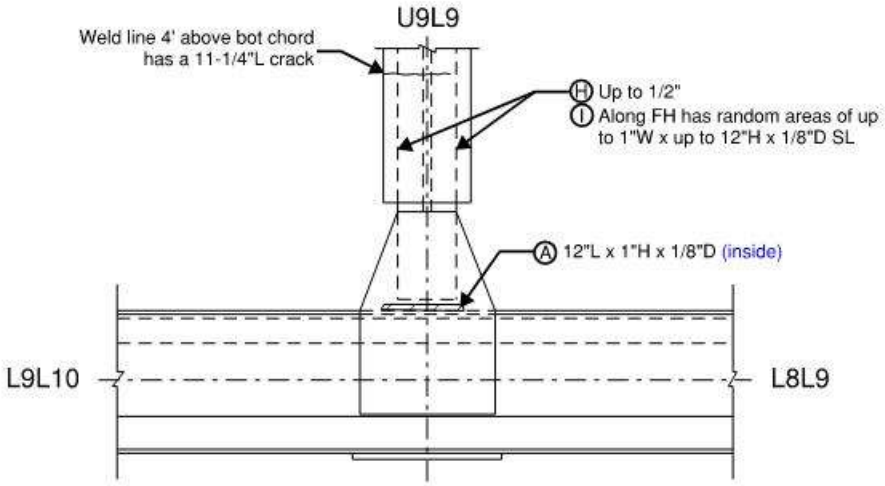

Span 23, South Truss, Node L9, South Gusset Plate, South Elevation

REVISION 1	DATE: 8/19/19	CREW: BH, JG (Baker) - No change	REVISION 3	DATE:	CREW:
REVISION 2	DATE: 9/13/2021	CREW: BM, IS (PRIME)	REVISION 4	DATE:	CREW:

CREW: SW, BF	DATE: 10/13/2017	BRIDGE NO.: 03819

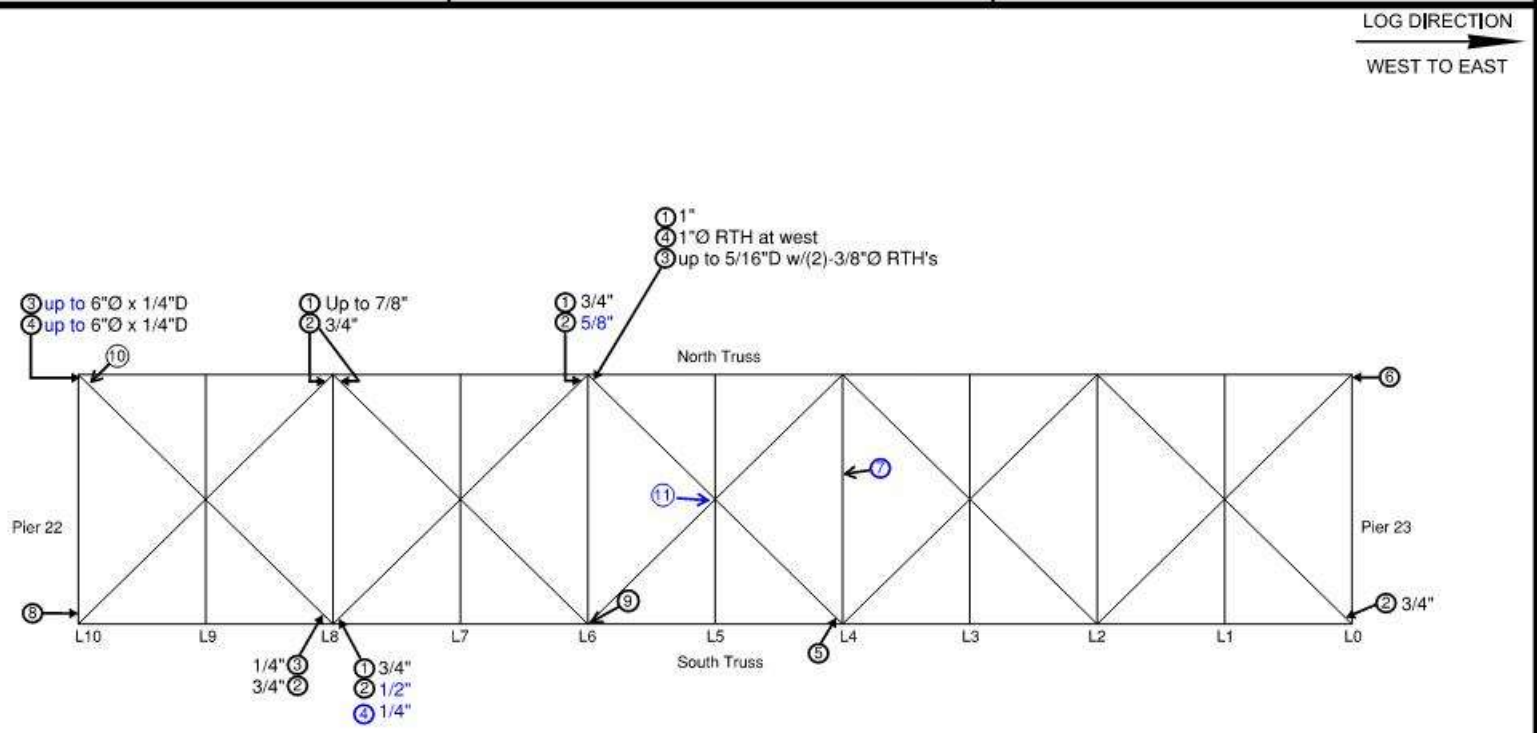

Deterioration Legend:

1 - PR between top horiz gusset PL and bracing members up to __" thick
2 - PR between bot horiz gusset PL and bracing members up to __" thick
3 - Pitting on top horiz gusset PL areas up to __" deep
4 - Pitting on bot horiz gusset PL areas up to __" deep
5 - Top gusset PL has (5) R/H's w/up to 50% SL
6 - Bot angle of horiz X-member and end of vert leg (on both angles) have RTH's up to 3-1/2"L x 1-1/4"H (painted over)
7 - Lat brace lower angle w/ 12'L x 6"W x 3/16"D pitt PO re-rusting
8 - Sway bracing has 25% SL to random rivet heads
9 - Top horiz G PL w/ 1/8"D SL/LR
10 - Lat brac bot angle VT leg w/ 5" x 1" RTH
11 - Bird nest on horiz G PL's

General Notes:
- See Lateral and Sway Bracing General Notes (Spans 22-25 & 29-32) sheet.

Span 23 - Bottom Laterals

REVISION 1	DATE: 8/19/19	CREW: BH, JG (Baker)	REVISION 3	DATE:	CREW:
REVISION 2	DATE: 8/3/2021	CREW: BM, CMR, AN, EB, IS (PRIME)	REVISION 4	DATE:	CREW:

Sketches
Inspection type: Fracture Critical,Routine
Inspection Date: 7/26/2021
Inspected by: PRIME AE

:Bridge No 03819

Town: NEW LONDON
Carried: INTERSTATE 95 NORTHBOUND
Crossed: THAMES RV,RR,LOCAL ROADS
Inventory Route: NHS

CREW: SW, BF	DATE: 10/20/2017	BRIDGE NO.: 03819

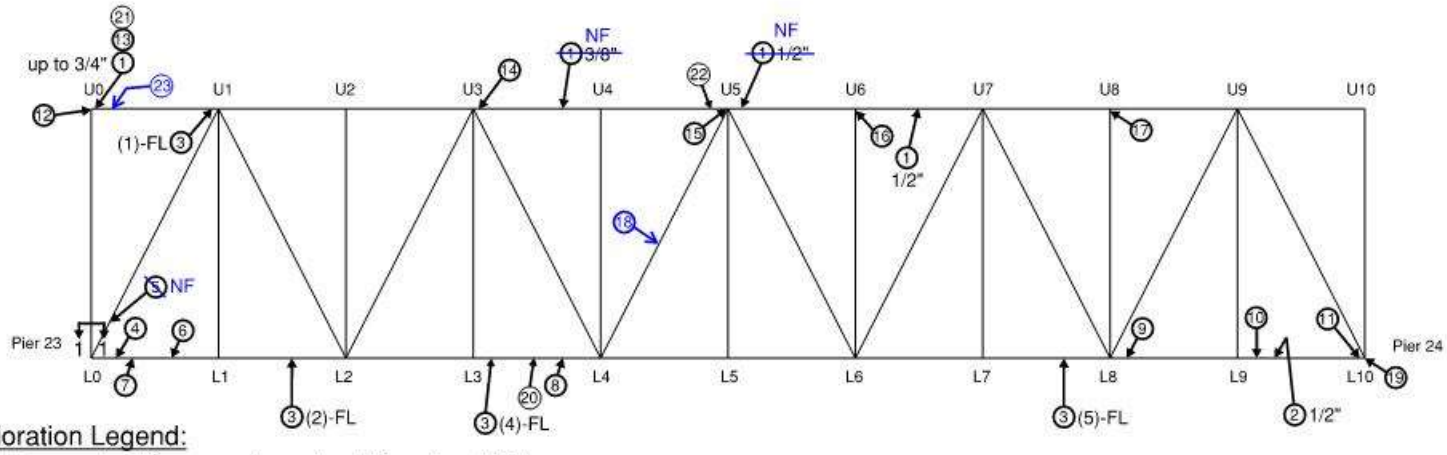

Deterioration Legend:

1 - PR between chord flange angles and web PL up to __" thick
2 - PR between chord flange angles and cover PL at edges up to __" thick
3 - Tack welds partially cracked or broken at lacing bar or batten PL and chord; (# per panel) and up to __" long
4 - N web PL (inside) at bot has 3'L x 4"H x 1/16"D SL & top has 10"L x 4"H x 1/16"D SL
5 - ~~S web cover PL has FW x 5"H x 3/16"D pitting & (1) R/H w/25% SL at end of cover PL at node~~ NF
6 - Lacing bar at bot flg has (1) missing rivet
7 - N web (outside) has 11"L x 3"H x 1/16"-1/8"D SL/LR
8 - Bot flg N angle horiz leg has random areas of SL up to 12"L x 2"W x 3/16"D & vert leg has areas up to 16"L x 1"H x 1/8"D pitting
9 - Top cover PL has areas of pitting up to 6"L x 12"W x 1/4"D
10 - Top cover PL has areas of active SL up to 1'ø x 1/16" to 1/8"D and painted over pitting areas up to 3"ø x 1/8"D
11 - Top cover PL inside node has (3) areas of pitting up to 4"ø x 3/16"-1/4"D
12 - Up to 1-1/8" PR between web PL's at end
13 - E side of U0 has 1/4" PR at S splice PL & horizontal leg of bot flg angles and splice PL's have 1"H x 2'L x 1/16"-1/8"D SL at PR areas for node; up to 1/2" PR b/w web and splice PL's
14 - SE side of node at top flg has (1) missing rivet/or bolt inside
15 - 3/4" PR between N bot angle & splice PL w/10"L x 1"W x 1/16" rem at splice PL & (14) R/H's have up to 50% SL
16 - N vert gusset PL near bot is bowed up to 3/16" over 1' due to PR (only 1/16" PR at this location)
17 - N vert shim PL below gusset PL near bot is bowed up to 3/16" due to PR & S vert gusset PL at E side is bowed out up to 1/2" over 5"L due to PR
18 - N & S channel webs with random areas of 4"L x 1/2"H x 1/16"D SL along cover plate.
19 - 1/4" PR between vert PL at pin PL cap & 1/8" pitting to pin PL around cap
20 - (1) lattice bar at bot 90% rusted out with KE rem
21 - North top chord bot angle horiz leg w/ 10"L x FW x 1/8" rem; (1) location w/ 1"ø paper thin w/ pinhole
22 - South top chord bot angle w/ 3'L x 2"H x 1/8"D SL/LR & 2'L x 4"W x 3/16"D SL/LR at Horizontal leg
23 - ± 1" thick pack rust between top chord N. web plate & splice plate & 4"H x 1"L x 1/8"D SL at web plate along splice plate.
24 - N & S channel webs with random areas of 4"L x 1/2"H x 1/16"D SL along cover plate.

Span 24 - North Truss South Elevation

General Notes:
- See Riveted Truss General Notes (Spans 22-25 & 29-32) sheet
- See following gusset plate sheets for bottom chord gusset plate details

REVISION 1	DATE: 9/9/19	CREW: AH, BF (Baker)	REVISION 3	DATE:	CREW:
REVISION 2	DATE: 8/30/2021	CREW: BM, EG, EB, SD, AN (PRIME)	REVISION 4	DATE:	CREW:

CREW: SW, KT	DATE: 8/23/2017	BRIDGE NO.: 03819

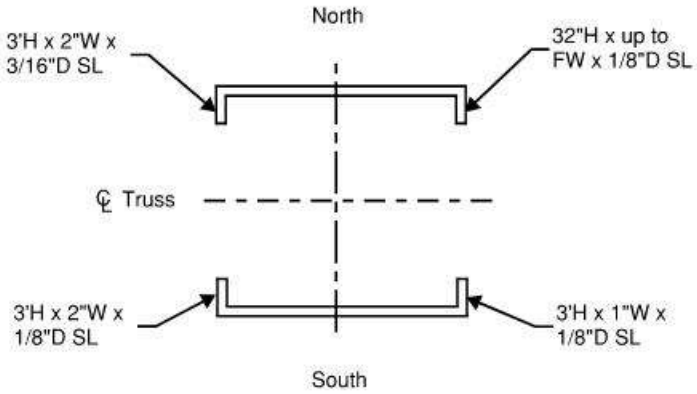

Section 1-1 (U0-L0)

(5.1% Loss)

Note:
- All (4) corners have up to 5/16" thick PR between flg's and bot chord vertical gusset PL
- All PO inside node at stiffened area

Span 24 - North Truss Section Loss

REVISION 1	DATE: 9/10/19	CREW: BH, JG (Baker)	REVISION 3	DATE:	CREW:
REVISION 2	DATE: 9/16/2021	CREW: BM, EB (PRIME) - No Change	REVISION 4	DATE:	CREW:

Sketches
Inspection type: Fracture Critical,Routine
Inspection Date: 7/26/2021
Inspected by: PRIME AE

:Bridge No 03819

Town: NEW LONDON
Carried: INTERSTATE 95 NORTHBOUND
Crossed: THAMES RV,RR,LOCAL ROADS
Inventory Route: NHS

CREW: SW, BF	DATE: 10/20/2017	BRIDGE NO.: 03819

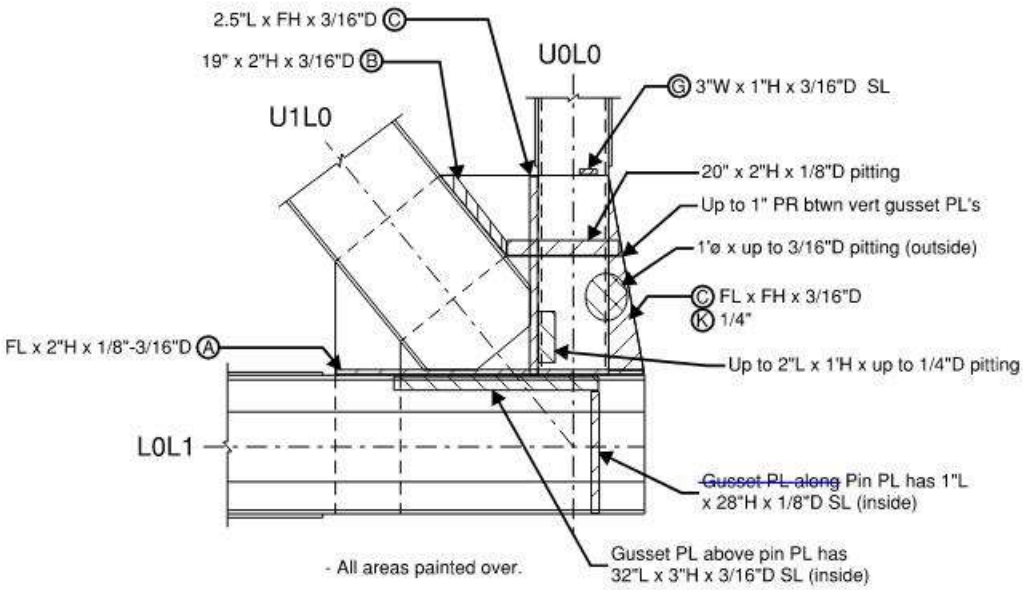

Span 24, North Truss, Node L0, North Gusset Plate, North Elevation

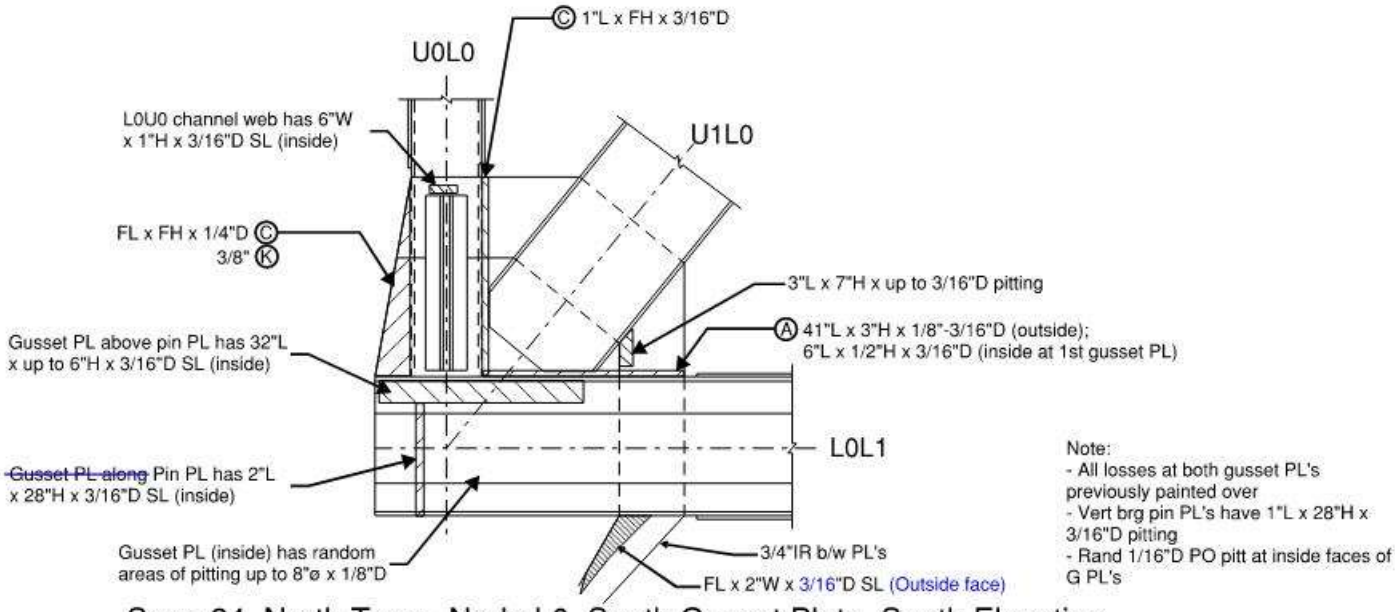

Note:
- All losses at both gusset PL's previously painted over
- Vert brg pin PL's have 1"L x 28"H x 3/16"D pitting
- Rand 1/16"D PO pitt at inside faces of G PL's

Span 24, North Truss, Node L0, South Gusset Plate, South Elevation

REVISION 1	DATE: 9/10/19	CREW: BH, JG (Baker)	REVISION 3	DATE:	CREW:
REVISION 2	DATE: 9/16/2021	CREW: BM, EB (PRIME)	REVISION 4	DATE:	CREW:

CREW: SW, BF	DATE: 10/20/2017	BRIDGE NO.: 03819

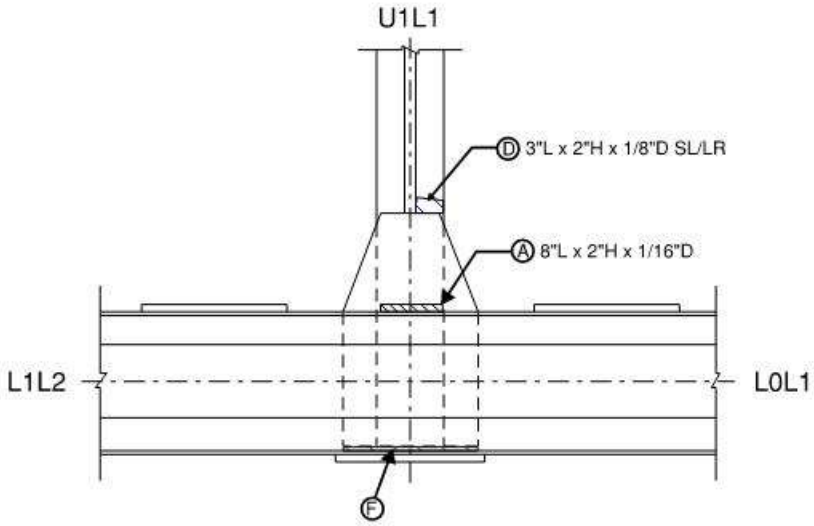

Span 24, North Truss, Node L1, North Gusset Plate, North Elevation

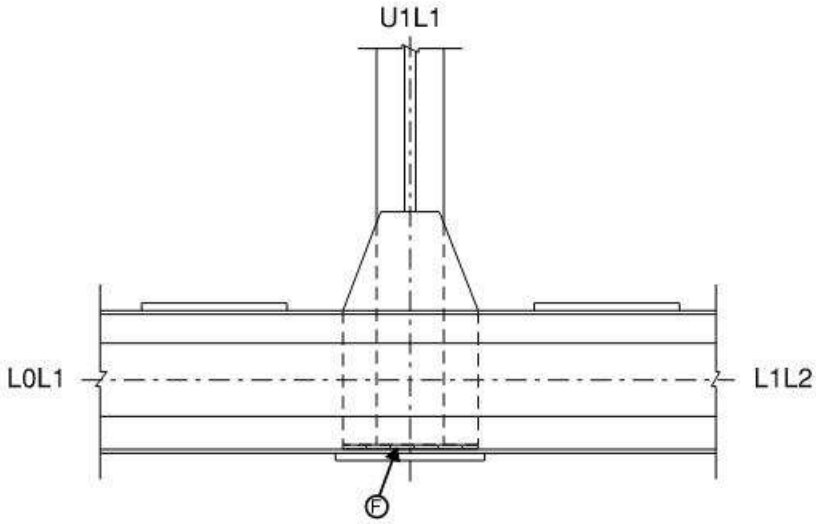

Span 24, North Truss, Node L1, South Gusset Plate, South Elevation

REVISION 1	DATE: 9/10/19	CREW: BH, JG (Baker)	REVISION 3	DATE:	CREW:
REVISION 2	DATE: 9/16/2021	CREW: BM, EB (PRIME) - No Change	REVISION 4	DATE:	CREW:

CREW: SW, BF	DATE: 10/20/2017	BRIDGE NO.: 03819

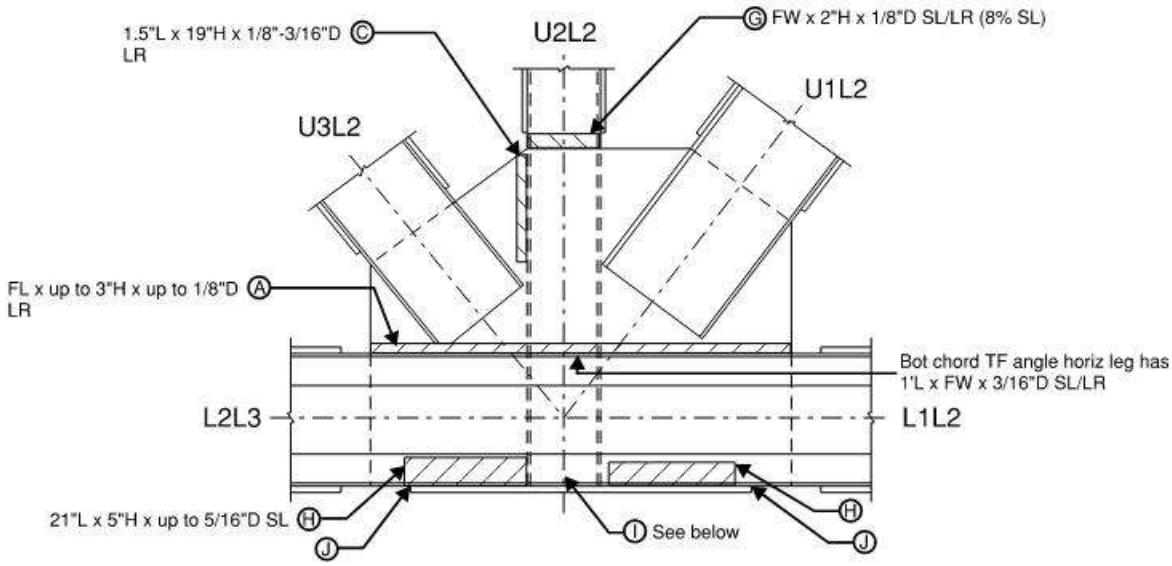

Span 24, North Truss, Node L2, North Gusset Plate, North Elevation

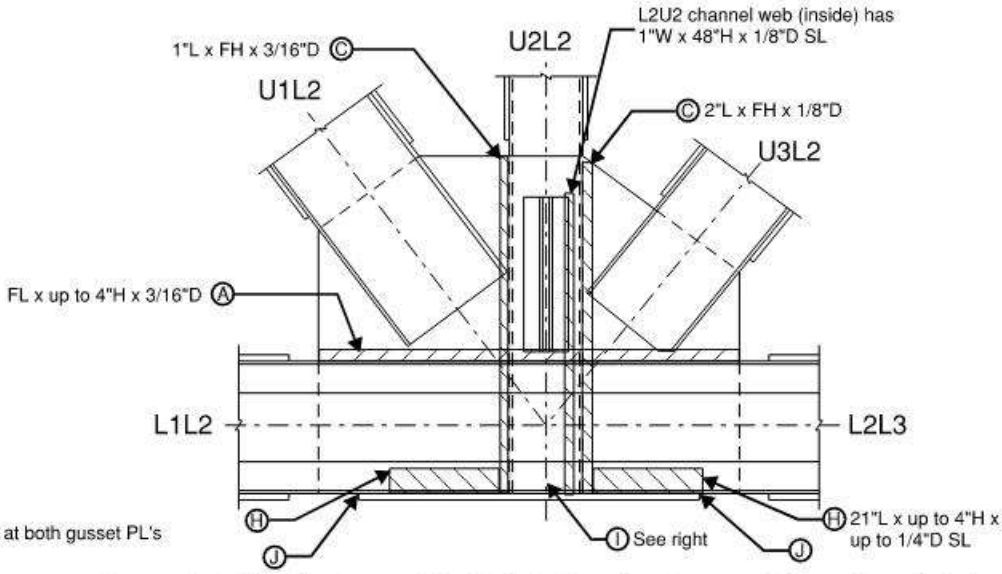

Note I:
- Vert stiff PL has FW x 4"H RTH
- NW channel leg has (2) RTH's up to 1/2"ø
- NE channel leg has 2.5"H x 1" RTH
- SW channel leg has 1"ø RTH
- SE channel leg has 3"H x 1"W RTH
- (8) R/H's have up to 100% SL

Note:
- Some losses are active at both gusset PL's

Span 24, North Truss, Node L2, South Gusset Plate, South Elevation

REVISION 1	DATE: 9/10/19	CREW: BH, JG (Baker)	REVISION 3	DATE:	CREW:
REVISION 2	DATE: 9/16/2021	CREW: BM, EB (PRIME)	REVISION 4	DATE:	CREW:

CREW: SW, BF	DATE: 10/20/2017	BRIDGE NO.: 03819

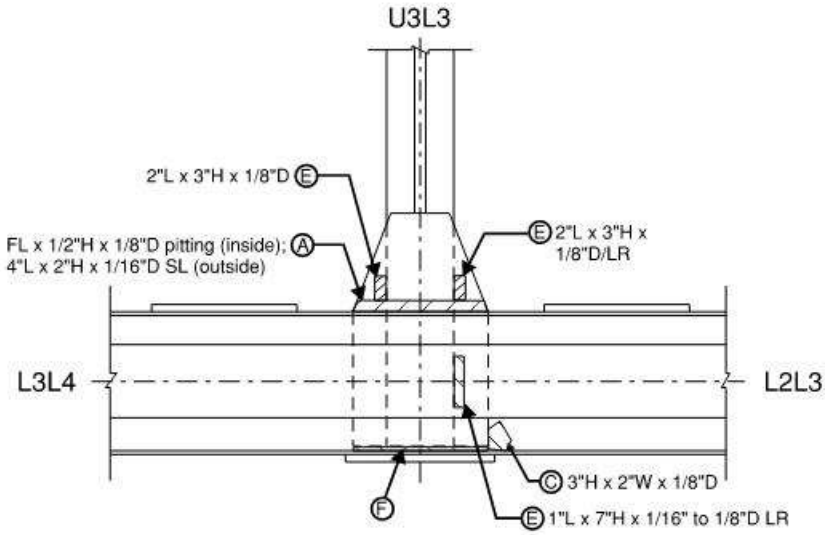

Span 24, North Truss, Node L3, North Gusset Plate, North Elevation

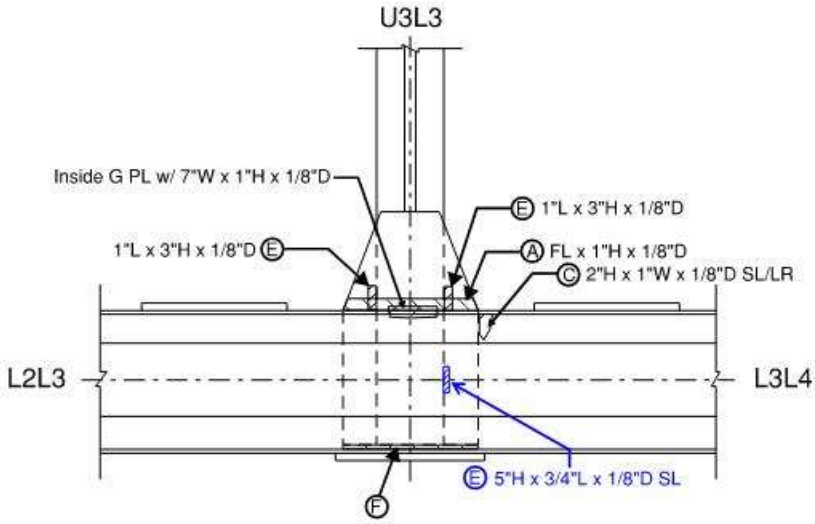

Span 24, North Truss, Node L3, South Gusset Plate, South Elevation

REVISION 1	DATE: 9/10/19	CREW: BH, JG (Baker)	REVISION 3	DATE:	CREW:
REVISION 2	DATE: 9/16/2021	CREW: BM, EB (PRIME)	REVISION 4	DATE:	CREW:

CREW: SW, BF	DATE: 10/20/2017	BRIDGE NO.: 03819

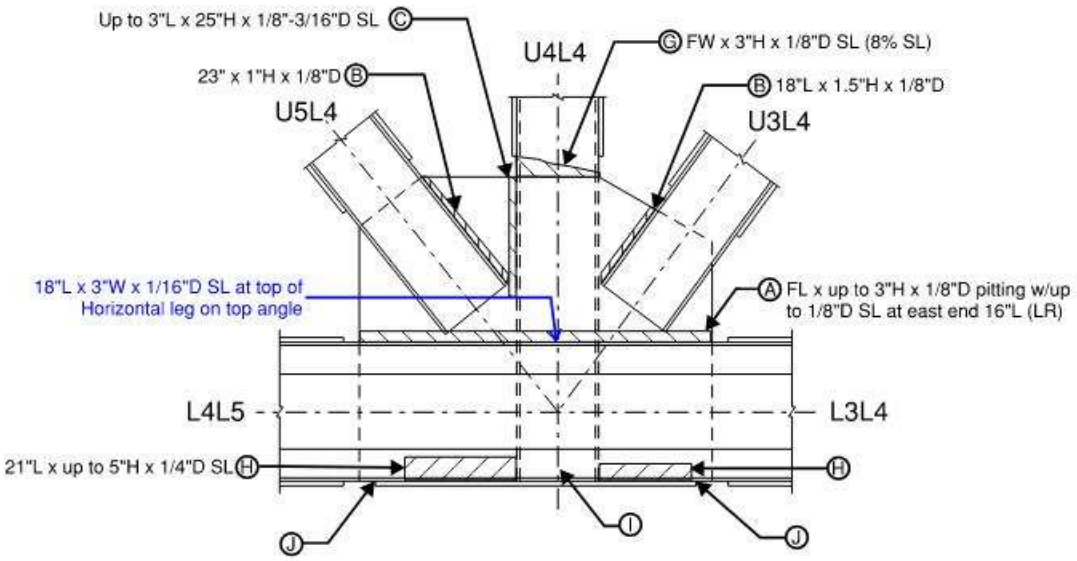

Span 24, North Truss, Node L4, North Gusset Plate, North Elevation

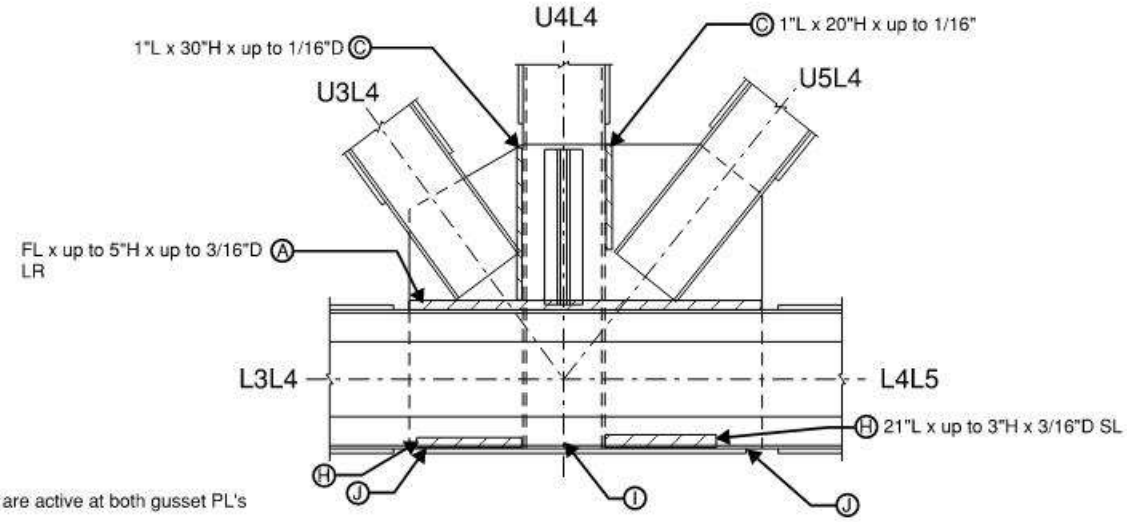

Note:
- Most losses are active at both gusset PL's

Span 24, North Truss, Node L4, South Gusset Plate, South Elevation

REVISION 1	DATE: 9/10/19	CREW: BH, JG (Baker)	REVISION 3	DATE:	CREW:
REVISION 2	DATE: 9/16/2021	CREW: BM, EB (PRIME)	REVISION 4	DATE:	CREW:

CREW: SW, BF	DATE: 10/20/2017	BRIDGE NO.: 03819

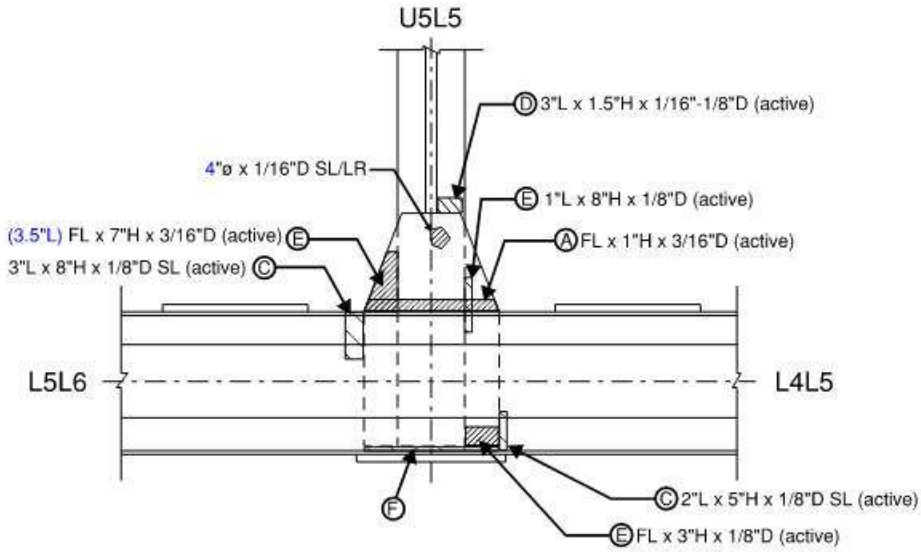

Span 24, North Truss, Node L5, North Gusset Plate, North Elevation

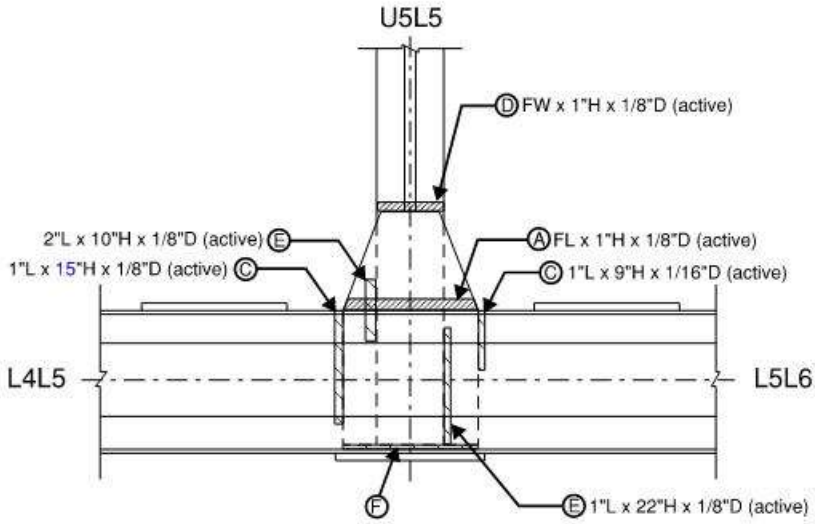

Span 24, North Truss, Node L5, South Gusset Plate, South Elevation

REVISION 1	DATE: 9/10/19	CREW: BH, JG (Baker)	REVISION 3	DATE:	CREW:
REVISION 2	DATE: 9/16/2021	CREW: BM, EB (PRIME)	REVISION 4	DATE:	CREW:

CREW: SW, BF	DATE: 10/20/2017	BRIDGE NO.: 03819

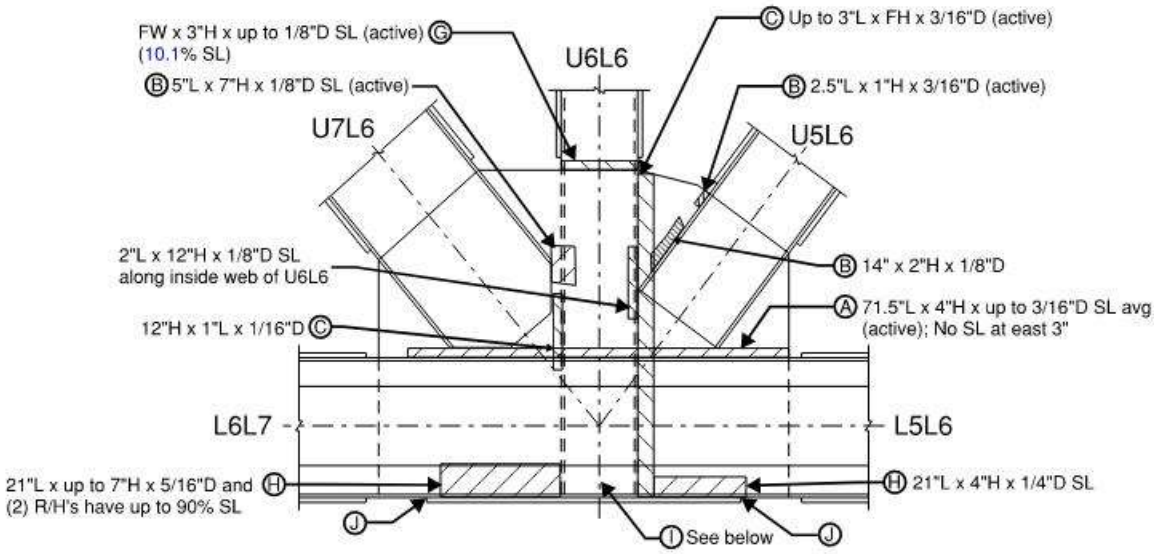

Span 24, North Truss, Node L6, North Gusset Plate, North Elevation

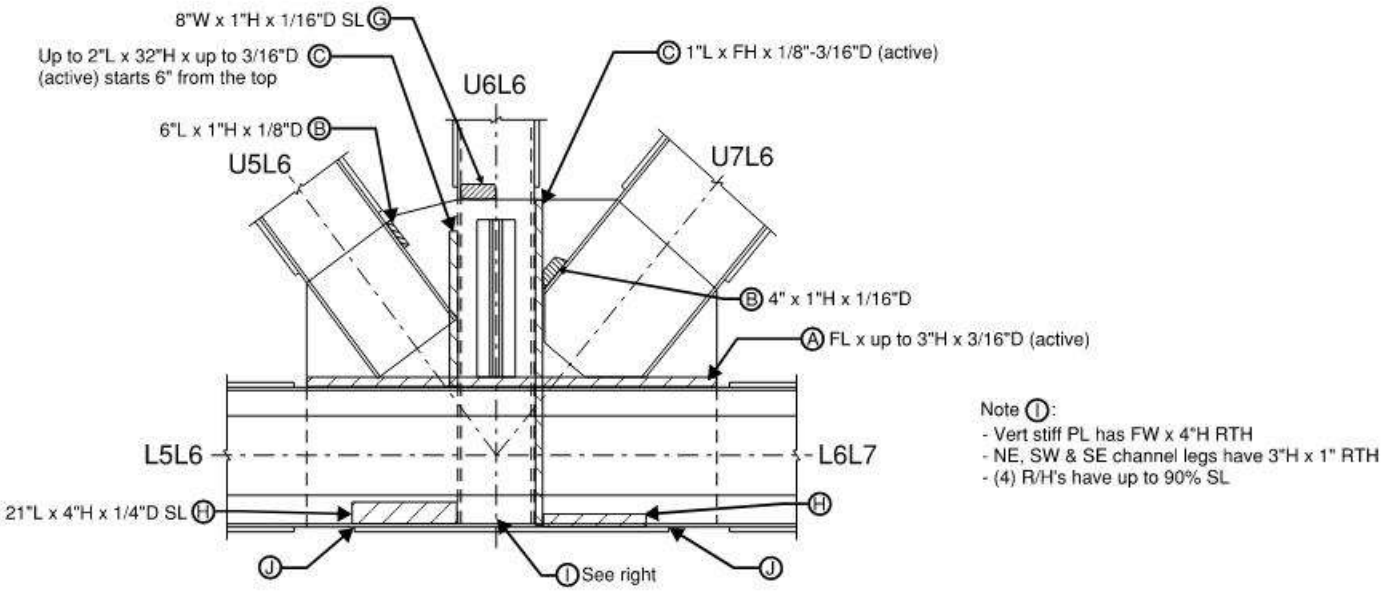

Span 24, North Truss, Node L6, South Gusset Plate, South Elevation

REVISION 1	DATE: 9/10/19	CREW: BH, JG (Baker)	REVISION 3	DATE:	CREW:
REVISION 2	DATE: 9/16/2021	CREW: BM, EB (PRIME) - No Change	REVISION 4	DATE:	CREW:

CREW: SW, BF	DATE: 10/20/2017	BRIDGE NO.: 03819

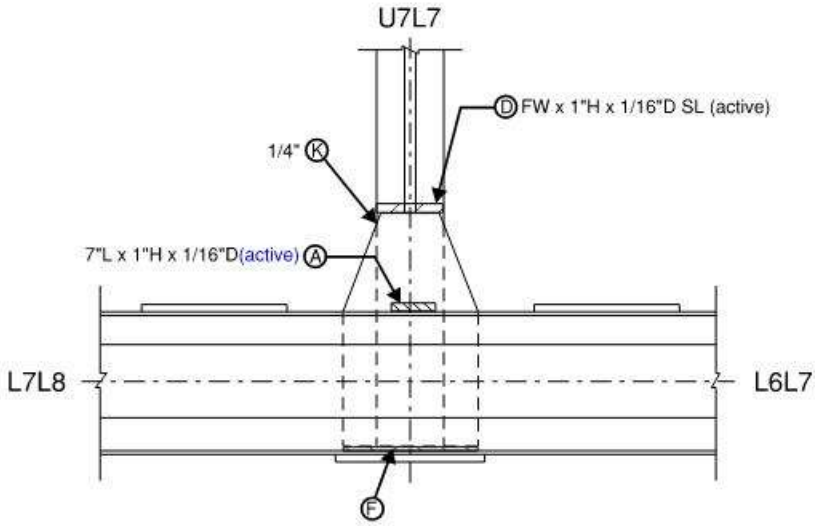

Span 24, North Truss, Node L7, North Gusset Plate, North Elevation

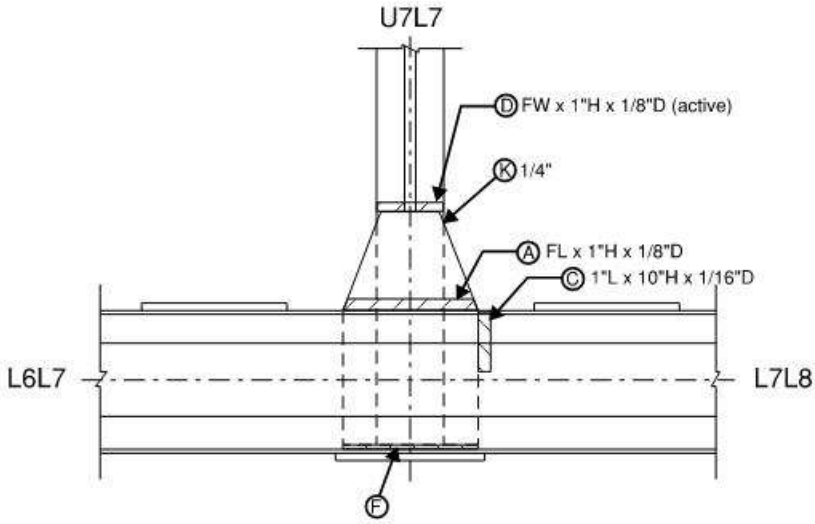

Span 24, North Truss, Node L7, South Gusset Plate, South Elevation

REVISION 1	DATE: 9/10/19	CREW: BH, JG (Baker) - No change	REVISION 3	DATE:	CREW:
REVISION 2	DATE: 9/16/2021	CREW: BM, SD (PRIME)	REVISION 4	DATE:	CREW:

CREW: SW, BF	DATE: 10/20/2017	BRIDGE NO.: 03819

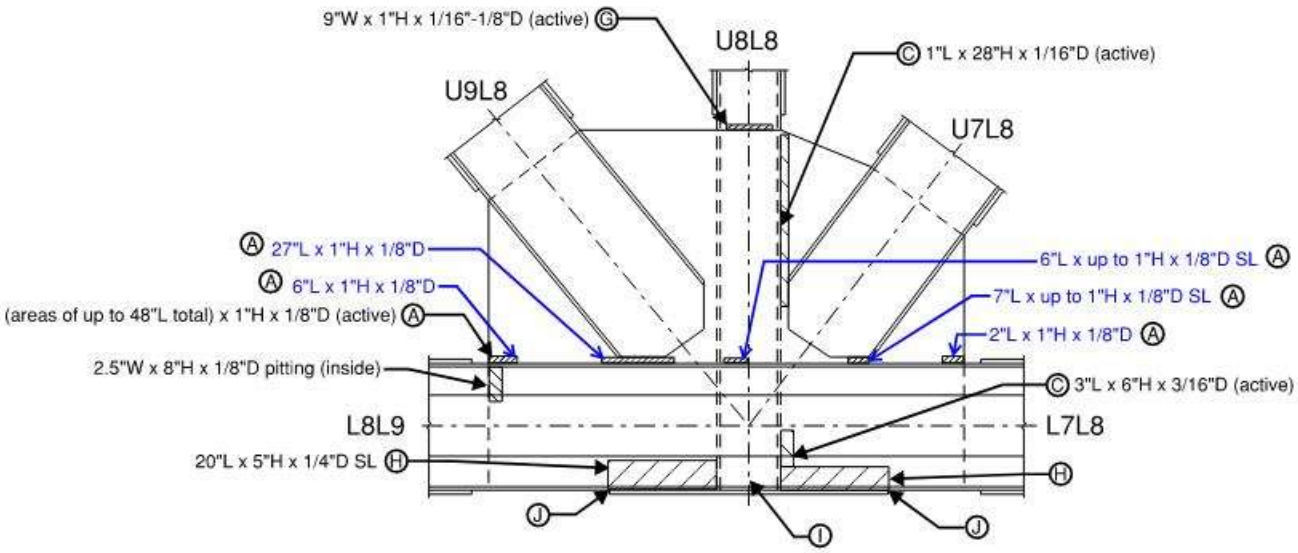

Span 24, North Truss, Node L8, North Gusset Plate, North Elevation

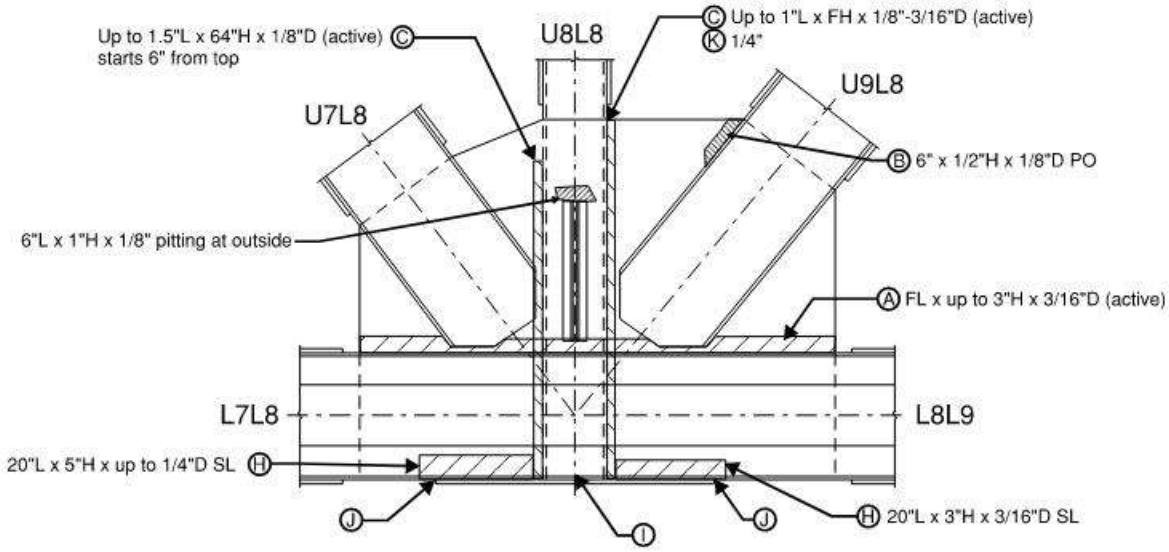

Span 24, North Truss, Node L8, South Gusset Plate, South Elevation

REVISION 1	DATE: 9/10/19	CREW: BH, JG (Baker)	REVISION 3	DATE:	CREW:
REVISION 2	DATE: 9/22/2021	CREW: BM, SD (PRIME)	REVISION 4	DATE:	CREW:

CREW: SW, BF	DATE: 10/20/2017	BRIDGE NO.: 03819

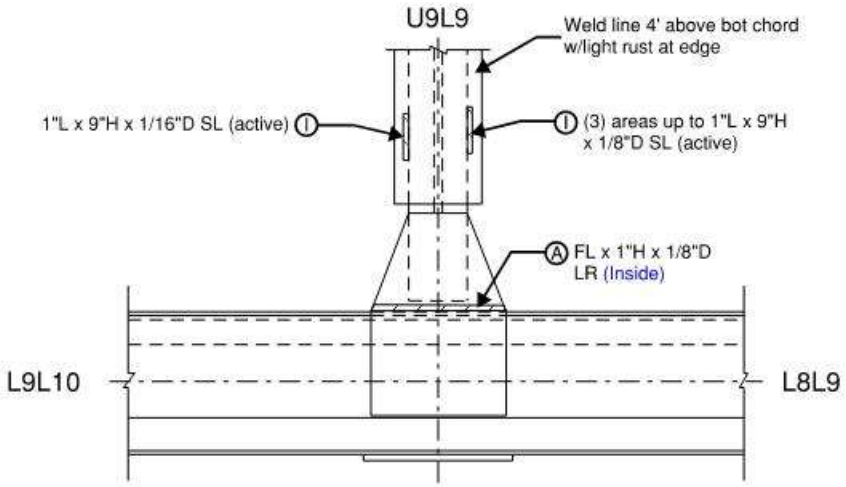

Span 24, North Truss, Node L9, North Gusset Plate, North Elevation

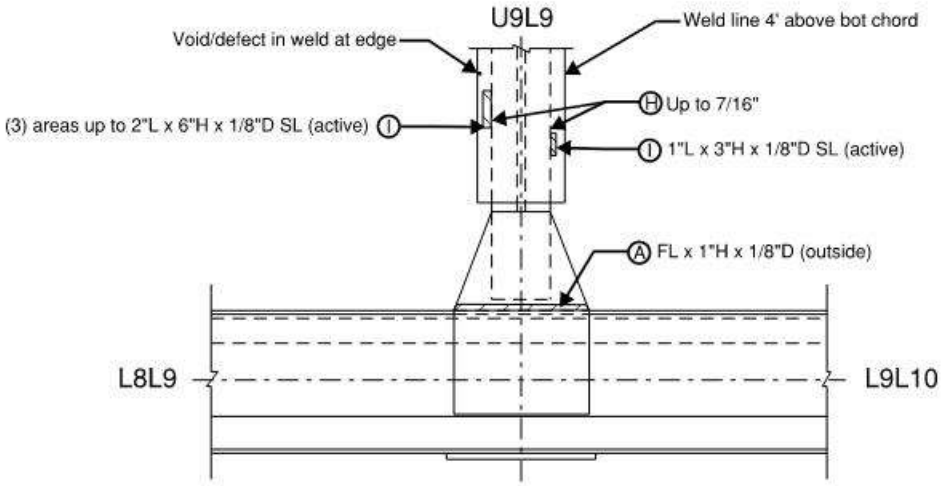

Span 24, North Truss, Node L9, South Gusset Plate, South Elevation

REVISION 1	DATE: 9/10/19	CREW: BH, JG (Baker)	REVISION 3	DATE:	CREW:
REVISION 2	DATE: 9/22/2021	CREW: BM, SD (PRIME)	REVISION 4	DATE:	CREW:

Sketches
Inspection type: Fracture Critical,Routine
Inspection Date: 7/26/2021
Inspected by: PRIME AE

:Bridge No 03819

Town: NEW LONDON
Carried: INTERSTATE 95 NORTHBOUND
Crossed: THAMES RV,RR,LOCAL ROADS
Inventory Route: NHS

CREW: SW, BF	DATE: 10/20/2017	BRIDGE NO.: 03819

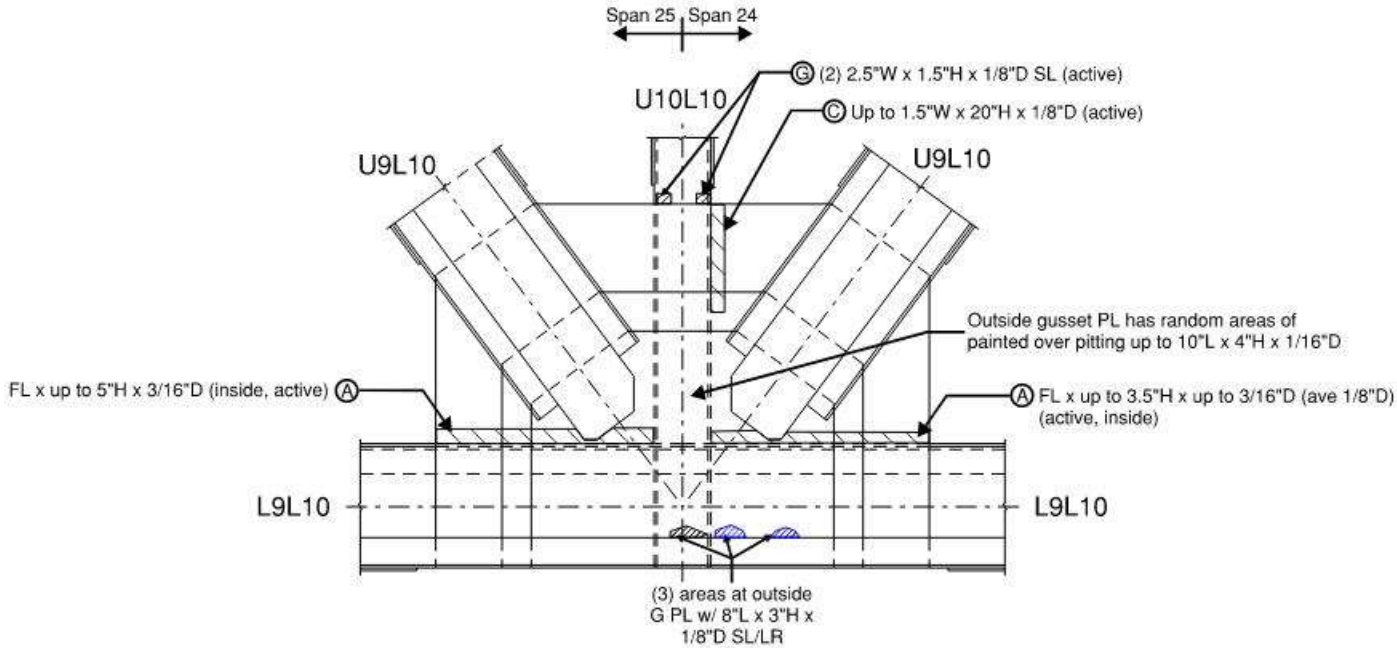

Span 24, North Truss, Node L10, North Gusset Plate, North Elevation

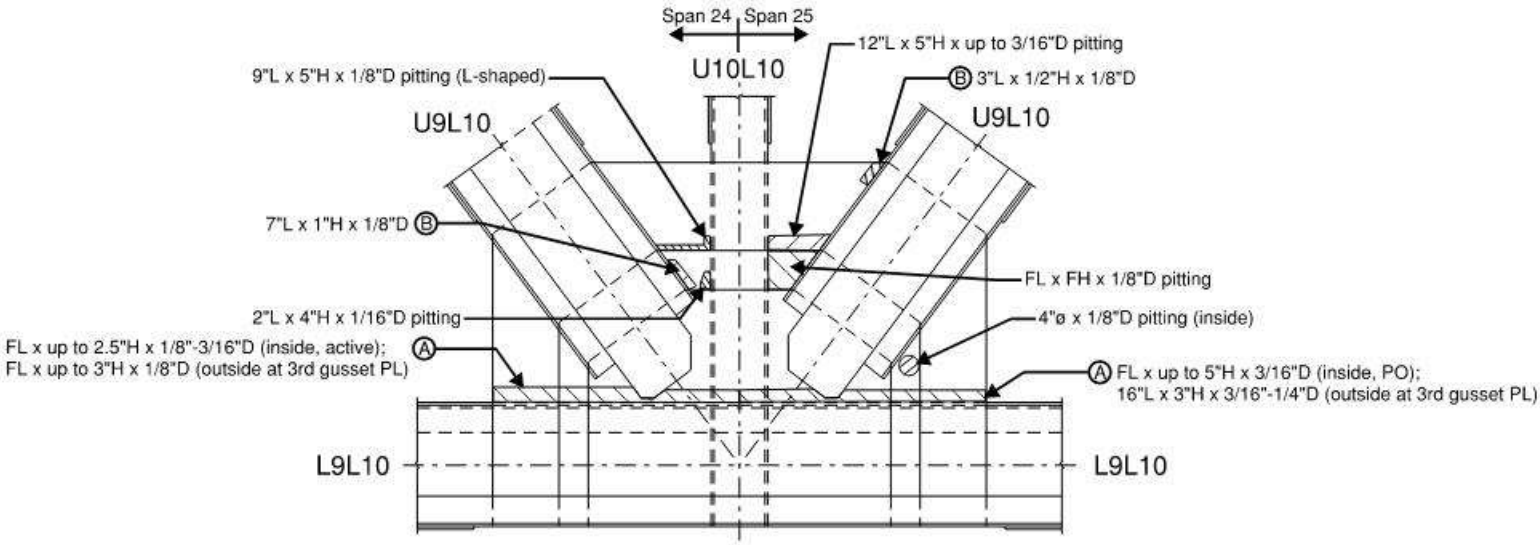

Span 24, North Truss, Node L10, South Gusset Plate, South Elevation

REVISION 1	DATE: 9/10/19	CREW: BH, JG (Baker)	REVISION 3	DATE:	CREW:
REVISION 2	DATE: 8/30/2021	CREW: EG, AN (PRIME)	REVISION 4	DATE:	CREW:

CREW: AH, JG	DATE: 9/25/2017	BRIDGE NO.: 03819

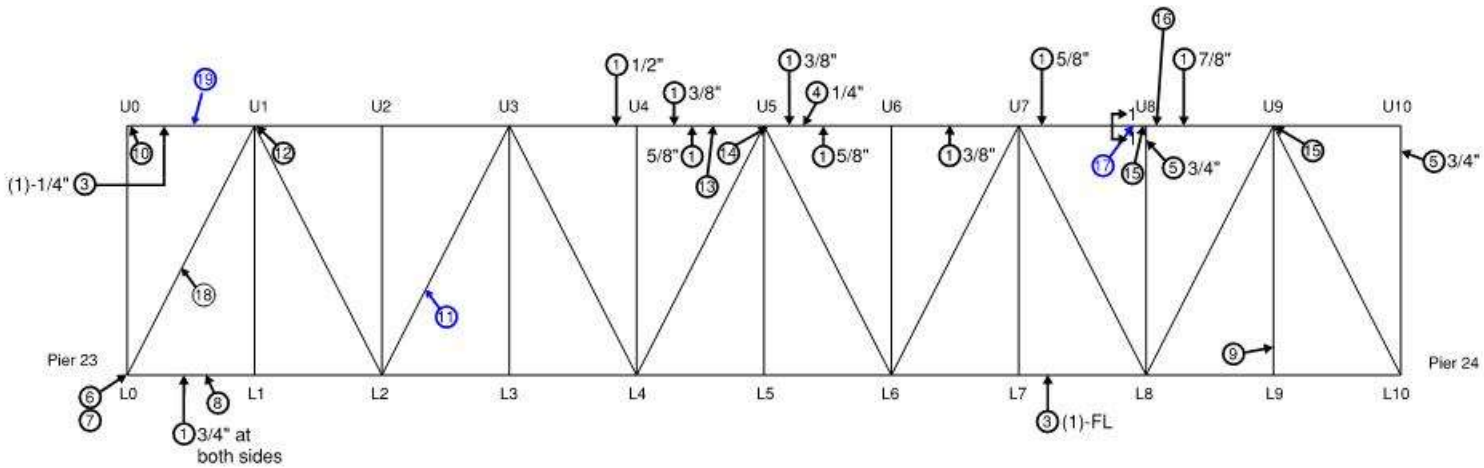

Deterioration Legend:

1 - PR between chord flange angles and web PL up to __" thick
2 - PR between chord flange angles and cover PL at edges up to __" thick (none on this sheet)
3 - Tack welds partially cracked or broken at lacing bar or batten PL and chord; (# per panel) and up to __" long
4 - PR between chord web and vert splice PL up to __" thick
5 - PR between vert member vert PL and splice PL up to __" thick at both sides
6 - (1) missing bolt between vert member and gusset PL at N side (mis-drilled hole)
7 - Adjacent to vert gusset PL, S web PL (inside) has 30"L x 4"H x 1/8"D SL/LR and N web PL (inside) has 16"L x 4"H x 1/16"-1/8"D SL/LR
8 - Lacing bar has (1) missing rivet
9 - Cover PL along vert angle has 3'L x 3/4"W x 3/16"D SL (N.Cover plate inside at west angle)
10 - Up to 1" PR between web PL at end and web cover PL, S bot flg angle horiz leg has 2.5'L x FW x 5/16" rem/LR
11 - North channel web at base at 7th lattice connection from bottom with 1'L x 1"H x 3/16"D SL & North bottom flange with 9"L x up to 2"W x 1/8"D SL on top
12 - South web splice PL has 1 SF x 1/8"D pitting PO
13 - Top chord S bot flg angle horiz leg has 1.5'L x 2"W x 5/8" rem/LR
14 - 1/4" PR between bot flg angle and splice PL at corners
15 - Broken tack weld between top of vert back-to-back angles and top chord seat angle (inside)
16 - Top chord cover PL has 11"W x 2"L x 1/8"-3/16"D SL/LR
17 - S bot flg angle horiz leg has two areas of pitting, 4"ø x 3/16"D & 3"ø x 1/4"D
18 - All (4) angle legs w/rand LR & up to FW x 1/8"D SL at horiz legs.
19 - (2) 4"L x 1"W x 1/4"D bent on bottom horizontal leg (North Face)

General Notes:
- See Riveted Truss General Notes (Spans 22-25 & 29-32) sheet
- See following gusset plate sheets for bottom chord gusset plate details

Span 24 - South Truss South Elevation

REVISION 1	DATE: 9/11/19	CREW: BH, JG (Baker)	REVISION 3	DATE:	CREW:
REVISION 2	DATE: 9/14/2021	CREW: BM, IS, AN (PRIME)	REVISION 4	DATE:	CREW:

CREW: AH, JG	DATE: 9/25/2017	BRIDGE NO.: 03819

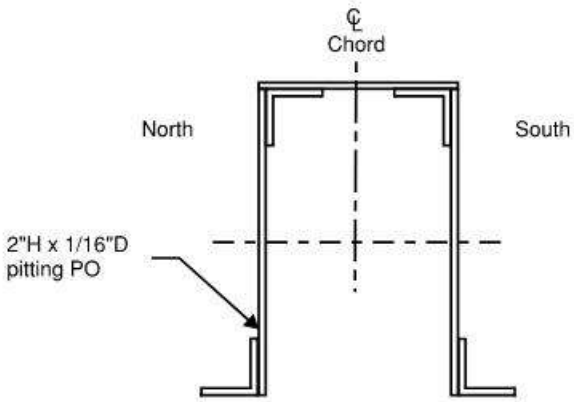

Section 1-1 (U7-U8)

- Scattered painted pitting up to 1/8" deep, typical not in same X-sect

Span 24 - South Truss Section Loss

REVISION 1	DATE: 9/12/19	CREW: AH, BF (Baker)	REVISION 3	DATE:	CREW:
REVISION 2	DATE: 9/21/2021	CREW: BM, AN (PRIME)	REVISION 4	DATE:	CREW:

CREW: AH, JG	DATE: 9/25/2017	BRIDGE NO.: 03819

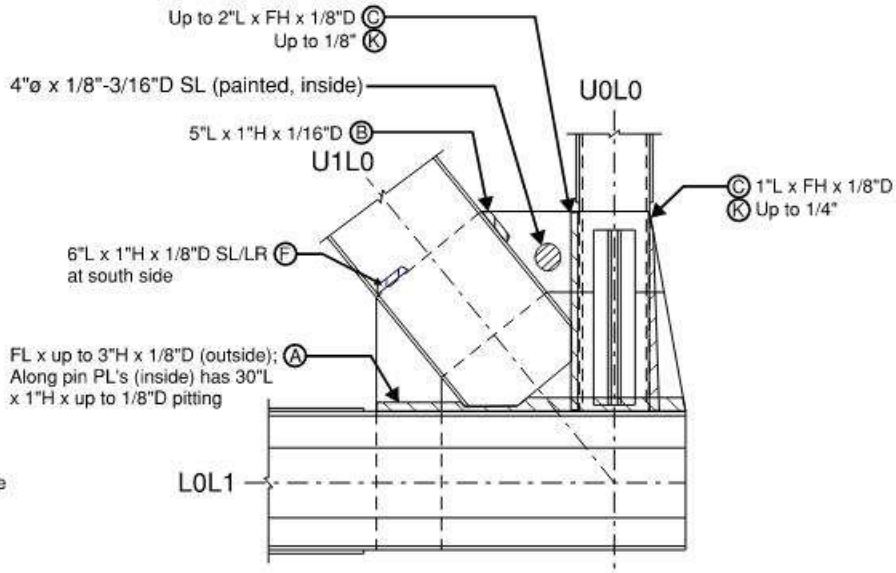

Note:
- Inside faces of gusset PL's have isolated painted over SL around bolts/rivets up to 1/8"-3/16"D
- Losses typically PO

Span 24, South Truss, Node L0, North Gusset Plate, North Elevation

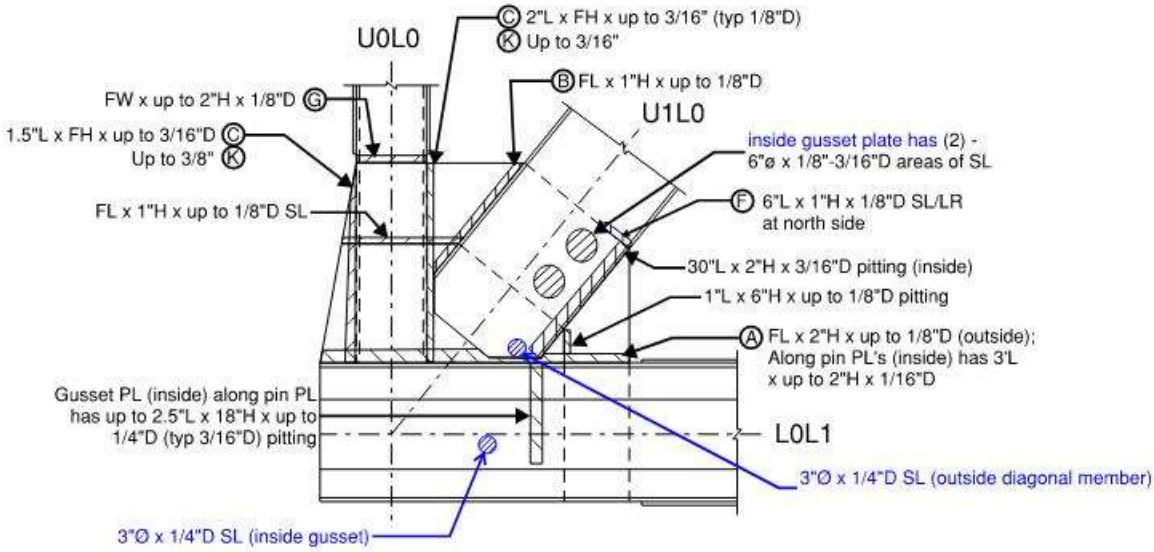

Span 24, South Truss, Node L0, South Gusset Plate, South Elevation

REVISION 1	DATE: 9/11/19	CREW: BH, JG (Baker)	REVISION 3	DATE:	CREW:
REVISION 2	DATE: 9/14/2021	CREW: BM, IS (PRIME)	REVISION 4	DATE:	CREW:

CREW: AH, JG	DATE: 9/25/2017	BRIDGE NO.: 03819

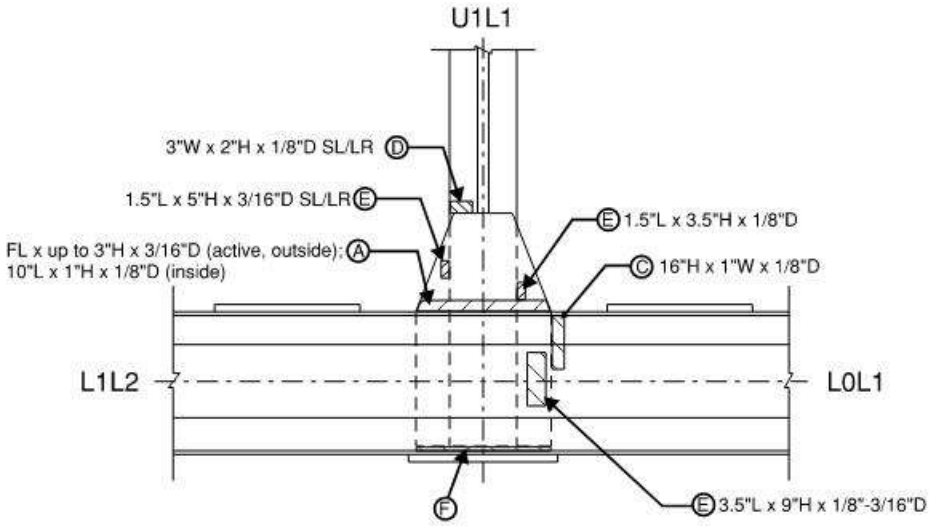

Span 24, South Truss, Node L1, North Gusset Plate, North Elevation

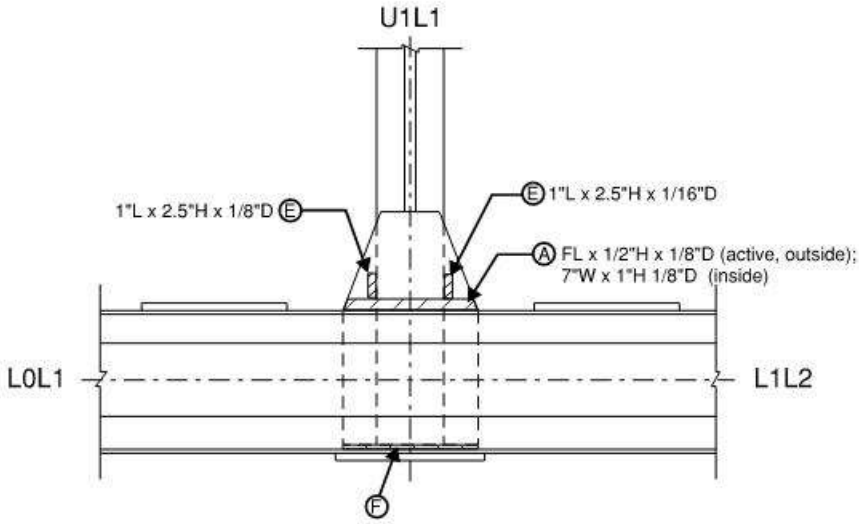

Span 24, South Truss, Node L1, South Gusset Plate, South Elevation

REVISION 1	DATE: 9/11/19	CREW: BH, JG (Baker)	REVISION 3	DATE:	CREW:
REVISION 2	DATE: 9/14/2021	CREW: BM, IS (PRIME) - No Change	REVISION 4	DATE:	CREW:

Sketches
Inspection type: Fracture Critical,Routine
Inspection Date: 7/26/2021
Inspected by: PRIME AE

:Bridge No 03819

Town: NEW LONDON
Carried: INTERSTATE 95 NORTHBOUND
Crossed: THAMES RV,RR,LOCAL ROADS
Inventory Route: NHS

CREW: AH, JG	DATE: 9/25/2017	BRIDGE NO.: 03819

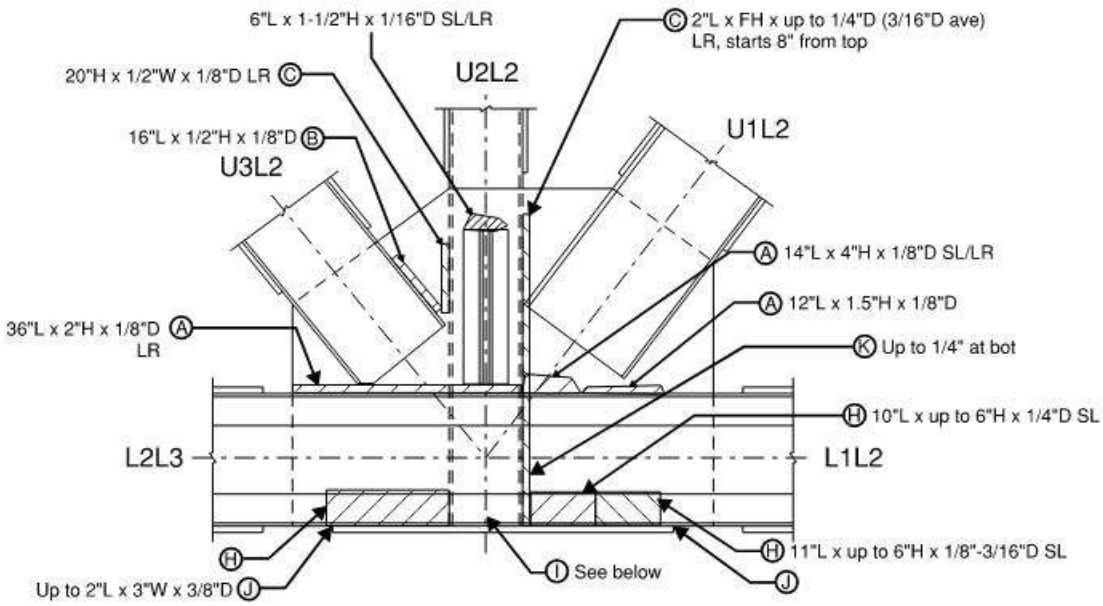

Span 24, South Truss, Node L2, North Gusset Plate, North Elevation

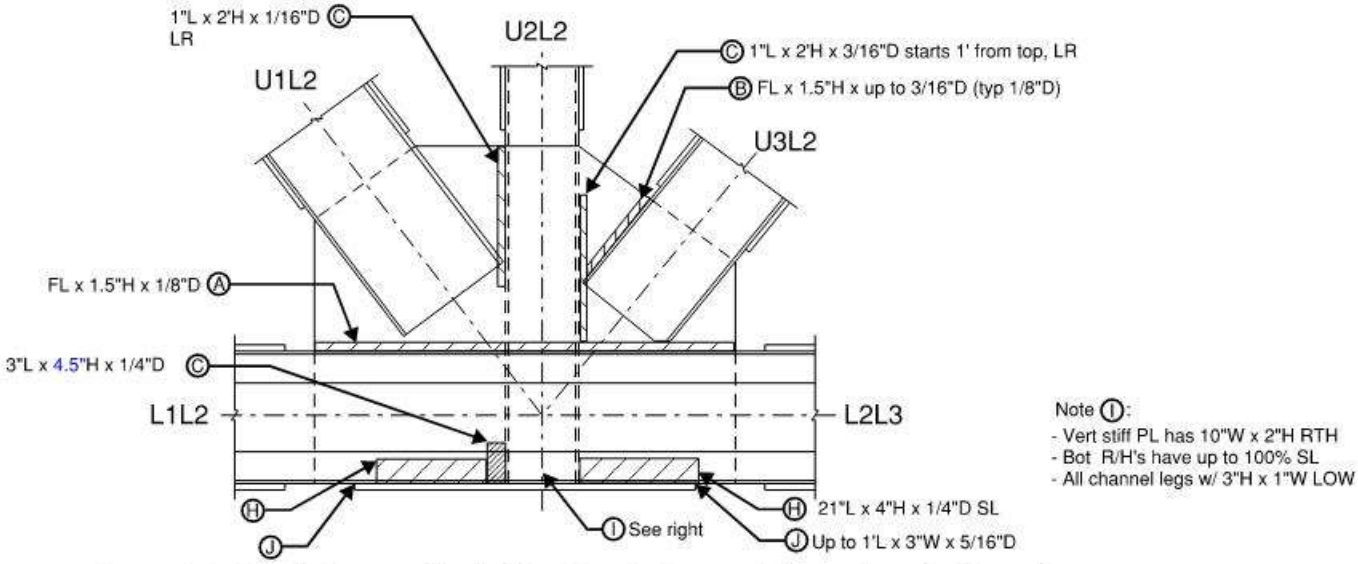

Span 24, South Truss, Node L2, South Gusset Plate, South Elevation

REVISION 1	DATE: 9/11/19	CREW: BH, JG (Baker)	REVISION 3	DATE:	CREW:
REVISION 2	DATE: 9/20/2021	CREW: BM, AN (PRIME)	REVISION 4	DATE:	CREW:

CREW: AH, JG	DATE: 9/25/2017	BRIDGE NO.: 03819

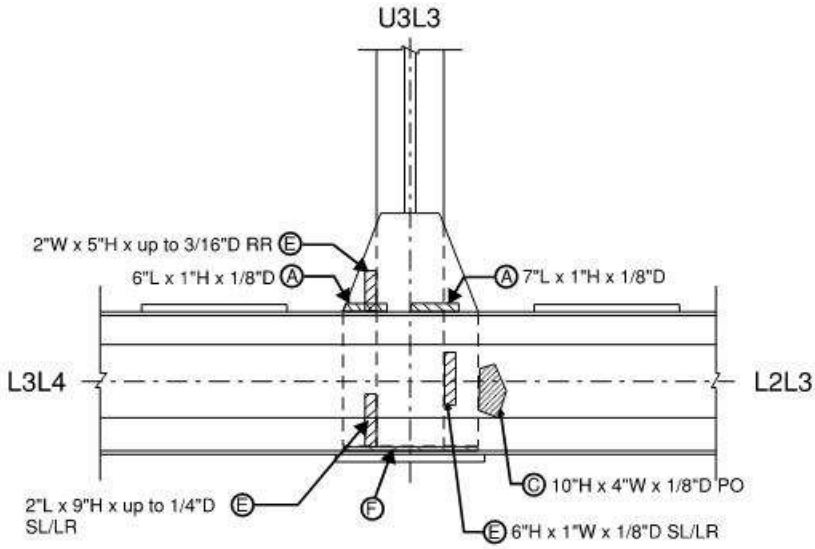

Span 24, South Truss, Node L3, North Gusset Plate, North Elevation

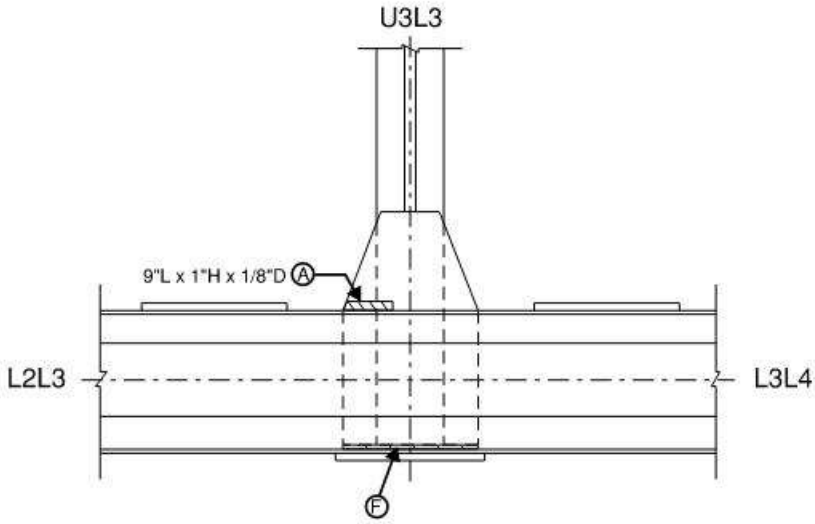

Span 24, South Truss, Node L3, South Gusset Plate, South Elevation

REVISION 1	DATE: 9/11/19	CREW: BH, JG (Baker)	REVISION 3	DATE:	CREW:
REVISION 2	DATE: 9/20/2021	CREW: BM, AN (PRIME) - No Change	REVISION 4	DATE:	CREW:

CREW: AH, JG	DATE: 9/25/2017	BRIDGE NO.: 03819

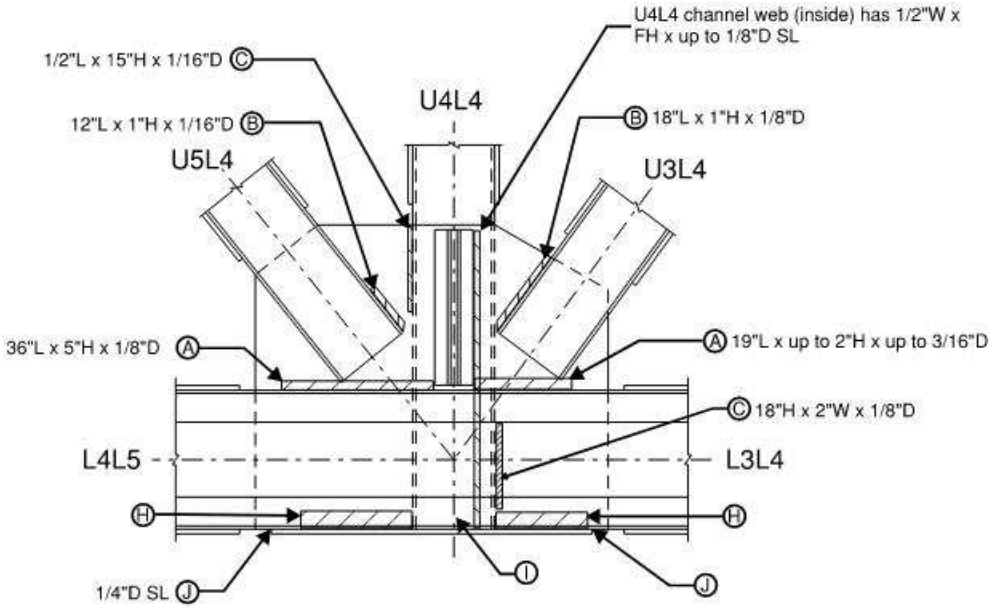

Span 24, South Truss, Node L4, North Gusset Plate, North Elevation

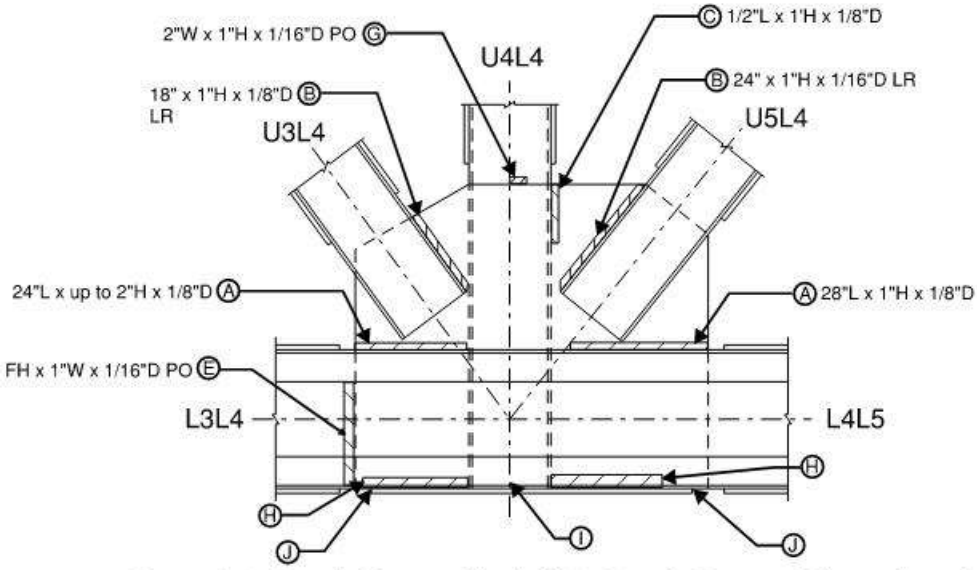

Span 24, South Truss, Node L4, South Gusset Plate, South Elevation

REVISION 1	DATE: 9/11/19	CREW: BH, JG (Baker)	REVISION 3	DATE:	CREW:
REVISION 2	DATE: 9/20/2021	CREW: BM, AN (PRIME) - No Change	REVISION 4	DATE:	CREW:

CREW: AH, JG	DATE: 9/25/2017	BRIDGE NO.: 03819

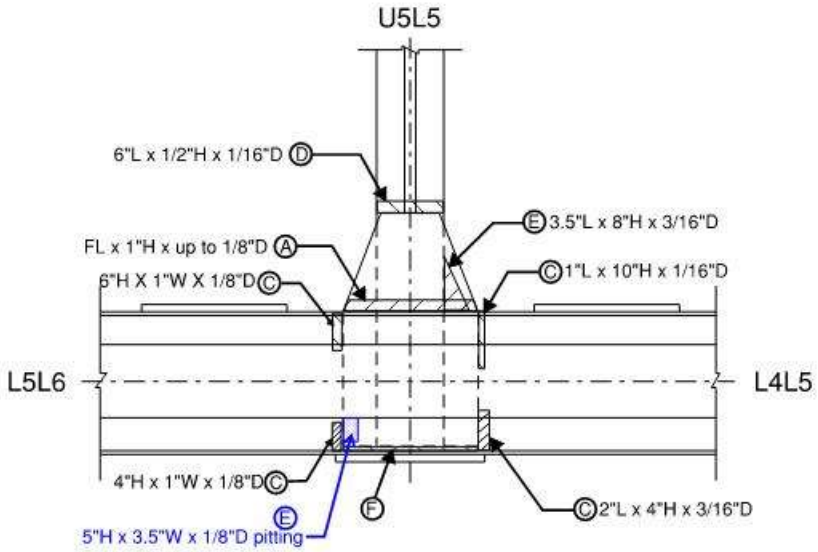

Span 24, South Truss, Node L5, North Gusset Plate, North Elevation

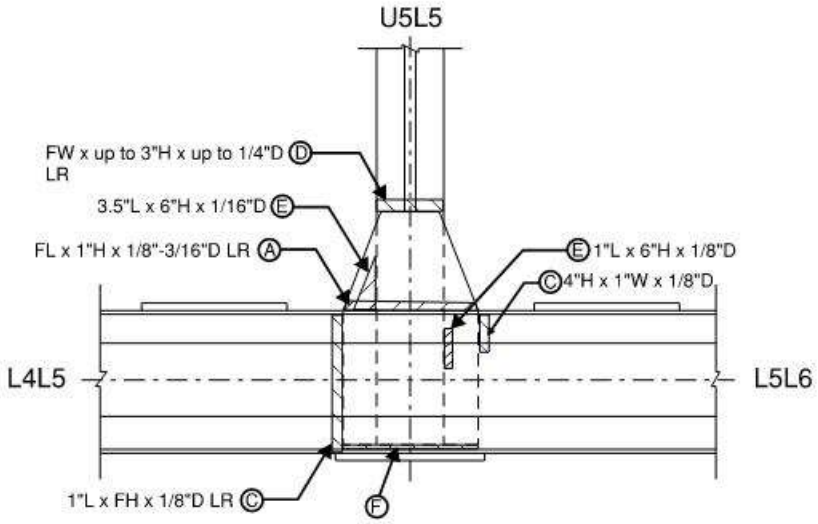

Span 24, South Truss, Node L5, South Gusset Plate, South Elevation

REVISION 1	DATE: 9/11/19	CREW: BH, JG (Baker)	REVISION 3	DATE:	CREW:
REVISION 2	DATE: 9/20/2021	CREW: BM, AN (PRIME)	REVISION 4	DATE:	CREW:

CREW: AH, JG	DATE: 9/25/2017	BRIDGE NO.: 03819

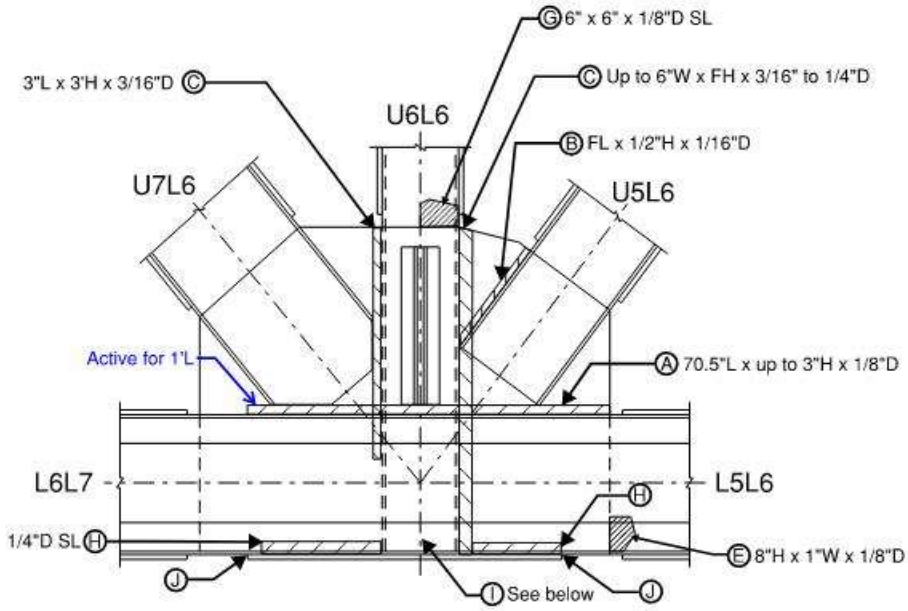

Span 24, South Truss, Node L6, North Gusset Plate, North Elevation

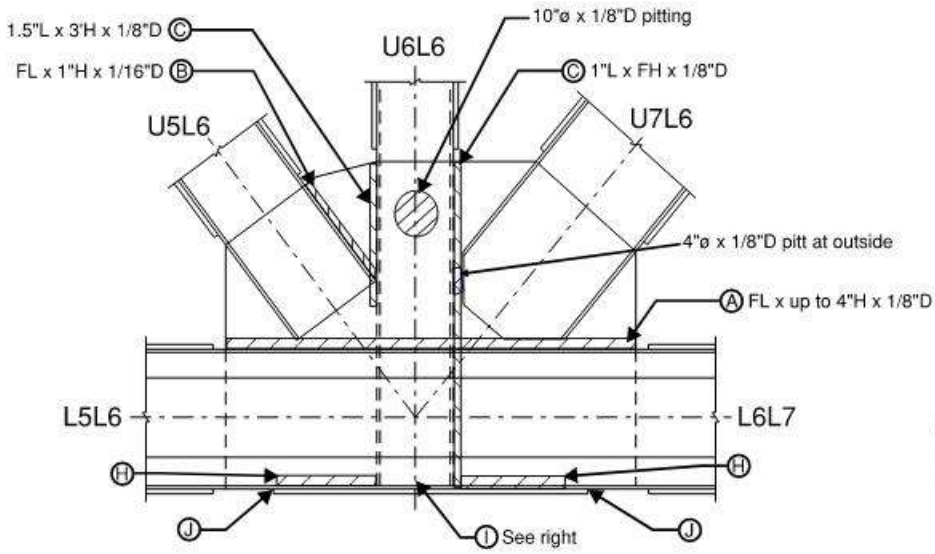

Note I:
- Vert stiff PL has FW x up to 12"H w/min KE rem and an 8"W x 1"H RTH
- (7) R/H's have up to 80% SL
- Channel legs w/ up to 3"H x 1"W LOW

Span 24, South Truss, Node L6, South Gusset Plate, South Elevation

- Active rust/LR at all locations

REVISION 1	DATE: 9/11/19	CREW: BH, JG (Baker)	REVISION 3	DATE:	CREW:
REVISION 2	DATE: 9/20/2021	CREW: BM, AN (PRIME)	REVISION 4	DATE:	CREW:

CREW: AH, JG	DATE: 9/25/2017	BRIDGE NO.: 03819

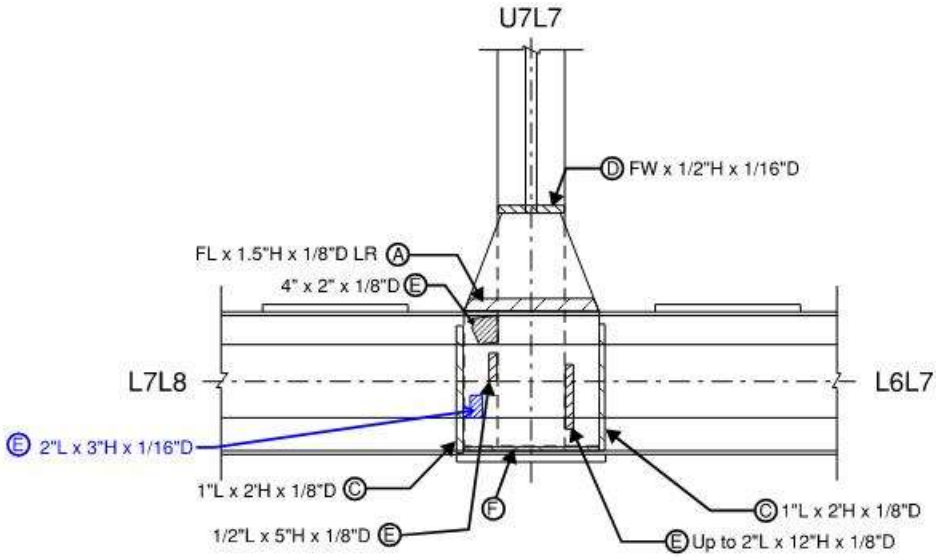

Span 24, South Truss, Node L7, North Gusset Plate, North Elevation

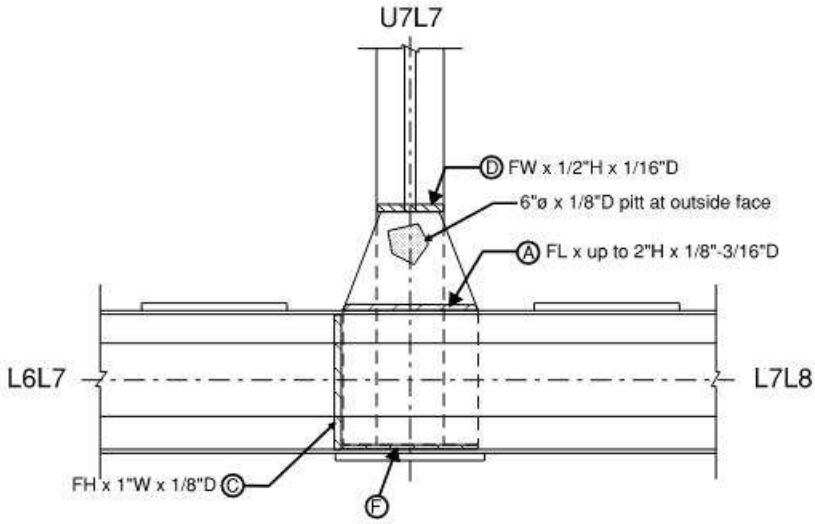

Span 24, South Truss, Node L7, South Gusset Plate, South Elevation

REVISION 1	DATE: 9/11/19	CREW: BH, JG (Baker)	REVISION 3	DATE:	CREW:
REVISION 2	DATE: 9/21/2021	CREW: BM, AN (PRIME)	REVISION 4	DATE:	CREW:

CREW: AH, JG	DATE: 9/25/2017	BRIDGE NO.: 03819

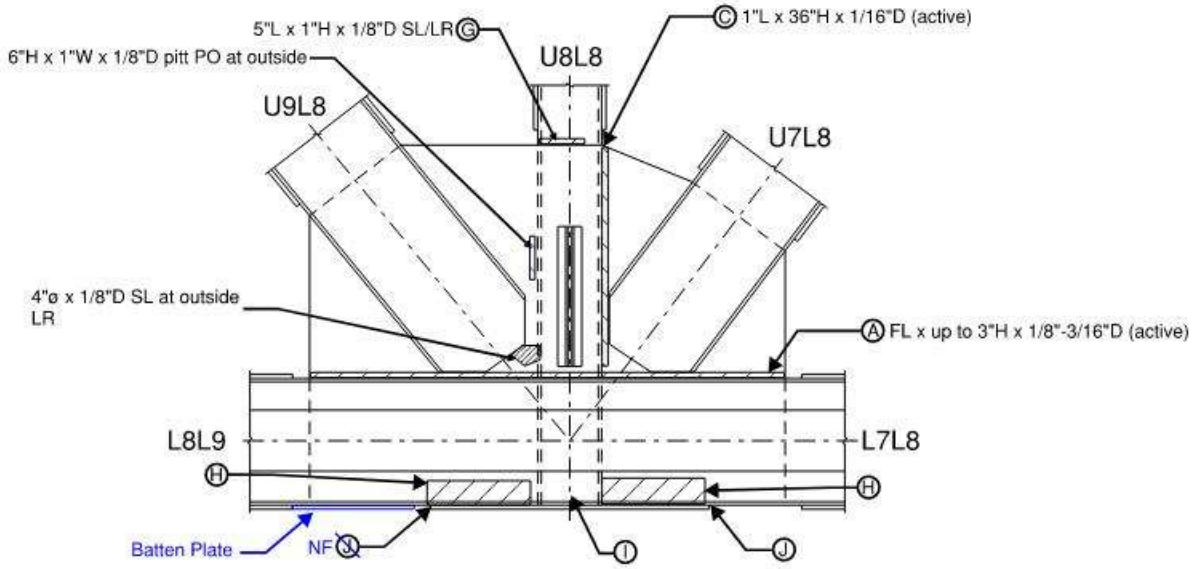

Span 24, South Truss, Node L8, North Gusset Plate, North Elevation

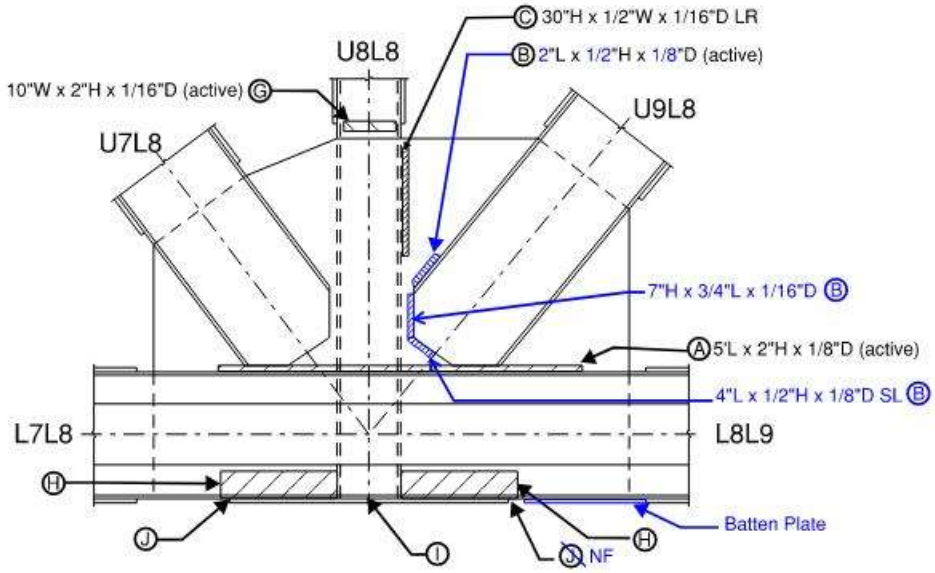

Span 24, South Truss, Node L8, South Gusset Plate, South Elevation

REVISION 1	DATE: 9/11/19	CREW: BH, JG (Baker)	REVISION 3	DATE:	CREW:
REVISION 2	DATE: 9/21/2021	CREW: BM, AN (PRIME)	REVISION 4	DATE:	CREW:

CREW: AH, JG	DATE: 9/257/2017	BRIDGE NO.: 03819

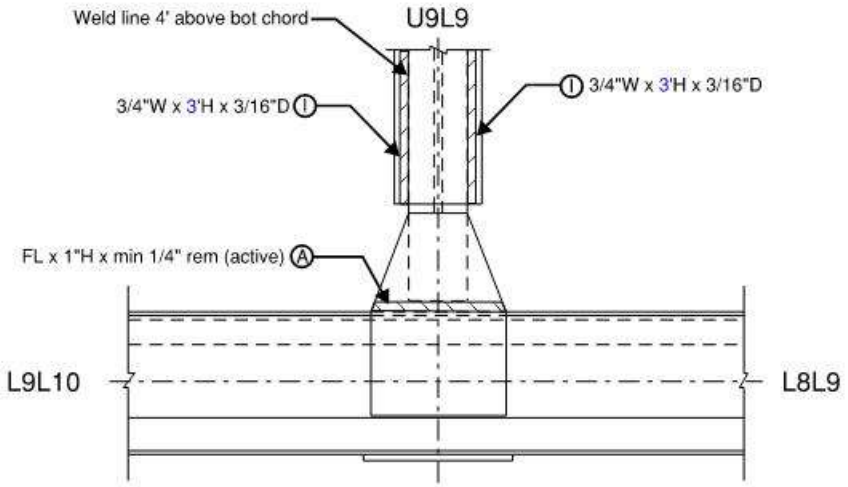

Span 24, South Truss, Node L9, North Gusset Plate, North Elevation

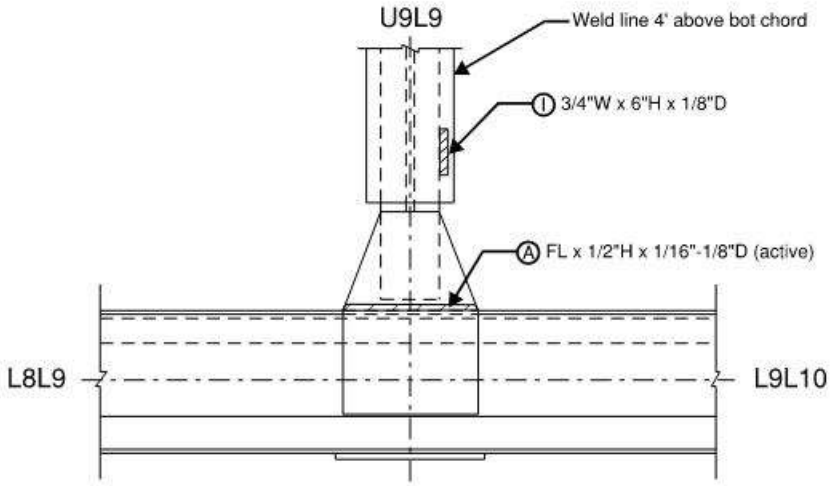

Span 24, South Truss, Node L9, South Gusset Plate, South Elevation

REVISION 1	DATE: 9/11/19	CREW: BH, JG (Baker) - No change	REVISION 3	DATE:	CREW:
REVISION 2	DATE: 9/21/2021	CREW: BM, AN (PRIME)	REVISION 4	DATE:	CREW:

CREW: AH, JG	DATE: 9/25/2017	BRIDGE NO.: 03819

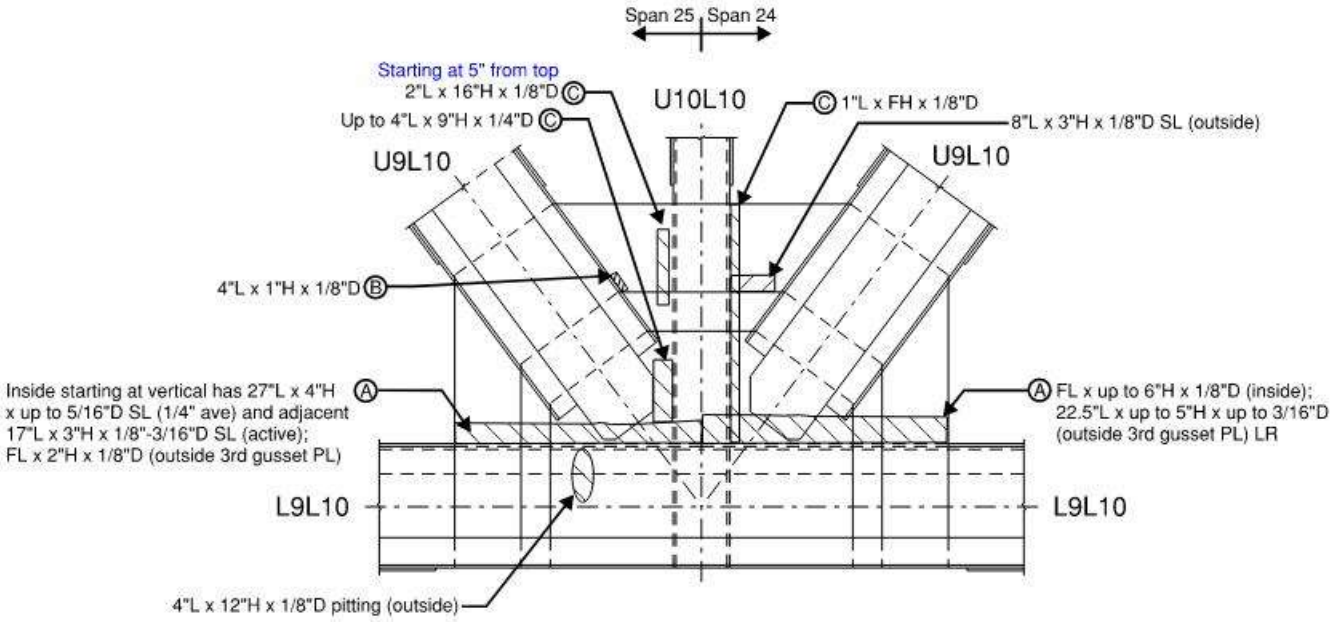

Span 24, South Truss, Node L10, North Gusset Plate, North Elevation

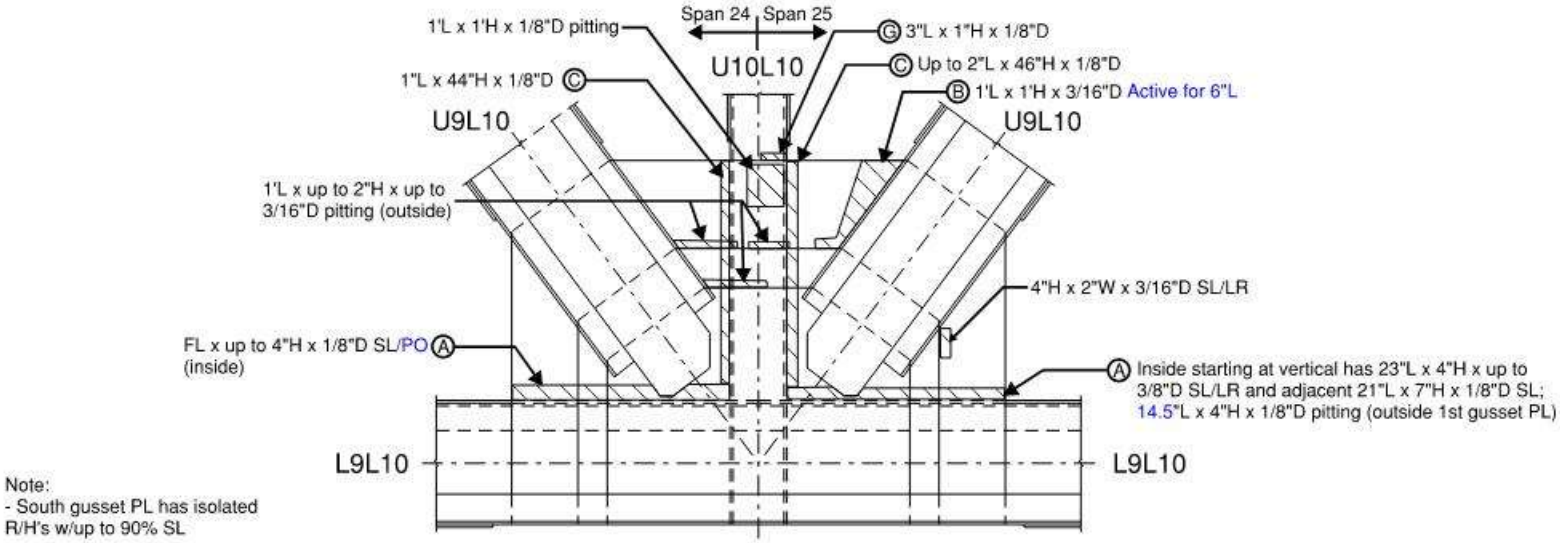

Span 24, South Truss, Node L10, South Gusset Plate, South Elevation

REVISION 1	DATE: 9/11/19	CREW: BH, JG (Baker)	REVISION 3	DATE:	CREW:
REVISION 2	DATE: 9/21/2021	CREW: BM, AN (PRIME)	REVISION 4	DATE:	CREW:

CREW: AH, JG	DATE: 9/23/2017	BRIDGE NO.: 03819

Deterioration Legend:

① PR between top horiz gusset PL and bracing members up to __" thick
② PR between bot horiz gusset PL and bracing members up to __" thick
③ Pitting on top horiz gusset PL up to __" deep
④ Pitting on bot horiz gusset PL up to __" deep
⑤ Bot lat brace angle w/4" x 2" RTH
⑥ Sway brace vert gusset PL's (inside faces) have 1/8"D pitting at bot 1'
⑦ Both VT legs of lat brace angle w/ up to 5"L x 1"H RTH's at end

LOG DIRECTION
WEST TO EAST

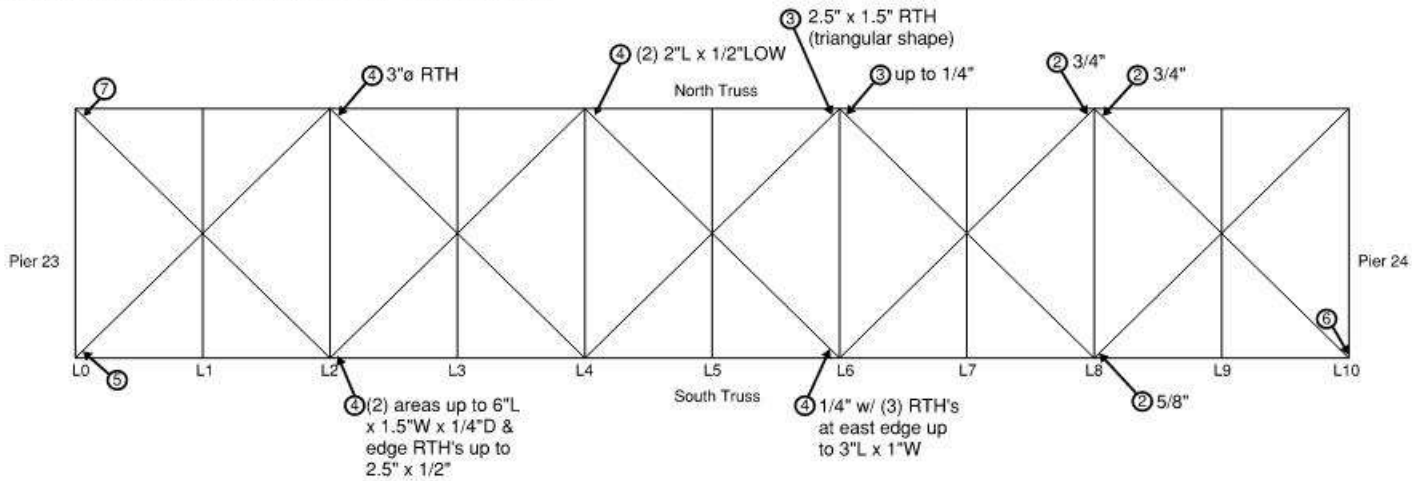

General Notes:
- See Lateral and Sway Bracing General Notes (Spans 22-25 & 29-32) sheet

Span 24 - Bottom Laterals

REVISION 1	DATE: 9/10/19	CREW: BH, JG (Baker)	REVISION 3	DATE:	CREW:
REVISION 2	DATE: 9/16/2021	CREW: BM, AN, EB, SD (PRIME)	REVISION 4	DATE:	CREW:

CREW: SW, KT	DATE: 9/7/2017	BRIDGE NO.: 03819

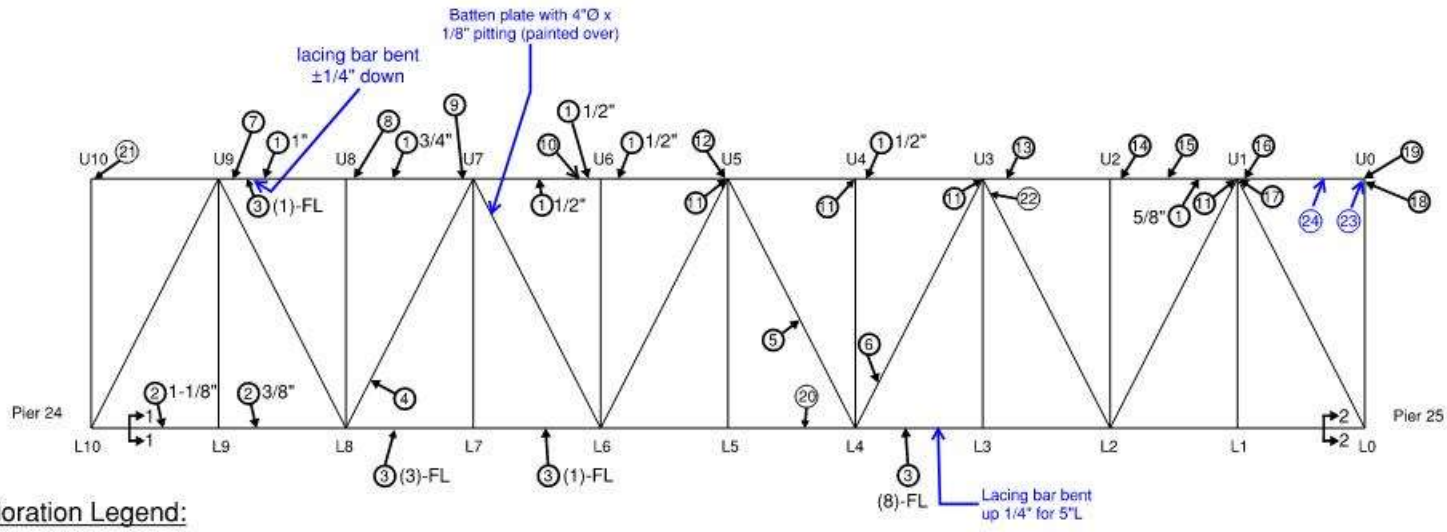

Deterioration Legend:

1. PR between chord flange angles and web PL up to __" thick
2. PR between chord flange angles and cover PL at edges up to __" thick
3. Tack welds partially cracked or broken at lacing bar or batten PL and chord; (# per panel) and up to __" long
4. Top angle horiz leg has (2) areas up to 3"L x 2"W x 1/8"D SL and areas up to 18"L x 1/4"TH PR between web PL & flg angles
5. Up to 1/4" PR between web and cover PL for 3/4 height at both sides w/random areas of SL up to 6"L x 1"H x 1/16"-1/8"D at both channel webs above cover PL
6. Top flg has 2"W x 1/4"D pitting
7. -N web PL has 2"L x 2"H x 1/8"D SL & top PL of top chord w/ 12"W x 4"L x 1/8"-3/16"D SL
8. Top PL has 3"L x 1½"W x 1/4"D section loss PO
9. S web PL has 4"L x 1"H x 3/16"D pitting ~~and 2'L x up to 1/4" PR at E side of vert gusset PL~~ NF
10. Top PL has 18"L x 3"W x up to 1/8"D SL and (7) R/H's have up to 10% SL
11. Broken tack weld between top of vert back-to-back angles and top chord seat angle (inside)
12. Up to 1/4" PR between N splice PL and web PL
13. Up to 1/2" PR between N vert splice PL and web PL and up to 3/8" PR between fill PL and bot flg angle vert leg
14. Top PL has 2"L x 10"W x 1/8"-3/16"D SL adj to FB seat
15. N web PL above bot flg angle vert leg has random areas of SL up to 2'L x 1"H x 1/16"D along FL of panel
16. 3/4" PR between S top chord splice PL and top PL & top splice PL has up to 10% SL on R/H's
17. 1/8" PR between S vert gusset PL and shim PL and gusset is bent
18. (3) - 5/8" torch cut holes in vert member and up to 3/4" PR between vert gusset PL & vert member at both sides
19. 1/8" PR between gusset PL and S web PL at W end and 1'L x 1/2"D x 3/16"D gouge (not ground smooth)
20. (4) top lattice bars w/ up to 50% SL/LR
21. Top of top chord w/ 4"ø x 1/8"D SL/LR
22. Diagonal webs adj VT G PL's w/ 6"L x 1"W x 1/16"D SL/LR
23. Underside horizontal gusset plate S.side, West of U0 with 2'L x up to 3"W x 3/16"D
24. North & South bottom flange angles horizontal leg bent up in (2) areas up to 1/2"

General Notes:

- See Riveted Truss General Notes (Spans 22-25 & 29-32) sheet
- See following gusset plate sheets for bottom chord gusset plate details

Span 25 - North Truss South Elevation

REVISION 1	DATE: 9/4/19	CREW: BH, JG (Baker)	REVISION 3	DATE:	CREW:
REVISION 2	DATE: 8/30/2021	CREW: EG, AN (PRIME)	REVISION 4	DATE:	CREW:

CREW: SW, KT	DATE: 9/7/2017	BRIDGE NO.: 03819

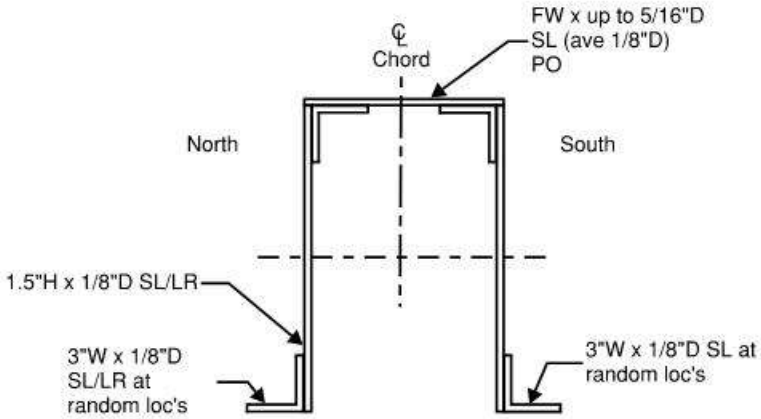

Section 1-1 (L9-L10)

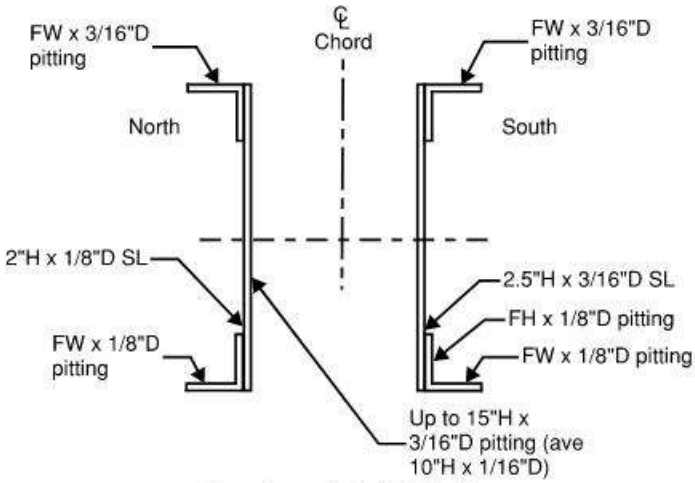

Section 2-2 (L0-L1)

(6.6% Loss)

+/- 3.5' from G PL

Span 25 - North Truss Section Loss

REVISION 1	DATE: 9/4/19	CREW: BH, JG (Baker)	REVISION 3	DATE:	CREW:
REVISION 2	DATE: 8/30/2021	CREW: EG, AN (PRIME) - No Change	REVISION 4	DATE:	CREW:

CREW: SW, KT	DATE: 9/8/2017	BRIDGE NO.: 03819

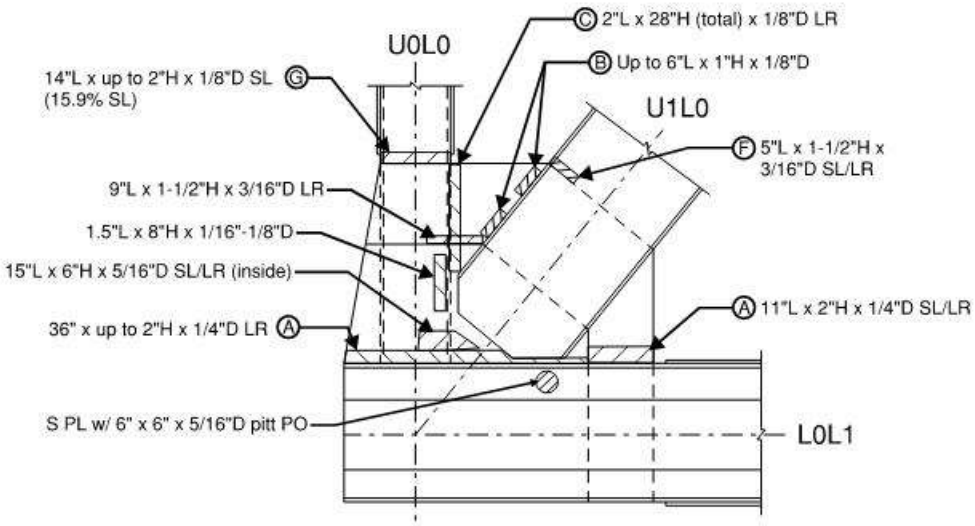

Span 25, North Truss, Node L0, North Gusset Plate, North Elevation

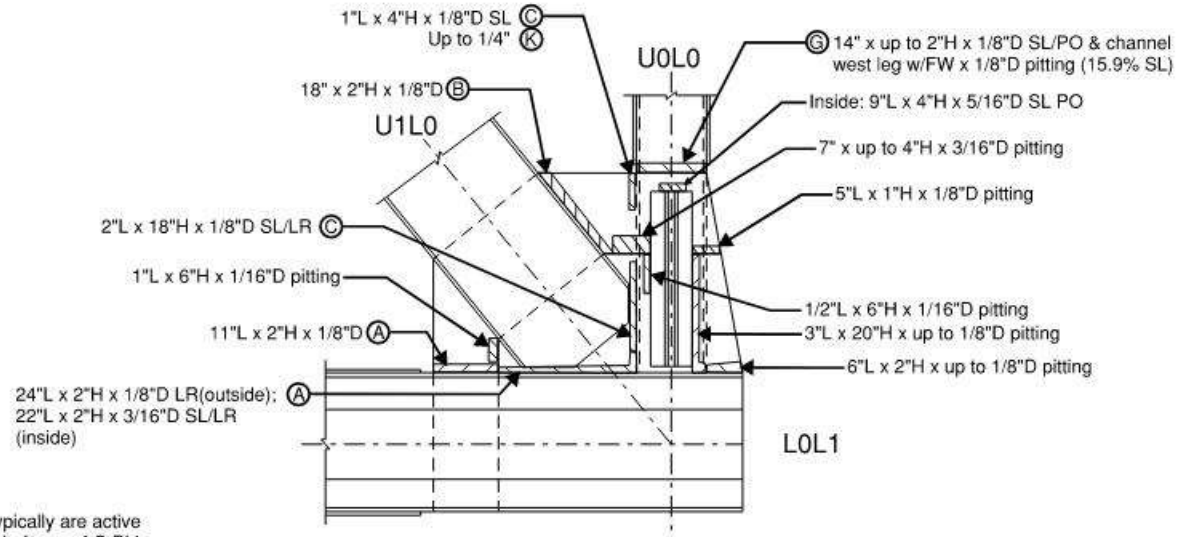

Note:
- SL's at both gusset PL's typically are active
- Rand 1/8"D PO pitt at inside faces of G PL's
- Stacked VT bearing PL's w/isol 3/16"D pitt.
- Vertical channel webs inside w/ 6"H LR w/ 1/8"D SL's

Span 25, North Truss, Node L0, South Gusset Plate, South Elevation

REVISION 1	DATE: 9/4/19	CREW: BH, JG (Baker)	REVISION 3	DATE:	CREW:
REVISION 2	DATE: 8/31/2021	CREW: EG, AN (PRIME) - No Change	REVISION 4	DATE:	CREW:

CREW: SW, KT	DATE: 9/8/2017	BRIDGE NO.: 03819

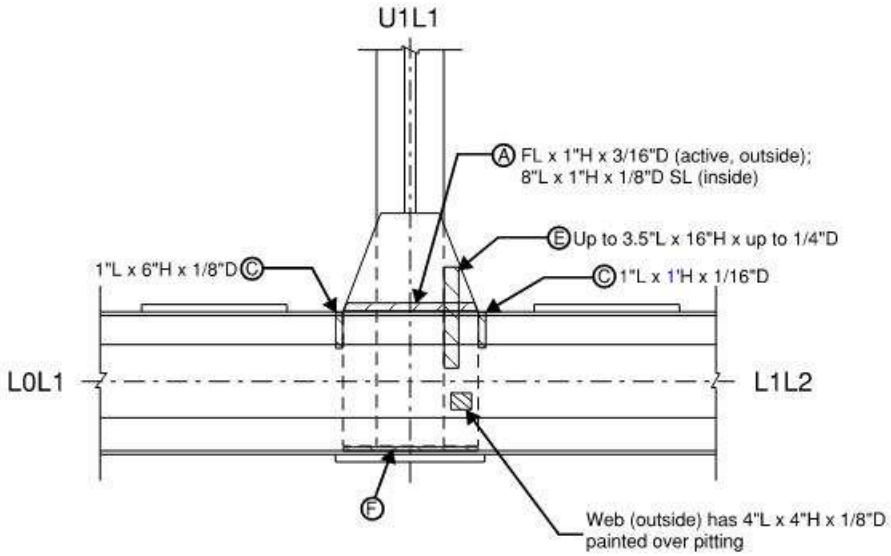

Span 25, North Truss, Node L1, North Gusset Plate, North Elevation

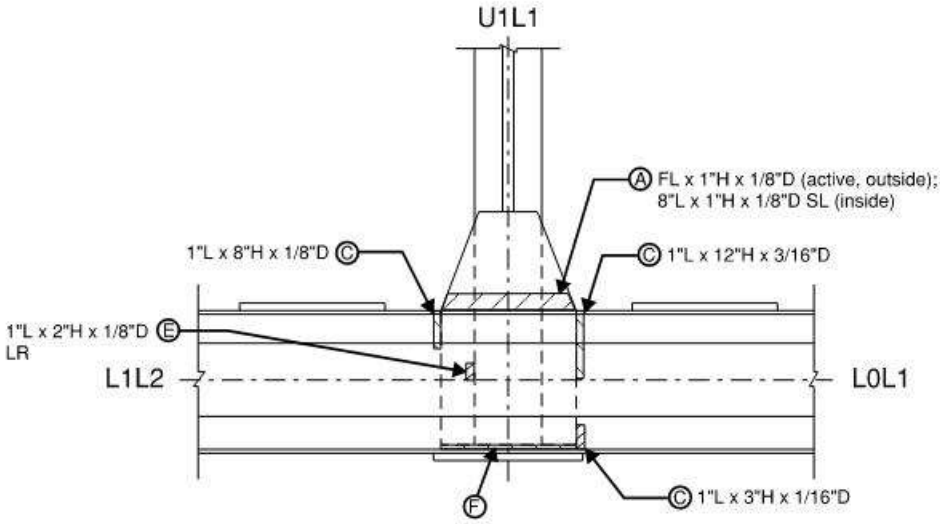

Span 25, North Truss, Node L1, South Gusset Plate, South Elevation

REVISION 1	DATE: 9/4/19	CREW: BH, JG (Baker)	REVISION 3	DATE:	CREW:
REVISION 2	DATE: 8/31/2021	CREW: EG, AN (PRIME)	REVISION 4	DATE:	CREW:

Sketches
Inspection type: Fracture Critical,Routine
Inspection Date: 7/26/2021
Inspected by: PRIME AE

:Bridge No 03819

Town: NEW LONDON
Carried: INTERSTATE 95 NORTHBOUND
Crossed: THAMES RV,RR,LOCAL ROADS
Inventory Route: NHS

CREW: SW, KT	DATE: 9/8/2017	BRIDGE NO.: 03819

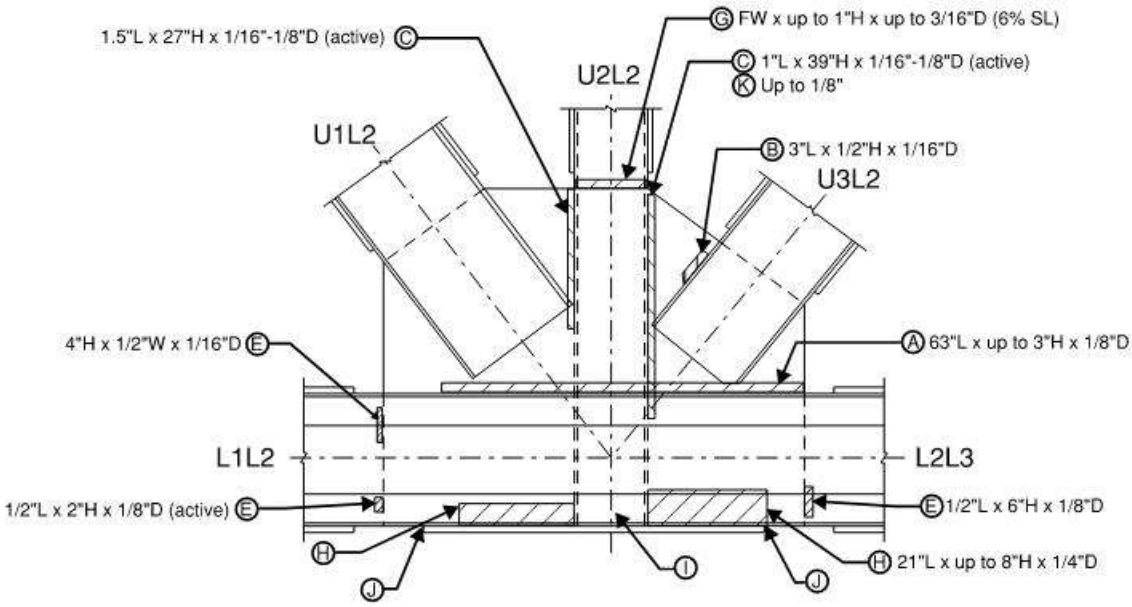

Span 25, North Truss, Node L2, North Gusset Plate, North Elevation

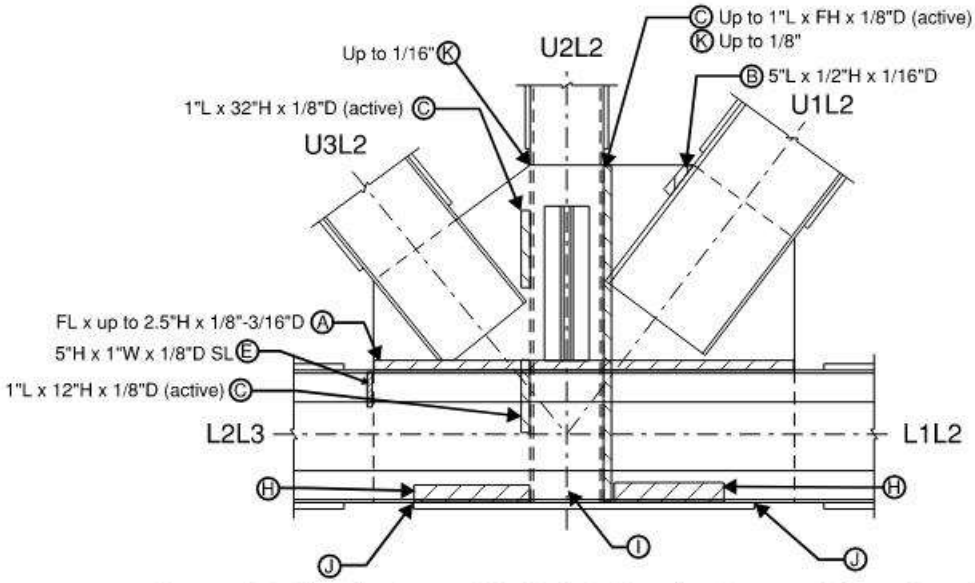

Note I:
- E chan legs w/ 2"H x 1/2" LOW

Span 25, North Truss, Node L2, South Gusset Plate, South Elevation

REVISION 1	DATE: 9/4/19	CREW: BH, JG (Baker)	REVISION 3	DATE:	CREW:
REVISION 2	DATE: 8/31/2021	CREW: EG, AN (PRIME) - No Change	REVISION 4	DATE:	CREW:

CREW: SW, KT	DATE: 9/7/2017	BRIDGE NO.: 03819

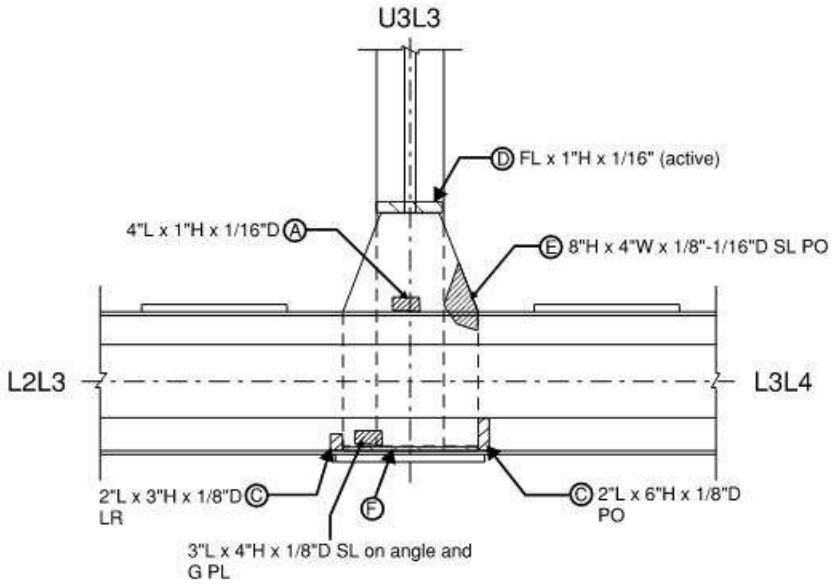

Span 25, North Truss, Node L3, North Gusset Plate, North Elevation

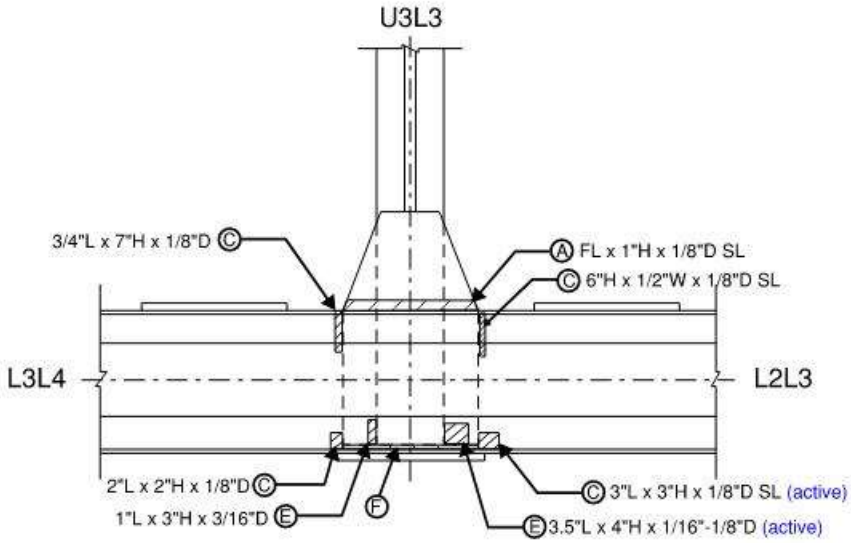

Span 25, North Truss, Node L3, South Gusset Plate, South Elevation

- LR at all locations

REVISION 1	DATE: 9/4/19	CREW: BH, JG (Baker)	REVISION 3	DATE:	CREW:
REVISION 2	DATE: 8/31/2021	CREW: EG, AN (PRIME)	REVISION 4	DATE:	CREW:

CREW: SW, KT	DATE: 9/7/2017	BRIDGE NO.: 03819

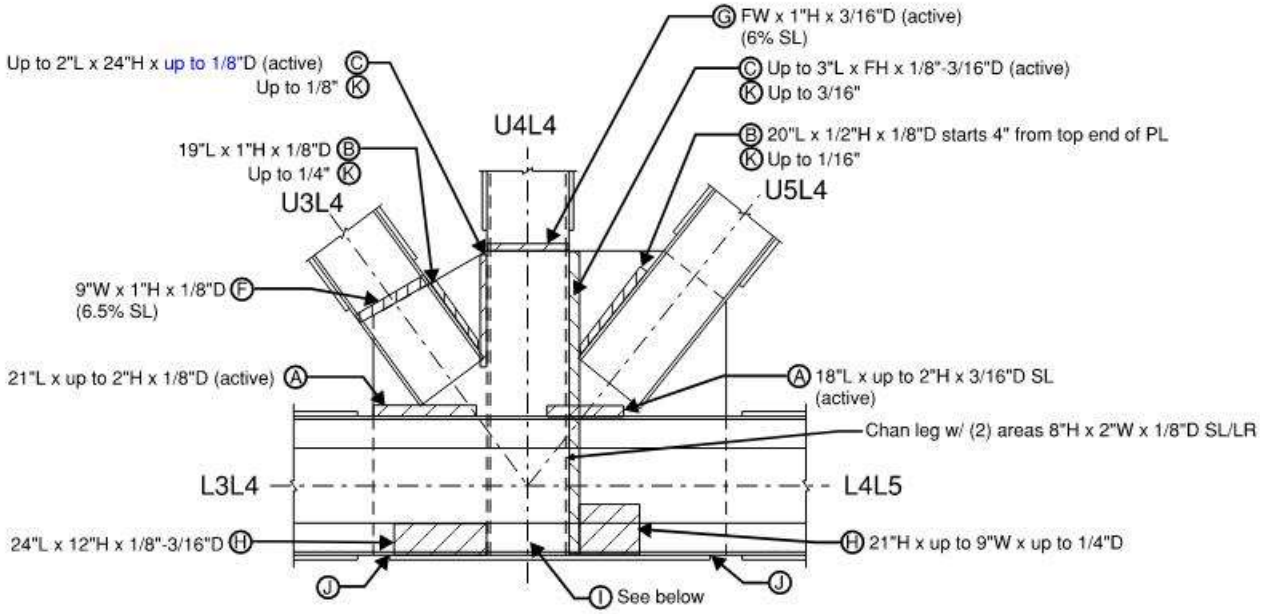

Span 25, North Truss, Node L4, North Gusset Plate, North Elevation

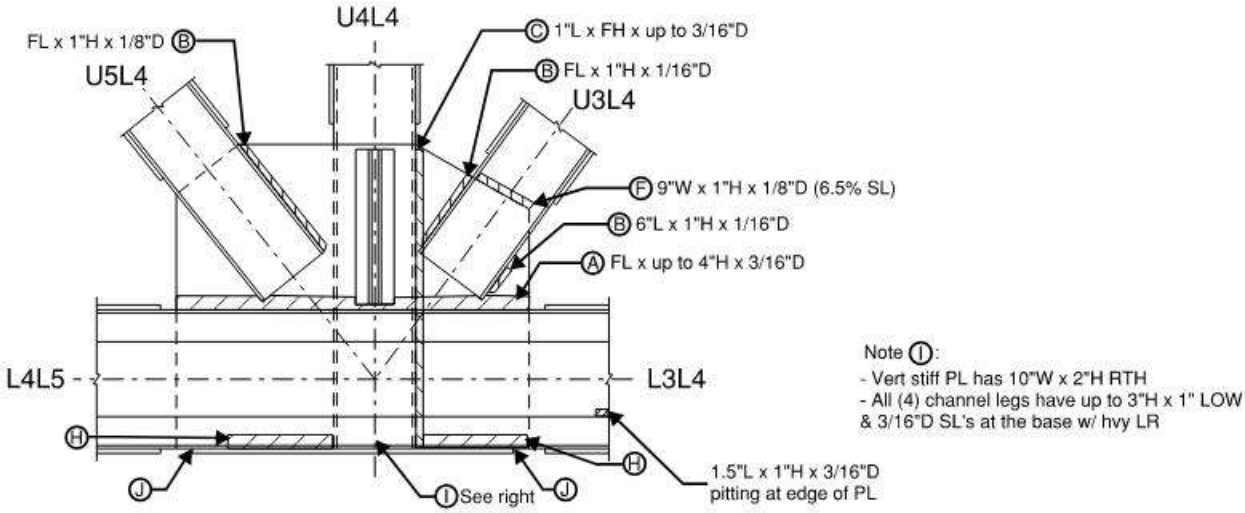

Span 25, North Truss, Node L4, South Gusset Plate, South Elevation

REVISION 1	DATE: 9/4/19	CREW: BH, JG (Baker)	REVISION 3	DATE:	CREW:
REVISION 2	DATE: 8/31/2021	CREW: EG, AN (PRIME)	REVISION 4	DATE:	CREW:

CREW: SW, KT	DATE: 9/7/2017	BRIDGE NO.: 03819

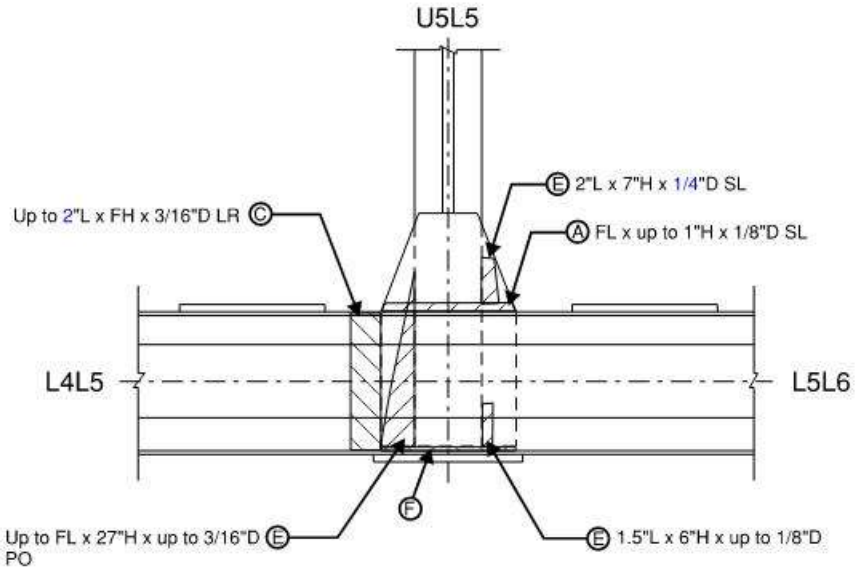

Span 25, North Truss, Node L5, North Gusset Plate, North Elevation

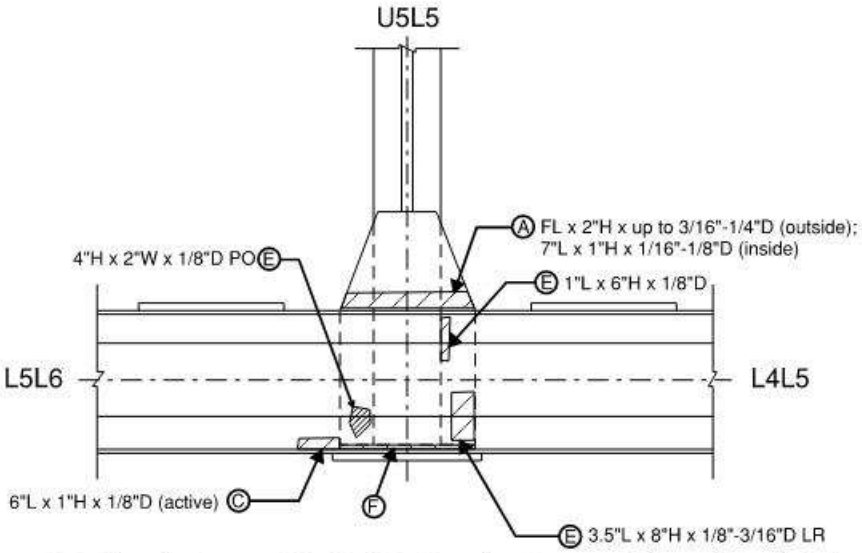

Span 25, North Truss, Node L5, South Gusset Plate, South Elevation

REVISION 1	DATE: 9/4/19	CREW: BH, JG (Baker)	REVISION 3	DATE:	CREW:
REVISION 2	DATE: 8/31/2021	CREW: EG, AN (PRIME)	REVISION 4	DATE:	CREW:

Sketches
Inspection type: Fracture Critical,Routine
Inspection Date: 7/26/2021
Inspected by: PRIME AE

:Bridge No 03819

Town: NEW LONDON
Carried: INTERSTATE 95 NORTHBOUND
Crossed: THAMES RV,RR,LOCAL ROADS
Inventory Route: NHS

CREW: SW, KT	DATE: 9/7/2017	BRIDGE NO.: 03819

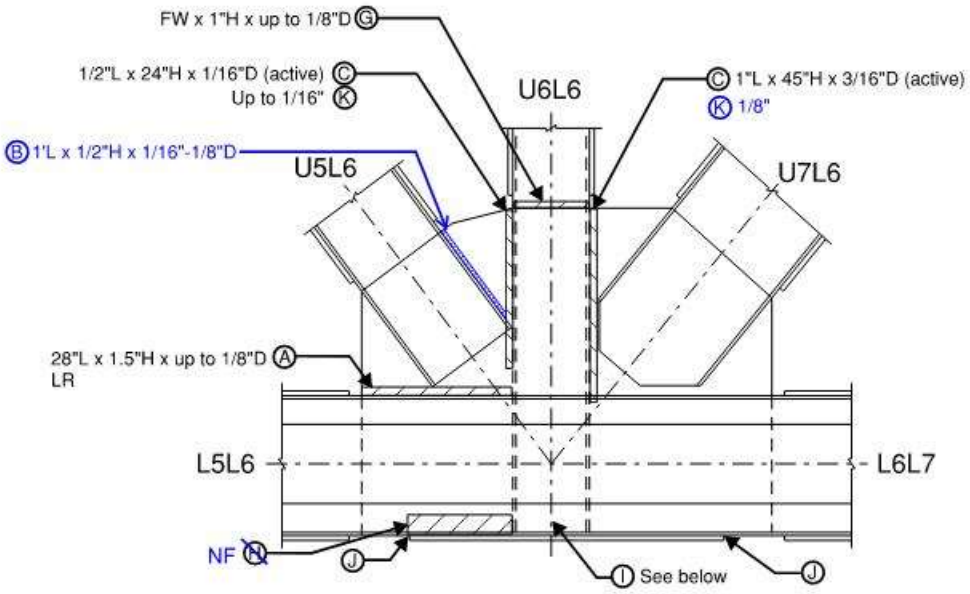

Span 25, North Truss, Node L6, North Gusset Plate, North Elevation

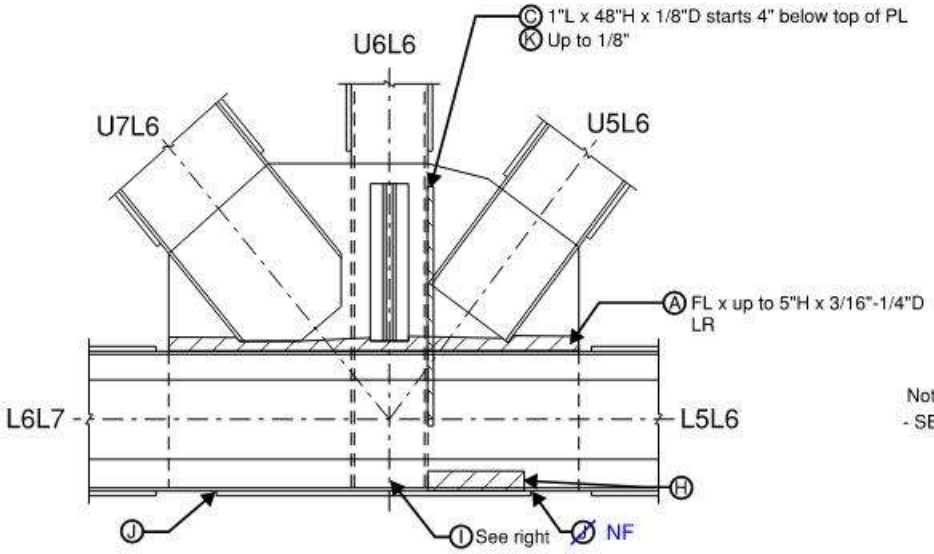

Note I:
- SE stiff w/ 1"ø RTH at base

Span 25, North Truss, Node L6, South Gusset Plate, South Elevation

REVISION 1	DATE: 9/4/19	CREW: BH, JG (Baker)	REVISION 3	DATE:	CREW:
REVISION 2	DATE: 8/31/2021	CREW: EG, AN (PRIME)	REVISION 4	DATE:	CREW:

CREW: SW, KT	DATE: 9/7/2017	BRIDGE NO.: 03819

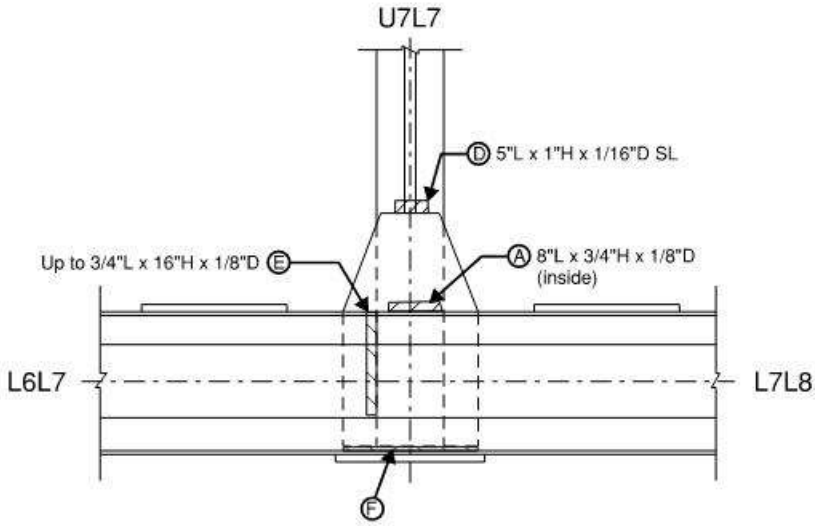

Span 25, North Truss, Node L7, North Gusset Plate, North Elevation

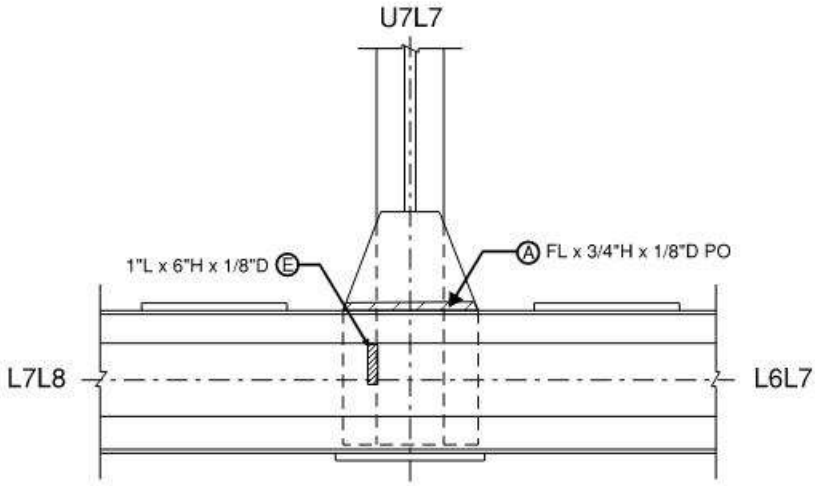

Span 25, North Truss, Node L7, South Gusset Plate, South Elevation

REVISION 1	DATE: 9/4/19	CREW: BH, JG (Baker)	REVISION 3	DATE:	CREW:
REVISION 2	DATE: 8/30/2021	CREW: BM, EG, AN (PRIME) - No Change	REVISION 4	DATE:	CREW:

Sketches
Inspection type: Fracture Critical,Routine
Inspection Date: 7/26/2021
Inspected by: PRIME AE

:Bridge No 03819

Town: NEW LONDON
Carried: INTERSTATE 95 NORTHBOUND
Crossed: THAMES RV,RR,LOCAL ROADS
Inventory Route: NHS

CREW: SW, KT	DATE: 9/7/2017	BRIDGE NO.: 03819

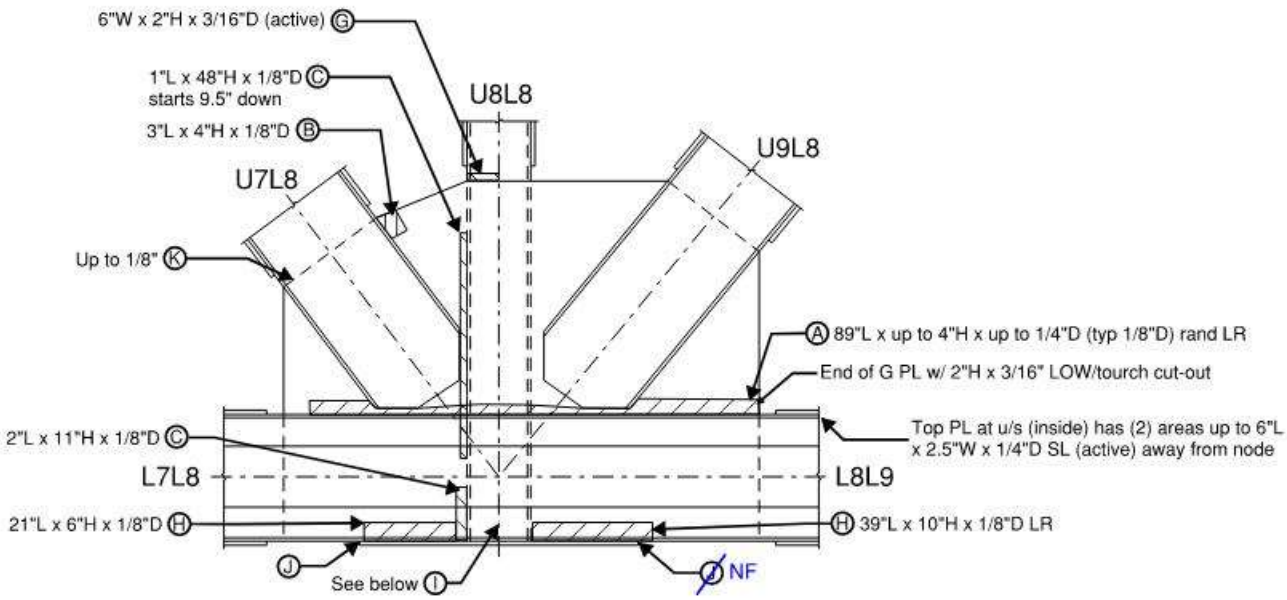

Span 25, North Truss, Node L8, North Gusset Plate, North Elevation

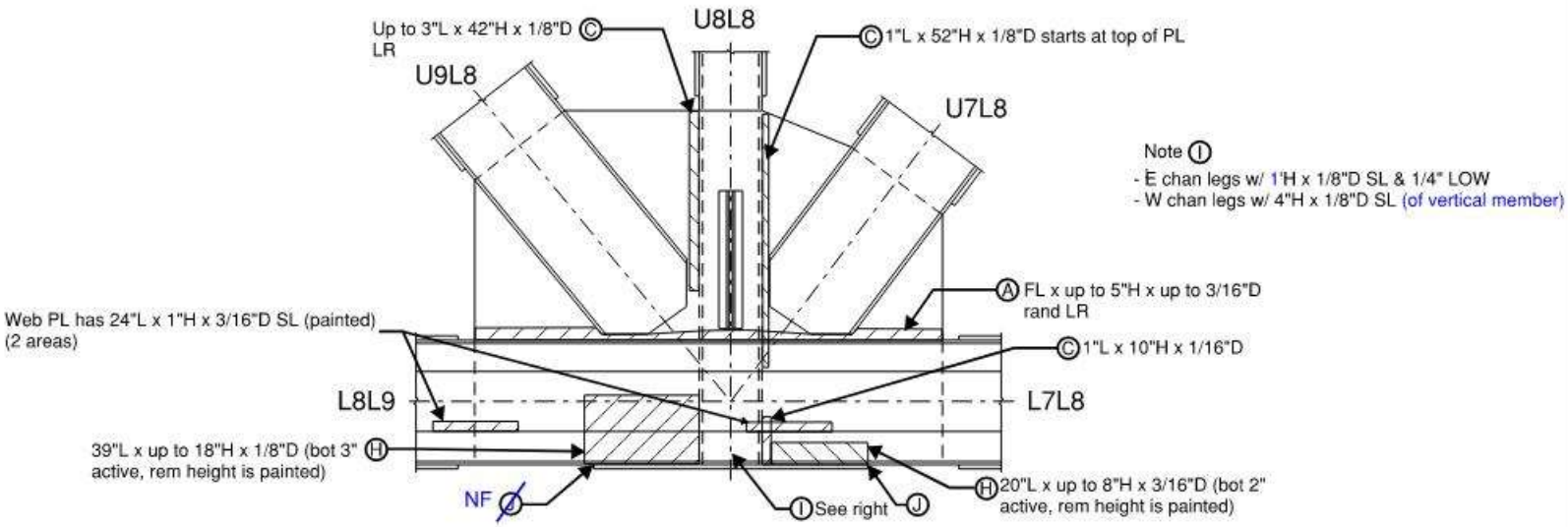

Span 25, North Truss, Node L8, South Gusset Plate, South Elevation

REVISION 1	DATE: 9/4/19	CREW: BH, JG (Baker)	REVISION 3	DATE:	CREW:
REVISION 2	DATE: 8/30/2021	CREW: EG, AN (PRIME)	REVISION 4	DATE:	CREW:

CREW: SW, KT	DATE: 9/7/2017	BRIDGE NO.: 03819

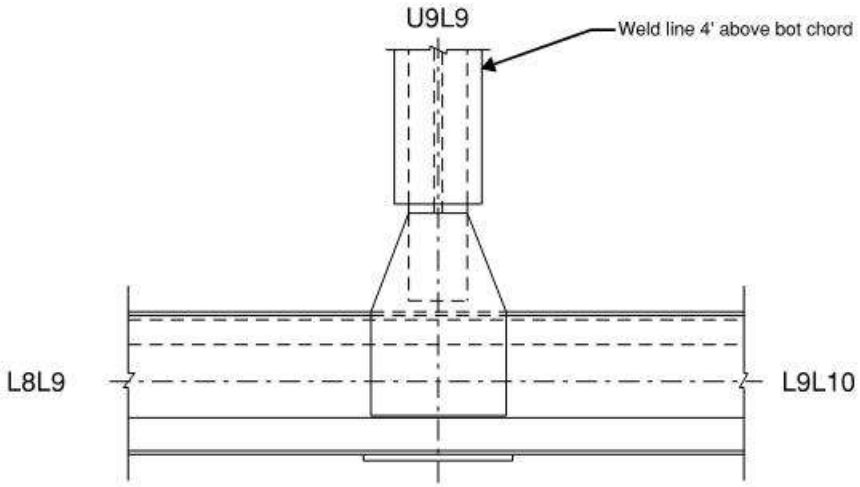

Span 25, North Truss, Node L9, North Gusset Plate, North Elevation

- All general losses.
- LR along G PL's above bot chord

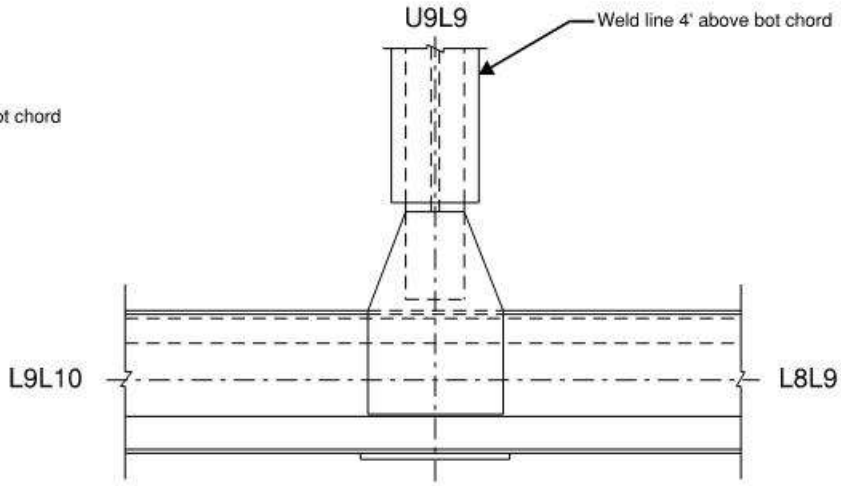

Span 25, North Truss, Node L9, South Gusset Plate, South Elevation

REVISION 1	DATE: 9/4/19	CREW: BH, JG (Baker)	REVISION 3	DATE:	CREW:
REVISION 2	DATE: 8/30/2021	CREW: EG, AN (PRIME) - No Change	REVISION 4	DATE:	CREW:

CREW: KT, AH	DATE: 9/29/2017	BRIDGE NO.: 03819

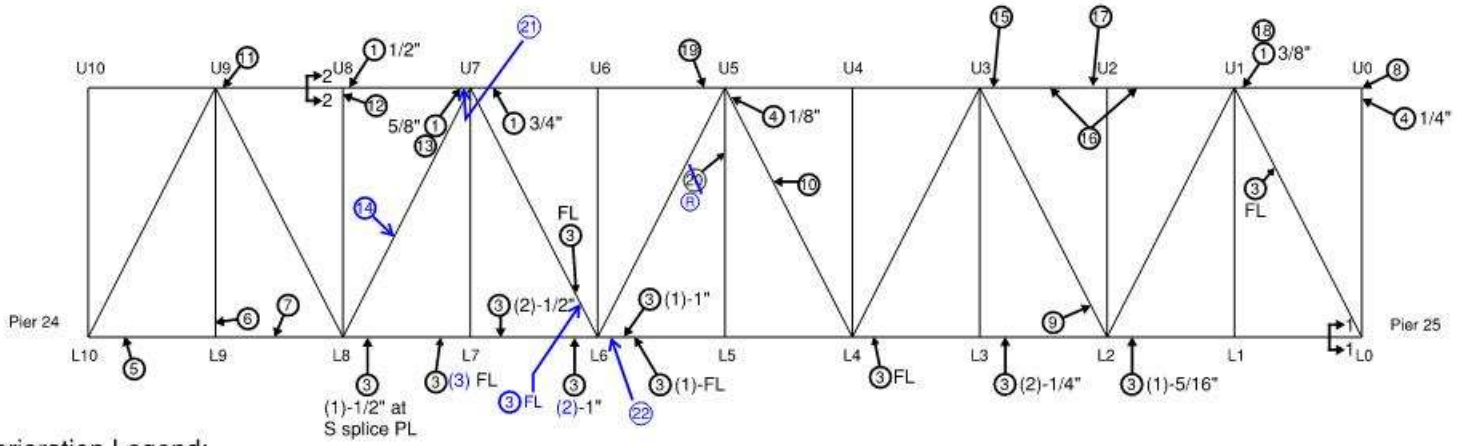

Deterioration Legend:

1 - PR between chord flange angles and web PL up to __" thick
2 - PR between chord flange angles and cover PL at edges up to __" thick
3 - Tack welds partially cracked or broken at lacing bar or batten PL and chord; (# per panel) and up to __" long
4 - PR between vert gusset PL and vert or diag member up to __" thick
5 - Top PL has areas of pitting up to 3"ø x 1/8"D around random rivets; N bot flg both legs have up to 5/16"D pitting x FH/FW & up to 1.5"H in web, S side bot flg both legs have 3"ø x 3/16"D pitting
6 - Both cover PL's (inside) at both sides has up to 26"H x 1"W x 1/8"D pitting
7 - Top PL has spotty areas of 2"ø x 3/16"D pitting
8 - Up to 1" PR between chord plates at ends
9 - N channel web (inside) adjacent to vert gusset PL has 12"W x 2"H x 1/8"D SL P.O.
10 - Up to 1/4" PR between S channel web and cover PL along FL
11 - Web above bot flg angle has 8"L x 1.5"H x 1/8"D pitting & 1/4" PR between bot angles and splice PL's
12 - 3/8" PR between vert member and fill PL
13 - Bot shim PL between clip angles has a 4¾"L minor defect & tack weld at the top is broken (inside U7)
14 - South channel, TF with random areas of SL adjacent to lacing bars up to FW x 1"L x 1/8"-3/16"D
15 - Up to 1" PR between bot flg angle and fill PL
16 - Top of bot flg angle horiz legs have 6"L x FW x up to 5/16"D pitting PO
17 - 1/4" PR between clip angle and vert web PL
18 - 1" PR between top PL and both web PL's
19 - S web PL at bottom has 4"L x 4"H x 1/4"D SL & 1" PR between angle and fill PL; N. web plate w/ 2"L x 1"H x 1/8"D SL/LR
20 - ~~Scupper downspout at diagonal has an 18"ø hole~~ (repaired with sleeve)
21 - Lacing bar with 5/8" impact rust between Flange angles
22 - Flange angle bent up 1/2" for 6"L

General Notes:

- See Riveted Truss General Notes (Spans 22-25 & 29-32) sheet
- See following gusset plate sheets for bottom chord gusset plate details

Span 25 - South Truss South Elevation

REVISION 1	DATE: 8/19/19	CREW: AH, BF (Baker)	REVISION 3	DATE:	CREW:
REVISION 2	DATE: 9/13/2021	CREW: EG, NH (PRIME)	REVISION 4	DATE:	CREW:

Sketches
Inspection type: Fracture Critical,Routine
Inspection Date: 7/26/2021
Inspected by: PRIME AE

:Bridge No 03819

Town: NEW LONDON
Carried: INTERSTATE 95 NORTHBOUND
Crossed: THAMES RV,RR,LOCAL ROADS
Inventory Route: NHS

CREW: KT, AH	DATE: 9/29/2017	BRIDGE NO.: 03819

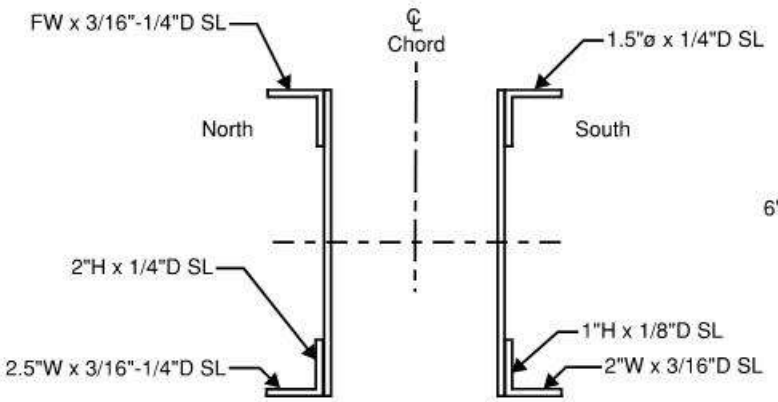

Section 1-1 (L0-L1)
(7.1% Loss)
4' from L0 Gusset plate
(Between 1st & 2nd lacing bar connections)

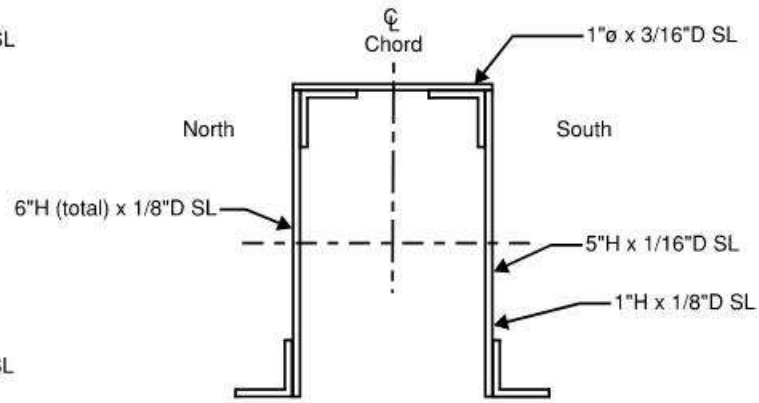

Section 2-2 (U8-U9)

Span 25 - South Truss Section Loss

REVISION 1	DATE: 8/19/19	CREW: AH, BF (Baker)	REVISION 3	DATE:	CREW:
REVISION 2	DATE: 9/13/2021	CREW: EG, NH (PRIME)	REVISION 4	DATE:	CREW:

CREW: SW, BF	DATE: 10/6/2017	BRIDGE NO.: 03819

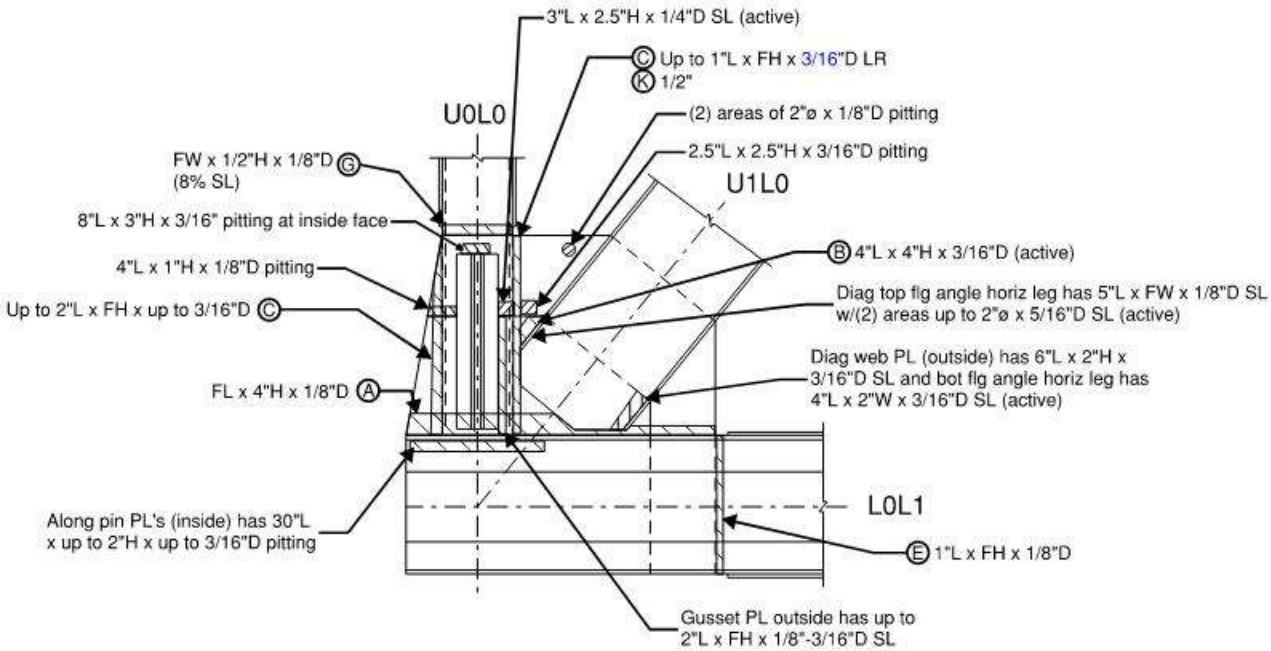

Span 25, South Truss, Node L0, North Gusset Plate, North Elevation

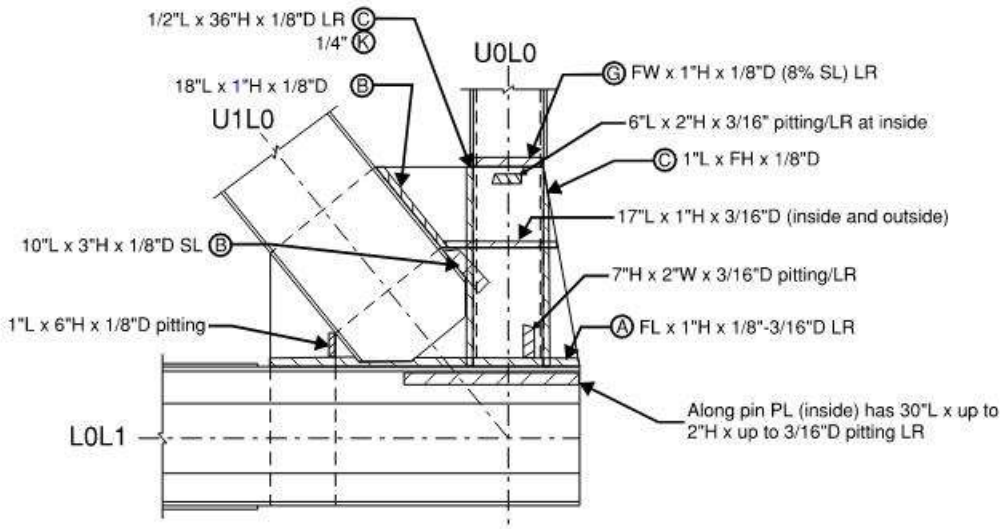

Note:
- Inside of both gusset PL's have pockets of pitting up to 3"ø 1/4"D

Span 25, South Truss, Node L0, South Gusset Plate, South Elevation

REVISION 1	DATE: 8/20/19	CREW: BH, JG (Baker)	REVISION 3	DATE:	CREW:
REVISION 2	DATE: 9/14/2021	CREW: EG, NH (PRIME)	REVISION 4	DATE:	CREW:

CREW: SW, BF	DATE: 10/6/2017	BRIDGE NO.: 03819

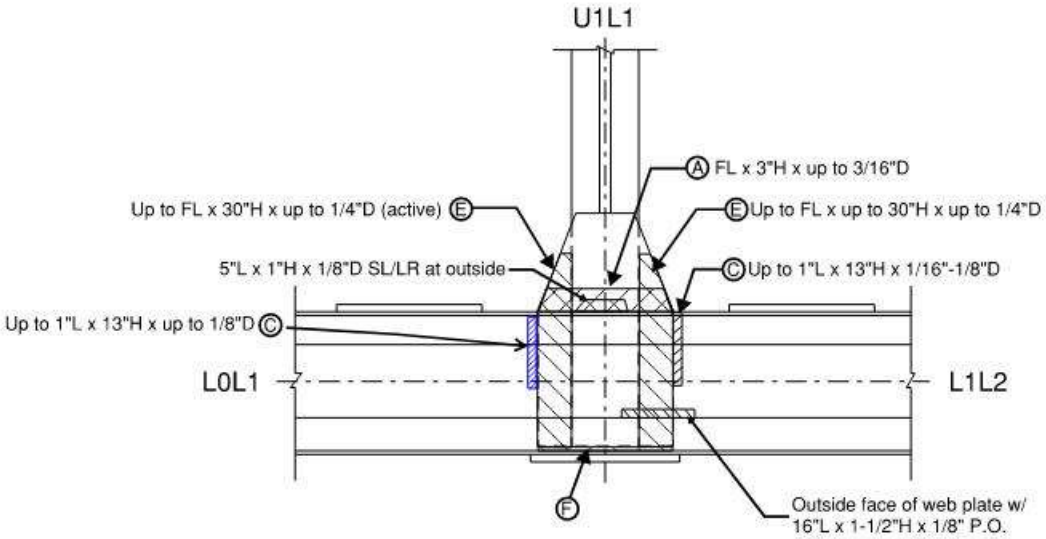

Span 25, South Truss, Node L1, North Gusset Plate, North Elevation

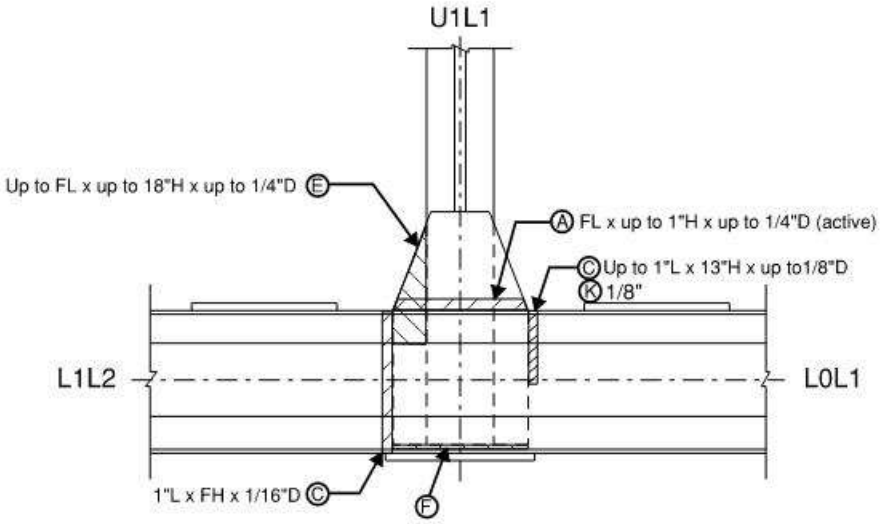

Span 25, South Truss, Node L1, South Gusset Plate, South Elevation

REVISION 1	DATE: 8/20/19	CREW: BH, JG (Baker)	REVISION 3	DATE:	CREW:
REVISION 2	DATE: 9/14/2021	CREW: EG, NH (PRIME)	REVISION 4	DATE:	CREW:

Sketches
Inspection type: Fracture Critical,Routine
Inspection Date: 7/26/2021
Inspected by: PRIME AE

:Bridge No 03819

Town: NEW LONDON
Carried: INTERSTATE 95 NORTHBOUND
Crossed: THAMES RV,RR,LOCAL ROADS
Inventory Route: NHS

CREW: BF, SW	DATE: 10/5/2017	BRIDGE NO.: 03819

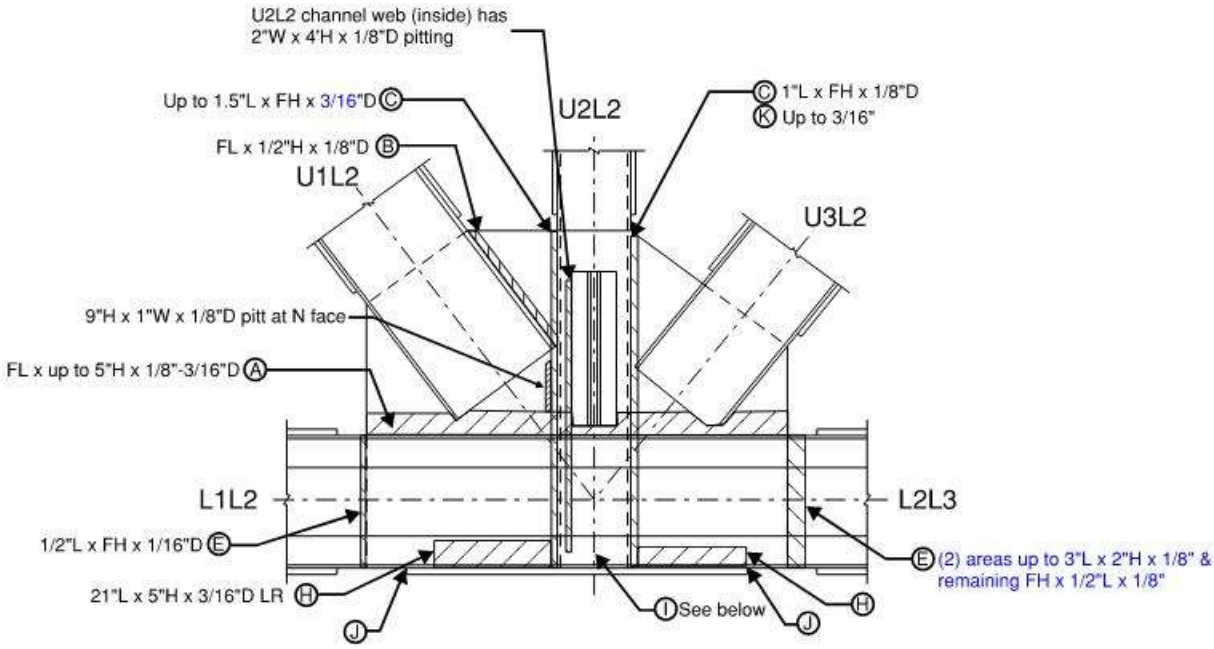

Span 25, South Truss, Node L2, North Gusset Plate, North Elevation

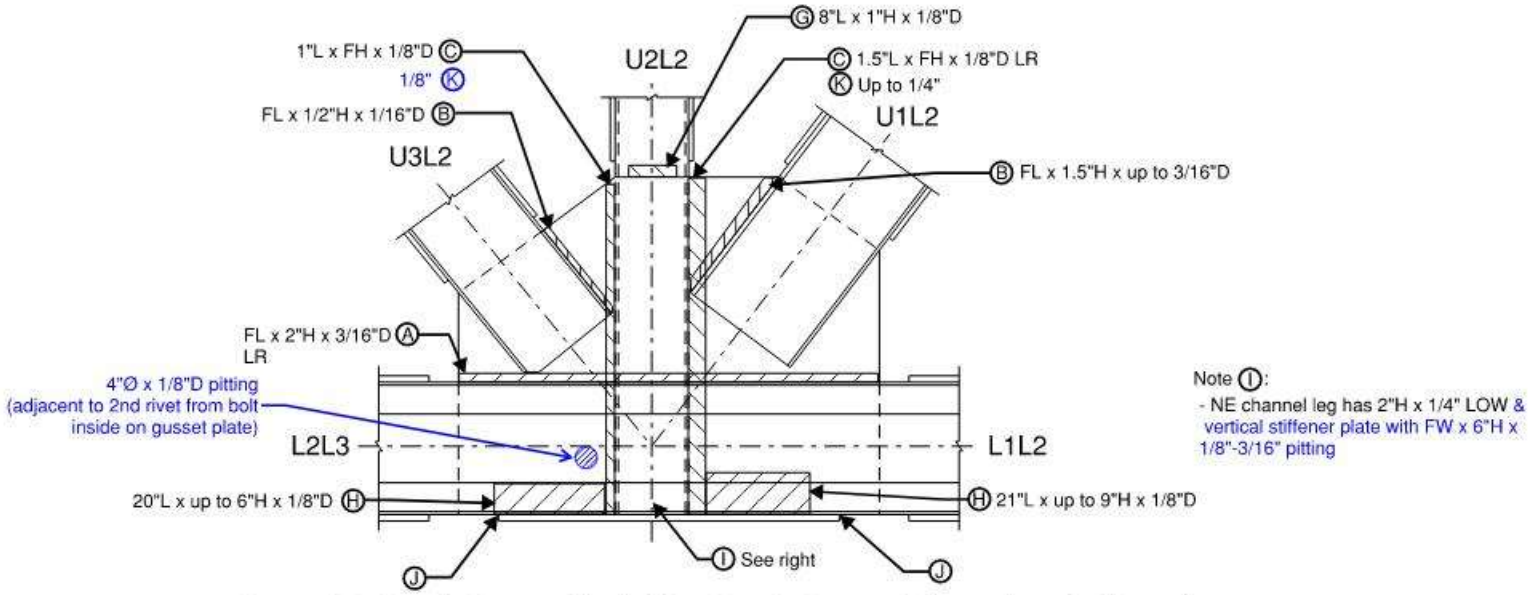

Span 25, South Truss, Node L2, South Gusset Plate, South Elevation

REVISION 1	DATE: 8/20/19	CREW: BH, JG (Baker)	REVISION 3	DATE:	CREW:
REVISION 2	DATE: 9/14/2021	CREW: EG, NH (PRIME)	REVISION 4	DATE:	CREW:

CREW: BF, SW	DATE: 10/5/2017	BRIDGE NO.: 03819

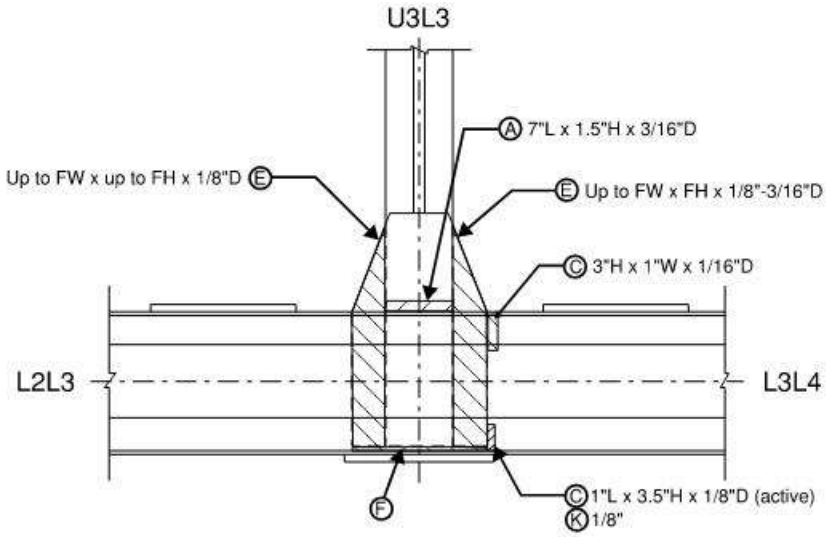

Span 25, South Truss, Node L3, North Gusset Plate, North Elevation

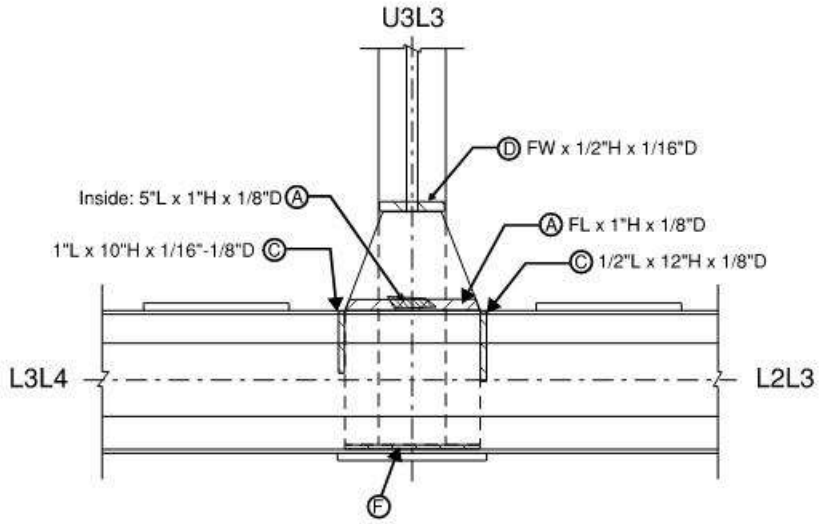

Span 25, South Truss, Node L3, South Gusset Plate, South Elevation

REVISION 1	DATE: 8/20/19	CREW: BH, JG (Baker)	REVISION 3	DATE:	CREW:
REVISION 2	DATE: 9/14/2021	CREW: EG, NH (PRIME)	REVISION 4	DATE:	CREW:

CREW: BF, SW	DATE: 10/5/2017	BRIDGE NO.: 03819

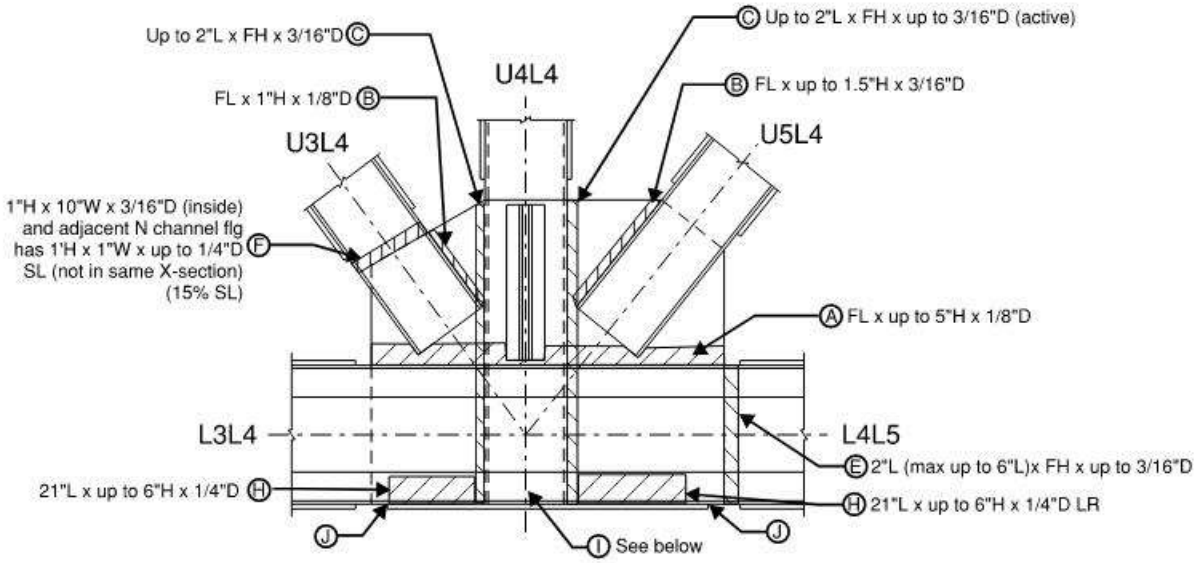

Span 25, South Truss, Node L4, North Gusset Plate, North Elevation

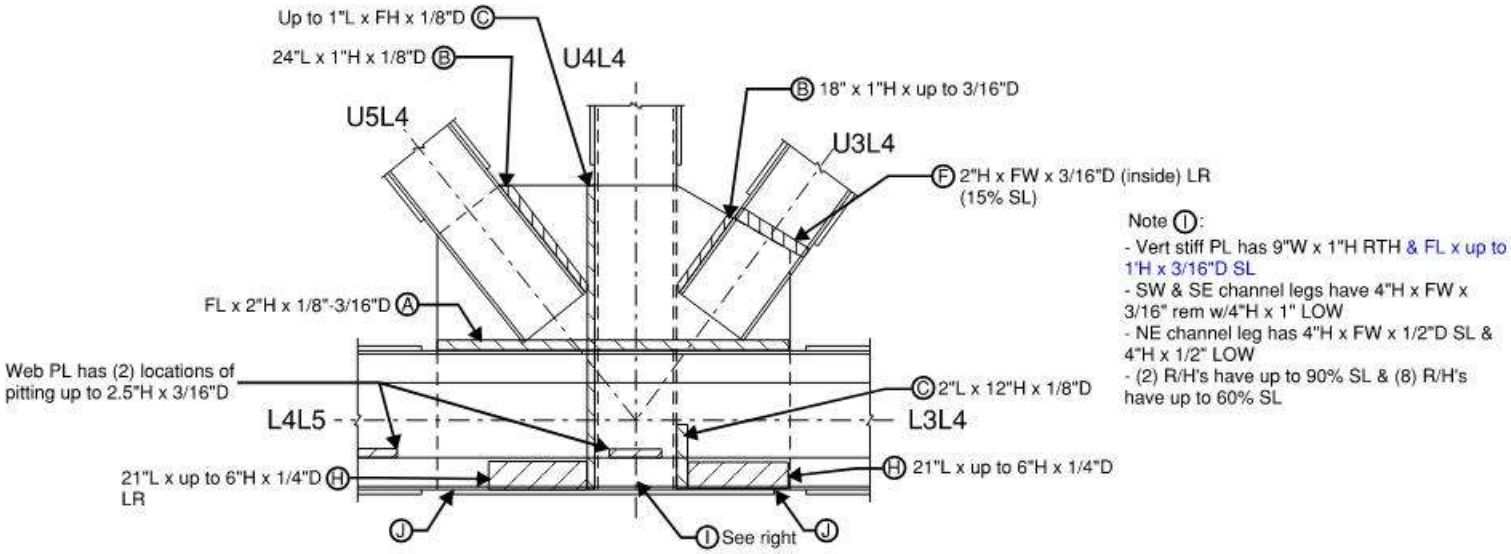

Span 25, South Truss, Node L4, South Gusset Plate, South Elevation

REVISION 1	DATE: 8/20/19	CREW: BH, JG (Baker)	REVISION 3	DATE:	CREW:
REVISION 2	DATE: 9/14/2021	CREW: EG, NH (PRIME)	REVISION 4	DATE:	CREW:

CREW: BF, SW	DATE: 10/5/2017	BRIDGE NO.: 03819

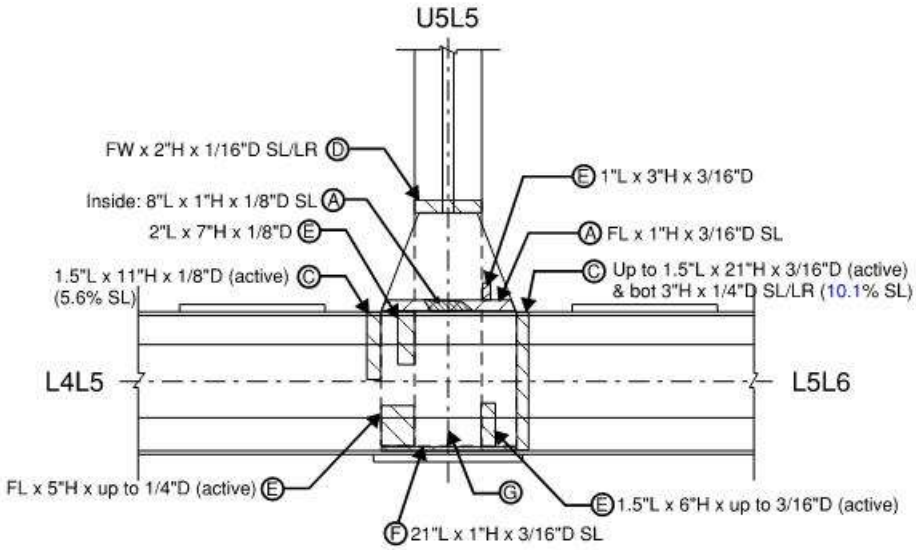

Span 25, South Truss, Node L5, North Gusset Plate, North Elevation

Note G:
- N. side w/ 4"H x 2"W KE rem area w/ 1.5" x 1"W RTH within
- Random LR at node

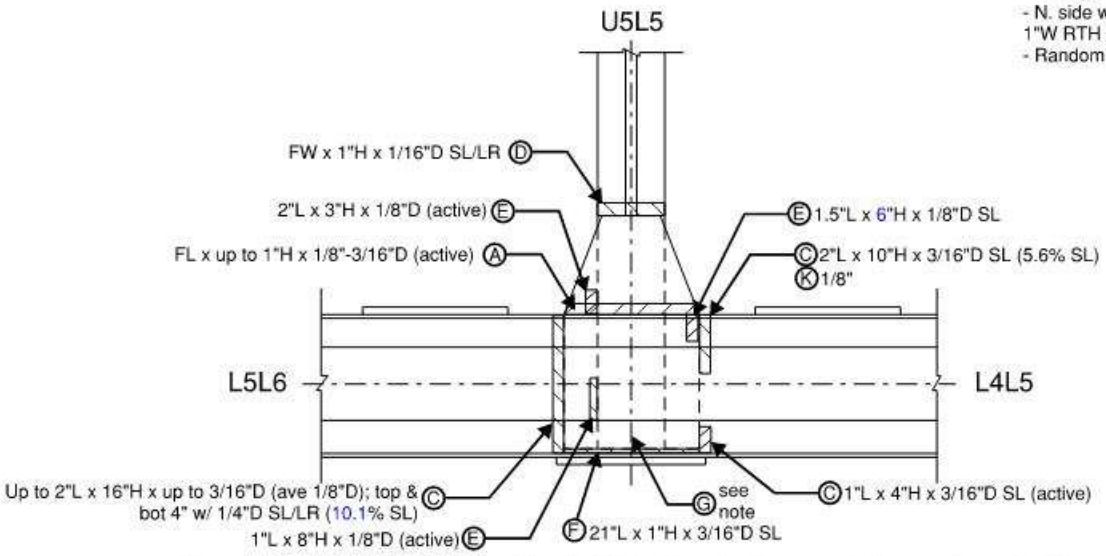

Span 25, South Truss, Node L5, South Gusset Plate, South Elevation

REVISION 1	DATE: 8/20/19	CREW: BH, JG (Baker)	REVISION 3	DATE:	CREW:
REVISION 2	DATE: 9/13/2021	CREW: EG, NH (PRIME)	REVISION 4	DATE:	CREW:

CREW: BF, SW	DATE: 10/5/2017	BRIDGE NO.: 03819

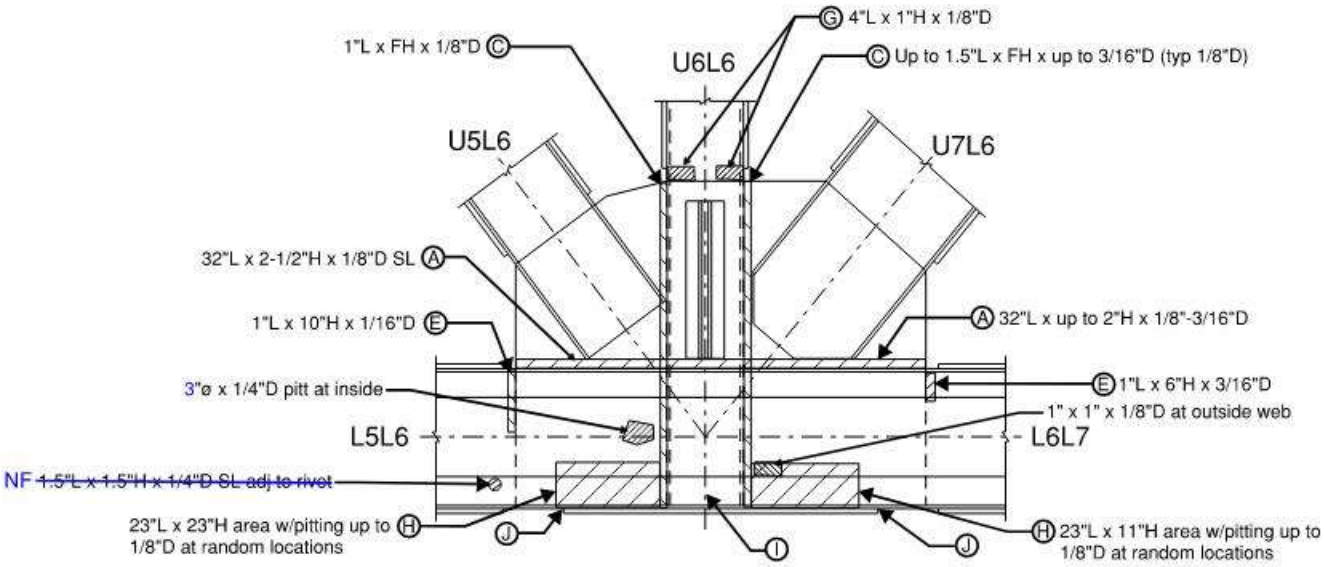

Span 25, South Truss, Node L6, North Gusset Plate, North Elevation

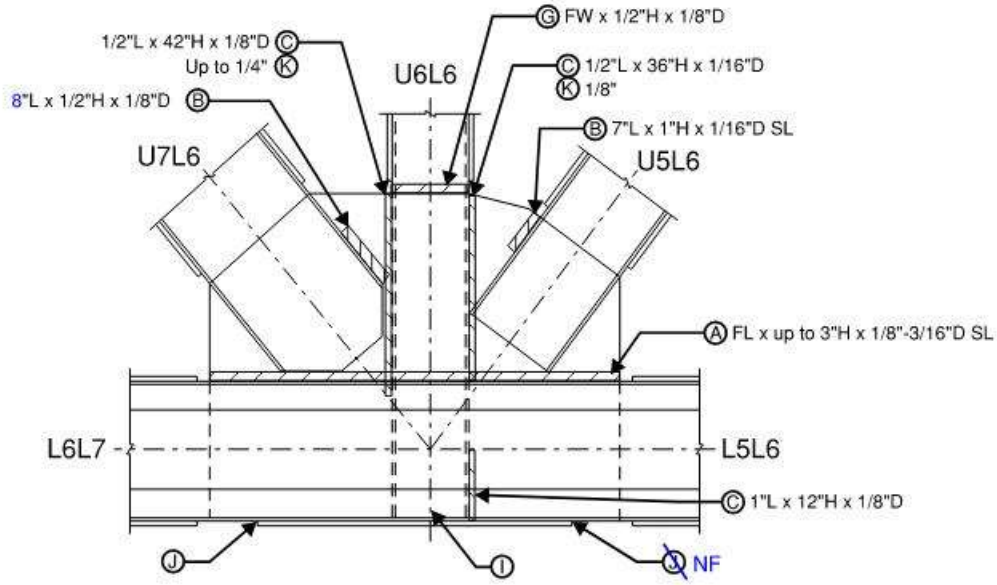

Span 25, South Truss, Node L6, South Gusset Plate, South Elevation

REVISION 1	DATE: 8/20/19	CREW: BH, JG (Baker)	REVISION 3	DATE:	CREW:
REVISION 2	DATE: 9/13/2021	CREW: EG, NH (PRIME)	REVISION 4	DATE:	CREW:

CREW: BF, SW	DATE: 10/5/2017	BRIDGE NO.: 03819

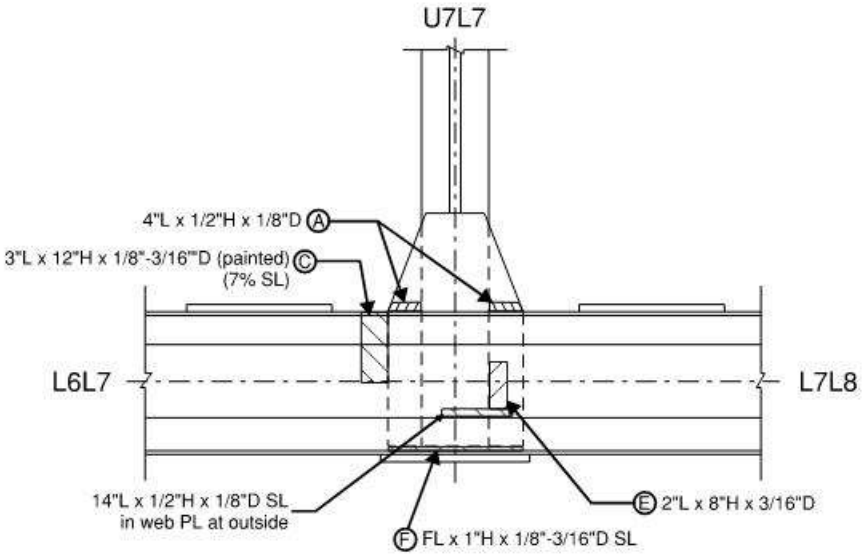

Span 25, South Truss, Node L7, North Gusset Plate, North Elevation

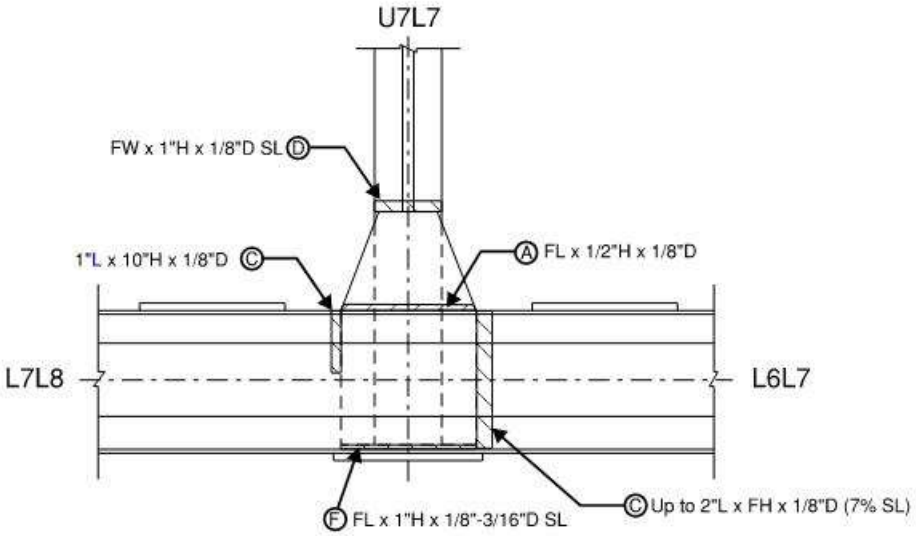

Span 25, South Truss, Node L7, South Gusset Plate, South Elevation

REVISION 1	DATE: 8/20/19	CREW: BH, JG (Baker)	REVISION 3	DATE:	CREW:
REVISION 2	DATE: 9/13/2021	CREW: EG, NH (PRIME)	REVISION 4	DATE:	CREW:

CREW: BF, SW	DATE: 10/13/2017	BRIDGE NO.: 03819

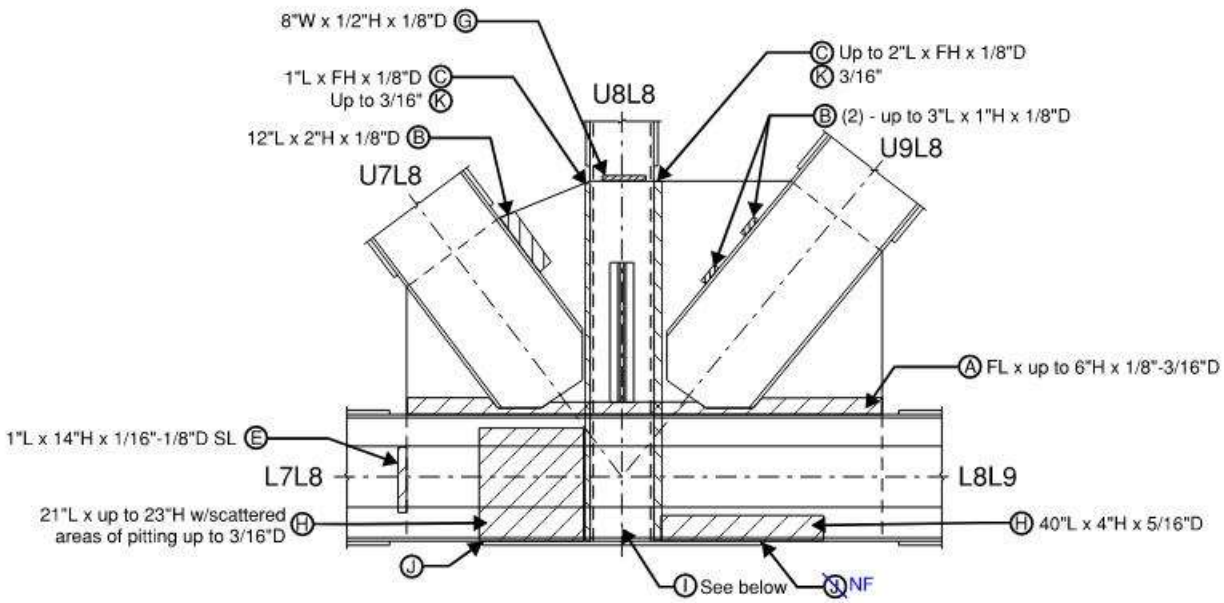

Span 25, South Truss, Node L8, North Gusset Plate, North Elevation

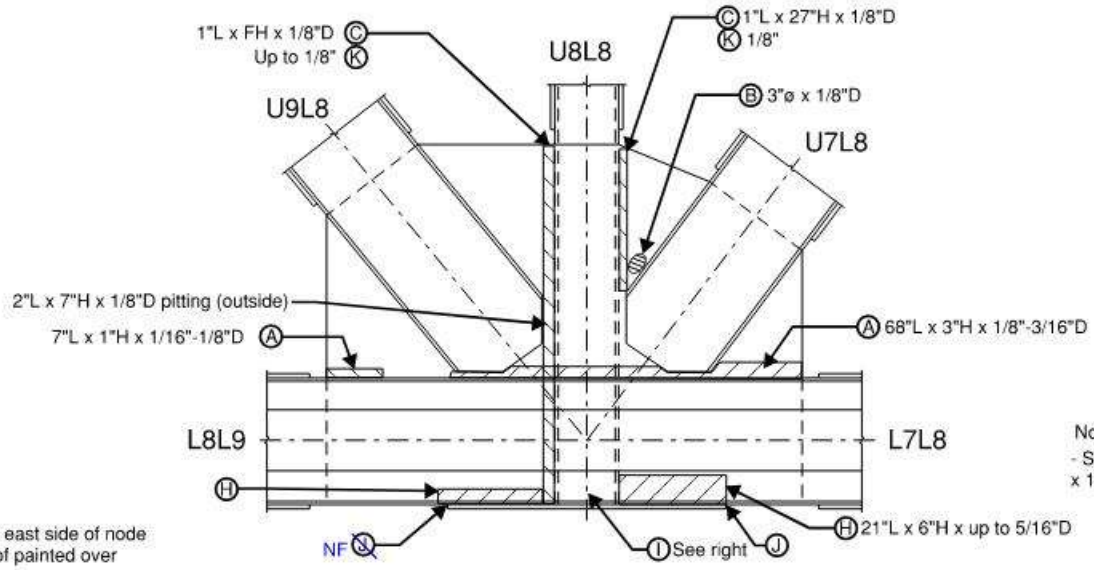

Note I:
- SE & NE channel legs have 5"H x FW x 1/8" rem with 1/4" LOW

Note:
- Both gusset PL's at east side of node have random areas of painted over pitting up to 1/8"D

Span 25, South Truss, Node L8, South Gusset Plate, South Elevation

REVISION 1	DATE: 8/20/19	CREW: BH, JG (Baker)	REVISION 3	DATE:	CREW:
REVISION 2	DATE: 9/13/2021	CREW: EG, NH (PRIME)	REVISION 4	DATE:	CREW:

CREW: BF, SW	DATE: 10/5/2017	BRIDGE NO.: 03819

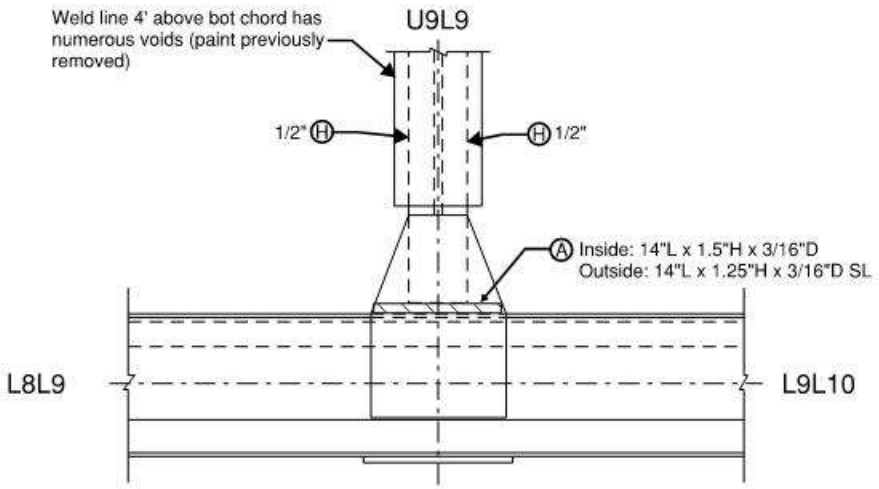

Span 25, South Truss, Node L9, North Gusset Plate, North Elevation

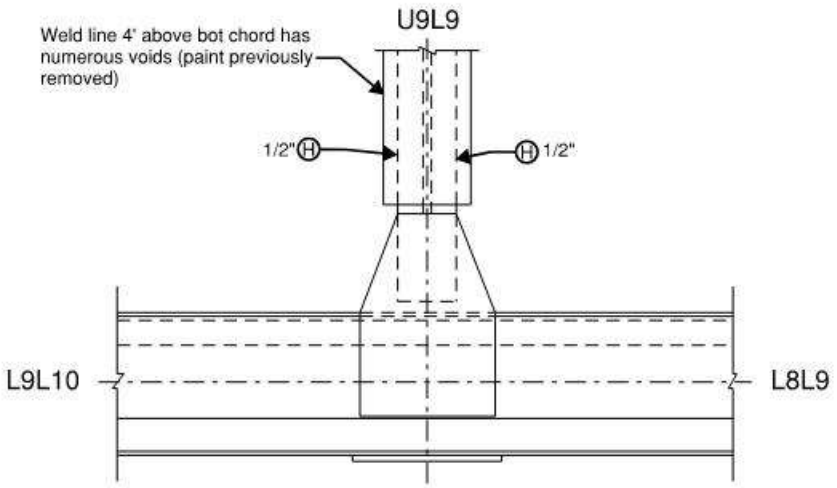

Span 25, South Truss, Node L9, South Gusset Plate, South Elevation

REVISION 1	DATE: 8/20/19	CREW: BH, JG (Baker)	REVISION 3	DATE:	CREW:
REVISION 2	DATE: 9/13/2021	CREW: EG, NH (PRIME) - No Change	REVISION 4	DATE:	CREW:

CREW: SW, KT	DATE: 9/17/2017	BRIDGE NO.: 03819

Deterioration Legend:
1 - PR between top horiz gusset PL and bracing members up to __" thick
2 - PR between bot horiz gusset PL and bracing members up to __" thick
3 - Pitting on top horiz gusset PL up to __" deep
4 - Pitting on bot horiz gusset PL up to __" deep
5 - Bot flg angle horiz leg has 1/4"D pitting
6 - Bot flg angle horiz leg has 6"L x FW x 1/4"D pitting and 20% SL to R/H

LOG DIRECTION
WEST TO EAST

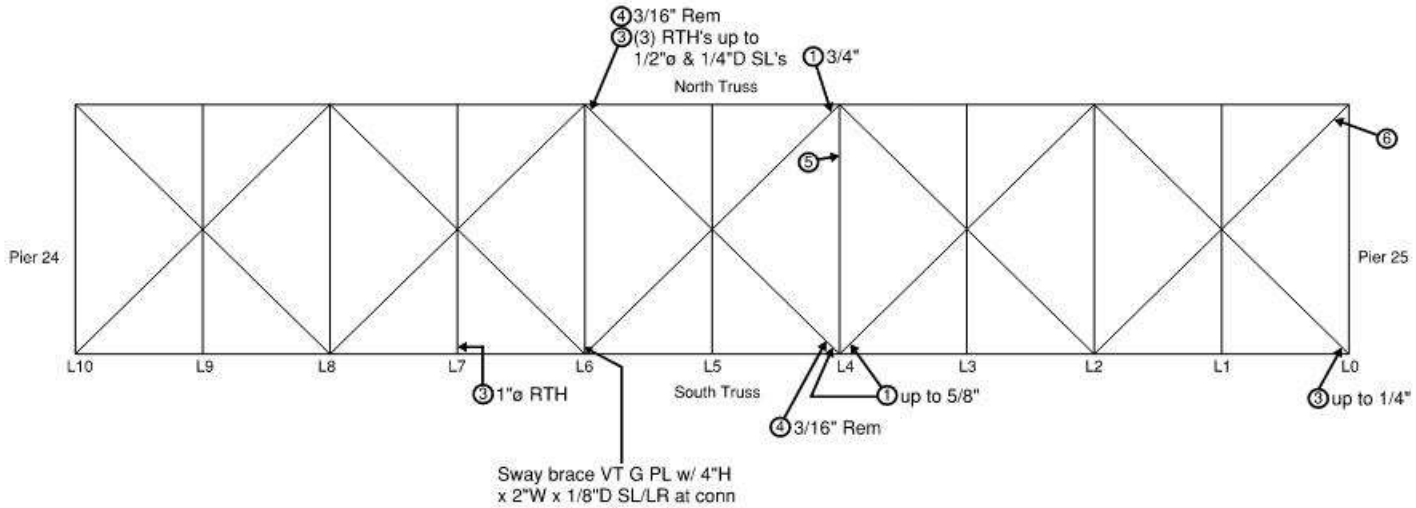

General Notes:
- See Lateral and Sway Bracing General Notes (Spans 22-25 & 29-32) sheet

Span 25 - Bottom Laterals

REVISION 1	DATE: 8/20/19	CREW: BH, JG (Baker)	REVISION 3	DATE:	CREW:
REVISION 2	DATE: 8/30/2021	CREW: EG, AN, NH (PRIME) - No Change	REVISION 4	DATE:	CREW:

CREW: SW, BF	DATE: 9/25/2017	BRIDGE NO.: 03819

Welded Truss General Notes - Spans 26-28

General:

- Specific areas of section loss and/or pitting losses shown on the field sheets are typically painted with some minor re-rusting, U.O.N.
- Trusses are built-up box members with continuous welds along outside faces and intermittent tack welds (typically 1" to 2" long) on the inside of the boxes, spaced approximately 3" center to center. Random tack welds are sloppy.
- Truss members and gusset plates have random areas of peeling paint with varying degrees of rusting, up to laminated.
- There are isolated areas of recurring light to laminated rust, typically at bolted connections at nodes and splices.
- Random connection bolts are not fully engaged with up to 1/8" gap (bolts are tight).
- Random mis-drilled holes in truss members and gusset plates (no bolts installed typically due to hole not drilled through all plates).
- Random areas of silt stains at truss nodes below joint locations.
- All truss member section losses shown on sketches are <5% of the total gross effective area, unless otherwise noted.
- Random minor smooth gouges and scrapes from construction throughout.
- The span 27 hanger rods (redundant support system) have moderate vibration and random areas of light rust.
- Random areas in the truss chords have a bolt not installed due to a rigging support, bracket, angle, etc., blocking the hole.
- Random light to heavy bird debris inside top and bottom chords.
- Random partially cracked and fully broken tack welds with no propagation into the base metal noted.
- LR = Laminated rust; PO = Painted over; RR = painted over with re-rusting

Top Chord:

- There is up to 1" thick pack rust between the truss top chord top flange cover plate and floorbeam shim plate w/random RTH's at edges, random shim plates are bent due to pack rust.

Bottom Chord:

- Random truss bottom chord vertical gusset plates above the bottom chords have 1/2" high x 1/16"-1/8" deep section loss (estimated, cannot hit with hammer) intermittent along full length (<5% loss). Loss typically past painted with random re-rusting.
- Top splice plates have random areas of laminated rust and section loss up to 1/16" deep with up to 1/8" thick pack rust..
- All truss vertical gusset plate section losses along the critical horizontal and vertical shear planes are <5%, unless otherwise noted.
- Random bolts, nuts and/or bolt heads in the bottom chord are rose-budded with up to 10% SL.

Verticals:

- Bottom chord vertical gusset plates at zero force vertical members (spans 26 & 28 odd nodes and at random span 27 nodes), inside faces above the bottom chord typically have up to 1/8" deep section loss and also at these locations, there is typically up to 1/2" thick pack rust between the gusset plates and vertical truss members (thicker areas noted on sketches). See sketch on next sheet.

REVISION 1	DATE: 8/21/19	CREW: BH, JG (Baker)	REVISION 3	DATE:	CREW:
REVISION 2	DATE: 08/02/2021	CREW: BM, EG, SD (PRIME AE) - No Change	REVISION 4	DATE:	CREW:

CREW: SW, BF	DATE: 9/25/2017	BRIDGE NO.: 03819

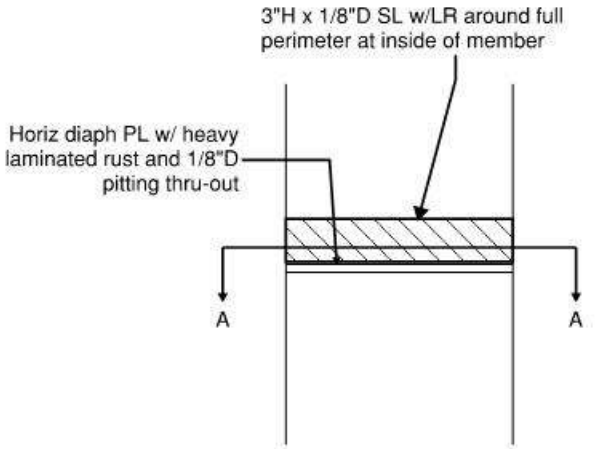

Mid-height at horiz diaph PL adj to horizontal strut connection

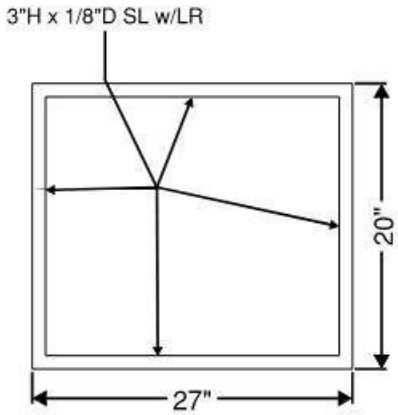

Section A-A

Note: Truss has 12" wide cut-outs in one plane, just above/below x-section shown. Therefore section loss calc shown will remove cut-out area and compare to effective section

Worst case loss (Span 26, S. Truss U12L12 & Span 27 N. Truss U14L14)

A_{GROSS} 2(20" x 5/8") + 2(27" x 5/8") = 58.75in^2 for L12U12 & L14U14

Area of holes in member: (2)(12")(5/8") = 15in^2

A_{EFF} = 58.75 - 15 = 43.75in^2

Loss at A_{GROSS}: L = 20" + 20" + 27" + 27" = 94in, 94"(1/8") = 11.75in^2

Loss is less than effective area, thus negligible loss compared to effective areas (similar at all locations)

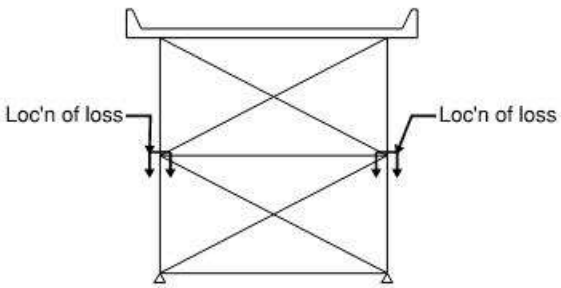

Truss Cross-Section

Typical Section Loss Locations in Vertical Members at "Stacked Sway Bracing" Locations in Spans 26-28
(Worst Case Losses Shown)

REVISION 1	DATE: 8/21/19	CREW: BH, JG (Baker)	REVISION 3	DATE:	CREW:
REVISION 2	DATE: 08/02/2021	CREW: BM, EG, SD (PRIME AE) - No Change	REVISION 4	DATE:	CREW:

CREW: SW, KT	DATE: 9/8/2017	BRIDGE NO.: 03819

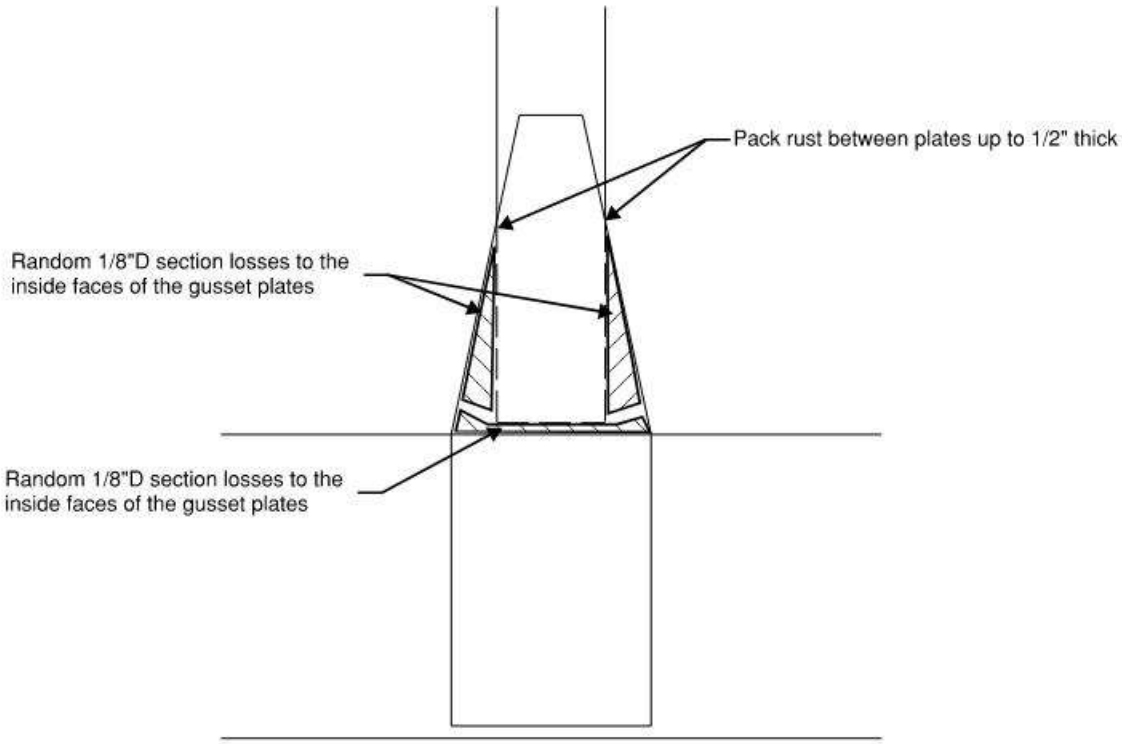

General Notes:
- In Spans 26 & 28, only applicable at odd nodes.
- Span 27 applicable at random nodes.

Spans 26-28 Typical Truss Lower Zero Force Gusset Plate Conditions

REVISION 1	DATE: 8/21/19	CREW: BH, JG (Baker)	REVISION 3	DATE:	CREW:
REVISION 2	DATE: 08/02/2021	CREW: BM, EG, SD (PRIME AE)	REVISION 4	DATE:	CREW:

CREW: SW, BF	DATE: 9/25/2017	BRIDGE NO.: 03819

Lateral and Sway Bracing General Notes - Spans 26-28

Lateral Bracing:

- Lateral bracing members and gusset plates have random areas of peeling paint and isolated areas of light to laminated rust.
- Random horizontal gusset plates have minor bends/dents (as-built condition) or deformations up to 3/4" due to pack rust.
- Lateral bracing members have random minor bends/dents up to 1" (as-built).
- There is pack rust between the lower lateral bracing members and the horizontal gusset plates at truss bottom chord connections and mid-strut connections up to 1/2" (thicker areas noted on sketches).
- Random lateral bracing members and struts have painted over pitting in the bottom of the webs and flanges up to 3" high/wide x 3/16" deep (some areas are re-rusting).
- There are areas of pack rust between the lower lateral bracing horizontal gusset plates and the truss bottom chord up to 1/2" (thicker areas noted on sketches).
- Random connection bolts and nuts at the lateral bracing horizontal gusset plate connections to the bottom chord have areas of active rust with isolated rose-budding w/up to 25% section loss (some losses painted).
- There is up to 1/4" thick pack rust between top lateral gusset plates and floorbeam bottom flanges.
- Isolated bolt nuts are not fully engaged with up to 1/8" gap (bolts are tight).
- Horizontal gusset plates have random areas of up to 1/4" deep painted over pitting.
- Random light to heavy bird debris on bracing members and gusset plates.
- Random top and bottom flanges are wavy.
- Random mis-drilled holes in bracing members and gusset plates (no bolts installed typically due to hole not drilled through all plates).

Sway Bracing:

- The sway bracing has random areas of peeling paint and isolated areas of light rust.
- There is up to 3/8" pack rust between the top lateral bracing gusset plates and X-brace sway strut connection plates and floorbeam bottom flanges, and up to 1/4" thick pack rust/gaps between bottom strut and sway brace bracket, and between vertical gusset plates and sway members.
- There is up to 3/16" pack rust between lateral brace gusset plate and shim plates for sway bracing.

REVISION 1	DATE: 8/21/19	CREW: BH, JG (Baker)	REVISION 3	DATE:	CREW:
REVISION 2	DATE: 08/02/2021	CREW: BM, EG, SD (PRIME AE)	REVISION 4	DATE:	CREW:

CREW: BH, BF	DATE: 9/8/2017	BRIDGE NO.: 03819

5 ET, Cotter pin replaced since the last inspection and tie wire in place; bolt and nut have light to moderate rust

Date	Meas.
10/05	1-3/8"
7/07	1-3/8"
1/10	1-3/8"
10/12/11	1-3/8"
10/2/13	1-3/8"
9/22/15	1-5/16"
10/12/17	1-3/8"
8/29/19	1-3/8"
8/09/21	1-3/8"

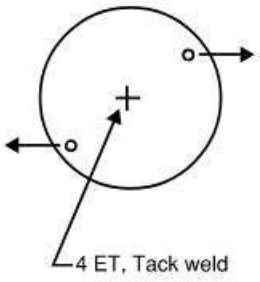

Date	Meas.
10/05	1-3/8"
7/07	1-3/8"
1/10	1-3/8"
10/12/11	1-7/16"
10/2/13	1-7/16"
9/22/15	1-7/16"
10/12/17	1-7/16"
8/29/19	1-7/16"
8/09/21	1-7/16"

North Elev.

Date	Meas.
10/05	1-1/16"
7/07	1-1/16"
1/10	1-1/16"
10/12/11	1-1/16"
10/2/13	1-1/16"
9/22/15	1"
10/12/17	1"
8/29/19	1"
8/09/21	1"

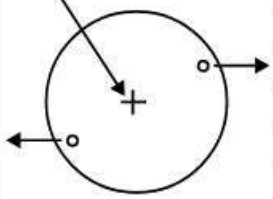

Date	Meas.
10/05	1"
7/07	1"
1/10	1"
10/12/11	1"
10/2/13	1"
9/22/15	1-1/16"
10/12/17	1"
8/29/19	1"
8/09/21	1"

South Elev.

Upper Pin

4 ET, cotter pin missing, pin nut rotates slightly when tapped with hammer (cotter pin replaced with wire by CDOT Maintenance on 11/15/17, no room for actual cotter pin)

Date	Meas.
10/05	*
7/07	*
1/10	*
10/12/11	*
10/2/13	1-5/16"
9/22/15	1-5/16"
9/8/17	1-5/16"
9/6/19	1-5/16"
8/09/21	1-5/16"

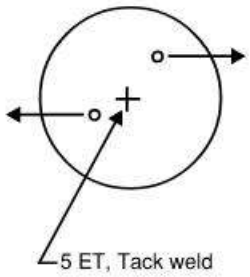

Date	Meas.
10/05	*
7/07	*
1/10	*
10/12/11	*
10/2/13	1-5/16"
9/22/15	1-5/16"
9/8/17	1-5/16"
9/6/19	1-5/16"
8/09/21	1-5/16"

North Elev.

Date	Meas.
10/05	*
7/07	*
1/10	*
10/12/11	*
10/2/13	1-1/8"
9/22/15	1-1/8"
9/8/17	1-1/8"
9/6/19	1-1/8"
8/09/21	1-1/8"

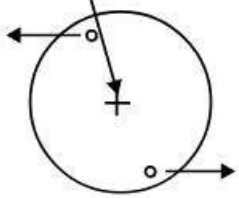

Date	Meas.
10/05	*
7/07	*
1/10	*
10/12/11	*
10/2/13	1-1/8"
9/22/15	1-3/16"
9/8/17	1-3/16"
9/6/19	1-3/16"
8/09/21	1-3/16"

South Elev.

Lower Pin

Note: Remove plug bolts and measure depth to pin plate. 10"ø pin at these locations.
- Washers appear to have shifted lower based on exposed paint system beneath.

LEGEND
ET - Exposed threads on bolt at centerline of pin
* - Bolt stripped - No measurement taken

Span 27 North Truss L19U19 Truss Pin Measurements

REVISION 1	DATE: 8/29/19	CREW: BH, JG (Baker)	REVISION 3	DATE:	CREW:
REVISION 2	DATE: 8/9/2021	CREW: NR, EB (PRIME)	REVISION 4	DATE:	CREW:

Sketches
Inspection type: Fracture Critical,Routine
Inspection Date: 7/26/2021
Inspected by: PRIME AE

:Bridge No 03819

Town: NEW LONDON
Carried: INTERSTATE 95 NORTHBOUND
Crossed: THAMES RV,RR,LOCAL ROADS
Inventory Route: NHS

CREW: SW, BF	DATE: 9/25/2017	BRIDGE NO.: 03819

Date	Meas.
10/05	1-5/8"
7/07	1-5/8"
1/10	1-5/8"
10/12/11	1-5/8"
10/2/13	1-5/8"
9/22/15	1-5/8"
9/29/17	1-5/8"
9/4/19	1-5/8"
8/11/21	1-5/8"

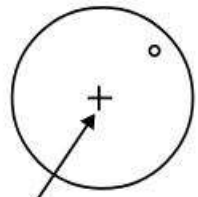

8 ET, Cotter pin in place. Pin nut moves when hit with hammer

North Elev.

Date	Meas.
10/05	15/16"
7/07	15/16"
1/10	15/16"
10/12/11	15/16"
10/2/13	15/16"
9/22/15	15/16"
9/29/17	15/16"
9/4/19	15/16"
8/11/21	15/16"

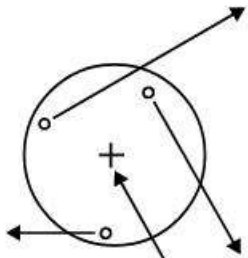

1 ET, Tack weld

South Elev.

Date	Meas.
10/05	15/16"
1/10	15/16"
10/12/11	15/16"
10/2/13	15/16"
9/22/15	15/16"
9/29/17	15/16"
9/4/19	15/16"
8/11/21	15/16"

Date	Meas.		
10/05	1-1/2"	8/11/21	15/16"
7/07	1-9/16"		
1/10	1-1/2"		
10/12/11	15/16"		
10/2/13	15/16"		
9/22/15	15/16"		
9/29/17	15/16"		
9/4/19	15/16"		

Upper Pin

5 ET, Cotter pin missing and tie wire in place (cotter pin replaced by CDOT Maintenance on 11/15/17)

Date	Meas.
10/05	*
7/07	*
1/10	*
10/12/11	*
10/2/13	1-9/16"
9/22/15	1-5/8"
9/25/17	1-5/8"
8/22/19	1-5/8"
8/11/21	1-5/8"

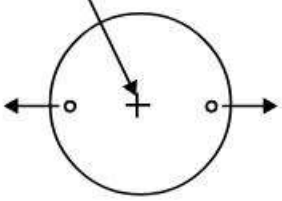

Date	Meas.
10/05	*
7/07	*
1/10	*
10/12/11	*
10/2/13	1-1/2"
9/22/15	1-1/2"
9/25/17	1-1/2"
8/22/19	1-1/2"
8/11/21	1-1/2"

North Elev.

Date	Meas.
10/05	1-1/16"
7/07	1"
1/10	1-1/16"
10/12/11	1-1/16"
10/2/13	1"
9/22/15	1-1/16"
9/25/17	1-1/16"
8/22/19	1-1/16"
8/11/21	1-1/16"

Bolt missing

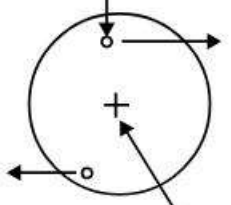

3 ET, Tack weld

Date	Meas.
10/05	1-1/16"
7/07	1-1/16"
1/10	1-1/8"
10/12/11	1-1/16"
10/2/13	1"
9/22/15	1"
9/25/17	1"
8/22/19	1"
8/11/21	1"

South Elev.

Lower Pin

Note: Remove plug bolts and measure depth to pin plate. 10"ø pin at these locations.

LEGEND
ET - Exposed threads on bolt at centerline of pin
* - Bolt stripped - No measurement taken

Span 27 South Truss L19U19 Truss Pin Measurements

REVISION 1	DATE: 8/22/19	CREW: BH, JG (Baker)	REVISION 3	DATE:	CREW:
REVISION 2	DATE: 8/11/2021	CREW: NR, EB (PRIME)	REVISION 4	DATE:	CREW:

Sketches
Inspection type: Fracture Critical,Routine
Inspection Date: 7/26/2021
Inspected by: PRIME AE

:Bridge No 03819

Town: NEW LONDON
Carried: INTERSTATE 95 NORTHBOUND
Crossed: THAMES RV,RR,LOCAL ROADS
Inventory Route: NHS

CREW: SW, BF	DATE: 10/10/2017	BRIDGE NO.: 03819

✳- Unable to remove deteriorated brass plug

Date	Meas.
10/05	1-3/16"
8/07	1-3/16"
1/10	1-3/16"
11/17/11	1-3/16"
10/2/13	1-3/16"
9/22/15	1-3/16"
10/12/17	1-3/16"
8/29/19	1-3/16"
8/10/21	✳

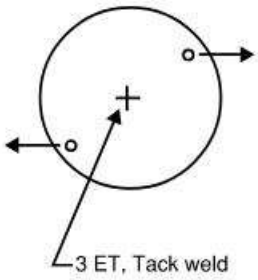

Date	Meas.
10/05	1-1/8"
8/07	1-1/8"
1/10	1-1/8"
11/17/11	1-3/16"
10/2/13	1-1/8"
9/22/15	1-1/8"
10/12/17	1-1/8"
8/29/19	✳
8/10/21	✳

North Elev.

Date	Meas.
10/05	1-3/16"
8/07	1-3/16"
1/10	1-3/16"
11/17/11	1-3/16"
10/2/13	1-3/16"
9/22/15	1-3/16"
10/12/17	1-3/16"
8/29/19	1-3/16"
8/10/21	1-3/16"

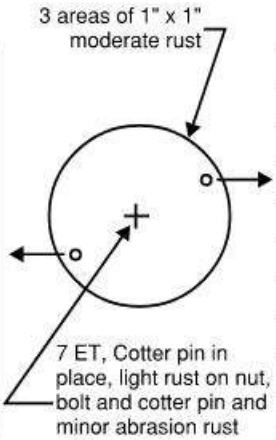

Date	Meas.
10/05	1-1/8"
8/07	1-1/8"
1/10	1-1/8"
11/17/11	1-1/8"
10/2/13	1-1/8"
9/22/15	1-1/8"
10/12/17	1-1/8"
8/29/19	1-1/8"
8/10/21	1-1/8"

South Elev.

Upper Pin

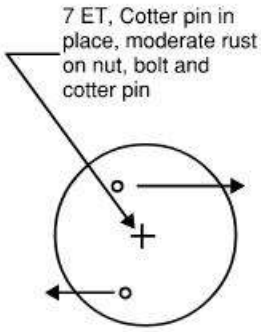

Date	Meas.
10/05	*
8/07	*
1/10	*
11/17/11	*
10/2/13	1-1/4"
9/22/15	1-1/4"
10/10/17	1-1/4"
9/6/19	1-1/4"
8/10/21	1-1/4"

Date	Meas.
10/05	1-1/8"
8/07	1/1/8"
1/10	1-3/16"
11/17/11	1-5/16"
10/2/13	1-5/16"
9/22/15	1-5/16"
10/10/17	1-5/16"
9/6/19	1-5/16"
8/10/21	✳

North Elev.

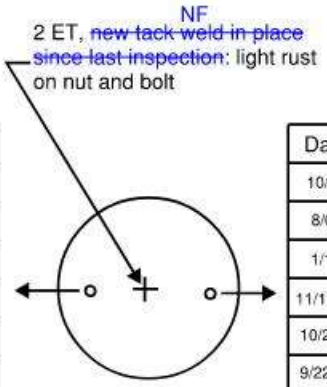

Date	Meas.
10/05	1-5/16"
8/07	1-3/8"
1/10	1-3/8"
11/17/11	1-3/8"
10/2/13	1-1/4"
9/22/15	1-5/16"
10/10/17	1-5/16"
9/6/19	1-5/16"
8/10/21	1-5/16"

Date	Meas.
10/05	1-5/16"
8/07	1-3/8"
1/10	1-3/8"
11/17/11	1-5/16"
10/2/13	1-5/16""
9/22/15	1-5/16"
10/10/17	1-5/16"
9/6/19	1-5/16"
8/10/21	1-5/16"

South Elev.

Lower Pin

Note: Remove plug bolts and measure depth to pin plate. 10"ø pin at these locations.

LEGEND
ET - Exposed threads on bolt at centerline of pin
* - Bolt stripped - No measurement taken

Span 27 North Truss L27U27 Truss Pin Measurements

REVISION 1	DATE: 8/29/19	CREW: BH, JG (Baker)	REVISION 3	DATE:	CREW:
REVISION 2	DATE: 8/10/2021	CREW: NR, EB (PRIME)	REVISION 4	DATE:	CREW:

CREW: SW, BF	DATE: 9/26/2017	BRIDGE NO.: 03819

Date	Meas.
10/05	1"
8/07	1"
1/10	1"
11/17/11	1-1/16"
10/2/13	1-1/16"
9/22/15	1-1/16"
9/29/17	1-1/16"
9/5/19	1-1/16"
8/12/21	1-1/16"

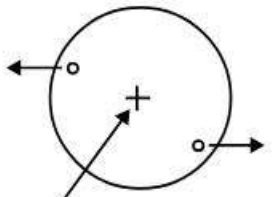

North Elev.

Date	Meas.
10/05	1-1/16"
8/07	1-1/8"
1/10	1-1/8"
11/17/11	1-1/16"
10/2/13	1-1/16"
9/22/15	1-1/16"
9/29/17	1-1/16"
9/5/19	1-1/16"
8/12/21	1-1/16"

- deteriorated/stripped brass plug bolt

Date	Meas.
10/05	1-1/4"
8/07	1-1/4"
1/10	1-1/4"
11/17/11	1-1/4"
10/2/13	1-1/4"
9/22/15	*
9/29/17	1-1/4"
9/5/19	1-1/4"
8/12/21	1-1/4"

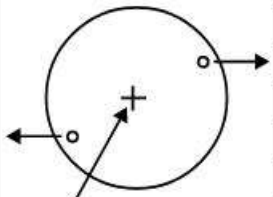

South Elev.

Date	Meas.
10/05	1-5/16"
8/07	1-5/16"
1/10	1-5/16"
11/17/11	1-5/16"
10/2/13	1-5/16"
9/22/15	1-5/16"
9/29/17	1-5/16"
9/5/19	1-5/16"
8/12/21	1-5/16"

Upper Pin

Date	Meas.
10/05	1-5/16"
8/07	1-5/16"
1/10	1-5/16"
11/17/11	1-3/16"
10/2/13	1-3/8"
9/22/15	1-5/16"
9/26/17	1-5/16"
8/22/19	1-5/16"
8/12/21	1-5/16"

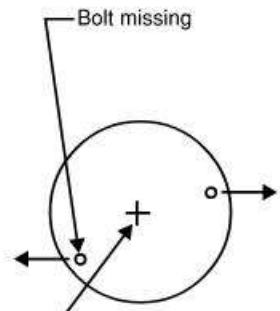

North Elev.

Date	Meas.
10/05	1-5/16"
8/07	1-5/16"
1/10	1-5/16"
11/17/11	*
10/2/13	1-5/16"
9/22/15	1-5/16"
9/26/17	1-5/16"
8/22/19	1-5/16"
8/12/21	1-5/16"

Date	Meas.
10/05	1-9/16"
8/07	1-9/16"
1/10	1-9/16"
11/17/11	1-9/16"
10/2/13	1-7/16"
9/22/15	1-1/2"
9/26/17	1-7/16"
8/22/19	1-7/16"
8/12/21	1-7/16"

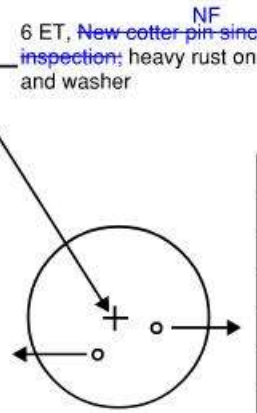

South Elev.

Date	Meas.
10/05	1-9/16"
8/07	1-9/16"
1/10	1-9/16"
11/17/11	1-1/2"
10/2/13	1-1/2"
9/22/15	1-1/2"
9/26/17	1-1/2"
8/22/19	1-1/2"
8/12/21	1-1/2"

Lower Pin

Note: Remove plug bolts and measure depth to pin plate. 10"ø pin at these locations.

LEGEND
ET - Exposed threads on bolt at centerline of pin
* - Bolt stripped - No measurement taken

- Plug bolts should be replaced at all locations.

Span 27 South Truss L27U27 Truss Pin Measurements

REVISION 1	DATE: 8/22/19	CREW: BH, JG (Baker)	REVISION 3	DATE:	CREW:
REVISION 2	DATE: 8/12/2021	CREW: NR, EB (PRIME)	REVISION 4	DATE:	CREW:

CREW: BH, BF	DATE: 9/8/2017	BRIDGE NO.: 03819

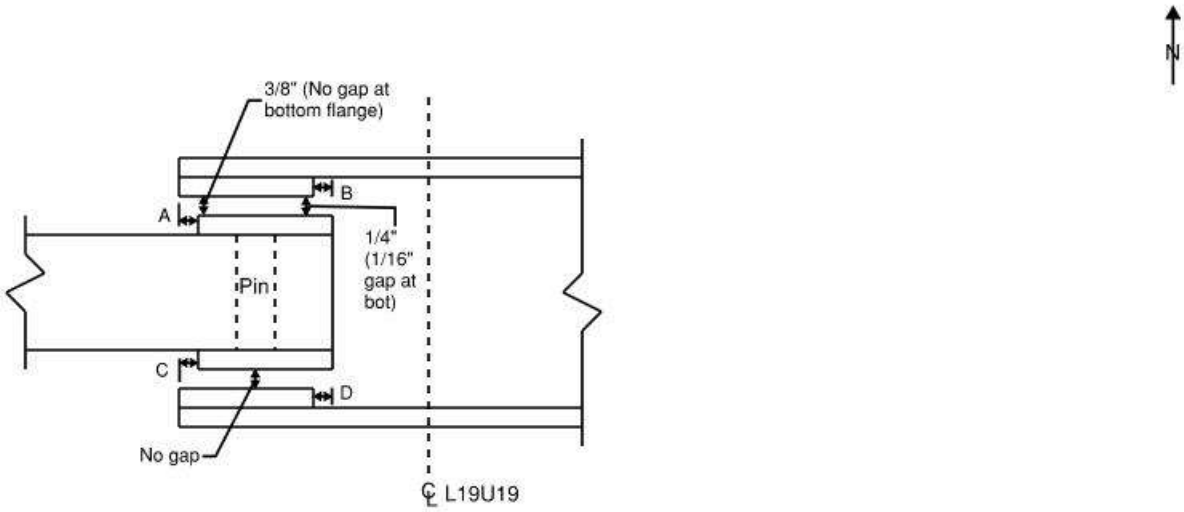

Plan View L19

Date	Temp.	A	B	C	D	Notes
7/07	80°F	1-11/16"	1-3/4"	1-1/2"	1-1/2"	
1/26/10	40°F	1/8"	1/8"	-1/16"	0"	
10/12/11	62°F	13/16"	7/8"	7/16"	5/8"	
10/15/13	70°F	1"	1-1/8"	1-1/8"	1"	
9/22/15	70°F	15/16"	15/16"	11/16"	3/4"	
9/8/17	70°F	1"	1"	3/4"	3/4"	See sketches above and below
9/6/19	70°F	13/16"	15/16"	7/16"	11/16"	
8/9/21	73°F	1-5/16"	1-1/2"	7/8"	1-5/16"	

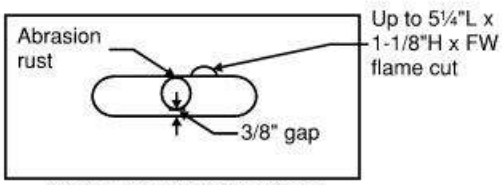

North web plate inside chord at 6"ø pin

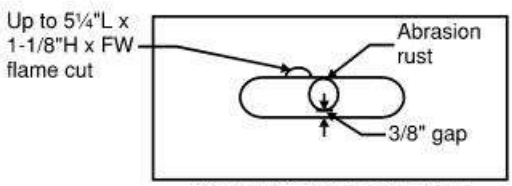

South web plate inside chord at 6"ø pin

Span 27 North Truss L19 Truss Pin Measurements

REVISION 1	DATE: 9/6/19	CREW: BH, JG (Baker)	REVISION 3	DATE:	CREW:
REVISION 2	DATE: 8/9/2021	CREW: NR, EB (PRIME)	REVISION 4	DATE:	CREW:

Sketches
Inspection type: Fracture Critical,Routine
Inspection Date: 7/26/2021
Inspected by: PRIME AE

:Bridge No 03819

Town: NEW LONDON
Carried: INTERSTATE 95 NORTHBOUND
Crossed: THAMES RV,RR,LOCAL ROADS
Inventory Route: NHS

CREW: SW, BF	DATE: 9/25/2017	BRIDGE NO.: 03819

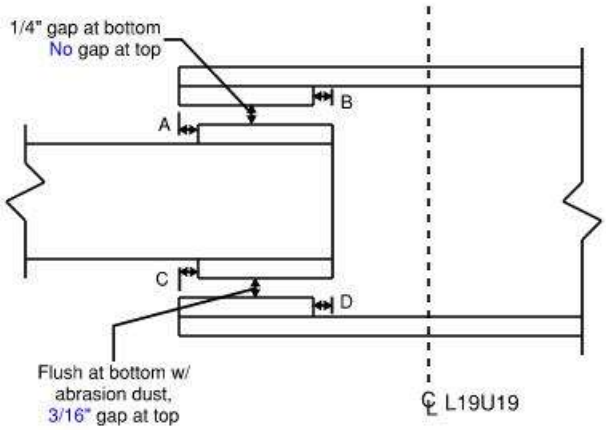

Plan View L19

Date	Temp.	A	B	C	D	Notes
7/07	70°F	1"	-	1-1/8"	-	1/16" gap btwn pin top and slotted hole w/abrasion rust
1/26/10	40°F	0"	0"	3/16"	0"	" "
10/12/11	62°F	5/8"	5/8"	11/16"	3/4"	" "
10/2/13	75°F	1-1/2"	1-1/2"	1-1/4"	1-3/16"	" "
9/22/15	70°F	11/16"	11/16"	3/4"	13/16"	1/8" gap btwn pin and slotted hole at north end
9/25/17	80°F	1-1/4"	1-3/8"	1-3/8"	1-1/2"	Plate is wearing into pin 1/8" at south end; See sketches above and below
9/22/19	80°F	1-3/16"	1-5/16"	1-5/16"	1-5/8"	See 2017 notes
8/11/21	81°F	1-3/8"	1-3/8"	1-3/8"	1-1/2"	See 2017 notes

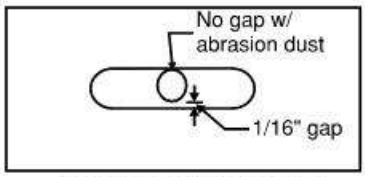

North web plate inside chord
at 6"ø pin

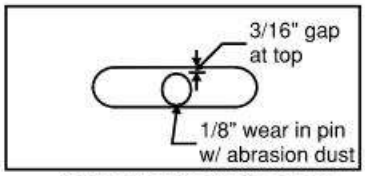

South web plate inside chord
at 6"ø pin

Span 27 South Truss L19 Truss Pin Measurements

REVISION 1	DATE: 9/22/19	CREW: BH, JG (Baker)	REVISION 3	DATE:	CREW:
REVISION 2	DATE: 8/11/2021	CREW: NR, EB (PRIME)	REVISION 4	DATE:	CREW:

CREW: BF, SW	DATE: 10/12/2017	BRIDGE NO.: 03819

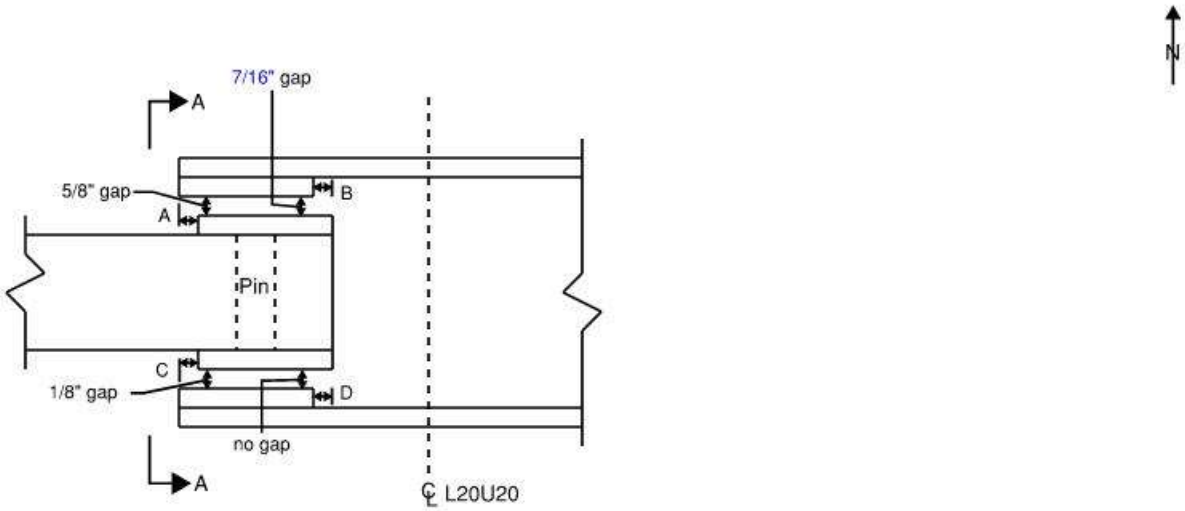

Plan View U20

Note:
- Section A-A is on a following sheet.

Date	Temp.	A	B	C	D	Notes
8/07	75°F	1-1/2"	1-9/16"	1-11/16"	1-11/16"	
1/26/10	40°F	5/16"	3/8"	5/8"	9/16"	
9/16/11	58°F	7/8"	15/16"	1"	1"	
10/2/13	70°F	1-3/8"	1-1/2"	1-5/8"	1-5/8"	
9/22/15	70°F	1-3/16"	1-3/16"	1-3/8"	1-5/16"	
10/12/17	60°F	1"	1-1/16"	1-3/16"	1-1/8"	See sketches above and below
8/29/19	75°F	1-9/16"	1-5/8"	1-13/16"	1-11/16"	See sketches above and below. All measurements double checked.
8/9/21	73°F	1-11/16"	1-3/4"	1-15/16"	1-7/8"	

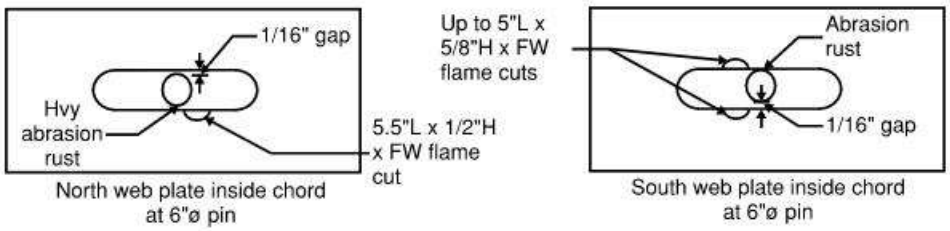

North web plate inside chord at 6"ø pin

South web plate inside chord at 6"ø pin

Span 27 North Truss U20 Truss Pin Measurements

REVISION 1	DATE: 8/29/19	CREW: BH, JG (Baker)	REVISION 3	DATE:	CREW:
REVISION 2	DATE: 8/9/2021	CREW: NR, EB (PRIME)	REVISION 4	DATE:	CREW:

Sketches
Inspection type: Fracture Critical,Routine
Inspection Date: 7/26/2021
Inspected by: PRIME AE

:Bridge No 03819

Town: NEW LONDON
Carried: INTERSTATE 95 NORTHBOUND
Crossed: THAMES RV,RR,LOCAL ROADS
Inventory Route: NHS

CREW: SW, BF	DATE: 9/28/2017	BRIDGE NO.: 03819

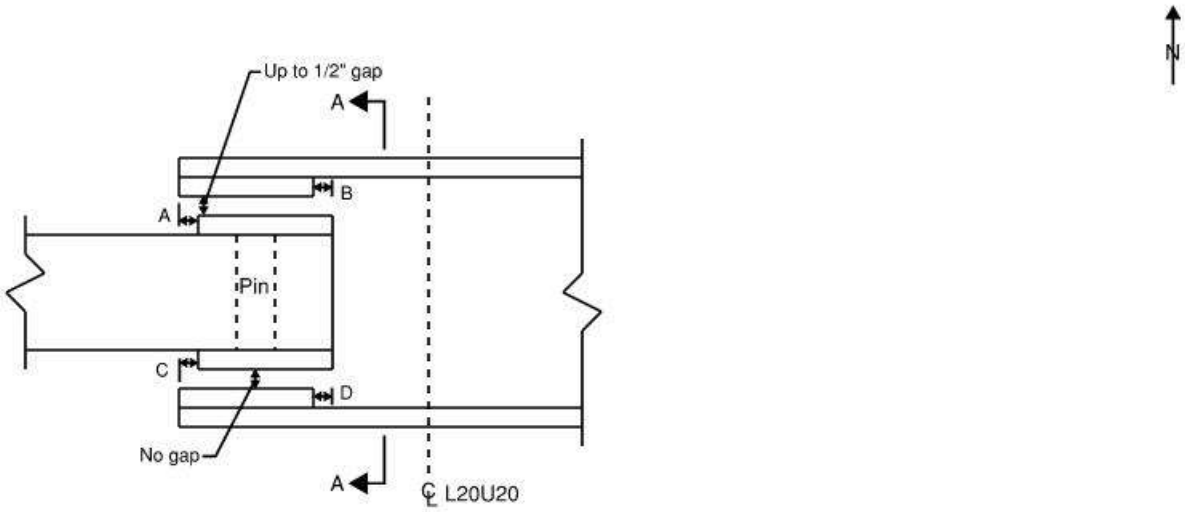

Plan View U20

Note:
- Section A-A is on a following sheet.

Date	Temp.	A	B	C	D	Notes
8/07	70°F	1-1/4"	1-1/4"	1-1/2"	1-1/4"	
1/26/10	40°F	-1/16"	-1/16"	1/8"	1/4"	Up to 1/8" wear at pin plate, inside chord w/abrasion rust
11/9/11	54°F	3/8"	1/2"	3/4"	13/16"	" "
10/2/13	70°F	1-3/16"	1-1/4"	1-7/16"	1-7/16"	" "
9/22/15	70°F	1-1/8"	7/8"	1"	1-1/8"	" "
9/28/17	75°F	1-1/4"	1-1/2"	1-1/2"	1-5/8"	Pin plate is wearing into pin at top up to 1/8" w/abrasion rust; See sketches above and below
9/5/19	70°F	15/16"	1-3/16"	1-3/16"	1-5/16"	See 2017 comments. All measurements double checked.
8/11/21	82°F	1-1/2"	1-9/16"	1-3/4"	1-13/16"	See 2017 comments.

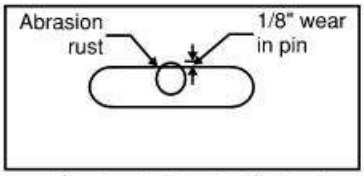

North web plate inside chord at 6"ø pin

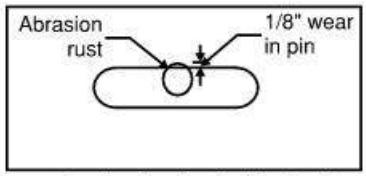

South web plate inside chord at 6"ø pin

Span 27 South Truss U20 Truss Pin Measurements

REVISION 1	DATE: 9/4/19	CREW: BH, JG (Baker)	REVISION 3	DATE:	CREW:
REVISION 2	DATE: 8/11/2021	CREW: NR, EB (PRIME)	REVISION 4	DATE:	CREW:

Sketches
Inspection type: Fracture Critical,Routine
Inspection Date: 7/26/2021
Inspected by: PRIME AE

:Bridge No 03819

Town: NEW LONDON
Carried: INTERSTATE 95 NORTHBOUND
Crossed: THAMES RV,RR,LOCAL ROADS
Inventory Route: NHS

CREW: SW, BF	DATE: 10/12/2017	BRIDGE NO.: 03819

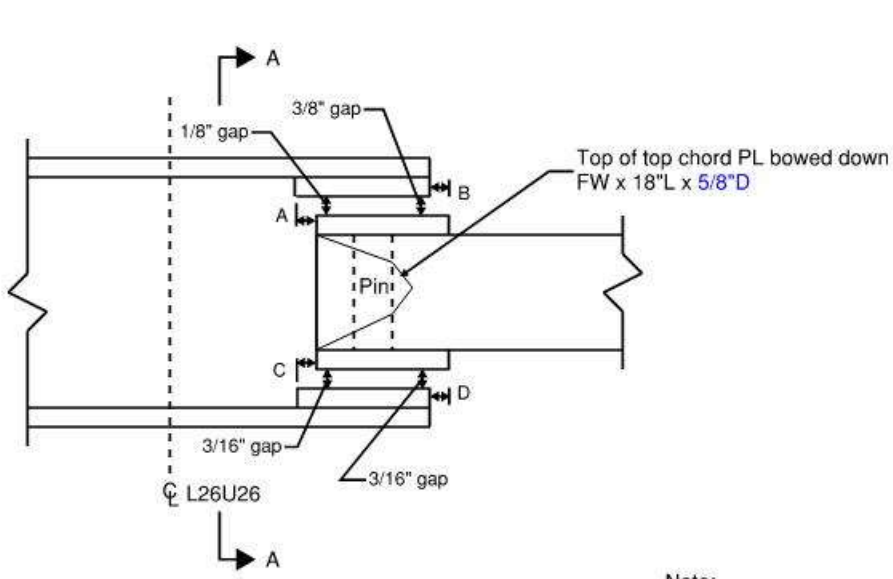

Plan View U26

Note:
- Gaps between pin and slotted holes at bottom, 3/16" at north and 5/16" at south
- Section A-A is on a following sheet.

Date	Temp.	A	B	C	D	Notes
8/07	75°F	1/8"	0"	1/16"	3/16"	Pin worn 3/16" x 3" long at the top
1/10	40°F	3/16"	1/16"	1/8"	3/16"	Pin plate worn ±3/16"-1/4", See sketch below
10/13/11	67°F	1/8"	0"	0"	3/16"	" "
10/2/13	70°F	1/16"	1/16"	1/16"	1/16"	" "
9/22/15	70°F	1/8"	0"	1/16"	3/16"	" "
10/12/17	65°F	1/8"	0"	1/16"	3/16"	Pin plate worn ±3/16"-1/4"; abrasion rust at both plates and see sketches above and below
8/29/19	75°F	0"	1/8"	1/8"	0"	See 2017 notes
8/10/21	75°F	0"	1/16"	0"	1/16"	See 2017 comments.

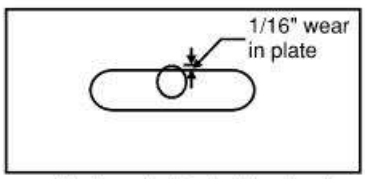

North web plate inside chord
at 6"ø pin

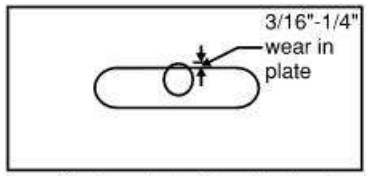

South web plate inside chord
at 6"ø pin

Span 27 North Truss U26 Truss Pin Measurements

REVISION 1	DATE: 8/29/19	CREW: BH, JG (Baker)	REVISION 3	DATE:	CREW:
REVISION 2	DATE: 8/10/2021	CREW: NR, EB (PRIME)	REVISION 4	DATE:	CREW:

CREW: SW, BF	DATE: 9/29/2017	BRIDGE NO.: 03819

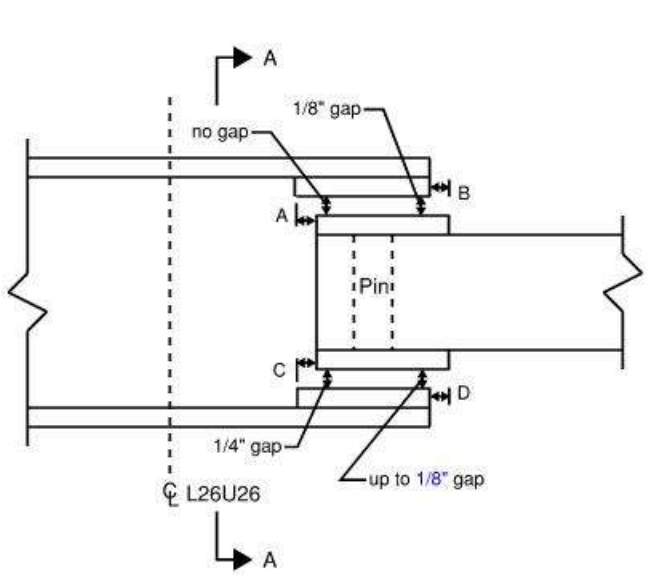

Plan View U26

Note:
- Gaps between pin and slotted holes, 3/16" at north and 1/8" at south
- Section A-A is on a following sheet.

Date	Temp.	A	B	C	D	Notes
7/07	70°F	1/8"	3/8"	3/8"	1/2"	
1/26/10	40°F	3/16"	3/8"	7/16"	9/16"	Pin plate worn up to 1/4" at north and 1/16" at south, See sketch on U-26 sheet
11/9/11	60°F	3/16"	7/16"	7/16"	5/8"	" "
10/2/13	78°F	3/16"	1/4"	5/16"	9/16"	" "
9/22/15	70°F	3/8"	3/16"	9/16"	3/8"	" "
9/29/17	65°F	1/8"	5/16"	5/8"	1/2"	Pin plate worn up to 1/4" at north and 1/16" at south; See sketches above and below
9/5/19	70°F	1/16"	5/16"	1/4"	1/2"	
8/12/21	85°F	0"	1/4"	1/4"	7/16"	See 2017 comments.

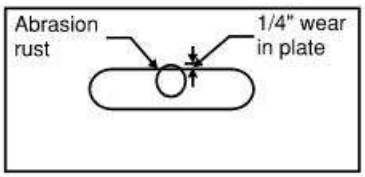

North web plate inside chord at 6"ø pin

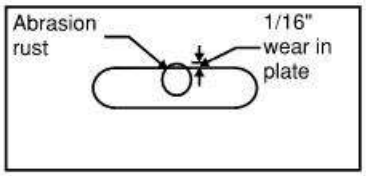

South web plate inside chord at 6"ø pin

Span 27 South Truss U26 Truss Pin Measurements

REVISION 1	DATE: 9/5/19	CREW: BH, JG (Baker)	REVISION 3	DATE:	CREW:
REVISION 2	DATE: 8/12/2021	CREW: NR, EB (PRIME)	REVISION 4	DATE:	CREW:

CREW: SW, BF	DATE: 9/25/2017	BRIDGE NO.: 03819

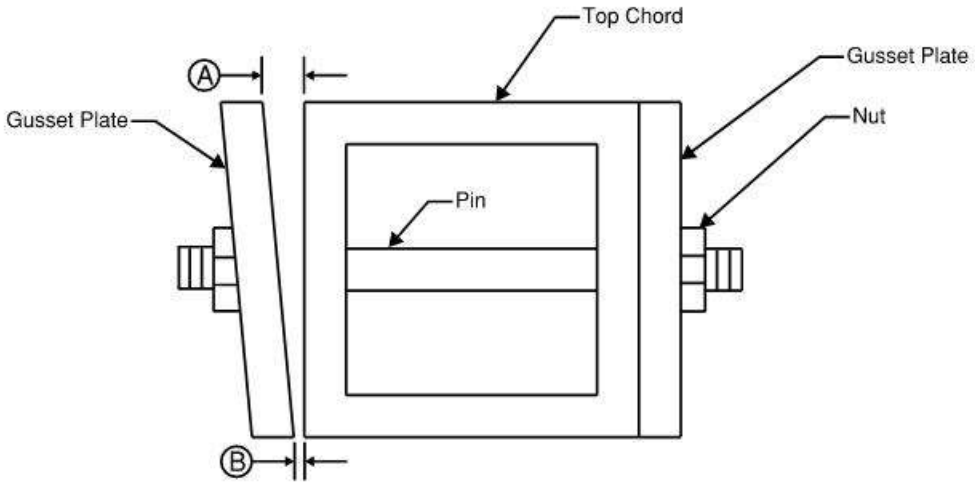

Section A-A in Span 27 Truss Nodes U20 & U26

North Truss			
Joint Location	Date	A	B
U20	10/4/11	9/16"	1/8"
U26	10/4/11	7/16"	1/16"
U20	10/2/13	5/8"	1/16"
U26	10/2/13	9/16"	1/8"
U20	9/22/15	5/8"	1/16"
U26	9/22/15	9/16"	1/8"
U20	9/25/17	5/8"	3/16"
U26	9/25/17	3/8"	0"
U20	8/29/19	5/8"	3/16"
U26	8/29/19	3/8"	1/16"
U20	8/09/21	5/8"	3/16"
U26	8/10/21	3/8"	1/16"

South Truss			
Joint Location	Date	A	B
U20	10/4/11	7/16"	1/16"
U26	10/4/11	1/8"	1/8"
U20	10/2/13	1/2"	1/8"
U26	10/2/13	1/8"	1/8"
U20	9/22/15	1/2"	1/8"
U26	9/22/15	1/8"	1/8"
U20	9/25/17	1/2"	1/8"
U26	9/25/17	3/16"	0"
U20	9/5/19	1/2"	1/16"
U26	9/5/19	3/16"	0"
U20	8/11/21	1/2"	1/16"
U26	8/12/21	1/8"	0"

Note:
- Measurements taken at north elevation (typical).

Span 27 Truss Pins

REVISION 1	DATE: 8/29/19	CREW: BH, JG (Baker)	REVISION 3	DATE:	CREW:
REVISION 2	DATE: 8/9/2021	CREW: NR, EB (PRIME)	REVISION 4	DATE:	CREW:

Sketches
Inspection type: Fracture Critical,Routine
Inspection Date: 7/26/2021
Inspected by: PRIME AE

:Bridge No 03819

Town: NEW LONDON
Carried: INTERSTATE 95 NORTHBOUND
Crossed: THAMES RV,RR,LOCAL ROADS
Inventory Route: NHS

CREW: SW, KT	DATE: 9/8/2017	BRIDGE NO.: 03819

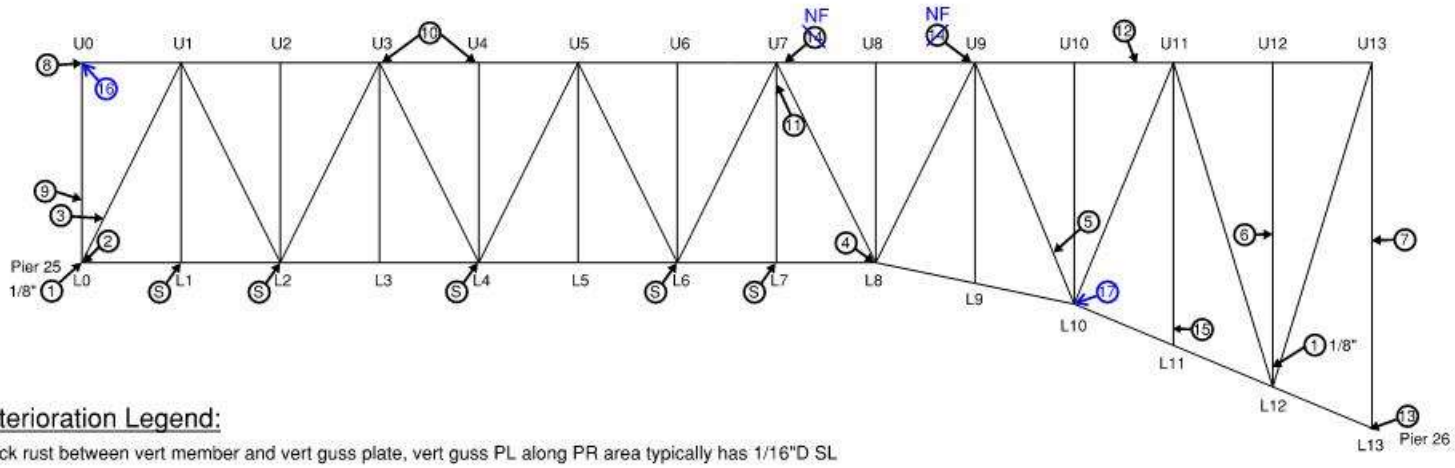

Deterioration Legend:

1 - Pack rust between vert member and vert guss plate, vert guss PL along PR area typically has 1/16"D SL
2 - Top plate of bot flg has 3'L x FW x 1/16"D pitting, bot conn nuts w/up to 50% SL & vert stiff at bot has FW x 4"H x 3/16"D SL; inside web PL's w/ 3'L x 3"H x 1/16"D SL/LR
3 - U1L0 N web PL has 5"L x 2"H x 1/8"D SL (just above L0 N. G PL)
4 - Top of top plate of bot chord has 4.5"ø x 3/16"D painted over pitting
5 - S web plate to top PL tack welds (inside): (3) broken, (2) partially cracked & (2) poorly/not fused
6 - U12L12 all (4) PL's have up to FW x 3"H x 1/8"D SL (inside); W & E side of sway brace vert guss PL at inside has up to FL x 4"H (up to 7"H at west plate) x 1/8"D pitting w/lam rust (see typical sketch)
7 - Sway brace horiz member web has lam rust w/up to FL x FW x 1/8"D SL and both flg's have up to 4"H x 1/8"D SL ~~w/ water pending~~ NF, also see note 10 at Span 27, North Truss
8 - (3) broken tack welds between top chord PL and horiz conn of vert stiff at west end, inside (Fully broken)
9 - L0U0 vert member NE leg, 8' above guss PL is bent inward 5/16" x 1'L x 2"W
10 - U3U4 top PL adj to lat bracing guss PL at U4 and adj to splice PL at U3 has 6"L x 1.5"W x 1/8"-3/16"D SL
11 - U7L7 N flg has 6"W x 1"H x 1/8"D SL & 1/8" PR to vert guss PL
12 - U10U11 top PL has 7"L x 9"W x 1/8"D pitt w/ LR
13 - (1) drop bolt nut not fully engaged
14 - ~~N PL of top chord above VT G Plate w/ 18"L x 1"H x 1/8"D pitt~~ (Not found at time of inspection)
15 - VT mem at N. elev above G PL w/ up to 3/4"W x 1"H x 1/8"D SL/LR
16 - (5 of 5) connection bolts short at vertical stiffener angle connection to FB (inside)
17 - (1) bolt backed off 3/16"

General Notes:

- See Welded Truss General Notes (Spans 26-28) sheet

Legend:

S See Sketch

Span 26 - North Truss South Elevation

REVISION 1	DATE: 8/28/19	CREW: BH, JG (Baker)	REVISION 3	DATE:	CREW:
REVISION 2	DATE: 08/02/2021	CREW: BM, EG, EB, SD, BC, JC (PRIME AE)	REVISION 4	DATE:	CREW:

CREW: SW, KT	DATE: 9/8/2017	BRIDGE NO.: 03819

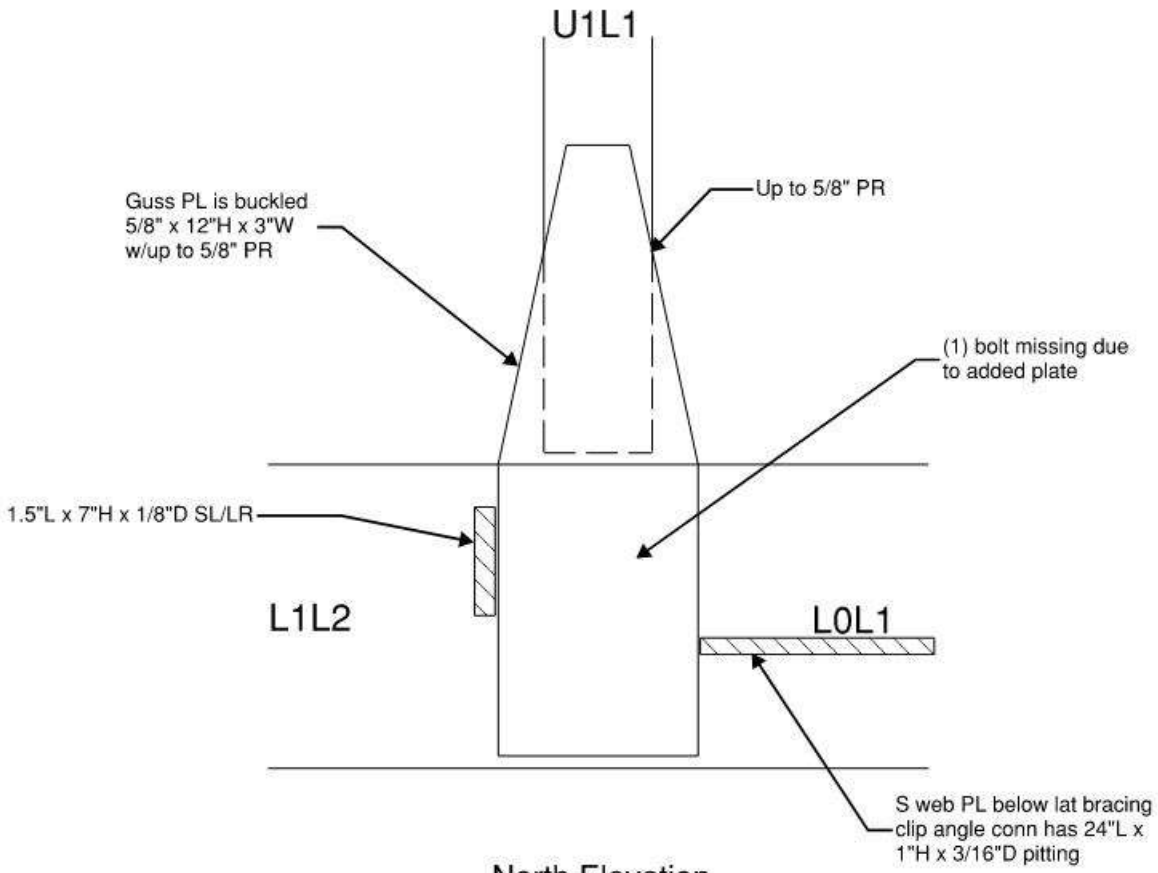

North Elevation

Span 26 - North Truss L1

REVISION 1	DATE: 8/29/19	CREW: AH, BF (Baker)	REVISION 3	DATE:	CREW:
REVISION 2	DATE: 8/2/2021	CREW: EG, SD (PRIME) - No Change	REVISION 4	DATE:	CREW:

CREW: SW, KT	DATE: 9/8/2017	BRIDGE NO.: 03819

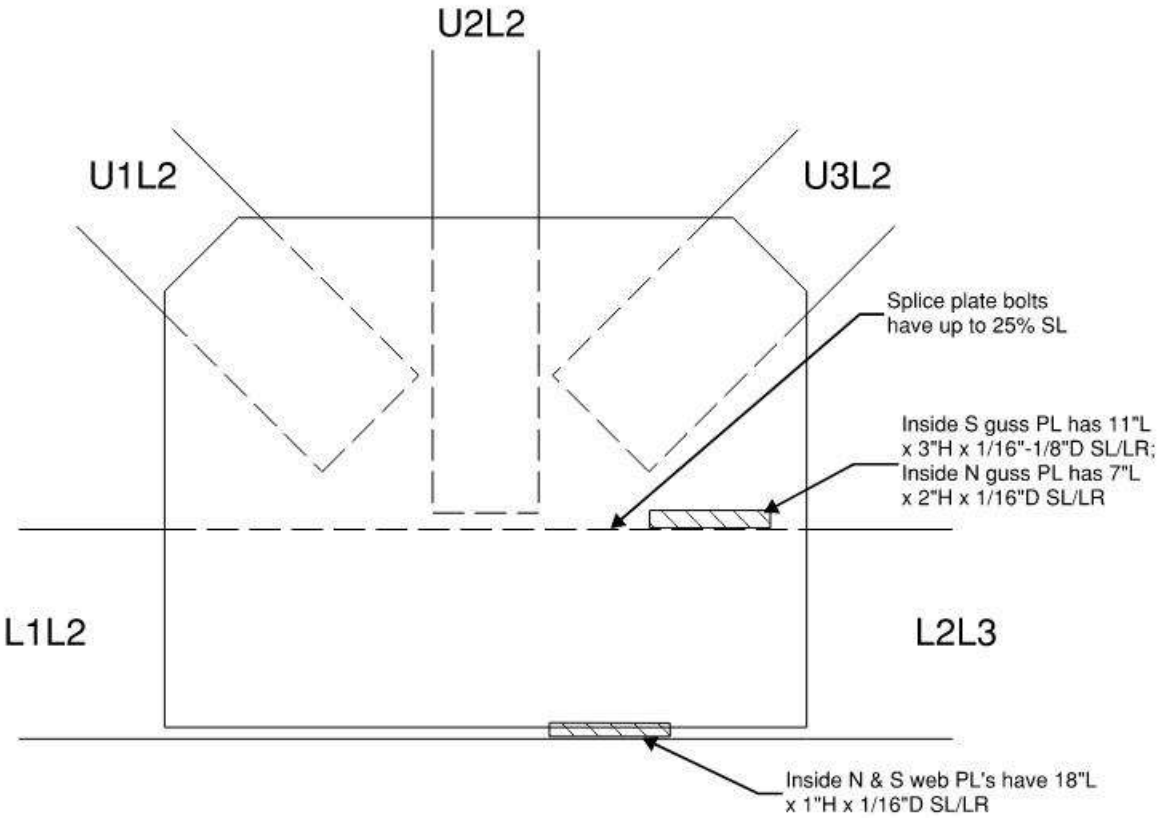

South Elevation

Span 26 - North Truss L2

REVISION 1	DATE: 8/29/19	CREW: AH, BF (Baker)	REVISION 3	DATE:	CREW:
REVISION 2	DATE: 8/2/2021	CREW: EG, SD (PRIME) - No Change	REVISION 4	DATE:	CREW:

CREW: SW, KT	DATE: 9/8/2017	BRIDGE NO.: 03819

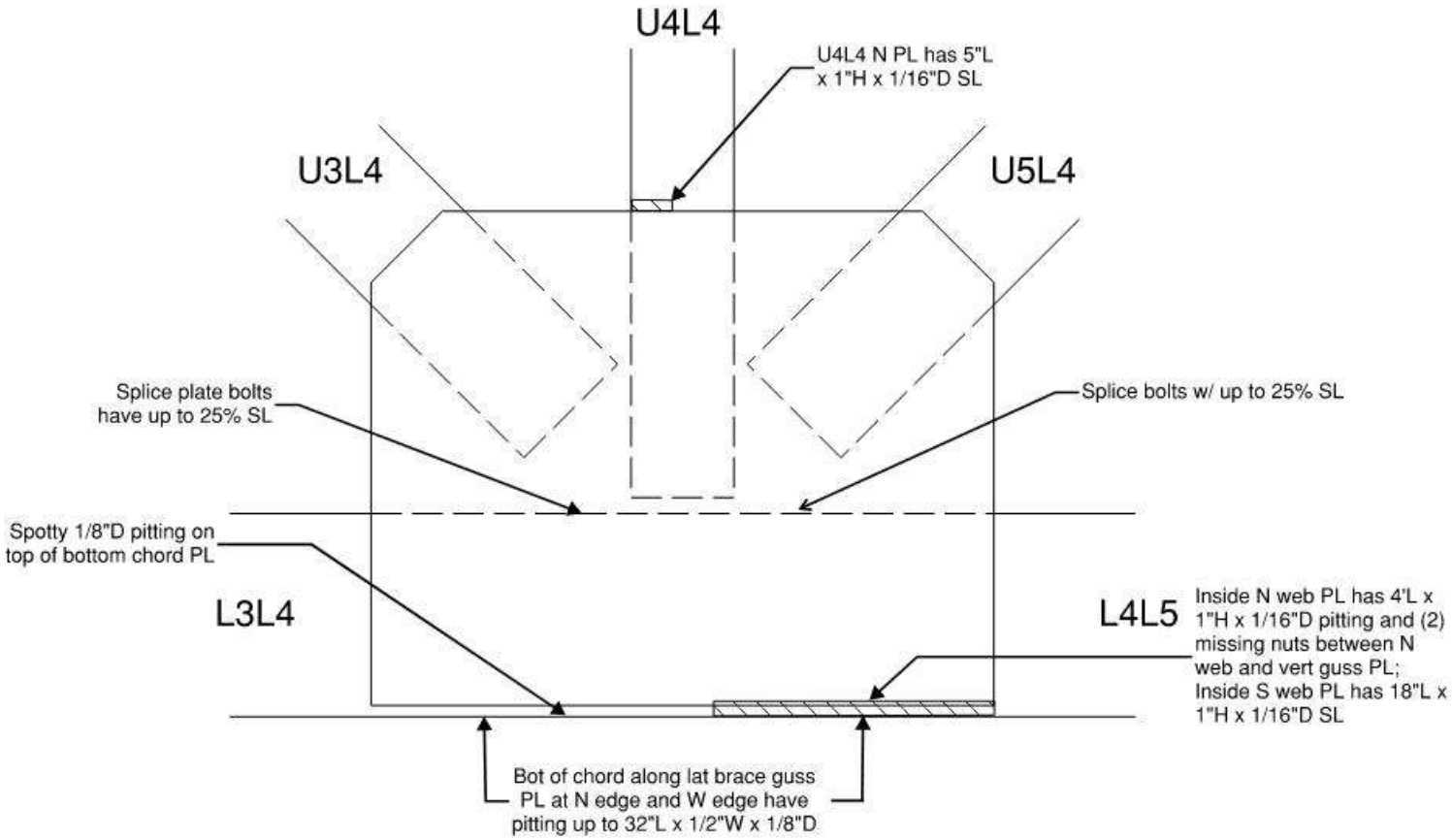

South Elevation

- LR at all locations

Span 26 - North Truss L4

REVISION 1	DATE: 8/29/19	CREW: AH, BF (Baker)	REVISION 3	DATE:	CREW:
REVISION 2	DATE: 8/2/2021	CREW: EG, SD (PRIME) - No Change	REVISION 4	DATE:	CREW:

Sketches
Inspection type: Fracture Critical,Routine
Inspection Date: 7/26/2021
Inspected by: PRIME AE

:Bridge No 03819

Town: NEW LONDON
Carried: INTERSTATE 95 NORTHBOUND
Crossed: THAMES RV,RR,LOCAL ROADS
Inventory Route: NHS

CREW: SW, KT	DATE: 9/8/2017	BRIDGE NO.: 03819

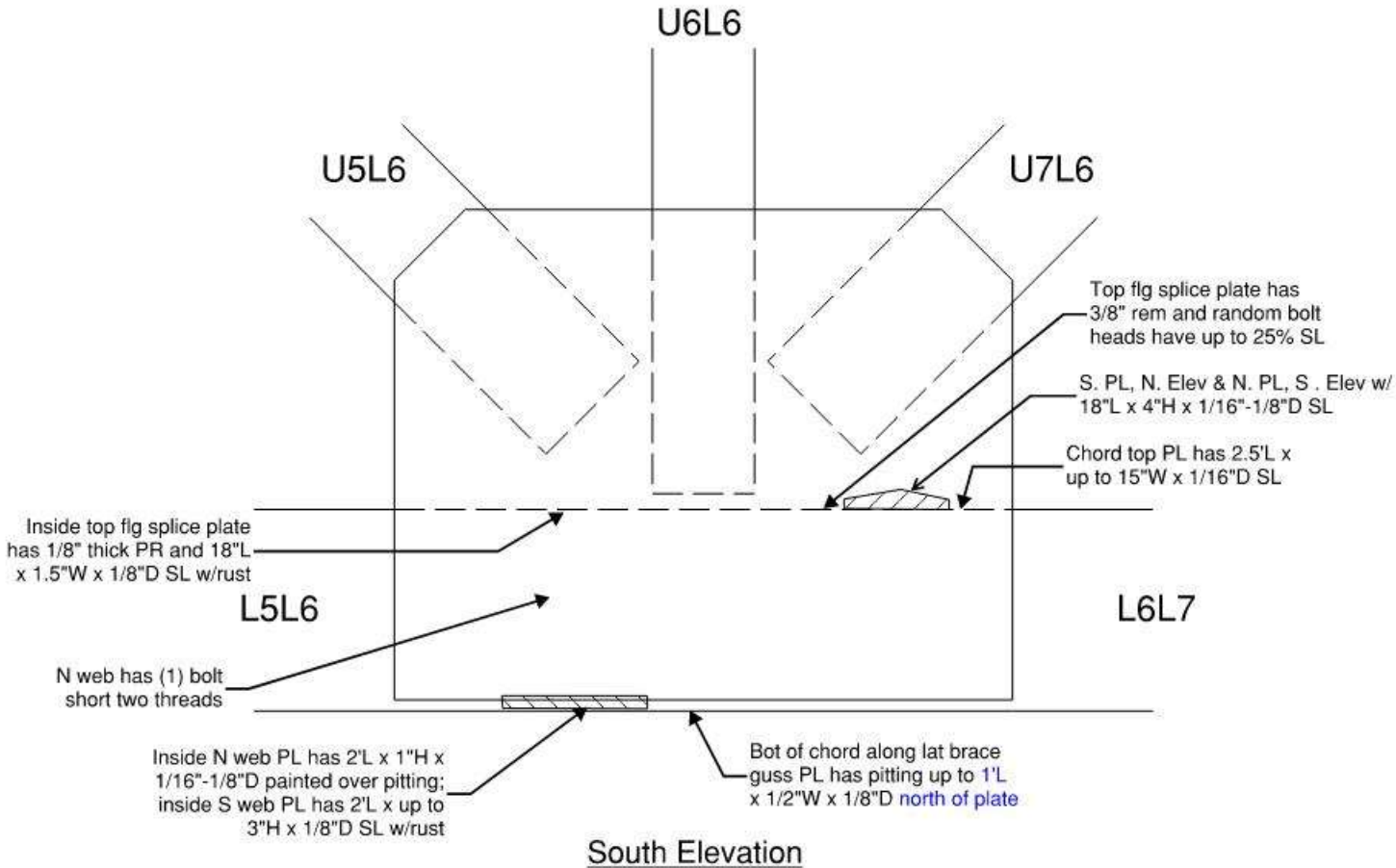

South Elevation

- LR at all locations

Span 26 - North Truss L6

REVISION 1	DATE: 8/29/19	CREW: AH, BF (Baker)	REVISION 3	DATE:	CREW:
REVISION 2	DATE: 8/3/2021	CREW: EG, SD (PRIME)	REVISION 4	DATE:	CREW:

CREW: SW, KT	DATE: 9/8/2017	BRIDGE NO.: 03819

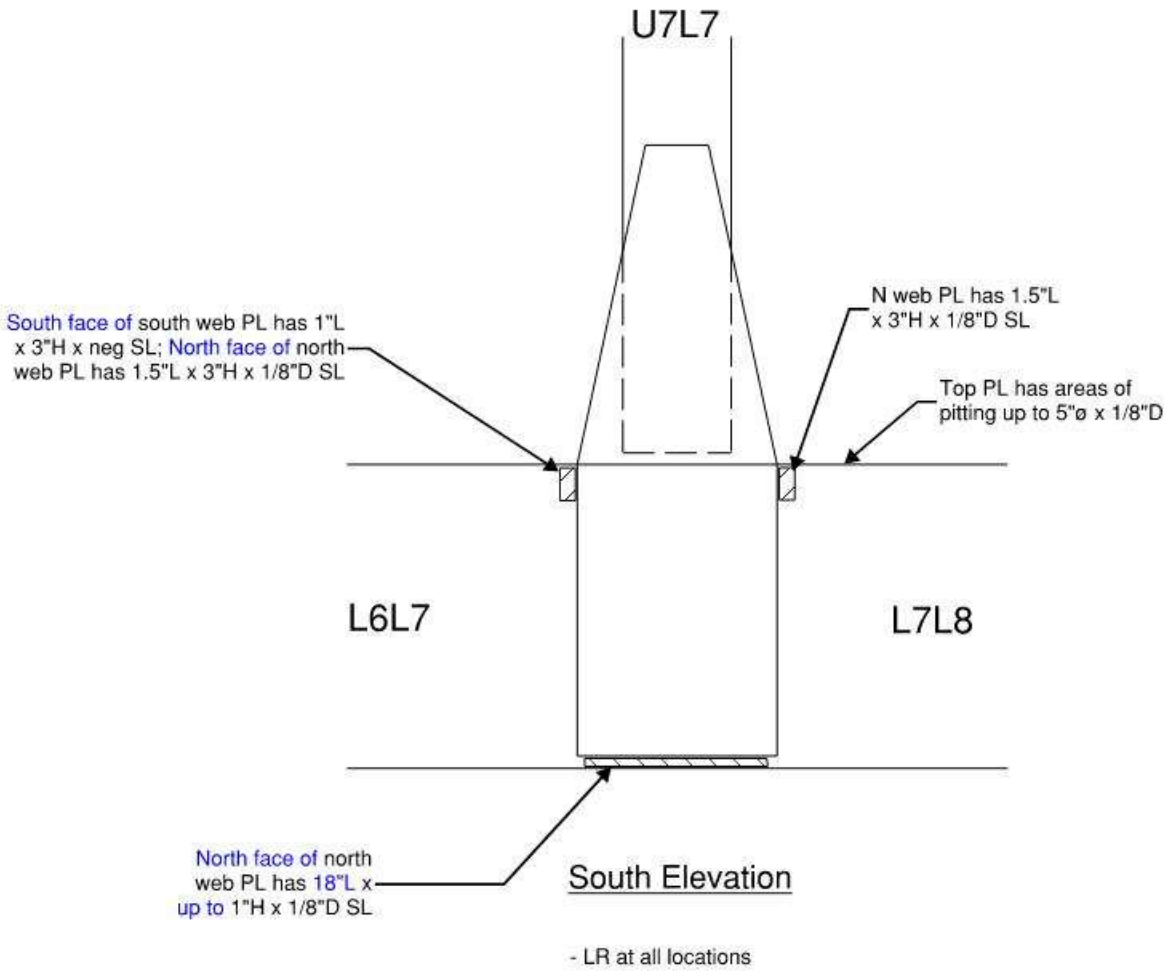

Span 26 - North Truss L7

REVISION 1	DATE: 8/29/19	CREW: AH, BF (Baker)	REVISION 3	DATE:	CREW:
REVISION 2	DATE: 08/03/2021	CREW: EG, SD (PRIME AE)	REVISION 4	DATE:	CREW:

Sketches
Inspection type: Fracture Critical,Routine
Inspection Date: 7/26/2021
Inspected by: PRIME AE

:Bridge No 03819

Town: NEW LONDON
Carried: INTERSTATE 95 NORTHBOUND
Crossed: THAMES RV,RR,LOCAL ROADS
Inventory Route: NHS

CREW: SW, BF	DATE: 9/25/2017	BRIDGE NO.: 03819

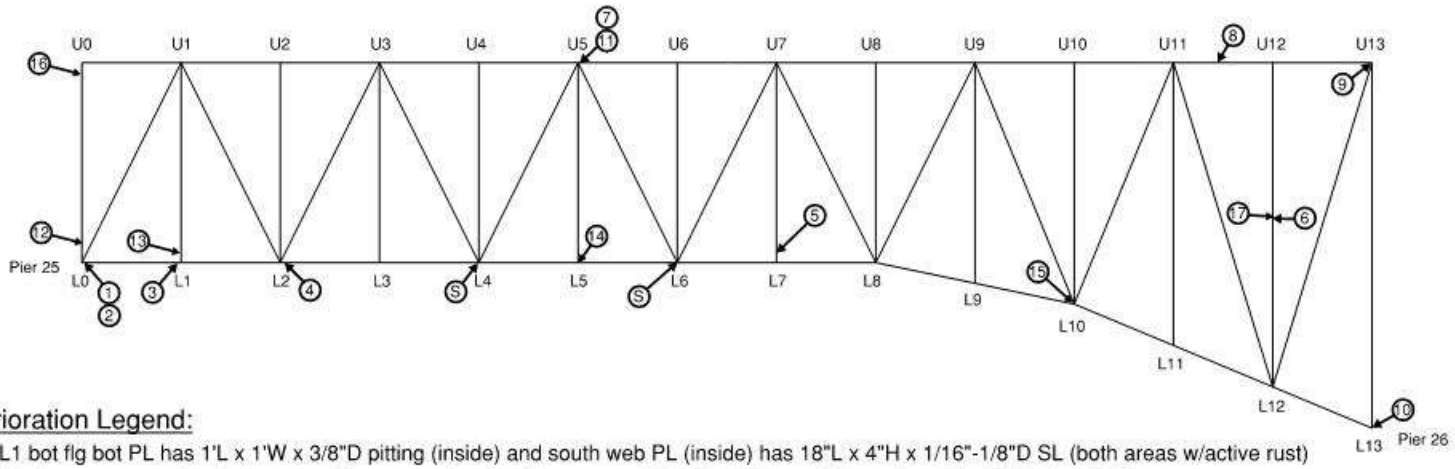

Deterioration Legend:

① - L0L1 bot flg bot PL has 1'L x 1'W x 3/8"D pitting (inside) and south web PL (inside) has 18"L x 4"H x 1/16"-1/8"D SL (both areas w/active rust)
② - (13) bolt nuts connecting horiz gusset PL to truss bot chord have up to 75% SL & E brg stiff base has 4"H x FW x 3/16"D SL
③ - S web PL has 1"L x 8"H x 3/16"D SL (along VT G PL), extends along bot of G PL, 10"L x 1/2"H x 1/8"D SL, N web PL has 16"L x 2"H x 1/16"D SL w/rust
④ - Bot PL along edge of guss PL (L1-L2) has 1"L x 1'W x 1/8"-3/16"D pitting & N guss PL (East of L2-U2) on S side along top of bot chord has 1'L x 3/4"H x up to 1/8"D SL & N web plate (L1-L2) inside w/ 1'L x 1"H x 1/8"D SL/LR; L1-L2 with 3'L x up to 1"W x 1/8"D SL along the south edge of gusset plate
⑤ - L7U7 south flg above vert guss PL has 10"L x 1"H x 1/8"D SL/LR; S VT G PL , N. elev along bot chord w/ 5"L x 3"H x 3/16"D SL at both sides of the vertical member
⑥ - U12L12 all (4) web PL's have up to FW x 1.5"H x 1/16"-1/8"D SL (see typical sketch)
⑦ - 1/8" PR between U5L5 & N. vert guss PL at E side, U5U6 N web PL has 15"L x 2"H x 1/16"-1/8"D SL/LR above guss PL & inside has 1 missing bolt at top angle
⑧ - S Web PL to bot PL has 1/8" PR (inside)
⑨ - Interior angle with short bolt at S PL: sway brace conn to G PL w/ backed off nut at north
⑩ - Fixed rocker w/no restraint on nut (nut is tight)
⑪ - Bleeding rust from past leakage thru deck joint w/heavy debris
⑫ - U0L0 above VT G PL w/ 18"L x 2"H x 1/8"D SL/LR at N face of N flange
⑬ - U1L1 N FL adj to G PL w/ 10"H x 1"W x 3/16"D SL/LR & 3/4" IR b/w G PL and member
⑭ - Top of bot chord inside node w/ 3"L x 9"W x 1/4"D SL/LR
⑮ - Top of bot chord ~~inside node~~ w/ 6"W x 3"L x 1/8"D SL/LR
⑯ - N FL of VT below G PL w/ 3"W x 1"H x 1/8"D SL/LR
⑰ - N elev of VT below sway brace conn w/ 10"W x 1"H x 1/8"D SL/LR (in-line w/ cut-outs) & N elev above sway brace conn w/ 16"L x 1"H x 1/8"D SL/LR (<5% loss)

General Notes:
- See Welded Truss General Notes (Spans 26-28) sheet

Legend:
Ⓢ See Sketch

Span 26 - South Truss South Elevation

REVISION 1	DATE: 8/21/19	CREW: BH, JG (Baker)	REVISION 3	DATE:	CREW:
REVISION 2	DATE: 08/04/2021	CREW: EG, BM, EB, SD, BC, JC (PRIME AE)	REVISION 4	DATE:	CREW:

CREW: SW, BF	DATE: 9/25/2017	BRIDGE NO.: 03819

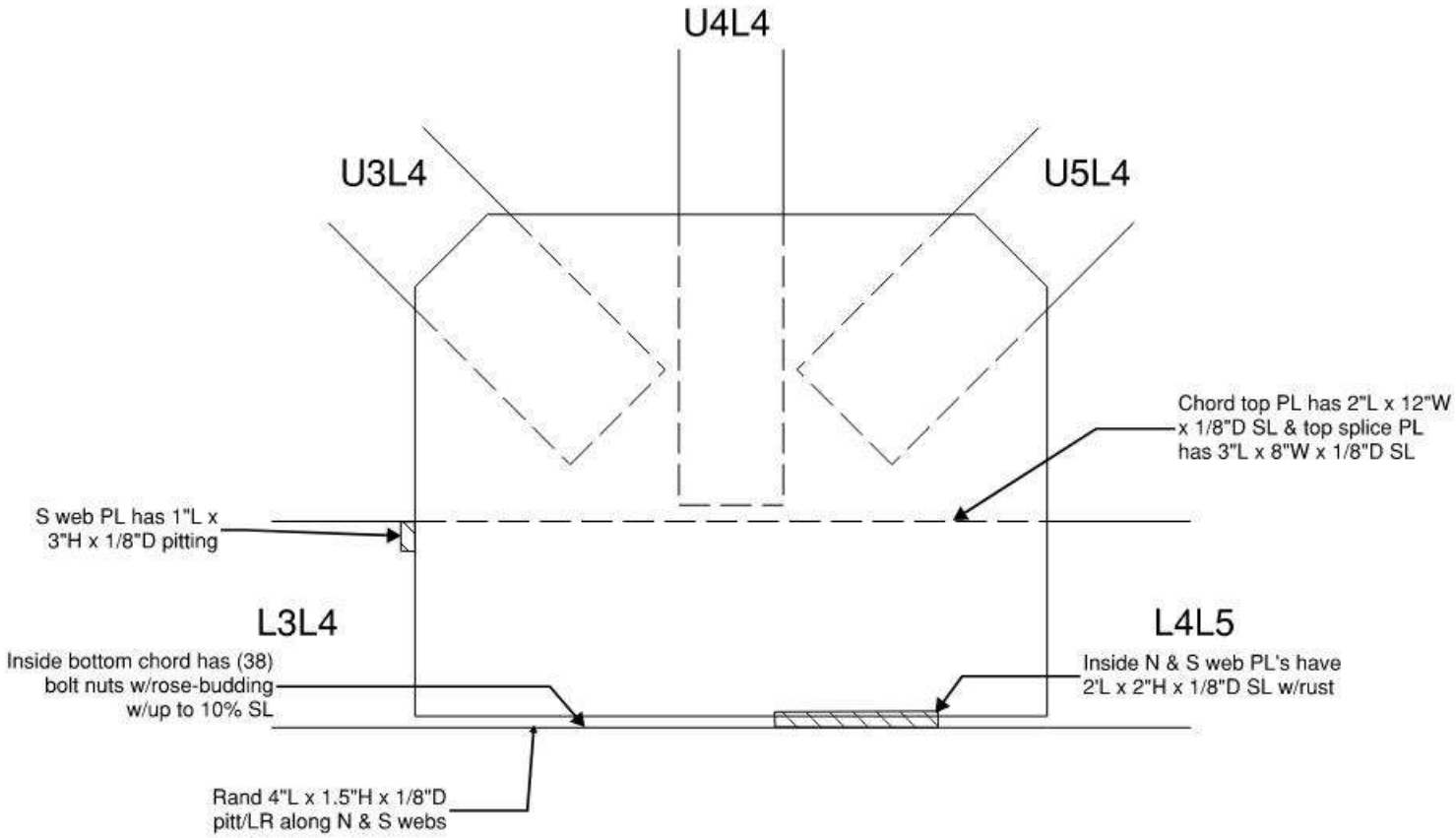

South Elevation

Span 26 - South Truss L4

REVISION 1	DATE: 8/21/19	CREW: BH, JG (Baker)	REVISION 3	DATE:	CREW:
REVISION 2	DATE: 8/4/2021	CREW: EG, SD (PRIME) - No Change	REVISION 4	DATE:	CREW:

Sketches
Inspection type: Fracture Critical,Routine
Inspection Date: 7/26/2021
Inspected by: PRIME AE

:Bridge No 03819

Town: NEW LONDON
Carried: INTERSTATE 95 NORTHBOUND
Crossed: THAMES RV,RR,LOCAL ROADS
Inventory Route: NHS

CREW: SW, BF	DATE: 9/25/2017	BRIDGE NO.: 03819

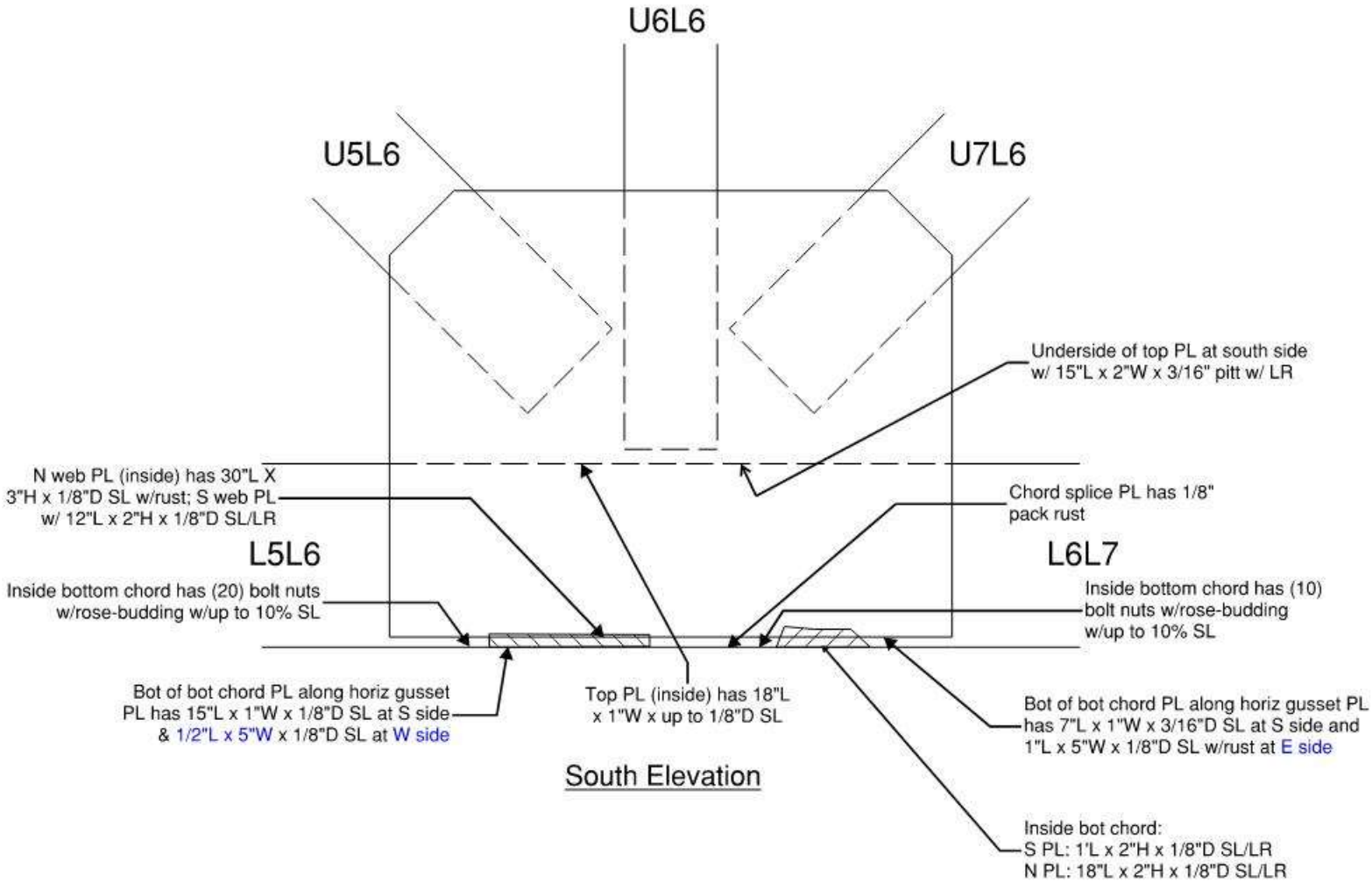

South Elevation

Span 26 - South Truss L6

REVISION 1	DATE: 8/21/19	CREW: BH, JG (Baker)	REVISION 3	DATE:	CREW:
REVISION 2	DATE: 08/04/2021	CREW: EG, SD (PRIME AE)	REVISION 4	DATE:	CREW:

Sketches
Inspection type: Fracture Critical,Routine
Inspection Date: 7/26/2021
Inspected by: PRIME AE

:Bridge No 03819

Town: NEW LONDON
Carried: INTERSTATE 95 NORTHBOUND
Crossed: THAMES RV,RR,LOCAL ROADS
Inventory Route: NHS

CREW: SW, KT	DATE: 9/8/2017	BRIDGE NO.: 03819

Deterioration Legend:
1 - Underside of top horizontal gusset plate has 7"L x 4"W x 1/8"D SL w/lam rust
2 - (1) bolt not fully engaged (backed off 1/4") at bottom gusset plate
3 - Gusset plate with pockets of up to 2"Ø x 3/16"D section loss

LOG DIRECTION
WEST TO EAST

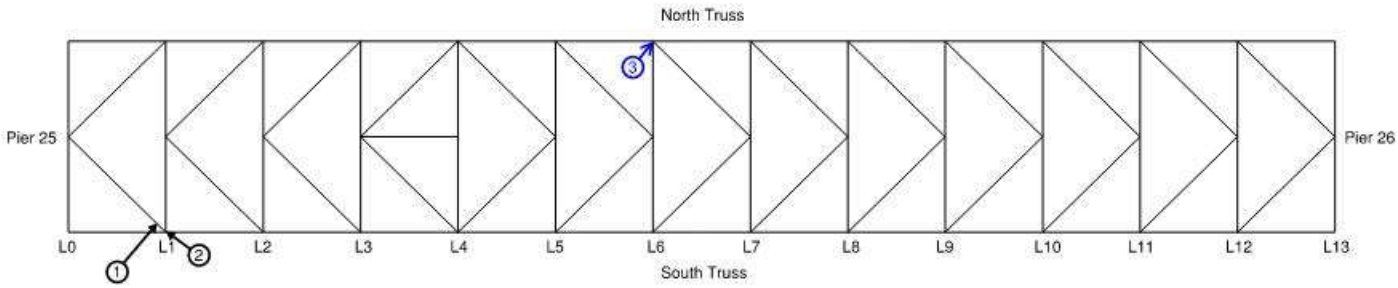

General Notes:
- See Lateral and Sway Bracing General Notes (Spans 26-28) sheet.
- Evidence of water ponding on L9-L11 bottom strut bottom flanges.

Span 26 - Bottom Chord Laterals

REVISION 1	DATE: 8/21/19	CREW: BH, JG (Baker) - No change	REVISION 3	DATE:	CREW:
REVISION 2	DATE: 08/03/2021	CREW: BM, EG, EB, SD, BC, JC (PRIME AE)	REVISION 4	DATE:	CREW:

CREW: SW, BF	DATE: 9/25/2017	BRIDGE NO.: 03819

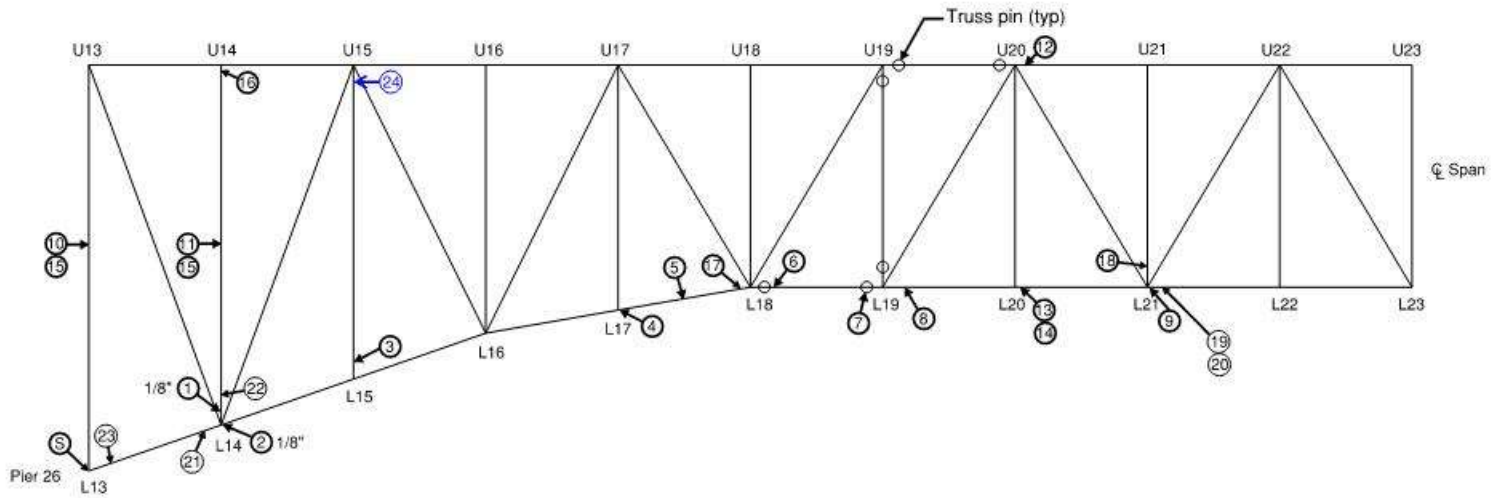

Deterioration Legend:

1. - Pack rust between vert member and vert gusset plate
2. - Pack rust between vert gusset plate and bot chord web
3. - U15L15 N flange above vert gusset PL has 3"W x 1"H x 1/8"D SL
4. - L17L18 N web PL has 1/2"L x 20"H x 3/16"D SL/LR & S web PL has 1/2"L x 21"H (total) x 1/8"D pitting/LR (both areas are along vert gusset PL)
5. - Bottom chord top PL has 3"ø x 3/16"D SL w/ hvy rust
6. - Top splice PL has 3'L x 2'W x 1/8"D pitting and N gusset PL (inside) has (2) 6"L x 3"H x 1/8"D SL areas & (1) 6"L x 3"H x 1/8"D SL area at S PL
7. - Gaps between bottom chord & elastomeric pad, 3/8" at N side & 7/8" at S side; up to 1/8" gap b/w pad and sling PL
8. - Bot chord S web PL adjacent to platform angle has 1"L x 12"H x 1/8"D SL & top PL has (2) areas up to 2"L x 24"W x 1/16"D SL
9. - N gusset PL (inside face) W side has 27"L x 2"H x 1/8"D SL/LR & E side has 26"L x 2"H x 1/8"D SL/LR
10. - U13L13 (inside) N & W PL's have FW x 2"H x up to 1/8"D SL & horiz PL has 1/8"D SL throughout (see typical sketch)
11. - U14L14 (inside) all (4) PL's have up to FW x up to 3"H x 1/8"D SL & horiz PL has areas of SL up to 6"ø x 1/8"D (see typical sketch)
12. - 2-3/4"L crack in tack weld between FB load PL and top chord: (2) broken FL
13. - L20L21 N web PL along bottom of vert gusset PL has 16"H x 1"L x up to 3/16"D pitting and adjacent to gusset PL has 2"L x 6"H x 1/4"D SL/LR all (4) top corners
14. - L20L21 top PL along both gusset PL's has 22"L x 2"W x 1/8"D SL inside node
15. - Int. horiz strut at sway brace at mid-height of truss has areas of 3/16"D pitting at top of web and adjacent flanges up to 4"H ~~w/ water ponding.~~ NF
16. - 1/8" IR/gap at top of VT to S VT G PL
17. - Top of top PL w/ 10"L x 4"W x 3/16"D PO pitt
18. - N Face of U21L21 above G PL w/ 8"L x 1"H x 1/16" to 1/8"D SL/LR

General Notes:

- See Welded Truss General Notes (Spans 26-28) sheet

Legend:

(S) See Sketch

Span 27 - North Truss West Half South Elevation

REVISION 1	DATE: 8/29/19	CREW: BH, JG (Baker)	REVISION 3	DATE:	CREW:
REVISION 2	DATE: 08/09/2021	CREW: BM, NR, EB, BC, JC (PRIME AE)	REVISION 4	DATE:	CREW:

CREW: SW, BF	DATE: 9/25/2017	BRIDGE NO.: 03819

Deterioration Legend Continued:

(19) Underside of bot chord top PL inside around splice PL w/ 24"W x 1"L x 1/8"-3/16"D SL/LR & adj gouge up to 1-1/4"L x 1/4"W x 3/16"D
(20) Underside of bot PL adj horiz G PL w/ 12"W x 1/2"L x 1/8"D SL PO
(21) Top of bot PL w/ 1'W x 4"L x 1/16"D SL/LR
(22) VT member above G PL w/ SL/LR, N. elev: 7"W x 1-1/2"H x 1/16"D, S. elev: 19"W x 1"H x 1/8"D pitt
(23) Top of chord w/ (2) up to 8"L x 5"W x 1/8"D pitt/LR
(24) U15L15 north web plate has 3"L x 1/2"H x 1/16"D section loss below the gusset plate

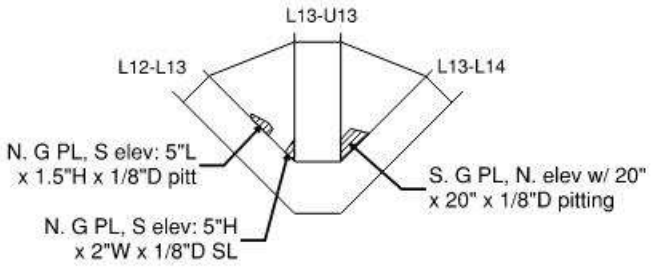

L13 at Pier 26

General Notes:
- See Welded Truss General Notes (Spans 26-28) sheet

Span 27 - North Truss West Half South Elevation

REVISION 1	DATE: 8/29/19	CREW: BH, JG (Baker)	REVISION 3	DATE:	CREW:
REVISION 2	DATE: 08/10/2021	CREW: BM, NR, EB, BC, JC (PRIME AE)	REVISION 4	DATE:	CREW:

CREW: SW, BF	DATE: 9/26/2017	BRIDGE NO.: 03819

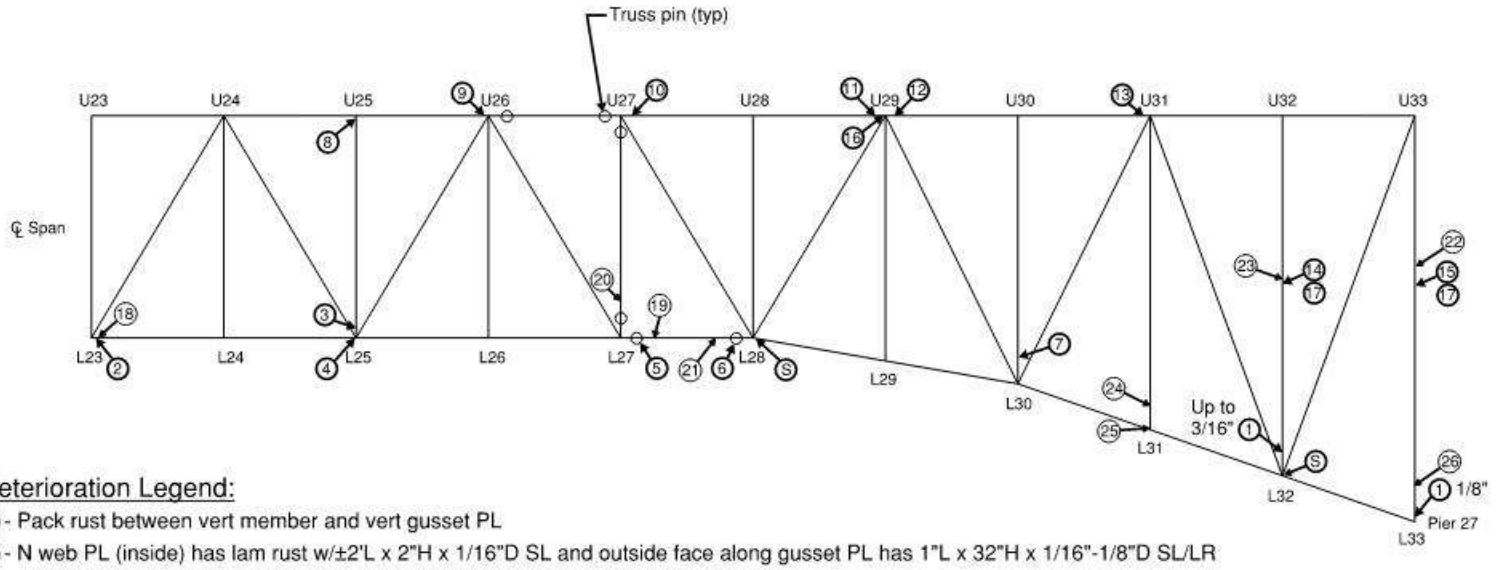

Deterioration Legend:

1. - Pack rust between vert member and vert gusset PL
2. - N web PL (inside) has lam rust w/±2'L x 2"H x 1/16"D SL and outside face along gusset PL has 1"L x 32"H x 1/16"-1/8"D SL/LR
3. - U24L24 above vert gusset PL has lam rust and 9"W (total) x 1"H x 1/8"D SL/LR
4. - Bot chord S web PL (inside) has 1'L x 3"H x 1/8"D SL at both sides of node and top splice PL (outside) has random 1/8"D pitting and 50% SL to bolts
5. - (1) hanger rod is missing 1 of 2 nuts at bottom and remaining nut is loose
6. - 1/4" PR/gap between sliding pin conn & web of bottom chord at both sides at east. Bottom tack weld at N PL's is broken
7. - U30L30 above vert gusset PL has lam rust and 5"W x 1"H x 3/16"D SL
8. - Diaph conn at top has one missing bolt (drift pin in place) at west
9. - Cracked tack weld between spacer PL and truss top chord below FB conn at NW corner
10. - Top chord diaph w/4"ø punch through/cut and bent w/possible crack at top of cut-out (could not access) at west side
11. - (3) missing bolts at N gusset PL and 3/8" PR between vert gusset PL and top chord N PL
12. - N web PL above vert gusset PL has 9"L x 1"H x 1/16"D SL and E side of gusset PL has 1"L x 7"H x 1/16"D SL/LR
13. - Tack weld between FB shim PL and truss top chord has FL crack, west side
14. - U32L32 N, W & E PL's have up to FW x 3"H x 1/8"-3/16"D SL/LR (inside), (see typical sketch)
15. - U33L33 N & E PL's have 6"W x 2"H x 1/8"D SL (inside), (see typical sketch) (up to FW of W. side)
16. - 1/4" gap between top diaph and top chord top splice PL (inside)
17. - Sway strut near mid-height at web and W & E flanges (inside) have SL/LR up to 6"H x 1/8"-1/4"D (avg 3/16"D) along FL
18. - N G PL, E end, S face above bot chord w/ 10"L x 2"H x 1/8"D SL/LR
19. - Top of bot chord w/ 9"L x 5"W x 1/8"D SL/LR
20. - N face of U27L27 w/ FW x 2"H x 1/16" pitt
21. - Inside bot chord web bases w/ up to 1'L x 2"H x 1/8" pitt PO west of pin

General Notes:

- See Welded Truss General Notes (Spans 26-28) sheet

Legend:

S See Sketch

Span 27 - North Truss East Half South Elevation

REVISION 1	DATE: 8/29/19	CREW: BH, JG (Baker)	REVISION 3	DATE:	CREW:
REVISION 2	DATE: 08/10/2021	CREW: BM, NR, EB, BC, JC (PRIME AE)	REVISION 4	DATE:	CREW:

CREW: SW, BF	DATE: 9/25/2017	BRIDGE NO.: 03819

Deterioration Legend Continued:

(22) S side of VT above sway conn w/ 12"W x 1.5"H x 1/8"D SL/LR
(23) Mid-height strut conn to VT w/ 3/16" IR/gap
(24) N. elev VT member w/ 4"W x 1"H x 1/8"D SL/LR
(25) N G PL w/ 13"L x 1.5"H x 1/16"D SL/LR along top of Bottom Chord at S. Elev
(26) S. elev VT member w/ 10.5"W x 1.5"H x 1/16"D SL/LR

General Notes:
- See Welded Truss General Notes (Spans 26-28) sheet

Span 27 - North Truss East Half South Elevation

REVISION 1	DATE: 8/29/19	CREW: BH, JG (Baker)	REVISION 3	DATE:	CREW:
REVISION 2	DATE: 08/18/2021	CREW: BM, NR, EB, BC, JC (PRIME AE)	REVISION 4	DATE:	CREW:

CREW: SW, BF	DATE: 9/25/2017	BRIDGE NO.: 03819

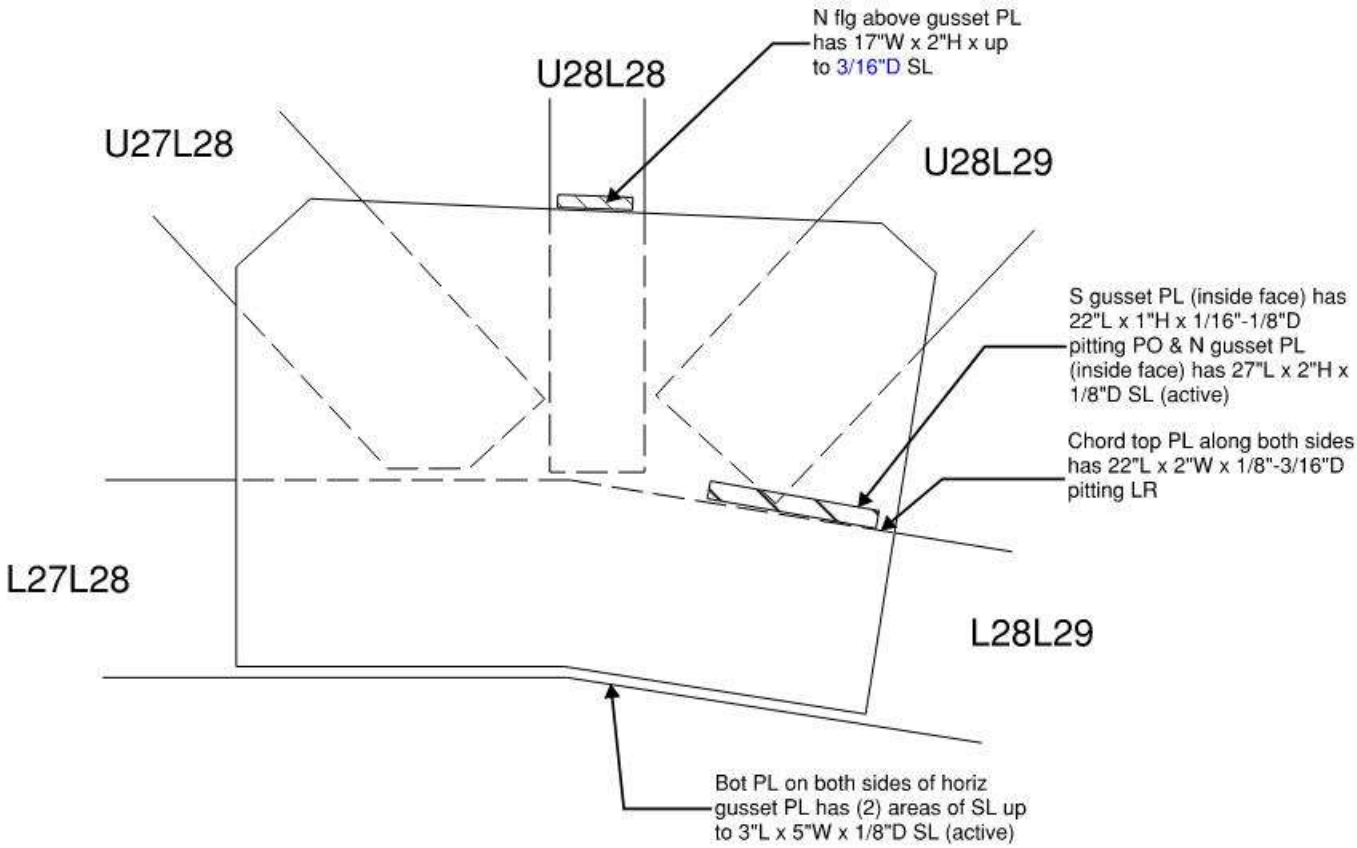

South Elevation

Span 27 - North Truss L28

REVISION 1	DATE: 9/6/19	CREW: BH, JG (Baker)	REVISION 3	DATE:	CREW:
REVISION 2	DATE: 08/10/2021	CREW: NR, EB (PRIME AE)	REVISION 4	DATE:	CREW:

Sketches
Inspection type: Fracture Critical,Routine
Inspection Date: 7/26/2021
Inspected by: PRIME AE

:Bridge No 03819

Town: NEW LONDON
Carried: INTERSTATE 95 NORTHBOUND
Crossed: THAMES RV,RR,LOCAL ROADS
Inventory Route: NHS

CREW: SW, BF	DATE: 9/25/2017	BRIDGE NO.: 03819

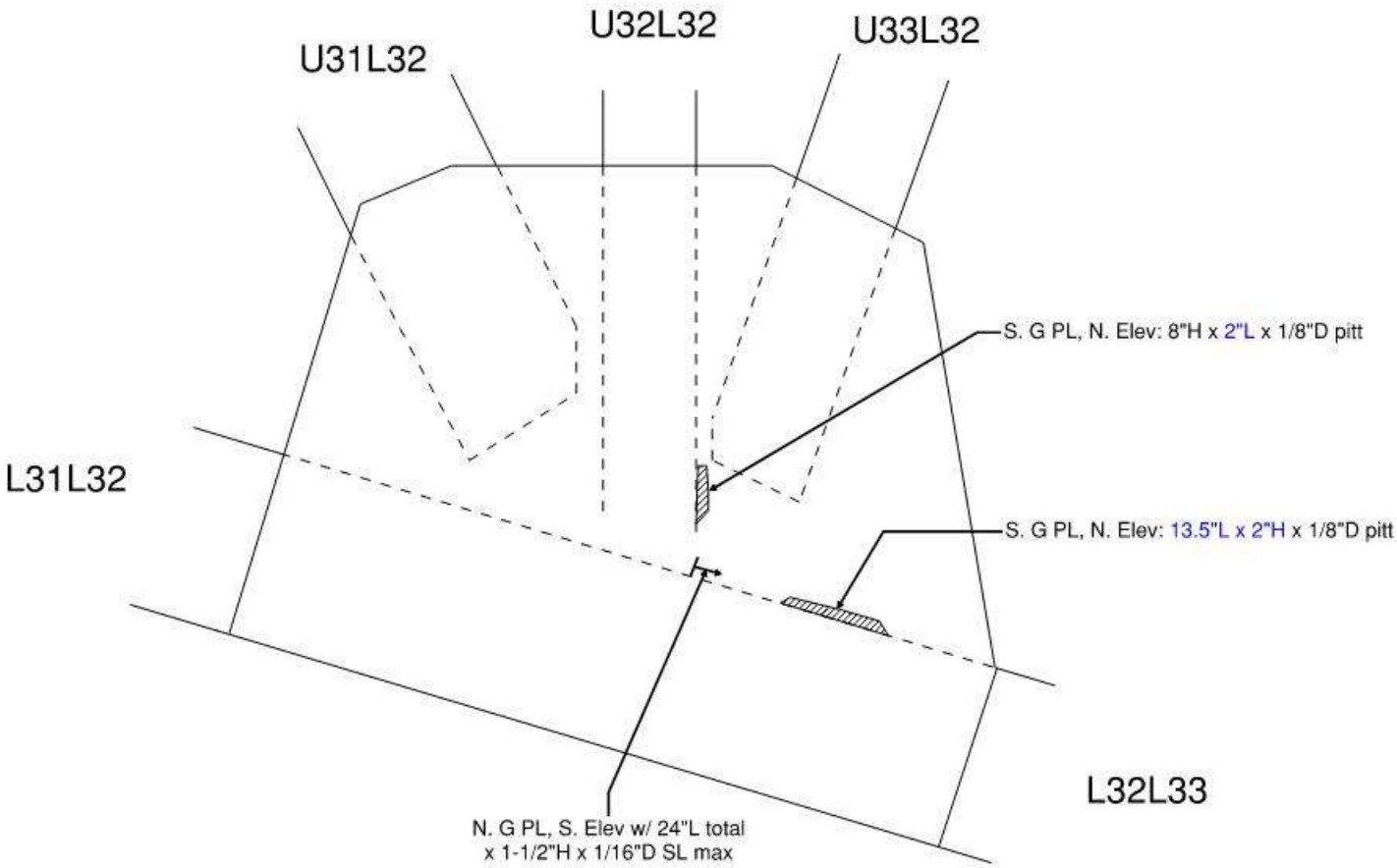

South Elevation

- Active/LR rusting

Span 27 - North Truss L32

REVISION 1	DATE: 9/6/19	CREW: BH, JG (Baker)	REVISION 3	DATE:	CREW:
REVISION 2	DATE: 08/18/2021	CREW: BC, JC (PRIME AE)	REVISION 4	DATE:	CREW:

CREW: SW, BF	DATE: 9/25/2017	BRIDGE NO.: 03819

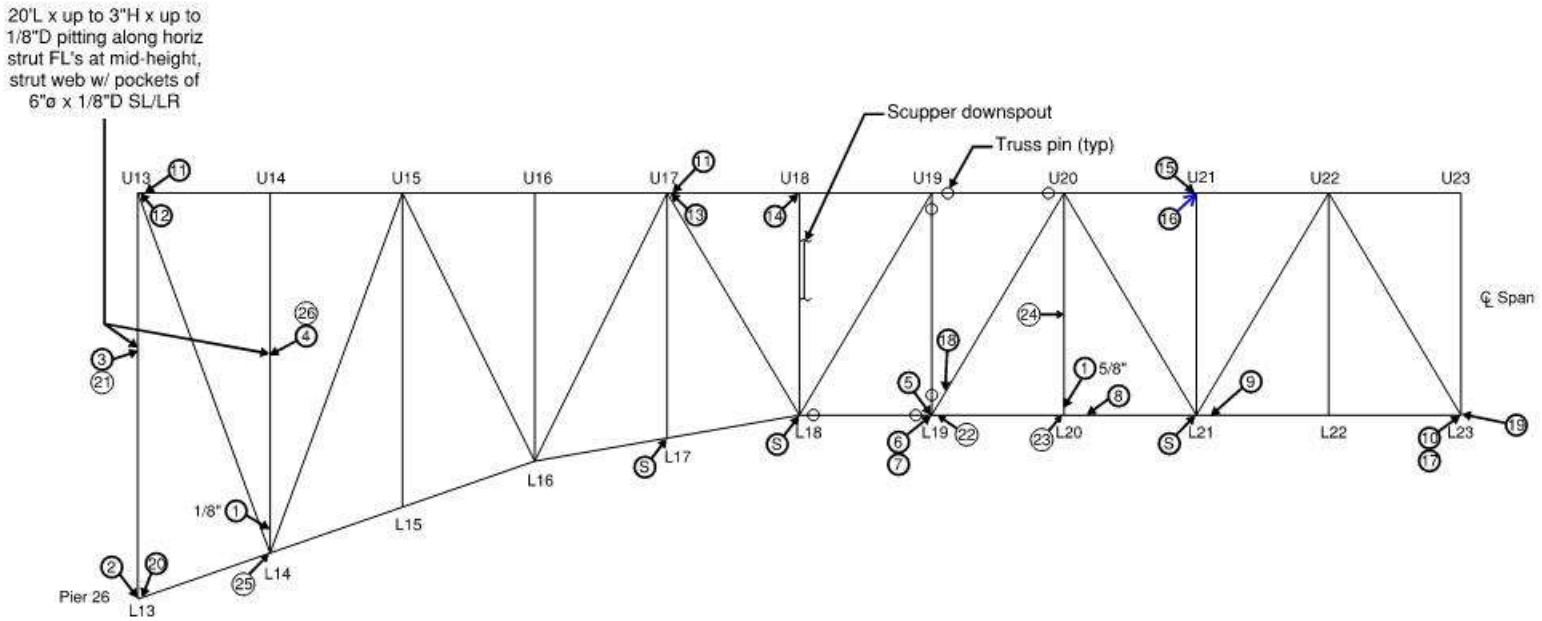

Deterioration Legend:

1. - Pack rust between vert member and vert gusset plate, vert gusset PL along PR area typically has 1/16"D SL
2. - NE vert gusset PL has 1'ø x 1/8"D pitting
3. - L13U13 S plate (inside) has FW x 2"H x 1/16"D SL (see typical sketch) & N PL (outside) has 16"W x 4"H x 1/16"-1/8"D SL (losses not at same X-section)
4. - L14U14 E PL (inside) has 26"L x 2"H x 1/8"D SL & S PL (inside) has 4"L x 2"H x 1/8"D SL & vert strut gusset PL inside has 2'L x 1"H x 1/8"D SL (see typical sketch)
5. - Inside of both vert gusset PL's along top flg of bottom chord has isolated areas of 1/8"D pitting
6. - Elast pad at top E side has 1/2" bulge and (2) tears up to 4"L x 1/4"H x 1"D, W side has 2"L tear; pad O/H 1" at SW corner & keeper is bent; no gaps btwn elast pad & bot chord at W side
7. - Bot chord has 1/16" gap at W side to restraining PL & hanger rods for redundant system have areas of mod rust; NW VT rod, secondary nut at bottom is loose
8. - Top PL of bot chord has 2'L area of LR w/ 22"W x 10"L x 1/8"D Average SL with pockets of up to 1/4"D SL, N. web w/ 19"H x 6"W x 1/8"D pitting
9. - Top of top PL of bot chord has 3'L x 2.5"W x 1/8"D SL PO, ~~inside node w/ ponding water~~ NF
10. - N splice PL at bottom (inside) has 18"L x 3"H x 1/16"D SL w/rust & (15) bolt nuts w/up to 30% SL with rosebudding
11. - Top chord top PL has up to 25"L x up to 11"W x 1/16"-1/8"D SL & (7) bolt heads w/10% SL w/ rosebudding (worst at U13)
12. - Top of N gusset PL has 4"L x 16"H x 1/8"D SL/LR
13. - U17U18 N web PL above N vert gusset PL has 16"L x 2"H x 1/8"D SL/LR
14. - 1/8" PR between vert gusset PL & S web PL
15. - Top chord top PL has (2) areas of SL/LR up to 3"L x 2"W x 3/16"D
16. - Weld between chord and FB keeper PL has 1-3/4"L crack/possible weld defect
17. - Conn bolt backed off 1/2" at bot chord inside at top angle (short bolt)
18. - 1'L section of elect conduit rusted out w/exp wires, abandoned conduit
19. - Junction box open, 15'L wire for navig light comes out of junction box (abandoned wires thru-out)
20. - Drain holes unclogged & heavy flaking corrosion

General Notes:

- See Welded Truss General Notes (Spans 26-28) sheet

Legend:

Ⓢ See Sketch

Span 27 - South Truss West Half South Elevation

REVISION 1	DATE: 8/21/19	CREW: BH, JG (Baker)	REVISION 3	DATE:	CREW:
REVISION 2	DATE: 08/11/2021	CREW: BM, NR, EB, BC, JC (PRIME AE)	REVISION 4	DATE:	CREW:

CREW: SW, BF	DATE: 9/25/2017	BRIDGE NO.: 03819

Deterioration Legend Continued:

(21) Strut E VT PL, west elev w/ 26"L x 3"H x 1/8"D SL/LR & along top diag w/ 12"L x 2"H x 1/8"D SL/LR
(22) N. elev of bot chord adj web PL w/ 4"H x 2"W x 1/8"D SL/LR & top of bot chord at catwalk w/ (2) 12"W x 1.5"L x 1/8"D SL/LR (not at same X-section)
(23) Bot chord adj to G PL at top; all (4) corners w/ 7"H x 3"W x 1/8"D SL/LR
(24) N. face of U20L20 at mid-height w/ (2) areas of up to FW(14") x 8"H x 1/8"D SL/LR at ladder barrel conn
(25) Diaph W. elev w/ sloppy diagonal weld; ~~(1) bolt missing at diaph conn to bot chord~~ (Not found during this inspection) and connection PL slightly bent (as-built)
(26) N. elev of L14U14 above sway bracing conn w/ 15"L x 1"H x 1/8"D pitt/LR and below conn w/ 10"L x 1/2"H x 1/8"D pitt/LR

General Notes:
- See Welded Truss General Notes (Spans 26-28) sheet

Span 27 - South Truss West Half South Elevation

REVISION 1	DATE: 8/29/19	CREW: BH, JG (Baker)	REVISION 3	DATE:	CREW:
REVISION 2	DATE: 08/11/2021	CREW: BM, NR, EB, BC, JC (PRIME AE)	REVISION 4	DATE:	CREW:

CREW: SW, BF	DATE: 9/25/2017	BRIDGE NO.: 03819

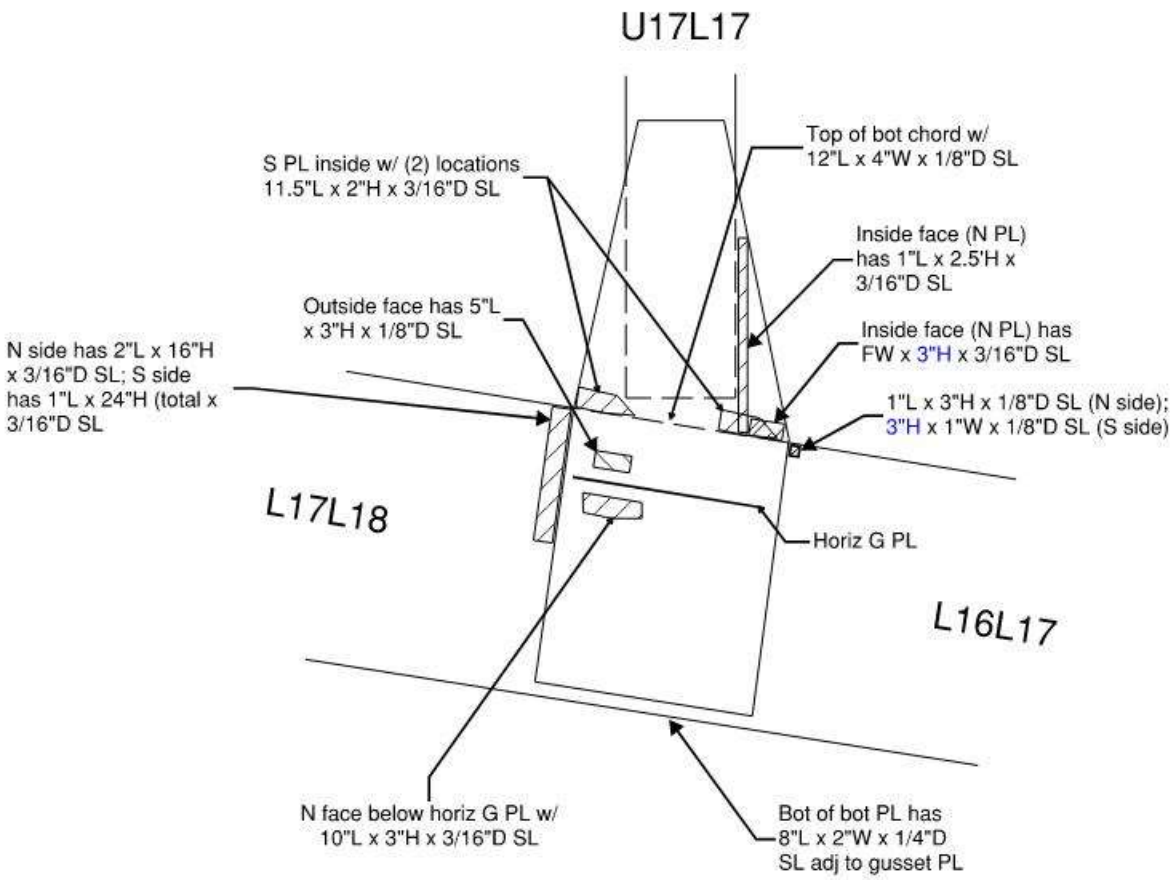

North Elevation

- LR at all locations

Span 27 - South Truss L17

REVISION 1	DATE: 8/21/19	CREW: BH, JG (Baker)	REVISION 3	DATE:	CREW:
REVISION 2	DATE: 08/11/2021	CREW: NR, EB (PRIME AE)	REVISION 4	DATE:	CREW:

Sketches
Inspection type: Fracture Critical,Routine
Inspection Date: 7/26/2021
Inspected by: PRIME AE

:Bridge No 03819

Town: NEW LONDON
Carried: INTERSTATE 95 NORTHBOUND
Crossed: THAMES RV,RR,LOCAL ROADS
Inventory Route: NHS

CREW: SW, BF	DATE: 9/25/2017	BRIDGE NO.: 03819

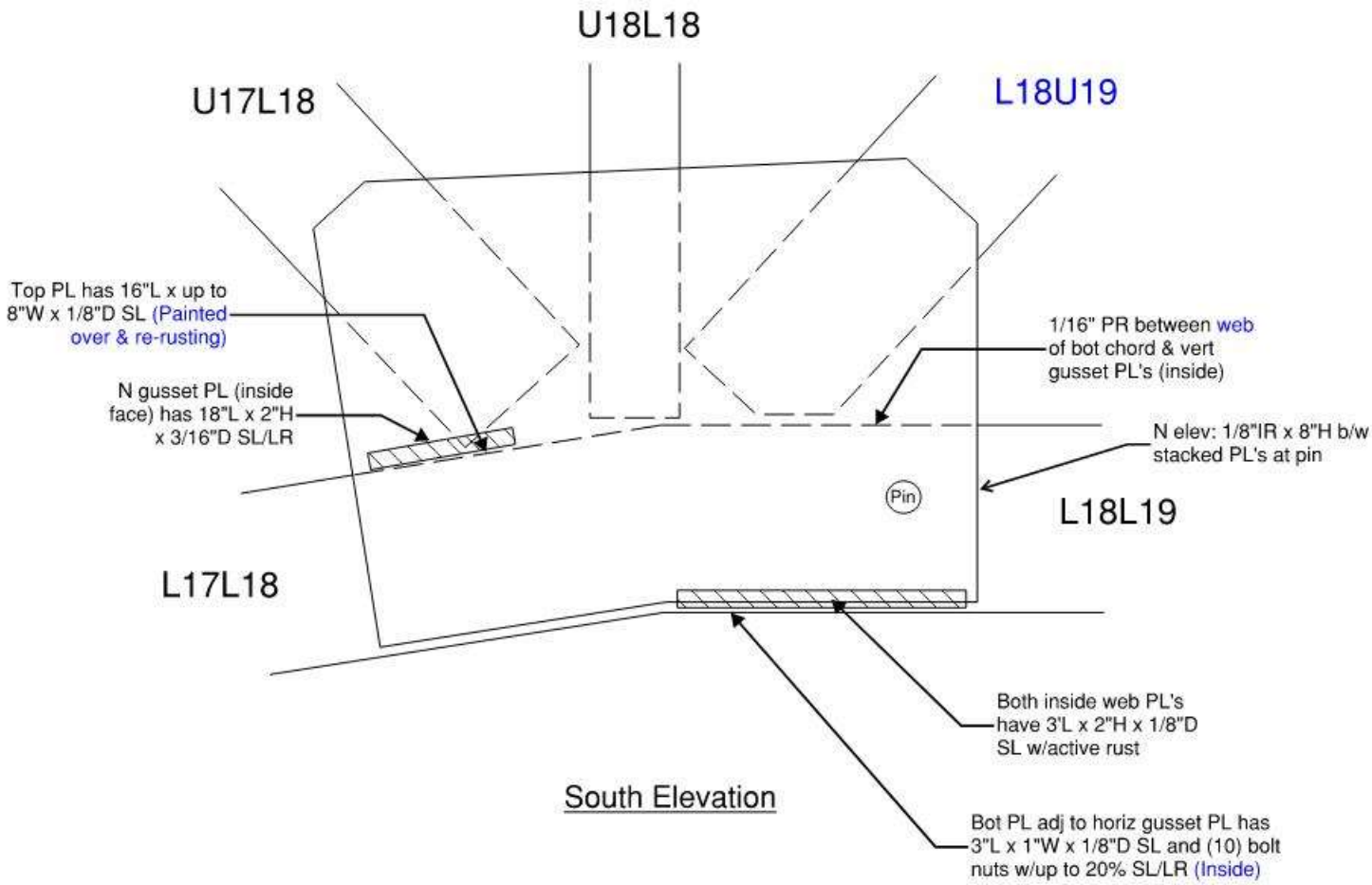

South Elevation

Span 27 - South Truss L18

REVISION 1	DATE: 8/21/19	CREW: BH, JG (Baker)	REVISION 3	DATE:	CREW:
REVISION 2	DATE: 08/11/2021	CREW: NR, EB (PRIME AE)	REVISION 4	DATE:	CREW:

CREW: SW, BF	DATE: 9/25/2017	BRIDGE NO.: 03819

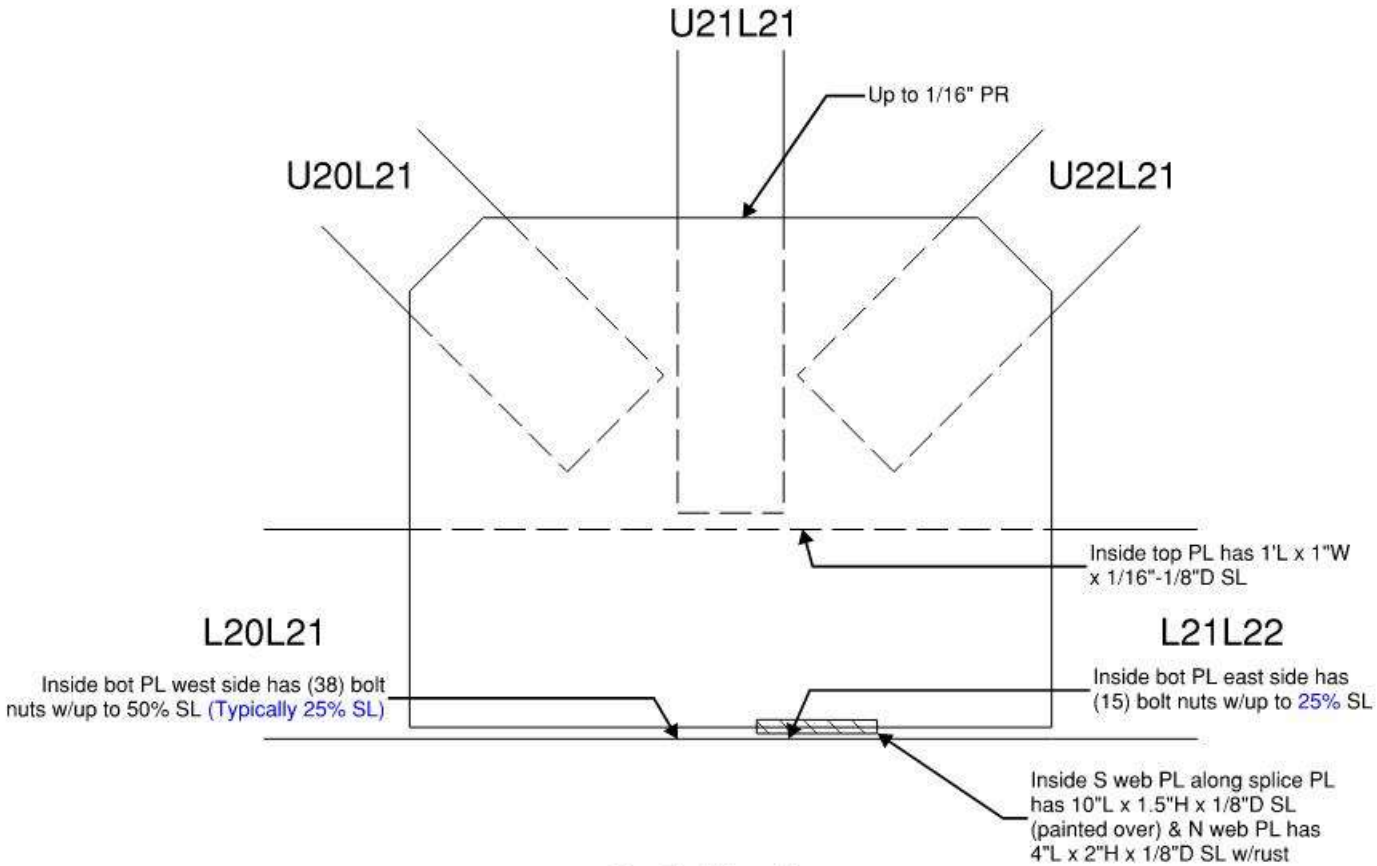

South Elevation

Span 27 - South Truss L21

REVISION 1	DATE: 8/22/19	CREW: BH, JG (Baker) - No change	REVISION 3	DATE:	CREW:
REVISION 2	DATE: 08/11/2021	CREW: NR, EB (PRIME AE)	REVISION 4	DATE:	CREW:

CREW: SW, BF	DATE: 9/26/2017	BRIDGE NO.: 03819

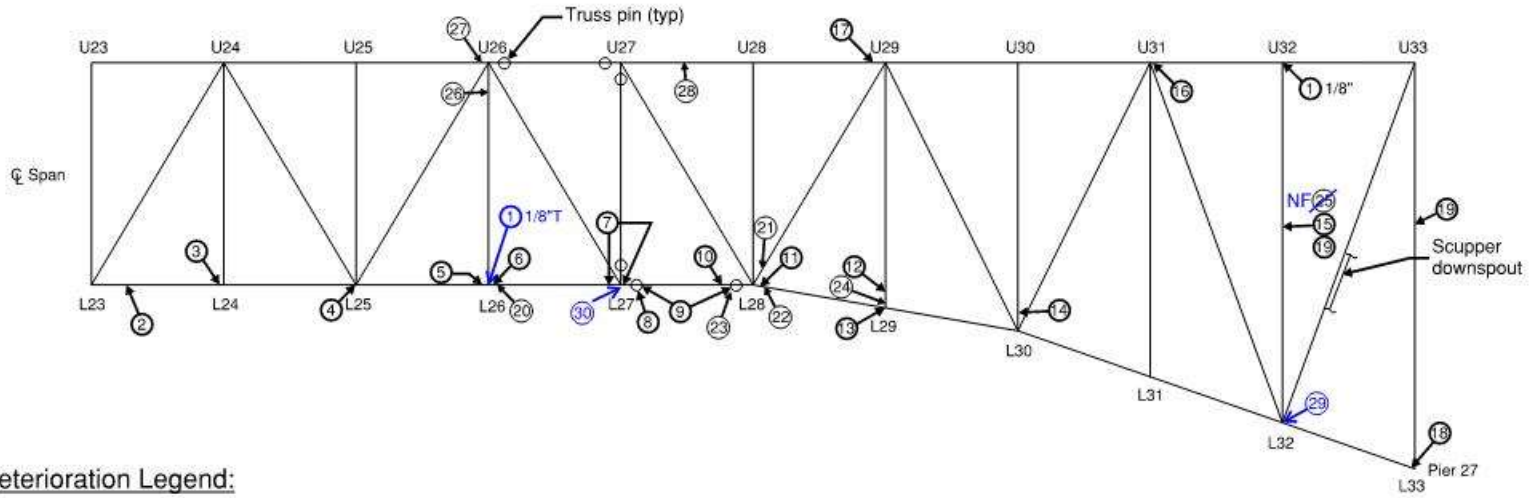

Deterioration Legend:

① - Pack rust between vert member and vert gusset PL
② - Up to 1/4" pack rust between catwalk support and underside of chord (typ at all catwalk conn's this area w/ rand catwalk panels disconnected, lifted)
③ - Top PL has 5"Ø x 3/16"D SL/LR
④ - Inside bot chord at bot PL W side has (7) bolt nuts have up to 20% SL, E side has (17) bolt nuts with up to 50% SL & web splice PL's have 2'L x 2"H x 1/16"D pitting
⑤ - L25L26 S web PL has 3"Ø x 1/8"D SL and top PL has area of SL up to 2'L x FW x 1/16"-1/8"D SL/LR; N PL adj to G PL w/ 14"H (total) x 1.5"W x 1/8"D SL
⑥ - L26L27 top PL has rand areas up to 9"ø x 1/8"D SL; N web PL along G PL w/ 6"H x 1"W x 1/16"D SL/LR
⑦ - See sketch of L27 G PL
⑧ - 4 of 4 hanger rods at NE corner have up to 1/16"D SL at end threads on half of perimeter and there is <1/16" gap between elastomeric pad & bot chord at E side
⑨ - Up to 1/4" PR between vert gusset PL & pin plate and bot chord spacer/shim PL at N side; S side at top has 1/4" gap and at bot is touching at L27
⑩ - Inside vert web PL along edge of vert PL surrounding pin has 2'L x 2"H x up to 3/16"D SL
⑪ - L28L29 top of top PL adjacent to vert gusset PL's w/4'L x 1"W x 1/4"-5/16"D SL at both sides inside node: N. web PL S. Elev w/ 22"L x 1"H x 1/16"-1/8"D SL/LR
⑫ - U29L29 S PL above vert gusset PL has FW x 1"H x 1/16"D pitting
⑬ - 3/16" PR between chord web and vert gusset PL at all corners
⑭ - U30L30 S flange has 13"W x 1/2"H x 1/16"D SL; N. G PL, N. elev w/ 2SF LR neg loss
⑮ - U32L32 E, W & S PL's (inside) above sway bracing have lam rust w/up to 2'L x 1.5"H x 1/8"D SL; N PL (outside) has 14"W x 1"H x 1/8"D SL (see typical sketch)
⑯ - S vert gusset PL at E edge has 5/16"L x 1/8"W x FD gouge (painted over)
⑰ - Top of chord adjacent to splice PL has 14"L x 3/4"W x up to 1/8"D SL (painted)
⑱ - Both Drain holes clogged and water ponding inside at span 28 side
⑲ - Sway bracing mid-height strut at W & E flg's have up to 1/8"D SL x 5"H along FL
⑳ - (1) missing bolt at bot chord VT G PL at south (Inside)

General Notes:
- See Welded Truss General Notes (Spans 26-28) sheet

Span 27 - South Truss East Half South Elevation

REVISION 1	DATE: 8/22/19	CREW: BH, JG (Baker)	REVISION 3	DATE:	CREW:
REVISION 2	DATE: 08/12/2021	CREW: BM, NR, EB, BC, JC (PRIME AE)	REVISION 4	DATE:	CREW:

CREW: SW, BF	DATE: 9/25/2017	BRIDGE NO.: 03819

Deterioration Legend Continued:

(21) (1) missing bolt at N G PL to U29L28
(22) L28L29 bot chord bot PL bowed up FW x 7/8"H
(23) Bot chord: S. PL inside: 2'L x 1"H x 1/8"D pitt, N. PL (inside): 2'L x 1"H x 1/16"D pitt
(24) N. PL, S. elev: 10"L x 5"H x 1/8"D SL above bot chord. N. PL, N elev at lat bracing conn w/ 6"L x 4"H x 1/8"D SL
(25) ~~N. PL above sway conn w/ 10"L x 1"H x 1/8"-3/16"D SL/LR in VT member (same plane as cut-outs)~~ NF
(26) S. side of VT below G PL w/ 4"L x 1"H x 1/16"D SL/LR
(27) Top of top chord b/w FB's w/ FL x FW x 1/8"D pitt PO
(28) Bot of S web PL w/ numerous minor smooth gouges
(29) Interior of North Gusset has 6"L x 4"H x 1/8"D pitting at east side; Diaphragm at west side has pack rust up to 2'L along the top
(30) (1) Anchor rod has (1 of 2) backed off nuts (Secondary sleeve nuts)

General Notes:
- See Welded Truss General Notes (Spans 26-28) sheet

Span 27 - South Truss East Half South Elevation

REVISION 1	DATE: 8/22/19	CREW: BH, JG (Baker)	REVISION 3	DATE:	CREW:
REVISION 2	DATE: 08/12/2021	CREW: BM, NR, EB, BC, JC (PRIME AE)	REVISION 4	DATE:	CREW:

Sketches
Inspection type: Fracture Critical,Routine
Inspection Date: 7/26/2021
Inspected by: PRIME AE

:Bridge No 03819

Town: NEW LONDON
Carried: INTERSTATE 95 NORTHBOUND
Crossed: THAMES RV,RR,LOCAL ROADS
Inventory Route: NHS

CREW: SW, BF	DATE: 9/26/2017	BRIDGE NO.: 03819

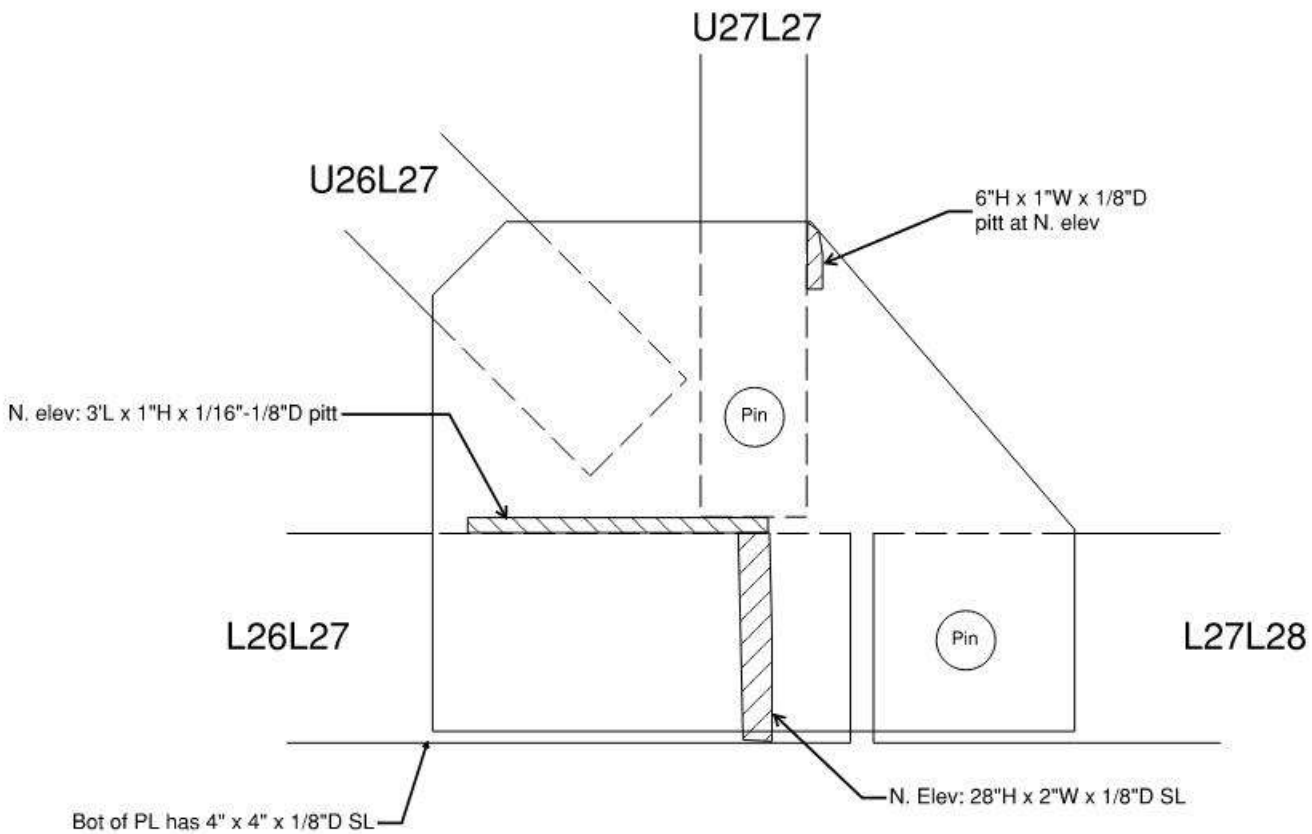

South Elevation

Span 27 - South Truss L27, South Plate

REVISION 1	DATE: 8/22/19	CREW: BH, JG (Baker)	REVISION 3	DATE:	CREW:
REVISION 2	DATE: 08/12/2021	CREW: NR, EB (PRIME AE) - No Change	REVISION 4	DATE:	CREW:

Sketches
Inspection type: Fracture Critical,Routine
Inspection Date: 7/26/2021
Inspected by: PRIME AE

:Bridge No 03819

Town: NEW LONDON
Carried: INTERSTATE 95 NORTHBOUND
Crossed: THAMES RV,RR,LOCAL ROADS
Inventory Route: NHS

CREW: SW, BF	DATE: 9/26/2017	BRIDGE NO.: 03819

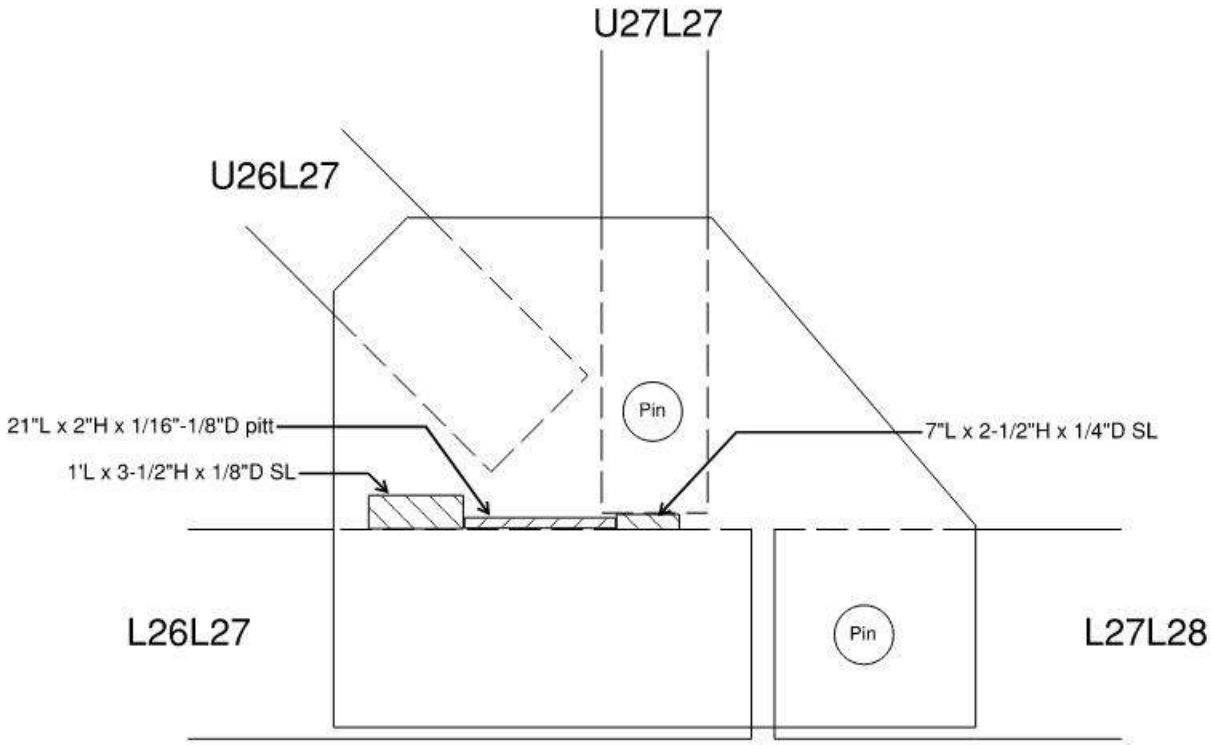

South Elevation

Span 27 - South Truss L27, North Plate

REVISION 1	DATE: 8/22/19	CREW: BH, JG (Baker)	REVISION 3	DATE:	CREW:
REVISION 2	DATE: 08/12/2021	CREW: NR, EB (PRIME AE) - No Change	REVISION 4	DATE:	CREW:

CREW: BH, BF	DATE: 9/8/2017	BRIDGE NO.: 03819

LOG DIRECTION
WEST TO EAST

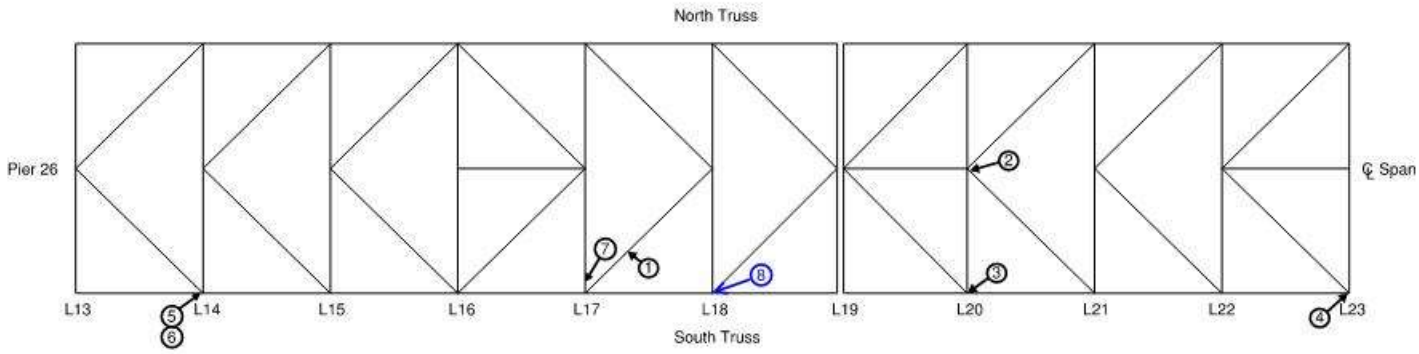

Deterioration Legend:

1 - Heavy silt stains on bottom flange
2 - (7) bolt heads at top gusset plate of strut angle connection w/up to 30% SL and areas of lam rust
3 - Bolted angles on vertical gusset plate
4 - mis-drilled bolt holes on inside
5 - 3/4" PR b/w X-brace & lower strut; sway bracing G PL at u/s w/ 1' x 2" x 3/16" SL/LR
6 - L14 strut w/ 1'L x 2"H x 1/4"D SL/LR at web
7 - Web above horiz G PL w/ 13"L x 3"H x 1/8"D pitt
8 - (4) Mis-drilled holes at top flange

General Notes:

- See Lateral and Sway Bracing General Notes (Spans 26-28) sheet.
- Heavy silt stains and evidence of water ponding on L13-L17 bottom strut bottom flanges.

Span 27 - Bottom Laterals - West Half

REVISION 1	DATE: 8/21/19	CREW: BH, JG (Baker)	REVISION 3	DATE:	CREW:
REVISION 2	DATE: 08/09/2021	CREW: BM, NR, EB, BC, JC (PRIME AE)	REVISION 4	DATE:	CREW:

CREW: BH, BF	DATE: 9/8/2017	BRIDGE NO.: 03819

Deterioration Legend:

LOG DIRECTION → WEST TO EAST

① - NE corner of lower horizontal gusset plate w/1"L x 1"W tear
② - (2) missing bolts at lateral bracing to top lateral gusset plate due to diag sway bracing conn configuration
③ - Bottom flange of transverse bracing is bent up 1" for 18" long
④ - Up to 1/2" pack rust between lateral brace bottom gusset plate and truss bottom chord
⑤ - ~~Lateral bracing web w/ 7"Ø x 1/8"D SL at conn~~ NF

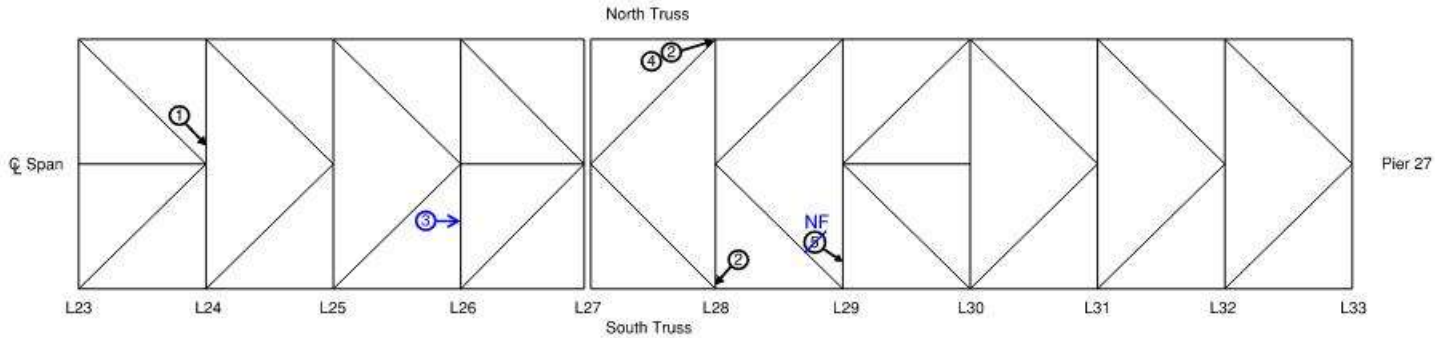

General Notes:

- See Lateral and Sway Bracing General Notes (Spans 26-28) sheet.
- Heavy silt stains and evidence of water ponding on L29-L33 bottom strut bottom flanges.

Span 27 - Bottom Laterals - East Half

REVISION 1	DATE: 8/22/19	CREW: BH, JG (Baker)	REVISION 3	DATE:	CREW:
REVISION 2	DATE: 08/10/2021	CREW: BM, NR, EB, BC, JC (PRIME AE)	REVISION 4	DATE:	CREW:

Sketches
Inspection type: Fracture Critical,Routine
Inspection Date: 7/26/2021
Inspected by: PRIME AE

:Bridge No 03819

Town: NEW LONDON
Carried: INTERSTATE 95 NORTHBOUND
Crossed: THAMES RV,RR,LOCAL ROADS
Inventory Route: NHS

CREW: SW, BF	DATE: 10/10/2017	BRIDGE NO.: 03819

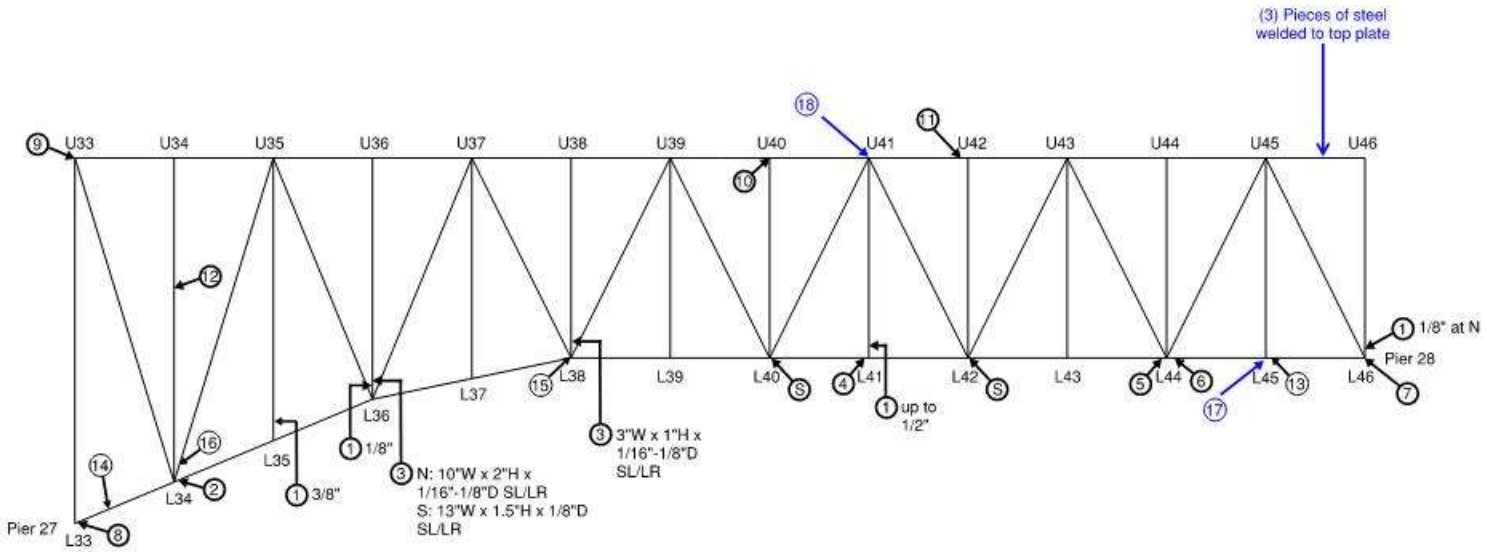

Deterioration Legend:

1. - Pack rust between vert member and vert gusset plate
2. - Bot of bot chord has (1) loose bolt
3. - N Flange has SL (size given)
4. - Top of bot PL has 7"Ø x 1/8"-3/16"D pitting w/rust inside node
5. - N web PL at bot (inside face) has 15"L x 3"H x 3/16"D pitting (painted over); South Web plate with 16"L x 1"H x 1/8"D at bottom painted; (1) bolt is missing at South Web (inside)
6. - (L44 - L45) N web PL adj to vert gusset PL has 1"L x 3.5"H x 1/8"D SL
7. - Water ponding (dry) inside bot chord w/up to 50% SL to bolt nuts; Top of bot flg PL has (2) areas of SL up to 3" x 3" x 1/16"D; stiff w/ FW x 2"H x 1/8"D SL/LR
8. - Water ponding in bottom chord due to plugged drain holes (dry, debris inside)
9. - 2" PR between shim PL's w/FW x 1.5"W RTH at S shim PL (east side of FB 33)
10. - Up to 1/4" gap between vert gusset PL and lateral sway bracing bracket (knee brace)
11. - Top chord top PL has 3.5"L x 1-3/4"W x 5/16"D SL w/ hvy rust
12. - U34L34 (inside) above horiz PL S & W PL's have 1/2 Width x 3"H x 1/8"D SL, N & E PL's have FW x 3"H x 1/8"D SL & S PL (outside) has 1'W x 1"H x 1/8"D SL (see typical sketch)
13. - L45L46 at L45 N web PL w/ 4"H x 1"W x 1/8"D SL/LR
14. - Top of bot chord w/ (3) areas of pitt/LR - (1) - 7.5"L x 4.5"W x 1/8"D; (1) - 18"L x 6"W x 1/8"D; (1) - 18"L x 6W x 1/16"D
15. - Diaph inside w/ gap 3/4"H b/w bot angle and bot PL & 5 out of 5 bolts not fully engaged
16. - N. elev of diag w/ (2) locations of 3"L x 1"H x 1/16"D SL/LR just above G PL
17. - Missing bolt due to abandoned steel plate
18. - Peeling paint with rust on gusset plate

General Notes:

- See Welded Truss General Notes (Spans 26-28) sheet

Legend:

Ⓢ See Sketch

Span 28 - North Truss South Elevation

REVISION 1	DATE: 9/4/19	CREW: AH, BF (Baker)	REVISION 3	DATE:	CREW:
REVISION 2	DATE: 08/17/2021	CREW: BM, EG, EB, AN, BC, JC (PRIME AE)	REVISION 4	DATE:	CREW:

Sketches
Inspection type: Fracture Critical,Routine
Inspection Date: 7/26/2021
Inspected by: PRIME AE

:Bridge No 03819

Town: NEW LONDON
Carried: INTERSTATE 95 NORTHBOUND
Crossed: THAMES RV,RR,LOCAL ROADS
Inventory Route: NHS

CREW: SW, BF	DATE: 10/10/2017	BRIDGE NO.: 03819

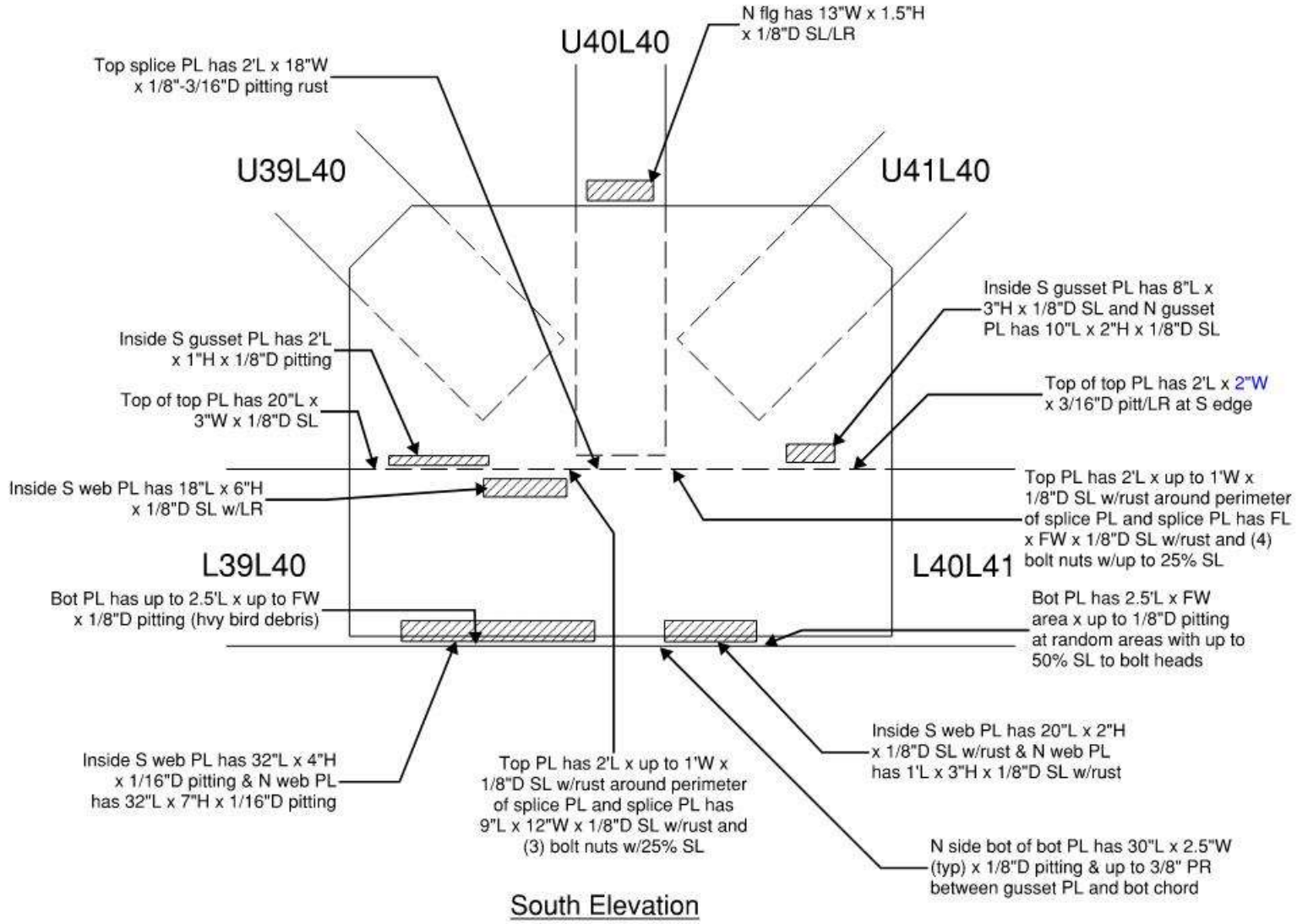

South Elevation

Note:
- All SL's are painted over U.O.N.

Span 28 - North Truss L40

REVISION 1	DATE: 9/6/19	CREW: AH, BF (Baker)	REVISION 3	DATE:	CREW:
REVISION 2	DATE: 08/24/2021	CREW: EG, AN (PRIME AE)	REVISION 4	DATE:	CREW:

Sketches
Inspection type: Fracture Critical,Routine
Inspection Date: 7/26/2021
Inspected by: PRIME AE

:Bridge No 03819

Town: NEW LONDON
Carried: INTERSTATE 95 NORTHBOUND
Crossed: THAMES RV,RR,LOCAL ROADS
Inventory Route: NHS

CREW: SW, BF	DATE: 10/10/2017	BRIDGE NO.: 03819

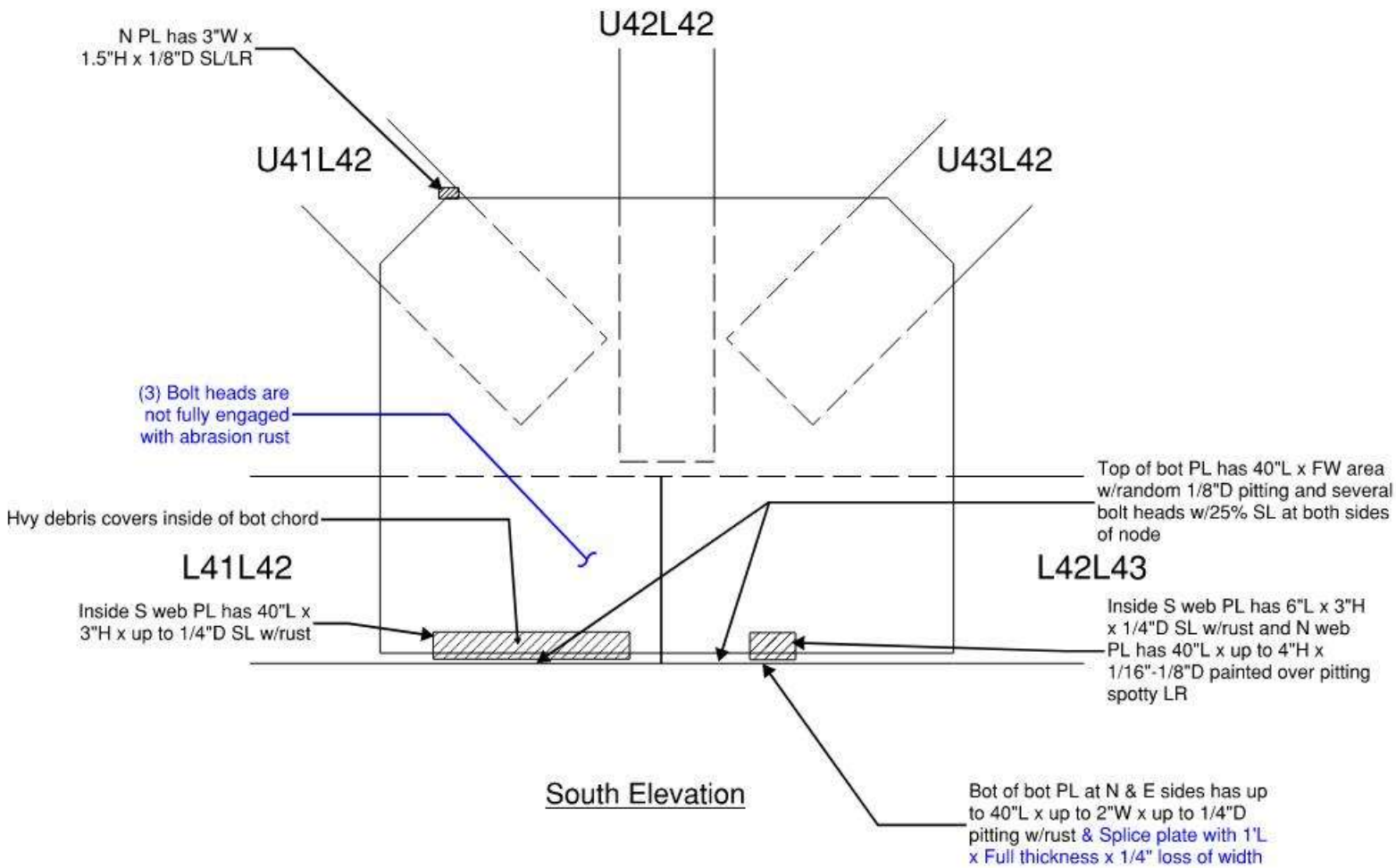

South Elevation

Span 28 - North Truss L42

REVISION 1	DATE: 9/6/19	CREW: AH, BF (Baker)	REVISION 3	DATE:	CREW:
REVISION 2	DATE: 08/26/2021	CREW: EG, AN (PRIME AE)	REVISION 4	DATE:	CREW:

CREW: SW, BF	DATE: 9/26/2017	BRIDGE NO.: 03819

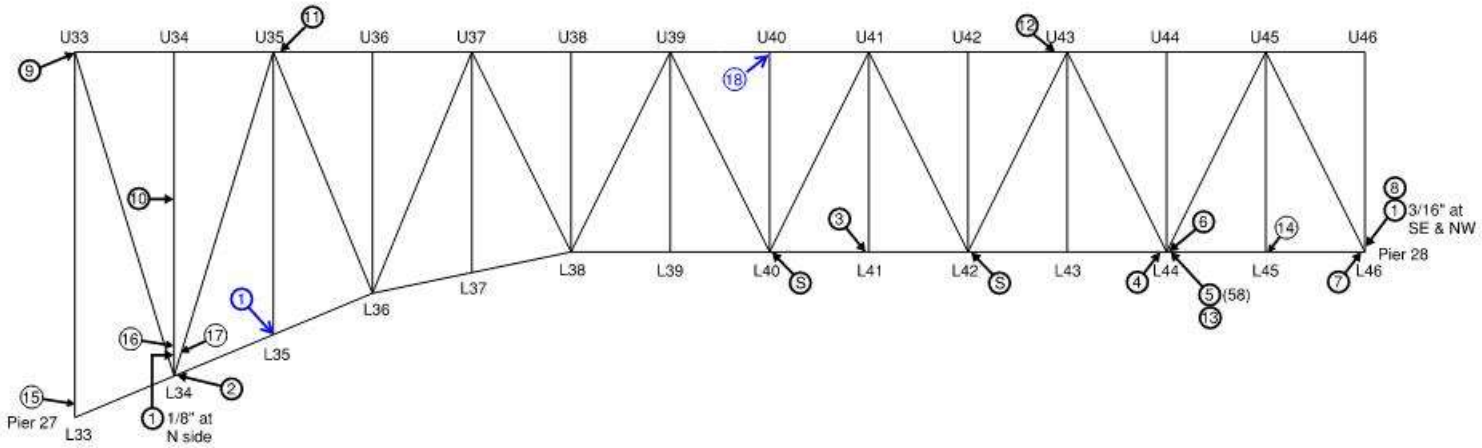

Deterioration Legend:

1. - Pack rust between vert member and vert gusset plate
2. - Lam rust inside bot chord has isolated areas w/up to 1/16"D pitting
3. - Top PL has 16"W (total) x 10"H x 1/8"D pitting
4. - Both web PL's (inside) have 2'L x 2"H x 1/16"D SL/LR; top of bot PL inside w/ FW x 2'L x 1/8" pitt PO
5. - Up to 75% SL/LR to bolt nuts inside connection (# of bolt nuts)
6. - Top PL has 5"L x 2"W x 3/16"D pitting inside node
7. - (13) of (13) bolt nuts at bot PL have up to 60% SL & bot chord bot PL has 1"L x 16"W x 1/16"-1/8"D SL PO; top of bot PL w/ rand 1/8"D pitt inside PO
8. - Vert member stiff has 6"W x 2"H x 1/8"D SL & U46L46 S flange above vert gusset PL has (2) areas of SL up to 3"W x 1"H x 1/16"-1/8"D SL; N flg above G PL w/ 9"L x 2.5"H x 1/8"D SL/LR
9. - N vert gusset PL has (1) bolt short (3) threads; N G PL adj to sway conn w/ 10"H x 1"W x 1/8"D SL/LR
10. - U34L34 W PL near sway brace conn has a total of 1'W x 2"H x 1/8"D SL & E PL has 8"W x 2"H x 1/8"D SL (see typical sketch); N elev above sway conn w/ 14"L x 2"H x 1/8"D pitt (in-line with cut-out section)
11. - S vert gusset PL has (1) missing bolt
12. - W edge of vert gusset PL has (8) gouges up to 1"H x 1/2"W x 1/8"D (painted over)
13. - Bot of chord ~~(outside face)~~ along south edge horizontal gusset PL has 3'L x 1/2"W 1/8"D pitting
14. - Miss bolt at S VT G PL due to abandoned steel PL ~~inside~~
15. - VT mem, S. elev w/ 8"W x 1.5"H x 1/16"D SL/LR
16. - VT mem, N. elev w/ FW x 1"H x up to 1/16"D SL/LR
17. - N. G PL, N. elev w/ 1'L x 1"H x 1/16"D SL/LR above X-bracing strut
18. - Up to 1/4" gap between sway brace bracket & vertical gusset plate

General Notes:

- See Welded Truss General Notes (Spans 26-28) sheet.

Legend:

Ⓢ See Sketch

Span 28 - South Truss South Elevation

REVISION 1	DATE: 8/22/19	CREW: BH, JG (Baker)	REVISION 3	DATE:	CREW:
REVISION 2	DATE: 08/25/2021	CREW: BM, EG, EB, AN, BC, JC (PRIME AE)	REVISION 4	DATE:	CREW:

Sketches
Inspection type: Fracture Critical,Routine
Inspection Date: 7/26/2021
Inspected by: PRIME AE

:Bridge No 03819

Town: NEW LONDON
Carried: INTERSTATE 95 NORTHBOUND
Crossed: THAMES RV,RR,LOCAL ROADS
Inventory Route: NHS

CREW: SW, BF	DATE: 9/26/2017	BRIDGE NO.: 03819

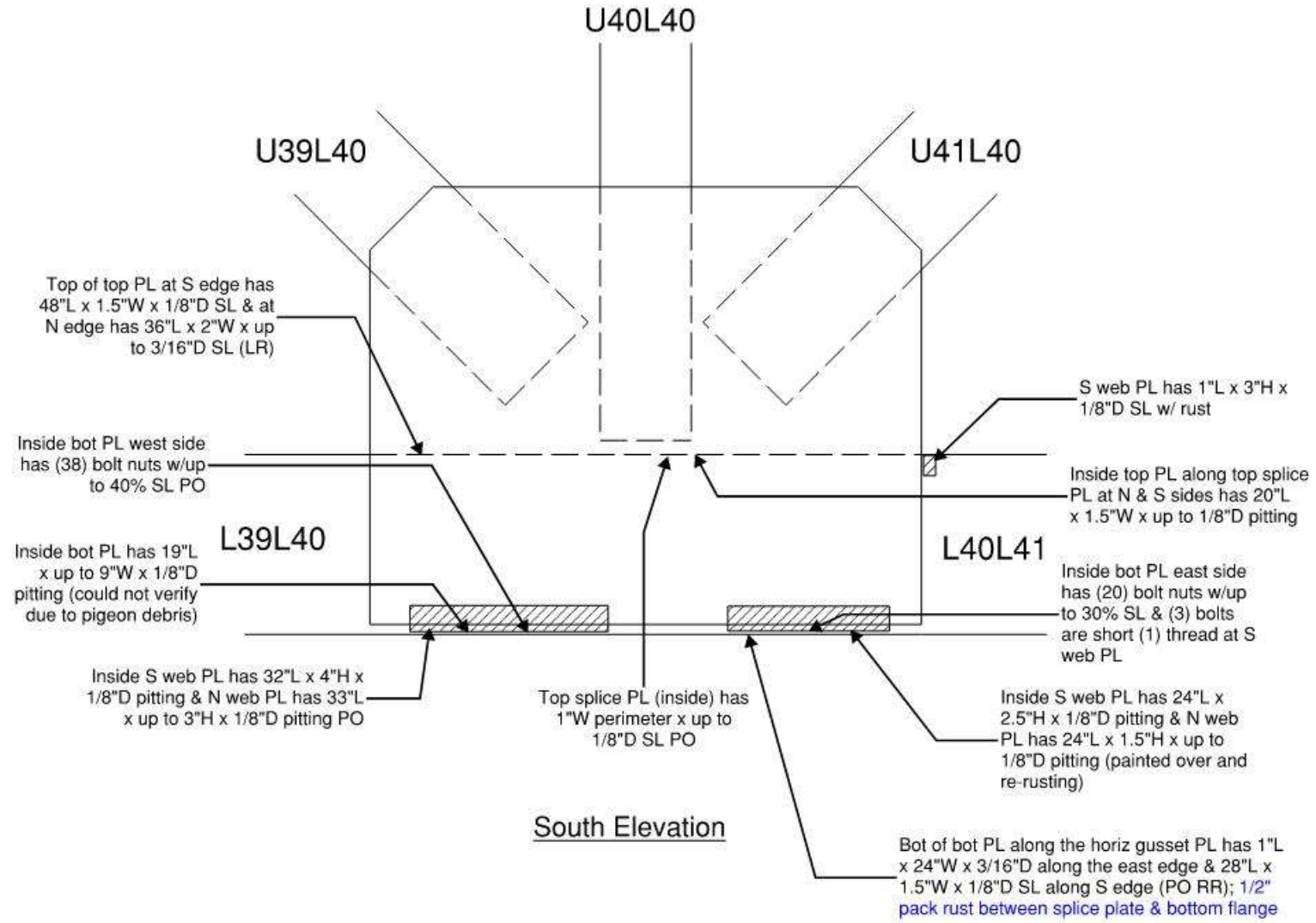

Span 28 - South Truss L40

REVISION 1	DATE: 8/26/19	CREW: BH, JG (Baker)	REVISION 3	DATE:	CREW:
REVISION 2	DATE: 08/25/2021	CREW: EG, AN (PRIME AE)	REVISION 4	DATE:	CREW:

Sketches
Inspection type: Fracture Critical,Routine
Inspection Date: 7/26/2021
Inspected by: PRIME AE

:Bridge No 03819

Town: NEW LONDON
Carried: INTERSTATE 95 NORTHBOUND
Crossed: THAMES RV,RR,LOCAL ROADS
Inventory Route: NHS

CREW: SW, BF	DATE: 9/26/2017	BRIDGE NO.: 03819

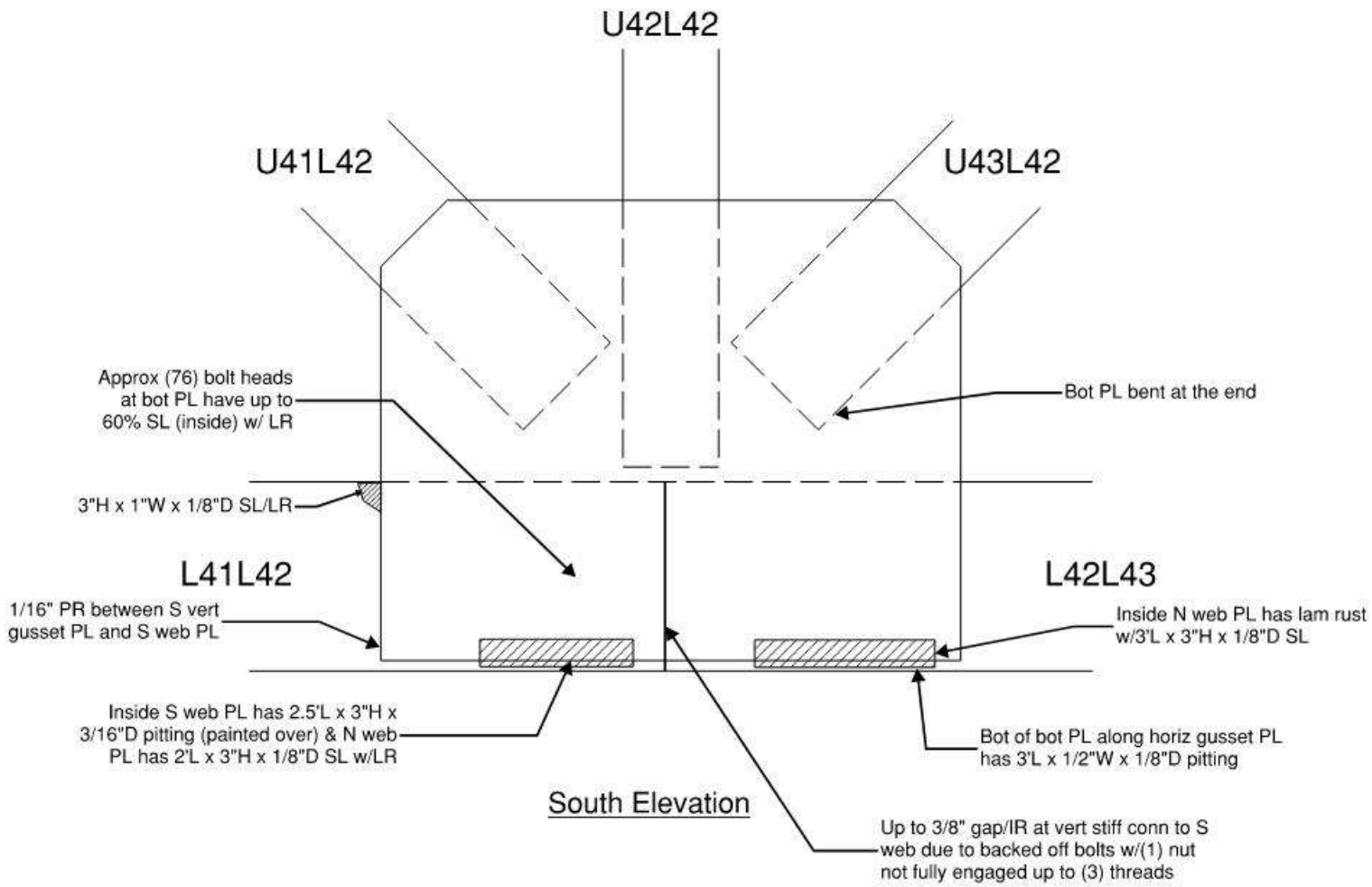

Span 28 - South Truss L42

REVISION 1	DATE: 8/26/19	CREW: BH, JG (Baker)	REVISION 3	DATE:	CREW:
REVISION 2	DATE: 08/25/2021	CREW: EG, AN (PRIME AE) - No Change	REVISION 4	DATE:	CREW:

CREW: SW, BF	DATE: 9/26/2017	BRIDGE NO.: 03819

LOG DIRECTION
WEST TO EAST

Deterioration Legend:

1. (4) bolts w/up to 1/4" gap (tight) and 1/2" pack rust between sway brace bracket and horizontal strut
2. Horizontal strut top flange has 1'L x 4"W x 1/4"D pitting (painted over) and areas of silt stains
3. Water ponding on horizontal gusset plate (dry)
4. 30% SL to connection bolts between bot horizontal gusset plate and horizontal strut member
5. 3/16" gap between diagonal sway brace and vertical gusset plate
6. Top of lat brace w/ (2) 6"ø x 1/8"D SL/LR, conn bolts w/ LR
7. Bot flg of lat brace at conn to horiz G PL w/ FW x 1-1/2"L x 1/8"D pitt
8. Lateral bracing on west side has pack rust and 1/8"D pitting loss

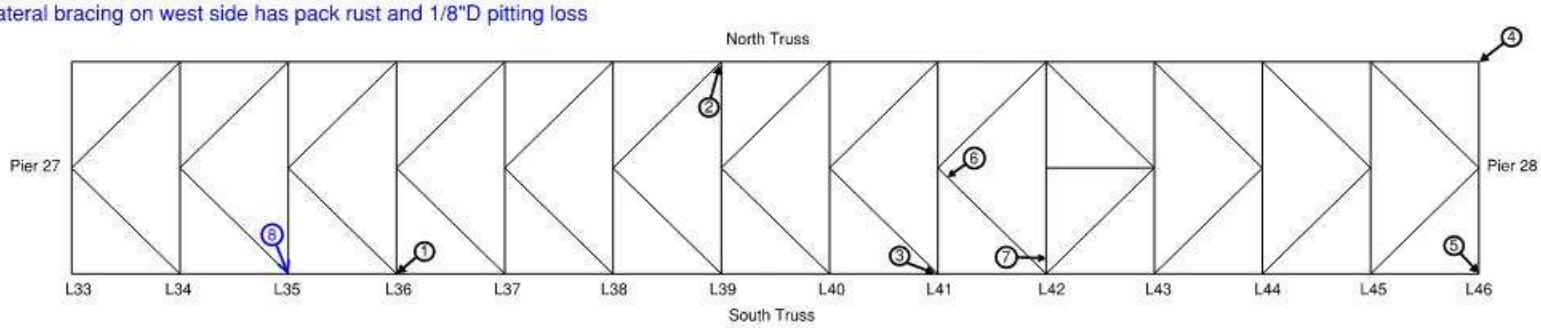

General Notes:

- See Lateral and Sway Bracing General Notes (Spans 26-28) sheet
- Evidence of water ponding on L35-L37 bottom strut bottom flanges

Span 28 - Bottom Laterals

REVISION 1	DATE: 8/26/19	CREW: BH, JG (Baker)	REVISION 3	DATE:	CREW:
REVISION 2	DATE: 08/17/2021	CREW: BM, EG, EB, AN, BC, JC (PRIME AE)	REVISION 4	DATE:	CREW:

Sketches
Inspection type: Fracture Critical,Routine
Inspection Date: 7/26/2021
Inspected by: PRIME AE

:Bridge No 03819

Town: NEW LONDON
Carried: INTERSTATE 95 NORTHBOUND
Crossed: THAMES RV,RR,LOCAL ROADS
Inventory Route: NHS

CREW: SW, BF	DATE: 10/16/2017	BRIDGE NO.: 03819

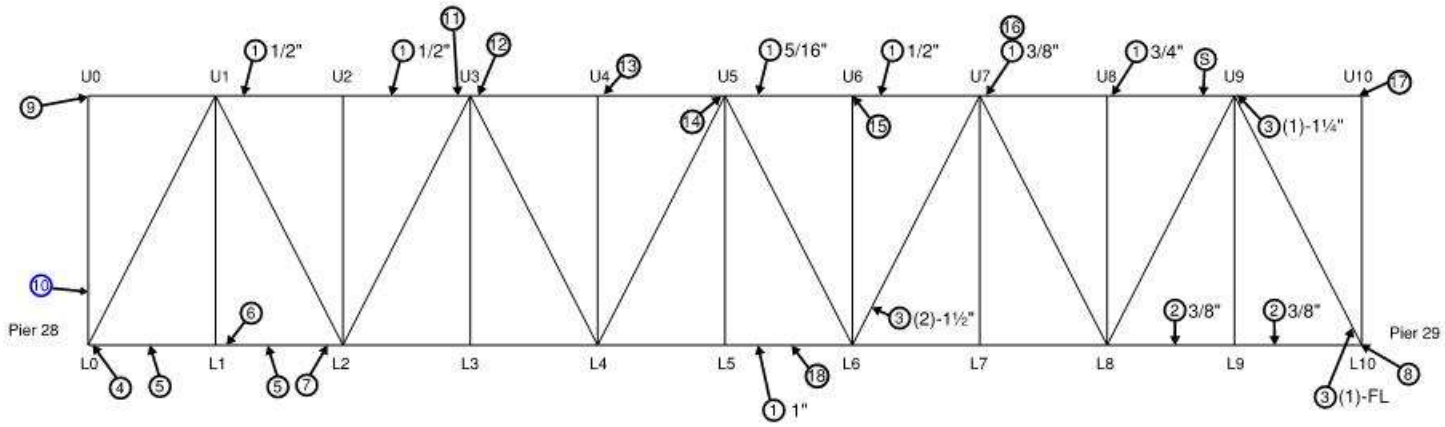

Deterioration Legend:

1 - PR between chord flange angles and web PL up to __" thick
2 - PR between chord flange angles and cover PL at edges up to __" thick
3 - Tack welds partially cracked or broken at lacing bar or batten PL and chord; (# per panel) and up to __" long
4 - Bot chord is missing 2 of 20 rivets & (8) rivets at south bot angle w/ 50% SL PO
5 - N web PL & S web PL above bot flg angle vert leg has 2"H x 1/8"-3/16"D SL intermittently in panel
6 -N bot flg to horiz G PL is missing 2 of 7 rivets
7 - Up to 1/8" thick PR between bot flg angle and splice PL
8 - Broken/disconnected scupper connection and scupper drain is clogged at top of pier at bell conn
9 - Up to 1" thick PR between web end PL's & between vert gusset PL and U0L0
10 - S channel N face web w/ rand 6"ø x 1/4"D pitt PO
11 - Up to 3/8" thick PR btwn N web PL and splice PL & 3/4" IR b/w N splice PL & bot flange angle vertical leg
12 - N web w/missing rivet (filled w/loose bolt) and 1-1/8"L x 3/16"W x 3/16"D gouge in splice PL at loose bolt (not ground smooth)
13 - Inside chord has (1) short bolt at top flg
14 - N side has up to 1/2" PR between bot flg angle and splice PL & splice PL bent down
15 - Drift pin in place of bolt at top connection inside node
16 - N gusset PL has (1) missing rivet and splice PL has a 2" x 2" x 3/16"D gouge adjacent to hole (not ground smooth)
17 - Top flg PL has 2"L x 15"W x 1/8"D SL/LR
18 - Missing rivet at bot lacing bar

General Notes:
- See Riveted Truss General Notes (Spans 22-25 & 29-32) sheet
- See following gusset plate sheets for bottom chord gusset plate details

Legend:
S See Sketch on Next Sheet

Span 29 - North Truss South Elevation

REVISION 1	DATE: 9/16/19	CREW: BH, JG (Baker)	REVISION 3	DATE:	CREW:
REVISION 2	DATE: 8/24/2021	CREW: NR, SD (PRIME)	REVISION 4	DATE:	CREW:

Sketches
Inspection type: Fracture Critical,Routine
Inspection Date: 7/26/2021
Inspected by: PRIME AE

:Bridge No 03819

Town: NEW LONDON
Carried: INTERSTATE 95 NORTHBOUND
Crossed: THAMES RV,RR,LOCAL ROADS
Inventory Route: NHS

CREW: SW, BF	DATE: 10/18/2017	BRIDGE NO.: 03819

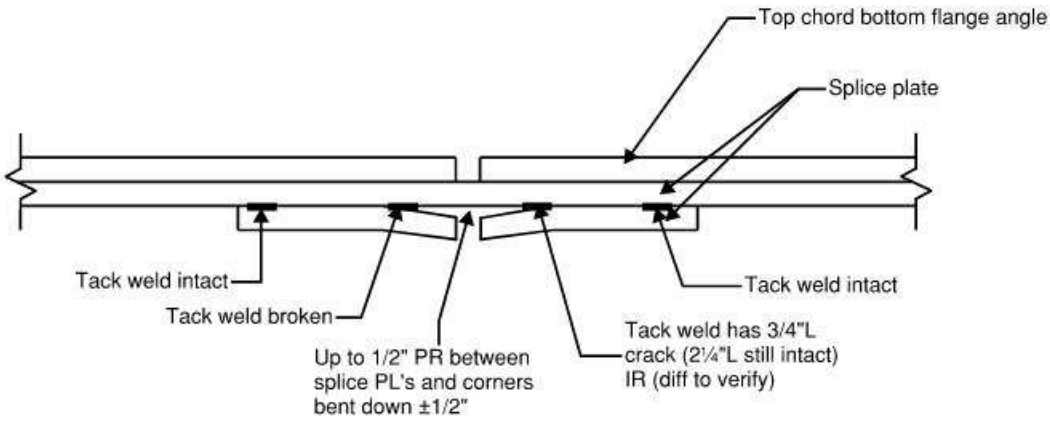

North Elevation

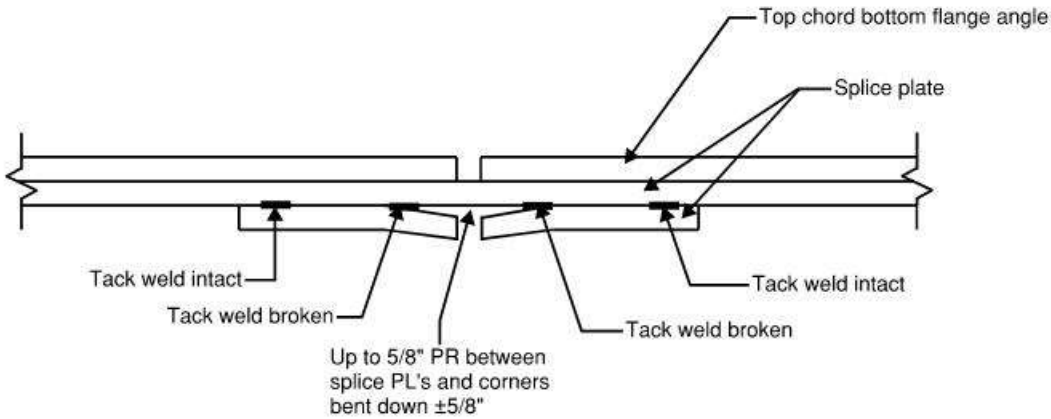

South Elevation

Span 29 - North Truss U8U9 near U9

REVISION 1	DATE: 9/6/19	CREW: AH, BF (Baker)	REVISION 3	DATE:	CREW:
REVISION 2	DATE: 8/26/2021	CREW: NR, SD (PRIME) - No Change	REVISION 4	DATE:	CREW:

CREW: BF, SW	DATE: 10/16/2017	BRIDGE NO.: 03819

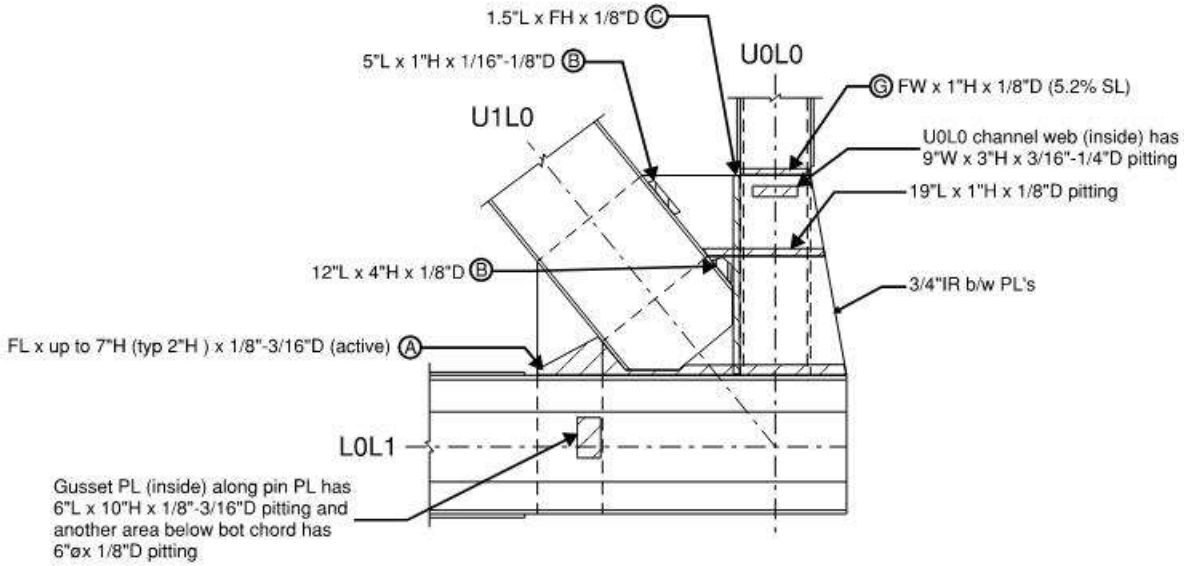

Span 29, North Truss, Node L0, North Gusset Plate, North Elevation

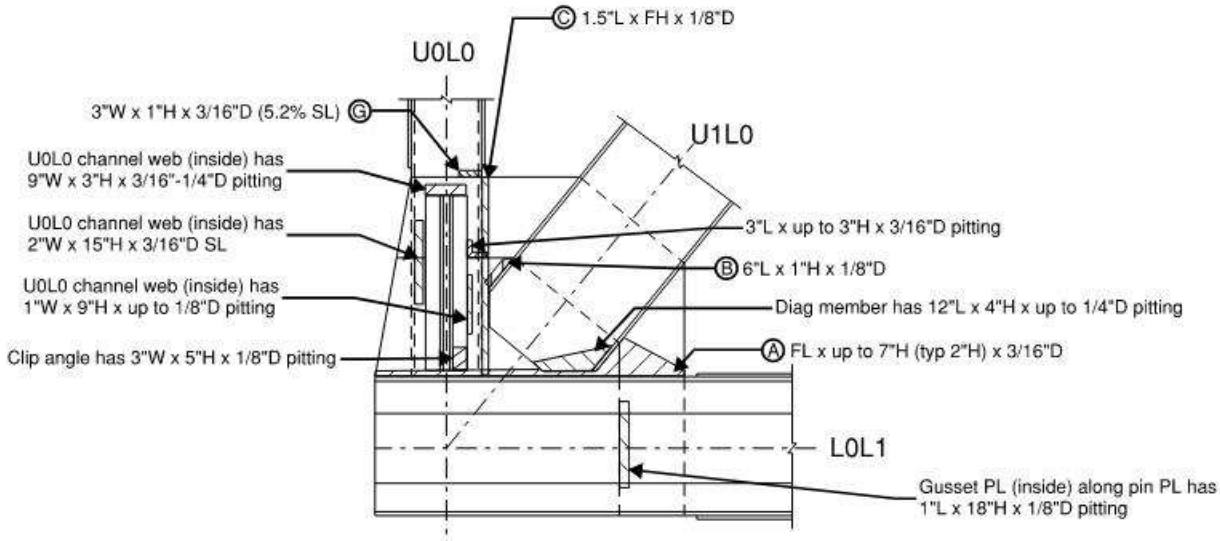

Span 29, North Truss, Node L0, South Gusset Plate, South Elevation

REVISION 1	DATE: 9/16/19	CREW: BH, JG (Baker)	REVISION 3	DATE:	CREW:
REVISION 2	DATE: 8/24/2021	CREW: NR, SD (PRIME) - No Change	REVISION 4	DATE:	CREW:

CREW: SW, BF	DATE: 10/16/2017	BRIDGE NO.: 03819

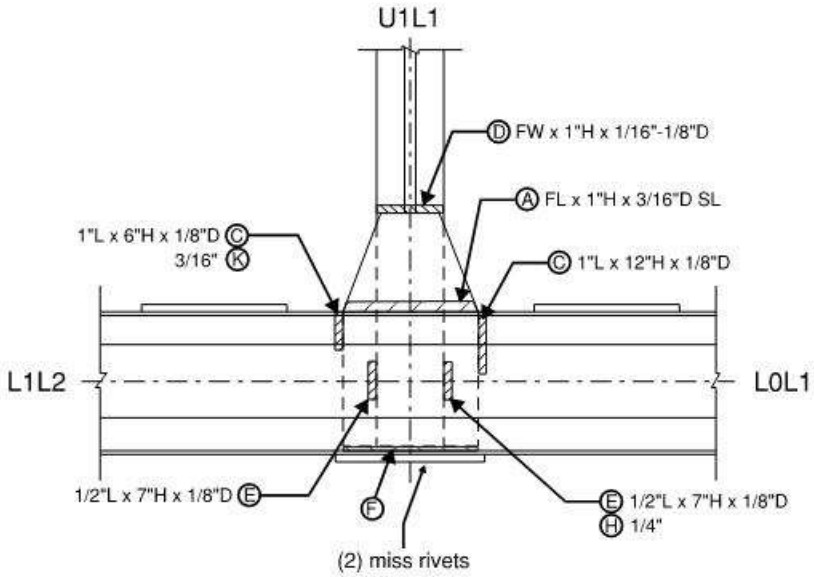

Span 29, North Truss, Node L1, North Gusset Plate, North Elevation

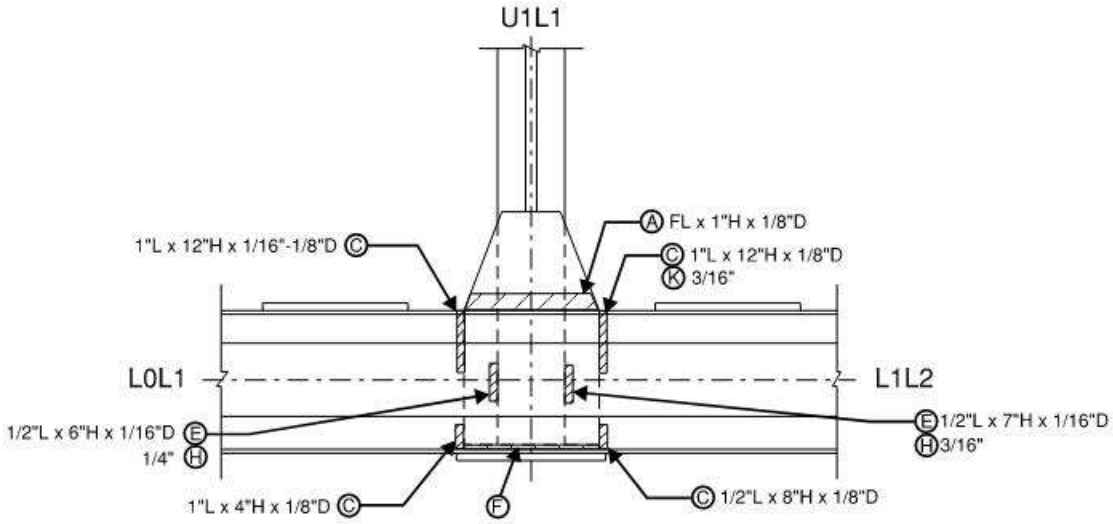

Note:
- Most SL areas are active

Span 29, North Truss, Node L1, South Gusset Plate, South Elevation

REVISION 1	DATE: 9/16/19	CREW: BH, JG (Baker)	REVISION 3	DATE:	CREW:
REVISION 2	DATE: 8/24/2021	CREW: NR, SD (PRIME) - No Change	REVISION 4	DATE:	CREW:

Sketches
Inspection type: Fracture Critical,Routine
Inspection Date: 7/26/2021
Inspected by: PRIME AE

:Bridge No 03819

Town: NEW LONDON
Carried: INTERSTATE 95 NORTHBOUND
Crossed: THAMES RV,RR,LOCAL ROADS
Inventory Route: NHS

CREW: SW, BF	DATE: 10/16/2017	BRIDGE NO.: 03819

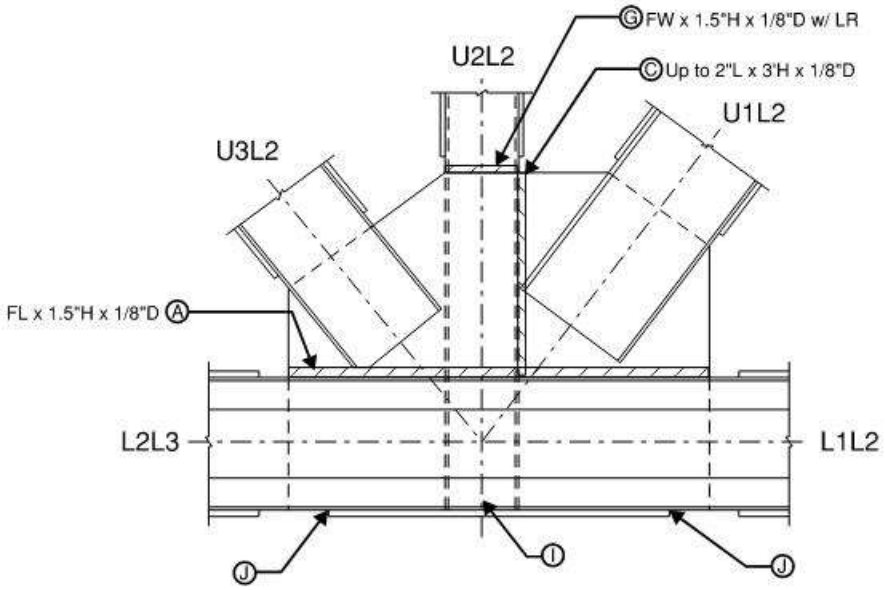

Span 29, North Truss, Node L2, North Gusset Plate, North Elevation

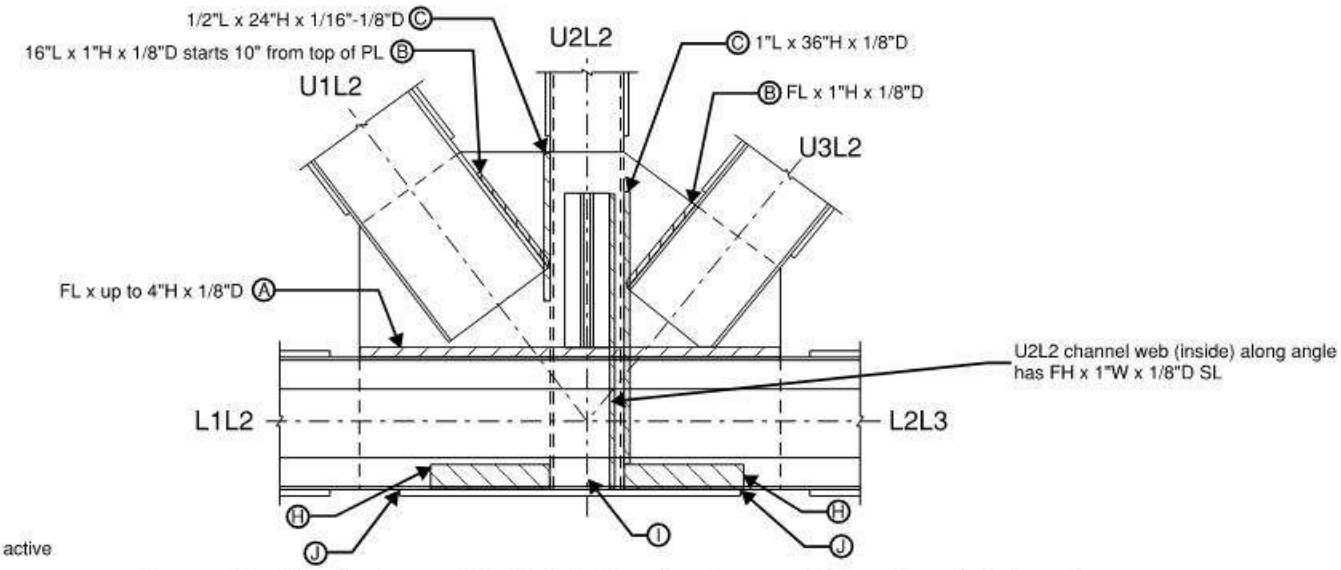

Note:
- Most SL areas are active

Span 29, North Truss, Node L2, South Gusset Plate, South Elevation

REVISION 1	DATE: 9/16/19	CREW: BH, JG (Baker)	REVISION 3	DATE:	CREW:
REVISION 2	DATE: 8/24/2021	CREW: NR, SD (PRIME) - No Change	REVISION 4	DATE:	CREW:

CREW: SW, BF	DATE: 10/16/2017	BRIDGE NO.: 03819

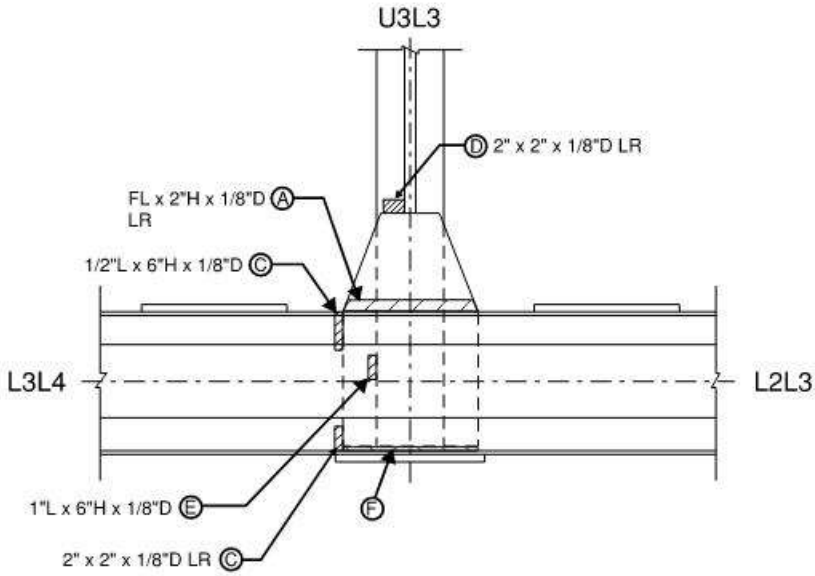

Span 29, North Truss, Node L3, North Gusset Plate, North Elevation

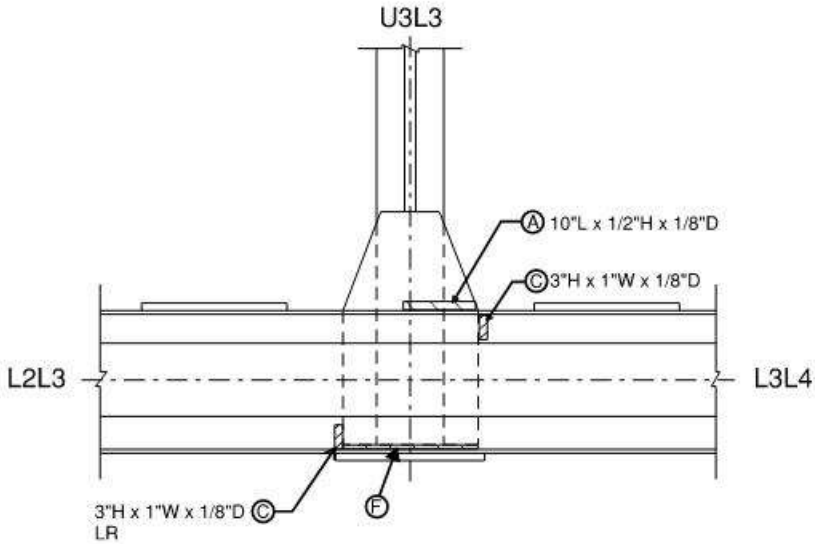

Span 29, North Truss, Node L3, South Gusset Plate, South Elevation

REVISION 1	DATE: 9/16/19	CREW: BH, JG (Baker)	REVISION 3	DATE:	CREW:
REVISION 2	DATE: 8/24/2021	CREW: NR, SD (PRIME) - No Change	REVISION 4	DATE:	CREW:

CREW: SW, BF	DATE: 10/16/2017	BRIDGE NO.: 03819

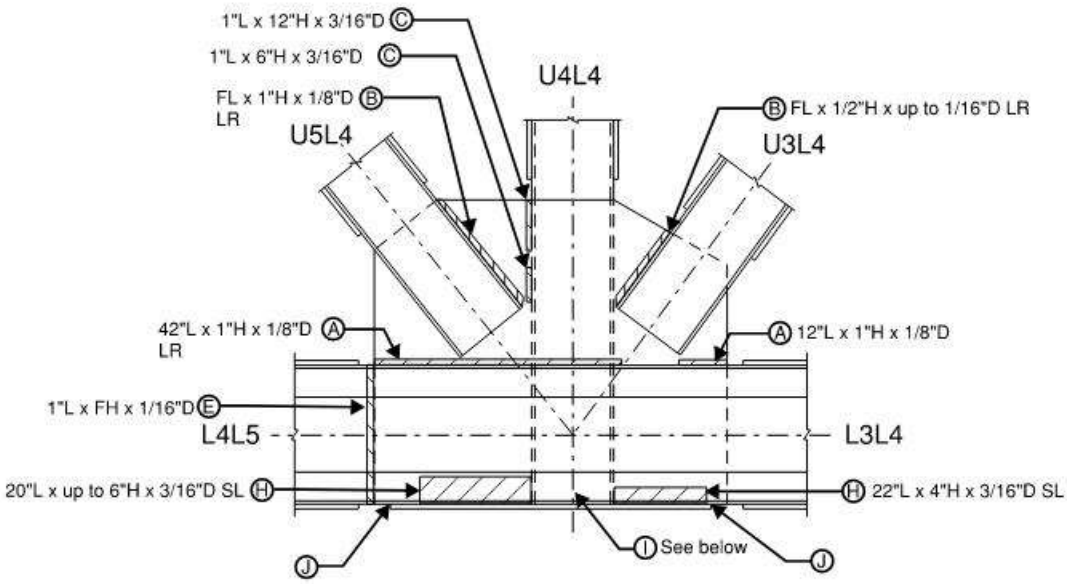

Span 29, North Truss, Node L4, North Gusset Plate, North Elevation

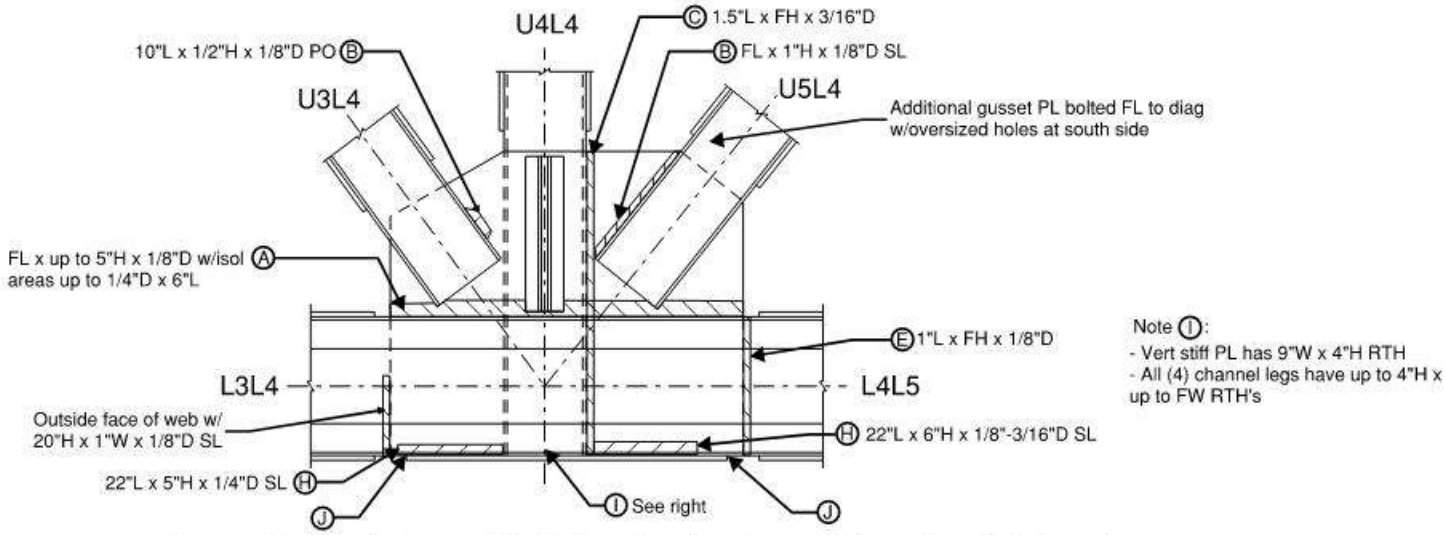

Span 29, North Truss, Node L4, South Gusset Plate, South Elevation

REVISION 1	DATE: 9/16/19	CREW: BH, JG (Baker)	REVISION 3	DATE:	CREW:
REVISION 2	DATE: 8/24/2021	CREW: NR, SD (PRIME) - No Change	REVISION 4	DATE:	CREW:

CREW: SW, BF	DATE: 10/16/2017	BRIDGE NO.: 03819

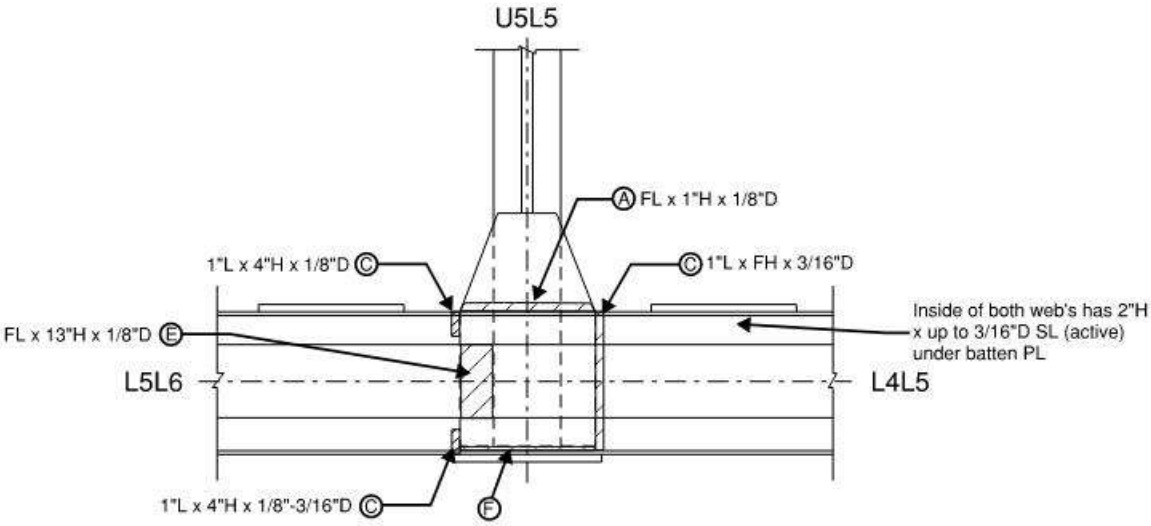

Span 29, North Truss, Node L5, North Gusset Plate, North Elevation

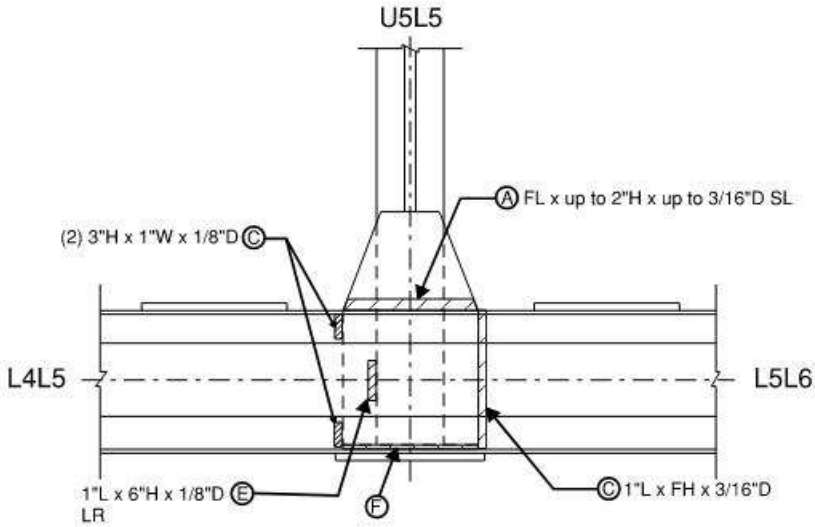

Span 29, North Truss, Node L5, South Gusset Plate, South Elevation

REVISION 1	DATE: 9/16/19	CREW: BH, JG (Baker)	REVISION 3	DATE:	CREW:
REVISION 2	DATE: 8/24/2021	CREW: NR, SD (PRIME) - No Change	REVISION 4	DATE:	CREW:

CREW: SW, BF	DATE: 10/16/2017	BRIDGE NO.: 03819

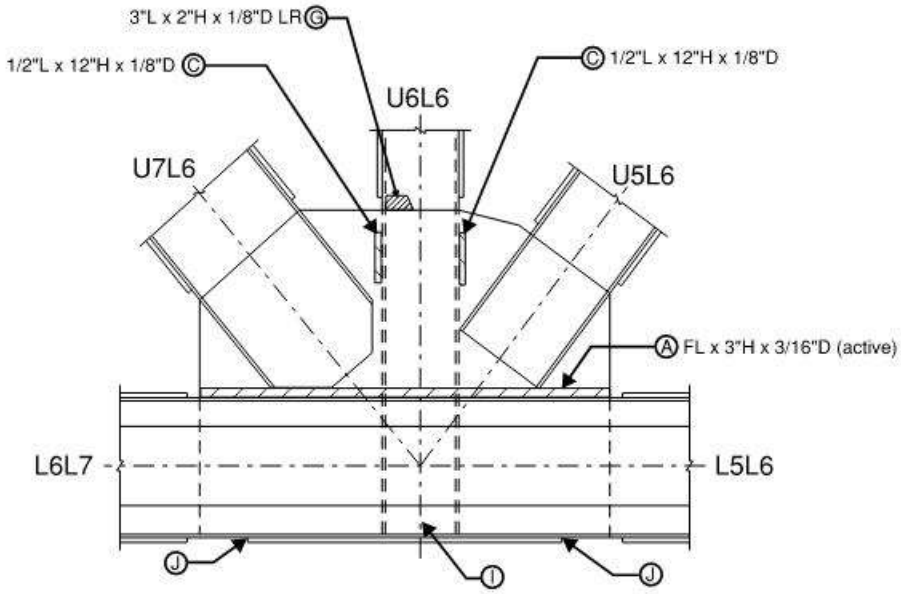

Span 29, North Truss, Node L6, North Gusset Plate, North Elevation

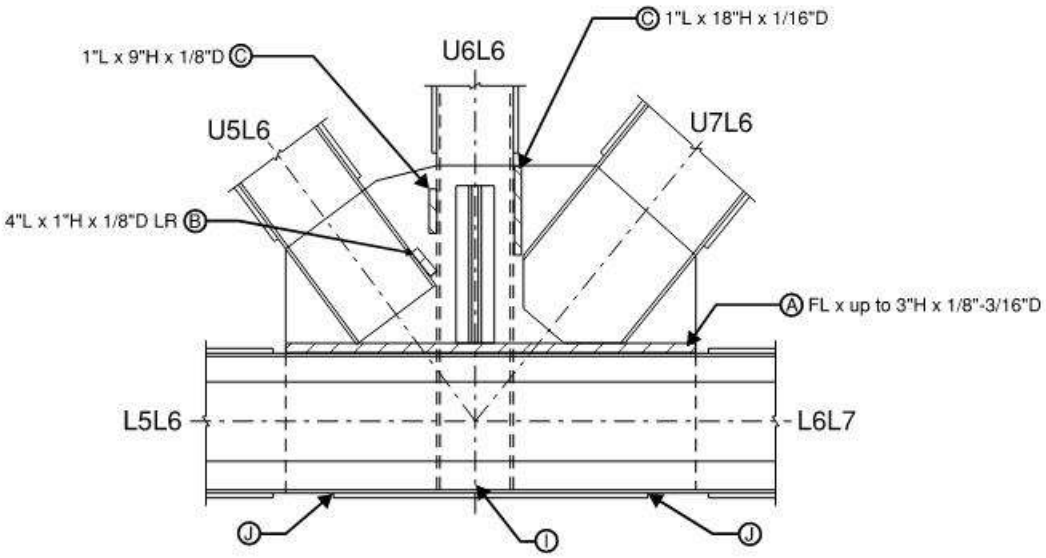

Span 29, North Truss, Node L6, South Gusset Plate, South Elevation

REVISION 1	DATE: 9/16/19	CREW: BH, JG (Baker)	REVISION 3	DATE:	CREW:
REVISION 2	DATE: 8/26/2021	CREW: NR, SD (PRIME) - No Change	REVISION 4	DATE:	CREW:

CREW: BF, SW	DATE: 10/16/2017	BRIDGE NO.: 03819

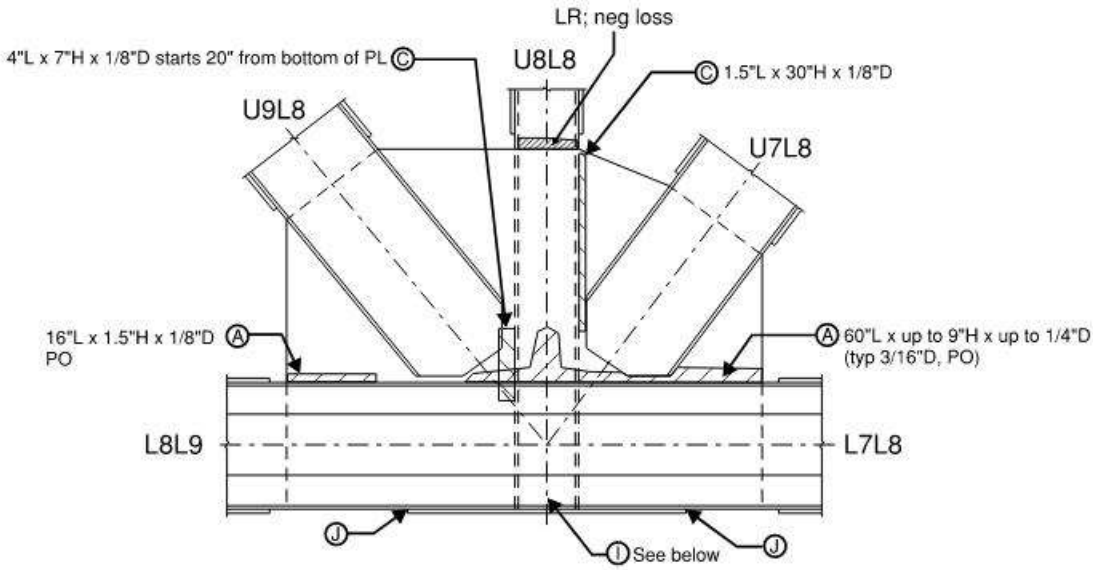

Span 29, North Truss, Node L8, North Gusset Plate, North Elevation

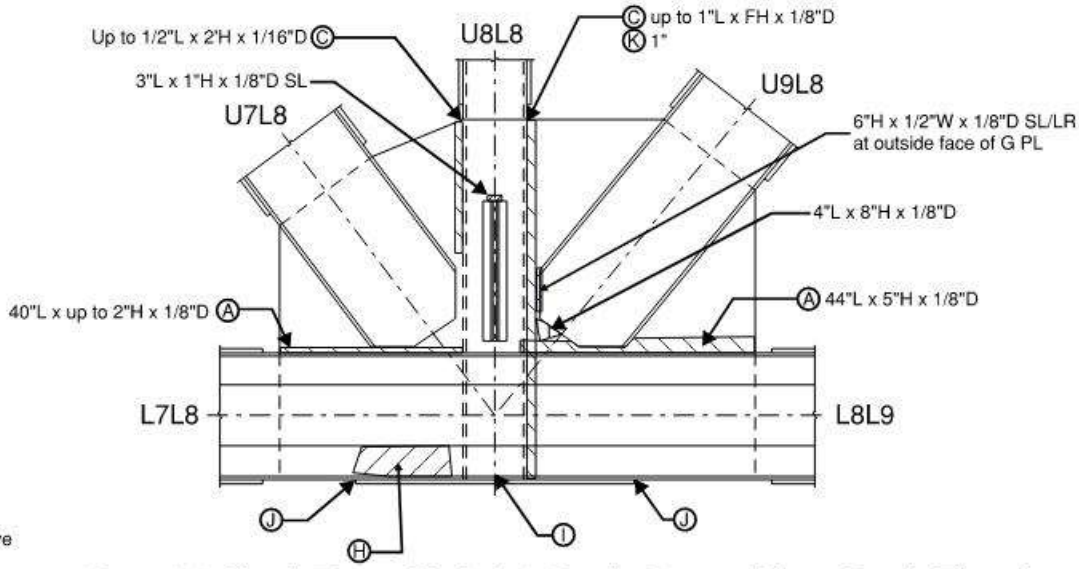

Note:
- Most SL areas are active

Span 29, North Truss, Node L8, South Gusset Plate, South Elevation

REVISION 1	DATE: 9/16/19	CREW: BH, JG (Baker)	REVISION 3	DATE:	CREW:
REVISION 2	DATE: 8/26/2021	CREW: NR, SD (PRIME) - No Change	REVISION 4	DATE:	CREW:

CREW: SW, BF	DATE: 10/16/2017	BRIDGE NO.: 03819

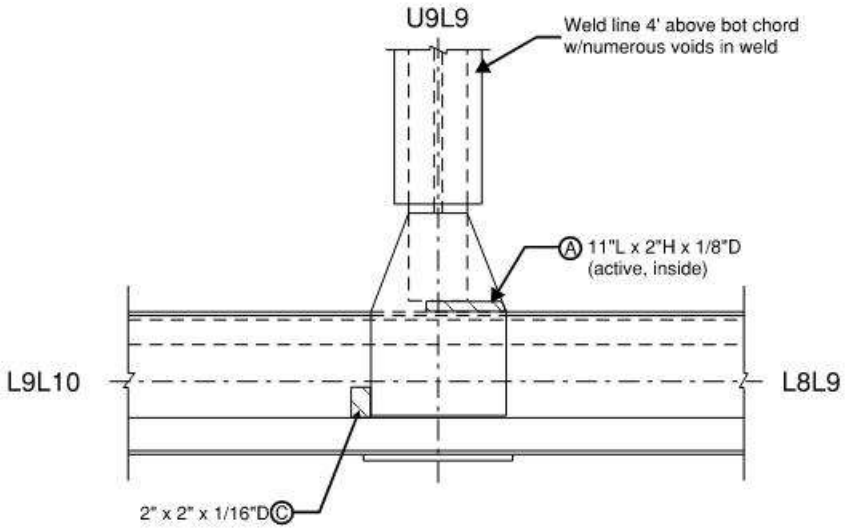

Span 29, North Truss, Node L9, North Gusset Plate, North Elevation

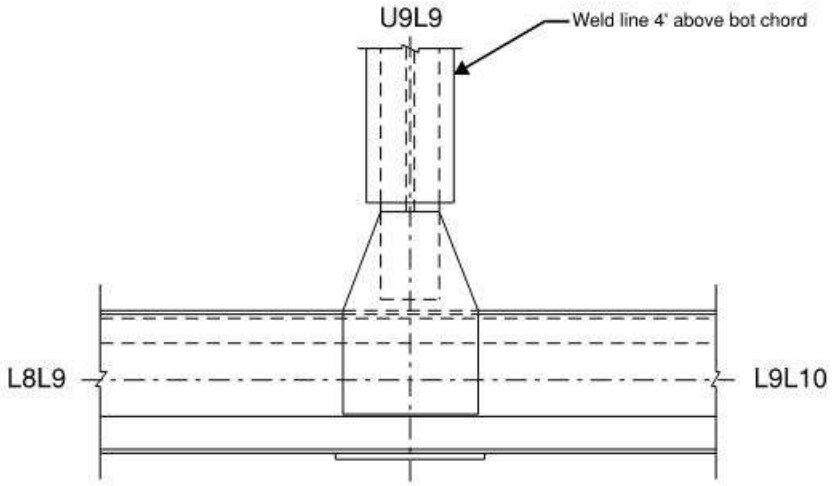

Span 29, North Truss, Node L9, South Gusset Plate, South Elevation

REVISION 1	DATE: 9/16/19	CREW: BH, JG (Baker)	REVISION 3	DATE:	CREW:
REVISION 2	DATE: 8/26/2021	CREW: NR, SD (PRIME) - No Change	REVISION 4	DATE:	CREW:

Sketches
Inspection type: Fracture Critical,Routine
Inspection Date: 7/26/2021
Inspected by: PRIME AE

:Bridge No 03819

Town: NEW LONDON
Carried: INTERSTATE 95 NORTHBOUND
Crossed: THAMES RV,RR,LOCAL ROADS
Inventory Route: NHS

CREW: SW, BF	DATE: 10/16/2017	BRIDGE NO.: 03819

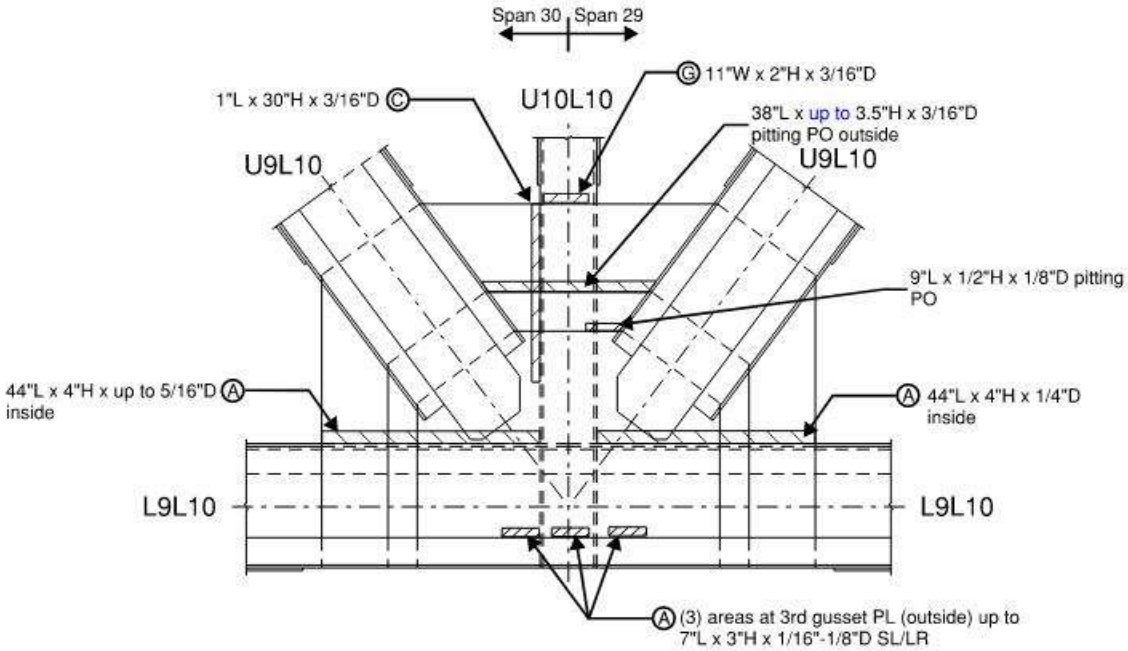

Span 29, North Truss, Node L10, North Gusset Plate, North Elevation

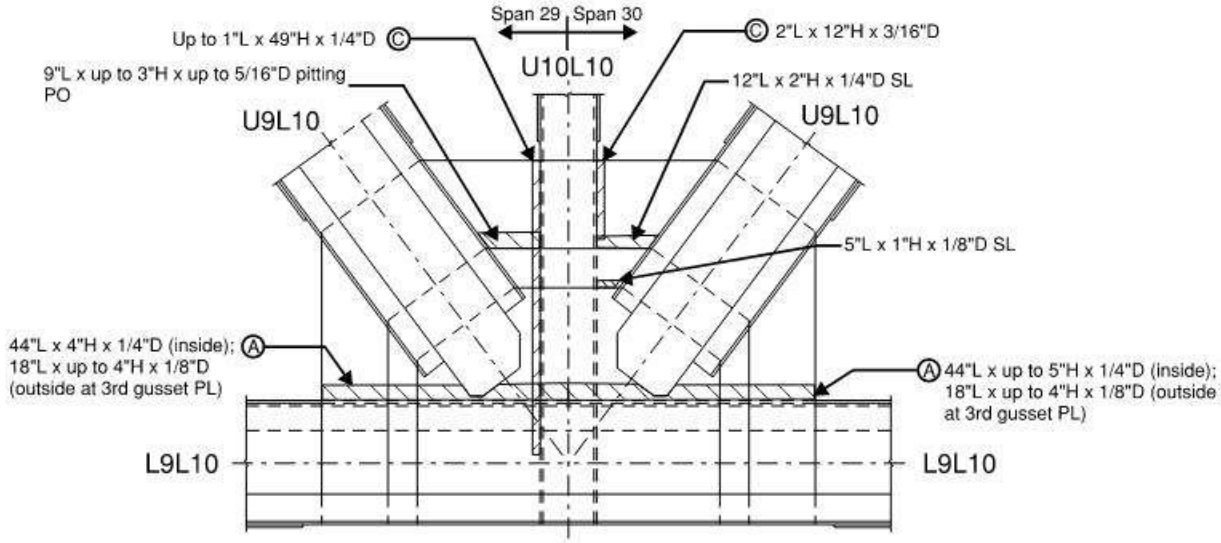

Note:
- All SL areas are active

Span 29, North Truss, Node L10, South Gusset Plate, South Elevation

REVISION 1	DATE: 9/16/19	CREW: BH, JG (Baker)	REVISION 3	DATE:	CREW:
REVISION 2	DATE: 8/24/2021	CREW: CMR, NH (PRIME)	REVISION 4	DATE:	CREW:

Sketches
Inspection type: Fracture Critical,Routine
Inspection Date: 7/26/2021
Inspected by: PRIME AE

:Bridge No 03819

Town: NEW LONDON
Carried: INTERSTATE 95 NORTHBOUND
Crossed: THAMES RV,RR,LOCAL ROADS
Inventory Route: NHS

CREW: SW, BF	DATE: 10/6/2017	BRIDGE NO.: 03819

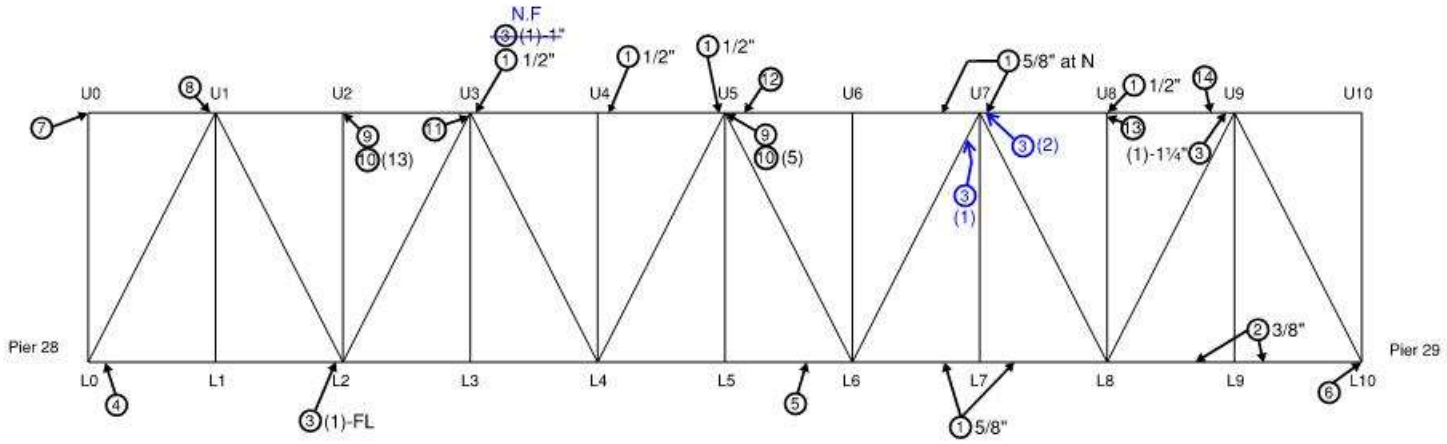

Deterioration Legend:

1. PR between chord flange angles and web PL up to __" thick
2. PR between chord flange angles and cover PL at edges up to __" thick
3. Tack welds partially cracked or broken at lacing bar or batten PL and chord; (# per panel) and up to __" long
4. S bot flg angle batten PL conn is missing (2) rivets & 3/4" thick PR at SE corner & S top flg angle horiz leg has 40"L x 3"W x 3/16"D SL
5. Bot flg lacing bar to bot flg angle conn is missing (1) rivet (disconnected)
6. Bot of pin PL's have 1/8"D pitting x FW
7. Up to 1" thick PR between web end PL's
8. SE corner of web splice PL has 1/2" PR
9. Broken tack weld between top of vert back-to-back angles and top chord seat angle (inside)
10. (#) rivets not fully seated
11. South gusset PL has 5"L x 1/2"H x 1/8"D PO SL
12. N web fill PL has 2"L x 1"H x KE rem
13. Up to 3/8" PR between vert member and vert gusset PL at all (4) corners
14. Chord top PL has 1"L x 12"W x 1/8"D pitting PO & 1/2" IR b/w bot splice PL's at N & (1) brk'n tack weld

General Notes:
- See Riveted Truss General Notes (Spans 22-25 & 29-32) sheet
- See following gusset plate sheets for bottom chord gusset plate details

Span 29 - South Truss South Elevation

REVISION 1	DATE: 8/26/19	CREW: BH, JG (Baker)	REVISION 3	DATE:	CREW:
REVISION 2	DATE: 8/25/2021	CREW: NR, SD (PRIME)	REVISION 4	DATE:	CREW:

CREW: SW, BF	DATE: 10/6/2017	BRIDGE NO.: 03819

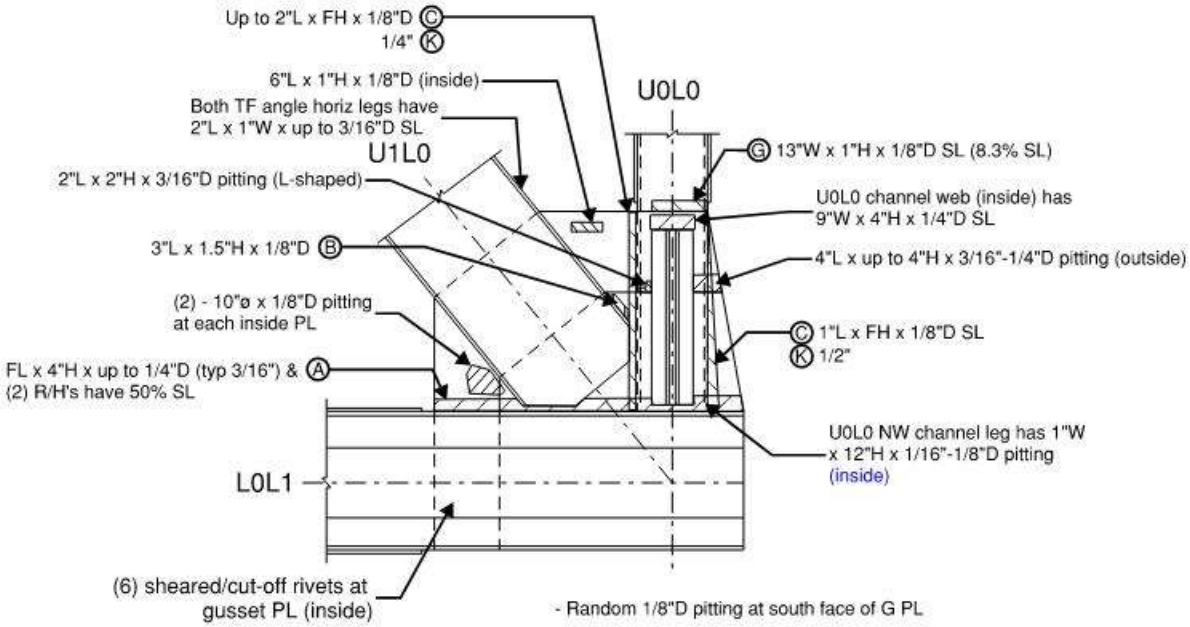

Span 29, South Truss, Node L0, North Gusset Plate, North Elevation

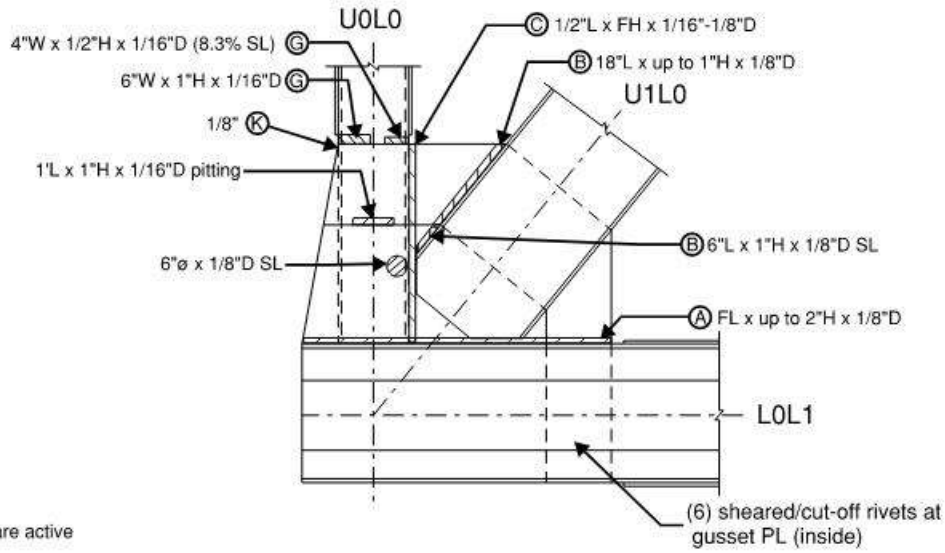

Note:
- All SL's at both gusset PL's are active

Span 29, South Truss, Node L0, South Gusset Plate, South Elevation

REVISION 1	DATE: 8/28/19	CREW: BH, JG (Baker)	REVISION 3	DATE:	CREW:
REVISION 2	DATE: 8/25/2021	CREW: NR, SD (PRIME) - No Change	REVISION 4	DATE:	CREW:

CREW: SW, BF	DATE: 10/6/2017	BRIDGE NO.: 03819

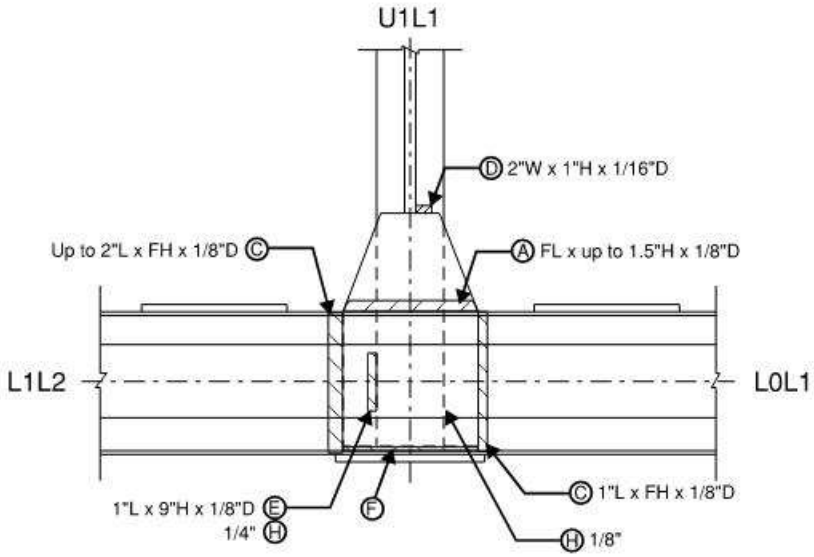

Span 29, South Truss, Node L1, North Gusset Plate, North Elevation

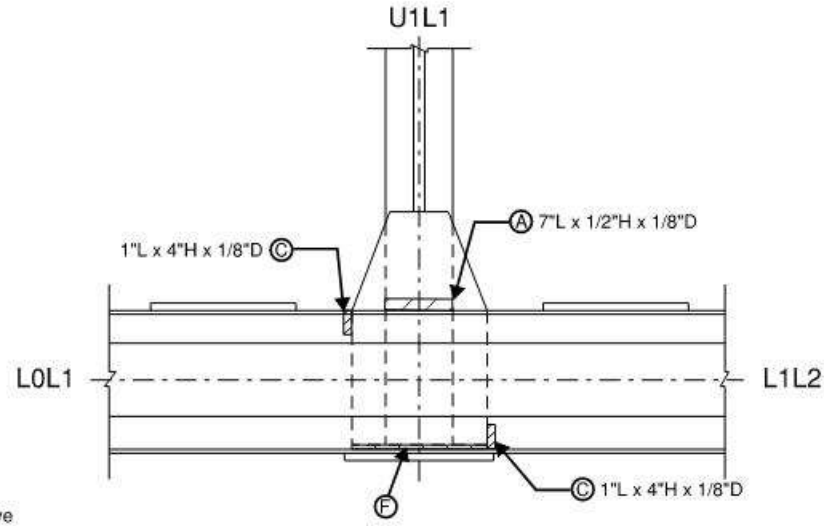

Note:
- Most SL's at both gusset PL's are active

Span 29, South Truss, Node L1, South Gusset Plate, South Elevation

REVISION 1	DATE: 8/26/19	CREW: BH, JG (Baker) - No change	REVISION 3	DATE:	CREW:
REVISION 2	DATE: 8/25/2021	CREW: NR, SD (PRIME) - No Change	REVISION 4	DATE:	CREW:

CREW: SW, BF	DATE: 10/6/2017	BRIDGE NO.: 03819

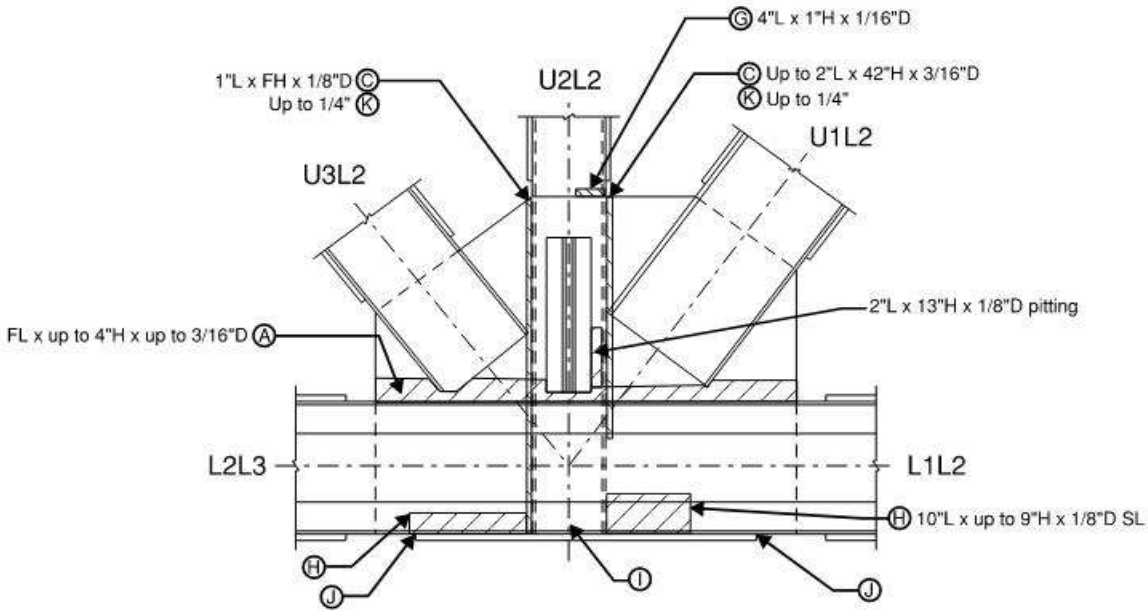

Span 29, South Truss, Node L2, North Gusset Plate, North Elevation

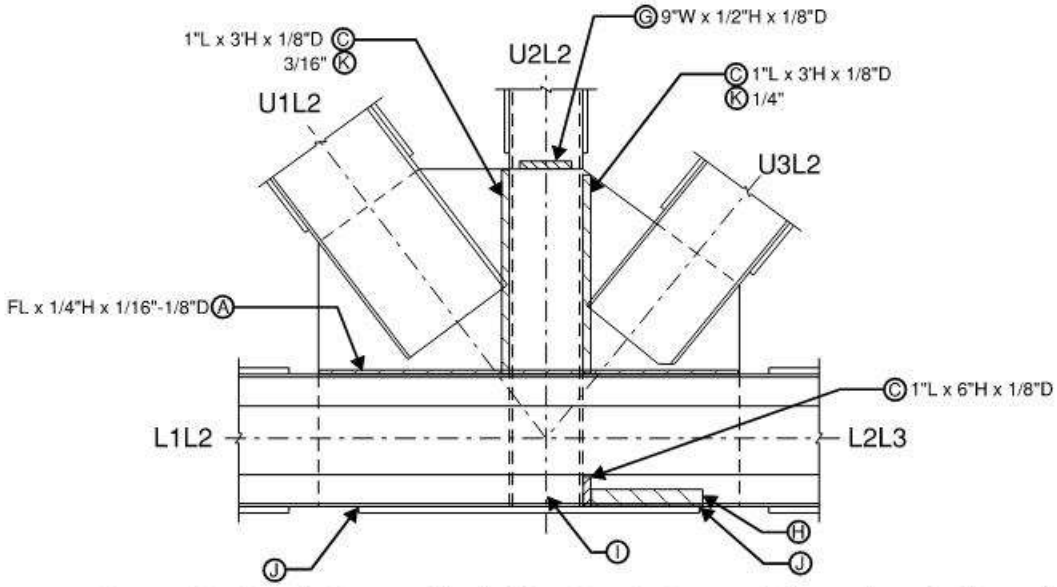

Span 29, South Truss, Node L2, South Gusset Plate, South Elevation

REVISION 1	DATE: 8/26/19	CREW: BH, JG (Baker) - No change	REVISION 3	DATE:	CREW:
REVISION 2	DATE: 8/25/2021	CREW: NR, SD (PRIME) - No Change	REVISION 4	DATE:	CREW:

CREW: SW, BF	DATE: 10/6/2017	BRIDGE NO.: 03819

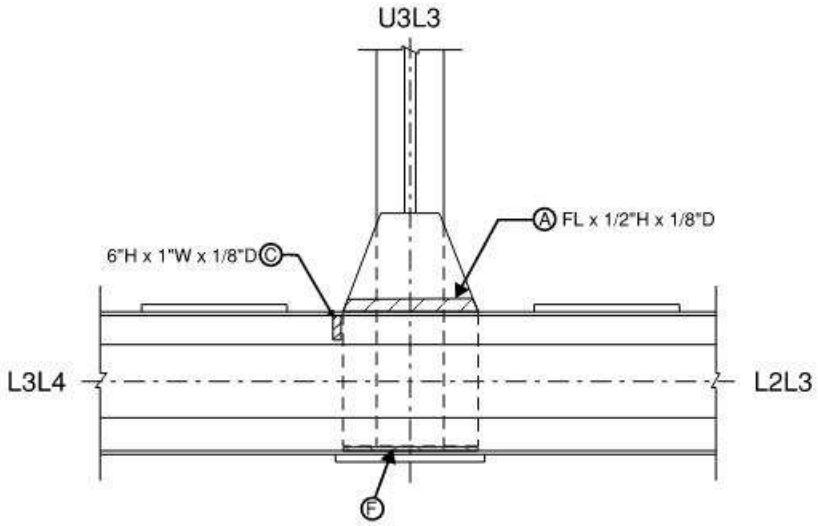

Span 29, South Truss, Node L3, North Gusset Plate, North Elevation

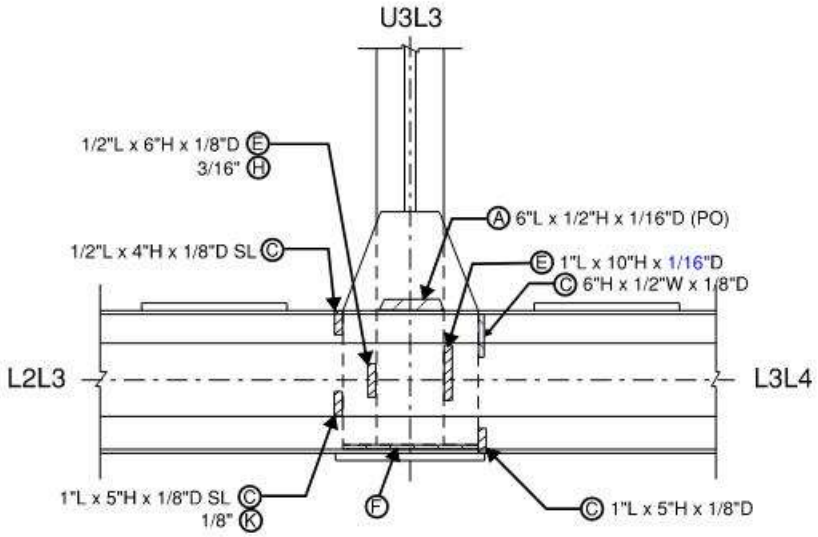

Span 29, South Truss, Node L3, South Gusset Plate, South Elevation

REVISION 1	DATE: 8/26/19	CREW: BH, JG (Baker)	REVISION 3	DATE:	CREW:
REVISION 2	DATE: 8/25/2021	CREW: NR, SD (PRIME)	REVISION 4	DATE:	CREW:

CREW: SW, BF	DATE: 10/31/2017	BRIDGE NO.: 03819

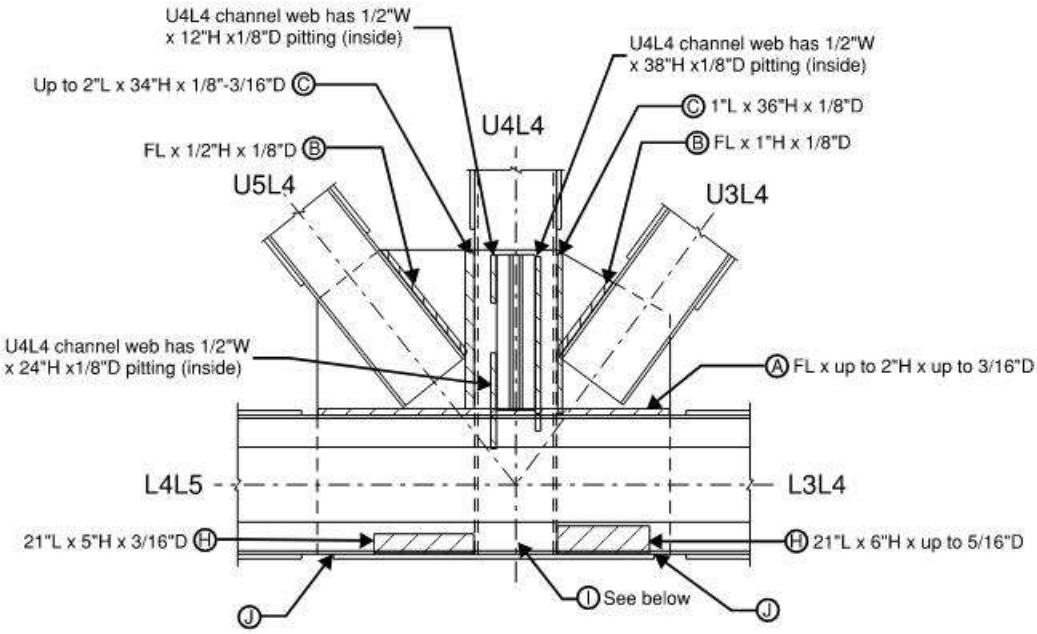

Span 29, South Truss, Node L4, North Gusset Plate, North Elevation

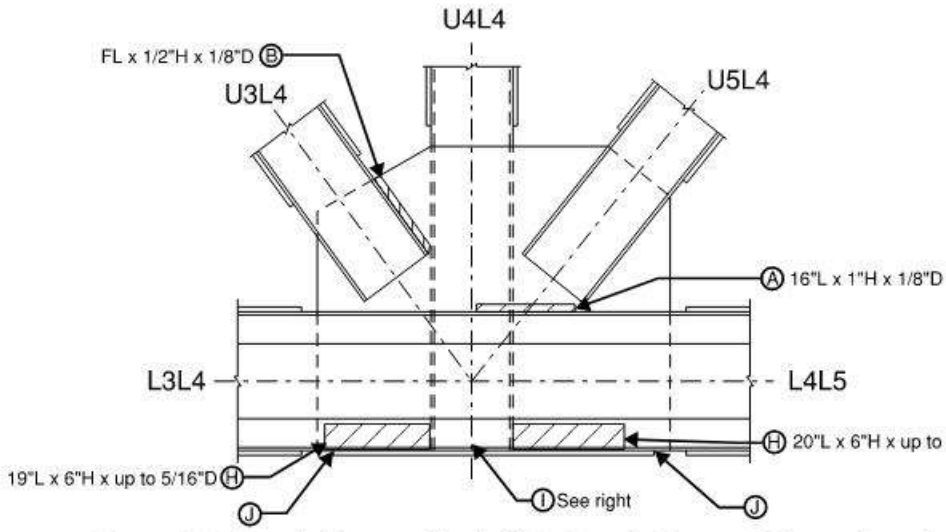

Note Ⓘ:
- Vert stiff PL has 8W" x 3"H RTH
- NW channel leg has 2"H x 1.5" LOW
- NE & SE channel legs have 1"H x 1/2" LOW
- SW channel leg has 2"H x 1" LOW
- (8) R/H's have up to 75% SL

Span 29, South Truss, Node L4, South Gusset Plate, South Elevation

REVISION 1	DATE: 8/26/19	CREW: BH, JG (Baker) - No change	REVISION 3	DATE:	CREW:
REVISION 2	DATE: 8/25/2021	CREW: NR, SD (PRIME) - No Change	REVISION 4	DATE:	CREW:

CREW: SW, BF	DATE: 10/31/2017	BRIDGE NO.: 03819

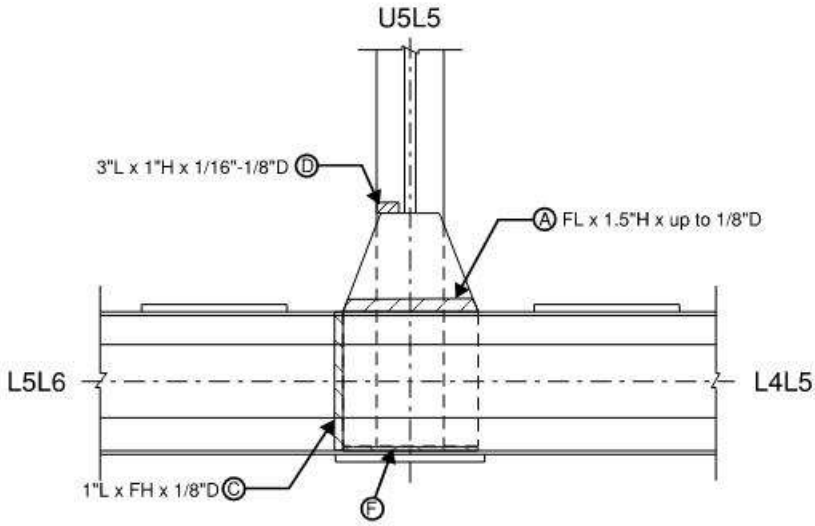

Span 29, South Truss, Node L5, North Gusset Plate, North Elevation

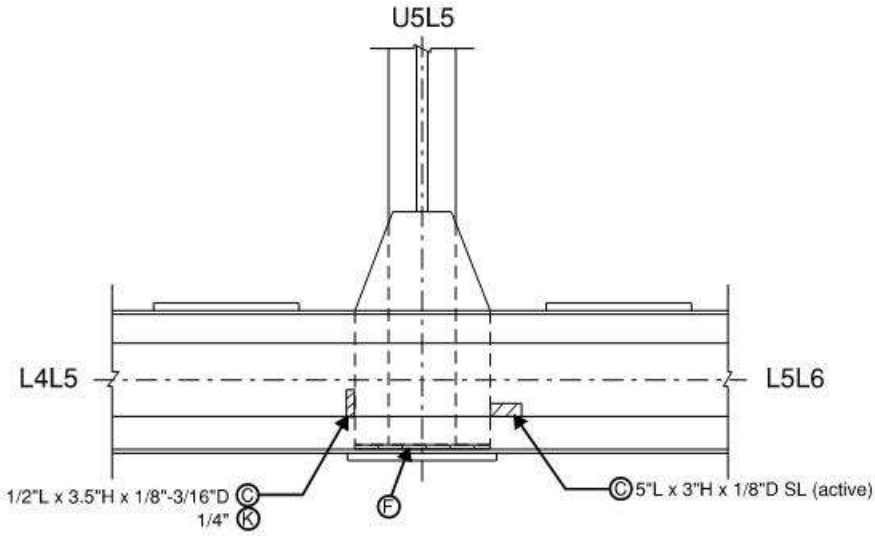

Span 29, South Truss, Node L5, South Gusset Plate, South Elevation

REVISION 1	DATE: 8/26/19	CREW: BH, JG (Baker) - No change	REVISION 3	DATE:	CREW:
REVISION 2	DATE: 8/25/2021	CREW: NR, SD (PRIME) - No Change	REVISION 4	DATE:	CREW:

CREW: SW, BF	DATE: 10/31/2017	BRIDGE NO.: 03819

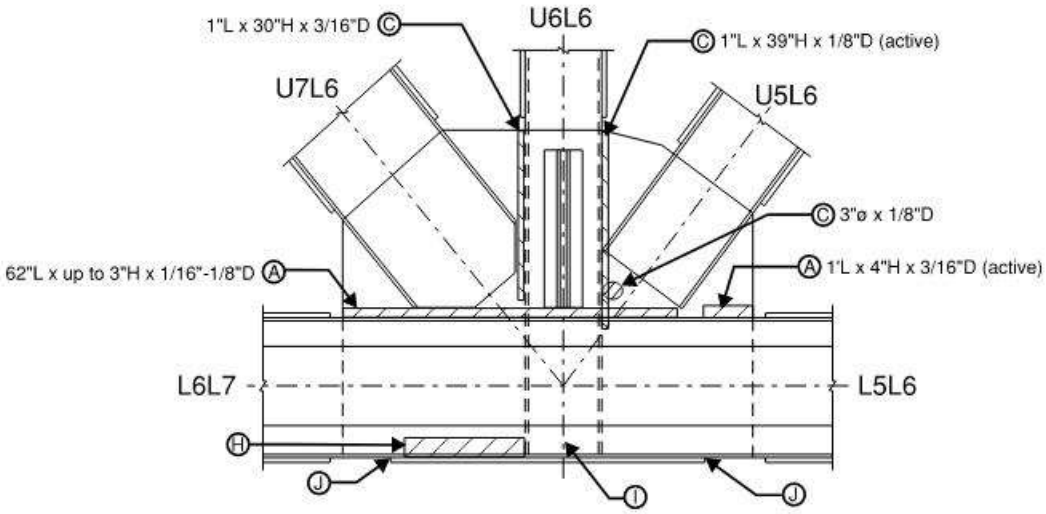

Span 29, South Truss, Node L6, North Gusset Plate, North Elevation

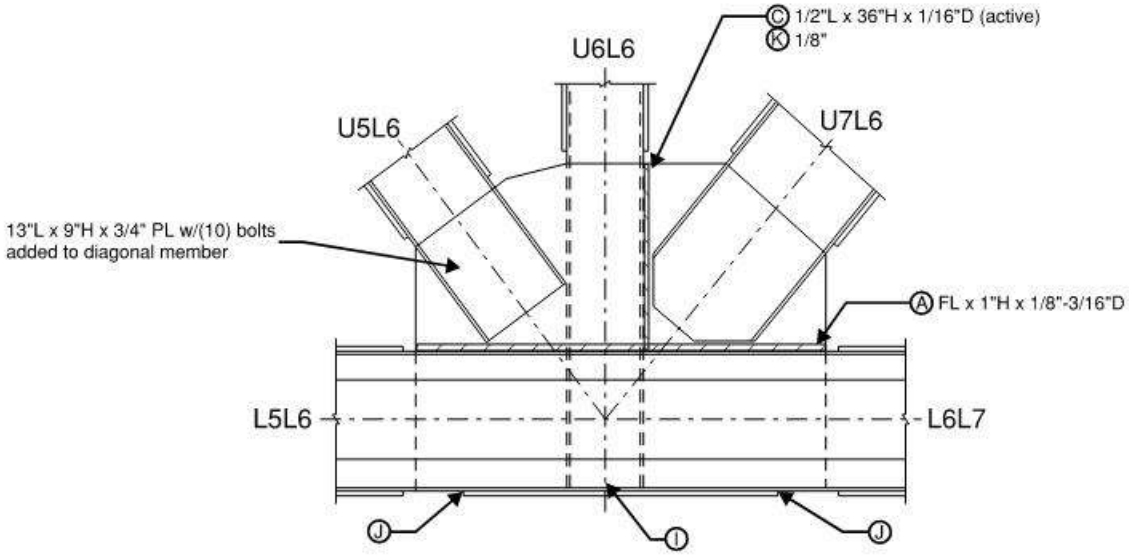

Span 29, South Truss, Node L6, South Gusset Plate, South Elevation

REVISION 1	DATE: 8/26/19	CREW: BH, JG (Baker) - No change	REVISION 3	DATE:	CREW:
REVISION 2	DATE: 8/25/2021	CREW: NR, SD (PRIME) - No Change	REVISION 4	DATE:	CREW:

CREW: SW, BF	DATE: 10/31/2017	BRIDGE NO.: 03819

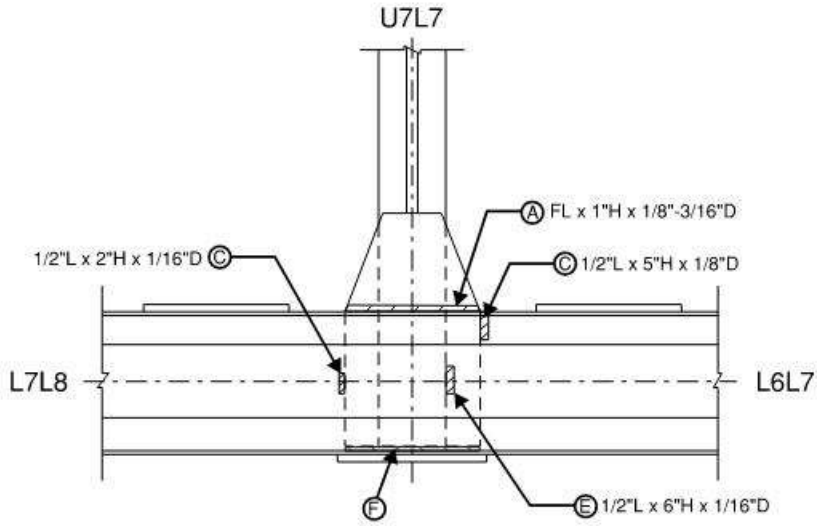

Span 29, South Truss, Node L7, North Gusset Plate, North Elevation

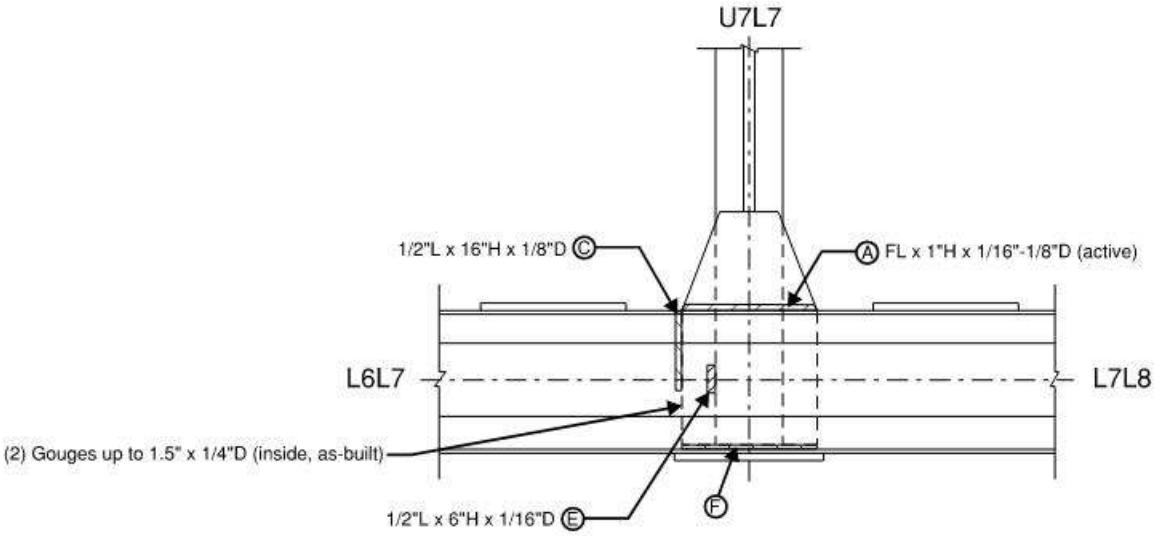

Span 29, South Truss, Node L7, South Gusset Plate, South Elevation

REVISION 1	DATE: 8/26/19	CREW: BH, JG (Baker) - No change	REVISION 3	DATE:	CREW:
REVISION 2	DATE: 9/20/2021	CREW: NR, NH (PRIME) - No Change	REVISION 4	DATE:	CREW:

CREW: SW, BF	DATE: 10/31/2017	BRIDGE NO.: 03819

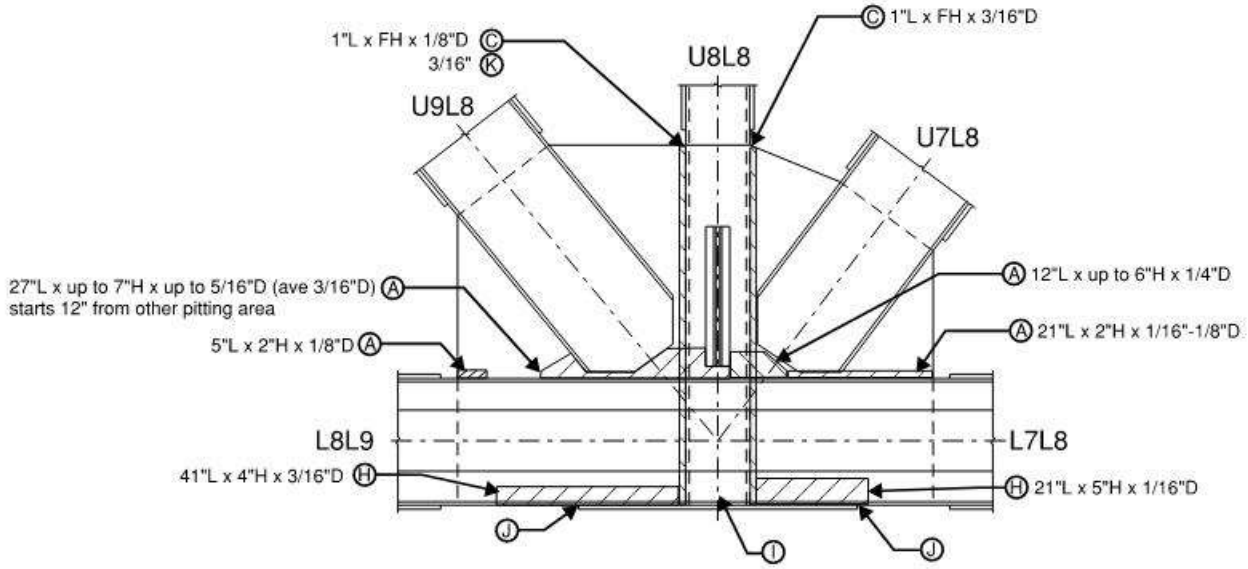

Span 29, South Truss, Node L8, North Gusset Plate, North Elevation

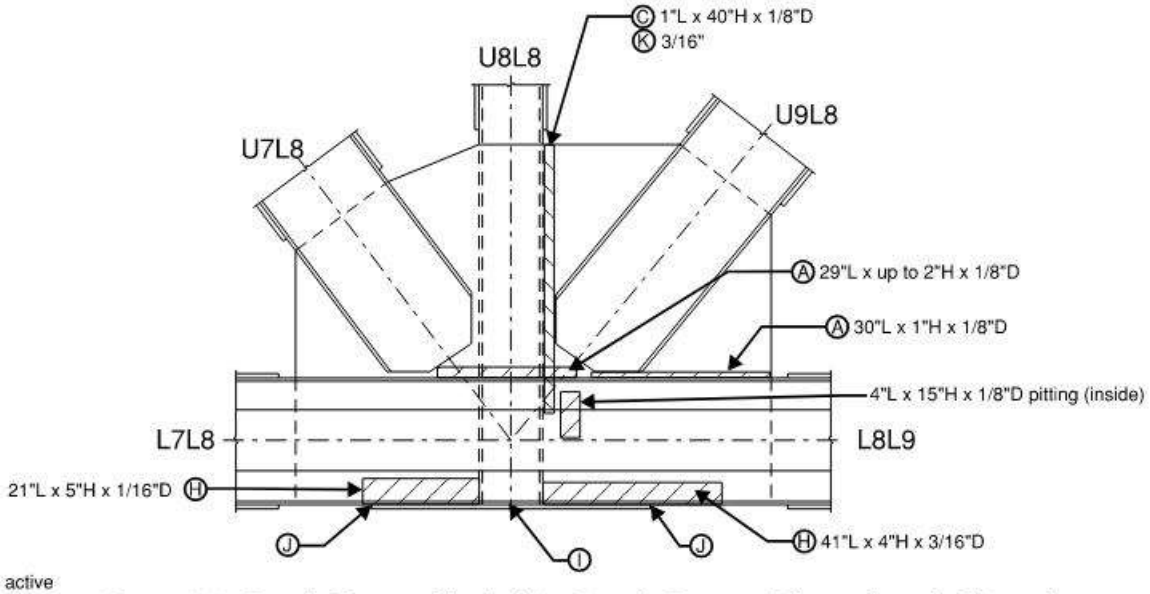

Note:
- Random SL areas are active

Span 29, South Truss, Node L8, South Gusset Plate, South Elevation

REVISION 1	DATE: 8/26/19	CREW: BH, JG (Baker) - No change	REVISION 3	DATE:	CREW:
REVISION 2	DATE: 9/20/2021	CREW: NR, NH (PRIME) - No Change	REVISION 4	DATE:	CREW:

CREW: SW, BF	DATE: 10/31/2017	BRIDGE NO.: 03819

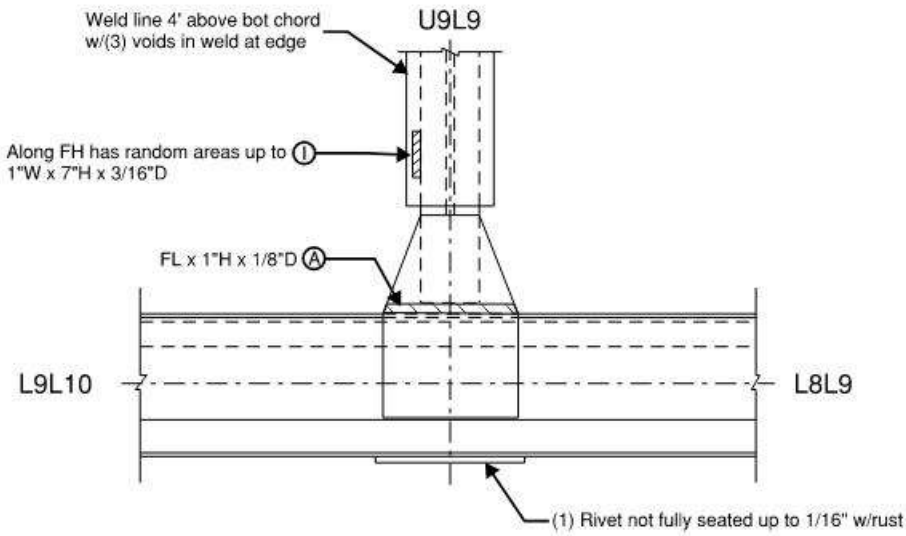

Span 29, South Truss, Node L9, North Gusset Plate, North Elevation

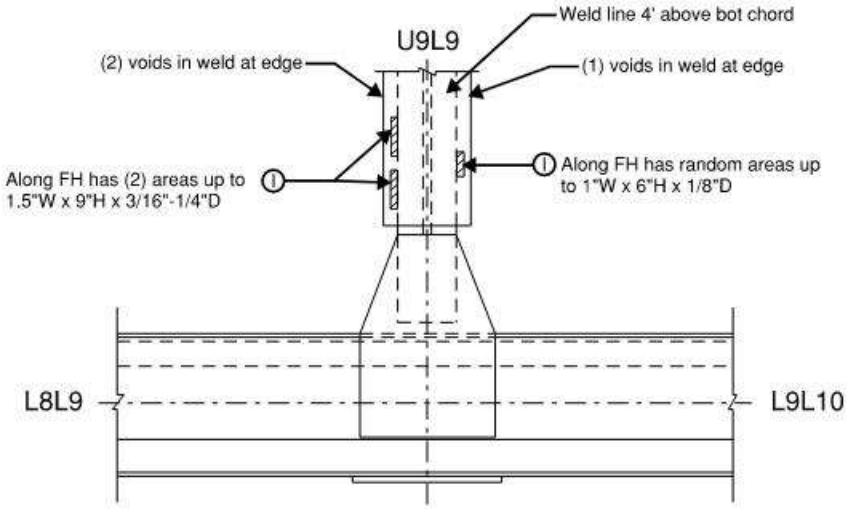

Span 29, South Truss, Node L9, South Gusset Plate, South Elevation

REVISION 1	DATE: 8/26/19	CREW: BH, JG (Baker) - No change	REVISION 3	DATE:	CREW:
REVISION 2	DATE: 9/20/2021	CREW: NR, NH (PRIME) - No Change	REVISION 4	DATE:	CREW:

Sketches
Inspection type: Fracture Critical,Routine
Inspection Date: 7/26/2021
Inspected by: PRIME AE

:Bridge No 03819

Town: NEW LONDON
Carried: INTERSTATE 95 NORTHBOUND
Crossed: THAMES RV,RR,LOCAL ROADS
Inventory Route: NHS

CREW: SW, BF	DATE: 10/31/2017	BRIDGE NO.: 03819

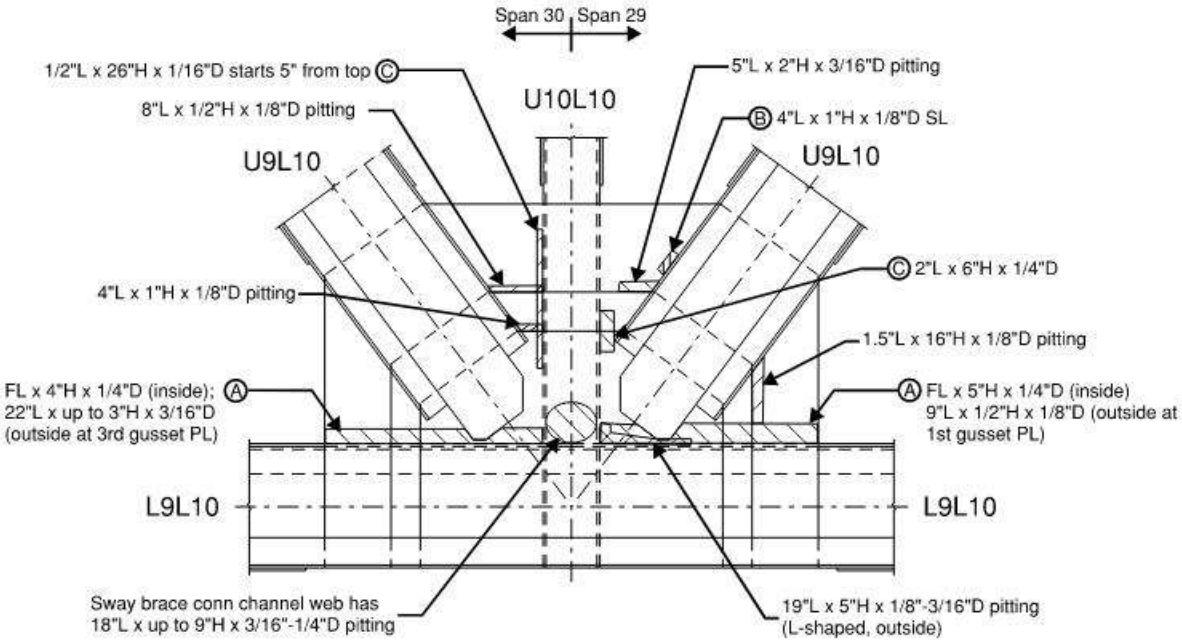

Span 29, South Truss, Node L10, North Gusset Plate, North Elevation

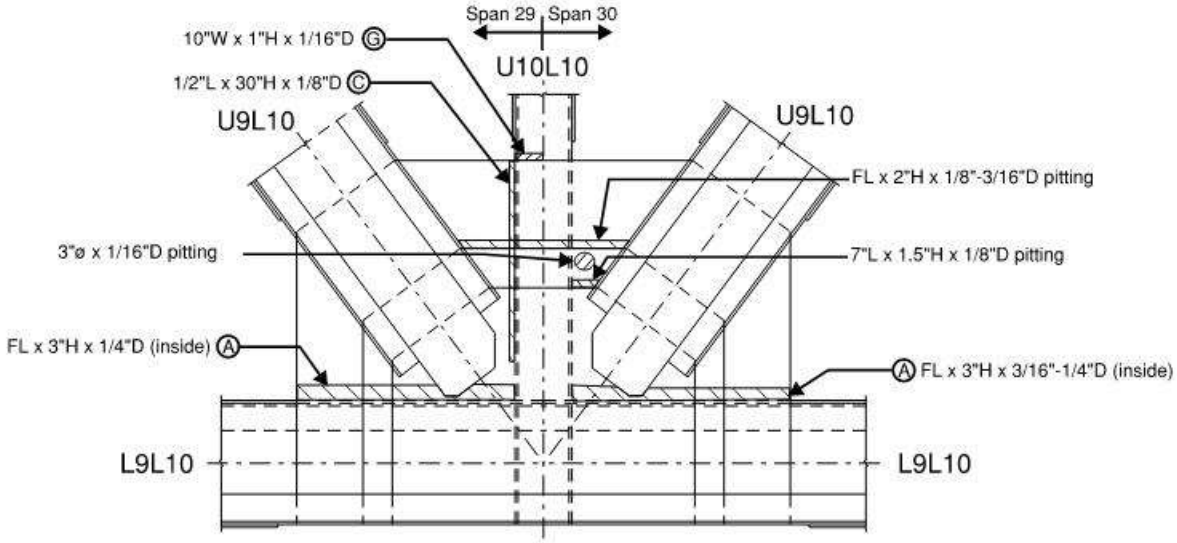

Note:
-Random SL areas are active

Span 29, South Truss, Node L10, South Gusset Plate, South Elevation

REVISION 1	DATE: 8/26/19	CREW: BH, JG (Baker) - No change	REVISION 3	DATE:	CREW:
REVISION 2	DATE: 8/11/2021	CREW: CMR, NH (PRIME) - No Change	REVISION 4	DATE:	CREW:

Sketches
Inspection type: Fracture Critical,Routine
Inspection Date: 7/26/2021
Inspected by: PRIME AE

:Bridge No 03819

Town: NEW LONDON
Carried: INTERSTATE 95 NORTHBOUND
Crossed: THAMES RV,RR,LOCAL ROADS
Inventory Route: NHS

CREW: SW, BF	DATE: 10/16/2017	BRIDGE NO.: 03819

Deterioration Legend:
1 - PR between top horiz gusset PL and bracing members up to __" thick
2 - PR between bot horiz gusset PL and bracing members up to __" thick
3 - Pitting on top horiz gusset PL up to __" deep
4 - Pitting on bot horiz gusset PL up to __" deep
5 - Bot flg angle horiz leg has up to 1/4"D pitting
6 - Random rivet heads have up to ___% SL
7 - Top flange Horizontal leg has up to 3/16"D pitting loss.

LOG DIRECTION
WEST TO EAST

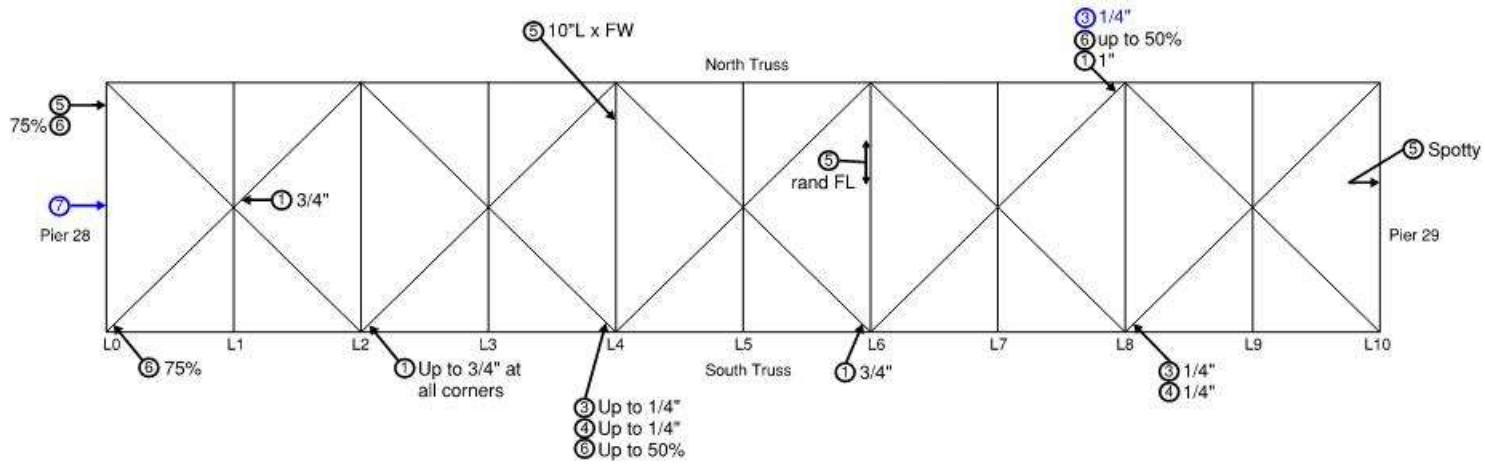

General Notes:
- See Lateral and Sway Bracing General Notes (Spans 22-25 & 29-32) sheet.
- Top flange has isolated pockets of painted over section loss up to 1/4"Ø x 1/8"D.

Span 29 - Bottom Chord Laterals

REVISION 1	DATE: 8/26/19	CREW: BH, JG (Baker)	REVISION 3	DATE:	CREW:
REVISION 2	DATE: 8/24/2021	CREW: NR, SD (PRIME)	REVISION 4	DATE:	CREW:

CREW: SW, BF	DATE: 10/18/2017	BRIDGE NO.: 03819

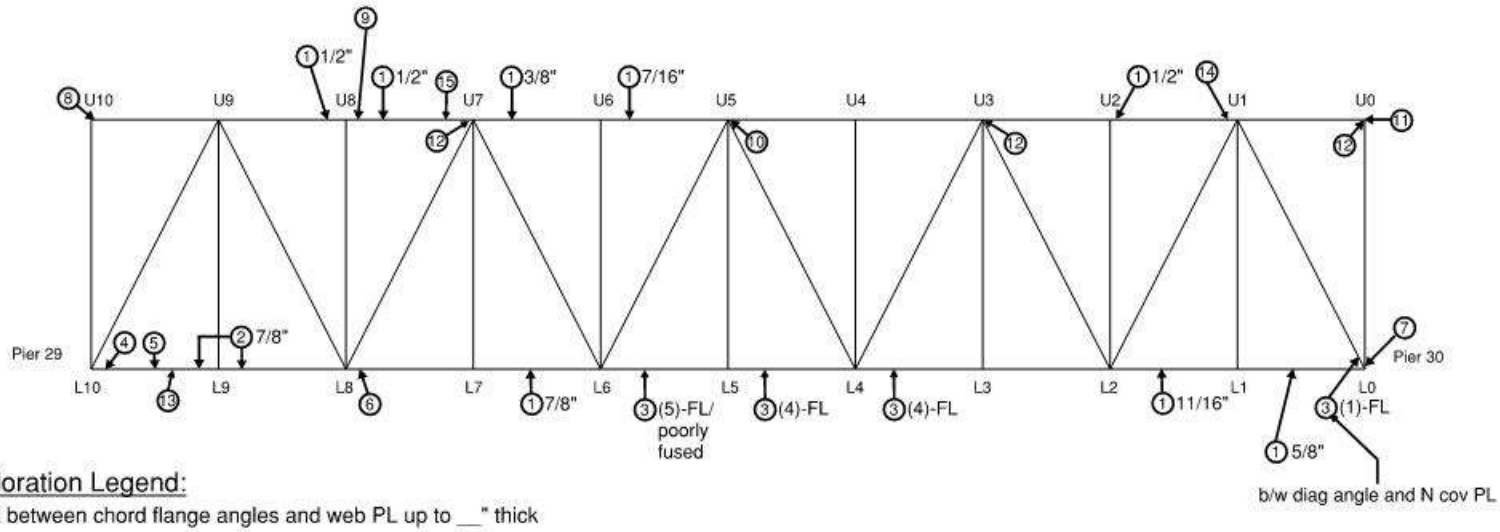

Deterioration Legend:

1. PR between chord flange angles and web PL up to __" thick
2. PR between chord flange angles and cover PL at edges up to __" thick
3. Tack welds partially cracked or broken at lacing bar or batten PL and chord; (# per panel) and up to __" long
4. Top PL has 2'L x 8"W (total) x 1/8"-3/16"D pitting w/(10) R/H's w/30% SL at inside node; N web PL has 1'L x 2"H x 1/8"D SL
5. (2) missing rivets between lacing bar and N bot flg angle
6. Up to 1/2" PR between splice PL and web PL (inside)
7. U0L0 (inside) channel web has 3'H x 1"W x 1/8"D SL inside node
8. Top cover PL along horiz gusset PL has 1"L x 13"W x 3/16"D pitting/LR
9. Top PL has 3"ø x 3/16"D SL (PO)
10. Up to 3/8" PR between N bot flg and splice PL; BF splice PL has 6"L x up to 1"W x 1/8"D SL
11. Up to 1¼" PR at web end between stacked PL's
12. Broken tack weld between top of vert back-to-back angles and top chord seat angle (inside)
13. Rand areas of 8"L x 2"H x 1/8"D pitt/LR in N web PL above bot angle
14. Missing rivet at horiz lat brace G PL to top chord
15. Top of top chord w/ 1'ø x 1/16"D pitting

General Notes:

- See Riveted Truss General Notes (Spans 22-25 & 29-32) sheet
- See following gusset plate sheets for bottom chord gusset plate details

Span 30 - North Truss South Elevation

REVISION 1	DATE: 9/17/19	CREW: BH, JG (Baker)	REVISION 3	DATE:	CREW:
REVISION 2	DATE: 8/9/2021	CREW: CMR, NH (PRIME) - No Change	REVISION 4	DATE:	CREW:

CREW: BF, SW	DATE: 10/23/2017	BRIDGE NO.: 03819

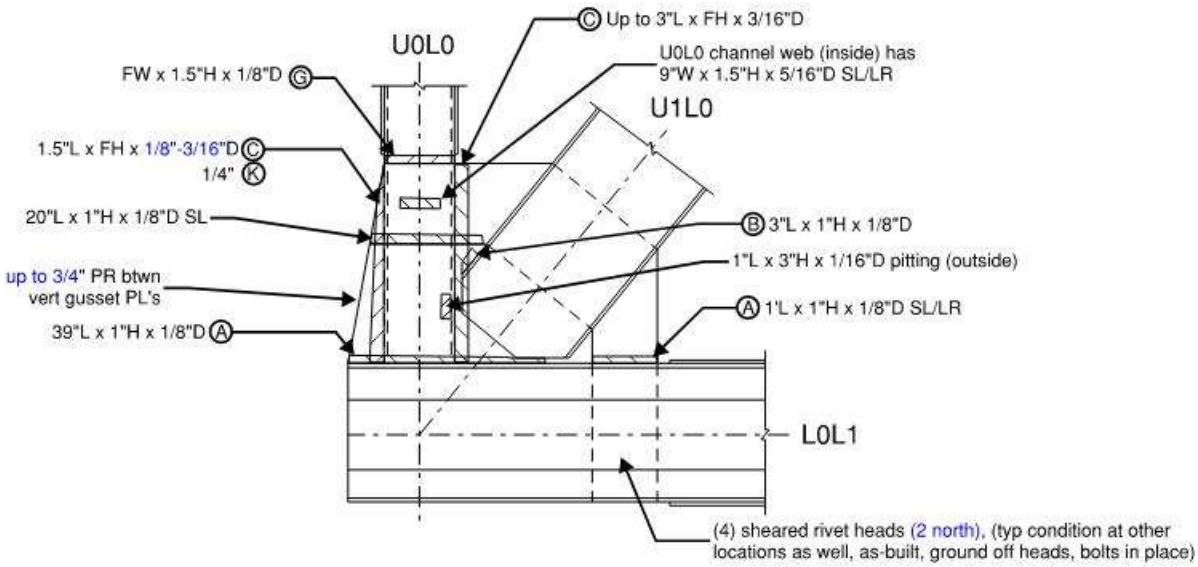

Span 30, North Truss, Node L0, North Gusset Plate, North Elevation

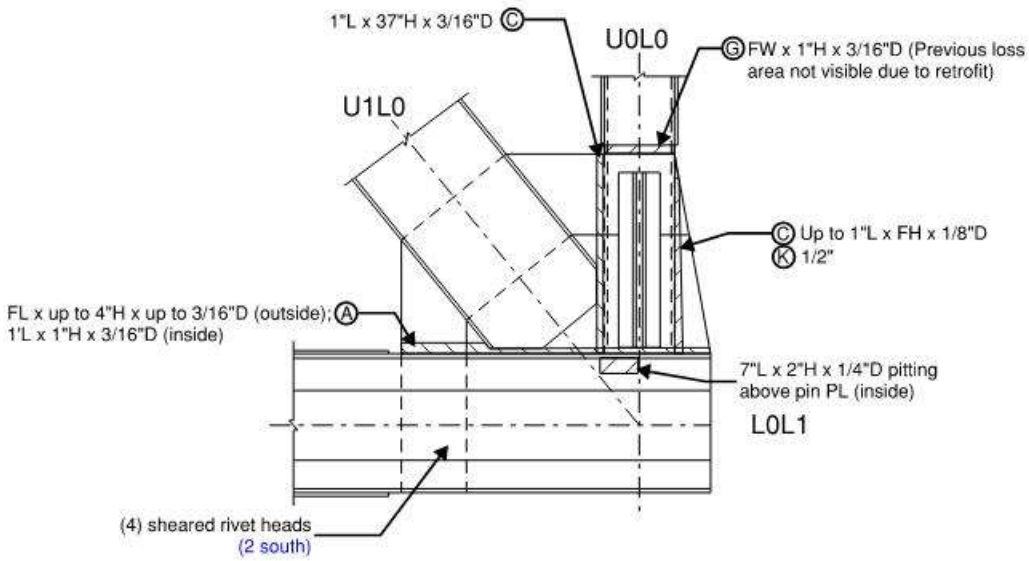

Note:
- Most SL's are active

Span 30, North Truss, Node L0, South Gusset Plate, South Elevation

REVISION 1	DATE: 9/17/19	CREW: BH, JG (Baker)	REVISION 3	DATE:	CREW:
REVISION 2	DATE: 8/10/2021	CREW: CMR, NH (PRIME)	REVISION 4	DATE:	CREW:

CREW: SW, BF	DATE: 10/23/2017	BRIDGE NO.: 03819

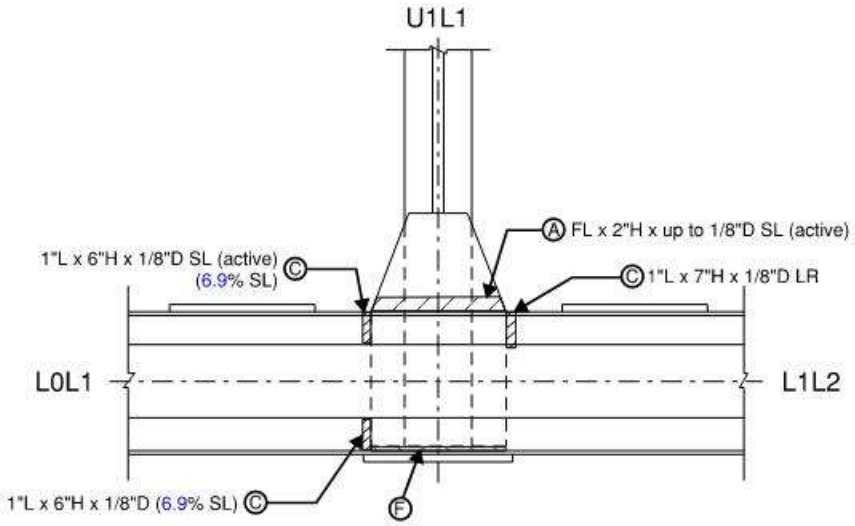

Span 30, North Truss, Node L1, North Gusset Plate, North Elevation

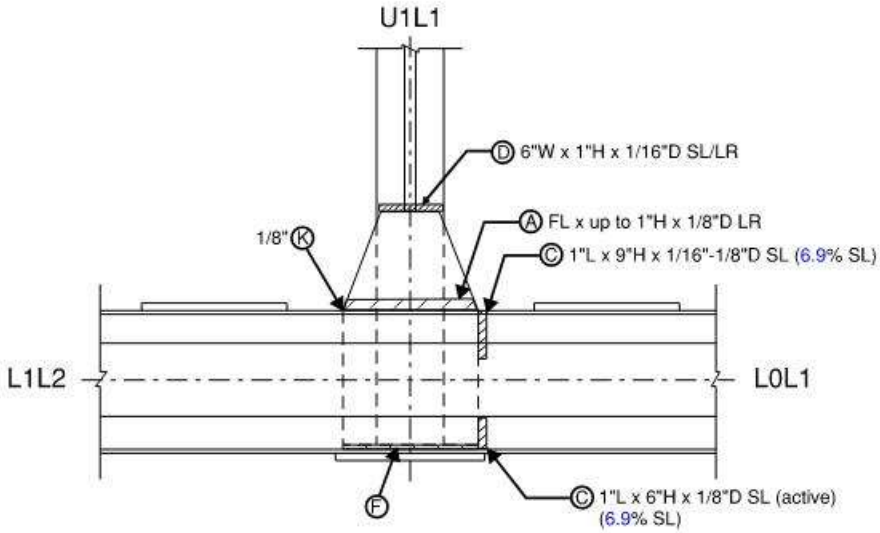

Span 30, North Truss, Node L1, South Gusset Plate, South Elevation

REVISION 1	DATE: 9/17/19	CREW: BH, JG (Baker)	REVISION 3	DATE:	CREW:
REVISION 2	DATE: 8/10/2021	CREW: CMR, NH (PRIME)	REVISION 4	DATE:	CREW:

CREW: SW, BF	DATE: 10/23/2017	BRIDGE NO.: 03819

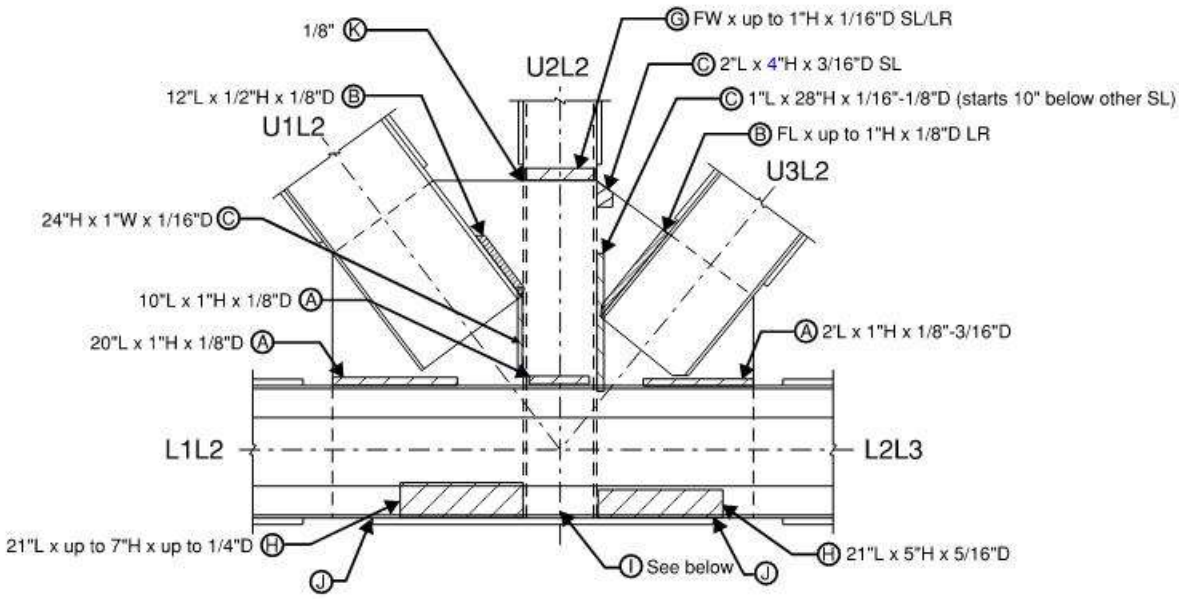

Span 30, North Truss, Node L2, North Gusset Plate, North Elevation

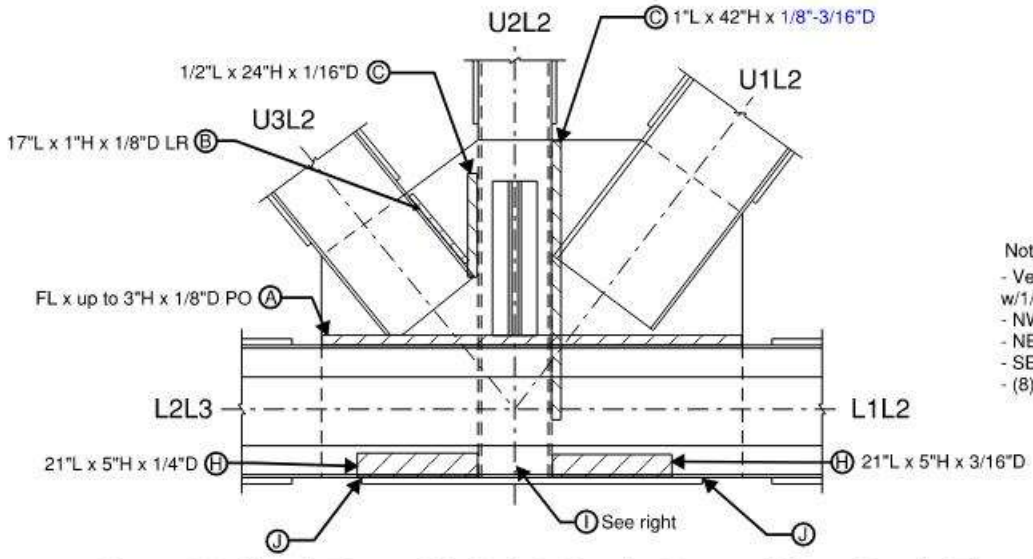

Note I:
- Vert stiff PL has (2) RTH's up to 4" x 3" w/1/16" rem between
- NW & SW channel legs have 2"H x 1/2" LOW
- NE channel leg has 4"H x 1" LOW
- SE channel leg has 2"H x 1.5" LOW
- (8) R/H's have up to 90% SL

Note:
- Most SL's are active

Span 30, North Truss, Node L2, South Gusset Plate, South Elevation

REVISION 1	DATE: 9/17/19	CREW: BH, JG (Baker)	REVISION 3	DATE:	CREW:
REVISION 2	DATE: 8/10/2021	CREW: CMR, NH (PRIME)	REVISION 4	DATE:	CREW:

CREW: SW, BF	DATE: 10/23/2017	BRIDGE NO.: 03819

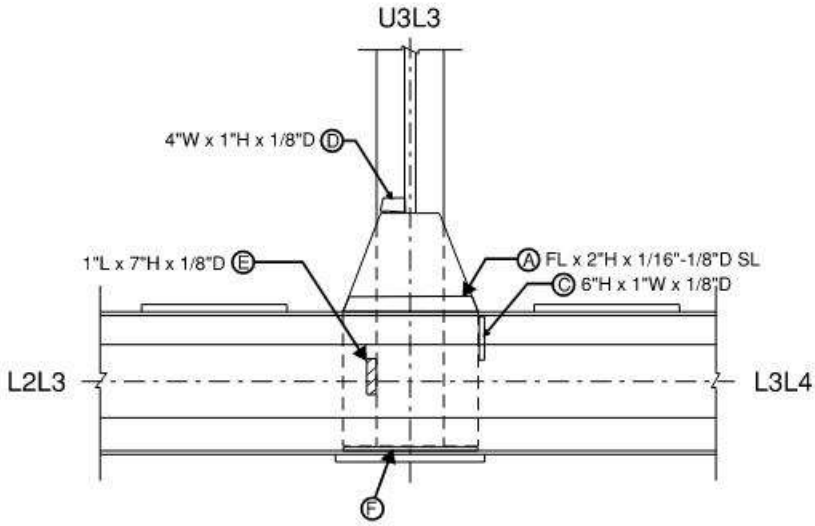

Span 30, North Truss, Node L3, North Gusset Plate, North Elevation

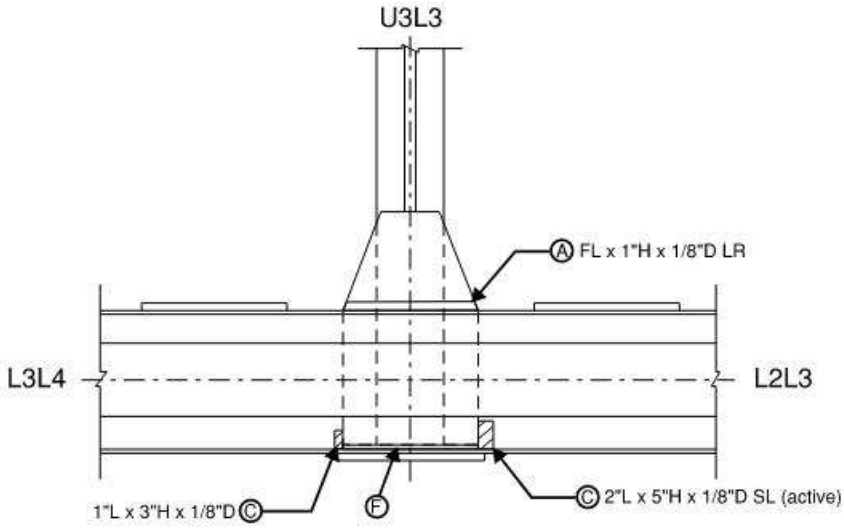

Span 30, North Truss, Node L3, South Gusset Plate, South Elevation

REVISION 1	DATE: 9/17/19	CREW: BH, JG (Baker)	REVISION 3	DATE:	CREW:
REVISION 2	DATE: 8/10/2021	CREW: CMR, NH (PRIME) - No Change	REVISION 4	DATE:	CREW:

CREW: SW, BF	DATE: 10/23/2017	BRIDGE NO.: 03819

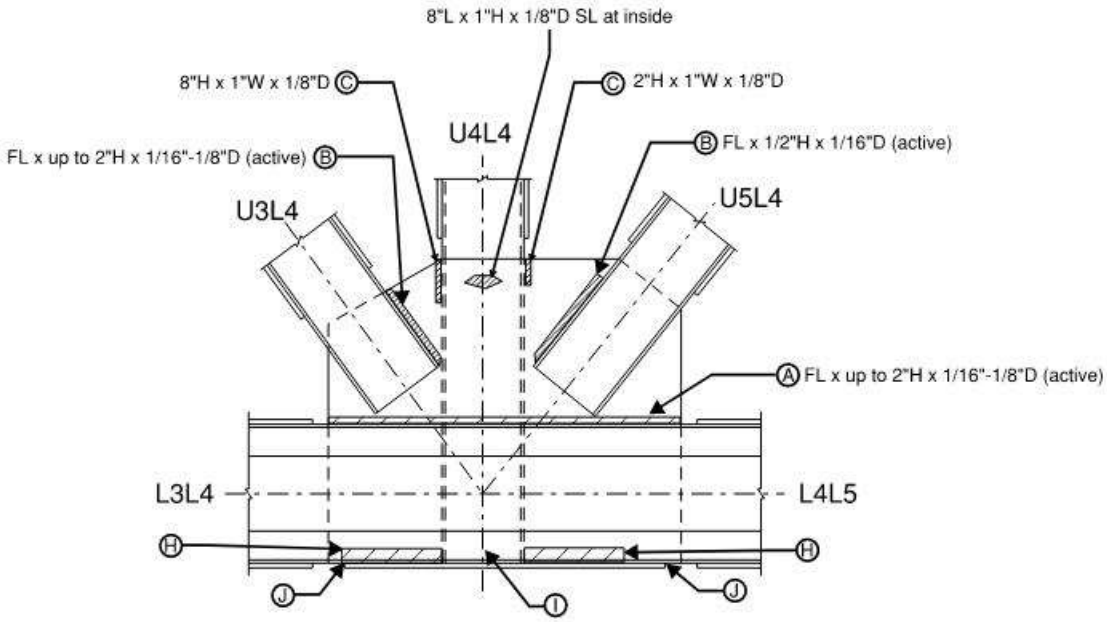

Span 30, North Truss, Node L4, North Gusset Plate, North Elevation

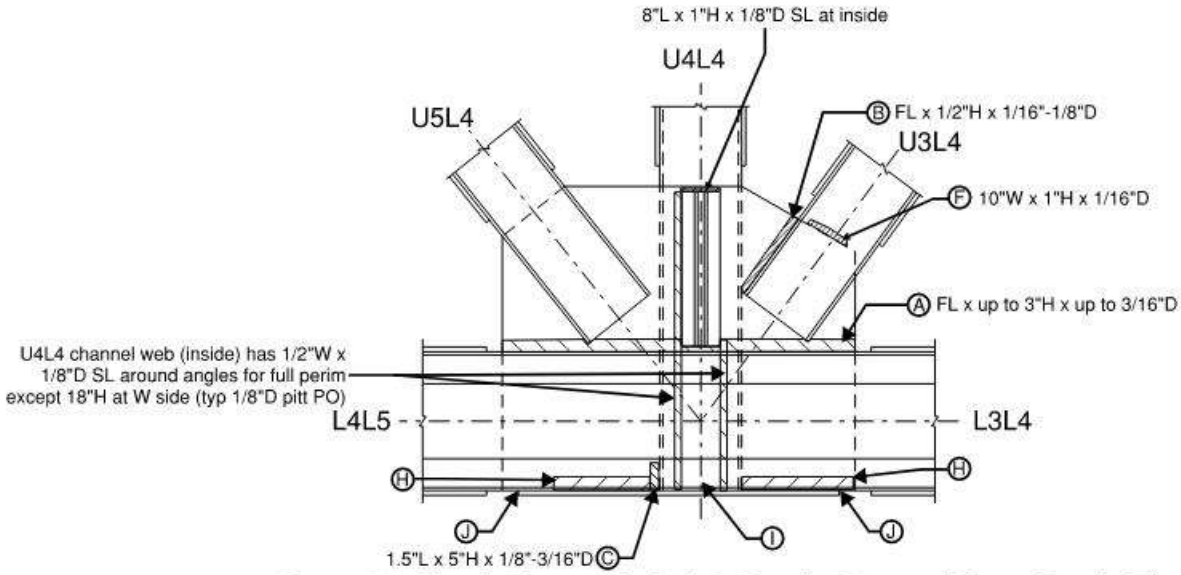

Span 30, North Truss, Node L4, South Gusset Plate, South Elevation

REVISION 1	DATE: 9/17/19	CREW: BH, JG (Baker)	REVISION 3	DATE:	CREW:
REVISION 2	DATE: 8/10/2021	CREW: CMR, NH (PRIME) - No Change	REVISION 4	DATE:	CREW:

CREW: SW, BF	DATE: 10/23/2017	BRIDGE NO.: 03819

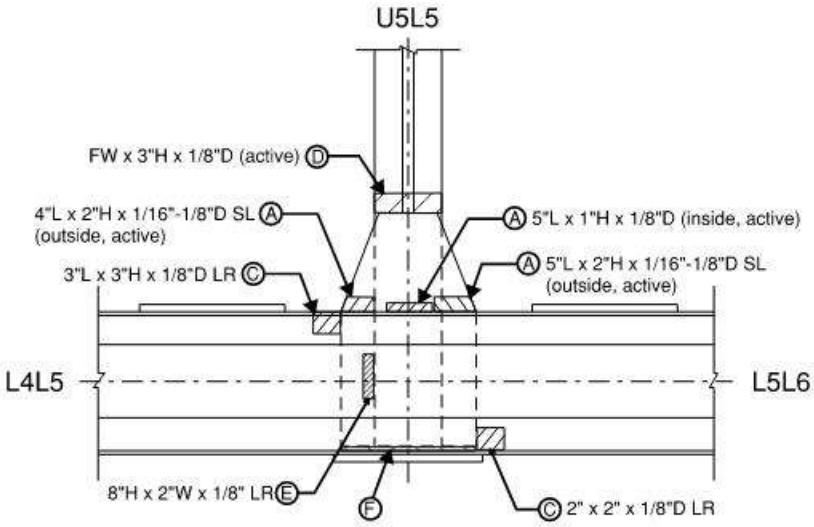

Span 30, North Truss, Node L5, North Gusset Plate, North Elevation

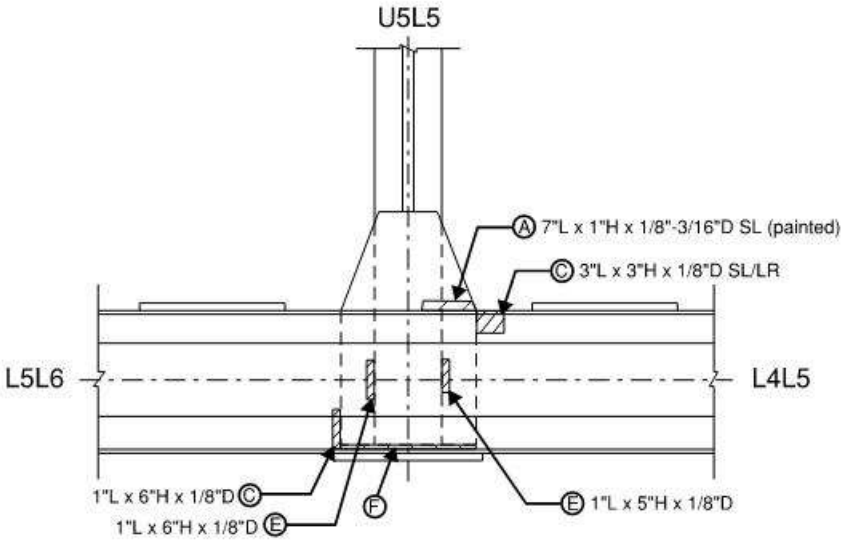

Span 30, North Truss, Node L5, South Gusset Plate, South Elevation

REVISION 1	DATE: 9/17/19	CREW: BH, JG (Baker)	REVISION 3	DATE:	CREW:
REVISION 2	DATE: 8/10/2021	CREW: CMR, NH (PRIME) - No Change	REVISION 4	DATE:	CREW:

CREW: SW, BF	DATE: 10/23/2017	BRIDGE NO.: 03819

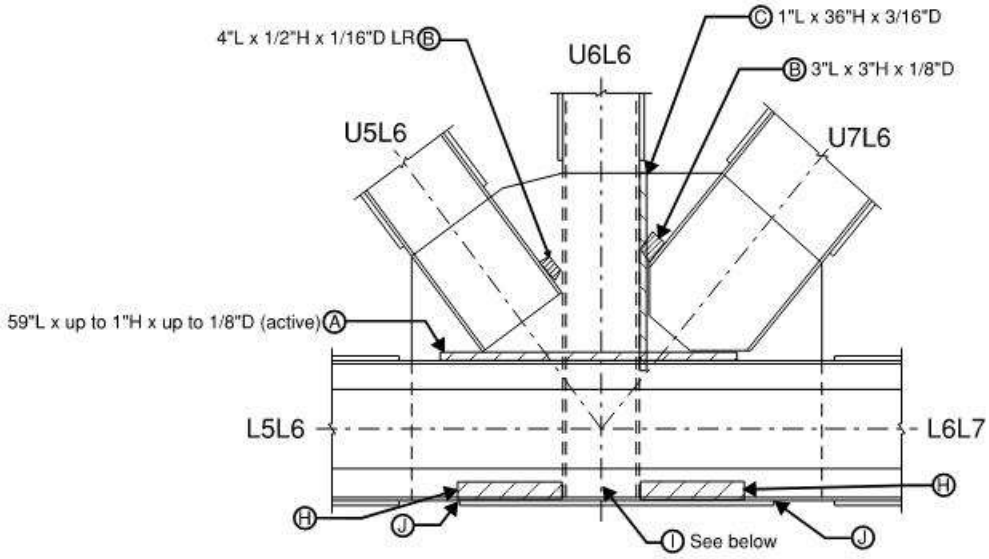

Span 30, North Truss, Node L6, North Gusset Plate, North Elevation

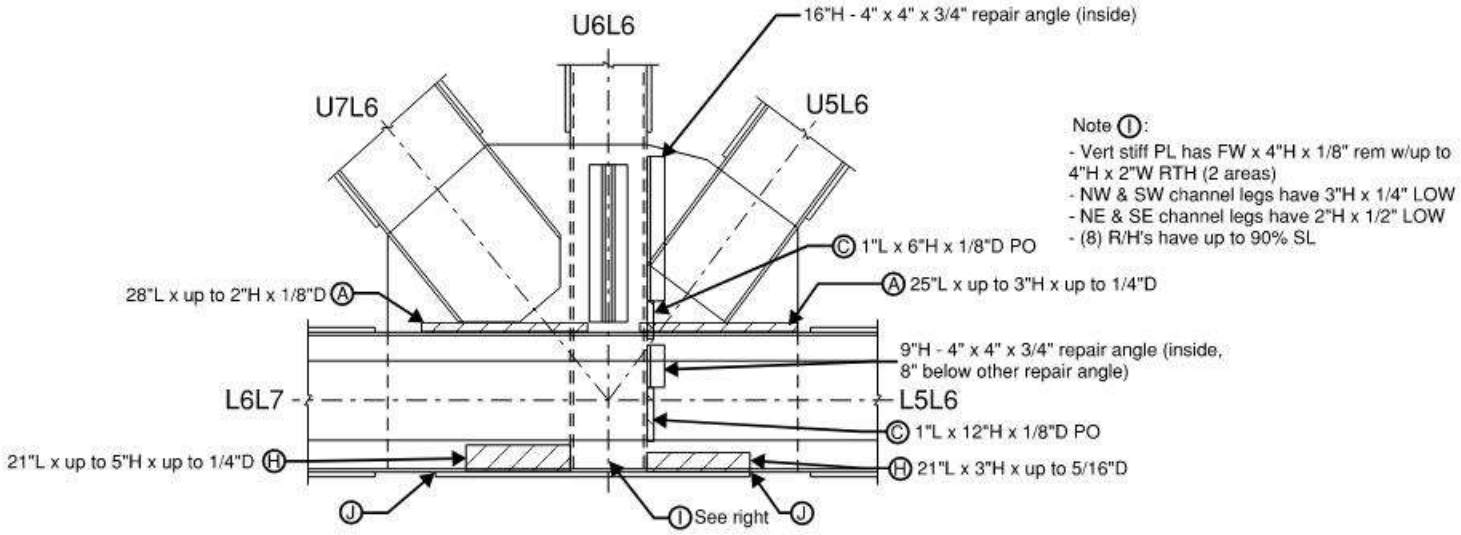

Span 30, North Truss, Node L6, South Gusset Plate, South Elevation

REVISION 1	DATE: 9/17/19	CREW: BH, JG (Baker)	REVISION 3	DATE:	CREW:
REVISION 2	DATE: 8/10/2021	CREW: CMR, NH (PRIME) - No Change	REVISION 4	DATE:	CREW:

CREW: SW, BF	DATE: 10/23/2017	BRIDGE NO.: 03819

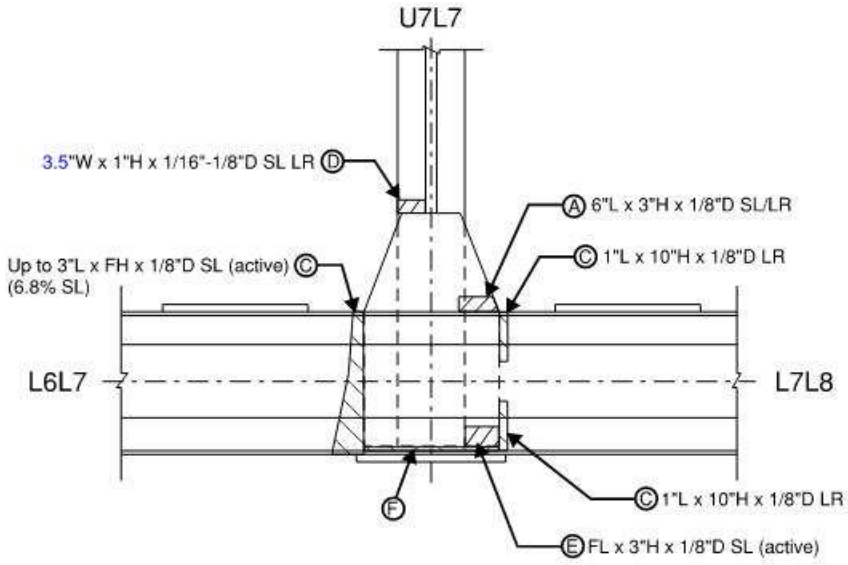

Span 30, North Truss, Node L7, North Gusset Plate, North Elevation

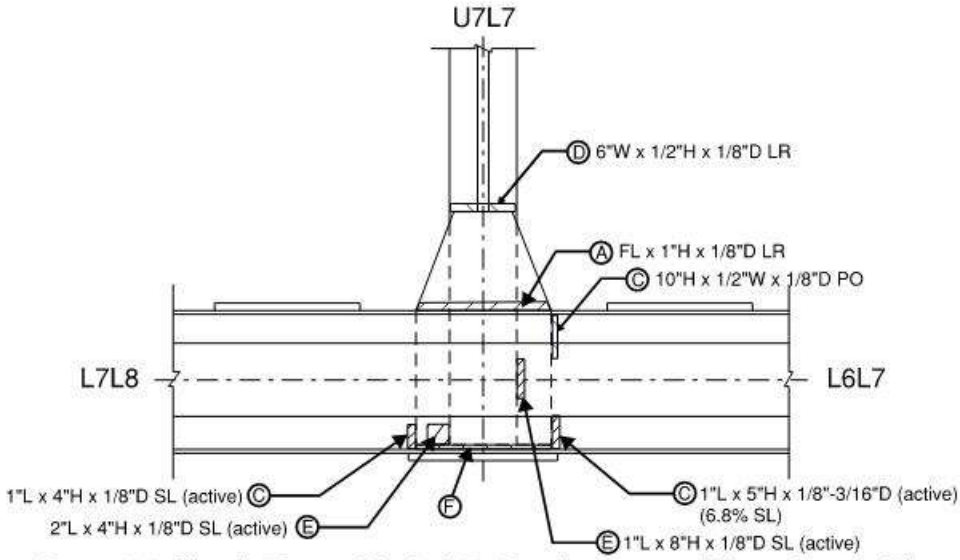

Span 30, North Truss, Node L7, South Gusset Plate, South Elevation

REVISION 1	DATE: 9/17/19	CREW: BH, JG (Baker)	REVISION 3	DATE:	CREW:
REVISION 2	DATE: 8/9/2021	CREW: CMR, NH (PRIME)	REVISION 4	DATE:	CREW:

CREW: SW, BF	DATE: 10/23/2017	BRIDGE NO.: 03819

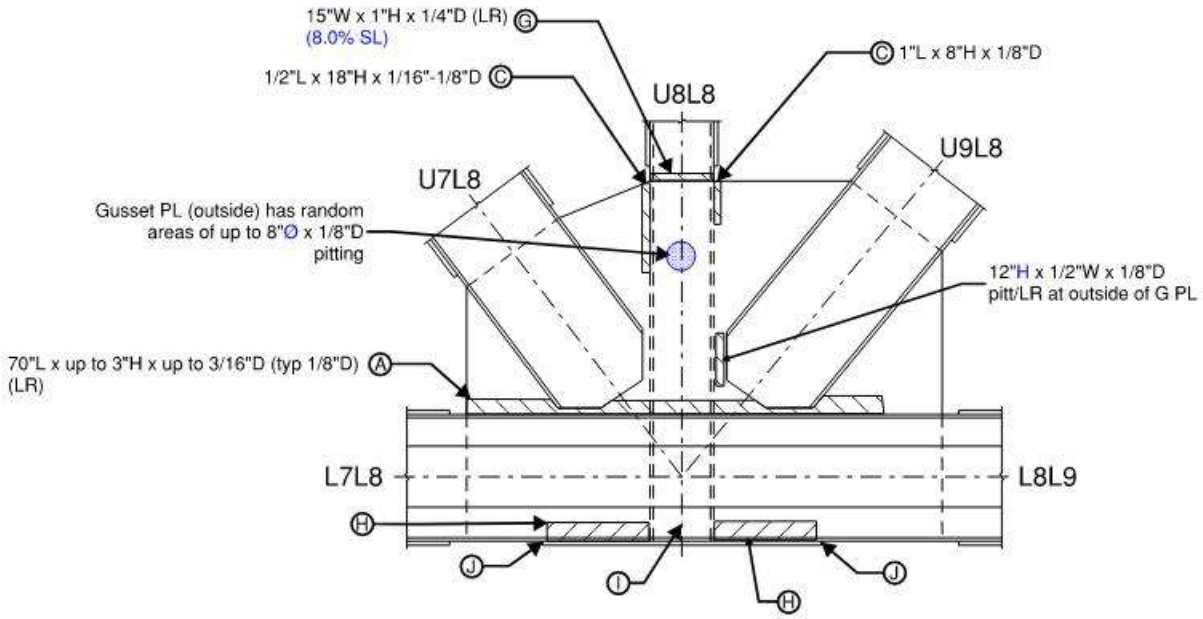

Span 30, North Truss, Node L8, North Gusset Plate, North Elevation

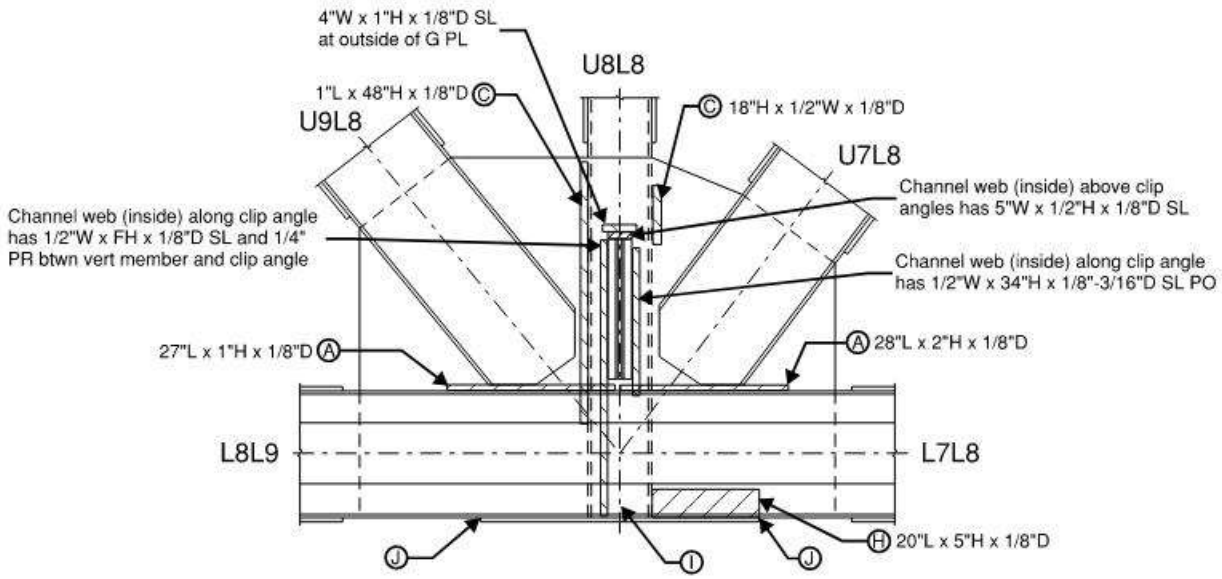

Span 30, North Truss, Node L8, South Gusset Plate, South Elevation

REVISION 1	DATE: 9/17/19	CREW: BH, JG (Baker)	REVISION 3	DATE:	CREW:
REVISION 2	DATE: 8/9/2021	CREW: CMR, NH (PRIME)	REVISION 4	DATE:	CREW:

CREW: SW, BF	DATE: 10/23/2017	BRIDGE NO.: 03819

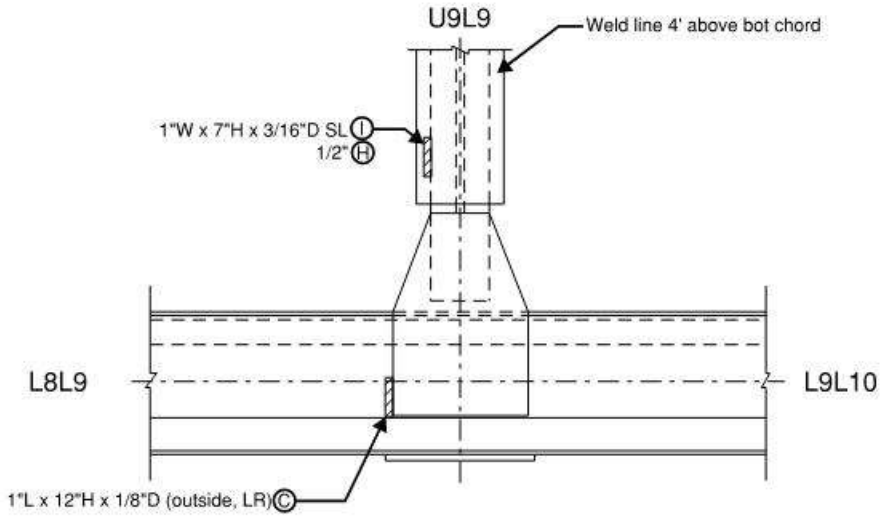

Span 30, North Truss, Node L9, North Gusset Plate, North Elevation

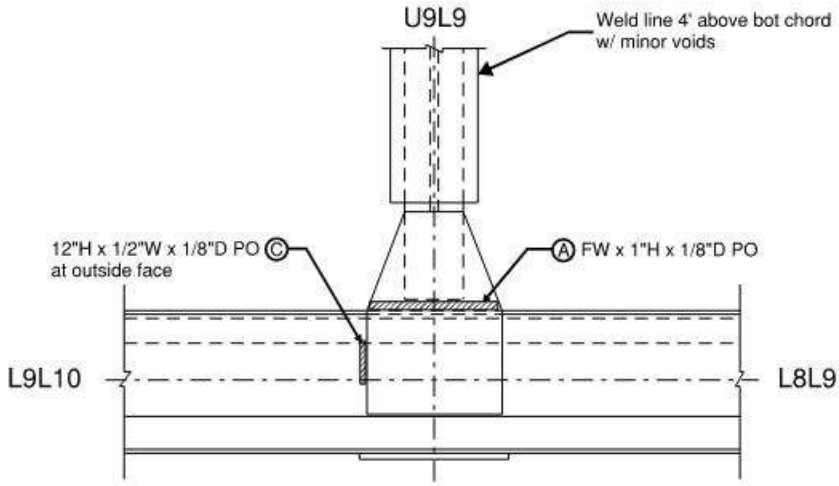

Span 30, North Truss, Node L9, South Gusset Plate, South Elevation

REVISION 1	DATE: 9/17/19	CREW: BH, JG (Baker)	REVISION 3	DATE:	CREW:
REVISION 2	DATE: 8/9/2021	CREW: CMR, NH (PRIME) - No Change	REVISION 4	DATE:	CREW:

Sketches
Inspection type: Fracture Critical,Routine
Inspection Date: 7/26/2021
Inspected by: PRIME AE

:Bridge No 03819

Town: NEW LONDON
Carried: INTERSTATE 95 NORTHBOUND
Crossed: THAMES RV,RR,LOCAL ROADS
Inventory Route: NHS

CREW: SW, BF	DATE: 10/31/2017	BRIDGE NO.: 03819

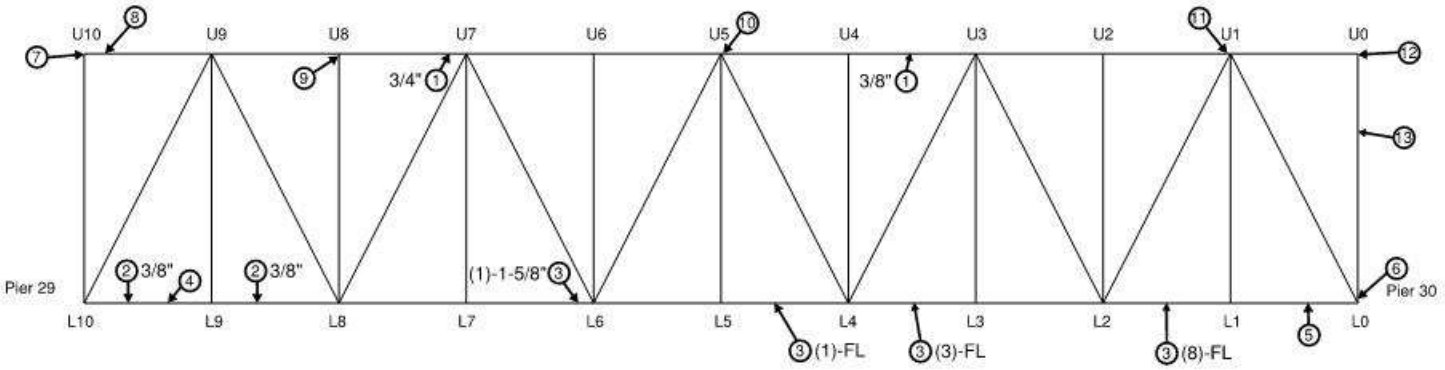

Deterioration Legend:

1. - PR between chord flange angles and web PL up to __" thick
2. - PR between chord flange angles and cover PL at edges up to __" thick
3. - Tack welds partially cracked or broken at lacing bar or batten PL and chord; (# per panel) and up to __" long
4. -(2) missing rivets between lacing bar and S bot flg angle
5. - N web PL has 1"H x 1/8"D SL at top and bot (rand areas FL of member w/ rand LR)
6. - Note moved to gusset PL sketch, wrong location previously
7. - 3/4" PR between vert member and shim/fill PL at SE corner
8. - Top cover PL has 1"L x 13"W x 3/16"D SL/LR
9. - Up to 3/4" PR between vert member and fill PL at all (4) sides
10. - S top chord web splice PL has random areas of active SL up to 3"H x 1/8"D and 1/4" PR between splice PL's
11. - Up to 1/2" PR between splice PL and web PL at both sides
12. - Up to 1¼" PR at web end between PL's & VT back-back angles
13. - 3rd scupper support from top broken at west

General Notes:
- See Riveted Truss General Notes (Spans 22-25 & 29-32) sheet
- See following gusset plate sheets for bottom chord gusset plate details

Span 30 - South Truss South Elevation

REVISION 1	DATE: 9/23/19	CREW: BH, JG (Baker)	REVISION 3	DATE:	CREW:
REVISION 2	DATE: 8/11/2021	CREW: CMR, NH (PRIME) - No Change	REVISION 4	DATE:	CREW:

CREW: SW, BF	DATE: 11/1/2017	BRIDGE NO.: 03819

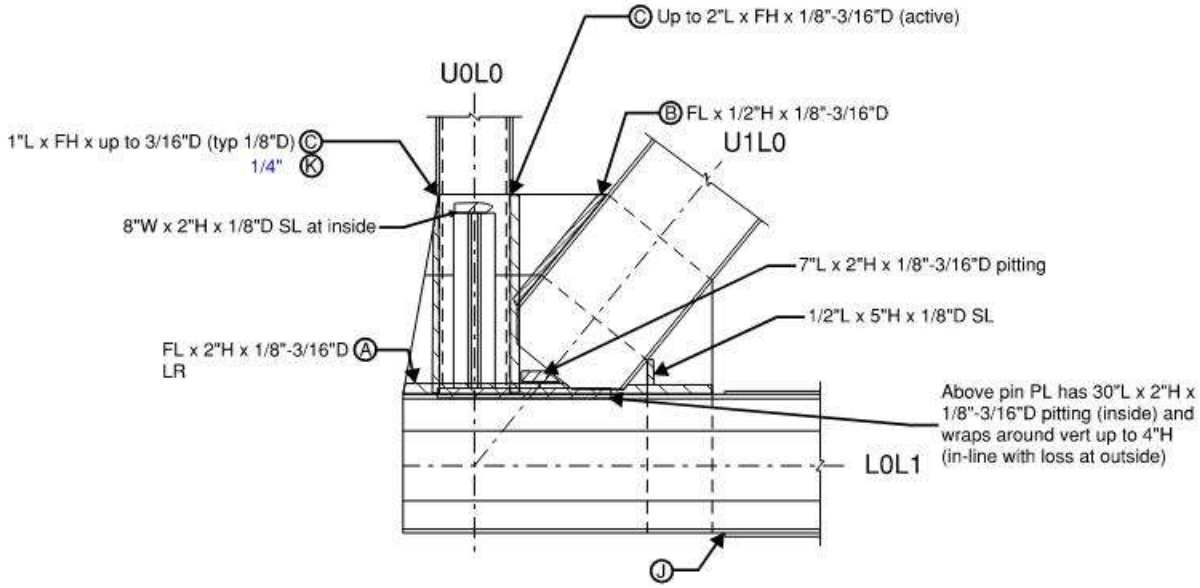

Span 30, South Truss, Node L0, North Gusset Plate, North Elevation

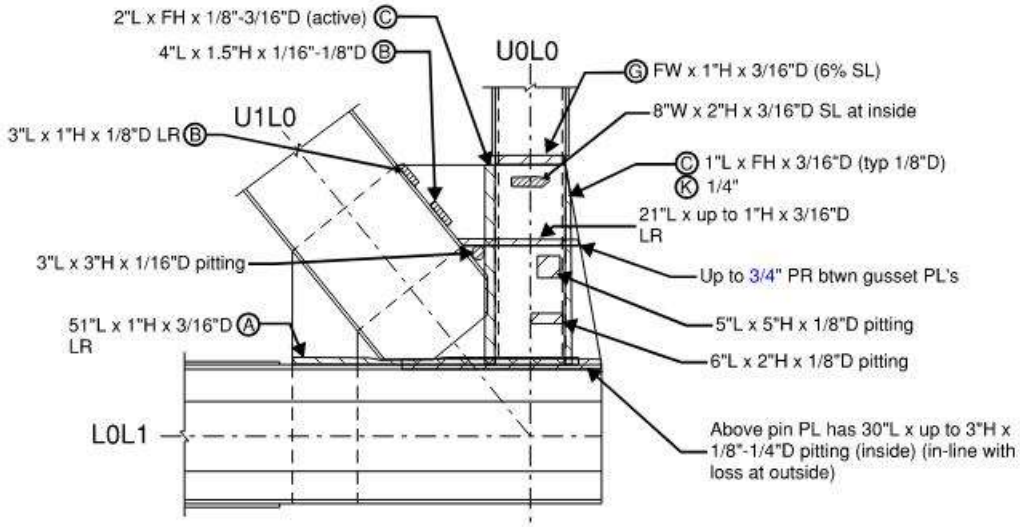

Note:
- All losses with active rust

Span 30, South Truss, Node L0, South Gusset Plate, South Elevation

REVISION 1	DATE: 9/23/19	CREW: BH, JG (Baker)	REVISION 3	DATE:	CREW:
REVISION 2	DATE: 8/12/2021	CREW: CMR, NH (PRIME)	REVISION 4	DATE:	CREW:

CREW: SW, BF	DATE: 11/1/2017	BRIDGE NO.: 03819

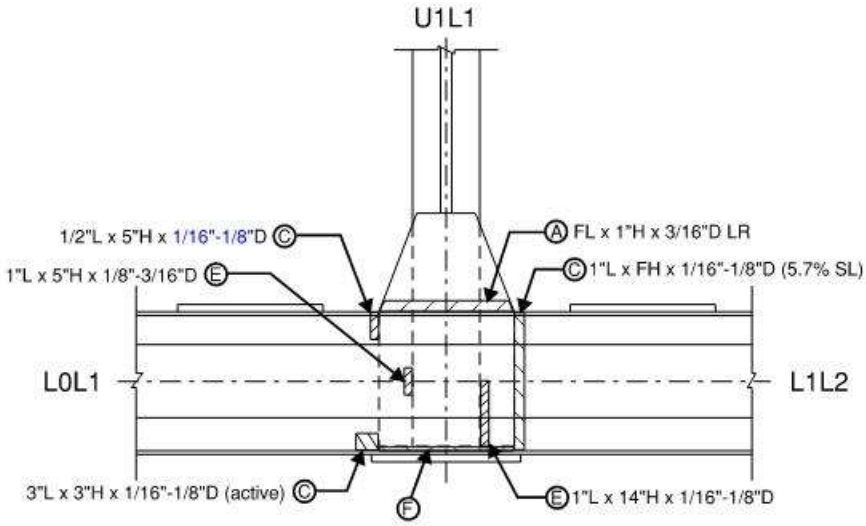

Span 30, South Truss, Node L1, North Gusset Plate, North Elevation

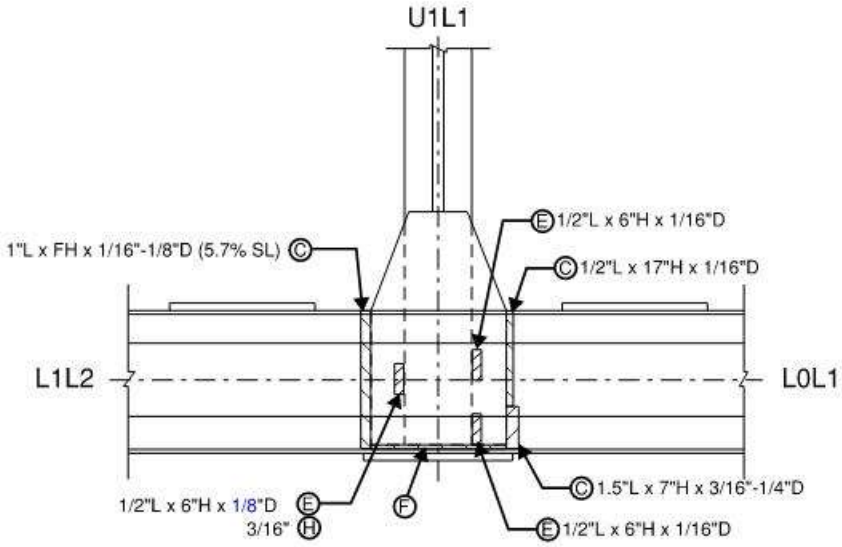

Span 30, South Truss, Node L1, South Gusset Plate, South Elevation

REVISION 1	DATE: 9/23/19	CREW: BH, JG (Baker)	REVISION 3	DATE:	CREW:
REVISION 2	DATE: 8/12/2021	CREW: CMR, NH (PRIME)	REVISION 4	DATE:	CREW:

Sketches
Inspection type: Fracture Critical,Routine
Inspection Date: 7/26/2021
Inspected by: PRIME AE

:Bridge No 03819

Town: NEW LONDON
Carried: INTERSTATE 95 NORTHBOUND
Crossed: THAMES RV,RR,LOCAL ROADS
Inventory Route: NHS

CREW: SW, BF	DATE: 11/1/2017	BRIDGE NO.: 03819

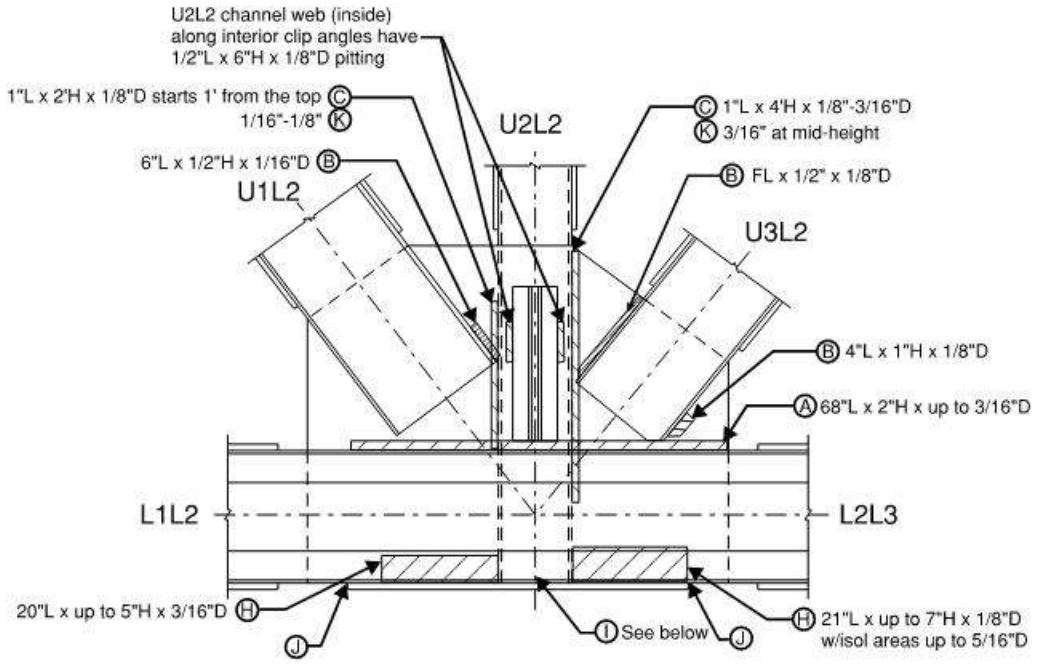

Span 30, South Truss, Node L2, North Gusset Plate, North Elevation

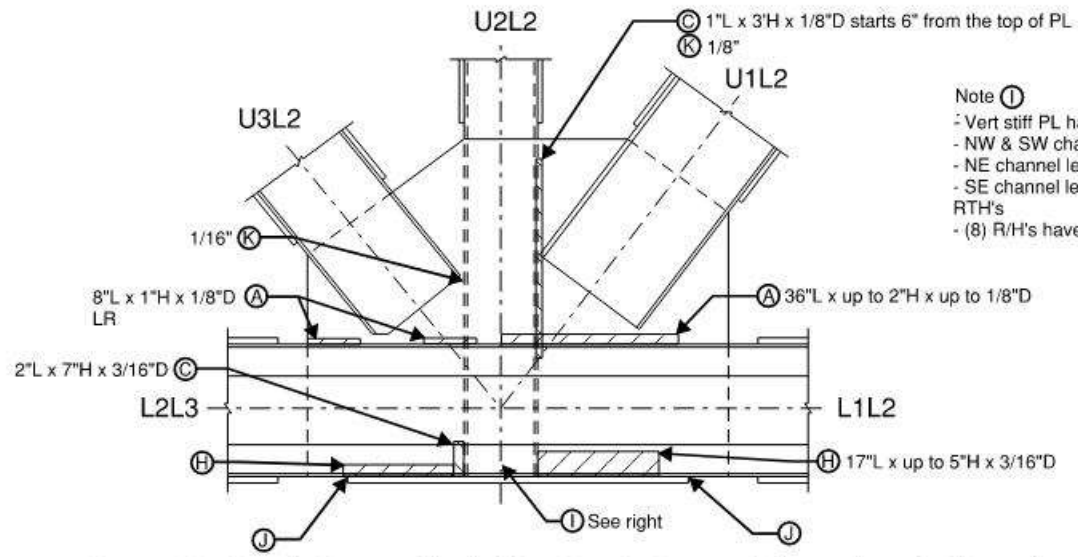

Note I
- Vert stiff PL has (3) RTH's up to 2"W x 4"H
- NW & SW channel legs have 2"H x 1/2" LOW
- NE channel leg has 1"H x 1/4" LOW & 1/2"ø RTH
- SE channel leg has 2"H x 1/4" LOW & (2) - 1/4"ø RTH's
- (8) R/H's have up to 75% SL

Span 30, South Truss, Node L2, South Gusset Plate, South Elevation

REVISION 1	DATE: 9/23/19	CREW: BH, JG (Baker)	REVISION 3	DATE:	CREW:
REVISION 2	DATE: 8/12/2021	CREW: CMR, NH (PRIME) - No Change	REVISION 4	DATE:	CREW:

CREW: SW, BF	DATE: 11/1/2017	BRIDGE NO.: 03819

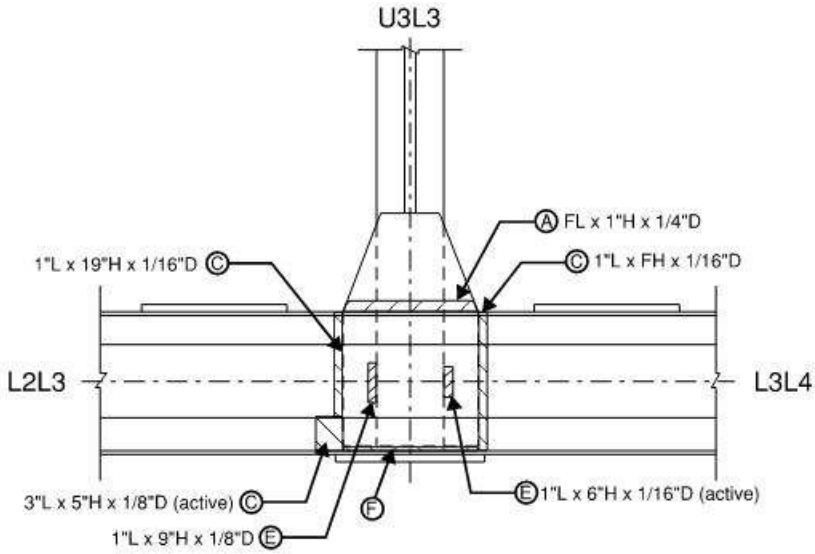

Span 30, South Truss, Node L3, North Gusset Plate, North Elevation

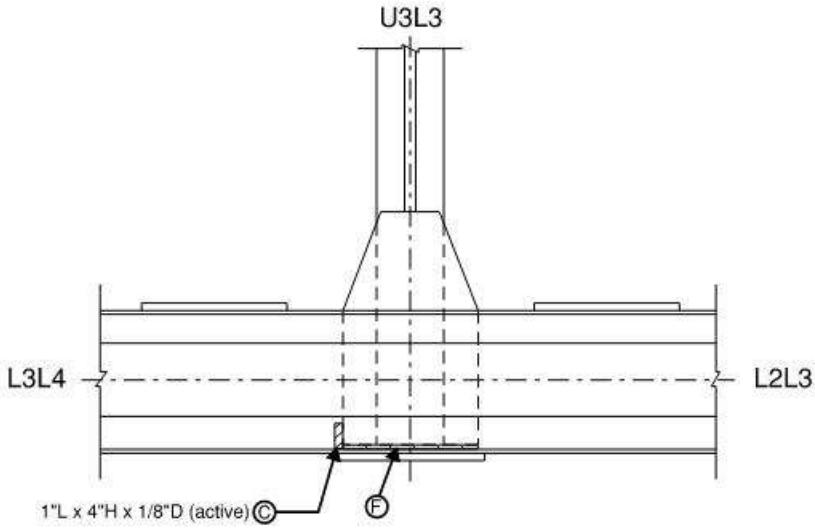

Span 30, South Truss, Node L3, South Gusset Plate, South Elevation

REVISION 1	DATE: 9/23/19	CREW: BH, JG (Baker)	REVISION 3	DATE:	CREW:
REVISION 2	DATE: 8/12/2021	CREW: CMR, NH (PRIME) - No Change	REVISION 4	DATE:	CREW:

CREW: SW, BF	DATE: 11/1/2017	BRIDGE NO.: 03819

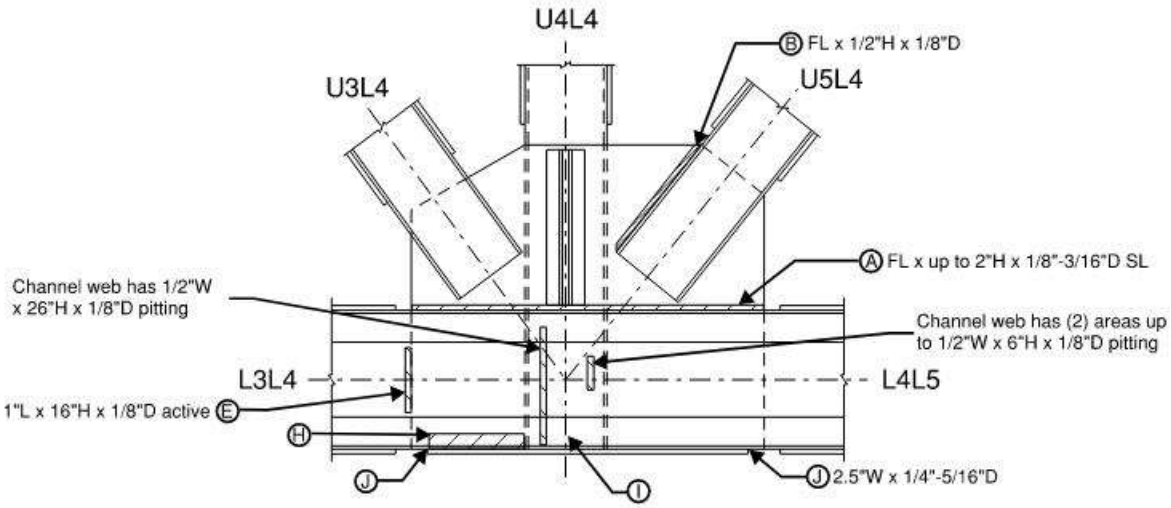

Span 30, South Truss, Node L4, North Gusset Plate, North Elevation

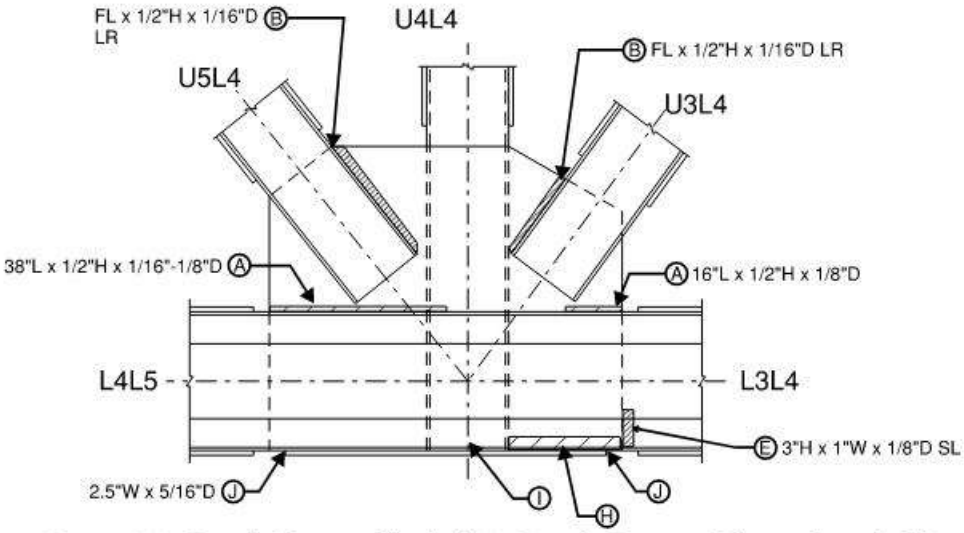

Span 30, South Truss, Node L4, South Gusset Plate, South Elevation

REVISION 1	DATE: 9/23/19	CREW: BH, JG (Baker)	REVISION 3	DATE:	CREW:
REVISION 2	DATE: 8/11/2021	CREW: CMR, NH (PRIME) - No Change	REVISION 4	DATE:	CREW:

CREW: SW, BF	DATE: 11/1/2017	BRIDGE NO.: 03819

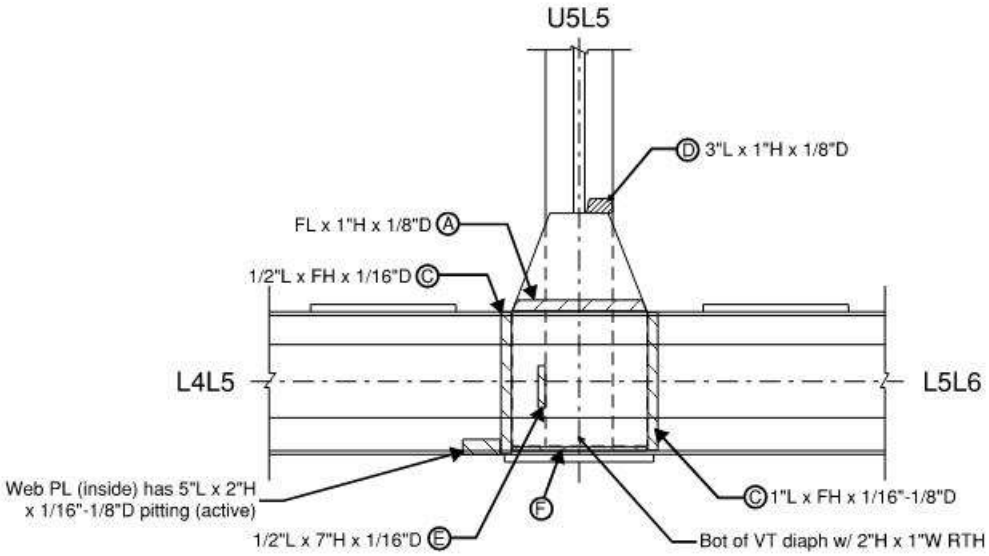

Span 30, South Truss, Node L5, North Gusset Plate, North Elevation

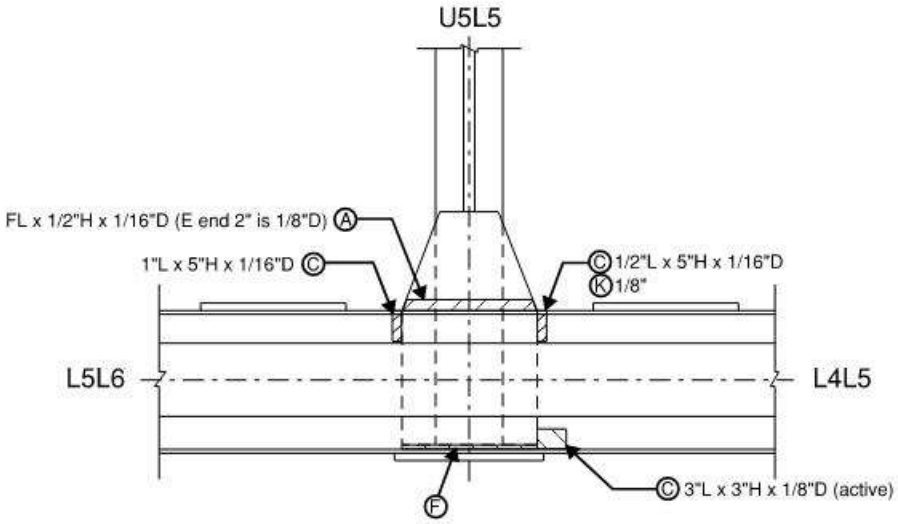

Span 30, South Truss, Node L5, South Gusset Plate, South Elevation

REVISION 1	DATE: 9/23/19	CREW: BH, JG (Baker)	REVISION 3	DATE:	CREW:
REVISION 2	DATE: 8/11/2021	CREW: CMR, NH (PRIME) - No Change	REVISION 4	DATE:	CREW:

CREW: SW, BF	DATE: 10/31/2017	BRIDGE NO.: 03819

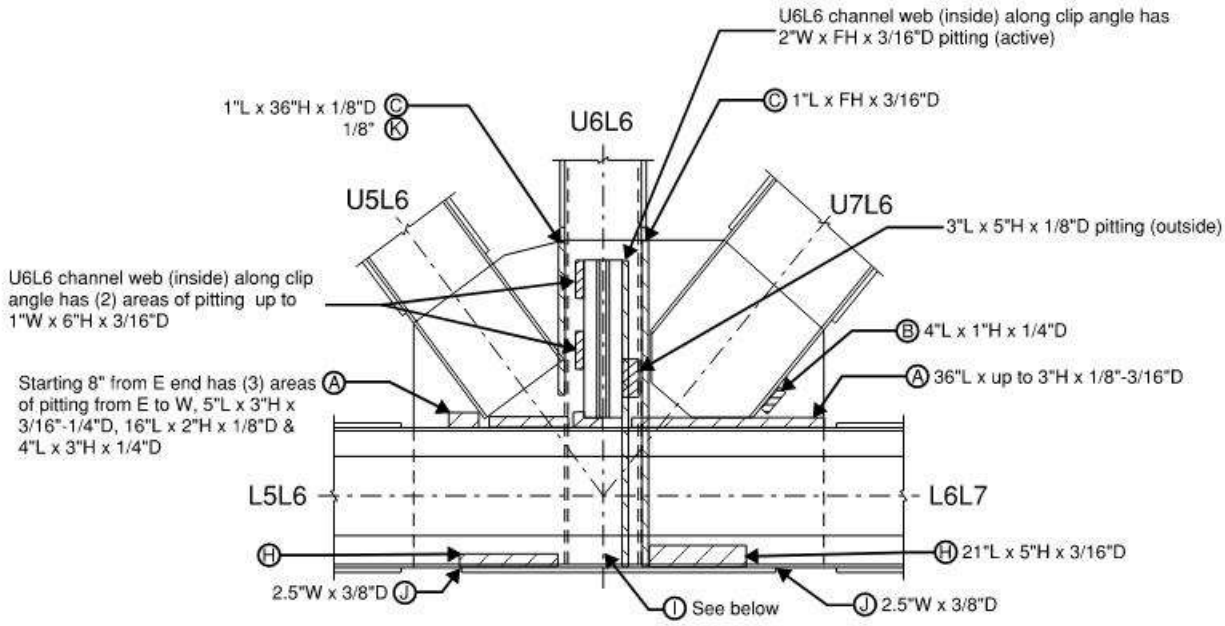

Span 30, South Truss, Node L6, North Gusset Plate, North Elevation

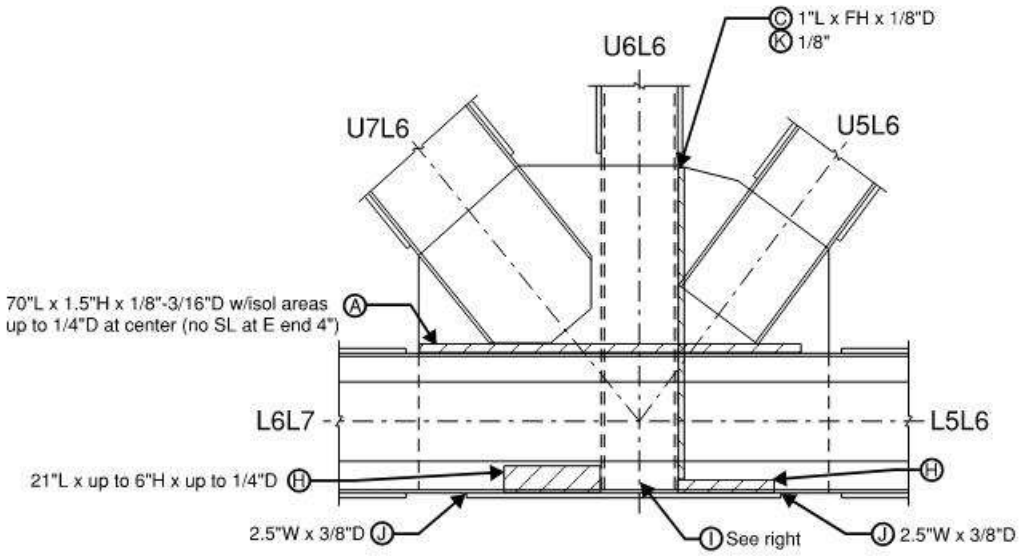

Note I:
- Vert stiff PL has FW x 4"H x 1/8" rem
- NE & SE channel legs have 2"H x 1/4" LOW
- NW & SW channel legs have 3"H x 1/4" LOW
- (8) R/H's have up to 75% SL

Span 30, South Truss, Node L6, South Gusset Plate, South Elevation

REVISION 1	DATE: 9/23/19	CREW: BH, JG (Baker)	REVISION 3	DATE:	CREW:
REVISION 2	DATE: 8/11/2021	CREW: CMR, NH (PRIME) - No Change	REVISION 4	DATE:	CREW:

CREW: SW, BF	DATE: 10/31/2017	BRIDGE NO.: 03819

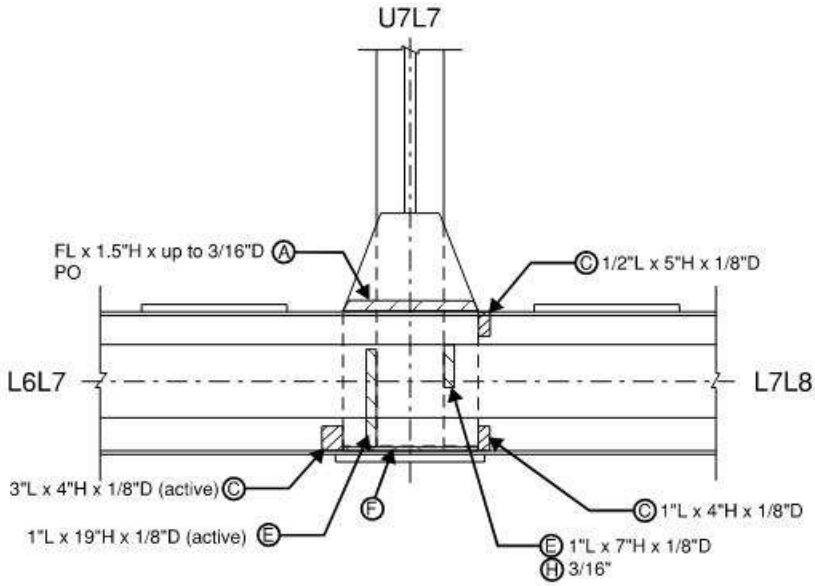

Span 30, South Truss, Node L7, North Gusset Plate, North Elevation

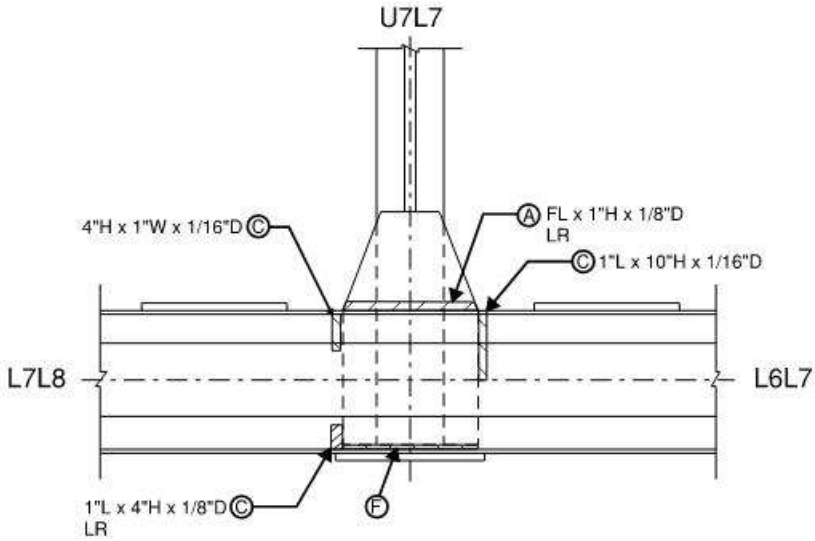

Span 30, South Truss, Node L7, South Gusset Plate, South Elevation

REVISION 1	DATE: 9/23/19	CREW: BH, JG (Baker)	REVISION 3	DATE:	CREW:
REVISION 2	DATE: 8/11/2021	CREW: CMR, NH (PRIME) - No Change	REVISION 4	DATE:	CREW:

CREW: SW, BF	DATE: 10/31/2017	BRIDGE NO.: 03819

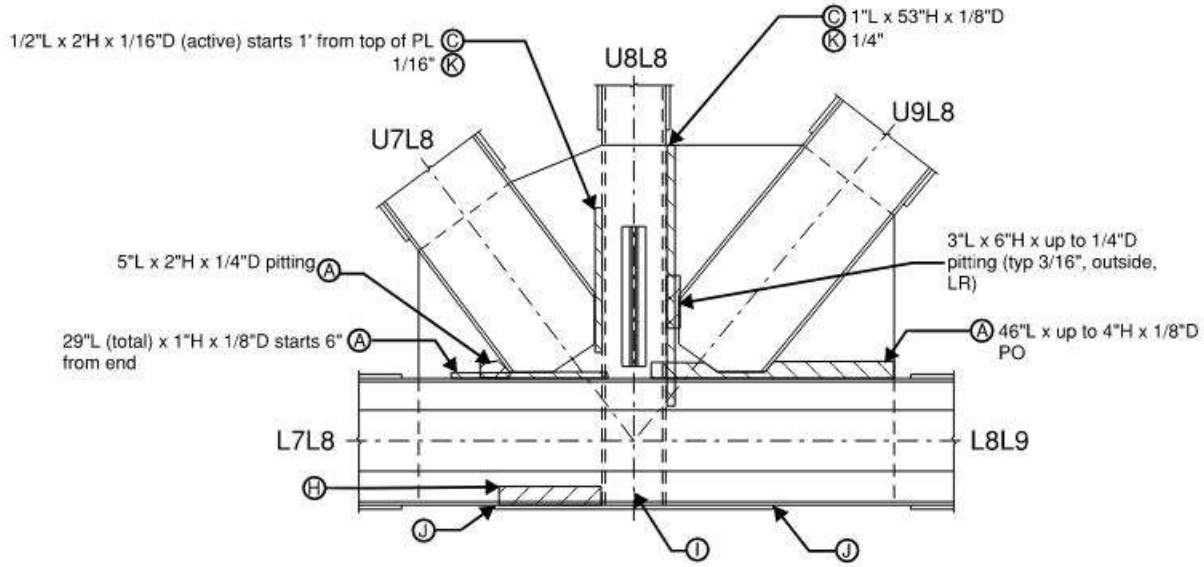

Span 30, South Truss, Node L8, North Gusset Plate, North Elevation

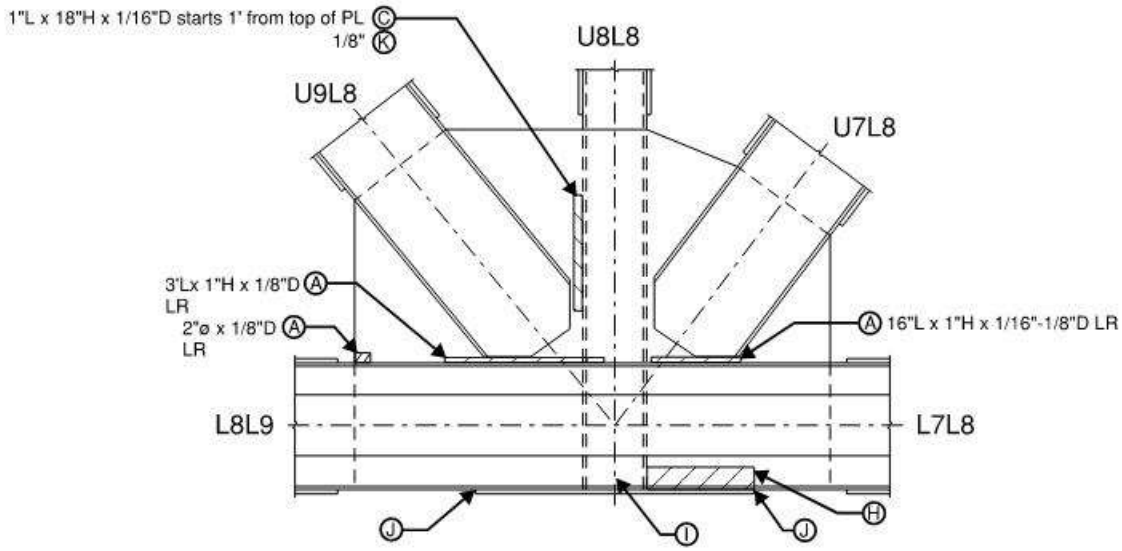

Span 30, South Truss, Node L8, South Gusset Plate, South Elevation

REVISION 1	DATE: 9/23/19	CREW: BH, JG (Baker)	REVISION 3	DATE:	CREW:
REVISION 2	DATE: 8/11/2021	CREW: CMR, NH (PRIME) - No Change	REVISION 4	DATE:	CREW:

CREW: SW, BF	DATE: 10/31/2017	BRIDGE NO.: 03819

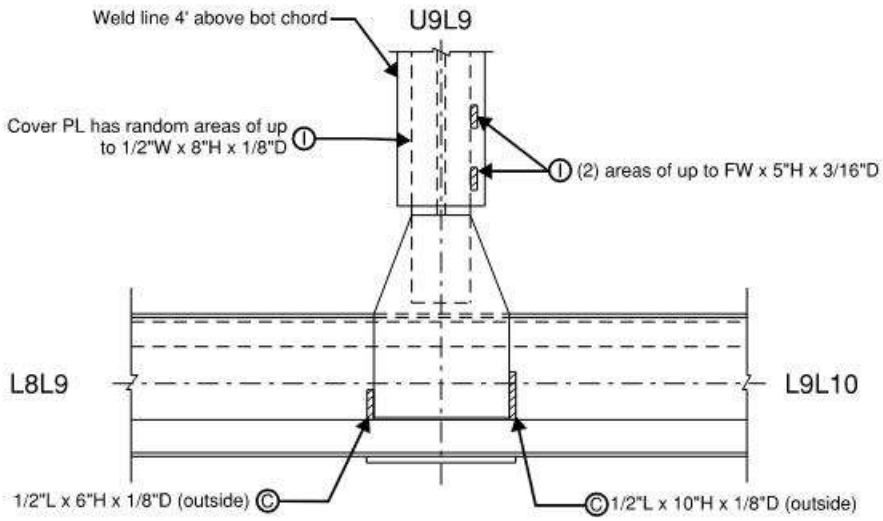

Span 30, South Truss, Node L9, North Gusset Plate, North Elevation

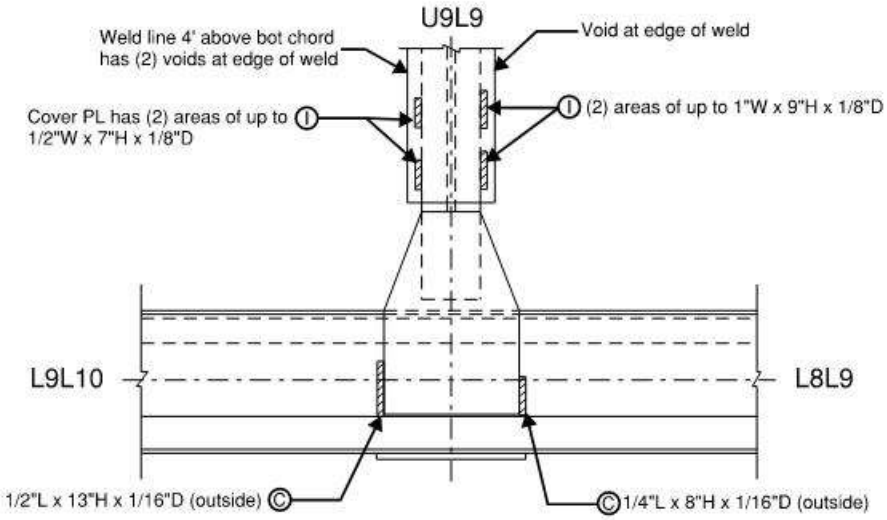

Span 30, South Truss, Node L9, South Gusset Plate, South Elevation

REVISION 1	DATE: 9/23/19	CREW: BH, JG (Baker) - No change	REVISION 3	DATE:	CREW:
REVISION 2	DATE: 8/11/2021	CREW: CMR, NH (PRIME) - No Change	REVISION 4	DATE:	CREW:

CREW: SW, BF	DATE: 10/31/2017	BRIDGE NO.: 03819

Deterioration Legend:

① - PR between top horiz gusset PL and bracing members up to __" thick
② - PR between bot horiz gusset PL and bracing members up to __" thick
③ - Pitting on top horiz gusset PL up to __" deep (none on this sheet)
④ - Pitting on bot horiz gusset PL up to __" deep
⑤ - Top gusset PL has (1) R/H w/50% SL
⑥ - Jacking diaphragm bot FL splice w/ (1) bolt sheared off at conn to old bracing top FL

LOG DIRECTION
WEST TO EAST

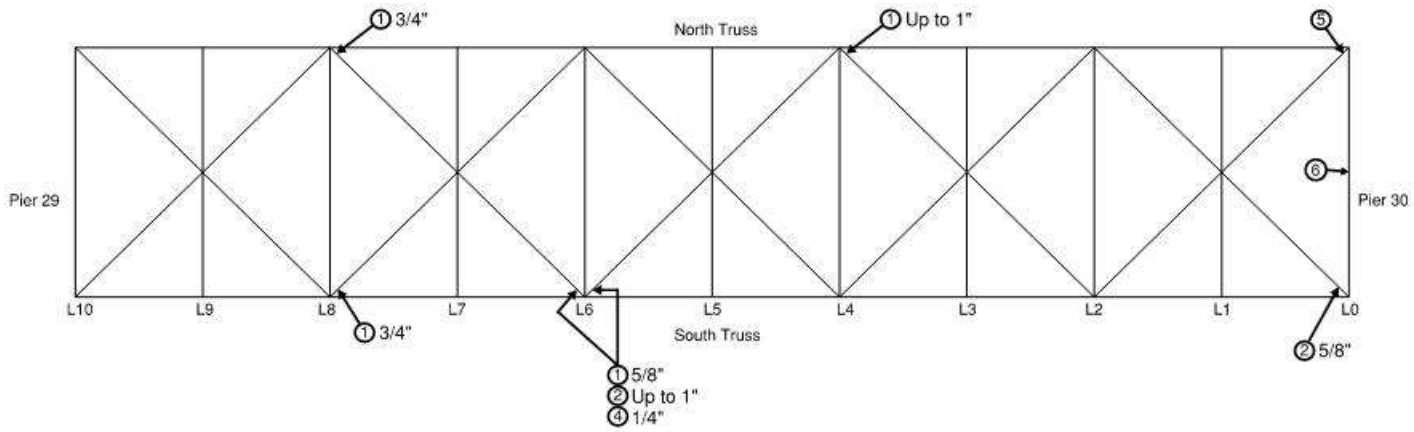

General Notes:
- See Lateral and Sway Bracing General Notes (Spans 22-25 & 29-32) sheet

Span 30 - Bottom Laterals

REVISION 1	DATE: 9/17/19	CREW: BH, JG (Baker)	REVISION 3	DATE:	CREW:
REVISION 2	DATE: 8/9/2021	CREW: CMR, NH (PRIME) - No Change	REVISION 4	DATE:	CREW:

Sketches
Inspection type: Fracture Critical,Routine
Inspection Date: 7/26/2021
Inspected by: PRIME AE

:Bridge No 03819

Town: NEW LONDON
Carried: INTERSTATE 95 NORTHBOUND
Crossed: THAMES RV,RR,LOCAL ROADS
Inventory Route: NHS

CREW: MJO, BF	DATE: 11/3/2017	BRIDGE NO.: 03819

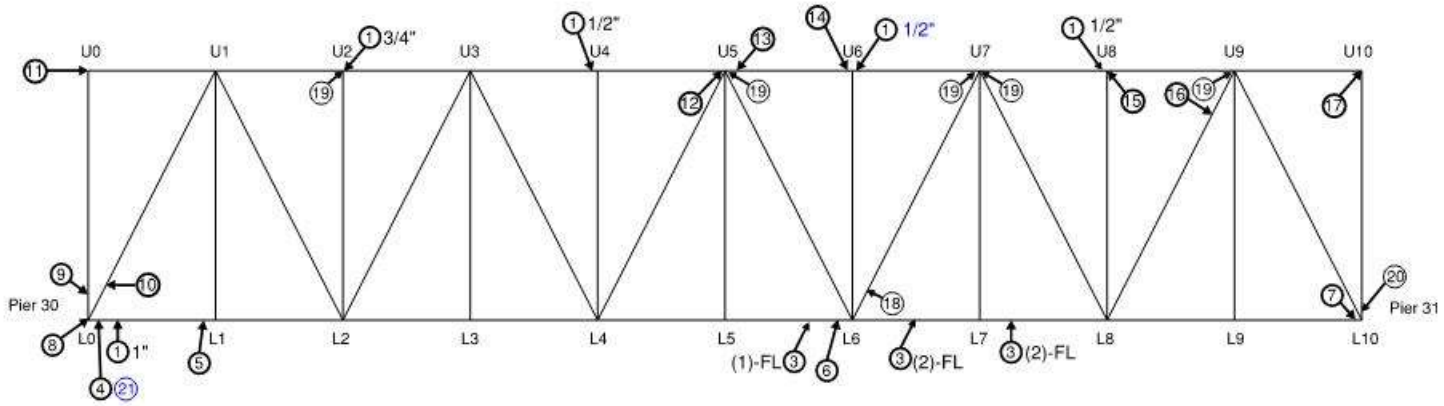

Deterioration Legend:

1 - PR between chord flange angles and web PL up to __" thick
2 - PR between chord flange angles and cover PL at edges up to __" thick (none on this sheet)
3 - Tack welds partially cracked or broken at lacing bar or batten PL and chord; (# per panel) and up to __" long
4 - Up to 3/4"PR between both web PL's and splice PL & N web PL along full panel length has up to 2"H x 1/4"D pitting
5 - Lacing bar has (1) missing rivet at lower, north angle
6 - Missing rivet between N bot flg angle and lacing bar
7 - Top of bot chord has 25% SL to R/H's ~~and ponding water inside brg~~ Dry
8 - Inside N channel web has 7"W x 3"H x 1/4"D pitting; NW channel flg has 7"H x FW x 1/4"D pitting; NE & SE channel flg's have 2"W x 12"H x 1/8"D SL at bot above bot chord inside node (less critical area)
9 - Inside S channel web has 4"W x 2"H x 1/4"D SL
10 - L0U1 N angle horiz leg has FW x 5/16" pitting and there is up to 3/8" PR between S & N PL's and bot angles
11 - Up to 1-3/8" PR between vert end web PL's & 1-1/2" PR b/w back to back stiffs inside
12 - Up to 1/2" PR between north BF splice PL and bot flg angle horiz leg
13 - Up to 7/8" PR between bot flg angle vert leg & fill PL at both sides
14 - Top chord to FB has (2) of (12) bolts missing
15 - Top flg (inside) conn to vert angle has (2) bolts short (3) threads
16 - Top batten PL has 1¼"ø cut-out
17 - Top chord to FB has (1) of (12) bolts backed off
18 - Batten PL tack weld at lower NW corner broken FL
19 - Tack weld b/w top of back to back stiffeners and top clip angle broken
20 - (2) broken vertical tack welds between sway bracing channel and fill PL's
21 - See Detail Sketch

General Notes:
- See Riveted Truss General Notes (Spans 22-25 & 29-32) sheet
- See following gusset plate sheets for bottom chord gusset plate details

Span 31 - North Truss South Elevation

REVISION 1	DATE: 9/17/19	CREW: BH, JG (Baker)	REVISION 3	DATE:	CREW:
REVISION 2	DATE: 8/18/2021	CREW: CMR, NR, EB, NH, IS (PRIME)	REVISION 4	DATE:	CREW:

Sketches
Inspection type: Fracture Critical,Routine
Inspection Date: 7/26/2021
Inspected by: PRIME AE

:Bridge No 03819

Town: NEW LONDON
Carried: INTERSTATE 95 NORTHBOUND
Crossed: THAMES RV,RR,LOCAL ROADS
Inventory Route: NHS

CREW: CMR, NH (PRIME)	DATE: 8/18/2021	BRIDGE NO.: 03819

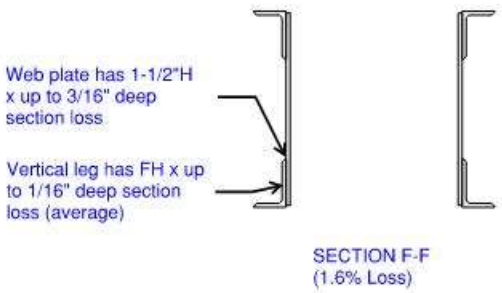

A - 38"L x 1-1/2"H x 0.289" REM (3/16"DP Maximum section loss)
B - 7"L x 5-1/4"H x 0.679" REM (Avg. 1/16" DP section loss)
C - 13"L x 1"H x 0.212" REM
D - 13"L x 2"H x 0.330" REM
E - 2 - 1/2" x 3"H x 0.281" REM

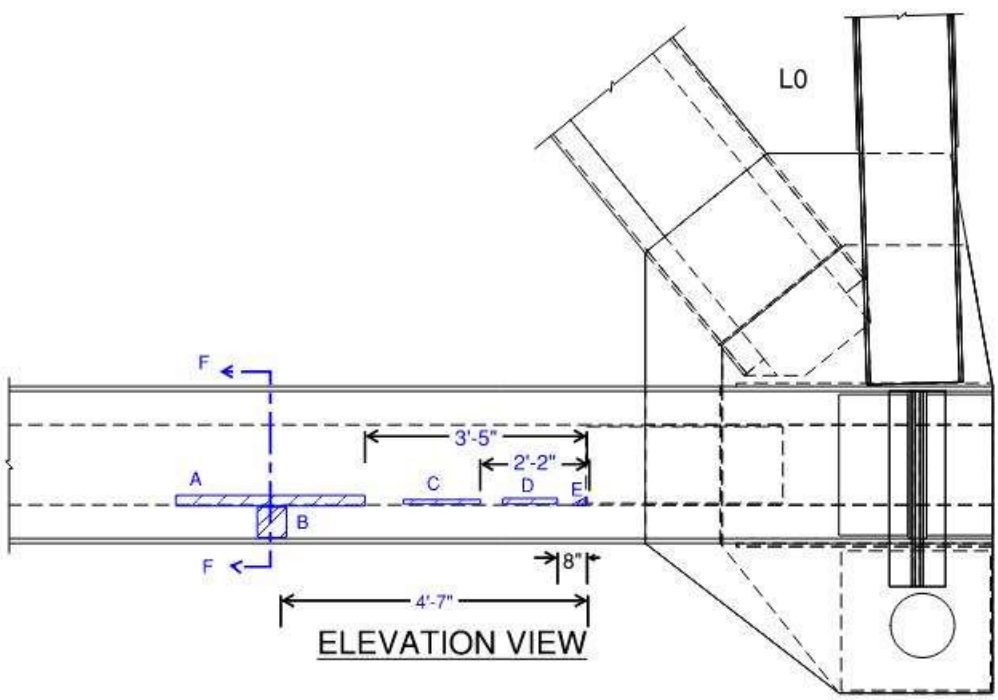

SPAN 31, NORTH TRUSS, MEMBER L0L1, NORTH ELEVATION

REVISION 1	DATE:	CREW:	REVISION 3	DATE:	CREW:
REVISION 2	DATE:	CREW:	REVISION 4	DATE:	CREW:

CREW: SW, BF	DATE: 10/23/2017	BRIDGE NO.: 03819

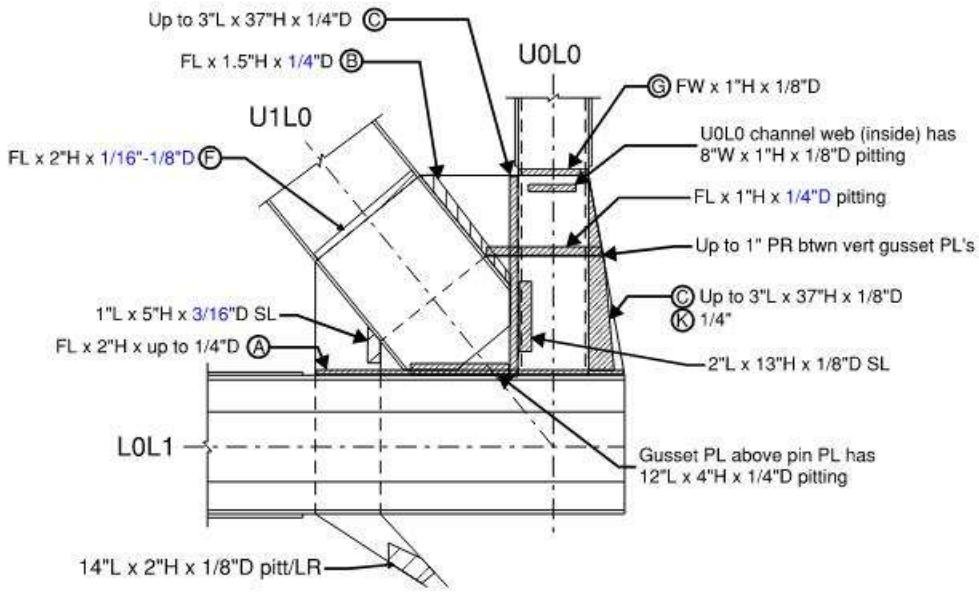

Span 31, North Truss, Node L0, North Gusset Plate, North Elevation

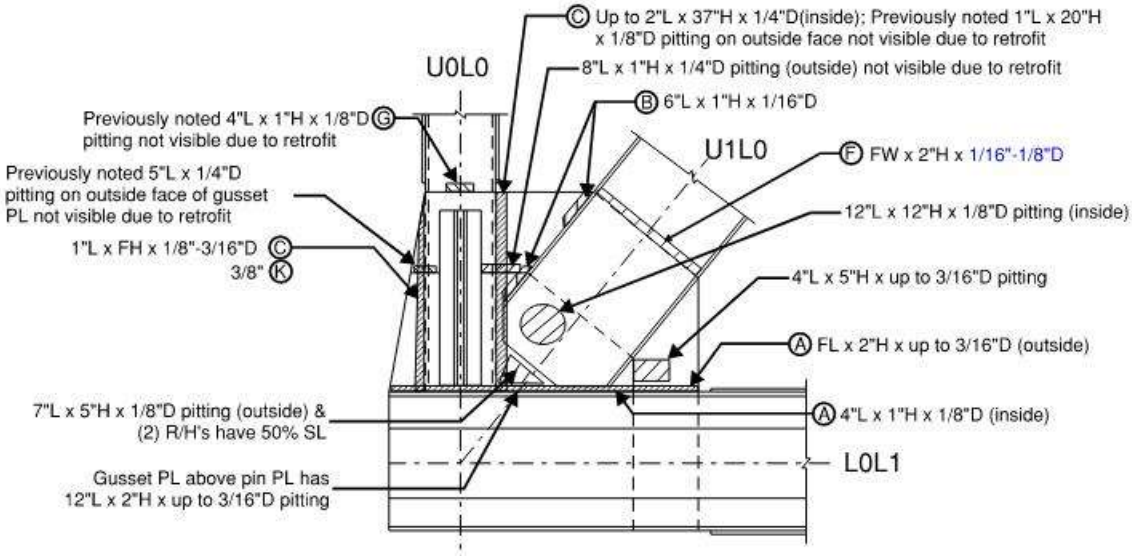

Note:
- Most SL's are active

Span 31, North Truss, Node L0, South Gusset Plate, South Elevation

REVISION 1	DATE: 9/17/19	CREW: BH, JG (Baker)	REVISION 3	DATE:	CREW:
REVISION 2	DATE: 8/18/2021	CREW: CMR, NH (PRIME)	REVISION 4	DATE:	CREW:

CREW: SW, BF	DATE: 11/2/2017	BRIDGE NO.: 03819

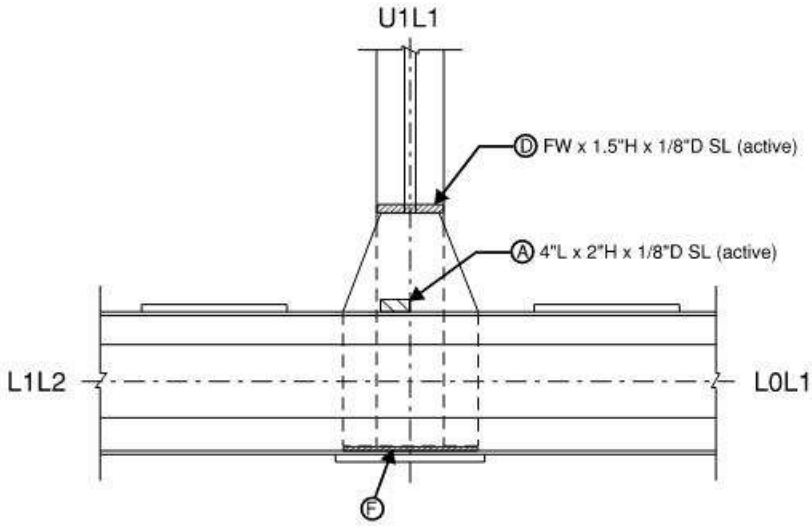

Span 31, North Truss, Node L1, North Gusset Plate, North Elevation

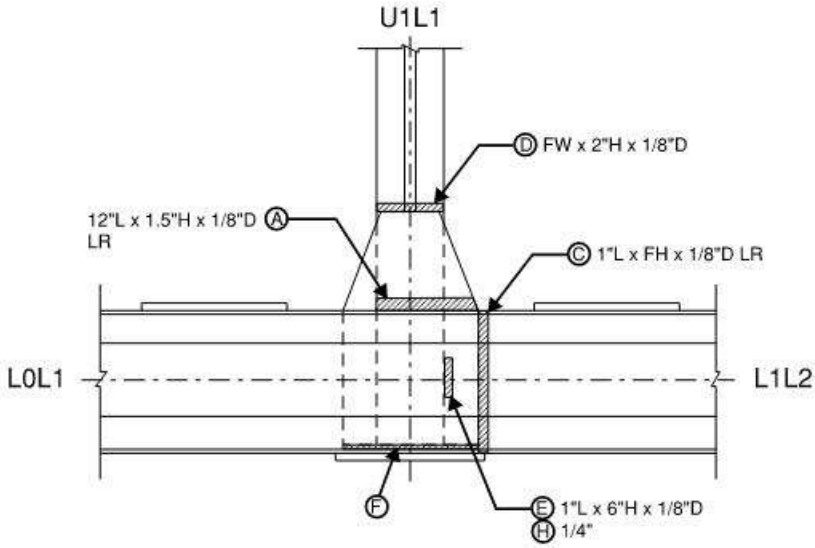

Span 31, North Truss, Node L1, South Gusset Plate, South Elevation

REVISION 1	DATE: 9/17/19	CREW: BH, JG (Baker)	REVISION 3	DATE:	CREW:
REVISION 2	DATE: 8/18/2021	CREW: CMR, NH (PRIME) - No Change	REVISION 4	DATE:	CREW:

CREW: SW, BF	DATE: 11/2/2017	BRIDGE NO.: 03819

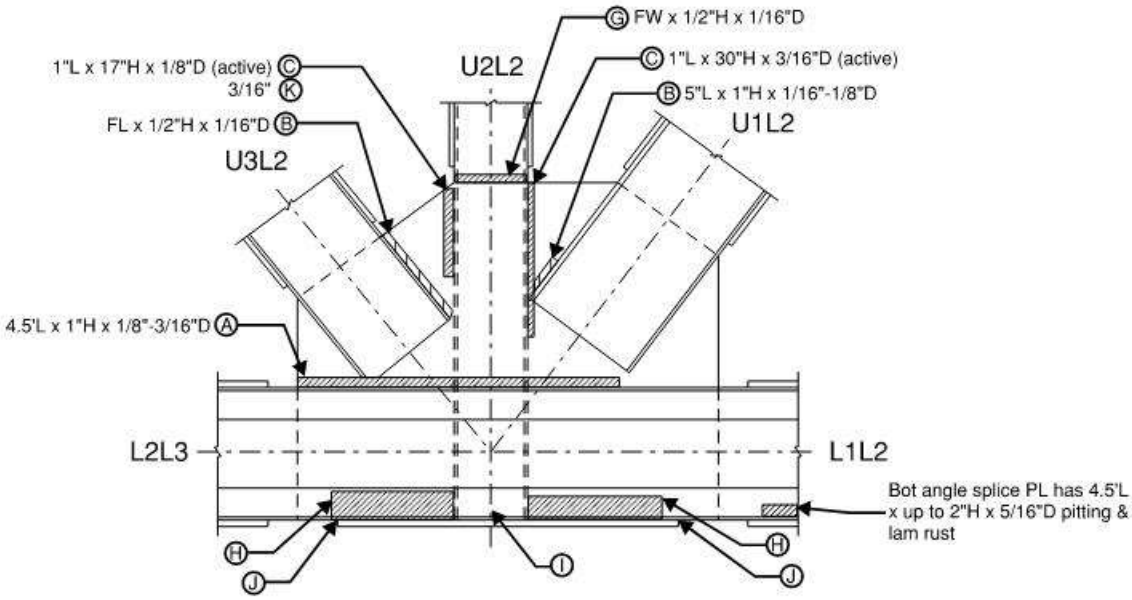

Span 31, North Truss, Node L2, North Gusset Plate, North Elevation

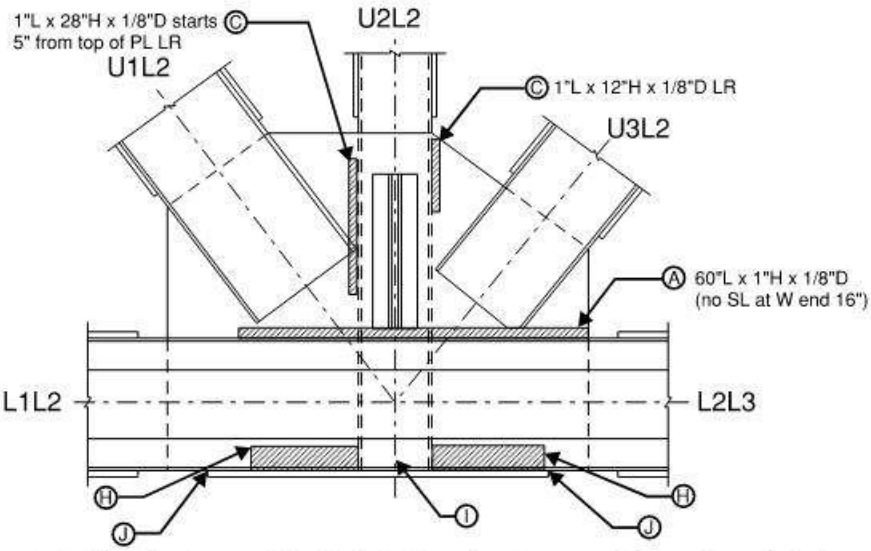

Note:
- Most SL's are ~~not~~ active

Span 31, North Truss, Node L2, South Gusset Plate, South Elevation

REVISION 1	DATE: 9/17/19	CREW: BH, JG (Baker)	REVISION 3	DATE:	CREW:
REVISION 2	DATE: 9/22/2021	CREW: NR, EB (PRIME)	REVISION 4	DATE:	CREW:

CREW: SW, BF	DATE: 11/2/2017	BRIDGE NO.: 03819

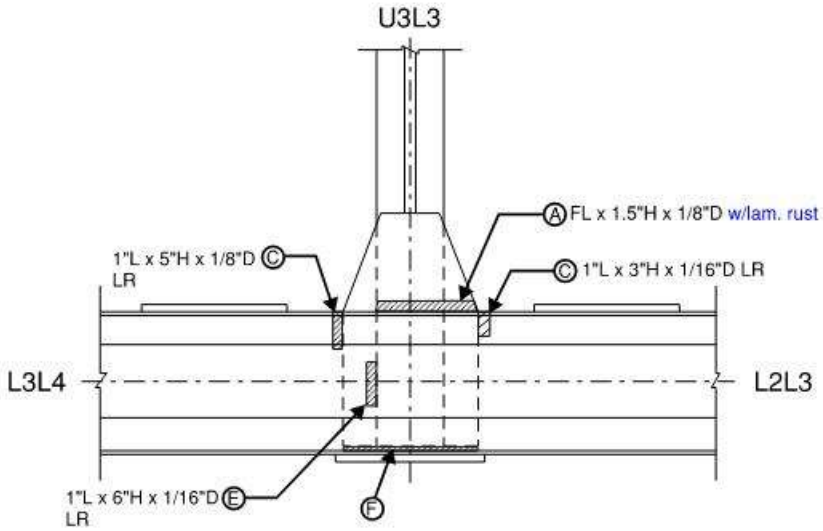

Span 31, North Truss, Node L3, North Gusset Plate, North Elevation

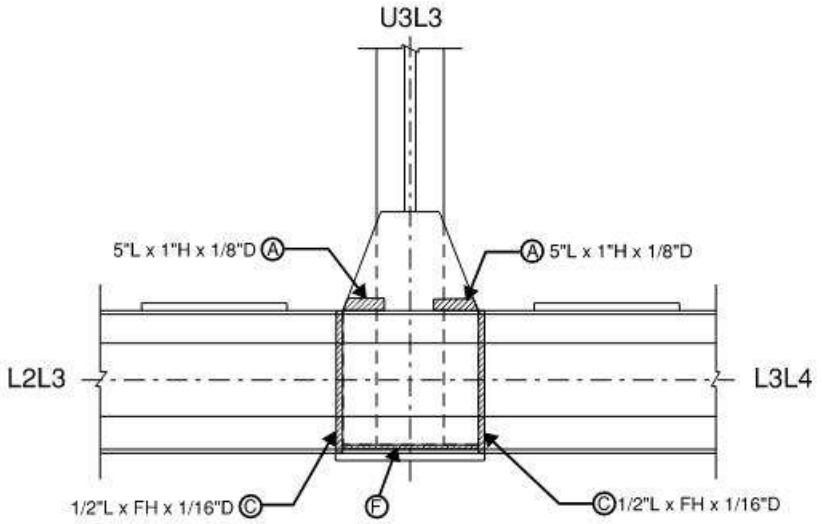

Span 31, North Truss, Node L3, South Gusset Plate, South Elevation

REVISION 1	DATE: 9/18/19	CREW: BH, JG (Baker)	REVISION 3	DATE:	CREW:
REVISION 2	DATE: 9/22/2021	CREW: NR, EB (PRIME)	REVISION 4	DATE:	CREW:

Sketches
Inspection type: Fracture Critical,Routine
Inspection Date: 7/26/2021
Inspected by: PRIME AE

:Bridge No 03819

Town: NEW LONDON
Carried: INTERSTATE 95 NORTHBOUND
Crossed: THAMES RV,RR,LOCAL ROADS
Inventory Route: NHS

CREW: SW, BF	DATE: 11/2/2017	BRIDGE NO.: 03819

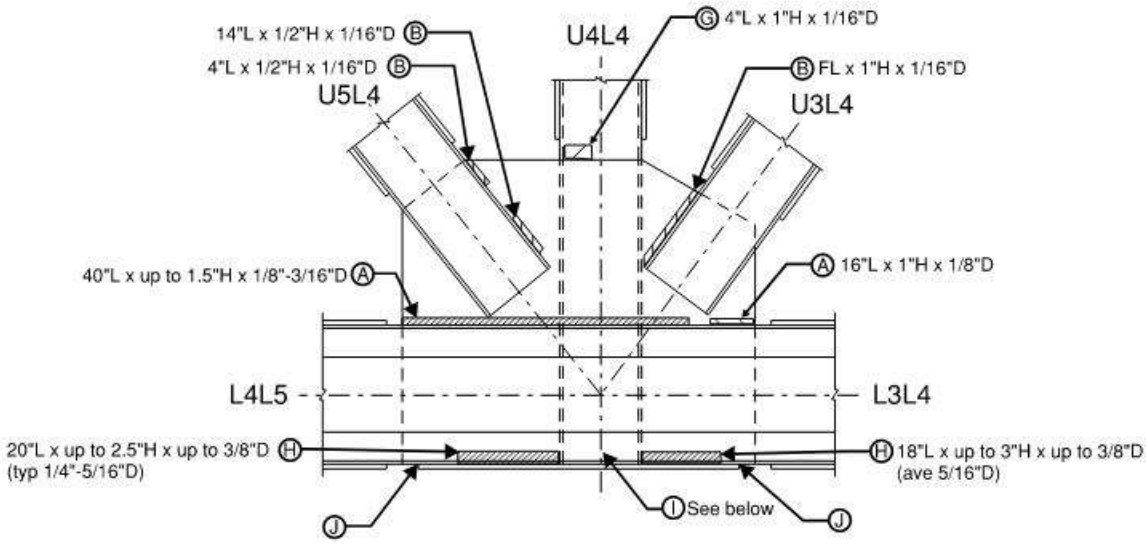

Span 31, North Truss, Node L4, North Gusset Plate, North Elevation

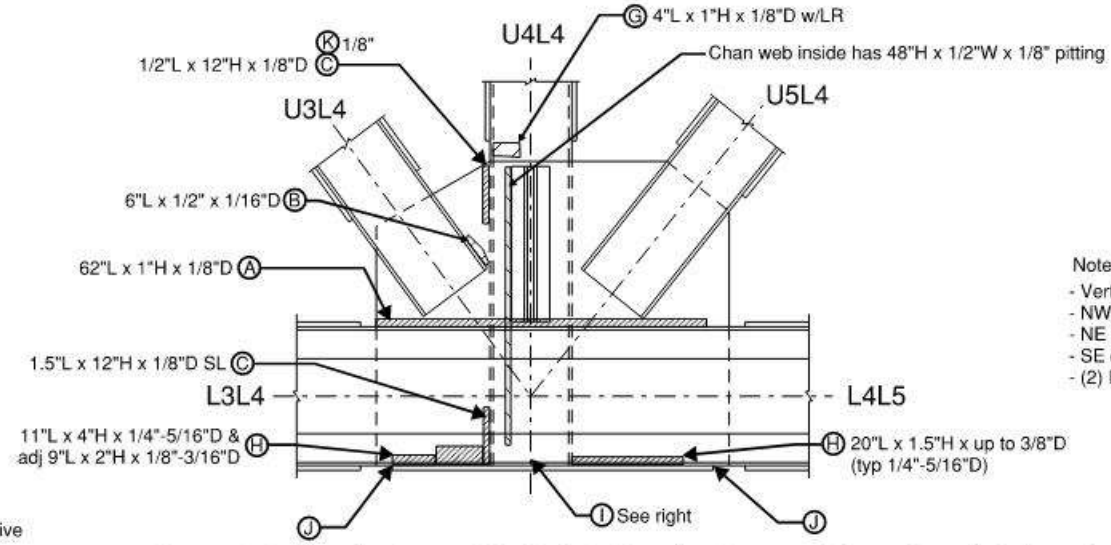

Note (I):
- Vert stiff PL has 9"W x 4"H RTH
- NW & SW channel legs have 3"H x 1" LOW
- NE channel leg has 2"H x 1/2" LOW
- SE channel leg has 1/2"ø RTH
- (2) R/H's have 90% SL

Note:
- Most SL's are active

Span 31, North Truss, Node L4, South Gusset Plate, South Elevation

REVISION 1	DATE: 9/18/19	CREW: BH, JG (Baker)	REVISION 3	DATE:	CREW:
REVISION 2	DATE: 9/22/2021	CREW: NR, EB (PRIME) - No Change	REVISION 4	DATE:	CREW:

CREW: SW, BF	DATE: 11/2/2017	BRIDGE NO.: 03819

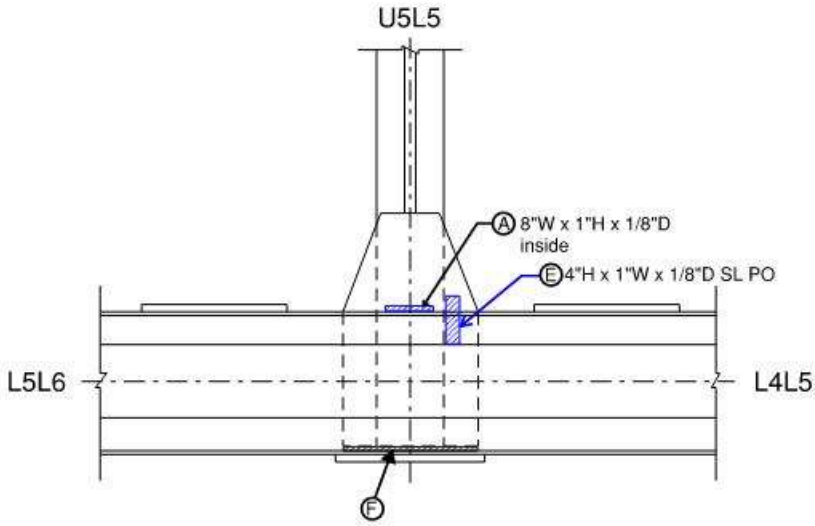

Span 31, North Truss, Node L5, North Gusset Plate, North Elevation

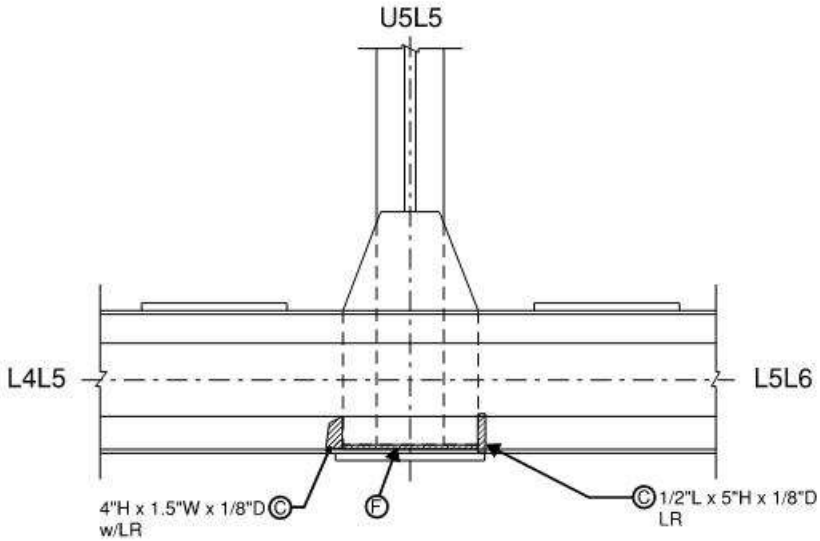

Span 31, North Truss, Node L5, South Gusset Plate, South Elevation

REVISION 1	DATE: 9/18/19	CREW: BH, JG (Baker)	REVISION 3	DATE:	CREW:
REVISION 2	DATE: 9/22/2021	CREW: NR, EB (PRIME)	REVISION 4	DATE:	CREW:

CREW: SW, BF	DATE: 11/2/2017	BRIDGE NO.: 03819

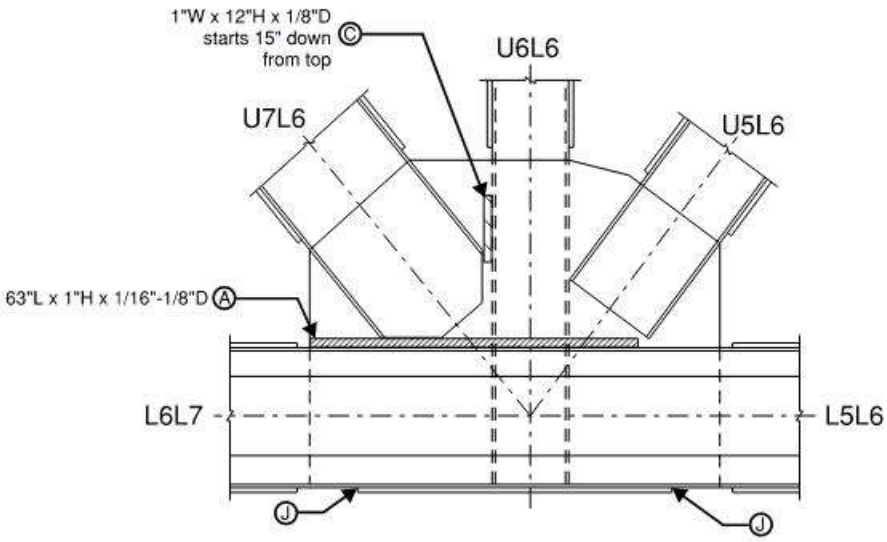

Span 31, North Truss, Node L6, North Gusset Plate, North Elevation

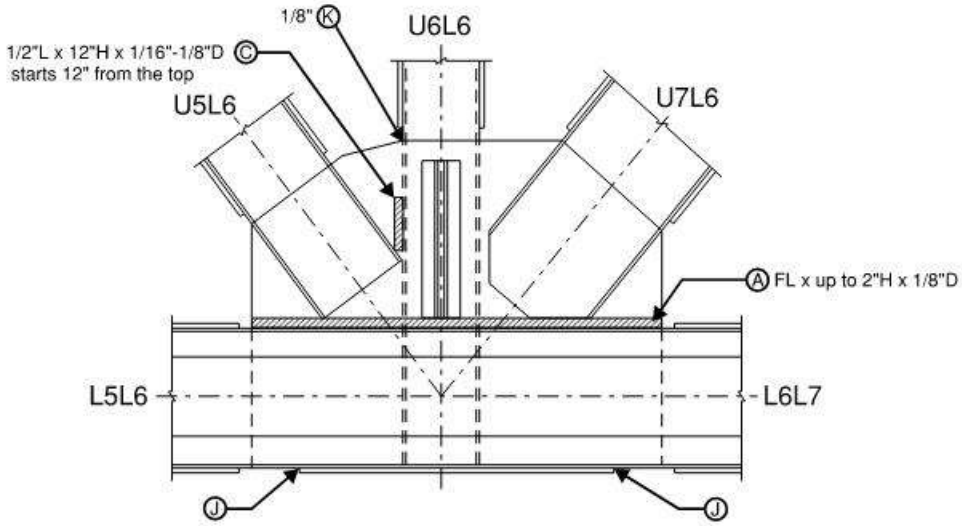

Span 31, North Truss, Node L6, South Gusset Plate, South Elevation

REVISION 1	DATE: 9/18/19	CREW: BH, JG (Baker)	REVISION 3	DATE:	CREW:
REVISION 2	DATE: 9/23/2021	CREW: NR, EB (PRIME) - No Change	REVISION 4	DATE:	CREW:

CREW: SW, BF	DATE: 11/2/2017	BRIDGE NO.: 03819

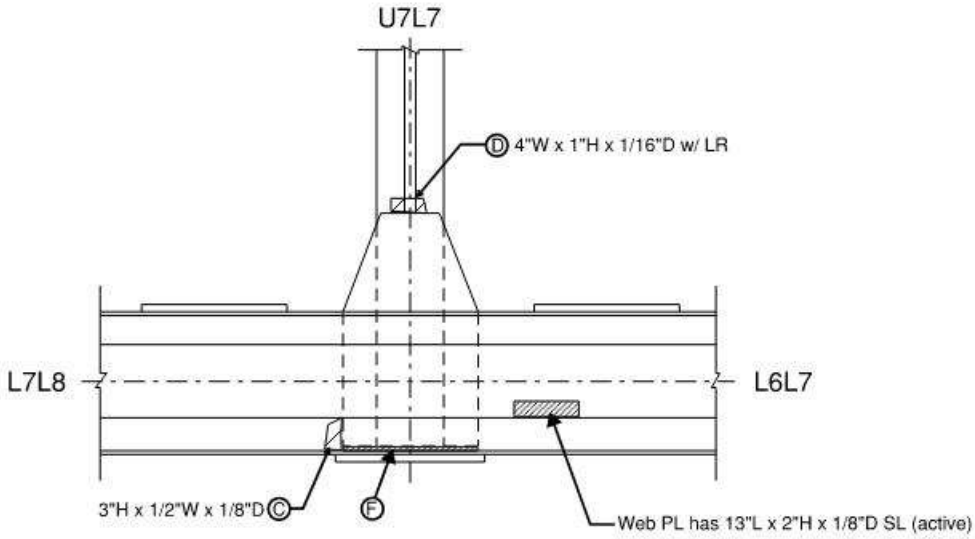

Span 31, North Truss, Node L7, North Gusset Plate, North Elevation

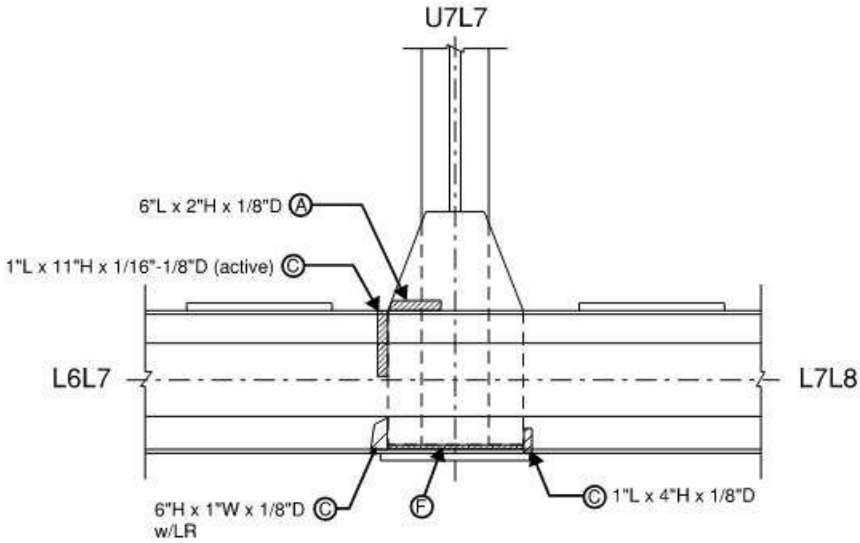

Span 31, North Truss, Node L7, South Gusset Plate, South Elevation

REVISION 1	DATE: 9/18/19	CREW: BH, JG (Baker)	REVISION 3	DATE:	CREW:
REVISION 2	DATE: 9/23/2021	CREW: NR, EB (PRIME) - No Change	REVISION 4	DATE:	CREW:

CREW: SW, BF	DATE: 11/8/2017	BRIDGE NO.: 03819

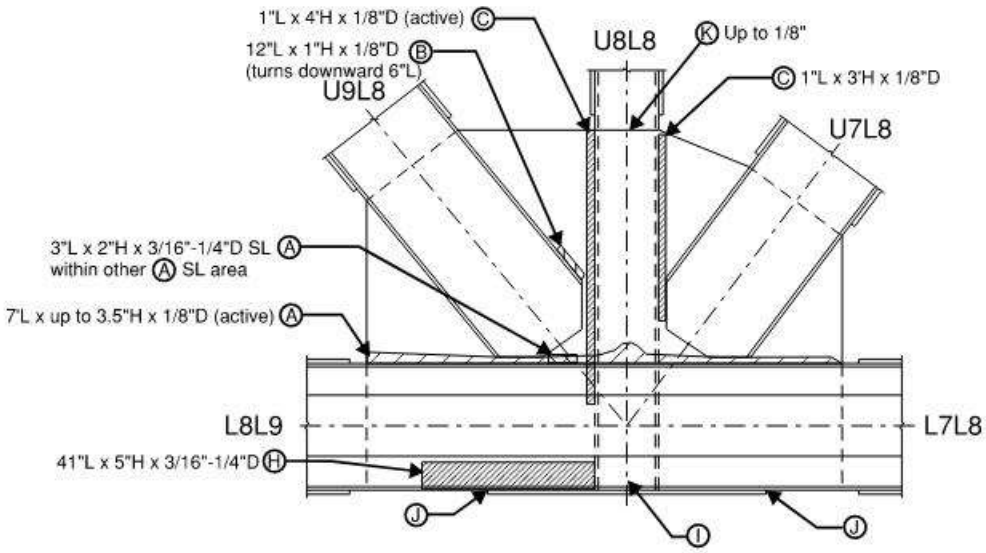

Span 31, North Truss, Node L8, North Gusset Plate, North Elevation

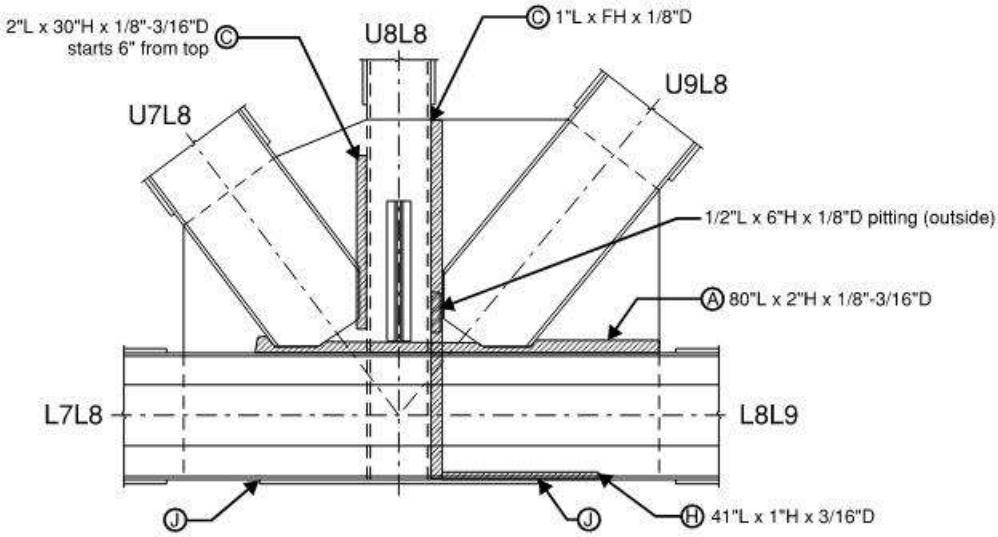

Span 31, North Truss, Node L8, South Gusset Plate, South Elevation

REVISION 1	DATE: 9/18/19	CREW: BH, JG (Baker)	REVISION 3	DATE:	CREW:
REVISION 2	DATE: 10/18/2021	CREW: NR, IS (PRIME) - No Change	REVISION 4	DATE:	CREW:

CREW: SW, BF	DATE: 11/2/2017	BRIDGE NO.: 03819

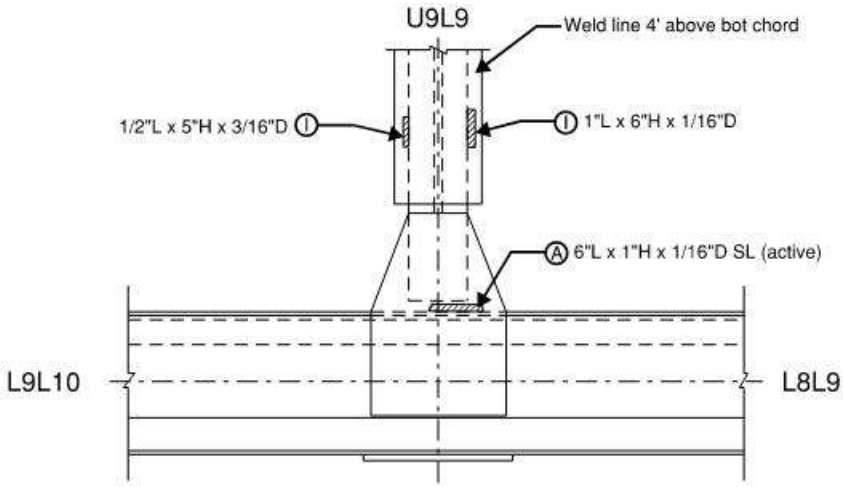

Span 31, North Truss, Node L9, North Gusset Plate, North Elevation

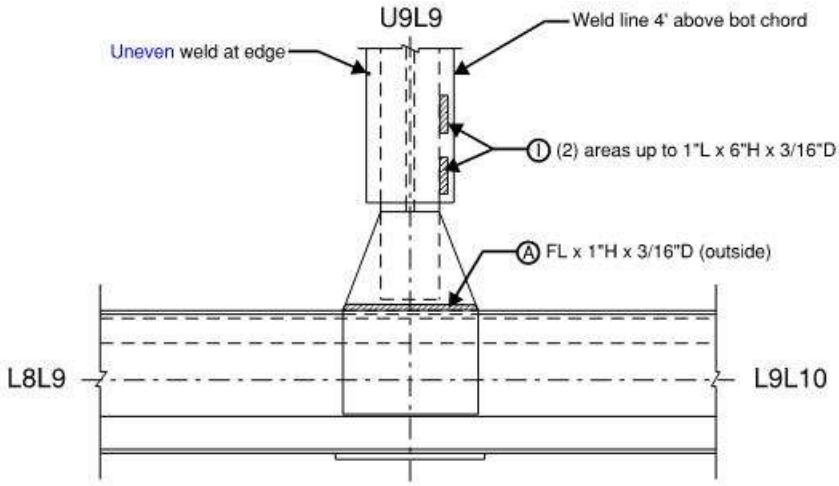

Span 31, North Truss, Node L9, South Gusset Plate, South Elevation

REVISION 1	DATE: 9/18/19	CREW: BH, JG (Baker) - No change	REVISION 3	DATE:	CREW:
REVISION 2	DATE: 9/23/2021	CREW: NR, EB (PRIME)	REVISION 4	DATE:	CREW:

CREW: SW, BF	DATE: 11/2/2017	BRIDGE NO.: 03819

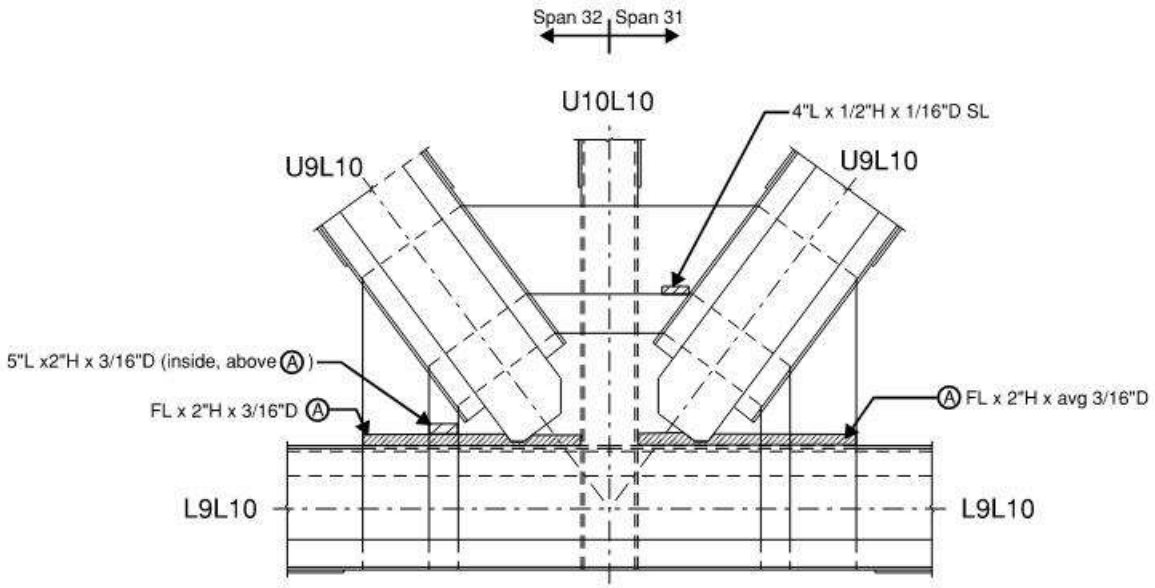

Span 31, North Truss, Node L10, North Gusset Plate, North Elevation

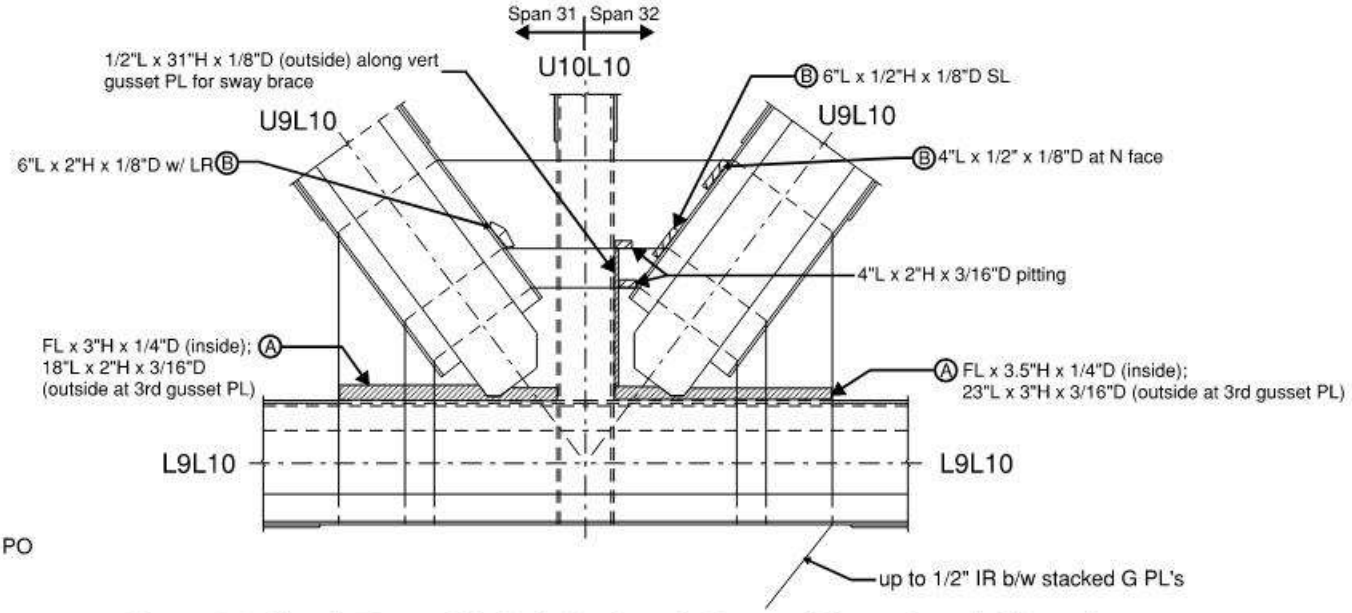

Note:
- Losses typ PO

Span 31, North Truss, Node L10, South Gusset Plate, South Elevation

REVISION 1	DATE: 9/18/19	CREW: BH, JG (Baker)	REVISION 3	DATE:	CREW:
REVISION 2	DATE: 9/23/2021	CREW: NR, EB (PRIME) - No Change	REVISION 4	DATE:	CREW:

CREW: SW, BF	DATE: 11/8/2017	BRIDGE NO.: 03819

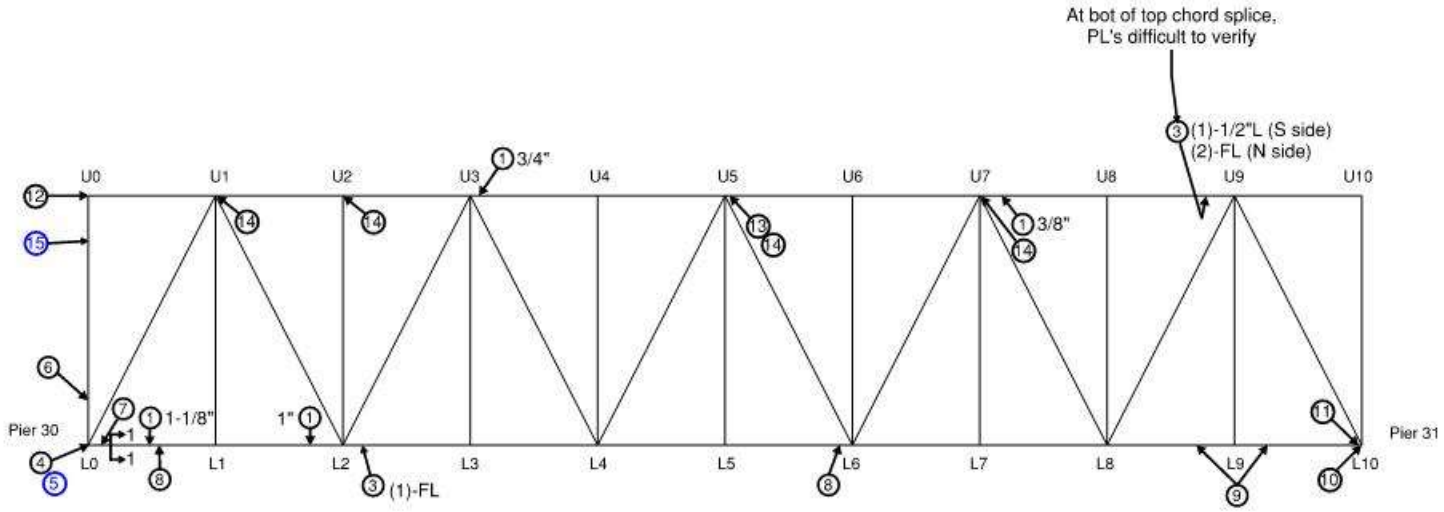

Deterioration Legend:

1. PR between chord flange angles and web PL up to __" thick
2. PR between chord flange angles and cover PL at edges up to __" thick (none on this sheet)
3. Tack welds partially cracked or broken at lacing bar or batten PL and chord; (# per panel) and up to __" long
4. Pin PL's have random areas of SL up to 1/8"D
5. Brg, S. pin cov PL has 1/4"IR and adj VT brg PL has up to 3"W x 1/8"D pitting adj to cover
6. S & N channel both flg's have FW x 1/8"D SL above batten PL
7. 1/4" PR between web PL and splice PL
8. Missing rivet between bot flg angle and lacing bar
9. S web PL above bot flg angle vert leg has random areas of SL up to 4"H x 1/8"D SL/LR
10. Mas PL at the SW corner is undermined 2" x 2" and NW corner is undermined 3" x 3" (both areas are triangular shaped)
11. Top cover PL has 2"ø x 5/16"D pitting and (6) R/H's have up to 25% SL
12. Up to 1" PR between web PL's at end & VT back to back angles
13. Top chord angle conn to lat brace gusset PL has (1 of 6) R/H's sheared/broken off
14. Broken tack weld between top of vert back-to-back angles and top chord seat angle (inside)
15. VT chan west legs w/ 3"W x 1/8" to 3/16"D SL/LR below VT G PL

General Notes:
- See Riveted Truss General Notes (Spans 22-25 & 29-32) sheet
- See following gusset plate sheets for bottom chord gusset plate details

Span 31 - South Truss South Elevation

REVISION 1	DATE: 9/13/19	CREW: BH, JG (Baker)	REVISION 3	DATE:	CREW:
REVISION 2	DATE: 9/21/2021	CREW: NR, NH (PRIME)	REVISION 4	DATE:	CREW:

Sketches
Inspection type: Fracture Critical,Routine
Inspection Date: 7/26/2021
Inspected by: PRIME AE

:Bridge No 03819

Town: NEW LONDON
Carried: INTERSTATE 95 NORTHBOUND
Crossed: THAMES RV,RR,LOCAL ROADS
Inventory Route: NHS

CREW: SW, BF	DATE: 11/8/2017	BRIDGE NO.: 03819

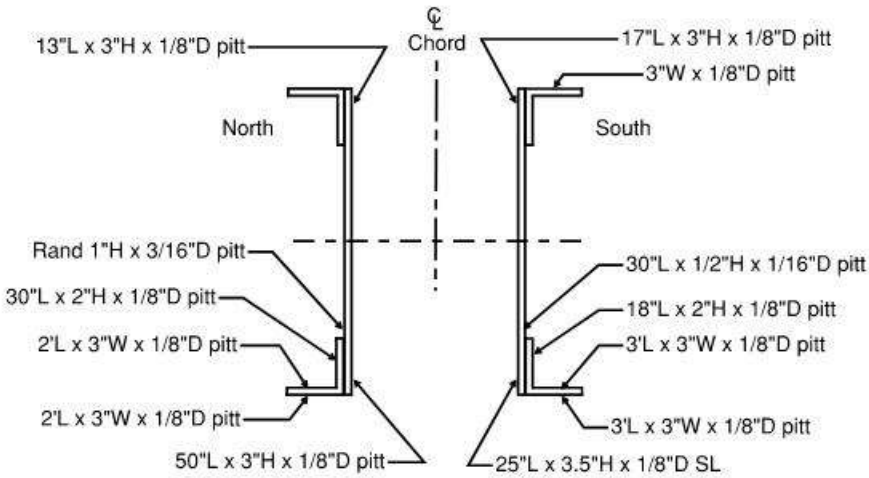

Section 1-1 (L1-L0)

(6.3% Loss)

- LR at all locations U.O.N.

Span 31 - South Truss Section Loss

REVISION 1	DATE: 9/13/19	CREW: BH, JG (Baker)	REVISION 3	DATE:	CREW:
REVISION 2	DATE: 9/21/2021	CREW: NR, NH (PRIME) - No Change	REVISION 4	DATE:	CREW:

Sketches
Inspection type: Fracture Critical,Routine
Inspection Date: 7/26/2021
Inspected by: PRIME AE

:Bridge No 03819

Town: NEW LONDON
Carried: INTERSTATE 95 NORTHBOUND
Crossed: THAMES RV,RR,LOCAL ROADS
Inventory Route: NHS

CREW: SW, BF	DATE: 11/1/2017	BRIDGE NO.: 03819

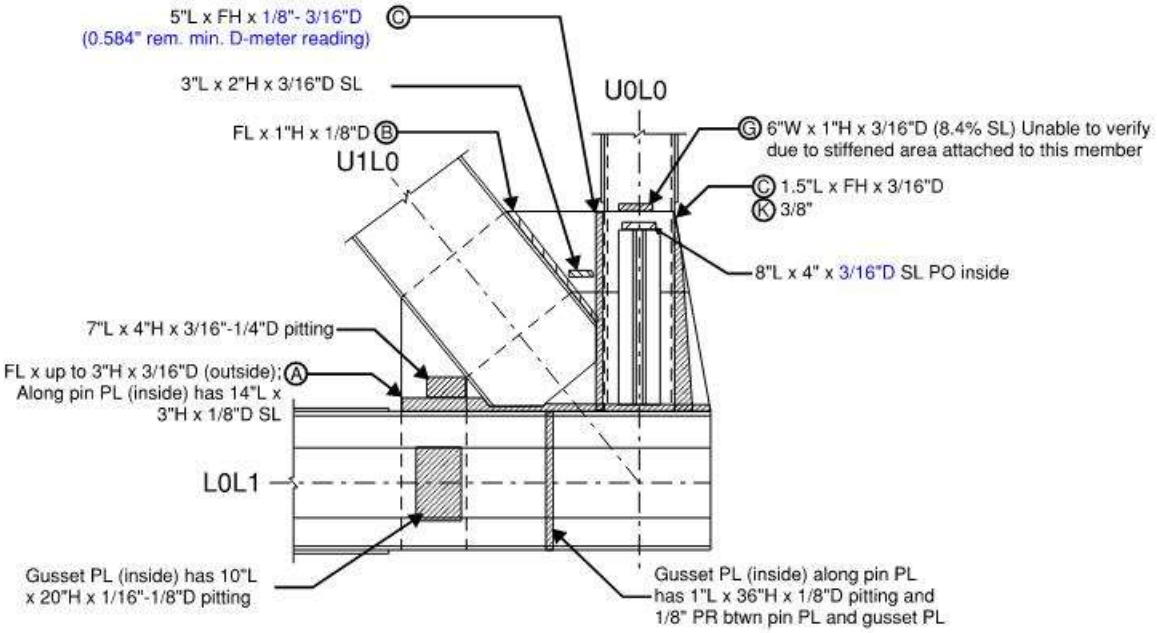

Span 31, South Truss, Node L0, North Gusset Plate, North Elevation

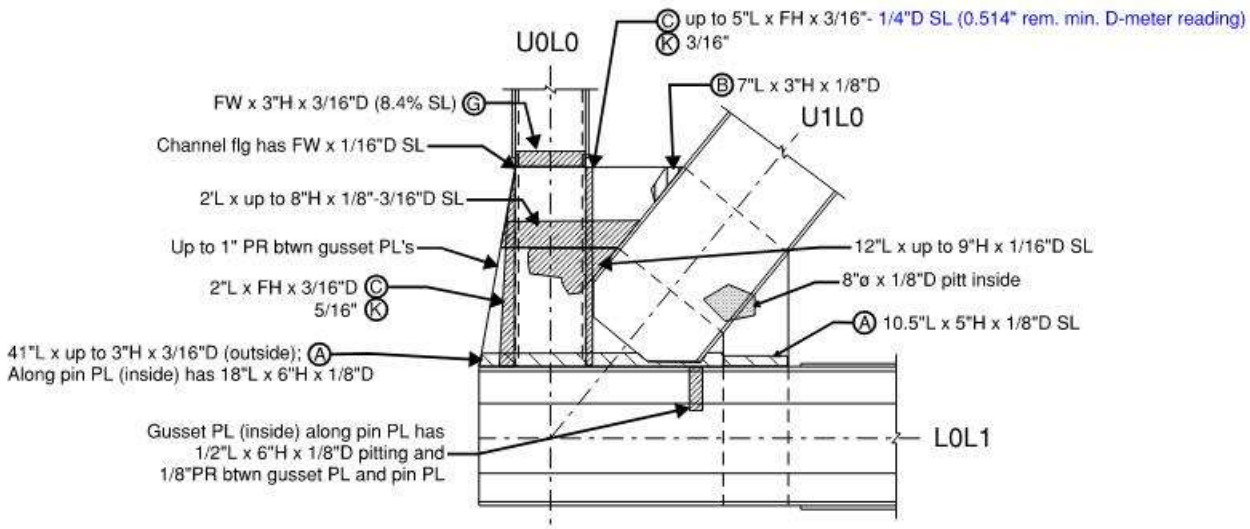

Note:
- Most SL's are active

Span 31, South Truss, Node L0, South Gusset Plate, South Elevation

REVISION 1	DATE: 9/13/19	CREW: BH, JG (Baker)	REVISION 3	DATE:	CREW:
REVISION 2	DATE: 9/21/2021	CREW: NR, NH (PRIME)	REVISION 4	DATE:	CREW:

CREW: SW, BF	DATE: 11/1/2017	BRIDGE NO.: 03819

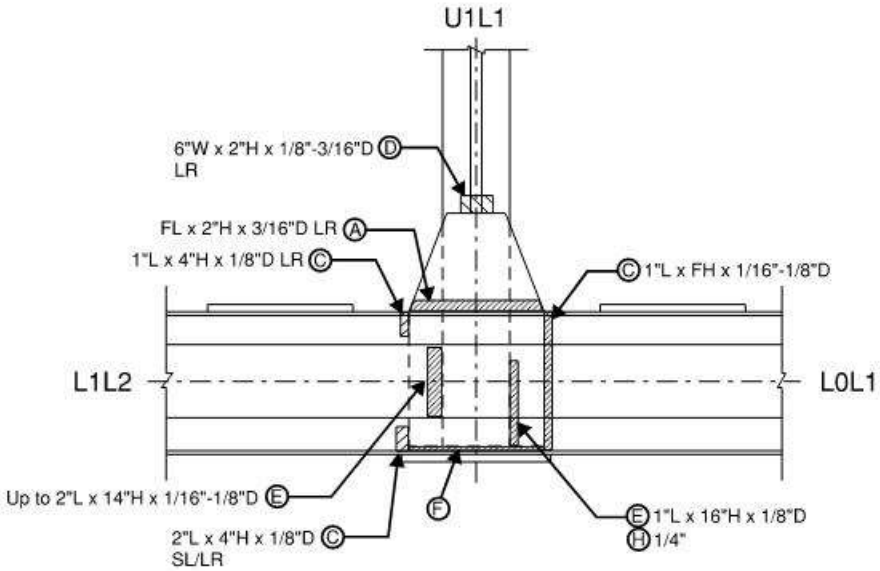

Span 31, South Truss, Node L1, North Gusset Plate, North Elevation

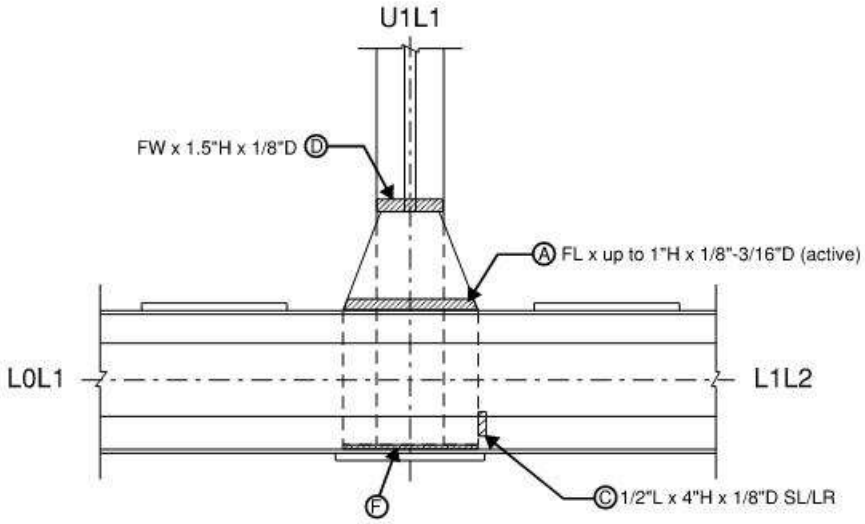

Span 31, South Truss, Node L1, South Gusset Plate, South Elevation

REVISION 1	DATE: 9/13/19	CREW: BH, JG (Baker)	REVISION 3	DATE:	CREW:
REVISION 2	DATE: 9/21/2021	CREW: NR, NH (PRIME) - No Change	REVISION 4	DATE:	CREW:

CREW: SW, BF	DATE: 11/1/2017	BRIDGE NO.: 03819

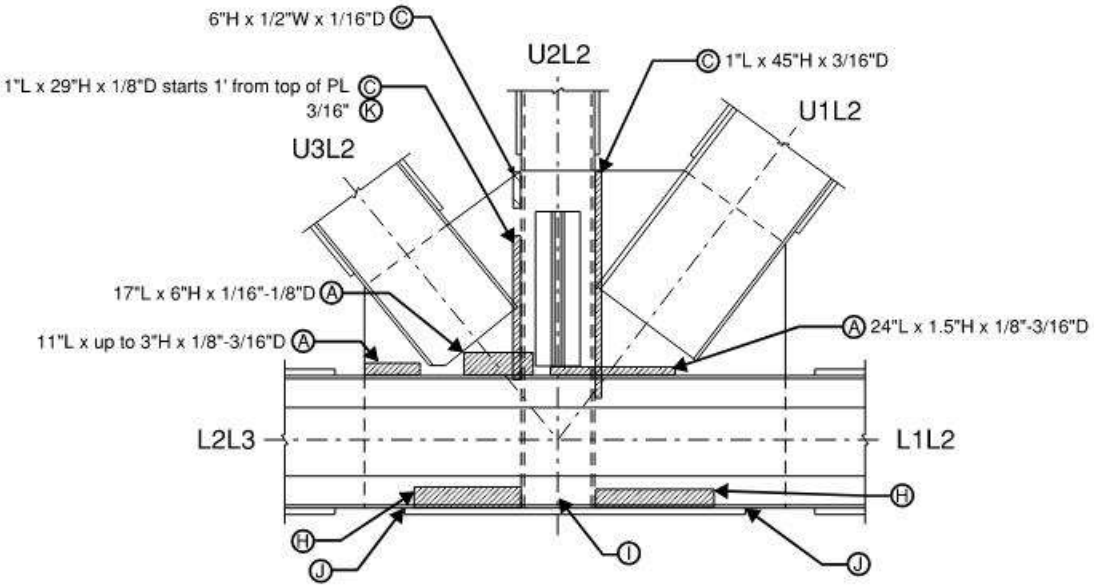

Span 31, South Truss, Node L2, North Gusset Plate, North Elevation

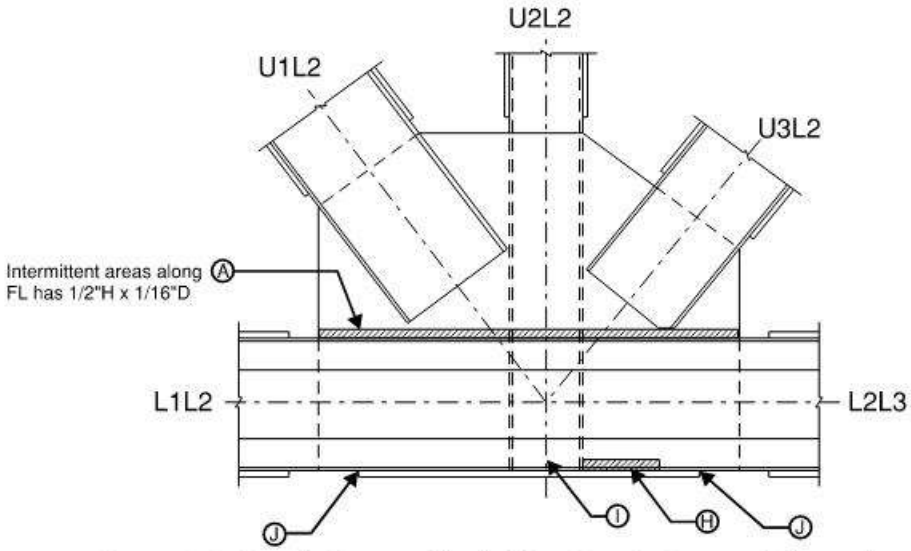

Span 31, South Truss, Node L2, South Gusset Plate, South Elevation

REVISION 1	DATE: 9/13/19	CREW: BH, JG (Baker)	REVISION 3	DATE:	CREW:
REVISION 2	DATE: 9/21/2021	CREW: NR, NH (PRIME) - No Change	REVISION 4	DATE:	CREW:

CREW: SW, BF	DATE: 11/1/2017	BRIDGE NO.: 03819

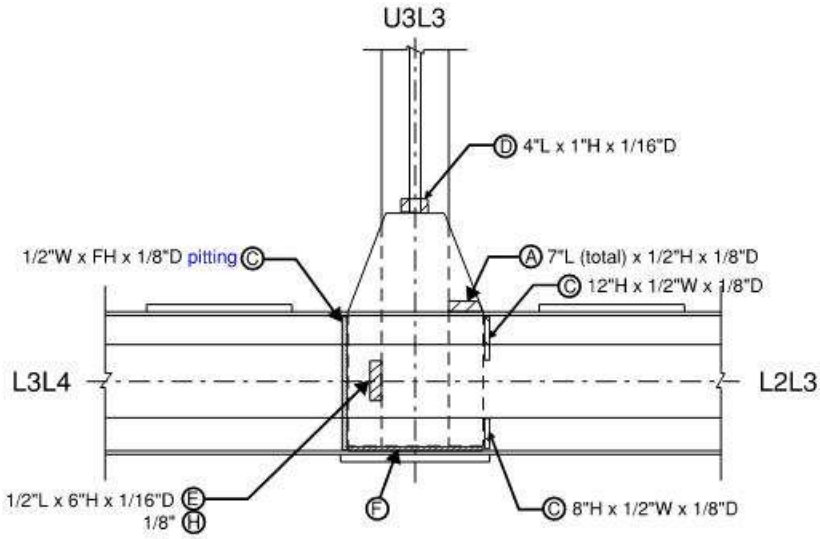

Span 31, South Truss, Node L3, North Gusset Plate, North Elevation

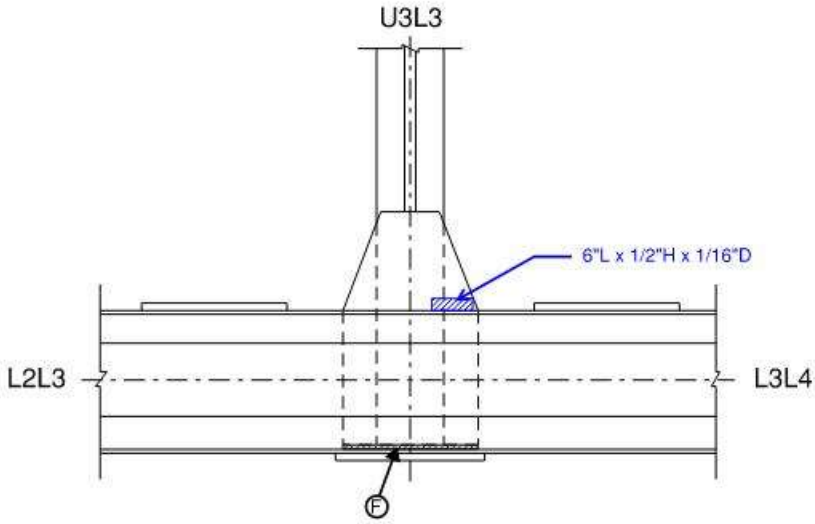

Span 31, South Truss, Node L3, South Gusset Plate, South Elevation

REVISION 1	DATE: 9/13/19	CREW: BH, JG (Baker)	REVISION 3	DATE:	CREW:
REVISION 2	DATE: 9/21/2021	CREW: NR, NH (PRIME)	REVISION 4	DATE:	CREW:

Sketches
Inspection type: Fracture Critical,Routine
Inspection Date: 7/26/2021
Inspected by: PRIME AE

:Bridge No 03819

Town: NEW LONDON
Carried: INTERSTATE 95 NORTHBOUND
Crossed: THAMES RV,RR,LOCAL ROADS
Inventory Route: NHS

CREW: SW, BF	DATE: 11/1/2017	BRIDGE NO.: 03819

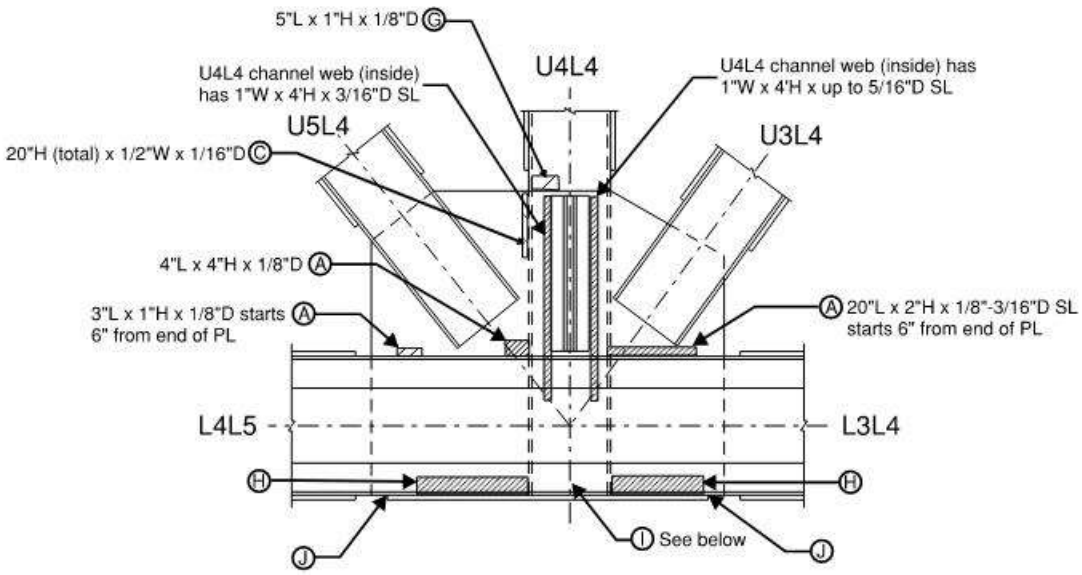

Span 31, South Truss, Node L4, North Gusset Plate, North Elevation

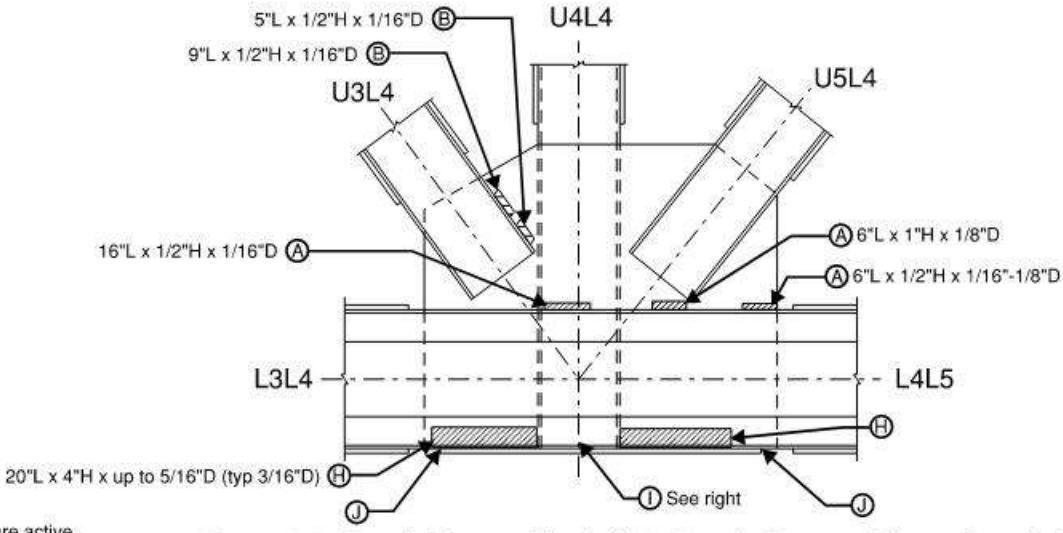

Note I:
- Vert stiff PL has FW x 3"H RTH
- NW channel leg has 2"H x 1/2" LOW
- SW channel leg has 1"H x 1/2" LOW

Note:
- Most SL's are active

Span 31, South Truss, Node L4, South Gusset Plate, South Elevation

REVISION 1	DATE: 9/13/19	CREW: BH, JG (Baker)	REVISION 3	DATE:	CREW:
REVISION 2	DATE: 9/21/2021	CREW: NR, NH (PRIME) - No Change	REVISION 4	DATE:	CREW:

CREW: SW, BF	DATE: 11/13/2017	BRIDGE NO.: 03819

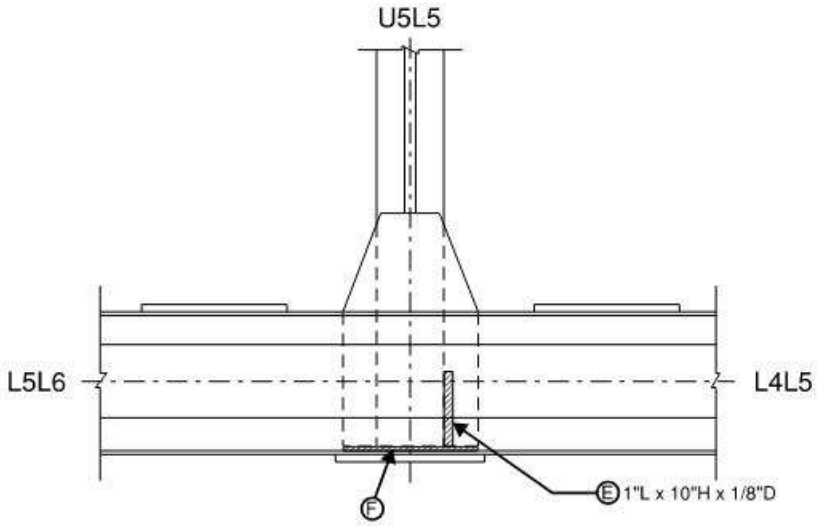

Span 31, South Truss, Node L5, North Gusset Plate, North Elevation

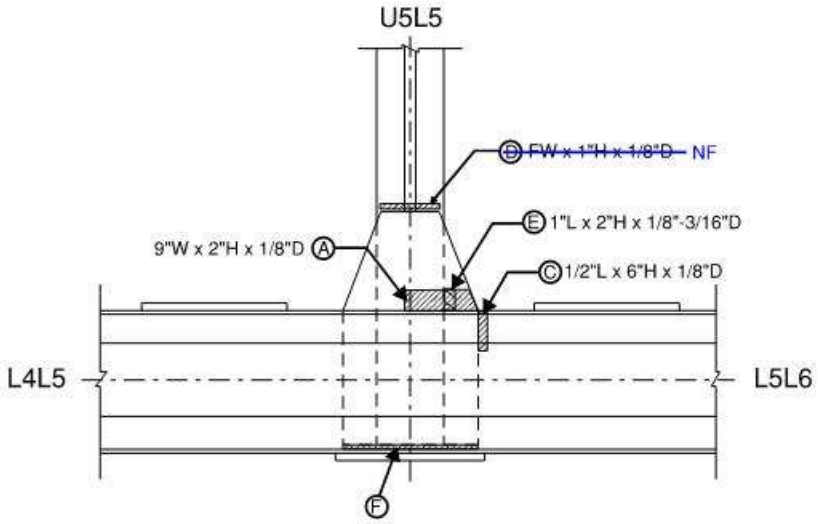

Span 31, South Truss, Node L5, South Gusset Plate, South Elevation

REVISION 1	DATE: 9/13/19	CREW: BH, JG (Baker)	REVISION 3	DATE:	CREW:
REVISION 2	DATE: 9/21/2021	CREW: NR, NH (PRIME)	REVISION 4	DATE:	CREW:

CREW: SW, BF	DATE: 11/13/2017	BRIDGE NO.: 03819

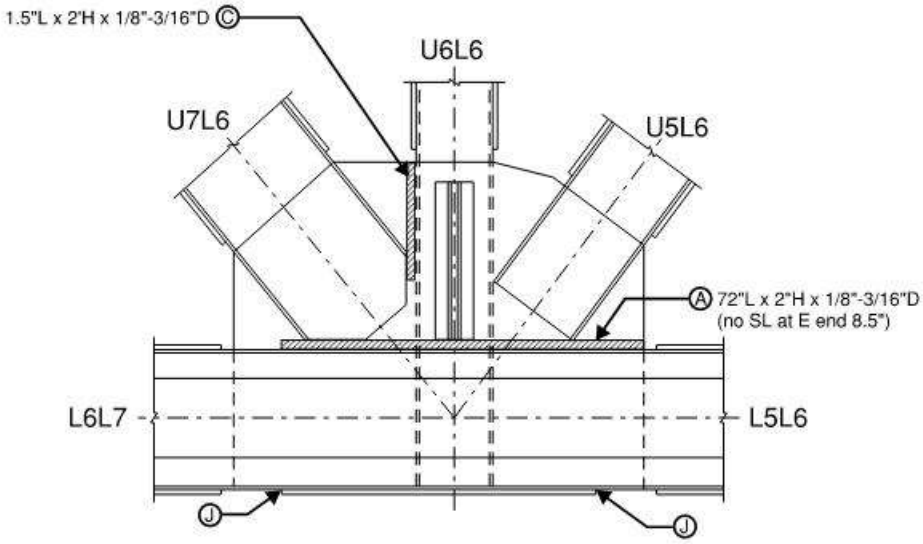

Span 31, South Truss, Node L6, North Gusset Plate, North Elevation

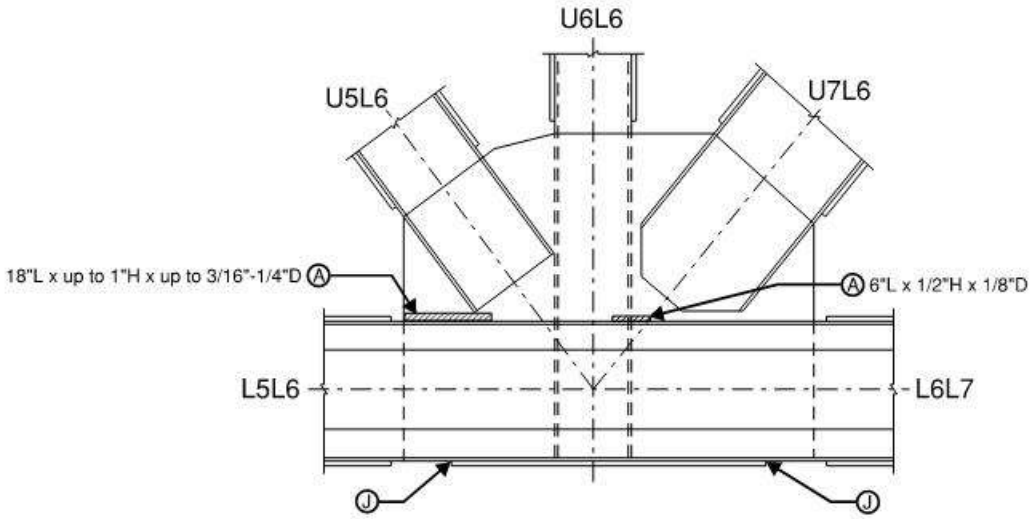

Span 31, South Truss, Node L6, South Gusset Plate, South Elevation

REVISION 1	DATE: 9/13/19	CREW: BH, JG (Baker) - No change	REVISION 3	DATE:	CREW:
REVISION 2	DATE: 9/21/2021	CREW: NR, NH (PRIME) - No Change	REVISION 4	DATE:	CREW:

CREW: SW, BF	DATE: 11/13/2017	BRIDGE NO.: 03819

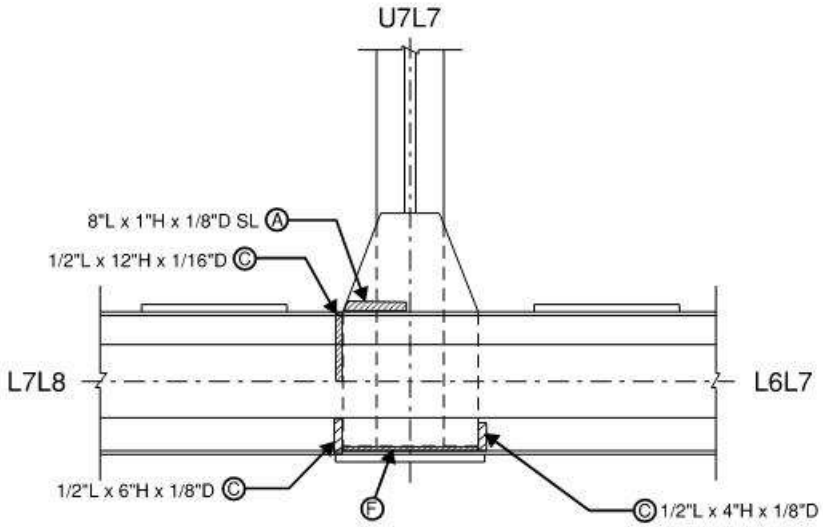

Span 31, South Truss, Node L7, North Gusset Plate, North Elevation

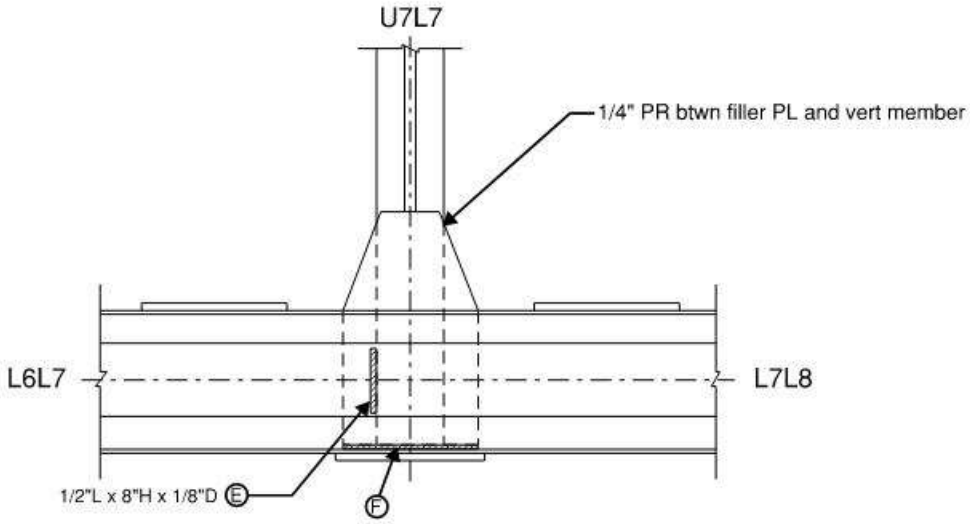

Span 31, South Truss, Node L7, South Gusset Plate, South Elevation

REVISION 1	DATE: 9/13/19	CREW: BH, JG (Baker) - No change	REVISION 3	DATE:	CREW:
REVISION 2	DATE: 10/18/2021	CREW: NR, IS (PRIME) - No Change	REVISION 4	DATE:	CREW:

CREW: SW, BF	DATE: 9/25/2017	BRIDGE NO.: 03819

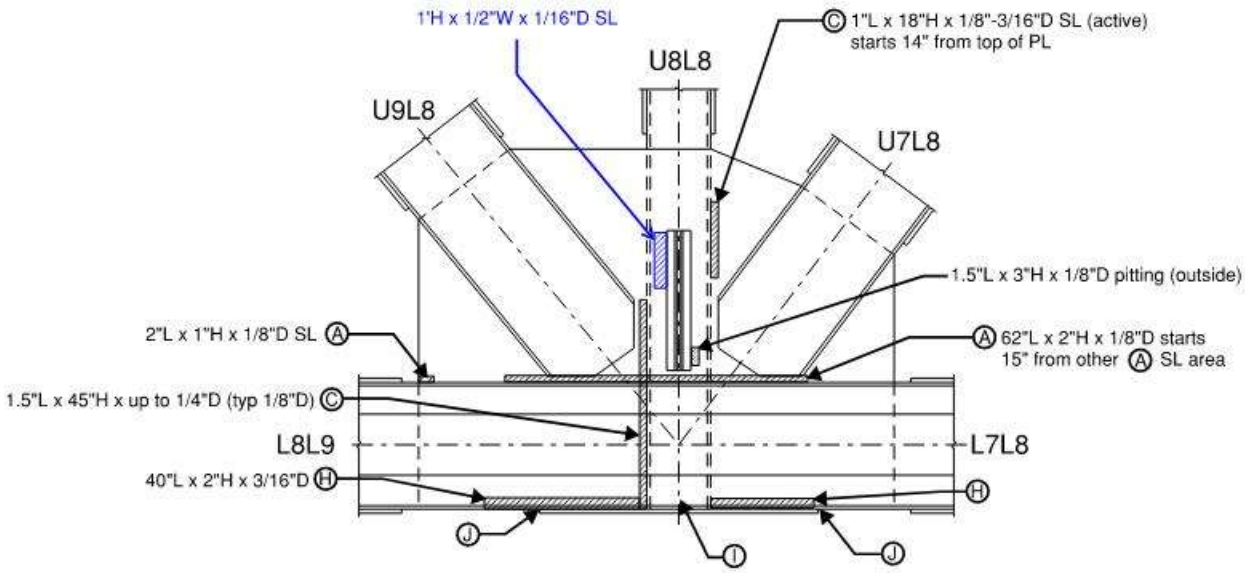

Span 31, South Truss, Node L8, North Gusset Plate, North Elevation

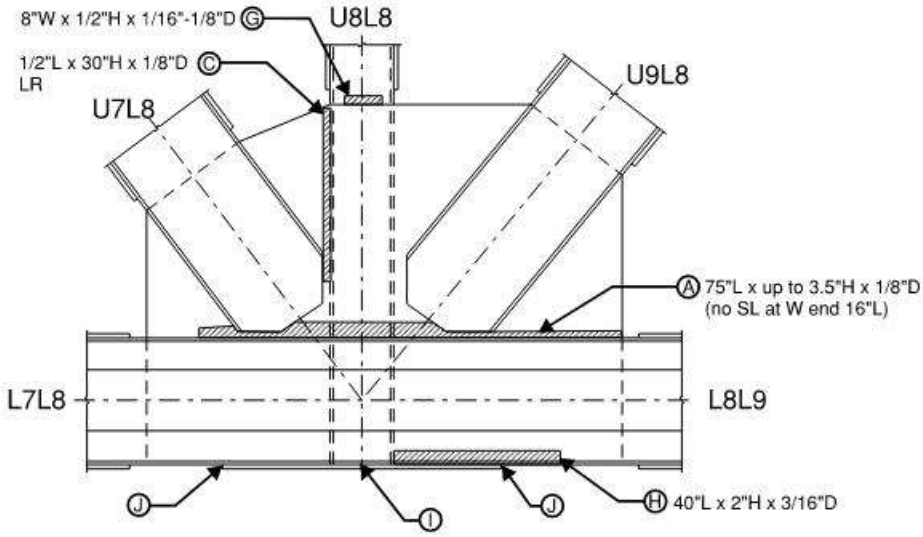

Span 31, South Truss, Node L8, South Gusset Plate, South Elevation

REVISION 1	DATE: 9/13/19	CREW: BH, JG (Baker)	REVISION 3	DATE:	CREW:
REVISION 2	DATE: 10/18/2021	CREW: NR, IS (PRIME)	REVISION 4	DATE:	CREW:

CREW: SW, BF	DATE: 11/8/2017	BRIDGE NO.: 03819

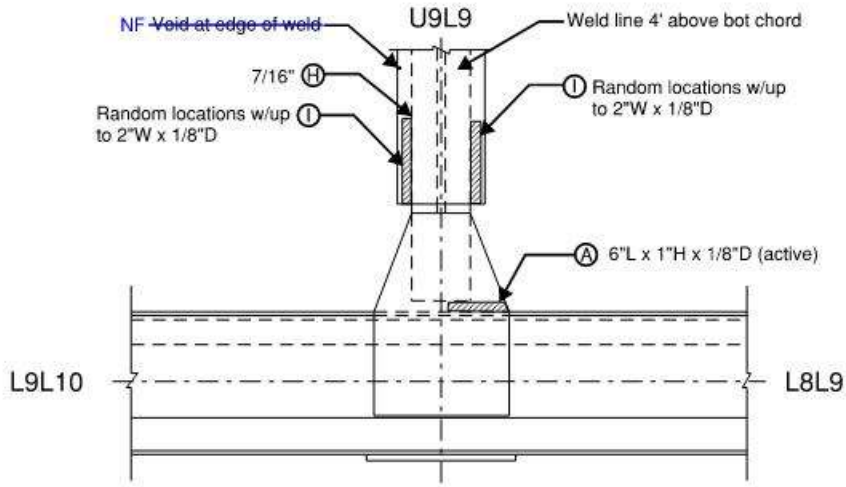

Span 31, South Truss, Node L9, North Gusset Plate, North Elevation

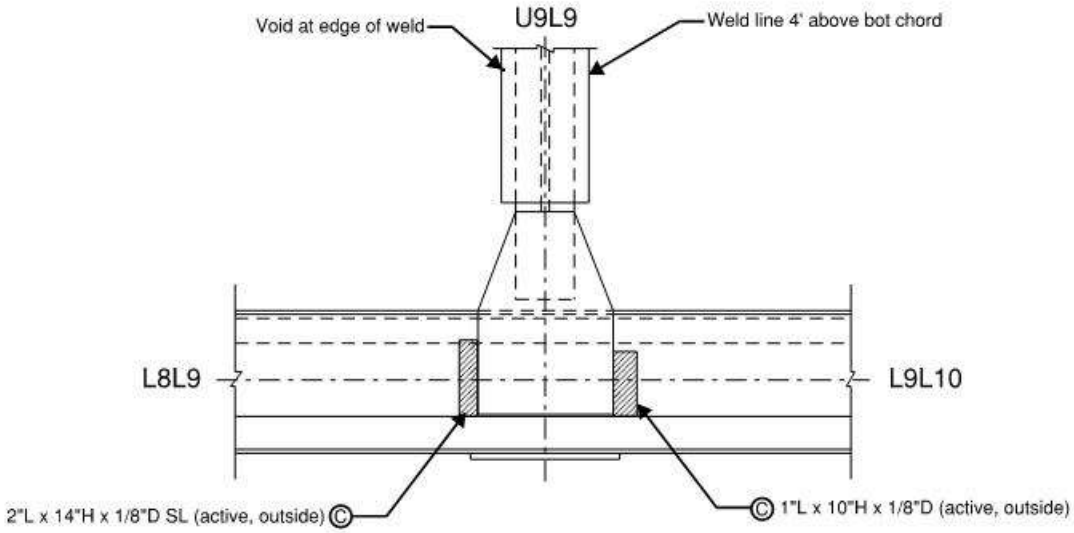

Span 31, South Truss, Node L9, South Gusset Plate, South Elevation

REVISION 1	DATE: 9/13/19	CREW: BH, JG (Baker)	REVISION 3	DATE:	CREW:
REVISION 2	DATE: 10/18/2021	CREW: NR, IS (PRIME)	REVISION 4	DATE:	CREW:

Sketches
Inspection type: Fracture Critical,Routine
Inspection Date: 7/26/2021
Inspected by: PRIME AE

:Bridge No 03819

Town: NEW LONDON
Carried: INTERSTATE 95 NORTHBOUND
Crossed: THAMES RV,RR,LOCAL ROADS
Inventory Route: NHS

CREW: SW, BF	DATE: 10/3/2017	BRIDGE NO.: 03819

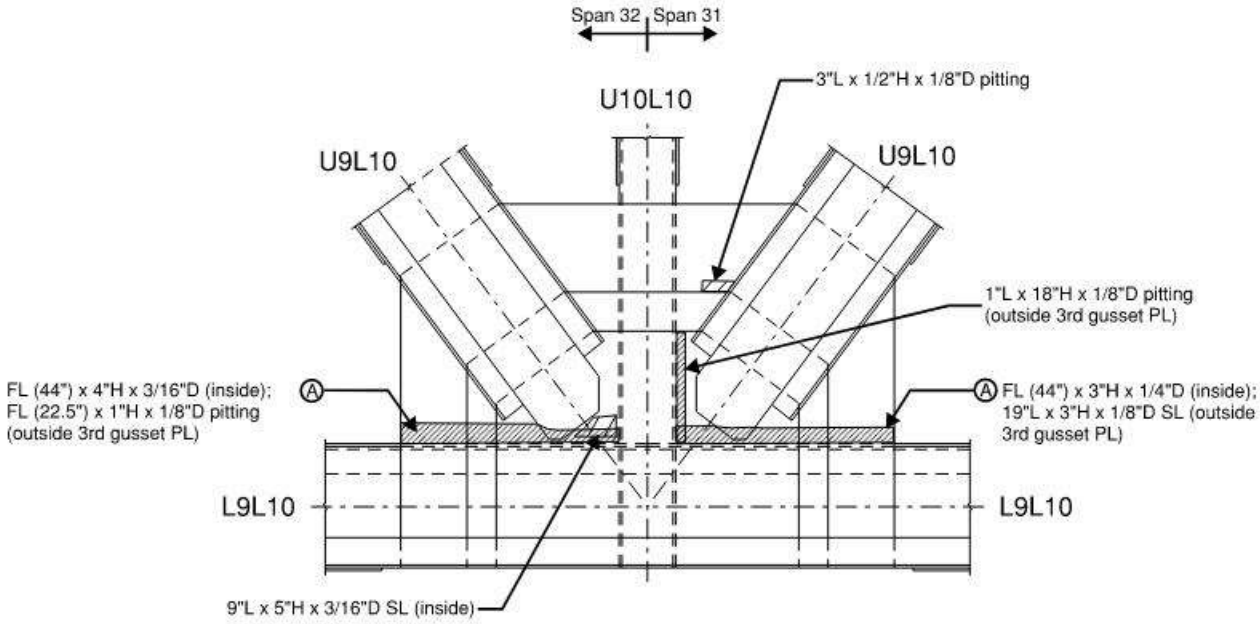

Span 31, South Truss, Node L10, North Gusset Plate, North Elevation

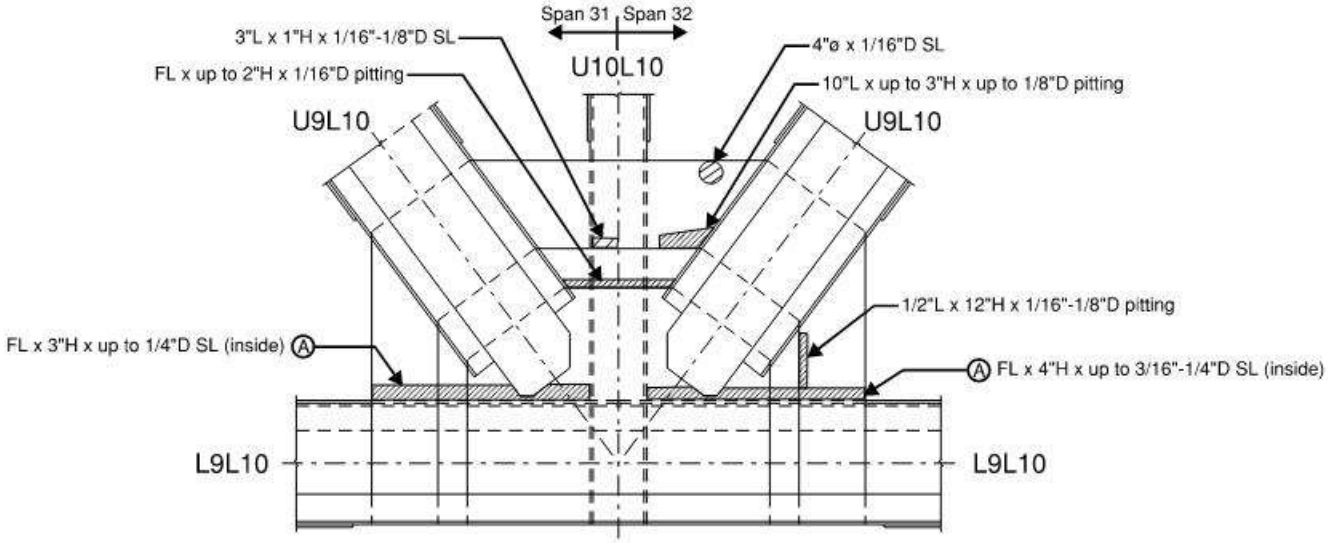

Note:
- Most SL's are active

Span 31, South Truss, Node L10, South Gusset Plate, South Elevation

REVISION 1	DATE: 9/13/19	CREW: BH, JG (Baker)	REVISION 3	DATE:	CREW:
REVISION 2	DATE: 10/18/2021	CREW: NR, IS (PRIME) - No Change	REVISION 4	DATE:	CREW:

Sketches
Inspection type: Fracture Critical,Routine
Inspection Date: 7/26/2021
Inspected by: PRIME AE

:Bridge No 03819

Town: NEW LONDON
Carried: INTERSTATE 95 NORTHBOUND
Crossed: THAMES RV,RR,LOCAL ROADS
Inventory Route: NHS

CREW: SW, BF	DATE: 11/1/2017	BRIDGE NO.: 03819

Deterioration Legend:
① - PR between top horiz gusset PL and bracing members up to __" thick
② - PR between bot horiz gusset PL and bracing members up to __" thick
③ - Pitting on top horiz gusset PL up to __" deep
④ - Pitting on bot horiz gusset PL up to __" deep
⑤ - Rivet heads have up to ___% SL
⑥ - Lat bracing angle ends have RTH's up to 2"ø
⑦ - Bot G PL inside w/ 1/2"ø RTH

LOG DIRECTION
WEST TO EAST

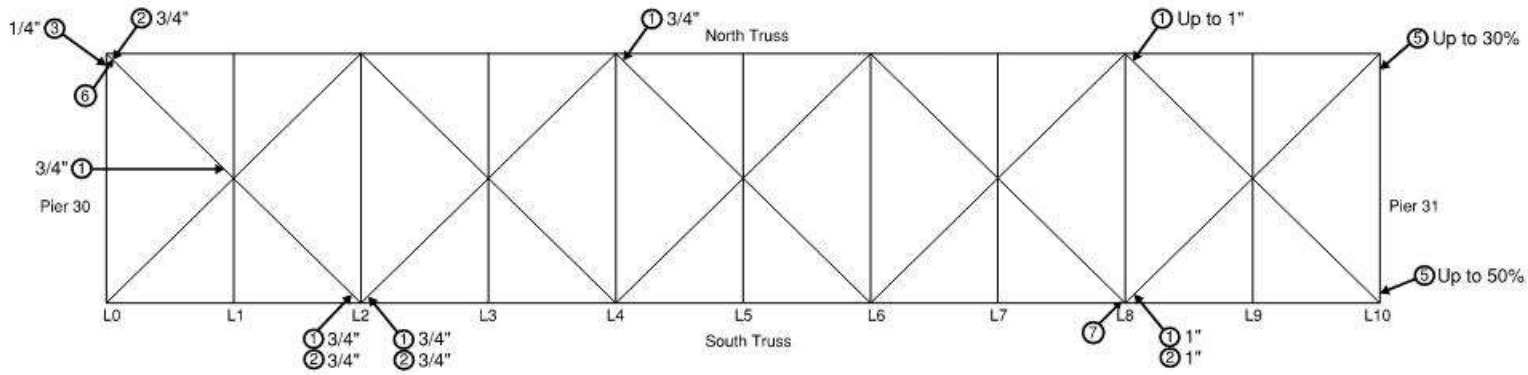

General Notes:
- See Lateral and Sway Bracing General Notes (Spans 22-25 & 29-32) sheet

Span 31 - Bottom Laterals

REVISION 1	DATE: 9/13/19	CREW: BH, JG (Baker)	REVISION 3	DATE:	CREW:
REVISION 2	DATE: 10/18/2021	CREW: CMR, NR, NH (PRIME) - No Change	REVISION 4	DATE:	CREW:

Sketches
Inspection type: Fracture Critical,Routine
Inspection Date: 7/26/2021
Inspected by: PRIME AE

:Bridge No 03819

Town: NEW LONDON
Carried: INTERSTATE 95 NORTHBOUND
Crossed: THAMES RV,RR,LOCAL ROADS
Inventory Route: NHS

CREW: SW, KT	DATE: 8/23/2017	BRIDGE NO.: 03819

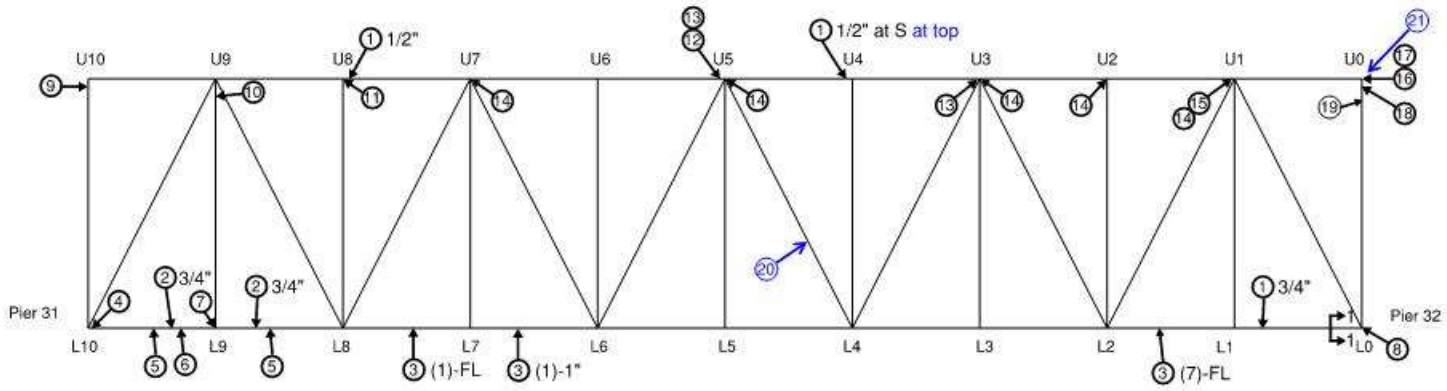

Deterioration Legend:

1. PR between chord flange angles and web PL up to __" thick
2. PR between chord flange angles and cover PL at edges up to __" thick
3. Tack welds partially cracked or broken at lacing bar or batten PL and chord; (# per panel) and up to __" long
4. Top flg cover PL has areas of active pitting up to 1/4"D and approx (20) R/H's w/up to 75% SL inside node
5. N Web PL has intermittent active pitting up to 2"H x 3/16"D & both legs of N bot chord angles have up to 3/16"D x 2"H/W pitting
6. N bot flg angle horiz leg has (2) missing rivets at lattice conn
7. Top flg cover PL has a 4'L x FW area w/areas of SL/LR up to 5"ø x 1/8"D and an isolated 2"L x 3"W x 1/4"D area of pitting (inside node PO), 8 R/H's 40%SL
8. Both pin PL's have FH x 2"W x up to 3/16"D SL & up to 3" adj to pin cov PL x 1/8"D pitt at S. Face only
9. 1/8" PR between vert spacer PL and vert member
10. N vert gusset PL has (2) bolts not fully engaged (bolts are tilted w/one edge in contact w/gusset PL)
11. S web PL has 9"L x 3"H x 1/8"D pitting PO
12. 3/8" PR between top of N web PL and splice PL
13. 1/2" PR at edge of N gusset PL and spacer PL 's
14. Broken tack weld between top of vert back-to-back angles and top chord seat angle (inside); U2 node also has (1) VT broken tack weld between vert angles
15. (4 of 6) FB to top chord bolts are flush with nut
16. Up to 2" PR between web PL's at end
17. 1/8" PR between vert gusset PL and shim PL at SE side & shim PL at bot has 3" x 1.5" RTH at corner
18. N web has 3"L x 1"H x 1/8"D SL and S web has 6"L x 1"H x 1/8"D SL
19. U0L0 N chan below VT G PL w/ FW x 2"H x 1/8"D SL/LR, S chan w/ 4" x 2"H x 1/8"D SL/LR
20. North elevation w/ laminated rust & negligible section loss up to 7' long at edge of plate
21. East face batten plate w/ 1/16"D SL between rivets

General Notes:
- See Riveted Truss General Notes (Spans 22-25 & 29-32) sheet
- See following gusset plate sheets for bottom chord gusset plate details

Span 32 - North Truss South Elevation

REVISION 1	DATE: 9/18/19	CREW: BH, JG (Baker)	REVISION 3	DATE:	CREW:
REVISION 2	DATE: 7/26/2021	CREW: BM, NH, IS (PRIME)	REVISION 4	DATE:	CREW:

CREW: SW, KT	DATE: 8/23/2017	BRIDGE NO.: 03819

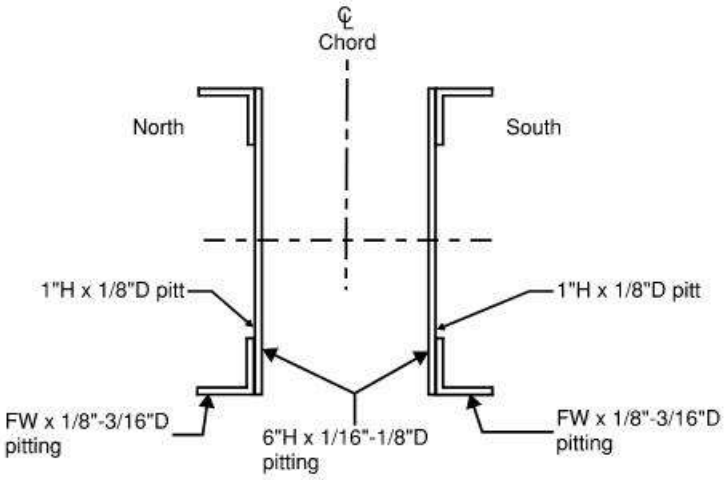

Section 1-1 (L1-L2)

Span 32 - North Truss Section Loss

REVISION 1	DATE: 9/18/19	CREW: BH, JG (Baker)	REVISION 3	DATE:	CREW:
REVISION 2	DATE: 10/5/2021	CREW: BM, IS (PRIME) - No Change	REVISION 4	DATE:	CREW:

CREW: SW, BF	DATE: 11/6/2017	BRIDGE NO.: 03819

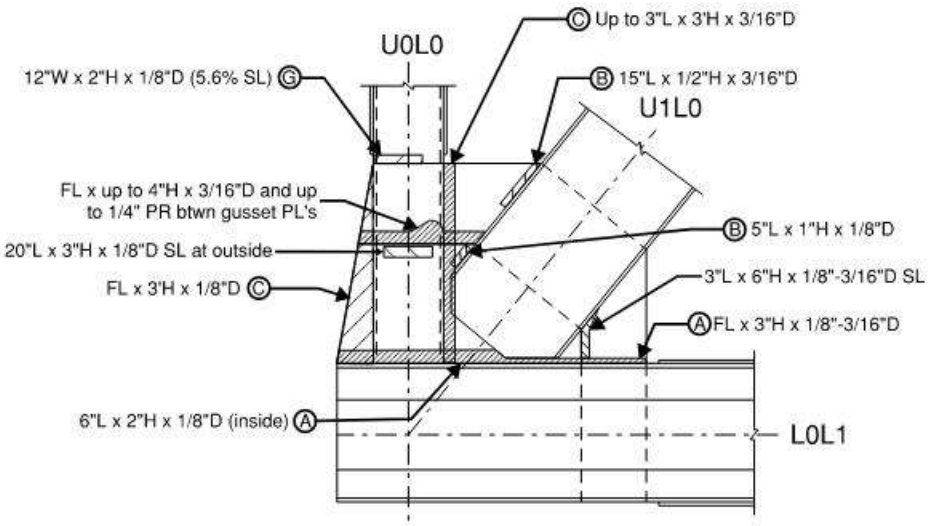

Span 32, North Truss, Node L0, North Gusset Plate, North Elevation

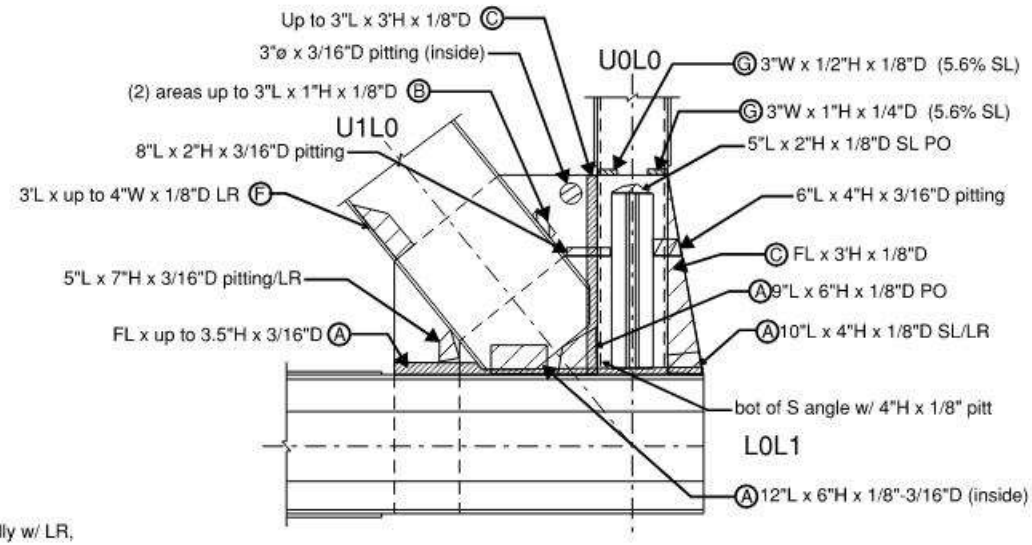

Note:
- SL's at both gusset PL's typically w/ LR, U.O.N.

Span 32, North Truss, Node L0, South Gusset Plate, South Elevation

REVISION 1	DATE: 9/18/19	CREW: BH, JG (Baker)	REVISION 3	DATE:	CREW:
REVISION 2	DATE: 10/5/2021	CREW: BM, IS (PRIME) - No Change	REVISION 4	DATE:	CREW:

CREW: SW, BF	DATE: 11/6/2017	BRIDGE NO.: 03819

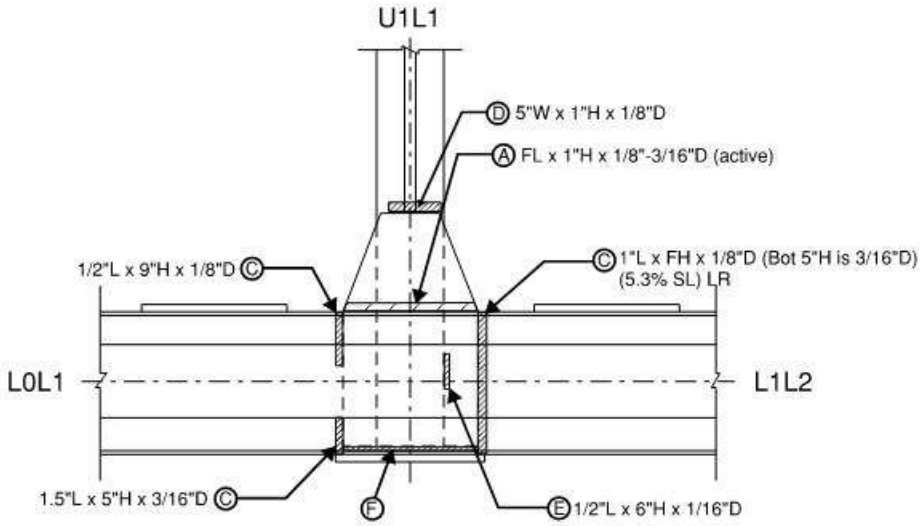

Span 32, North Truss, Node L1, North Gusset Plate, North Elevation

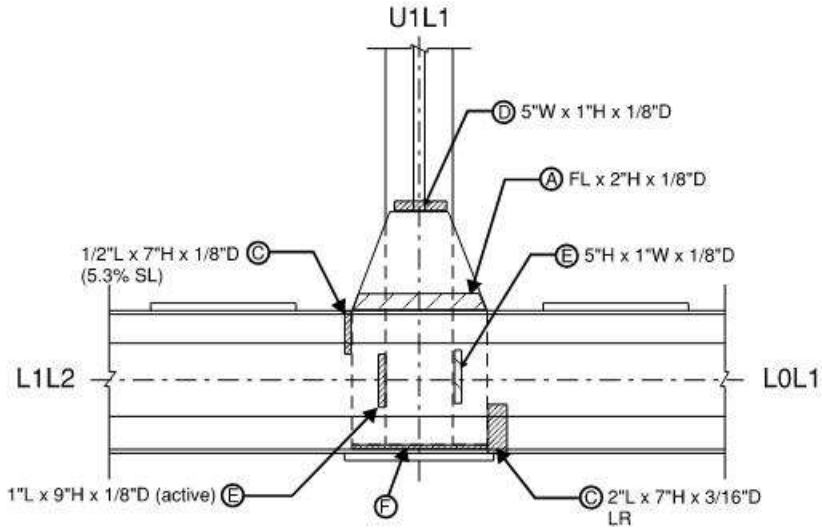

Span 32, North Truss, Node L1, South Gusset Plate, South Elevation

REVISION 1	DATE: 9/18/19	CREW: BH, JG (Baker)	REVISION 3	DATE:	CREW:
REVISION 2	DATE: 10/5/2021	CREW: BM, IS (PRIME) - No Change	REVISION 4	DATE:	CREW:

Sketches
Inspection type: Fracture Critical,Routine
Inspection Date: 7/26/2021
Inspected by: PRIME AE

:Bridge No 03819

Town: NEW LONDON
Carried: INTERSTATE 95 NORTHBOUND
Crossed: THAMES RV,RR,LOCAL ROADS
Inventory Route: NHS

CREW: SW, BF	DATE: 11/6/2017	BRIDGE NO.: 03819

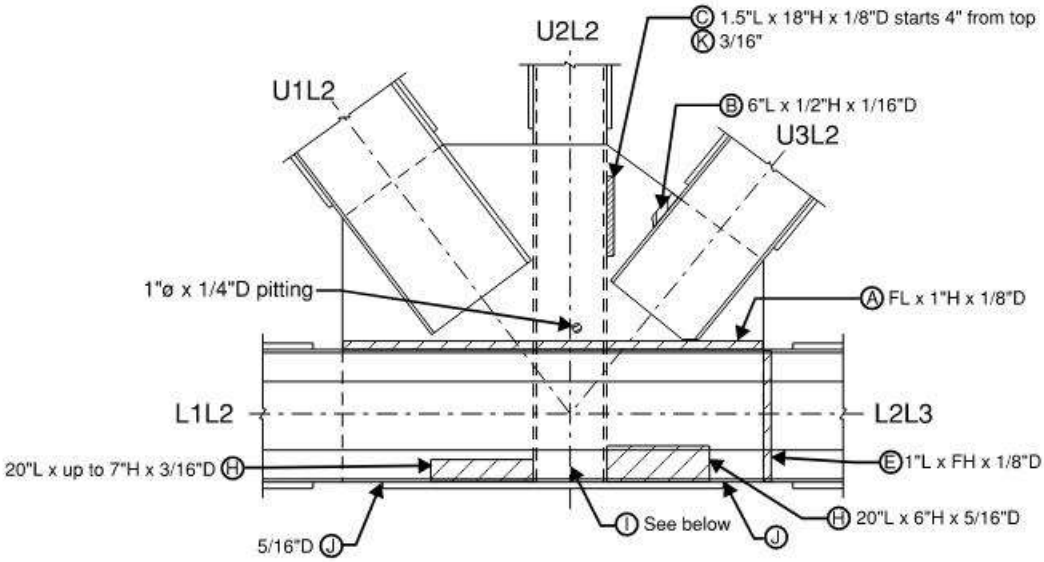

Span 32, North Truss, Node L2, North Gusset Plate, North Elevation

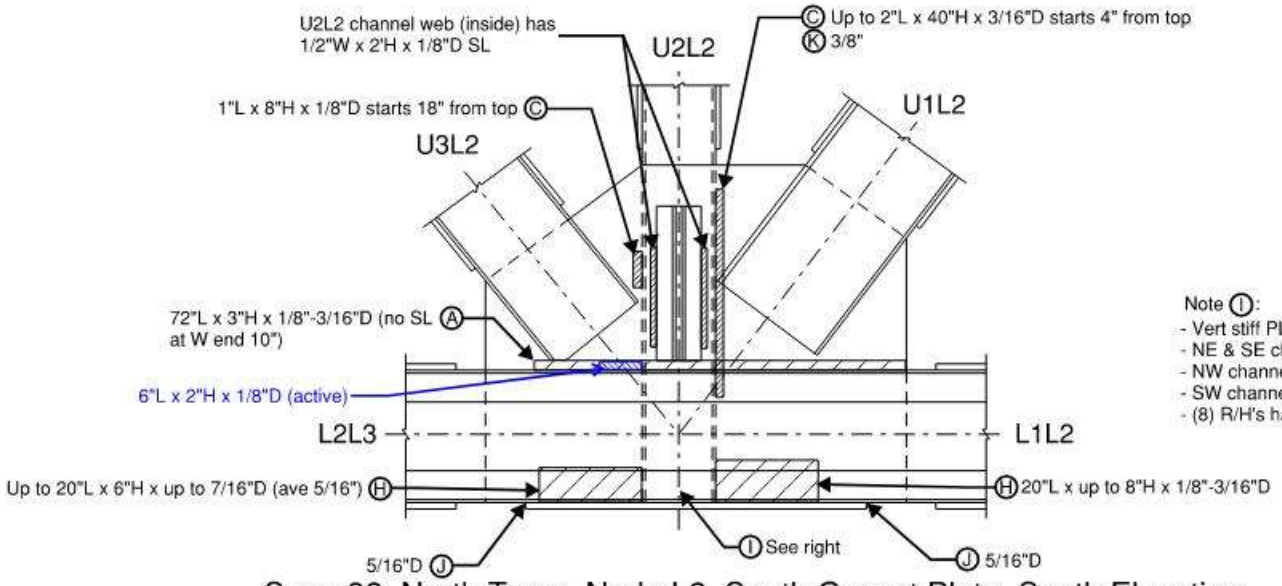

Note I:
- Vert stiff PL has FW x 4"H RTH
- NE & SE channel legs have 1"H x 1/2" LOW
- NW channel leg has 4"H x 1.5" LOW
- SW channel leg has 5"H x 1.5" LOW
- (8) R/H's have up to 90% SL

Span 32, North Truss, Node L2, South Gusset Plate, South Elevation

Note:
- Many SL's at both gusset PL's typically are active

REVISION 1	DATE: 9/18/19	CREW: BH, JG (Baker)	REVISION 3	DATE:	CREW:
REVISION 2	DATE: 10/5/2021	CREW: BM, IS (PRIME)	REVISION 4	DATE:	CREW:

Sketches
Inspection type: Fracture Critical,Routine
Inspection Date: 7/26/2021
Inspected by: PRIME AE

:Bridge No 03819

Town: NEW LONDON
Carried: INTERSTATE 95 NORTHBOUND
Crossed: THAMES RV,RR,LOCAL ROADS
Inventory Route: NHS

CREW: SW, BF	DATE: 11/6/2017	BRIDGE NO.: 03819

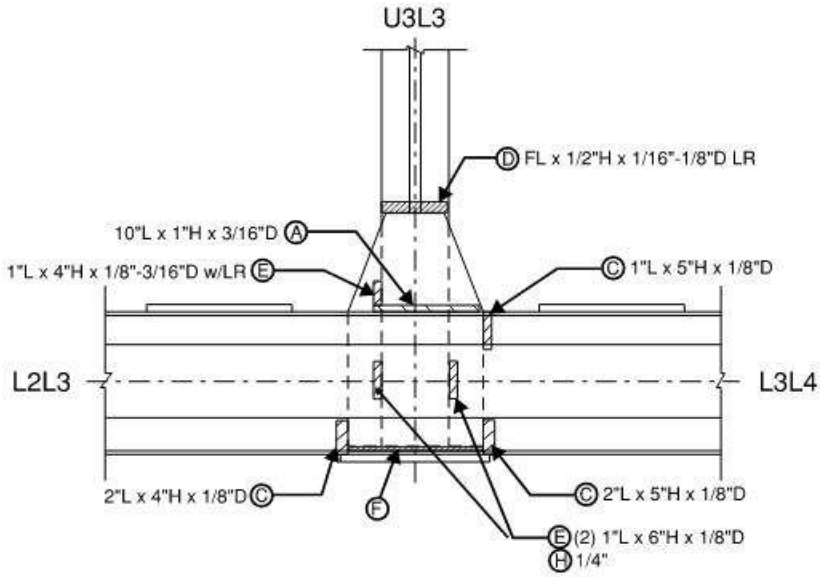

Span 32, North Truss, Node L3, North Gusset Plate, North Elevation

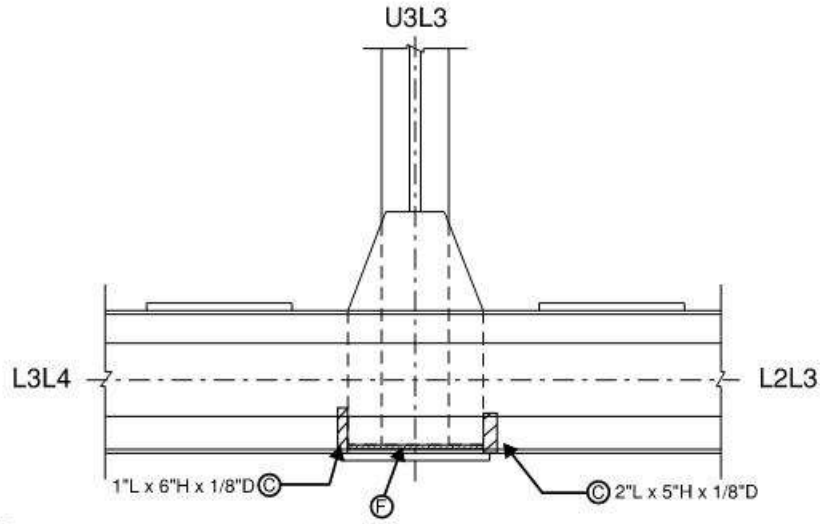

Note:
- SL's at both gusset PL's typically are PO

Span 32, North Truss, Node L3, South Gusset Plate, South Elevation

REVISION 1	DATE: 9/18/19	CREW: BH, JG (Baker)	REVISION 3	DATE:	CREW:
REVISION 2	DATE: 10/5/2021	CREW: BM, IS (PRIME) - No Change	REVISION 4	DATE:	CREW:

CREW: SW, KT	DATE: 8/23/2017	BRIDGE NO.: 03819

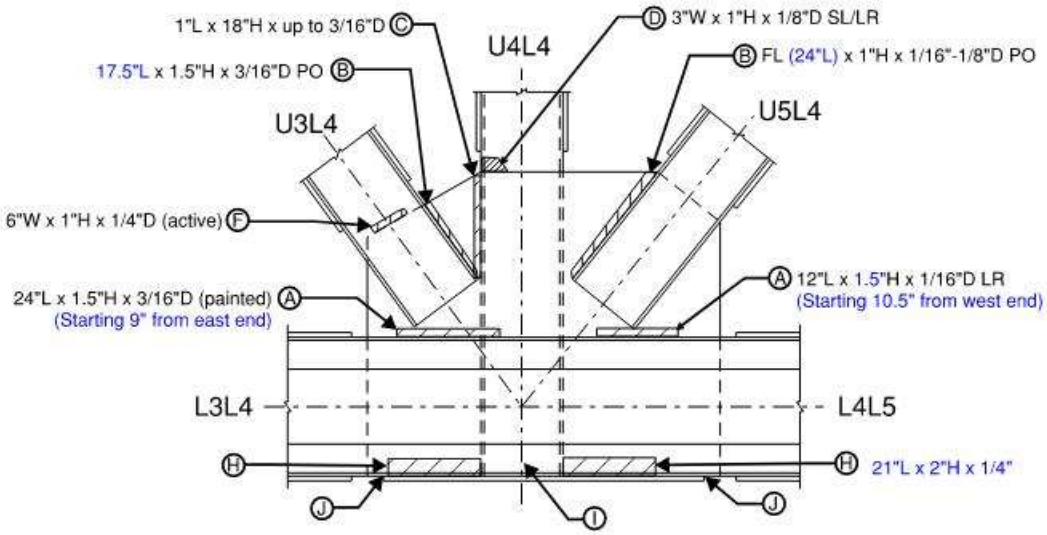

Span 32, North Truss, Node L4, North Gusset Plate, North Elevation

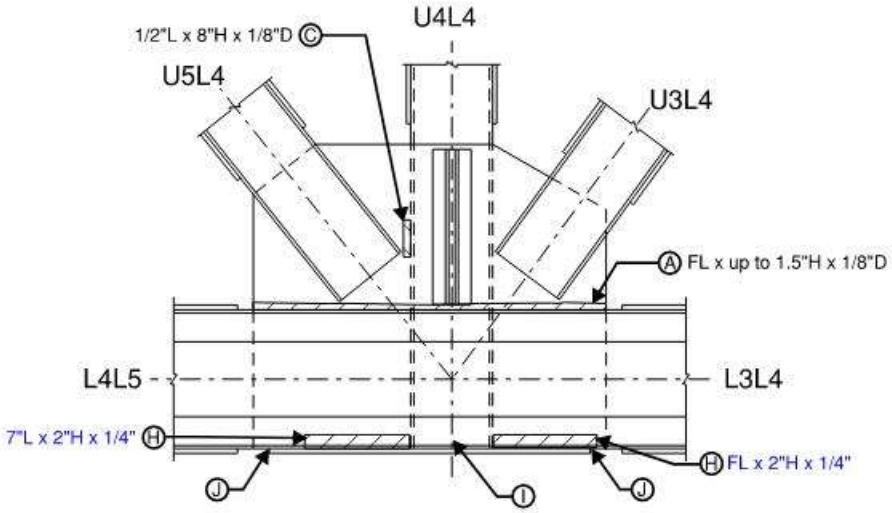

Span 32, North Truss, Node L4, South Gusset Plate, South Elevation

REVISION 1	DATE: 11/20/19	CREW: BH, JG (Baker)	REVISION 3	DATE:	CREW:
REVISION 2	DATE: 7/26/2021	CREW: BM, NH (PRIME)	REVISION 4	DATE:	CREW:

CREW: SW, KT	DATE: 8/23/2017	BRIDGE NO.: 03819

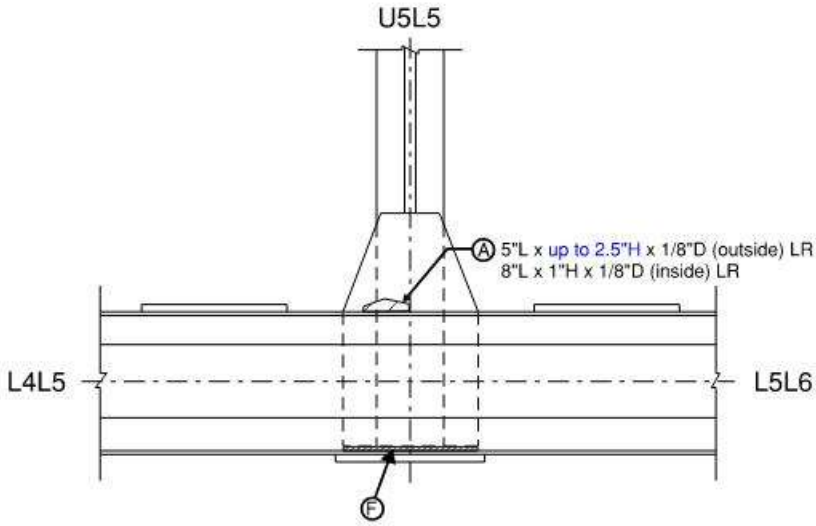

Span 32, North Truss, Node L5, North Gusset Plate, North Elevation

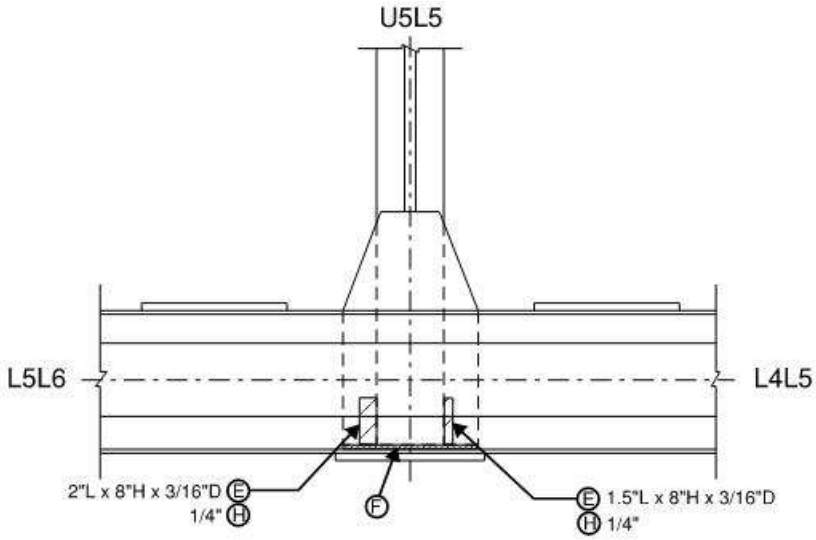

Span 32, North Truss, Node L5, South Gusset Plate, South Elevation

REVISION 1	DATE: 11/20/19	CREW: BH, JG (Baker)	REVISION 3	DATE:	CREW:
REVISION 2	DATE: 7/26/2021	CREW: BM, NH (PRIME)	REVISION 4	DATE:	CREW:

CREW: SW, BF	DATE: 11/2/2017	BRIDGE NO.: 03819

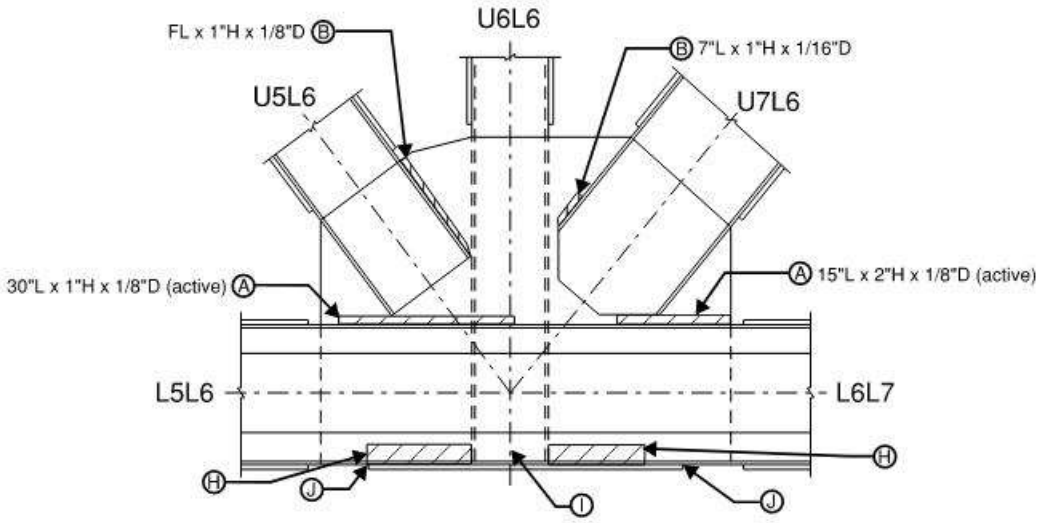

Span 32, North Truss, Node L6, North Gusset Plate, North Elevation

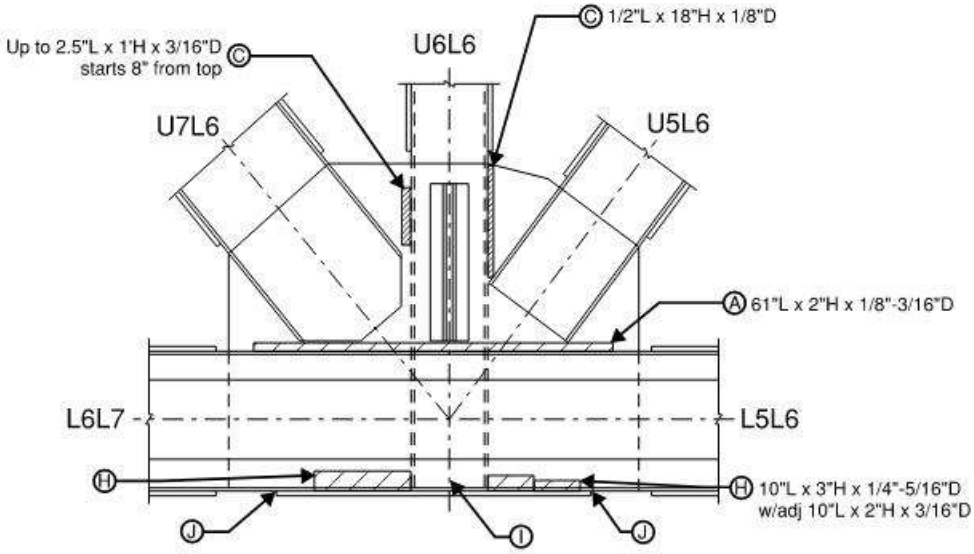

Span 32, North Truss, Node L6, South Gusset Plate, South Elevation

REVISION 1	DATE: 9/18/19	CREW: BH, JG (Baker) - No change	REVISION 3	DATE:	CREW:
REVISION 2	DATE: 10/5/2021	CREW: BM, IS (PRIME) - No Change	REVISION 4	DATE:	CREW:

CREW: SW, BF	DATE: 11/2/2017	BRIDGE NO.: 03819

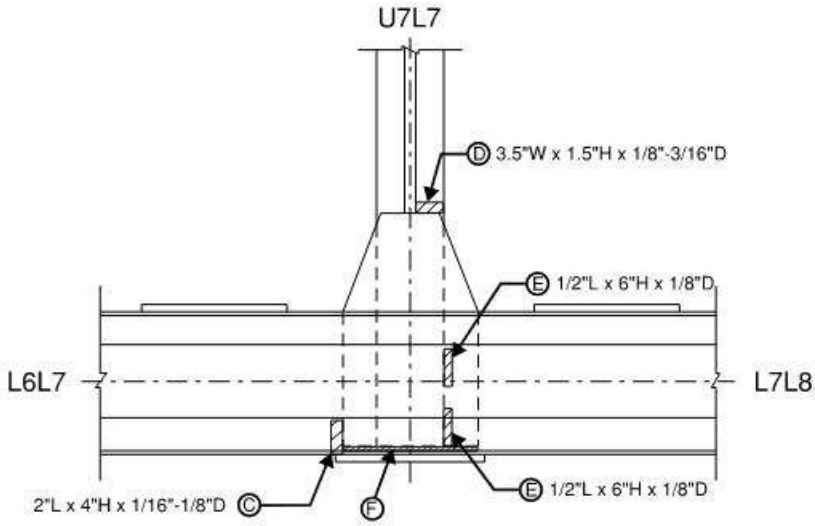

Span 32, North Truss, Node L7, North Gusset Plate, North Elevation

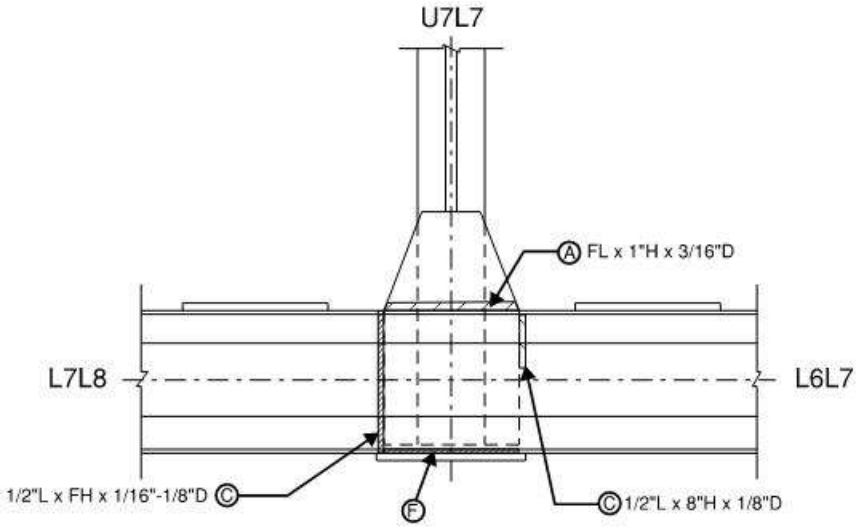

Span 32, North Truss, Node L7, South Gusset Plate, South Elevation

REVISION 1	DATE: 9/18/19	CREW: BH, JG (Baker)	REVISION 3	DATE:	CREW:
REVISION 2	DATE: 10/5/2021	CREW: BM, IS (PRIME) - No Change	REVISION 4	DATE:	CREW:

CREW: SW, BF	DATE: 11/2/2017	BRIDGE NO.: 03819

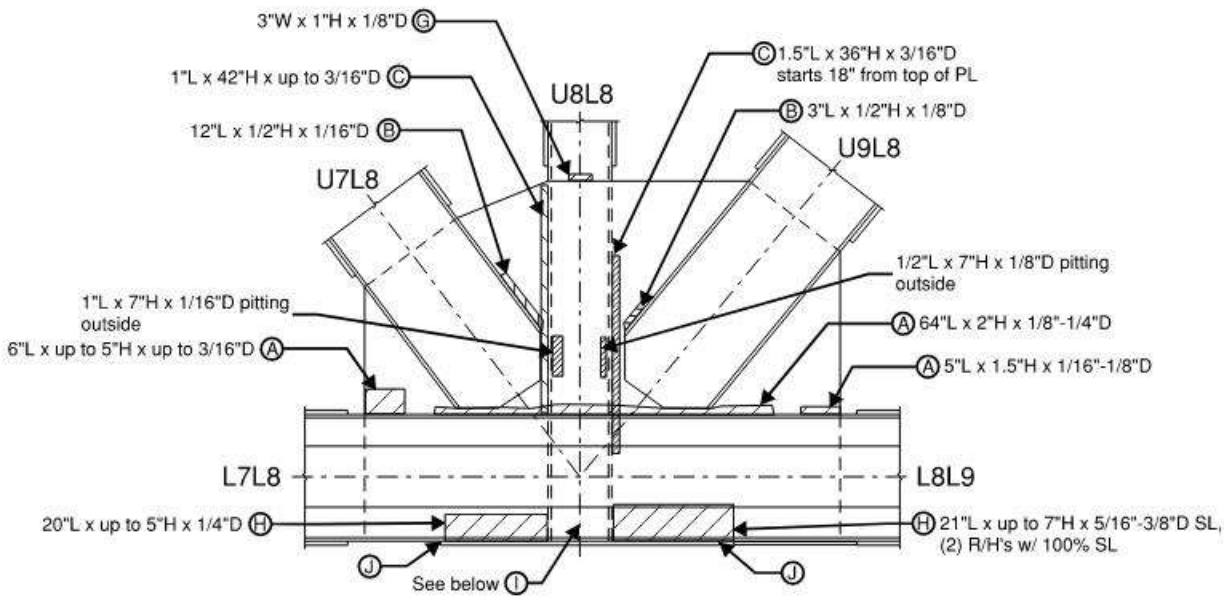

Span 32, North Truss, Node L8, North Gusset Plate, North Elevation

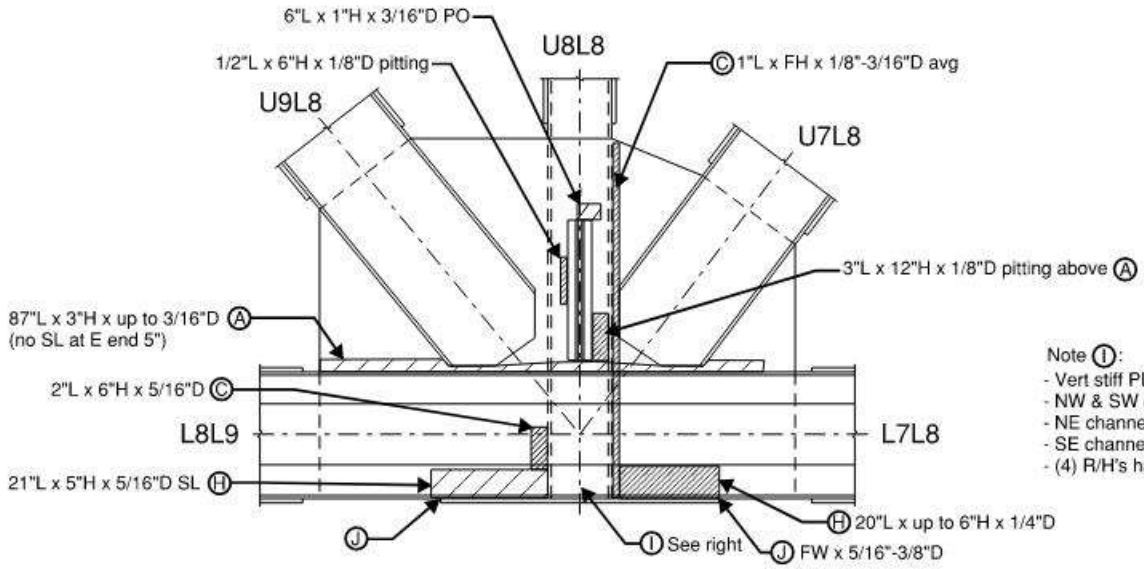

Note I:
- Vert stiff PL has FW x 6"H RTH
- NW & SW channel legs have 4"H x 2" LOW
- NE channel leg has 3"H x 1/2" LOW
- SE channel leg has 3"H x 1" LOW
- (4) R/H's have up to 100% SL

Span 32, North Truss, Node L8, South Gusset Plate, South Elevation

REVISION 1	DATE: 9/18/19	CREW: BH, JG (Baker)	REVISION 3	DATE:	CREW:
REVISION 2	DATE: 10/5/2021	CREW: BM, IS (PRIME) - No Change	REVISION 4	DATE:	CREW:

CREW: SW, BF	DATE: 11/2/2017	BRIDGE NO.: 03819

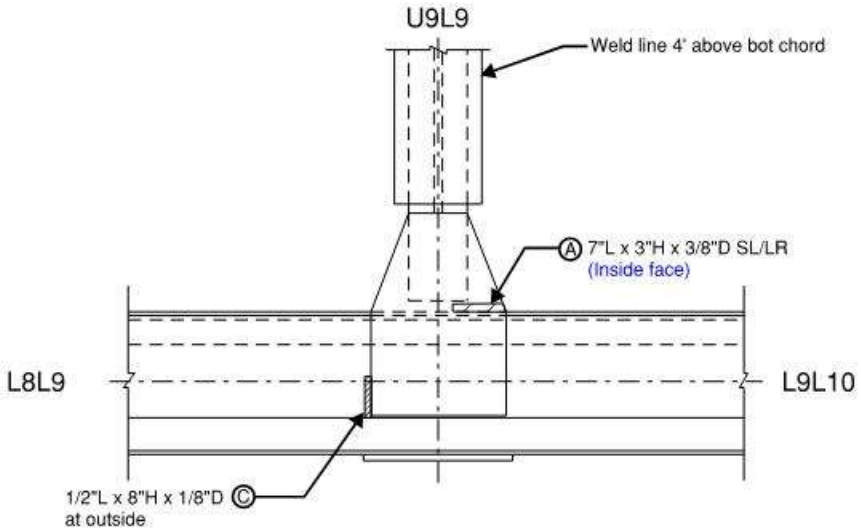

Span 32, North Truss, Node L9, North Gusset Plate, North Elevation

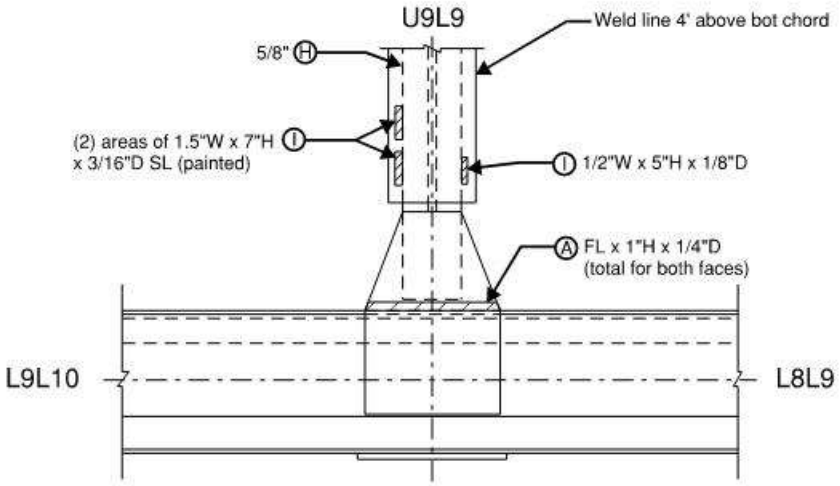

Span 32, North Truss, Node L9, South Gusset Plate, South Elevation

REVISION 1	DATE: 9/18/19	CREW: BH, JG (Baker)	REVISION 3	DATE:	CREW:
REVISION 2	DATE: 10/5/2021	CREW: BM, IS (PRIME)	REVISION 4	DATE:	CREW:

CREW: SW, KT	DATE: 8/23/2017	BRIDGE NO.: 03819

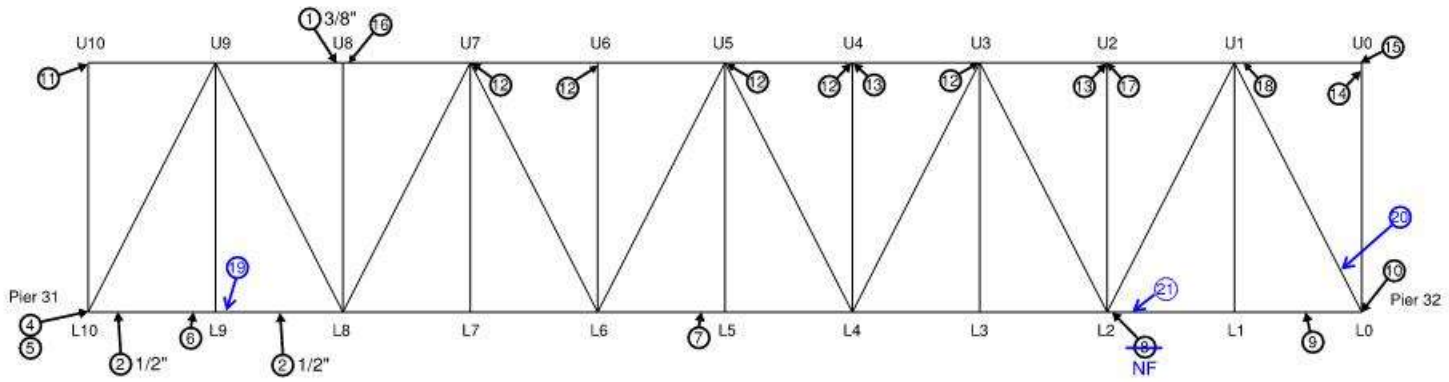

Deterioration Legend:

1. - PR between chord flange angles and web PL up to __" thick
2. - PR between chord flange angles and cover PL at edges up to __" thick
3. - Tack welds partially cracked or broken at lacing bar or batten PL and chord; (# per panel) and up to __" long
4. - Vert gusset PL (inside) at top has (4) R/H's w/up to 80% SL & up to 50% SL at bot interior row
5. - 1/2" PR between vert PL's at brg below bot chord
6. - (2) short bolts at lattice bar conn to bot flange angle with 5/16" gap between angle & bar and 3/16" gap between bars
7. - Bot flg lacing bar is loose due to (1) missing rivet
8. - ~~Bot flg angle horiz legs at both sides have 3"W x up to 1/2"D pitting~~ NF
9. - Web above bot flg angle vert leg has areas up to 1"H x 1/8"D SL
10. - S gusset PL has (1) missing rivet at stacked PL's below bot chord at east end below bottom flange angle
11. - S side has 11/16" PR between vert spacer PL and vert member
12. - Broken tack weld between top of vert back-to-back angles and top chord seat angle (inside) (2 total)
13. - (1) backed off nut inside chord connection.
14. - N channel web below vert gusset PL has 10"W x 1/2"H x 1/8"D pitting, S. side w/ 6"W x 2"H x 1/8"D SL/LR; Spacer PL at bot of G PL w/ 3"H x 1.5"W RTH at E end (N&S) & 1"ø RTH & 6"ø x 1/8" rem at N top stacked PL
15. - Up to 1½" PR between web PL's at end
16. - Top chord S web PL w/ 1'L x 8"H x 1/8"D pitt PO
17. - One short bolt at top chord conn & (3) flush bolt nuts & (4) mis-drilled holes at top PL & N. VT G PL miss (1) bolt
18. - One bolt short at top chord conn
19. - North horizontal leg bottom flange angle with 3"Ø x 5/16"D section loss and vertical leg with 1"H x 1/8"D section loss throughout
20. - (17) slotted bolt holes on U1-L0 diagonal cover plate
21. - Lattice bar with 4"L x FW x 5/16"D (7/16" original)

General Notes:
- See Riveted Truss General Notes (Spans 22-25 & 29-32) sheet
- See following gusset plate sheets for bottom chord gusset plate details

Span 32 - South Truss South Elevation

REVISION 1	DATE: 8/26/19	CREW: SW, BF (Baker)	REVISION 3	DATE:	CREW:
REVISION 2	DATE: 8/17/2021	CREW: CMR, EG, NH, MM (PRIME)	REVISION 4	DATE:	CREW:

CREW: BF, SW	DATE: 10/3/2017	BRIDGE NO.: 03819

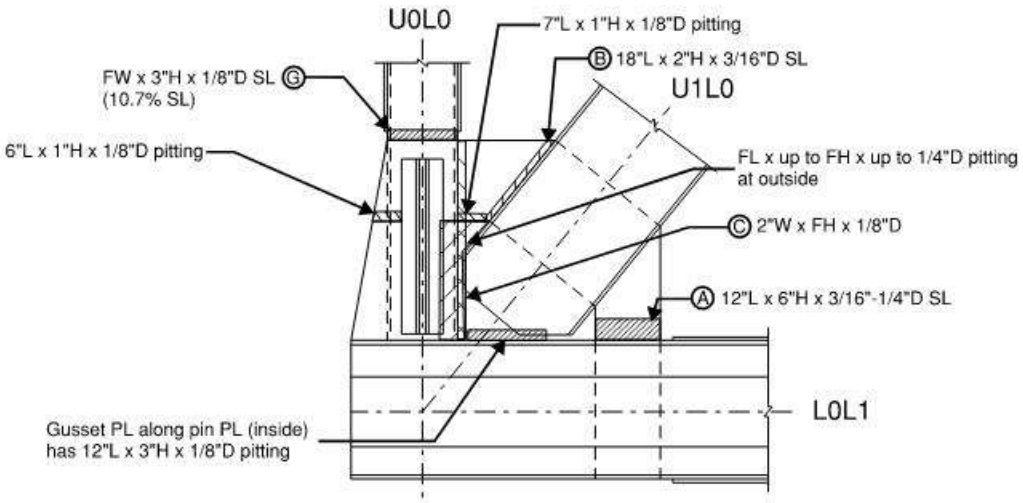

Span 32, South Truss, Node L0, North Gusset Plate, North Elevation

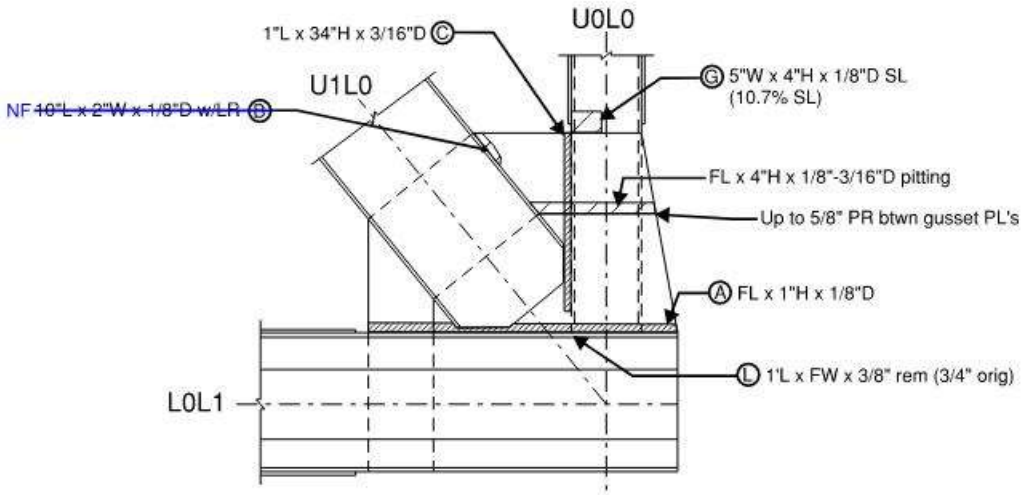

-All losses LR

Span 32, South Truss, Node L0, South Gusset Plate, South Elevation

REVISION 1	DATE: 9/23/19	CREW: BH, JG (Baker)	REVISION 3	DATE:	CREW:
REVISION 2	DATE: 9/28/2021	CREW: EG, MM (PRIME)	REVISION 4	DATE:	CREW:

CREW: BF, SW	DATE: 10/3/2017	BRIDGE NO.: 03819

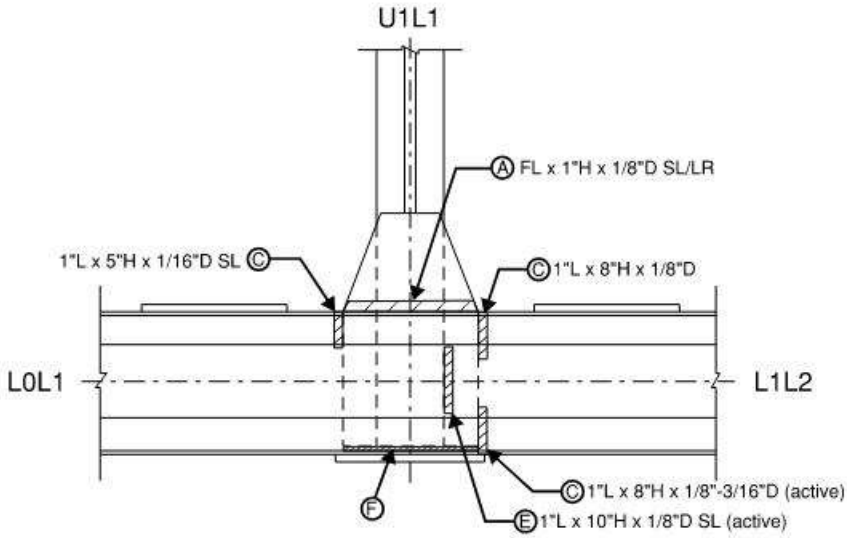

Span 32, South Truss, Node L1, North Gusset Plate, North Elevation

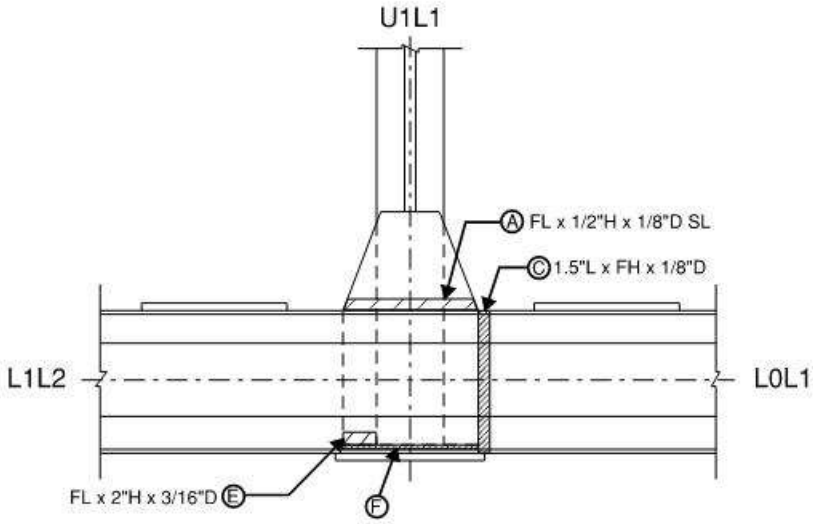

Span 32, South Truss, Node L1, South Gusset Plate, South Elevation

REVISION 1	DATE: 8/26/19	CREW: SW, BF (Baker)	REVISION 3	DATE:	CREW:
REVISION 2	DATE: 9/27/2021	CREW: EG, MM (PRIME) - No Change	REVISION 4	DATE:	CREW:

CREW: BF, SW	DATE: 10/3/2017	BRIDGE NO.: 03819

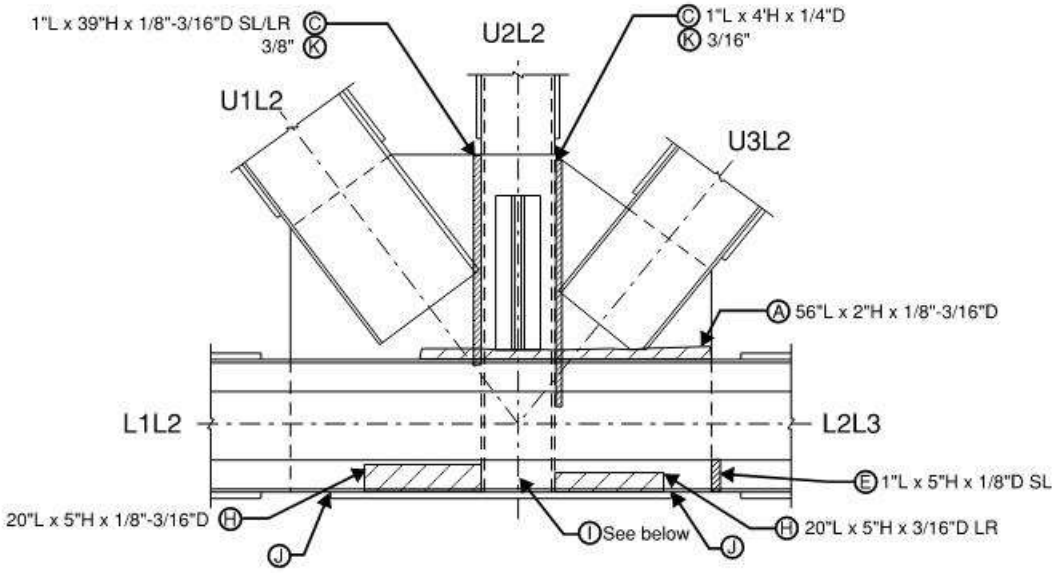

Span 32, South Truss, Node L2, North Gusset Plate, North Elevation

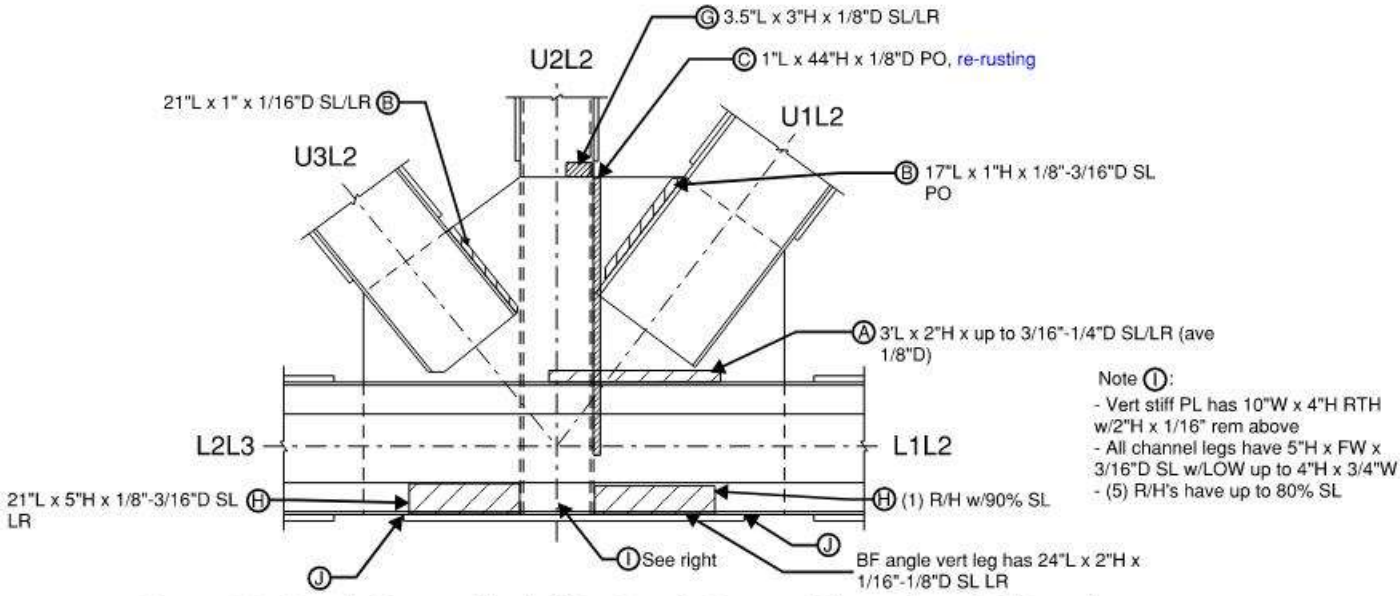

Span 32, South Truss, Node L2, South Gusset Plate, South Elevation

REVISION 1	DATE: 8/26/19	CREW: SW, BF (Baker)	REVISION 3	DATE:	CREW:
REVISION 2	DATE: 9/27/2021	CREW: EG, MM (PRIME)	REVISION 4	DATE:	CREW:

CREW: SW, BF	DATE: 10/3/2017	BRIDGE NO.: 03819

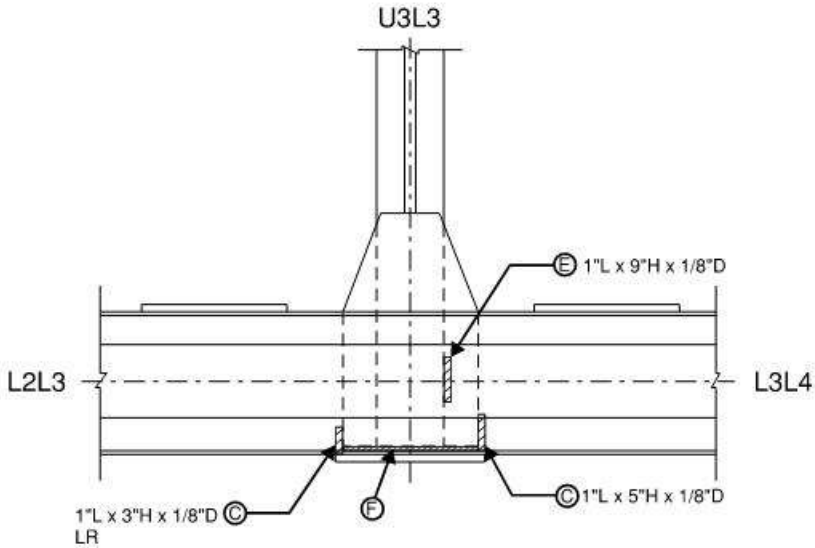

Span 32, South Truss, Node L3, North Gusset Plate, North Elevation

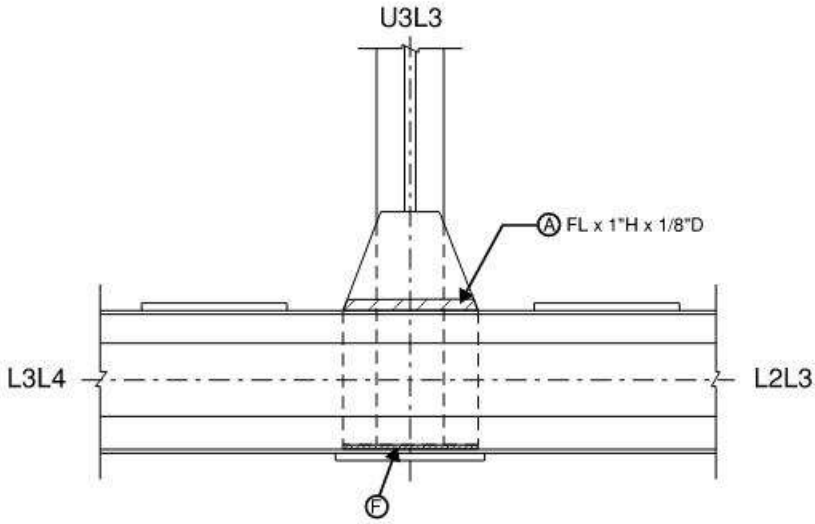

Span 32, South Truss, Node L3, South Gusset Plate, South Elevation

REVISION 1	DATE: 8/26/19	CREW: SW, BF (Baker)	REVISION 3	DATE:	CREW:
REVISION 2	DATE: 9/27/2021	CREW: EG, MM (PRIME) - No Change	REVISION 4	DATE:	CREW:

CREW: SW, KT	DATE: 8/23/2017	BRIDGE NO.: 03819

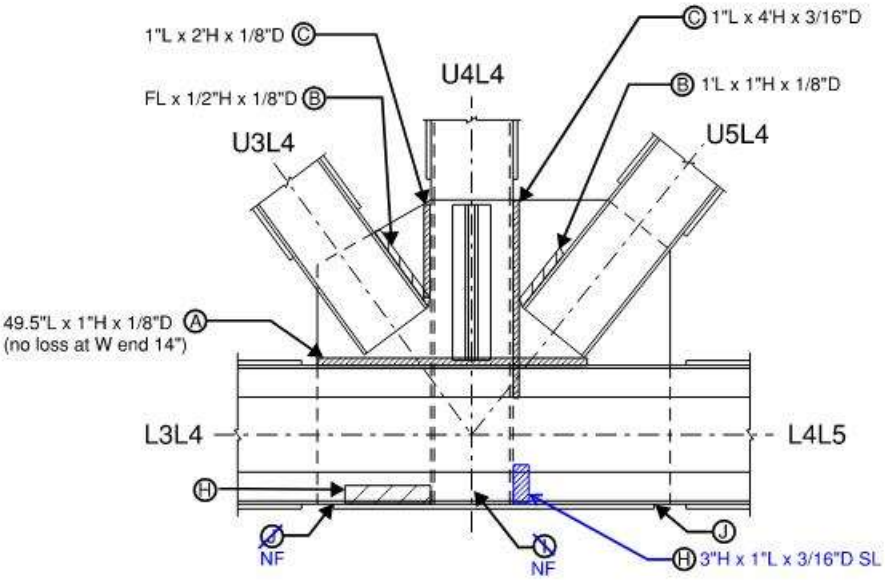

Span 32, South Truss, Node L4, North Gusset Plate, North Elevation

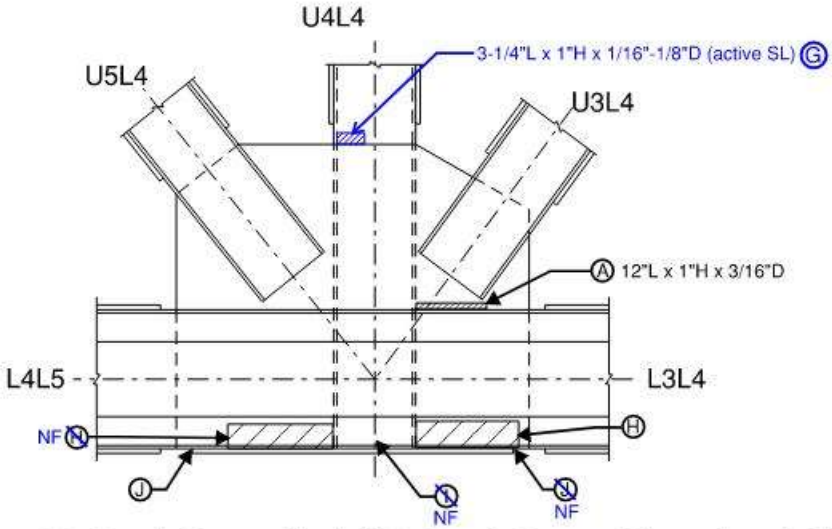

Span 32, South Truss, Node L4, South Gusset Plate, South Elevation

REVISION 1	DATE: 8/26/19	CREW: SW, BF (Baker)	REVISION 3	DATE:	CREW:
REVISION 2	DATE: 9/27/2021	CREW: EG, MM (PRIME)	REVISION 4	DATE:	CREW:

CREW: SW, KT	DATE: 10/5/2017	BRIDGE NO.: 03819

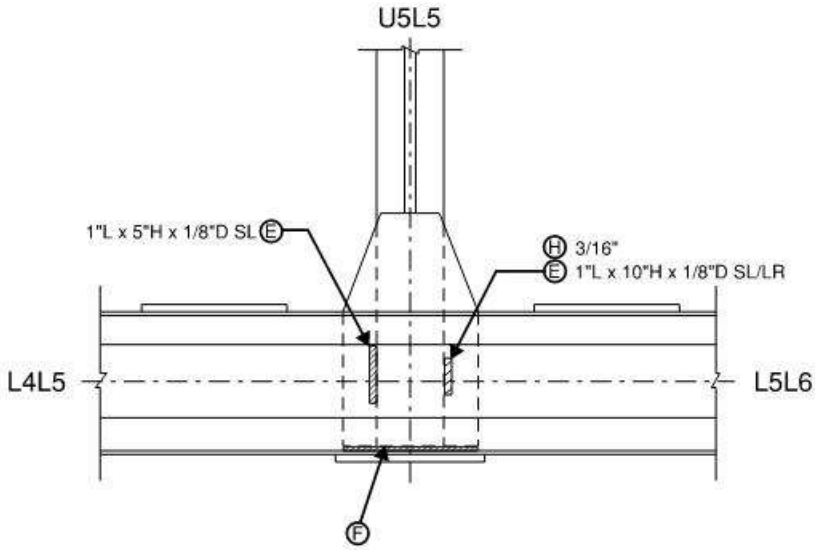

Span 32, South Truss, Node L5, North Gusset Plate, North Elevation

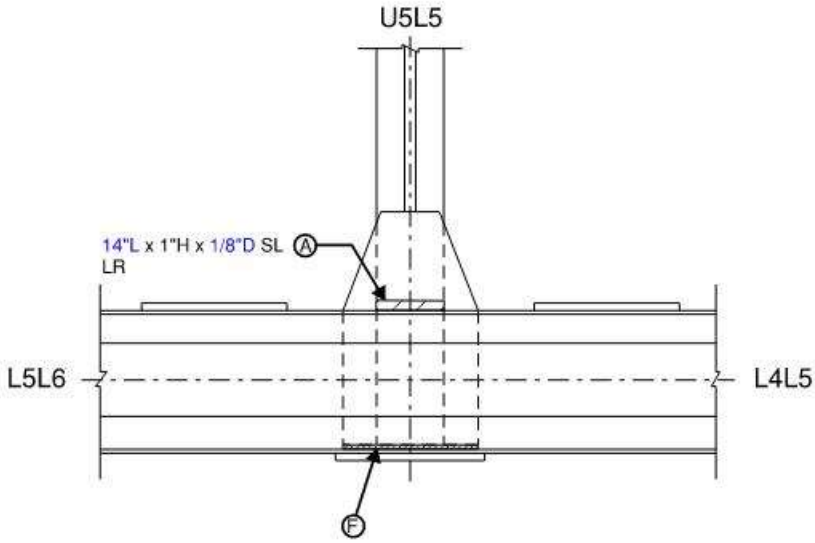

Span 32, South Truss, Node L5, South Gusset Plate, South Elevation

REVISION 1	DATE: 8/26/19	CREW: SW, BF (Baker)	REVISION 3	DATE:	CREW:
REVISION 2	DATE: 8/17/2021	CREW: CMR, NH (PRIME)	REVISION 4	DATE:	CREW:

CREW: SW, KT	DATE: 8/23/2017	BRIDGE NO.: 03819

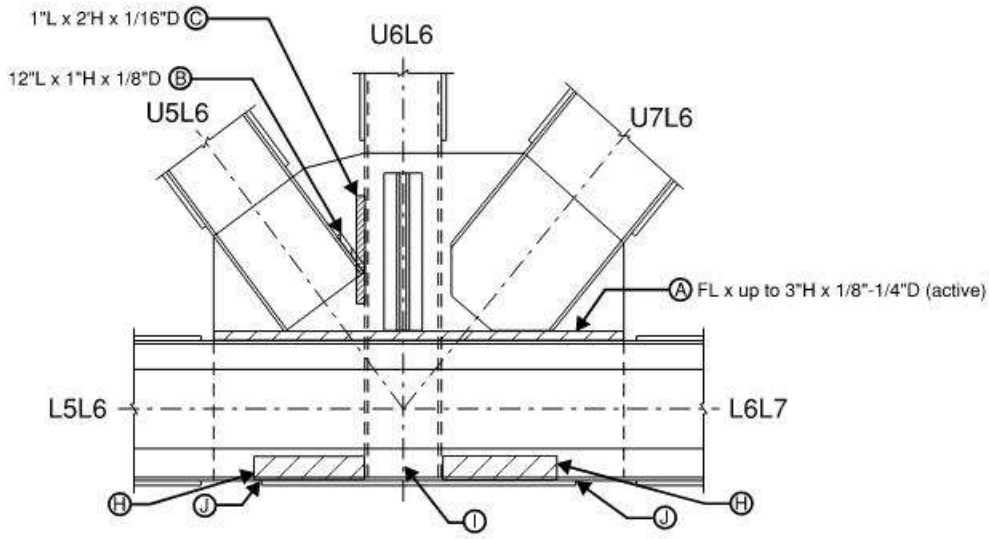

Span 32, South Truss, Node L6, North Gusset Plate, North Elevation

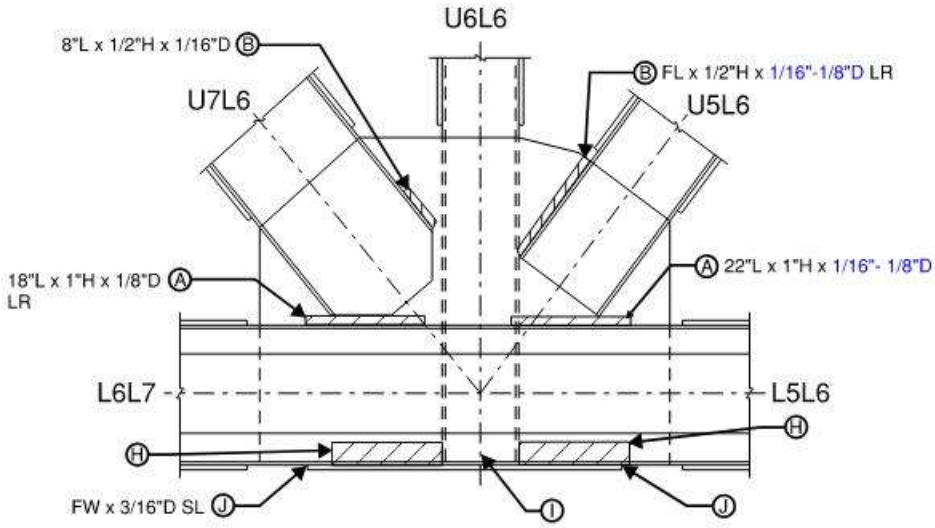

Span 32, South Truss, Node L6, South Gusset Plate, South Elevation

REVISION 1	DATE: 11/20/19	CREW: BH, JG (Baker)	REVISION 3	DATE:	CREW:
REVISION 2	DATE: 8/17/2021	CREW: CMR, NH (PRIME)	REVISION 4	DATE:	CREW:

CREW: BH, JG	DATE: 11/20/2019	BRIDGE NO.: 03819

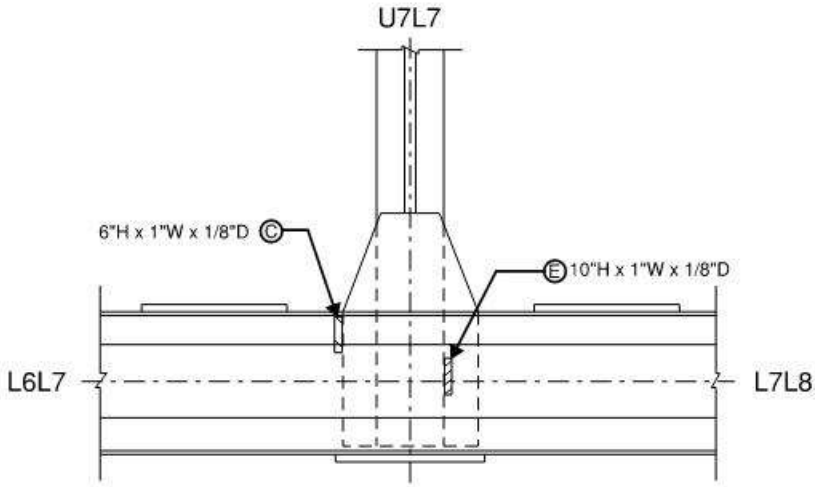

Span 32, South Truss, Node L7, North Gusset Plate, North Elevation

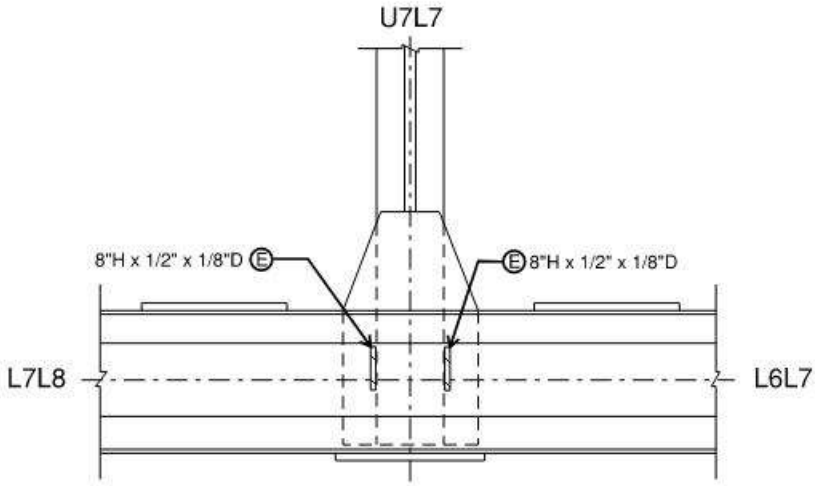

Span 32, South Truss, Node L7, South Gusset Plate, South Elevation

REVISION 1	DATE: 9/13/19	CREW: BH, JG (Baker)	REVISION 3	DATE:	CREW:
REVISION 2	DATE: 8/17/2021	CREW: CMR, NH (PRIME) - No Change	REVISION 4	DATE:	CREW:

CREW: BF, SW	DATE: 10/3/2017	BRIDGE NO.: 03819

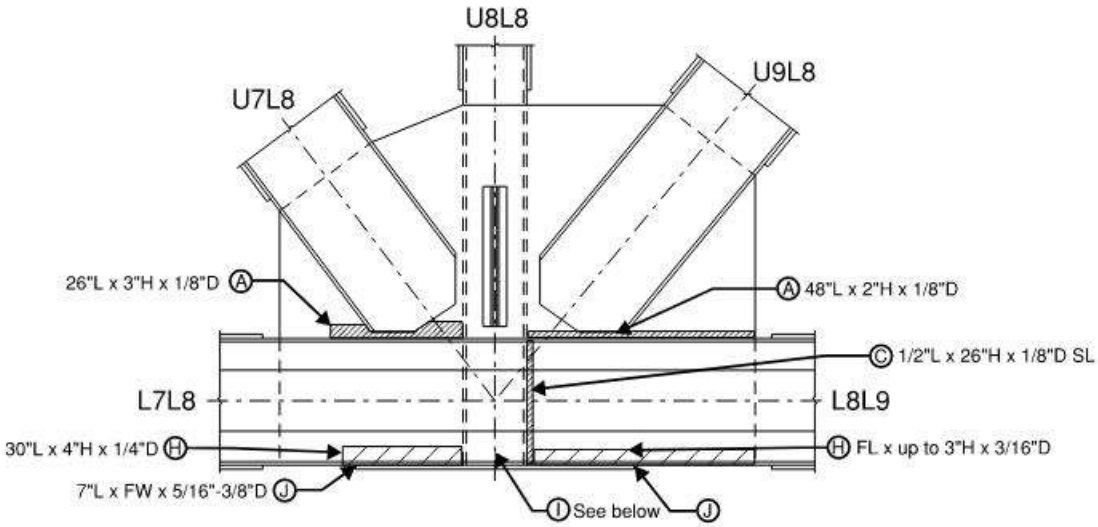

Span 32, South Truss, Node L8, North Gusset Plate, North Elevation

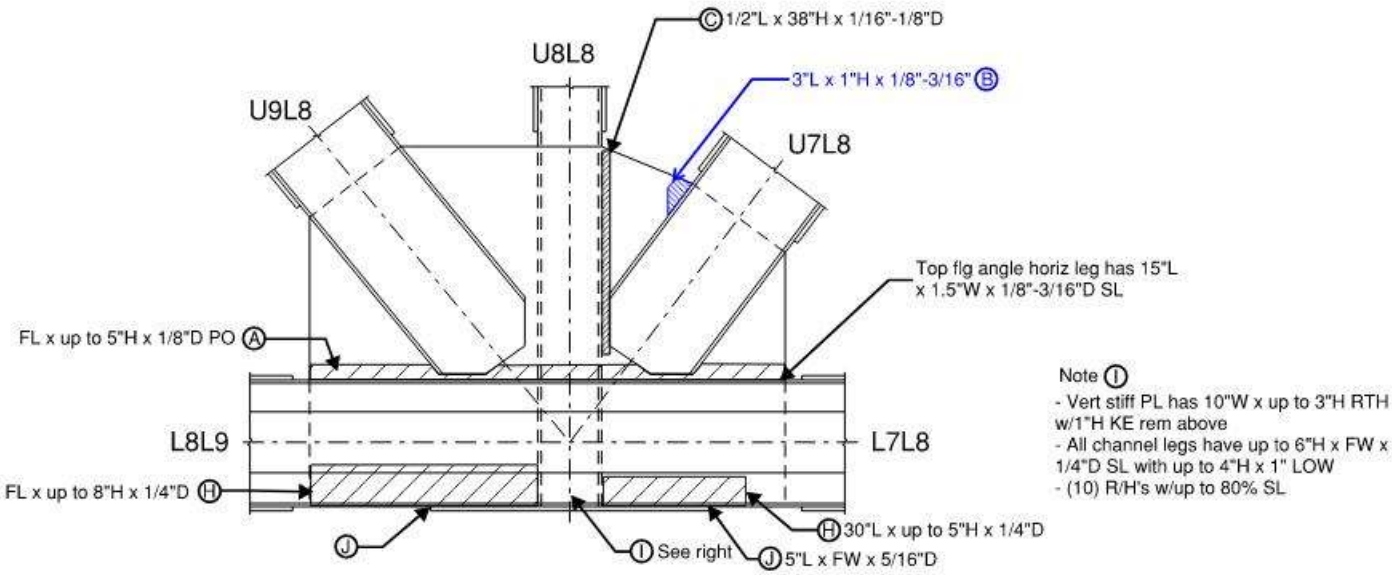

Note:
- Most SL's are active

Span 32, South Truss, Node L8, South Gusset Plate, South Elevation

REVISION 1	DATE: 9/13/19	CREW: BH, JG (Baker)	REVISION 3	DATE:	CREW:
REVISION 2	DATE: 9/27/2021	CREW: EG, MM (PRIME)	REVISION 4	DATE:	CREW:

CREW: SW, BF	DATE: 10/3/2017	BRIDGE NO.: 03819

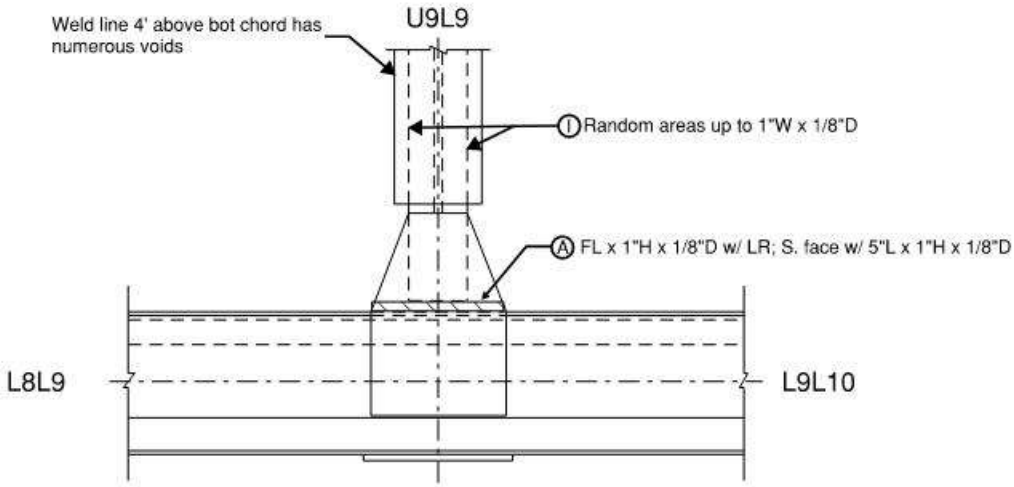

Span 32, South Truss, Node L9, North Gusset Plate, North Elevation

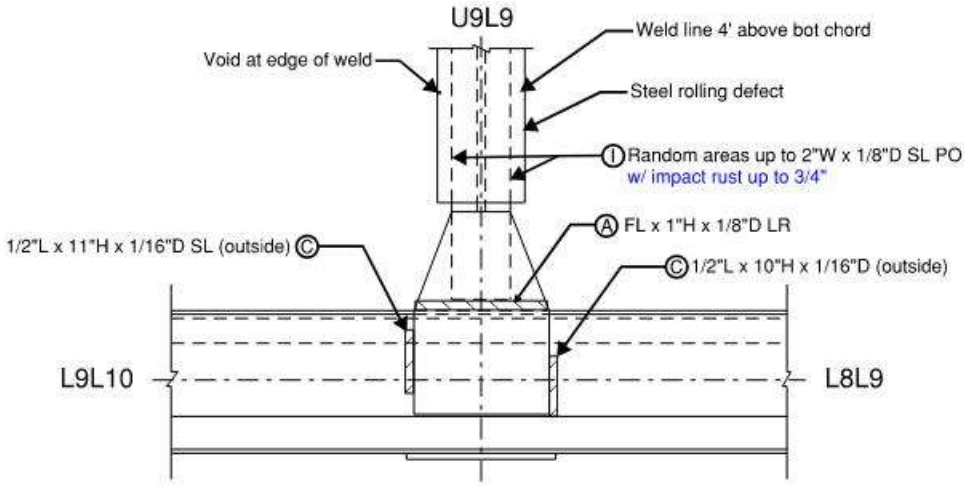

Span 32, South Truss, Node L9, South Gusset Plate, South Elevation

REVISION 1	DATE: 9/13/19	CREW: BH, JG (Baker)	REVISION 3	DATE:	CREW:
REVISION 2	DATE: 9/27/2021	CREW: EG, MM (PRIME)	REVISION 4	DATE:	CREW:

Sketches
Inspection type: Fracture Critical,Routine
Inspection Date: 7/26/2021
Inspected by: PRIME AE

:Bridge No 03819

Town: NEW LONDON
Carried: INTERSTATE 95 NORTHBOUND
Crossed: THAMES RV,RR,LOCAL ROADS
Inventory Route: NHS

CREW: SW, KT	DATE: 8/23/2017	BRIDGE NO.: 03819

Deterioration Legend:
① - PR between top horiz gusset PL and bracing members up to __" thick
② - PR between bot horiz gusset PL and bracing members up to __" thick
③ - Rivet heads have up to ___% SL
④ - Top of bot angle has 18"L x 6"W x 1/4"D pitting
⑤ - (1) Rivet between horiz gusset PL and horiz strut is mis-shaped
⑥ - Rand FW x 1/4" pitt at lower horiz leg
⑦ - Horiz G PL at conn's to bot chord lower angle w/ 3" x 1/4" LOW
⑧ - Lower lat bracing vertical leg of angle w/ 2" x 1" RTH

LOG DIRECTION
WEST TO EAST

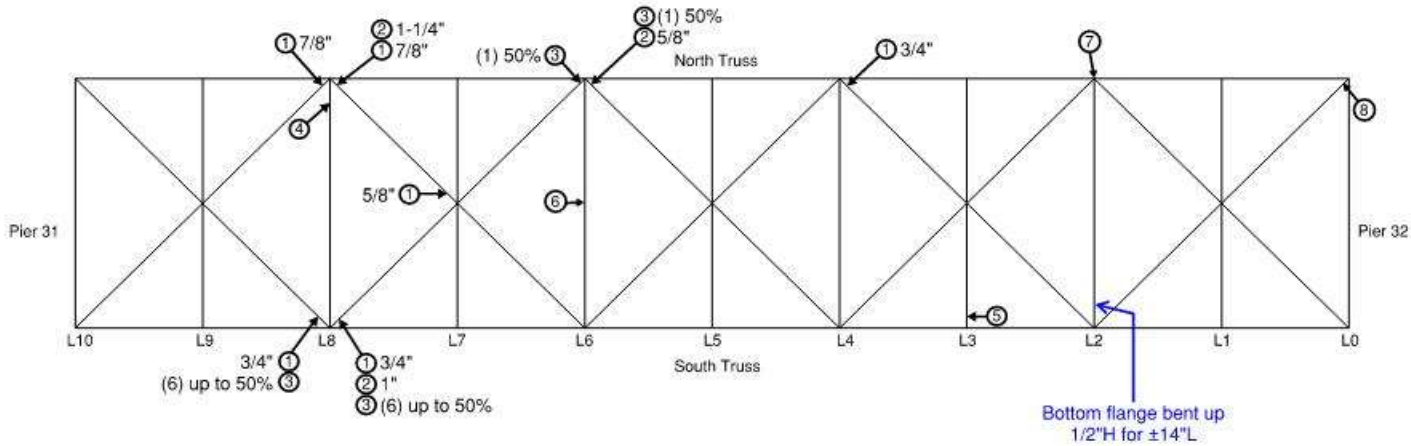

General Notes:
- See Lateral and Sway Bracing General Notes (Spans 22-25 & 29-32) sheet

Span 32 - Bottom Laterals

REVISION 1	DATE: 9/13/19	CREW: BH, JG (Baker)	REVISION 3	DATE:	CREW:
REVISION 2	DATE: 7/26/2021	CREW: BM, EG, CMR, NH, IS (PRIME)	REVISION 4	DATE:	CREW:

Sketches
Inspection type: Fracture Critical,Routine
Inspection Date: 7/26/2021
Inspected by: PRIME AE

:Bridge No 03819

Town: NEW LONDON
Carried: INTERSTATE 95 NORTHBOUND
Crossed: THAMES RV,RR,LOCAL ROADS
Inventory Route: NHS

CREW: SW, JG	DATE: 12/8/2017	BRIDGE NO.: 03819

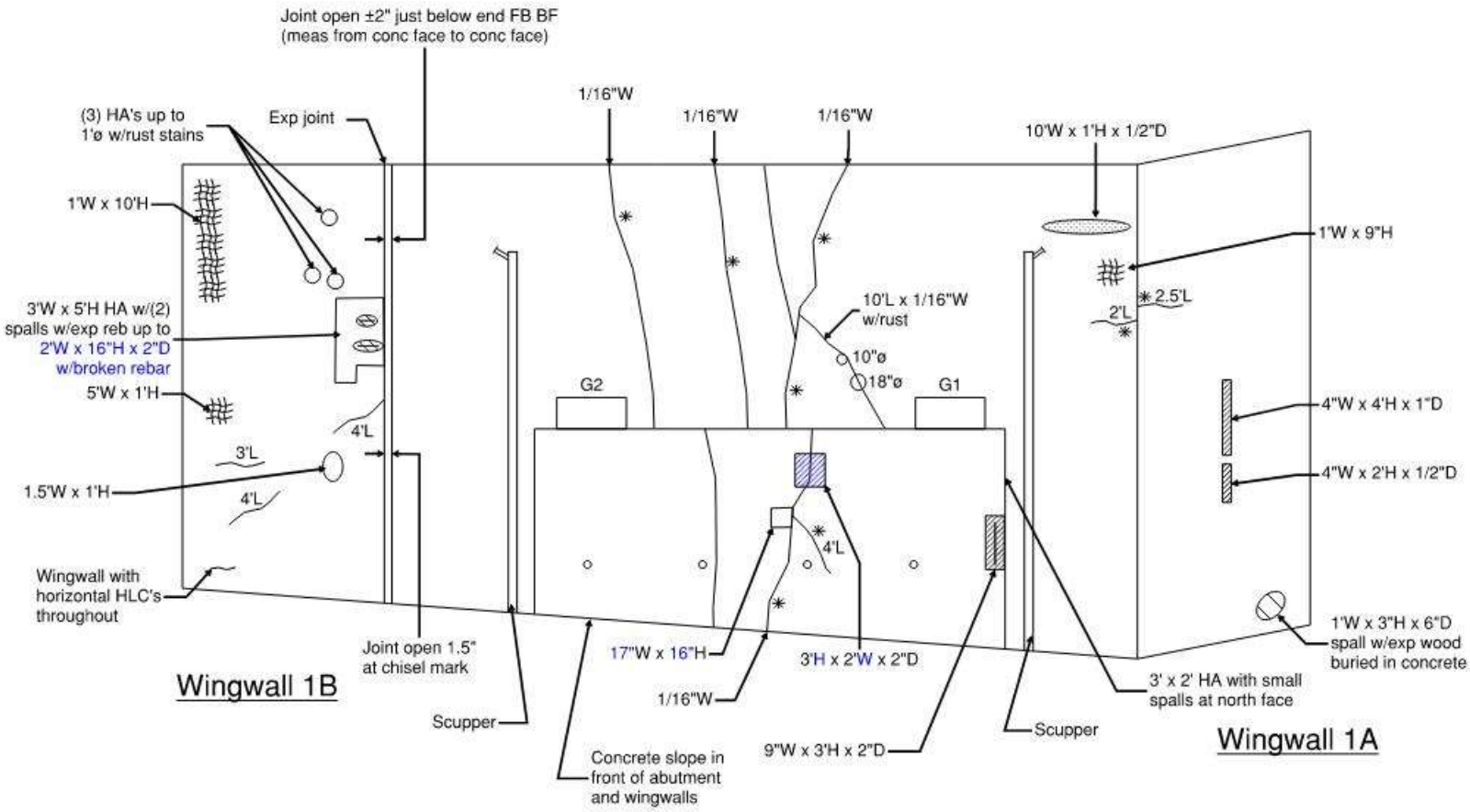

General Notes:

- Random areas of light scale, minor honeycomb and minor pop-outs up to 3"ø x 1/2"D
- Abutment and wingwalls at bottom have painted over graffiti w/minor areas of newer graffiti
- Backwall has random vertical and diagonal hairline cracks up to 4'L
- Light debris on bridge seat
- Active joint leakage with silt stains on backwall, bridge seat and abutment stem ~~(dry this inspection)~~
- Retaining walls have random vertical hairline cracks
- Light vegetation on south retaining wall
- Concrete pedestals have random vertical hairline cracks up to full height with random efflorescence
- Abutment seat with ponding water between bearings

LEGEND:
- HOLLOW AREA
- SHALLOW REBAR
- SPALL AREA
- SPALL AREA WITH EXPOSED REBAR
- MAPCRACKS
- HAIRLINE CRACKS
- HONEYCOMB AREA
- SCALE AREA
- EFFLORESCENCE PRESENT

Abutment 1

REVISION 1	DATE: 10/3/19	CREW: BH, JG (Baker)	REVISION 3	DATE:	CREW:
REVISION 2	DATE: 9/9/2021	CREW: EG, IS, NH (Prime)	REVISION 4	DATE:	CREW:

Sketches
Inspection type: Fracture Critical,Routine
Inspection Date: 7/26/2021
Inspected by: PRIME AE

:Bridge No 03819

Town: NEW LONDON
Carried: INTERSTATE 95 NORTHBOUND
Crossed: THAMES RV,RR,LOCAL ROADS
Inventory Route: NHS

CREW: SW, BF	DATE: 10/2/2017	BRIDGE NO.: 03819

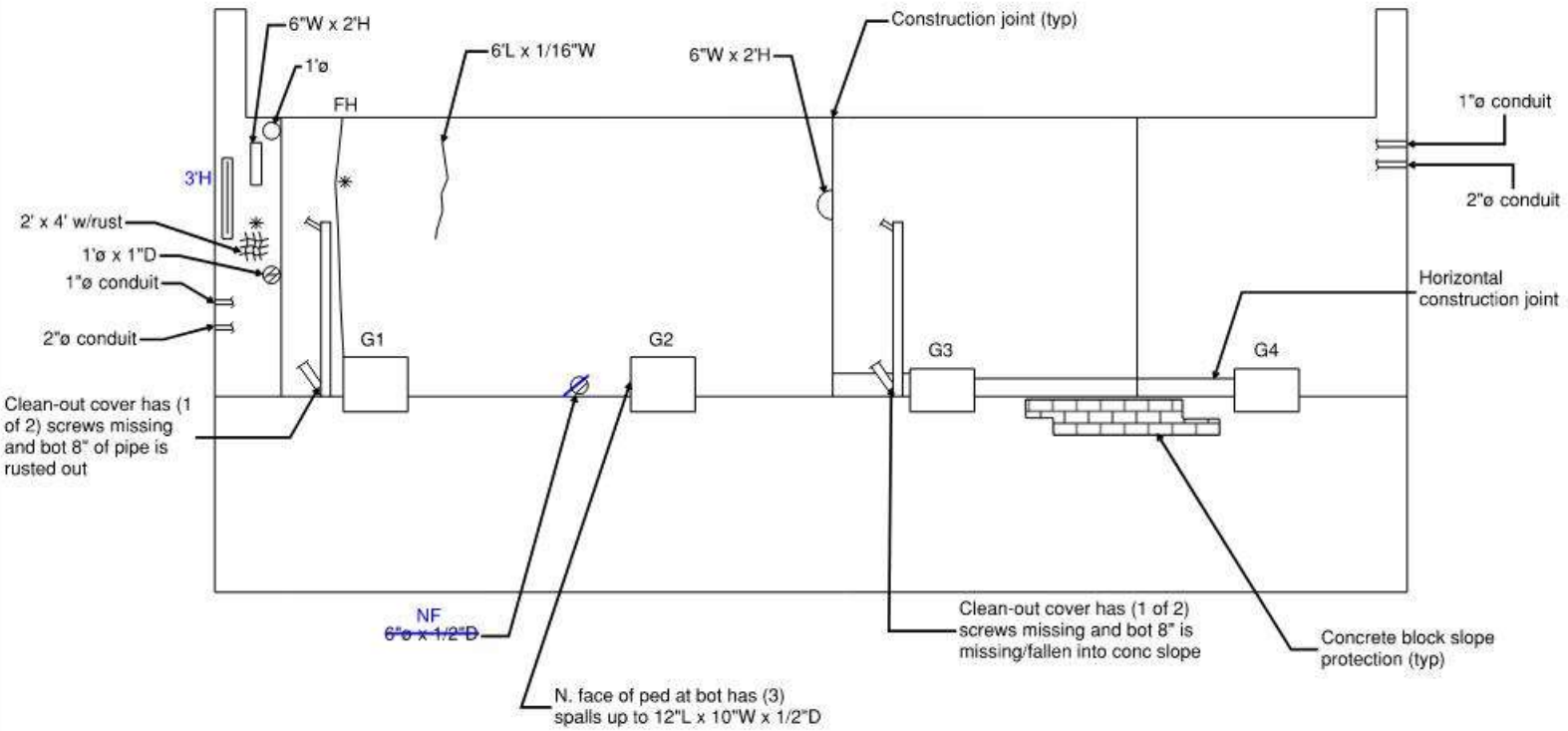

General Notes:

- Random areas of light scale and paint protective coating peeling
- Evidence of past joint leakage with silt stains on backwall, pedestals and slope protection (dry this inspection)
- Damp areas noted on the portions of the backwall and slope protection between Girders G1-G3.
- Backwall has random vertical HLC's up to FH (some cracks prev noted not visible due to graffiti, paint or silt stains)
- Backwall has areas of painted over graffiti with random areas of newer graffiti
- Concrete block slope protection has random cracks up to 3/8"W (typ less than 1/8"W)
- Bituminous section below conc slope blocks have isolated settled areas up to 10' x 8' x 14"DP.

LEGEND:
- HOLLOW AREA
- SHALLOW REBAR
- SPALL AREA
- SPALL AREA WITH EXPOSED REBAR
- MAPCRACKS
- HAIRLINE CRACKS
- HONEYCOMB AREA
- SCALE AREA
- EFFLORESCENCE PRESENT

Abutment 2

REVISION 1	DATE: 8/26/19	CREW: BF, SW (Baker)	REVISION 3	DATE:	CREW:
REVISION 2	DATE: 10/5/2021	CREW: CMR, NH (Prime)	REVISION 4	DATE:	CREW:

Sketches
Inspection type: Fracture Critical,Routine
Inspection Date: 7/26/2021
Inspected by: PRIME AE

:Bridge No 03819

Town: NEW LONDON
Carried: INTERSTATE 95 NORTHBOUND
Crossed: THAMES RV,RR,LOCAL ROADS
Inventory Route: NHS

CREW: SW, BF	DATE: 11/15/2017	BRIDGE NO.: 03819

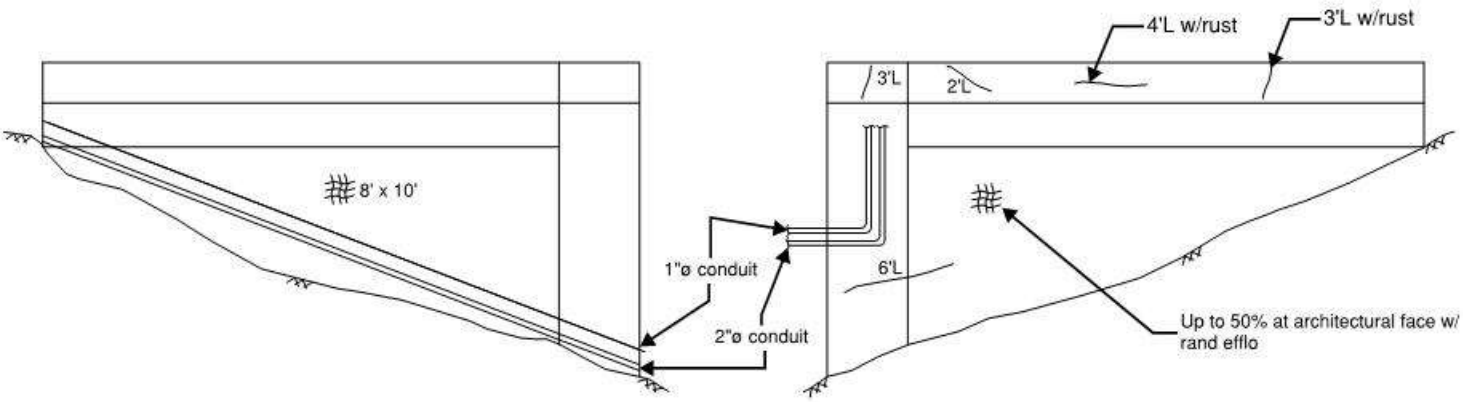

Wingwall 2A

Wingwall 2B

General Notes:
- Random areas of light scale and minor honeycomb
- Light to moderate vegetation growth in front of wingwalls

LEGEND:
- HOLLOW AREA
- SHALLOW REBAR
- SPALL AREA
- SPALL AREA WITH EXPOSED REBAR
- MAPCRACKS
- HAIRLINE CRACKS
- HONEYCOMB AREA
- SCALE AREA
- EFFLORESCENCE PRESENT

Abutment 2 Wingwalls

REVISION 1	DATE: 8/26/19	CREW: BF, SW (Baker)	REVISION 3	DATE:	CREW:
REVISION 2	DATE: 10/5/2021	CREW: CMR, NH (Prime) - No Change	REVISION 4	DATE:	CREW:

CREW: SW, BF	DATE: 8/22/2017	BRIDGE NO.: 03819

Pier General Notes

General for Piers 22-32:

- Per CTDOT directive, the piers were only inspected with a 60' snooper from the top and from the ground/boat. Therefore, some deficiencies from the previous inspection report could not be verified but were added to the sketches.

Pier Struts Between Columns (for 2-girder and truss spans):

- Random areas of light to moderate scale, minor honeycomb, shallow rebar up to 1' long and minor spalls/pop-outs up to 6"ø and 1" deep, exposed rebar chairs, rust stains (typically under bearings) and stains from past leakage.
- Random concrete patches have random hairline linear and map cracks with isolated efflorescence (patches sound solid unless noted otherwise).
- Light to moderate debris accumulation on top of pier caps.
- Random areas of exposed tie wire.

Pier Columns:

- Random areas of light to heavy scale, minor honeycomb, light graffiti, areas of painted over graffiti (making some cracks difficult to verify), minor scrapes/chips less than 1" deep, shallow rebar up to 1'L and minor spalls/pop-outs up to 6"ø x 1" deep.
- Random concrete patches have random hairline linear and map cracks with isolated efflorescence (patches sound solid unless noted otherwise).
- Scupper pipes at pier columns have random areas of light rust.
- Steel columns at piers 6, 8, 12 and 14 have random areas of peeling paint with light rust.
- Bearing grout pads and pedestals have random minor spalls up to 4"ø x 1/2" deep and random linear hairline cracks, some of which extend to bearing masonry plates.

Granite Pier Bases (Piers 24-28):

- Stone masonry pier bases have random hairline cracks in stones.
- Random areas (<5%) of loose/missing/deteriorated mortar between stones w/penetration up to 1' deep.

Piers 33-35 (Hammerhead Piers)

- Random areas of light to moderate scale and minor honeycomb.
- Bearing grout pads and pedestals have random minor spalls up to 4"ø x 1/2" deep and random linear hairline cracks, some of which extend to bearing masonry plates.

REVISION 1	DATE: 10/3/19	CREW: BH, JG (Baker) - No change	REVISION 3	DATE:	CREW:
REVISION 2	DATE: 7/26/21	CREW: IS, CMR, NH (Prime) - No Change	REVISION 4	DATE:	CREW:

CREW: SW, BF	DATE: 8/22/2017	BRIDGE NO.: 03819

Hollow Areas in Substructure Over Roadways, RR Tracks, Channel and Accessible Areas

- Pier 7, top of column 2, 6' x 10" adjacent to sidewalk
- Pier 9, strut, (2) areas up to 12' wide x full length hollow area over stock pile area.
- Pier 9, column 1, 16" high x 11" wide over stock pile area
- Pier 9, column 2, (2) areas up to 2' x 1' over stock pile area
- Pier 10, strut, (2) areas up to 4' x 4' over stock pile area
- ~~Pier 10, column 1, 4' x 1' over stock pile area~~ NF
- Pier 10, column 2, (2) areas up to 6.5' x 4' over stock pile area
- Pier 11, strut, (8) areas up to 8' x 3' over stock pile area
- Pier 11, column 1, (5) areas up to 5' x 1' over stock pile area
- Pier 11, column 2, 3' x 3' over stock pile area
- Pier 17, column 2, (3) up to 2' x 1' over DPW parking lot
- Pier 18, column 1, 10"ø over DPW parking lot
- Pier 18, underside of horizontal strut, 2'ø over DPW parking lot
- Pier 19, columns 1 & 2, (4) up to 3' x 6" over DPW parking lot/road
- Pier 24, column 2, 1' x 1 over boat launch parking lot
- Piers 25, 27 and 28, columns have random HA's up to 7' x 1.5' over water (could not confirm this inspection)
- Pier 30, strut, (2) up to 8' x 3' over boat launch area
- Pier 30, column 2, (8) up to 4' x 2' adjacent to boat launch parking lot and Mohawk parking area.

REVISION 1	DATE: 10/3/19	CREW: BH, JG (Baker)	REVISION 3	DATE:	CREW:
REVISION 2	DATE: 9/9/21	CREW: EG, IS, NH (Prime)	REVISION 4	DATE:	CREW:

Sketches
Inspection type: Fracture Critical,Routine
Inspection Date: 7/26/2021
Inspected by: PRIME AE

:Bridge No 03819

Town: NEW LONDON
Carried: INTERSTATE 95 NORTHBOUND
Crossed: THAMES RV,RR,LOCAL ROADS
Inventory Route: NHS

CREW: SW, JG	DATE: 12/7/2017	BRIDGE NO.: 03819

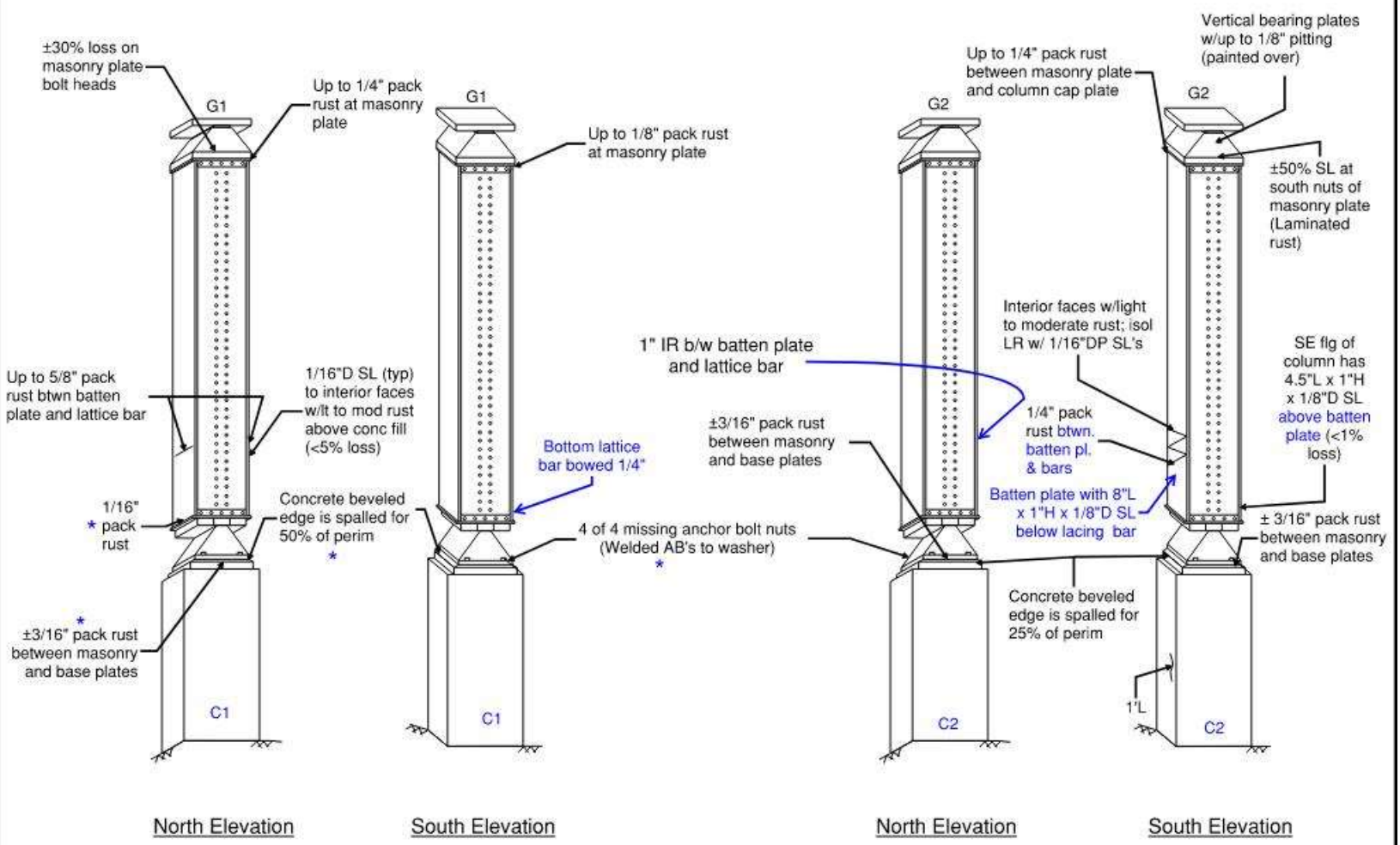

Note:
* - Cannot confirm due to heavy vegetation

LEGEND:
- HOLLOW AREA
- SHALLOW REBAR
- SPALL AREA
- SPALL AREA WITH EXPOSED REBAR
- MAPCRACKS
- HAIRLINE CRACKS
- HONEYCOMB AREA
- SCALE AREA
- EFFLORESCENCE PRESENT

General Notes:
- See Substructure General Notes Sheet
- Pier 6N has vine growth along full height of column base and column
- Bottom ±2.5' of steel columns are filled with concrete

Pier 6

REVISION 1	DATE: 10/3/19	CREW: BH, JG (Baker)	REVISION 3	DATE:	CREW:
REVISION 2	DATE: 9/9/21	CREW: EG, IS, NH (Prime)	REVISION 4	DATE:	CREW:

Sketches
Inspection type: Fracture Critical,Routine
Inspection Date: 7/26/2021
Inspected by: PRIME AE

:Bridge No 03819

Town: NEW LONDON
Carried: INTERSTATE 95 NORTHBOUND
Crossed: THAMES RV,RR,LOCAL ROADS
Inventory Route: NHS

CREW: SW, JG	DATE: 12/7/2017	BRIDGE NO.: 03819

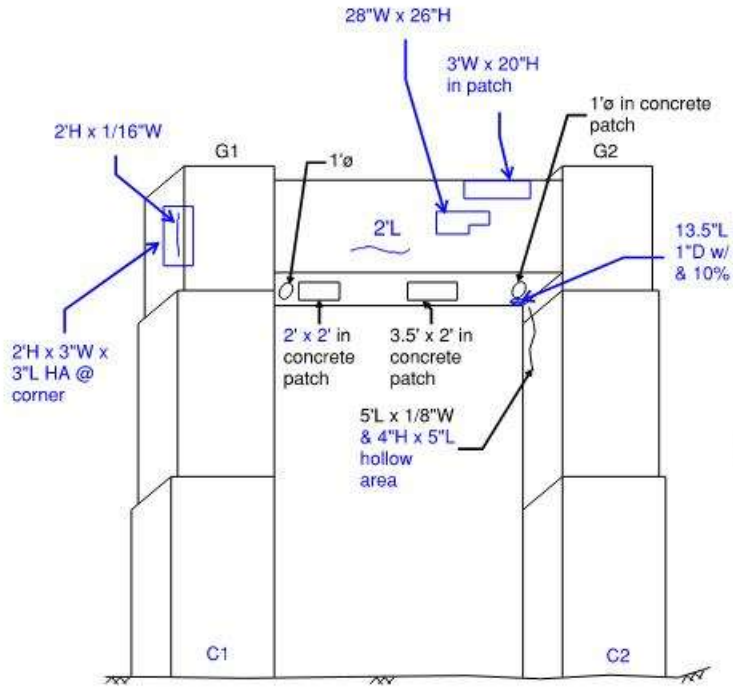

West Elevation

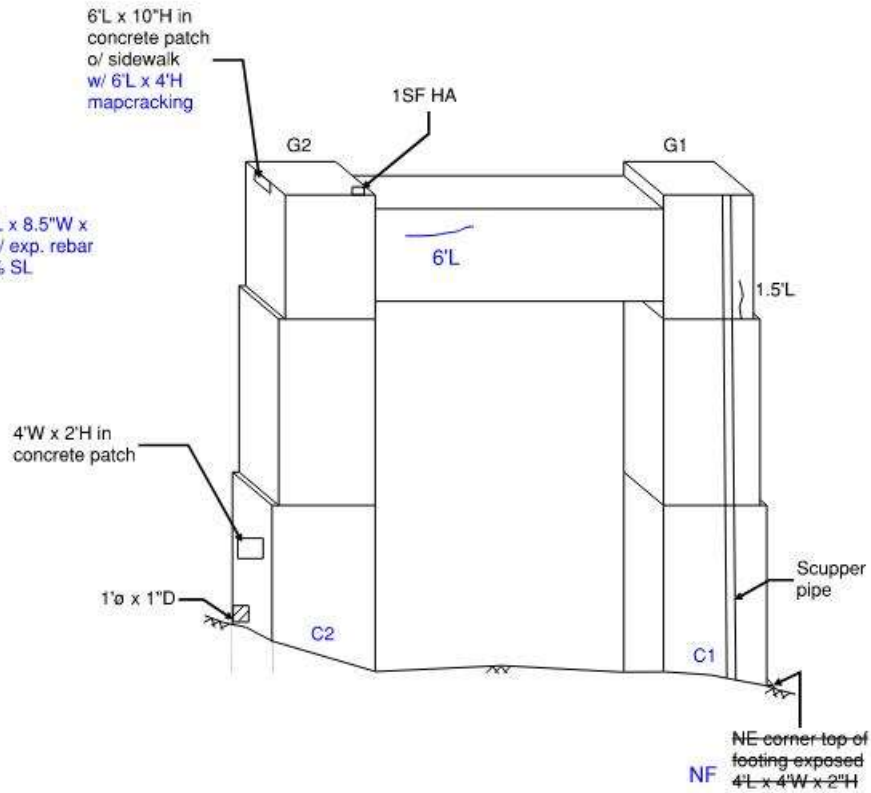

East Elevation

General Notes:

- See Substructure General Notes Sheet
- Active Leakage for full length cap/strut
- Moderate scaling on cap

LEGEND:
- HOLLOW AREA
- SHALLOW REBAR
- SPALL AREA
- SPALL AREA WITH EXPOSED REBAR
- MAPCRACKS
- HAIRLINE CRACKS
- HONEYCOMB AREA
- SCALE AREA
- EFFLORESCENCE PRESENT

Pier 7

REVISION 1	DATE: 10/3/19	CREW: BH, JG (Baker)	REVISION 3	DATE:	CREW:
REVISION 2	DATE: 9/9/21	CREW: EG, IS, NH (Prime)	REVISION 4	DATE:	CREW:

Sketches
Inspection type: Fracture Critical,Routine
Inspection Date: 7/26/2021
Inspected by: PRIME AE

:Bridge No 03819

Town: NEW LONDON
Carried: INTERSTATE 95 NORTHBOUND
Crossed: THAMES RV,RR,LOCAL ROADS
Inventory Route: NHS

CREW: SW, JG	DATE: 12/7/2017	BRIDGE NO.: 03819

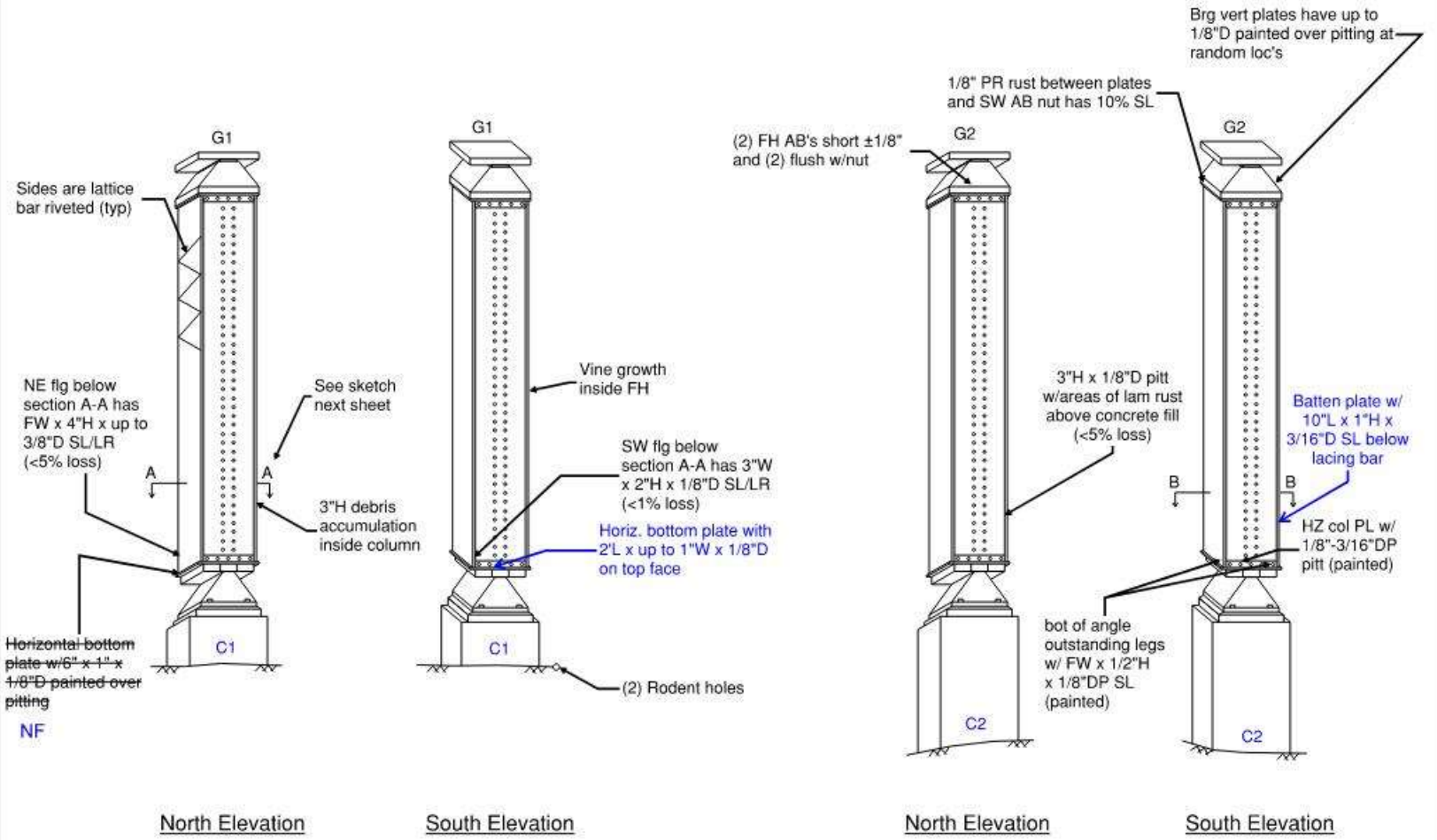

North Elevation | South Elevation | North Elevation | South Elevation

Pier 8N | Pier 8S

General Notes:

- See Substructure General Notes Sheet
- Pier 8N lower brg stiff's have up to FW x up to 6"H lam rust w/up to 3/16"D SL
- Bottom ±2.5' of steel columns are filled with concrete

LEGEND:
- HOLLOW AREA
- SHALLOW REBAR
- SPALL AREA
- SPALL AREA WITH EXPOSED REBAR
- MAPCRACKS
- HAIRLINE CRACKS
- HONEYCOMB AREA
- SCALE AREA
- EFFLORESCENCE PRESENT

Pier 8

REVISION 1	DATE: 10/3/19	CREW: BH, JG (Baker)	REVISION 3	DATE:	CREW:
REVISION 2	DATE: 10/6/21	CREW: EG, BM, IS (Prime)	REVISION 4	DATE:	CREW:

CREW: SW, JG	DATE: 12/8/2017	BRIDGE NO.: 03819

27 CB 91 (2)
A = 26.77 in²
t_w = 0.483 in
D = 26.84 - 2(0.712) = 25.42 in²
t_f = 0.712 in
b_f = 9.983 in

27 I 81.4 (1)
A = 23.74 in²
t_w = 0.6 in
D = 20 - 2(1.183) = 17.63 in²
t_f = 0.92 in (ave
b_f = 7 in

16.5" x 13/16" (2)
A = 13.41 in²

Note:
* - Covered by bird debris.

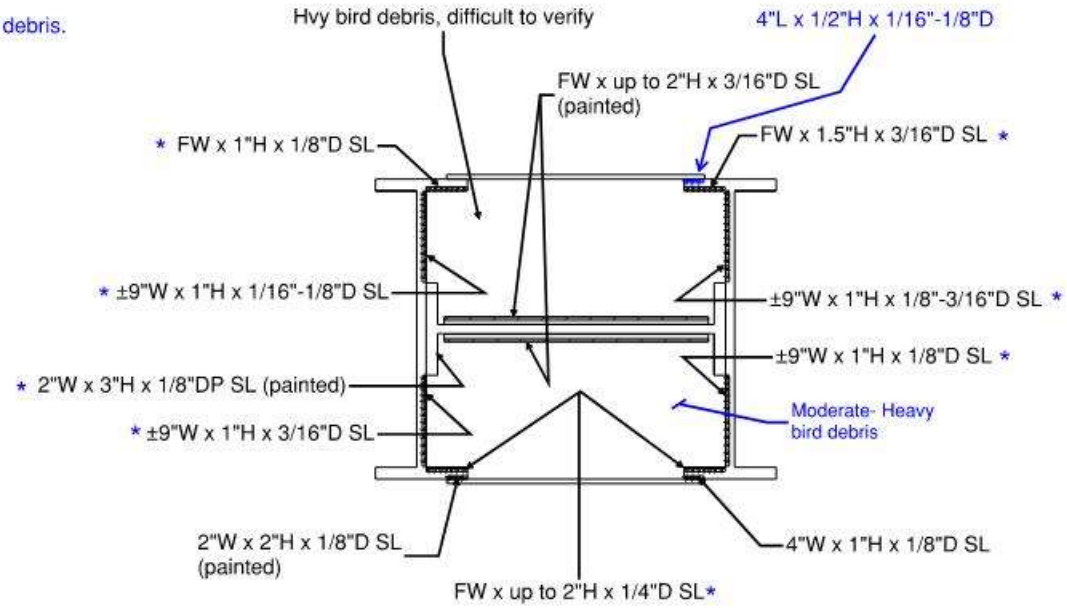

Section Loss Calculation:
A_{orig}= 2(26.77) + 23.74 + (2)(16.5)(13/16) = 104.09 in²
A_{Loss}= 4.75(1/8 + 3/16 + 1/4 + 1/4) + (9)(3/32 + 5/32 + 3/16 + 1/8) + (2)(1/8) + (4)(1/8 + 3/32) + (16.5)(3/16 + 3/16) + (2)(1/8) = 16.49 in²
Percent Loss = 16.49/104.09 = **15.8% section loss**

Note:
- Section is located above concrete filled base
- All section losses have laminated rust, U.O.N.

Pier 8N Section A-A

REVISION 1	DATE: 10/7/19	CREW: BH, JG (Baker)	REVISION 3	DATE:	CREW:
REVISION 2	DATE: 10/6/21	CREW: EG, AN (Prime)	REVISION 4	DATE:	CREW:

CREW: BH, JG	DATE: 10/7/19	BRIDGE NO.: 03819

27 CB 91 (2)
A = 26.77 in²
t_w = 0.483 in
D = 26.84 - 2(0.712) = 25.42 in²
t_f = 0.712 in
b_f = 9.983 in

27 I 81.4 (1)
A = 23.74 in²
t_w = 0.6 in
D = 20 - 2(1.183) = 17.63 in²
t_f = 0.92 in (ave
b_f = 7 in

16.5" x 13/16" (2)
A = 13.41 in²

N

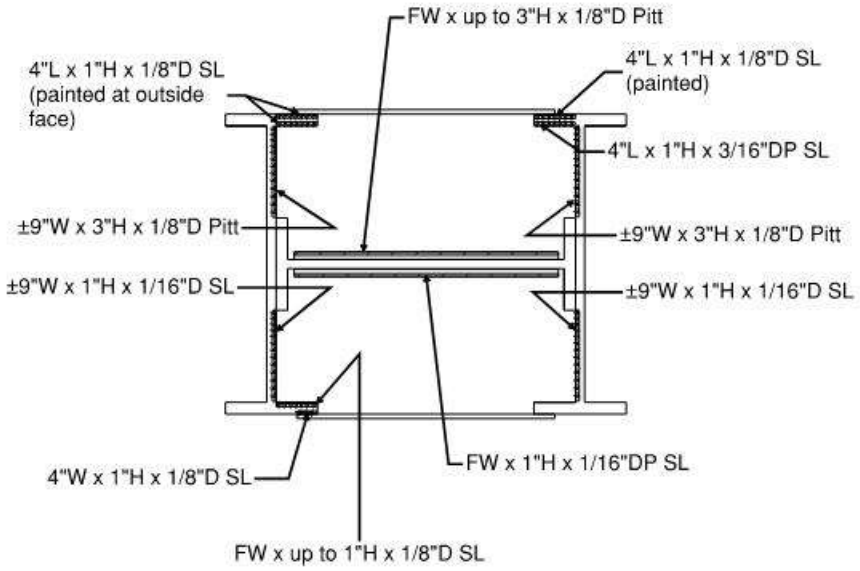

Section Loss Calculation:
A_{orig}= 2(26.77) + 23.74 + (2)(16.5)(13/16) = 104.09 in²
A_{Loss}= 4.75(1/8) + 4(1/8 + 1/8 + 1/8 + 1/8 + 3/16) + 9[(1/8)/2 + (1/8)/2 + 1/16 + 1/16] + 16.5[(1/8)/2 + 1/16] = 7.66 in²
Percent Loss = 7.66/104.09 = **7.4% section loss**

Note:
- Section is located above concrete filled base
- All section losses have laminated rust, U.O.N.

Pier 8S Section B-B

REVISION 1	DATE: 10/7/19	CREW: BH, JG (Baker)	REVISION 3	DATE:	CREW:
REVISION 2	DATE: 10/18/21	CREW: EG, SD (Prime)	REVISION 4	DATE:	CREW:

Sketches
Inspection type: Fracture Critical,Routine
Inspection Date: 7/26/2021
Inspected by: PRIME AE

:Bridge No 03819

Town: NEW LONDON
Carried: INTERSTATE 95 NORTHBOUND
Crossed: THAMES RV,RR,LOCAL ROADS
Inventory Route: NHS

CREW: JG, SW	DATE: 11/28/2017	BRIDGE NO.: 03819

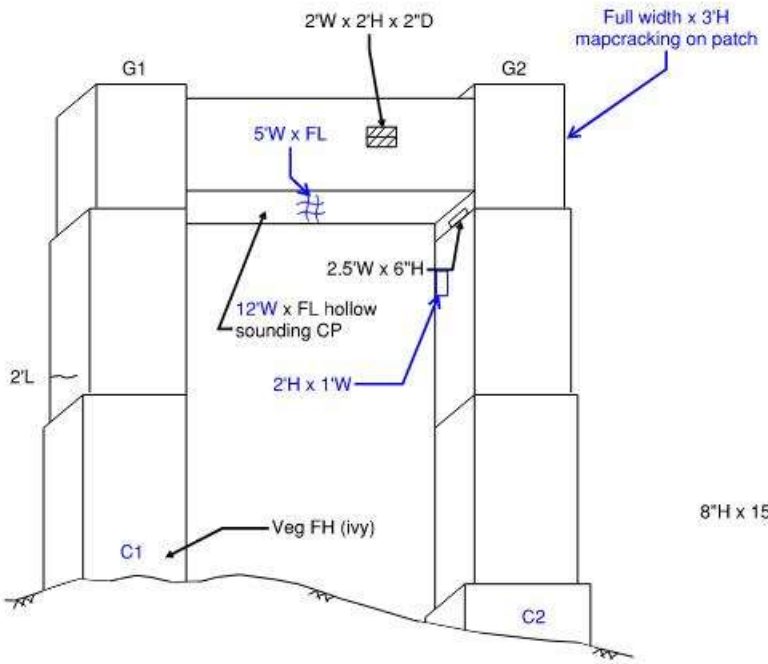

West Elevation

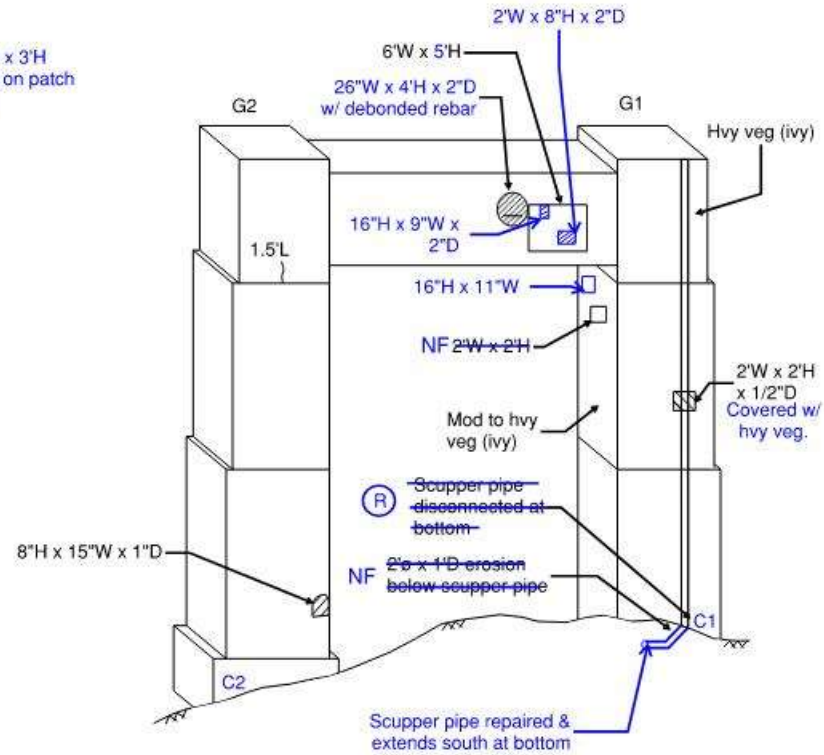

East Elevation

General Notes:

- See Substructure General Notes Sheet.
- Accumulation of wood forms, sand, concrete and joint debris up to 3" high on cap and on and around bearings.
- Above noted hollow areas are over/adjacent to actively used stock pile area.
- Concrete patches have areas of mapcracking.

(R) Repaired

LEGEND:
- HOLLOW AREA
- SHALLOW REBAR
- SPALL AREA
- SPALL AREA WITH EXPOSED REBAR
- MAPCRACKS
- HAIRLINE CRACKS
- HONEYCOMB AREA
- SCALE AREA
- EFFLORESCENCE PRESENT

Pier 9

REVISION 1	DATE: 10/3/19	CREW: BH, JG (Baker)	REVISION 3	DATE:	CREW:
REVISION 2	DATE: 10/11/21	CREW: BM, NR, IS, EB (Prime)	REVISION 4	DATE:	CREW:

Sketches
Inspection type: Fracture Critical,Routine
Inspection Date: 7/26/2021
Inspected by: PRIME AE

:Bridge No 03819

Town: NEW LONDON
Carried: INTERSTATE 95 NORTHBOUND
Crossed: THAMES RV,RR,LOCAL ROADS
Inventory Route: NHS

CREW: SW, EN	DATE: 11/27/2017	BRIDGE NO.: 03819

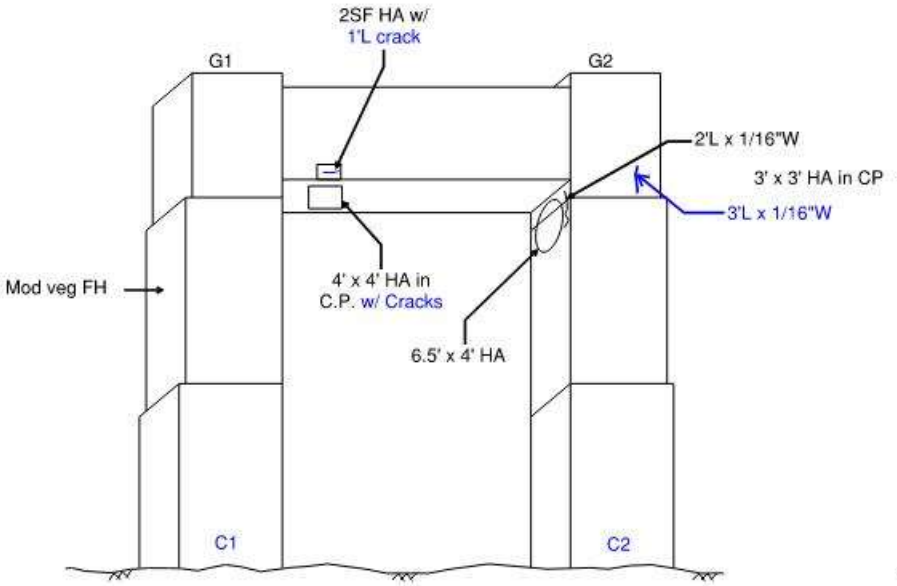

West Elevation

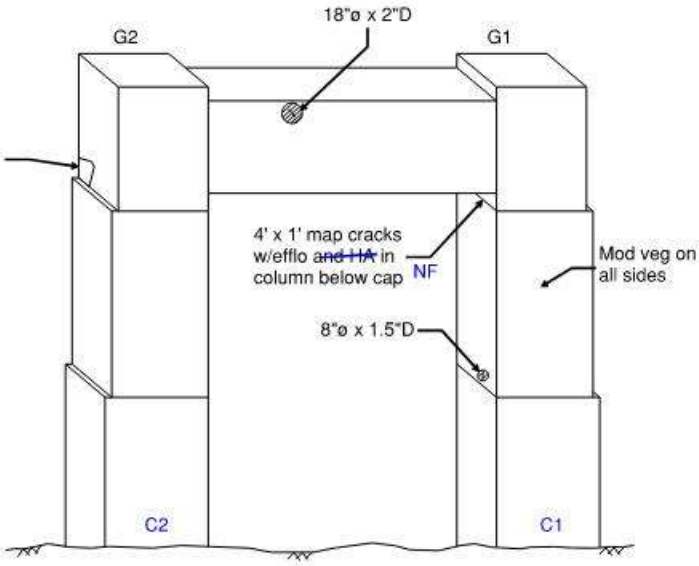

East Elevation

General Notes:

- See Substructure General Notes Sheet
- All hollow areas over construction/stock pile area

LEGEND:
- HOLLOW AREA
- SHALLOW REBAR
- SPALL AREA
- SPALL AREA WITH EXPOSED REBAR
- MAPCRACKS
- HAIRLINE CRACKS
- HONEYCOMB AREA
- SCALE AREA
- EFFLORESCENCE PRESENT

Pier 10

REVISION 1	DATE: 10/4/19	CREW: AH, JG (Baker)	REVISION 3	DATE:	CREW:
REVISION 2	DATE: 10/13/21	CREW: BM, NR, IS (Prime)	REVISION 4	DATE:	CREW:

Sketches
Inspection type: Fracture Critical,Routine
Inspection Date: 7/26/2021
Inspected by: PRIME AE

:Bridge No 03819

Town: NEW LONDON
Carried: INTERSTATE 95 NORTHBOUND
Crossed: THAMES RV,RR,LOCAL ROADS
Inventory Route: NHS

CREW: SW, EN	DATE: 11/27/2017	BRIDGE NO.: 03819

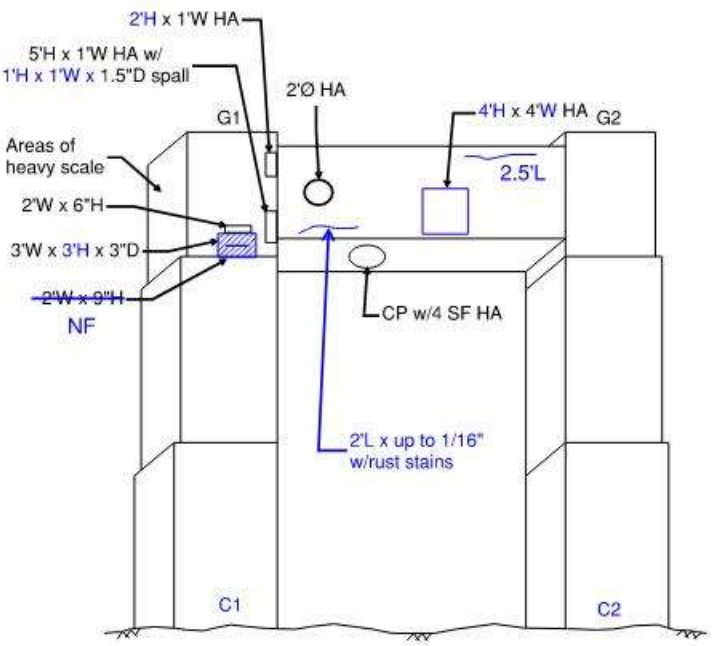

West Elevation

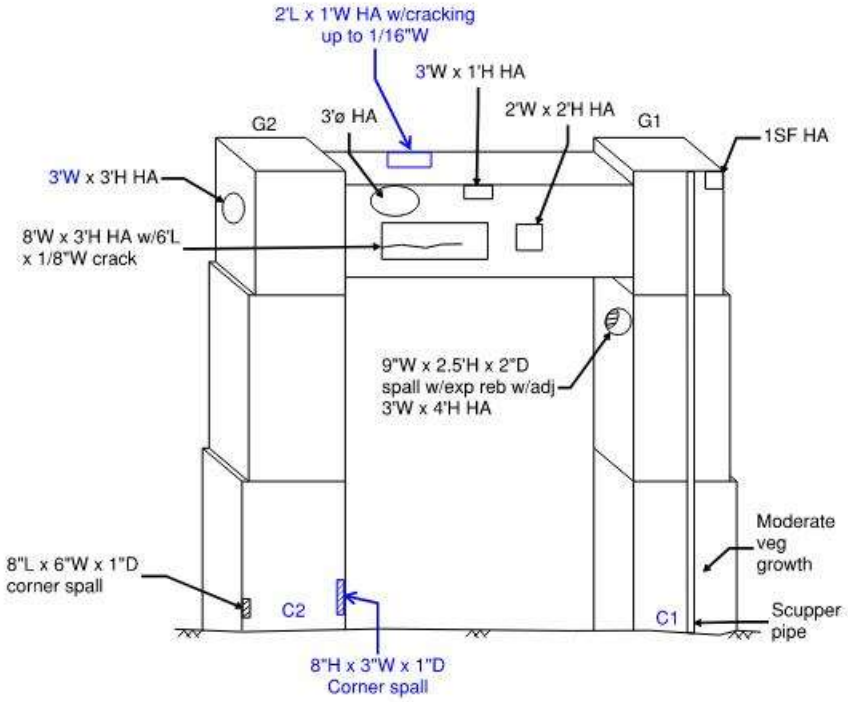

East Elevation

General Notes:

- See Substructure General Notes Sheet
- Areas of mod. to heavy debris along the top of columns, around bearings
- All hollow areas over stock pile yard
- Concrete patches have hairline mapcracking

LEGEND:
- HOLLOW AREA
- SHALLOW REBAR
- SPALL AREA
- SPALL AREA WITH EXPOSED REBAR
- MAPCRACKS
- HAIRLINE CRACKS
- HONEYCOMB AREA
- SCALE AREA
- EFFLORESCENCE PRESENT

Pier 11

REVISION 1	DATE: 10/2/19	CREW: BH, JG (Baker)	REVISION 3	DATE:	CREW:
REVISION 2	DATE: 10/13/21	CREW: BM, EG, NR, IS (Prime)	REVISION 4	DATE:	CREW:

Sketches
Inspection type: Fracture Critical,Routine
Inspection Date: 7/26/2021
Inspected by: PRIME AE

:Bridge No 03819

Town: NEW LONDON
Carried: INTERSTATE 95 NORTHBOUND
Crossed: THAMES RV,RR,LOCAL ROADS
Inventory Route: NHS

CREW: SW, JG	DATE: 12/6/2017	BRIDGE NO.: 03819

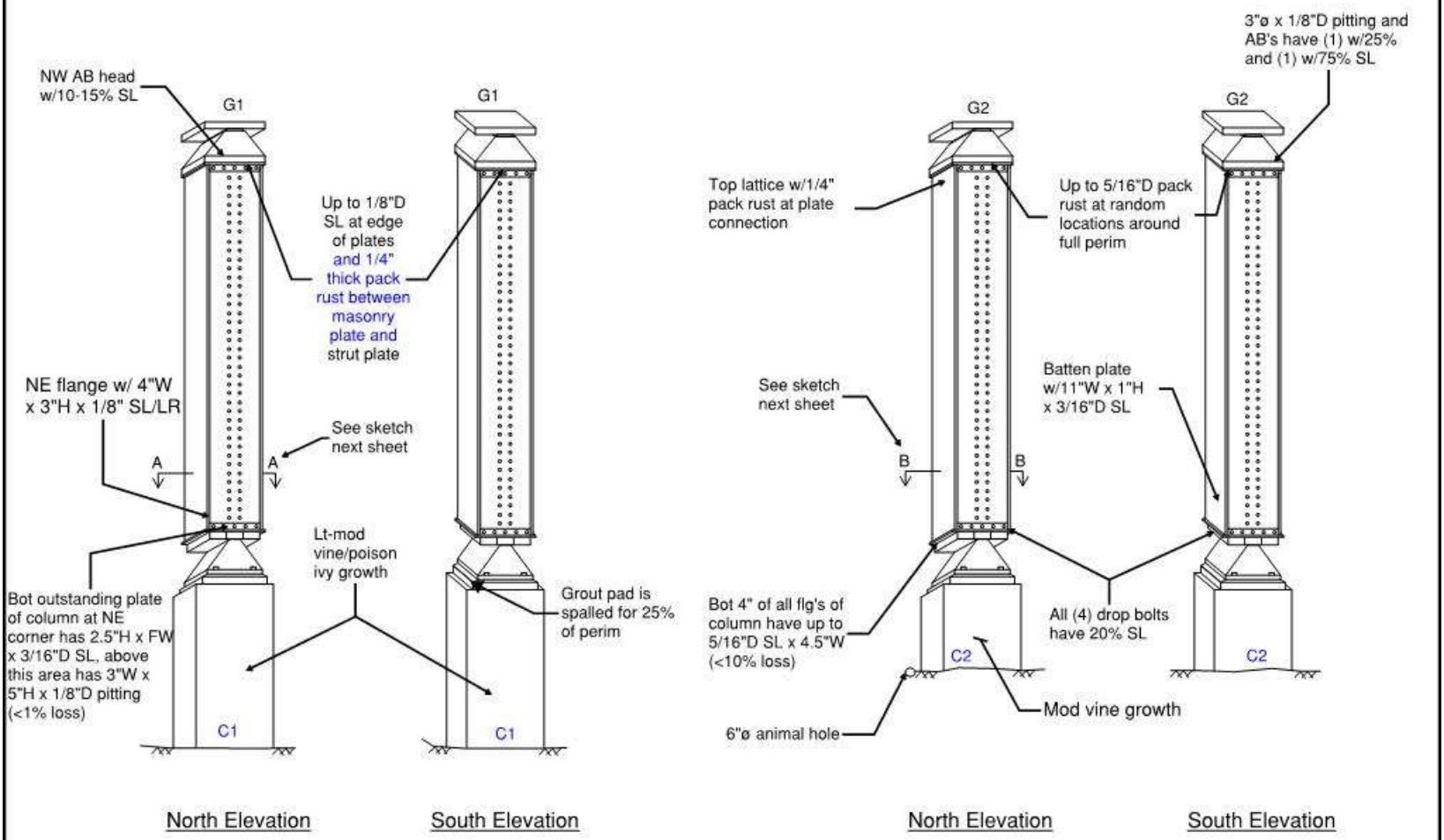

General Notes:

- See Substructure General Notes Sheet
- Anchor bolt nuts removed, welded at bolts
- Pier 12S grout pad corner is spalled for 60% of perimeter (rem areas have random vertical HLC's), there is up to 1/2" pack rust below masonry plate and bearing vertical plates have up to 1/4"D SL at isol areas
- Bottom ±2.5' of steel columns are filled with concrete
- Up to 1" IR between lower lattice bars and batten plates (call-outs removed from sketch)

LEGEND:
- HOLLOW AREA
- SHALLOW REBAR
- SPALL AREA
- SPALL AREA WITH EXPOSED REBAR
- MAPCRACKS
- HAIRLINE CRACKS
- HONEYCOMB AREA
- SCALE AREA
- EFFLORESCENCE PRESENT

Pier 12

REVISION 1	DATE: 10/2/19	CREW: BH, JG (Baker)	REVISION 3	DATE:	CREW:
REVISION 2	DATE: 10/14//21	CREW: EG, SD (Prime)	REVISION 4	DATE:	CREW:

CREW: SW, JG	DATE: 12/6/2017	BRIDGE NO.: 03819

See the following sheet for section loss calculations

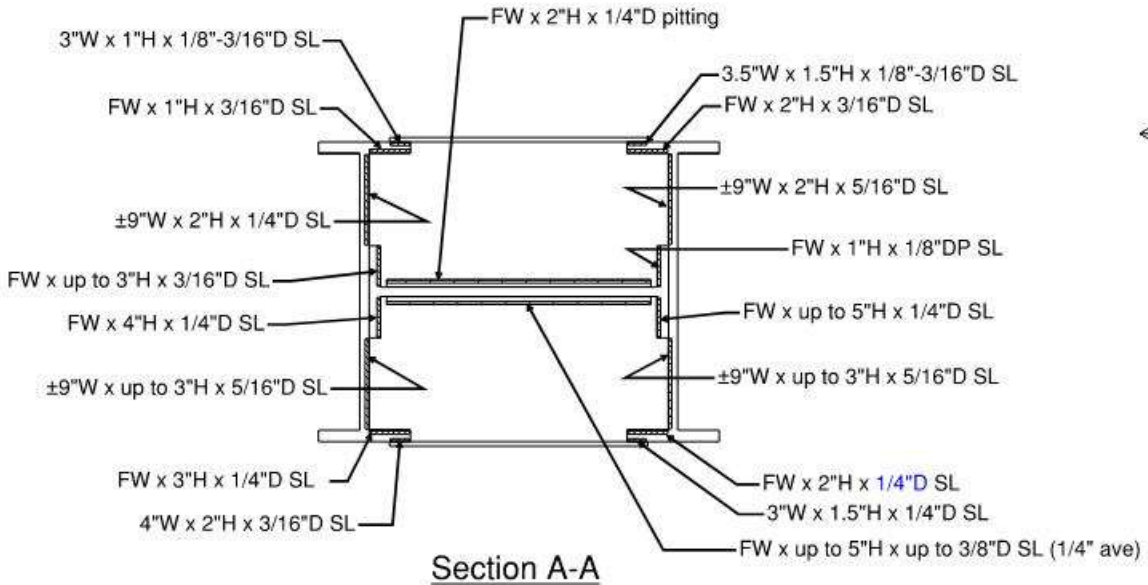

Section A-A

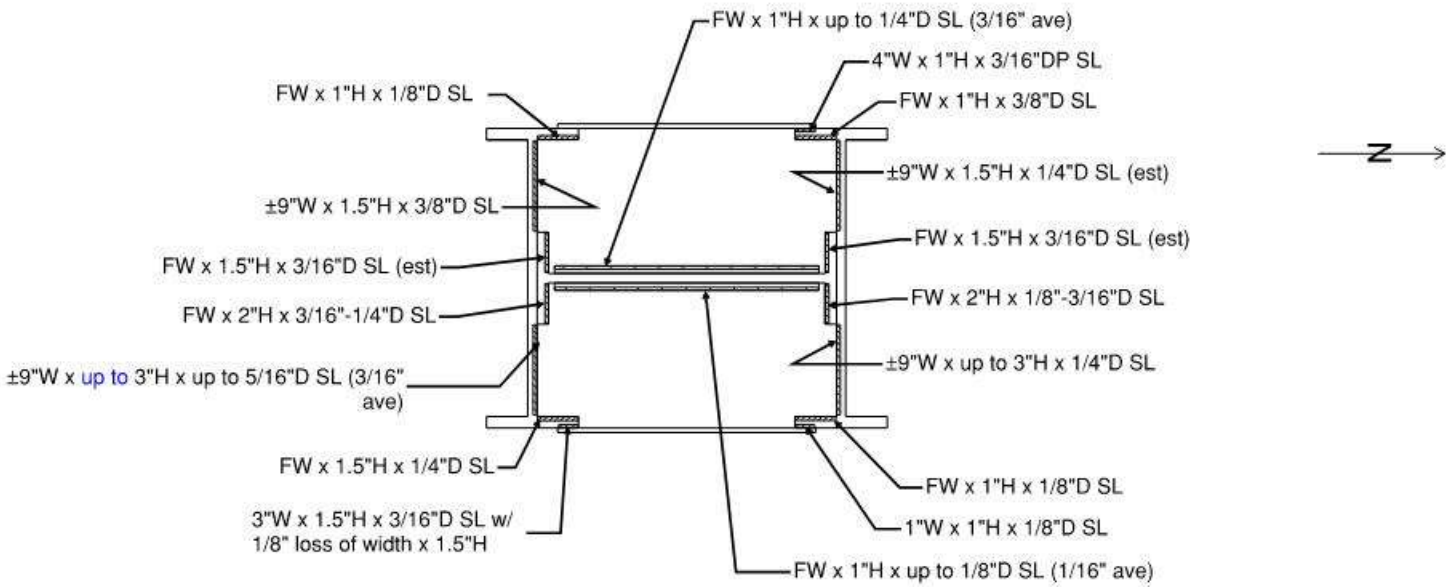

Section B-B

Notes:
- Sections are located above concrete filled base
- All section losses have laminated rust

Pier 12

REVISION 1	DATE: 10/7/19	CREW: BH, JG (Baker)	REVISION 3	DATE:	CREW:
REVISION 2	DATE: 10/20/21	CREW: NR, EB (Prime AE)	REVISION 4	DATE:	CREW:

CREW: SW, JG	DATE: 12/6/2017	BRIDGE NO.: 03819

Pier 12 - Column Section Loss Calculations

27 CB 98 (2)
$A = 28.82\ in^2$
$t_w = 0.50$ in
$D = 27 - 2(0.792) = 25.42\ in^2$
$t_f = 0.792$ in
$b_f = 10$ in

20 I 90 (1)
$A = 26.26\ in^2$
$t_w = 0.73$ in
$D = 20 - 2(0.792) = 17.63\ in^2$
$t_f = 0.92$ in (ave)
$b_f = 7.13$ in

16.5" x 13/16" (2)
$A = 13.41\ in^2$

Section A-A
$A_{orig} = 2(28.82) + 26.26 + (2)(16.5)(13/16) = 110.71\ in^2$
$A_{Loss} = 4.75(3/16 + 3/16 + 1/4 + 1/4) + 9(1/4 + 5/16 + 5/16 + 5/16) + 3.2(3/16 + 1/4 + 1/4 + 1/8) + 3(5/32 + 1/4) + 3.5(5/32) + 4(3/16) + 16.5[(1/4)/2 + 1/4] = 26.15\ in^2$
Percent Loss = 26.15/110.71 = 23.6% section loss

Section B-B
$A_{orig} = 110.71\ in^2$
$A_{loss} = 4.75(1/8 + 3/8 + 1/4 + 1/8) + 9(3/8 + 3/16 + 1/4 + 1/4) + 3.2(3/16 + 7/32 + 3/16 + 5/32) + 3(3/16) + (1/8)(0.792) + 1(1/8) + 4(3/16) + 16.5(3/16 + 1/16) = 21.78\ in^2$
Percent Loss = 21.78/110.71 = 19.7% section loss

REVISION 1	DATE: 10/7/19	CREW: BH, JG (Baker)	REVISION 3	DATE:	CREW:
REVISION 2	DATE: 10/20/21	CREW: NR, EB (Prime)	REVISION 4	DATE:	CREW:

Sketches
Inspection type: Fracture Critical,Routine
Inspection Date: 7/26/2021
Inspected by: PRIME AE

:Bridge No 03819

Town: NEW LONDON
Carried: INTERSTATE 95 NORTHBOUND
Crossed: THAMES RV,RR,LOCAL ROADS
Inventory Route: NHS

CREW: SW, JG	DATE: 12/5/2017	BRIDGE NO.: 03819

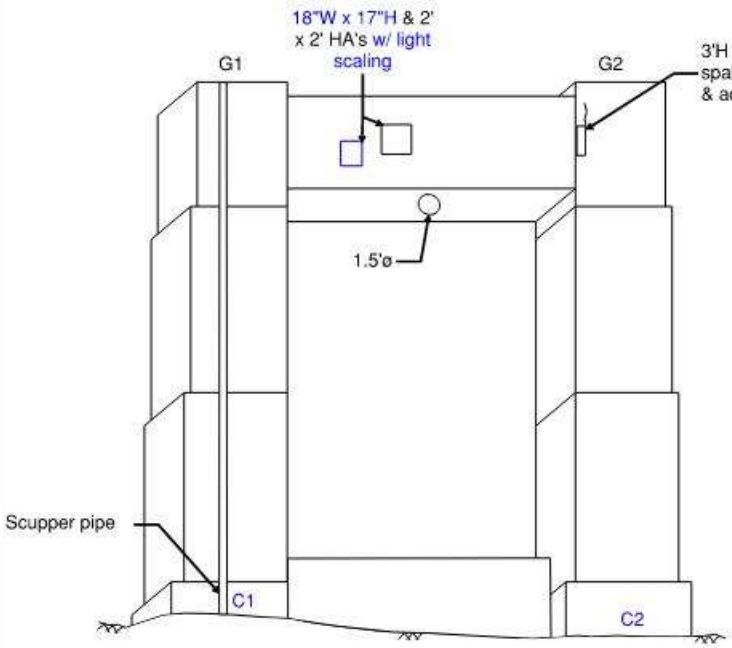

West Elevation

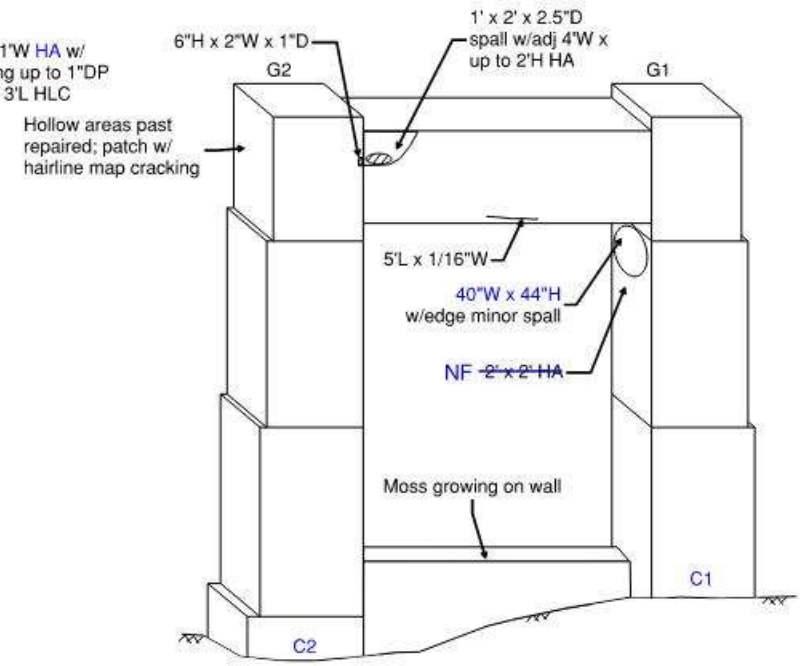

East Elevation

General Notes:

- See Substructure General Notes Sheet
- Concrete patches have hairline mapcracking

LEGEND:
- HOLLOW AREA
- SHALLOW REBAR
- SPALL AREA
- SPALL AREA WITH EXPOSED REBAR
- MAPCRACKS
- HAIRLINE CRACKS
- HONEYCOMB AREA
- SCALE AREA
- EFFLORESCENCE PRESENT

Pier 13

REVISION 1	DATE: 10/2/19	CREW: BH, JG (Baker)	REVISION 3	DATE:	CREW:
REVISION 2	DATE: 10/19/21	CREW: EG, SD (Prime)	REVISION 4	DATE:	CREW:

Sketches
Inspection type: Fracture Critical,Routine
Inspection Date: 7/26/2021
Inspected by: PRIME AE

:Bridge No 03819

Town: NEW LONDON
Carried: INTERSTATE 95 NORTHBOUND
Crossed: THAMES RV,RR,LOCAL ROADS
Inventory Route: NHS

CREW: SW, EN	DATE: 12/15/2017	BRIDGE NO.: 03819

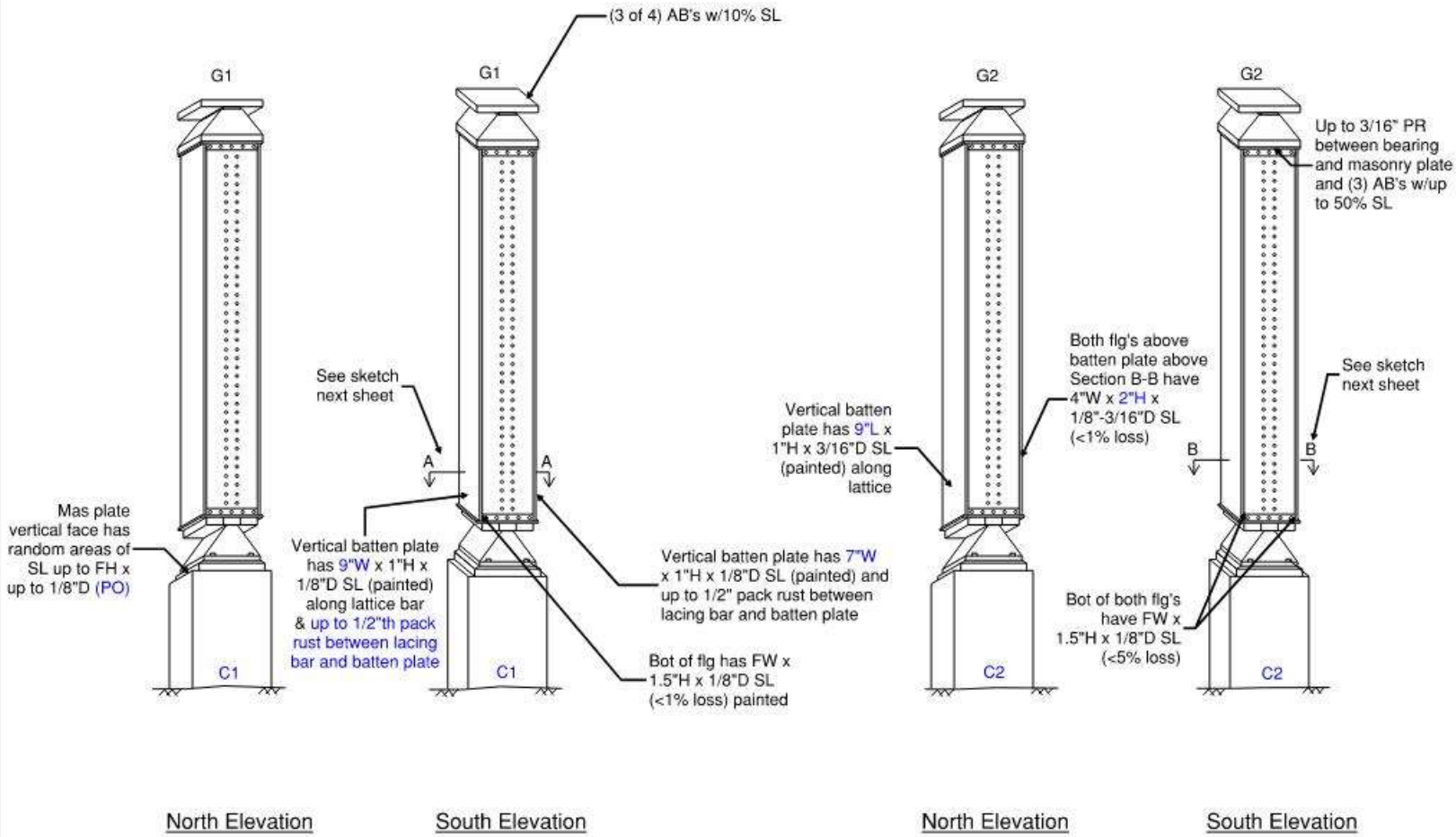

General Notes:

- See Substructure General Notes Sheet
- Bottom ±2.5' of steel columns are filled with concrete
- Random gouges on lower masonry plates; specific notes removed from sketch

LEGEND:
- HOLLOW AREA
- SHALLOW REBAR
- SPALL AREA
- SPALL AREA WITH EXPOSED REBAR
- MAPCRACKS
- HAIRLINE CRACKS
- HONEYCOMB AREA
- SCALE AREA
- EFFLORESCENCE PRESENT

Pier 14

REVISION 1	DATE: 10/7/19	CREW: BH, JG (Baker)	REVISION 3	DATE:	CREW:
REVISION 2	DATE: 10/20/21	CREW: NR, EB (Prime)	REVISION 4	DATE:	CREW:

CREW: JG, SW	DATE: 2/6/2018	BRIDGE NO.: 03819

- See following sheet for section loss calculations.

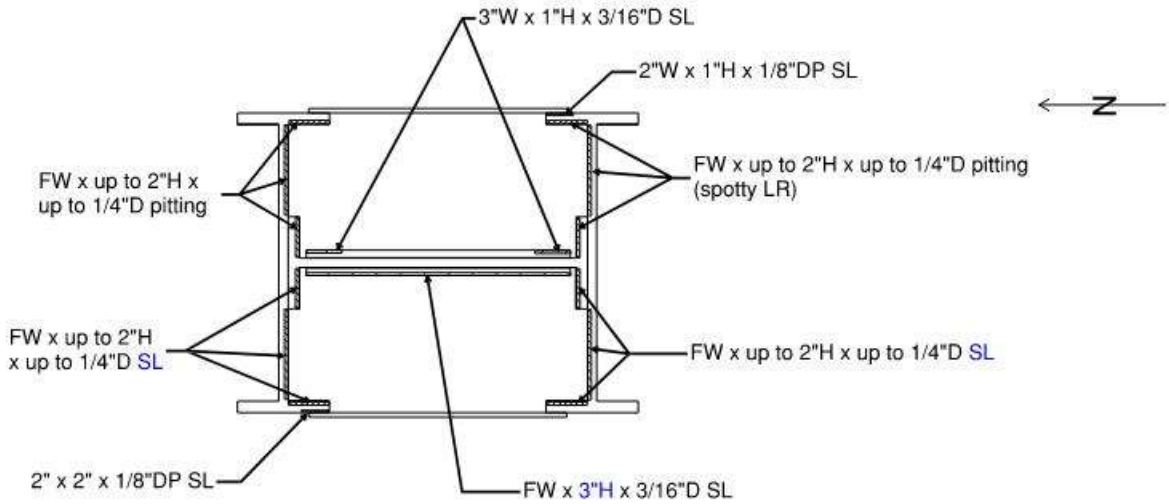

Section A-A

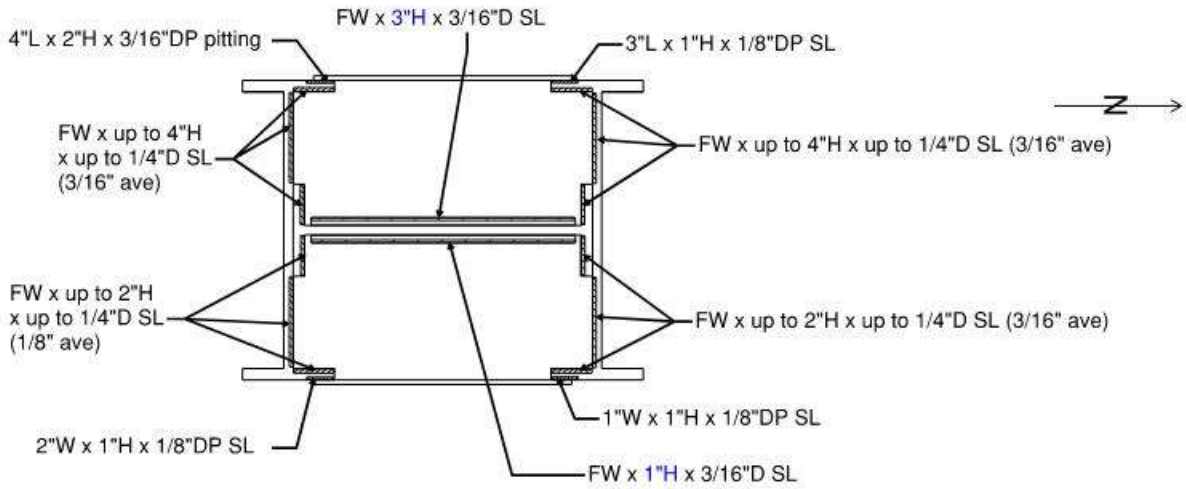

Section B-B

Notes:
- Sections are located above concrete filled base
- All section losses are painted but re-rusting

Pier 14

REVISION 1	DATE: 10/7/19	CREW: BH, JG (Baker)	REVISION 3	DATE:	CREW:
REVISION 2	DATE: 10/20/21	CREW: NR, EB (Prime AE)	REVISION 4	DATE:	CREW:

CREW: SW, JG	DATE: 12/6/2017	BRIDGE NO.: 03819

Pier 14 - Column Section Loss Calculations

27 CB 98 (2)
$A = 28.82\ in^2$
$t_w = 0.50$ in
$D = 27 - 2(0.792) = 25.42\ in^2$
$t_f = 0.792$ in
$b_f = 10$ in

20 I 90 (1)
$A = 26.26\ in^2$
$t_w = 0.73$ in
$D = 20 - 2(0.792) = 17.63\ in^2$
$t_f = 0.92$ in (ave)
$b_f = 7.13$ in

16.5" x 13/16" (2)
$A = 13.41\ in^2$

Section A-A
$A_{orig} = 2(28.82) + 26.26 + (2)(16.5)(13/16) = 110.71\ in^2$
$A_{Loss} = 4.75[(1/4)/2 + (1/4)/2 + 1/4 + 1/4] + 9[(1/4)/2 + (1/4)/2 + 1/4 + 1/4] + 3.2[(1/4)/2 + (1/4)/2 + 1/4 + 1/4] + 3(3/16)(2) + 16.5(3/16) + 2(1/8)(2) = 17.43\ in^2$
Percent Loss = 17.43/110.71 = 15.7% section loss

Section B-B
$A_{orig} = 110.71\ in^2$
$A_{loss} = (4.75 + 9 + 3.2)(3/16 + 1/8 + 3/16 + 3/16) + 16.5(3/16)(2) + (2+3+1)(1/8) + 4(3/16)/2 = 18.97\ in^2$
Percent Loss = 18.97/110.71 = 17.1% section loss

REVISION 1	DATE: 10/7/19	CREW: BH, JG (Baker)	REVISION 3	DATE:	CREW:
REVISION 2	DATE: 10/20/21	CREW: NR, EB (Prime)	REVISION 4	DATE:	CREW:

Sketches
Inspection type: Fracture Critical,Routine
Inspection Date: 7/26/2021
Inspected by: PRIME AE

:Bridge No 03819

Town: NEW LONDON
Carried: INTERSTATE 95 NORTHBOUND
Crossed: THAMES RV,RR,LOCAL ROADS
Inventory Route: NHS

CREW: JG, SW	DATE: 11/30/2017	BRIDGE NO.: 03819

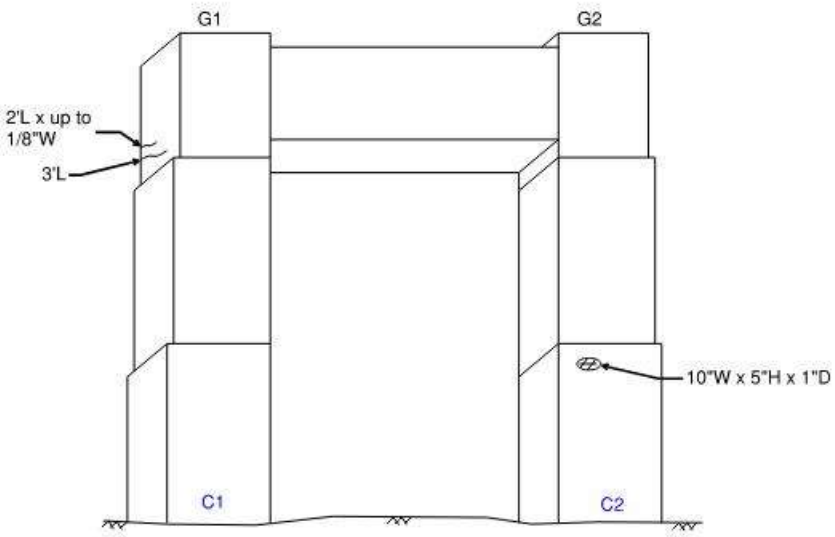

West Elevation

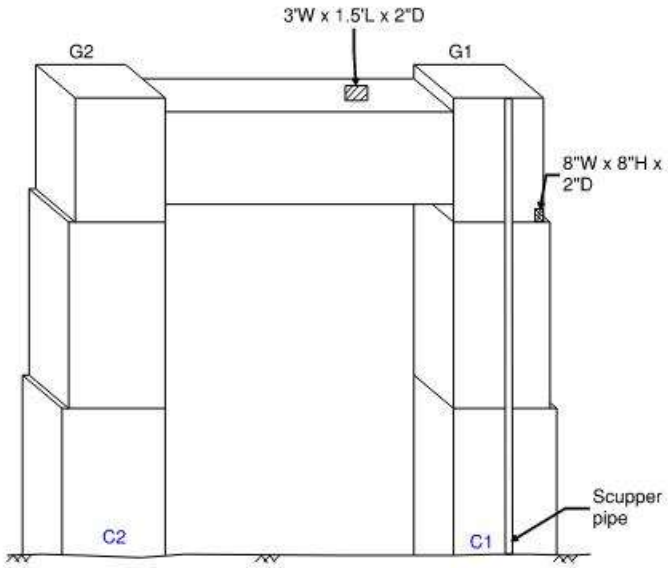

East Elevation

General Notes:

- See Substructure General Notes Sheet

LEGEND:
- HOLLOW AREA
- SHALLOW REBAR
- SPALL AREA
- SPALL AREA WITH EXPOSED REBAR
- MAPCRACKS
- HAIRLINE CRACKS
- HONEYCOMB AREA
- SCALE AREA
- EFFLORESCENCE PRESENT

Pier 15

REVISION 1	DATE: 10/1/19	CREW: BH, JG (Baker) - No Change	REVISION 3	DATE:	CREW:
REVISION 2	DATE: 10/6/21	CREW: NR, EB (Prime) - No Change	REVISION 4	DATE:	CREW:

Sketches
Inspection type: Fracture Critical,Routine
Inspection Date: 7/26/2021
Inspected by: PRIME AE

:Bridge No 03819

Town: NEW LONDON
Carried: INTERSTATE 95 NORTHBOUND
Crossed: THAMES RV,RR,LOCAL ROADS
Inventory Route: NHS

CREW: JG, SW	DATE: 11/28/2017	BRIDGE NO.: 03819

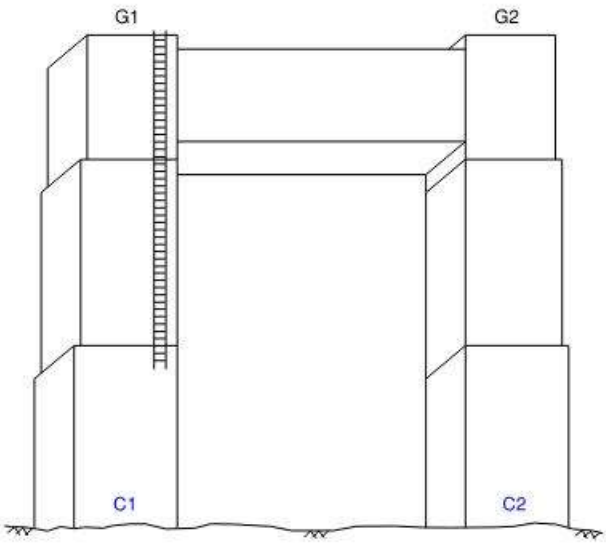

West Elevation

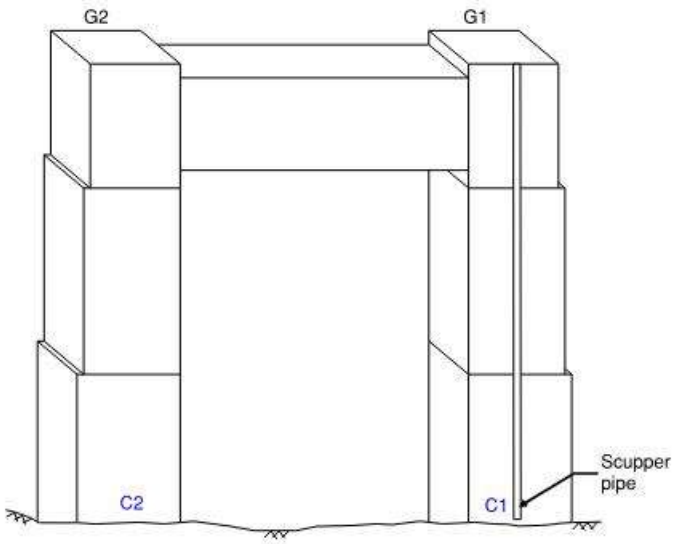

East Elevation

General Notes:

- See Substructure General Notes Sheet
- Column 1 with light vine/poison ivy growth.

LEGEND:
- HOLLOW AREA
- SHALLOW REBAR
- SPALL AREA
- SPALL AREA WITH EXPOSED REBAR
- MAPCRACKS
- HAIRLINE CRACKS
- HONEYCOMB AREA
- SCALE AREA
- EFFLORESCENCE PRESENT

Pier 16

REVISION 1	DATE: 10/1/19	CREW: BH, JG (Baker)	REVISION 3	DATE:	CREW:
REVISION 2	DATE: 10/6/21	CREW: NR, EB (Prime) - No Change	REVISION 4	DATE:	CREW:

Sketches
Inspection type: Fracture Critical,Routine
Inspection Date: 7/26/2021
Inspected by: PRIME AE

:Bridge No 03819

Town: NEW LONDON
Carried: INTERSTATE 95 NORTHBOUND
Crossed: THAMES RV,RR,LOCAL ROADS
Inventory Route: NHS

CREW: SW, JG	DATE: 12/4/2017	BRIDGE NO.: 03819

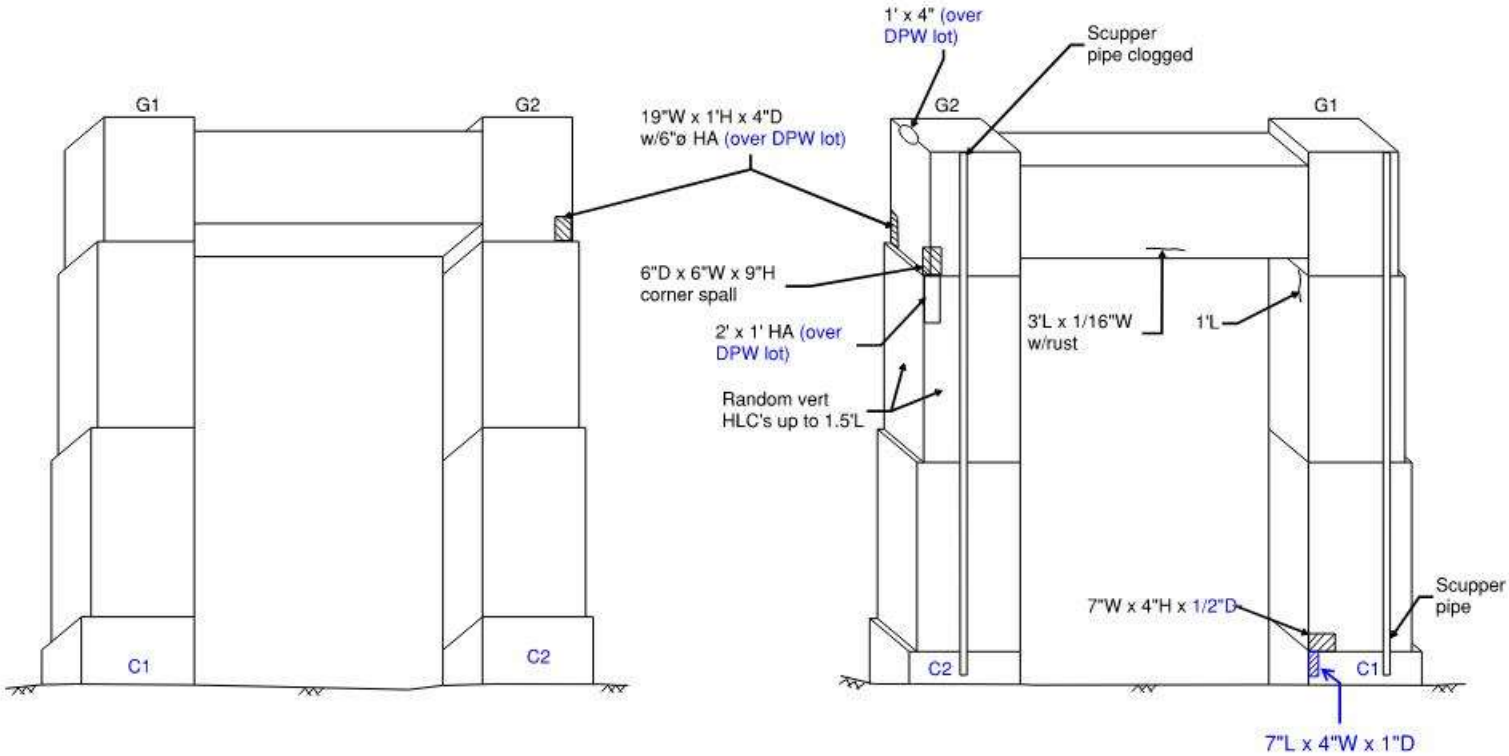

West Elevation

East Elevation

General Notes:

- See Substructure General Notes Sheet
- Heavy concrete asphaltic debris up to 4"H on cap and under bearings
- Random concrete patches with light mapcracking

LEGEND:
- HOLLOW AREA
- SHALLOW REBAR
- SPALL AREA
- SPALL AREA WITH EXPOSED REBAR
- MAPCRACKS
- HAIRLINE CRACKS
- HONEYCOMB AREA
- SCALE AREA
- EFFLORESCENCE PRESENT

Pier 17

REVISION 1	DATE: 9/30/19	CREW: BH, JG (Baker)	REVISION 3	DATE:	CREW:
REVISION 2	DATE: 10/6/21	CREW: NR, EB (Prime)	REVISION 4	DATE:	CREW:

Sketches
Inspection type: Fracture Critical,Routine
Inspection Date: 7/26/2021
Inspected by: PRIME AE

:Bridge No 03819

Town: NEW LONDON
Carried: INTERSTATE 95 NORTHBOUND
Crossed: THAMES RV,RR,LOCAL ROADS
Inventory Route: NHS

CREW: SW, JG	DATE: 12/4/2017	BRIDGE NO.: 03819

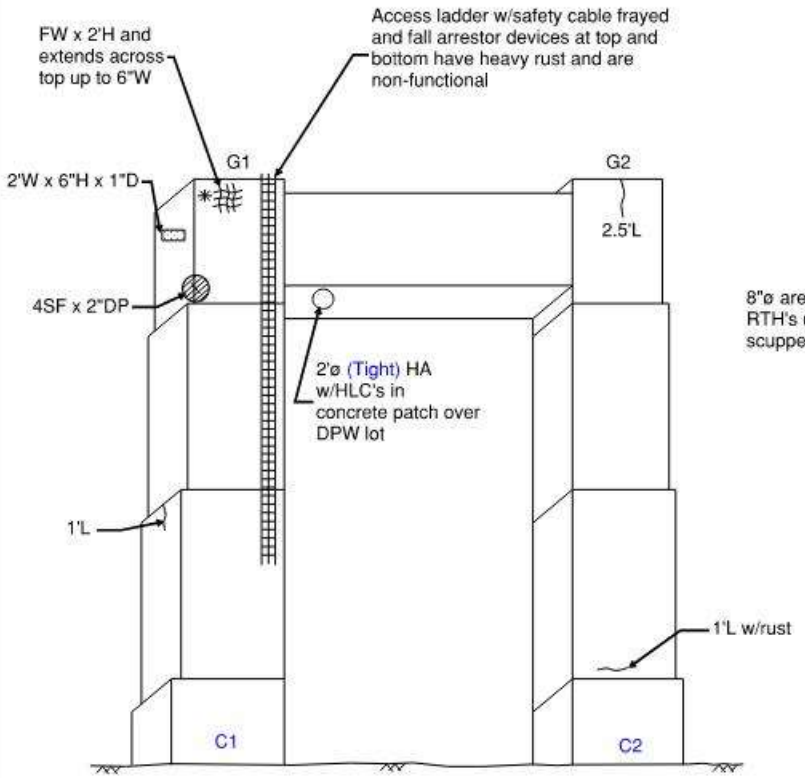

West Elevation

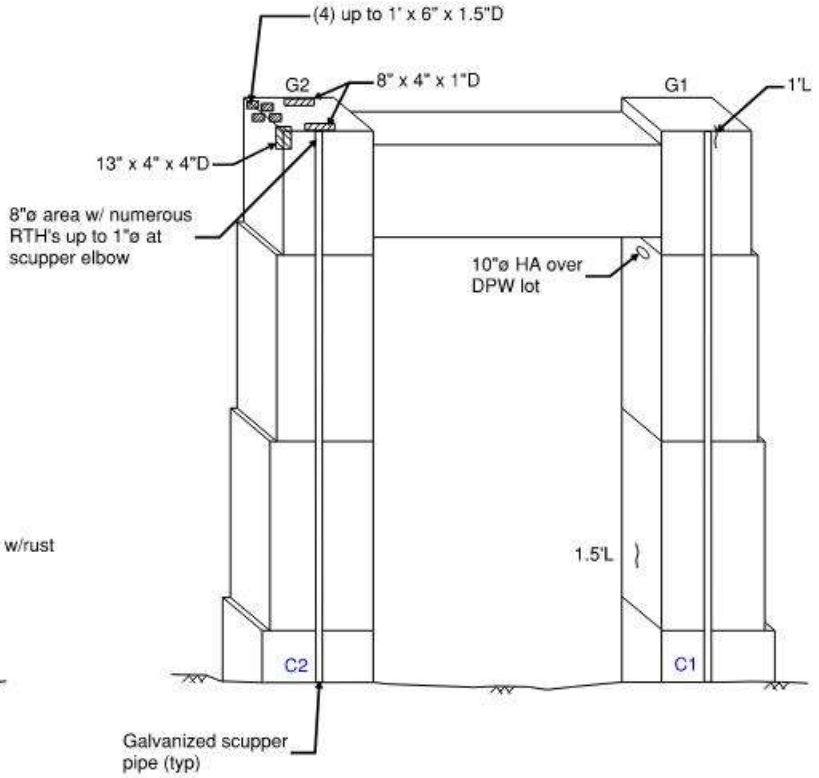

East Elevation

General Notes:

- See Substructure General Notes Sheet

LEGEND:
- HOLLOW AREA
- SHALLOW REBAR
- SPALL AREA
- SPALL AREA WITH EXPOSED REBAR
- MAPCRACKS
- HAIRLINE CRACKS
- HONEYCOMB AREA
- SCALE AREA
- EFFLORESCENCE PRESENT

Pier 18

REVISION 1	DATE: 9/30/19	CREW: JG, BH (Baker)	REVISION 3	DATE:	CREW:
REVISION 2	DATE: 10/7/21	CREW: NR, EB (Prime) - No Change	REVISION 4	DATE:	CREW:

Sketches
Inspection type: Fracture Critical,Routine
Inspection Date: 7/26/2021
Inspected by: PRIME AE

:Bridge No 03819

Town: NEW LONDON
Carried: INTERSTATE 95 NORTHBOUND
Crossed: THAMES RV,RR,LOCAL ROADS
Inventory Route: NHS

CREW: SW, JG	DATE: 12/1/2017	BRIDGE NO.: 03819

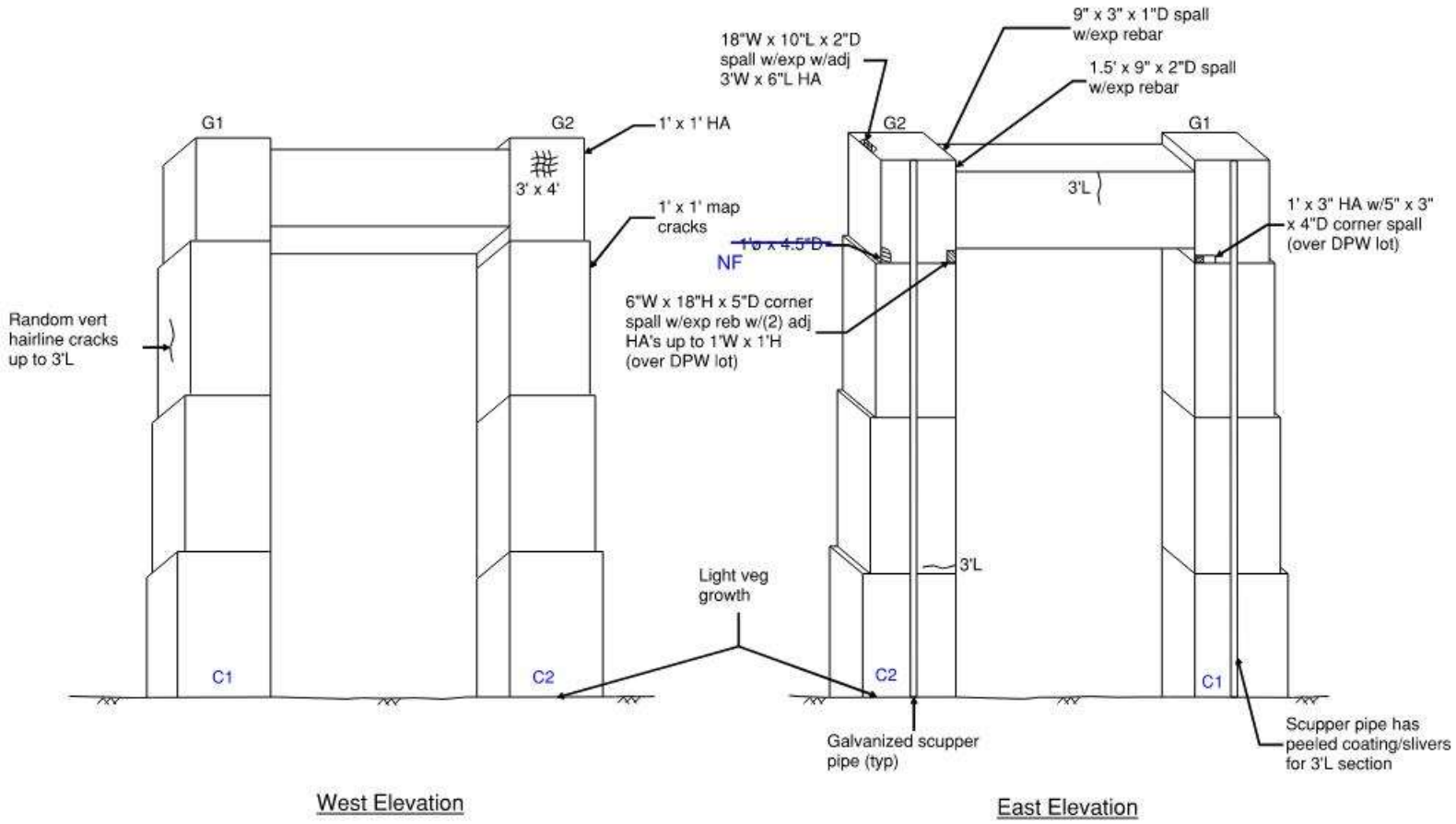

General Notes:

- See Substructure General Notes Sheet

LEGEND:
- HOLLOW AREA
- SHALLOW REBAR
- SPALL AREA
- SPALL AREA WITH EXPOSED REBAR
- MAPCRACKS
- HAIRLINE CRACKS
- HONEYCOMB AREA
- SCALE AREA
- EFFLORESCENCE PRESENT

Pier 19

REVISION 1	DATE: 9/30/19	CREW: JG, BH (Baker) - No Change	REVISION 3	DATE:	CREW:
REVISION 2	DATE: 10/7/21	CREW: NR, EB (Prime)	REVISION 4	DATE:	CREW:

Sketches
Inspection type: Fracture Critical,Routine
Inspection Date: 7/26/2021
Inspected by: PRIME AE

:Bridge No 03819

Town: NEW LONDON
Carried: INTERSTATE 95 NORTHBOUND
Crossed: THAMES RV,RR,LOCAL ROADS
Inventory Route: NHS

CREW: SW, JG	DATE: 11/30/2017	BRIDGE NO.: 03819

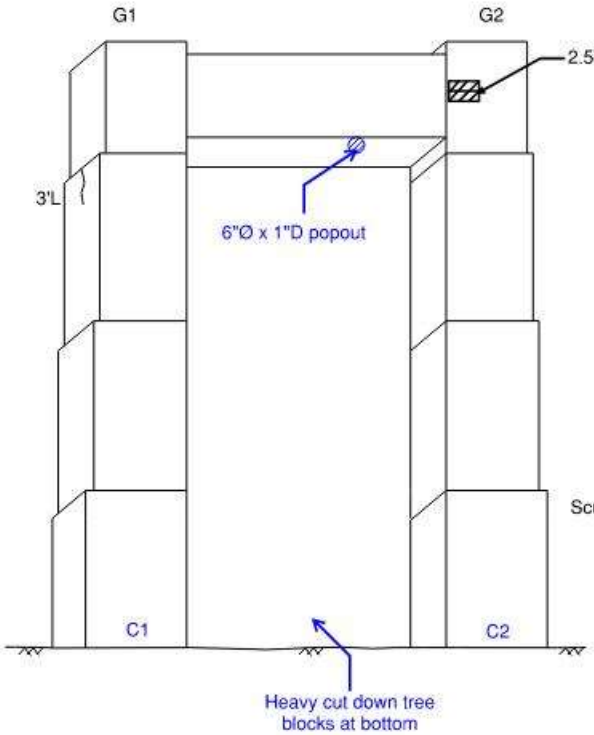

West Elevation

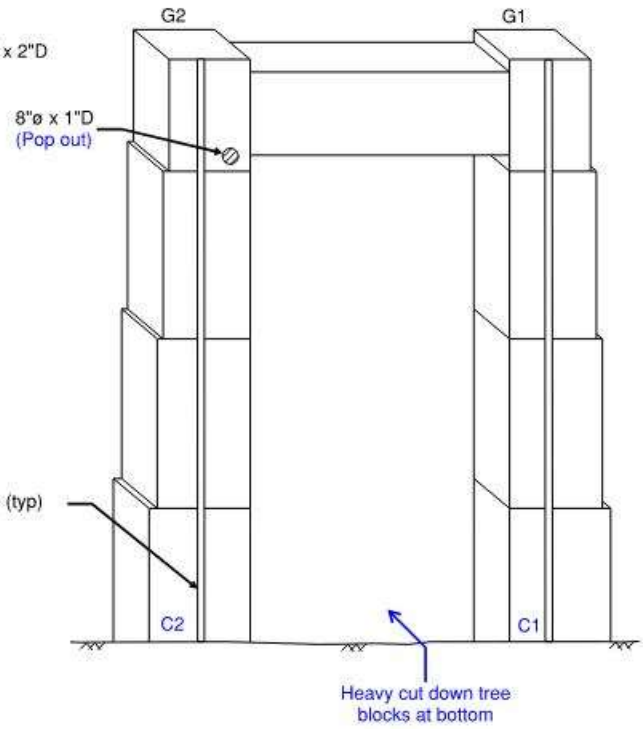

East Elevation

General Notes:

- See Substructure General Notes Sheet
- ~~Heavy veg growth up to 5' high around south column~~ NF
- Strut and top section of columns have random areas of hairline map cracks

LEGEND:
- HOLLOW AREA
- SHALLOW REBAR
- SPALL AREA
- SPALL AREA WITH EXPOSED REBAR
- MAPCRACKS
- HAIRLINE CRACKS
- HONEYCOMB AREA
- SCALE AREA
- EFFLORESCENCE PRESENT

Pier 20

REVISION 1	DATE: 9/30/19	CREW: JG, BH (Baker)	REVISION 3	DATE:	CREW:
REVISION 2	DATE: 10/7/21	CREW: NR, EB (Prime)	REVISION 4	DATE:	CREW:

CREW: SW, JG	DATE: 11/30/2017	BRIDGE NO.: 03819

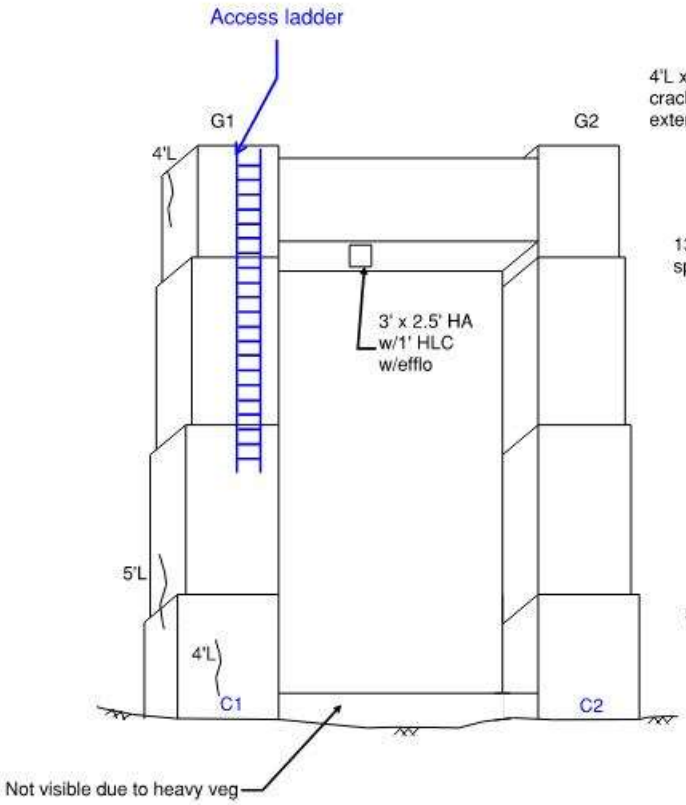

West Elevation

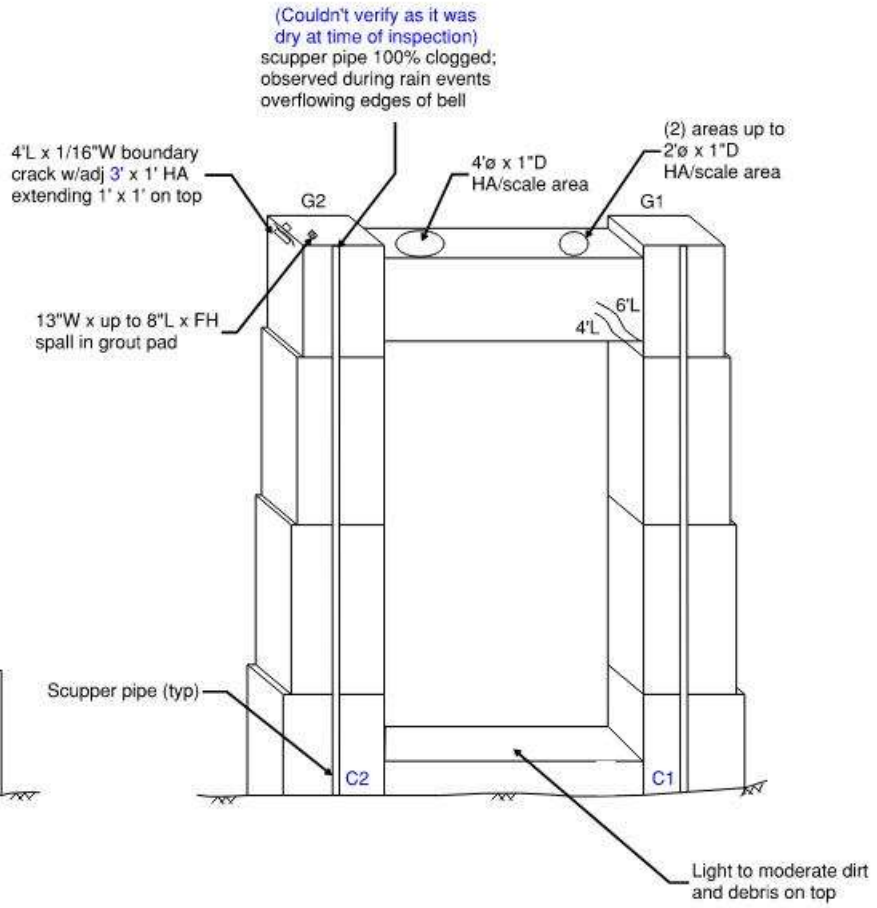

East Elevation

General Notes:

- See Substructure General Notes Sheet
- Random areas of heavy scale throughout
- Random hairline cracks along pour lines
- Debris, cut down tree blocks and vegetation in front of pier at both sides (within fenced area)

LEGEND:
- HOLLOW AREA
- SHALLOW REBAR
- SPALL AREA
- SPALL AREA WITH EXPOSED REBAR
- MAPCRACKS
- HAIRLINE CRACKS
- HONEYCOMB AREA
- SCALE AREA
- EFFLORESCENCE PRESENT

Pier 21

REVISION 1	DATE: 9/9/19	CREW: BH, JG (Baker)	REVISION 3	DATE:	CREW:
REVISION 2	DATE: 8/2/21	CREW: BM, IS (Prime)	REVISION 4	DATE:	CREW:

CREW: SW, JG	DATE: 11/30/2017	BRIDGE NO.: 03819

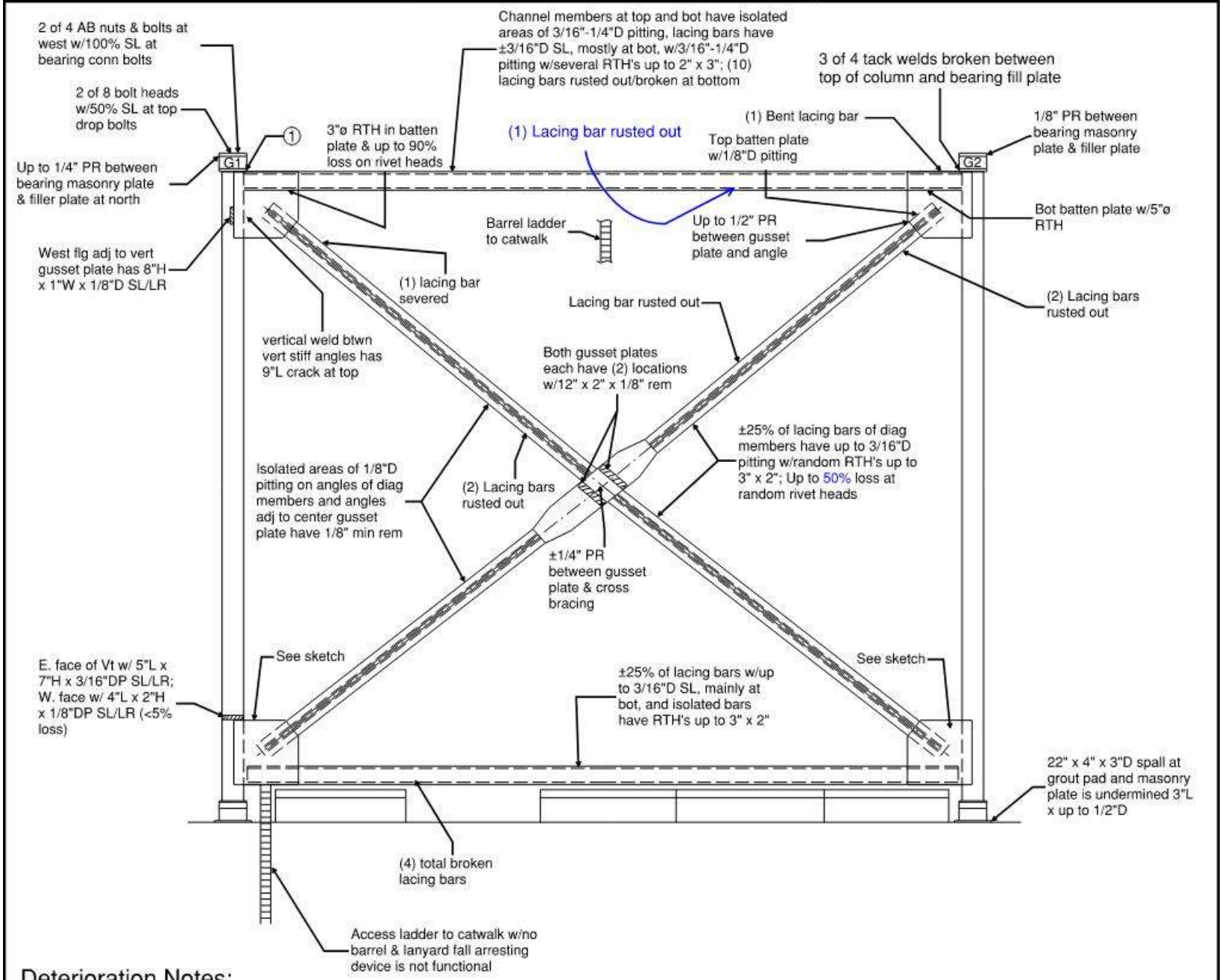

Deterioration Notes:

① Top of column to bearing fill plate w/ (2) broken tack welds at south; south bearing keeper bar at top of rocker w/ cracked Vt welds up to FH, horiz weld OK

Steel Pier Bent Over Pier 21 - West Elevation

REVISION 1	DATE: 10/1/19	CREW: BH, JG (Baker)	REVISION 3	DATE:	CREW:
REVISION 2	DATE: 8/2/21	CREW: BM, IS (Prime)	REVISION 4	DATE:	CREW:

CREW: SW, JG	DATE: 11/30/2017	BRIDGE NO.: 03819

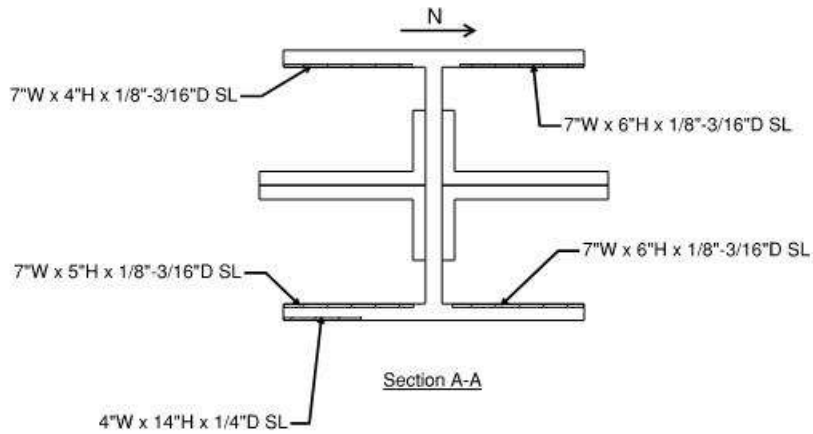

Section A-A

Section Loss Calculation:
H14 x 127: A = 37.33 in²
8 x 4 x 5/8 angle: A = 7.11 in²
A_{orig}= 37.33 + (4)(7.11) = 65.77 in²
A_{loss}= (4)(1/4) + (7)(5/32)(4) = 5.38 in²
Percent Loss = 5.38/65.77 = **8.2% section loss**

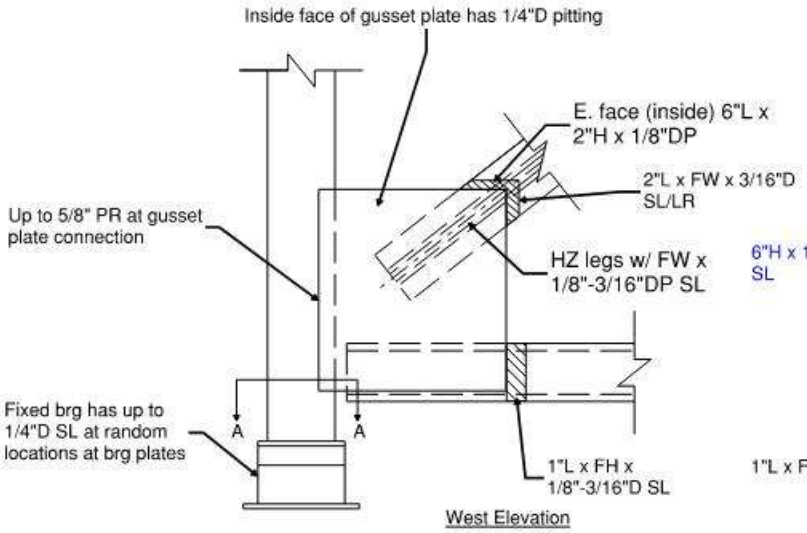

West Elevation

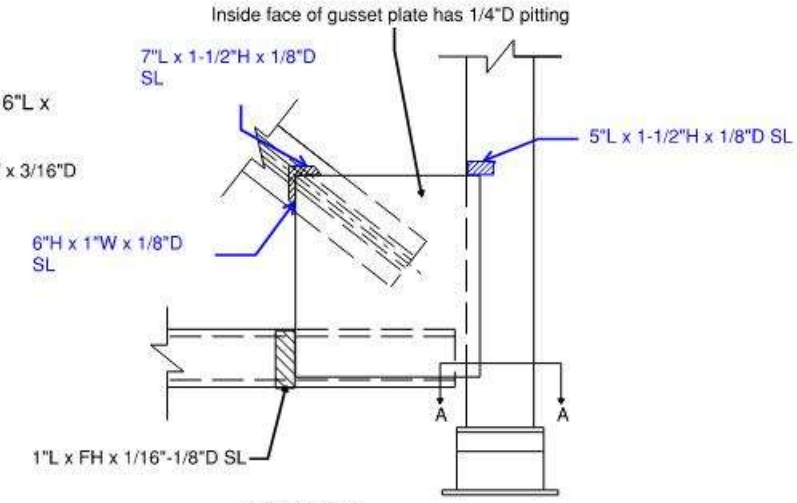

East Elevation

- All losses active

North Bent At Pier 21 (W)

REVISION 1	DATE: 10/1/19	CREW: BH, JG (Baker)	REVISION 3	DATE:	CREW:
REVISION 2	DATE: 8/2/21	CREW: BM, IS (Prime AE)	REVISION 4	DATE:	CREW:

CREW: SW, JG	DATE: 11/30/2017	BRIDGE NO.: 03819

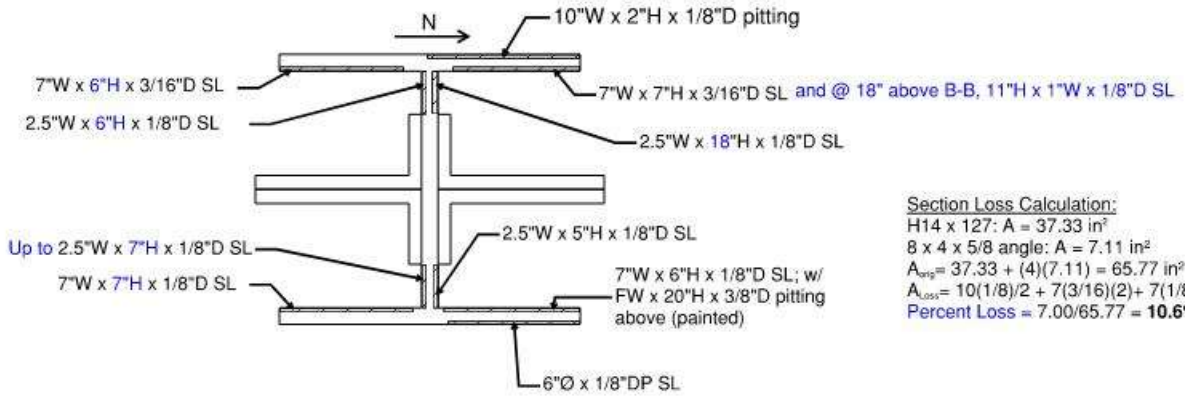

Section B-B

Section Loss Calculation:
H14 x 127: A = 37.33 in²
8 x 4 x 5/8 angle: A = 7.11 in²
A_{orig}= 37.33 + (4)(7.11) = 65.77 in²
A_{Loss}= 10(1/8)/2 + 7(3/16)(2)+ 7(1/8)(2) + 2.5(1/8)(4) + 6(1/8) = 7.00 in²
Percent Loss = 7.00/65.77 = **10.6% section loss**

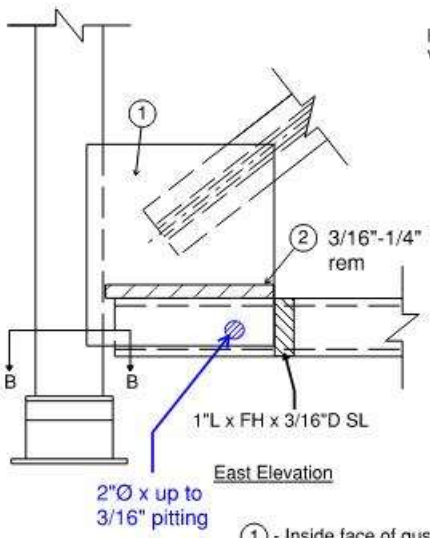

East Elevation

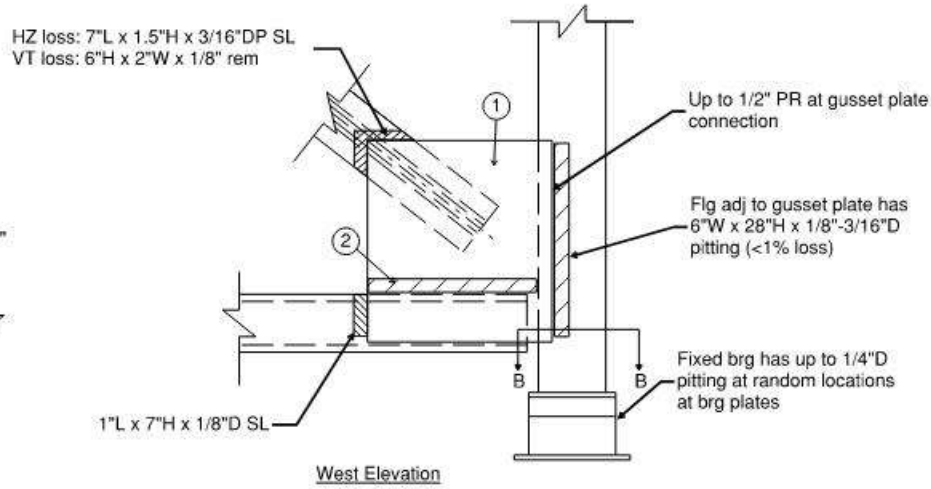

West Elevation

- All losses active

(1) - Inside face of gusset plate has 1/4"D pitting
(2) - Gusset plate (inside face) above channel has FW x 3"H x 3/16" rem

South Bent At Pier 21 (W)

REVISION 1	DATE: 10/1/19	CREW: BH, JG (Baker)	REVISION 3	DATE:	CREW:
REVISION 2	DATE: 8/4/21	CREW: BM, NH (Prime)	REVISION 4	DATE:	CREW:

Sketches
Inspection type: Fracture Critical,Routine
Inspection Date: 7/26/2021
Inspected by: PRIME AE

:Bridge No 03819

Town: NEW LONDON
Carried: INTERSTATE 95 NORTHBOUND
Crossed: THAMES RV,RR,LOCAL ROADS
Inventory Route: NHS

CREW: SW, MW	DATE: 8/30/2017	BRIDGE NO.: 03819

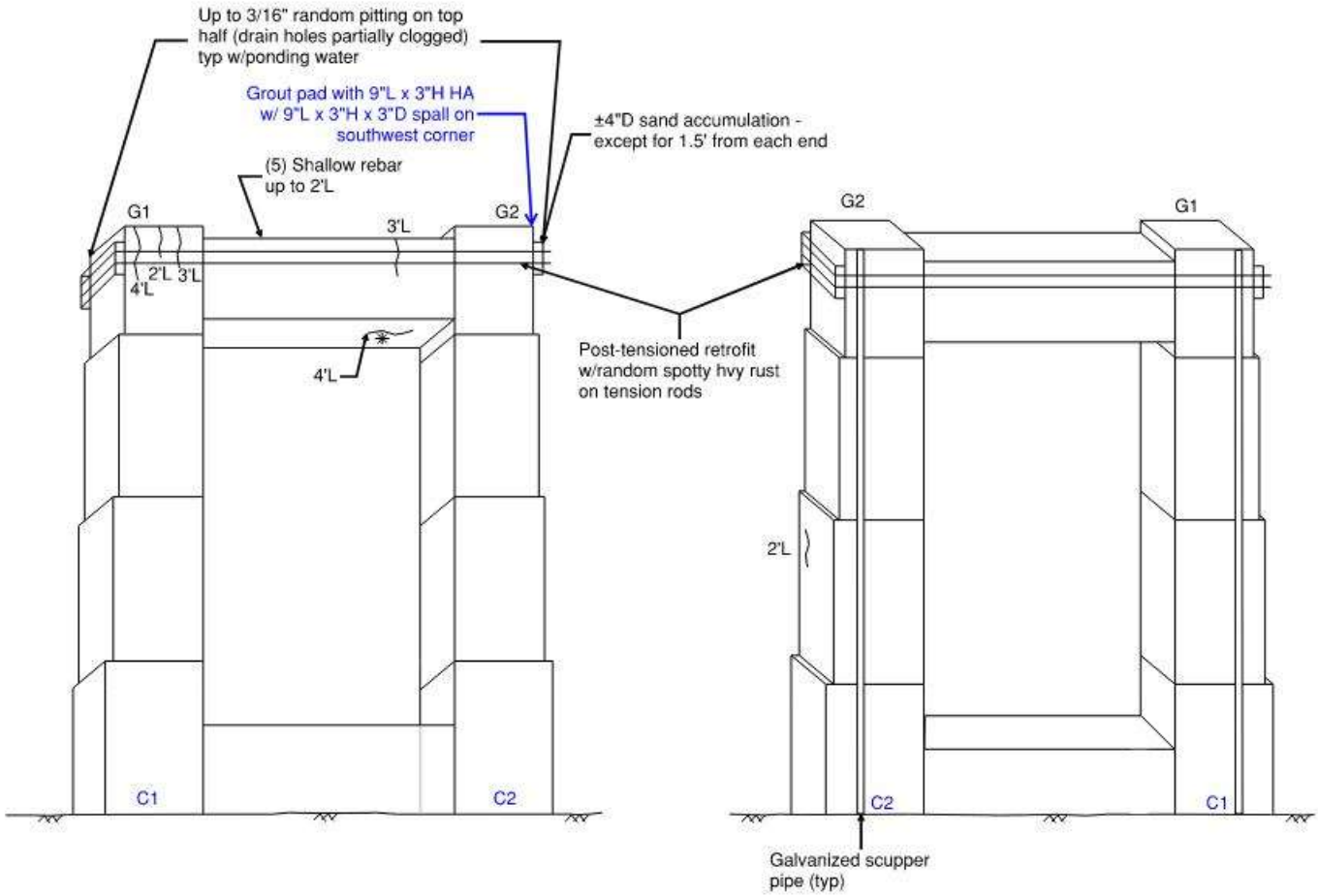

West Elevation

East Elevation

General Notes:

- See Substructure General Notes Sheet
- Random areas of heavy scale throughout
- Random hairline cracks along pour lines
- Random hollow areas at underside of strut, mostly in concrete patches, up to 8' x 3'

LEGEND:
- HOLLOW AREA
- SHALLOW REBAR
- SPALL AREA
- SPALL AREA WITH EXPOSED REBAR
- MAPCRACKS
- HAIRLINE CRACKS
- HONEYCOMB AREA
- SCALE AREA
- EFFLORESCENCE PRESENT

Pier 22

REVISION 1	DATE: 8/19/19	CREW: BH, JG (Baker)	REVISION 3	DATE:	CREW:
REVISION 2	DATE: 8/3/21	CREW: BM, IS (Prime AE)	REVISION 4	DATE:	CREW:

Sketches
Inspection type: Fracture Critical,Routine
Inspection Date: 7/26/2021
Inspected by: PRIME AE

:Bridge No 03819

Town: NEW LONDON
Carried: INTERSTATE 95 NORTHBOUND
Crossed: THAMES RV,RR,LOCAL ROADS
Inventory Route: NHS

CREW: SW, MW	DATE: 8/30/2017	BRIDGE NO.: 03819

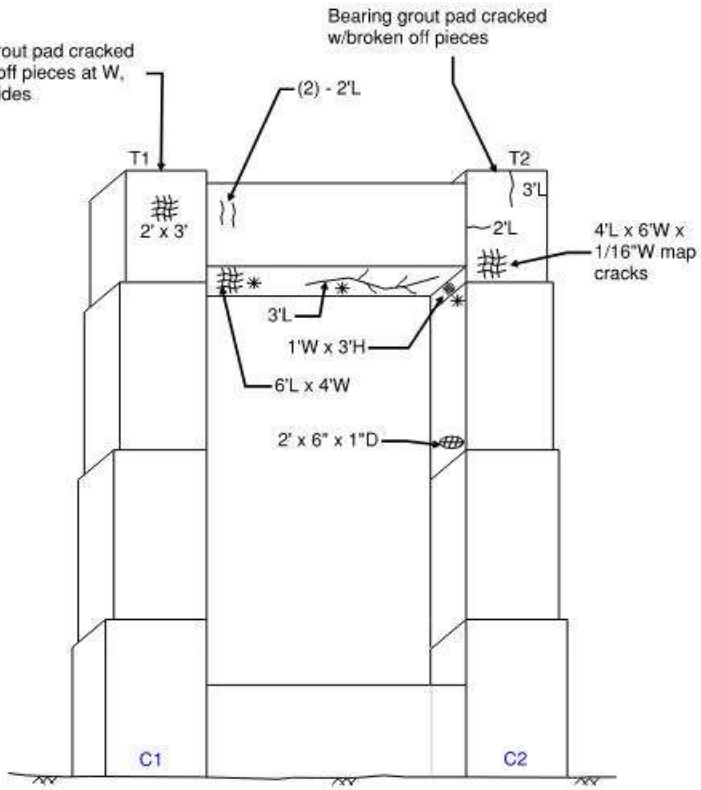

West Elevation

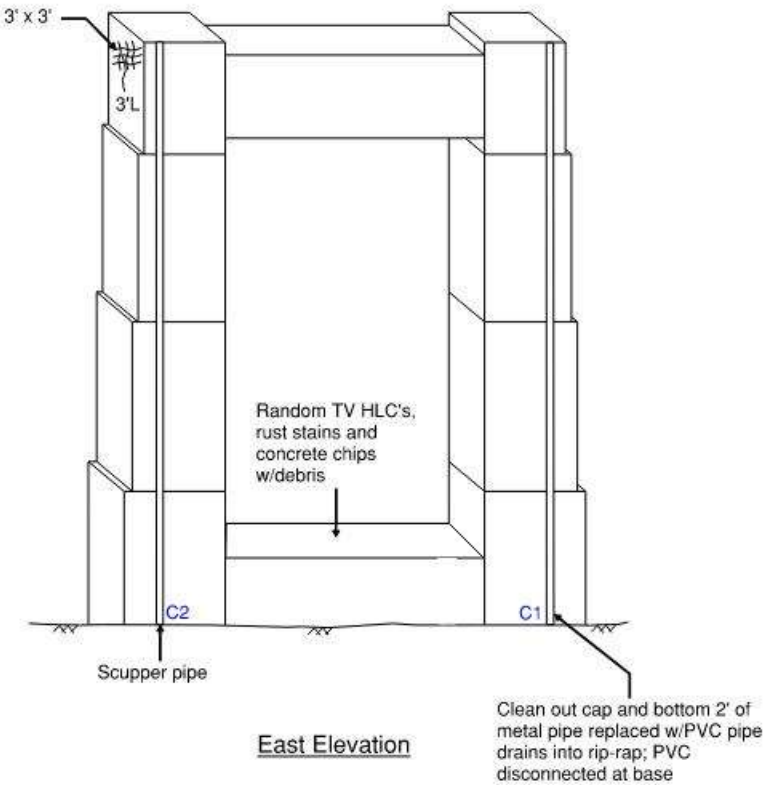

East Elevation

General Notes:

- See Substructure General Notes Sheet
- Underside of strut is hollow sounding/patched for up to 25% of area; not verified
- Active leakage at random locations from deck joint above; dry at T.O.I.

LEGEND:
- HOLLOW AREA
- SHALLOW REBAR
- SPALL AREA
- SPALL AREA WITH EXPOSED REBAR
- MAPCRACKS
- HAIRLINE CRACKS
- HONEYCOMB AREA
- SCALE AREA
- EFFLORESCENCE PRESENT

Pier 23

REVISION 1	DATE: 8/19/19	CREW: BH, JG (Baker)	REVISION 3	DATE:	CREW:
REVISION 2	DATE: 9/14/21	CREW: BM, IS, EB (Prime AE)	REVISION 4	DATE:	CREW:

Sketches
Inspection type: Fracture Critical,Routine
Inspection Date: 7/26/2021
Inspected by: PRIME AE

:Bridge No 03819

Town: NEW LONDON
Carried: INTERSTATE 95 NORTHBOUND
Crossed: THAMES RV,RR,LOCAL ROADS
Inventory Route: NHS

CREW: JG, AH	DATE: 9/25/2017	BRIDGE NO.: 03819

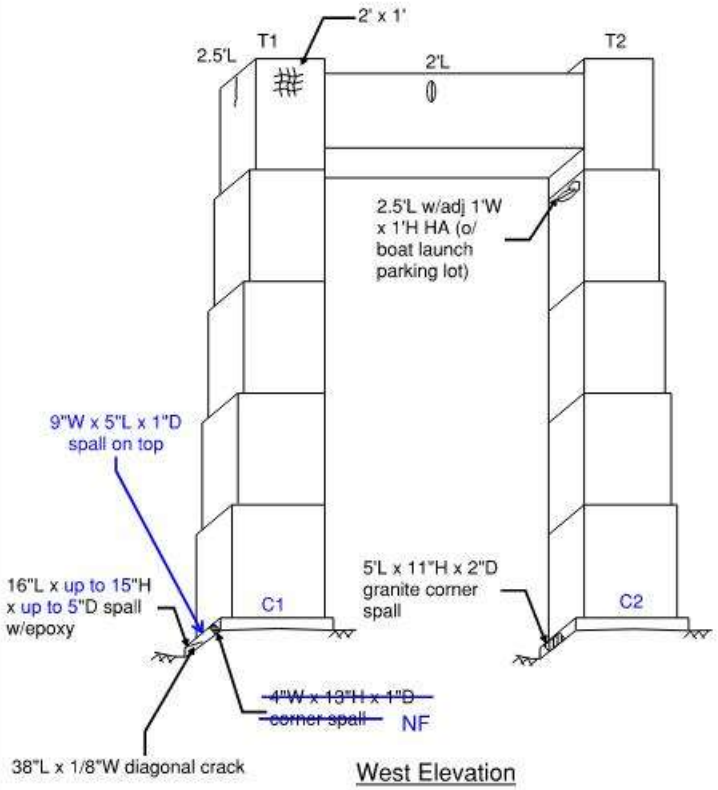

West Elevation

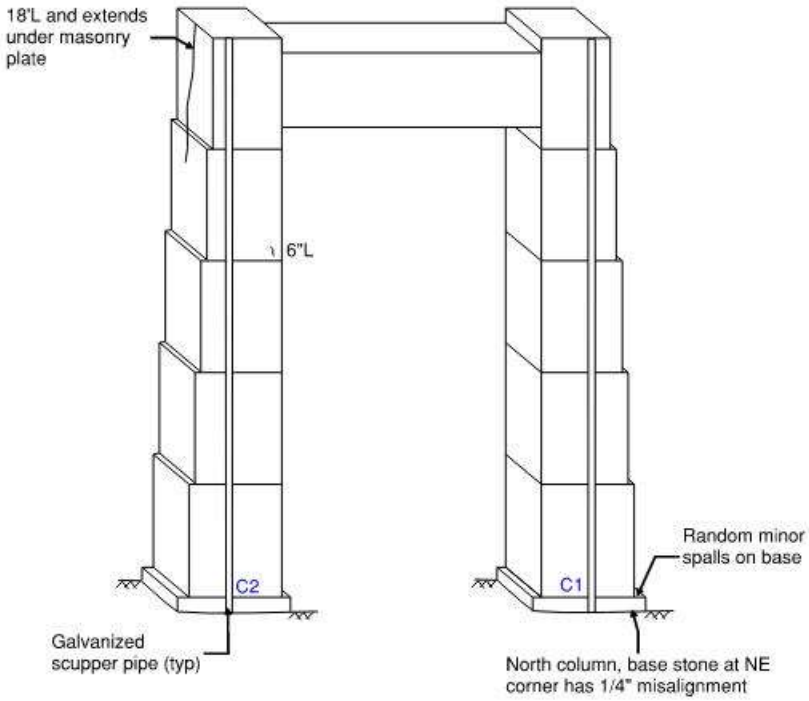

East Elevation

General Notes:

- See Substructure General Notes Sheet

LEGEND:
- HOLLOW AREA
- SHALLOW REBAR
- SPALL AREA
- SPALL AREA WITH EXPOSED REBAR
- MAPCRACKS
- HAIRLINE CRACKS
- HONEYCOMB AREA
- SCALE AREA
- EFFLORESCENCE PRESENT

Pier 24

REVISION 1	DATE: 8/20/19	CREW: BH, JG (Baker) - No Change	REVISION 3	DATE:	CREW:
REVISION 2	DATE: 8/30/21	CREW: EG, AN (Prime)	REVISION 4	DATE:	CREW:

Sketches
Inspection type: Fracture Critical,Routine
Inspection Date: 7/26/2021
Inspected by: PRIME AE

:Bridge No 03819

Town: NEW LONDON
Carried: INTERSTATE 95 NORTHBOUND
Crossed: THAMES RV,RR,LOCAL ROADS
Inventory Route: NHS

CREW: SW, BF	DATE: 9/25/2017	BRIDGE NO.: 03819

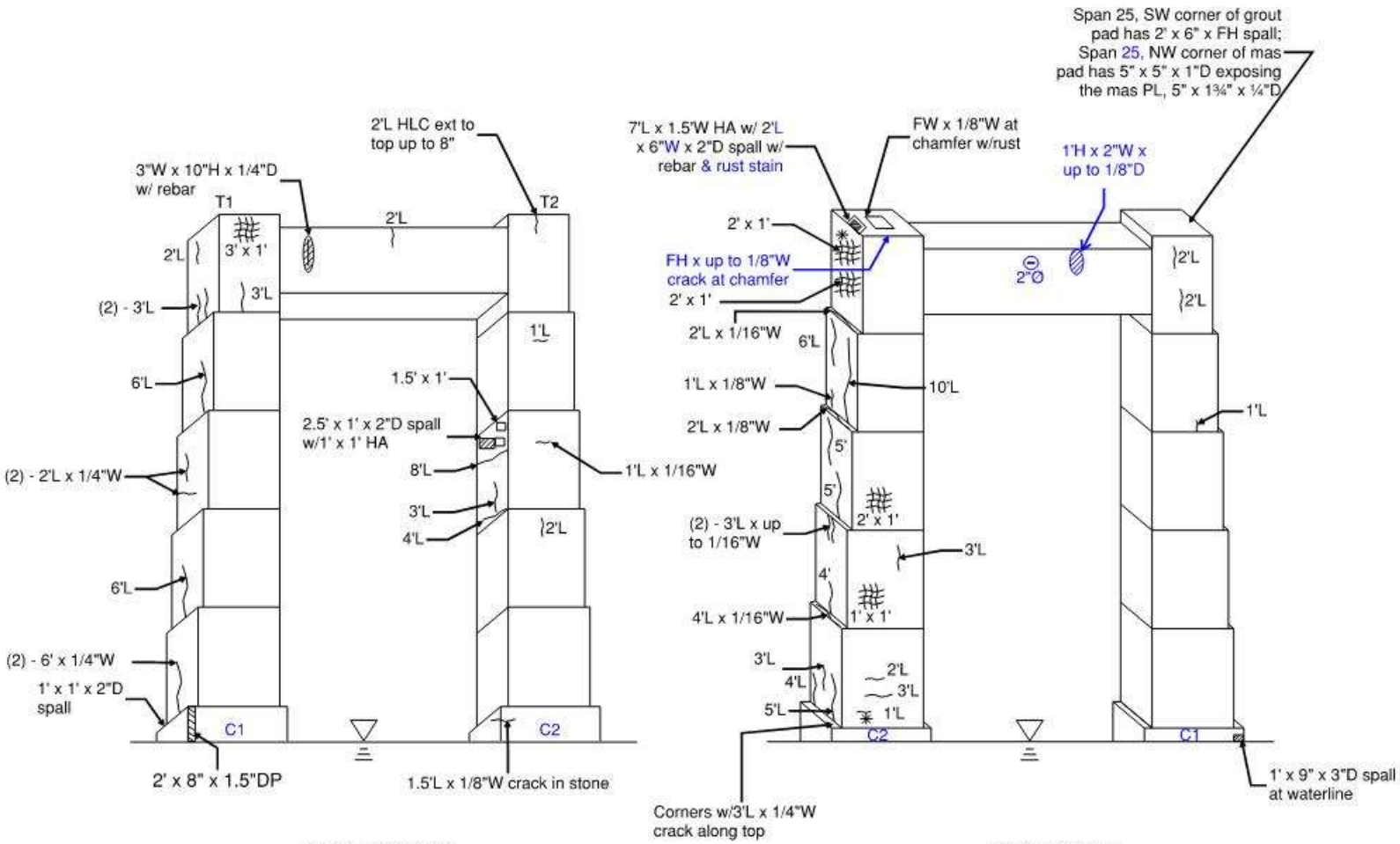

West Elevation

East Elevation

General Notes:

- See Substructure General Notes Sheet

LEGEND:
- HOLLOW AREA
- SHALLOW REBAR
- SPALL AREA
- SPALL AREA WITH EXPOSED REBAR
- MAPCRACKS
- HAIRLINE CRACKS
- HONEYCOMB AREA
- SCALE AREA
- EFFLORESCENCE PRESENT

Pier 25

REVISION 1	DATE: 8/20/19	CREW: BH, JG (Baker)	REVISION 3	DATE:	CREW:
REVISION 2	DATE: 8/2/2021	CREW: EG, SD (Prime)	REVISION 4	DATE:	CREW:

Sketches
Inspection type: Fracture Critical,Routine
Inspection Date: 7/26/2021
Inspected by: PRIME AE

:Bridge No 03819

Town: NEW LONDON
Carried: INTERSTATE 95 NORTHBOUND
Crossed: THAMES RV,RR,LOCAL ROADS
Inventory Route: NHS

CREW: SW, BF	DATE: 9/25/2017	BRIDGE NO.: 03819

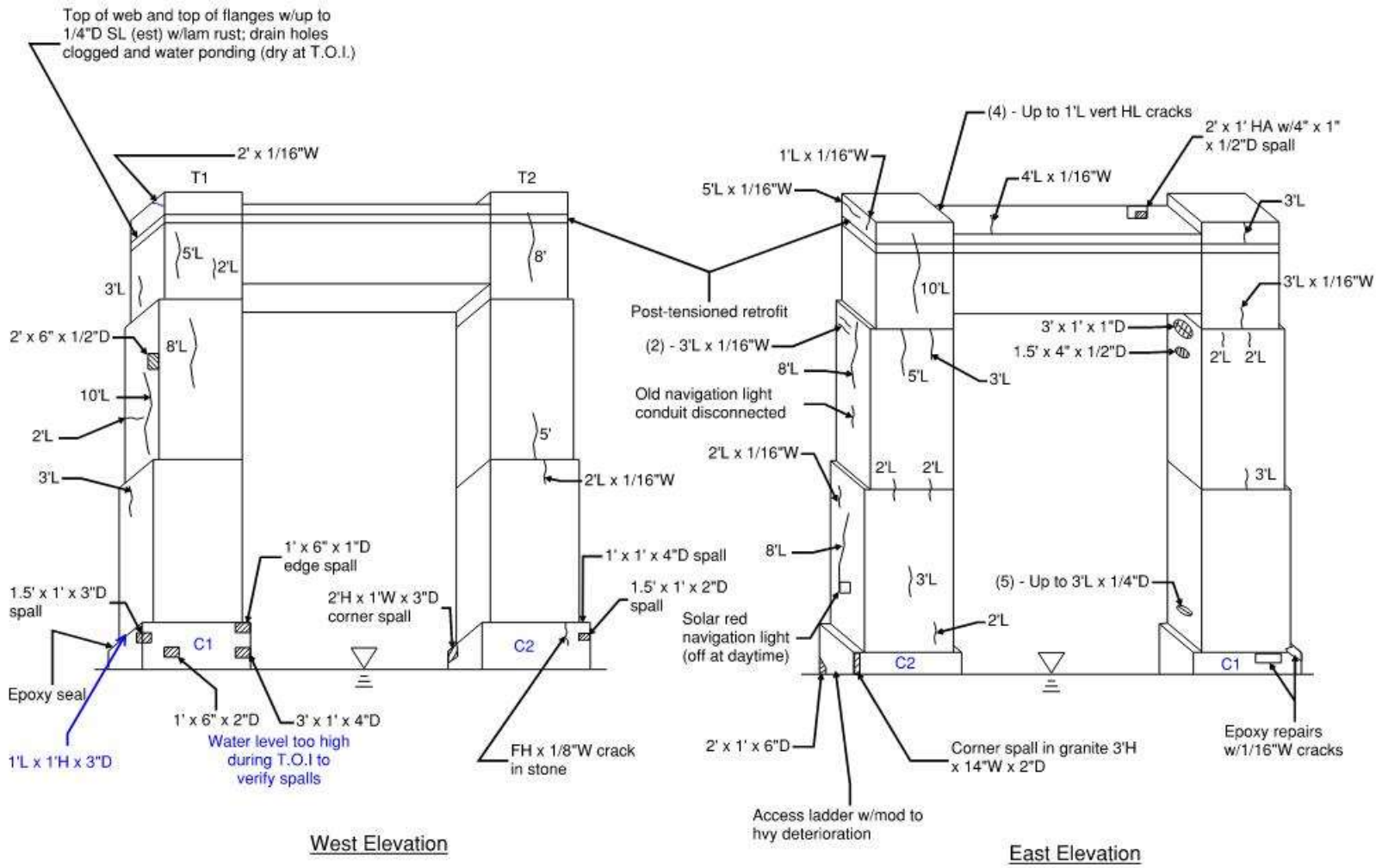

General Notes:

- See Substructure General Notes Sheet
- Isolated notes at pier bases not seen this inspection; possibly underwater

LEGEND:
- HOLLOW AREA
- SHALLOW REBAR
- SPALL AREA
- SPALL AREA WITH EXPOSED REBAR
- MAPCRACKS
- HAIRLINE CRACKS
- HONEYCOMB AREA
- SCALE AREA
- EFFLORESCENCE PRESENT

Pier 26

REVISION 1	DATE: 11/20/19	CREW: AH, BF (Baker)	REVISION 3	DATE:	CREW:
REVISION 2	DATE: 8/2/2021	CREW: IS, EG, SD (Prime)	REVISION 4	DATE:	CREW:

Sketches
Inspection type: Fracture Critical,Routine
Inspection Date: 7/26/2021
Inspected by: PRIME AE

:Bridge No 03819

Town: NEW LONDON
Carried: INTERSTATE 95 NORTHBOUND
Crossed: THAMES RV,RR,LOCAL ROADS
Inventory Route: NHS

CREW: SW, BF	DATE: 9/26/2017	BRIDGE NO.: 03819

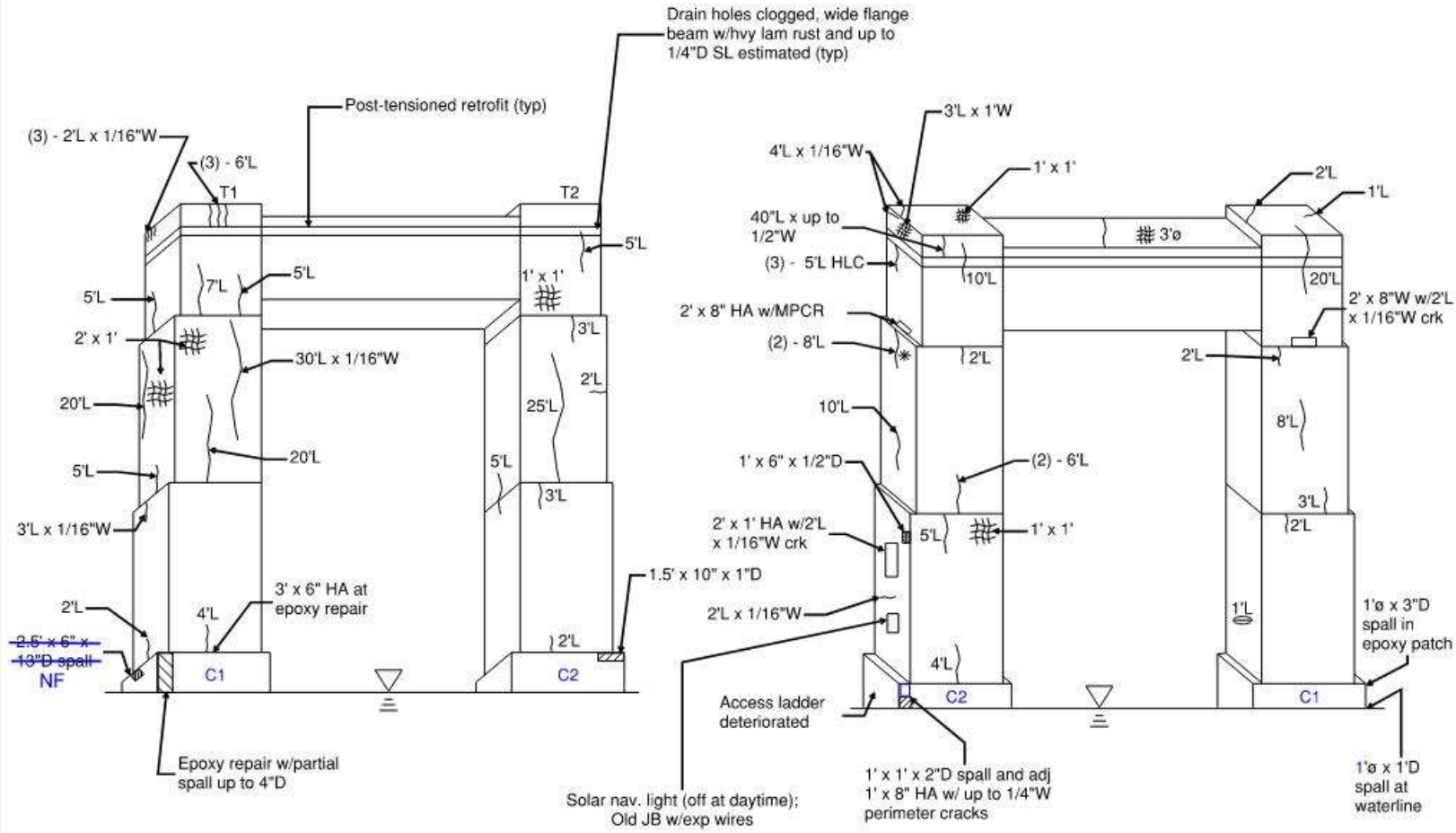

West Elevation

East Elevation

General Notes:

- See Substructure General Notes Sheet
- Isolated notes at pier bases not seen this inspection; possibly underwater
- Seal deteriorated throughout base of pier

LEGEND:
- HOLLOW AREA
- SHALLOW REBAR
- SPALL AREA
- SPALL AREA WITH EXPOSED REBAR
- MAPCRACKS
- HAIRLINE CRACKS
- HONEYCOMB AREA
- SCALE AREA
- EFFLORESCENCE PRESENT

Pier 27

REVISION 1	DATE: 11/20/19	CREW: AH, BF (Baker)	REVISION 3	DATE:	CREW:
REVISION 2	DATE: 8/2/2021	CREW: IS, EG, SD (Prime)	REVISION 4	DATE:	CREW:

Sketches
Inspection type: Fracture Critical,Routine
Inspection Date: 7/26/2021
Inspected by: PRIME AE

:Bridge No 03819

Town: NEW LONDON
Carried: INTERSTATE 95 NORTHBOUND
Crossed: THAMES RV,RR,LOCAL ROADS
Inventory Route: NHS

CREW: SW, BF	DATE: 9/26/2017	BRIDGE NO.: 03819

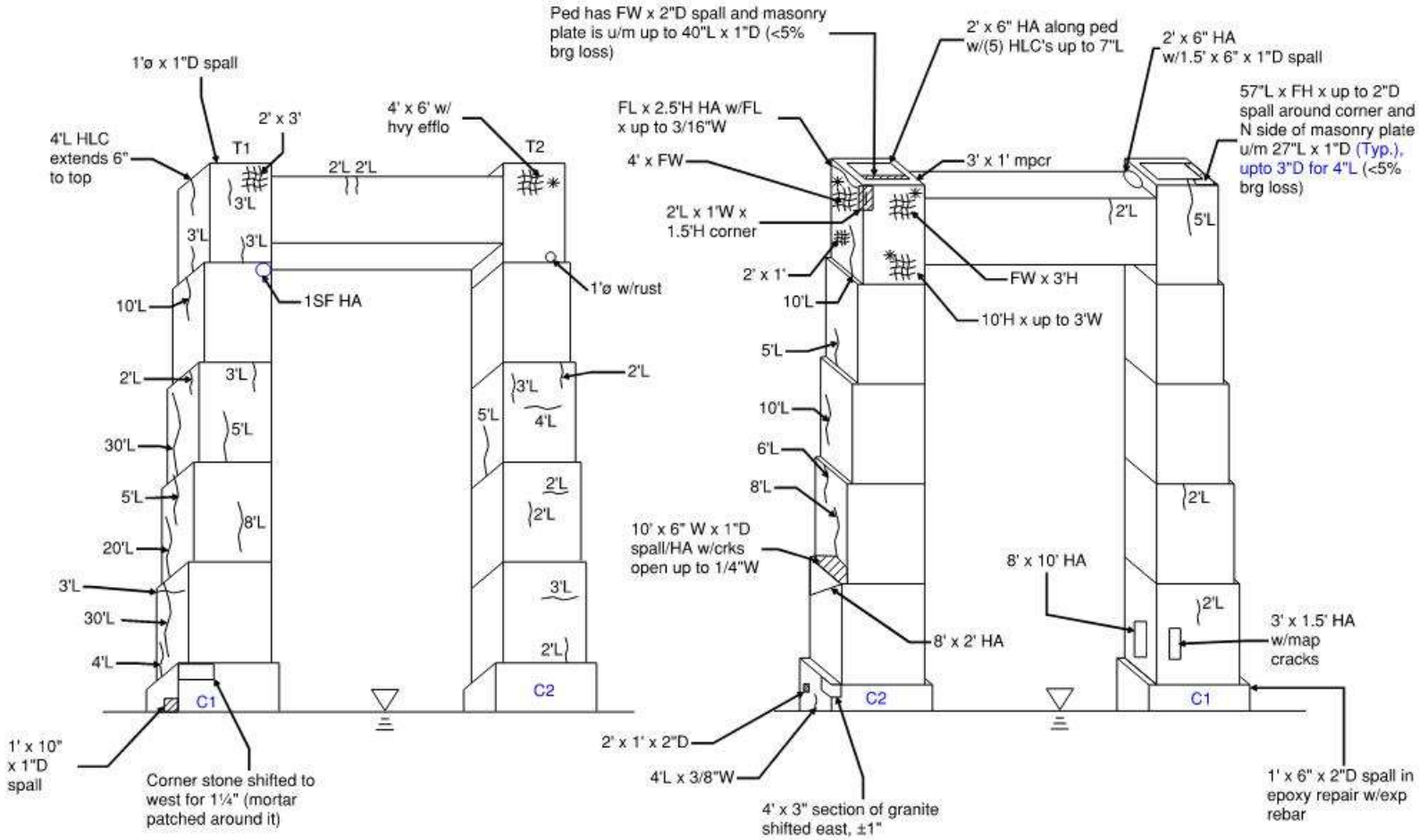

West Elevation

East Elevation

General Notes:

- See Substructure General Notes Sheet

LEGEND:
- HOLLOW AREA
- SHALLOW REBAR
- SPALL AREA
- SPALL AREA WITH EXPOSED REBAR
- MAPCRACKS
- HAIRLINE CRACKS
- HONEYCOMB AREA
- SCALE AREA
- EFFLORESCENCE PRESENT

Pier 28

REVISION 1	DATE: 8/26/19	CREW: BH, JG (Baker)	REVISION 3	DATE:	CREW:
REVISION 2	DATE: 8/24/21	CREW: NR, SD (Prime) - No Change	REVISION 4	DATE:	CREW:

Sketches
Inspection type: Fracture Critical,Routine
Inspection Date: 7/26/2021
Inspected by: PRIME AE

:Bridge No 03819

Town: NEW LONDON
Carried: INTERSTATE 95 NORTHBOUND
Crossed: THAMES RV,RR,LOCAL ROADS
Inventory Route: NHS

CREW: SW, JG	DATE: 2/6/2018	BRIDGE NO.: 03819

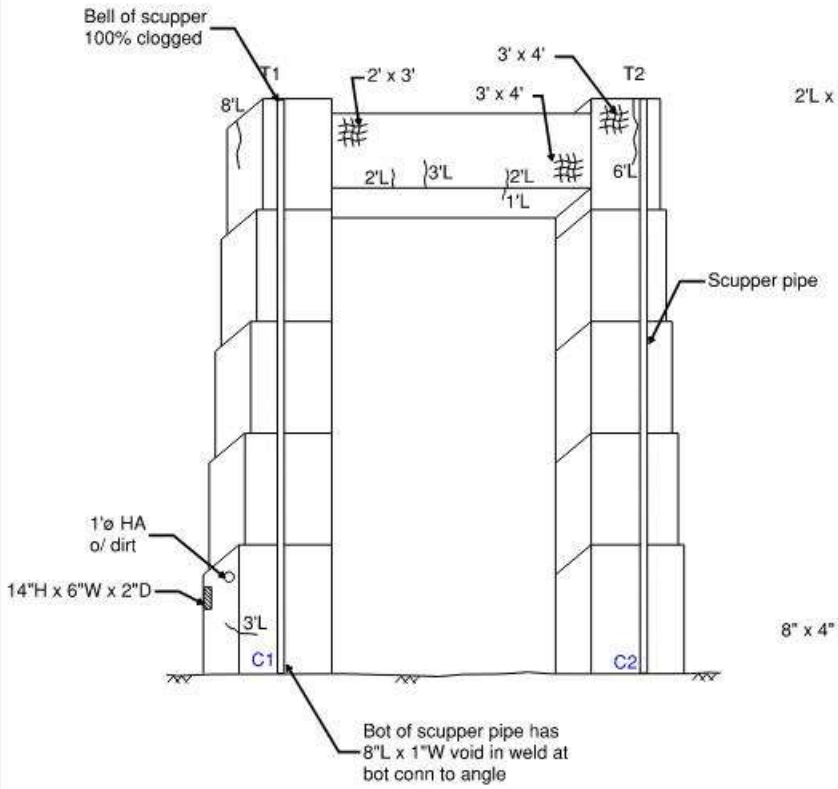

West Elevation

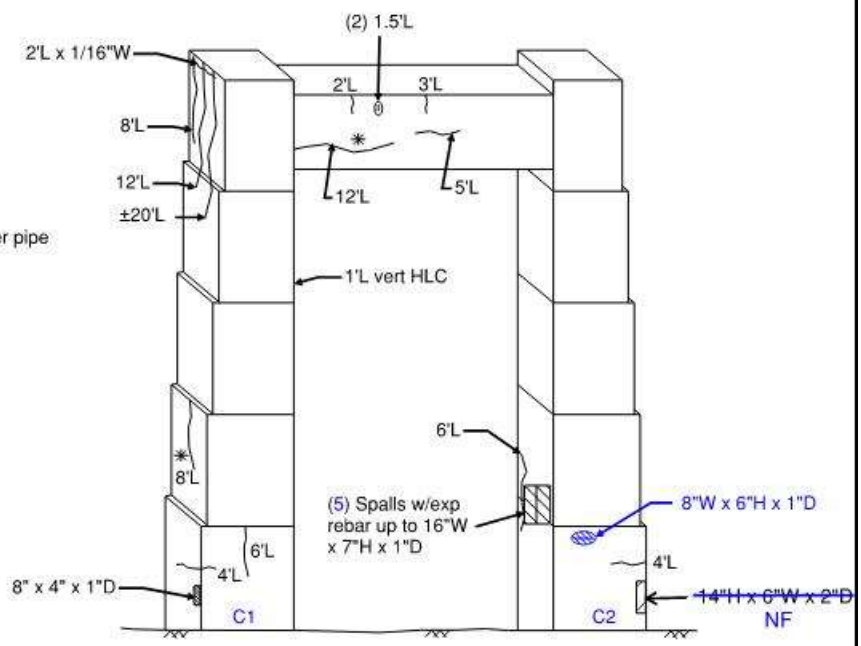

East Elevation

General Notes:

- See Substructure General Notes Sheet
- Random horizontal cracks along pour lines
- Random hollow areas in grout pads

LEGEND:
- HOLLOW AREA
- SHALLOW REBAR
- SPALL AREA
- SPALL AREA WITH EXPOSED REBAR
- MAPCRACKS
- HAIRLINE CRACKS
- HONEYCOMB AREA
- SCALE AREA
- EFFLORESCENCE PRESENT

Pier 29

REVISION 1	DATE: 9/16/19	CREW: BH, JG (Baker)	REVISION 3	DATE:	CREW:
REVISION 2	DATE: 7/26/2021	CREW: IS, CMR, NH (Prime)	REVISION 4	DATE:	CREW:

Sketches
Inspection type: Fracture Critical,Routine
Inspection Date: 7/26/2021
Inspected by: PRIME AE

:Bridge No 03819

Town: NEW LONDON
Carried: INTERSTATE 95 NORTHBOUND
Crossed: THAMES RV,RR,LOCAL ROADS
Inventory Route: NHS

CREW: SW, JG	DATE: 2/6/2018	BRIDGE NO.: 03819

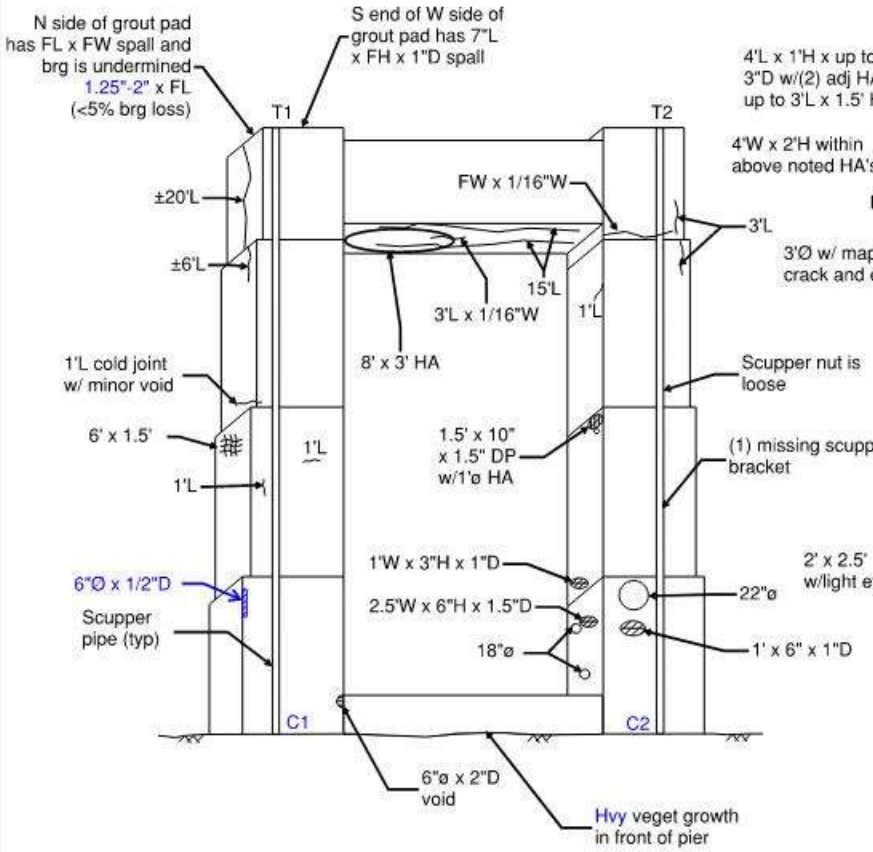

West Elevation

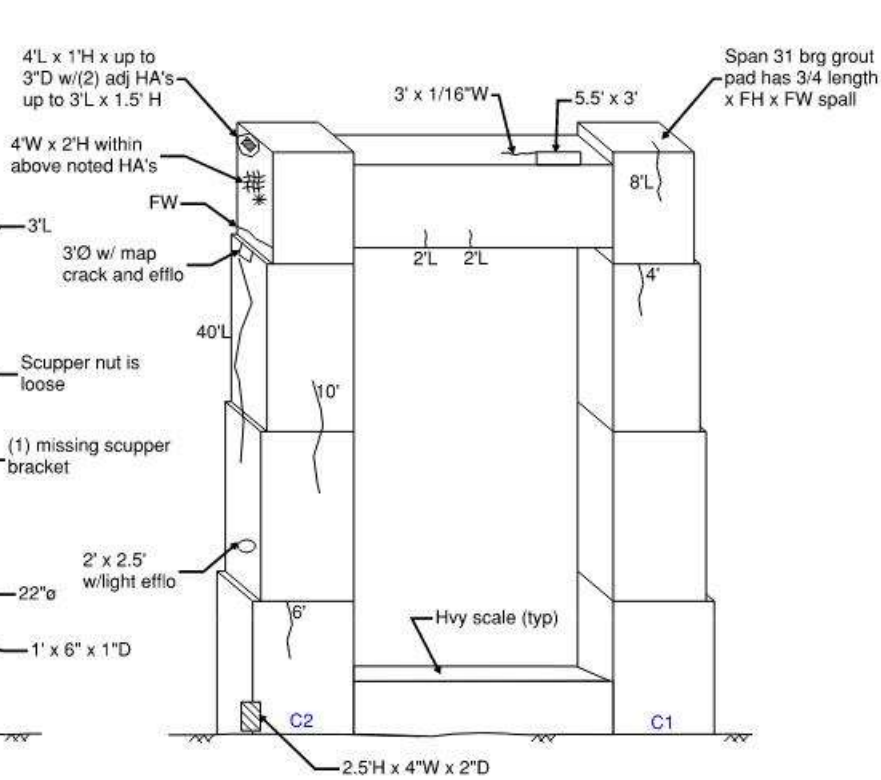

East Elevation

General Notes:

- See Substructure General Notes Sheet
- Active leakage at random locations from deck joint above; dry at T.O.I.
- Above noted hollow areas are over and/or adjacent to boat launch parking lot.

LEGEND:
- HOLLOW AREA
- SHALLOW REBAR
- SPALL AREA
- SPALL AREA WITH EXPOSED REBAR
- MAPCRACKS
- HAIRLINE CRACKS
- HONEYCOMB AREA
- SCALE AREA
- EFFLORESCENCE PRESENT

Pier 30

REVISION 1	DATE: 9/13/19	CREW: BH, JG (Baker)	REVISION 3	DATE:	CREW:
REVISION 2	DATE: 7/26/2021	CREW: IS, CMR, NH (Prime)	REVISION 4	DATE:	CREW:

Sketches
Inspection type: Fracture Critical,Routine
Inspection Date: 7/26/2021
Inspected by: PRIME AE

:Bridge No 03819

Town: NEW LONDON
Carried: INTERSTATE 95 NORTHBOUND
Crossed: THAMES RV,RR,LOCAL ROADS
Inventory Route: NHS

CREW: SW, JG	DATE: 2/6/2018	BRIDGE NO.: 03819

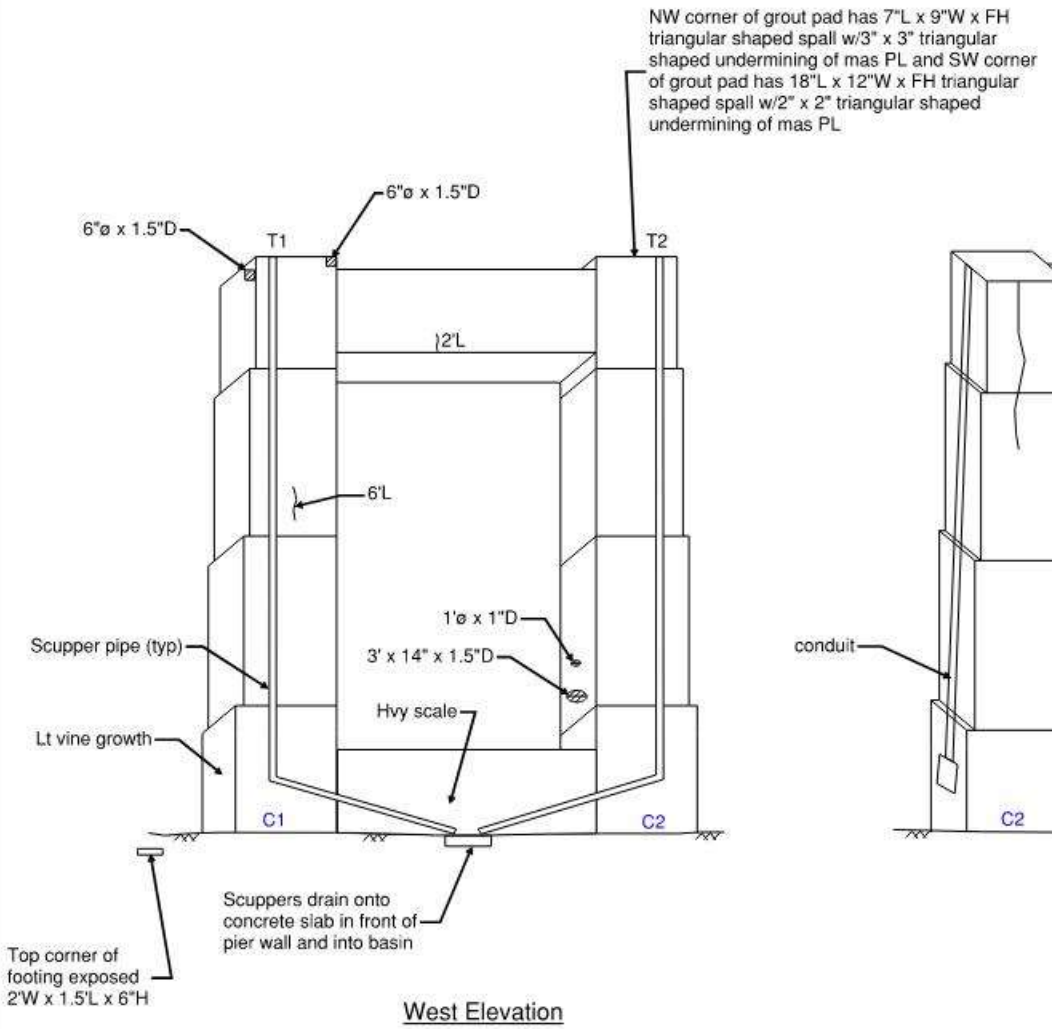

West Elevation

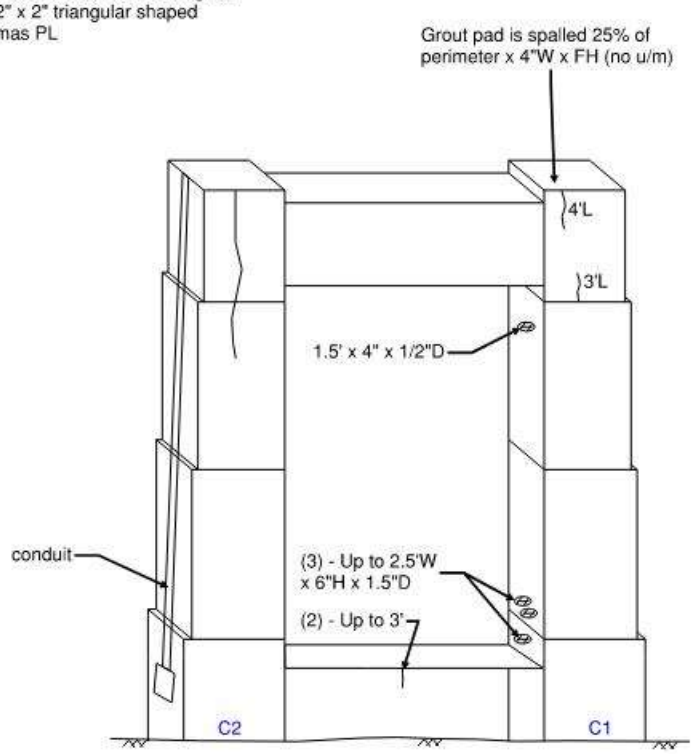

East Elevation

General Notes:

- See Substructure General Notes Sheet

LEGEND:
- HOLLOW AREA
- SHALLOW REBAR
- SPALL AREA
- SPALL AREA WITH EXPOSED REBAR
- MAPCRACKS
- HAIRLINE CRACKS
- HONEYCOMB AREA
- SCALE AREA
- EFFLORESCENCE PRESENT

Pier 31

REVISION 1	DATE: 9/13/19	CREW: BH, JG (Baker)	REVISION 3	DATE:	CREW:
REVISION 2	DATE: 7/26/21	CREW: IS, NR, EB (Prime) - No Change	REVISION 4	DATE:	CREW:

Sketches
Inspection type: Fracture Critical,Routine
Inspection Date: 7/26/2021
Inspected by: PRIME AE

:Bridge No 03819

Town: NEW LONDON
Carried: INTERSTATE 95 NORTHBOUND
Crossed: THAMES RV,RR,LOCAL ROADS
Inventory Route: NHS

CREW: SW, BF	DATE: 9/26/2017	BRIDGE NO.: 03819

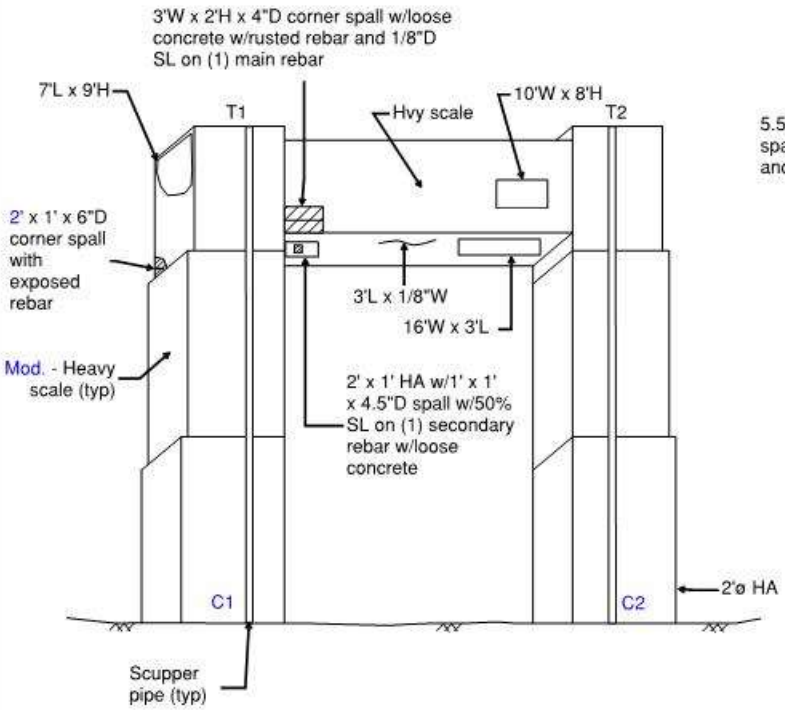

West Elevation

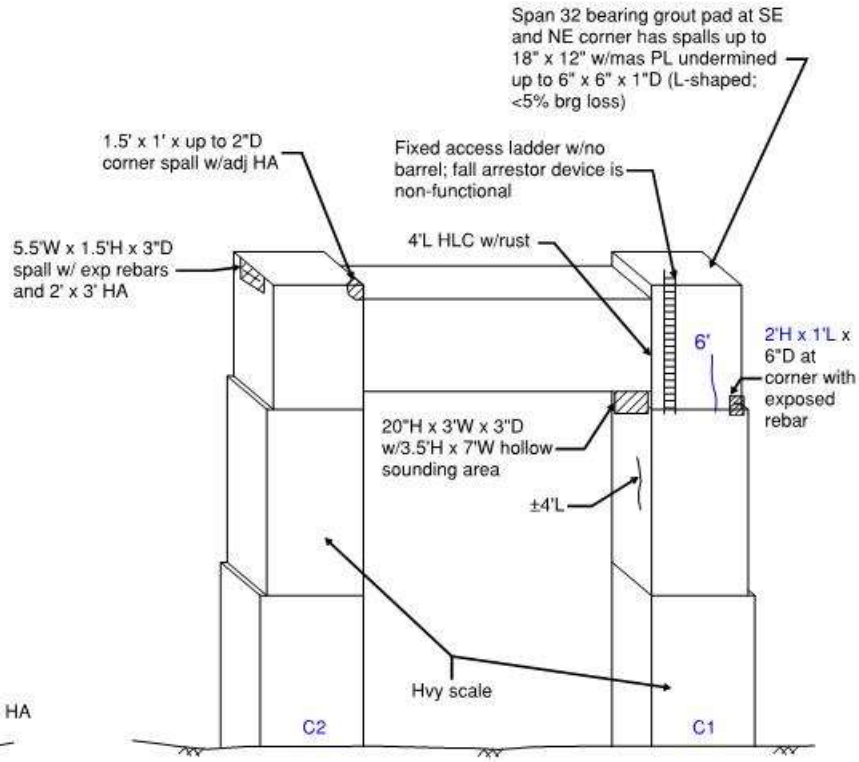

East Elevation

General Notes:

- See Substructure General Notes Sheet
- Evidence of leakage through deck joint onto pier

LEGEND:
- HOLLOW AREA
- SHALLOW REBAR
- SPALL AREA
- SPALL AREA WITH EXPOSED REBAR
- MAPCRACKS
- HAIRLINE CRACKS
- HONEYCOMB AREA
- SCALE AREA
- EFFLORESCENCE PRESENT

Pier 32

REVISION 1	DATE: 9/23/19	CREW: BH, JG (Baker)	REVISION 3	DATE:	CREW:
REVISION 2	DATE: 7/26/21	CREW: IS, BM, NH (Prime)	REVISION 4	DATE:	CREW:

Sketches
Inspection type: Fracture Critical,Routine
Inspection Date: 7/26/2021
Inspected by: PRIME AE

:Bridge No 03819

Town: NEW LONDON
Carried: INTERSTATE 95 NORTHBOUND
Crossed: THAMES RV,RR,LOCAL ROADS
Inventory Route: NHS

CREW: SW, KT	DATE: 8/23/2017	BRIDGE NO.: 03819

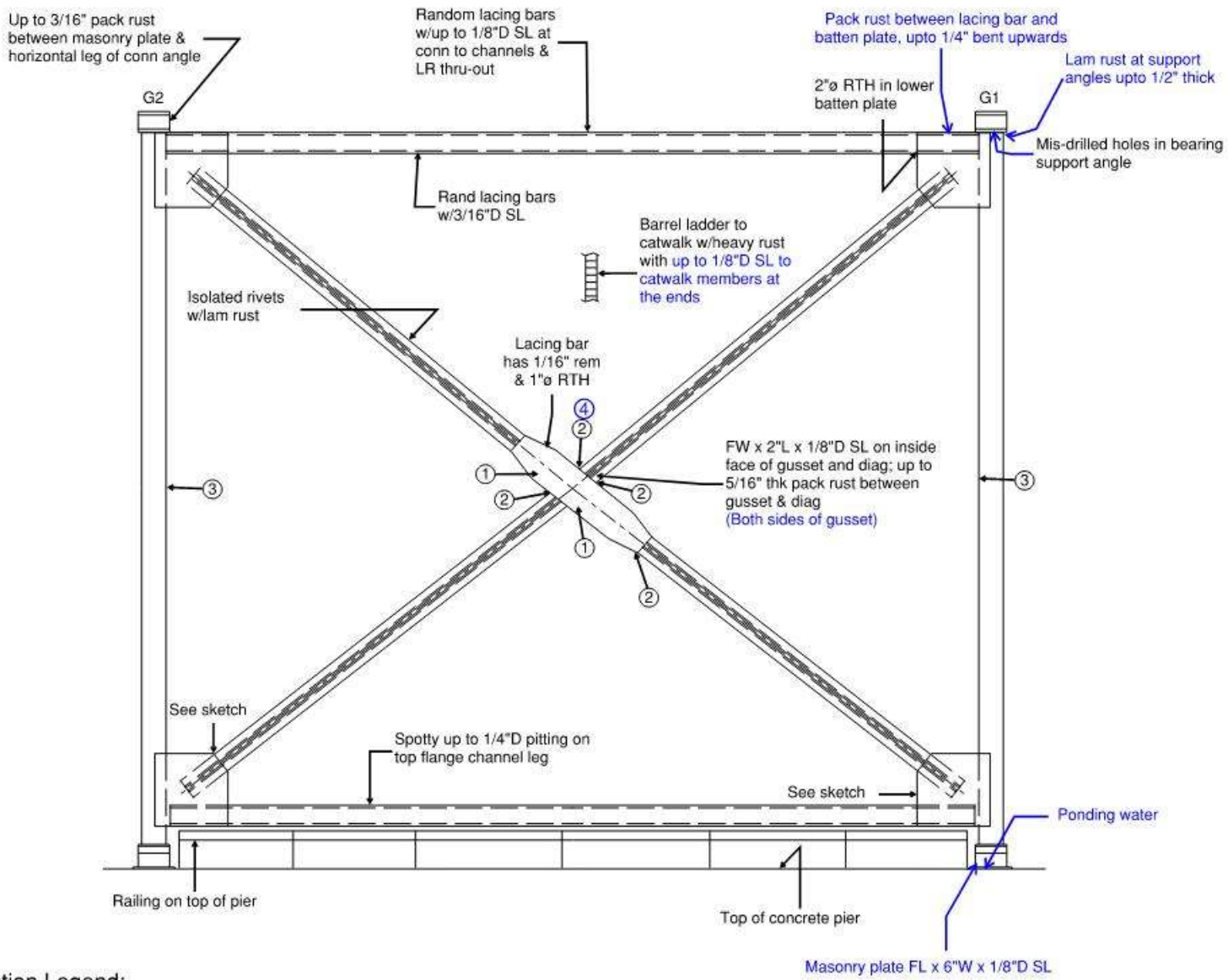

Deterioration Legend:

(1) - Up to 3/16"D SL to batten plate w/ hvy LR
(2) - Flange angles at both sides with laminar rust along gusset plate FW x up to 6"L x up to 1/8"-3/16"D SL
(3) - Back-back angles with welded splice, both north and south sides
(4) - 4 rivets with upto 50% section loss on rivet heads

Steel Pier Bent Over Pier 32 - East Elevation

REVISION 1	DATE: 11/20/19	CREW: BH, JG (Baker)	REVISION 3	DATE:	CREW:
REVISION 2	DATE: 7/26/21	CREW: BM, NH (Prime)	REVISION 4	DATE:	CREW:

CREW: SW, KT	DATE: 8/23/2017	BRIDGE NO.: 03819

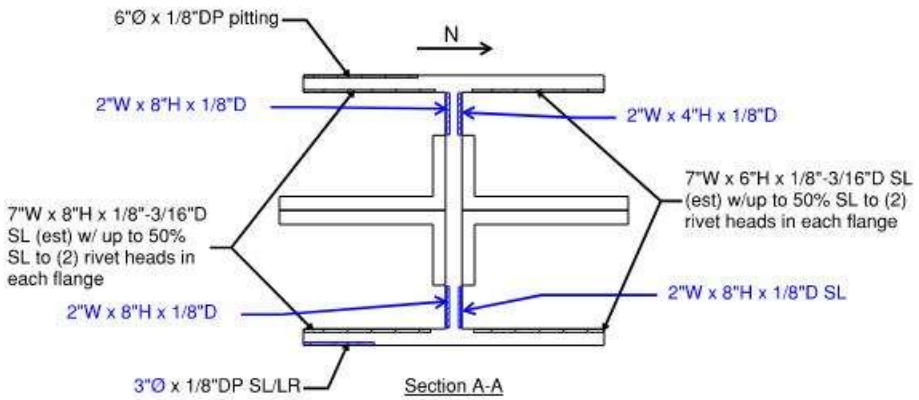

Section A-A

Section Loss Calculation:
14H x 103: A = 30.26 in²
8 x 4 x 5/8 angle: A = 7.11 in²
A_{orig}= 30.26 + (4)(7.11) = 58.7 in²
A_{loss}= 7(5/32)(4) + 2(1/8)(4) + (3)(1/8) + (6)(1/16) = 6.13 in²
Percent Loss = 6.13/58.7 = **10.4% section loss**

(1) - Inside face of gusset plate w/FW x FH x up to 3/16"D SL (ave 1/4"D) w/up to 1/4" PR btwn vert and gusset plates
(2) - FL x FW x 1/16"D SL to batten plate
(3) - 75% SL to one lacing bar
(4) - 9" x 8" RTH in batten plate

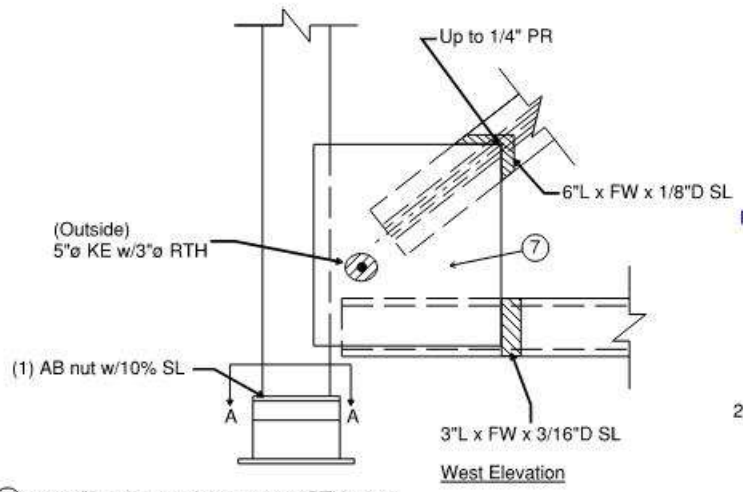

West Elevation

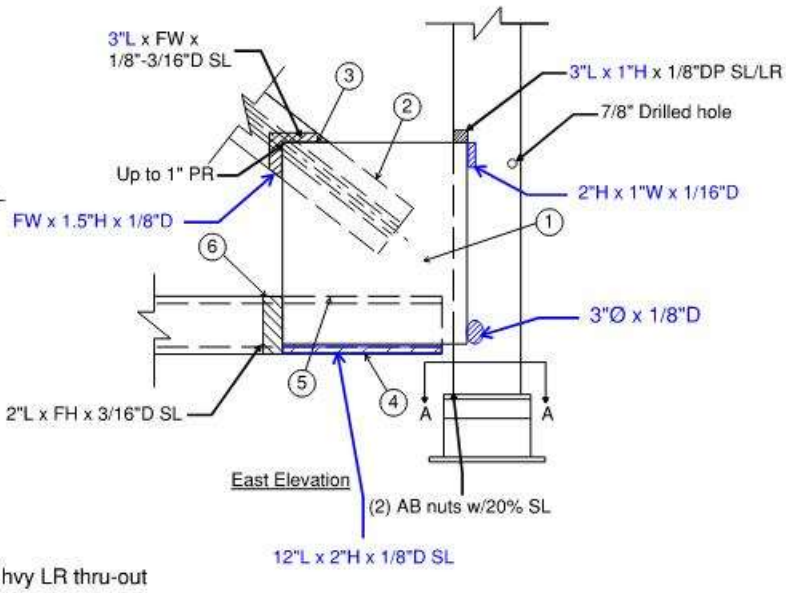

East Elevation

(5) - 50% SL to batten plate w/4" x 6" RTH at top
(6) - 100% SL to lacing bar
(7) - Inside face of gusset plate at bot w/10"W x up to 6"H x 1/4"D SL and rem area has up to 1/8"D SL w/up to 1/4" PR btwn VT and guss PL's

Note: hvy LR thru-out

North Bent at Pier 32 (E)

REVISION 1	DATE: 11/20/19	CREW: BH, JG (Baker)	REVISION 3	DATE:	CREW:
REVISION 2	DATE: 7/26/21	CREW: BM, NH (Prime AE)	REVISION 4	DATE:	CREW:

Sketches
Inspection type: Fracture Critical,Routine
Inspection Date: 7/26/2021
Inspected by: PRIME AE

:Bridge No 03819

Town: NEW LONDON
Carried: INTERSTATE 95 NORTHBOUND
Crossed: THAMES RV,RR,LOCAL ROADS
Inventory Route: NHS

CREW: SW, BF	DATE: 10/3/2017	BRIDGE NO.: 03819

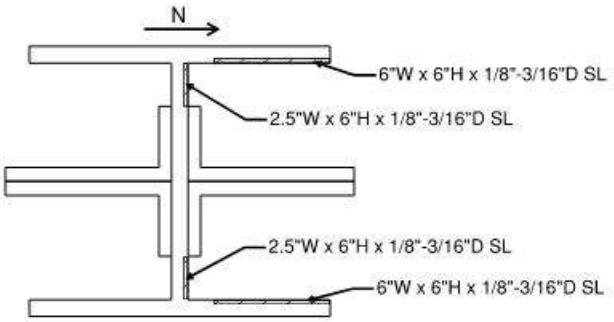

Section B-B

<5% section loss

Note: All losses estimated (hvy LR/difficult to access)

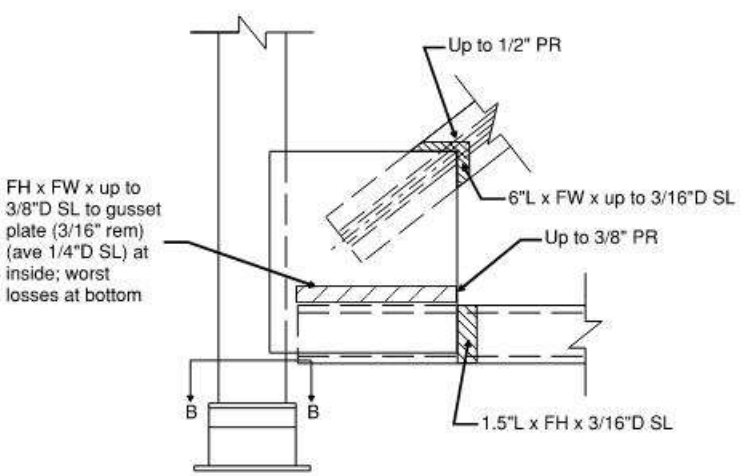

East Elevation

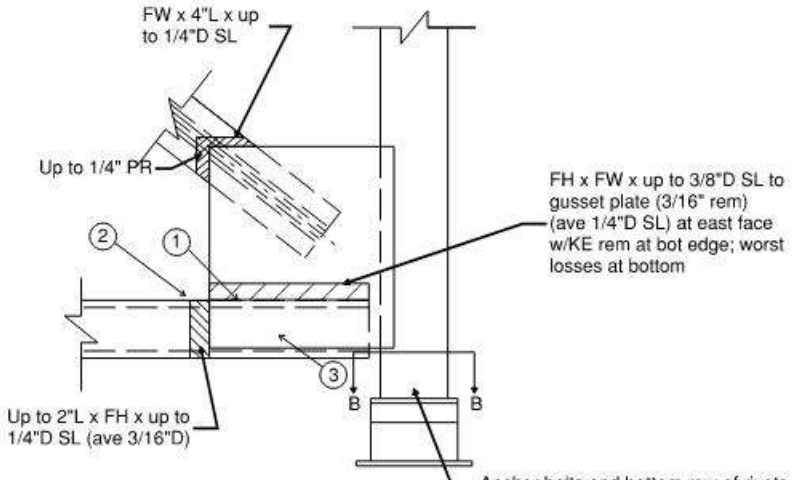

West Elevation

Note: hvy LR thru-out

1 - Up to 60% SL to batten plate
2 - 100% SL to first lacing bar
3 - Up to 60% SL to batten plate w/(4) RTH's up to 1"ø & up to 100% SL to random rivet heads

South Bent at Pier 32 (E)

REVISION 1	DATE: 11/20/19	CREW: BH, JG (Baker)	REVISION 3	DATE:	CREW:
REVISION 2	DATE: 8/17/21	CREW: CMR, NH (Prime AE)	REVISION 4	DATE:	CREW:

Sketches
Inspection type: Fracture Critical,Routine
Inspection Date: 7/26/2021
Inspected by: PRIME AE

:Bridge No 03819

Town: NEW LONDON
Carried: INTERSTATE 95 NORTHBOUND
Crossed: THAMES RV,RR,LOCAL ROADS
Inventory Route: NHS

CREW: MRJ, JG	DATE: 10/10/2017	BRIDGE NO.: 03819

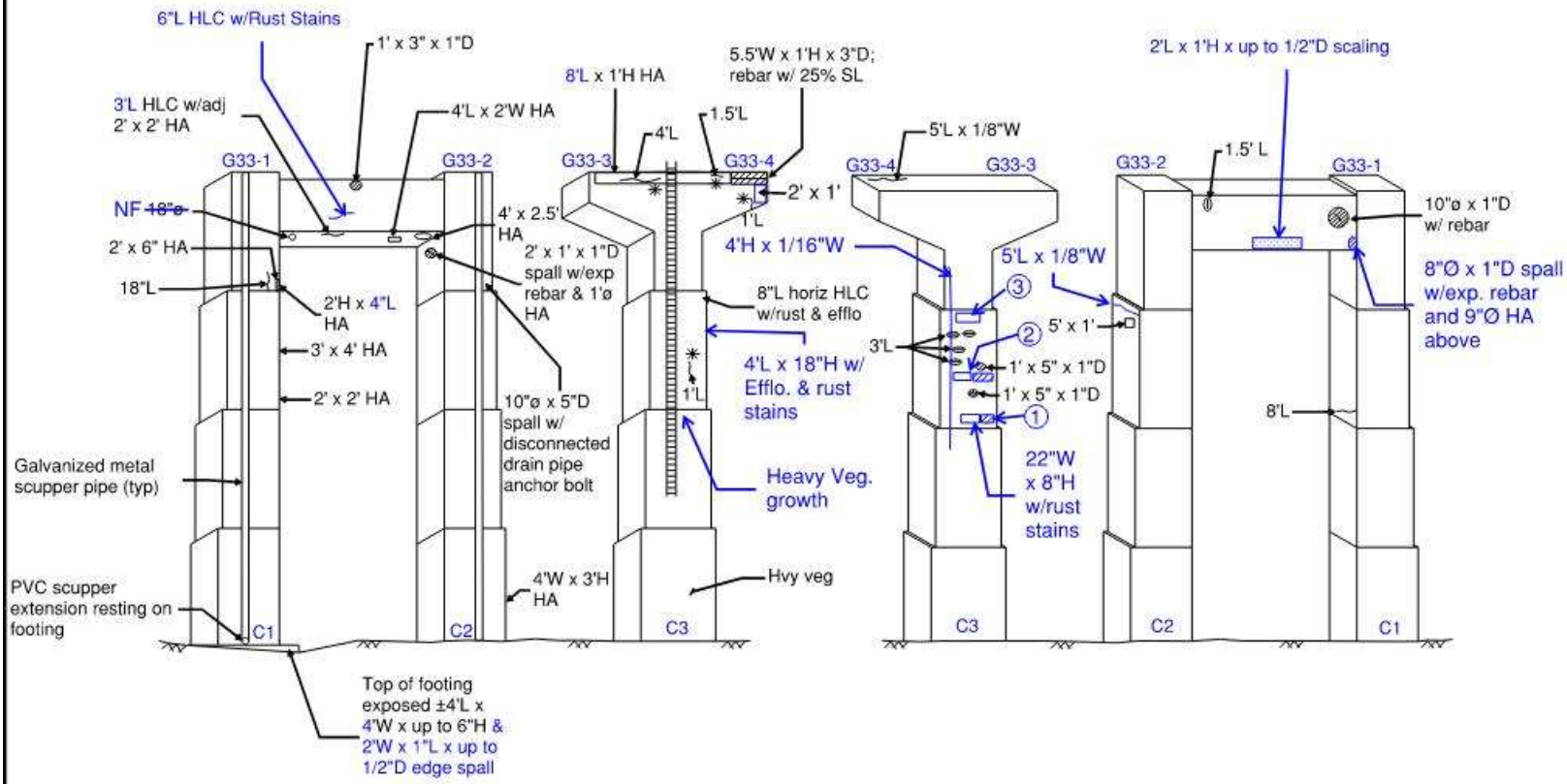

DETERIORATION NOTES
① - 2 Shallow spalls up to 9"W x 2"H x 1/2"D
② - 34"L x up to 15"H hollow area and (3) shallow spalls 16"L x 5"H x 1"D w/ exp. rebar.
③ - (2) Hollow areas 26"W x 20"H & (5) spalls up to 23"W x 5"H x 1/2"D

LEGEND:
- HOLLOW AREA
- SHALLOW REBAR
- SPALL AREA
- SPALL AREA WITH EXPOSED REBAR
- MAPCRACKS
- HAIRLINE CRACKS
- HONEYCOMB AREA
- SCALE AREA
- EFFLORESCENCE PRESENT

General Notes:
- See Substructure General Notes Sheet
- Embankment with areas of erosion up to 3' wide x 6" deep
- Rust stains on cap at railing connections
- Hammerhead pier cap w/ random joint debris

Pier 33

REVISION 1	DATE: 8/26/19	CREW: SW, BF (Baker)	REVISION 3	DATE:	CREW:
REVISION 2	DATE: 7/26/21	CREW: IS, EG, MM (Prime)	REVISION 4	DATE:	CREW:

Sketches
Inspection type: Fracture Critical,Routine
Inspection Date: 7/26/2021
Inspected by: PRIME AE

:Bridge No 03819

Town: NEW LONDON
Carried: INTERSTATE 95 NORTHBOUND
Crossed: THAMES RV,RR,LOCAL ROADS
Inventory Route: NHS

CREW: MRJ, JG	DATE: 10/10/2017	BRIDGE NO.: 03819

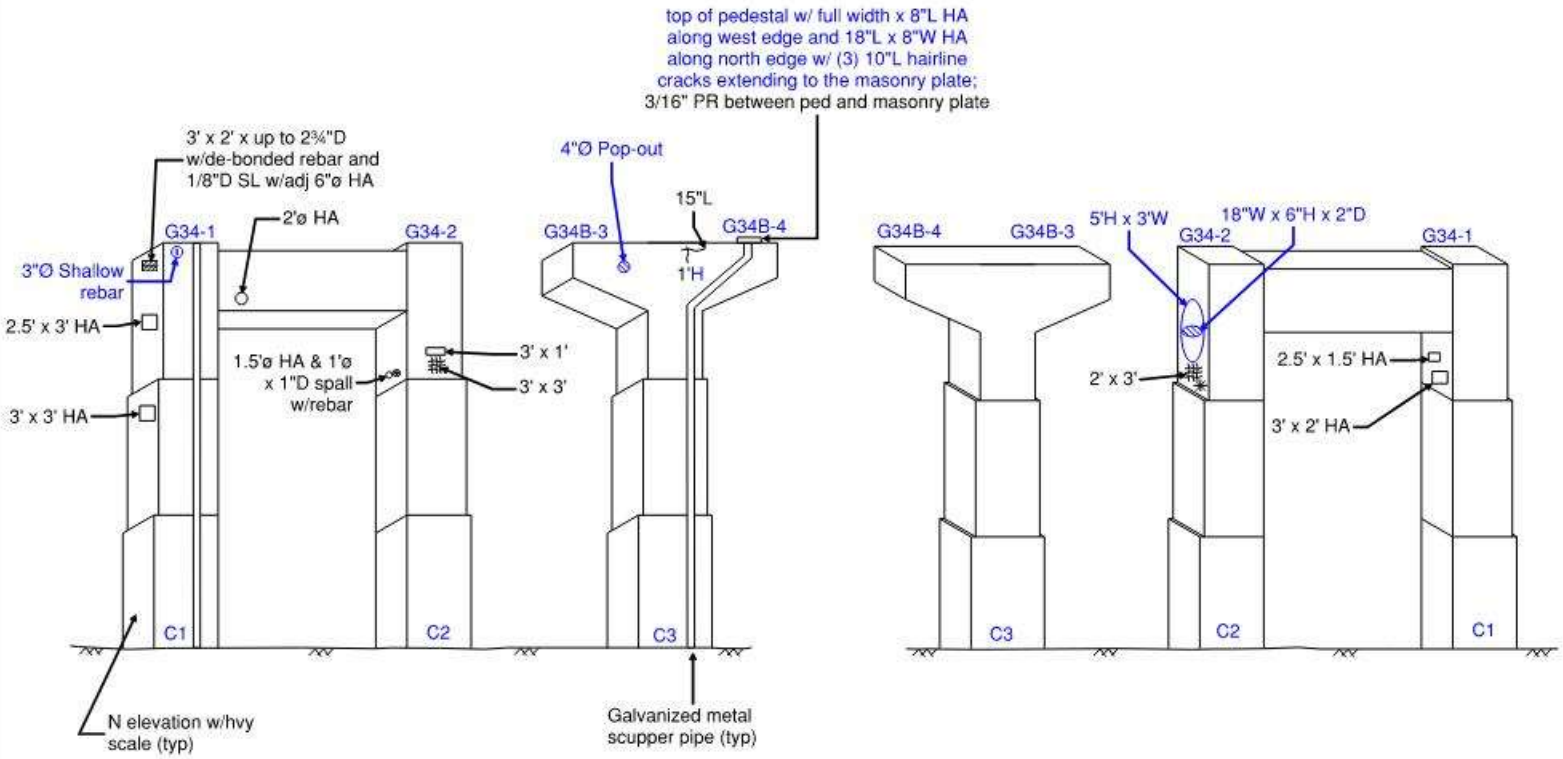

West Elevation

East Elevation

General Notes:

- See Substructure General Notes Sheet
- Concrete, asphalt and joint material up to 4" deep on top of cap

LEGEND:
- HOLLOW AREA
- SHALLOW REBAR
- SPALL AREA
- SPALL AREA WITH EXPOSED REBAR
- MAPCRACKS
- HAIRLINE CRACKS
- HONEYCOMB AREA
- SCALE AREA
- EFFLORESCENCE PRESENT

Pier 34

REVISION 1	DATE: 8/26/19	CREW: SW, BF (Baker) - No Change	REVISION 3	DATE:	CREW:
REVISION 2	DATE: 9/23/2021	CREW: BM, CMR (Prime)	REVISION 4	DATE:	CREW:

Sketches
Inspection type: Fracture Critical,Routine
Inspection Date: 7/26/2021
Inspected by: PRIME AE

:Bridge No 03819

Town: NEW LONDON
Carried: INTERSTATE 95 NORTHBOUND
Crossed: THAMES RV,RR,LOCAL ROADS
Inventory Route: NHS

CREW: MRJ, JG	DATE: 10/10/2017	BRIDGE NO.: 03819

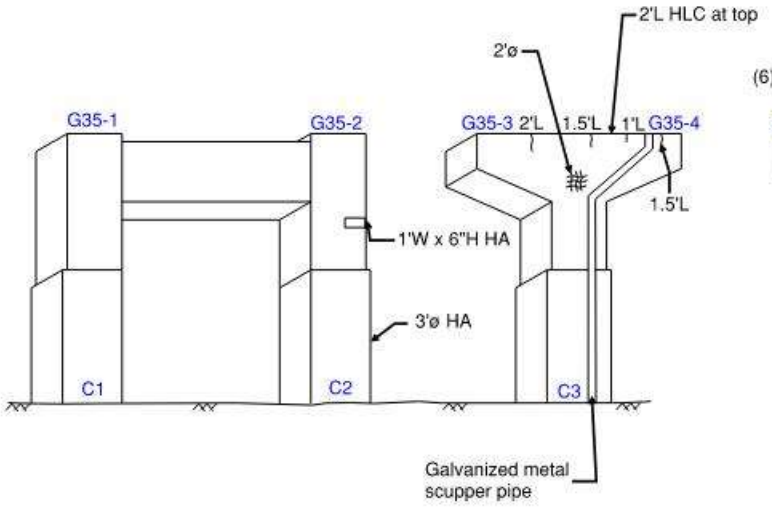

West Elevation

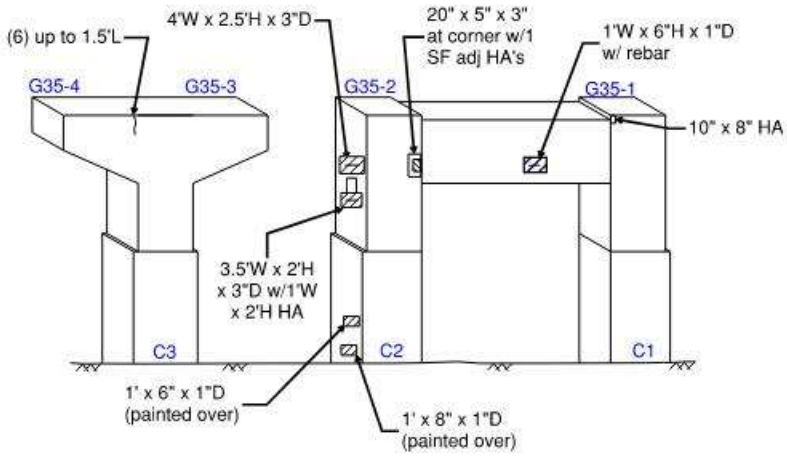

East Elevation

General Notes:

- See Substructure General Notes Sheet
- Random hairline cracks along construction joints

LEGEND:
- HOLLOW AREA
- SHALLOW REBAR
- SPALL AREA
- SPALL AREA WITH EXPOSED REBAR
- MAPCRACKS
- HAIRLINE CRACKS
- HONEYCOMB AREA
- SCALE AREA
- EFFLORESCENCE PRESENT

Pier 35

REVISION 1	DATE: 8/26/19	CREW: SW, BF (Baker)	REVISION 3	DATE:	CREW:
REVISION 2	DATE: 9/29/2021	CREW: CMR, EB (Prime) - No Change	REVISION 4	DATE:	CREW:

Form: Asset Photos
Inspection type: Fracture Critical,Routine
Inspection Date: 7/26/2021
Inspected by: PRIME AE

:Bridge No 03819

Town: NEW LONDON
Carried: INTERSTATE 95 NORTHBOUND
Crossed: THAMES RV,RR,LOCAL ROADS
Inventory Route: NHS

Photo Number: 1 Photo Taken: 10/28/2021

Bridge identification number.

Photo Number: 2 Photo Taken: 08/25/2021

North elevation of the bridge.

Form: Asset Photos
Inspection type: Fracture Critical,Routine
Inspection Date: 7/26/2021
Inspected by: PRIME AE

:Bridge No 03819

Town: NEW LONDON
Carried: INTERSTATE 95 NORTHBOUND
Crossed: THAMES RV,RR,LOCAL ROADS
Inventory Route: NHS

Photo Number: 3 Photo Taken: 08/25/2021

South elevation of the bridge.

Photo Number: 4 Photo Taken: 10/07/2021

Bridge from the west approach.

Form: Asset Photos
Inspection type: Fracture Critical,Routine
Inspection Date: 7/26/2021
Inspected by: PRIME AE

:Bridge No 03819

Town: NEW LONDON
Carried: INTERSTATE 95 NORTHBOUND
Crossed: THAMES RV,RR,LOCAL ROADS
Inventory Route: NHS

Photo Number: 5 Photo Taken: 10/12/2021

West approach from the bridge.

Photo Number: 6 Photo Taken: 07/26/2021

East approach from the bridge.

Photo Number: 7 Photo Taken: 07/26/2021

Bridge from the east approach.

Photo Number: 8 Photo Taken: 10/20/2021

Typical configuration and condition of the underside of west approach girder spans (Spans 6-21) and superstructure framing. Span 12 shown, looking east.

Photo Number: 9 Photo Taken: 07/26/2021

Typical configuration and condition of the underside of approach truss spans (Spans 22-25 and 29-32) and superstructure framing. Span 31 shown looking west.

Photo Number: 10 Photo Taken: 08/17/2021

Typical configuration and condition of the underside of main truss spans (Spans 26-28) and superstructure framing. Span 28 shown looking west.

Photo Number: 11 Photo Taken: 10/05/2021

Typical configuration and condition of the underside of east approach girder spans (Spans 33-36) and superstructure framing. Span 35 shown looking east.

Photo Number: 12 Photo Taken: 07/26/2021

Typical condition of bridge overlay, looking south in Span 36.

Photo Number: 13 Photo Taken: 10/07/2021

Span 8, pothole in overlay exposing the spalled deck along the north parapet with five (5) exposed rebar.

Photo Number: 14 Photo Taken: 10/12/2021

Span 12, right lane with raveling and breaking up bituminous overlay, looking northeast.

Photo Number: 15 Photo Taken: 07/26/2021

Span 32 overlay has multiple potholes with exposed deck in the left middle/center lanes, looking south.

Photo Number: 16 Photo Taken: 10/07/2021

Span 12, typical repairs surrounding scupper drain grate since the last inspection. North side near Pier 11 deck joint shown, looking east.

Photo Number: 17 Photo Taken: 09/28/2021

Span 33, south shoulder, deck hole repair adjacent to scupper near Pier 33 deck joint since the last inspection.

Photo Number: 18 Photo Taken: 08/10/2021

Span 27, underside of deck, Bays 1 to 3, between Floorbeams FB 24 and FB 25. Transverse hairline cracks with efflorescence and removed hollow areas.

Photo Number: 19 Photo Taken: 08/24/2021

Span 28, Bay 1 underside of deck between Floorbeams 35 and 36 has a spall with exposed corroded rebars.

Photo Number: 20 Photo Taken: 08/25/2021

Span 28, Bay 9 underside of deck between Floorbeams FB 38 and FB 39 with full length haunch spall adjacent to Stringer S9. Note the transverse cracks with efflorescence and dampness.

Photo Number: 21 Photo Taken: 09/15/2021
Span 23, Bay 1 underside of deck between Floorbeams FB 3 and FB 4 with rusted through stay in place forms with punky concrete.

Photo Number: 22 Photo Taken: 10/14/2021
Span 14, Bay 1 underside of side adjacent to Floorbeam FB 15-1 looking north. Previously noted hole in deck adjacent to scupper has been repaired since the last inspection.

Photo Number: 23 Photo Taken: 08/02/2021

Span 22, Bay 1 underside of deck adjacent to Floorbeam FB 0, looking west. Rusted through SIP forms around scupper grate. Previously noted hole in deck has been repaired since the last inspection.

Photo Number: 24 Photo Taken: 08/04/2021

Span 22, Bay 12 underside of deck adjacent to Floorbeam FB 0. Previously noted spall in the deck adjacent to scupper has been repaired (red arrow) since the last inspection.

Photo Number: 25 Photo Taken: 09/20/2021

Span 24, Bay 12 underside of deck between Floorbeam FB 5 and FB 6 with rust and section loss to the stay in place forms and deck spall around the scupper.

Photo Number: 26 Photo Taken: 10/06/2021

Span 17, underside of deck in Bay 1 between Floorbeams FB16-6 and FB17-1, exposed deck grid bar bottom flanges with section loss and perforations.

Photo Number: 27 Photo Taken: 07/26/2021

Typical configuration and condition of the north curb, parapet, railing and fence, Span 32 shown. Note: Spall in the parapet above the curb (typical).

Photo Number: 28 Photo Taken: 10/12/2021

Southwest approach curb has a gap between the approach curb and the approach slab.

Photo Number: 29 Photo Taken: 09/28/2021

Spall in the south concrete curb at Abutment 2 deck joint.

Photo Number: 30 Photo Taken: 07/26/2021

Northeast approach curb is settled and has misaligned granite curb sections.

Photo Number: 31 Photo Taken: 10/19/2021

Span 7, south parapet to the east of Floorbeam FB 7-7 with a spall and hollow area over sidewalk/Mill Street.

Photo Number: 32 Photo Taken: 10/12/2021

Span 17, south parapet near Pier 17 has a spall with exposed rebar and hollow area over sidewalk.

Photo Number: 33 Photo Taken: 09/20/2021

Span 24, south parapet has a spall with exposed rebar between Floorbeams FB 2 and FB 3.

Photo Number: 34 Photo Taken: 08/25/2021

Span 29, south parapet between Floorbeams FB 2 and FB 3 has a spall with exposed/debonded rebar.

Photo Number: 35 Photo Taken: 10/12/2021

Southwest approach bridge rail is missing the 1st rail post from the bridge fence.

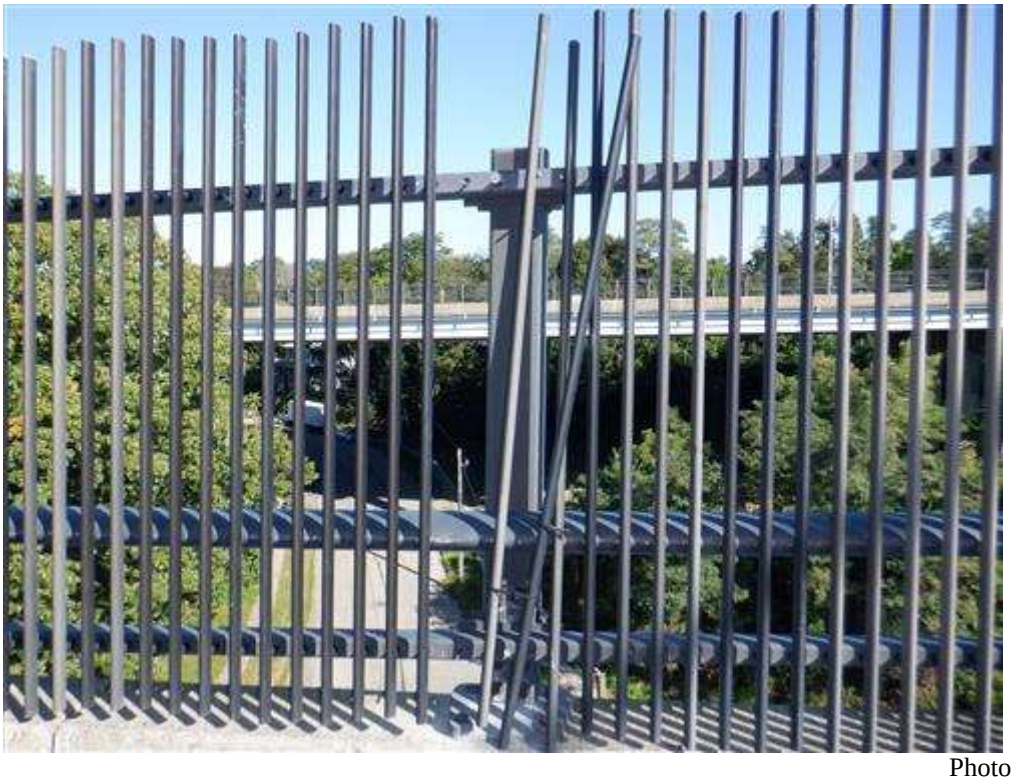

Photo Number: 36 Photo Taken: 10/07/2021

Span 10, north fence damage with a gap between the pickets near Pier 10. Note: One (1) picket was installed to close the gap since the last inspection.

Photo Number: 37 Photo Taken: 10/07/2021

Span 11, north fence damage with gaps up to 9" wide near mid-span.

Photo Number: 38 Photo Taken: 10/12/2021

Span 25, south fence with disconnected bottom rail.

Photo Number: 39 Photo Taken: 11/23/2021

Span 11, north fence post base adjacent to OHSS with cracked weld at the base plate for 50% of the perimeter.

Photo Number: 40 Photo Taken: 07/26/2021

Span 35, north fence, 2nd post from Pier 35 deck joint has a fully cracked weld at the base plate.

Photo Number: 41 Photo Taken: 10/13/2021

Span 20, south parapet railing post with detached bracket at bottom near FB20-3.

Photo Number: 42 Photo Taken: 10/05/2021

Span 32, north trough between Floorbeam FB 5 and FB 4 with a hole near the top support connection.

Photo Number: 43 Photo Taken: 10/07/2021

Span 20, Bay 1 scupper trough at Pier 19 is clogged with debris.

Photo Number: 44 Photo Taken: 09/28/2021

Span 33 south trough near Pier 33. Previously noted clogged trough has been cleaned since the last inspection.

Photo Number: 45 Photo Taken: 10/18/2021

Span 6, south scupper bottom bracket connection to Floorbeam FB 7-1 web is broken.

Photo Number: 46 Photo Taken: 09/13/2021

Span 22, south truss scupper pipe at Pier 22 with rusted through holes.

Photo Number: 47 Photo Taken: 08/24/2021

Span 29, north scupper pipe to the west of Floorbeam FB 5 has a 6" long crack at the elbow. No leakage found at the time of inspection.

Photo Number: 48 Photo Taken: 10/05/2021

Scupper drain pipe at Abutment 2 near Girder G36-1 with a missing section at the base.

Photo Number: 49 Photo Taken: 09/15/2021

Span 23 between Floorbeams FB 7 and FB 6, north scupper support and bracket angle connection along Stringer S4 with broken weld and gap.

Photo Number: 50 Photo Taken: 08/02/2021

Span 22, north trough support bracket has a 5" long cracked weld at the 2nd support from Pier 21.

Photo Number: 51 Photo Taken: 08/11/2021

Span 30, south trough to the east of Floorbeam FB 5 with two (2) missing connection bolts and cracked welds.

Photo Number: 52 Photo Taken: 10/06/2021

Span 7, Bay 1 between Floorbeams FB 7-6 & 7-7, active leakage from the short weep with laminated rust and section loss on Stringer S1.

Photo Number: 53 Photo Taken: 10/06/2021

Span 9, Bay 1 between Floorbeams FB 9-5 & 9-6, active leakage from the short weep with laminated rust and section loss on Stringer S1.

Photo Number: 54 Photo Taken: 10/06/2021

Same location as the previous photo, close up of the section loss on the Stringer S1 bottom flange due to active leakage from the short weep.

Photo Number: 55 Photo Taken: 12/17/2021

Span 14, south fence, top rail rubbing against the light standard.

Photo Number: 56 Photo Taken: 10/12/2021

Span 16, light standard with a broken base plate at northeast corner.

Photo Number: 57 Photo Taken: 09/28/2021

Span 27, light standard with a broken base plate at the northwest corner.

Photo Number: 58 Photo Taken: 10/12/2021

Span 6, south parapet junction box with one (1) screw in place, cover is loose (can be moved by hand exposing wires).

Photo Number: 59 Photo Taken: 09/28/2021

Span 26, south parapet junction box cover is fractured with a 8" long x 4" high hole and exposed wires.

Photo Number: 60 Photo Taken: 08/25/2021

Span 28, south parapet between Floorbeam FB 41 & FB 42 with a broken support bracket and a rusted through hole in cover with exposed wires.

Photo Number: 61 Photo Taken: 10/12/2021

Pier 9 strip seal deck joint, looking north. Note the debris on the joint.

Photo Number: 62 Photo Taken: 09/28/2021

Span 27 intermediate Joint D with strip seal. Note the broken steel extrusion on the east side in the ramp lane (red arrow), looking north.

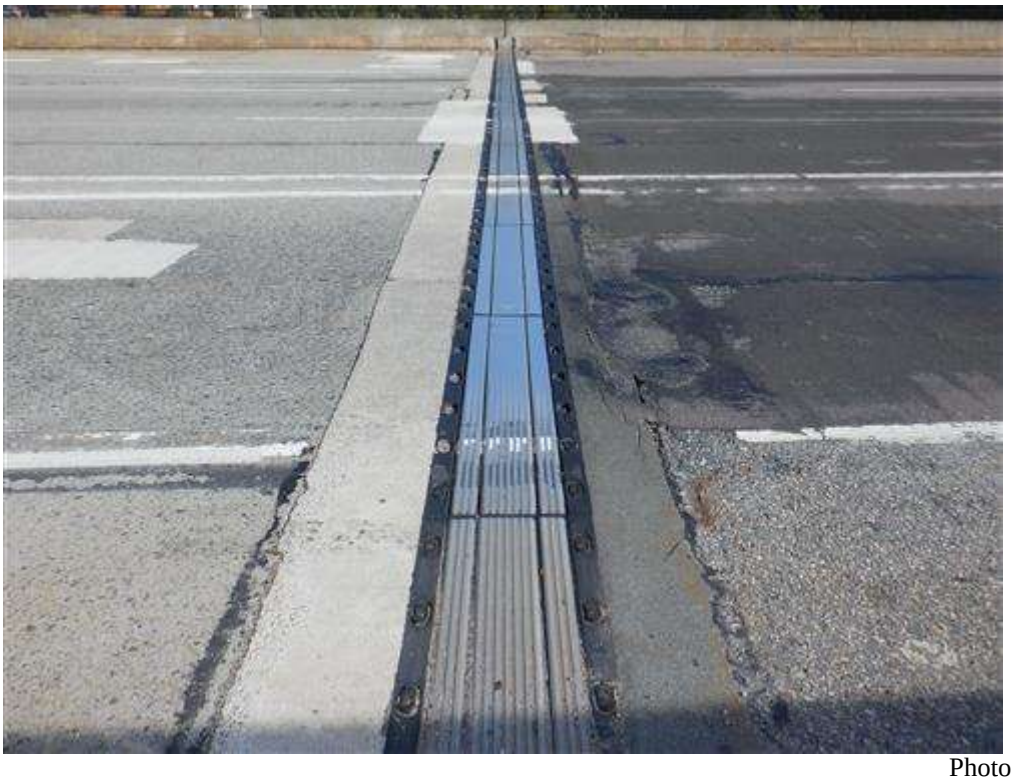

Photo Number: 63 Photo Taken: 10/12/2021

Abutment 1 plank seal joint with several new patches in concrete headers since the last inspection, looking north. Note: Bridge overlay is settled up to 1/2".

Photo Number: 64 Photo Taken: 09/28/2021

Pier 32 plank seal deck joint, looking north. Note: New patches on the west header since the last inspection.

Photo Number: 65 Photo Taken: 10/07/2021

Pier 23 modular deck joint looking south, typical. Note: Debris in the joint and separating joint seal for 40% of joint length. There are two (2) 1' long areas of bulging/broken seal in north shoulder

Photo Number: 66 Photo Taken: 09/28/2021

Span 27 intermediate Joint B with modular deck joint looking north. Note: Deck headers have mapcracking and hollow areas.

Photo Number: 67 Photo Taken: 10/07/2021

Pier 17 compression seal deck joint, looking south. Note: Tears in seal and separation from the header.

Photo Number: 68 Photo Taken: 10/07/2021

Pier 19 compression seal deck joint, looking south. Note: Tears in the sealant between headers at three (3) locations.

Photo Number: 69 Photo Taken: 07/26/2021

Span 28, Joint A asphaltic plug joint has two (2) potholes with exposed steel plate in the left center lane and the center lane, looking south.

Photo Number: 70 Photo Taken: 07/26/2021

Abutment 2 asphaltic plug joint with adhesion cracks up to 50% of length and opened 2" wide in the north shoulder, looking south. Note: Separation at header.

Form: Asset Photos
Inspection type: Fracture Critical,Routine
Inspection Date: 7/26/2021
Inspected by: PRIME AE

:Bridge No 03819

Town: NEW LONDON
Carried: INTERSTATE 95 NORTHBOUND
Crossed: THAMES RV,RR,LOCAL ROADS
Inventory Route: NHS

Photo Number: 71 Photo Taken: 10/12/2021

West approach slab and adjacent bituminous approach pavement with multiple new patches and repairs.

Photo Number: 72 Photo Taken: 10/07/2021

West approach slab is exposed with numerous concrete patches, looking south.

Photo Number: 73 Photo Taken: 10/07/2021

Northwest continuous barrier transition at Abutment 1 deck joint. Note: Approach barrier has settled with respect to the parapet.

Photo Number: 74 Photo Taken: 09/09/2021

Span 6, Girder G1 expansion rocker bearing at Abutment 1. Note: Laminated rust on the bearing and missing (2 of 4) anchor bolt nuts.

Photo Number: 75 Photo Taken: 10/14/2021

Spans 11 and 12, Girder G1 expansion rocker bearings at Pier 11, looking southeast. Note: Heavy concrete debris behind the bearing which can possibly inhibit expansion.

Photo Number: 76 Photo Taken: 10/12/2021

Span 17, Girder G2 expansion rocker bearing at Pier 17. Note: One (1) of eight (8) drop bolts is missing.

Photo Number: 77 Photo Taken: 10/07/2021

Span 19, Girder G2 expansion rocker bearing at Pier 19. Note: Up to 3/16" thick pack rust under the rocker and bearing in contraction mode.

Photo Number: 78 Photo Taken: 08/02/2021

Pier 21, North Truss expansion rocker bearing (left) and steel pier bent bearing (right) have laminated rust with 1/8" deep section loss on the rocker, and up to 3/16" deep section loss on the fixed bearing.

Photo Number: 79 Photo Taken: 09/15/2021

Pier 23, north truss rocker bearings looking south. Note the bearings were replaced in the past.

Photo Number: 80 Photo Taken: 08/02/2021

Span 26, North Truss expansion rocker bearing at Pier 25 is missing the cotter pins at the pin nuts. Note: All four (4) anchor bolt nuts are missing (welds-in-place).

Photo Number: 81 Photo Taken: 08/10/2021

Span 30, North Truss expansion rocker bearing at Pier 30, looking south. Note: Masonry plate undermined up to 2" deep.

Photo Number: 82 Photo Taken: 08/18/2021

Span 31, North Truss, interior of pin at Pier 30 rocker bearing. Note: Rust on the pin.

Photo Number: 83 Photo Taken: 09/09/2021

Span 7, Girder G2 fixed bearing at Pier 7 with light to moderate surface rust. Note: Southeast anchor bolt nut with 50% section loss.

Photo Number: 84 Photo Taken: 10/14/2021

Span 13, Girder G1 fixed bearing at Pier 13, both south anchor bolt nuts are missing.

Photo Number: 85 Photo Taken: 08/03/2021

Pier 22, North Truss fixed bearing at Node L10, typical. Note: Rust and section loss up to 3/16" deep on the bearing components.

Photo Number: 86 Photo Taken: 08/17/2021

Typical condition of Pier 27, South Truss fixed bearing at Node L33.

Photo Number: 87 Photo Taken: 10/07/2021

Span 18, Floorbeam FB18-5 bearing at Girder G1, northwest bolt is loose and undersized. Note: Typical pack rust between the bearing plates.

Photo Number: 88 Photo Taken: 08/11/2021

Span 27, Stringer S12 bearing connection at Floorbeam FB 20A. Note: Pack rust between the plates and broken tack welds.

Photo Number: 89 Photo Taken: 08/09/2021

Span 27, Stringer S4 connection to Floorbeam FB 20B, northwest connection bolt is sheared off.

Photo Number: 90 Photo Taken: 10/14/2021

Span 12, Stringer S1, 4-1/2' east of Floorbeam FB 13-1, south leg bottom flange has laminated rust and section loss.

Photo Number: 91 Photo Taken: 10/14/2021

Same location as the previous photo. Span 12, Stringer S1, 4-1/2' east of Floorbeam FB 13-1, north leg bottom flange has laminated rust and section loss.

Photo Number: 92 Photo Taken: 10/13/2021

Span 18, Stringer S13, 7' east of Floorbeam FB 18-3, laminated rust with section loss on both flanges and the web. Note: Loss of width on the bottom flange.

Photo Number: 93 Photo Taken: 09/13/2021

Span 25, Stringer S13 at 1.5' east of mid-span between Floorbeams FB 6 & FB 5, south leg bottom flange has a laminated rust, section loss and a perforation.

Photo Number: 94 Photo Taken: 08/11/2021

Span 30, Stringer S13, south elevation 6' west of Floorbeam FB 9. Note: Laminated rust with section loss on both flanges and the web.

Photo Number: 95 Photo Taken: 08/12/2021

Span 30, Stringer S13 at midpanel east of Floorbeam FB1, south leg bottom flange with 3/16" remaining thickness and loss of width, looking northwest.

Photo Number: 96 Photo Taken: 10/05/2021

Span 36, Stringer S1, south elevation at 4' west of Floorbeam FB3 at Abutment 2, section loss on the stringer web and bottom flange. Note: Laminated rust with section loss on the diaphragm.

Photo Number: 97 Photo Taken: 09/09/2021

Span 6, Stringer S1 south elevation at Floorbeam FB 7-1, the web has laminated rust and section loss and a perforation at the base.

Photo Number: 98 Photo Taken: 09/15/2021

Span 23, Stringer S1, north elevation at Floorbeam FB 0 connection, the web has laminated rust and section loss.

Photo Number: 99 Photo Taken: 09/13/2021

Span 25, Stringer S13, south elevation at east side of Floorbeam FB 7, the web has laminated rust and section loss for full height and a perforation at the base.

Photo Number: 100 Photo Taken: 09/13/2021

Span 25, Stringer S13, north elevation at east side of Floorbeam FB 7, the web has laminated rust, section loss and a perforation.

Photo Number: 101 Photo Taken: 08/17/2021

Span 28, Stringer S13, south elevation at west side of Floorbeam FB 37, the web has laminated rust with section loss adjacent to the connection plate.

Photo Number: 102 Photo Taken: 08/17/2021

Span 28, Stringer S13, north elevation at west side of Floorbeam FB 37, the web has laminated rust and section loss at the base. Note: Rusted through hole in the bolster web.

Photo Number: 103 Photo Taken: 09/21/2021

Span 31, Stringer S13, south elevation at west side of Floorbeam FB 1, the web has laminated rust and pitting/section loss. Note: Perforation in the top of the web along the cope.

Photo Number: 104 Photo Taken: 10/13/2021

Span 10, Girder G2 top flange cover plate with areas of pitting up to full width x 1/4" deep between Floorbeams FB 10-2 and FB 10-3.

Photo Number: 105 Photo Taken: 10/12/2021

Span 8, Girder G2 south face, web and splice plate with pitting loss between Floorbeams FB 9-2 and FB 9-3.

Photo Number: 106 Photo Taken: 10/07/2021

Span 9, Girder G1 south face at Pier 9 with painted over section loss on the bottom flange vertical legs.

Photo Number: 107 Photo Taken: 10/13/2021

Span 10. Girder G2 bottom flange between Floorbeams FB 10-2 & FB 10-3. Note: 3/4" thick pack rust between bottom flange cover plates.

Photo Number: 108 Photo Taken: 10/12/2021

Pack rust between the tab plate and top flange cover plate at isolated locations. Span 8, Girder G2 shown.

Form: Asset Photos
Inspection type: Fracture Critical,Routine
Inspection Date: 7/26/2021
Inspected by: PRIME AE

:Bridge No 03819

Town: NEW LONDON
Carried: INTERSTATE 95 NORTHBOUND
Crossed: THAMES RV,RR,LOCAL ROADS
Inventory Route: NHS

Photo Number: 109 Photo Taken: 10/19/2021

Span 11, Girder G2 south elevation over Pier 11. Pack rust up to 1" thick between back to back bearing stiffener angles with cracked tack welds.

Photo Number: 110 Photo Taken: 10/06/2021

Span 16, end diaphragm at Pier 15. Bottom horizontal member with rusted through holes in the web and pitting loss on the flanges.

Photo Number: 111 Photo Taken: 10/14/2021

Span 12, Girder G1 bottom horizontal gusset plate at Floorbeam FB13-3 is bent with rusted through holes.

Photo Number: 112 Photo Taken: 10/19/2021

Span 12, Girder G2 bottom horizontal gusset plate at Pier 11 has pitting on top of the plate and rusted through holes with adjacent knife edge remaining at the edges.

Photo Number: 113 Photo Taken: 08/17/2021

Span 33, Girder G2 south face at Pier 32. Bearing stiffener has laminated rust and section loss at the base on both sides.

Photo Number: 114 Photo Taken: 09/29/2021

Span 34, Girder G34B-2 at Pier 34 with 3/4" thick pack rust between floorbeam bottom flange and the girder top flange connection plate.

Photo Number: 115 Photo Taken: 10/18/2021

Span 31, Floorbeam FB 8, west face at Bay 1, laminated rust and section loss on both the top and bottom flanges. Note: Section loss on Stringer S1.

Photo Number: 116 Photo Taken: 07/26/2021

Span 33, Floorbeam FB 0 (left) and Span 32 Floorbeam FB 0 (right) from Bay 4 under Pier 32 deck joint, looking south. Note: Laminated rust and pitting on the bottom of the top flanges.

Photo Number: 117 Photo Taken: 08/17/2021

Span 33, Floorbeam FB 0 below Bay 13, bottom flange with section loss at the lateral gusset plate.

Photo Number: 118 Photo Taken: 08/17/2021

Span 28, Floorbeam FB 33, west elevation at Stringer S13 connection, the web has laminated rust, section loss and a perforation in the base.

Photo Number: 119 Photo Taken: 08/04/2021

Span 22, Floorbeam FB0, west elevation at the south end, base of the vertical stiffener has laminated rust, section loss and a perforation.

Photo Number: 120 Photo Taken: 08/09/2021

Span 27, Floorbeam FB 17, east elevation at Stringers S6-S8, connections with abrasion rust at floorbeam web and flanges.

Photo Number: 121 Photo Taken: 08/04/2021

Span 22, South Truss at Node U0. Note: Up to 2-3/8" Pack rust between the web plates.

Photo Number: 122 Photo Taken: 08/26/2021

Span 29, North Truss, Top Chord Member U8U9 near U9. Note: 5/8" thick pack rust between the splice plates with broken tack welds.

Photo Number: 123 Photo Taken: 08/03/2021

Span 23, North Truss, top chord member U10U9. Typical broken tack weld at lacing bar and chord angle connection due to pack rust.

Photo Number: 124 Photo Taken: 08/04/2021

Span 22, South truss, bottom chord member L0L1. Note: Up to 3/4" thick pack rust between the web plates and the bottom flange angles.

Photo Number: 125 Photo Taken: 08/04/2021

Span 22, South Truss, bottom chord member L0L1 near L0 have laminated rust with section loss to angles and web.

Photo Number: 126 Photo Taken: 09/15/2021

Span 23, North Truss, bottom chord member L0L1 north face with laminated rust and section loss on the bottom flange angles and web. Note: Pitting loss on the batten plate with two (2) rusted through holes.

Photo Number: 127 Photo Taken: 08/03/2021

Span 23, North Truss, bottom chord member L10L9 with laminated rust and isolated section loss.

Photo Number: 128 Photo Taken: 08/30/2021

Span 25, North Truss, bottom chord member L9L10 with painted over pitting loss on the top cover plate. Note: Pack rust between the cover plate ends with bent edges.

Photo Number: 129 Photo Taken: 08/18/2021

Span 31, North Truss, bottom chord L0L1 with laminated rust and section loss on the bottom flange angle and the web.

Photo Number: 130 Photo Taken: 08/18/2021

Same location as the previous photo after cleaning the section loss.

Photo Number: 131 Photo Taken: 08/31/2021

Span 25, North Truss, bottom chord member L4L5. Note: Laminated rust with section loss on the lattice bar.

Photo Number: 132 Photo Taken: 08/04/2021

Span 22, South Truss, bottom chord member L2L3. Note: Partially cracked tack weld connecting lattice bar to the flange angle.

Photo Number: 133 Photo Taken: 09/20/2021

Span 24, South Truss, diagonal member U3L2, north channel web with laminated rust and section loss.

Photo Number: 134 Photo Taken: 08/11/2021

Span 30, South Truss, vertical member L9U9 near L9. Note: Up to 1/2" thick pack rust between the cover plate and the angles.

Photo Number: 135 Photo Taken: 08/10/2021

Span 30, North Truss, Node L0 north gusset plate with pack rust between the gusset plates and laminated rust with section loss on the horizontal plane. Note: Retrofits on the inside of vertical member U0L0 for the jacking beam.

Photo Number: 136 Photo Taken: 08/10/2021

Same location as the previous photo, south gusset plate, north face shown. Note: Up to full-height section loss along the vertical plane adjacent to the west of vertical member U0L0.

Photo Number: 137 Photo Taken: 09/21/2021

Span 31, South Truss, Node L0, inside of north gusset plate, south face shown. Note: Laminated rust with section loss along the vertical plane of the gusset adjacent to vertical member U0L0.

Photo Number: 138 Photo Taken: 09/21/2021

Same location as previous photo after cleaning the laminated rust at isolated locations. Note: Section loss along the vertical plane of the gusset plate.

Photo Number: 139 Photo Taken: 07/27/2021

Span 22, North Truss, Node L8, north gusset plate, south face shown. Note: Section loss along the vertical plane of the gusset plate to the east of Vertical Member U8L8.

Photo Number: 140 Photo Taken: 08/05/2021

Span 22, South truss, Node L8 south gusset looking north. Note: Painted over section loss along the horizontal plane on the top of the bottom chord flange angles.

Photo Number: 141 Photo Taken: 08/03/2021

Span 22, North Truss at Node L10 gusset plate connection inside face, looking east at the vertical member. Note: Laminated rust with section loss along the horizontal plane of both gusset plates.

Photo Number: 142 Photo Taken: 08/03/2021

Same location as the previous photo after cleaning the laminar rust. Inside of the south gusset plate shown.

Photo Number: 143 Photo Taken: 09/15/2021

Span 23, North Truss at Node L6 gusset, inside face looking east at the vertical member. Note: Section loss on the gusset plate, loss of width on the vertical member channel legs, and the rusted through hole on the vertical stiffener plate.

Photo Number: 144 Photo Taken: 08/02/2021

Span 26, North Truss, Diagonal Member L0U1 at Node L0 with laminated rust and section loss above the north gusset plate.

Photo Number: 145 Photo Taken: 08/10/2021

Span 30, North Truss at Node L6 north face of south plate gusset plate. Note: Repair angles on the south gusset plate along the vertical plane adjacent to diagonal member U6L6.

Photo Number: 146 Photo Taken: 08/03/2021

Span 26, North Truss, Bottom chord member L6L7 at Node L6 with laminated rust and section loss at the top plate of bottom chord and inside faces of the gusset plates.

Photo Number: 147 Photo Taken: 08/11/2021

Span 27, South Truss at Node L17, Bottom chord member L17L18 has section loss on the south web adjacent to the vertical gusset plate.

Photo Number: 148 Photo Taken: 08/11/2021

Span 27, South Truss, Bottom chord member L2021 at the east of Node L20 top plate with average 1/8" deep section loss.

Photo Number: 149 Photo Taken: 08/26/2021

Span 28, North Truss, at Node L42, the bottom chord with section loss on the underside and loss of width to the horizontal gusset plate/splice plate.

Photo Number: 150 Photo Taken: 08/25/2021

Random pigeon debris on top of bottom chord at lower truss node. Span 28, South Truss, at Node L44 shown. Note: Heavy rust on the bolt nuts.

Photo Number: 151 Photo Taken: 08/25/2021

Random pack rust between bottom chord members and splice plates. Span 28, South Truss at Node L40 shown.

Photo Number: 152 Photo Taken: 08/02/2021

Random pack rust between vertical gusset plates and vertical members. Span 26, North truss, Node L1 shown. Note: The north gusset plate is buckled due to pack rust.

Photo Number: 153 Photo Taken: 08/16/2021

Span 27, South Truss Vertical Member U12L12, inside at intermediate bracing. Note: Laminated rust with section loss on the top of the horizontal plate and the vertical member.

Photo Number: 154 Photo Taken: 08/16/2021

South Truss, south elevation of Node L13, south gusset plate at Pier 26, typical condition.

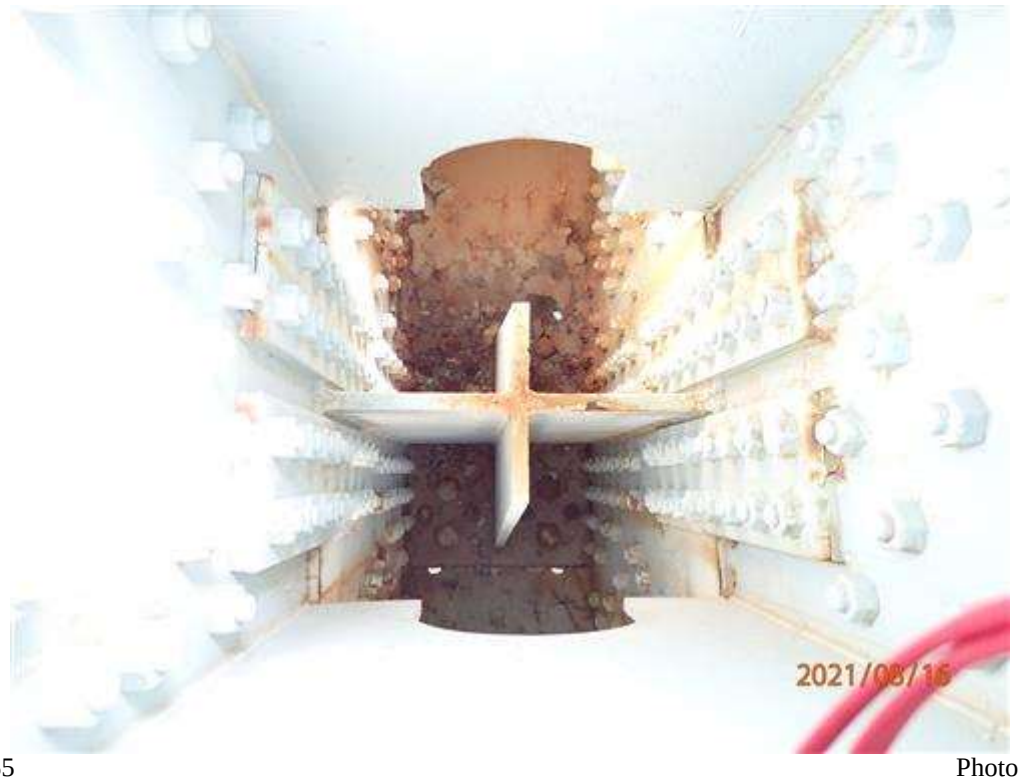

Photo Number: 155 Photo Taken: 08/17/2021

South Truss, the interior of vertical member U13L13 at Node L13. Note: Pack rust clogging the drain holes on top of the bottom chord.

Photo Number: 156 Photo Taken: 08/10/2021

Span 27, North Truss, at Node L28, the top of bottom chord and inside face of the south gusset plate has painted over pitting loss.

Photo Number: 157 Photo Taken: 08/09/2021

Typical view of interior of the 10" diameter pin. Span 27, North Truss, Node L19 pin shown.

Photo Number: 158 Photo Taken: 08/09/2021

Span 27, North Truss, Node L19 pin cover, south elevation shown. Note: Rust on the bolts, nuts, and washers at the pin cover.

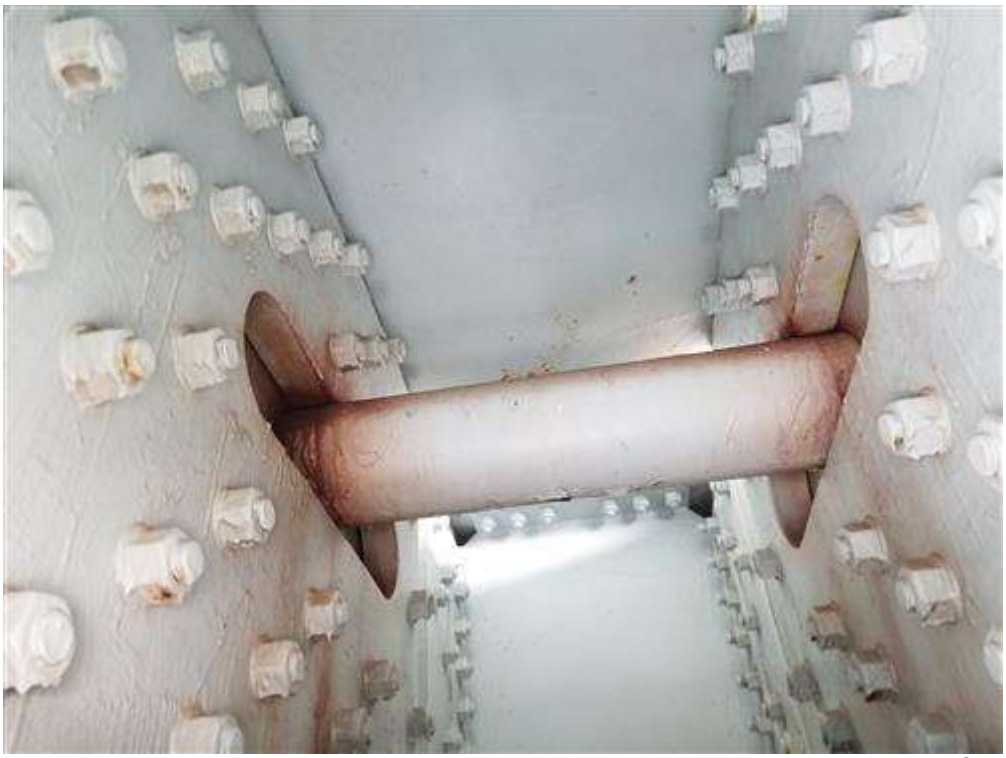

Photo Number: 159 Photo Taken: 08/10/2021

Span 27, North Truss, web plate at Node U26 pin (6" diameter) is wearing into the web plate and there is abrasion rust.

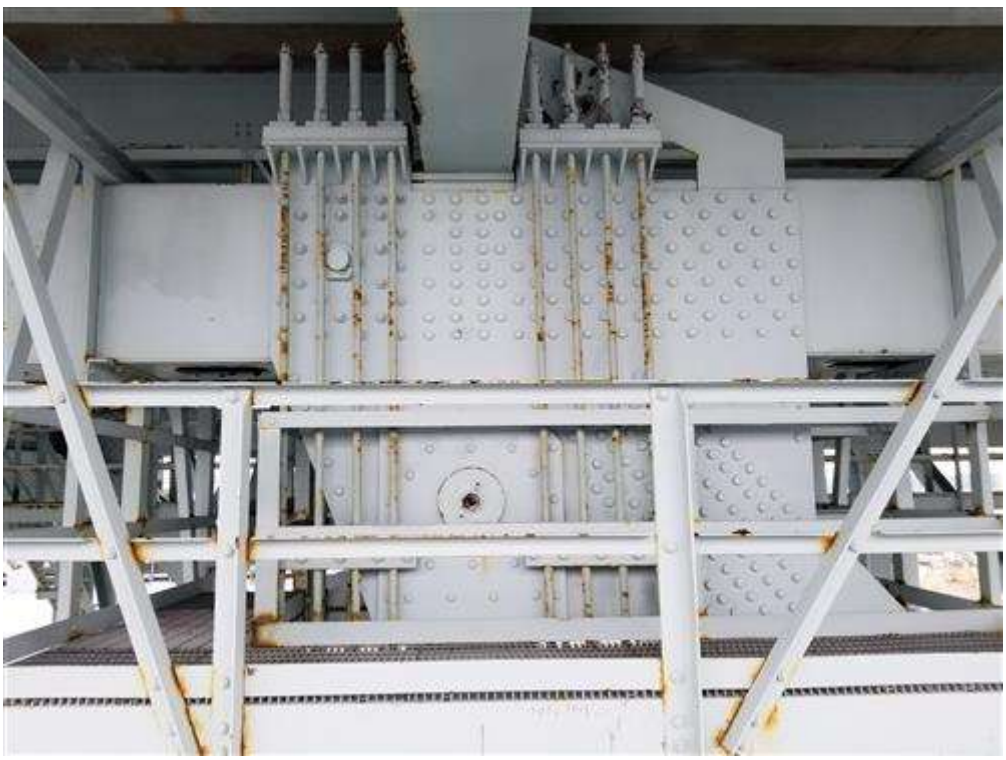

Photo Number: 160 Photo Taken: 08/09/2021

Typical configuration of Span 27 hanger retrofits at the upper node, North Truss at Node U19 shown. Note: Rusting throughout the hanger rods.

Photo Number: 161 Photo Taken: 08/09/2021

Typical configuration of Span 27 hanger retrofits at the lower node, North Truss at Node L19 shown. Note: Rusting throughout the hanger rods.

Photo Number: 162 Photo Taken: 08/11/2021

Typical Span 27 hanger elastomeric pad. South truss, Node L19, west hanger pad is shown looking from down.

Photo Number: 163 Photo Taken: 08/10/2021

Span 27, North Truss, Node L27 hanger with one of two (1 of 2) nuts missing and the remaining nut is loose at one (1 of 2) of the hanger rods.

Photo Number: 164 Photo Taken: 08/04/2021

Span 22, sway bracing between trusses at Nodes U2 and L2. Note: Pack rust between the back to back flange angles.

Photo Number: 165 Photo Taken: 07/26/2021
Span 32, sway bracing between the trusses at Nodes U4 and L4. Note: Up to 1-1/4" thick pack rust between the back to back angles.

Photo Number: 166 Photo Taken: 09/14/2021
Span 23, top lateral bracing between Floorbeam FB 2 & FB 3. Note: Pack rust between the back to back angles.

Photo Number: 167 Photo Taken: 08/30/2021

Span 25, Floorbeam FB8, west elevation, up to 2" thick Pack rust between the top bracing members and the horizontal gusset plate.

Photo Number: 168 Photo Taken: 08/02/2021

Span 22, North Truss at Node L0, typical framing at the end nodes looking north. Note: Laminated rust on the horizontal gusset plates and the bracing members.

Photo Number: 169 Photo Taken: 07/27/2021

Span 22, South Truss at Node L8, looking north. Typical framing at the even number nodes and typical pitting loss on the horizontal gusset plates.

Photo Number: 170 Photo Taken: 08/31/2021

Span 25, North Truss at the east side of Node L6. Note: Pitting and section loss on the horizontal gusset plate with rusted through holes.

Photo Number: 171 Photo Taken: 07/27/2021
Span 22, North Truss at Node L6. Note: Pack rust between the bottom bracing member and the bottom horizontal gusset plate.

Photo Number: 172 Photo Taken: 07/27/2021
Span 23, bottom bracing members at the intersection between both trusses at Node L5, looking south. Note: Bird's nest on the bottom lateral bracing plate.

Photo Number: 173 Photo Taken: 08/17/2021

Span 27, intermediate strut between trusses at Node 32, looking north. Note: Laminated rust with section loss on the interior of strut flanges and web.

Photo Number: 174 Photo Taken: 08/16/2021

Span 27, South Truss, Vertical Member U13L13 at the intermediate bracing has laminated rust with section loss at the vertical plate and bracing member.

Photo Number: 175 Photo Taken: 08/12/2021

Span 27, bottom bracing member between trusses at Node L26, looking north. Note: Bent bottom flange (construction related).

Photo Number: 176 Photo Taken: 10/06/2021

Girder G1 top flange in Span 7 (right) and Span 8 (left) at Pier 7, looking south. Note: Missing bolts/misdrilled holes (red arrows) at the Girder G1 top flange to floorbeam bearing connection.

Photo Number: 177 Photo Taken: 10/14/2021

Span 13, Stringer S3, north face to west of Floorbeam FB 13-8 connection, 6 out of 6 connection bolts are not fully engaged with abrasion rust.

Photo Number: 178 Photo Taken: 08/03/2021

Span 22, Stringer S4 south face to the west of Floorbeam FB 5 connection, 4 out of 6 connection bolts are loose with abrasion rust.

Photo Number: 179 Photo Taken: 08/09/2021

Span 27, Stringer S5 south face at the east Floorbeam FB 17 connection, six (6) of six (6) connection bolts are loose.

Photo Number: 180 Photo Taken: 08/26/2021

Span 29, North Truss, Top chord at Node U7, missing rivet at the top chord to the vertical gusset plate east of Floorbeam FB 7.

Photo Number: 181 Photo Taken: 08/10/2021

Span 27, North Truss at Top chord Node U29, three (3) missing bolts at the top chord, and the vertical gusset plate connection.

Photo Number: 182 Photo Taken: 08/16/2021

Span 26, south truss at Node U13, north gusset plate. Note: Backed off nut at U13L12 bracing connection to the gusset plate.

Photo Number: 183 Photo Taken: 09/23/2021

Span 31, North Truss at Node U6, interior to the west of vertical member U6L6, two (2) missing bolts at the floorbeam to top chord connection.

Photo Number: 184 Photo Taken: 08/17/2021

Span 29, Floorbeam FB 6 east elevation, the bottom of vertical stiffener below Stringer S7 has an undercut weld at base of vertical stiffener.

Photo Number: 185 Photo Taken: 08/17/2021

Span 29, Floorbeam FB 8 east elevation, the bottom of the vertical stiffener below Stringer S7 has a crack in the floorbeam web at the base of the stiffener weld, which has been repaired with stop holes drilled at the ends of the crack.

Photo Number: 186 Photo Taken: 08/17/2021

Span 32, Floorbeam FB 4 east elevation, the bottom of the vertical stiffener below Stringer S7 has a crack in the floorbeam web at the base of the stiffener weld, which has been repaired with stop holes drilled at the ends of the crack.

Photo Number: 187 Photo Taken: 08/03/2021

Span 26, North Truss, diagonal member U9L10 (inside) near Node L10, two (2) broken tack welds between the flange and web plate.

Photo Number: 188 Photo Taken: 08/03/2021

Span 22, North Truss, vertical member U9L9 near Node L9. Note: 1/8" deep gouge on the south cover plate (previously noted as a crack).

Photo Number: 189 Photo Taken: 09/13/2021

Span 23, South Truss, vertical member U9L9 near Node L9 has an 11-1/4" long on the south cover plate (no change).

Photo Number: 190 Photo Taken: 09/23/2021

Span 33, Girder G1, east welded bottom flange transition, typical condition, looking west.

Photo Number: 191 Photo Taken: 10/20/2021

Ultrasonic testing of welded flange transition (Spans 33-36). Span 33, Girder G2, east welded bottom flange transition shown.

Photo Number: 192 Photo Taken: 08/17/2021

Span 27, stringers at the west face of Floorbeam FB 33 overhang the seat plate 1/2" to the north. Stringer S11 shown looking east.

Photo Number: 193 Photo Taken: 09/29/2021

Span 34, Girder G34 B-2 at Pier 34, the web end is bowed 1/4" north at the bottom.

Photo Number: 194 Photo Taken: 08/25/2021

Typical condition of the catwalk. Span 27 catwalk at Floorbeam FB23 is shown, looking east.

Photo Number: 195 Photo Taken: 08/25/2021

Span 27, catwalk tread expansion plate below Floorbeam FB 20 has laminated rust and section loss on the expansion plate. Note: Areas of perforations.

Photo Number: 196 Photo Taken: 08/25/2021

Span 27, transverse catwalk stairs east of Floorbeam FB 26, the top railing angle at the east side is wearing into the bracing member.

Photo Number: 197 Photo Taken: 08/25/2021

Span 27, top of the catwalk stairs at Floorbeam FB 26 has pack rust between the vertical plate and sidewalk stringer channels with crack in the weld.

Photo Number: 198 Photo Taken: 08/17/2021

Span 32 between Floorbeams FB 0 and FB 1, north railing post to stringer channel connection has one (1) bolt backed off and loose.

Photo Number: 199 Photo Taken: 08/16/2021

Barrel ladder with platform at Pier 27, typical condition.

Photo Number: 200 Photo Taken: 09/09/2021

Abutment 1 elevation. Note: Active leakage on the abutment stem and backwall.

Photo Number: 201 Photo Taken: 09/09/2021

Abutment 1 bridge seat, looking north. Note: Ponding water on the bridge seat due to deck joint leakage.

Photo Number: 202 Photo Taken: 10/05/2021

Abutment 2 elevation, looking northeast.

Photo Number: 203 Photo Taken: 09/09/2021

Wingwall 1A elevation. Note: Spall on the north corner of stem with exposed rebar.

Photo Number: 204 Photo Taken: 09/09/2021

Wingwall 1B elevation. Note: Damp areas on wingwall (red arrow).

Photo Number: 205 Photo Taken: 10/05/2021

Wingwall 2A elevation.

Photo Number: 206 Photo Taken: 09/09/2021

Pier 7, west elevation, typical condition. Note: Active leakage up to a full length of the pier cap.

Photo Number: 207 Photo Taken: 10/07/2021

Pier 18, underside of strut has a hollow area and hairline cracks over DPW parking lot.

Photo Number: 208 Photo Taken: 08/25/2021

Pier 26, east elevation, typical condition.

Form: Asset Photos
Inspection type: Fracture Critical,Routine
Inspection Date: 7/26/2021
Inspected by: PRIME AE

:Bridge No 03819

Town: NEW LONDON
Carried: INTERSTATE 95 NORTHBOUND
Crossed: THAMES RV,RR,LOCAL ROADS
Inventory Route: NHS

Photo Number: 209 Photo Taken: 09/28/2021

Pier 32, east elevation, typical condition. Note: Spalls on the columns.

Photo Number: 210 Photo Taken: 10/05/2021

Pier 32, west face of the strut has a spall with exposed rebar at the bottom. Note: Exposed rebar with 1/8"deep section loss.

Photo Number: 211 Photo Taken: 07/26/2021

Pier 33, west elevation. Note: Typical condition of hammerhead pier cap.

Photo Number: 212 Photo Taken: 08/04/2021

Pier 21 bent, south side, east gusset plate has laminated rust with section loss on the inside of the gusset plate down to 3/16" remaining.

Photo Number: 213 Photo Taken: 07/26/2021

Pier 32, steel bent at north side, east elevation. Note: Laminated rust with section loss on the diagonal members and bottom horizontal member.

Photo Number: 214 Photo Taken: 08/17/2021

Pier 32 bent at south side, inside of bottom gusset plates have laminated rust and section loss. Note: Section loss on the bottom horizontal member batten plate and lacing bar with perforations.

Photo Number: 215 Photo Taken: 08/17/2021

Pier 32 bent at south side, north elevation, looking down. Note: Laminated rust with section loss on the flanges and web of the steel pier at the base.

Photo Number: 216 Photo Taken: 10/20/2021

Pier 14 steel columns, west elevation, looking northeast.

Photo Number: 217 Photo Taken: 10/20/2021

Pier 12N, inside face, west elevation at the base, painted over section loss at the base of the middle web at the interface of the concrete.

Photo Number: 218 Photo Taken: 10/20/2021

Pier 14S, north I-beam, south elevation (inside) at the west end has painted over section loss at the base of the web at the interface of the concrete.

Form: Asset Photos
Inspection type: Fracture Critical,Routine
Inspection Date: 7/26/2021
Inspected by: PRIME AE

:Bridge No 03819

Town: NEW LONDON
Carried: INTERSTATE 95 NORTHBOUND
Crossed: THAMES RV,RR,LOCAL ROADS
Inventory Route: NHS

Photo Number: 219 Photo Taken: 10/18/2021

Pier 6S, top column bearing with painted over pitting loss on the vertical bearing plates. Note: Up to 1/4" pack rust between the bearing plate and column plate and the south anchor bolt nuts have 50% section loss.

Photo Number: 220 Photo Taken: 09/09/2021

Pier 7, south elevation of Column C2 has a hollow area with mapcracking at top over the sidewalk (intact).

Photo Number: 221 Photo Taken: 07/26/2021

Pier 32, northeast corner of Column C1 has a spall with exposed rebar near the top.

Photo Number: 222 Photo Taken: 09/28/2021

Pier 33, Column C3, east elevation has multiple hollow areas and spalls with exposed rebars.

Photo Number: 223 Photo Taken: 08/25/2021

Pier 27, Column C1 granite facing has a spall at the northeast corner.

Photo Number: 224 Photo Taken: 10/28/2021

Pier 33, west elevation, Column C1 (north) footing is exposed and has a spall at the south end.

Photo Number: 225 Photo Taken: 10/05/2021

Abutment 2 concrete block slope protection has an adjacent bituminous section at the base. Note: Areas of bituminous settlement.

Photo Number: 226 Photo Taken: 09/28/2021

Pier 34 west elevation has asphalt joint material and concrete debris on top of the pier cap.

Photo Number: 227 Photo Taken: 08/13/2021

Bridge from Groton side (east), looking west. The navigation lights at the base of the south columns of Piers 26 and 27 were functioning. The navigation lights on the truss in Span 27 were not functioning.

Photo Number: 228 Photo Taken: 08/11/2021

Span 27, Bay 12 near Floorbeam FB 23, navigation light conduit (abandoned) has a rusted through hole with exposed wires.

Form: Maintenance

Town: NEW LONDON

Carried: INTERSTATE 95 NORTHBOUND

:Bridge No 03819

Crossed: THAMES RV,RR,LOCAL ROADS

Inventory Route: NHS

Status: Maintenance Review

Assigned To: David Hiscox

Work Item ID: 03819-2021-0022

Date Issued: 08/16/2021

Priority: Critical Finding B

Deficiency: Electrical

Structural Component: N/A

Comments: The navigation lights attached to the south fascia of the truss in Span 27 are not functioning as required.

Date Completed:

Actual Quantity:

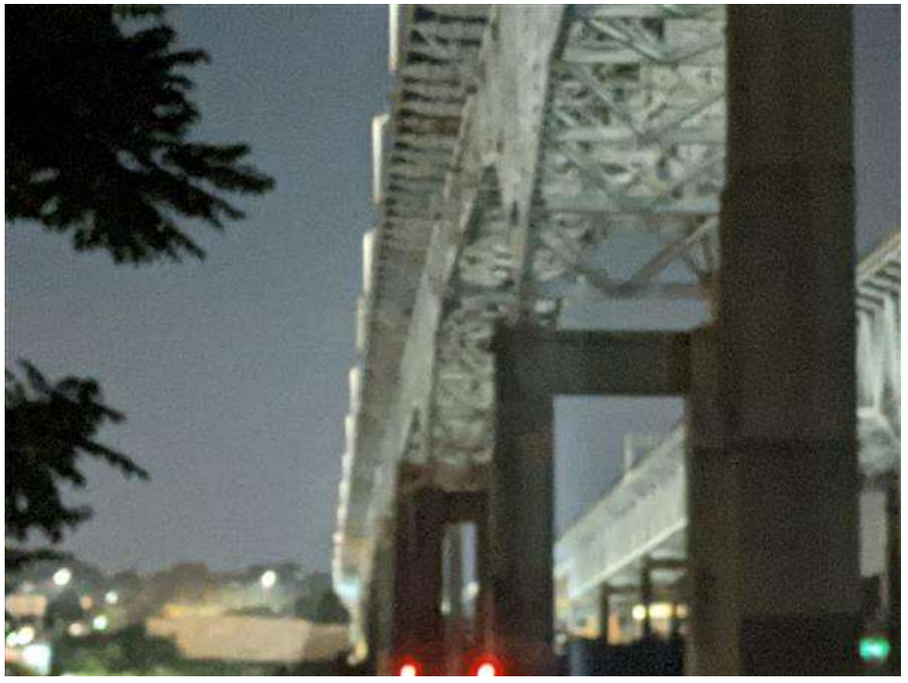

Bridge from Groton side (east), looking west. The navigation lights on the truss in Span 27 were not functioning.

Form: Maintenance

Town: NEW LONDON

Carried: INTERSTATE 95 NORTHBOUND

:Bridge No 03819

Crossed: THAMES RV,RR,LOCAL ROADS

Inventory Route: NHS

Status: Bridge Maintenance Garage

Assigned To: District_2 Bridge

Work Item ID: 03819-2020-0018

Date Issued: 02/19/2020

Priority: Routine Repair

Deficiency: Other

Structural Component: Superstructure

Comments: Span 27, North Truss at node L27, one (1) hanger rod is missing (1 out of 2) nuts at the bottom and the remaining nut is loose.

Date Completed:

Actual Quantity:

Span 27, north truss at L27. Hanger rod has one missing nut and one loose nut.

Form: Maintenance **Town:** NEW LONDON

Carried: INTERSTATE 95 NORTHBOUND **:Bridge No 03819**

Crossed: THAMES RV,RR,LOCAL ROADS **Inventory Route:** NHS

Status: Bridge Maintenance Garage **Assigned To:** District_2 Bridge **Work Item ID:** 03819-2020-0017

Date Issued: 02/19/2020 **Priority:** Priority Repair

Deficiency: Hollow Concrete

Structural Component: Deck

Comments: There are hollow areas in the parapet undersides/outside faces over roadways, active stock pile areas, sidewalks, DPW Parking lot and Railroad tracks at the following locations:

- Span 6, south fascia near Abutment 1 & FB 7-2, (2) up to 20’ x 2’ (homeless seen walking in this area)
- Span 7, south fascia, east of FB 7-7, 2' x 1’ over sidewalk and road
- Span 7, north fascia, between FB 7-8 & FB 7-9, 20"L x 4"H over path
- Span 8, south fascia, between FB 9-1 & 9-2, 2'L x 7"H and 16"L x 4"H over roadway
- Span 10, north fascia at FB 10-2, 1 square foot over stock pile area
- Span 10, north fascia at pier 10, 3’ x 2.5’ over stock pile area
- Span 11, north fascia, east of FB 11-2, 3 square feet over stock pile area
- Span 11, south fascia, between pier 10 & FB 11-1, (3) up to 4’ x 1’ over stock pile area
- Span 12, north fascia, between FB 13-1 & 13-2, 1 square foot over stock pile area
- Span 12, south fascia, west of FB 13-3, 3’ x 1.5’ over stock pile area
- Span 12, south fascia, between FB 13-3 & 13-4, 2.5’ x 1’ over stock pile area
- Span 13, south fascia at pier 13, 2’ x 10" over sidewalk and road
- Span 16, north fascia, between FB 16-3 & 16-4, (2) up to 4’ x 10” over stock pile area.
- Span 17, south fascia, west of FB 17-5, 2'L x 18"H over sidewalk
- Span 18, south fascia, between FB 18-3 & 18-4, 3'L x 10"H over DPW parking lot
- Span 18, south fascia, between FB 18-5 & 18-6, 4'L x 1'H over DPW parking lot
- Span 19, south fascia, between FB 19-3 & 19-4, 6'L x 1'H over DPW parking lot
- Span 20, north fascia, between FB 20-2 & 20-3, 2.5'L x 9"H over DPW parking lot
- Span 21, south fascia, between FB 21-3 & 21-4, 1' x 1' over DPW parking lot
- Span 22, north fascia, between FB 5 & FB 6, 20"L x 9"H over RR Tracks.
- Span 33, north fascia, between FB 0 & FB 1, (2) up to 14"L x 6"H over RR Tracks
- Span 33, south fascia, east of FB 1, 3'L x 1.5'H over RR Tracks.

There are hollow areas in the undersides of deck over the Thames River at the following locations:
- Span 26, Bay 12, between FB 9 and FB 10 has a 6"L x 8"W adjacent to Stringer S12.
- Span 28, Bay 1, between FB 43 and FB 44 has a 15"L x 4"W adjacent to Stringer S1.

Date Completed: **Actual Quantity:**

Form: Maintenance **Town:** NEW LONDON

Carried: INTERSTATE 95 NORTHBOUND **:Bridge No 03819**

Crossed: THAMES RV,RR,LOCAL ROADS **Inventory Route:** NHS

Span 8, south parapet between floorbeam 9-1 and 9-2 with a large spall with exposed rebar and hollow area over the roadway.

Form: Maintenance

Town: NEW LONDON

Carried: INTERSTATE 95 NORTHBOUND

:Bridge No 03819

Crossed: THAMES RV,RR,LOCAL ROADS

Inventory Route: NHS

Status: Bridge Maintenance Garage

Assigned To: District_2 Bridge

Work Item ID: 03819-2019-0015

Date Issued: 10/03/2019

Priority: Priority Repair

Deficiency: Deck Joint

Structural Component: Deck

Comments: Span 27, joint D west of the pier 27 joint, there is a 5" long section of broken off steel extrusion. The east extrusion is up to 1/2" higher than the west and has random plow gouges and tears up to 5" long.

Date Completed:

Actual Quantity:

Span 27, strip seal joint D (2nd joint west of pier 27 joint), looking north. East steel extrusion with gouges, tears and a broken off section.

Form: Maintenance **Town:** NEW LONDON

Carried: INTERSTATE 95 NORTHBOUND **:Bridge No 03819**

Crossed: THAMES RV,RR,LOCAL ROADS **Inventory Route:** NHS

Status: Bridge Maintenance Garage **Assigned To:** District_2 Bridge **Work Item ID:** 03819-2018-0008

Date Issued: 03/01/2018 **Priority:** Priority Repair

Deficiency: Hollow Concrete

Structural Component: Substructure

Comments: Pier columns and struts have hollow areas over parking lots, roadways and water at the following locations (below list supersedes previous word document):

- Pier 7, top of column 2, 6’ x 10” adjacent to sidewalk
- Pier 9, strut, (2) areas up to 12' wide x full length hollow area over stock pile area.
- Pier 9, column 1, 16" high x 11" wide over stock pile area
- Pier 9, column 2, (2) areas up to 2’ x 1' over stock pile area
- Pier 10, strut, (2) areas up to 4’ x 4’ over stock pile area
- Pier 10, column 2, (2) areas up to 6.5’ x 4’ over stock pile area
- Pier 11, strut, (8) areas up to 8’ x 3’ over stock pile area
- Pier 11, column 1, (5) areas up to 5’ x 1’ over stock pile area
- Pier 11, column 2, 3’ x 3’ over stock pile area
- Pier 17, column 2, (3) up to 2' x 1' over DPW parking lot
- Pier 18, column 1, 10"ø over DPW parking lot
- Pier 18, underside of horizontal strut, 2'ø over DPW parking lot
- Pier 19, columns 1 & 2, (4) up to 3' x 6" over DPW parking lot/road
- Pier 24, column 2, 1' x 1 over boat launch parking lot
- Piers 25, 27 and 28, columns have random HA's up to 7' x 1.5' over water (could not confirm this inspection)
- Pier 30, strut, (2) up to 8' x 3' over boat launch area
- Pier 30, column 2, (8) up to 4' x 2' adjacent to boat launch parking lot and Mohawk parking area.

Date Completed: **Actual Quantity:**

Pier 30, column 2 has (2) hollow areas adjacent to a spall adjacent to boat launch parking lot and Mohawk parking area.