# GEORGETOWN

## Intermodal Transportation Hub


Owner:
**Georgetown Redevelopment Corporation**
1 North Main Street, P.O. Box 36
Georgetown, Connecticut 06829
(203) 544-8323

Applicant:
**Georgetown Special Taxing District**
1 North Main Street, P.O. Box 36
Georgetown, Connecticut 06829
(203) 544-8323

Project Counsel:
**Richard S. Gibbons, Attorney at Law**
27 Imperial Avenue
Westport, Connecticut 06880
(203) 227-9545

Tax District Counsel:
**Shipman & Goodwin LLP**
One Constitution Plaza
Hartford, Connecticut 06103
(860) 251-5000

Architects and Site/Civil Engineers:
**LiRo Architects & Engineers, P.C.**
111 Broadway, Suite 501
New York, New York 10006
(212)563-0280

District Engineer:
**James Ford, Earth Tech**
655 Winding Brook Drive, Suite 402
Glastonbury, CT, 06033-4337
(860) 494-4347

Traffic Engineer:
**Fitzgerald & Halliday Inc.**
72 Cedar Street
Hartford, Connecticut 06106
(860) 767-3044

Environmental Engineer/Surveyor:
**Fuss & O'Neill, Inc.**
146 Hartford Road
Manchester, Connecticut 06040
(860) 646-2469

GeoTechnical Engineer
**Geo Design, Inc**
984 Southford Road
Middlebury, Connecticut 06762
(203)758-8836

Site Civil Engineer:
**Tighe & Bond**
1000 Bridgeport Avenue
Shelton, Connecticut 06484
(203) 712-1100

Landscape Planning:
**Solaris Landscape Architecture**
88 Main Street South, Suite A201
Southbury, Connecticut 06488
(203)264-6442

**Environmental Land Solutions, LLC**
(203) 855-7879
8 Knight Street, Suite 203
Norwalk, Connecticut 06851


| | |
|---|---|
| ISSUE DATE: | 17 APRIL 2007 |
| REVISION DATE: | – |
| SCALE: | 1/16" = 1'-0" |
| DWN BY: | SA / MLe |

DWG TITLE:

**PARKING STRUCTURE FIRST LEVEL**

DWG NO

# A110

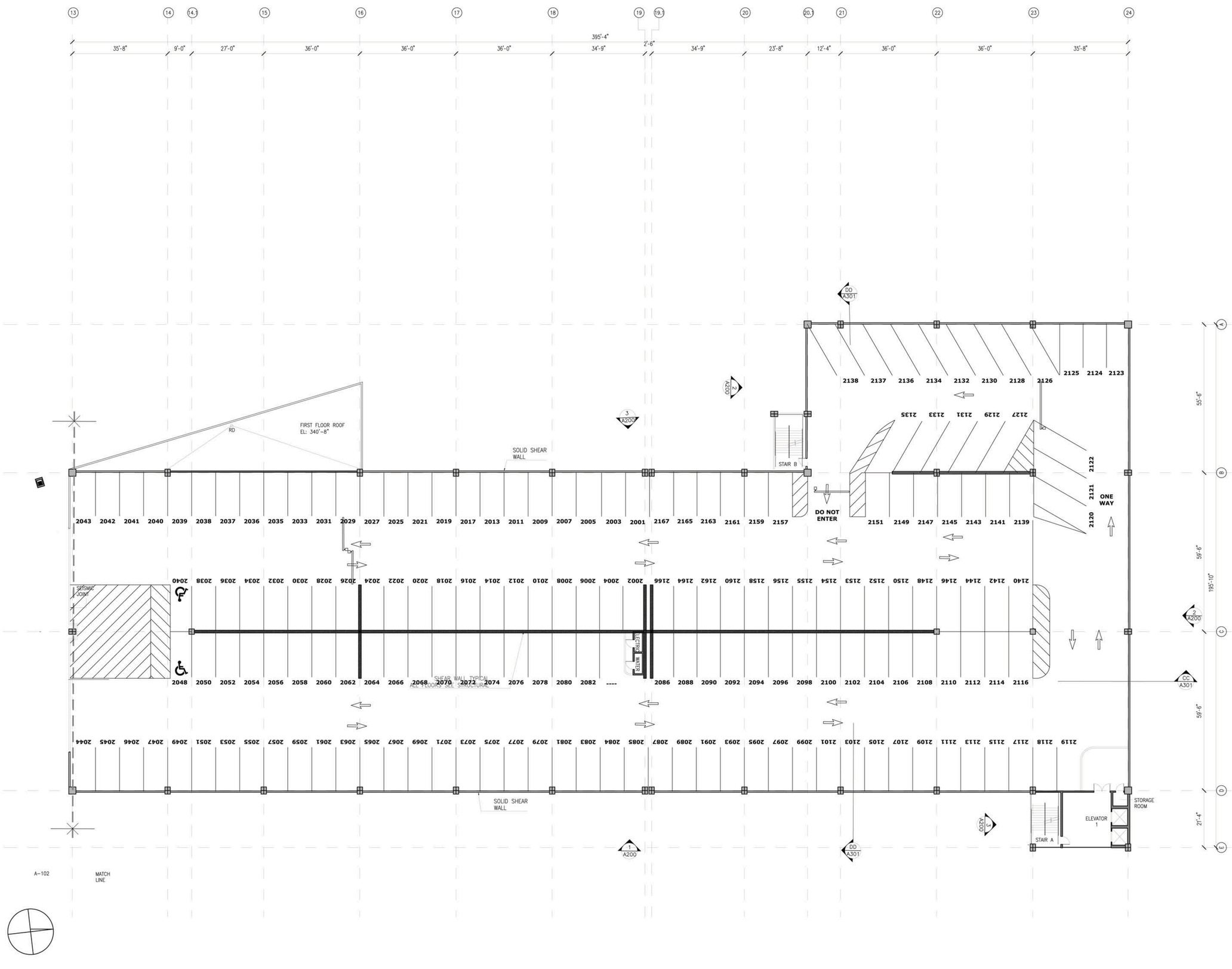


# GEORGETOWN

## Intermodal Transportation Hub


Owner:
Georgetown Redevelopment Corporation
1 North Main Street, P.O. Box 36
Georgetown, Connecticut 06829
(203) 544-8323

Applicant:
Georgetown Special Taxing District
1 North Main Street, P.O. Box 36
Georgetown, Connecticut 06829
(203) 544-8323

Project Counsel:
Richard S. Gibbons, Attorney at Law
27 Imperial Avenue
Westport, Connecticut 06880
(203) 227-9545

Tax District Counsel:
Shipman & Goodwin LLP
One Constitution Plaza
Hartford, Connecticut 06103
(860) 251-5000

Architects and Site/Civil Engineers:
LiRo Architects & Engineers, P.C.
111 Broadway, Suite 501
New York, New York 10006
(212)563-0280

District Engineer:
James Ford, Earth Tech
655 Winding Brook Drive, Suite 402
Glastonbury, CT, 06033-4337
(860) 494-4347

Traffic Engineer:
Fitzgerald & Halliday Inc.
72 Cedar Street
Hartford, Connecticut 06106
(860) 767-3044

Environmental Engineer/Surveyor:
Fuss & O'Neill, Inc.
146 Hartford Road
Manchester, Connecticut 06040
(860) 646-2469

GeoTechnical Engineer
Geo Design, Inc
984 Southford Road
Middlebury, Connecticut 06762
(203)758-8836

Site Civil Engineer:
Tighe & Bond
1000 Bridgeport Avenue
Shelton, Connecticut 06484
(203) 712-1100

Landscape Planning:
Solaris Landscape Architecture
88 Main Street South, Suite A201
Southbury, Connecticut 06488
(203)264-6442

Environmental Land Solutions, LLC
(203) 855-7879
8 Knight Street, Suite 203
Norwalk, Connecticut 06851


| | |
|---|---|
| ISSUE DATE: | 11 APRIL 2008 |
| REVISION DATE: | – |
| SCALE: | 1/16" = 1'-0" |
| DWN BY: | SA / MLe |

DWG TITLE:

PARKING STRUCTURE
SECOND LEVEL

DWG NO

# A111

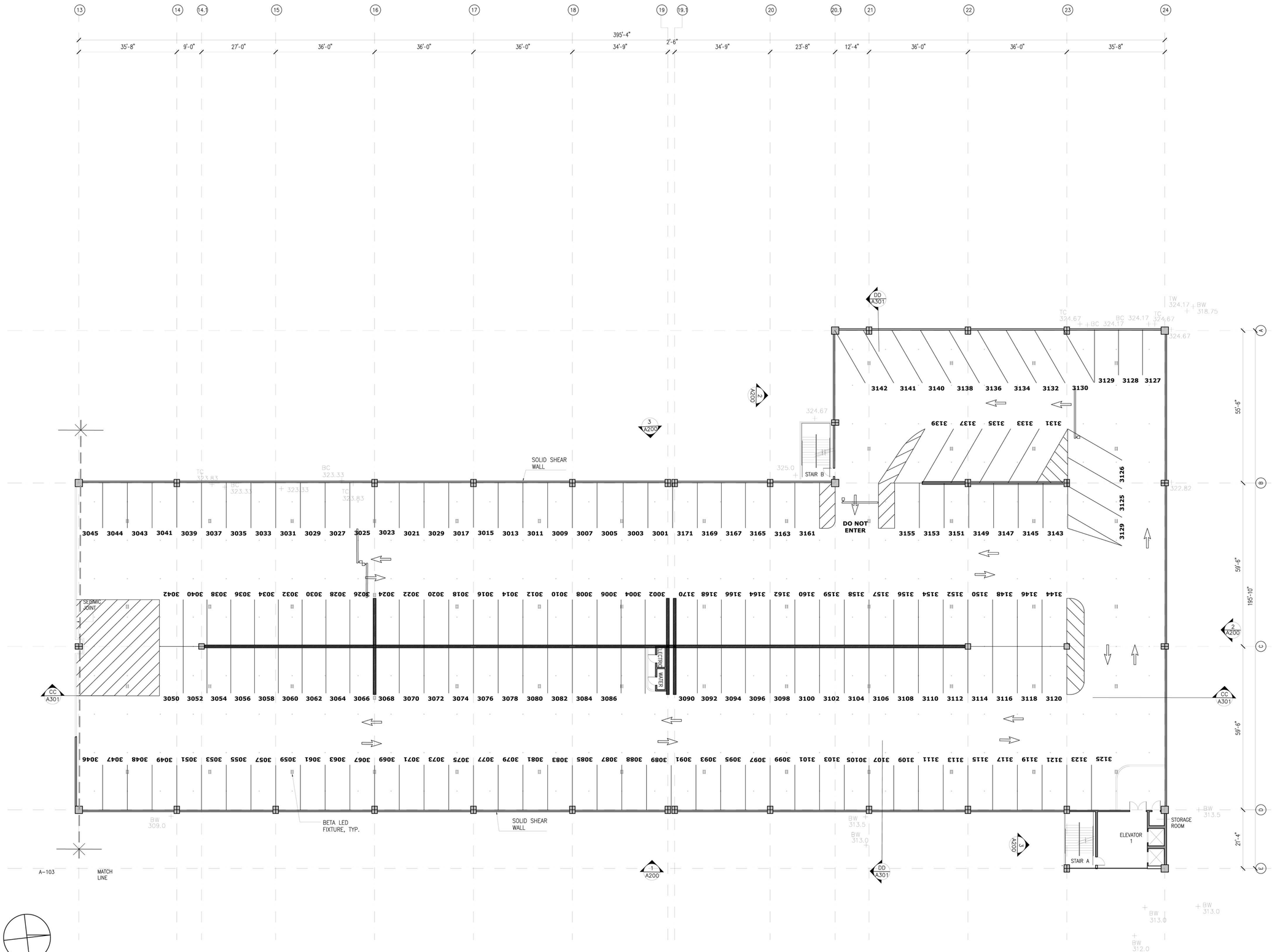


# GEORGETOWN

## Intermodal Transportation Hub


Owner:
Georgetown Redevelopment Corporation
1 North Main Street, P.O. Box 36
Georgetown, Connecticut 06829
(203) 544-8323

Applicant:
Georgetown Special Taxing District
1 North Main Street, P.O. Box 36
Georgetown, Connecticut 06829
(203) 544-8323

Project Counsel:
Richard S. Gibbons, Attorney at Law
27 Imperial Avenue
Westport, Connecticut 06880
(203) 227-9545

Tax District Counsel:
Shipman & Goodwin LLP
One Constitution Plaza
Hartford, Connecticut 06103
(860) 251-5000

Architects and Site/Civil Engineers:
LiRo Architects & Engineers, P.C.
111 Broadway, Suite 501
New York, New York 10006
(212)563-0280

District Engineer:
James Ford PE, Earth Tech
655 Winding Brook Drive, Suite 402
Glastonbury, CT, 06033-4337
(860) 494-4347

Traffic Engineer:
Fitzgerald & Halliday Inc.
72 Cedar Street
Hartford, Connecticut 06106
(860) 767-3044

Environmental Engineer/Surveyor:
Fuss & O'Neill, Inc.
146 Hartford Road
Manchester, Connecticut 06040
(860) 646-2469

GeoTechnical Engineer
Geo Design, Inc
984 Southford Road
Middlebury, Connecticut 06762
(203)758-8836

Site Civil Engineer:
Tighe & Bond
1000 Bridgeport Avenue
Shelton, Connecticut 06484
(203) 712-1100

Landscape Planning:
Solaris Landscape Architecture
88 Main Street South, Suite A201
Southbury, Connecticut 06488
(203)264-6442

Environmental Land Solutions, LLC
(203) 855-7879
8 Knight Street, Suite 203
Norwalk, Connecticut 06851


ISSUE DATE: APRIL 2008

REVISION DATE:

SCALE: 1/16" = 1'-0"

DWN BY: SA / MLe

DWG TITLE:
PARKING STRUCTURE
THIRD LEVEL

DWG NO
A112

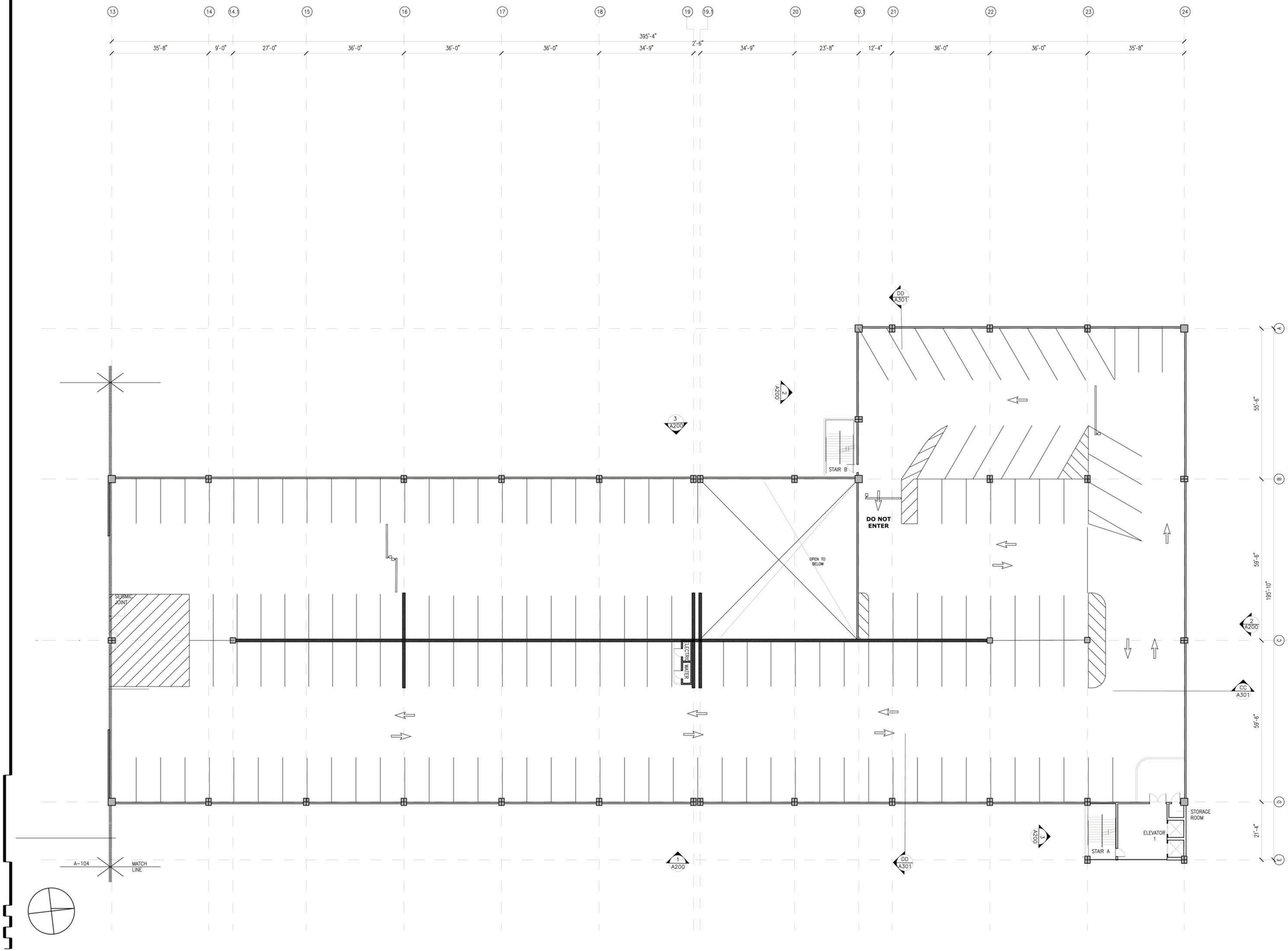


# GEORGETOWN

## Intermodal Transportation Hub


Owner:

**Georgetown Redevelopment Corporation**
1 North Main Street, P.O. Box 36
Georgetown, Connecticut 06829
(203) 544-8323

Applicant:

**Georgetown Special Taxing District**
1 North Main Street, P.O. Box 36
Georgetown, Connecticut 06829
(203) 544-8323

Project Counsel:

**Richard S. Gibbons, Attorney at Law**
27 Imperial Avenue
Westport, Connecticut 06880
(203) 227-9545

Tax District Counsel:

**Shipman & Goodwin LLP**
One Constitution Plaza
Hartford, Connecticut 06103
(860) 251-5000

Architects and Site/Civil Engineers:

**LiRo Architects & Engineers, P.C.**
111 Broadway, Suite 501
New York, New York 10006
(212)563-0280

District Engineer:

**James Ford, Earth Tech**
655 Winding Brook Drive, Suite 402
Glastonbury, CT, 06033-4337
(860) 494-4347

Traffic Engineer:

**Fitzgerald & Halliday Inc.**
72 Cedar Street
Hartford, Connecticut 06106
(860) 767-3044

Environmental Engineer/Surveyor:

**Fuss & O'Neill, Inc.**
146 Hartford Road
Manchester, Connecticut 06040
(860) 646-2469

GeoTechnical Engineer

**Geo Design, Inc**
984 Southford Road
Middlebury, Connecticut 06762
(203)758-8836

Site Civil Engineer:

**Tighe & Bond**
1000 Bridgeport Avenue
Shelton, Connecticut 06484
(203) 712-1100

Landscape Planning:

**Solaris Landscape Architecture**
88 Main Street South, Suite A201
Southbury, Connecticut 06488
(203)264-6442

**Environmental Land Solutions, LLC**
(203) 855-7879
8 Knight Street, Suite 203
Norwalk, Connecticut 06851


| | |
|---|---|
| ISSUE DATE: | 07 MARCH 2008 |
| REVISION DATE: | – |
| SCALE: | 1/16" = 1'-0" |
| DWN BY: | SA / MLe |

DWG TITLE:

PARKING STRUCTURE FOURTH LEVEL

DWG NO

# A113

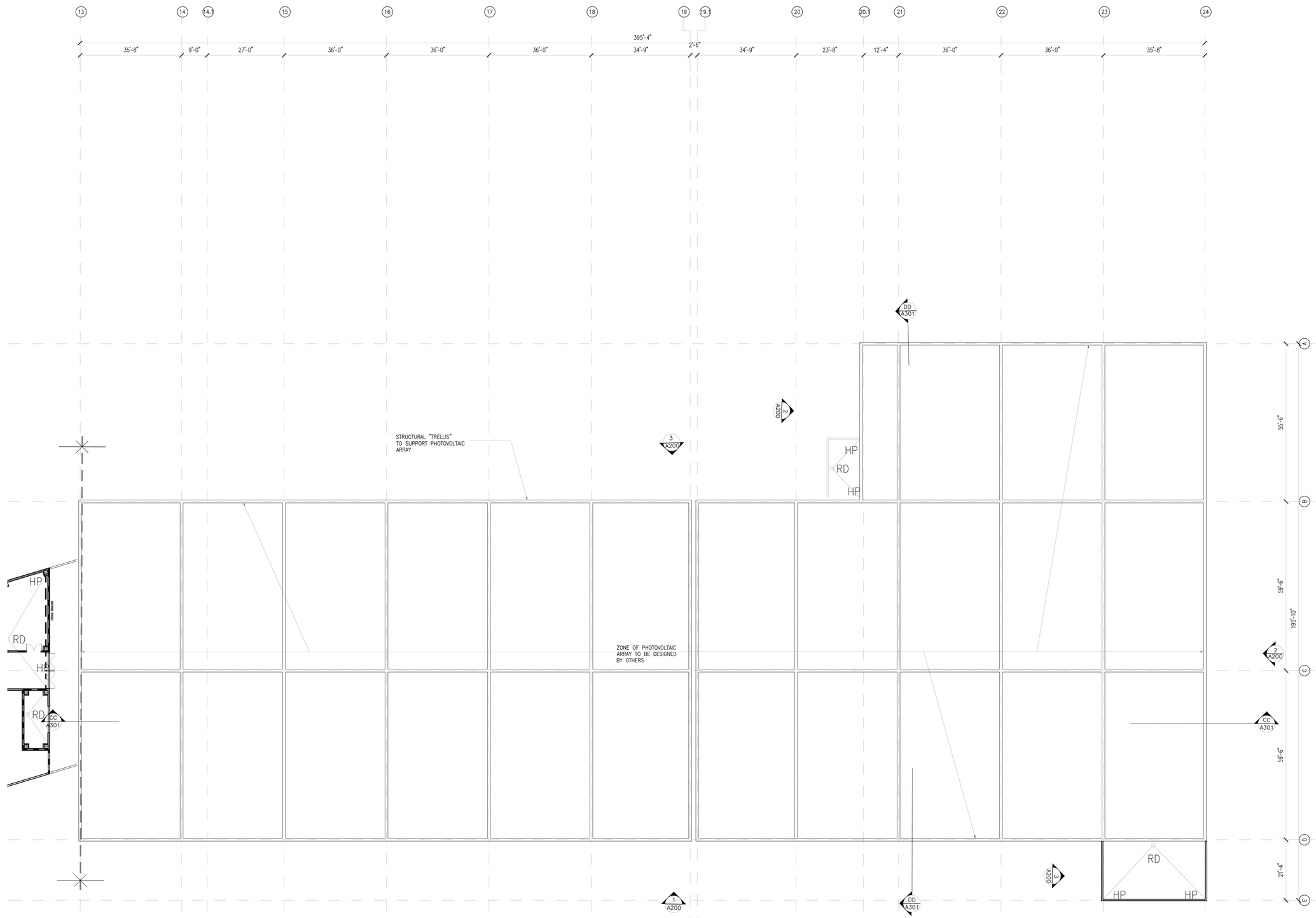


# GEORGETOWN

## Intermodal Transportation Hub


Owner:

**Georgetown Redevelopment Corporation**
1 North Main Street, P.O. Box 36
Georgetown, Connecticut 06829
(203) 544-8323

Applicant:

**Georgetown Special Taxing District**
1 North Main Street, P.O. Box 36
Georgetown, Connecticut 06829
(203) 544-8323

Project Counsel:

**Richard S. Gibbons, Attorney at Law**
27 Imperial Avenue
Westport, Connecticut 06880
(203) 227-9545

Tax District Counsel:

**Shipman & Goodwin LLP**
One Constitution Plaza
Hartford, Connecticut 06103
(860) 251-5000

Architects and Site/Civil Engineers:

**LiRo Architects & Engineers, P.C.**
111 Broadway, Suite 501
New York, New York 10006
(212)563-0280

District Engineer:

**James Ford, Earth Tech**
655 Winding Brook Drive, Suite 402
Glastonbury, CT, 06033-4337
(860) 494-4347

Traffic Engineer:

**Fitzgerald & Halliday Inc.**
72 Cedar Street
Hartford, Connecticut 06106
(860) 767-3044

Environmental Engineer/Surveyor:

**Fuss & O'Neill, Inc.**
146 Hartford Road
Manchester, Connecticut 06040
(860) 646-2469

GeoTechnical Engineer

**Geo Design, Inc**
984 Southford Road
Middlebury, Connecticut 06762
(203)758-8836

Site Civil Engineer:

**Tighe & Bond**
1000 Bridgeport Avenue
Shelton, Connecticut 06484
(203) 712-1100

Landscape Planning:

**Solaris Landscape Architecture**
88 Main Street South, Suite A201
Southbury, Connecticut 06488
(203)264-6442

**Environmental Land Solutions, LLC**
(203) 855-7879
8 Knight Street, Suite 203
Norwalk, Connecticut 06851


| | |
|---|---|
| ISSUE DATE: | 11 APRIL 2008 |
| REVISION DATE: | – |
| SCALE: | 1/16" = 1'-0" |
| DWN BY: | SA / MLe |

DWG TITLE:

**PARKING STRUCTURE ROOF LEVEL**

DWG NO

# A114

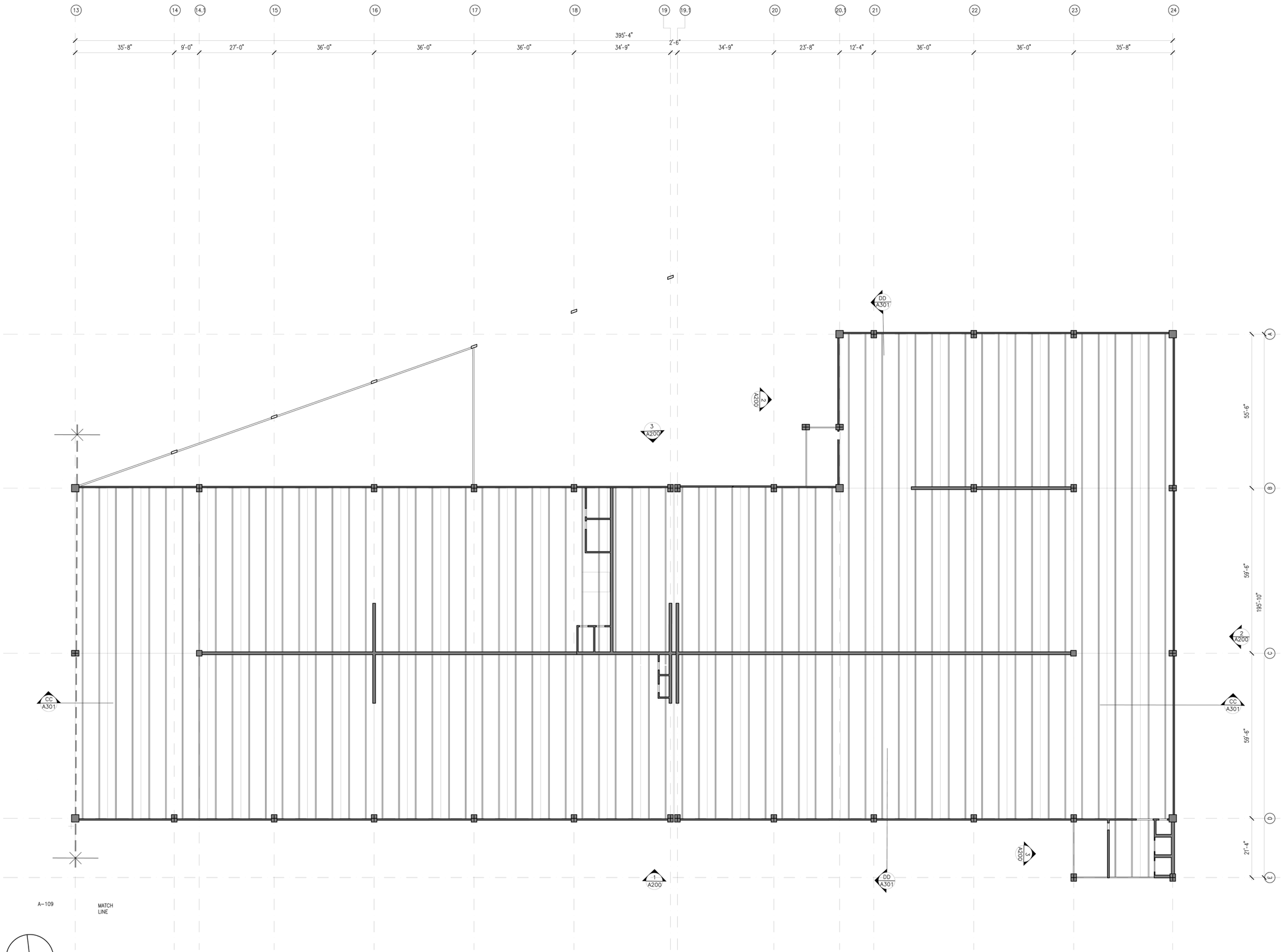


# GEORGETOWN

## Intermodal Transportation Hub


Owner:

**Georgetown Redevelopment Corporation**
1 North Main Street, P.O. Box 36
Georgetown, Connecticut 06829
(203) 544-8323

Applicant:

**Georgetown Special Taxing District**
1 North Main Street, P.O. Box 36
Georgetown, Connecticut 06829
(203) 544-8323

Project Counsel:

**Richard S. Gibbons, Attorney at Law**
27 Imperial Avenue
Westport, Connecticut 06880
(203) 227-9545

Tax District Counsel:

**Shipman & Goodwin LLP**
One Constitution Plaza
Hartford, Connecticut 06103
(860) 251-5000

Architects and Site/Civil Engineers:

**LiRo Architects & Engineers, P.C.**
111 Broadway, Suite 501
New York, New York 10006
(212)563-0280

District Engineer:

**James Ford, Earth Tech**
655 Winding Brook Drive, Suite 402
Glastonbury, CT, 06033-4337
(860) 494-4347

Traffic Engineer:

**Fitzgerald & Halliday Inc.**
72 Cedar Street
Hartford, Connecticut 06106
(860) 767-3044

Environmental Engineer/Surveyor:

**Fuss & O'Neill, Inc.**
146 Hartford Road
Manchester, Connecticut 06040
(860) 646-2469

GeoTechnical Engineer

**Geo Design, Inc**
984 Southford Road
Middlebury, Connecticut 06762
(203)758-8836

Site Civil Engineer:

**Tighe & Bond**
1000 Bridgeport Avenue
Shelton, Connecticut 06484
(203) 712-1100

Landscape Planning:

**Solaris Landscape Architecture**
88 Main Street South, Suite A201
Southbury, Connecticut 06488
(203)264-6442

**Environmental Land Solutions, LLC**
(203) 855-7879
8 Knight Street, Suite 203
Norwalk, Connecticut 06851


| | |
|---|---|
| ISSUE DATE: | 28 APRIL 2008 |
| REVISION DATE: | – |
| SCALE: | 1/16" = 1'-0" |
| DWN BY: | SA / MLe |

DWG TITLE:

# PARKING STRUCTURE FIRST LEVEL CEILING AND LIGHTING PLAN

DWG NO

# A115

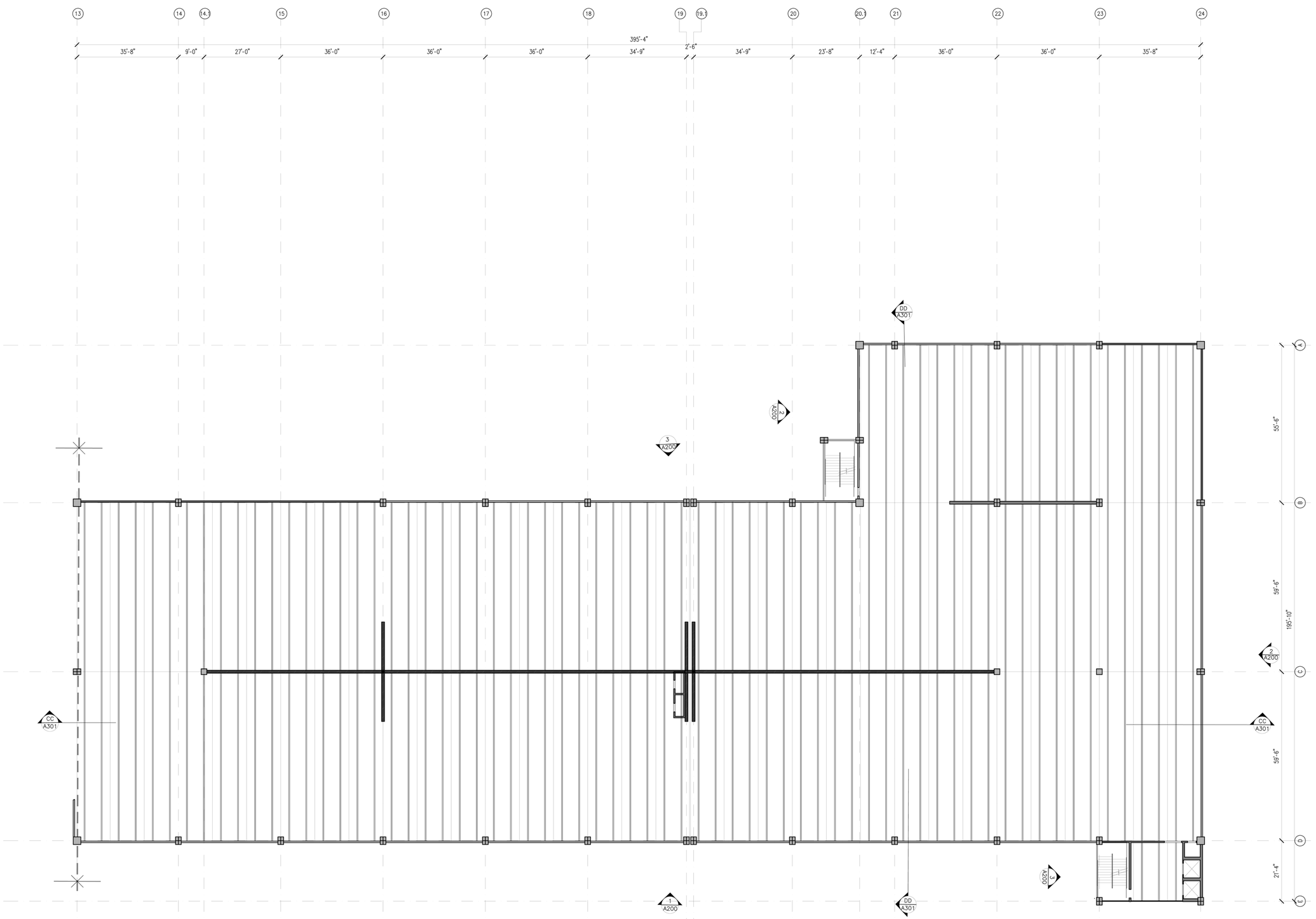


GEORGETOWN

Intermodal Transportation Hub


Owner:

Georgetown Redevelopment Corporation
1 North Main Street, P.O. Box 36
Georgetown, Connecticut 06829
(203) 544-8323

Applicant:

Georgetown Special Taxing District
1 North Main Street, P.O. Box 36
Georgetown, Connecticut 06829
(203) 544-8323

Project Counsel:

Richard S. Gibbons, Attorney at Law
27 Imperial Avenue
Westport, Connecticut 06880
(203) 227-9545

Tax District Counsel:

Shipman & Goodwin LLP
One Constitution Plaza
Hartford, Connecticut 06103
(860) 251-5000

Architects and Site/Civil Engineers:

LiRo Architects & Engineers, P.C.
111 Broadway, Suite 501
New York, New York 10006
(212)563-0280

District Engineer:

James Ford, Earth Tech
655 Winding Brook Drive, Suite 402
Glastonbury, CT, 06033-4337
(860) 494-4347

Traffic Engineer:

Fitzgerald & Halliday Inc.
72 Cedar Street
Hartford, Connecticut 06106
(860) 767-3044

Environmental Engineer/Surveyor:

Fuss & O'Neill, Inc.
146 Hartford Road
Manchester, Connecticut 06040
(860) 646-2469

GeoTechnical Engineer

Geo Design, Inc
984 Southford Road
Middlebury, Connecticut 06762
(203)758-8836

Site Civil Engineer:

Tighe & Bond
1000 Bridgeport Avenue
Shelton, Connecticut 06484
(203) 712-1100

Landscape Planning:

Solaris Landscape Architecture
88 Main Street South, Suite A201
Southbury, Connecticut 06488
(203)264-6442

Environmental Land Solutions, LLC
(203) 855-7879
8 Knight Street, Suite 203
Norwalk, Connecticut 06851


| | |
|---|---|
| ISSUE DATE: | 28 APRIL 2008 |
| REVISION DATE: | – |
| SCALE: | 1/16" = 1'-0" |
| DWN BY: | SA / MLe |

DWG TITLE:

# PARKING STRUCTURE TYPICAL UPPER LEVEL CEILING AND LIGHTING PLAN

DWG NO

# A116

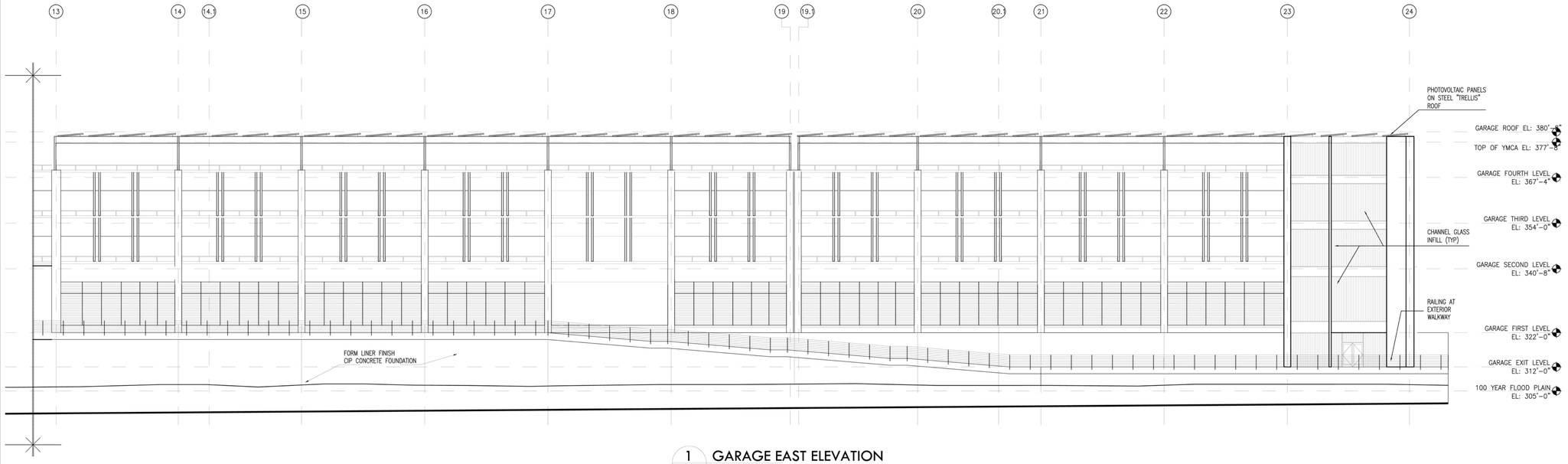


1 GARAGE EAST ELEVATION
A-202

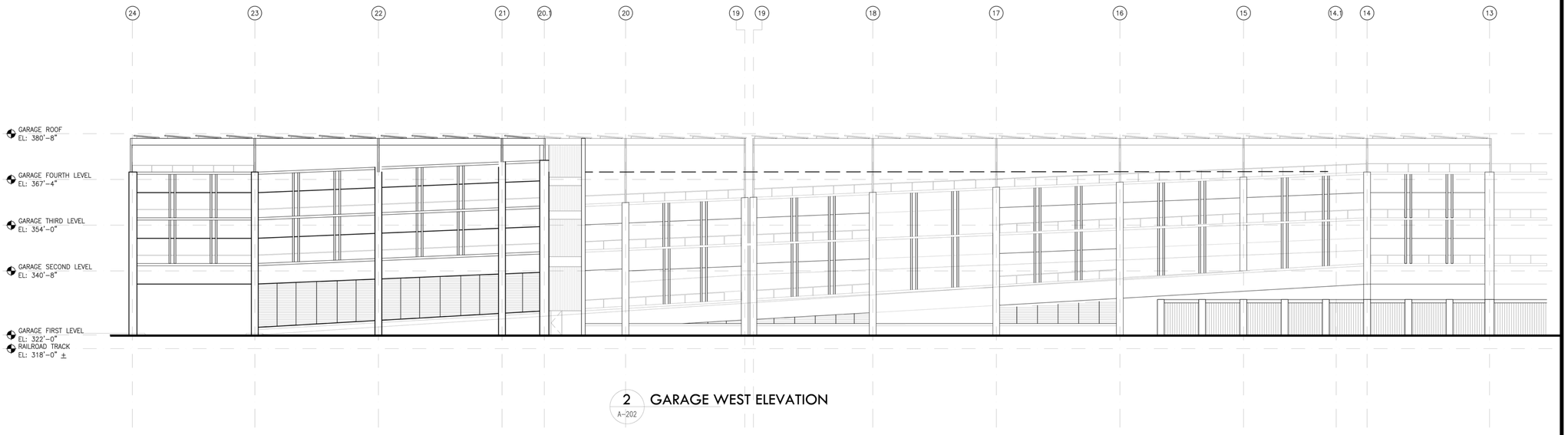


2 GARAGE WEST ELEVATION
A-202

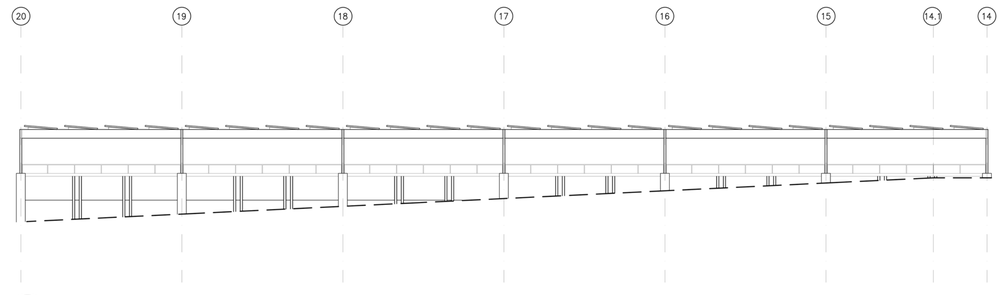


3 GARAGE WEST HIDDEN ELEVATION
A-202

# GEORGETOWN

## Intermodal Transportation Hub


Owner:
Georgetown Redevelopment Corporation
1 North Main Street, P.O. Box 36
Georgetown, Connecticut 06829
(203) 544-8323

Applicant:
Georgetown Special Taxing District
1 North Main Street, P.O. Box 36
Georgetown, Connecticut 06829
(203) 544-8323

Project Counsel:
Richard S. Gibbons, Attorney at Law
27 Imperial Avenue
Westport, Connecticut 06880
(203) 227-9545

Tax District Counsel:
Shipman & Goodwin LLP
One Constitution Plaza
Hartford, Connecticut 06103
(860) 251-5000

Architects and Site/Civil Engineers:
LiRo Architects & Engineers, P.C.
111 Broadway, Suite 501
New York, New York 10006
(212)563-0280

District Engineer:
James Ford, Earth Tech
655 Winding Brook Drive, Suite 402
Glastonbury, CT, 06033-4337
(860) 494-4347

Traffic Engineer:
Fitzgerald & Halliday Inc.
72 Cedar Street
Hartford, Connecticut 06106
(860) 767-3044

Environmental Engineer/Surveyor:
Fuss & O'Neill, Inc.
146 Hartford Road
Manchester, Connecticut 06040
(860) 646-2469

GeoTechnical Engineer
Geo Design, Inc
984 Southford Road
Middlebury, Connecticut 06762
(203)758-8836

Site Civil Engineer:
Tighe & Bond
1000 Bridgeport Avenue
Shelton, Connecticut 06484
(203) 712-1100

Landscape Planning:
Solaris Landscape Architecture
88 Main Street South, Suite A201
Southbury, Connecticut 06488
(203)264-6442

Environmental Land Solutions, LLC
(203) 855-7879
8 Knight Street, Suite 203
Norwalk, Connecticut 06851


| | |
|---|---|
| ISSUE DATE: | 31 MARCH 2008 |
| REVISION DATE: | – |
| SCALE: | 1/16" = 1'-0" |
| DWN BY: | SA / MLe |

DWG TITLE:

PARKING STRUCTURE ELEVATIONS

DWG NO

**A202**

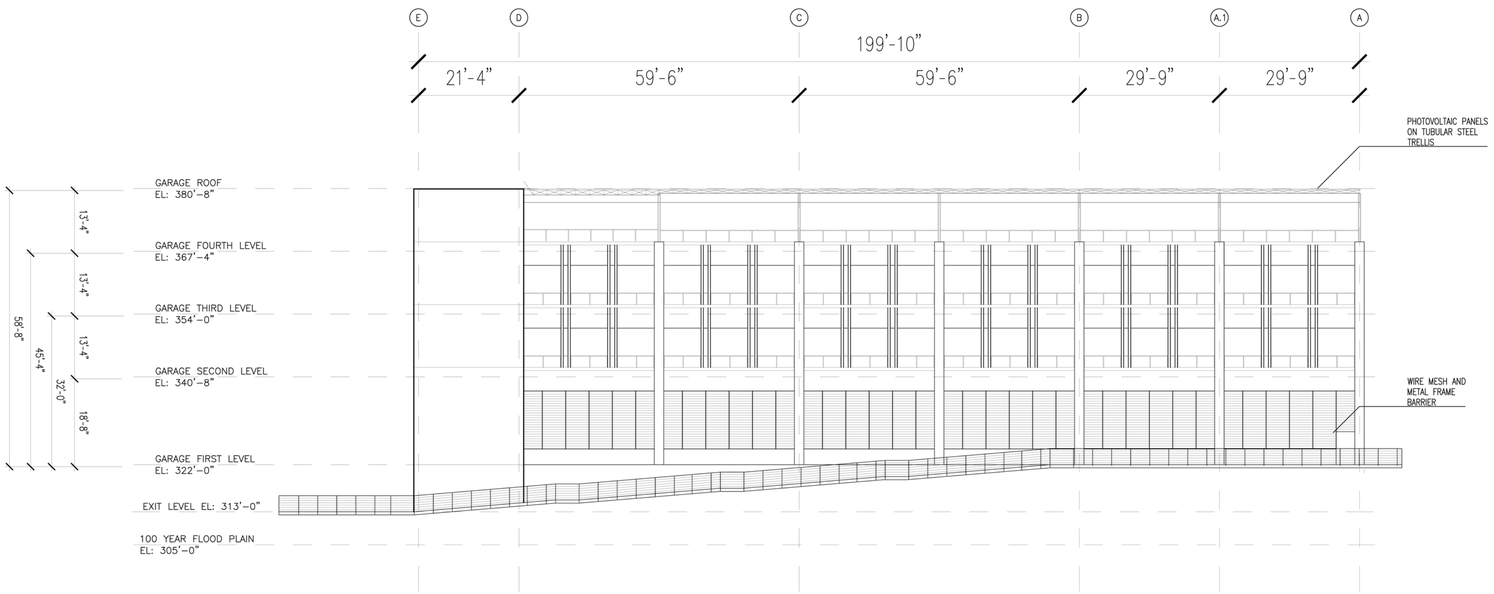


1 A-110 PARKING STRUCTURE NORTH ELEVATION

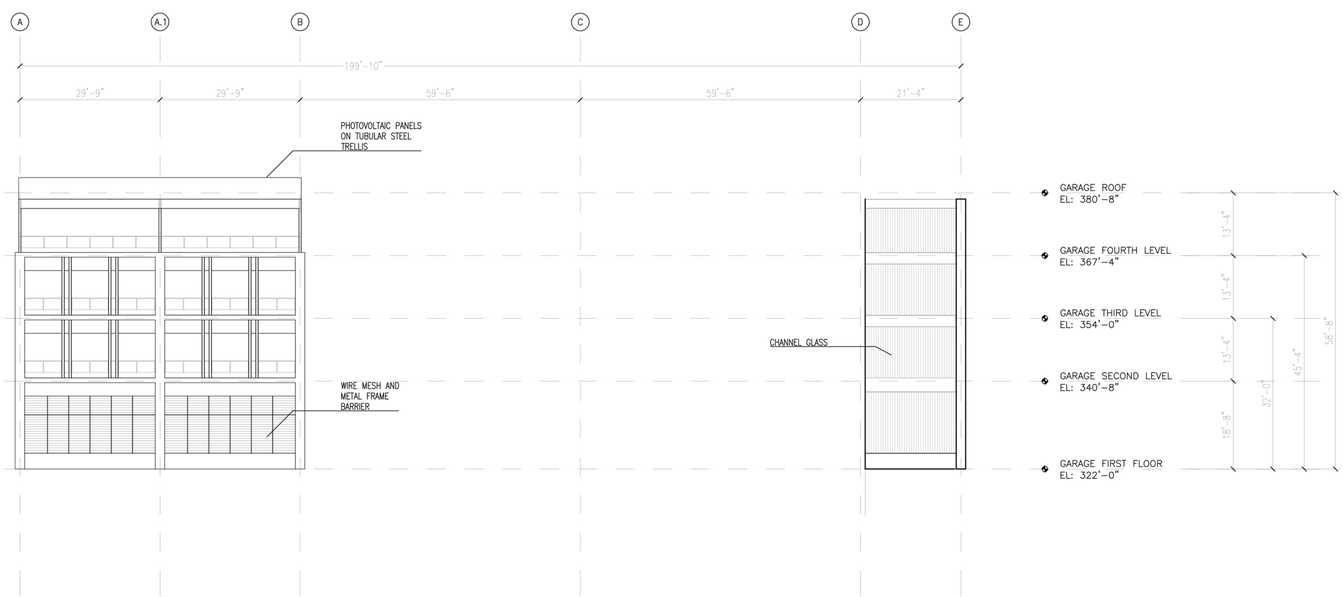


2 A-110 PARKING STRUCTURE SOUTH ELEVATION

3 A-110 PARKING STRUCTURE SOUTH ELEVATION

GEORGETOWN

# Intermodal Transportation Hub

Owner:
Georgetown Redevelopment Corporation
1 North Main Street, P.O. Box 36
Georgetown, Connecticut 06829
(203) 544-8323

Applicant:
Georgetown Special Taxing District
1 North Main Street, P.O. Box 36
Georgetown, Connecticut 06829
(203) 544-8323

Project Counsel:
Richard S. Gibbons, Attorney at Law
27 Imperial Avenue
Westport, Connecticut 06880
(203) 227-9545

Tax District Counsel:
Shipman & Goodwin LLP
One Constitution Plaza
Hartford, Connecticut 06103
(860) 251-5000

Architects and Site/Civil Engineers:
LiRo Architects & Engineers, P.C.
111 Broadway, Suite 501
New York, New York 10006
(212)563-0280

District Engineer:
James Ford, Earth Tech
655 Winding Brook Drive, Suite 402
Glastonbury, CT, 06033-4337
(860) 494-4347

Traffic Engineer:
Fitzgerald & Halliday Inc.
72 Cedar Street
Hartford, Connecticut 06106
(860) 767-3044

Environmental Engineer/Surveyor:
Fuss & O'Neill, Inc.
146 Hartford Road
Manchester, Connecticut 06040
(860) 646-2469

GeoTechnical Engineer
Geo Design, Inc
984 Southford Road
Middlebury, Connecticut 06762
(203)758-8836

Site Civil Engineer:
Tighe & Bond
1000 Bridgeport Avenue
Shelton, Connecticut 06484
(203) 712-1100

Landscape Planning:
Solaris Landscape Architecture
88 Main Street South, Suite A201
Southbury, Connecticut 06488
(203)264-6442

Environmental Land Solutions, LLC
(203) 855-7879
8 Knight Street, Suite 203
Norwalk, Connecticut 06851

| | |
|---|---|
| ISSUE DATE: | 31 MARCH 2008 |
| REVISION DATE: | – |
| SCALE: | 1/16" = 1'-0" |
| DWN BY: | SA / MLe |

DWG TITLE:

PARKING STRUCTURE ELEVATIONS

DWG NO

A203

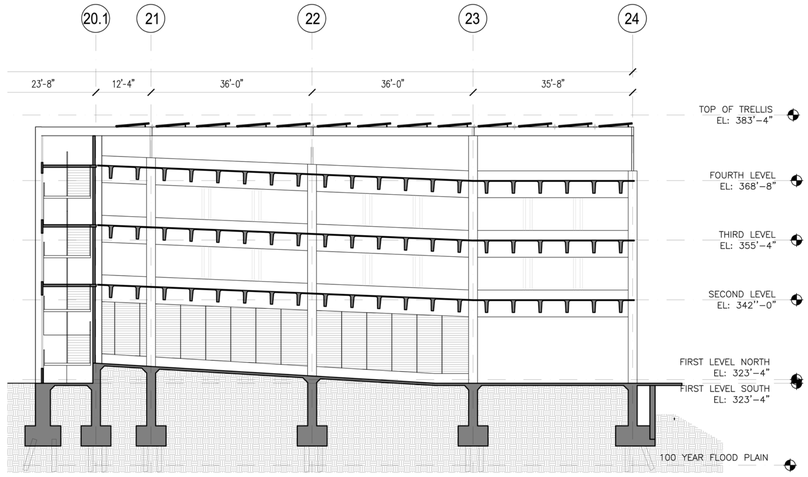


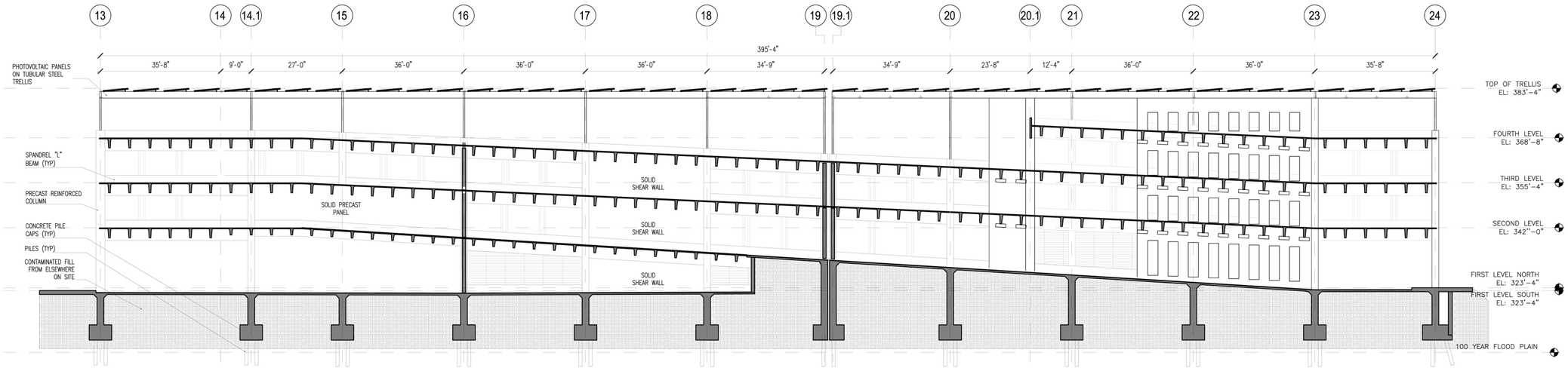


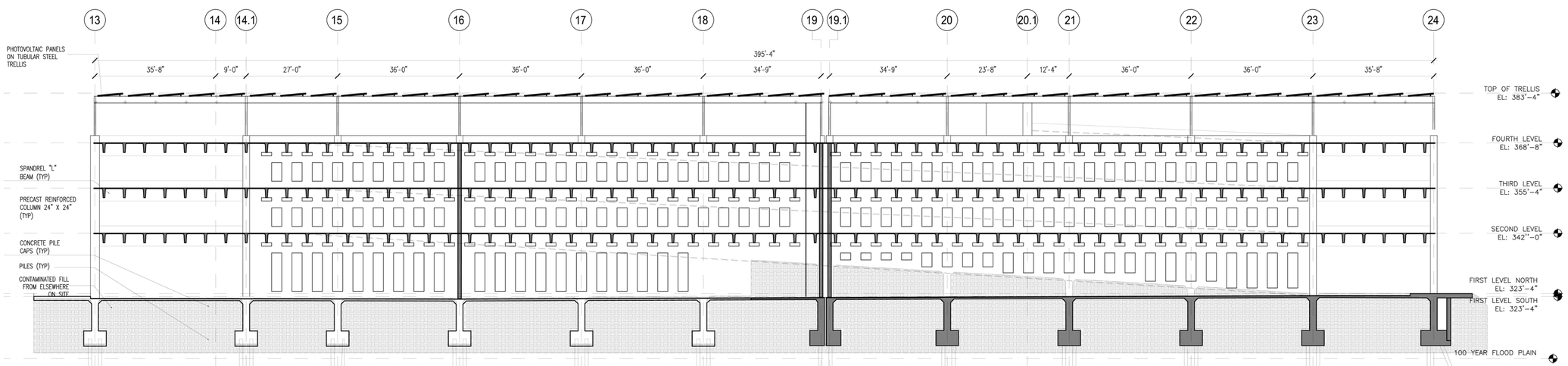


# GEORGETOWN

## Intermodal Transportation Hub


Owner:

**Georgetown Redevelopment Corporation**
1 North Main Street, P.O. Box 36
Georgetown, Connecticut 06829
(203) 544-8323

Applicant:

**Georgetown Special Taxing District**
1 North Main Street, P.O. Box 36
Georgetown, Connecticut 06829
(203) 544-8323

Project Counsel:

**Richard S. Gibbons, Attorney at Law**
27 Imperial Avenue
Westport, Connecticut 06880
(203) 227-9545

Tax District Counsel:

**Shipman & Goodwin LLP**
One Constitution Plaza
Hartford, Connecticut 06103
(860) 251-5000

Architects and Site/Civil Engineers:

**LiRo Architects & Engineers, P.C.**
111 Broadway, Suite 501
New York, New York 10006
(212)563-0280

District Engineer:

**James Ford, Earth Tech**
655 Winding Brook Drive, Suite 402
Glastonbury, CT, 06033-4337
(860) 494-4347

Traffic Engineer:

**Fitzgerald & Halliday Inc.**
72 Cedar Street
Hartford, Connecticut 06106
(860) 767-3044

Environmental Engineer/Surveyor:

**Fuss & O'Neill, Inc.**
146 Hartford Road
Manchester, Connecticut 06040
(860) 646-2469

GeoTechnical Engineer

**Geo Design, Inc**
984 Southford Road
Middlebury, Connecticut 06762
(203)758-8836

Site Civil Engineer:

**Tighe & Bond**
1000 Bridgeport Avenue
Shelton, Connecticut 06484
(203) 712-1100

Landscape Planning:

**Solaris Landscape Architecture**
88 Main Street South, Suite A201
Southbury, Connecticut 06488
(203)264-6442

**Environmental Land Solutions, LLC**
(203) 855-7879
8 Knight Street, Suite 203
Norwalk, Connecticut 06851


| | |
|---|---|
| ISSUE DATE: | 11 APRIL 2008 |
| REVISION DATE: | – |
| SCALE: | 1/16" = 1'-0" |
| DWN BY: | SA / MLe |

DWG TITLE:

PARKING STRUCTURE SECTIONS

DWG NO

**A301**

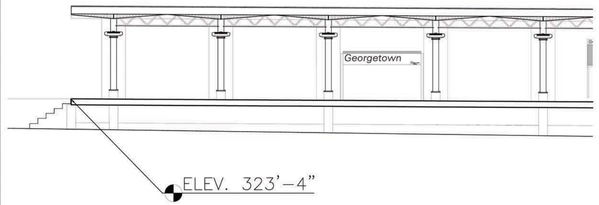


1A A-402 PLATFORM ELEVATION AT BUILDING
1'-0"=1/8"

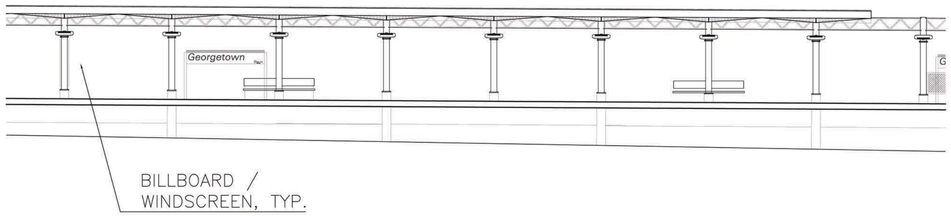


1B A-402 PLATFORM ELEVATION AT ACCES PLATFORM
1'-0"=1/8"

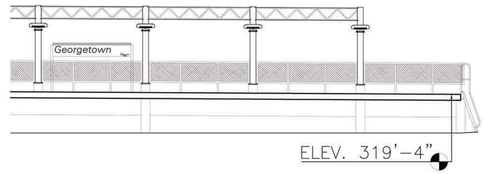


1C A-402 PLATFORM ELEVATION STAND ALONE
1'-0"=1/8"

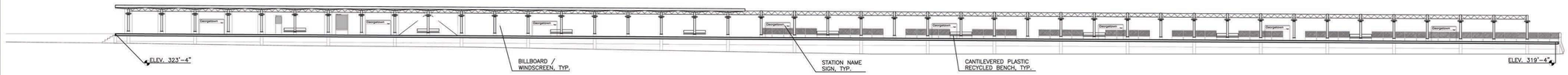


2 A-402 FULL PLATFORM ELEVATION
1'-0"=1/16"

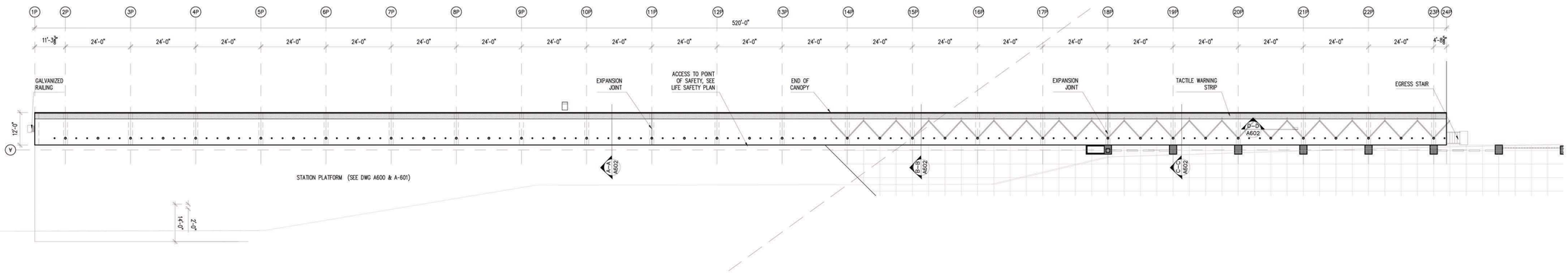


3 A-402 PLATFORM PLAN
1"=20'

GEORGETOWN

Intermodal Transportation Hub


Owner:
Georgetown Redevelopment Corporation
1 North Main Street, P.O. Box 36
Georgetown, Connecticut 06829
(203) 544-8323

Applicant:
Georgetown Special Taxing District
1 North Main Street, P.O. Box 36
Georgetown, Connecticut 06829
(203) 544-8323

Project Counsel:
Richard S. Gibbons, Attorney at Law
27 Imperial Avenue
Westport, Connecticut 06880
(203) 227-9545

Tax District Counsel:
Shipman & Goodwin LLP
One Constitution Plaza
Hartford, Connecticut 06103
(860) 251-5000

Architects and Site/Civil Engineers:
LiRo Architects & Engineers, P.C.
111 Broadway, Suite 501
New York, New York 10006
(212)563-0280

District Engineer:
James Ford, Earth Tech
655 Winding Brook Drive, Suite 402
Glastonbury, CT, 06033-4337
(860) 494-4347

Traffic Engineer:
Fitzgerald & Halliday Inc.
72 Cedar Street
Hartford, Connecticut 06106
(860) 767-3044

Environmental Engineer/Surveyor:
Fuss & O'Neill, Inc.
146 Hartford Road
Manchester, Connecticut 06040
(860) 646-2469

GeoTechnical Engineer
Geo Design, Inc
984 Southford Road
Middlebury, Connecticut 06762
(203)758-8836

Site Civil Engineer:
Tighe & Bond
1000 Bridgeport Avenue
Shelton, Connecticut 06484
(203) 712-1100

Landscape Planning:
Solaris Landscape Architecture
88 Main Street South, Suite A201
Southbury, Connecticut 06488
(203)264-6442

Environmental Land Solutions, LLC
(203) 855-7879
8 Knight Street, Suite 203
Norwalk, Connecticut 06851


| | |
|---|---|
| ISSUE DATE: | 26 MARCH 2008 |
| REVISION DATE: | – |
| SCALE: | VARIES |
| DWN BY: | SA / MLe |

DWG TITLE:
STATION PLATFORM ELEVATION AND PLANS

DWG NO
A600

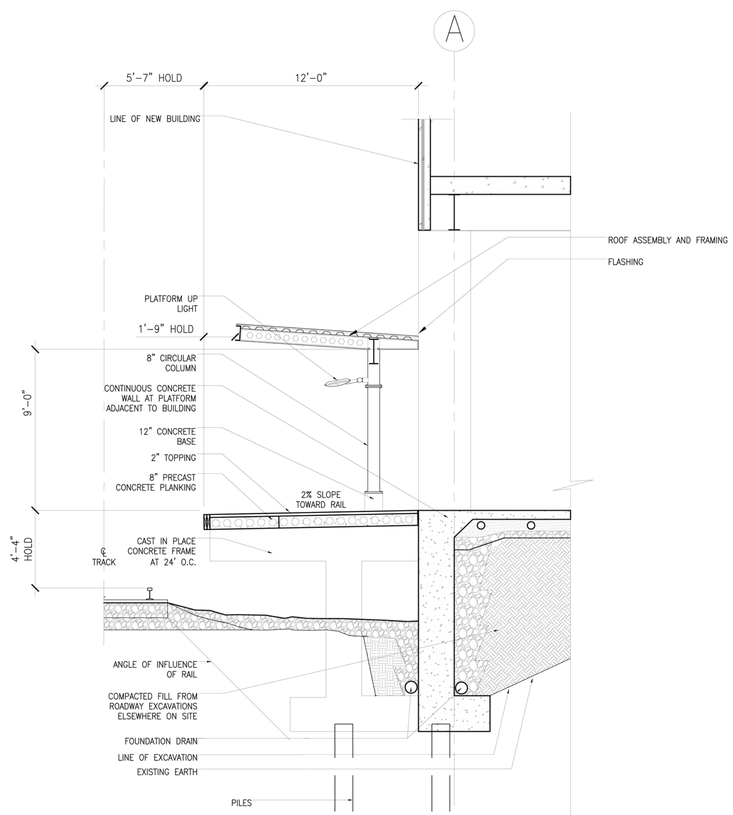


1 SECTION A-A
A-600

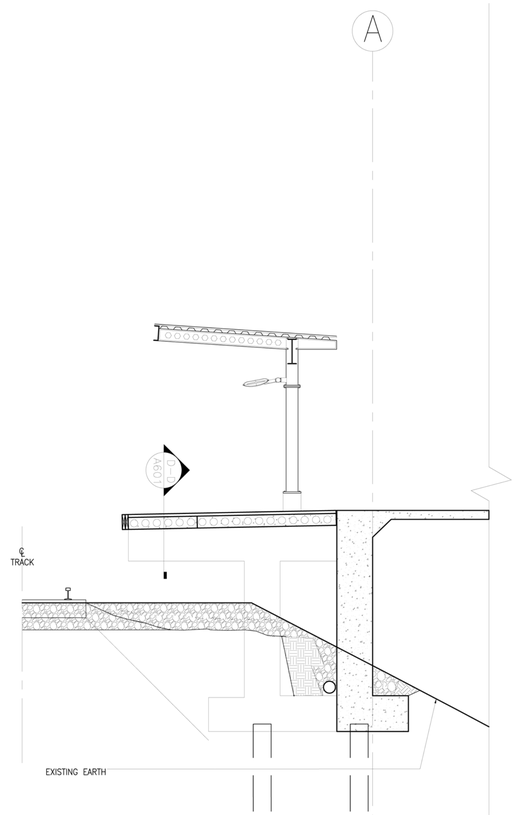


2 SECTION B-B
A-600

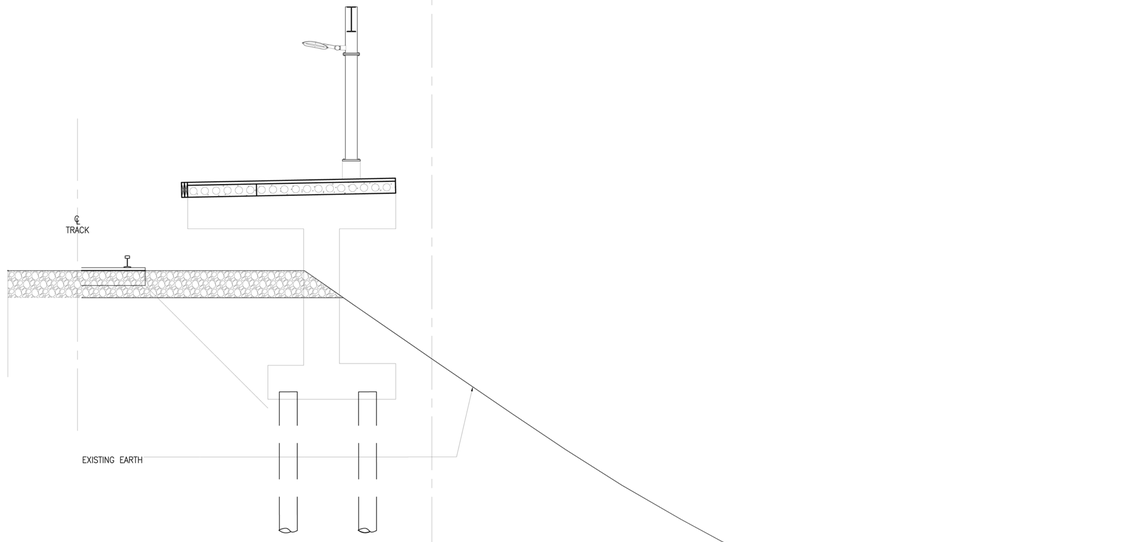


3 SECTION C-C
A-600

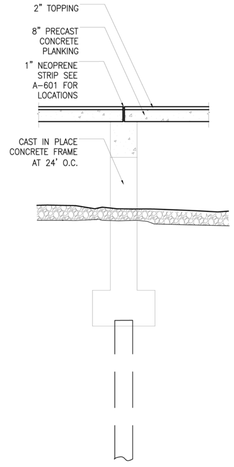


4 SECTION D-D
A-601

# GEORGETOWN

## Intermodal Transportation Hub

-


Owner:
Georgetown Redevelopment Corporation
1 North Main Street, P.O. Box 36
Georgetown, Connecticut 06829
(203) 544-8323

Applicant:
Georgetown Special Taxing District
1 North Main Street, P.O. Box 36
Georgetown, Connecticut 06829
(203) 544-8323

Project Counsel:
Richard S. Gibbons, Attorney at Law
27 Imperial Avenue
Westport, Connecticut 06880
(203) 227-9545

Tax District Counsel:
Shipman & Goodwin LLP
One Constitution Plaza
Hartford, Connecticut 06103
(860) 251-5000

Architects and Site/Civil Engineers:
LiRo Architects & Engineers, P.C.
111 Broadway, Suite 501
New York, New York 10006
(212)563-0280

District Engineer:
James Ford, Earth Tech
655 Winding Brook Drive, Suite 402
Glastonbury, CT, 06033-4337
(860) 494-4347

Traffic Engineer:
Fitzgerald & Halliday Inc.
72 Cedar Street
Hartford, Connecticut 06106
(860) 767-3044

Environmental Engineer/Surveyor:
Fuss & O'Neill, Inc.
146 Hartford Road
Manchester, Connecticut 06040
(860) 646-2469

GeoTechnical Engineer
Geo Design, Inc
984 Southford Road
Middlebury, Connecticut 06762
(203)758-8836

Site Civil Engineer:
Tighe & Bond
1000 Bridgeport Avenue
Shelton, Connecticut 06484
(203) 712-1100

Landscape Planning:
Solaris Landscape Architecture
88 Main Street South, Suite A201
Southbury, Connecticut 06488
(203)264-6442

Environmental Land Solutions, LLC
(203) 855-7879
8 Knight Street, Suite 203
Norwalk, Connecticut 06851


| | |
|---|---|
| ISSUE DATE: | 26 MARCH 2008 |
| REVISION DATE: | – |
| SCALE: | 1/4" = 1'-0" |
| DWN BY: | SA / MLe |

DWG TITLE:

PLATFORM SECTIONS

DWG NO

# A601

## STRUCTURAL OVERVIEW

### GENERAL DESCRIPTION

GEORGETOWN REDEVELOPMENT PROJECT IS LOCATED AT NORTH MAIN STREET AND PORTLAND AVENUE, TOWN OF WILTON AND TOWN OF READING, FAIRFIELD COUNTY, CONNECTICUT. AS PART OF THIS DEVELOPMENT, A TRANSPORTATION HUB IS TO BE CONSTRCUTED FOR A MULTI-PURPOSE BUILDING THAT INCLUDES A YMCA, RAILROAD PLATFORM, FIRE REFUGE DECK AND A PARKING GARAGE, CURRENT FOOT PRINT AREA IS APPROXIMATELY 120,000 S.F. IN GEORGETOWN, CT. THE BUILDING SITE IS BORDERED BY THE RAILROAD TRACKS ON ITS WESTERN SIDE AND THE NORWALK RIVER ON ITS EASTERN SIDE. THE SITE NARROWS TOWARDS THE SOUTHERN END AND SLOPES DOWN TOWARD THE RIVER. CONSTRUCTION CONSISTS OF A NEW 3 STORY YMCA BUILDING AND A FOUR STORY PARKING GARAGE WITH A DEDICATED GROUND FLOOR BUS AND CAR DROP OFF. A 520 FT LONG TRAIN STATION PLATFORM IS PROVIDED FOR METRO NORTH. DUE TO SITE CONSTRAINTS A FIRE REFUGE IS CREATED IN THE LAND LOCKED AREA BETWEEN TRACKS, RIVER AND YMCA.

### FOUNDATIONS

THE FOUNDATION SYSTEM WILL CONSIST OF DRIVING 12" STEEL PIPE PILE FILLED WITH CONCRETE (PER GEOTECHNICAL RECOMMENDATIONS) AND PILES WITH REINFORCED CONCRETE PILE CAPS. ALL PILE CAPS WILL BE LINKED TOGETHER BY THE GROUND-LEVEL STRUCTURAL SLAB OR, ALTERNATIVELY, CONCRETE BEAMS. GRADE BEAMS WILL LINK THE PERIMETER PILE CAPS AND WILL SUPPORT REINFORCED CONCRETE FOUNDATION WALLS. INTERIOR STEEL COLUMNS AND/OR CONCRETE COLUMNS WILL REST DIRECTLY ON PILE CAPS. PERIMETER STEEL COLUMNS WILL REST A TOP REINFORCED CONCRETE PILASTER WITHIN THE FOUNDATION WALL.

### GRAVITY SYSTEM

IN YMCA BUILDING, TYPICAL FLOOR SLABS WILL CONSIST OF 3" COMPOSITE METAL DECK WITH 4 1/2" OF NORMAL WEIGHT CONCRETE ABOVE THE DECK. THE FLOOR SLAB WILL ACT WITH THE STRUCTURAL STEEL BEAMS AND GIRDERS TO FORM COMPOSITE SYSTEM. TYPICAL BEAM SPACING WILL BE 8'-0". THICKER CONCRETE SLAB WILL BE PROVIDED IN SOME AREAS TO SATISFY ACOUSTIC, VIBRATION, AND SPECIAL LOADING REQUIREMENTS. GENERALLY BEAMS AND GIRDERS WILL BE DESIGNED FOR CONSTRUCTION WITHOUT SHORING. ROOF WILL BE A MIX OF STEEL TRUSSES AND BEAM SYSTEM COVERED MY 3" ROOF METAL DECK.

PARKING GARAGE, TYPICAL FLOOR WILL CONSIST OF 10" CONCRETE SLAB WITH 2" CONCRETE TOPPING SUPPORTED BY CONCRETE BEAMS. A TRELLIS STEEL FRAME IS PROVIDED ALL LAST LEVEL TO SUPPORT PHOTOVOLTAIC PANEL FRAMES.

STATION PLATFORM CONSISTS OF PRECAST DOUBLE TEE AND HOLLOW-CORE PRESTRESSED CONCRETE WITH 2" CONCRETE TOPPING SUPPORTED BY CONCRETE BENT OR T-SHAPE PIER SYSTEM.

FIRE REFUGE AREA CONSISTS OF PRECAST HOLLOW-CORE AND CAST-IN-PLACE CONCRETE DECKS SUPPORTED BY CONCRETE BENT SYSTEM.

### LATERAL LOAD RESISTING SYSTEM

RESISTANCE TO LATERAL WIND AND SEISMIC LOADS WILL BE PROVIDED BY A SERIES OF REINFORCED CONCRETE SHEAR WALLS IN THE PARKING GARAGE.

IN THE YMCA BUILDING LATERAL LOADS WILL BE RESISTED BY A DUAL SYSTEM OF BRACES AND STEEL MOMENT FRAME LATERAL LOAD RESISTING SYSTEM.

STATION PLATFORM AND FIRE REFUGE AREA WILL RESIST LATERAL LOADS THROUGH FRAMING ACTION BETWEEN SUPPORT AND THE DECK. CANOPIES ARE INDEPENDENT STEEL FRAMED SYSTEM.

## GENERAL NOTES

1. ALL WORK SHALL COMPLY WITH THE 2005 STATE BUILDING CODE FOR THE STATE OF CONNECTICUT, LATEST AMENDMENTS, AND ALL OTHER APPLICABLE CODES.

2. A LICENSED PROFESSIONAL ENGINEER IN THE STATE OF CONNECTICUT ACCEPTABLE TO THE ENGINEER-OF-RECORD SHALL SUPERVISE THE TESTING AND INSPECTION OF THE FOLLOWING METHODS AND MATERIALS IN ACCORDANCE WITH THE CT BUILDING CODE: SUBGRADE, FILL, ENGINEERED FILL, STABILITY DURING CONSTRUCTION, REINFORCED CONCRETE, REINFORCED MASONRY, WELDING, HIGH-STRENGTH BOLTING, AND FIREPROOFING.

3. CONTRACTOR SHALL BE RESPONSIBLE FOR MAINTAINING PUBLIC AND WORKER SAFETY DURING CONSTRUCTION OPERATIONS. THE CONTRACTOR SHALL COMPLY WITH CT STATE BUILDING CODE OPERATION & SAFETY REQUIREMENTS AS WELL AS ALL OTHER GOVERNING CODES.

4. THE DESIGN DETAILS AND NOTES CONTAINED HEREIN ARE IN COMPLIANCE WITH LATEST CODE REQUIREMENTS FOR EARTHQUAKE AND WIND.

## CODES & STANDARDS

### GENERAL DESIGN

1. 2003 INTERNATIONAL BUILDING CODE PORTION OF THE 2005 STATE BUILDING CODE STATE OF CONNECTICUT.

### STRUCTURAL STEEL DESIGN

1. SPECIFICATION FOR STRUCTURAL STEEL BUILDINGS – ALLOWABLE STRESS DESIGN, AMERICAN INSTITUTE OF STEEL CONSTRUCTION, 1989.

2. LOAD AND RESISTANCE FACTOR DESIGN SPECIFICATION FOR STRUCTURAL STEEL BUILDINGS, AMERICAN INSTITUTE OF STEEL CONSTRUCTION, THIRD EDITION, 2001.

### STEEL DECK DESIGN

1. DESIGN MANUAL FOR COMPOSITE DECKS, FORM DECKS, ROOF DECKS AND CELLULAR METAL FLOOR DECK WITH ELECTRICALDISTRIBUTION, STEEL DECK INSTITUTE.

### REINFORCED CONCRETE DESIGN

1. BUILDING CODE REQUIREMENTS FOR STRUCTURAL CONCRETE – ACI 318-02, AMERICAN CONCRETE INSTITUTE, 2002.

### LATERAL LOADS

1. 2003 INTERNATIONAL BUILDING CODE PORTION OF THE 2005 STATE BUILDING CODE STATE OF CONNECTICUT, CHAPTER 16.

2. MINIMUM DESIGN LOADS FOR BUILDINGS AND OTHER STRUCTURES, ASCE 7, 2002.

## MATERIALS

### CONCRETE

| | |
|---|---|
| FOUNDATIONS: | 150 PCF, 4000 PSI 28 DAY COMPRESSIVE STRENGTH |
| SHEAR WALLS: | 150 PCF, 5000 PSI 28 DAY COMPRESSIVE STRENGTH |
| COLUMNS: | 150 PCF, 5000 PSI 28 DAY COMPRESSIVE STRENGTH |
| LWT. SLABS: | 115 PCF, 4000 PSI 28 DAY COMPRESSIVE STRENGTH |
| NWT. SLABS: | 150 PCF, 4000 PSI 28 DAY COMPRESSIVE STRENGTH |
| NWT. SLABS ON METAL DECK: | 150 PCF, 4000 PSI 28 DAY COMPRESSIVE STRENGTH |

### REINFORCING BARS

ASTM A615, GRADE 60

### WELDED WIRE FABRIC

ASTM A185

### STRUCTURAL STEEL

FLOOR BEAMS: ASTM A992 – GRADE 50
COLUMNS: ASTM A992 – GRADE 50
DIAGONAL/BRACING: ASTM A992 – GRADE 50
CONNECTIONS PLATES: ASTM A572 – GRADE 50
BASE PLATES: ASTM A572 – GRADE 50
ANGLES: ASTM A36 – GRADE 36
STEEL TUBING: ASTM A500, GRADE B
BOLTS: ASTM A325, AND/OR A490
ANCHOR BOLTS: ASTM A36, GRADE 36 AND/OR F1554, GRADE 36

### ESTIMATED STRUCTURAL STEEL QUANTITIES

THE FOLLOWING STEEL QUANTITES DO NOT INCLUDE SCREEN WALLS, MISCELLANEOUS EXTERIOR WALL SUPPORT STEEL, MISCELLANEOUS MECHANICAL MEZZANINE AND EQUIPMENT SUPPORT, TEMPORARY DIAGONAL BRACING FOR ANY ERECTION, STAIRS, ELEVATOR RAIL SUPPORT AND DIVIDER BEAMS, SECONDARY SERVICES FRAMING, REINFORCING BARS OR STEEL DECKING. FRAMED AREAS INCLUDE ROOFS.

| | |
|---|---|
| YMCA BUILDING: | 920 TONS (BASED ON GROSS AREA OF 100,000 SF) |
| PARKING GARAGE TRELLIS: | 360 TONS (BASED ON GROSS AREA OF 75,000 SF) |
| STATION PLATFORM CANOPIES: | 80 TONS (BASED ON GROSS AREA OF 6,000 SF) |

NOTE: MAKE AN ALLOWANCE FOR ADDITIONAL 100 – 12" DIAMETER STEEL PIPE PILES FILLED WITH CONCRETE.

### ESTIMATED STRUCTURAL CONCRETE QUANTITIES

THE FOLLOWING CONCRETE QUANTITES DO NOT INCLUDE SLABS, BEAMS, COLUMNS, SLAB-ON-GRADE, PILES, PILE CAPS, RETAINING WALLS, GRADE BEAMS, MISCELLANEOUS FOUNDATION ELEMENTS, STRUCTURAL SLABS, OR ANY CONCRETE ELEMENTS NOT EXPLICITLY LISTED BELOW.

PARKING GARAGE

| | |
|---|---|
| CONCRETE SHEAR WALLS & LINK BEAMS: | 1200 CY |
| REINFORCING STEEL: | 160 LBS/CY |

## STRUCTURAL DRAWINGS LIST


| | | |
|---|---|---|
| S-00A | GENERAL NOTES & TYPICAL DETAILS | |
| S-08 | PARKING GARAGE | SECOND LEVEL FRAMING PLAN |
| S-09 | PARKING GARAGE | THIRD LEVEL FRAMING PLAN |
| S-10 | PARKING GARAGE | FOURTH LEVEL FRAMING PLAN |
| S-11 | PARKING GARAGE | ROOF (TRELLIS) FRAMING PLAN |
| S-13 | PARKING GARAGE | SECTIONS AND DETAILS |
| S-15 | FIRE REFUGE AREA | SECTIONS AND DETAILS |


## LEGEND:

### LINES

- CENTER LINE
- HIDDEN, OUTLINE
- NOTE
- DIMENSION

### SLAB MARKS

- MS – COMPOSITE METAL DECK SLAB
- RF – ROOF METAL DECK SLAB
- S – ONE-WAY REINFORCED CONCRETE SLAB

### BEAM MARKS

- MOMENT CONNECTION
- TRUSS/ BRACE ABOVE

### COLUMN MARKS

- STEEL WIDE FLANGE
- STEEL TUBING

### FOUNDATION MARKS

- STEEL PIPE PILE
- 3'-0"ø CONCRETE CAISSON

### MISCELLANEOUS SYMBOLS

- METAL DECK
- WELDED WIRE FABRIC
- CHANGE IN ELEVATION

SOOA

DWG NO

DWG TITLE: GENERAL NOTES AND TYPICAL DETAILS

# GEORGETOWN SPECIAL TAXING DISTRICT

## INTERMODAL TRANSPORTATION HUB

GEORGETOWN CONNECTICUT

SCHEMATIC DESIGN SET


LiRo Architects + Engineers P.C.
111 Broadway, Suite 501
New York, New York 10006
212.563.0280 [P] 212.563.1841 [F]


© The LiRo Group All Rights Reserved

ISSUE DATE: 10 SEPTEMBER 2007 SCALE: NOT TO SCALE

REVISION DATE: – DWN BY: PR

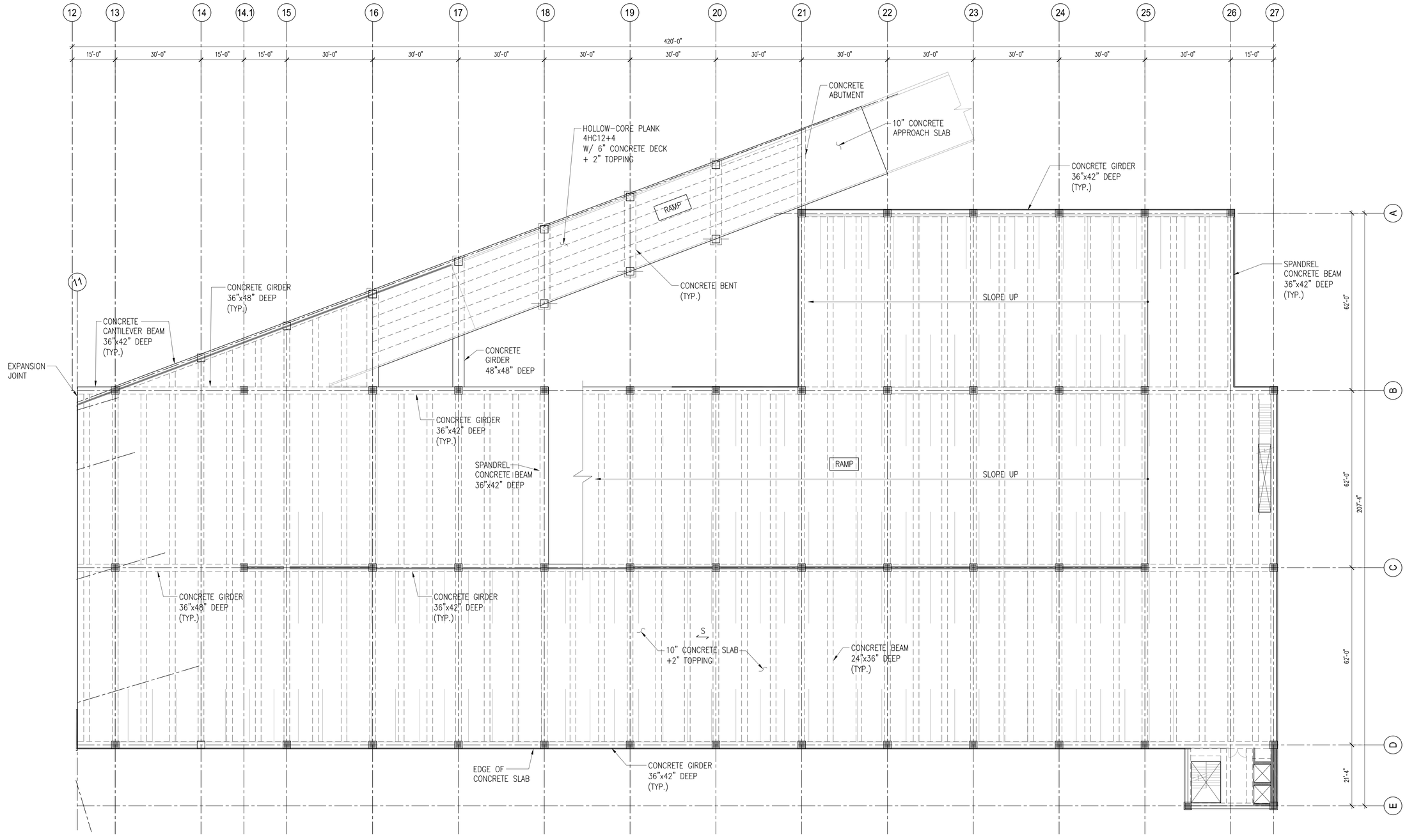


# S08

DWG NO

PARKING GARAGE
SECOND FLOOR FRAMING PLAN

DWG TITLE

# GEORGETOWN SPECIAL TAXING DISTRICT

## INTERMODAL TRANSPORTATION HUB

GEORGETOWN CONNECTICUT

SCHEMATIC DESIGN SET


LiRo Architects + Engineers P.C.

111 Broadway, Suite 501
New York, New York 10006
212.563.0280 [P] 212.563.1841 [F]


© The LiRo Group All Rights Reserved

ISSUE DATE: 10 SEPTEMBER 2007
SCALE: 1/16" = 1'-0"
REVISION DATE: –
DWN BY: PR

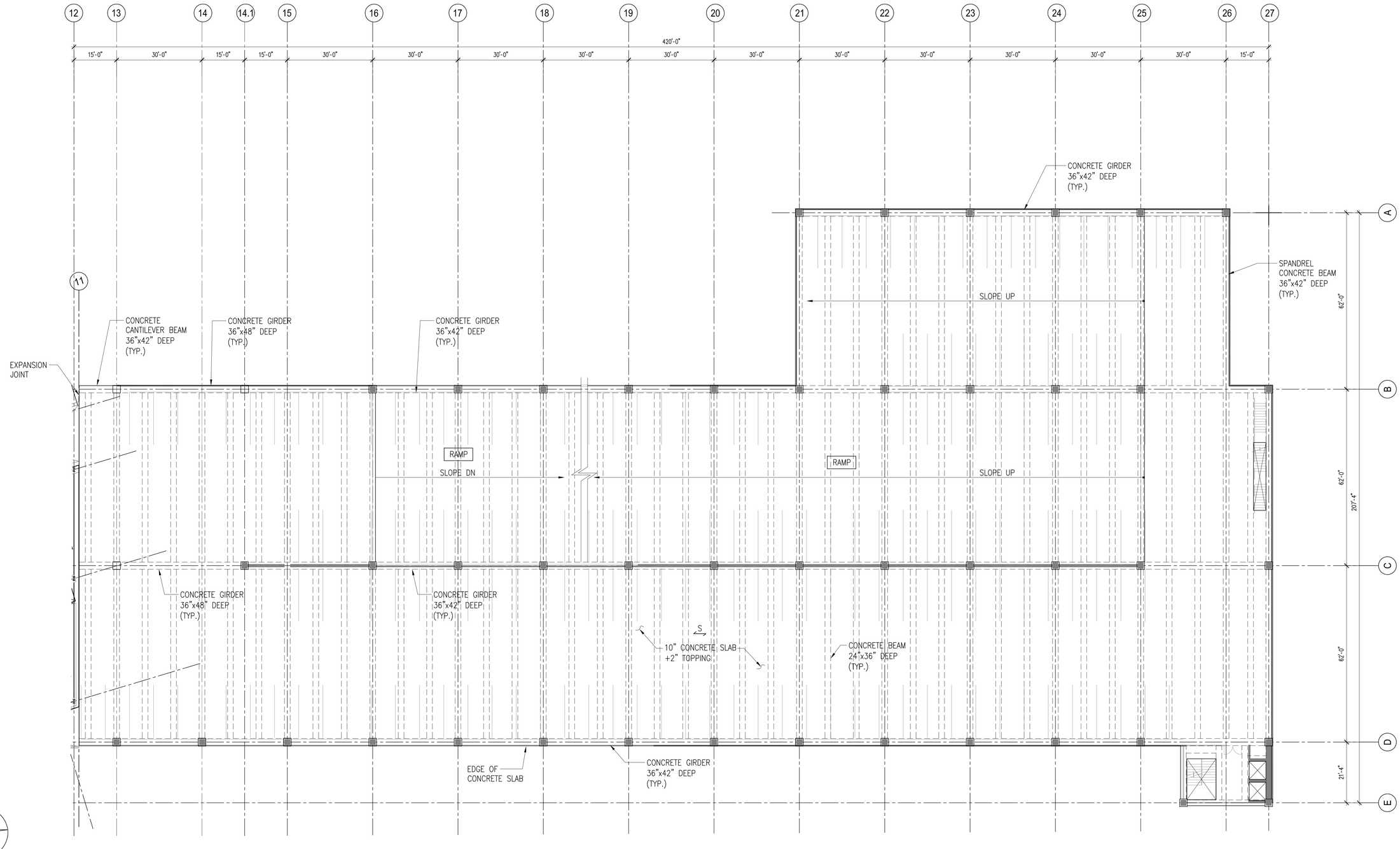


# GEORGETOWN SPECIAL TAXING DISTRICT

## INTERMODAL TRANSPORTATION HUB

GEORGETOWN CONNECTICUT

SCHEMATIC DESIGN SET

**S09**

DWG NO

PARKING GARAGE
THIRD FLOOR FRAMING PLAN

DWG TITLE

LiRo Architects + Engineers P.C.
111 Broadway, Suite 501
New York, New York 10006
212.563.0280 [P] 212.563.1841 [F]

© The LiRo Group All Rights Reserved

ISSUE DATE: 10 SEPTEMBER 2007
SCALE: 1/16" = 1'-0"
REVISION DATE: –
DWN BY: PR

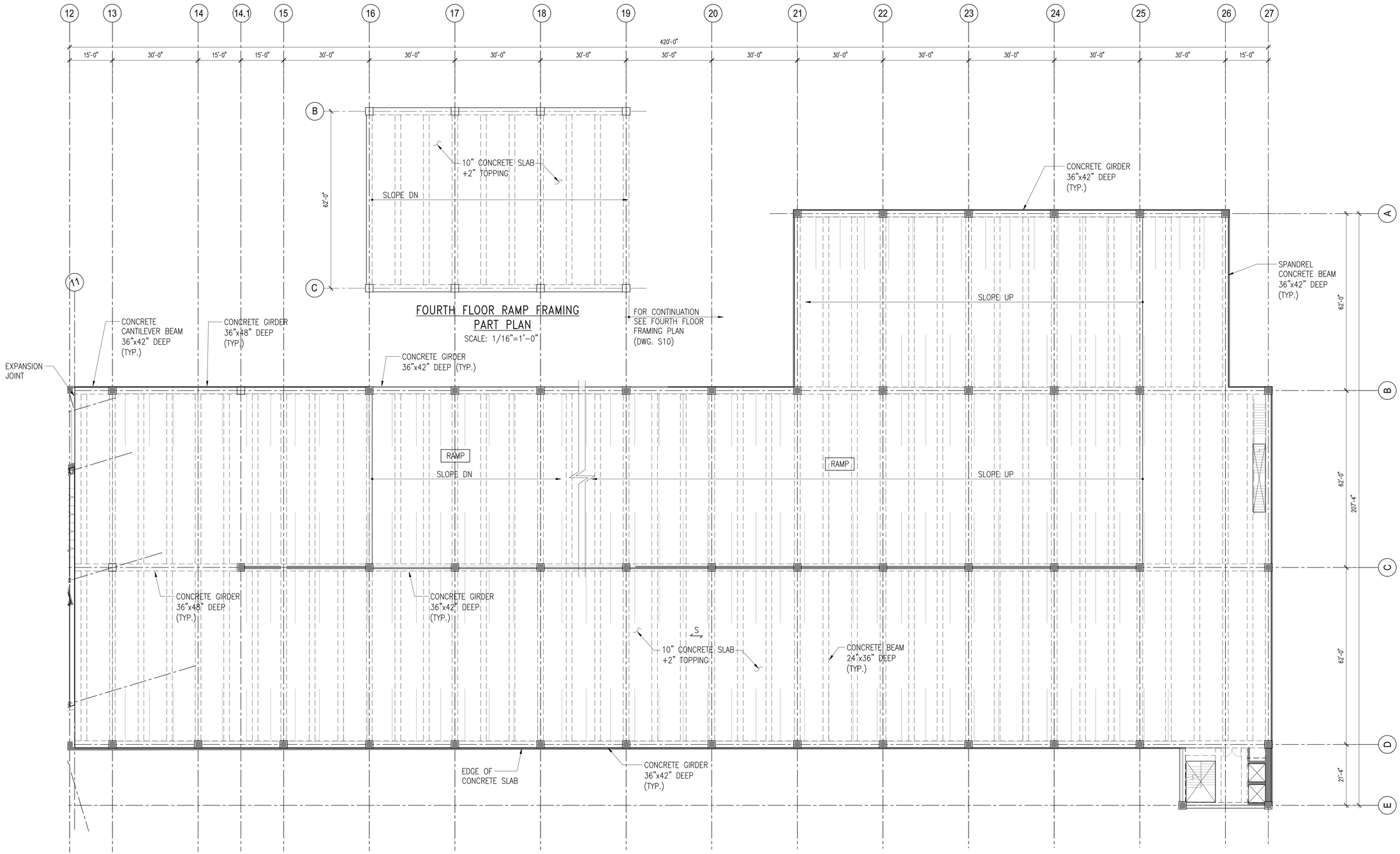


# S10

DWG NO

PARKING GARAGE
FOURTH FLOOR FRAMING PLAN

DWG TITLE

# GEORGETOWN SPECIAL TAXING DISTRICT

## INTERMODAL TRANSPORTATION HUB

GEORGETOWN CONNECTICUT

SCHEMATIC DESIGN SET

LiRo Architects + Engineers P.C.
111 Broadway, Suite 501
New York, New York 10006
212.563.0280 [P] 212.563.1841 [F]

© The LiRo Group All Rights Reserved

ISSUE DATE: 10 SEPTEMBER 2007 SCALE: 1/16" = 1'-0"

REVISION DATE: – DWN BY: PR

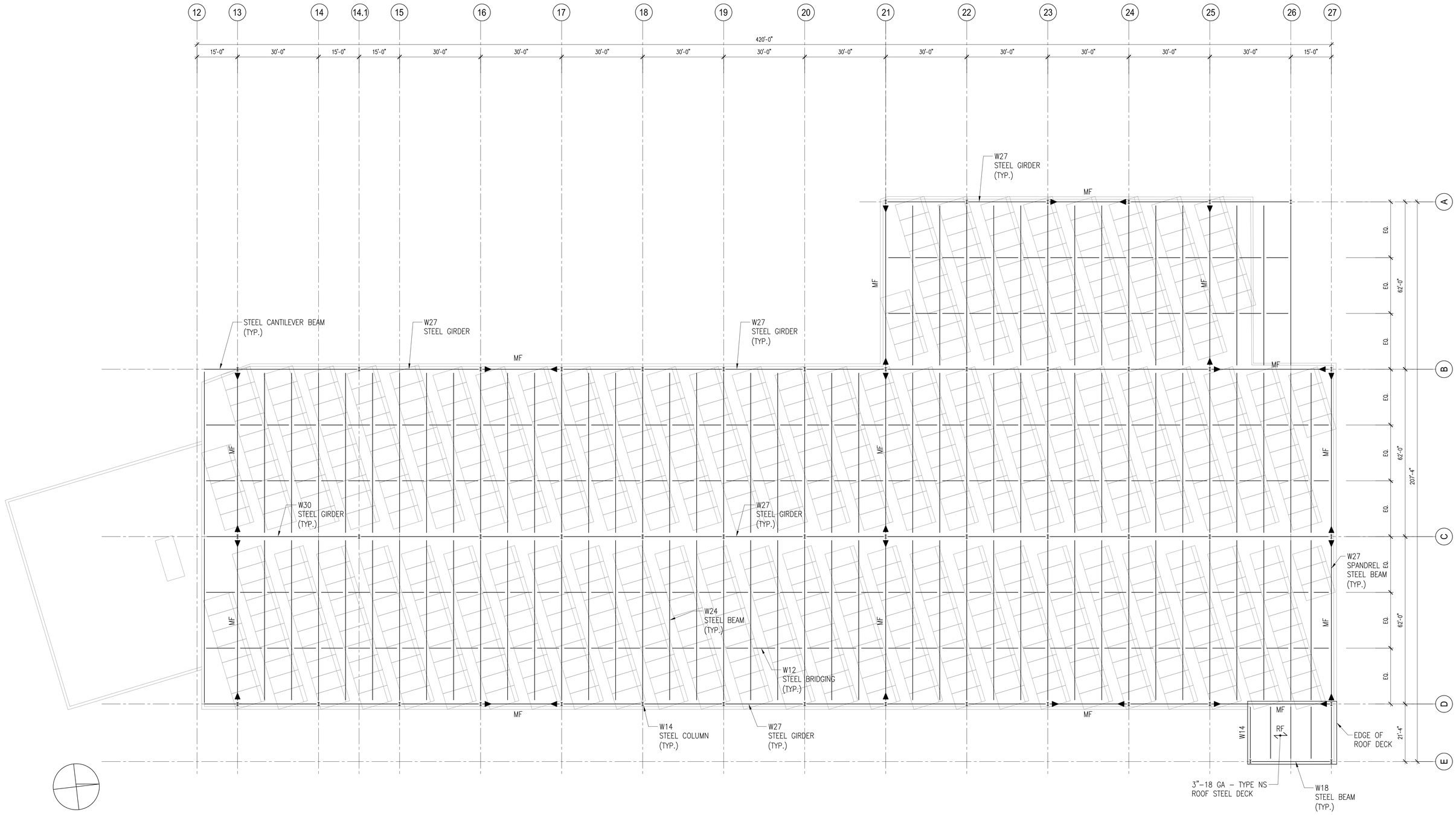


# S11

DWG NO

PARKING GARAGE
ROOF (TRELLIS) FRAMING PLAN

DWG TITLE

## GEORGETOWN SPECIAL TAXING DISTRICT

INTERMODAL TRANSPORTATION HUB

GEORGETOWN CONNECTICUT

LiRo Architects + Engineers P.C.

111 Broadway, Suite 501
New York, New York 10006
212.563.0280 [P] 212.563.1841 [F]

© The LiRo Group All Rights Reserved

ISSUE DATE: AUGUST 2007 SCALE: 1/16" = 1'–0"

REVISION DATE: – DWN BY: PR

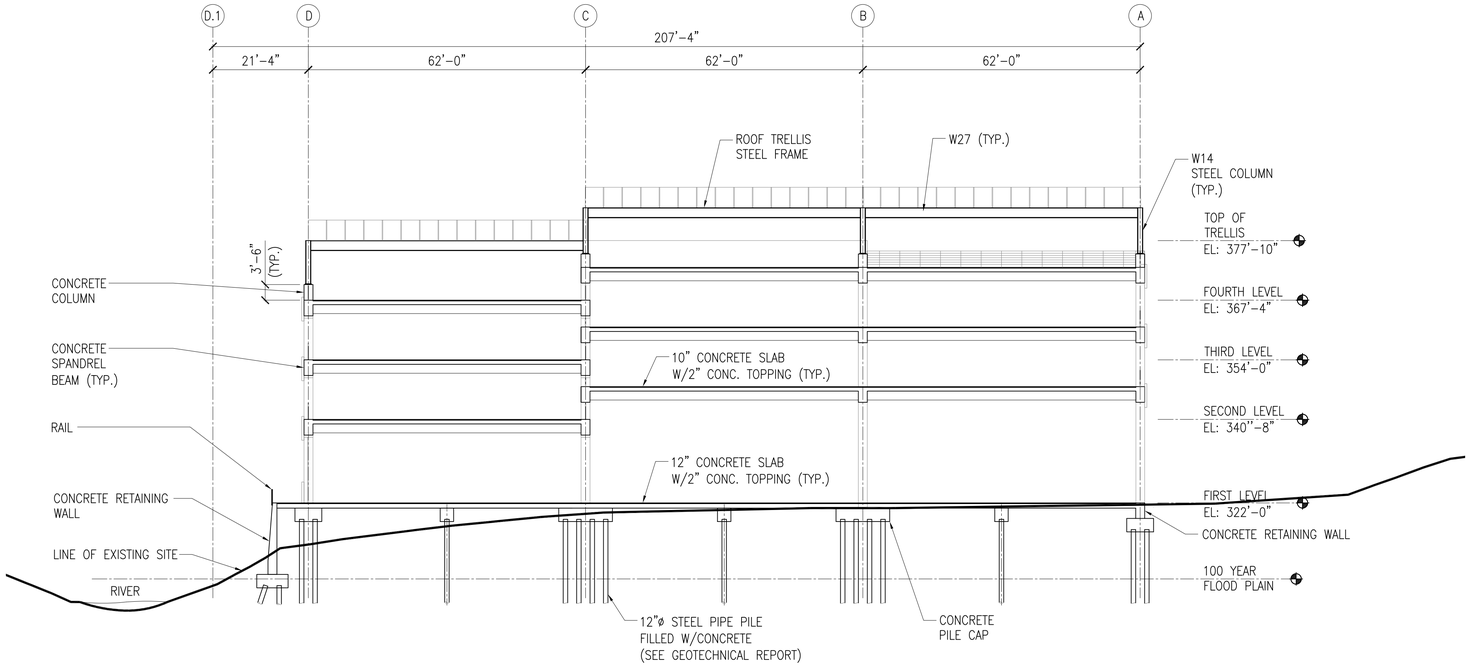


1/S02 SECTION
SCALE: 1/16"=1'–0"

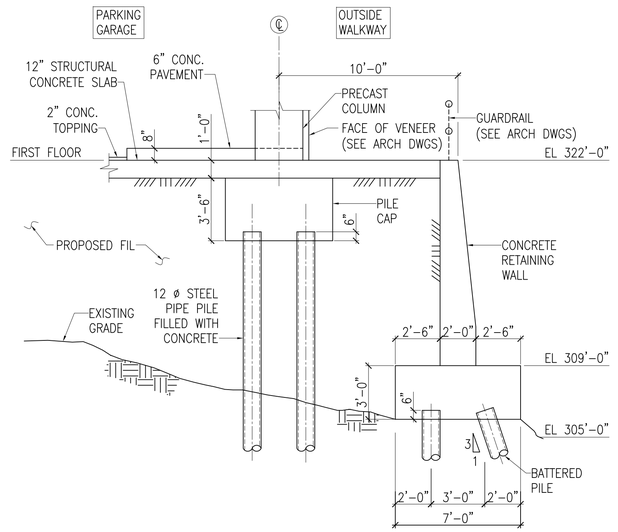


2/S02 SECTION
SCALE: 1/4"=1'–0"

**S13**

DWG NO

PARKING GARAGE
SECTIONS AND DETAILS

DWG TITLE

# GEORGETOWN SPECIAL TAXING DISTRICT
## INTERMODAL TRANSPORTATION HUB
GEORGETOWN CONNECTICUT

SCHEMATIC DESIGN SET

LiRo Architects + Engineers P.C.
111 Broadway, Suite 501
New York, New York 10006
212.563.0280 [P] 212.563.1841 [F]

© The LiRo Group All Rights Reserved

ISSUE DATE: 10 SEPTEMBER 2007 SCALE: AS SHOWN
REVISION DATE: – DWN BY: PR

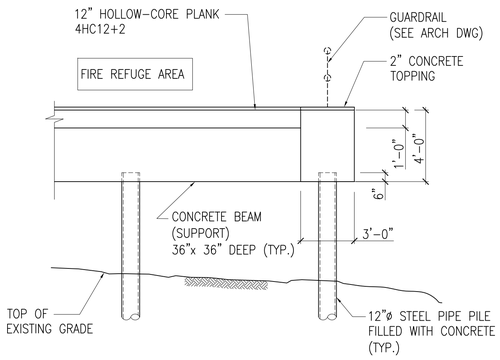


1 / S04 SECTION
SCALE: 1/4"=1'-0"

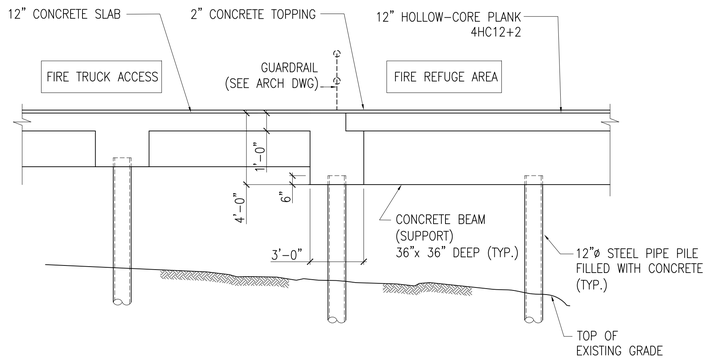


2 / S04 SECTION
SCALE: 1/4"=1'-0"

DWG NO **S15**

DWG TITLE FIRE REFUGE AREA
SECTIONS AND DETAILS

# GEORGETOWN SPECIAL TAXING DISTRICT
## INTERMODAL TRANSPORTATION HUB
GEORGETOWN CONNECTICUT

SCHEMATIC DESIGN SET

LiRo Architects + Engineers P.C.
111 Broadway, Suite 501
New York, New York 10006
212.563.0280 [P] 212.563.1841 [F]

© The LiRo Group All Rights Reserved

ISSUE DATE: 10 SEPTEMBER 2007 SCALE: AS SHOWN
REVISION DATE: – DWN BY: PR

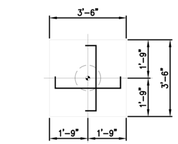


PC1

DEPTH=36"
REINF.=4H-#6 E.W.

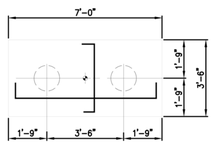


PC2

DEPTH=38"
REINF.=4H-#9 L.W.
5H-#4 S.W.

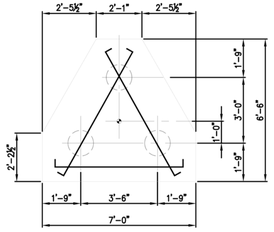


PC3

DEPTH=40"
REINF.=3H-#9 (3 WAYS)

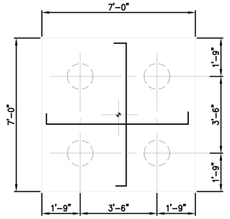


PC4

DEPTH=36"
REINF.=10H-#8 L.W.
10H-#8 S.W.

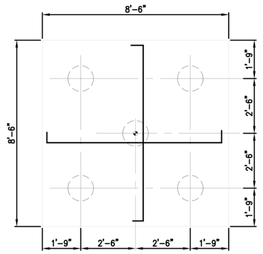


PC5

DEPTH=40"
REINF.=9H-#9 L.W.
9H-#9 S.W.

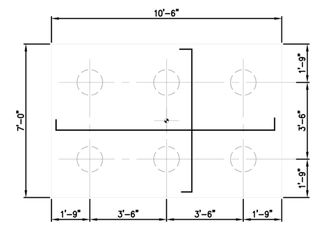


PC6

DEPTH=46"
REINF.=12H-#8 L.W.
12H-#8 S.W.

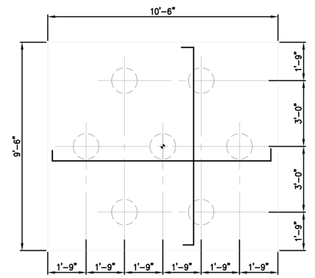


PC7

DEPTH=50"
REINF.=12H-#8 L.W.
10H-#9 S.W.

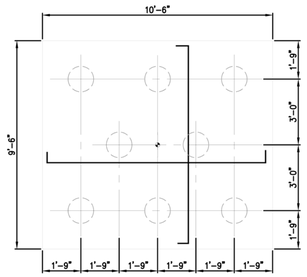


PC8

DEPTH=50"
REINF.=13H-#9 L.W.
14H-#9 S.W.

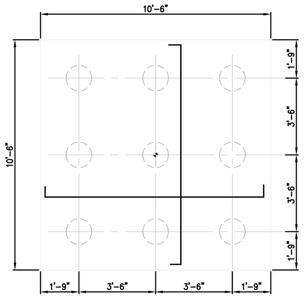


PC9

DEPTH=52"
REINF.=15H-#9 L.W.
15H-#9 S.W.

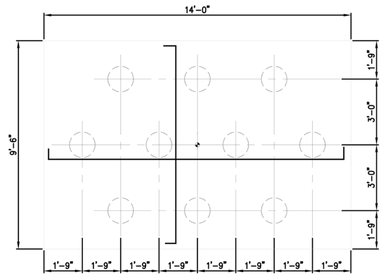


PC10

DEPTH=52"
REINF.=12H-#10 L.W.
14H-#9 S.W.

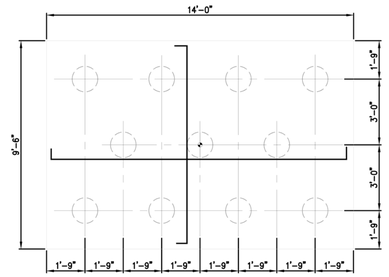


PC11

DEPTH=54"
REINF.=13H-#10 L.W.
19H-#8 S.W.

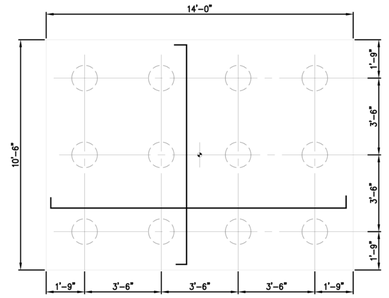


PC12

DEPTH=56"
REINF.=20H-#9 L.W.
17H-#9 S.W.

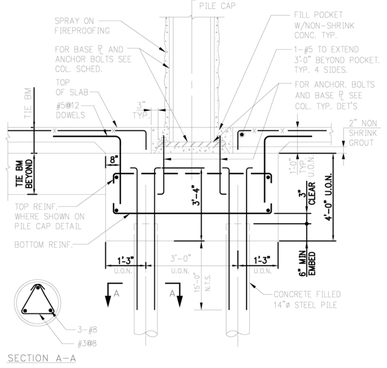


TYPICAL INTERIOR PILE CAP DETAIL

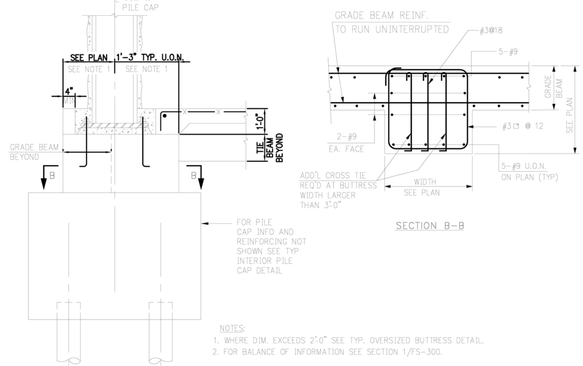


TYPICAL EXTERIOR PIEL CAP AND BUTTRESS DETAIL

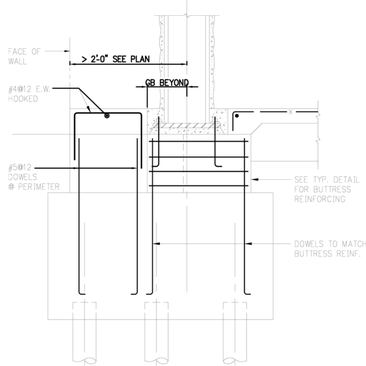


TYPICAL OVERSIZED BUTTRESS DETAIL

NOTES:
1. REF. CODE = LATEST ACI 318.
2. CLASS "B": AS (PROVIDED)/AS (REQUIRED)<2 WITH MORE THAN 50% OF BARS SPLICED.
3. TABLE VALUES ARE IN INCHES.
4. LAP SPLICE LENGTH NOT TO BE LESS THAN 12".
5. LAP SPLICE FOR BARS #14 & #18 IS NOT PERMITTED, USE WELDED OR MECHANICAL SPLICES ACCORDING TO LATEST ACI 318-SECTION-12.14.3.
6. TYPES 1,2, AND 3 ARE DEFINED AS FOLLOW:
   TYPE-1 = SEC.-12,2,3,1: BARS SATISFYING ANY ONE OF THE FOLLOWING CONDITIONS A,B, OR C:
   (A)- BARS IN C.II .P. BEAMS AND COLUMNS WITH CLEAR SPACING OF BARS NOT LESS THAN 3db
   (B)- INNER LAYER BARS OF SLAB OR WALL WITH CLEAR SPACING NOT LESS THAN 3db.
   (C)- BARS WITH COVER NOT LESS THAN 2db AND WITH CLEAR SPACING NOT LESS THAN 3db.
   TYPE-2 = SEC.-12,2,3,2: BARS WITH COVER NOT MORE THAN db, OR WITH CLEAR SPACING NOT MORE THAN 2db.
   TYPE-3 = SEC.-12,2,3,3: BARS NOT INCLUDED IN TYPE 1 OR 2.
7. LAP SPLICE LENGTHS IN TABLE ABOVE MUST BE MULTIPLIED WITH THE FOLLOWING FACTORS:

| FOR | MODIFICATION FACTOR |
|---|---|
| a. TOP BARS: | 1.3 |
| b. LIGHT WEIGHT CONCRETE: | 1.3 |

8. CONCRETE: REGULAR WEIGHT (W=145-150 pcf) IN PSI
9. REINFORCING BASE: Fy=60,000 PSI .

TABLE # 1

| BAR SIZE | EMBEDMENT LENGTH |
|---|---|
| # 4 | 11" |
| # 5 | 14" |
| # 6 | 16" |
| # 7 | 19" |
| # 8 | 22" |
| # 9 | 25" |
| # 10 | 28" |
| # 11 | 31" |
| # 14 | 37" |
| # 18 | 49" |

TABLE #2
TENSION LAP SPLICES - CLASS "B"
(NOT APPLICABLE FOR TENSION TIE MEMBER)

| BAR SIZE | TYPE - 1 | | | | | TYPE - 2 | | | | | TYPE - 3 | | | | |
|---|---|---|---|---|---|---|---|---|---|---|---|---|---|---|---|
| | 3000 | 3500 | 4000 | 5000 | 6000 | 3000 | 3500 | 4000 | 5000 | 6000 | 3000 | 3500 | 4000 | 5000 | 6000 |
| #3 | 16 | 16 | 14 | 13 | 12 | 16 | 16 | 14 | 13 | 12 | 16 | 16 | 14 | 13 | 12 |
| #4 | 21 | 20 | 18 | 17 | 15 | 23 | 21 | 20 | 18 | 17 | 21 | 20 | 18 | 17 | 15 |
| #5 | 27 | 25 | 23 | 21 | 19 | 35 | 33 | 31 | 27 | 25 | 27 | 25 | 23 | 21 | 19 |
| #6 | 33 | 30 | 27 | 25 | 23 | 51 | 46 | 43 | 39 | 36 | 35 | 33 | 30 | 27 | 25 |
| #7 | 38 | 35 | 33 | 29 | 26 | 69 | 64 | 60 | 53 | 49 | 48 | 44 | 42 | 38 | 34 |
| #8 | 46 | 42 | 39 | 35 | 32 | 90 | 83 | 78 | 70 | 64 | 62 | 59 | 55 | 49 | 45 |
| #9 | 57 | 53 | 49 | 44 | 40 | 114 | 105 | 99 | 88 | 81 | 79 | 74 | 69 | 62 | 57 |
| #10 | 73 | 68 | 62 | 56 | 51 | 144 | 134 | 125 | 112 | 102 | 101 | 95 | 88 | 78 | 71 |
| #11 | 88 | 82 | 77 | 69 | 63 | 178 | 164 | 153 | 138 | 126 | 125 | 116 | 108 | 96 | 88 |

PROGRESS SET
DATE: 04-29-08

LiRo Architects + Engineers P.C.
111 Broadway, Suite 501
New York, New York 10006
212.563.0280 [P] 212.563.1841 [F]
© The LiRo Group All Rights Reserved

Ysrael A. Seinuk P.C.
Structural Engineers
One Woodbridge Center, Ste 510
Woodbridge, New Jersey 07095
732.636.3700 [P]

Landmark Facilities Group, INC.
252 East Avenue
Norwalk, Connecticut 06855
203.866.4626 [P] 203.866.8019 [F]

Ellana, Inc.
Cost Consulting
40 Exchange Place, 19th Floor
New York, New York 10005
212.971.0936 [P] 212.361.6169 [F]

GEORGETOWN SPECIAL TAXING DISTRICT

INTERMODAL TRANSPORTATION HUB
GEORGETOWN CONNECTICUT

ISSUE DATE: 02/14/08
REVISION DATE:
SCALE: AS NOTED
DWN BY: CAD
DWG TITLE: TYPICAL FOUNDATION DETAILS I

DWG NO
FS-200

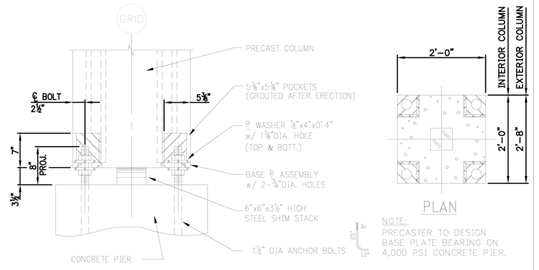


1 PS-600 TYPICAL COLUMN TO BASE/FOUNDATION DETAIL
SCALE: 1"=1'-0"

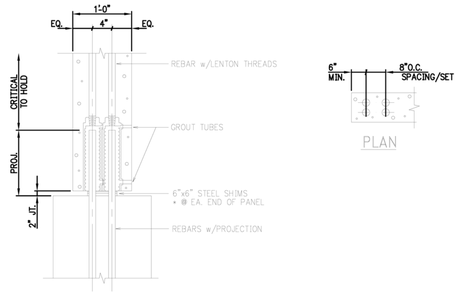


2 PS-600 WALL PANEL/FOUNDATION
SCALE: 1"=1'-0"

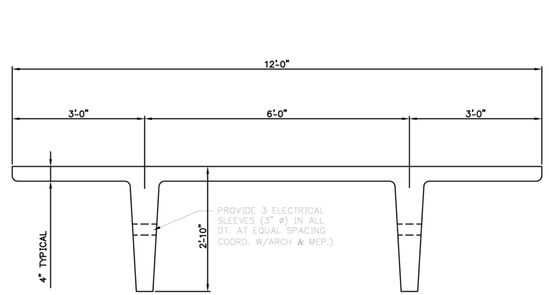


3 PS-600 TYPICAL DOUBLE TEE
SCALE: ¾"=1'-0"

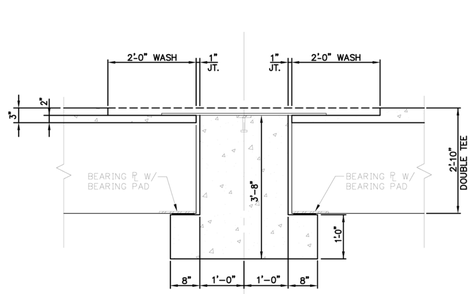


4 PS-600 TEE TO INVERTED 'T' GIRDER
SCALE: ¾"=1'-0"

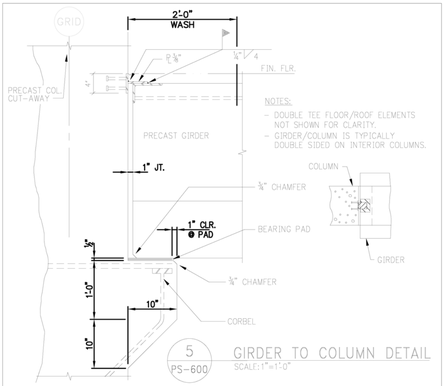


5 PS-600 GIRDER TO COLUMN DETAIL
SCALE: 1"=1'-0"

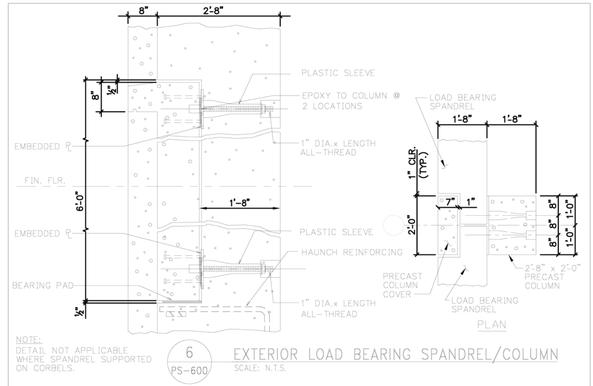


NOTE:
DETAIL NOT APPLICABLE WHERE SPANDREL SUPPORTED ON CORBELS.

6 PS-600 EXTERIOR LOAD BEARING SPANDREL/COLUMN
SCALE: N.T.S.

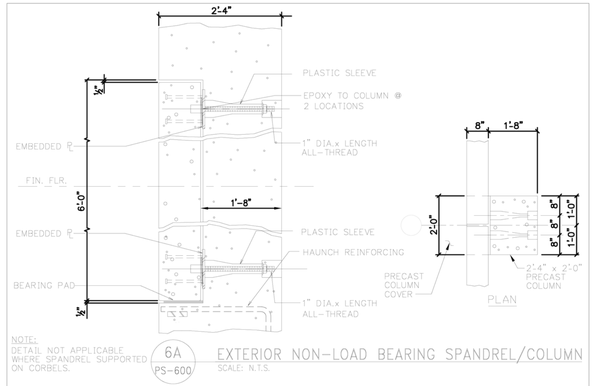


NOTE:
DETAIL NOT APPLICABLE WHERE SPANDREL SUPPORTED ON CORBELS.

6A PS-600 EXTERIOR NON-LOAD BEARING SPANDREL/COLUMN
SCALE: N.T.S.

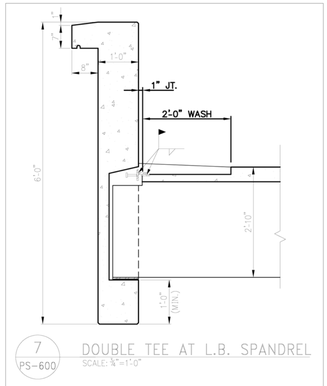


7 PS-600 DOUBLE TEE AT L.B. SPANDREL
SCALE: ¾"=1'-0"

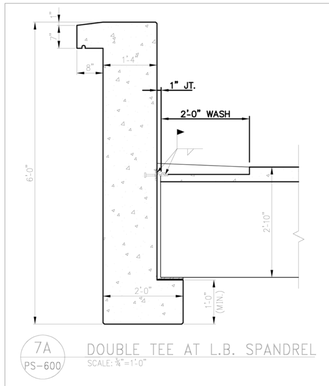


7A PS-600 DOUBLE TEE AT L.B. SPANDREL
SCALE: ¾"=1'-0"

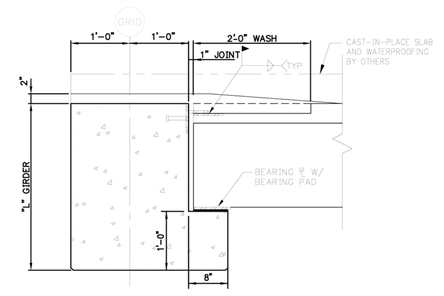


8 PS-600 DOUBLE TEE AT "L" BEAM
SCALE: 1"=1'-0"

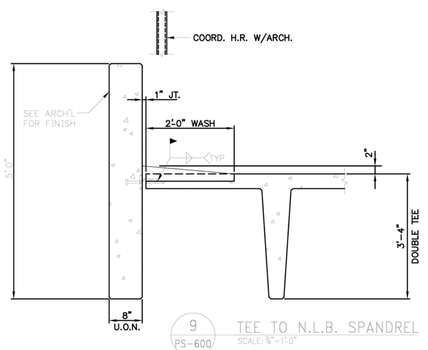


9 PS-600 TEE TO N.L.B. SPANDREL
SCALE: ¾"=1'-0"

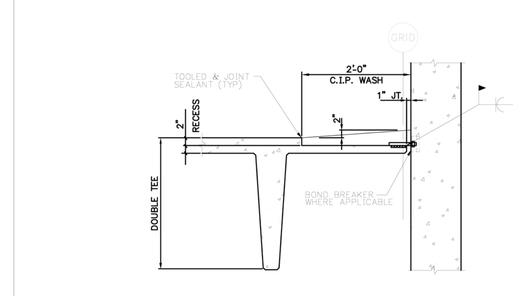


10 PS-600 SECTION DOUBLE TEE AT CONCRETE SHEAR WALL
SCALE: ¾"=1'-0"

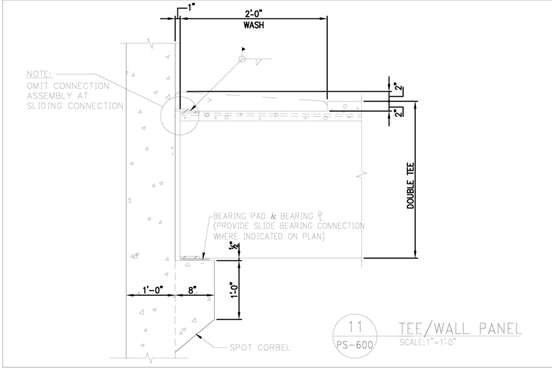


11 PS-600 TEE/WALL PANEL
SCALE: 1"=1'-0"

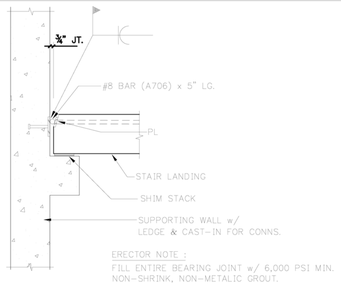


12 PS-600 STAIR LANDING/SUPPORT WALL
SCALE: 1"=1'-0"

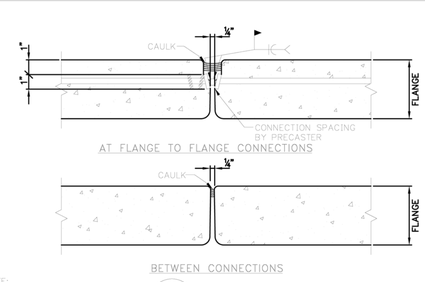


NOTE:
DIAPHRAGM CHORD CONNECTIONS NOT SHOWN

13 PS-600 TEE TO TEE
SCALE: 3"=1'-0"

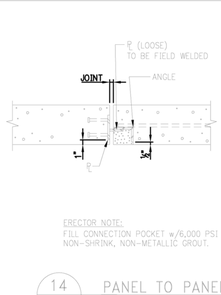


ERECTOR NOTE:
FILL CONNECTION POCKET w/6,000 PSI MIN. NON-SHRINK, NON-METALLIC GROUT.

NOTE:
EDGE DISTANCE < 1'-5" (PANEL EDGE TO CENTER OF CONNECTION).

14 PS-600 PANEL TO PANEL
SCALE: 1"=1'-0"

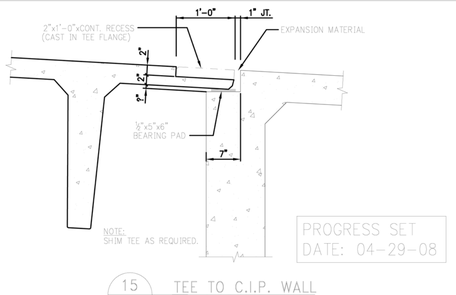


PROGRESS SET
DATE: 04-29-08

15 PS-600 TEE TO C.I.P. WALL
SCALE: 1"=1'-0"

LiRo Architects + Engineers P.C.
111 Broadway, Suite 501
New York, New York 10006
212.563.0280 [P] 212.563.1841 [F]

© The LiRo Group All Rights Reserved

Ysrael A. Seinuk P.C.
Structural Engineers
One Woodbridge Center, Ste 510
Woodbridge, New Jersey 07095
732.636.3700 [P]

Landmark Facilities Group, INC.
252 East Avenue
Norwalk, Connecticut 06855
203.866.4626 [P] 203.866.8019 [F]

Ellana, Inc.
Cost Consulting
40 Exchange Place, 19th Floor
New York, New York 10005
212.971.0936 [P] 212.361.6169 [F]

# GEORGETOWN SPECIAL TAXING DISTRICT

## INTERMODAL TRANSPORTATION HUB
GEORGETOWN CONNECTICUT

ISSUE DATE: 01/08/08
REVISION DATE:
SCALE: AS NOTED
DWN BY: CAD

DWG NO **PS-600**

DWG TITLE TYPICAL (PRECAST) SUPERSTRUCTURE DETAILS 1

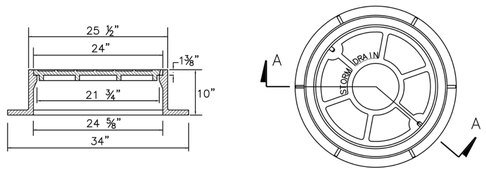


## MANHOLE FRAME & COVER

N.T.S.

NOTE:
MANHOLE FRAMES & COVERS SHALL BE PATTERN #1204 AS MANUFACTURED BY THE "CAMPBELL FOUNDRY COMPANY" OF NORTH HAVEN, CONNECTICUT, OR APPROVED EQUAL. FINAL SPECIAL DESIGN OF MH COVERS TO BE DETERMINED.

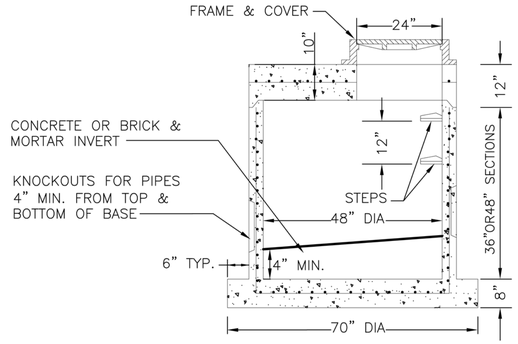


## SHALLOW DRAIN MANHOLE

N.T.S.

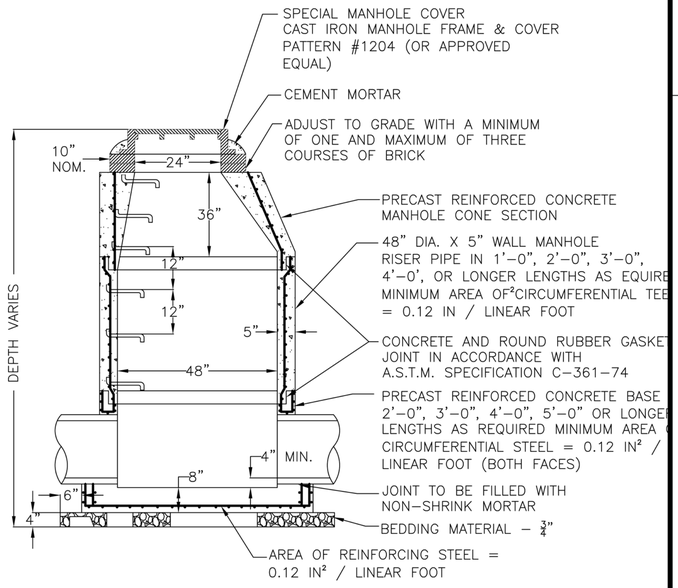


## MANHOLE DETAIL

N.T.S.

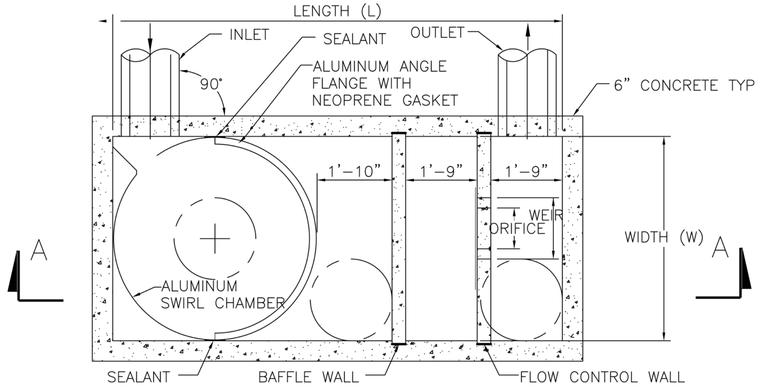


## PLAN VIEW B – B

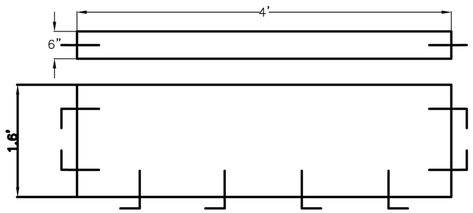


## CONCRETE WEIR

N.T.S.

THE BYPASS WEIR SHALL BE CAST INTO THE 4' DIAMETER MANHOLE USING TWO #5 BARS, EACH SIDE TO KEY INTO MANHOLE WALL. ONCE CONCRETE HAS CURED, THE INTERSECTION OF THE WEIR WALL AND THE MANHOLE SHALL BE CAULKED WITH A WATER REPELLENT SEALER. SEE DRAINAGE PLAN FOR PROPOSED LAYOUT OF STR # 10

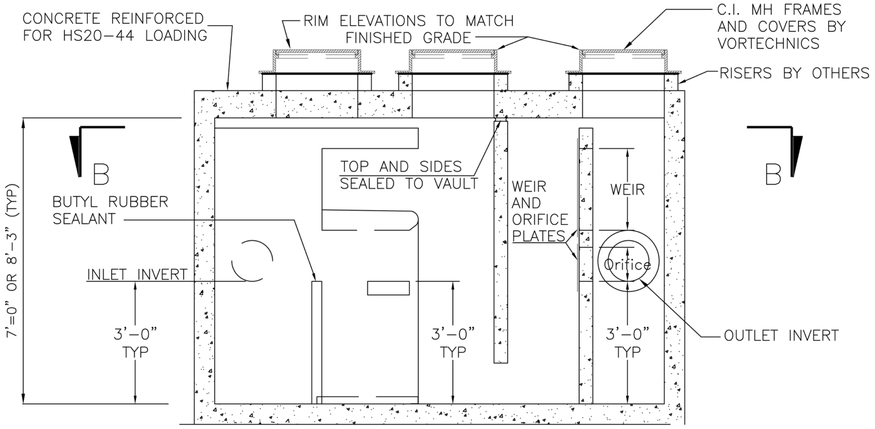


## SECTION A–A

| VORTECHS MODEL | GIFT CHAMBER DIAMETER/AREA FT/FT² | TREATED FLOW CFS | SEDIMENT STORAGE YDS² | APPROX. SIZE L X W FT |
|---|---|---|---|---|
| 1000 | 3.67/11 | 1.6 | 0.75 | 10 x 3.67 |
| 2000 | 4/13 | 2.8 | 1.25 | 10 x 4 |
| 3000 | 5/20 | 4.5 | 1.75 | 11 x 5 |
| 4000 | 6/28 | 6.0 | 2.5 | 12 x 6 |
| 5000 | 7/38 | 8.5 | 3.25 | 13 x 7 |
| 7000 | 8/50 | 11.0 | 4.0 | 14 x 8 |
| 9000 | 9/64 | 14.0 | 4.75 | 15 x 9 |
| 11000 | 10/79 | 17.5 | 5.5 | 16 x 10 |
| 16000 | 12/113 | 25.0 | 7.0 | 18 x 12 |

This CADD file is for the purpose of specifying stormwater treatment equipment to be furnished by Vortechnics, Inc. and may only be transferred to other documents exactly as provided by Vortechnics. Title block information, excluding the Vortechnics logo and the Vortechs Stormwater Treatment System designation and patent number, may be deleted if necessary. Revisions to any part of this CADD file without prior coordination with Vortechnics shall be considered unauthorized use of proprietary information.

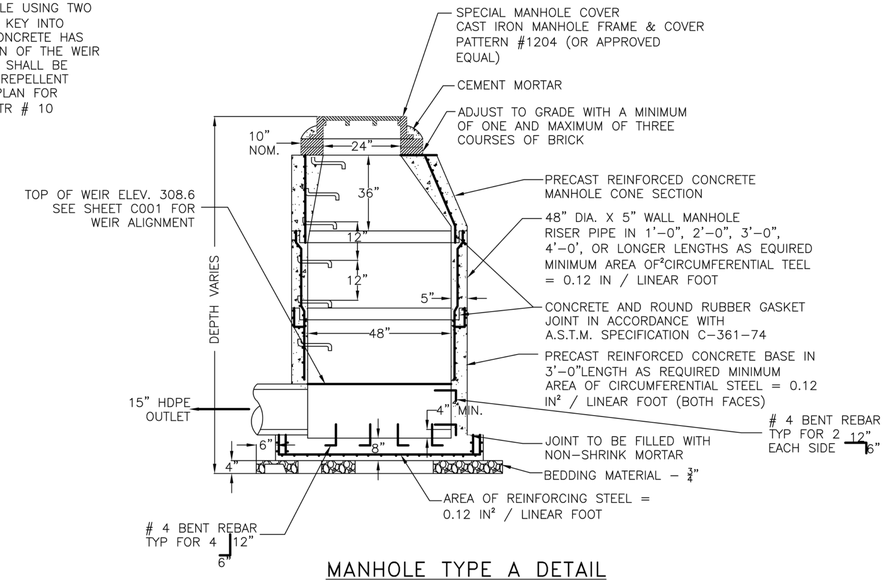


## MANHOLE TYPE A DETAIL

N.T.S.

GEORGETOWN

Intermodal Transportation Hub

Owner:
Georgetown Redevelopment Company
1 North Main Street, P.O. Box 630
Georgetown, Connecticut 06829
(203) 544-8383

Applicant:
Georgetown Special Taxing District
1 North Main Street, P.O. Box 630
Georgetown, Connecticut 06829
(203) 544-8383

Project Counsel:
Richard S. Gibbons, Attorney at Law
27 Imperial Avenue
Westport, Connecticut 06880
(203) 544-8323

Tax District Counsel:
Shipman & Goodwin LLP
One Constitution Plaza
Hartford, Connecticut 06103
(860) 251-5000

Architects:
Liro Architects & Engineers, P.C.
111 Broadway, Suite 501
New York, New York 10006
(212)563-0280

Site Civil Engineer
Liro Engineers, Inc
3 Aerial Way
Syosset, N.Y. 11791
(516)938-5476

Traffic Engineer:
Fitzgerald & Halliday Inc.
72 Cedar Street
Hartford, Connecticut 06106
(860) 767-3044

Environmental Engineer/Surveyor:
Fuss & O'Neill, Inc.
146 Hartford Road
Manchester, Connecticut 06040
(860) 646-2469

GeoTechnical Engineer
Geo Design, Inc
984 Southford Road
Middlebury, Connecticut 06762
(203)758-8836

Site Civil Engineer:
Tighe & Bond
1000 Bridgeport Avenue
Shelton, Connecticut 06484
(203) 712-1100

Landscape Planning:
Solaris Landscape Architecture
88 Main Street South, Suite A201
Southburry, Connecticut 06488
(203)264-6442

Environmental Land Solutions, LLC
(203) 855-7879
8 Knight Street, Suite 203
Norwalk, Connecticut 06851

| | |
|---|---|
| ISSUE DATE: | 04/22/08 |
| REVISION DATE: | --- |
| SCALE: | --- |
| DWN BY: | --- |

DWG TITLE:

STORM DRAINAGE STRUCTURES

DWG NO

C017

C:\Projects\07-28-0007 - Georgetown Hub\Engineering\Design Phase\Drawings\ - Current Working Drawings\Grading\C017 MANHOLE DETAILS.dwg, C017 - 4/22/2008 3:45:52 PM, Dmitry

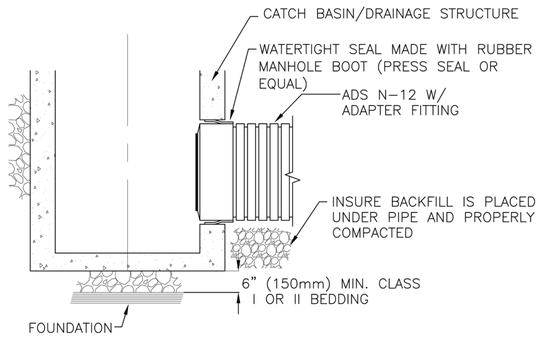


TRENCH SIDE VIEW

NOTES:

1. MAXIMUM INSERTION ANGLE TO BE DETERMINED BY BOOT MANUFACTURER.
2. MANHOLE BOOT TO BE CONNECTED TO ADS ADAPTER FITTING (SEE FITTINGS MANUAL DRAWINGS 310A AND 310B).

## WATERTIGHT MANHOLE/CATCH BASIN CONNECTION
## MANHOLE BOOT CONNECTION
N.T.S.

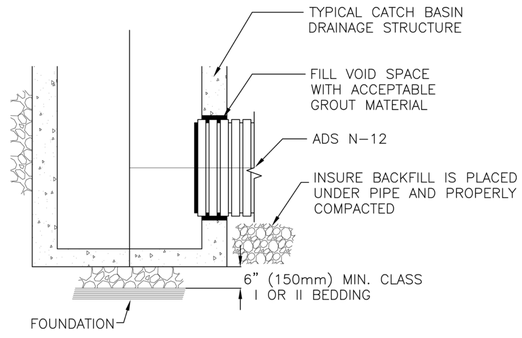


TRENCH SIDE VIEW

FILL VOID SPACE BETWEEN ADS PIPE AND MANHOLE OPENING WITH A NON-SHRINK GROUT MATERIAL

## GROUTED DRAINAGE STRUCTURE CONNECTION
## FOR NON-WATERTIGHT APPLICATIONS ONLY
N.T.S.

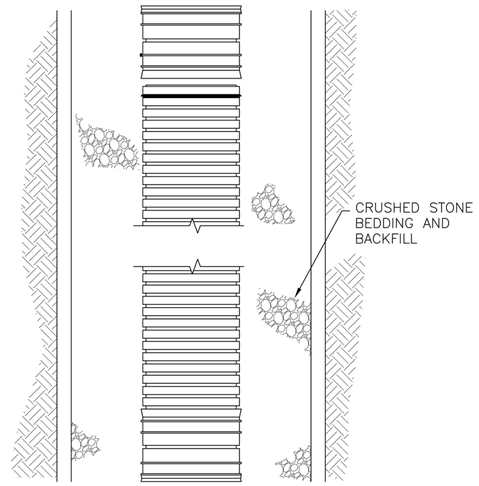


PLAN

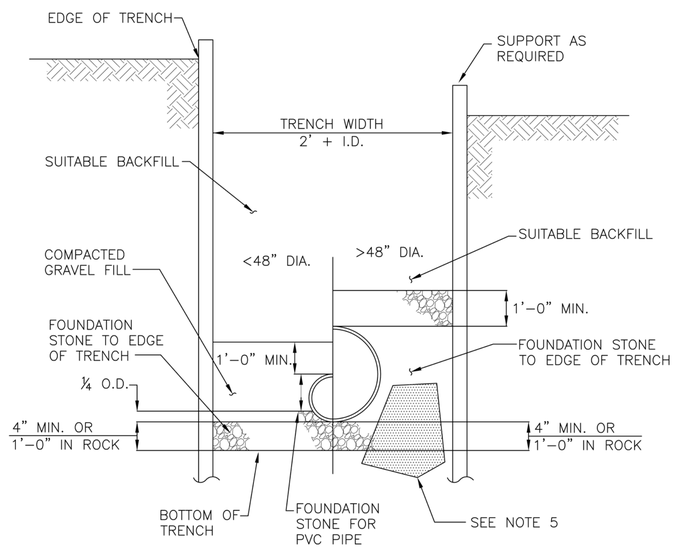


TRENCH SECTION

NOTE:

1. HIGH DENSITY POLYETHYLENE PIPE (HDPE) SHALL BE HANCOR HI-Q, OR ADS N-12, WITH WATER TIGHT JOINTS WITH RUBBER GASKETS, OR EQUAL PRODUCT APPROVED BY SITE ENGINEER.
2. REFER TO OTHER DETAILS FOR INFILTRATION PIPES.
3. INSTALL PER DETAIL & MANUFACTURER INSTRUCTIONS, PARTICULARLY REGARDING BACKFILL & COMPACTION.
4. ADD FILTER FABRIC AROUND CRUSHED STONE IF NECESSARY OR IF DIRECTED BY SITE ENGINEER.
5. REMOVE AND REPLACE UNSUITABLE MATERIAL AS ORDERED BY THE ENGINEE 2' MAXIMUM BELOW PIPE.

## TYP. HDPE STORM SEWER PIPE INSTALLATION
N.T.S.

GEORGETOWN

Intermodal Transportation Hub

Owner:
Georgetown Redevelopment Company
1 North Main Street, P.O. Box 630
Georgetown, Connecticut 06829
(203) 544-8383

Applicant:
Georgetown Special Taxing District
1 North Main Street, P.O. Box 630
Georgetown, Connecticut 06829
(203) 544-8383

Project Counsel:
Richard S. Gibbons, Attorney at Law
27 Imperial Avenue
Westport, Connecticut 06880
(203) 544-8323

Tax District Counsel:
Shipman & Goodwin LLP
One Constitution Plaza
Hartford, Connecticut 06103
(860) 251-5000

Architects:
Liro Architects & Engineers, P.C.
111 Broadway, Suite 501
New York, New York 10006
(212)563-0280

Site Civil Engineer
Liro Engineers, Inc
3 Aerial Way
Syosset, N.Y. 11791
(516)938-5476

Traffic Engineer:
Fitzgerald & Halliday Inc.
72 Cedar Street
Hartford, Connecticut 06106
(860) 767-3044

Environmental Engineer/Surveyor:
Fuss & O'Neill, Inc.
146 Hartford Road
Manchester, Connecticut 06040
(860) 646-2469

GeoTechnical Engineer
Geo Design, Inc
984 Southford Road
Middlebury, Connecticut 06762
(203)758-8836

Site Civil Engineer:
Tighe & Bond
1000 Bridgeport Avenue
Shelton, Connecticut 06484
(203) 712-1100

Landscape Planning:
Solaris Landscape Architecture
88 Main Street South, Suite A201
Southbury, Connecticut 06488
(203)264-6442

Environmental Land Solutions, LLC
(203) 855-7879
8 Knight Street, Suite 203
Norwalk, Connecticut 06851

| | |
|---|---|
| ISSUE DATE: | 04/22/08 |
| REVISION DATE: | --- |
| SCALE: | --- |
| DWN BY: | --- |

DWG TITLE:

STORM DRAINAGE PIPE INSTALLATION

DWG NO

C018

C:\Projects\07-08-0007 - Georgetown Hub\Engineering\Design Phase\Drawings\1 Current Working Drawings\CIVIL\DETAILS\C018-STORM DRAINAGE PIPE INSTALLATION.DWG, Layout2, 4/22/2008 3:47:07 PM, Greg

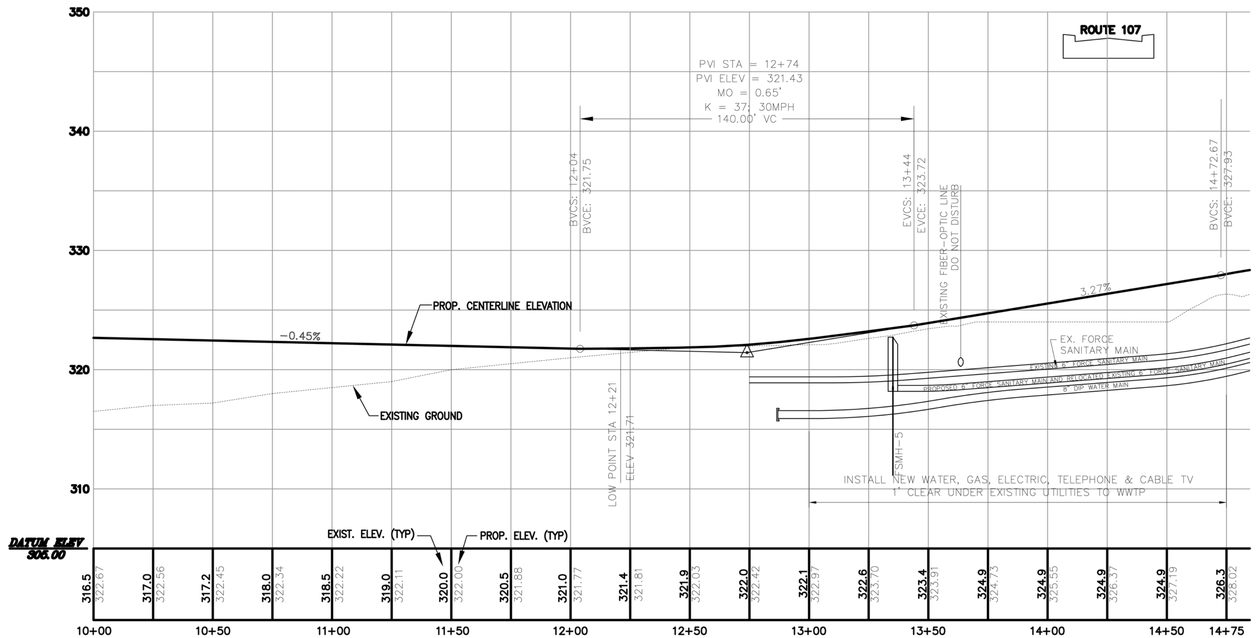


# ROAD PROFILE–STATION PLACE

## STATION PLACE PROFILE

**Scale: Hor. 1" = 30' Vert. 1" = 6'**

GEORGETOWN

Intermodal Transportation Hub

Owner:
Georgetown Redevelopment Corporation
1 North Main Street, P.O. Box 36
Georgetown, Connecticut 06829
(203) 544-8323

Applicant:
Georgetown Special Taxing District
1 North Main Street, P.O. Box 36
Georgetown, Connecticut 06829
(203) 544-8323

Project Counsel:
Richard S. Gibbons, Attorney at Law
27 Imperial Avenue
Westport, Connecticut 06880
(203) 227-9545

Tax District Counsel:
Shipman & Goodwin LLP
One Constitution Plaza
Hartford, Connecticut 06103
(860) 251-5000

Architects and Site/Civil Engineers:
LiRo Architects & Engineers, P.C.
111 Broadway, Suite 501
New York, New York 10006
(212)563-0280

District Engineer:
James Ford, Earth Tech
655 Winding Brook Drive, Suite 402
Glastonbury, CT, 06033-4337
(860) 494-4347

Traffic Engineer:
Fitzgerald & Halliday Inc.
72 Cedar Street
Hartford, Connecticut 06106
(860) 767-3044

Environmental Engineer/Surveyor:
Fuss & O'Neill, Inc.
146 Hartford Road
Manchester, Connecticut 06040
(860) 646-2469

GeoTechnical Engineer
Geo Design, Inc
984 Southford Road
Middlebury, Connecticut 06762
(203)758-8836

Site Civil Engineer:
Tighe & Bond
1000 Bridgeport Avenue
Shelton, Connecticut 06484
(203) 712-1100

Landscape Planning:
Solaris Landscape Architecture
88 Main Street South, Suite A201
Southbury, Connecticut 06488
(203)264-6442

Environmental Land Solutions, LLC
(203) 855-7879
8 Knight Street, Suite 203
Norwalk, Connecticut 06851

ISSUE DATE: 22 APRIL 2008
REVISION DATE: ---
SCALE: ---
DWN BY: AW

DWG TITLE:
ROAD PROFILE-STATION PLACE

DWG NO
C-019

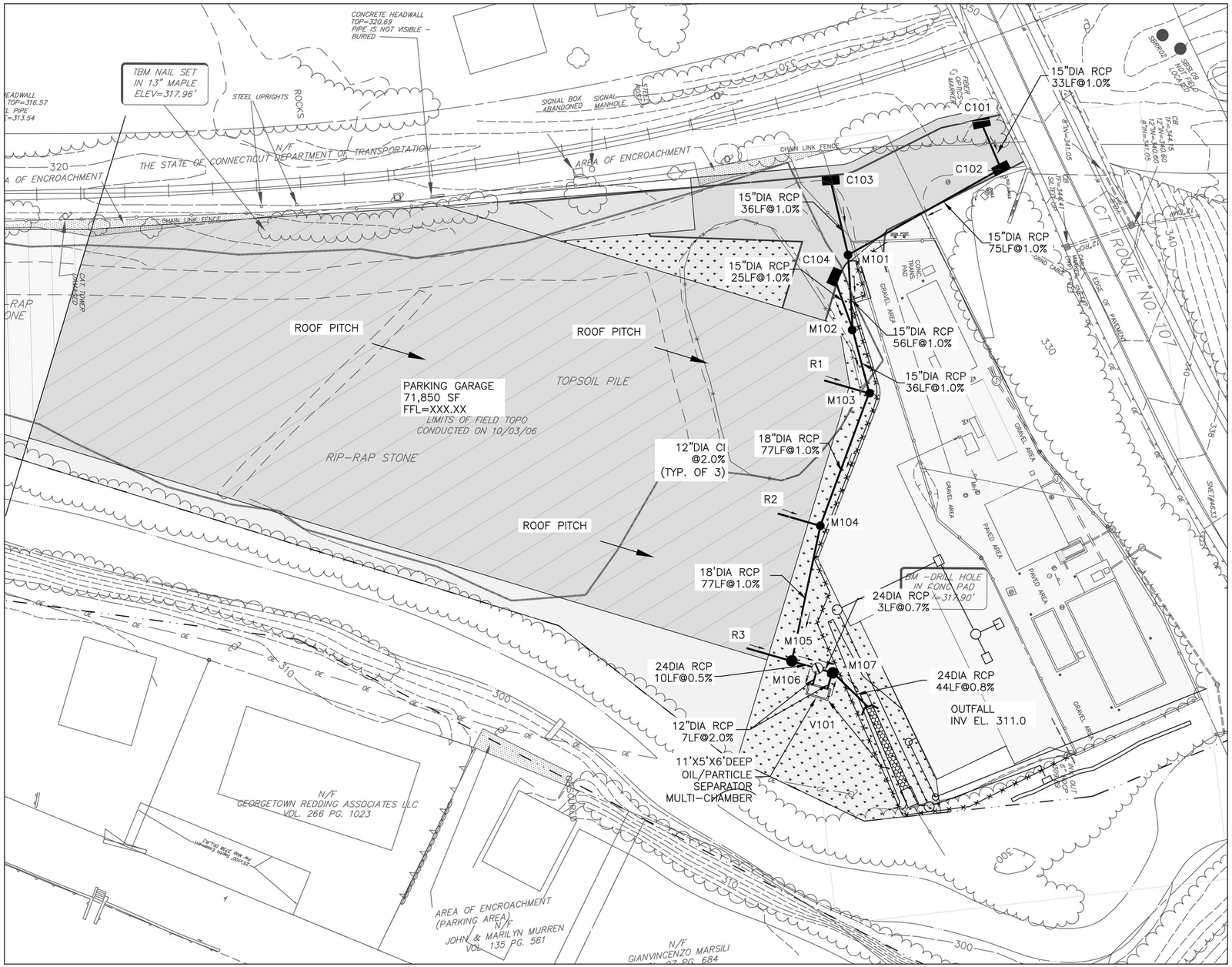


NOTES:

ALL MANHOLES ARE 5' DIA.

| SCHEDULE OF STRUCTURES | | | | | | | | |
|---|---|---|---|---|---|---|---|---|
| FROM | TO | TYPE | SIZE | LENGTH | SLOPE | RIM | INV. | |
| | | | | | | | IN | OUT |
| R1 | M104 | CI | 12" | --- | 2.0% | | --- | --- |
| R2 | M105 | CI | 12" | --- | 2.0% | | --- | --- |
| R3 | M106 | CI | 12" | --- | 2.0% | | --- | --- |
| C101 | C102 | CI | 12" | --- | 2.0% | | --- | --- |
| C102 | M102 | RCP | 15" | --- | 1.0% | | --- | --- |
| C103 | M101 | RCP | 15" | --- | 1.0% | | --- | --- |
| C104 | M103 | RCP | 15" | --- | 1.0% | | --- | --- |
| M101 | M102 | RCP | 15" | --- | 1.0% | | --- | --- |
| M102 | M103 | RCP | 15" | --- | 1.0% | | --- | --- |
| M103 | M104 | RCP | 15" | --- | 1.0% | | --- | --- |
| M104 | M105 | RCP | 18" | --- | 1.0% | | --- | --- |
| M105 | M106 | RCP | 18" | --- | 1.0% | | --- | --- |
| M106 | M107 | RCP | 24" | --- | 1.0% | | | |
| M106 | V101 | RCP | 12" | --- | 1.0% | | | |
| M107 | OUTLET | RCP | 24" | --- | 0.8% | | | |
| V101 | M107 | RCP | 12" | --- | 1.0% | | | |

R ROOF DRAIN
DC RAILROAD CANOPY
D DECK
C* CATCH BASIN (FIELD INLET) 5' DIA.
M* MANHOLE, 5' DIA.
CI CAST IRON
RCP REINFORCED CONCRETE PIPE

## TRIBUTARY AREA

| | AREA | SIZE |
|---|---|---|
| | PLATFORM AND CANOPY | (0.15AC) |
| | DECK | (0.30AC) |

## SITE DATA

**DRAFT**

## LEGEND

| PROPOSED | EXISTING | DESCRIPTION |
|---|---|---|
| N/A | | UTILITY POLE |
| | N/A | RIP RAP |
| | N/A | SCUPPER DRAIN |
| | | MAN HOLE |
| 300 | 300 | CONTOUR |
| N/A | | TREELINE |
| N/A | | BOUNDARY |
| | | CURB |
| N/A | OE OE | OVERHEAD ELECTRIC |
| N/A | | RAILROAD TRACK |

# GEORGETOWN SPECIAL TAXING DISTRICT
## INTERMODAL TRANSPORTATION HUB
GEORGETOWN, CONNECTICUT

LiRo Architects + Engineers P.C.
111 Broadway, Suite 5D
New York, New York 10006
212.563.0280 [P] 212.563.1841 [F]

© The LiRo Group All Rights Reserved

DWG NO C2.2

GRADING AND DRAINAGE PLAN
SYSTEM 2
DWG TITLE

ISSUE DATE: 17 AUG. 07 SCALE: 1:30
REVISION DATE: 17 AUG. 07 DWN BY: J.P./M.C.

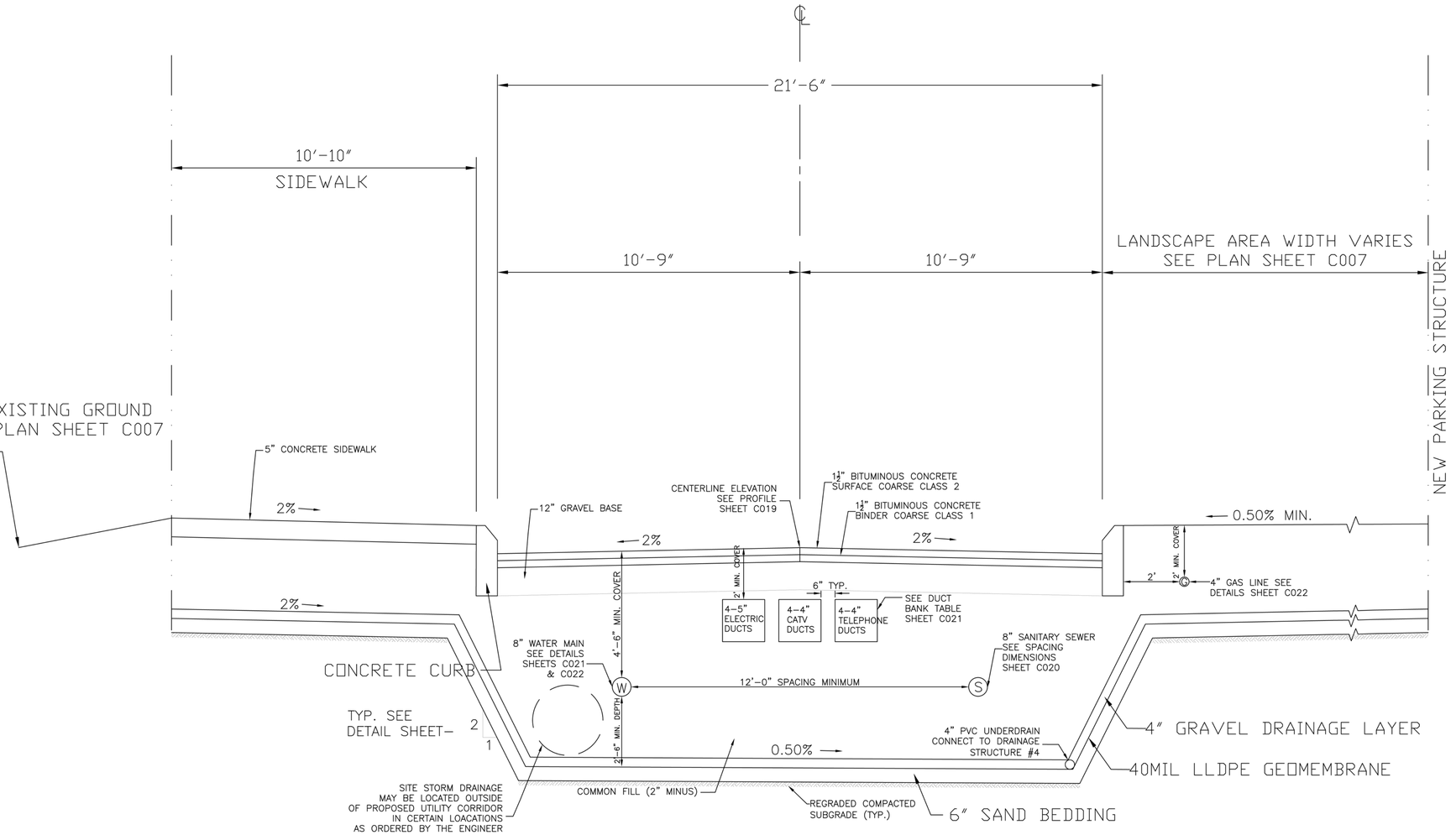


# PROPOSED TYPICAL SECTION AND CLEAN UTILITY CORRIDOR

STATION PLACE STATION 10+00 TO 13+00


GEORGETOWN

Intermodal Transportation Hub

Owner:
Georgetown Redevelopment Company
1 North Main Street, P.O. Box 630
Georgetown, Connecticut 06829
(203) 544-8383

Applicant:
Georgetown Special Taxing District
1 North Main Street, P.O. Box 630
Georgetown, Connecticut 06829
(203) 544-8383

Project Counsel:
Richard S. Gibbons, Attorney at Law
27 Imperial Avenue
Westport, Connecticut 06880
(203) 544-8323

Tax District Counsel:
Shipman & Goodwin LLP
One Constitution Plaza
Hartford, Connecticut 06103
(860) 251-5000

Architects:
Liro Architects & Engineers, P.C.
111 Broadway, Suite 501
New York, New York 10006
(212)563-0280

Site Civil Engineer
Liro Engineers, Inc
3 Aerial Way
Syosset, N.Y. 11791
(516)938-5476

Traffic Engineer:
Fitzgerald & Halliday Inc.
72 Cedar Street
Hartford, Connecticut 06106
(860) 767-3044

Environmental Engineer/Surveyor:
Fuss & O'Neill, Inc.
146 Hartford Road
Manchester, Connecticut 06040
(860) 646-2469

GeoTechnical Engineer
Geo Design, Inc
984 Southford Road
Middlebury, Connecticut 06762
(203)758-8836

Site Civil Engineer:
Tighe & Bond
1000 Bridgeport Avenue
Shelton, Connecticut 06484
(203) 712-1100

Landscape Planning:
Solaris Landscape Architecture
88 Main Street South, Suite A201
Southburry, Connecticut 06488
(203)264-6442

Environmental Land Solutions, LLC
(203) 855-7879
8 Knight Street, Suite 203
Norwalk, Connecticut 06851


| | |
|---|---|
| ISSUE DATE: | 04/22/08 |
| REVISION DATE: | --- |
| SCALE: | --- |
| DWN BY: | |

DWG TITLE:

TYPICAL SECTION AND CLEAN UTILITY CORRIDOR

DWG NO

C023


Saved:8/8/2007 - G:\projects\Georgetown Hub\Engineering\Design Phase\Drawings\Current Working Drawings\Civil\DETAILS\SCD23-TYPICAL SECTION AND CLEAN UTILITY CORRIDOR.dwg, DETAILS A, 4/22/2008 3:54:57 PM, Plotted:

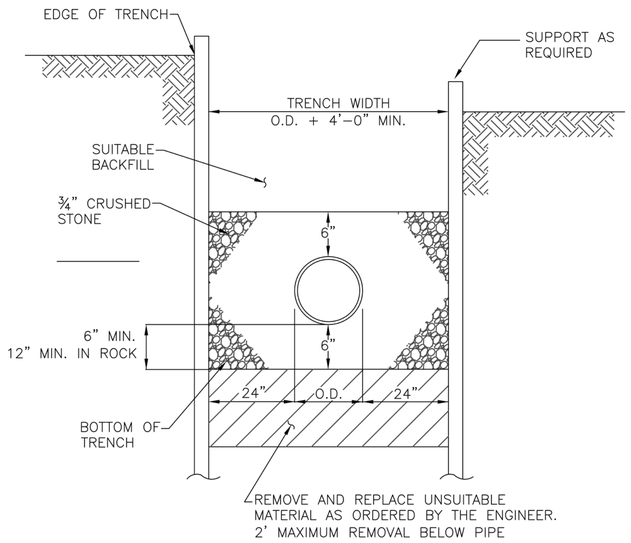


## TYPICAL SANITARY SEWER TRENCH SECTION

N.T.S.

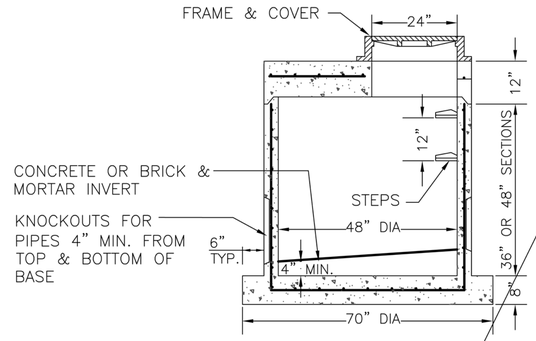


## SHALLOW SANITARY MANHOLE

N.T.S.

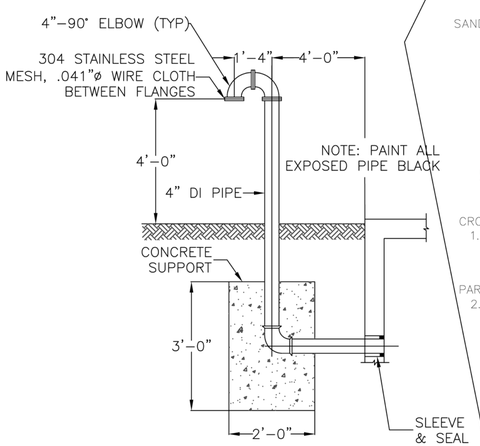


## VENTING DETAIL

NTS

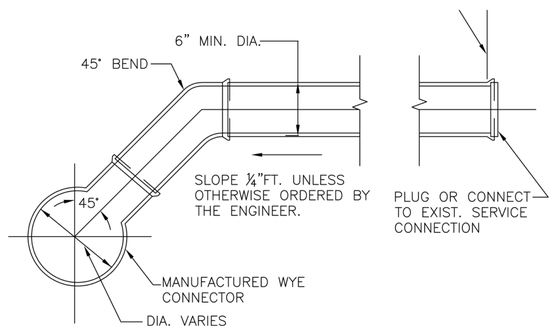


TYPICAL SECTION

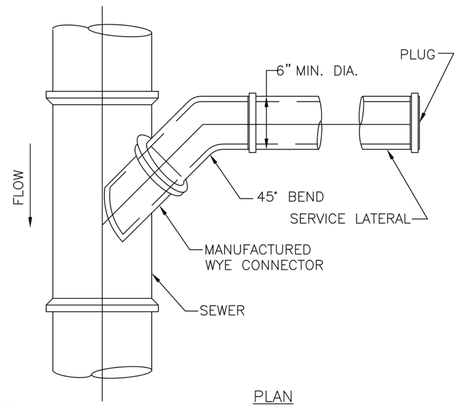


PLAN

## STANDARD SERVICE LATERAL CONNECTION

N.T.S.

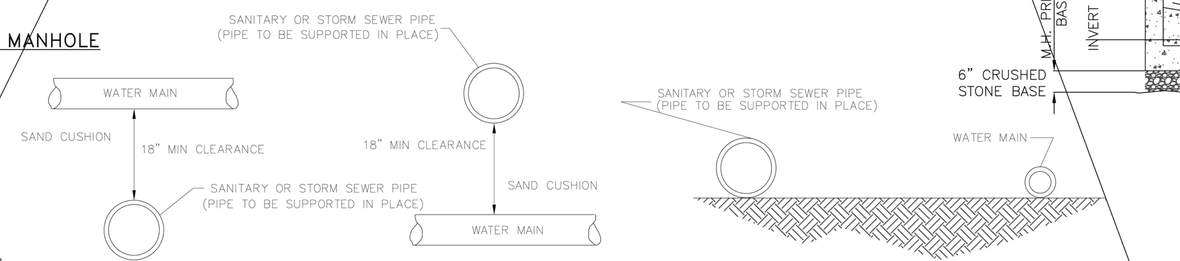


CROSSING UNDER WATER MAIN | CROSSING OVER WATER MAIN | PARALLEL TO WATER MAIN

CROSSING WATER MAIN

1. IF THE SANITARY SEWER CROSSES LESS THAN 18" ABOVE OR UNDER THE WATER MAIN, THE SANITARY SEWER MUST BE ENCASED IN CONCRETE TO A DISTANCE OF 10 FEET (10') ON BOTH SIDES OF THE WATER MAIN OR BE APPROVED TIGHT JOINTED PIPE AS PER THE STATE OF CONNECTICUT D.O.H.S

PARALLEL TO WATER MAIN

2. IF THE SANITARY SEWER IS WITHIN 10 HORIZONTAL FEET (10') OF THE WATER MAIN AND EITHER ABOVE THE WATER MAIN INVERT OR LESS THAN 18 INCHES (18") UNDER THE WATER MAIN, THE SANITARY SEWER MUST BE ENCASED IN CONCRETE OR BE APPROVED TIGHT JOINTED PIPE AS PER THE STATE OR CONNECTICUT D.O.H.S

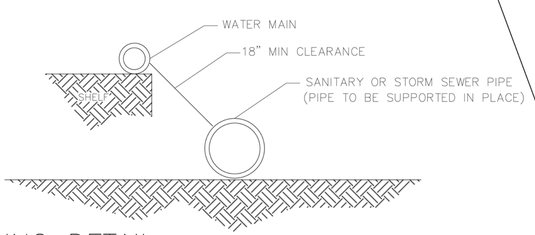


## SEWER PIPE CROSSING DETAIL

N.T.S.

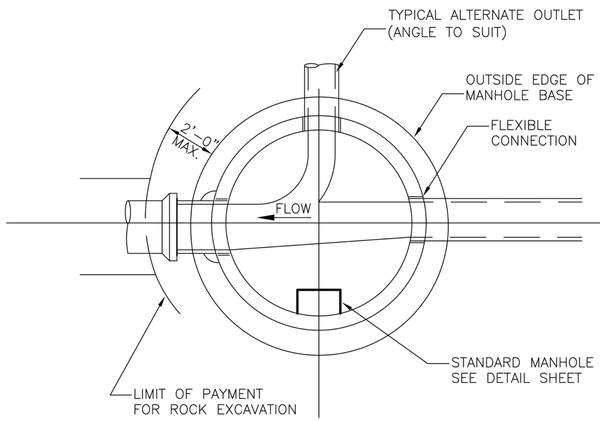


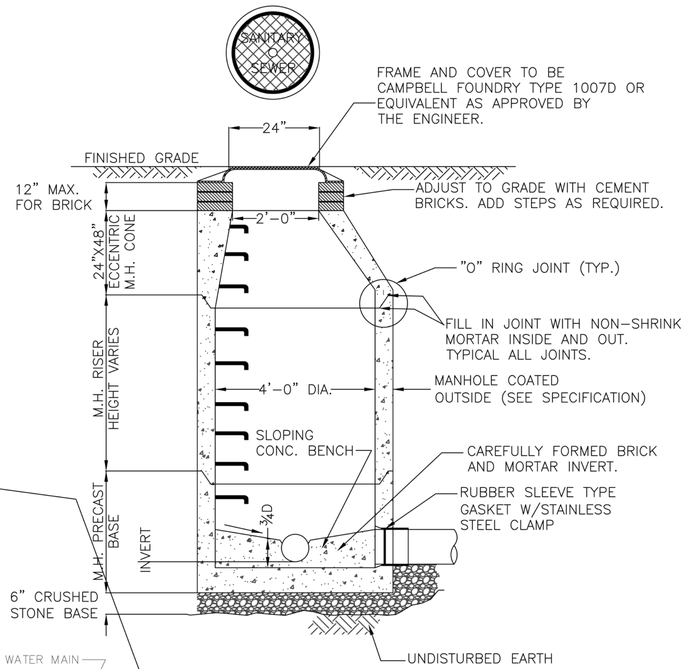


## STANDARD SANITARY SEWER MANHOLE

N.T.S.

# GEORGETOWN

Intermodal Transportation Hub


Owner:
Georgetown Redevelopment Company
1 North Main Street, P.O. Box 630
Georgetown, Connecticut 06829
(203) 544-8383

Applicant:
Georgetown Special Taxing District
1 North Main Street, P.O. Box 630
Georgetown, Connecticut 06829
(203) 544-8383

Project Counsel:
Richard S. Gibbons, Attorney at Law
27 Imperial Avenue
Westport, Connecticut 06880
(203) 544-8323

Tax District Counsel:
Shipman & Goodwin LLP
One Constitution Plaza
Hartford, Connecticut 06103
(860) 251-5000

Architects:
Liro Architects & Engineers, P.C.
111 Broadway, Suite 501
New York, New York 10006
(212)563-0280

Site Civil Engineer
Liro Engineers, Inc
3 Aerial Way
Syosset, N.Y. 11791
(516)938-5476

Traffic Engineer:
Fitzgerald & Halliday Inc.
72 Cedar Street
Hartford, Connecticut 06106
(860) 767-3044

Environmental Engineer/Surveyor:
Fuss & O'Neill, Inc.
146 Hartford Road
Manchester, Connecticut 06040
(860) 646-2469

GeoTechnical Engineer
Geo Design, Inc
984 Southford Road
Middlebury, Connecticut 06762
(203)758-8836

Site Civil Engineer:
Tighe & Bond
1000 Bridgeport Avenue
Shelton, Connecticut 06484
(203) 712-1100

Landscape Planning:
Solaris Landscape Architecture
88 Main Street South, Suite A201
Southbury, Connecticut 06488
(203)264-6442

Environmental Land Solutions, LLC
(203) 855-7879
8 Knight Street, Suite 203
Norwalk, Connecticut 06851


| | |
|---|---|
| ISSUE DATE: | 04/22/08 |
| REVISION DATE: | --- |
| SCALE: | --- |
| DWN BY: | --- |

DWG TITLE:

SANITARY SEWER DETAILS

DWG NO

C020


U:\Projects\128\007 - Georgetown HUB\Engineering\Design Phase\Drawings\Current Working Drawings\Civil\SITE\TAILS\SANITARY SEWER DETAIL.dwg, Layout: ANSI D (22.00 x 34.00) 04/22/2008 3:56:50 PM, DWN