# Connecticut Department of Energy and Environmental Protection License*

## Structures, Dredging & Fill Permit
## Section 401 Water Quality Certification

| | |
|---|---|
| **Licensee(s):** | Electric Boat Corporation, c/o Paul Harren |
| **Licensee Address(s):** | 75 Eastern Point Road<br>Groton, CT 06430 |
| **License Number(s):** | 202208091-SDFWQC |
| **Municipality:** | City of Groton |
| **Project Description:** | Installation of a floating security barrier at the South Yard. |
| **Project Address/Location:** | 75 Eastern Point Road |
| **Waters:** | Thames River |
| **Authorizing CT Statute(s) and/or Federal Law:** | CGS Section 22a-359 to 363g; CGS Section 22a-90 to 112; Section 401 CWA (33 USC 1341) |
| **Applicable Regulations of CT State Agencies:** | 22a-426-1 to 9 |
| **Agency Contact:** | Land & Water Resources Division,<br>Bureau of Water Protection & Land Reuse, 860-424-3019 |
| **License Expiration:** | Five (5) years from the date of issuance of this license. |
| **Project Site Plan Set:** | Twenty-two (22) sheets of plans prepared by Stantec, Oceanetics and Truston. |
| **License Enclosures:** | LWRD General Conditions; Land Record Filing; LWRD Work Commencement Form; LWRD Compliance Certification Form; Site Plan Set |

**Authorized Activities:**

The Licensee is hereby authorized to conduct the following work as described in application # 202208091-SDFWQC and as depicted on any site plan sheets / sets cited herein:

1. remove a portion of an existing floating security barrier; and

*Connecticut's Uniform Administrative Procedure Act defines License to include, "*the whole or part of any agency permit, certificate, approval, registration, charter or similar form of permission required by law . . .*"

2. install approximately 2,820 linear feet of floating security barrier, consisting of fifty-seven (57) 50-foot long units with security nets extending 8' above the water surface supported by 36' diameter by 17' long pontoons with metal structural members between each pontoon, flashing red lights and anchored by two (2) buoys with associated chains and a total of four (4) 7-ton sinkers spaced approximately 11'apart and four (4) 25-to or 30-ton anchors spaced approximately 161' apart and will have a 300' long access gate and a 1,080' long access gate and will be secured to the upland at five (5) locations and associated 5' wide by 14' long floating fenders as shown on the plans attached hereto.

***Failure to comply with the terms and conditions of this license shall subject the Licensee and / or the Licensee's contractor(s) to enforcement actions and penalties as provided by law.***

**This license is subject to the following Terms and Conditions:**

1. **License Enclosure(s) and Conditions.** The Licensee shall comply with all applicable terms and conditions as may be stipulated within the License Enclosure(s) listed above.
2. The installation of the floating security barrier and anchors authorized herein shall be conducted using water-based equipment.
3. All waste material generated by the work authorized herein shall be disposed of at an approved upland disposal location.

Issued under the authority of the Commissioner of Energy and Environmental Protection on:

_____ _____

Date

Graham J. Stevens
Bureau Chief
Bureau of Water Protection & Land Reuse

## LWRD General Conditions

1. **Land Record Filing (for *Structures Dredging & Fill*, *Tidal Wetlands*, *Certificate of Permission*, and *Long Island Sound General Permit* Licenses only).** The Licensee shall file the Land Record Filing on the land records of the municipality in which the subject property is located not later than thirty (30) days after license issuance pursuant to Connecticut General Statutes (CGS) Section 22a-363g. A copy of the Notice with a stamp or other such proof of filing with the municipality shall be submitted to DEEP.LWRDRegulatory@ct.gov no later than sixty (60) days after license issuance. If a Land Record Filing form is not enclosed and the work site is not associated with an upland property, no filing is required.

2. **Contractor Notification.** The Licensee shall give a copy of the license and its attachments to the contractor(s) who will be carrying out the authorized activities prior to the start of construction and shall receive a written receipt for such copy, signed and dated by such contractor(s). The Licensee's contractor(s) shall conduct all operations at the site in full compliance with the license and, to the extent provided by law, may be held liable for any violation of the terms and conditions of the license. At the work site, the contractor(s) shall, whenever work is being performed, have on site and make available for inspection a copy of the license and the authorized plans.

3. **Work Commencement[1].** Not later than two (2) weeks prior to the commencement of any work authorized herein, the Licensee shall submit to DEEP.LWRDRegulatory@ct.gov, on the Work Commencement Form attached hereto, the name(s) and address(es) of all contractor(s) employed to conduct such work and the expected date for commencement and completion of such work, if any.
   - For water diversion activities authorized pursuant to 22a-377(c)-1 of the Regulations of Connecticut State Agencies, the Licensee shall also notify the Commissioner in writing two weeks prior to initiating the authorized diversion.
   - For emergency activities authorized pursuant Connecticut General Statutes Section 22a-6k, the Licensee shall notify the Commissioner, in writing, of activity commencement at least one (1) day prior to construction and of activity completion no later than five (5) days after conclusion.

4. **For Coastal Licenses Only - License Notice.** The Licensee shall post the first page of the License in a conspicuous place at the work area while the work authorized therein is undertaken.

5. **Unauthorized Activities.** Except as specifically authorized, no equipment or material, including but not limited to, fill, construction materials, excavated material or debris, shall be

[1] The Work Commencement condition and the need for a Work Commencement Form is not applicable to Flood Management Certification approvals.

deposited, placed or stored in any wetland or watercourse on or off-site. The Licensee may not conduct work within wetlands or watercourses other than as specifically authorized, unless otherwise authorized in writing by the Commissioner. Tidal wetlands means "wetland" as defined by section 22a-29 and "freshwater wetlands and watercourses" means "wetlands" and "watercourses" as defined by section 22a-38.

6. **Management of Materials.** Any materials removed from the site shall be managed in accordance with all federal, state, and local requirements, including Chapter 446K Water Pollution Control, Chapter 445 Hazardous Waste, and Chapter 446d Solid Waste of the Connecticut General Statutes.

7. **Unconfined Instream Work.** Unless otherwise noted in a condition of the license, the following conditions apply to projects in non-coastal waters:
   - Unconfined instream work is limited to the period June 1 through September 30.
   - Confinement of a work area by cofferdam techniques using sand bag placement, sheet pile installation (vibratory method only), portadam, or similar confinement devices is allowed any time of the year. The removal of such confinement devices is allowed any time of the year.
   - Once a work area has been confined, in-water work within the confined area is allowed any time of the year.
   - The confinement technique used shall completely isolate and protect the confined area from all flowing water. The use of silt boom/curtain or similar technique as a means for confinement is prohibited.

8. **For State Actions Only - Material or Equipment Storage in the Floodplain.** Unless approved by a Flood Management Exemption, the storage of any materials at the site which are buoyant, hazardous, flammable, explosive, soluble, expansive, radioactive, or which could in the event of a flood be injurious to human, animal or plant life, below the elevation of the five-hundred (500) year flood is prohibited. Any other material or equipment stored at the site below said elevation by the Licensee or the Licensee's contractor must be firmly anchored, restrained or enclosed to prevent flotation. The quantity of fuel stored below such elevation for equipment used at the site shall not exceed the quantity of fuel that is expected to be used by such equipment in one day. In accordance with the licensee's Flood Contingency Plan, the Licensee shall remove equipment and materials from the floodplain during periods when flood warnings have been issued or are anticipated by a responsible federal, state or local agency. It shall be the Licensee's responsibility to obtain such warnings when flooding is anticipated.

9. **Temporary Hydraulic Facilities for Water Handling.** If not reviewed and approved as a part of the license application, temporary hydraulic facilities shall be designed by a qualified professional and in accordance with the *Connecticut Guidelines for Soil Erosion and Sediment Control*, the *2004 Connecticut Stormwater Quality Manual*, or the *Department of Transportation's ConnDOT Drainage Manual,* as applicable. Temporary hydraulic facilities may include channels, culverts or bridges which are required for haul roads, channel relocations, culvert installations, bridge construction, temporary roads, or detours.

10. **Excavated Materials.** Unless otherwise authorized, all excavated material shall be staged and managed in a manner which prevents additional impacts to wetlands and watercourses.

11. **Best Management Practices.** The Licensee shall not cause or allow pollution of any wetlands or watercourses, including pollution resulting from sedimentation and erosion. In constructing or maintaining any authorized structure or facility or conducting any authorized activity, or in removing any such structure or facility, the Licensee shall employ best management practices to control storm water discharges, to prevent erosion and sedimentation, and to otherwise prevent pollution of wetlands and other waters of the State. For purposes of the license, "pollution" means "pollution" as that term is defined by CGS section 22a-423. Best Management Practices include, but are not limited, to practices identified in the *Connecticut Guidelines for Soil Erosion and Sediment Control* as revised, *2004 Connecticut Stormwater Quality Manual*, Department of Transportation's *ConnDOT Drainage Manual* as revised, and the Department of Transportation Standard Specifications as revised.

12. **In-Water Work Vessel Staging and Storage. (for Structures Dredging & Fill, Tidal *Wetlands*, *Certificate of Permission*, and *Long Island Sound General Permit* Licenses only).** For any barge, vessel, skiff or floating work platform ("work vessels") utilized in the execution of the work authorized herein, the Licensee shall ensure that such work vessels:
    - do not rest on, or come in contact with, the substrate at any time, unless specifically authorized in the license.
    - are not stored over intertidal flats, submerged aquatic vegetation or tidal wetland vegetation or in a location that interferes with navigation. In the event any work vessel is grounded, no dragging or prop dredging shall occur to free it.

13. **Work Site Restoration.** Upon completion of any authorized work, the Licensee shall restore all areas impacted by construction, or used as a staging area or accessway in connection with such work, to their condition prior to the commencement of such work.

14. **Inspection.** The Licensee shall allow any representative of the Commissioner to inspect the project location at reasonable times to ensure that work is being or has been conducted in accordance with the terms and conditions of this license.

15. **Change of Use. (Applies only if a use is specified within the License "*Project Description*")**
    a. The work specified in the license is authorized solely for the purpose set forth in the license. No change in purpose or use of the authorized work or facilities as set forth in the license may occur without the prior written approval of the Commissioner. The Licensee shall, prior to undertaking or allowing any change in use or purpose from that which is authorized by this license, request permission from the Commissioner for such change. Said request shall be in writing and shall describe the proposed change and the reason for the change.

    b. A change in the form of ownership of any structure authorized herein from a rental/lease commercial marina to a wholly-owned common interest community or dockominium may constitute a change in purpose as specified in paragraph (a) above.

16. **De Minimis Alteration.** The Licensee shall not deviate from the authorized activity without

prior written approval from the Commissioner. The Licensee may request a de minimis change to any authorized structure, facility, or activity. A de minimis alteration means a change in the authorized design, construction or operation that individually and cumulatively has minimal additional environmental impact and does not substantively alter the project as authorized.

- For diversion activities authorized pursuant to 22a-377(c)-2 of the Regulations of Connecticut State Agencies, a de minimis alteration means an alteration which does not significantly increase the quantity of water diverted or significantly change the capacity to divert water.

17. **Extension Request.** The Licensee may request an extension of the license expiration date. Such request shall be in writing and shall be submitted to DEEP.LWRDRegulatory@ct.gov at least thirty (30) days prior to the license expiration. Such request shall describe the work done to date, what work still needs to be completed, and the reason for such extension. The Commissioner may extend the expiration date of this license for a period of up to one year, in order for the Licensee to complete the authorized activities. It shall be at the Commissioner's sole discretion to grant or deny such request. No more than three (3) one-year extensions will be granted under this license.

18. **Compliance Certification.** Not later than 90 days after completion of the authorized work, the Licensee shall prepare and submit to DEEP.LWRDRegulatory@ct.gov, the attached Compliance Certification Form. Such Compliance Certification shall be completed, signed, and sealed by the Licensee and a Connecticut Licensed Design Professional. If non-compliance is indicated on the form, or the Commissioner has reason to believe the activities and/or structures were conducted in non-compliance with the license, the Commissioner may require the Licensee to submit as-built plans as a condition of this license.

19. **Maintenance.** The Licensee shall maintain all authorized structures or work in optimal condition or shall remove such structures or facility and restore the affected waters to their pre-work condition. Any such maintenance or removal activity shall be conducted in accordance with applicable law and any additional approvals required by law.

20. **No Work After License Expiration.** Work conducted after the license expiration date is a violation of the license and may subject the licensee to enforcement action, including penalties, as provided by law.

21. **License Transfer.** The license is not transferable without prior written authorization of the Commissioner. A request to transfer a license shall be submitted in writing and shall describe the proposed transfer and the reason for such transfer. The Licensee's obligations under the license shall not be affected by the passage of title to the license site to any other person or municipality until such time as a transfer is approved by the Commissioner.

22. **Document Submission.** Any document required to be submitted to the Commissioner under the license or any contact required to be made with the Commissioner shall, unless otherwise specified in writing by the Commissioner, be directed to:

    DEEP.LWRDRegulatory@ct.gov or

Regulatory Section
Land & Water Resources Division
Department of Energy and Environmental Protection
79 Elm Street
Hartford, Connecticut 06106-5127
860-424-3019

23. **Date of Document Submission.** The date of submission to the Commissioner of any document required by the license shall be the date such document is received by the Commissioner. The date of any notice by the Commissioner under the license, including but not limited to notice of approval or disapproval of any document or other action, shall be the date such notice is personally delivered or the date three (3) days after it is mailed by the Commissioner, whichever is earlier. Except as otherwise specified in the license, the word "day" as used in the license means calendar day. Any document or action which is required by the license to be submitted or performed by a date which falls on a Saturday, Sunday or a Connecticut or federal holiday shall be submitted or performed on or before the next day which is not a Saturday, Sunday, or a Connecticut or federal holiday.

24. **Certification of Documents.** Any document, including but not limited to any notice, which is required to be submitted to the Commissioner under the license shall be signed by the Licensee and by the individual or individuals responsible for actually preparing such document, each of whom shall certify in writing as follows: "I have personally examined and am familiar with the information submitted in this document and all attachments and certify that based on reasonable investigation, including my inquiry of those individuals responsible for obtaining the information, the submitted information is true, accurate and complete to the best of my knowledge and belief, and I understand that any false statement made in this document or its attachments may be punishable as a criminal offense."

25. **Accuracy of Documentation.** In evaluating the application for the license, the Commissioner has relied on information and data provided by the Licensee and on the Licensee's representations concerning site conditions, design specifications and the proposed work, including but not limited to representations concerning the commercial, public or private nature of the work or structures, the water-dependency of said work or structures, its availability for access by the general public, and the ownership of regulated structures or filled areas. If such information proves to be false, deceptive, incomplete or inaccurate, the license may be modified, suspended or revoked, and any unauthorized activities may be subject to enforcement action.

26. **Limits of Liability.** In granting the license, the Commissioner has relied on all representations of the Licensee, including information and data provided in support of the Licensee's application. Neither the Licensee's representations nor the issuance of the license shall constitute an assurance by the Commissioner as to the structural integrity, the engineering feasibility or the efficacy of such design.

27. **Reporting of Violations.** In the event that the Licensee becomes aware that they did not or may not comply, or did not or may not comply on time, with any provision of this license or of any document incorporated into the license, the Licensee shall immediately notify the

agency contact specified within the license and shall take all reasonable steps to ensure that any noncompliance or delay is avoided or, if unavoidable, is minimized to the greatest extent possible. In so notifying the agency contact, the Licensee shall provide, for the agency's review and written approval, a report including the following information:

a. the provision(s) of the license that has been violated;

b. the date and time the violation(s) was first observed and by whom;

c. the cause of the violation(s), if known;

d. if the violation(s) has ceased, the duration of the violation(s) and the exact date(s) and times(s) it was corrected;

e. if the violation(s) has not ceased, the anticipated date when it will be corrected;

f. steps taken and steps planned to prevent a reoccurrence of the violation(s) and the date(s) such steps were implemented or will be implemented; and

g. the signatures of the Licensee and of the individual(s) responsible for actually preparing such report.

If the violation occurs outside of normal business hours, the Licensee shall contact the Department of Energy and Environmental Protection Emergency Dispatch at 860-424-3333. The Licensee shall comply with any dates which may be approved in writing by the Commissioner.

28. **Revocation/Suspension/Modification.** The license may be revoked, suspended, or modified in accordance with applicable law.

29. **Other Required Approvals.** License issuance does not relieve the Licensee of their obligations to obtain any other approvals required by applicable federal, state and local law.

30. **Rights.** The license is subject to and does not derogate any present or future property rights or powers of the State of Connecticut, and conveys no property rights in real estate or material nor any exclusive privileges, and is further subject to any and all public and private rights and to any federal, state or local laws or regulations pertinent to the property or activity affected hereby.

31. **Condition Conflicts.** In the case where a project specific special condition listed on the license differs from, or conflicts with, one of the general conditions listed herein, the project specific special condition language shall prevail. It is the licensee's responsibility to contact the agency contact person listed on the license for clarification if needed prior to conducting any further regulated activities.

Connecticut Department of
ENERGY &
ENVIRONMENTAL
PROTECTION

**Bureau of Water Protection & Land Reuse**
**Land & Water Resources Division**

79 Elm Street • Hartford, CT 06106-5127 www.ct.gov/deep Affirmative Action/Equal Opportunity Employer

# Land Record Filing*

**To:** City of Groton Clerk

**Signature and**

NOTE: Due to the electronic delivery of this license and the legal requirement to have a live signature on this document, the "Land Record Filing" as detailed in General Condition #1 will be sent to you via U.S. Mail.

**Date:**

**Subject:** 75 Eastern Point Road, Groton
License #202208091-SDFWQC, Electric Boat Corporation

If you have any questions pertaining to this matter, please contact the Land & Water Resources Division at 860-424-3019.

Return to:

Land & Water Resources Division
State of Connecticut
Department of Energy & Environmental Protection
79 Elm Street
Hartford, CT 06106-5127

*The Licensee shall file the Land Record Filing on the land records of the municipality in which the subject property is located not later than thirty (30) days after license issuance pursuant to Connecticut General Statutes (CGS) Section 22a-363g. A copy of the Notice with a stamp or other such proof of filing with the municipality shall be submitted to the Commissioner no later than sixty (60) days after license issuance.

# LWRD Work Commencement Form

**To:** DEEP.LWRDRegulatory@ct.gov or
Regulatory Section
Department of Energy and Environmental Protection
Land & Water Resources Division
79 Elm Street
Hartford, CT 06106-5127

**Licensee Name:** _____
**Municipality in which the project is occurring:** _____
**DEEP License No(s):**_____

**CONTRACTOR(s):**

# 1 Name: _____
Address: _____
Telephone: _____
E-mail: _____

# 2 Name: _____
Address: _____
Telephone: _____
E-mail: _____

# 3 Name: _____
Address: _____
Telephone: _____
E-mail: _____

Date Contractor(s) received a copy
of the license and approved plans: _____

EXPECTED DATE OF COMMENCEMENT OF WORK: _____

EXPECTED DATE OF COMPLETION OF WORK: _____

LICENSEE: _____ _____
(Signature) (Date)

Connecticut Department of
ENERGY & ENVIRONMENTAL PROTECTION

79 Elm Street • Hartford, CT 06106-5127 portal.ct.gov/DEEP Affirmative Action/Equal Opportunity Employer

# Compliance Certification Form

The following certification must be signed by the licensee working in consultation with a Connecticut-licensed design professional and must be submitted to the address indicated at the end of this form within ninety (90) days of completion of the authorized work.

1. Licensee Name: _____

   DEEP License Number(s):_____

   Municipality in which project is occurring:_____

2. **Check one:**

   (a) ☐ "I certify that the final site conditions and / or structures are in general conformance with the approved site plans". Identify and describe any deviations and attach to this form.

   (b) ☐ "The final site conditions and / or structures are not in general conformance with the approved site plans. The enclosed "as-built" plans note the modifications".

3. "I understand that any false statement in this certification is punishable as a criminal offence under section 53a-157b of the General Statutes and under any other applicable law."

_____ _____
Signature of Licensee Date

_____
Name of Licensee (print or type)

_____ _____
Signature of CT-Licensed Design Professional Date

_____
Name of CT-Licensed Design Professional (print or type)

_____
Professional License Number (if applicable) Affix Stamp Here

- As-built plans shall include: elevations or tidal datums, as applicable, and structures, including any proposed elevation views and cross sections included in the approved license plans. Such as-built plans shall be the original ones and be signed and sealed by an engineer, surveyor or architect, as applicable, who is licensed in the State of Connecticut.
- The Licensee will be notified by staff of the Land and Water Resources Division (LWRD) if further compliance review is necessary. Lack of response by LWRD staff does not imply compliance.

Submit this completed form to :
DEEP.LWRDRegulatory@ct.gov or
**Regulatory Section**
**Department of Energy and Environmental Protection**
**Land & Water Resources Division**
**79 Elm Street**
**Hartford, CT 06106-5127**

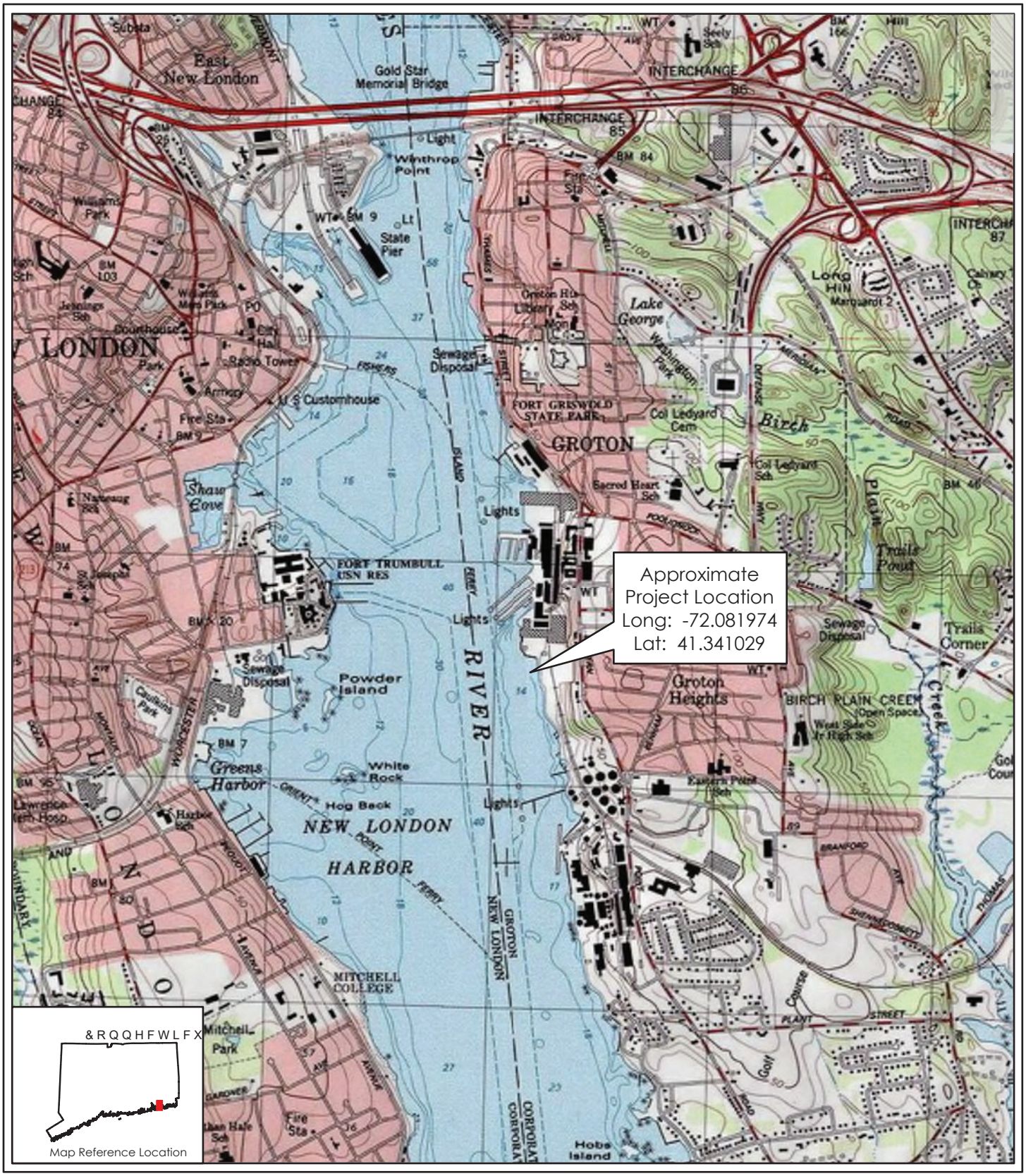


0 1,000 2,000

GRAPHIC SCALE

SCALE: 1" = 2,000'

Data Source: ESRI

FUSS & O'NEILL

ELECTRIC BOAT CORPORATION

**SITE LOCATION MAP**

PROPOSED EXPANDED
SECURITY BARRIER
GROTON, CT

PROJ No.: 199797570.A11

DATE: Jul 2022

**FIGURE 1**

Folder: K:\P97\97570\A11\MXD\ProjectLocationMap20220707\ Project: ProjectLocationMap20220707
User: shayden Date Saved: 7/7/2022 2:04 PM

# Town of Groton

# Property Map

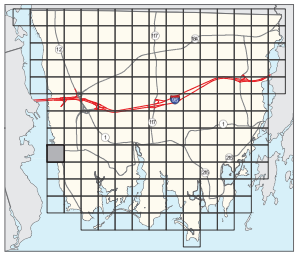

**Legend**

- Map Boundary
- Block Boundary
- Sidewalk
- Bridge
- Main Road
- Paved Surface
- Unpaved Surface
- Water Body
- Wet Area
- Dock / Pier
- Swimming Pool
- Building
- Sports Field
- Woodland
- Fence
- Retaining Wall
- Misc. Wall
- Political Boundary
- Railway
- Parcel Line
- Railroad Right of Way
- Road Right of Way
- Townline
- Easement Line
- Stream
- 123 Deeded Lot Dimension
- (123) Calculated Lot Dimension
- /1 Developer Lot Number
- 0.3 A Acreage
- 0139 Lot Number
- 12 Block Number
- 210 House Number

Disclaimer:

The planimetric and topographic information depicted on this map was compiled by The Sanborn Map Company based on an aerial flight performed in April, 2009. The parcel and property line information depicted on this map has been compiled from recorded deeds, maps, assessor records, and other sources of information in the Town of Groton. The intent of this map is to depict a graphical representation of real property information relative to the planimetric features for the Town of Groton and is subject to change as a more accurate survey may disclose. The Town of Groton and the mapping companies assume no legal responsibility for the information contained in this data.
THIS MAP IS NOT TO BE USED FOR THE TRANSFER OF PROPERTY.

Horizontal Datum:
Connecticut State Plane Coordinates, North American Datum of 1983 (NAD83 Feet).

Vertical Datum:
North American Vertical Datum of 1988 (NAVD88).

N
W E
S

100 50 0 100 200 300 Feet

Map Scale: 1" = 100'

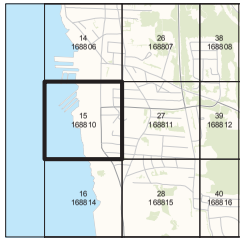


DATE: OCTOBER 1, 2009

**MAP: 168810 TILE: 15**

FILE: \\acdcarg1\projects\Assessor\projects\ArcGIS\Tax\Map Projects\2009_Planimetrics.mxd

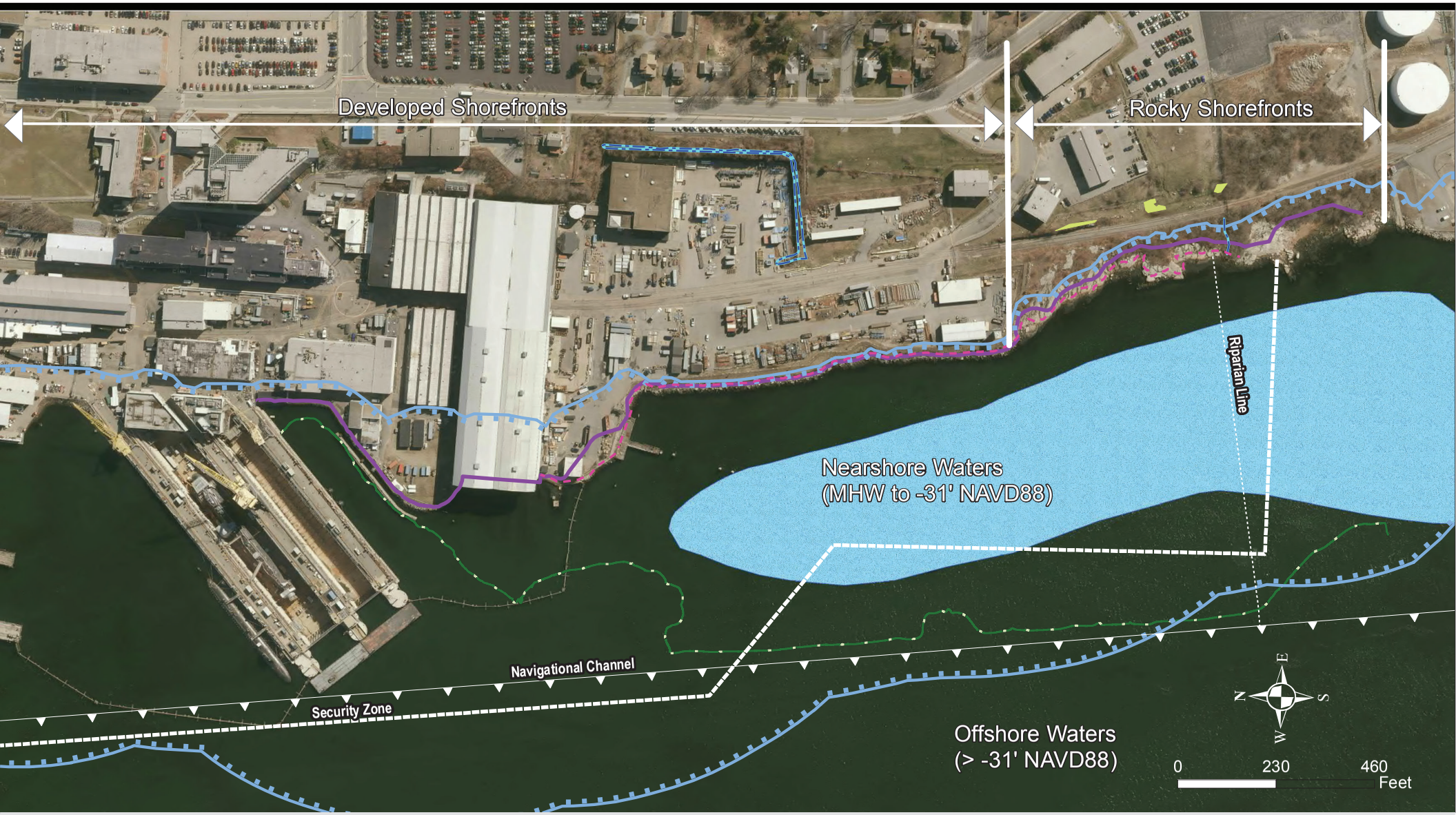


**Legend**

- Freshwater Watercourse
- Freshwater Wetland
- Coastal Hazard Area (FEMA)
- Shellfish Concentration Area (Hard Clam)
- -31' NAVD88 Approximate Water Depth
- Approximate Mean High Water Line (6' NAVD88)
- Coastal Jurisdiction Line (2.1 NAVD88)

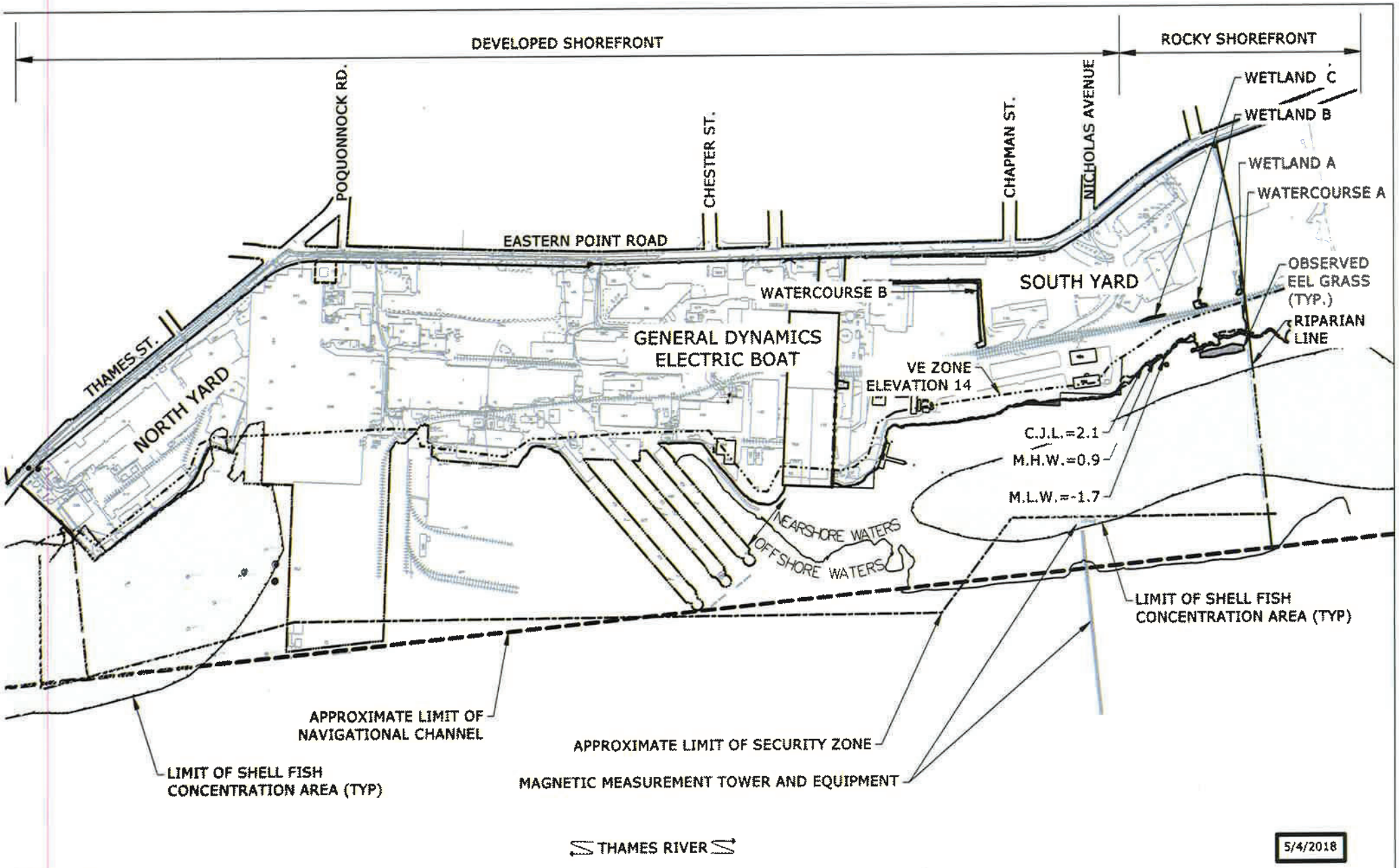


ORIGINAL SHEET - ANSI A

DATUM: NAVD 88

**PLAN VIEW**

SCALE: 1"=500'

N

Stantec

55 Church Street, Suite 601
New Haven, CT 06510
www.stantec.com

Client/Project

ELECTRIC BOAT
SOUTH YARD
75 EASTERN POINT RD, GROTON, CT 06340

179310250

Figure No.

C-101

Title

EXISTING CONDITIONS OVERALL SITE

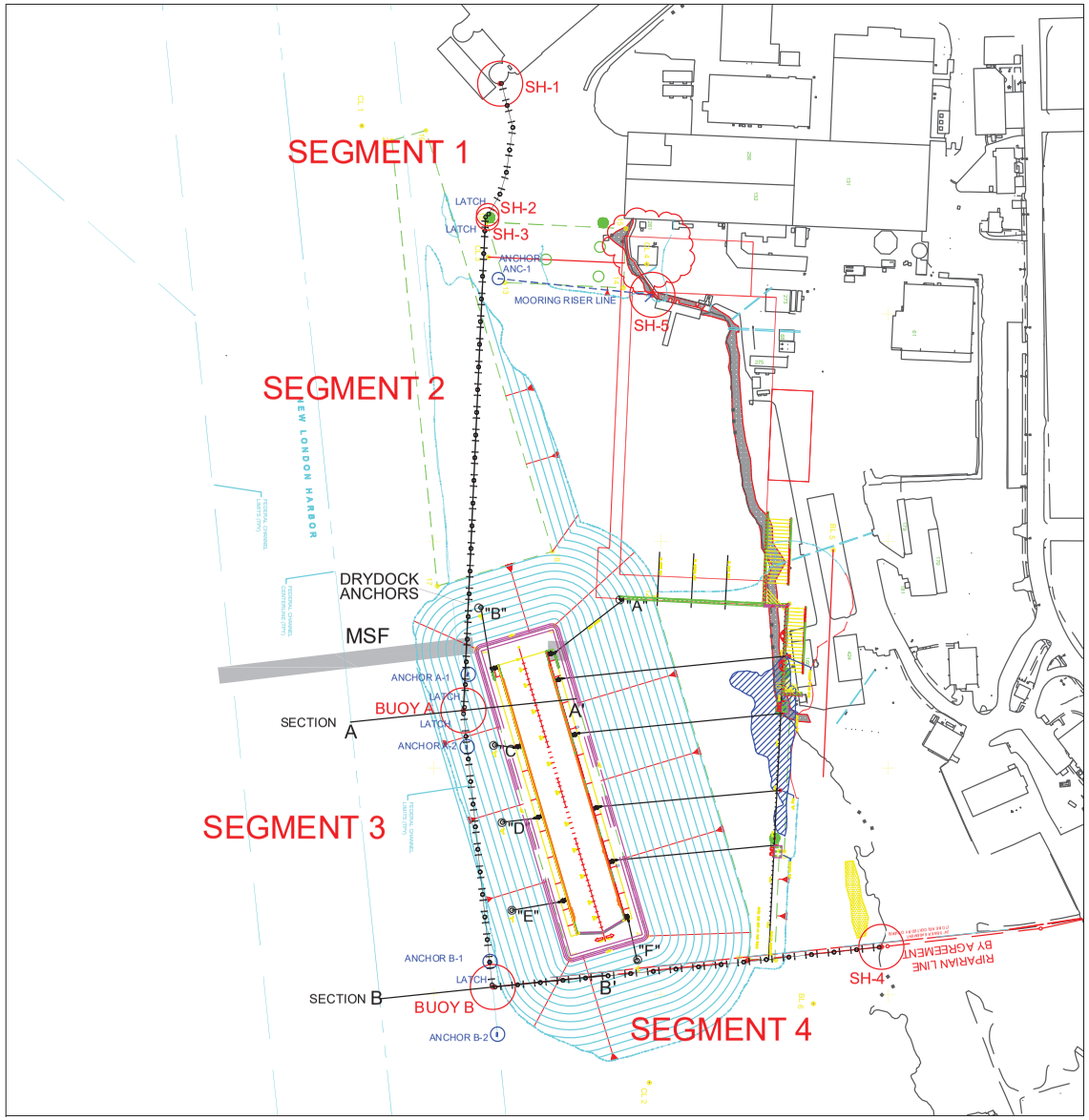


PHASE II CONFIGURATION; HOLLAND OUT

| REVISION HISTORY | | | |
|---|---|---|---|
| REV | DESCRIPTION | DATE | APPVD |
| - | XXXXXX | MM/DD/YY | MGR |

GENERAL DYNAMICS ELECTRIC BOAT GROTON, CT (GDEB) AWARDED OCEANETICS OF ANNAPOLIS, MD A DESIGN/BUILD CONTRACT TO PROVIDE AN ENHANCED WATERSIDE SECURITY BARRIER (EWSB) TO PROTECT THE WATERFRONT ASSETS AT GROTON, CT IN RESPONSE TO RFQ 13885 "NEW INSTALLATION FLOATING SECURITY BARRIER REQUIREMENT SOUTH YARD EXPANSION".

LIST OF SHEETS


| SHEET | DESCRIPTION |
|---|---|
| 01 | PHASE II CONFIGURATION, HOLLAND OUT |
| 02 | LOCATIONS AND NOTES |
| 03 | PHASE I CONFIGURATION, HOLLAND BERTHED |
| 04 | SECTION VIEW PHASES I AND II |
| 05 | MOORING DESIGN |
| 06 | ANCHOR ANC-1 TO ACCOMMODATE HOLLAND |


OCEANETICS STANDARD DRAWINGS

| NUMBER | DESCRIPTION |
|---|---|
| 4930-002 | 30-TON LOW-PROFILE ANCHOR |
| 4925C-000 | 25-TON IMPROVED PEARL HARBOR ANCHOR |
| 4930-003 | 7-TON LOW-PROFILE SINKER |
| 3114M-001 | ENHANCED WATERSIDE SECURITY BARRIER, 50-FT UNIT |

**DO NOT SCALE**

UNLESS OTHERWISE SPECIFIED TOLERANCES ARE IN INCHES. METRIC DIM'S ARE FOR REF. ONLY.

| 1PLACE DEC. | 2PLACE DEC. | 3PLACE DEC. | ANGLES |
|---|---|---|---|
| +/- 0.06 | +/- 0.03 | +/- 0.010 | +/- 0°-30' |

**NOTES:**

1. DIMENSIONS ARE IN FEET.
2. VERIFY ALL DIMENSIONS & CONDITIONS BEFORE STARTING WORK. NOTIFY OCEANETICS OF ANY DISCREPENCIES OR INCONSISTENCIES.


OCEANETICS™
520 Ridgely Ave
Annapolis, MD
21401
Tel: (410) 571-5186
Fax: (410) 510-1095


Reference:

Dwg Title: CONFIGURATION DESIGN GDEB BARRIER

| | | | | | |
|---|---|---|---|---|---|
| Drawn | WNS | 05/26/2022 | Sheet Size: B | Project No.: EB3709 | OE Dwg No.: EB3709 |
| Check | DRL | XXX | | Discipline Code | Customer Dwg No. |
| Engr. | DED | XXX | | | |
| Finish | Weight | Appr. | Plot Scale: | File Name: FILENAME | Sheet 1 of 6 |

Revision

Revision


NOTICE

THIS DOCUMENT CONTAINS COPYRIGHTED MATERIAL AND CONFIDENTIAL TRADE SECRET INFORMATION BELONGING EXCLUSIVELY TO OCEANETICS INC. OR ITS SUBSIDIARIES. UNAUTHORIZED USE, DISCLOSURE, DISSEMINATION, OR DUPLICATION OF ANY OF THE INFORMATION CONTAINED HERIN MAY RESULT IN LIABILITY UNDER APPLICABLE LAWS.

| REVISION HISTORY | | | |
|---|---|---|---|
| REV | DESCRIPTION | DATE | APPVD |
| - | XXXXXX | MM/DD/YY | MGR |

NOTES:

1. THE WATERFRONT AT THIS SHIPYARD IS BEING RE-CONFIGURED AND THERE ARE TWO PROJECT PHASES:
   - PHASE I THE PRESENT CONDITION (2022) AND,
   - PHASE II – THE AREA WILL BE DREDGED AND A MOORED FLOATING DRYDOCK INSTALLED.

THE WATERFRONT BARRIER WILL BE INSTALLED IN PHASE I AND THEN AT THE END OF PHASE I, THE WATERFRONT BARRIER AND ASSOCIATED EQUIPMENT WILL BE RE-MOVED AND THEN RE-INSTALLED FOR PHASE II.
THE WATERFRONT BARRIER CONFIGURATION AND ITS TERMINATIONS ARE INTENDED TO REMAIN THE SAME FOR BOTH PHASES I AND II WITH ONLY MINOR ADJUSTMENTS MADE TO THE TWO MOORINGS (A AND B), SUCH AS ADJUSTING THE CHAIN LENGTHS FOR THE INCREASED WATER DEPTH IN PHASE II.

2. THE WATERFRONT BOAT BARRIER CONSISTS OF:
   - 57 OCEANETICS STANDARD ENHANCED WATERSIDE SECURITY BARRIER (EWSB) 50-FOOT-LONG UNITS WITH SECURITY NETS 8 FEET OFF THE WATER SURFACE FOR A TOTAL BARRIER LENGTH OF 2,820 FEET. THE BARRIER HAS AN ULTIMATE BOAT STOPPING CAPACITY OF 5.0 MILLION FT*LBF (6,779 kJ) OF IN-COMING BOAT KINETIC ENERGY AND THE SYSTEM IS DESIGNED TO STOP MULTIPLE ATTACKING BOATS.
   - 5 OCEANETICS STANDARD SHORE/STRUCTURE TERMINATIONS.
   - 2 BUOYS AND ASSOCIATED MOORINGS. THE MOORING CONSIST OF 1.75-INCH ABS GRADE 3 CHAIN WITH A BREAK STRENGTH OF 352 KIPS. TWO CHAIN GROUND LEGS ARE ASSOCIATED WITH EACH MOORING BUOY AND INCLUDE 7-TON IN-AIR WEIGHT SINKERS AND A COMBINATION OF 25 AND 30-TON CONCRETE ANCHORS. EACH MOORING BUOY HAS FROM 69 TO 74 TONS OF CONCRETE SINKERS/ANCHORS, AND ASSOCIATED CHAINS, KEEPING THE MOORING BUOYS IN PLACE.

BUOYS AND BARRIERS WILL INCLUDE NAVIGATION LIGHTS AND WARNING SIGNS THAT MEET ALL FEDERAL, STATE AND LOCAL REGULATIONS.

3. THIS WATERFRONT SECURITY BARRIER IS DESIGNED TO SAFELY OPERATE IN THREE CONDITIONS:
   - C1 – OPERATIONAL. IN 3-S WIND GUSTS OF 26 MPH OR LESS THE BARRIER CATENARY SAG IS LIMITED.
   - C2 – LARGE GATE OPENING/CLOSING IN 3-S WIND GUEST OF 16.5 MPH OR LESS.
   - C3 – SURVIVAL IN UP TO 3-S WIND GUSTS OF 95 MPH OR LESS.
4. THIS WATERFRONT BOAT BARRIER CONSISTS OF:
   - SEGMENT 1 – A 300-FOOT GATE TO THE NORTH THAT HAS SOME SLACK TO ALLOW FREQUENT USE.
   - SEGMENT 2 – A 1,080-FOOT LARGE GATE THAT IS PLANNED TO OCCASIONALLY BE USED. THIS GATE IS KEPT UNDER TENSION TO LIMIT THE CATENARY SAG IN C1 CONDITIONS. SEGMENT 2 IS CONFIGURED SO THAT IT CAN RE-POSITIONED WHEN THE VESSEL HOLLAND BERTHS AT THE MOORING DOLPHINS.

# TABLE 1. KEY COORDINATES

MOORINGS/ANCHORS

| ITEM | EASTING | NORTHING |
|---|---|---|
| BUOY A | 1,183,064.5 | 685,126.7 |
| ANCHOR A-1 | 1,183,073.4 | 685,206.5 |
| ANCHOR A-2 | 1,183,072.8 | 685,046.7 |
| BUOY B | 1,183,129.3 | 684,517.6 |
| ANCHOR B-1 | 1,183,123.4 | 684,574.0 |
| ANCHOR B-2 | 1,183,139.9 | 684,413.9 |
| ANCHOR ANC-1 | 1,183,141.5 | 686,077.7 |

STRUCTURE/SHORE TERMINATIONS

| ITEM | EASTING | NORTHING |
|---|---|---|
| SH-1 | 1,183,145.5 | 686,507.4 |
| SH-2 | 1,183,118.1 | 686,218.2 |
| SH-3 | 1,183,117.7 | 686,209.2 |
| SH-4 | 1,183,984.7 | 684,606.1 |
| SH-5 | 1,183,480.5 | 686,042.2 |

COORDINATES IN CONNECTICUT STATE PLAN COORDINATE SYSTEM (ZONE 0600) NORTH AMERICAN DATUM 1983 (NAD83) IN FEET.

NOTICE
THIS DOCUMENT CONTAINS COPYRIGHTED MATERIAL AND CONFIDENTIAL TRADE SECRET INFORMATION BELONGING EXCLUSIVELY TO OCEANETICS INC. OR ITS SUBSIDIARIES. UNAUTHORIZED USE, DISCLOSURE, DISSEMINATION, OR DUPLICATION OF ANY OF THE INFORMATION CONTAINED HERIN MAY RESULT IN LIABILITY UNDER APPLICABLE LAWS.

DO NOT SCALE
UNLESS OTHERWISE SPECIFIED TOLERANCES ARE IN INCHES. METRIC DIM'S ARE FOR REF. ONLY.

| 1PLACE DEC. | 2PLACE DEC. | 3PLACE DEC. | ANGLES |
|---|---|---|---|
| +/- 0.06 | +/- 0.03 | +/- 0.010 | +/- 0°-30' |

NOTES:
1. DIMENSIONS ARE IN FEET.
2. VERIFY ALL DIMENSIONS & CONDITIONS BEFORE STARTING WORK. NOTIFY OCEANETICS OF ANY DISCREPENCIES OR INCONSISTENCIES.

Finish | Weight

Reference:

| | | |
|---|---|---|
| Drawn | WNS | 05/25/2022 |
| Check | DRL | XXX |
| Engr. | DED | XXX |
| Appr. | | |

OCEANETICS
520 Ridgely Ave
Annapolis, MD
21401
Tel: (410) 571-5186
Fax: (410) 510-1095

Dwg Title: COORDINATES & NOTES GDEB BARRIER

Sheet Size: B | Project No.: EB3709 | OE Dwg No.: EB3709 | Revision
Discipline Code | Customer Dwg No. | Revision
Plot Scale: | File Name: FILENAME | Sheet 2 of 6

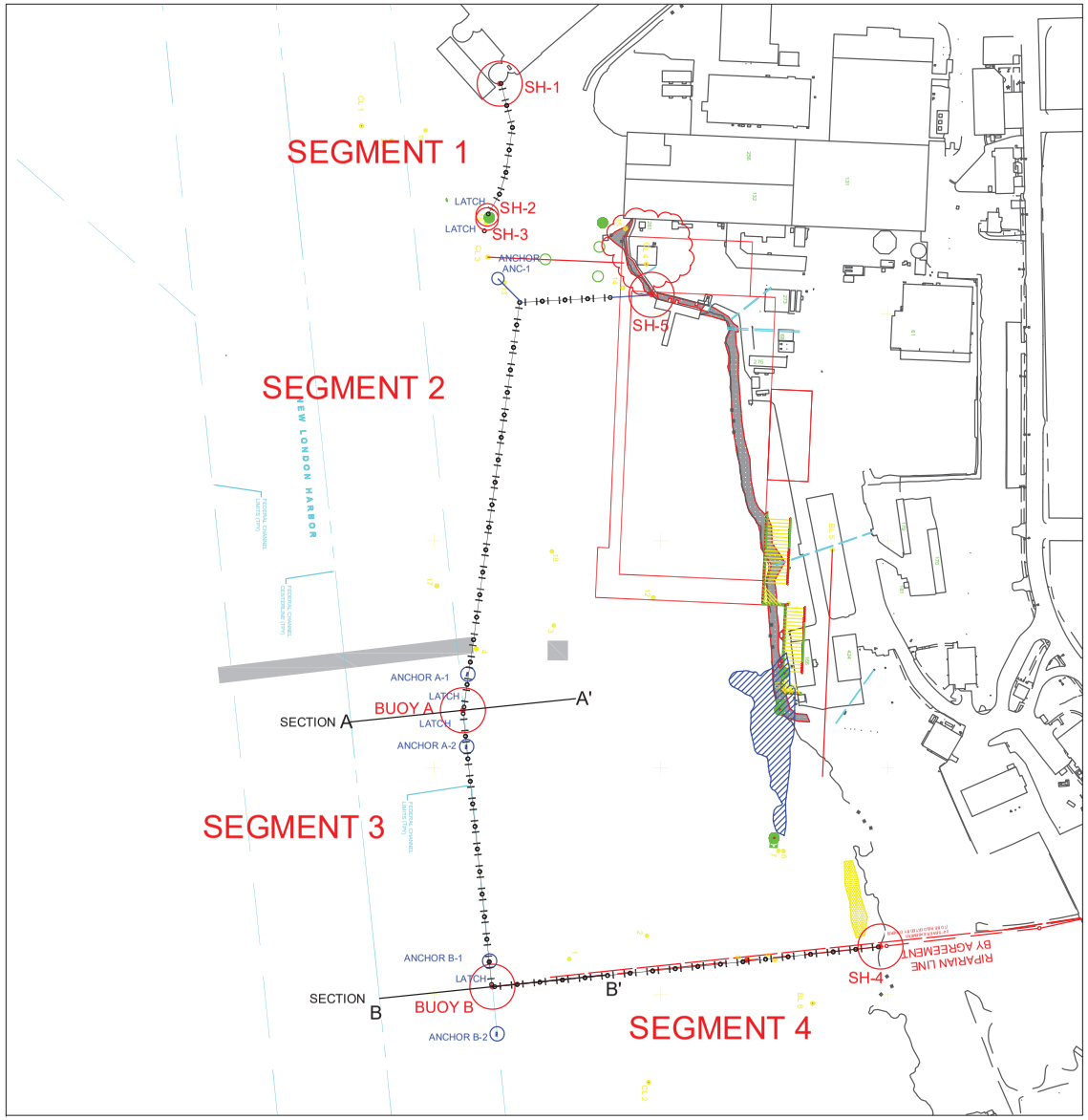


PHASE I CONFIGURATION; HOLLAND BERTHED

| REVISION HISTORY | | | |
|---|---|---|---|
| REV | DESCRIPTION | DATE | APPVD |
| - | XXXXXX | MM/DD/YY | MGR |

TO PREPARE FOR ARRIVAL OF THE VESSEL HOLLAND, SEGMENT 2 OF THE BARRIER CAN BE DETACHED FROMTERMINATION SH-2, THE BARRIER IS TIED OFF TO ANCHOR ANC-1 AND THE END FOUR SEGMENTS OF EWSB UNITS TEMPORARILY TIED OFF TO SHORE TERMINATION SH-5. THIS PROVIDES ROOM FOR HOLLAND TO BERTH AT THE MOORING DOLPHINS.

**NOTICE**

THIS DOCUMENT CONTAINS COPYRIGHTED MATERIAL AND CONFIDENTIAL TRADE SECRET INFORMATION BELONGING EXCLUSIVELY TO OCEANETICS INC. OR ITS SUBSIDEIARIES. UNAUTHORIZED USE, DISCLOSURE, DISSEMINATION, OR DUPLICATION OF ANY OF THE INFORMATION CONTAINED HERIN MAY RESULT IN LIABILITY UNDER APPLICABLE LAWS.

**DO NOT SCALE**

UNLESS OTHERWISE SPECIFIED TOLERANCES ARE IN INCHES. METRIC DIM'S ARE FOR REF. ONLY.

| 1 PLACE DEC. | 2 PLACE DEC. | 3 PLACE DEC. | ANGLES |
|---|---|---|---|
| +/- 0.06 | +/- 0.03 | +/- 0.010 | +/- 0°-30' |

**NOTES:**

1. DIMENSIONS ARE IN FEET.
2. VERIFY ALL DIMENSIONS & CONDITIONS BEFORE STARTING WORK. NOTIFY OCEANETICS OF ANY DISCREPENCIES OR INCONSISTENCIES.

OCEANETICS
520 Ridgely Ave
Annapolis, MD
21401
Tel: (410) 571-5186
Fax: (410) 510-1095

Reference:

Dwg Title: CONFIGURATION DESIGN GDEB BARRIER

| | | | | | |
|---|---|---|---|---|---|
| Drawn | WNS | 06/07/2022 | Sheet Size: B | Project No.: EB3709 | OE Dwg No.: EB3709 |
| Check | DRL | XXX | | Discipline Code | Customer Dwg No. |
| Engr. | DED | XXX | | | |
| Appr. | | | Plot Scale: | File Name: FILENAME | Sheet 3 of 6 |

Revision

Revision

Finish | Weight

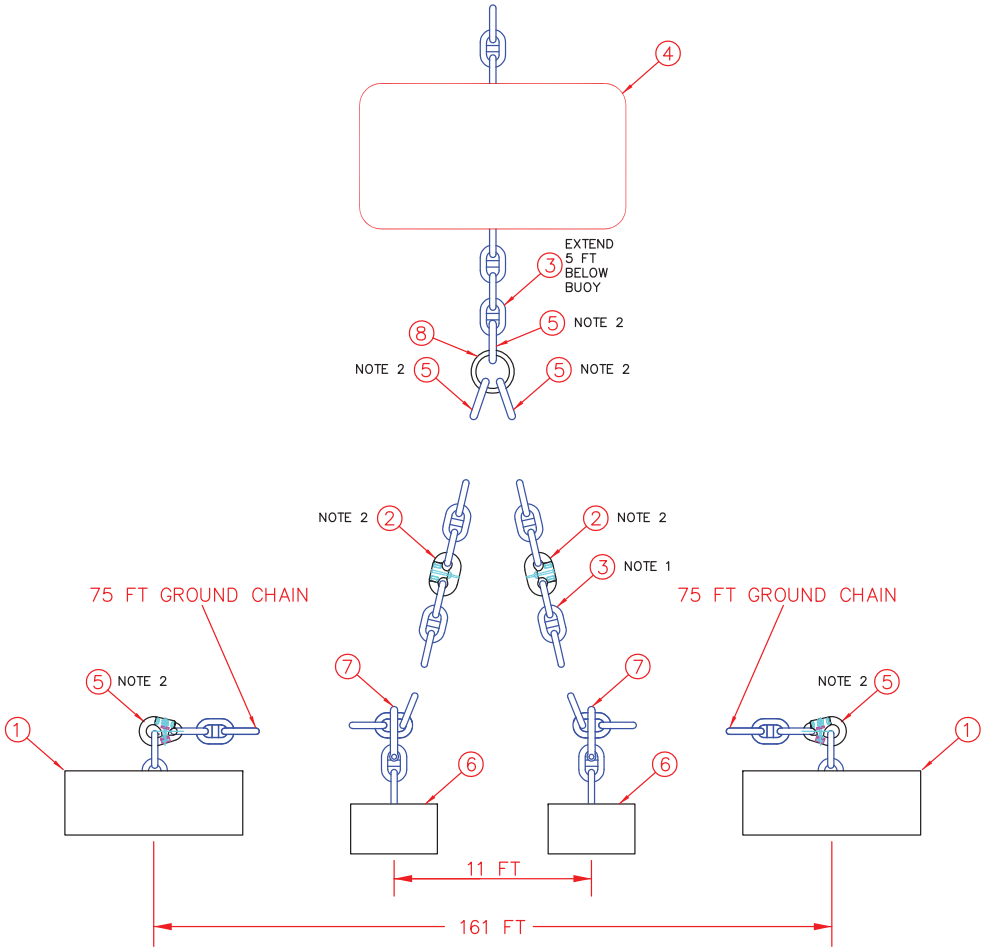


| REVISION HISTORY | | | |
|---|---|---|---|
| REV | DESCRIPTION | DATE | APPVD |
| - | XXXXXX | MM/DD/YY | MGR |

NOTES:

1. MEASURE WATER DEPTH AT THE MOORING SITE AND SET RISER CHAIN LENGTH SO CHAIN IS TIGHT AT LOW WATER.

2. SECURE ITEM NO 2&5 PER MANUFACTURES RECOMMENDATIONS AND WELD SHUT TO HELP ENSURE IT DOES NOT ACCIDENTALLY SEPARATE IN USE

.

## BILL OF MATERIAL

| PART NO. | REQ'D | DESCRIPTION | SPEC. |
|---|---|---|---|
| 8 | 1 | GROUND RING, 1.75-INCH | STEEL |
| 7 | 2 | SINKER SHACKLE, 1.75-INCH | STEEL |
| 6 | 2 | SINKER, 7-TON | 4930-003 |
| 5 | AR | ANCHOR JOINING LINK, 1.75-INCH | ABS GRADE 3 |
| 4 | 1 | BUOY | FOAM/STEEL |
| 3 | AR | CHAIN, 1.75-INCH | ABS GRADE 3 |
| 2 | AR | CHAIN JOINING LINK, 1.75-INCH | ABS GRADE 3 |
| 1 | 2 | ANCHOR, 25-TON OR 30-TON | 4925C-000 OR 4930-002 |

**DO NOT SCALE**

UNLESS OTHERWISE SPECIFIED TOLERANCES ARE IN INCHES. METRIC DIM'S ARE FOR REF. ONLY.

| 1PLACE DEC. | 2PLACE DEC. | 3PLACE DEC. | ANGLES |
|---|---|---|---|
| +/- 0.06 | +/- 0.03 | +/- 0.010 | +/- 0°-30' |

**NOTES:**

1. DIMENSIONS ARE IN FEET.
2. VERIFY ALL DIMENSIONS & CONDITIONS BEFORE STARTING WORK. NOTIFY OCEANETICS OF ANY DISCREPENCIES OR INCONSISTENCIES.


NOTICE

THIS DOCUMENT CONTAINS COPYRIGHTED MATERIAL AND CONFIDENTIAL TRADE SECRET INFORMATION BELONGING EXCLUSIVELY TO OCEANETICS INC. OR ITS SUBSIDIARIES. UNAUTHORIZED USE, DISCLOSURE, DISSEMINATION, OR DUPLICATION OF ANY OF THE INFORMATION CONTAINED HERIN MAY RESULT IN LIABILITY UNDER APPLICABLE LAWS.



OCEANETICS

520 Ridgely Ave
Annapolis, MD
21401
Tel: (410) 571-5186
Fax: (410) 510-1095


Reference:

Dwg Title: MOORING DESIGN GDEB BARRIER

| | | |
|---|---|---|
| Drawn | WNS | 05/24/2022 |
| Check | DRL | XXX |
| Engr. | DED | XXX |
| Appr. | | |

Sheet Size: B

Project No.: EB3709

Discipline Code:

OE Dwg No.: EB3709

Customer Dwg No.:

Revision

Revision

Finish

Weight

Plot Scale:

File Name: FILENAME

Sheet 5 of 6

| REVISION HISTORY | | | |
|---|---|---|---|
| REV | DESCRIPTION | DATE | APPVD |
| - | XXXXXX | MM/DD/YY | MGR |

NOTES:

1. WELD ITEMS 2 AND 4 AFTER INSTALLATION TO ASSURE THEY REMAIN CLOSED IN OPERATION.

2. REMOVE CHAIN STUD FROM END LINK.

.

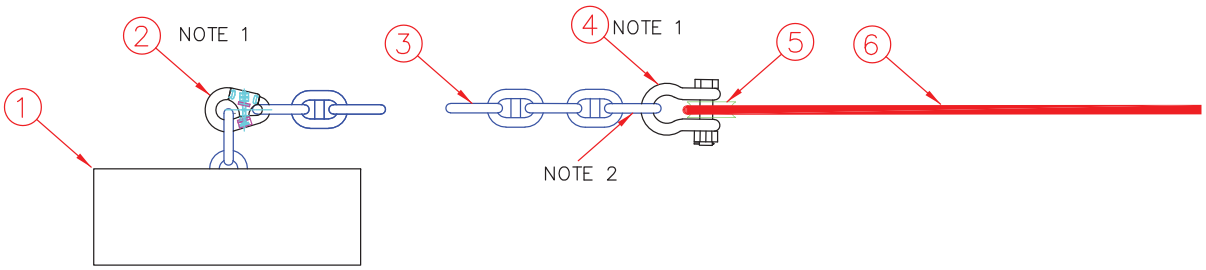


| BILL OF MATERIAL | | | |
|---|---|---|---|
| | | | |
| | | | |
| 6 | 1 | PICK-UP LINE, 1.25-INCH DIA FB=149 KIPS L=340 FT | DYNEMMA |
| 5 | 1 | THIMBLE, 1-1/4-INCH | STAINLESS STEEL |
| 4 | 1 | SHACKLE, 1-1/2-INCH, G-2130 OR EQUAL | STEEL |
| 3 | 45 FT | CHAIN, 1.75-INCH, FB=352 KIPS | ABS GRADE 3 |
| 2 | 1 | ANCHOR JOINING LINK, 1.75-INCH | ABS GRADE 3 |
| 1 | 1 | ANCHOR, 30-TON, CONCRETE | 4930-002 |
| PART NO. | REQ'D | DESCRIPTION | SPEC. |

**DO NOT SCALE**

UNLESS OTHERWISE SPECIFIED TOLERANCES ARE IN INCHES. METRIC DIM'S ARE FOR REF. ONLY.

| 1PLACE DEC. | 2PLACE DEC. | 3PLACE DEC. | ANGLES |
|---|---|---|---|
| +/- 0.06 | +/- 0.03 | +/- 0.010 | +/- 0°-30' |

**NOTES:**

1. DIMENSIONS ARE IN FEET.
2. VERIFY ALL DIMENSIONS & CONDITIONS BEFORE STARTING WORK. NOTIFY OCEANETICS OF ANY DISCREPENCIES OR INCONSISTENCIES.


NOTICE

THIS DOCUMENT CONTAINS COPYRIGHTED MATERIAL AND CONFIDENTIAL TRADE SECRET INFORMATION BELONGING EXCLUSIVELY TO OCEANETICS INC. OR ITS SUBSIDEIARIES. UNAUTHORIZED USE, DISCLOSURE, DISSEMINATION, OR DUPLICATION OF ANY OF THE INFORMATION CONTAINED HERIN MAY RESULT IN LIABILITY UNDER APPLICABLE LAWS.



OCEANETICS

520 Ridgely Ave
Annapolis, MD
21401
Tel: (410) 571-5186
Fax: (410) 510-1095


Reference:

Dwg Title: DESIGN ANCHOR ANC-1 GDEB BARRIER

| | | | | | |
|---|---|---|---|---|---|
| Drawn | WNS | 05/26/2022 | Sheet Size: B | Project No.: EB3709 | OE Dwg No.: EB3709 |
| Check | DRL | XXX | | Discipline Code | Customer Dwg No. |
| Engr. | DED | XXX | | | |
| Appr. | | | Plot Scale: | File Name: FILENAME | Sheet 6 of 6 |

Finish | Weight | Revision | Revision

## TABLE 5, CONCRETE SPECFICATIONS

| CONCRETE WEIGHT: | 60,000 LBF [30 TON*g] | VOLUME: | 15 CY [11.5 m^3] |
|---|---|---|---|
| DESCRIPTION | SPECIFICATION | DESCRIPTION | SPECIFICATION |
| CEMENT: TYPE II/IV | ASTM C150 NOTE 17 | f'c @ 28 DAYS 5000 PSI [28 kPA] (f'c @ TRANSFER: 2500 PSI [17 kPA]) | ACI 214, ASTM C31,C39 |
| POZZULAN: FLY-ASH | ASTM C618 CLASS F | | |
| | | AIR ENTRAIN 3-5% TEST METHOD | ASTM C-231 |
| MAX SOLUABLE CHLORIDE ION CONTENT (CI-) 0.15% BY WEIGHT | ACI 318, TABLE-19.3.2.1 NOTE 14 | MAX. WATER TO CEMENTITIOUS MATERIAL RATIO 40% BY WEIGHT | ACI 318, TABLE-19.3.2.1 NOTE 14 |
| AGGREGATE: CLASS 4S 3-INCH [75mm] MAX | ASTM C-33 NOTE 13 | SLUMP TEST: 2-3 INCH [50-76mm] | ASTM C143 NOTE 16 |
| SIEVE ANALYSIS | ASTM C136 | CHEMICAL ADDMIXTURES NOTE 14 | ASTM C-494 TYPE D |
| PROPORTIONS: NORMAL-DENSITY | ACI ACI 211.1 NOTE 12 | BULK DENSITY SHALL BE 3915 Lbs/Yd^3 MIN. | ASTM C-29, NOTE 12 |

| REVISION HISTORY | | | |
|---|---|---|---|
| REV | DESCRIPTION | DATE | APPVD |
| | | | |

NOTES CONTINUED ON SHT. 2

20. FORMS SHALL NOT BE STRIPPED UNTIL CONCRETE HAS REACHED 75% OF DESIGN STRENGTH (f'c).

19. BEVEL ALL CORNERS 1-INCH. BOTTOM & SIDE FINISH: STD FORM; TOP FINISH: WOOD FLOAT

18. REBAR TO BE NO. 4, ASTM A615 GRADE 60. PLACE REBAR APPROXIMATELY AS SHOWN. MINIMUM CONCRETE COVER OF REBAR TO BE 4 INCHES. MATERIAL CERTIFICATION (MILL REPORT) FOR REBAR TO BE SUBMITTED.

17. ALL CEMENTS CONFORMING T ASTM C150 ARE SUITABLE. CEMENT TO BE TYPE II/IV. CEMENT SHALL CONTAIN NO MORE THAN 8% TRICALCIUM ALUMINATE (C3A) AND MAXIMUM SUM TOTAL OF 58% TRI-CALCIUM ALUMINATE + TRICALCIUM SILICATE (C3S).

16. PRIOR TO CONDUCTING SLUMP TEST, SAMPLES SHALL BE SIEVED SUCH THAT MAX SIZE OF AGGREGATE IS LESS THAN 1.5 INCHES [40mm].

15. ADD-MIXTURES TO REDUCE HEAT OF HYDRATION, INCREASE DURRABILATY, DECREASE PERMABILITY, INCREASE WORKABILITY AND INHIBIT CORROSION TO REINFORCEMENT LIKE GRACE ADVA 190, SHALL BE USED. ADMIXTURES SHALL NOT CONTAIN CALCIUM CHLORIDE, CALCIUM FORMATE, OR TRIETHANOLAMINE OR ANY OTHER ACCELERATOR.

14. AS PER ACI 318-17, TABLE 19.3.2.1, MAXIMUM WATER TO CEMENTITIOUS MATERIAL AND MAXIMUM WATER-SOLUBLE CHLORIDE ION (Cl-) CONTENT IN CONCRETE ARE BOTH % BY WEIGHT OF CEMENT. FOR MAX CI, IT IS THE CONTRIBUTION FROM ALL INGREDIENTS INCLUDING: WATER, AGGREGATES, CEMENTIOUS MATERIALS AND ALL ADD-MIXURES AND SHALL BE DETERMINED BY ASTM C1218 AT AGE BETWEEN 28 AND 42-DAYS.

13. AGGREGATES QUALITY MUST CONFORM WITH THE QUALITY SPECIFIED AND SHALL MEET THE LIMITS SET OF DELETERIOUS SUBSTANCES IN TABLE-3 OF ASTM C33.

12. CONCRETE SHALL HAVE A MINIMUM DENSITY OF 140 Lbs/ft^3 [3500 kg/m^3] AS DETERMINED BY ASTM C-29.

11. CONCRETE SHALL CONFORM TO ACI 318-19 EXPOSURE CLASS C-2 AND THE STANDARDS PROVIDED IN TABLE-5, CONCRETE SPECIFICATIONS.

10. PRIOR TO CONSTRUCTION, CONTRACTOR SHALL SUBMIT MIX DESIGN WITH AGGREGATE GRADATION SCHEDULE AND BACK UP WITH TEST DATA FOR APPROVAL.

**NOTES: (CONTINUED FROM TITLE BLOCK)**

| | | | | |
|---|---|---|---|---|
| 1 | 5 | | ROUND BAR, No 18 (2 1/4 OD) x 12 L | ASTM A615 No. Gd 60 |
| 1 | 4 | | CHAIN, 2-1/2-INCH STUD-LINK x 7-LINKS | MIL-C-24633A (ABS Grade 3Aa) or EQ. |
| ~894-FT | 3 | | REINFORCEMENT No. 5 | ASTM A615 Gd 60 |
| ~15 CY | 2 | | CONC, NORMAL AGGREGATE, 145#/FT^3 | NOTE 11, TABLE-5 |
| ~ | 1 | | ANCHOR, CONCRETE, LOW PROFILE, 30-TON, 2.5 INCH CHAIN EMBED | |
| -1 | ITEM | PART NO | DESCRIPTION | SPECIFICATION |

Parts List

**DO NOT SCALE**

UNLESS OTHERWISE SPECIFIED TOLERANCES ARE IN INCHES. METRIC DIM'S ARE FOR REF. ONLY.

| 1PLACE DEC. | 2PLACE DEC. | 3PLACE DEC. | ANGLES |
|---|---|---|---|
| +/- 0.06 | +/- 0.03 | +/- 0.010 | +/- 0°-30' |

**NOTES:**

1. DIMENSIONS ARE IN INCHES, (X)=REF DIM.
2. X (ZERO DECIMAL PLACE) = +/- 1/8
3. REMOVE BURRS AND SHARP EDGES .015 MAX.
4. ALL SURFACE ROUGHNESS PER MIL-STD-10.
5. DIMENSION LIMITS HELD AFTER COATING.
6. MACHINED FILLET RADII .015-.030.
7. SUBSTITUTIONS MUST BE PREAPPROVED IN WRITING
8. NORMALITY, ⊐ AND // OF MACHINED SURFACES .002 PER INCH, TO A MAX. OF .012 INCHES FOR A SINGLE SURFACE.
9. VERIFY ALL DIMENSIONS & CONDITIONS BEFORE STARTING WORK. NOTIFY OWNER (OE) OF ANY DISCREPENCIES.

Finish | Weight 60,000 Lbs

Reference:

Drawn J ANDERSEN, PE 05/10/22
Check D. Dellaert 05/17/22
Engr. J Andersen 05/11/22
Appr. D. Dellaert 05/17/22

OCEANETICS
520 Ridgely Ave
Annapolis, MD
21401
Tel: (410) 571-5186
Fax: (410) 510-1095

Dwg Title:

# ANCHOR, CONCRETE, LOW PROFILE, 30-TON, 2.5 INCH CHAIN EMBED

Sheet Size B | Project No. NA3001 | OE Dwg No. 4930-002 | Revision -
Discipline Code | Customer Dwg No. | Revision
Plot Scale: 1:1 | File Name 4930-002.DWG | Sheet 1 of 2

**NOTICE**

THIS DOCUMENT CONTAINS CONFIDENTIAL, PROPRIETARY,TRADE SECRET INFORMATION, AND/OR COPYRIGHTABLE SUBJECT MATTER BELONGING TO OCEANETICS, INC. AND/OR ITS SUBSIDIARIES. UNAUTHORIZED USE, DISCLOSURE, DUPLICATION, OR DISSEMINATION OF ANY OF THE INFORMATION CONTAINED HEREIN IS EXPRESSLY FORBIDDEN.

C:\Users\JimAndersenPE\OneDrive - Truston, Inc. - GCC High\DRAWINGS\RELEASED\4930-002.dwg, 5/23/2022 12:49:46 PM

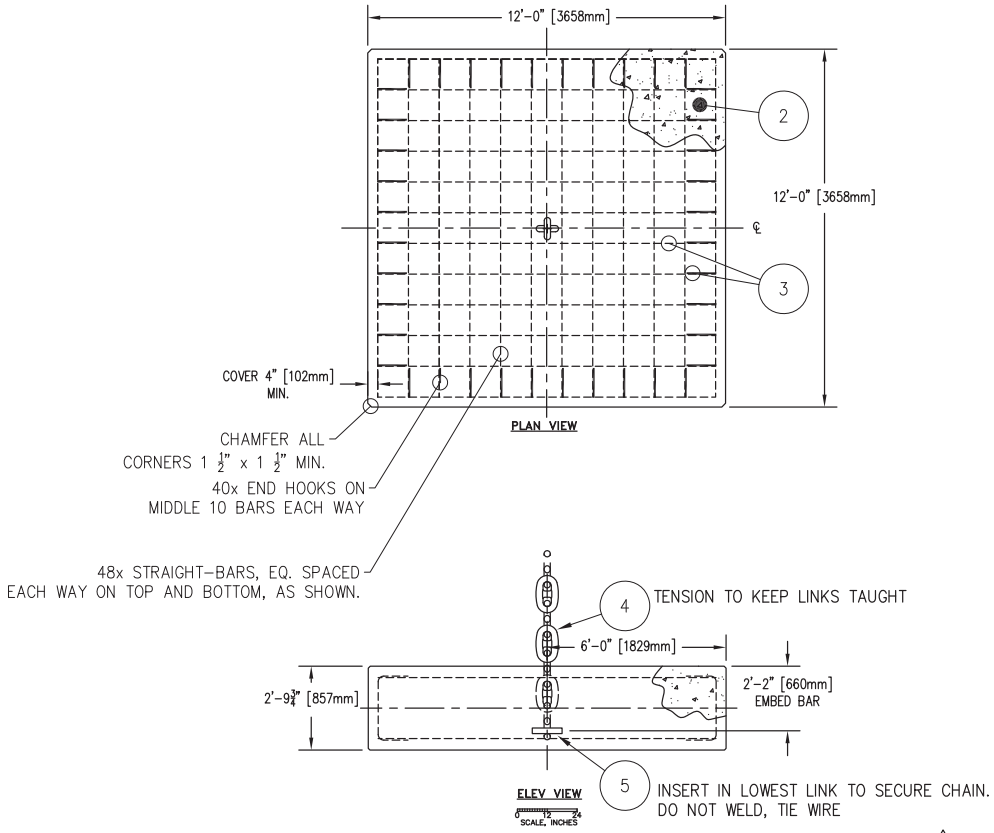


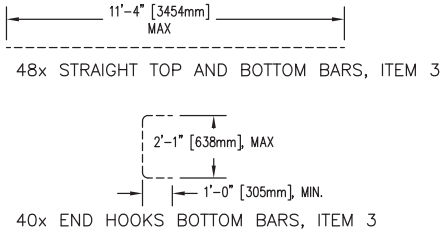


1 ANCHOR, CONCRETE, LOW PROFILE, 30-TON, 2.5 INCH CHAIN EMBED (SCALE: 1:50), IN-AIR WEIGHT, 30-TONS, US

11

OCEANETICS
520 Ridgely Ave.
Annapolis, MD
21401
Tel: (410) 571-5186
Fax: (410) 510-1095

Dwg Title:

# ANCHOR, CONCRETE, LOW PROFILE, 30-TON, 2.5 INCH CHAIN EMBED

| Sheet Size | Project No. | TTI Dwg No. | Revision |
|---|---|---|---|
| B | NA3001 | 4930-002 | - |
| | Discipline Code: CONC | Customer Dwg No. | Revision |
| Scale: 1:1 | File Name: OE-B-SIZE.idw | SHEET 2 OF 2 | |

**NOTICE**

THIS DOCUMENT CONTAINS CONFIDENTIAL, PROPRIETARY, TRADE SECRET INFORMATION, AND/OR COPYRIGHTABLE SUBJECT MATTER BELONGING TO OCEANETICS, INC, AND/OR ITS SUBSIDIARIES. UNAUTHORIZED USE, DISCLOSURE, DUPLICATION, OR DISSEMINATION OF ANY OF THE INFORMATION CONTAINED HEREIN IS EXPRESSLY FORBIDDEN.

| REVISIONS | | | | | | | |
|---|---|---|---|---|---|---|---|
| TRANS | DRAWN | CHKD | APPR | LTR | DESCRIPTION | DATE | EN |
| | | | | | | | |

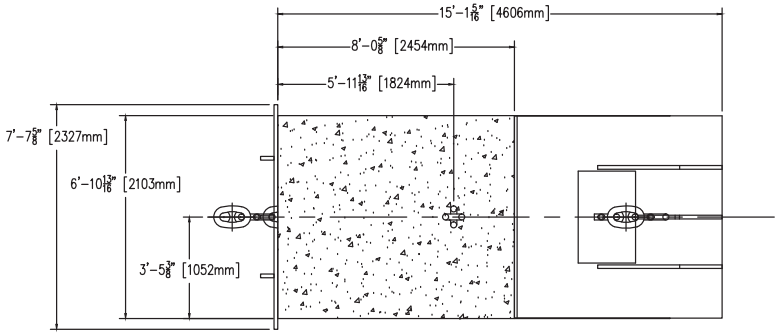


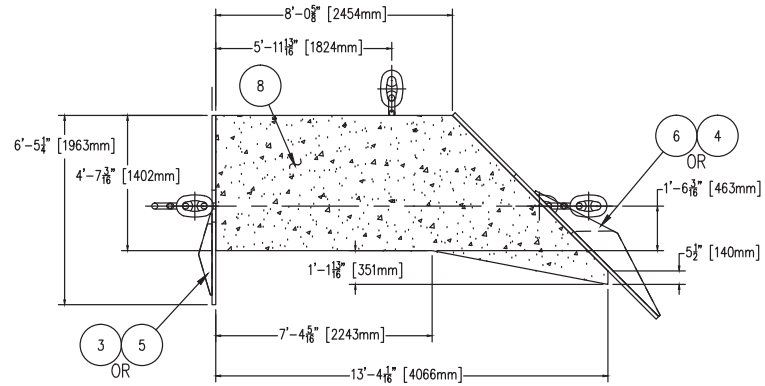


1 25 TON CHAIN PEARL HARBOR ANCHOR, ROCK TYPE OPTION

OR

2 25 TON CHAIN PEARL HARBOR ANCHOR, MUD TYPE OPTION

NOTES: CONTINUED ON SHEET 2

13. THE ENTIRE OUTSIDE OF ITEMS 3 & 5, or 4 & 6 SHALL HAVE SURFACES ROUGHENED TO A MIN. SURFACE PROFILE OF 1/32-INCH (0.8 mm)

12. CONTRACTOR SHALL SUBMIT FABRICATION DRAWINGS FOR APPROVAL.

11. FORMWORK SHALL INCLUDE SUPPORT FOR FRONT SHEAR KEY, ITEM 4 or 6, TO BE POSITIONED AS SHOWN.

10. RUN REBAR THROUGH CHAIN AS SHOWN ON EACH SIDE OF PLATE SHACKLE. CHAIN SHALL BE KEPT STRAIGHT AND TAUT DURING POUR. MIN. OF TWO LINKS SHALL BE EXPOSED FROM CONCRETE SURFACE, AS SHOWN.

9. PRIOR TO POURING CONCRETE, ALL STEEL SHALL BE CLEAN AND FREE FROM: RUST, DIRT, OIL, OR ANY COATINGS.

8. UNLESS OTHERWISE NOTED, ALL TOLERANCES ON FRACTIONAL DIMENSIONS SHALL BE +/- 1/4-INCH [6mm]

NOTES: CONTINUED FROM TITLE BLOCK

| PLATE & WELD CONVERSION | |
|---|---|
| INCH | MM |
| 3/16 | 5 |
| 1/4 | 6 |
| 5/16 | 8 |
| 3/8 | 10 |
| 1/2 | 12 |
| 3/4 | 20 |
| 1 | 25 |
| 1 1/4 | 30 |
| 1 3/8 | 35 |
| 1 1/2 | 40 |

NOTICE

THIS DOCUMENT CONTAINS COPYRIGHTED MATERIAL AND CONFIDENTIAL TRADE SECRET INFORMATION BELONGING EXCLUSIVELY TO TRUSTON TECHNOLOGIES INC. OR ITS SUBSIDIARIES. UNAUTHORIZED USE, DISCLOSURE, DISSEMINATION OR DUPLICATION OF ANY OF THE INFORMATION CONTAINED HEREIN MAY RESULT IN LIABILITY UNDER APPLICABLE LAWS.

| -3 | -2 | -1 | ITEM | PART NO | DESCRIPTION | SPECIFICATION |
|---|---|---|---|---|---|---|
| | 16 | 16 | 21 | | RAMSET/RED-HEAD ROCK BOLT: 1-1/4" DIA X 8" | WS-CARBON OR EQUIVALENT |
| | 8 | 8 | 20 | | #5 DEFORMED STRAIGHT REBAR | ASTM A-615, GRADE 60, NOTES 18 & 19 |
| | 8 | 8 | 19 | | #5 DEFORMED STRAIGHT REBAR | ASTM A-615, GRADE 60, NOTES 18 & 19 |
| | 8 | 8 | 18 | | #5 DEFORMED STRAIGHT REBAR | ASTM A-615, GRADE 60, NOTES 18 & 19 |
| | 8 | 8 | 17 | | #5 DEFORMED STRAIGHT REBAR | ASTM A-615, GRADE 60, NOTES 18 & 19 |
| | 48 | 48 | 16 | | #5 DEFORMED STRAIGHT REBAR | ASTM A-615, GRADE 60, NOTES 18 & 19 |
| | 20 | 20 | 15 | | #5 DEFORMED BENT BAR | ASTM A-615, GRADE 60, NOTES 18 & 19 |
| | 16 | 16 | 14 | | #5 DEFORMED BENT BAR | ASTM A-615, GRADE 60, NOTES 18 & 19 |
| | 8 | 8 | 13 | | #5 DEFORMED STRAIGHT REBAR | ASTM A-615, GRADE 60, NOTES 18 & 19 |
| | 8 | 8 | 12 | | #5 DEFORMED STRAIGHT REBAR | ASTM A-615, GRADE 60, NOTES 18 & 19 |
| | 63 | 63 | 11 | | #5 DEFORMED STRAIGHT REBAR | ASTM A-615, GRADE 60, NOTES 18 & 19 |
| | 40 | 40 | 10 | | #5 DEFORMED STRAIGHT REBAR | ASTM A-615, GRADE 60, NOTES 18 & 19 |
| | AR | AR | 9 | | CHAIN, 2.5-INCH | STUD LINK, ABS GRADE 3 |
| | AR | AR | 8 | | CONCRETE, ~351 CF | SEE CONCRETE SPECIFICATION TABLE ON SHEET 2 |
| | 1 | 1 | 7 | | 2-1/4 - 4 INCH PLATE SHACKLE ASSY. | |
| | 1 | | 6 | | 25-TON PEARL HARBOR ANCHOR FRONT SHEAR KEY WELDMENT, MUD TYPE | 1-1/2" A572, GR. 50 PLATE |
| | 1 | | 5 | | 25-TON PEARL HARBOR ANCHOR REAR SHEAR KEY WELDMENT, MUD TYPE | 1-1/2" A572, GR. 50 PLATE |
| | | 1 | 4 | | 25-TON PEARL HARBOR ANCHOR FRONT SHEAR KEY WELDMENT, ROCK TYPE | 1-1/2" A572, GR. 50 PLATE |
| | | 1 | 3 | | 25-TON PEARL HARBOR ANCHOR REAR SHEAR KEY WELDMENT, ROCK TYPE | 1-1/2" A572, GR. 50 PLATE |
| | ~ | | 2 | | 25-TON CHAIN, PEARL HARBOR ANCHOR, MUD TYPE | |
| | | ~ | 1 | | 25-TON CHAIN, PEARL HARBOR ANCHOR, ROCK TYPE | |

QUANTITY — LIST OF MATERIAL

DO NOT SCALE
UNLESS OTHERWISE SPECIFIED TOLERANCES ON

| 1 PLACE DEC. | 2 PLACE DEC. | 3 PLACE DEC. | ANGLES |
|---|---|---|---|
| ± .1 | ± .03 | ± .010 | ± 0°-30' |

GENERAL NOTES
1. DIMENSIONS ARE IN INCHES, (X)= REF DIMENSION.
2. REMOVE BURRS AND SHARP EDGES .015 MAX.
3. ALL SURFACE ROUGHNESS PER MIL-STD-10.
4. DIMENSION LIMITS HELD AFTER PLATING.
5. MACHINED FILLET RADII .015-.030.
6. MACHINED DIAMETERS ON A COMMON CENTERLINE MUST BE CONCENTRIC WITHIN .005 T.I.R. UNMACHINED DIAMETERS CONCENTRIC WITHIN .032 T.I.R.
7. NORMALITY, SQUARENESS AND PARALLELISM OF MACHINED SURFACES .002 PER INCH, TO A MAX. OF .012 INCHES FOR A SINGLE SURFACE.

Finish | Weight ~60,000 LBS

TRUSTON TECHNOLOGIES, INC.
520 Ridgely Avenue
Annapolis, MD 21401
TEL (410)571-5186

REFERENCE: MOORING COMPONENTS

TITLE: 25-TON CHAIN, PEARL HARBOR ANCHOR

| | | |
|---|---|---|
| Drawn | DRL | 5/28/2014 |
| Check | - | - |
| Approved | - | - |
| Approved | | |

| | | | |
|---|---|---|---|
| SIZE B | Project No. - | TTI Dwg No. 4925C-000 | REVISION — |
| | Discipline Code: C-1 | Customer Dwg No. | REVISION |
| Scale: PLOT 1:1 | CAD File Name - | Sheet 1 of 5 | |

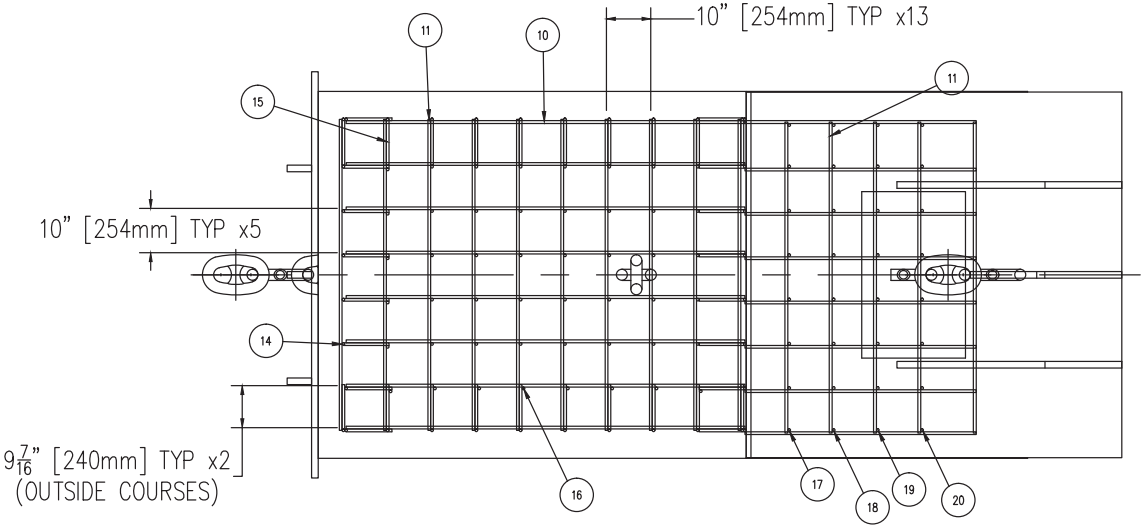


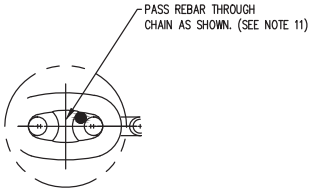


NOTES: CONTINUED ON SHEET 3

| ANCHOR CONRETE SPECIFICATIONS | | | |
|---|---|---|---|
| CONCRETE | | | |
| MIX | | f'c@TRANSFER | 2500PSI |
| CU.FT.CONC. | 351 C.F. | f'c@28 DAYS | 4000PSI |
| AIR WEIGHT: ~ 60,000 LBS. | SLUMP 3" TO 4" | | |
| IN WATER WEIGHT: ~ 36,000 LBS. | | | |
| CEMENT TYPE I-II | AIR ENTRAIN. | 3 - 5% | |
| TOP FINISH: WOOD FLOAT | | | |
| SIDES & BOTTOM FINISH:STD. FORM | | | |

15. EQUIVALENT BRITISH STANDARDS FOR CONCRETE ARE AS FOLLOWS. ASTM C150 MAY BE REPLACED WITH B S12 IN CONJUNCTION WITH BS 6699. ASTM C33 MAY BE REPLACED WITH BS 882.

14. MINIMUM 28-DAY COMPRESSIVE STRENGTH OF CONCRETE TO BE 4000 PSI. MAXIMUM WATER-CEMENT RATIO = .45 BY WEIGHT. CONCRETE MIX SHALL CONTAIN A MIN. OF 752 LBS. OF CEMENT PER CY. MIX DESIGN SHALL BE ACCORDING TO ACI 211.1-91. CONCRETE SHALL CONFORM TO ASTM C150, STANDARD SPECIFICATION FOR PORTLAND CEMENT AND ASTM C33, STANDARD SPECIFICATION FOR CONCRETE AGGREGATE.

NOTES: CONTINUED FROM SHEET 1

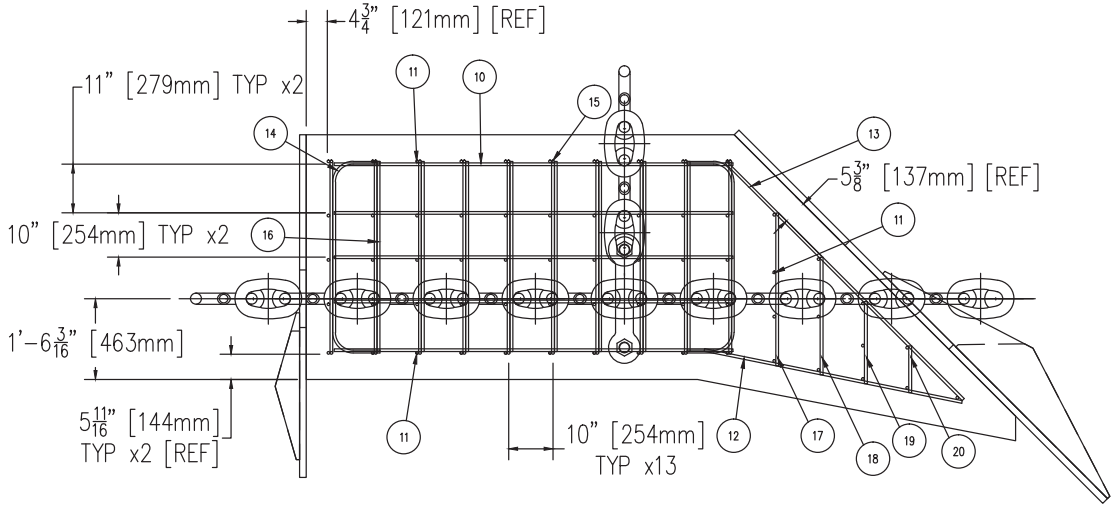


NOTICE
THIS DOCUMENT CONTAINS COPYRIGHTED MATERIAL AND CONFIDENTIAL TRADE SECRET INFORMATION BELONGING EXCLUSIVELY TO TRUSTON TECHNOLOGIES INC. OR ITS SUBSIDIARIES. UNAUTHORIZED USE, DISCLOSURE, DISSEMINATION OR DUPLICATION OF ANY OF THE INFORMATION CONTAINED HEREIN MAY RESULT IN LIABILITY UNDER APPLICABLE LAWS.

TRUSTON TECHNOLOGIES, INC.
520 Ridgely Avenue
Annapolis, MD 21401
TEL (410)571-5186

TITLE
25-TON CHAIN, PEARL HARBOR ANCHOR

| SIZE | Project No. | TTI DWG No. | REVISION |
|---|---|---|---|
| B | - | 4925C-000 | — |
| | Discipline Code: C-2 | Customer Dwg No. | REVISION |
| Scale X:Y | CAD File Name - | Sht. 2 of 5 | |

19. FINDS NUMBERS 3, 4, 5, & 6 SHALL HAVE THEIR SURFACES ROUGHENED OR MANUFACTURED FROM RUSTED STEEL FOR IMPROVED ANCHOR HOLDING.

18. FORWARD AND REAR SHEAR KEYS SHALL BE SECURED BY ROCK BOLTS (PN 21) PER THE MANUFACTURER'S INSTRUCTONS.

17. STANDARD FOR CARBON STEEL BARS FOR REINFORCEMENT (REBAR) SHALL BE BS 4449 GRADE 420 (420 MPA) AND SHALL BE 5/8", IN CROSS-SECTION. BS 4466 FOR SCHEDULING, DIMENSIONING, BENDING AND CUTTING OF STEEL REINFORCEMENT.

16. PLACE REBAR APPROXIMATELY AS SHOWN. MINIMUM CONCRETE COVER OF REBAR TO BE 4 INCHES [102 mm]. MATERIAL CERTIFICATION (MILL REPORT) FOR REBAR TO BE SUBMITTED. ALL REBAR SPLICES SHALL HAVE A MIN OVERLAP OF 18 in [460 mm]. TIE ALL REBAR INTERSECTIONS. WELDING, GAS TORCHING, OR HEATING REBAR IS NOT ALLOWED.

## NOTES: CONTINUED FROM SHEET 2

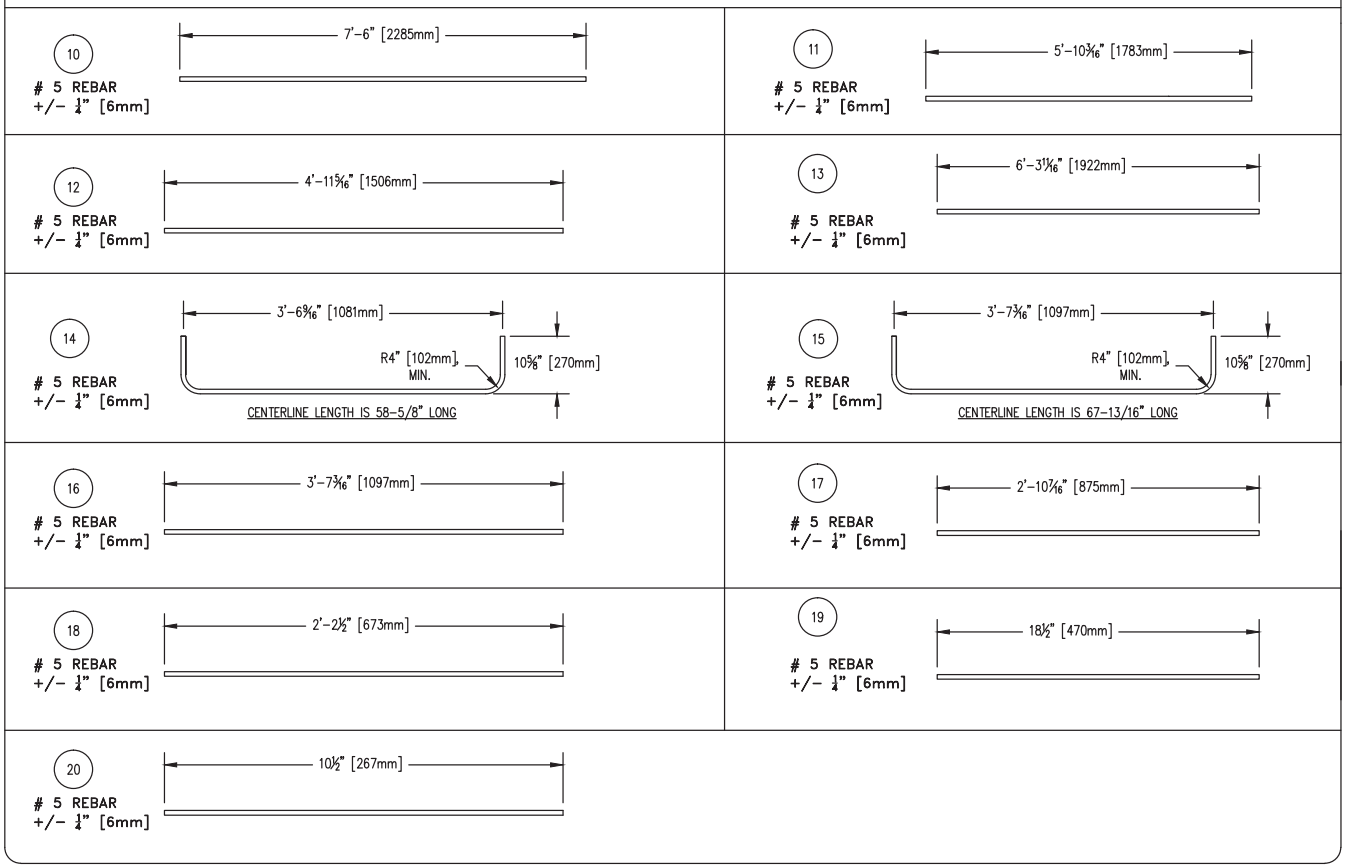


NOTICE
THIS DOCUMENT CONTAINS COPYRIGHTED MATERIAL AND CONFIDENTIAL TRADE SECRET INFORMATION BELONGING EXCLUSIVELY TO TRUSTON TECHNOLOGIES INC. OR ITS SUBSIDIARIES. UNAUTHORIZED USE, DISCLOSURE DISSEMINATION OR DUPLICATION OF ANY OF THE INFORMATION CONTAINED HEREIN MAY RESULT IN LIABILITY UNDER APPLICABLE LAWS.

TRUSTON TECHNOLOGIES, INC.
520 Ridgely Avenue
Annapolis, MD 21401
TEL (410)571-5186

TITLE
25-TON CHAIN, PEARL HARBOR ANCHOR

| SIZE | Project No. | TTI DWG No. | REVISION |
|---|---|---|---|
| B | - | 4925C-000 | — |
| | Discipline Code: C-3 | Customer Dwg No. | REVISION |
| Scale PLOT 1:1 | CAD File Name - | Sht. 3 of 5 | |

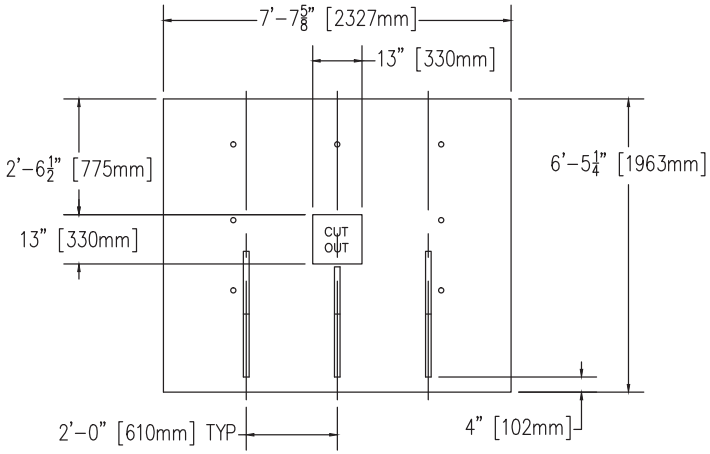


5 25-TON PEARL HARBOR ANCHOR REAR SHEAR KEY WELDMENT, MUD TYPE
(SCALE: 1:50)

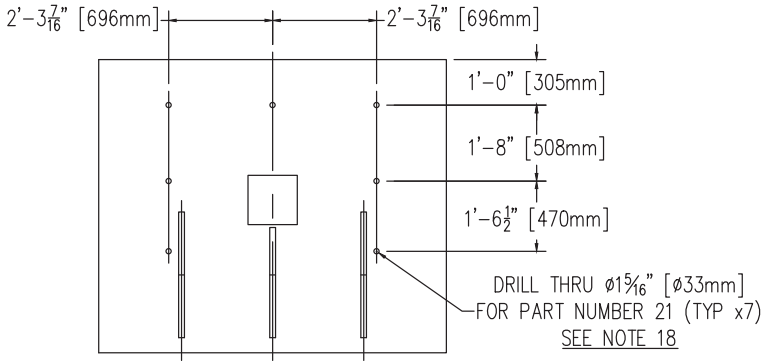


25-TON PEARL HARBOR ANCHOR REAR SHEAR KEY WELDMENT, ROCK BOLT LAYOUT
(SCALE: 1:50)

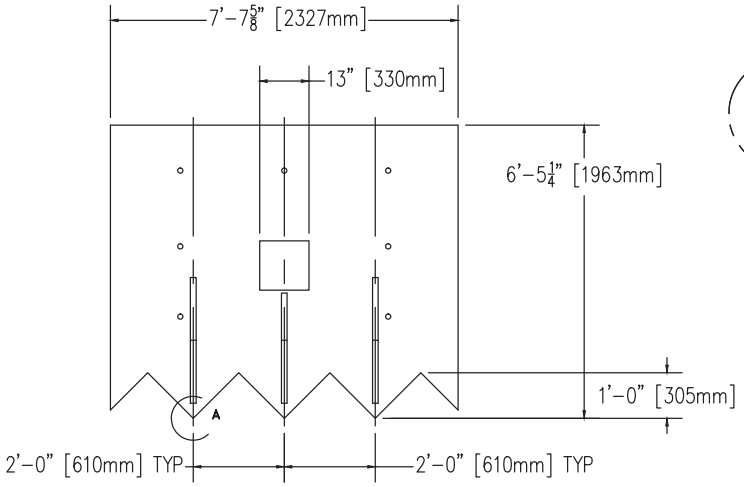


3 25-TON PEARL HARBOR ANCHOR REAR SHEAR KEY WELDMENT, ROCK TYPE
(SCALE: 1:50)

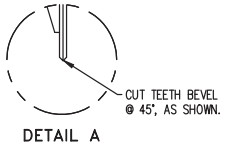


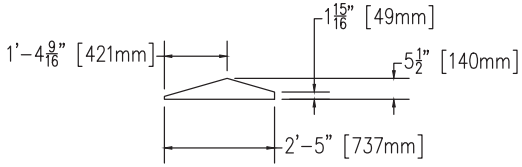


REAR SHEAR KEY SMALL GUSSET
(1 REQUIRED PER ASSEMBLY)

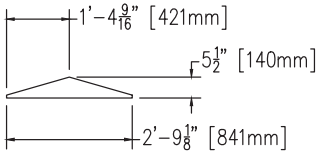


REAR SHEAR KEY LARGE GUSSET
(2 REQUIRED PER ASSEMBLY)

NOTICE
THIS DOCUMENT CONTAINS COPYRIGHTED MATERIAL AND CONFIDENTIAL TRADE SECRET INFORMATION BELONGING EXCLUSIVELY TO TRUSTON TECHNOLOGIES INC. OR ITS SUBSIDIARIES. UNAUTHORIZED USE, DISCLOSURE DISSEMINATION OR DUPLICATION OF ANY OF THE INFORMATION CONTAINED HEREIN MAY RESULT IN LIABILITY UNDER APPLICABLE LAWS.

TRUSTON TECHNOLOGIES, INC.
520 Ridgely Avenue
Annapolis, MD 21401
TEL (410)571-5186

TITLE
25-TON CHAIN, PEARL HARBOR ANCHOR

| SIZE | Project No. | TTI DWG No. | REVISION |
|---|---|---|---|
| B | - | 4925C-000 | — |
| | Discipline Code: C-3 | Customer Dwg No. | REVISION |
| Scale PLOT 1:1 | CAD File Name - | Sht. 4 of 5 | |

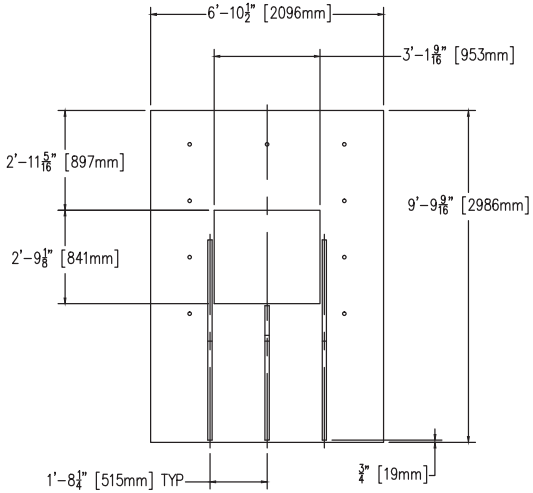


6 25-TON PEARL HARBOR ANCHOR FRONT SHEAR KEY WELDMENT, MUD TYPE
(SCALE: 1:50)

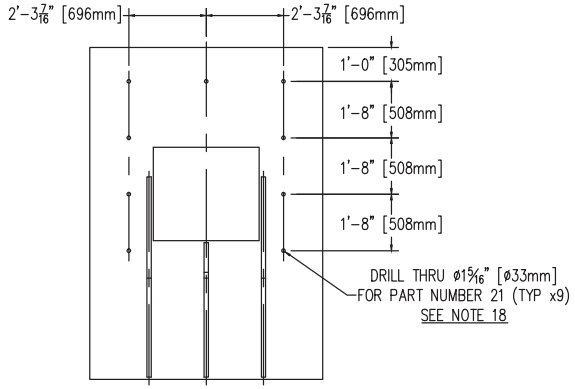


25-TON PEARL HARBOR ANCHOR FRONT SHEAR KEY WELDMENT, ROCK BOLT LAYOUT
(SCALE: 1:50)

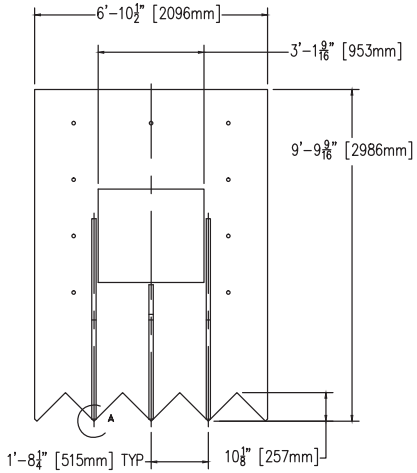


4 25-TON PEARL HARBOR ANCHOR FRONT SHEAR KEY WELDMENT, ROCK TYPE
(SCALE: 1:50)

DETAIL A

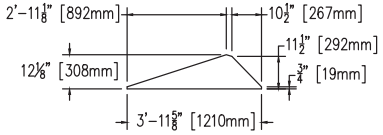


FRONT SHEAR KEY SMALL GUSSET
(1 REQUIRED PER ASSEMBLY)

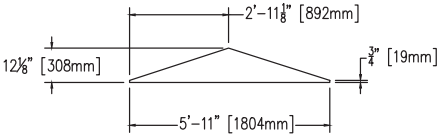


FRONT SHEAR KEY LARGE GUSSET
(2 REQUIRED PER ASSEMBLY)

NOTICE
THIS DOCUMENT CONTAINS COPYRIGHTED MATERIAL AND CONFIDENTIAL TRADE SECRET INFORMATION BELONGING EXCLUSIVELY TO TRUSTON TECHNOLOGIES INC. OR ITS SUBSIDIARIES. UNAUTHORIZED USE, DISCLOSURE DISSEMINATION OR DUPLICATION OF ANY OF THE INFORMATION CONTAINED HEREIN MAY RESULT IN LIABILITY UNDER APPLICABLE LAWS.

TRUSTON TECHNOLOGIES, INC.
520 Ridgely Avenue
Annapolis, MD 21401
TEL (410)571-5186

TITLE
25-TON CHAIN, PEARL HARBOR ANCHOR

| SIZE | Project No. | TTI DWG No. | REVISION |
|---|---|---|---|
| B | - | 4925C-000 | — |
| | Discipline Code: C-3 | Customer Dwg No. | REVISION |
| Scale PLOT 1:1 | CAD File Name - | Sht. 5 of 5 | |

## TABLE 5, CONCRETE SPECFICATIONS

| CONCRETE WEIGHT: | 14,200 LBF [7.1 TON*g] | VOLUME: | 3.6 CY [2.75 m^3] |
|---|---|---|---|
| DESCRIPTION | SPECIFICATION | DESCRIPTION | SPECIFICATION |
| CEMENT: TYPE II/IV | ASTM C150 NOTE 17 | f'c @ 28 DAYS 5000 PSI [28 kPA] (f'c @ TRANSFER: 2500 PSI [17 kPA]) | ACI 214, ASTM C31,C39 |
| POZZULAN: FLY-ASH | ASTM C618 CLASS F | | |
| | | | |
| MAX SOLUABLE CHLORIDE ION CONTENT (CI-) | 0.15% BY WEIGHT NOTE 14 | AIR ENTRAIN 3-5% TEST METHOD | ASTM C-231 |
| AGGREGATE: CLASS 4S 3-INCH [75mm] MAX | ASTM C-33 NOTE 13 | SLUMP TEST: 2-3 INCH [50-76mm] | ASTM C143 NOTE 16 |
| SIEVE ANALYSIS | ASTM C136 | CHEMICAL ADDMIXTURES NOTE 14 | ASTM C-494 TYPE D |
| PROPORTIONS: NORMAL-DENSITY | ACI ACI 211.1 NOTE 12 | BULK DENSITY SHALL BE 3915 Lbs/Yd^3 MIN. | ASTM C-29, NOTE 12 |

NOTES CONTINUED ON SHT. 2

20. FORMS SHALL NOT BE STRIPPED UNTIL CONCRETE HAS REACHED 75% OF DESIGN STRENGTH (f'c).

19. BEVEL ALL CORNERS 1-INCH. BOTTOM & SIDE FINISH: STD FORM; TOP FINISH: WOOD FLOAT

18. REBAR TO BE NO. 4, ASTM A615 GRADE 60. PLACE REBAR APPROXIMATELY AS SHOWN. MINIMUM CONCRETE COVER OF REBAR TO BE 4 INCHES. MATERIAL CERTIFICATION (MILL REPORT) FOR REBAR TO BE SUBMITTED.

17. ALL CEMENTS CONFORMING T ASTM C150 ARE SUITABLE. CEMENT TO BE TYPE II/IV. CEMENT SHALL CONTAIN NO MORE THAN 8% TRICALCIUM ALUMINATE (C3A) AND MAXIMUM SUM TOTAL OF 58% TRI-CALCIUM ALUMINATE + TRICALCIUM SILICATE (C3S).

16. PRIOR TO CONDUCTING SLUMP TEST, SAMPLES SHALL BE SIEVED SUCH THAT MAX SIZE OF AGGREGATE IS LESS THAN 1.5 INCHES [40mm].

15. ADD-MIXTURES TO REDUCE HEAT OF HYDRATION, INCREASE DURRABILATY, DECREASE PERMABILITY, INCREASE WORKABILITY AND INHIBIT CORROSION TO REINFORCEMENT LIKE GRACE ADVA 190, SHALL BE USED. ADMIXTURES SHALL NOT CONTAIN CALCIUM CHLORIDE, CALCIUM FORMATE, OR TRIETHANOLAMINE OR ANY OTHER ACCELERATOR.

14. MAXIMUM WATER-SOLUBLE CHLORIDE ION (CI–) CONTENT IN CONCRETE, % BY WEIGHT OF CEMENT SHALL BE NO MORE THAN 0.15 AND IS THE THAT IS CONTRIBUTED FROM INGREDIENTS INCLUDING: WATER, AGGREGATES, CEMENTIOUS MATERIALS AND ALL ADD-MIXURES AND SHALL BE DETERMINED BY ASTM C1218 AT AGE BETWEEN 28 AND 42-DAYS.

13. AGGREGATES QUALITY MUST CONFORM WITH THE QUALITY SPECIFIED AND SHALL MEET THE LIMITS SET OF DELETERIOUS SUBSTANCES IN TABLE-3 OF ASTM C33.

12. CONCRETE SHALL HAVE A MINIMUM DENSITY OF 140 Lbs/ft^3 [3500 kg/m^3] AS DETERMINED BY ASTM C-29.

11. CONCRETE SHALL CONFORM TO ACI 318-19 EXPOSURE CLASS C-2 AND THE STANDARDS PROVIDED IN TABLE-5, CONCRETE SPECIFICATIONS.

10. PRIOR TO CONSTRUCTION, CONTRACTOR SHALL SUBMIT MIX DESIGN WITH AGGREGATE GRADATION SCHEDULE AND BACK UP WITH TEST DATA FOR APPROVAL.

**NOTES: (CONTINUED FROM TITLE BLOCK)**

**NOTICE**

THIS DOCUMENT CONTAINS CONFIDENTIAL, PROPRIETARY,TRADE SECRET INFORMATION, AND/OR COPYRIGHTABLE SUBJECT MATTER BELONGING TO OCEANETICS, INC. AND/OR ITS SUBSIDIARIES. UNAUTHORIZED USE, DISCLOSURE, DUPLICATION, OR DISSEMINATION OF ANY OF THE INFORMATION CONTAINED HEREIN IS EXPRESSLY FORBIDDEN.

REVISION HISTORY

| REV | DESCRIPTION | DATE | APPVD |
|---|---|---|---|
| – | | | |

| –1 | ITEM | PART NO | DESCRIPTION | SPECIFICATION |
|---|---|---|---|---|
| 1 | 5 | | ROUND BAR, No 16 (2–IN OD) x 12 L | ASTM A615 No. Gd 60 |
| 1 | 4 | | CHAIN, 2–INCH STUD–LINK x 5–LINKS | MIL–C–24633A (ABS Grade 3a) or EQ. |
| ~288–Ft | 3 | | REINFORCEMENT No. 4 | ASTM A615 Gd 60 |
| ~3.6–CY | 2 | | CONC, NORMAL AGGREGATE, 145#/FT^3 | NOTE 11, TABLE–5 |
| ~ | 1 | | ANCHOR, CONCRETE LOW–PROFILE, 7–TON, 2–INCH CHAIN EMBED | |

Parts List

**DO NOT SCALE**

UNLESS OTHERWISE SPECIFIED TOLERANCES ARE IN INCHES. METRIC DIM'S ARE FOR REF. ONLY.

| 1PLACE DEC. | 2PLACE DEC. | 3PLACE DEC. | ANGLES |
|---|---|---|---|
| +/- 0.06 | +/- 0.03 | +/- 0.010 | +/- 0°-30' |

**NOTES:**

1. DIMENSIONS ARE IN INCHES, (X)=REF DIM.
2. X (ZERO DECIMAL PLACE) = +/- 1/8
3. REMOVE BURRS AND SHARP EDGES .015 MAX.
4. ALL SURFACE ROUGHNESS PER MIL-STD-16.
5. DIMENSION LIMITS HELD AFTER COATING.
6. MACHINED FILLET RADII .015-.030.
7. SUBSTITUTIONS MUST BE PREAPPROVED IN WRITING
8. NORMALITY, ⊡ AND // OF MACHINED SURFACES .002 PER INCH, TO A MAX. OF .012 INCHES FOR A SINGLE SURFACE.
9. VERIFY ALL DIMENSIONS & CONDITIONS BEFORE STARTING WORK. NOTIFY OWNER (OE) OF ANY DISCREPENCIES.

Finish | Weight 60,000 Lbs

Reference:

Drawn J ANDERSEN, PE 05/11/22
Check D. Dellaert 05/17/22
Engr. J Andersen 05/15/22
Appr. D. Dellaert 05/17/22

OCEANETICS
520 Ridgely Ave
Annapolis, MD
21401
Tel: (410) 571-5186
Fax: (410) 510-1095

Dwg Title:

# ANCHOR, CONCRETE LOW-PROFILE, 7-TON, 2-INCH CHAIN EMBED

Sheet Size: B | Project No. NA3001 | OE Dwg No. 4930-003 | Revision -
Discipline Code | Customer Dwg No. | Revision
Plot Scale: 1:1 | File Name 4930-003.DWG | Sheet 1 of 2

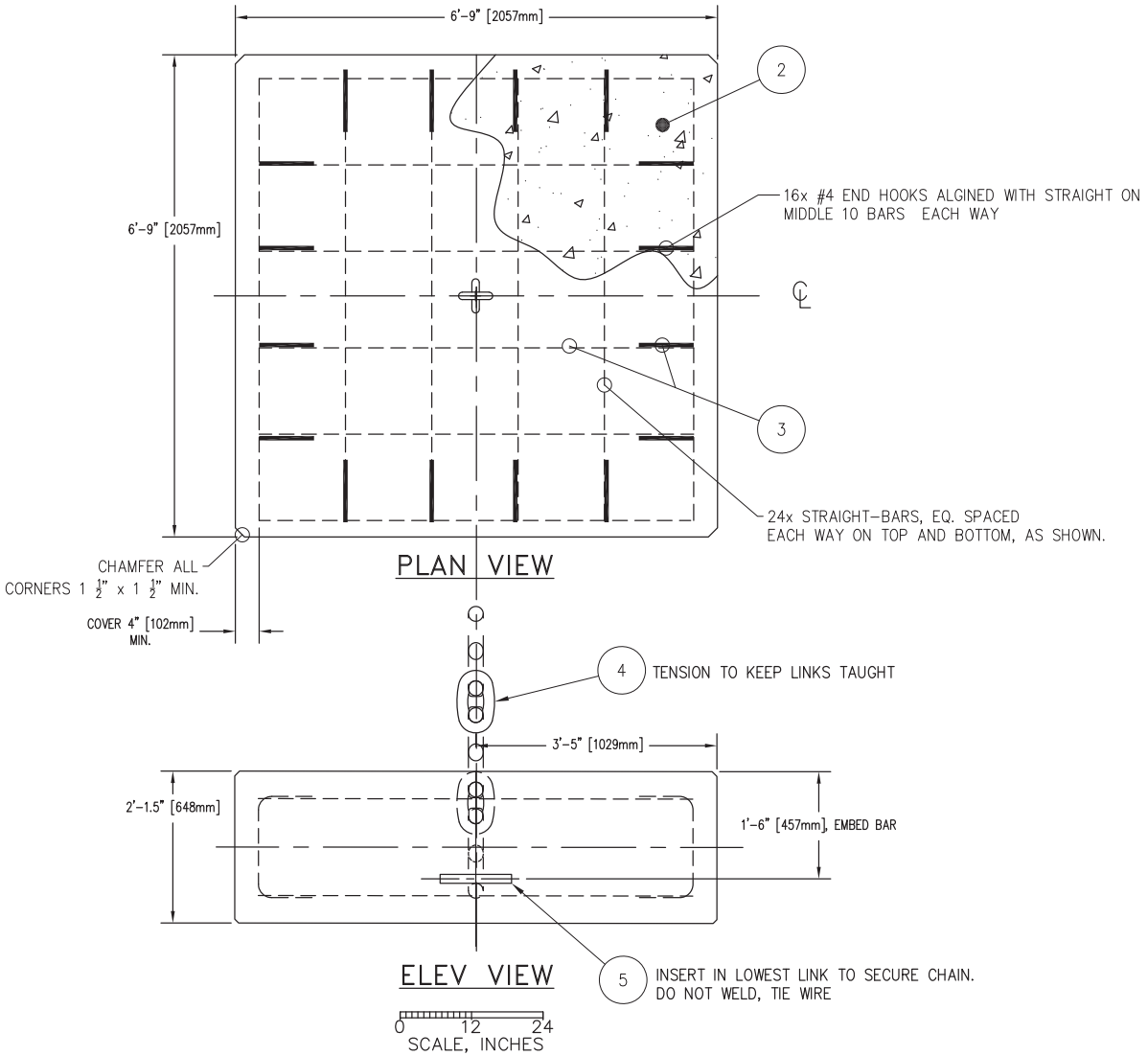


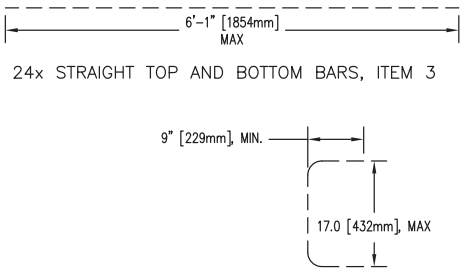


1 ANCHOR, CONCRETE LOW-PROFILE, 7-TON, 2-INCH CHAIN EMBED
(SCALE: 1:20) IN-AIR WEIGHT, 7-TONS US

11

**NOTICE**

THIS DOCUMENT CONTAINS CONFIDENTIAL, PROPRIETARY, TRADE SECRET INFORMATION, AND/OR COPYRIGHTABLE SUBJECT MATTER BELONGING TO OCEANETICS, INC, AND/OR ITS SUBSIDIARIES. UNAUTHORIZED USE, DISCLOSURE, DUPLICATION, OR DISSEMINATION OF ANY OF THE INFORMATION CONTAINED HEREIN IS EXPRESSLY FORBIDDEN.

OCEANETICS
520 Ridgely Ave.
Annapolis, MD
21401
Tel: (410) 571-5186
Fax: (410) 510-1095

Dwg Title:
ANCHOR, CONCRETE LOW-PROFILE, 7-TON, 2-INCH CHAIN EMBED

| Sheet Size | Project No. | TTI Dwg No. | Revision |
|---|---|---|---|
| B | NA3001 | 4930-003 | - |
| | Discipline Code: CONC | Customer Dwg No. | Revision |
| Scale: 1:1 | File Name: OE-B-SIZE.idw | SHEET 2 OF 2 | |

C:\Users\JimAndersenPE\OneDrive - Truston, Inc. - GCC High\DRAWINGS\RELEASED\4930-003.dwg, 5/23/2022 12:45:33 PM

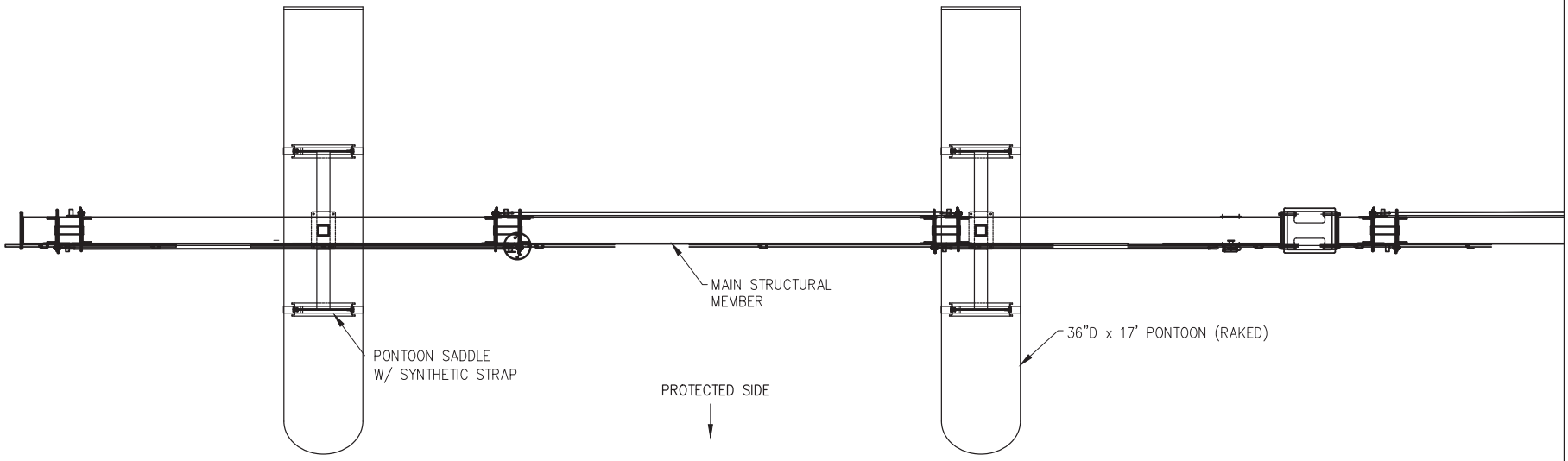


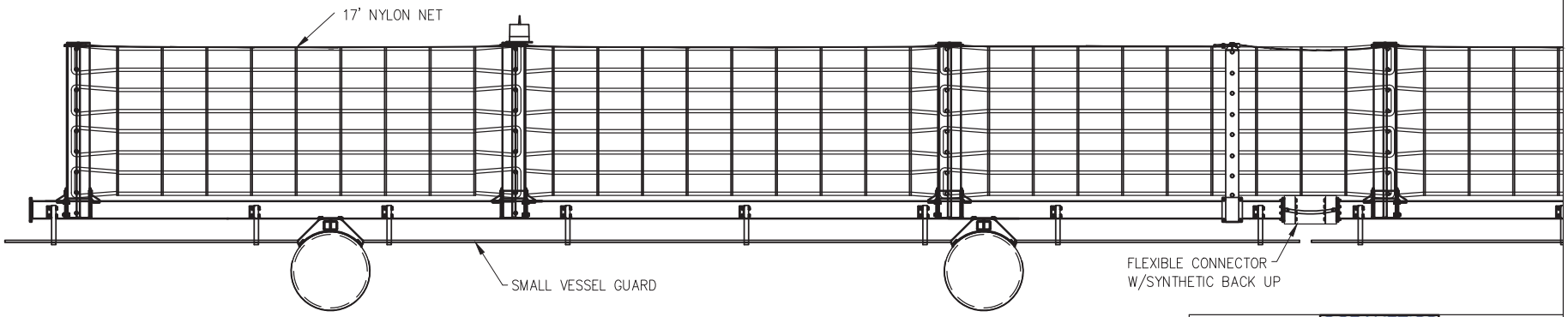


ELEVATION LOOKING FROM THE PROTECTED SIDE

## ELEVATION AND PLAN VIEW: EWSB SINGLE UNIT

NOTICE

THIS DOCUMENT CONTAINS COPYRIGHTED MATERIAL AND CONFIDENTIAL TRADE SECRET INFORMATION BELONGING EXCLUSIVELY TO TRUSTON TECHNOLOGIES INC. OR ITS SUBSIDIARIES. UNAUTHORIZED USE, DISCLOSURE, DISSEMINATION OR DUPLICATION OF ANY OF THE INFORMATION CONTAINED HEREIN MAY RESULT IN LIABILITY UNDER APPLICABLE LAWS.

OCEANETICS
Innovation at any depth

520 Ridgely Avenue
Annapolis, MD 21401
TEL(410) 571-5186
FAX(410) 510-1095

TITLE: EWSB, GA

| SIZE | Project No. | TTI Dwg No. | REVISION |
|---|---|---|---|
| B | EB3079 | 3114M-001 | — |
| | Discipline Code: W-1 | Customer Dwg No. | REVISION |
| Scale: PLOT 1:1 | CAD File Name 3114M-001.DWG | Sheet 1 of 1 | |

| REVISION HISTORY | | | |
|---|---|---|---|
| REV | DESCRIPTION | DATE | APPVD |
| - | XXXXXX | MM/DD/YY | MGR |

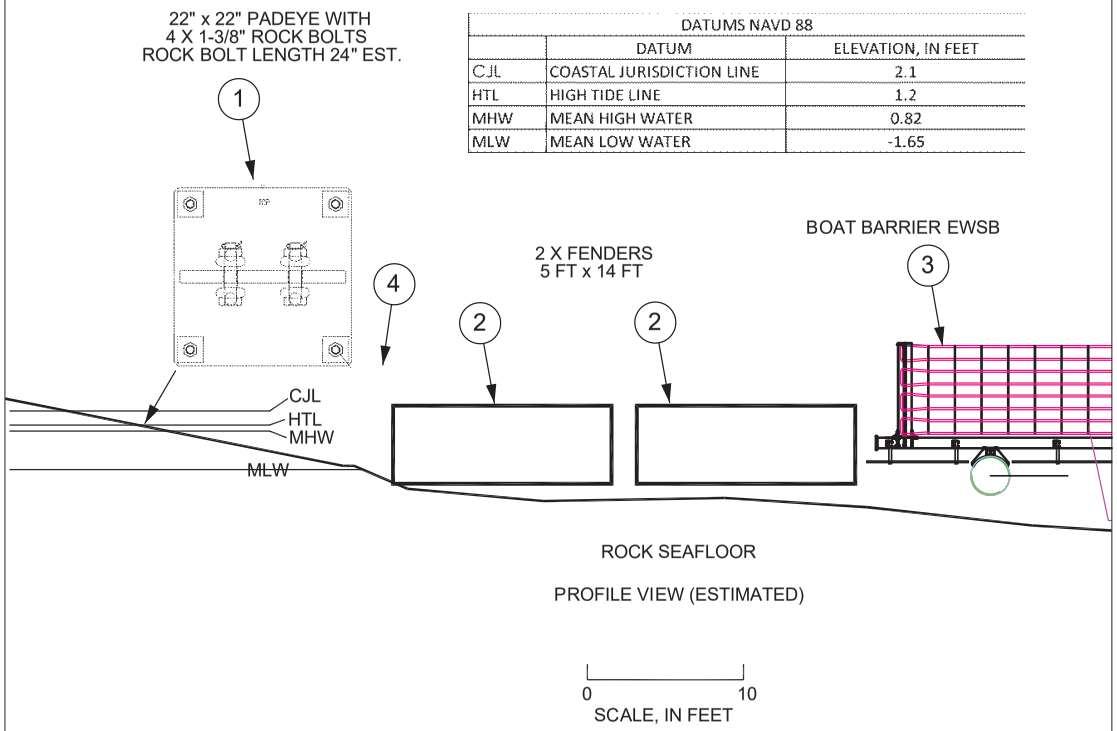


| DATUMS NAVD 88 | | |
|---|---|---|
| | DATUM | ELEVATION, IN FEET |
| CJL | COASTAL JURISDICTION LINE | 2.1 |
| HTL | HIGH TIDE LINE | 1.2 |
| MHW | MEAN HIGH WATER | 0.82 |
| MLW | MEAN LOW WATER | -1.65 |

SHORE LANDING SH-4

PLACE SH-4 ON THE GDEB SOUTH SHORE PROPERTY LINE ADJACENT TO THE PROPERTY WARNING SIGN. THE BARRIER IS TERMINATED WITH A PADEYE ROCKBOLTED INTO THE SHORELINE AT HIGH TIDE (DETAIL A).

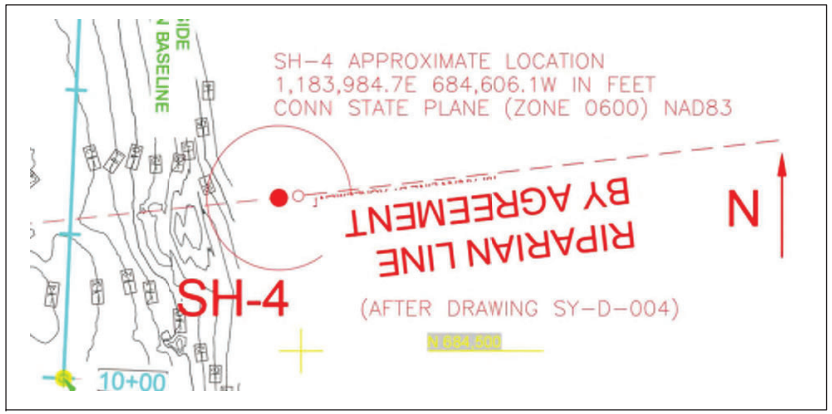


DETAIL A

| ITEM | QTY | DESCRIPTION | SPECIFICATION |
|---|---|---|---|
| 4 | AR | CONNECTORS | |
| 3 | AR | EWSB BARRIER | OCEANETICS DWG 3114-000 |
| 2 | 2 | FENDER BUOY 5' X 14' | OCEANETICS DWG 4702C-000 |
| 1 | 1 | PADEYE WITH 1-3/8" DIA BOLTS | OCEANETICS DWG 4706-001 |

**DO NOT SCALE**

UNLESS OTHERWISE SPECIFIED TOLERANCES ARE IN INCHES. METRIC DIM'S ARE FOR REF. ONLY.

| 1PLACE DEC. | 2PLACE DEC. | 3PLACE DEC. | ANGLES |
|---|---|---|---|
| +/- 0.06 | +/- 0.03 | +/- 0.010 | +/- 0°-30' |

**NOTES:**

1. DIMENSIONS ARE IN FEET.
2. VERIFY ALL DIMENSIONS & CONDITIONS BEFORE STARTING WORK. NOTIFY OCEANETICS OF ANY DISCREPENCIES OR INCONSISTENCIES.


OCEANETICS™ Innovation at any depth
520 Ridgely Ave
Annapolis, MD
21401
Tel: (410) 571-5186
Fax: (410) 510-1095


Reference:

Dwg Title: EWSB SHORE LANDING SH-4

| | | | | | |
|---|---|---|---|---|---|
| Drawn | WNS | 07/28/2022 | Sheet Size: B | Project No.: EB3709 | OE Dwg No.: 4704C-029 |
| Check | DRL | XXX | | Discipline Code | Customer Dwg No. |
| Engr. | DED | XXX | | | |
| Appr. | | | Plot Scale: | File Name: FILENAME | Sheet 1 of 1 |

Revision

Revision

Finish

Weight

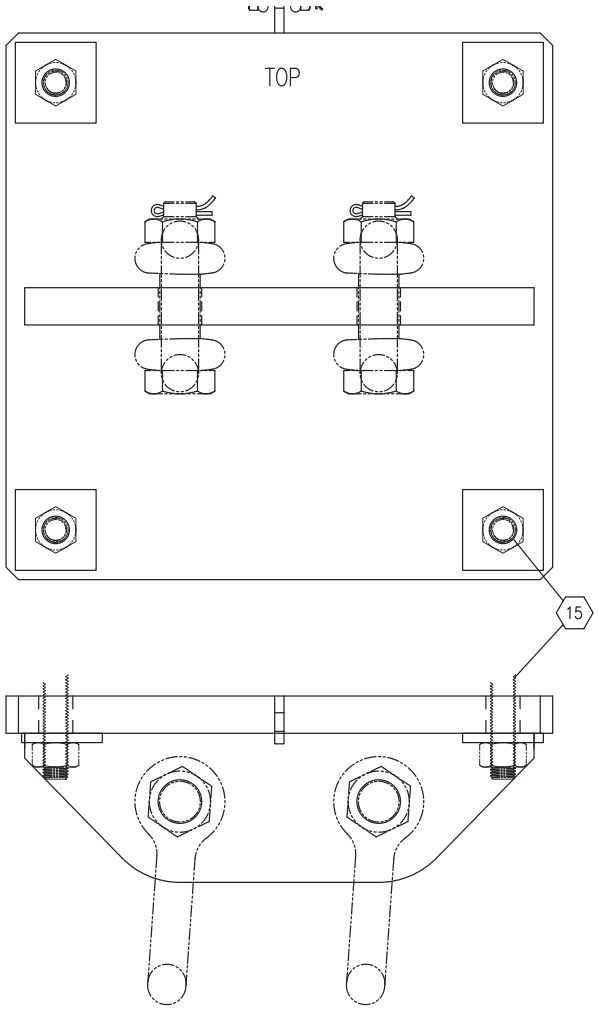


1 PAD-EYE, ø 1-1/2 SHACKLE, CONCRETE ANCHOR DESIGN
(SCALE: 1:5)

NOTICE
THIS DOCUMENT CONTAINS COPYRIGHTED MATERIAL AND CONFIDENTIAL TRADE SECRET INFORMATION BELONGING EXCLUSIVELY TO TRUSTON TECHNOLOGIES INC. OR ITS SUBSIDIARIES. UNAUTHORIZED USE, DISCLOSURE, DISSEMINATION OR DUPLICATION OF ANY OF THE INFORMATION CONTAINED HEREIN MAY RESULT IN LIABILITY UNDER APPLICABLE LAWS.

OCEANETICS™
Innovation at any depth
520 Ridgely Avenue
Annapolis, MD 21401
TEL(410) 571-5186
FAX(410) 510-1095

TITLE
PAD-EYE, ø 1-1/2 SHACKLE, CONCRETE ANCHOR DESIGN

| SIZE | Project No. | TTI Dwg No. | REVISION |
|---|---|---|---|
| B | DF3073 | 4706-001 | — |
| | Discipline Code: W-1 | Customer Dwg No. | REVISION |
| Scale: PLOT 1:1 | CAD File Name 4706-001.DWG | Sheet 2 of 3 | |

12. GALVANIZING:

AFTER WELDMENT & DRILLING, BLAST TO SSPC SP 6 (NACE NO 3), AND IMMEDIATLEY AFTER (<4 HOURS IF BLASTING REPLACES PICKLING) HOT DIP GALVANIZE CERTIFIED TO ASTM A123. MIN COVER OF 4.0 OZ/SQFT; AVE THICKNESS OF 6 TO 8 MILS IN EXCESS OF ASTM A123 GRADE 100.

11. WELDING:

A. CONFORM TO THE AMERICAN WELDING SOCIETY AWS D1.1 "STRUCTURAL WELDING CODE",
B. USING 70 KSI TENSILE STRENGTH LOW HYDROGEN ELECTRODES OR APPROVED EQUAL.
C. ALL WELDS SHALL BE CONTINUOUS TO PREVENT CORROSION UNLESS SPECIFICALLY NOTED ON THESE DRAWINGS.
D. WELDED CONSTRUCTION, 1/4 FILLET SEAL WELD UNLESS NOTED OTHERWISE.

10. MATERIALS:

A. CARBON STEEL PLATES: ASTM A36 [DIN 17100 ST42-3, BS 4360 GRADE 43A] OR EQ. UNLESS NOTED OTHERWISE.
B. HIGH STREGTH LOW ALLOY STEEL PLATES: A572 GD 50 [DIN 17100 ST52-3, BS 4360 GRADE 50B].
C. EQIVALENT PLATE THICKNESS SHALL BE AS PROVIDED IN PLATE & WELD CONVERSION TABLE.

NOTES: (CONTINUED FROM TITLE BLOCK)

| PLATE & WELD CONVERSION | |
|---|---|
| INCH | MILLIMETERS |
| 3 / 16 | 5 |
| 1 / 4 | 6 |
| 5 / 16 | 8 |
| 3 / 8 | 10 |
| 7 / 16 | 11 |
| 1 / 2 | 12 |
| 5 / 8 | 16 |
| 3 / 4 | 20 |
| 7 / 8 | 22 |
| 1 | 25 |
| 1 - 1 / 4 | 32 |
| 1 - 3 / 8 | 35 |
| 1 - 1 / 2 | 40 |
| 1 - 3 / 4 | 45 |
| 2 | 50 |

NOTICE

THIS DOCUMENT CONTAINS COPYRIGHTED MATERIAL AND CONFIDENTIAL TRADE SECRET INFORMATION BELONGING EXCLUSIVELY TO TRUSTON TECHNOLOGIES INC. OR ITS SUBSIDIARIES. UNAUTHORIZED USE, DISCLOSURE, DISSEMINATION, OR DUPLICATION OF ANY OF THE INFORMATION CONTAINED HERIN MAY RESULT IN LIABILITY UNDER APPLICABLE LAWS.

| ITEM | QTY | DESCRIPTION | SPECIFICATION |
|---|---|---|---|
| 8 | AR | RIGID CORE FOAM: 4# / CU. FT DENSITY | SEE NOTE 14 |
| 7 | AR | COATING: 1/2" THICK, BLACK | SEE NOTE 13 |
| 6 | 2 | WALL FOAM END CAP: 6" THICK, 4 LBS/CU FT XLPE | SEE NOTE 15 |
| 5 | 1 | WALL FOAM: 2" THICK, 4 LBS/CU FT XLPE | SEE NOTE 15 |
| 4 | 24 | FLAT BAR: 1/4" x 2" x 25" LONG | A36 |
| 3 | 4 | FLAT BAR: 1/4" x 2" x 172-3/4" LONG | A36 |
| 2 | 2 | PLATE: 3/4" x 14" x 14" | A572 |
| 1 | 1 | PIPE: 4" SCH. 80 x 180" LONG | A500, BARE |

BILL OF MATERIALS

DO NOT SCALE

UNLESS OTHERWISE SPECIFIED TOLERANCES ARE IN INCHES. METRIC DIM'S ARE FOR REF. ONLY.

| 1PLACE DEC. | 2PLACE DEC. | 3PLACE DEC. | ANGLES |
|---|---|---|---|
| +/- 0.06 | +/- 0.03 | +/- 0.010 | +/- 0°-30' |

NOTES:

1. DIMENSIONS ARE IN INCHES, (X)=REF DIM.
2. X (ZERO DECIMAL PLACE) = +/- 1/8
3. REMOVE BURRS AND SHARP EDGES .015 MAX.
4. ALL SURFACE ROUGHNESS PER MIL-STD- 10.
5. DIMENSION LIMITS HELD AFTER COATING.
6. MACHINED FILLET RADII .015-.030.
7. SUBSTITUTIONS MUST BE PREAPPROVED IN WRITING
8. NORMALITY, SQUARENESS AND PARALLELISM OF MACHINED SURFACES .002 PER INCH, TO A MAX. OF .012 INCHES FOR A SINGLE SURFACE.
9. VERIFY ALL DIMENSIONS & CONDITIONS BEFORE STARTING WORK. NOTIFY TTI OF ANY DISCREPENCIES OR INCONSISTENCIES.

Finish | Weight

520 Ridgely Ave
Annapolis, MD
21401
Tel: (410) 571-5186
Fax: (410) 510-1095

Reference:

Dwg Title: 5FT X 14 FT FENDER BUOY

| | | |
|---|---|---|
| Drawn | DRL | 11/20/2014 |
| Check | | |
| Engr. | | |
| Appr. | | |

| Sheet Size | Project No. | TTI Dwg No. | Revision |
|---|---|---|---|
| B | EB1402 | 4702C-000 | - |
| | Discipline Code | Customer Dwg No. | Revision |

Plot Scale: | File Name 4702C-000.idw | Sheet 1 of 3