STATE PIER INFRASTRUCTURE IMPROVEMENTS
STATE PIER FACILITY
NEW LONDON, CONNECTICUT

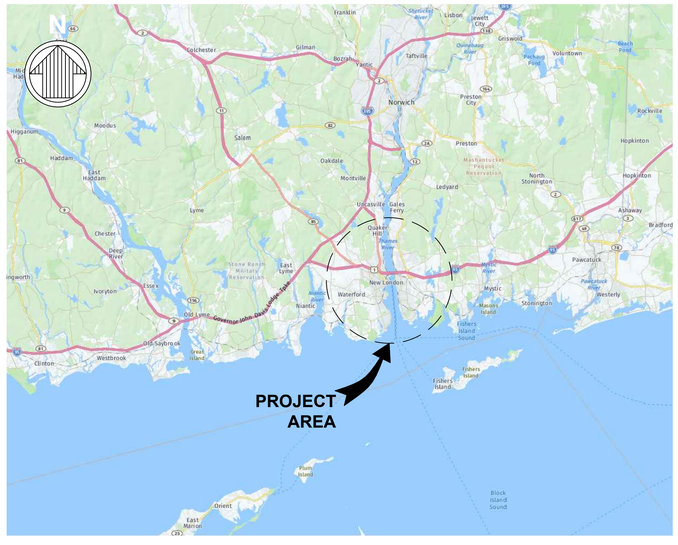

AREA MAP

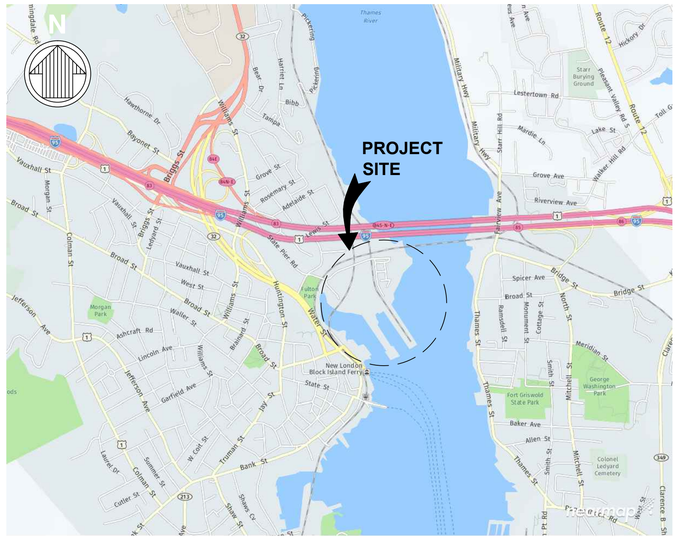

LOCATION MAP

DRAWING INDEX	
SHEET NUMBER	SHEET TITLE
1	COVER SHEET
2	NOTES - 1 OF 2
3	NOTES - 2 OF 2
4	EROSION AND SEDIMENT CONTROL NOTES - 1 OF 3
5	EROSION AND SEDIMENT CONTROL NOTES - 2 OF 3
6	EROSION AND SEDIMENT CONTROL NOTES - 3 OF 3
7	EROSION AND SEDIMENT CONTROL PLAN
8	EXISTING TOPOGRAPHIC AND HYDROGRAPHIC PLAN
9	EXISTING CONDITIONS PLAN
10	DEMOLITION AND REMOVAL PLAN
11	EXISTING STATE PIER PILE SUPPORTED PLATFORM
12	PROPOSED PLAN
13	PROPOSED DREDGING PLAN
14	GRADING AND DRAINAGE PLAN
15	PHASING PLAN
16	WORK COVERED UNDER CERTIFICATE OF PERMISSION AND CT GP PERMITS
17	OFFICE AND PARKING PLAN
18	FACILITY USE AND LOGISTICS PLAN
19	FEDERAL CHANNEL MAP PLAN
20	INSTALL VESSEL NAVIGATION PLAN (INBOUND)
21	INSTALL VESSEL NAVIGATION PLAN (OUTBOUND)
22	NORTHEAST BULKHEAD SECTIONS
23	PROPOSED EAST STATE PIER PILE SUPPORTED PLATFORM
24	KING PILE WALL CLOSURE BETWEEN CVRR AND STATE PIER
25	CVRR BULKHEAD SECTIONS
26	MOORING PLATFORM SECTION
27	BUOY ANCHORAGE AND MOORING DOLPHIN DETAILS
28	DRAINAGE STRUCTURE DETAILS - 1 OF 2
29	DRAINAGE STRUCTURE DETAILS - 2 OF 2
30	OUTFALL DETAILS
31	DUCTBANK DETAILS
32	PROPOSED DREDGE ALIGNMENT PLAN
33	NORTHEAST BERTH DREDGE SECTIONS
34	EAST BERTH DREDGE SECTIONS
35	DREDGE SECTIONS FOR INSTALL VESSEL JACK-UP LEGS

Connecticut PORT AUTHORITY

PERMITTING SET
ISSUED: 10/23/2020
NOT TO BE USED FOR CONSTRUCTION

moffatt & nichol

SEAL

DWG INFO: Q:\BOS\Projects\10630 Detail Design State pier\500 CADD_Active_PermitSet\10630-01.dwg, May 4, 2020 - 8:04 PM, CMOYAGLESIAS, (C) MOFFATT AND NICHOL

GENERAL NOTES

1. ALL FEDERAL, STATE, AND LOCAL SAFETY REGULATIONS ARE TO BE STRICTLY FOLLOWED.
2. THE CONTRACTOR SHALL ABIDE BY ALL APPLICABLE FEDERAL, STATE, AND LOCAL ENVIRONMENTAL PROTECTION STANDARDS, LAWS AND REGULATIONS.
3. THE CONTRACTOR SHALL BE RESPONSIBLE FOR THE MAINTENANCE OF THE CONSTRUCTION SITE AND THE AREAS OF WORK WHILE PERFORMING THE WORK OF THIS CONTRACT. CONSTRUCTION DEBRIS SHALL BE REMOVED FROM THE CONSTRUCTION SITE ON A DAILY BASIS. NO BURNING OF DEBRIS SHALL BE PERMITTED.
4. DURING ALL PHASES OF THE WORK ALL PRECAUTIONS SHALL BE TAKEN AS NECESSARY OR AS REQUIRED TO PERMANENTLY PREVENT CONTAMINATED WATER, VEHICLE FLUIDS, CONSTRUCTION DEBRIS, AND ANY OTHER CONTAMINANT FROM ENTERING THE WATERWAY.
5. CONTRACTOR SHALL INSTALL A FLOATING BOOM SYSTEM THAT FULLY ENCLOSES THE WORK AREA. THIS BOOM SHALL BE ANCHORED IN PLACE OR ATTACHED TO A FIXED STRUCTURE. THIS BOOM SHALL BE CAPABLE OF COLLECTING ANY FLOATING DEBRIS GENERATED DURING CONSTRUCTION ACTIVITIES. DEBRIS SHALL BE COLLECTED AND DISPOSED OF FROM THIS BOOM ON A DAILY BASIS.

TURBIDITY CURTAIN:

1. A FLOATING TURBIDITY BARRIER MAY BE DEPLOYED AROUND AND/OR IMMEDIATELY ADJACENT TO THE WORK AREA AS SHOWN ON SHEET 11 DURING EACH CONSTRUCTION PHASE THAT IS EXPECTED TO PRODUCE DEBRIS AND/OR SEDIMENT IN 600 FOOT (MAX) LENGTHS. THE CONTRACTOR IS RESPONSIBLE FOR STAYING UNDER THE TURBIDITY LIMIT SET BY THE STATE. DURING ALL PHASES OF WORK, THE CONTRACTOR MAY PROPOSE AN ALTERNATIVE METHODOLOGY AND SUBMIT TO THE STATE FOR APPROVAL. ALTERNATIVE METHODOLOGY MUST BE SUBMITTED 45 DAYS PRIOR TO FILL PLACEMENT BETWEEN PIERS.
2. TURBIDITY CURTAIN WILL BE AVAILABLE ON-SITE FOR USE AS WARRANTED BASED ON MONITORING OF TURBIDITY TO MAINTAIN COMPLIANCE WITH PERMIT CONDITIONS.
3. TO SERVE AS A BARRIER FOR OPERATIONS DURING PLACEMENT BETWEEN THE PIERS, A HEAVY DUTY TYPE III OR TYPE IV TURBIDITY CURTAIN WITH A BOTTOM ANCHOR SHALL BE INSTALLED. THE CONTRACTOR MAY UTILIZE EQUIPMENT TO LEVEL THE RIVER BOTTOM TO IMPROVE THE FUNCTIONALITY OF THE TURBIDITY CURTAIN AND MAY UTILIZE PILES OR OTHER ANCHORS TO KEEP THE TURBIDITY CURTAIN IN PLACE DURING OPERATIONS. THE CONTRACTOR SHALL PERFORM DAILY VISUAL INSPECTIONS, WITH A PHYSICAL CHECK ON THE TURBIDITY CURTAIN WITHIN 24 HOURS OF ANY MAJOR STORM OR ICE EVENT.

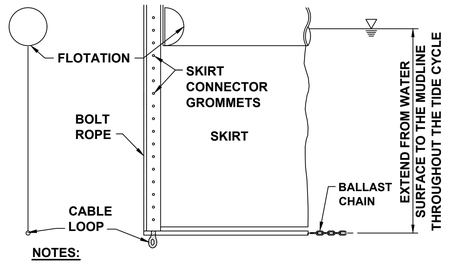

NOTES:

1. FIGURE IS FOR REFERENCE ONLY. TURBIDITY CURTAIN SHALL BE SUBMITTED BY THE CONTRACTOR FOR APPROVAL.
2. CURTAIN ANCHORAGE TO STRUCTURE AND MUDLINE SHALL BE SUBMITTED BY THE CONTRACTOR.

TURBIDITY CURTAIN

EROSION AND SEDIMENT CONTROL NOTES

GENERAL EROSION CONTROL NOTES

1. SOIL EROSION AND SEDIMENTATION CONTROL MEASURES SHALL BE IN CONFORMANCE WITH THE CONNECTICUT DEPARTMENT OF ENERGY AND ENVIRONMENTAL PROTECTION (CT DEEP) "2002 CONNECTICUT GUIDELINES FOR SOIL EROSION AND SEDIMENTATION CONTROL" DEEP BULLETIN NO. 34 , LATEST REVISION, AND THE CONNECTICUT DEPARTMENT OF TRANSPORTATION (CTDOT) "2004 CONNECTICUT STORM WATER QUALITY MANUAL", LATEST REVISION, AND THE CTDOT FORM 817.
2. INSTALL ALL EROSION CONTROL MEASURES SHOWN, SPECIFIED OR REQUIRED BY THE ENGINEER PRIOR TO ANY CONSTRUCTION MEASURES UNTIL FINAL SURFACE TREATMENTS ARE IN PLACE AND/OR UNTIL ALL PERMANENT VEGETATION IS ESTABLISHED.
3. MARK WORK LIMIT LINE(S) PRIOR TO STARTING WORK. DO NOT DISTURB VEGETATION OR TOPSOIL BEYOND THE PROPOSED LIMIT LINE. COORDINATE WITH THE ENGINEER FOR THE LOCATIONS FOR THE TEMPORARY STOCKPILING OF TOPSOIL DURING CONSTRUCTION.
4. FINE GRADE AND IMMEDIATELY SEED ALL SIDE SLOPES, SHOULDER AREAS, AND DISTURBED VEGETATED AREAS. ALL GRADING TO BE A MAXIMUM SLOPE OF 2:1, COMPACTED, AND STABILIZED. SLOPES GREATER THAN 2:1 TO RECEIVE EROSION CONTROL BLANKET.
5. REMOVE ALL SEDIMENT TRACKED ON PUBLIC RIGHT-OF-WAYS AT THE END OF EACH DAY.
6. LAND DISTURBANCE SHALL BE KEPT TO A MINIMUM NECESSARY FOR CONSTRUCTION.
7. ALL CATCH BASINS SHALL BE PROTECTED WITH SILT SACKS, HAY BALE RINGS, OR SILT FENCE THROUGHOUT THE CONSTRUCTION PERIOD AND UNTIL ALL DISTURBED AREAS ARE THOROUGHLY STABILIZED.
8. WHENEVER POSSIBLE, EROSION AND SEDIMENTATION CONTROL MEASURES SHALL BE INSTALLED PRIOR TO CONSTRUCTION, ADDITIONAL CONTROL MEASURES SHALL BE INSTALLED DURING CONSTRUCTION.
9. THE CONTRACTOR SHALL USE APPROVED METHODS/MATERIALS FOR PREVENTING THE BLOWING AND MOVEMENT OF DUST FROM EXPOSED SOIL SURFACES ONTO ADJACENT PROPERTIES AND SITE AREAS.
10. AFTER CONSTRUCTION, EROSION AND SEDIMENTATION WITHIN PROJECT LIMITS WILL BE MANAGED BY FINISHED TERMINAL SURFACE.
11. MINIMIZING WIND EROSION AND CONTROLLING DUST WILL BE ACCOMPLISHED BY ONE OR MORE OF THE FOLLOWING METHODS:
    A. COVERING 30% OR MORE OF THE SOIL SURFACE WITH NON-ERODIBLE MATERIAL.
    B. ROUGHENING THE SOIL TO PRODUCE RIDGES PERPENDICULAR TO THE PREVAILING WIND.
    C. FREQUENT WATERING OF EXCAVATION AND FILL AREAS.
12. THE CONSTRUCTION ENTRANCE SHALL BE MAINTAINED IN A CONDITION WHICH WILL PREVENT TRACK OR FLOW OF MUD ONTO PUBLIC RIGHT-OF-WAY. THIS MAY REQUIRE PERIODIC TOP DRESSING WITH 1-3" OF STONE, AS CONDITIONS DEMAND. ALL MATERIALS SPILLED, DROPPED, WASHED, OR TRACKED FROM VEHICLE ONTO PUBLIC ROADWAY OR INTO STORM DRAIN MUST BE REMOVED IMMEDIATELY.
13. CONTRACTOR SHALL INSPECT CONTROL MEASURES AT THE END OF EACH WORKING DAY TO ENSURE MEASURES ARE FUNCTIONING PROPERLY.
14. EROSION CONTROL MEASURES WILL BE MAINTAINED AT ALL TIMES. IF FULL IMPLEMENTATION OF THE APPROVED PLAN DOES NOT PROVIDE FOR EFFECTIVE EROSION CONTROL, ADDITIONAL EROSION AND SEDIMENT CONTROL MEASURES SHALL BE IMPLEMENTED TO CONTROL OR TREAT THE SEDIMENT SOURCE AS DIRECTED BY THE ON SITE INSPECTOR OR THE CIVIL ENGINEER.
15. FAILURE TO INSTALL, OPERATE, OR MAINTAIN ALL EROSION CONTROL MEASURES WILL RESULT IN ALL CONSTRUCTION BEING STOPPED ON THE JOB UNTIL SUCH MEASURES ARE CORRECTED BACK TO THE APPROVED EROSION CONTROL PLANS.
16. THE SITE CONTRACTOR WILL BE RESPONSIBLE FOR MAINTENANCE OF ALL EROSION CONTROL MEASURES INCLUDING REPLACING OR REPAIRING ANY DAMAGED DEVICES DUE TO ANY CONSTRUCTION ACTIVITY BY OTHERS.
17. EROSION CONTROL MEASURES SHALL BE INSTALLED PRIOR TO ANY OTHER CONSTRUCTION ACTIVITY AND MAINTAINED UNTIL PERMANENT GROUND COVER IS ESTABLISHED.
18. SEDIMENT AND EROSION CONTROL MEASURES SHOULD BE CHECKED AFTER EACH RAIN EVENT. EACH DEVICE IS TO BE MAINTAINED OR REPLACED IF SEDIMENT ACCUMULATION HAS REACHED ONE HALF THE CAPACITY OF THE DEVICE. ADDITIONAL DEVICES MUST BE INSTALLED IF NEW CHANNELS HAVE DEVELOPED.

INITIAL PHASE EROSION CONTROL NOTES

1. PRIOR TO THE LAND DISTURBING CONSTRUCTION, THE CONTRACTOR SHALL SCHEDULE A PRE-CONSTRUCTION MEETING WITH THE OWNER.
2. THE CONTRACTOR SHALL REVIEW THE PROJECT SEQUENCE SHOWN ON THE PLANS. THE CONTRACTOR SHALL MAINTAIN CAREFUL SCHEDULING AND PERFORMANCE TO ENSURE THAT LAND STRIPPED OF ITS NATURAL COVER IS EXPOSED ONLY IN SMALL QUANTITIES.
3. A COPY OF THE APPROVED LAND DISTURBANCE PLAN SHALL BE PRESENT ON THE SITE AT ALL TIMES.
4. THE ESCAPE OF SEDIMENT FROM THE SITE SHALL BE PREVENTED BY THE INSTALLATION OF EROSION AND SEDIMENT CONTROL MEASURES AND PRACTICES PRIOR TO, OR CONCURRENT WITH, LAND-DISTURBING ACTIVITIES.
5. PRIOR TO COMMENCING LAND DISTURBANCE ACTIVITY, THE LIMITS OF LAND DISTURBANCE SHALL BE CLEARLY AND ACCURATELY DEMARCATED WITH STAKES, RIBBONS, OR OTHER APPROPRIATE MEANS. THE LOCATION AND EXTENT OF ALL AUTHORIZED LAND DISTURBANCE ACTIVITY SHALL BE DEMARCATED FOR THE DURATION OF THE CONSTRUCTION ACTIVITY. NO LAND DISTURBANCE SHALL OCCUR OUTSIDE THE APPROVED LIMITS INDICATED ON THE APPROVED PLANS.
6. PRIOR TO ANY OTHER CONSTRUCTION, A CONSTRUCTION ENTRANCE SHALL BE CONSTRUCTED AT EACH POINT OF ENTRY TO OR EXIT FROM THE SITE OR ONTO ANY PUBLIC ROADWAY.
7. THE FOLLOWING INITIAL EROSION CONTROL MEASURES SHALL BE IMPLEMENTED PRIOR TO ANY OTHER CONSTRUCTION ACTIVITY.
    A. THE CONSTRUCTION ENTRANCE, CONSISTING OF A MINIMUM PAD SIZE OF 12 FT BY 50 FT WITH A MINIMUM OF 6" THICK STONE. THE STONE SIZE SHOULD CONSIST OF COURSE AGGREGATE BETWEEN 1-1/2" & 3-1/2" IN DIAMETER AND OVERLAID ON A GEOTEXTILE UNDERLINER. THE GEOTEXTILE UNDERLINER SHALL MEET THE REQUIREMENTS OF AASHTO M288-96, SECTION 7.3 SEPARATION REQUIREMENTS. (ROCK INSTALLATION TO COINCIDE WITH DEMOLITION)
    B. IMMEDIATELY AFTER THE ESTABLISHMENT OF CONSTRUCTION ENTRANCE, ALL PERIMETER EROSION CONTROL AND STORM WATER MANAGEMENT DEVICES SHALL BE INSTALLED AS SHOWN ON THE INITIAL EROSION CONTROL PLAN.
    C. GEOTEXTILE SILT FENCE SHOULD BE INSTALLED AT THE PERIMETER OF THE DISTURBED AREA IF CONDITIONS WARRANT INSTALLATION OR SHOWN ON THE PLANS. THE GEOTEXTILE SILT FENCE SHOULD BE PLACED IN ACCORDANCE WITH THE CONNECTICUT EROSION & SEDIMENTATION CONTROL GUIDELINES. THE GEOTEXTILE SILT FENCE SHOULD BE KEPT ERECT AT ALL TIMES AND REPAIRED WHEN REQUESTED BY THE SITE INSPECTOR OR THE PROJECT DESIGN PROFESSIONAL OF RECORD. SILT SHOULD BE REMOVED WHEN ACCUMULATION REACHES 1/2 HEIGHT OF THE BARRIER. THE PERIMETER SILT FENCE SHOULD BE INSPECTED DAILY FOR ANY FAILURES. ANY FAILURES OF SAID FENCING SHOULD BE REPAIRED IMMEDIATELY.
    D. INLET SEDIMENT PROTECTION MEASURES SHALL BE INSTALLED ON ALL EXISTING STORM STRUCTURES AS SHOWN ON THE PLAN, SEE SEPARATE DETAILS FOR SPECIFICS ON TYPE OF INLET PROTECTION SPECIFIED.
8. AFTER INSTALLATION OF INITIAL EROSION CONTROL MEASURES THE SITE CONTRACTOR SHALL SCHEDULE AN INSPECTION BY THE PROJECT RESIDENT ENGINEER. NO OTHER CONSTRUCTION ACTIVITIES SHALL OCCUR UNTIL THE PROJECT RESIDENT ENGINEER APPROVES THE INSTALLATION OF SAID EROSION CONTROL MEASURES. IF UNFORESEEN CONDITIONS EXIST IN THE FIELD THAT WARRANT ADDITIONAL EROSION CONTROL MEASURES, THE CONTRACTOR MUST CONSTRUCT ANY ADDITIONAL EROSION CONTROL DEVICES DEEMED NECESSARY BY THE SITE INSPECTION.
9. AFTER APPROVAL OF THE INITIAL EROSION CONTROL INSTALLATION, THE CONTRACTOR MAY PROCEED WITH CONSTRUCTION, CLEARING AND GRUBBING ACTIVITIES.
10. NO BURN OR BURY PITS SHALL BE PERMITTED ON THE CONSTRUCTION SITE.

GRADING AND FINAL PHASE EROSION CONTROL NOTES

1. DURING CONSTRUCTION, THE CONTRACTOR SHALL MAINTAIN CAREFUL SCHEDULING AND PERFORMANCE TO ENSURE THAT LAND STRIPPED OF ITS NATURAL GROUND COVER IS EXPOSED ONLY IN SMALL QUANTITIES AND THEREFORE LIMITED DURATIONS, BEFORE PERMANENT EROSION PROTECTION IS ESTABLISHED.
2. SEDIMENT SHALL NOT BE WASHED INTO INLETS. IT SHALL BE REMOVED FROM THE SEDIMENT TRAPS AND DISPOSED OF AND STABILIZED SO THAT IT WILL NOT ENTER THE INLETS AGAIN.
3. EROSION CONTROL DEVICES SHALL BE INSTALLED IMMEDIATELY AFTER GROUND DISTURBANCE OCCURS. THE LOCATION OF SOME OF THE EROSION CONTROL DEVICES MAY HAVE TO BE ALTERED FROM THAT SHOWN ON THE APPROVED PLANS IF DRAINAGE PATTERNS DURING CONSTRUCTION ARE DIFFERENT FROM THE PROPOSED DRAINAGE PATTERNS. IT IS THE CONTRACTOR'S RESPONSIBILITY TO ACCOMPLISH EROSION CONTROL FOR ALL DRAINAGE PATTERNS CREATED AT VARIOUS STAGES DURING CONSTRUCTION. ANY DIFFICULTY IN CONTROLLING EROSION DURING ANY PHASE OF CONSTRUCTION SHALL BE REPORTED TO THE DESIGN PROFESSIONAL IMMEDIATELY.
4. CUT AND FILL SLOPES ARE TO BE AS SHOWN ON PLAN BUT SHALL NOT EXCEED "2H:1V"
5. THE FOLLOWING EROSION CONTROL MEASURES SHALL BE IMPLEMENTED DURING THE PRELIMINARY GRADING PHASE OF CONSTRUCTION.
    A. GEOTEXTILE SILT FENCE SHALL BE PLACED AS SHOWN ON THE PLANS AND PER THE DETAIL SHOWN ON SHEET 6.
    B. INLET SEDIMENT PROTECTION MEASURES SHALL BE INSTALLED ON ALL STORM STRUCTURES AS THEY ARE CONSTRUCTED/MODIFIED. SEE PLAN VIEW FOR SPECIFIC TYPE AND SEPARATE DETAILS FOR ADDITIONAL INFORMATION ON TYPE OF INLET PROTECTION SPECIFIED.
    C. ALL DRAINAGE SWALES SHALL BE APPLIED WITH VEGETATIVE COVER AS SOON AS FINAL GRADE IS ACHIEVED.
    D. ALL GRADED AREAS SHALL BE APPLIED WITH VEGETATIVE COVER AS SOON AS FINAL GRADE IS ACHIEVED.
6. THE FOLLOWING EROSION CONTROL MEASURES SHALL BE IMPLEMENTED DURING THE FINAL EROSION CONTROL PHASE OF CONSTRUCTION.
    A. ALL GEOTEXTILE SILT FENCE SHALL BE REMOVED AT PROJECT COMPLETION.
    B. INLET SEDIMENT PROTECTION MEASURES SHALL BE REMOVED.
    C. ALL PERMANENT VEGETATIVE COVER WILL BE FULLY ESTABLISHED.
    D. CONSTRUCTION ENTRANCE WILL BE REMOVED AT PROJECT COMPLETION.
7. UPON COMPLETION OF THE PROJECT AND RECEIPT OF CERTIFICATE OF OCCUPANCY, THE CONTRACTOR SHALL REMOVE ALL TEMPORARY EROSION CONTROL MEASURES AND DISPOSE OF THEM UNLESS NOTED ON PLANS.

Connecticut PORT AUTHORITY

PERMITTING SET
ISSUED: 10/23/2020
NOT TO BE USED FOR CONSTRUCTION

moffatt & nichol

NOTES - 1 OF 2
STATE PIER INFRASTRUCTURE IMPROVEMENTS
STATE PIER FACILITY - NEW LONDON, CT

SEAL

DWG INFO: Q:\BOS\Projects\10630 Detail Design State pier\500 CADD_Active_Permit Set\10630-02.dwg, October 20, 2020 - 2:31 PM, CMOYAGLESIAS, (C) MOFFATT AND NICHOL

EROSION, SEDIMENTATION, AND POLLUTION CONTROL PLAN (ESPC)

EROSION AND SEDIMENT CONTROLS

1. ALL PERIMETER GEOTEXTILE SILT FENCES AND CONSTRUCTION EXITS SHALL BE IN PLACE PRIOR TO ANY LAND DISTURBING ACTIVITIES.
2. WHEN CONSTRUCTION ACTIVITIES HAVE CEASED IN AN AREA, THAT AREA SHALL BE STABILIZED WITHIN 14 DAYS.

OTHER CONTROLS

1. NO WASTE WILL BE DISPOSED OF INTO STORMWATER INLETS OR WATERS OF THE STATE.

WASTE MATERIALS

1. ALL WASTE MATERIALS WILL BE COLLECTED AND STORED IN A SECURELY LIDDED METAL DUMPSTER. THE DUMPSTER WILL MEET ALL SOLID WASTE MANAGEMENT REGULATIONS. ALL TRASH AND CONSTRUCTION DEBRIS FROM THE SITE WILL BE DEPOSITED IN THE DUMPSTER. THE DUMPSTER WILL BE EMPTIED A MINIMUM OF ONCE PER WEEK OR MORE OFTEN IF NECESSARY AND TRASH WILL BE HAULED AS REQUIRED BY LOCAL REGULATIONS. NO CONSTRUCTION WASTE WILL BE BURIED ON-SITE.
2. ALL PERSONNEL WILL BE INSTRUCTED ON PROPER PROCEDURES FOR WASTE DISPOSAL. A NOTICE STATING THESE PRACTICES WILL BE POSTED AT THE JOBSITE AND THE CONTRACTOR WILL BE RESPONSIBLE FOR SEEING THAT THESE PROCEDURES ARE FOLLOWED.

HAZARDOUS WASTE

1. ALL HAZARDOUS WASTE MATERIALS WILL BE DISPOSED OF IN THE MANNER SPECIFIED BY LOCAL STATE, AND/OR FEDERAL REGULATIONS AND BY THE MANUFACTURER OF SUCH PRODUCTS. THE JOB SITE SUPERINTENDENT, WHO WILL ALSO BE RESPONSIBLE FOR SEEING THAT THESE PRACTICES ARE FOLLOWED, WILL INSTRUCT SITE PERSONNEL IN THESE PRACTICES. MATERIAL SAFETY DATA SHEETS (MSDS'S) FOR EACH SUBSTANCE WITH HAZARDOUS PROPERTIES THAT IS USED ON THE JOB SITE WILL BE OBTAINED AND USED FOR THE PROPER MANAGEMENT OF POTENTIAL WASTES THAT MAY RESULT FROM THESE PRODUCTS. AN MSDS WILL BE POSTED IN THE IMMEDIATE AREA WHERE SUCH PRODUCT IS STORED AND/OR USED AND ANOTHER COPY OF EACH MSDS WILL BE MAINTAINED IN THE ESPCP FILE AT THE JOB SITE CONSTRUCTION TRAILER OFFICE. EACH EMPLOYEE WHO MUST HANDLE A SUBSTANCE WITH HAZARDOUS PROPERTIES WILL BE INSTRUCTED ON THE USE OF MSDS SHEETS AND THE SPECIFIC INFORMATION IN THE APPLICABLE MSDS FOR THE PRODUCT HE/SHE IS USING, PARTICULARLY REGARDING SPILL CONTROL TECHNIQUES.
2. THE CONTRACTOR WILL IMPLEMENT THE SPILL PREVENTION CONTROL AND COUNTERMEASURES (SPCC) PLAN FOUND WITHIN THE ESPCP AND WILL TRAIN ALL PERSONNEL IN THE PROPER CLEANUP AND HANDLING OF SPILLED MATERIALS. NO SPILLED HAZARDOUS MATERIALS OR HAZARDOUS WASTES WILL BE ALLOWED TO COME IN CONTACT WITH STORMWATER DISCHARGES. IF SUCH CONTACT OCCURS, THE STORMWATER DISCHARGE WILL BE CONTAINED ON SITE UNTIL APPROPRIATE MEASURES IN COMPLIANCE WITH STATE AND FEDERAL REGULATIONS ARE TAKEN TO DISPOSE OF SUCH CONTAMINATED STORMWATER. IT SHALL BE THE RESPONSIBILITY OF THE JOB SITE SUPERINTENDENT TO PROPERLY TRAIN ALL PERSONNEL IN THE USE OF THE SPCC PLAN.

SANITARY WASTES

1. A MINIMUM OF ONE PORTABLE SANITARY UNIT WILL BE PROVIDED FOR EVERY TEN (10) WORKERS ON THE SITE. ALL SANITARY WASTE WILL BE COLLECTED FROM THE PORTABLE SANITARY UNITS A MINIMUM OF ONE TIME PER WEEK BY A LICENSED PORTABLE FACILITY PROVIDER IN COMPLETE COMPLIANCE WITH LOCAL AND STATE REGULATIONS.
2. ALL SANITARY WASTE UNITS WILL BE LOCATED IN AN AREA WHERE THE LIKELIHOOD OF THE UNIT CONTRIBUTING TO STORMWATER DISCHARGE IS NEGLIGIBLE. ADDITIONAL CONTAINMENT BMPs MUST BE IMPLEMENTED, SUCH AS GRAVEL BAGS OR SPECIALLY DESIGNED PLASTIC SKID CONTAINERS AROUND THE BASE, TO PREVENT WASTES FROM CONTRIBUTING TO STORMWATER DISCHARGES. THE LOCATION OF THE SANITARY WASTES UNITS MUST BE IDENTIFIED ON THE EROSION CONTROL PLAN GRADING PHASE BY THE CONTRACTOR ONCE THE LOCATIONS HAVE BEEN DETERMINED.

OFFSITE VEHICLE TRACKING

1. A STABILIZED CONSTRUCTION ENTRANCE IS TO BE PROVIDED TO HELP REDUCE VEHICLE TRACKING OF SEDIMENT. SEE SHEET 4 FOR CONSTRUCTION ENTRANCE DETAILS. THE PAVED STREET ADJACENT TO THE SITE EXIT WILL BE INSPECTED DAILY FOR TRACKING OF MUD, DIRT OR ROCK. DUMP TRUCKS HAULING MATERIAL FROM THE CONSTRUCTION SITE WILL BE COVERED WITH A TARPAULIN.

INVENTORY FOR POLLUTION PREVENTION PLAN

1. THE FOLLOWING MATERIALS ARE EXPECTED ON-SITE DURING CONSTRUCTION: CONCRETE PRODUCTS, ASPHALT, PETROLEUM BASED FUELS AND LUBRICANTS FOR EQUIPMENT, TAR, METAL REINFORCING, PAINTS/FINISHES, PAINT SOLVENTS, LUMBER, CRUSHED STONE, PLASTIC, METAL, AND CONCRETE PIPES.

SPILL PREVENTION

1. PRACTICES SUCH AS GOOD HOUSEKEEPING, PROPER HANDLING OF HAZARDOUS PRODUCTS AND PROPER SPILL CONTROL PRACTICES WILL BE FOLLOWED TO REDUCE THE RISK OF SPILLS AND SPILLS FROM DISCHARGING INTO STORMWATER RUNOFF.

GOOD HOUSEKEEPING

1. QUANTITIES OF PRODUCTS STORED ON-SITE WILL BE LIMITED TO THE AMOUNT NEEDED FOR THE JOB.
2. PRODUCTS AND MATERIALS WILL BE STORED IN A NEAT, ORDERLY MANNER IN APPROPRIATE CONTAINERS PROTECTED FROM RAINFALL, WHERE POSSIBLE.
3. PRODUCTS WILL BE KEPT IN THEIR ORIGINAL CONTAINERS WITH MANUFACTURER LABELS LEGIBLE AND VISIBLE.
4. PRODUCTS MIXING, DISPOSAL AND DISPOSAL OF PRODUCT CONTAINERS WILL BE ACCORDING TO THE MANUFACTURER'S RECOMMENDATIONS.
5. THE CONTRACTOR WILL INSPECT SUCH MATERIALS TO ENSURE PROPER USE, STORAGE AND DISPOSAL.

PRODUCT SPECIFIC PRACTICES

1. PETROLEUM BASED PRODUCTS - CONTAINERS FOR PRODUCTS SUCH AS FUELS, LUBRICANTS AND TARS WILL BE INSPECTED DAILY FOR LEAKS AND SPILLS. THIS INCLUDES ON-SITE VEHICLE AND MACHINERY DAILY INSPECTION AND REGULAR PREVENTIVE MAINTENANCE OF SUCH EQUIPMENT. EQUIPMENT MAINTENANCE AREAS WILL BE LOCATED AWAY FROM STATE WATER, NATURAL DRAINS AND STORMWATER DRAINAGE INLETS. IN ADDITION, TEMPORARY FUELING TANKS SHALL HAVE A SECONDARY CONTAINMENT LINER TO PREVENT/MINIMIZE SITE CONTAMINATION. DISCHARGE OF OILS, FUELS AND LUBRICANTS IS PROHIBITED. PROPER DISPOSAL METHODS WILL INCLUDE COLLECTION IN A SUITABLE CONTAINER AND DISPOSAL AS REQUIRED BY LOCAL AND STATE REGULATIONS.
2. PAINTS/FINISHES/SOLVENTS - ALL PRODUCTS WILL BE STORED IN TIGHTLY SEALED ORIGINAL CONTAINERS WHEN NOT IN USE. EXCESS PRODUCT WILL NOT BE DISCHARGED TO THE STORMWATER COLLECTION SYSTEM. EXCESS PRODUCT, MATERIALS USED WITH THESE PRODUCTS AND PRODUCT CONTAINERS WILL BE DISPOSED OF ACCORDING TO MANUFACTURER'S SPECIFICATIONS AND RECOMMENDATIONS.
3. CONCRETE TRUCK WASHING - NO CONCRETE TRUCKS WILL BE ALLOWED TO WASH OUT OR DISCHARGE SURPLUS CONCRETE OR DRUM WASH WATER ON THE OWNER'S PROPERTY.
4. FERTILIZER/HERBICIDES - THESE PRODUCTS WILL BE APPLIED AT RATES THAT DO NOT EXCEED THAT MANUFACTURER'S SPECIFICATIONS OR ABOVE THE GUIDELINES SET FORTH IN THE CROP .
5. BUILDING MATERIALS/FORMWORK - NO BUILDING OR CONSTRUCTION MATERIALS WILL BE BURIED OR DISPOSED OF ON-SITE. ALL SUCH MATERIAL WILL BE DISPOSED OF IN PROPER WASTE DISPOSAL PROCEDURES.

SPILL CLEANUP AND CONTROL PRACTICES

1. LOCAL, STATE AND MANUFACTURER'S RECOMMENDED METHODS FOR SPILL CLEANUP WILL BE CLEARLY POSTED AND PROCEDURES WILL BE MADE AVAILABLE TO SITE PERSONNEL.
2. MATERIAL AND EQUIPMENT NECESSARY FOR SPILL CLEANUP WILL BE KEPT IN THE MATERIAL STORAGE AREAS. TYPICAL MATERIALS AND EQUIPMENT INCLUDES, BUT IS NOT LIMITED TO, BROOMS, DUSTPANS, MOPS, RAGS, GLOVES, GOGGLES, CAT LITTER, SAND, SAWDUST AND PROPERLY LABELED PLASTIC AND METAL WASTE CONTAINERS.
3. SPILL PREVENTION PRACTICES AND PROCEDURES WILL BE REVIEWED AFTER A SPILL AND ADJUSTED AS NECESSARY TO PREVENT FUTURE SPILLS.
4. ALL SPILLS WILL BE CLEANED UP IMMEDIATELY UPON DISCOVERY. ALL SPILLS WILL BE REPORTS AS REQUIRED BY LOCAL, STAT, AND FEDERAL REGULATIONS.
5. FOR SPILLS THAT IMPACT SURFACE WATER (LEAVE A SHEEN ON SURFACE WATER), THE NATIONAL RESPONSE CENTER (NRC) WILL BE CONTACTED WITHIN 24 HOURS AT 1-800-426-2675.
6. FOR SPILLS OF UNKNOWN AMOUNT, THE NATIONAL RESPONSE CENTER (NRC) WILL BE CONTACTED WITHIN 24 HOURS AT 1-800-426-2675.
7. FOR SPILLS GREATER THAN 25 GALLONS AND NO SURFACE WATER IMPACTS, THE SPILL WILL BE CLEANED UP AND LOCAL AGENCIES WILL BE CONTACTED AS REQUIRED.

HANDLING OF SOIL MATERIALS

1. EXCAVATED SOIL MATERIALS, EXCEPT FOR EXCAVATED ASPHALT AND CONCRETE, SHALL BE USED FOR BACKFILLING AND FILLING PROVIDED IT MEETS THE FOLLOWING REQUIREMENTS:
   - A. THE MATERIAL DOES NOT CONTAIN DELETERIOUS AMOUNTS OF:
     - a. ORGANIC CLAYS, SILTS, OR PEATS
     - b. MISCELLANEOUS DEBRIS, SUCH AS BUT NOT LIMITED TO, TIMBER, METAL, PLASTICS, GLASS, OR REFUSE
     - c. STONES OR CONCRETE PIECES LARGER THAN THREE (3) INCHES IN SIZE.
   - B. THE MATERIAL IS NOT FROZEN AND DOES NOT CONTAIN ICE.
   - C. THE MATERIAL IS NOT OIL STAINED AND DOES NOT HAVE A NOTICEABLE "OIL ODOR".
   - D. THE MATERIAL IS COMPACTABLE AS DETERMINED BY THE OWNER'S REPRESENTATIVE.
2. ALL EXCAVATED SOIL THAT EXHIBITS EVIDENCE OF CONTAMINATION INCLUDING, BUT NOT LIMITED TO, SHEENS, STAINING, AND ODORS SHALL BE SEGREGATED FROM SOIL NOT EXHIBITING SUCH EVIDENCE. SOIL WITH INDICATORS OF CONTAMINATION SHALL NOT BE USED AS BACKFILL.
3. TRANSPORT ALL EXCAVATED SOIL EXHIBITING EVIDENCE OF CONTAMINATION TO THE STOCKPILE AREA AS DIRECTED BY THE OWNER'S REPRESENTATIVE.
4. SUBMIT TO THE OWNER'S REPRESENTATIVE A SOIL STOCKPILE MANAGEMENT PLAN DESCRIBING MEASURES FOR SOIL CONTAINMENT WITHIN THE STOCKPILE AREA AND MAINTENANCE OF THE STOCKPILE AREA.
5. THE OWNER'S REPRESENTATIVE WILL PERFORM REQUIRED SOIL SAMPLING AND TESTING FOR OFF-SITE SOIL REUSE OR DISPOSAL. THE OWNER'S REPRESENTATIVE WILL PROVIDE TO THE CONTRACTOR A COPY OF THE LABORATORY REPORT CONTAINING THE LABORATORY ANALYTICAL DATA.
6. WHEN DIRECTED BY THE OWNER'S REPRESENTATIVE, TRANSPORT AND REUSE OR DISPOSE THE SOIL MATERIALS OFF AUTHORITY PROPERTY IN ACCORDANCE WITH ALL APPLICABLE FEDERAL, STATE AND LOCAL REGULATIONS.
7. SUBMIT INFORMATION ON THE TRANSPORTERS OF SOIL MATERIALS INCLUDING CURRENT APPLICABLE STATE-ISSUED WASTE TRANSPORTERS PERMITS TO THE OWNER'S REPRESENTATIVE FOR APPROVAL AT LEAST 2 WEEKS PRIOR TO THE COMMENCEMENT OF TRUCKING ACTIVITIES.
8. SUBMIT DOCUMENTATION OF REUSE OR DISPOSAL OF SOIL MATERIALS DETAILING EXECUTION OF MANIFESTS OR BILLS OF LADING FOR ALL SOIL MATERIAL REMOVED AND TRANSPORTED FROM THE SITE. DOCUMENTS SHALL BE SIGNED BY THE OWNER'S REPRESENTATIVE PRIOR TO THE REMOVAL OF SOIL OFF-SITE. EXECUTED MANIFESTS OR BILLS OF LADING SHALL BE SIGNED BY THE RECEIVING FACILITY AND COPIES SHALL BE PROVIDED TO THE OWNER'S REPRESENTATIVE WITHIN 72 HOURS.

INSPECTIONS

1. EACH DAY WHEN ANY TYPE OF CONSTRUCTION ACTIVITY HAS TAKEN PLACE AT THE CONTRACTOR'S SITE, QUALIFIED PERSONNEL PROVIDED BY THE CONTRACTOR SHALL INSPECT: (A) ALL AREAS AT THE CONTRACTOR'S SITE WHERE PETROLEUM PRODUCTS ARE STORED, USED, OR HANDLED FOR SPILLS AND LEAKS FROM VEHICLES AND EQUIPMENT; (B) ALL LOCATIONS AT THE CONTRACTOR'S SITE WHERE VEHICLES ENTER OF EXIT THE SITE FOR EVIDENCE OF OFF-SITE SEDIMENT TRACKING; AND (C) MEASURE RAINFALL ONCE EACH TWENTY-FOUR HOUR PERIOD AT THE SITE. THESE INSPECTIONS MUST BE CONDUCTED UNTIL PROJECT COMPLETION.
2. QUALIFIED PERSONNEL (PROVIDED BY THE CONTRACTOR) SHALL INSPECT AT LEAST ONCE EVERY SEVEN (7) CALENDAR DAYS AND WITHIN 24 HOURS OF THE END OF A STORM THAT IS 0.5 INCHES OR GREATER THE FOLLOWING: (A) DISTURBED AREAS OF THE CONTRACTOR'S CONSTRUCTION SITE THAT HAVE NOT UNDERGONE FINAL STABILIZATION; (B) AREAS USED BY THE CONTRACTOR FOR STORAGE OF MATERIALS THAT ARE EXPOSED TO PRECIPITATION THAT HAVE NOT UNDERGONE FINAL STABILIZATION; AND (C) STRUCTURAL CONTROL MEASURES. EROSION AND SEDIMENT CONTROL MEASURES IDENTIFIED IN THE PLAN APPLICABLE TO THE CONTRACTOR'S SITE SHALL BE OBSERVED TO ENSURE THAT THEY ARE OPERATING CORRECTLY. WHERE DISCHARGE LOCATIONS OR POINTS ARE ACCESSIBLE, THEY SHALL BE INSPECTED TO ASCERTAIN WHETHER EROSION CONTROL MEASURES ARE EFFECTIVE IN PREVENTING SIGNIFICANT IMPACTS TO RECEIVING WATER(S).
3. QUALIFIED PERSONNEL (PROVIDED BY THE CONTRACTOR) SHALL INSPECT AT LEAST ONCE PER MONTH UNTIL PROJECT COMPLETION THE AREAS OF THE SITE THAT HAVE UNDERGONE FINAL STABILIZATION. THESE AREAS SHALL BE INSPECTED FOR EVIDENCE OF, OR THE POTENTIAL FOR, POLLUTANTS ENTERING THE DRAINAGE SYSTEM AND THE RECEIVING WATER(S). EROSION AND SEDIMENT CONTROL MEASURES IDENTIFIED IN THE PLAN SHALL BE OBSERVED TO ENSURE THAT THEY ARE OPERATING CORRECTLY. WHERE DISCHARGE LOCATIONS OR POINTS ARE ACCESSIBLE, THEY SHALL BE INSPECTED TO ASCERTAIN WHETHER EROSION CONTROL MEASURES ARE EFFECTIVE IN PREVENTING SIGNIFICANT IMPACTS TO RECEIVING WATER(S).
4. BASED ON THE RESULTS OF EACH INSPECTION, THE SITE DESCRIPTION AND THE POLLUTION PREVENTION AND CONTROL MEASURES IDENTIFIED IN THE EROSION, SEDIMENTATION AND POLLUTION CONTROL PLAN, THE PLAN SHALL BE REVISED AS APPROPRIATE NOT LATER THAN SEVEN (7) CALENDAR DAYS FOLLOWING EACH INSPECTION. IMPLEMENTATION OF SUCH CHANGES SHALL BE MADE AS SOON AS PRACTICAL BUT IN NO CASE LATER THAN SEVEN (7) CALENDAR DAYS FOLLOWING EACH INSPECTION.
5. A REPORT SUMMARIZING THE SCOPE OF EACH INSPECTION AND THE NAME(S) OF PERSONNEL MAKING EACH INSPECTION, THE DATE(S) OF EACH INSPECTION, MAJOR OBSERVATIONS RELATING TO THE IMPLEMENTATION OF THE EROSION, SEDIMENTATION AND POLLUTION CONTROL PLAN AND ACTIONS TAKEN SHALL BE MADE AND RETAINED AT THE SITE OR BE READILY AVAILABLE AT A DESIGNATED ALTERNATE LOCATION UNTIL THE ENTIRE SITE OR THAT PORTION OF A CONSTRUCTION PROJECT THAT HAS BEEN PHASED HAS UNDERGONE FINAL STABILIZATION. SUCH REPORTS SHALL IDENTIFY ANY INCIDENTS OF NON-COMPLIANCE. WHERE THE REPORT DOES NOT IDENTIFY ANY INCIDENTS OF NON-COMPLIANCE, THE REPORT SHALL CONTAIN A CERTIFICATION THAT THE FACILITY IS IN COMPLIANCE WITH THE EROSION, SEDIMENTATION AND POLLUTION CONTROL PLAN.

PROJECT VERTICAL DATUM	
NEW LONDON, THAMES RIVER, CT STATION ID 8461490	ELEVATONS (NAVD88)
100 YEAR BASE FLOOD	+11.0
HIGHEST OBSERVED	+8.73
NGVD29	+2.85
COASTAL JURISDICTION LINE	+2.1
MHHW	+1.21
MHW	+0.92
NAVD88	0.00
MSL	-0.30
MTL	-0.37
MLW	-1.65
MLLW	-1.84
LOWEST OBSERVED	-5.84

NOTE: MLLW ELEVATIONS ARE 1.84' ABOVE NAVD88.

Connecticut PORT AUTHORITY

PERMITTING SET
ISSUED: 10/23/2020
NOT TO BE USED FOR CONSTRUCTION

moffatt & nichol

NOTES - 2 OF 2

STATE PIER INFRASTRUCTURE IMPROVEMENTS
STATE PIER FACILITY - NEW LONDON, CT

SEAL

DWG INFO: Q:\BOS\Projects\10630 Detail Design Stats pier\500 CADD_Active_Permit\Set\10630-03.dwg, April 28, 2020 - 2:25 PM, CMOYAGLESIAS, (C) MOFFATT AND NICHOL

SEDIMENT FENCE Sd1

DEFINITION

A TEMPORARY SEDIMENT BARRIER CONSISTING OF A FILTER FABRIC STRETCHED ACROSS AND ATTACHED TO SUPPORTING POSTS AND ENTRENCHED. THE SEDIMENT FENCE IS CONSTRUCTED OF STAKES AND SYNTHETIC FILTER FABRIC WITH A RIGID WIRE FENCE BACKING WHERE NECESSARY FOR SUPPORT. SEDIMENT FENCE CAN BE PURCHASED WITH POCKETS PRESEWN TO ACCEPT USE OF STEEL FENCE POSTS.

PURPOSE

A SEDIMENT FENCE INTERCEPTS AND DETAINS SMALL AMOUNTS OF SEDIMENT FROM DISTURBED AREAS DURING CONSTRUCTION OPERATIONS AND REDUCES RUNOFF VELOCITY DOWN A SLOPE. SEDIMENT FENCES MAY ALSO BE USED TO CATCH WIND-BLOWN SAND AND TO CREATE AN ANCHOR FOR SAND DUNE CREATION.

DESIGN RECOMMENDATIONS

DEPTH OF IMPOUNDED WATER SHOULD NOT EXCEED 1.5 FEET AT ANY POINT ALONG THE FENCE. DRAINAGE AREA LIMITED TO ¼ ACRE PER 100 FT OF FENCE, AND NO MORE THAN 1.5 ACRES IN TOTAL; OR IN COMBINATION WITH A SEDIMENT BASIN ON A LARGER SITE. AREA IS FURTHER RESTRICTED BY SLOPE STEEPNESS AS SHOWN IN THE FOLLOWING TABLE.

MAXIMUM SLOPE	
LAND SLOPE (%)	DISTANCE ABOVE FENCE (FEET)
2	250
5	180
10	100
20	50
30	30

MATERIALS AND USE

FILTER FABRIC
THE FILTER FABRIC USED IN A SEDIMENT FENCE MUST HAVE SUFFICIENT STRENGTH TO WITHSTAND VARIOUS STRESS CONDITIONS. IT ALSO MUST HAVE THE ABILITY TO ALLOW PASSAGE OF WATER WHILE RETAINING SOIL PARTICLES. FILTER FABRIC FOR A SEDIMENT FENCE IS AVAILABLE COMMERCIALLY.

SUPPORT POSTS
FOUR-INCH DIAMETER PINE, 1.33 LB./LINEAR FT. STEEL, OR SOUND QUALITY HARDWOOD WITH A MINIMUM CROSS SECTIONAL AREA OF 3.0 SQUARE INCHES. STEEL POSTS SHOULD HAVE PROJECTIONS FOR FASTENING FABRIC. DRIVE POSTS SECURELY, AT LEAST 16 INCHES INTO THE GROUND, ON THE DOWNSLOPE SIDE OF THE TRENCH. SPACE POSTS A MAXIMUM OF 8 FEET IF FENCE IS SUPPORTED BY WIRE, 6 FEET IF EXTRA-STRENGTH FABRIC IS USED WITHOUT SUPPORT WIRE. ADJUST SPACING TO PLACE POSTS AT LOW POINTS ALONG THE FENCE LINE.

SUPPORT WIRE
WIRE FENCE (14 GAUGE WITH 6-INCH MESH) IS REQUIRED TO SUPPORT STANDARD STRENGTH FABRIC.

REINFORCED, STABILIZED OUTLETS
ANY OUTLET WHERE STORM FLOW BYPASS OCCURS MUST BE STABILIZED AGAINST EROSION. SET OUTLET ELEVATION SO THAT WATER DEPTH CANNOT EXCEED 1.5 FEET AT THE LOWEST POINT ALONG THE FENCE LINE.

SET FABRIC HEIGHT AT 1 FOOT MAXIMUM BETWEEN SUPPORT POSTS SPACED NO MORE THAN 4 FEET APART. INSTALL A HORIZONTAL BRACE BETWEEN THE SUPPORT POSTS TO SERVE AS AN OVERFLOW WEIR AND TO SUPPORT TOP OF FABRIC. PROVIDE A RIPRAP SPLASH PAD A MINIMUM 5 FEET WIDE, 1 FOOT DEEP, AND 5 FEET LONG ON LEVEL GRADE. THE FINISHED SURFACE OF THE RIPRAP SHOULD BLEND WITH SURROUNDING AREA, ALLOWING NO OVERFALL. THE AREA AROUND THE PAD MUST BE STABLE.

CONSTRUCTION RECOMMENDATIONS

DIG A TRENCH APPROXIMATELY 8 INCHES DEEP AND 4 INCHES WIDE, OR A V-TRENCH; ALONG THE LINE OF THE FENCE, UPSLOPE SIDE.
FASTEN SUPPORT WIRE FENCE SECURELY TO THE UPSLOPE SIDE OF FENCE POSTS WITH WIRE TIES OR STAPLES. WIRE SHOULD EXTEND 6 INCHES INTO THE TRENCH.
ATTACH CONTINUOUS LENGTH OF FABRIC TO UPSLOPE SIDE OF FENCE POSTS. AVOID JOINTS, PARTICULARLY AT LOW POINTS IN THE FENCE LINE. WHERE JOINTS ARE NECESSARY, FASTEN FABRIC SECURELY TO SUPPORT POSTS AND OVERLAP TO THE NEXT POST.
PLACE THE BOTTOM ONE FOOT OF FABRIC IN THE TRENCH. BACKFILL WITH COMPACTED EARTH OR GRAVEL.
FILTER CLOTH SHALL BE FASTENED SECURELY TO THE WOVEN WIRE FENCE WITH TIES SPACED EVERY 24 INCHES AT THE TOP, MID-SECTION, AND BOTTOM.
TO REDUCE MAINTENANCE, A SHALLOW SEDIMENT STORAGE AREA MAY BE EXCAVATED ON THE UPSLOPE SIDE OF FENCE WHERE SEDIMENTATION IS EXPECTED.
PROVIDE GOOD ACCESS TO DEPOSITION AREAS FOR CLEANOUT AND MAINTENANCE.
SEDIMENT FENCES SHOULD BE REMOVED WHEN THEY HAVE SERVED THEIR USEFUL PURPOSE, BUT NOT BEFORE THE UPSLOPE AREA HAS BEEN PERMANENTLY STABILIZED. RETAINED SEDIMENT MUST BE REMOVED AND PROPERLY DISPOSED OF, OR MULCHED AND SEEDED.

MAINTENANCE

A SEDIMENT FENCE REQUIRES A GREAT DEAL OF MAINTENANCE. SILT FENCES SHOULD BE INSPECTED IMMEDIATELY AFTER EACH RAINFALL AND AT LEAST DAILY DURING PROLONGED RAINFALL. REPAIR AS NECESSARY.
REMOVE SEDIMENT DEPOSITS PROMPTLY TO PROVIDE ADEQUATE STORAGE VOLUME FOR THE NEXT RAIN AND TO REDUCE PRESSURE ON FENCE. TAKE CARE TO AVOID UNDERMINING FENCE DURING CLEANOUT.
IF THE FABRIC TEARS, DECOMPOSES, OR IN ANY WAY BECOMES INEFFECTIVE, REPLACE IT IMMEDIATELY.
REPLACE BURLAP USED IN SEDIMENT FENCES AFTER NO MORE THAN 60 DAYS.
REMOVE ALL FENCING MATERIALS AFTER THE CONTRIBUTING DRAINAGE AREA HAS BEEN PROPERLY STABILIZED. SEDIMENT DEPOSITS REMAINING AFTER THE FABRIC HAS BEEN REMOVED SHOULD BE GRADED TO CONFORM WITH THE EXISTING TOPOGRAPHY AND VEGETATED.

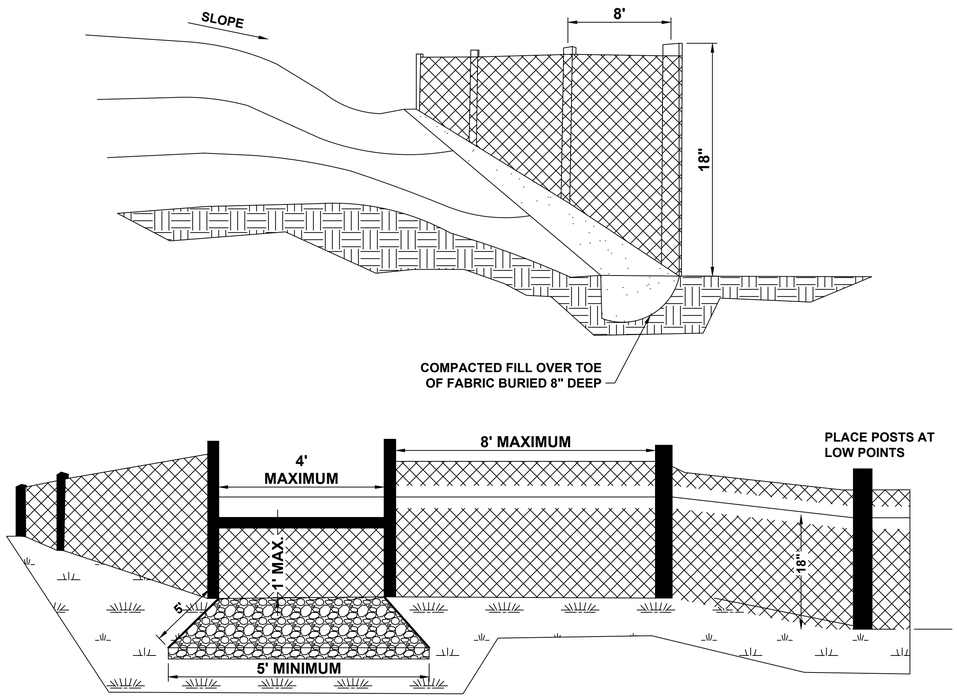

SEDIMENT FENCE
SCALE: N.T.S.

CONSTRUCTION ENTRANCE Co

DEFINITION

A TEMPORARY STONE-STABILIZED PAD LOCATED AT POINTS OF VEHICULAR INGRESS AND EGRESS ON A CONSTRUCTION SITE.

PURPOSE

TO PROVIDE A STABLE ENTRANCE AND EXIT FROM A CONSTRUCTION SITE AND KEEP MUD AND SEDIMENT OFF PUBLIC ROADS.

DESIGN RECOMMENDATIONS

REMOVE ALL VEGETATION AND OTHER OBJECTIONABLE MATERIAL FROM THE FOUNDATION AREA. GRADE AND CROWN FOUNDATION FOR POSITIVE DRAINAGE.
STONE FOR A STABILIZED CONSTRUCTION ENTRANCE SHALL BE 1 TO 3-INCH STONE, RECLAIMED STONE, OR RECYCLED CONCRETE EQUIVALENT PLACED ON A STABLE FOUNDATION AS SPECIFIED IN THE PLAN.
PAD DIMENSIONS: THE MINIMUM LENGTH OF THE GRAVEL PAD SHOULD BE 50 FEET, EXCEPT FOR A SINGLE RESIDENTIAL LOT WHERE A 30 FOOT MINIMUM LENGTH MAY BE USED. LONGER ENTRANCES WILL PROVIDE BETTER CLEANING ACTION. THE PAD SHOULD EXTEND THE FULL WIDTH OF THE CONSTRUCTION ACCESS ROAD OR 10 FEET WHICHEVER IS GREATER. THE AGGREGATE SHOULD BE PLACED AT LEAST SIX INCHES THICK.
A GEOTEXTILE FILTER FABRIC SHALL BE PLACED BETWEEN THE STONE FILL AND THE EARTH SURFACE BELOW THE PAD TO REDUCE THE MIGRATION OF SOIL PARTICLES FROM THE UNDERLYING SOIL INTO THE STONE AND VICE VERSA. FILTER CLOTH IS NOT REQUIRED FOR A SINGLE FAMILY RESIDENCE LOT.
IF THE SLOPE TOWARD THE ROAD EXCEEDS 2%, CONSTRUCT A RIDGE, 6 TO 8 INCHES HIGH WITH 3:1 SIDE SLOPES, ACROSS THE FOUNDATION APPROXIMATELY 15 FT FROM THE ENTRANCE TO DIVERT RUNOFF AWAY FROM THE PUBLIC ROAD.
ALL SURFACE WATER THAT IS FLOWING TO OR DIVERTED TOWARD THE CONSTRUCTION ENTRANCE SHOULD BE PIPED BENEATH THE ENTRANCE. IF PIPING IS IMPRACTICAL, A BERM WITH 5:1 SLOPES THAT CAN BE CROSSED BY VEHICLES MAY BE SUBSTITUTED FOR THE PIPE.
WASHING: IF THE SITE CONDITIONS ARE SUCH THAT THE MAJORITY OF MUD IS NOT REMOVED FROM THE VEHICLE TIRES BY THE GRAVEL PAD, THEN THE TIRES SHOULD BE WASHED BEFORE THE VEHICLE ENTERS THE ROAD OR STREET. THE WASH AREA SHOULD BE A LEVEL AREA WITH 3-INCH WASHED STONE MINIMUM, OR A COMMERCIAL RACK.
WASH WATER SHOULD BE DIRECTED INTO A SEDIMENT TRAP, A VEGETATED FILTER STRIP, OR OTHER APPROVED SEDIMENT TRAPPING DEVICE. SEDIMENT SHOULD BE PREVENTED FROM ENTERING ANY WATERCOURSES.
A FILTER FABRIC FENCE SHOULD BE INSTALLED DOWN-GRADIENT FROM THE CONSTRUCTION ENTRANCE IN ORDER TO CONTAIN ANY SEDIMENT-LADEN RUNOFF FROM THE ENTRANCE.

MAINTENANCE

THE ENTRANCE SHOULD BE MAINTAINED IN A CONDITION THAT WILL PREVENT TRACKING OR FLOWING OF SEDIMENT ONTO PUBLIC RIGHTS-OF-WAY. THIS MAY REQUIRE PERIODIC TOPDRESSING WITH ADDITIONAL STONE.
INSPECT ENTRANCE/EXIT PAD AND SEDIMENT DISPOSAL AREA WEEKLY AND AFTER HEAVY RAINS OR HEAVY USE.
REMOVE MUD AND SEDIMENT TRACKED OR WASHED ONTO PUBLIC ROAD IMMEDIATELY.
MUD AND SOIL PARTICLES WILL EVENTUALLY CLOG THE VOIDS IN THE GRAVEL AND THE EFFECTIVENESS OF THE GRAVEL PAD WILL NOT BE SATISFACTORY. WHEN THIS OCCURS, THE PAD SHOULD BE TOP-DRESSED WITH NEW STONE. COMPLETE REPLACEMENT OF THE PAD MAY BE NECESSARY WHEN THE PAD BECOMES COMPLETELY CLOGGED.
IF WASHING FACILITIES ARE USED, THE SEDIMENT TRAPS SHOULD BE CLEANED OUT AS OFTEN AS NECESSARY TO ASSURE THAT ADEQUATE TRAPPING EFFICIENCY AND STORAGE VOLUME IS AVAILABLE. VEGETATIVE FILTER STRIPS SHOULD BE MAINTAINED TO INSURE A VIGOROUS STAND OF VEGETATION AT ALL TIMES.
RESHAPE PAD AS NEEDED FOR DRAINAGE AND RUNOFF CONTROL.
REPAIR ANY BROKEN ROAD PAVEMENT IMMEDIATELY.
ALL TEMPORARY EROSION AND SEDIMENT CONTROL MEASURES SHALL BE REMOVED WITHIN 30 DAYS AFTER FINAL SITE STABILIZATION IS ACHIEVED OR AFTER THE TEMPORARY PRACTICES ARE NO LONGER NEEDED. TRAPPED SEDIMENT SHALL BE REMOVED OR STABILIZED ON SITE. DISTURBED SOIL AREAS RESULTING FROM REMOVAL SHALL BE PERMANENTLY STABILIZED.

CRUSHED STONE CONSTRUCTION EXIT

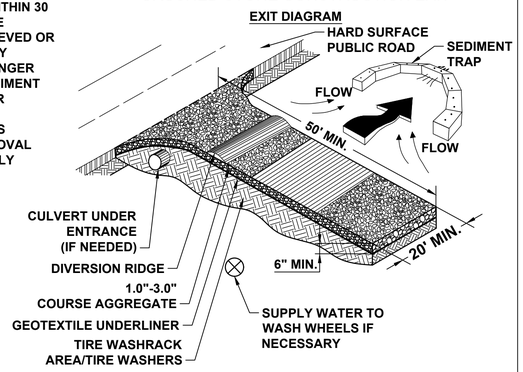

CONSTRUCTION ENTRANCE
SCALE: N.T.S.

DUST CONTROL ON DISTURBED AREAS Du

DEFINITION

CONTROLLING SURFACE AND AIR MOVEMENT OF DUST ON CONSTRUCTION SITES, ROADS, AND DEMOLITION SITES.

PURPOSE

TO PREVENT SURFACE AND AIR MOVEMENT OF DUST FROM EXPOSED SOIL SURFACES.

TO REDUCE THE PRESENCE OF AIRBORNE SUBSTANCES THAT MAY BE HARMFUL OR INJURIOUS TO HUMAN HEALTH, WELFARE, OR SAFETY, OR TO ANIMALS OR PLANT LIFE.

CONDITIONS

THIS PRACTICE IS APPLICABLE TO AREAS SUBJECT TO SURFACE AND AIR MOVEMENT OF DUST WHERE ON AND OFF-SITE DAMAGE MAY OCCUR WITHOUT TREATMENT.

METHOD AND MATERIALS

VEGETATIVE COVER. SEE SPECIFICATION DS2 - DISTURBED AREA STABILIZATION (WITH TEMPORARY SEEDING).

TILLAGE
THIS PRACTICE IS DESIGNED TO ROUGHEN AND BRING CLODS TO THE SURFACE. IT IS AN EMERGENCY MEASURE THAT SHOULD BE USED BEFORE WIND EROSION STARTS. BEGIN PLOWING ON WINDWARD SIDE OF CHISEL-TYPE PLOWS SPACED ABOUT 12 INCHES APART, SPRING-TOOTHED HARROWS, AND SIMILAR PLOWS ARE EXAMPLES OF EQUIPMENT THAT MAY PRODUCE THE DESIRED EFFECT.

IRRIGATION
THIS IS GENERALLY DONE AS AN EMERGENCY TREATMENT. SITE IS SPRINKLED WITH WATER UNTIL THE SURFACE IS WET. REPEAT AS NEEDED.

BARRIERS
SOLID BOARD FENCES, SNOWFENCES, BURLAP FENCES, CRATE WALLS, BALES OF HAY AND SIMILAR MATERIAL CAN BE USED TO CONTROL AIR CURRENTS AND SOIL BLOWING. BARRIERS PLACED AT RIGHT ANGLES TO PREVAILING CURRENTS AT INTERVALS OF ABOUT 15 TIMES THEIR HEIGHT ARE EFFECTIVE IN CONTROLLING WIND EROSION.

CALCIUM CHLORIDE
APPLY AT RATE THAT WILL KEEP SURFACE MOIST. MAY NEED RETREATMENT.

PERMANENT VEGETATION
SEE SPECIFICATION DS3-DISTURBED AREA STABILIZATION (WITH PERMANENT VEGETATION). EXISTING TREES AND LARGE SHRUBS MAY AFFORD VALUABLE PROTECTION IF LEFT IN PLACE.

DUST CONTROL ON DISTURBED AREAS
SCALE: N.T.S.

Connecticut PORT AUTHORITY

PERMITTING SET
ISSUED: 10/23/2020
NOT TO BE USED FOR CONSTRUCTION

moffatt & nichol

EROSION AND SEDIMENT CONTROL NOTES - 1 OF 3

STATE PIER INFRASTRUCTURE IMPROVEMENTS
STATE PIER FACILITY - NEW LONDON, CT

SEAL

DWG INFO. Q:\BOS\Projects\10630 Detail Design State pier\500 CADD_Active_PermitSet\10630-04.dwg, April 29, 2020 - 8:10 PM, CMOYANGLESMAS, (C) MOFFATT AND NICHOL

INLET PROTECTION Sd2

DEFINITION

A SEDIMENT FILTER OR AN EXCAVATED IMPOUNDING AREA AROUND A STORM DRAIN, DROP INLET, OR CURB INLET.

PURPOSE

USED TO PREVENT SEDIMENT FROM ENTERING STORM DRAINAGE SYSTEMS DURING CONSTRUCTION..

INSTALLATION

FILTER FABRIC SHOULD BE ENOUGH TO REACH FROM SIDE TO SIDE OF THE INLET. ALLOW FABRIC TO BE SAG NO MORE THAN 6" FROM THE TOP OF THE GRATE. FILTER FABRIC SHOULD HAVE AT LEAST A 6"OVERHANG ALONG THE OUTSIDE OF THE GRATE.

MAINTENANCE

REMOVE AND REPLACE FILTER FABRIC WHEN SEDIMENT HAS COVERED A MAJORITY OF FILTER FABRIC IN THE INLET. CAUTION SHOULD BE USED IN ORDER TO MAKE SURE FABRIC DOES NOT DROP IN THE INLET BELOW WHEN REPLACING.

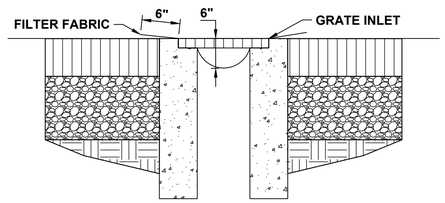

INLET PROTECTION
SCALE: N.T.S.

RIPRAP St

DEFINITION

A PERMANENT, EROSION-RESISTANT GROUND COVER OF LARGE, LOOSE, ANGULAR STONE.

PURPOSE

TO PROTECT SLOPES, STREAMBANKS, CHANNELS, OR AREAS SUBJECT TO EROSION BY WAVE ACTION.

ROCK RIPRAP PROTECTS SOIL FROM EROSION DUE TO CONCENTRATED RUNOFF. IT IS USED TO STABILIZE SLOPES THAT ARE UNSTABLE DUE TO SEEPAGE. IT IS ALSO USED TO SLOW THE VELOCITY OF CONCENTRATED RUNOFF WHICH IN TURN INCREASES THE POTENTIAL FOR INFILTRATION.

CONSTRUCTION RECOMMENDATIONS

SUBGRADE FOR THE FILTER MATERIAL, GEOTEXTILE FABRIC OR RIPRAP SHOULD BE CLEARED AND GRUBBED TO REMOVE ALL ROOTS, VEGETATION, AND DEBRIS AND PREPARED TO THE LINES AND GRADES SHOWN ON THE PLANS.

EXCAVATE DEEP ENOUGH FOR BOTH FILTER AND RIPRAP. COMPACT ANY FILL MATERIAL TO THE DENSITY OF SURROUNDING UNDISTURBED SOIL.

EXCAVATE A KEYWAY IN STABLE MATERIAL AT BASE OF SLOPE TO REINFORCE THE TOE. KEYWAY DEPTH SHOULD BE 1.5 TIMES THE DESIGN THICKNESS OF RIPRAP AND SHOULD "EXTEND A HORIZONTAL DISTANCE EQUAL TO THE DESIGN THICKNESS.

ROCK AND/OR GRAVEL USED FOR FILTER AND RIPRAP SHALL CONFORM TO THE SPECIFIED GRADATION. VOIDS IN THE ROCK RIPRAP SHOULD BE FILLED WITH SPALLS AND SMALLER ROCKS.

FILTER

INSTALL SYNTHETIC FILTER FABRIC OR A SAND/GRAVEL FILTER ON SUBGRADE.

SYNTHETIC FILTER FABRIC

PLACE FILTER FABRIC ON A SMOOTH FOUNDATION. OVERLAP EDGES AT LEAST 12 INCHES, WITH ANCHOR PINS SPACED EVERY 3 FT ALONG OVERLAP. FOR LARGE STONES, A 4-INCH LAYER OF SAND MAY BE NEEDED TO PROTECT FILTERCLOTH.

GEOTEXTILE FABRICS SHOULD BE PROTECTED FROM PUNCTURE OR TEARING DURING PLACEMENT OF THE ROCK RIPRAP BY PLACING A CUSHION OF SAND AND GRAVEL OVER THE FABRIC. DAMAGED AREAS IN THE FABRIC SHOULD BE REPAIRED BY PLACING A PIECE OF FABRIC OVER THE DAMAGED AREA OR BY COMPLETE REPLACEMENT OF THE FABRIC. ALL OVERLAPS REQUIRED FOR REPAIRS OR JOINING TWO PIECES OF FABRIC SHOULD BE A MINIMUM OF 12 INCHES.

SAND/GRAVEL FILTER

SPREAD WELL-GRADED AGGREGATE IN A UNIFORM LAYER TO THE REQUIRED THICKNESS (6 INCHES MINIMUM). IF TWO OR MORE LAYERS ARE SPECIFIED, PLACE THE LAYER OF SMALLER STONES FIRST AND AVOID MIXING THE LAYERS.

STONE PLACEMENT

PLACE RIPRAP IMMEDIATELY AFTER INSTALLING FILTER.

INSTALL RIPRAP TO FULL THICKNESS IN ONE OPERATION. DO NOT DUMP THROUGH CHUTES OR USE ANY METHOD THAT CAUSES SEGREGATION OF STONE SIZES. AVOID DISLODGING OR DAMAGING UNDERLYING FILTER MATERIAL WHEN PLACING STONE.

IF FABRIC IS DAMAGED, REMOVE RIPRAP AND REPAIR FABRIC BY ADDING ANOTHER LAYER, OVERLAPPING THE DAMAGED AREA BY 12 INCHES.

PLACE SMALLER STONES IN VOIDS TO FORM A DENSE, UNIFORM, WELL-GRADED MASS SELECTIVE LOADING AT THE QUARRY AND SOME HAND PLACEMENT MAY BE NECESSARY TO OBTAIN AN EVEN DISTRIBUTION OF STONE SIZES.

BLEND THE STONE SURFACE SMOOTHLY WITH THE SURROUNDING AREA ALLOWING NO PROTRUSIONS OR OVERFALL.

SINCE RIPRAP IS USED WHERE EROSION POTENTIAL IS HIGH, CONSTRUCTION MUST BE SEQUENCED SO THAT THE RIPRAP IS PUT IN PLACE WITH THE MINIMUM POSSIBLE DELAY. DISTURBANCE OF AREAS WHERE RIPRAP IS TO BE PLACED SHOULD BE UNDERTAKEN ONLY WHEN FINAL PREPARATION AND PLACEMENT OFTHE RIPRAP CAN FOLLOW IMMEDIATELY BEHIND THE INITIAL DISTURBANCE.

WHERE RIPRAP IS USED FOR OUTLET PROTECTION, THE RIPRAP SHOULD BE PLACED BEFORE OR IN CONJUNCTION WITH THE CONSTRUCTION OF THE PIPE OR CHANNEL

MAINTENANCE

RIPRAP SHOULD BE CHECKED AT LEAST ANNUALLY AND AFTER EVERY MAJOR STORM FOR DISPLACED STONES, SLUMPING, AND EROSION AT EDGES, ESPECIALLY DOWNSTREAM OR DOWNSLOPE. IF THE RIPRAP HAS BEEN DAMAGED, IT SHOULD BE REPAIRED IMMEDIATELY BEFORE FURTHER DAMAGE CAN TAKE PLACE.

WOODY VEGETATION SHOULD BE REMOVED FROM THE ROCK RIPRAP ANNUALLY BECAUSE TREE ROOTS WILL EVENTUALLY DISLODGE THE RIPRAP.

IF THE RIPRAP IS ON A CHANNEL BANK, THE STREAM SHOULD BE KEPT CLEAR OF OBSTRUCTIONS SUCH AS FALLEN TREES, DEBRIS, AND SEDIMENT BARS THAT MAY CHANGE FLOW PATTERNS WHICH COULD DAMAGE OR DISPLACE THE RIPRAP.

RIP RAP
SCALE: N.T.S.

DWG INFO: Q:\BGS\Projects\10630 Detail Design State pier\500 CADD_Active_Permit Set\10630-05.dwg, April 29, 2020 - 6:53 PM, DFRANZESE, (C) MOFFATT AND NICHOL

Connecticut PORT AUTHORITY

PERMITTING SET
ISSUED: 10/23/2020
NOT TO BE USED FOR CONSTRUCTION

moffatt & nichol

EROSION AND SEDIMENT CONTROL NOTES - 2 OF 3

STATE PIER INFRASTRUCTURE IMPROVEMENTS
STATE PIER FACILITY - NEW LONDON, CT

SEAL

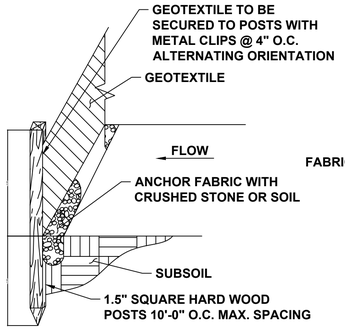

SILT FENCE

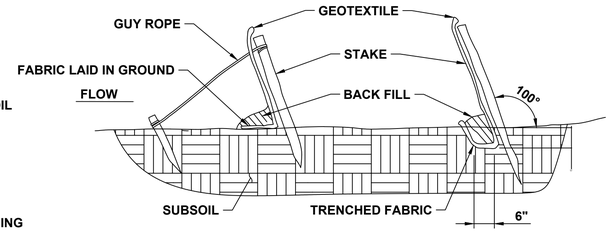

BACK FILL OR TRENCH FABRIC TOE

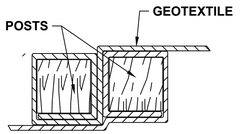

FENCE JOINT PLAN VIEW

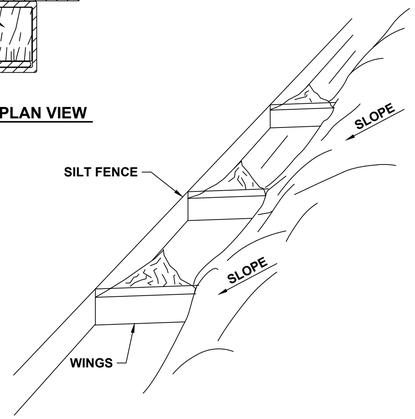

SILT FENCE SYSTEM PLACEMENT ON TOE OF SLOPE

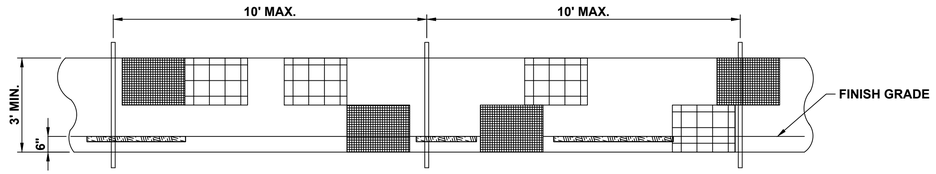

ELEVATION VIEW

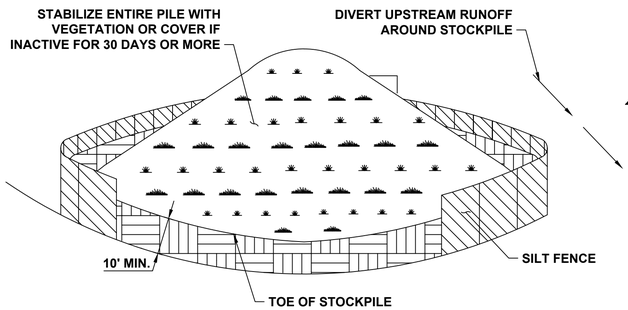

TEMPORARY SOIL STOCKPILING NOTES:

1. AREA CHOSEN FOR STOCKPILING OPERATIONS SHALL BE DRY AND STABLE.
2. MAXIMUM SLOPE OF STOCKPILE SHALL BE 2H:1V.
3. UPON COMPLETION OF SOIL STOCKPILING, EACH PILE SHALL BE SURROUNDED WITH EITHER SILT FENCING OR HAY BALES, THEN STABILIZED WITH VEGETATION OR COVERED WITH POLYETHYLENE SHEETING AND SANDBAGS.
4. A POLYETHYLENE MEMBRANE UNDERLAYMENT MAY BE REQUIRED PER ENGINEER REQUESTS.

TEMPORARY SOIL STOCKPILING

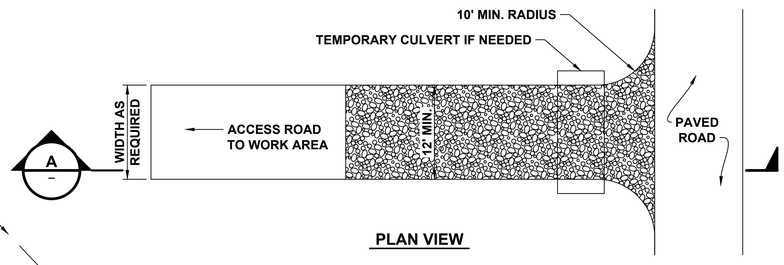

PLAN VIEW

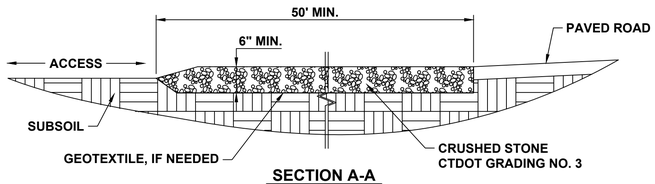

SECTION A-A

CONSTRUCTION ENTRANCE NOTES:

1. TOPSOIL AND ORGANICS SHOULD BE REMOVED PRIOR TO INSTALLATION.
2. CONSTRUCTION ENTRANCE TO BE LOCATED WHERE ACCESS ROAD MEETS PAVED ACCESS/DRIVEWAY.
3. AFTER CONSTRUCTION, ANY DEBRIS SHOULD BE CLEARED FROM THE TRACKING PAD, THE PAD RE-LEVELED AND 2'-4" OF 3/4" CRUSHED GRAVEL SHOULD BE ADDED TO FILL VOIDS AND CREATE A SMOOTH SURFACE WITH A 2% CROWN OR CROSS-SLOPE.

GEOTEXTILE SILT FENCE NOTES:

1. GEOTEXTILE FENCE SHOULD BE PLACED SO THE FENCE LEANS TOWARD THE SOURCE OF SEDIMENT.
2. MAXIMUM SPACING FOR WOODEN STAKES OR STEEL POSTS IS 10'-0".
3. WOOD STAKES SHALL HAVE A MINIMUM CROSS-SECTION SIZE OF 1.5"x1.5" AND A MINIMUM LENGTH OF 3'-6". SILT FENCE SUBJECT TO HEAVY LOADS SHALL BE REINFORCED WITH STEEL POSTS AT LEAST 0.5 LB. PER FOOT WITH A MINIMUM LENGTH OF 4 FT.
4. WOODEN STAKES OR STEEL POSTS SHALL BE DRIVEN TO A MINIMUM OF 12" INTO THE GROUND.
5. 6" OF GEOTEXTILE SHALL BE BURIED BY BACK FILLING OR TRENCHING AND AT LEAST 30" IN HEIGHT OF GEOTEXTILE SHALL BE EXPOSED.
6. FABRIC SHALL BE JOINED ONLY AT A SUPPORT POST WITH A MINIMUM OF 6" OVERLAP AND SECURELY SEALED.
7. UPON REESTABLISHMENT OF GROUND COVER IN DISTURBED AREAS AND WHEN DIRECTED BE YHE ENGINEER OR UPON FINAL INSPECTION, FENCE AND ANY SEDIMENT SHALL BE REMOVED. AT NO TIME WILL THE FENCE REMAIN IN PLACE AFTER PROJECT COMPLETION.
8. GEOTEXTILE FENCE SHALL NOT BE USED IN A WATER COURSE.
9. ONLY GEOTEXTILE FROM THE DEPARTMENTS APPROVED PRODUCT LIST SHALL BE USED.
10. BACK FILLING OF GEOTEXTILE SHALL ONLY BE USED WHEN GROUND IS FROZEN OR WHERE OTHER OBSTRUCTIONS ARE ENCOUNTERED THAT PROHIBIT TRENCHING; E.G., STUMPS OR ROCKS.
11. CLEAN OUT ACCUMULATED SEDIMENT WHEN ONE-HALF OF THE ORIGINAL HEIGHT OF THE GE3OTEZTILE FENCE BECOMES FILLED WITH SEDIMENT OR AS DIRECTED BY THE ENGINEER.
12. POSITION POSTS TO OVERLAP MAKING CERTAIN THAT FABRIC FOLDS AROUND EACH POST ONE FULL TURN.
13. DRIVE POSTS TIGHTLY TOGETHER AND SECURE TOPS OF POSTS BY TYING OFF WITH CORD OR WIRE TO PREVENT FLOW-THROUGH OF BUILT-UP SEDIMENT AT JOINTS.
14. WHEN USING SILT FENCE ALONG TOE OF SLOPE, ADD WINGS TO PREVENT SEDIMENT FROM MOVING ALONG THE FENCE AND OFF THE SITE.

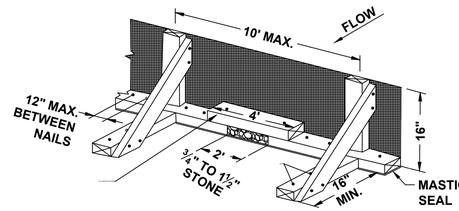

ISOMETRIC VIEW

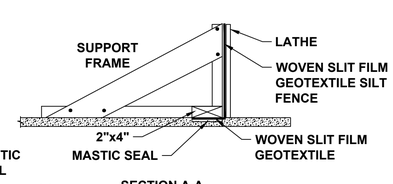

SECTION A-A

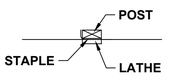

JOINING ADJACENT SECTIONS OF GEOTEXTILE

SILT FENCE ON PAVEMENT

CONSTRUCTION SPECIFICATIONS

1. USE NOMINAL 2 INCH X 4 INCH LUMBER.
2. USE WOVEN SLIT FILM GEOTEXTILE, SUCH AS POLYPROPYLENE, NYLON, POLYESTER, ETHYLENE, OR APPROVED SIMILAR MATERIAL.
3. PROVIDE MANUFACTURER CERTIFICATION TO THE AUTHORIZED REPRESENTATIVE OF THE INSPECTION/ENFORCEMENT AUTHORITY SHOWING THAT THE GEOTEXTILE USED MEETS THE REQUIREMENTS.
4. SPACE UPRIGHT SUPPORTS NO MORE THAN 10 FEET APART.
5. PROVIDE A TWO FOOT OPENING BETWEEN EVERY SET OF SUPPORTS AND PLACE STONE IN THE OPENING OVER GEOTEXTILE.
6. KEEP SILT FENCE TAUT AND SECURELY STAPLE TO THE UPSLOPE SIDE OF UPRIGHT SUPPORTS. EXTEND GEOTEXTILE UNDER 2x4.
7. WHERE TWO SECTIONS OF GEOTEXTILE ADJOIN: OVERLAP, FOLD, AND STAPLE TO POST IN ACCORDANCE WITH THIS DETAIL. ATTACH LATHE.
8. PROVIDE A MASTIC SEAL BETWEEN PAVEMENT, GEOTEXTILE, AND 2x4 TO PREVENT SEDIMENT-LADEN WATER FROM ESCAPING BENEATH SILT FENCE INSTALLATION.
9. SECURE BOARDS TO PAVEMENT WITH 40D 5 INCH MINIMUM LENGTH NAILS.
10. REMOVE ACCUMULATED SEDIMENT AND DEBRIS WHEN BULGES DEVELOP IN SILT FENCE OR WHEN SEDIMENT REACHES 25% OF FENCE HEIGHT. REPLACE GEOTEXTILE IF TORN. MAINTAIN WATER TIGHT SEAL ALONG BOTTOM. REPLACE STONE IF DISPLACED.

Connecticut PORT AUTHORITY

PERMITTING SET
ISSUED: 10/23/2020
NOT TO BE USED FOR CONSTRUCTION

moffatt & nichol

EROSION AND SEDIMENT CONTROL NOTES - 3 OF 3

STATE PIER INFRASTRUCTURE IMPROVEMENTS
STATE PIER FACILITY - NEW LONDON, CT

SEAL

DWG INFO: Q:\BOS\Projects\10630 Detail Design State pier\500 CADD_Active_Permit\Set\10630-06.dwg, April 29, 2020 - 6:56 PM, DFRANZESE - (C) MOFFATT AND NICHOL

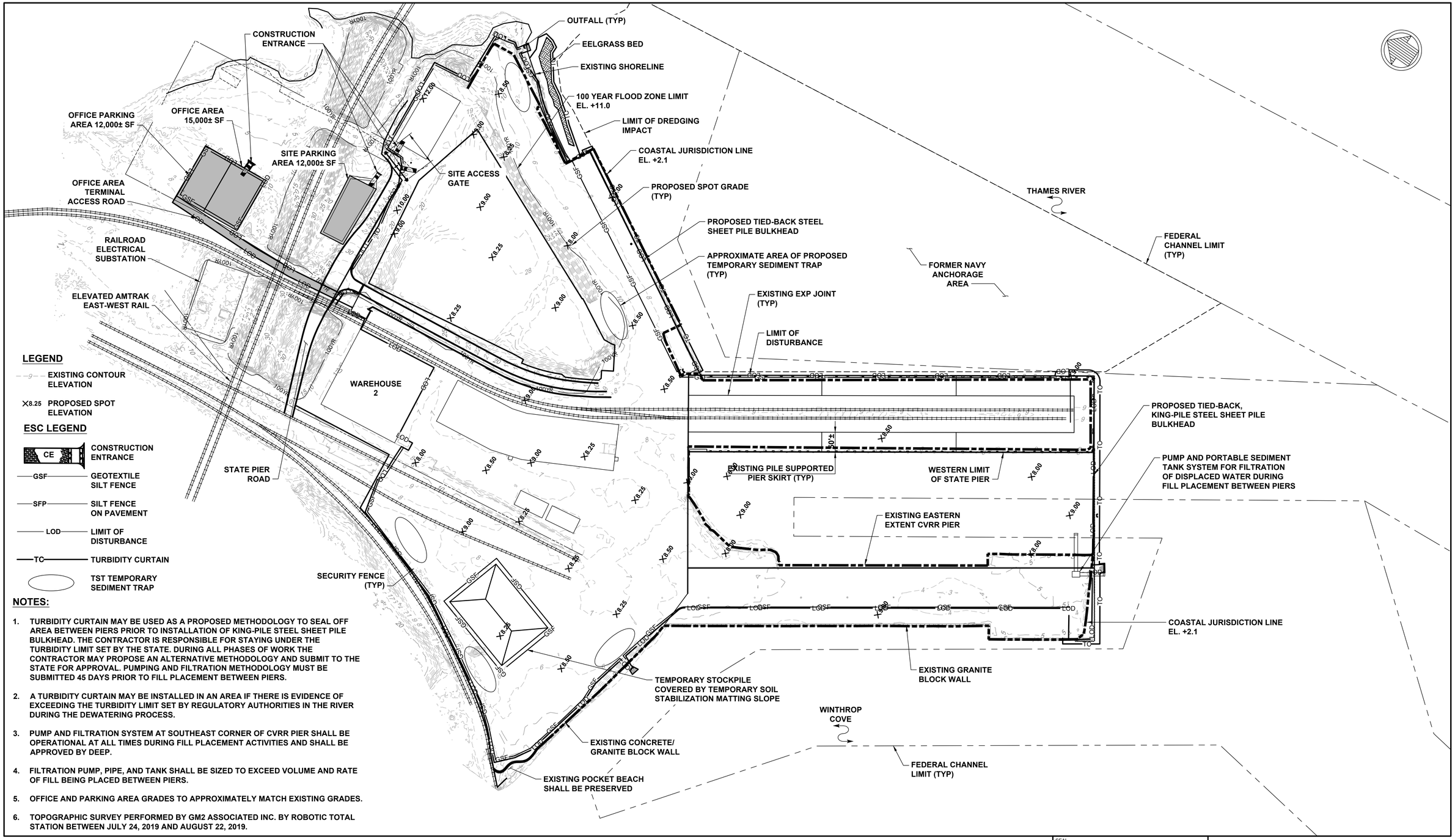

LEGEND

- EXISTING CONTOUR ELEVATION
- X8.25 PROPOSED SPOT ELEVATION

ESC LEGEND

- CE — CONSTRUCTION ENTRANCE
- GSF — GEOTEXTILE SILT FENCE
- SFP — SILT FENCE ON PAVEMENT
- LOD — LIMIT OF DISTURBANCE
- TC — TURBIDITY CURTAIN
- TST TEMPORARY SEDIMENT TRAP

NOTES:

1. TURBIDITY CURTAIN MAY BE USED AS A PROPOSED METHODOLOGY TO SEAL OFF AREA BETWEEN PIERS PRIOR TO INSTALLATION OF KING-PILE STEEL SHEET PILE BULKHEAD. THE CONTRACTOR IS RESPONSIBLE FOR STAYING UNDER THE TURBIDITY LIMIT SET BY THE STATE. DURING ALL PHASES OF WORK THE CONTRACTOR MAY PROPOSE AN ALTERNATIVE METHODOLOGY AND SUBMIT TO THE STATE FOR APPROVAL. PUMPING AND FILTRATION METHODOLOGY MUST BE SUBMITTED 45 DAYS PRIOR TO FILL PLACEMENT BETWEEN PIERS.
2. A TURBIDITY CURTAIN MAY BE INSTALLED IN AN AREA IF THERE IS EVIDENCE OF EXCEEDING THE TURBIDITY LIMIT SET BY REGULATORY AUTHORITIES IN THE RIVER DURING THE DEWATERING PROCESS.
3. PUMP AND FILTRATION SYSTEM AT SOUTHEAST CORNER OF CVRR PIER SHALL BE OPERATIONAL AT ALL TIMES DURING FILL PLACEMENT ACTIVITIES AND SHALL BE APPROVED BY DEEP.
4. FILTRATION PUMP, PIPE, AND TANK SHALL BE SIZED TO EXCEED VOLUME AND RATE OF FILL BEING PLACED BETWEEN PIERS.
5. OFFICE AND PARKING AREA GRADES TO APPROXIMATELY MATCH EXISTING GRADES.
6. TOPOGRAPHIC SURVEY PERFORMED BY GM2 ASSOCIATED INC. BY ROBOTIC TOTAL STATION BETWEEN JULY 24, 2019 AND AUGUST 22, 2019.

Connecticut PORT AUTHORITY

PERMITTING SET
ISSUED: 10/23/2020
NOT TO BE USED FOR CONSTRUCTION

moffatt & nichol

EROSION AND SEDIMENT CONTROL PLAN

STATE PIER INFRASTRUCTURE IMPROVEMENTS
STATE PIER FACILITY - NEW LONDON, CT

SEAL

120' 0' 120' 240'
SCALE: 1"=120'

DWG INFO: Q:\BOS\Projects\10630 Detail Design State pier\500 CAD\D_Active_Permit\Set\10630-07.dwg, May 4, 2020 - 3:03 PM, CMOYAGLESIAS, (C) MOFFATT AND NICHOL

STORAGE DOME

100 YEAR FLOOD ZONE LIMIT
EL. +11.0
(TYP)

THAMES RIVER

NORTHEAST
BULKHEAD

CONCRETE PAD

ADMIN. BUILDING

MOORING DOLPHIN
(TYP)

FEDERAL
CHANNEL LIMIT
(TYP)

FORMER NAVY
ANCHORAGE
AREA

TRAILERS

NORTHEAST ANNEX

HIGH MAST LIGHT
(TYP)

ELEVATED AMTRAK
EAST-WEST RAIL

WAREHOUSE
2

WAREHOUSE
1

ADMIRAL SHEAR STATE PIER (STATE PIER)

COASTAL
JURISDICTION LINE
EL. +2.1'

FEDERAL CHANNEL
LIMITS (TYP)

STATE
PIER ROAD

RIP RAP SLOPE
(TYP)

STEEL SHEETING
AND TIMBER PILES

STEEL FRAME
WAREHOUSE

RAIL LINE
(TYP)

CVRR PIER

NORTHWEST
BULKHEAD

HIGH MAST LIGHT
(TYP)

FEDERAL CHANNEL LIMIT
(TYP)

NOTES:

1. ELEVATIONS SHOWN ARE IN NAVD88 DATUM.
2. HYDROGRAPHIC SURVEY PERFORMED STEELE ASSOCIATES MARINE CONSULTANTS, LLC. ON AUGUST 15, 2019.
3. TOPOGRAPHIC SURVEY PERFORMED BY GM2 ASSOCIATED INC. BY ROBOTIC TOTAL STATION BETWEEN JULY 24, 2019 AND AUGUST 22, 2019.

Connecticut PORT AUTHORITY

PERMITTING SET
ISSUED: 10/23/2020
NOT TO BE USED FOR CONSTRUCTION

moffatt & nichol

EXISTING TOPOGRAPHIC AND HYDROGRAPHIC PLAN

STATE PIER INFRASTRUCTURE IMPROVEMENTS
STATE PIER FACILITY - NEW LONDON, CT

SEAL

120' 0' 120' 240'
SCALE: 1"=120'

DWG INFO: Q:\BOS\Projects\10630 Detail Design State pier\500 CAD\D_Active_PermitSet\10630-08.dwg, May 1, 2020 - 1:36 PM, CMOYA\GLESIAS, (C) MOFFATT AND NICHOL

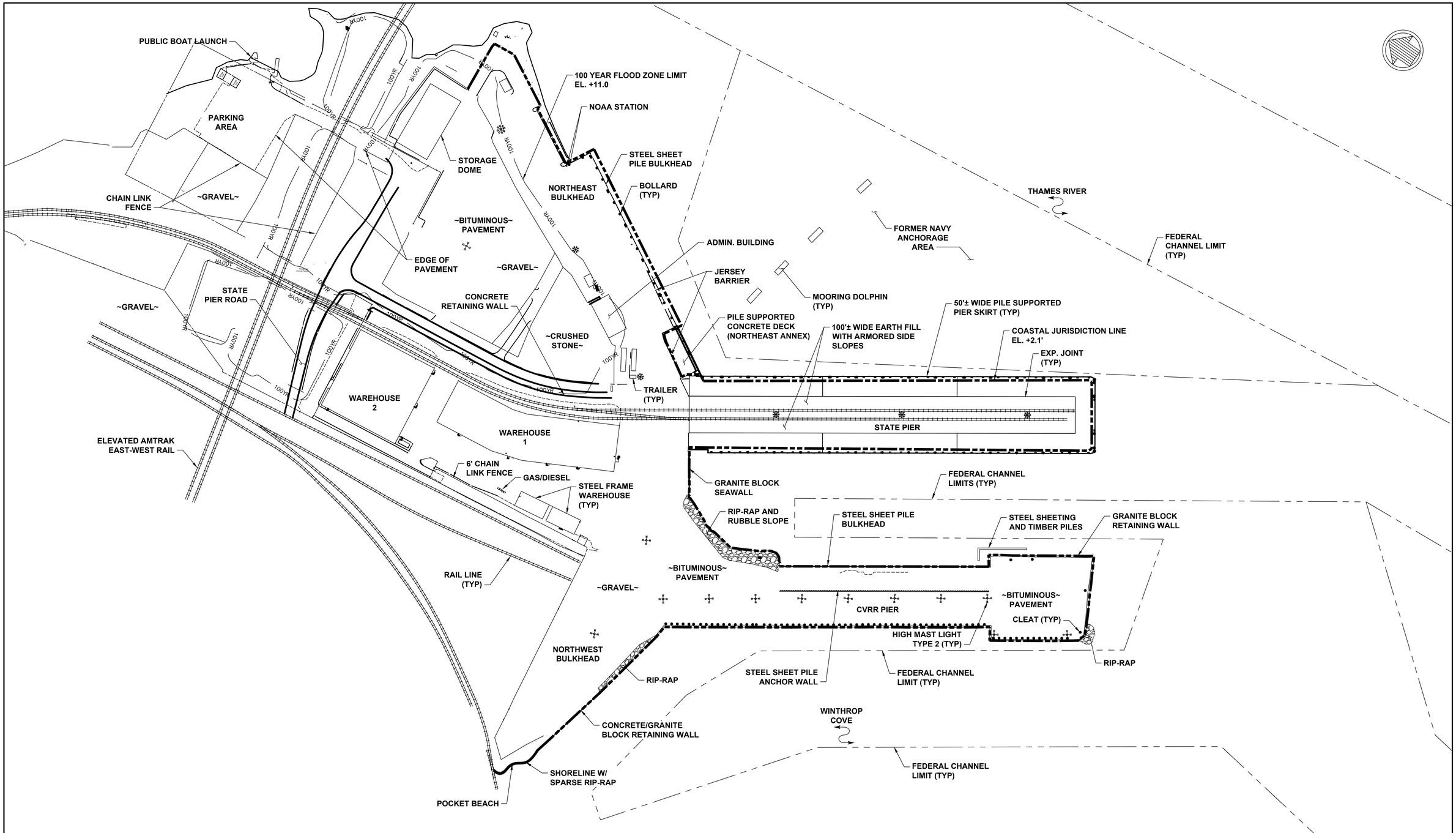

Connecticut Port Authority

PERMITTING SET
ISSUED: 10/23/2020
NOT TO BE USED FOR CONSTRUCTION

moffatt & nichol

EXISTING CONDITIONS PLAN

STATE PIER INFRASTRUCTURE IMPROVEMENTS
STATE PIER FACILITY - NEW LONDON, CT

SEAL

120' 0' 120' 240'
SCALE: 1"=120'

DWG INFO: Q:\BOS\Projects\10630 Detail Design State pier\500 CAD\D_Active_PermitSet\10630-09.dwg, April 29, 2020 - 2:32 PM, CMOYAGLESIAS, (C) MOFFATT AND NICHOL

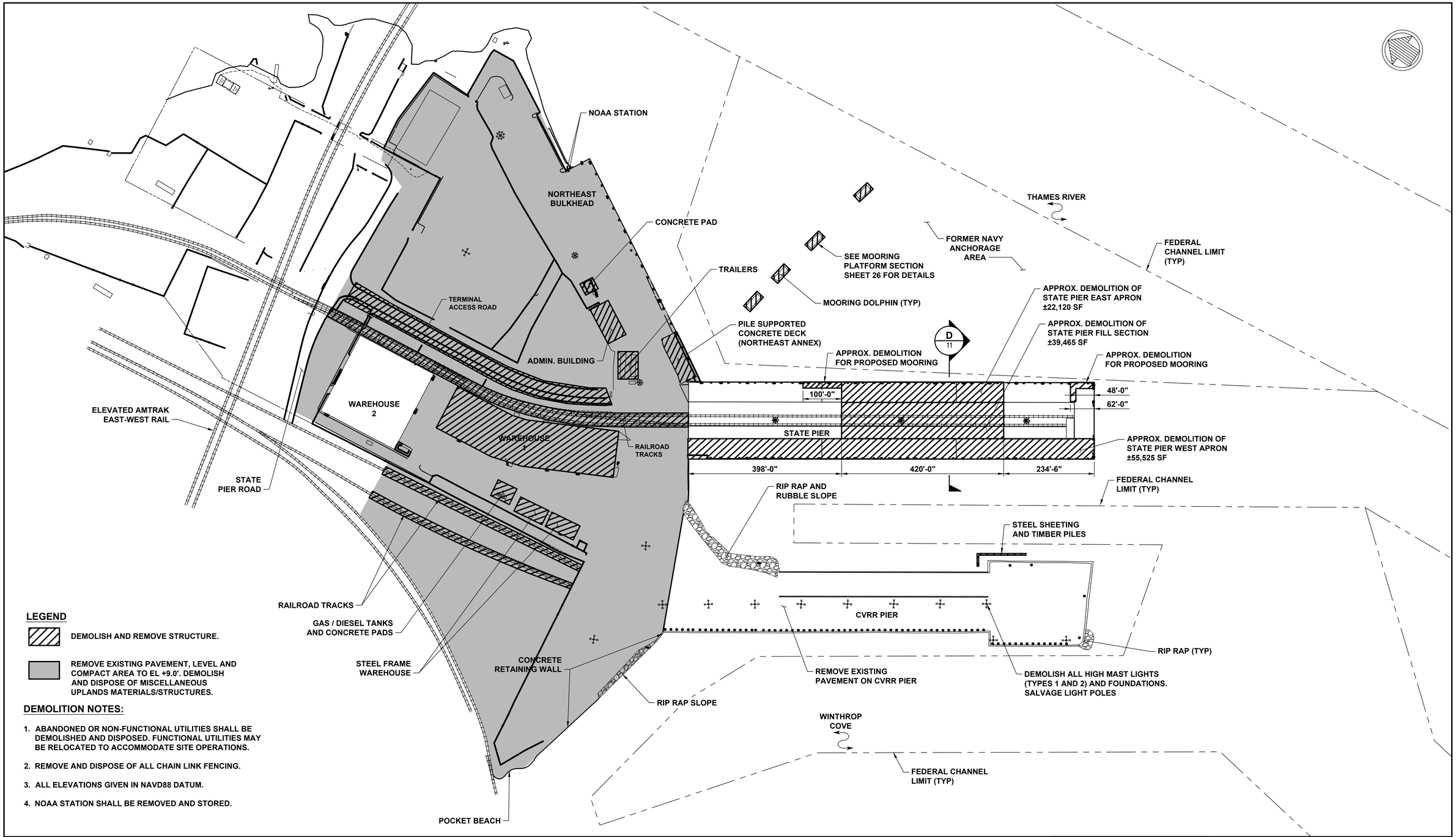

LEGEND

DEMOLISH AND REMOVE STRUCTURE.

REMOVE EXISTING PAVEMENT, LEVEL AND COMPACT AREA TO EL +9.0'. DEMOLISH AND DISPOSE OF MISCELLANEOUS UPLANDS MATERIALS/STRUCTURES.

DEMOLITION NOTES:

1. ABANDONED OR NON-FUNCTIONAL UTILITIES SHALL BE DEMOLISHED AND DISPOSED. FUNCTIONAL UTILITIES MAY BE RELOCATED TO ACCOMMODATE SITE OPERATIONS.
2. REMOVE AND DISPOSE OF ALL CHAIN LINK FENCING.
3. ALL ELEVATIONS GIVEN IN NAVD88 DATUM.
4. NOAA STATION SHALL BE REMOVED AND STORED.

Connecticut Port Authority

PERMITTING SET
ISSUED: 10/23/2020
NOT TO BE USED FOR CONSTRUCTION

moffatt & nichol

DEMOLITION AND REMOVAL PLAN

STATE PIER INFRASTRUCTURE IMPROVEMENTS
STATE PIER FACILITY - NEW LONDON, CT

SEAL

120' 0' 120' 240'
SCALE: 1"=120'

DWG INFO: Q:\BOS\Projects\10630 Detail Design State pier\500 CADD_Active_Permit\Set\10630-10.dwg, October 15, 2020 - 6:17 PM, CMOYA\GLESIAS, (C) MOFFATT AND NICHOL

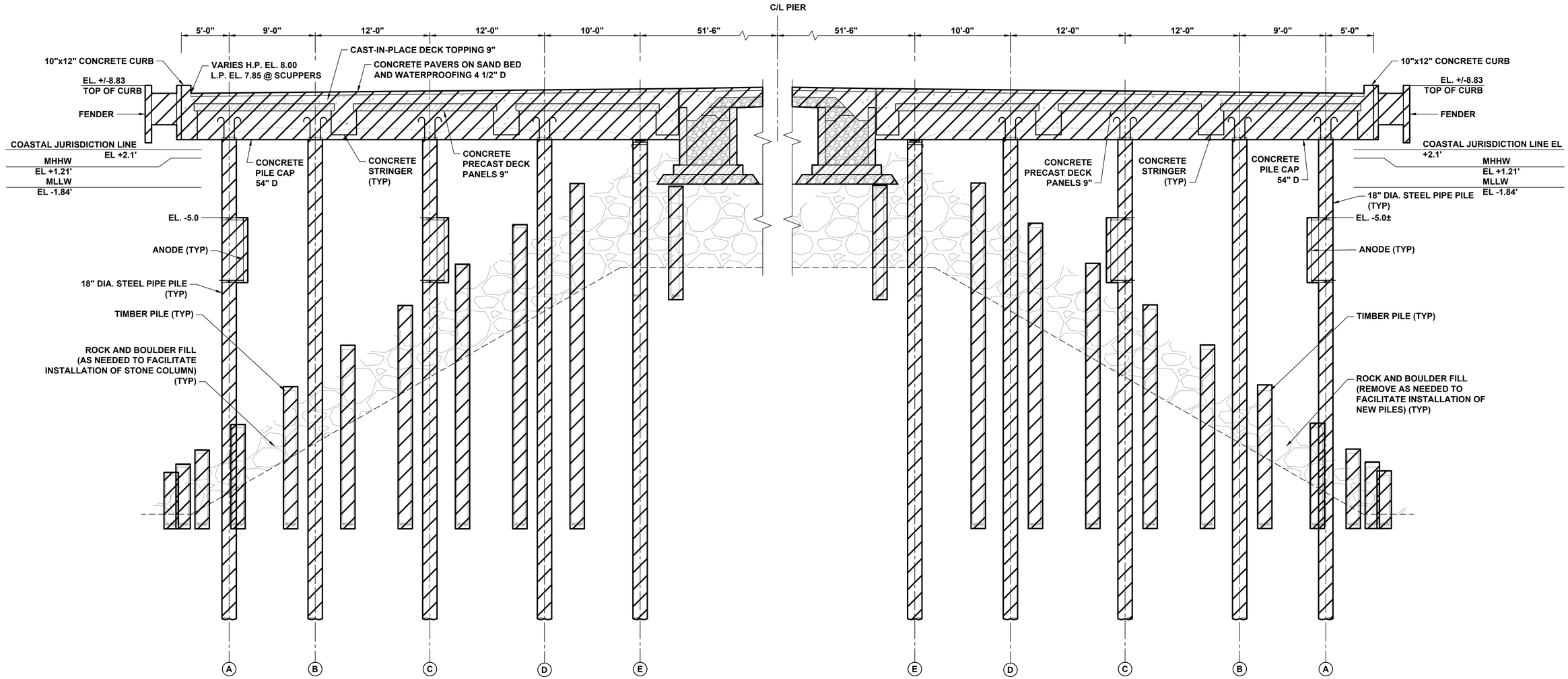

D/10 SECTION
SCALE: 3/16" = 1'-0"

NOTE:

1. ALL BOLLARDS AND FENDER SYSTEMS SHALL BE SALVAGED AND STORED AS DIRECTED BY OWNER.
2. STEEL PIPE AND TIMBER PILES ARE TO BE REMOVED VIA VIBRO-HAMMER

LEGEND

DEMOLISH AND REMOVE STRUCTURE

Connecticut Port Authority

PERMITTING SET
ISSUED: 10/23/2020
NOT TO BE USED FOR CONSTRUCTION

moffatt & nichol

EXISTING STATE PIER PILE SUPPORTED PLATFORM

STATE PIER INFRASTRUCTURE IMPROVEMENTS
STATE PIER FACILITY - NEW LONDON, CT

SEAL

8'-0" 0'-0" 4'-0" 8'-0"
SCALE: 3/16"=1'-0"

DWG INFO. Q:\BOS\Projects\10630 Detail Design States pier\500 CAD_Active_PermitSet\10630-11.dwg, May 4, 2020 - 7:24 PM, CMOYAGLESIAS, (C) MOFFATT AND NICHOL

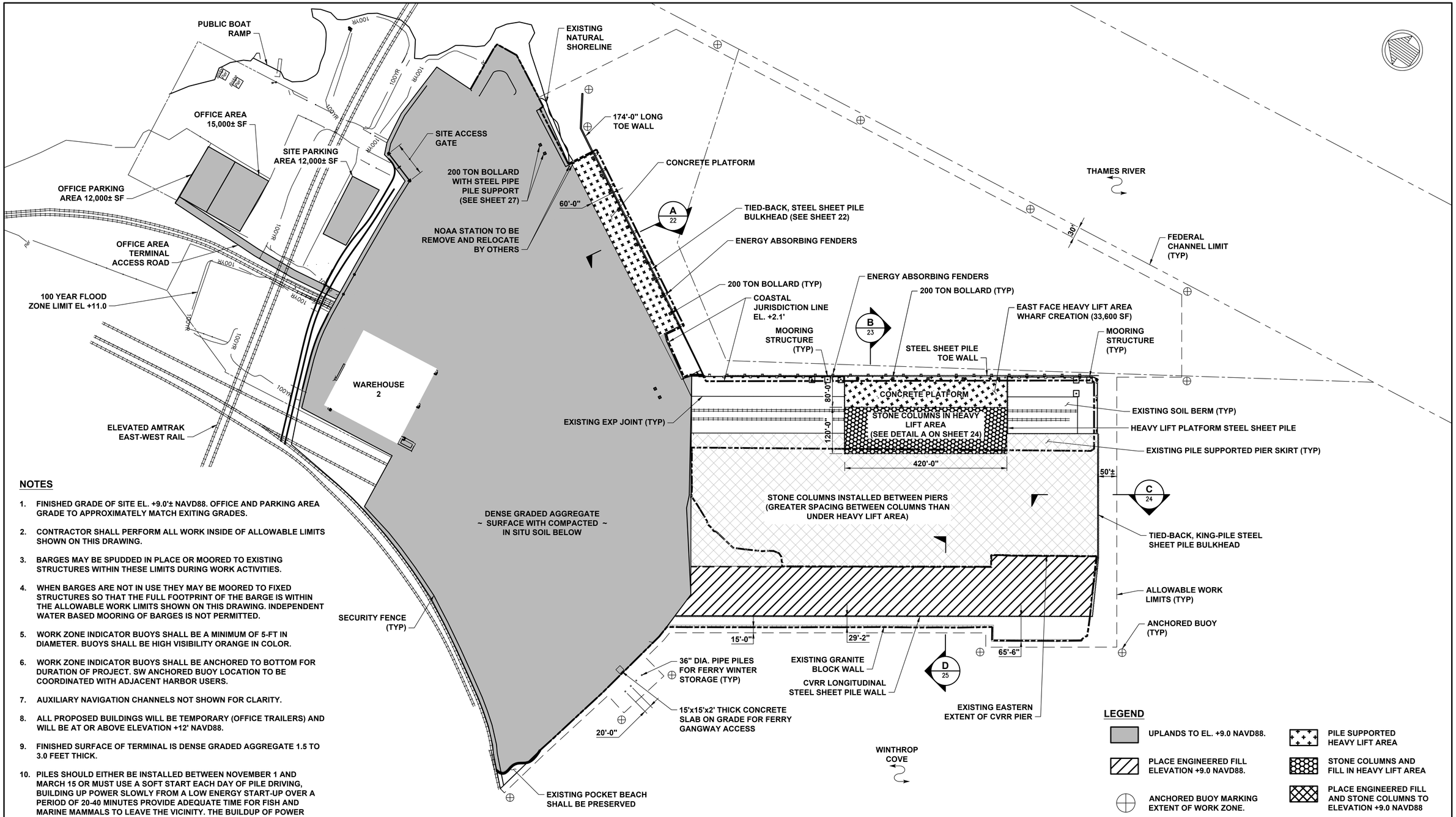

NOTES

1. FINISHED GRADE OF SITE EL. +9.0'± NAVD88. OFFICE AND PARKING AREA GRADE TO APPROXIMATELY MATCH EXITING GRADES.
2. CONTRACTOR SHALL PERFORM ALL WORK INSIDE OF ALLOWABLE LIMITS SHOWN ON THIS DRAWING.
3. BARGES MAY BE SPUDDED IN PLACE OR MOORED TO EXISTING STRUCTURES WITHIN THESE LIMITS DURING WORK ACTIVITIES.
4. WHEN BARGES ARE NOT IN USE THEY MAY BE MOORED TO FIXED STRUCTURES SO THAT THE FULL FOOTPRINT OF THE BARGE IS WITHIN THE ALLOWABLE WORK LIMITS SHOWN ON THIS DRAWING. INDEPENDENT WATER BASED MOORING OF BARGES IS NOT PERMITTED.
5. WORK ZONE INDICATOR BUOYS SHALL BE A MINIMUM OF 5-FT IN DIAMETER. BUOYS SHALL BE HIGH VISIBILITY ORANGE IN COLOR.
6. WORK ZONE INDICATOR BUOYS SHALL BE ANCHORED TO BOTTOM FOR DURATION OF PROJECT. SW ANCHORED BUOY LOCATION TO BE COORDINATED WITH ADJACENT HARBOR USERS.
7. AUXILIARY NAVIGATION CHANNELS NOT SHOWN FOR CLARITY.
8. ALL PROPOSED BUILDINGS WILL BE TEMPORARY (OFFICE TRAILERS) AND WILL BE AT OR ABOVE ELEVATION +12' NAVD88.
9. FINISHED SURFACE OF TERMINAL IS DENSE GRADED AGGREGATE 1.5 TO 3.0 FEET THICK.
10. PILES SHOULD EITHER BE INSTALLED BETWEEN NOVEMBER 1 AND MARCH 15 OR MUST USE A SOFT START EACH DAY OF PILE DRIVING, BUILDING UP POWER SLOWLY FROM A LOW ENERGY START-UP OVER A PERIOD OF 20-40 MINUTES PROVIDE ADEQUATE TIME FOR FISH AND MARINE MAMMALS TO LEAVE THE VICINITY. THE BUILDUP OF POWER SHOULD OCCUR IN UNIFORM STAGES TO PROVIDE A CONSTANT INCREASE IN OUTPUT.

Connecticut PORT AUTHORITY

PERMITTING SET
ISSUED: 10/23/2020
NOT TO BE USED FOR CONSTRUCTION

moffatt & nichol

PROPOSED PLAN

STATE PIER INFRASTRUCTURE IMPROVEMENTS
STATE PIER FACILITY - NEW LONDON, CT

SEAL

120' 0' 120' 240'
SCALE: 1"=120'

DWG INFO: Q:\BOS\Projects\10630 Detail Design State pier\500 CADD_Active_Permit\Set\10630-12.dwg, October 20, 2020 - 2:46 PM, MMIRANDA, (C) MOFFATT AND NICHOL

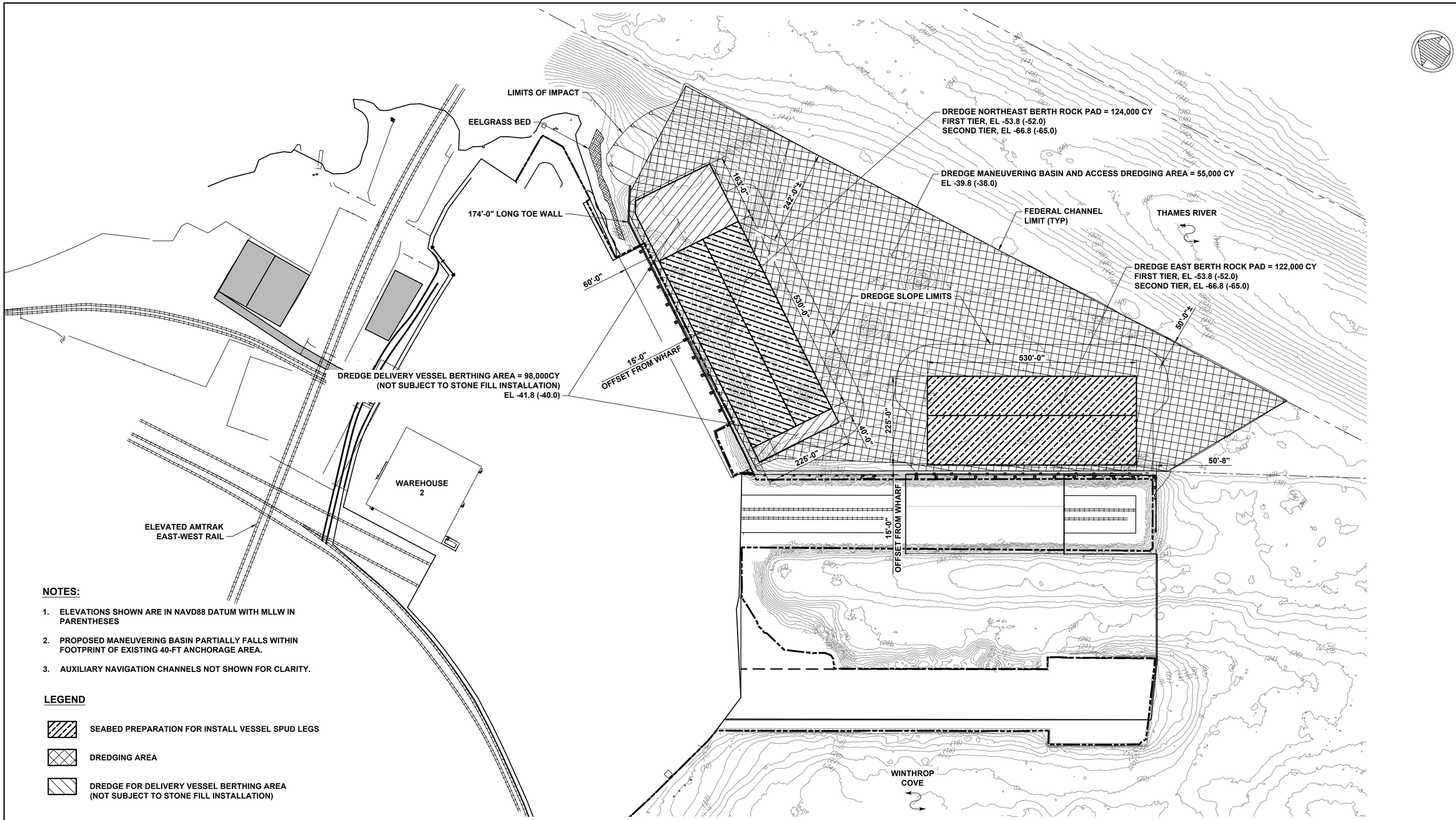

NOTES:

1. ELEVATIONS SHOWN ARE IN NAVD88 DATUM WITH MLLW IN PARENTHESES
2. PROPOSED MANEUVERING BASIN PARTIALLY FALLS WITHIN FOOTPRINT OF EXISTING 40-FT ANCHORAGE AREA.
3. AUXILIARY NAVIGATION CHANNELS NOT SHOWN FOR CLARITY.

LEGEND

- SEABED PREPARATION FOR INSTALL VESSEL SPUD LEGS
- DREDGING AREA
- DREDGE FOR DELIVERY VESSEL BERTHING AREA (NOT SUBJECT TO STONE FILL INSTALLATION)

Connecticut Port Authority

PERMITTING SET
ISSUED: 10/23/2020
NOT TO BE USED FOR CONSTRUCTION

moffatt & nichol

PROPOSED DREDGING PLAN

STATE PIER INFRASTRUCTURE IMPROVEMENTS
STATE PIER FACILITY - NEW LONDON, CT

SEAL

120' 0' 120' 240'
SCALE: 1"=120'

DWG INFO: Q:\BOS\Projects\10630 Detail Design State pier\500 CADD_Active_Permit\Set\10630-13.dwg, October 20, 2020 - 2:45 PM, MMIRANDA, (C) MOFFATT AND NICHOL

SITE ACCESS GATE

OUTFALL 3 - 60" DIA. (SEE DETAIL A SHEET 30)

EXISTING NATURAL SHORELINE

OFFICE AREA 15,000± SF

OFFICE PARKING AREA 12,000± SF

SITE PARKING AREA 12,000± SF

HEAVY LIFT AREA

THAMES RIVER

TRENCH DRAIN (TYP) (SEE DETAIL B ON SHEET 28)

FEDERAL CHANNEL LIMIT (TYP)

FORMER NAVY ANCHORAGE AREA

OFFICE AREA TERMINAL ACCESS ROAD

COASTAL JURISDICTION LINE EL. +2.1'

OUTFALL 2 - 54" DIA. (SEE DETAIL B SHEET 30)

EXISTING EXP JOINT (TYP)

EXISTING PILE SUPPORTED PIER SKIRT (TYP)

WAREHOUSE 2

HEAVY LIFT AREA

COASTAL JURISDICTION LINE EL. +2.1'

ELEVATED AMTRAK EAST-WEST RAIL

DENSE GRADED AGGREGATE ~ SURFACE WITH COMPACTED ~ IN SITU SOIL BELOW

OUTFALL 4 - 60" DIA. (SEE DETAIL B SHEET 30)

SECURITY FENCE (TYP)

SEE DETAIL A ON SHEET 28

29'-2"

65'-6"

EXISTING GRANITE BLOCK WALL

OUTFALL 1 - 60" DIA. (SEE DETAIL A SHEET 30)

SEE DETAILS ON SHEET 29

WINTHROP COVE

EXISTING CONCRETE/ GRANITE BLOCK WALL

FEDERAL CHANNEL LIMIT (TYP)

EXISTING POCKET BEACH SHALL BE PRESERVED

NOTES:

1. STORM WATER INFRASTRUCTURE IS NOT TO SCALE.
2. STORM WATER TREATMENT SYSTEM WILL COMPLY WITH CT STATE REQUIREMENTS.
3. OFFICE AND PARKING AREA GRADES TO APPROXIMATELY MATCH EXISTING GRADES. DRAINAGE SHALL BE VIA SURFACE RUNOFF WITH NO PROPOSED STRUCTURES.
4. ALL OUTFALLS WILL RECEIVE A STORM DRAIN PIPE CHECK VALVE (RED VALVE TIDEFLEX SERIES TF-1) SEE SHEET 31 FOR DETAILS.
5. SEE THE STORMWATER POLLUTION CONTROL PLAN (SWPCP) DATED 5 DECEMBER 2019 AND APPROVED BY CT DEEP ON 7 APRIL 2020 FOR ADDITIONAL STORMWATER AND EROSION AND SEDIMENT CONTROL DETAILS.

LEGEND

- TRENCH DRAIN
- MANHOLE
- GRATE INLET
- SWT — STORM WATER TREATMENT (80% SOLID REMOVAL)
- OUTFALL
- SD — STORMWATER DRAIN LINE

DWG INFO: Q:\BOS\Projects\10630 Detail Design State pier\500 CADD_Active_PermitSet\10630-14.dwg, October 29, 2020 - 6:08 PM, PVOELKER, (C) MOFFATT AND NICHOL

Connecticut PORT AUTHORITY

PERMITTING SET
ISSUED: 10/23/2020
NOT TO BE USED FOR CONSTRUCTION

moffatt & nichol

GRADING AND DRAINAGE PLAN

STATE PIER INFRASTRUCTURE IMPROVEMENTS
STATE PIER FACILITY - NEW LONDON, CT

SEAL

120' 0' 120' 240'
SCALE: 1"=120'

EXISTING NATURAL SHORELINE

INSTALLATION OF OFFICE PARKING AREA 12,000± SF

INSTALLATION OF OFFICE AREA 15,000± SF

INSTALLATION SITE PARKING AREA 12,000± SF

INSTALLATION OFFICE AREA TERMINAL ACCESS ROAD

SITE ACCESS GATE

200 TON BOLLARD WITH STEEL PIPE PILE SUPPORT (SEE SHEET 2?)

160'-0" LONG TOE WALL (PHASE 2)

HEAVY LIFT AREA

LIMIT OF FORMER NAVY ANCHORAGE AREA

THAMES RIVER

NOAA STATION

DEMOLITION OF MOORING DOLPHINS

INSTALLATION OF TIED-BACK, STEEL SHEET PILE BULKHEAD (PHASE 1)

FEDERAL CHANNEL LIMIT (TYP)

TRANSPORT AND INSTALL UPLAND EARTH MOUND TO AREA BETWEEN STATE AND CVRR PIER (PHASE 2 WORK)

LIMITS OF DREDGE FOR MANEUVERING BASIN

INSTALLATION OF 200 TON BOLLARD (TYP)

STEEL SHEET PILE TOE WALL CUT OFF 3' ABOVE MUDLINE

MOORING DOLPHIN (TYP)

HEAVY LIFT AREA

WAREHOUSE 2

+50'

INSTALLATION OF ENERGY ABSORBING FENDERS (TYP)

ELEVATED AMTRAK EAST-WEST RAIL

REMOVE RAILROAD IN UPLANDS AREA FROM NORTHERN EXTENT OF STATE PIER TO STATE PIER ROAD

420'

235'

WESTERN LIMIT OF STATE PIER

DEMOLISH STRUCTURE AND REMOVE RAILROAD IN HEAVY LIFT AREA

INSTALLATION OF TIED-BACK, KING-PILE STEEL SHEET PILE BULKHEAD

SECURITY FENCE (TYP)

FILL PLACEMENT AND COMPACTION

INSTALL DENSE GRADED AGGREGATE ~ SURFACE WITH COMPACTED ~ IN SITU SOIL BELOW

29'-2"

CVRR LONGITUDINAL STEEL SHEET PILE WALL

65'-6"

INSTALL FOUR (4) 36" DIA. PIPE PILES FOR FERRY WINTER STORAGE (TYP)

EXISTING GRANITE BLOCK WALL

INSTALL FILL AND COMPACT TOP OF CVRR PIER

INSTALL 15'x15'x2' THICK CONCRETE SLAB ON GRADE FOR FERRY GANGWAY ACCESS

WINTHROP COVE

EXISTING EASTERN EXTENT CVRR PIER

FERRY AT BERTH FOR WINTER STORAGE (64.8-FT x 30-FT)

EXISTING CONCRETE/ GRANITE BLOCK WALL

FEDERAL CHANNEL LIMIT (TYP)

EXISTING POCKET BEACH SHALL BE PRESERVED

NOTES:

1. UPLANDS STORMWATER INFRASTRUCTURE WILL BE INSTALLED DURING PHASE 1.
2. STORMWATER INFRASTRUCTURE BETWEEN THE PIERS WILL BE INSTALLED IN PHASE 2.
3. COP/CT GP APPROVED WORK MAY PROCEED UNDER EXISTING APPROVALS.

LEGEND

PHASE 1

PHASE 2

DWG INFO. Q:\BOS\Projects\10630 Detail Design State pier\500 CADD_Active_PermitSet\10630-15.dwg, May 4, 2020 - 8:03 PM, CMOYAGLESIAS, (C) MOFFATT AND NICHOL

Connecticut Port Authority

PERMITTING SET
ISSUED: 10/23/2020
NOT TO BE USED FOR CONSTRUCTION

moffatt & nichol

PHASING PLAN

STATE PIER INFRASTRUCTURE IMPROVEMENTS
STATE PIER FACILITY - NEW LONDON, CT

SEAL

120' 0' 120' 240'

SCALE: 1"=120'

EXISTING NATURAL SHORELINE

INSTALLATION OF TIED-BACK, STEEL SHEET PILE BULKHEAD AND ASSOCIATED PILE SUPPORTED PLATFORM (SEE SHEET 19)

200 TON BOLLARD WITH STEEL PIPE PILE SUPPORT (SEE SHEET 27)

NOAA STATION TO BE REMOVE AND RELOCATE BY OTHERS

LIMIT OF FORMER NAVY ANCHORAGE AREA

DEMOLITION OF MOORING DOLPHINS

THAMES RIVER

FEDERAL CHANNEL LIMIT (TYP)

INSTALLATION OF ENERGY ABSORBING FENDERS (TYP)

DEMOLITION OF NORTHEAST ANNEX

WAREHOUSE 2

200 TON BOLLARD (TYP)

INSTALLATION OF TIED BACK STEEL SHEET PILE BULKHEAD

ELEVATED AMTRAK EAST-WEST RAIL

COASTAL JURISDICTION LINE EL. +2.1'

WESTERN LIMIT OF STATE PIER

DENSE GRADED AGGREGATE ~ SURFACE WITH COMPACTED ~ IN SITU SOIL BELOW

EXISTING EASTERN EXTENT CVRR PIER

29'-2"

65'-6"

EXISTING GRANITE BLOCK WALL

WINTHROP COVE

EXISTING CONCRETE/ GRANITE BLOCK WALL

FEDERAL CHANNEL LIMIT (TYP)

EXISTING POCKET BEACH SHALL BE PRESERVED

WORK COVERED UNDER CERTIFICATE OF PERMISSION #201910828-COP AND USACE CT GENERAL PERMIT AUTHORIZATION (NAE-2018-02161)

1. DEMOLITION OF NORTHEAST ANNEX.
2. INSTALLATION OF OVERSHEETING AT NORTHEAST BULKHEAD AND ANNEX.
3. DEMOLITION OF MOORING DOLPHINS.

LEGEND

WORK COVERED UNDER CERTIFICATE OF PERMISSION

Connecticut PORT AUTHORITY

PERMITTING SET
ISSUED: 10/23/2020
NOT TO BE USED FOR CONSTRUCTION

moffatt & nichol

WORK COVERED UNDER CERTIFICATE OF PERMISSION AND CT GP PERMITS

STATE PIER INFRASTRUCTURE IMPROVEMENTS
STATE PIER FACILITY - NEW LONDON, CT

SEAL

120' 0' 120' 240'
SCALE: 1"=120'

DWG INFO: Q:\BOS\Projects\10630 Detail Design State pier\500 CAD\D_Active_PermitSet\10630-16.dwg, May 4, 2020 - 8:02 PM, CMOYAGLESIAS, (C) MOFFATT AND NICHOL

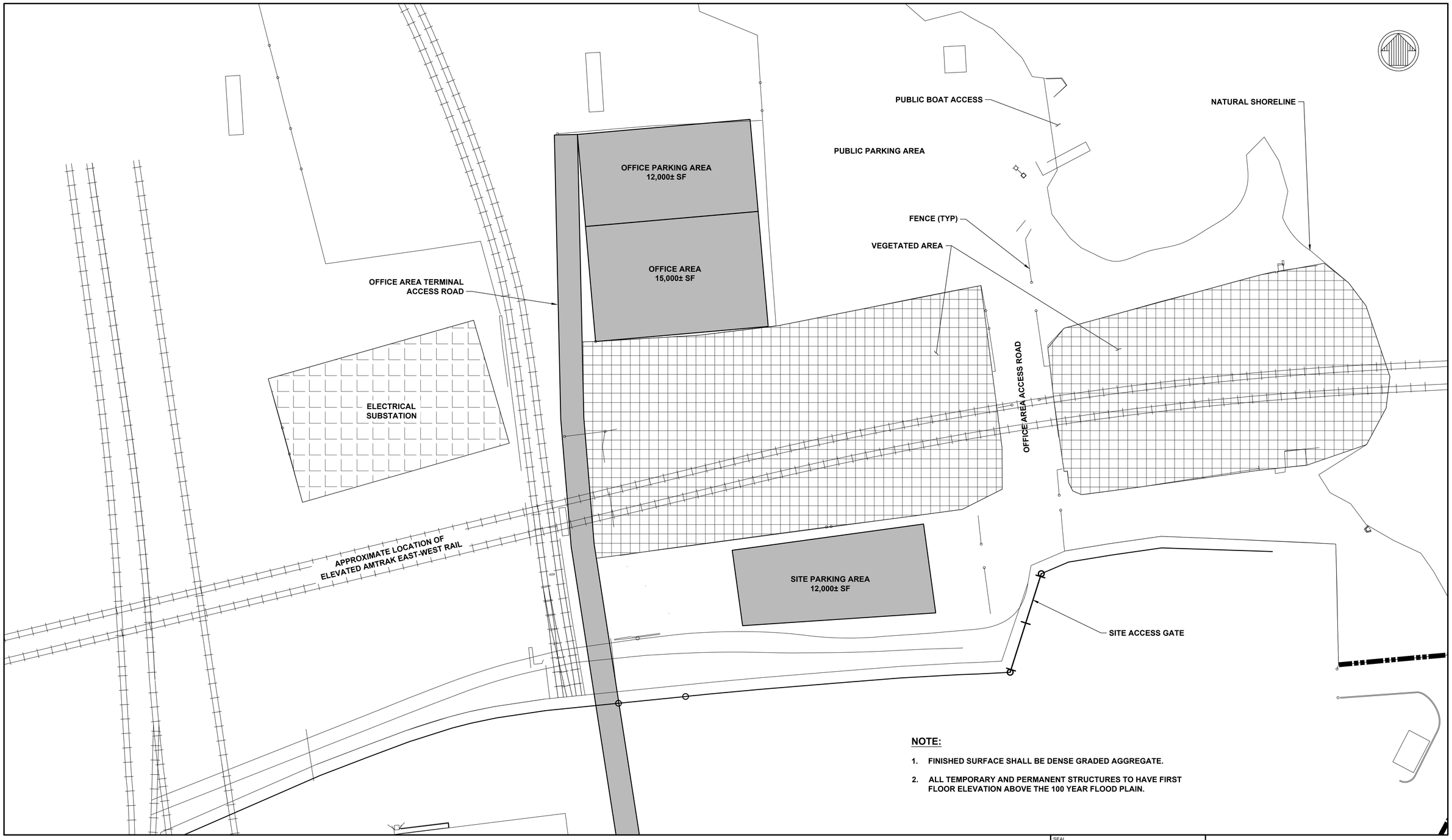

NOTE:

1. FINISHED SURFACE SHALL BE DENSE GRADED AGGREGATE.
2. ALL TEMPORARY AND PERMANENT STRUCTURES TO HAVE FIRST FLOOR ELEVATION ABOVE THE 100 YEAR FLOOD PLAIN.

Connecticut PORT AUTHORITY

PERMITTING SET
ISSUED: 10/23/2020
NOT TO BE USED FOR CONSTRUCTION

moffatt & nichol

OFFICE AND PARKING PLAN

STATE PIER INFRASTRUCTURE IMPROVEMENTS
STATE PIER FACILITY - NEW LONDON, CT

SEAL

40' 0' 40' 80'
SCALE: 1"=40'

DWG INFO: Q:\BOS\Projects\10630 Detail Design State pier\500 CADD_Active_PermitSet\10630-17.dwg, May 4, 2020 - 1:08 PM, DFRANZESE, (C) MOFFATT AND NICHOL

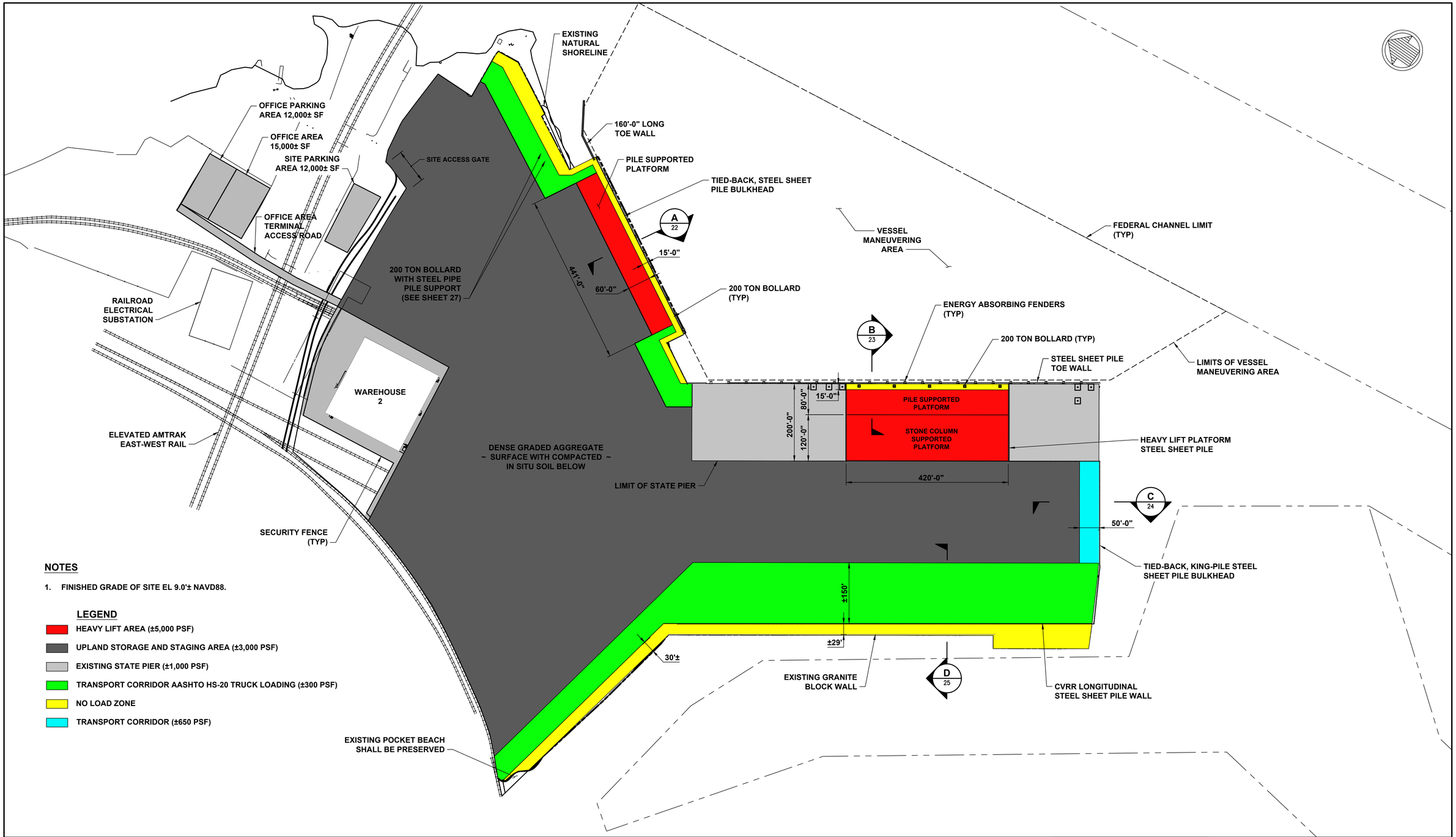

NOTES

1. FINISHED GRADE OF SITE EL 9.0'± NAVD88.

LEGEND

- HEAVY LIFT AREA (±5,000 PSF)
- UPLAND STORAGE AND STAGING AREA (±3,000 PSF)
- EXISTING STATE PIER (±1,000 PSF)
- TRANSPORT CORRIDOR AASHTO HS-20 TRUCK LOADING (±300 PSF)
- NO LOAD ZONE
- TRANSPORT CORRIDOR (±650 PSF)

Connecticut PORT AUTHORITY

PERMITTING SET
ISSUED: 10/23/2020
NOT TO BE USED FOR CONSTRUCTION

moffatt & nichol

FACILITY USE AND LOGISTICS PLAN

STATE PIER INFRASTRUCTURE IMPROVEMENTS
STATE PIER FACILITY - NEW LONDON, CT

SEAL

120' 0' 120' 240'
SCALE: 1"=120'

DWG INFO: Q:\BOS\Projects\10630 Detail Design State pier\500 CADD_Active_Permit\Set\10630-18.dwg; June 19, 2020 - 10:31 AM; MMIRANDA; (C) MOFFATT AND NICHOL

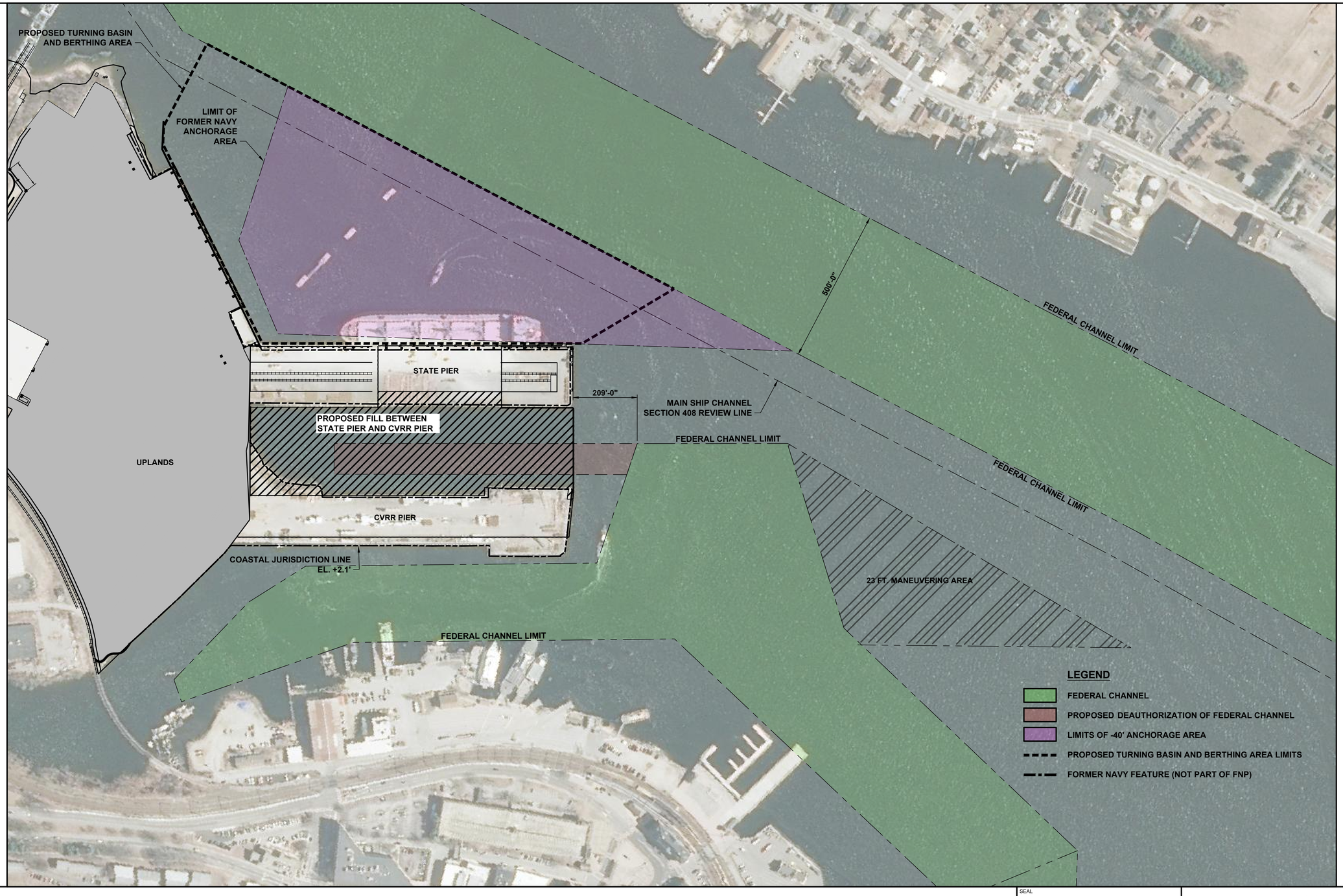

Connecticut Port Authority

PERMITTING SET
ISSUED: 10/23/2020
NOT TO BE USED FOR CONSTRUCTION

moffatt & nichol

FEDERAL CHANNEL MAP PLAN

STATE PIER INFRASTRUCTURE IMPROVEMENTS
STATE PIER FACILITY - NEW LONDON, CT

SEAL

150' 0' 150' 300'
SCALE: 1"=150'

DWG INFO: Q:\BOS\Projects\10630 Detail Design State pier\500 CADD_Active_PermitSet\10630-19.dwg, May 1, 2020 - 5:21 PM, MMIRANDA, (C) MOFFATT AND NICHOL

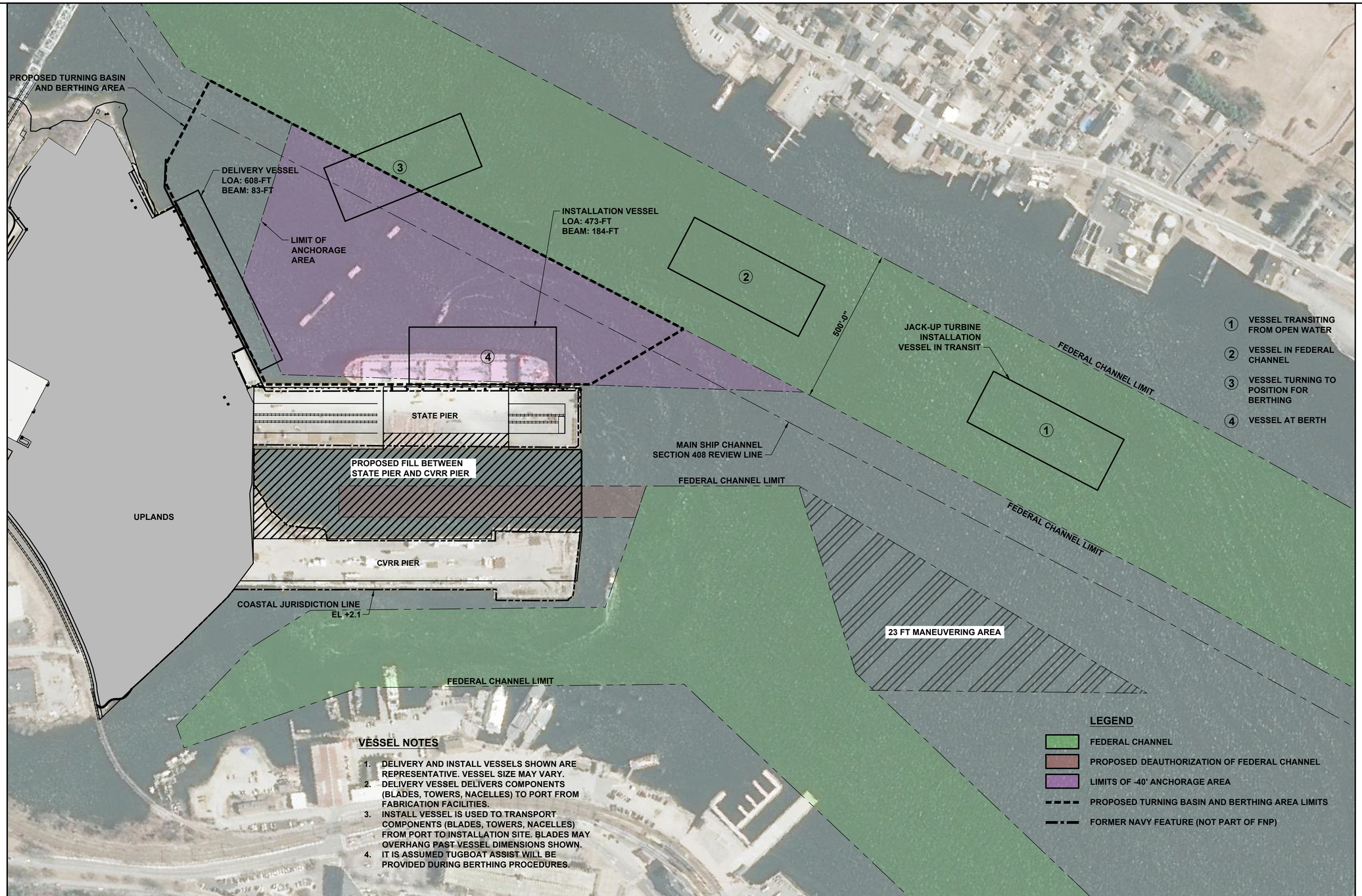

VESSEL NOTES

1. DELIVERY AND INSTALL VESSELS SHOWN ARE REPRESENTATIVE. VESSEL SIZE MAY VARY.
2. DELIVERY VESSEL DELIVERS COMPONENTS (BLADES, TOWERS, NACELLES) TO PORT FROM FABRICATION FACILITIES.
3. INSTALL VESSEL IS USED TO TRANSPORT COMPONENTS (BLADES, TOWERS, NACELLES) FROM PORT TO INSTALLATION SITE. BLADES MAY OVERHANG PAST VESSEL DIMENSIONS SHOWN.
4. IT IS ASSUMED TUGBOAT ASSIST WILL BE PROVIDED DURING BERTHING PROCEDURES.

Connecticut PORT AUTHORITY

PERMITTING SET
ISSUED: 10/23/2020
NOT TO BE USED FOR CONSTRUCTION

moffatt & nichol

INSTALL VESSEL NAVIGATION PLAN (INBOUND)

STATE PIER INFRASTRUCTURE IMPROVEMENTS
STATE PIER FACILITY - NEW LONDON, CT

SEAL

150' 0' 150' 300'
SCALE: 1"=150'

DWG INFO: Q:\BOS\Projects\10630 Detail Design State pier\500 CAD\3_Active_PermitSet\10630-20.dwg, May 1, 2020 - 4:10 PM, MMIRANDA, (C) MOFFATT AND NICHOL

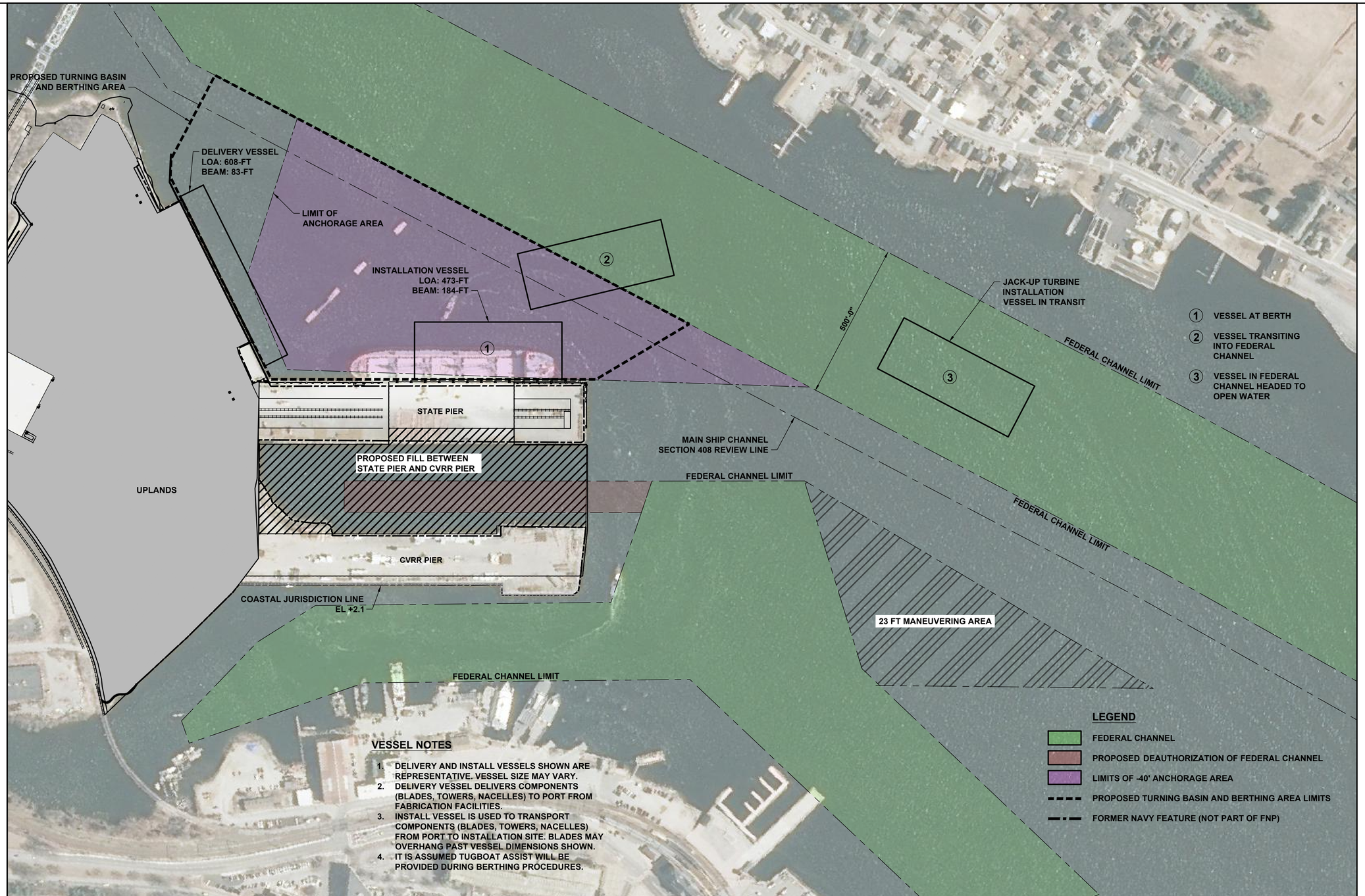

VESSEL NOTES

1. DELIVERY AND INSTALL VESSELS SHOWN ARE REPRESENTATIVE. VESSEL SIZE MAY VARY.
2. DELIVERY VESSEL DELIVERS COMPONENTS (BLADES, TOWERS, NACELLES) TO PORT FROM FABRICATION FACILITIES.
3. INSTALL VESSEL IS USED TO TRANSPORT COMPONENTS (BLADES, TOWERS, NACELLES) FROM PORT TO INSTALLATION SITE. BLADES MAY OVERHANG PAST VESSEL DIMENSIONS SHOWN.
4. IT IS ASSUMED TUGBOAT ASSIST WILL BE PROVIDED DURING BERTHING PROCEDURES.

Connecticut PORT AUTHORITY

PERMITTING SET
ISSUED: 10/23/2020
NOT TO BE USED FOR CONSTRUCTION

moffatt & nichol

INSTALL VESSEL NAVIGATION PLAN (OUTBOUND)

STATE PIER INFRASTRUCTURE IMPROVEMENTS
STATE PIER FACILITY - NEW LONDON, CT

SEAL

150' 0' 150' 300'
SCALE: 1"=150'

DWG INFO: Q:\BOS\Projects\10630 Detail Design State pier\500 CADD_Active_Permit\Set\10630-21.dwg, May 1, 2020 - 4:09 PM, MMIRANDA, (C) MOFFATT AND NICHOL

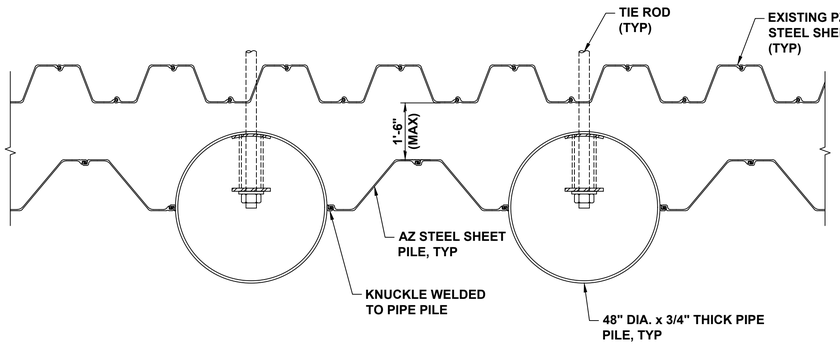

C — **KING PILE WALL**
SCALE: 1/2" = 1'-0"

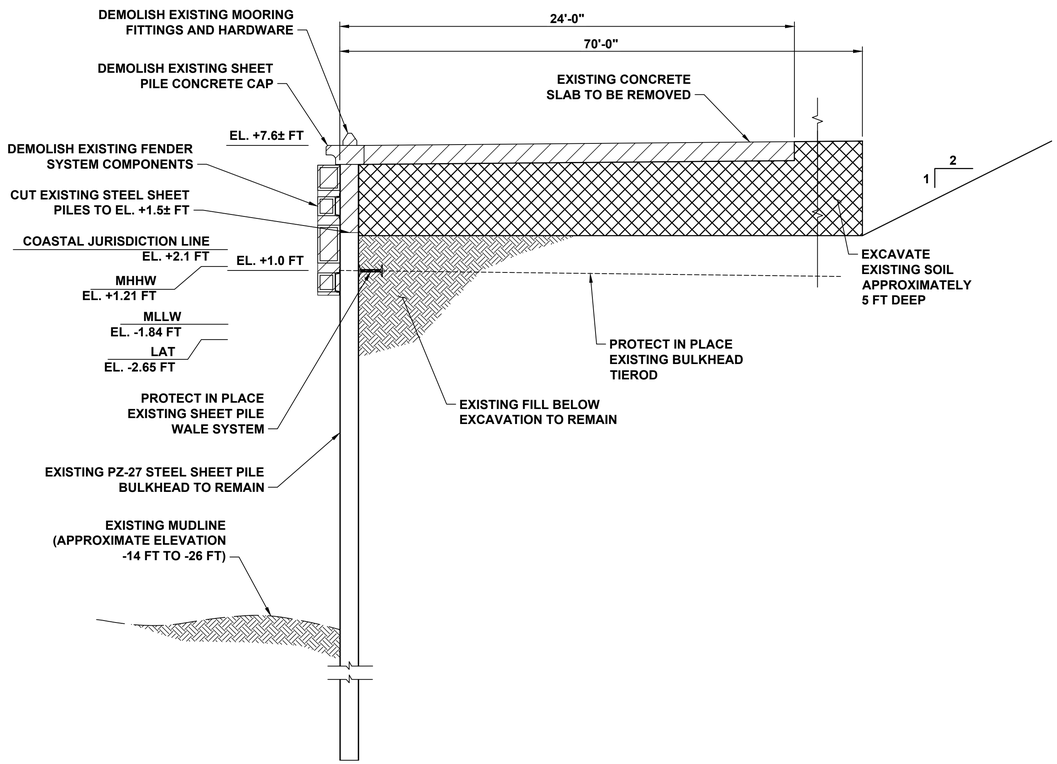

EXISTING - STEEL SHEET PILE BULKHEAD
SCALE: 1/4" = 1'-0"

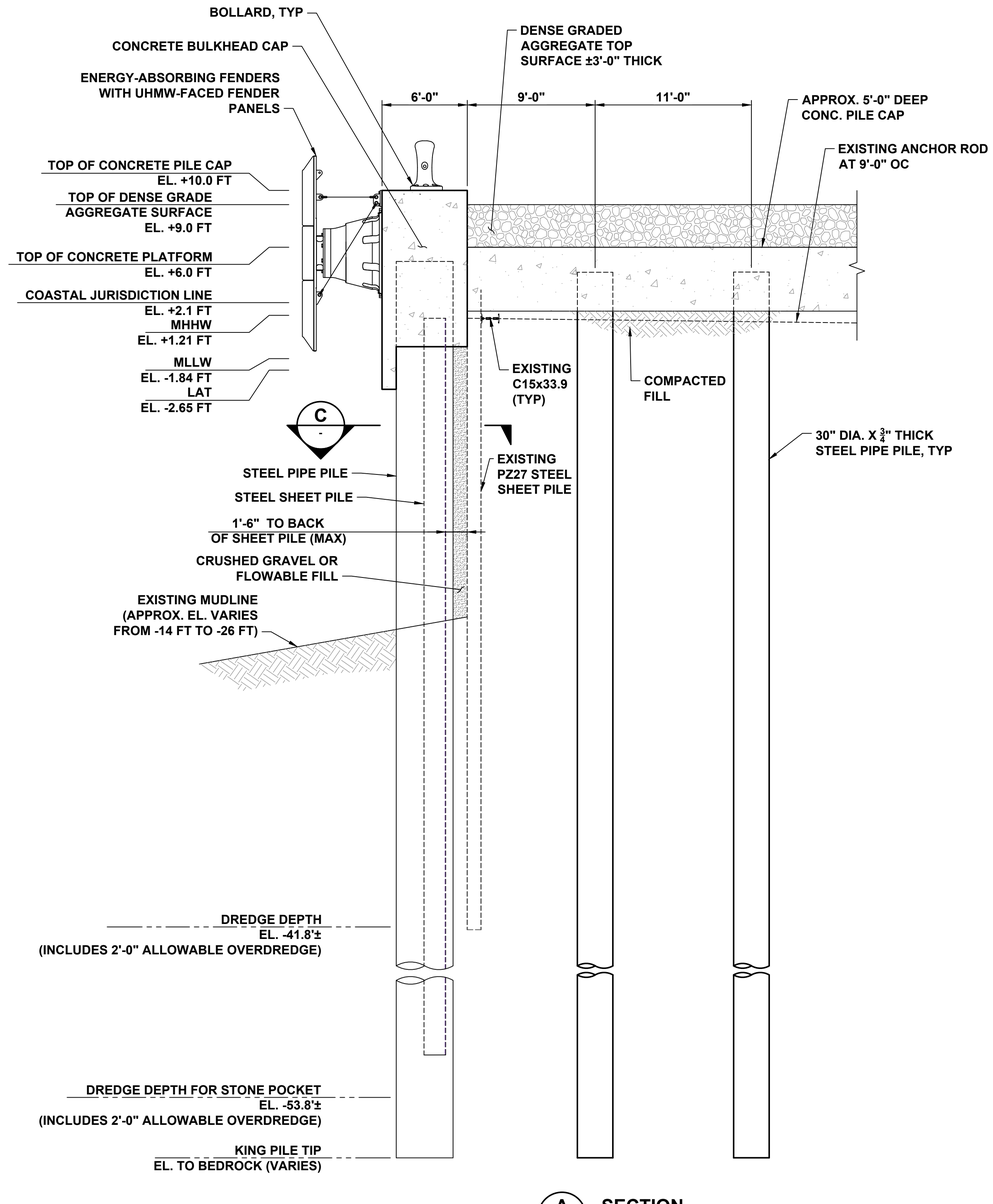

C — A/12 — **SECTION**
SCALE: 3/16" = 1'-0"

NOTE:

1. MEMBER SIZE IS PRELIMINARY AND MAY CHANGE IN FINAL DESIGN STAGE.

Connecticut PORT AUTHORITY

PERMITTING SET
ISSUED: 10/23/2020
NOT TO BE USED FOR CONSTRUCTION

moffatt & nichol

NORTHEAST BULKHEAD SECTIONS

STATE PIER INFRASTRUCTURE IMPROVEMENTS
STATE PIER FACILITY - NEW LONDON, CT

SEAL

2'-0" 0'-0" 2'-0" 4'-0"
SCALE: 1/2"=1'-0"
4'-0" 0'-0" 4'-0" 8'-0"
SCALE: 1/4"=1'-0"
8'-0" 0'-0" 4'-0" 8'-0"
SCALE: 3/16"=1'-0"

DWG INFO: Q:\BGS\Projects\10630 Detail Design State pier\500 CADD_Active_PermitSet\10630-22.dwg, May 5, 2020 - 11:58 AM, CMOYAGLESIAS, (C) MOFFATT AND NICHOL

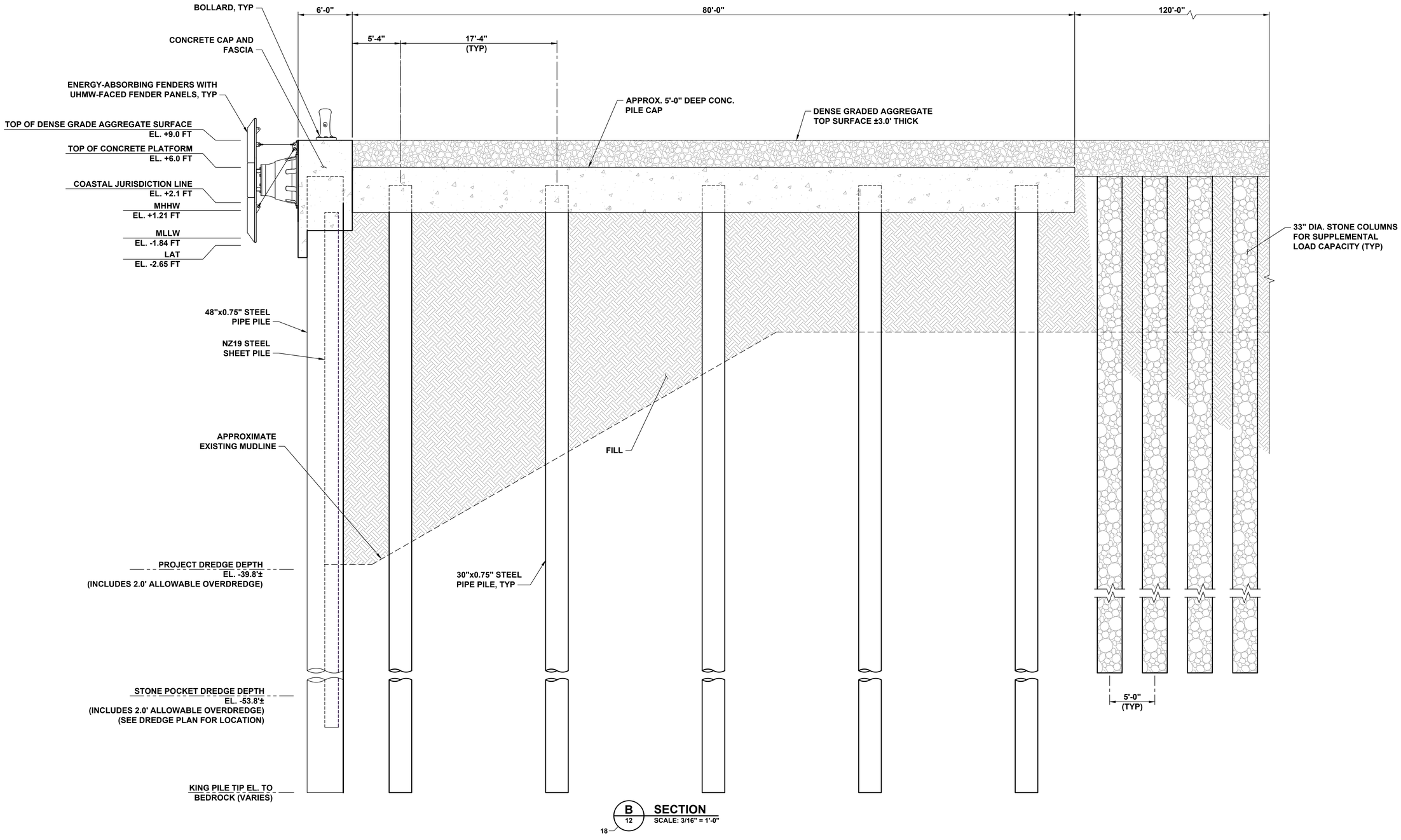

B 12 SECTION
SCALE: 3/16" = 1'-0"
18

Connecticut Port Authority

PERMITTING SET
ISSUED: 10/23/2020
NOT TO BE USED FOR CONSTRUCTION

moffatt & nichol

PROPOSED EAST STATE PIER PILE SUPPORTED PLATFORM

STATE PIER INFRASTRUCTURE IMPROVEMENTS
STATE PIER FACILITY - NEW LONDON, CT

SEAL

8'-0" 0'-0" 4'-0" 8'-0"
SCALE: 3/16"=1'-0"

DWG INFO: Q:\BOS\Projects\10630 Detail Design State pier\500 CADD_Active_PermitSet\10630-23.dwg; May 4, 2020 - 6:46 PM; DFRANZESE; (C) MOFFATT AND NICHOL

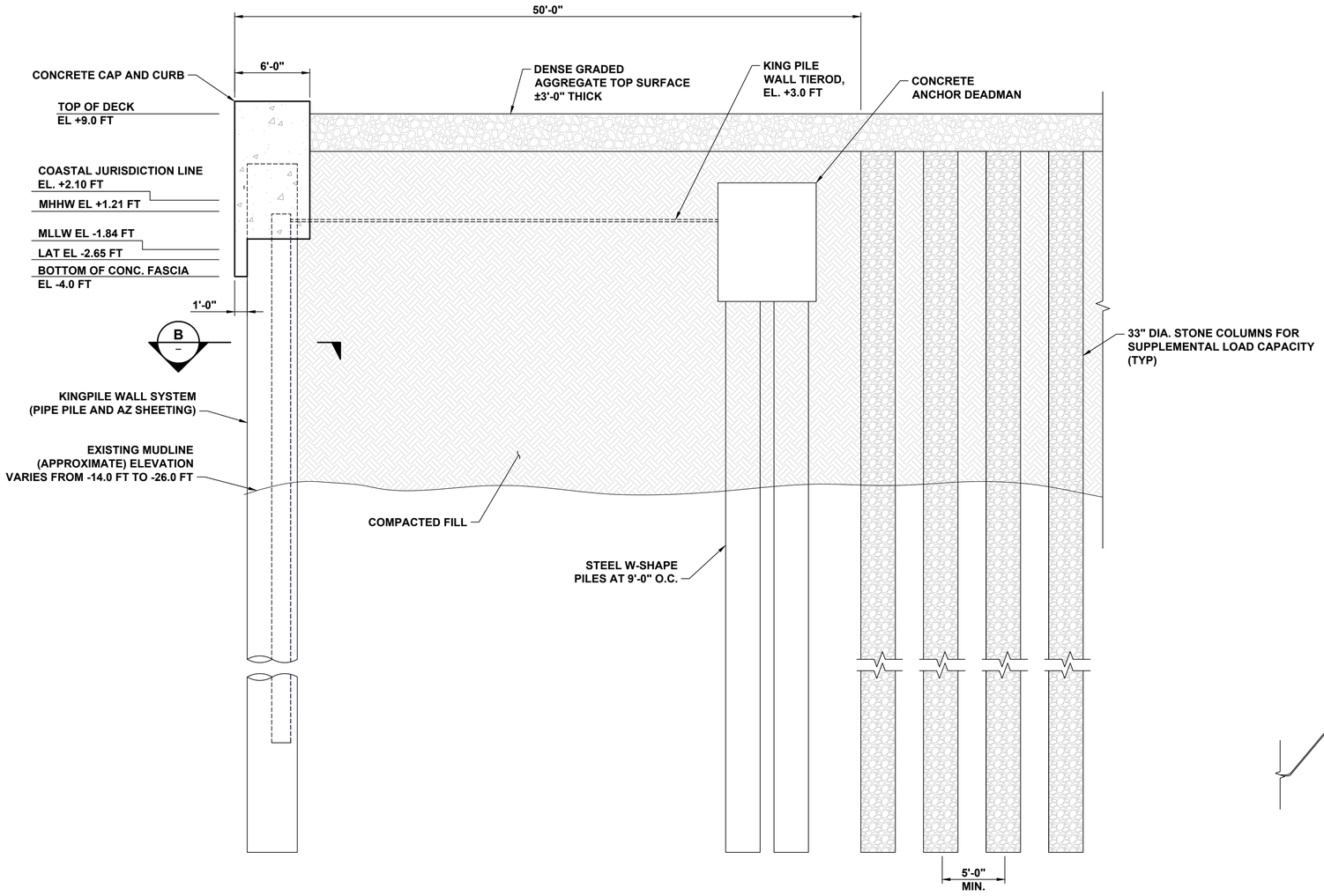

C / 12 / 18 **SECTION**
SCALE: 3/16" = 1'-0"

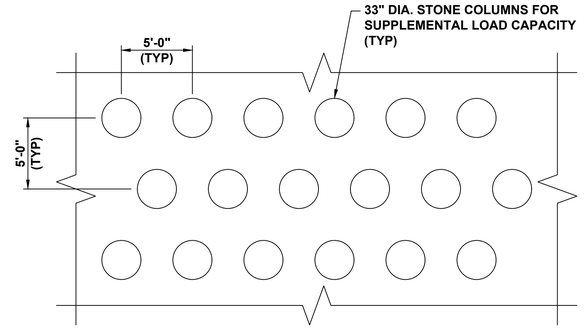

PARTIAL PLAN OF STONE COLUMNS IN HEAVY LIFT AREA
SCALE: 3/16" = 1'-0"

A / 12 **SECTION**
SCALE: 3/16" = 1'-0"

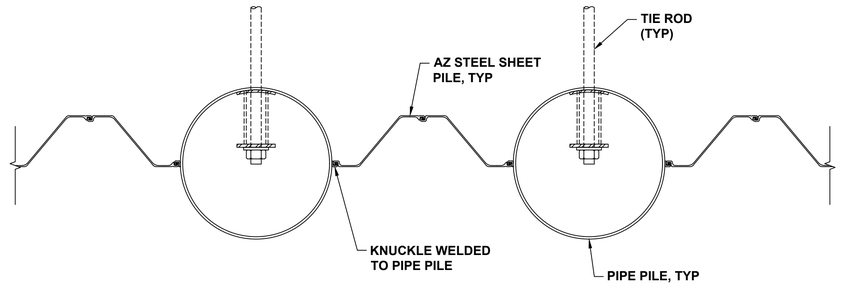

B / - **KING PILE WALL**
NTS

NOTES:

1. STONE COLUMNS SHALL COVER APPROXIMATELY 25% OF HEAVY LIFT AREA FOOTPRINT. SPACING AND DIAMETER SHOWN FOR ALL STONE COLUMNS ARE APPROXIMATE AND MAY BE ALTERED BY CONTRACTOR BASED ON AVAILABLE EQUIPMENT AND PREFERRED MEANS AND METHODS.
2. ALTERNATIVE METHODS FOR GROUND IMPROVEMENT WITHIN THE NEW CENTRAL WHARF AREA SUCH AS PREFABRICATED VERTICAL DRAINS (WICK DRAINS) OR VIBRO-COMPACTION OF IMPORTED SOILS MAY BE UTILIZED IN LIEU OF OR IN COMBINATION WITH STONE COLUMNS TO ACHIEVE PROJECT SCHEDULE.

Connecticut Port Authority

PERMITTING SET
ISSUED: 10/23/2020
NOT TO BE USED FOR CONSTRUCTION

moffatt & nichol

KING PILE WALL CLOSURE BETWEEN CVRR AND STATE PIER

STATE PIER INFRASTRUCTURE IMPROVEMENTS
STATE PIER FACILITY - NEW LONDON, CT

SEAL

8'-0" 0'-0" 4'-0" 8'-0"
SCALE: 3/16"=1'-0"
2'-0" 0'-0" 2'-0" 4'-0"
SCALE: 1/2"=1'-0"

DWG INFO: Q:\BOS\Projects\10630 Detail Design State pier\500 CAD\D_Active_PermitSet\10630-24.dwg, October 23, 2020 - 4:00 PM, CMOYAIGLESIAS, (C) MOFFATT AND NICHOL

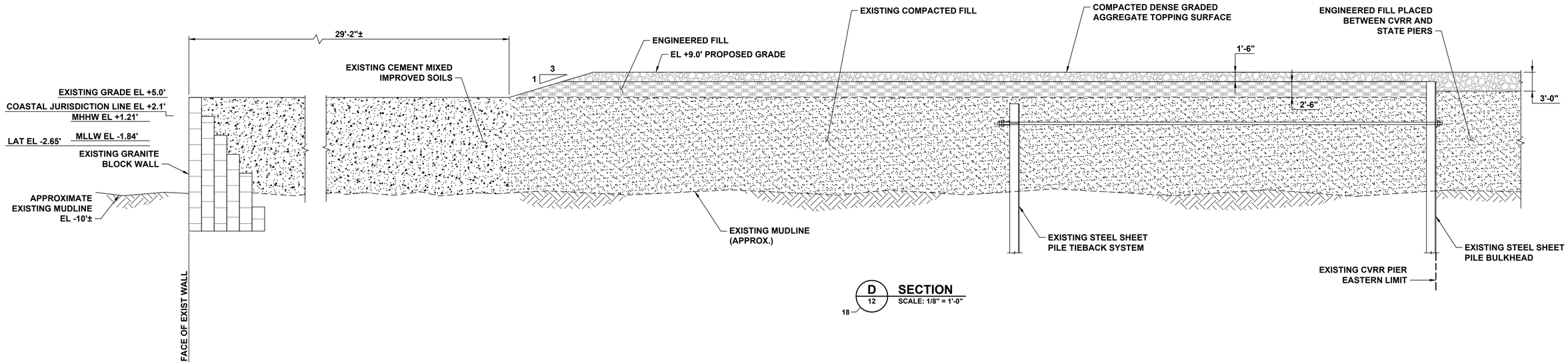

D/12 **SECTION**
SCALE: 1/8" = 1'-0"
18

NOTES:

1. EASTERN END OF INSTALLED FILL WILL BE RETAINED BY CENTRAL BERM OF EXISTING STATE PIER.
2. CONSTRUCTION OF GRANITE BLOCK WALL BELOW MUDLINE IS UNKNOWN. APPROXIMATE SECTION IS SHOWN.
3. SHEET SIZE IS APPROXIMATE AND MAY CHANGE IN DETAILED DESIGN.

Connecticut PORT AUTHORITY

PERMITTING SET
ISSUED: 10/23/2020
NOT TO BE USED FOR CONSTRUCTION

moffatt & nichol

CVRR BULKHEAD SECTIONS

STATE PIER INFRASTRUCTURE IMPROVEMENTS
STATE PIER FACILITY - NEW LONDON, CT

SEAL

8'-0" 0'-0" 8'-0" 16'-0"
SCALE: 1/8"=1'-0"

DWG INFO: Q:\BOS\Projects\10630 Detail Design State pier\500 CADD_Active_Permit\Set\10630-25.dwg, October 15, 2020 - 2:37 PM, CMOYA\GLESIAS, (C) MOFFATT AND NICHOL

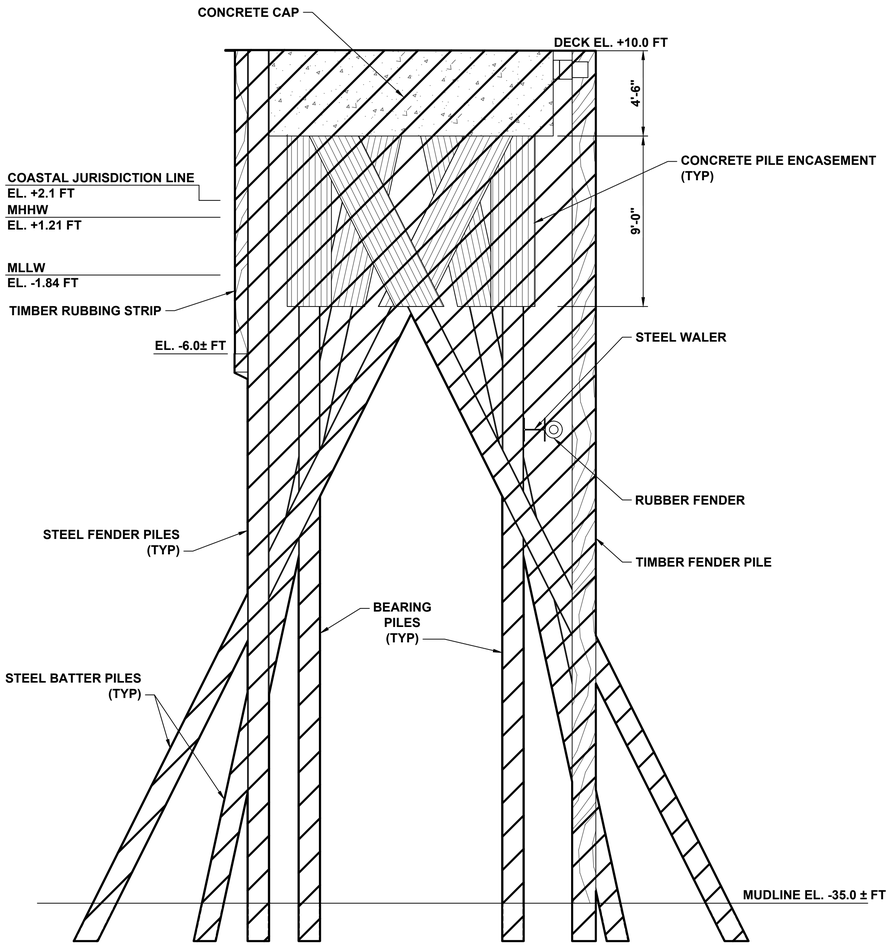

TYPICAL PLATFORM SECTION (LOOKING WEST)

SCALE: 1/4" = 1'-0"

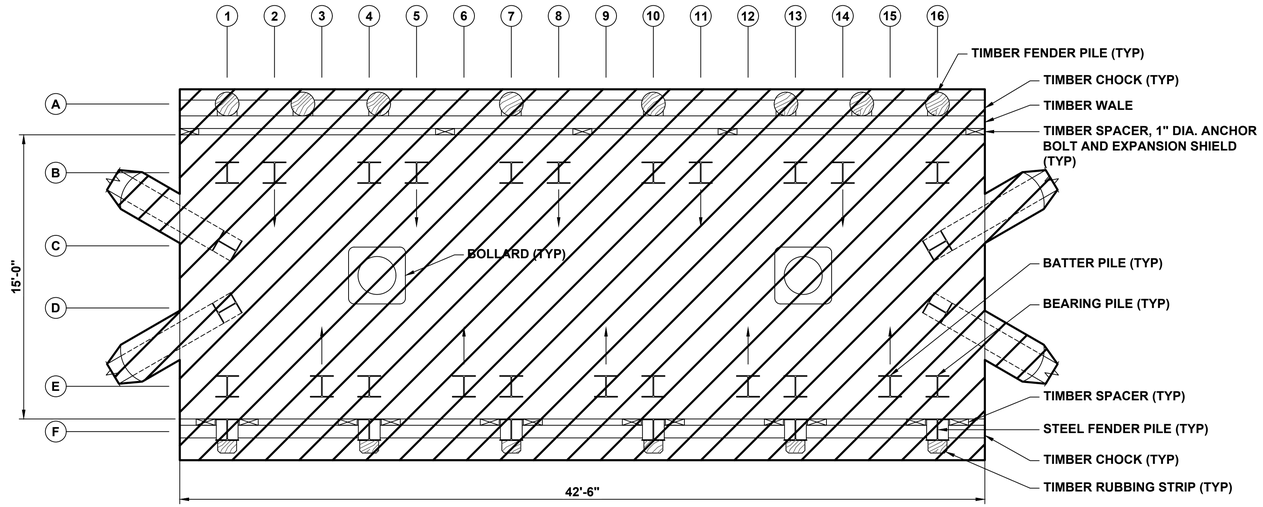

TYPICAL PLATFORM PLAN

SCALE: 1/4" = 1'-0"

NOTES:

1. ELEVATIONS ARE IN NAVD88.
2. TOTAL OF 4 MOORING PLATFORMS - TYPICAL PLATFORM HAS 12 SUPPORT PILES, 14 BATTER PILES, AND 14 FENDER PILES TO BE DEMOLISHED. CATWALK CONTAINS 8 SUPPORT PILES.
3. ALL PILES SHALL BE REMOVED IN THEIR ENTIRETY. CONTRACTOR SHALL SUBMIT REMOVAL METHODS FOR REVIEW PRIOR TO COMMENCEMENT OF WORK.
4. WORK COVERED UNDER CERTIFICATE OF PERMISSION.

LEGEND

DEMOLISH

DWG INFO: Q:\BOS\Projects\10630 Detail Design State pier\500 CADD_Active_PermitSet\10630-26.dwg, May 4, 2020 - 5:39 PM, DFRANZESE, (C) MOFFATT AND NICHOL

Connecticut Port Authority

PERMITTING SET
ISSUED: 10/23/2020
NOT TO BE USED FOR CONSTRUCTION

moffatt & nichol

MOORING PLATFORM SECTION

STATE PIER INFRASTRUCTURE IMPROVEMENTS
STATE PIER FACILITY - NEW LONDON, CT

SEAL

4'-0" 0'-0" 4'-0" 8'-0"

SCALE: 1/4"=1'-0"

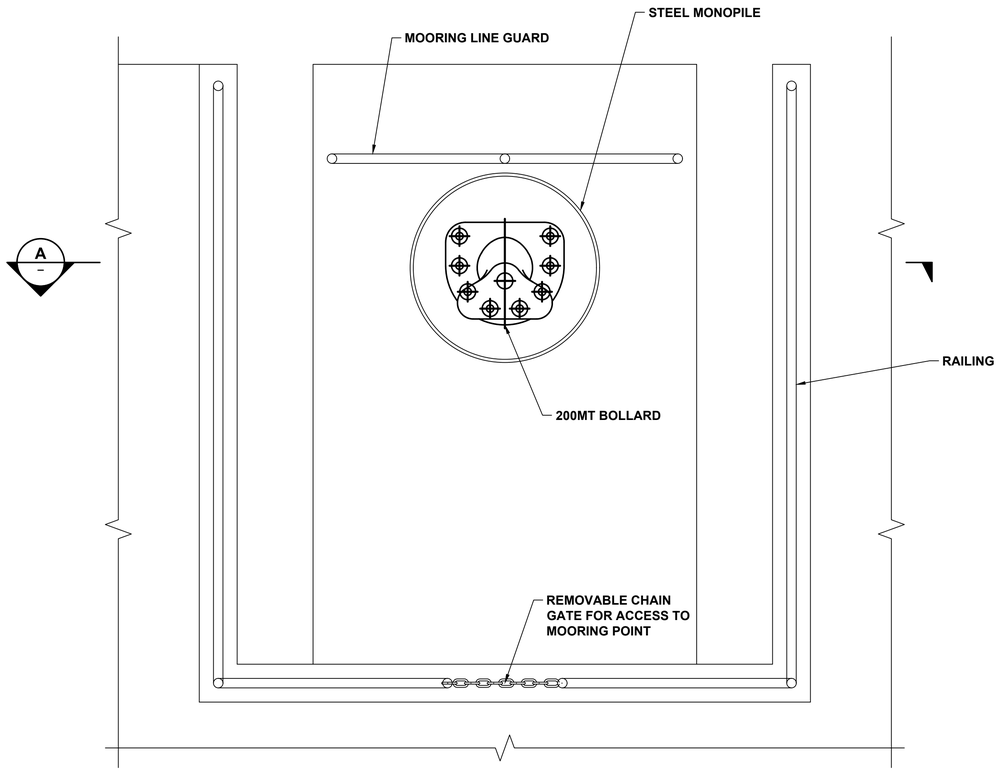

TYPICAL MOORING DOLPHIN PLAN AT STATE PIER
SCALE: 1/2"=1'-0"

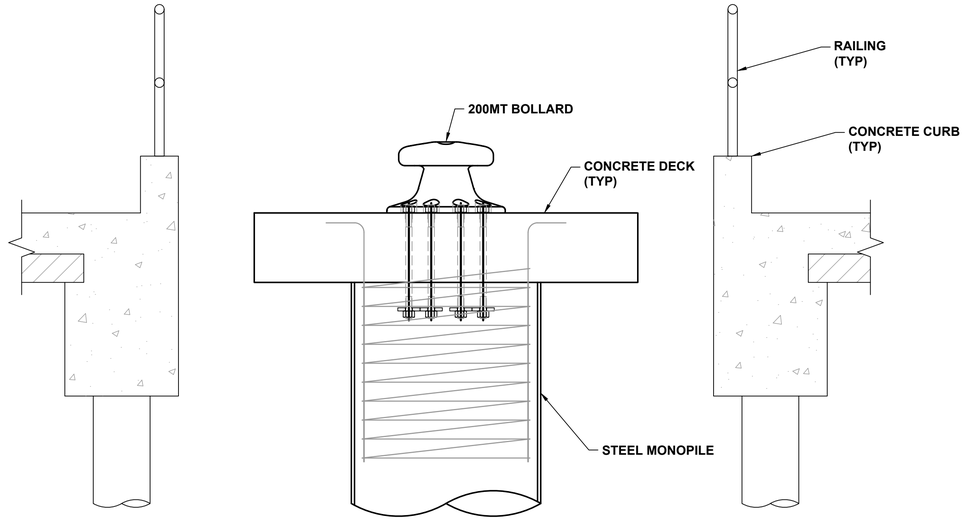

A - TYPICAL MOORING DOLPHIN ELEVATION AT STATE PIER
SCALE: 1/2"=1'-0"

BUOY NOTES:

1. LENGTH OF ANCHORAGE CHAIN SHALL ACCOMMODATE FULL TIDE CYCLE.
2. CONCRETE ANCHOR BLOCK SIZING SHALL PROHIBIT MOVEMENT OF BUOY.
3. BUOYS AND ANCHOR BLOCKS SHALL BE REMOVED UPON COMPLETION OF WORK.
4. BUOYS SHALL BE MARKED WITH THE FOLLOWING "STATE PIER WORK ZONE LIMITS".

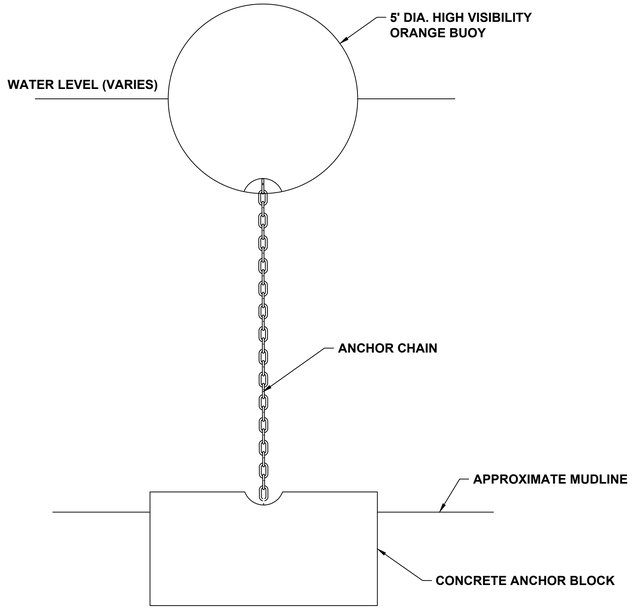

BUOY ANCHORAGE DETAIL
SCALE: 1/2"=1'-0"

Connecticut PORT AUTHORITY

PERMITTING SET
ISSUED: 10/23/2020
NOT TO BE USED FOR CONSTRUCTION

moffatt & nichol

BUOY ANCHORAGE AND MOORING DOLPHIN DETAILS

STATE PIER INFRASTRUCTURE IMPROVEMENTS
STATE PIER FACILITY - NEW LONDON, CT

SEAL

DWG INFO: Q:\BGS\Projects\10630 Detail Design State pier\500 CADD_Active_PermitSet\10630-27.dwg, May 4, 2020 - 10:13 PM, CMOYAIGLESIAS, (C) MOFFATT AND NICHOL

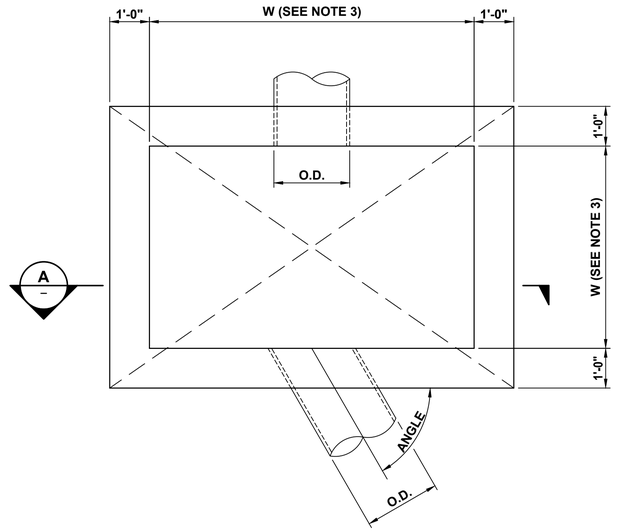

DRAINAGE STRUCTURE PLAN (MANHOLE AND GRATE INLET)

SCALE: 1/2" = 1'-0"

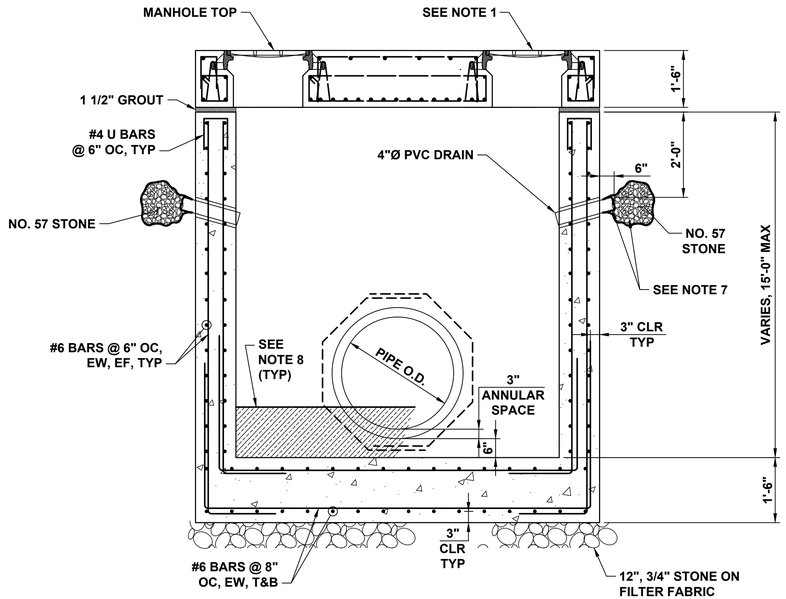

A
-
DRAINAGE STRUCTURE SECTION
SCALE: 1/2" = 1'-0"

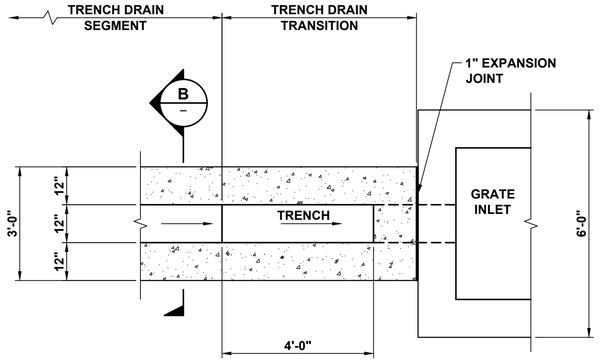

NOTE:
GRATE AND FRAMES NOT ILLUSTRATED.

TRENCH DRAIN PLAN

SCALE: 1/2" = 1'-0"

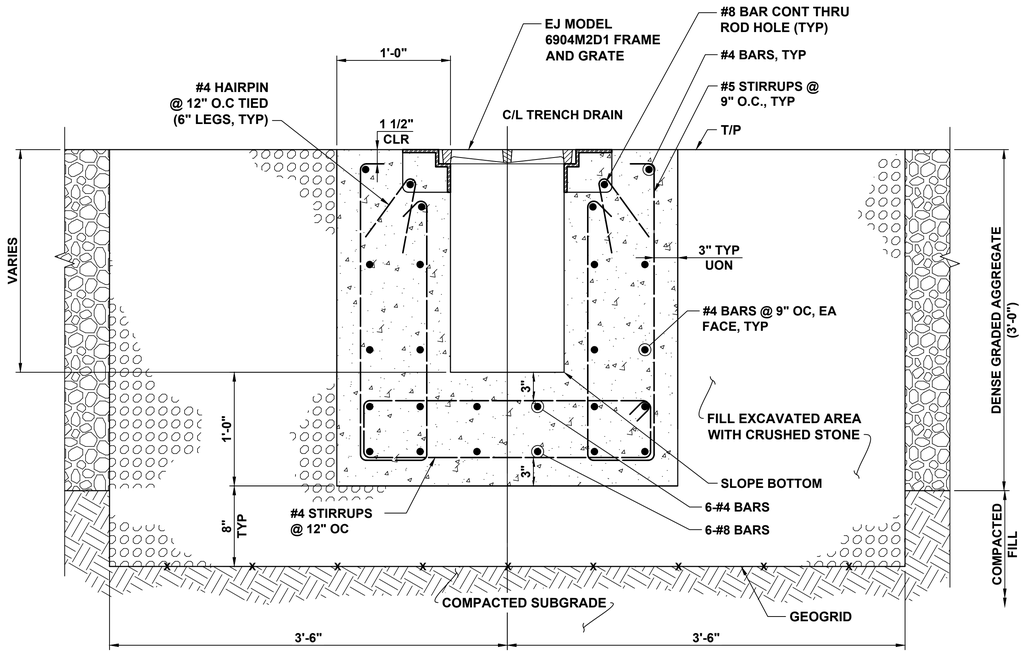

NOTES: (THIS SECTION ONLY)
1. REBAR TO BE EPOXY COATED.
2. CONCRETE SHALL INCLUDE SYNTHETIC FIBERS AT A DOSAGE RATE OF 1.5 LBS/CY. FIBERS SHALL BE MASTERFIBER M 100 BY BASF, PSI FIBERSTRAND F BY EUCLID CHEMICAL, SIKAFIBER PPM 150 BY SIKA, OR APPROVED EQUAL.

B
-
TRENCH DRAIN SECTION
SCALE: 1 1/2" = 1'-0"

INLET NOTES

1. FRAME AND GRATES SHALL BE AS FOLLOWS (OR APPROVED EQUALS) :
   QUAD: NEENAH R-4994-HAB (TYPE A GRATE AND TYPE S FRAME)
2. GRATE SHALL BE BOLTED TO THE FRAME.
3. MINIMUM INSIDE WALL DIMENSION "W" SHALL BE DETERMINED BY THE FORMULA W=(O.D./SIN ANGLE)+2'-6", BUT IN NO CASE SHALL THE DIMENSION "W' BE LESS THAN 4 FEET NOR MORE THAN 8 FEET.
4. OPENINGS IN THE WALLS FOR PIPE SHALL BE CAST-IN OR CUT CLEANLY WITHOUT PERCUSSION TO A MAXIMUM DIAMETER OF O.D. ±3". THE SPACE BETWEEN PIPE AND WALL SHALL THEN BE FILLED WITH NON SHRINK GROUT, OR APPROVED JOINT INSERT ASSEMBLY.
5. PRECASTER SHALL BE RESPONSIBLE FOR DESIGNING LIFTING PROVISIONS.
6. FOR PRECAST CONCRETE SECTIONS, MINIMUM COVER IS 2". FOR CAST-IN-PLACE CONCRETE SECTIONS, MINIMUM COVER IS 3".
7. SECURELY TIE 1 CUBIC FOOT OF NO. 57 STONE IN BAG OF NON-WOVEN FILTER FABRIC. ENSURE POSITIVE CLOSURE AROUND PIPE TO PREVENT MATERIAL FROM MIGRATING OUT OF PIPE.
8. GROUT BOTTOM OF STRUCTURE TO INVERT OF PIPE. DEPTH VARIES.

Connecticut PORT AUTHORITY

PERMITTING SET
ISSUED: 10/23/2020
NOT TO BE USED FOR CONSTRUCTION

moffatt & nichol

DRAINAGE STRUCTURE DETAILS - 1 OF 2

STATE PIER INFRASTRUCTURE IMPROVEMENTS
STATE PIER FACILITY - NEW LONDON, CT

SEAL

1'-0" 0'-0" 6" 1'-0"
SCALE: 1 1/2"=1'-0"
2'-0" 0'-0" 2'-0" 4'-0"
SCALE: 1/2"=1'-0"

DWG INFO: Q:\BOS\Projects\10630 Detail Design State pier\500 CADD_Active_PermitSet\10630-29.dwg, May 4, 2020 - 7:30 PM, CMOYAGLESIAS, (C) MOFFATT AND NICHOL

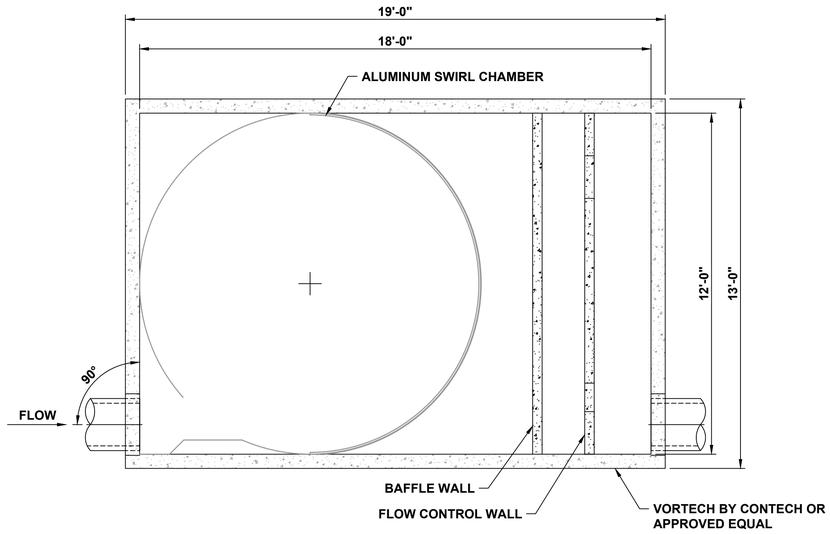

WATER TREATMENT STRUCTURE PLAN
N.T.S.

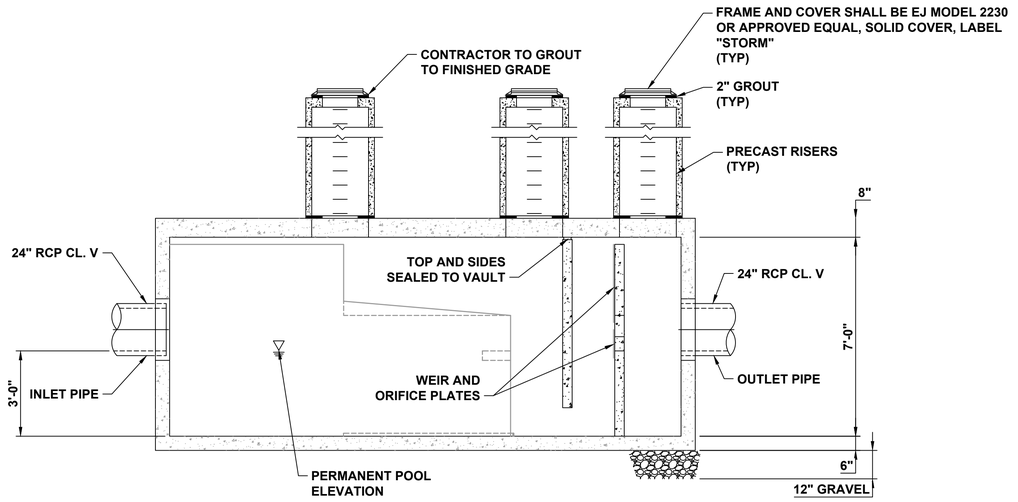

WATER TREATMENT STRUCTURE ELEVATION
N.T.S.

NOTES:

1. STRUCTURES SHOWN ARE REPRESENTATIVE. FINAL SIZING WILL BE PROVIDED BY MANUFACTURER DURING DETAILED DESIGN.
2. SECTIONS ARE NOT TO SCALE.

Connecticut PORT AUTHORITY

PERMITTING SET
ISSUED: 10/23/2020
NOT TO BE USED FOR CONSTRUCTION

moffatt & nichol

DRAINAGE STRUCTURE DETAILS - 2 OF 2

STATE PIER INFRASTRUCTURE IMPROVEMENTS
STATE PIER FACILITY - NEW LONDON, CT

SEAL

DWG INFO: Q:\BOS\Projects\10630 Detail Design State pier\450 CAD\3_Active_PermitSet\10630-30.dwg, May 4, 2020 - 7:31 PM, CMOYA\BGLESIAS. (C) MOFFATT AND NICHOL

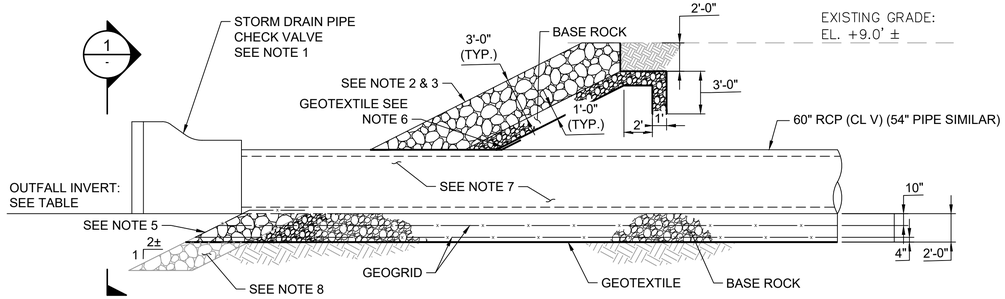

A 14 OUTFALL THROUGH SLOPE (TYPE 1)
SCALE: 3/16" = 1'-0"

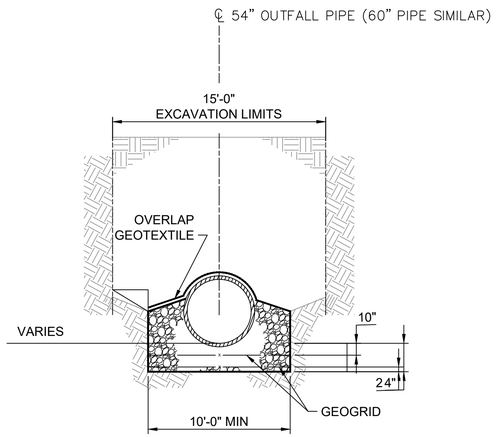

1 - SECTION
SCALE: 3/16" = 1'-0"

NOTES

1. STORM DRAIN PIPE CHECK VALVE TO BE RED VALVE TIDEFLEX SERIES TF-1 OR APPROVED EQUAL.
2. SALVAGE EXISTING RIPRAP FOR REUSE.
3. INSTALL ADDITIONAL RIPRAP (CT DEEP RIPRAP RR DETAIL) AS REQUIRED TO FORM DENSE ARMOR LAYER.
4. ALL RIPRAP SHALL BE CAREFULLY PLACED, NOT DUMPED.
5. WRAP LOWER GEOGRID ACROSS FACE OF BASE ROCK.
6. OVERLAP GEOTEXTILE AROUND PIPE AND SLOPE GEOTEXTILE.
7. USE FULL PIPE SEGMENT FOR CHECK VALVE MOUNTING.
8. ALLOW BASE ROCK TO FILL AROUND VOIDS OF EXISTING RIPRAP.
9. COASTAL JURISDICTION LINE IS AT EL. +2.1'
10. MHHW IS AT EL. +1.21'
11. MLLW IS AT EL. -1.84'

OUTFALL			
OF	INV. OUT	SIZE	TYPE
OF1	-4.20	60" Ø	1
OF2	-2.50	54" Ø	2
OF3	-3.10	60" Ø	1
OF4	-4.30	60" Ø	2

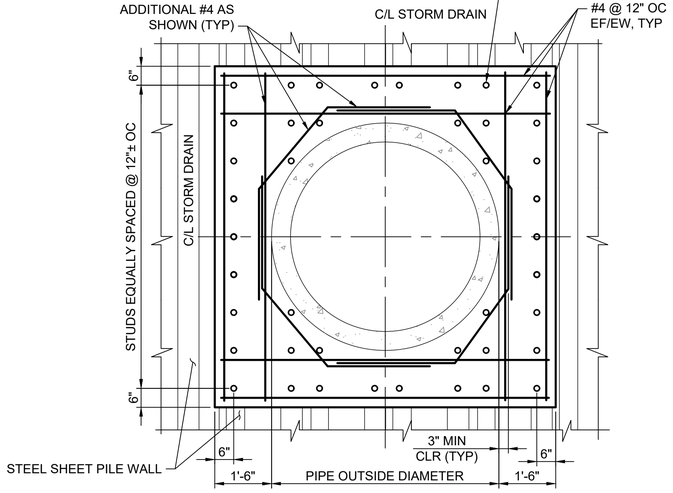

OUTFALL THROUGH STEEL SHEET PILE
SCALE: 1/2"=1'-0"

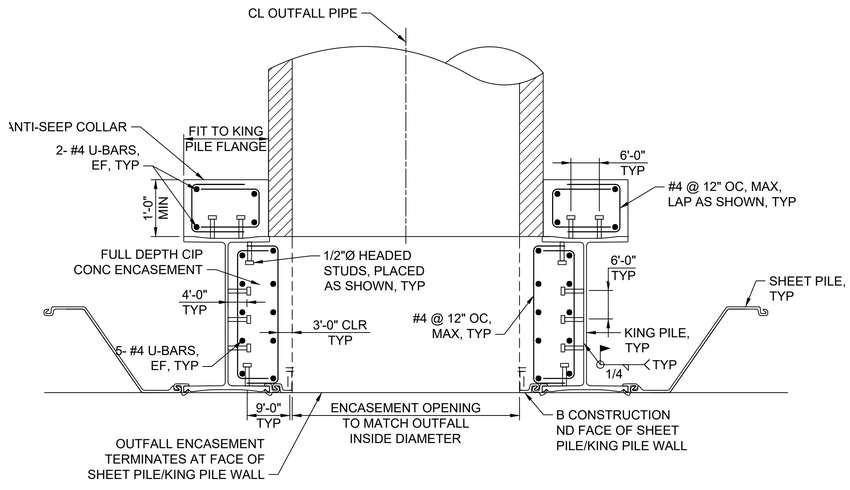

OUTFALL THROUGH STEEL SHEET PILE
SCALE: 1/16"=1'-0"

B 14 OUTFALL THROUGH STEEL SHEET PILE (TYPE 2)
SCALE: AS NOTED

Connecticut PORT AUTHORITY

PERMITTING SET
ISSUED: 10/23/2020
NOT TO BE USED FOR CONSTRUCTION

moffatt & nichol

OUTFALL DETAILS

STATE PIER INFRASTRUCTURE IMPROVEMENTS
STATE PIER FACILITY - NEW LONDON, CT

SEAL

2'-0" 0'-0" 2'-0" 4'-0"
SCALE: 1/2"=1'-0"

DWG INFO: Q:\BOS\Projects\10630 Detail Design State pier\500 CADD_Active_PermitSet\10630-31.dwg, May 4, 2020 - 7:31 PM, DFRANZESE - (C) MOFFATT AND NICHOL

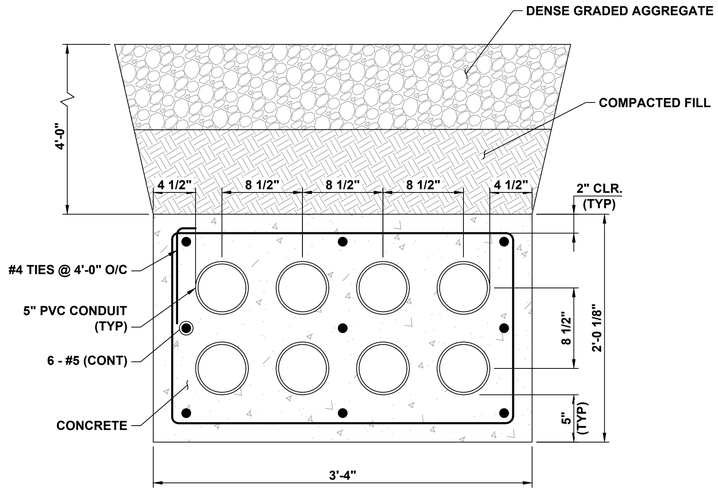

TYPICAL 5" 8-WAY CONCRETE ENCASED DUCTBANK

SCALE: 1 1/2"=1'-0"

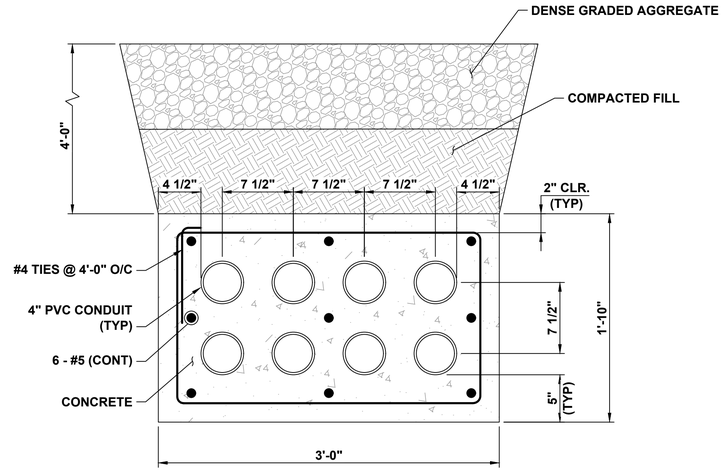

TYPICAL 4" 8-WAY CONCRETE ENCASED DUCTBANK

SCALE: 1 1/2"=1'-0"

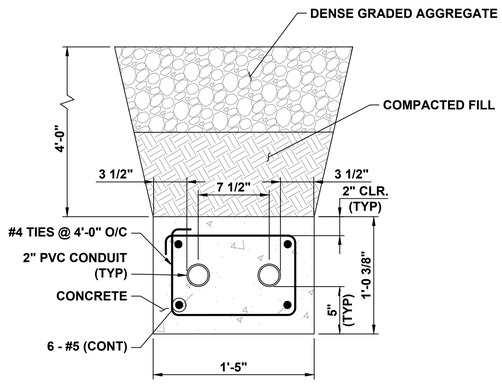

TYPICAL 2" 2-WAY CONCRETE ENCASED DUCTBANK

SCALE: 1 1/2"=1'-0"

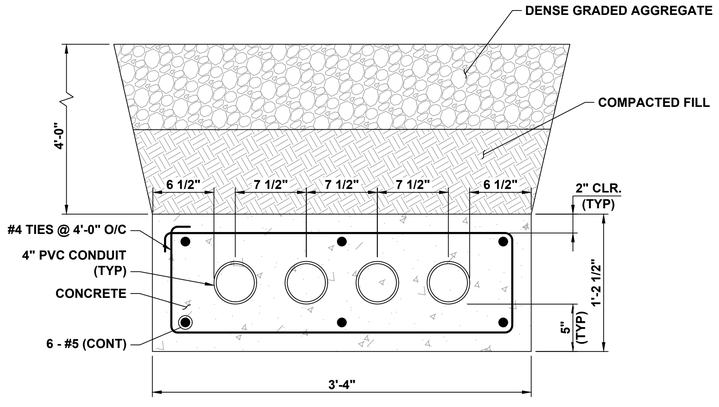

TYPICAL 2" & 4" 4-WAY CONCRETE ENCASED DUCTBANK

SCALE: 1 1/2"=1'-0"

DUCTBANK NOTES:

1. ALL 5" SCHEDULE 40 PVC CONDUIT SHALL HAVE AN OUTER DIAMETER OF NO MORE THAN 5.5" AND THE ENDBELL OUTER DIAMETER OF NO MORE THAN 6.1".
2. ALL 4" SCHEDULE 40 PVC CONDUIT SHALL HAVE AN OUTER DIAMETER OF NO MORE THAN 4.5" AND THE ENDBELL OUTER DIAMETER OF NO MORE THAN 5".
3. ALL END BELLES SHALL BE STAGGERED AT NO LESS THAN 12" ACROSS THE ENTIRE DUCTBANK SECTION.
4. ALL DUCTBANK SPACINGS SHALL BE REDUCED TO ENTER THE OPENINGS IN THE EQUIPMENT.
5. THE TOP OF THE DUCTBANK SHALL NOT BE SHALLOWER THAN 48" BELOW FINISHED GRADE.
6. DEVIATIONS IN DUCTBANK SHALL BE REQUIRED FOR ROUTING AROUND UTILITIES AND OTHER DUCTBANKS.
7. THE SLOPE OF ALL DUCTBANKS SHALL BE TOWARDS MANHOLES. IN DUCTBANK LENGTHS THAT DO NOT HAVE MANHOLES, THE SLOPE SHALL BE TO THE EQUIPMENT NEAREST TO THE EDGE OF THE PIER.
8. CONCRETE COMPRESSIVE STRENGTH f'_c = 3,000 PSI.
9. REINFORCING STEEL - UNCOATED ASTM A615, GRADE 60.
10. CONTINUOUS REINFORCING STEEL SHALL BE LAPPED 36 X BAR DIAMETER AT SPLICES AND CORNERS, UNLESS OTHERWISE NOTED.
11. INTENTIONALLY LEFT BLANK
12. THE SPACING IN BETWEEN 4", 5" AND 2" MIXED CONDUITS IN A SINGLE DUCTBANK SHALL MAINTAIN THE OVERALL CENTERLINE OF THE LARGEST CONDUIT IN THE DUCTBANK SECTION. THIS REQUIRES 7-1/2" IN BETWEEN 2" AND 4" CONDUITS, AND 8-1/2" IN BETWEEN A 4" AND 5" CONDUIT. THE REBAR AND CONCRETE COVER OF THE DUCTBANK CONDUITS SHALL REMAIN AS INDICATED FOR THE LARGEST CONDUIT IN THE DUCTBANK RUN.

DWG INFO: Q:\BOS\Projects\10630 Detail Design State pier\500 CADD_Active_Permit\Set\10630-32.dwg, May 4, 2020 - 7:31 PM, CMOYAIGLESIAS; (C) MOFFATT AND NICHOL

Connecticut Port Authority

PERMITTING SET
ISSUED: 10/23/2020
NOT TO BE USED FOR CONSTRUCTION

moffatt & nichol

DUCTBANK DETAILS

STATE PIER INFRASTRUCTURE IMPROVEMENTS
STATE PIER FACILITY - NEW LONDON, CT

SEAL

1'-0" 0'-0" 6" 1'-0"
SCALE: 1 1/2"=1'-0"

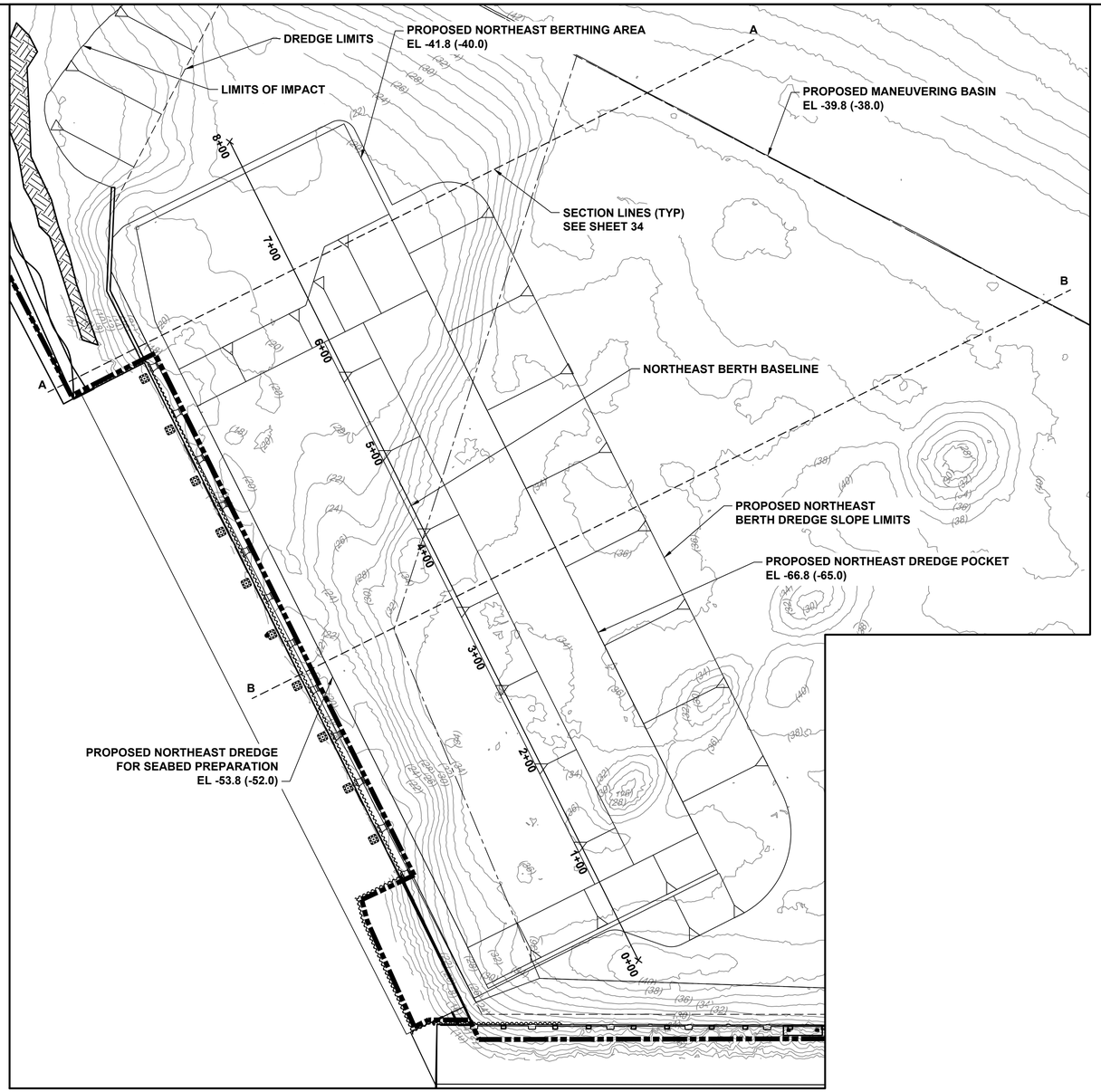

NORTHEAST BERTH
SCALE: 1" = 60'

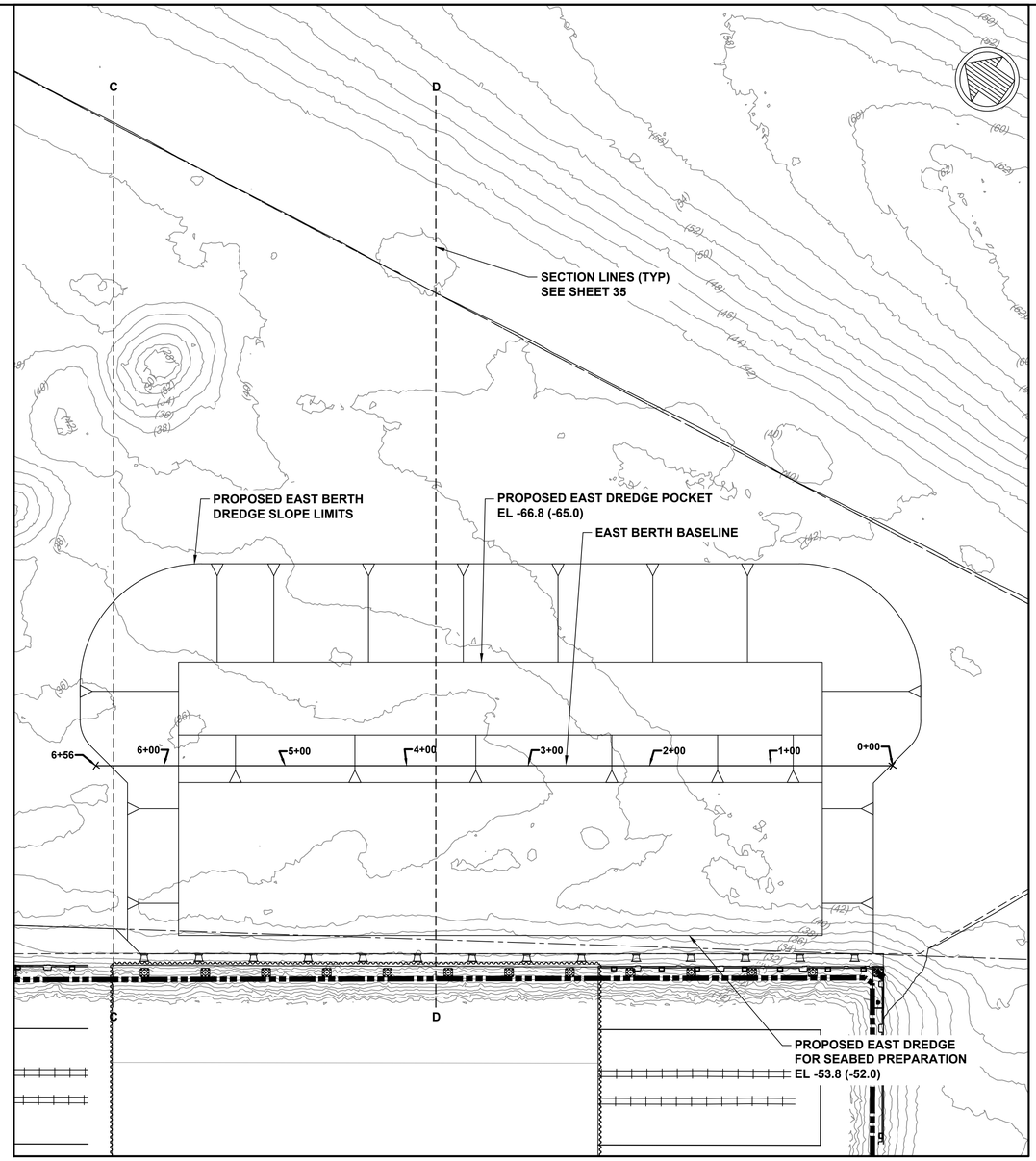

EAST BERTH
SCALE: 1" = 60'

NOTES:

1. ELEVATIONS SHOWN ARE IN NAVD88 DATUM WITH MLLW IN PARENTHESES

Connecticut Port Authority

PERMITTING SET
ISSUED: 10/23/2020
NOT TO BE USED FOR CONSTRUCTION

moffatt & nichol

PROPOSED DREDGE ALIGNMENT PLAN

STATE PIER INFRASTRUCTURE IMPROVEMENTS
STATE PIER FACILITY - NEW LONDON, CT

SEAL

60' 0' 60' 120'
SCALE: 1"=60'

DWG INFO: Q:\BOS\Projects\10630 Detail Design State pier\500 CAD\D_Active_PermitSet\10630-33.dwg, October 15, 2020 - 4:47 PM, MMIRANDA, (C) MOFFATT AND NICHOL

SECTION A-A

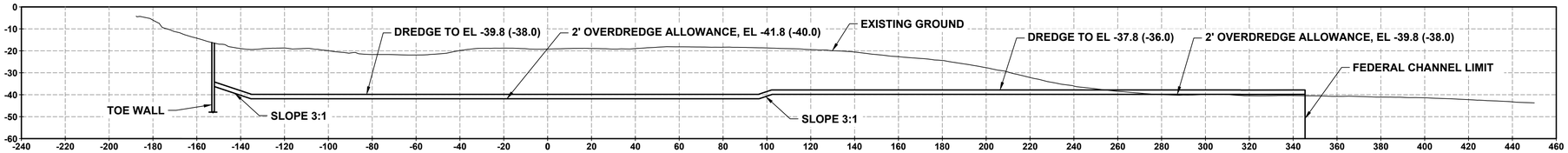

SECTION B-B

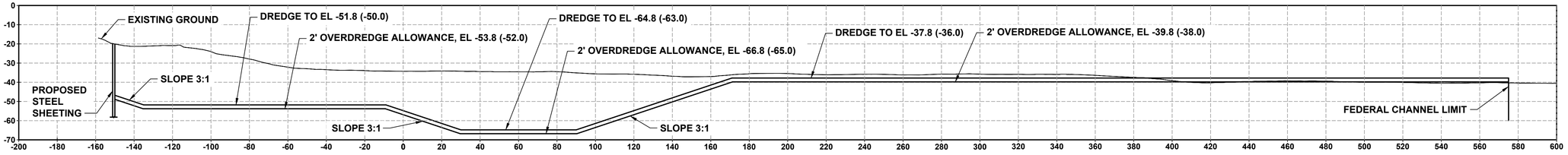

NOTE:

1. ELEVATIONS SHOWN ARE IN NAVD88 DATUM WITH MLLW IN PARENTHESES

PERMITTING SET
ISSUED: 10/23/2020
NOT TO BE USED FOR CONSTRUCTION

NORTHEAST BERTH DREDGE SECTIONS

STATE PIER INFRASTRUCTURE IMPROVEMENTS
STATE PIER FACILITY - NEW LONDON, CT

SEAL

DWG INFO: Q:\BOS\Projects\10630 Detail Design State pier\500 CAD\D_Active_PermitSet\10630-34.dwg, October 13, 2020 - 12:41 PM, MMIRANDA, (C) MOFFATT AND NICHOL

SECTION C-C

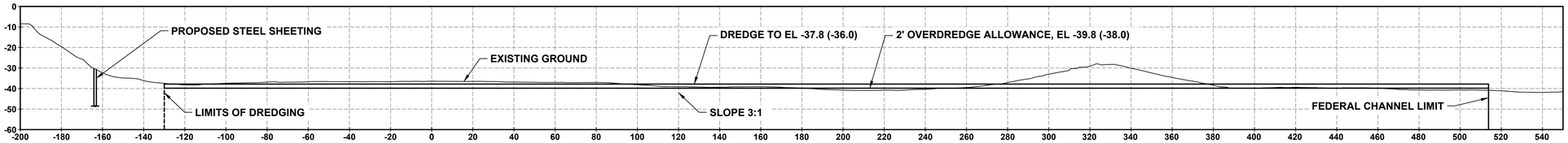

SECTION D-D

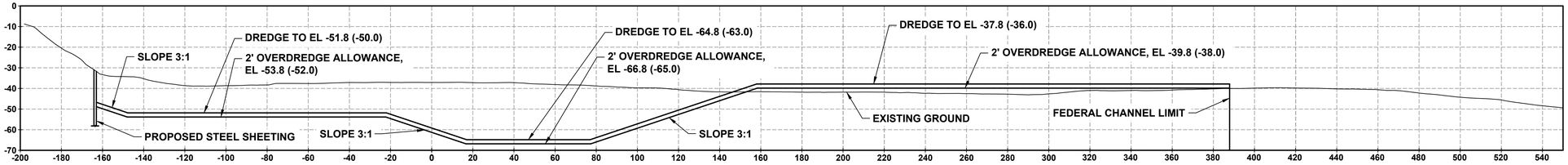

NOTE:

1. ELEVATIONS SHOWN ARE IN NAVD88 DATUM WITH MLLW IN PARENTHESES

Connecticut PORT AUTHORITY

PERMITTING SET
ISSUED: 10/23/2020
NOT TO BE USED FOR CONSTRUCTION

moffatt & nichol

EAST BERTH DREDGE SECTIONS

STATE PIER INFRASTRUCTURE IMPROVEMENTS
STATE PIER FACILITY - NEW LONDON, CT

SEAL

DWG INFO: Q:\BOS\Projects\10630 Detail Design State pier\500 CAD\D_Active_PermitSet\10630-35.dwg, October 13, 2020 - 12:50 PM, MMIRANDA, (C) MOFFATT AND NICHOL

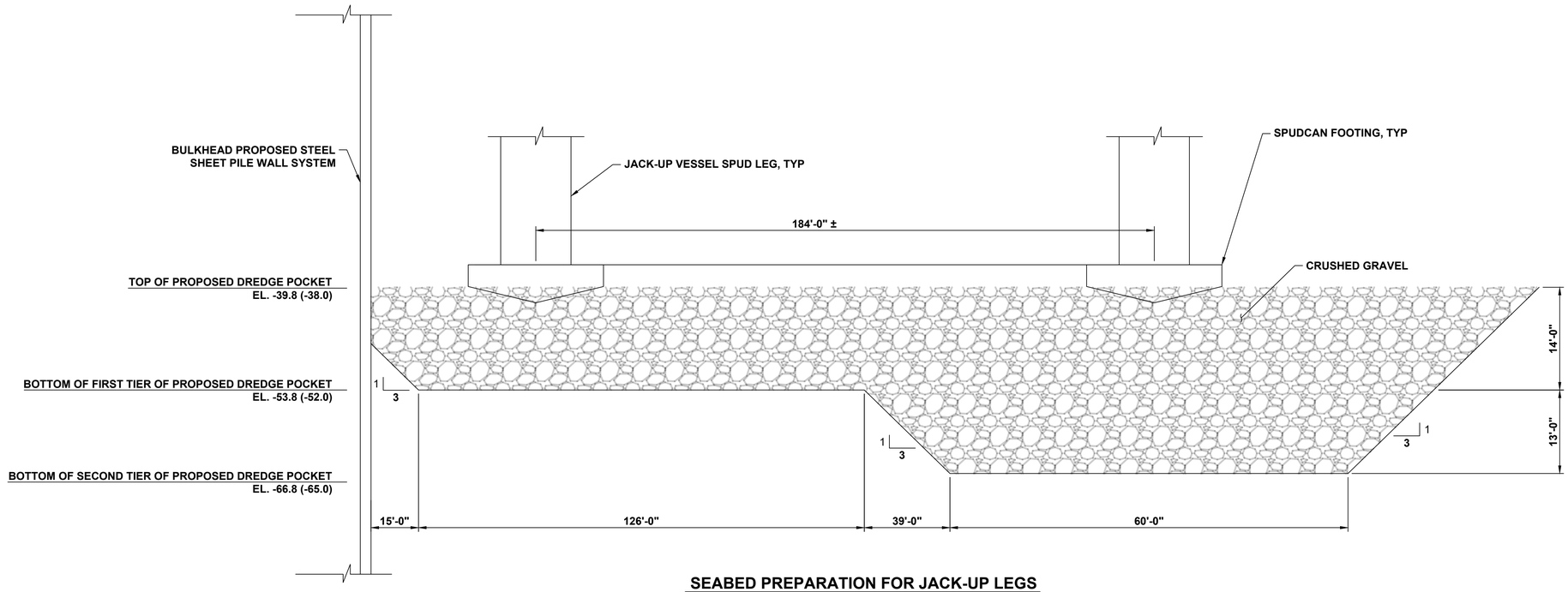

SEABED PREPARATION FOR JACK-UP LEGS
SCALE: N.T.S.

NOTES:

1. ELEVATIONS SHOWN ARE IN NAVD88 DATUM WITH MLLW IN PARENTHESES
2. SPUD LEG AND FOOTING ARE REPRESENTATIVE. ACTUAL SIZES OF THESE ELEMENTS ARE DEPENDENT ON THE SELECTED INSTALLATION VESSEL.
3. NORTHEAST BERTH CRUSHED GRAVEL= 99,400 CY
4. EAST BERTH CRUSHED GRAVEL = 99,400 CY

Connecticut PORT AUTHORITY

PERMITTING SET
ISSUED: 10/23/2020
NOT TO BE USED FOR CONSTRUCTION

moffatt & nichol

DREDGE SECTIONS FOR INSTALL VESSEL JACK-UP LEGS

STATE PIER INFRASTRUCTURE IMPROVEMENTS
STATE PIER FACILITY - NEW LONDON, CT

SEAL

DWG INFO: Q:\BOS\Projects\10630 Detail Design State pier\500 CADD_Active_PermitSet\10630-35.dwg, October 13, 2020 - 12:49 PM, MMIRANDA, (C) MOFFATT AND NICHOL