CONNECTICUT DEPARTMENT OF TRANSPORTATION

BRIDGE INSPECTION MANUAL

SEPTEMBER 2001

Version 2.1

with 05/04/2017 Revisions

REVISIONS TO BRIDGE INSPECTION MANUAL

(as of May 4, 2017)

The following are revisions that have been made to the Connecticut Department of Transportation's *Bridge Inspection Manual Version 2.1* since issued in September 2001.

CHAPTER	PAGES REVISED	REVISION DATE	COMMENTS
1	1-5	05/04/2017	Removed Load Rating Portions – Referenced Load Rating Manual
3	3-3, 3-4	06/17/2005	Inspection & Review Time Window
3	3-4, 3-5	03/14/2008	Increased Inspection Interval (Removed)
3	3-11 – 3-12	05/04/2017	Removed Load Rating Portions – Referenced Load Rating Manual
4	4-1 – 4-11	11/10/2016	Revised Chapter
7	7-1–7–7, 7–11-7–21	05/04/2017	Removed Load Rating Portions – Referenced Load Rating Manual
8	8-1, 8-2, 8-3, 8-4	11/24/2004	Posting Committee Revised
8	8-5	05/04/2017	Removed Load Rating Portion – Referenced Load Rating Manual
9	9-4, 9-5, 9-6, 9-7	05/04/2017	Priority Codes for Work Items
11	11-4	04/03/2003	Railroad Flagman Codes
APPENDIX A6.12	A6.12-5, A6.12-6, A6.12-7	11/29/2004	Stream Cross Section and Sounding Grid Measurements Added

Revisions to the Bridge Inspection Manual

NOTICE:

This manual has been prepared using a dual system of measurements. At the present time, all bridge inspection work and load rating analyses being done for the Bridge Safety and Evaluation Section shall be completed using the English System of measurement unless specifically directed otherwise. This is being done to be consistent with the majority of the available information in the current inventory. The vast majority of the bridges in the current inventory were constructed using the English System of measurement and available plans are typically in English. Also, all vertical clearance and load capacity postings are currently done in the English System.

PREFACE

The Connecticut Department of Transportation's *Bridge Inspection Manual* has been developed to provide a uniform standard for performing and reporting structure inspections in the state of Connecticut. The material presented here was as complete as possible at the time of publication, but the Manual is a "fluid" document that will be continuously changing to remain up to date with evolving standards, policies and technologies. While every effort has been made to present procedures for the most commonly encountered situations, no document can anticipate and give complete guidance on every possible situation that may be encountered in the field. The success of Connecticut's bridge inspection program will always rely on the diligence and discretion of the Bridge Safety Inspectors performing their jobs with all due respect for the safety of the traveling public.

The *Bridge Inspection Manual* was prepared by Lichtenstein Consulting Engineers, Inc., Watertown, CT, for the Connecticut Department of Transportation - Bridge Safety and Evaluation Section, Mr. James P. Loersch, P.E., Manager. Comments and suggestions for improvements to this manual are welcomed and should be forwarded to the Manager of Bridge Safety & Evaluation.

The authors wish to thank the following contributors, members of the Manual Committee, and all those individuals who contributed their time and suggestions to make this Manual possible:

James P. Loersch, P.E. (Manager, ConnDOT Bridge Safety & Evaluation)
Roger L. Kane (ConnDOT Bridge Safety & Evaluation - Retired)
Ralph A. Phillips (ConnDOT Bridge Safety & Evaluation)
Joseph C. Kozlowski, P.E. (ConnDOT Bridge Safety & Evaluation)
Ahmad A. Sarshory, P.E. (ConnDOT Bridge Safety & Evaluation)
Richard C. Van Allen, P.E. (ConnDOT Bridge Safety & Evaluation)
Theodore D. Lapierre, P.E. (ConnDOT Bridge Safety & Evaluation)
Ronald P. Annino (ConnDOT Bridge Safety & Evaluation)
Evan C. Lowell, P.E. (Lichtenstein Consulting Engineers)
William P. Saffian (Lichtenstein Consulting Engineers)
Christopher M. Donohue - Graphics (Lichtenstein Consulting Engineers)
Karen V. Donohue (Lichtenstein Consulting Engineers)

Thanks to Mr. Joseph E. Chilstrom, FHWA, for his patience in "fathering" this Manual.

Principal Authors: J. Brian McGovern, P.E. E. Allen Randall, P.E.

TABLE OF CONTENTS

CHAPTER 1: OVERVIEW OF CONNDOT BRIDGE INSPECTION PROGRAM

1.1 PURPOSE 1-1

1.2 PROGRAM OBJECTIVES 1-1

1.3 BACKGROUND 1-2

1.4 DEFINITIONS 1-2

1.5 STANDARD REFERENCES AND GUIDES 1-3

1.6 CONDITION EVALUATION 1-4

1.7 LOAD RATING 1-5

1.8 QUALITY CONTROL AND QUALITY ASSURANCE 1-5

CHAPTER 2: ORGANIZATION OF BRIDGE SAFETY AND EVALUATION

2.1 ORGANIZATION 2-1

2.2 JOB DESCRIPTION, QUALIFICATIONS, AND RESPONSIBILITIES 2-1

2.2.1 Manager of Bridge Safety and Evaluation 2-1
2.2.1.1 Description 2-1
2.2.1.2 Qualifications 2-1
2.2.1.3 Responsibilities 2-1
2.2.2 Transportation Supervising Engineer 2-2
2.2.2.1 Description 2-2
2.2.2.2 Qualifications 2-2
2.2.2.3 Responsibilities 2-2
2.2.3 Transportation Engineer III (Senior Engineer) 2-2
2.2.3.1 Description 2-2
2.2.3.2 Qualifications 2-2
2.2.3.3 Responsibilities 2-2
2.2.4 Transportation Engineer II and Transportation Engineer I 2-3
2.2.4.1 Description 2-3
2.2.4.2 Qualifications 2-3
2.2.4.3 Responsibilities 2-3

2.2.5 Lead Inspector (Team Leader) 2-3
2.2.5.1 Description 2-3
2.2.5.2 Qualifications 2-3
2.2.5.3 Responsibilities 2-3
2.2.6 Bridge Safety Inspector 2-3
2.2.6.1 Description 2-3
2.2.6.2 Qualifications 2-3
2.2.6.3 Responsibilities 2-4
2.2.7 Consultant Inspection Teams 2-4

2.3 LIAISON WITH OTHER DEPARTMENT SECTIONS 2-4

2.4 CONSULTANT COORDINATION 2-4

2.5 COORDINATION WITH OUTSIDE AGENCIES 2-4

CHAPTER 3: POLICIES

3.1 PERSONNEL POLICIES 3-1

3.1.1 Work Rules 3-1
3.1.2 Safety 3-1
3.1.3 Media/Public Relations 3-3

3.2 INSPECTION 3-3

3.2.1 Intensity of Inspection 3-3
3.2.2 Inspection Frequency 3-3
3.2.2.1 Inspection and Review Time Windows 3-3
3.2.2.2 Increased Inspection Interval 3-4
3.2.2.3 Decreased Inspection Interval 3-6
3.2.2.4 Diving Inspections 3-6
3.2.2.5 Overhead Sign Support (OHSS) Inspections 3-6
3.2.3 Inspection Team 3-6
3.2.4 Available ConnDOT Equipment 3-8
3.2.5 Maintenance and Protection of Traffic 3-8
3.2.6 Entry on Private Property 3-10
3.2.7 Critical Deficiency Reporting/Emergency Response - Flagging Procedures 3-10

3.3 LOAD RATING - QUALIFICATIONS & RESPONSIBILITIES 3-11

3.4 POSTING AND PERMITS 3-12

3.5 MAINTENANCE 3-12

3.6 BRIDGE FILES 3-13

3.6.1 Inspection Reports 3-13
3.6.2 Correspondence 3-13
3.6.3 Computations and Plans 3-13
3.6.4 Use of the Files 3-14

CHAPTER 4: QUALITY CONTROL/QUALITY ASSURANCE

4.1 GENERAL 4-1

4.2 PURPOSE AND SCOPE OF A QUALITY CONTROL/QUALITY ASSURANCE PLAN 4-1

4.3 QUALITY CONTROL PROCEDURES. 4-2

4.3.1 General 4-2
4.3.2 Staff Qualifications 4-3
4.3.2.1 General 4-3
4.3.2.2 Tracking Staff Qualifications 4-3
4.3.3 Quality Control Office Review Procedures 4-4
4.3.3.1 Bridge Inspection Rotation of Consultants 4-4
4.3.3.2 The Bridge Safety and Evaluation Unit's Internal Procedures 4-4
4.3.3.3 Procedures for Review of Inspection Reports and Data 4-5
4.3.3.3.1 Consultant Reports 4-5
4.3.3.3.2 State Team Reports 4-7
4.3.4 Quality Control Field Performance of Inspection Team Procedures 4-8
4.3.5 Corrective Action for Quality Control 4-8

4.4 QUALITY ASSURANCE PROCEDURES 4-9

4.4.1 General 4-9
4.4.2 Procedures for Sampling of Bridges for Review 4-9
4.4.3 Duties of Quality Assurance Review Team 4-9
4.4.4 Duties of the Bridge Safety and Evaluation Unit 4-10
4.4.5 Corrective Actions 4-10
4.4.5.1 General 4-10
4.4.5.2 Disqualification Reasons for Consultants Inspection Firms 4-10
4.4.5.3 Disqualification Procedures for State Inspected Personnel 4-11
4.4.6 Meetings 4-11

CHAPTER 5: GENERAL INSPECTION PROCEDURES

5.1 PLANNING AND SCHEDULING 5-1

5.1.1 Document Review 5-1
5.1.2 Pre-Inspection 5-2
5.1.3 Coordination of Access and Equipment Needs 5-3
5.1.4 Weather Considerations 5-3

5.2 TYPES OF INSPECTION 5-4

5.2.1 Routine Inspections 5-4
5.2.2 In-depth Inspections 5-5
5.2.3 Interim and Miscellaneous Inspections 5-7
5.2.3.1 Interim Inspections 5-7
5.2.3.2 Damage Inspections 5-7
5.2.3.3 Flood Surveys 5-9
5.2.3.4 Deck Surveys 5-9
5.2.3.5 Fracture Critical and Fatigue Sensitive Member Inspections 5-11
5.2.4 Underwater Inspections 5-13
5.2.5 Semi-Final Construction Inspections 5-18

5.3 RECORD KEEPING AND DOCUMENTATION 5-19

5.3.1 Bridge Inspection Report Format 5-20
5.3.2 Executive Summary 5-21
5.3.3 Field Notes and Field Forms 5-22
5.3.4 Introduction to Condition Rating Coding System 5-22
5.3.5 Structure Inventory and Appraisal Forms 5-24
5.3.6 Photographs 5-25
5.3.7 Documentation For Items Rated ‘5’ Or Less 5-27

CHAPTER 6: CONDITION EVALUATION PROCEDURES

GENERAL 6-1

Structure Identifier Requirements and Procedure 6-1
I. Structure Identifier Requirements 6-1
II. Procedure For Assigning Structure Numbers 6-2
Bridge Component Labeling Systems for Inspection Reporting 6-4
Measuring Clearances and Preparing Clearance Diagrams 6-6

6.1 DECK INSPECTION 6-10

6.1.1 Timber Decks 6-10
6.1.2 Concrete Decks 6-13
6.1.3 Metal Decks 6-19

6.1.4 Overlays 6-25
6.1.5 Curbs 6-30
6.1.5.1 Mountable Curbs 6-32
6.1.6 Medians 6-35
6.1.7 Sidewalks 6-36
6.1.8 Parapets 6-40
6.1.9 Bridge Railings 6-44
6.1.10 Drainage Systems 6-48
6.1.11 Lighting and Utilities 6-52
6.1.12 Deck Joints 6-57

6.2 SUPERSTRUCTURE INSPECTION 6-65

6.2.1 Bearings 6-65
6.2.1.1 Pin and Hanger Assemblies 6-77
6.2.1.2 Joint Measurements 6-87
6.2.2 Reinforced Concrete Slabs 6-90
6.2.3 Reinforced Concrete T-beams 6-93
6.2.4 Concrete Rigid Frames and Closed Spandrel Arches 6-98
6.2.5 Open Spandrel Concrete Arches 6-103
6.2.6 Prestressed and Post Tensioned Concrete Superstructures 6-109
6.2.7 Steel Multi-Girders 6-113
6.2.7.1 Steps to Follow when Fatigue Cracks are Observed 6-119
6.2.8 Steel Girder and Floorbeam Systems 6-122
6.2.9 Steel Box Girders 6-128
6.2.10 Trusses and Metal Arches 6-133
6.2.11 Movable Bridges 6-143
6.2.12 Timber Superstructures 6-164
6.2.13 Stone Masonry Arches 6-169

6.3 SUBSTRUCTURE INSPECTION 6-174

6.3.1 Concrete Substructures 6-174
6.3.2 Masonry Substructures 6-179
6.3.3 Timber Substructures 6-185

6.4 WATERWAYS 6-191

6.4.1 Channel and Channel Protection 6-191
6.4.2 Waterway Adequacy 6-196

6.5 CULVERTS 6-198

6.6 APPROACHES 6-204

CHAPTER 6 APPENDICES

6.1 Fatigue Sensitive Details
6.2 Steel Section Loss Measurements
6.3 Crack Arresting Detail
6.4 Definitions of Concrete Deterioration and Cracking
6.5 Inspection Measurements Required for Various Culvert Shapes
6.6 Typical Deck Joint Sketches
6.7 Stone Masonry Arches
6.8 Timber Decay and Deterioration
6.9 Concrete Open and Closed Arches and Frames
6.10 Waterways
6.11 Trusses
6.12 Scour and Stream Section Documentation

CHAPTER 7: LOAD RATINGS

7.0 GENERAL LOAD RATING REQUIREMENTS 7-1

7.1 APPROACH FOR LOAD RATING ANALYSIS 7-1

7.2 FORMAT FOR SUBMISSION 7-3

7.3 SELECTION OF MEMBERS FOR EVALUATION 7-4

7.4 MISCELLANEOUS RATING PROCEDURES & REQUIREMENTS 7-5

7.5 USING DESIGN CALCULATIONS FOR LOAD RATINGS 7-6

7.6 COMPUTER SOFTWARE 7-6

7.7 SPECIFICATIONS 7-7

7.8 DOCUMENTATION OF LOSSES 7-8

7.9 RE-EVALUATION 7-8

7.10 BRIDGES WITH UNKNOWN COMPONENT DETAILS 7-9

7.11 GUIDELINES FOR DETERMINING COMPACTNESS IN STEEL BEAMS 7-11

7.11.1 Riveted/Bolted Built-Up Members 7-11
7.11.2 Positive Moment Sections of Composite Steel I-Beams 7-11
7.11.3 Negative Moment Sections of Composite Steel I-Beams 7-12
7.11.4 Positive Moment Sections of Composite Steel Box Girders 7-13

7.11.5 Negative Moment Sections of Composite Steel Box Girders 7-14
7.11.6 Positive Moment Sections of Curved Composite Steel I-Girders 7-14
7.11.7 Negative Moment Sections of Curved Composite/Noncomposite Steel I-Girders..... 7-15
7.11.8 Positive Moment Sections of Curved Composite Steel Box Girders 7-17
7.11.9 Neg. Moment Sections of Curved Composite/Non-Composite Steel Box Girders..... 7-19
7.11.10 Tension Members 7-20

7.12 FIELD INVESTIGATION FORMS FOR LOAD RATING EVALUATIONS..... 7-21

CHAPTER 8: POSTING AND PERMIT PRACTICES

8.1 POSTING..... 8-1

8.2 PERMITS..... 8-4

LOAD RATING PROCEDURE..... 8-5

CHAPTER 9: TYPICAL MAINTENANCE ACTIVITIES

TYPICAL MAINTENANCE ACTIVITIES 9-1

PROCEDURES FOR CORRECTING CRITICAL BRIDGE DEFICIENCES..... 9-3

PRIORITY CODES FOR MAINTENANCE MEMORANDUMS..... 9-4

CHAPTER 10: CONDITION RATING GUIDELINES

10.1 REINFORCED CONCRETE DECKS 10-1

10.2 BEARINGS..... 10-7

10.3 REINFORCED CONCRETE 10-12

10.4 PRESTRESSED CONCRETE..... 10-18

10.5 STEEL..... 10-25

10.6 TIMBER 10-29

10.7 STONE MASONRY 10-32

10.8 WATERWAYS 10-36

10.8.1 Channel and Channel Protection 10-36
10.8.2 Waterway Adequacy 10-39

10.9 CULVERTS 10-40

10.9.1 Round Or Vertical Elongated Corrugated Metal Pipe Barrels 10-41
10.9.2 Corrugated Metal Pipe Arch Barrels 10-43
10.9.3 Structural Plate Arch Barrels 10-45
10.9.4 Low Profile Arch Long-Span Culvert Barrels 10-48
10.9.5 High Profile Arch Long-Span Culvert Barrels 10-50
10.9.6 Pear Shaped Long-Span Culvert Barrels 10-54
10.9.7 Horizontal Ellipse Long-Span Culvert Barrels 10-56
10.9.8 Corrugated Metal Box Culvert Barrel 10-59
10.9.9 Precast Concrete Culvert Barrels 10-62
10.9.10 Cast-In-Place Concrete Culvert Barrels 10-64
10.9.11 Masonry Culvert Barrels 10-66

10.10 RATING OF APPROACH CONDITIONS 10-69

10.11 TRAFFIC SAFETY FEATURES 10-76

10.12 MOVABLE BRIDGE CONDITION EVALUATION CODING 10-77

10.13 SUBSTRUCTURE CODING 10-88

10.14 RATING GUIDELINES FOR FORM BRI-18 "SUB-ITEMS" 10-94

Item 58 - Deck 10-94
Item 59 - Superstructure 10-103
Item 60 - Substructure 10-110
Item 61 - Channel Protection 10-116
Item 62 - Culverts & Retaining Walls 10-121
Approach Condition 10-124
Additional Notes/Comments 10-126

CHAPTER 11: CODING GUIDELINES FOR CONNDOT INVENTORY ITEMS

11.1 HIGHWAY BRIDGE CODING ITEMS 11-1

11.2 RAILROAD BRIDGE CODING ITEMS 11-11

11.3 OVERHEAD SIGN SUPPORT CODING ITEMS 11-16

CHAPTER 12: OVERHEAD SIGN SUPPORT INSPECTIONS

12.0 INSPECTION REQUIREMENTS 12-1

12.0.1 Minor Maintenance Required 12-2
12.0.2 Testing Required 12-2

12.1 DOCUMENTATION FOR INSPECTION 12-2

12.1.1 OHSS Inspection Report Format 12-4

12.2 REPORT REVIEW 12-4

12.3 MAINTENANCE CONCERNS 12-5

APPENDICES

APPENDIX A: ORGANIZATION CHARTS

- State of Connecticut Department of Transportation
- Office of Engineering & Highway Operations
- Bridge Safety & Evaluation

APPENDIX B: ADMINISTRATIVE FORMS

- Letter Requesting Permission for Entry on Private Property
- Instructions and Authorization Form for Use of Bridge Safety and Evaluation Files
- Request for Bridge Evaluation Load Ratings
- Field Review Checklist
- Maintenance Crew Leader's Report, Form MAINT. 014, Rev. 5/93

APPENDIX C: BRIDGE SAFETY & EVALUATION FORMS

Element Data Collection Form - Example PONTIS Input Form

BRI-8 Inspection Frequency Change Request

BRI- 9 Construction Punch List

BRI-10 Concrete Deterioration Worksheet

BRI-11 Seismic Data Sheet

BRI-12 Fracture Critical Data Sheet

BRI-13 Photo Log

BRI-14 Sliding Bearing Measurement Sheet

BRI-15 Rocker Bearing Measurement Sheet

BRI-16 Pot Bearing Measurement Sheet

BRI-17 Joint Measurement Sheet

BRI-18 Bridge Inspection Report Form

BRI-19	Structure Inventory & Appraisal Form (Highway Bridge)
BRI-24	Incident Report Form
BRI-25	Under Entry Structure Inventory & Appraisal Form
BRI-27	Inspection Report Transmittal Form
BRI-29	Pin & Hanger Data/Analysis Form
BRI-30	Hinge Data/Analysis Form
BRI-31	Inspection Scheduling Form
BRI-39	Structure Inventory & Appraisal Form (Railroad Bridge)
BRI-48	Sign Structure Inspection Report Form
BRI-49	Sign Structure Structure Inventory & Appraisal Form
BRI-58	Underwater Inspection Report Form
BRI-59	Underwater Inspection Structure Data Form

APPENDIX D: PROCEDURAL MEMORANDUMS

- Bridge Classifications (March 5, 1996)
- Priority Codes for Sign Support and Bridge Repairs (December 26, 1996)
- _____
- _____
- _____
- _____
- _____
- _____

APPENDIX E: BRIDGE INSPECTION MANUAL COMMENT FORM

GLOSSARY

CHAPTER 1

OVERVIEW OF CONNDOT BRIDGE INSPECTION PROGRAM

1.1 PURPOSE 1-1

1.2 PROGRAM OBJECTIVES 1-1

1.3 BACKGROUND 1-2

1.4 DEFINITIONS 1-2

1.5 STANDARD REFERENCES AND GUIDES 1-3

1.6 CONDITION EVALUATION 1-4

1.7 LOAD RATING 1-5

1.8 QUALITY CONTROL AND QUALITY ASSURANCE 1-5

CHAPTER 1

OVERVIEW OF ConnDOT BRIDGE INSPECTION PROGRAM

1.1 PURPOSE

The purpose of this Manual is to define the procedures and practices of the Connecticut Department of Transportation (ConnDOT) for determining the physical condition, load capacity, and maintenance needs of highway bridges in the State of Connecticut.

The provisions of this Manual are intended to:

- Establish policy for ConnDOT bridge inspection, evaluation and load rating program.
- Serve as a standard and provide uniformity in the execution of the program.
- Define program responsibilities for operating units within ConnDOT and for liaison with outside agencies.
- Provide bridge inspection, evaluation, load rating, and reporting procedures.
- Set guidelines for interpretation and implementation of AASHTO and FHWA codes and standards.
- Establish formal quality control and quality assurance procedures.
- Assist in training personnel to perform the various tasks required under the program.

1.2 PROGRAM OBJECTIVES

The objectives of ConnDOT's bridge inspection, evaluation, and load rating program are:

- To fulfill the requirements of the National Bridge Inspection Standards (NBIS).
- To ensure prompt discovery of any deterioration, defect, or structural deficiency that could be hazardous to the traveling public.
- To maintain an up-to-date inventory that records the condition and load capacity of all qualifying structures on certified public roads in Connecticut.

- To establish and maintain the information required by the Bridge Management System.

- To determine the extent of minor deterioration and initiate routine maintenance and repair work.

- To determine the extent of major deterioration and select rehabilitation or replacement candidates.

1.3 BACKGROUND

The general requirements for the inspection, evaluation, and load rating of the nation's bridges are defined in the National Bridge Inspection Standards (NBIS) in the Code of Federal Regulations, 23 CFR 650C. Each State is required to conduct biennial bridge inspections of its state and local bridges, and to record structure inventory and appraisal information in a specified format. The Federal Highway Administration (FHWA), U.S. Department of Transportation, is assigned the responsibility for collecting and storing the data reported by the states, and for administering the National Bridge Inventory.

The NBIS stipulates that each state highway department perform inspections, prepare reports, and determine load ratings in accordance with the provisions of the AASHTO "Manual for Condition Evaluation of Bridges" and the FHWA "Recording and Coding Guide for the Structure Inventory and Appraisal of the Nation's Bridges." In addition, other FHWA Manuals and Technical Advisories and AASHTO Specifications, Codes, and Guidelines serve as source material for state highway departments to conduct operations in compliance with the NBIS.

ConnDOT has established a program to meet the requirements of the NBIS. Certain procedures were contained in the ConnDOT Bridge Inspection Manual, 1984, and other practices have been established by ConnDOT policy, written and unwritten, or by historic practices. This Manual has been developed to set down the formal ConnDOT policy for complying with NBIS requirements, and to define the organizational structure and assign responsibilities to carry out the stated policy. In addition, this Manual is intended to compile available information to produce state-of-the-art guidance on inspection, condition evaluation, and load rating of bridges in Connecticut and replaces the existing ConnDOT Bridge Inspection Manual.

1.4 DEFINITIONS

AASHTO. American Association of State Highway and Transportation Officials, 444 North Capitol Street, N.W., Suite 225, Washington, DC 20001.

BRIDGE. (NBIS) A structure including supports erected over a depression or an obstruction, such as water, highway, or railway, and having a track or passageway for carrying traffic or other moving loads, and having an opening measured along the center of

the roadway of greater than or equal to 20' (6 m) between undercopings of abutments or spring lines of arches, or extreme ends of openings for multiple boxes; it may also include multiple pipes, where the clear distance between openings is less than half of the smaller contiguous opening (from the NBIS Transportation glossary).

QUALIFYING STRUCTURES. All bridges, as defined above, on certified public roadways, all bridges (other than pipes) 6 ft (2 m) or greater on State routes, all pedestrian bridges over State routes, all railroad bridges over State routes and other railroad bridges as identified in the appendix, all single pipes on State routes 10 ft. (3 m) or greater (inside diameter) except for water supply, combined sewer pipes, and pressure conduits.

NBIS (National Bridge Inspection Standards). Federal regulations establishing requirements for inspection procedures, frequency of inspections, qualifications of personnel, inspection reports, and preparation and maintenance of bridge inventory records. The NBIS apply to all structures defined as bridges located on or over all public roads.

ConnDOT. Connecticut Department of Transportation.

DEPARTMENT. Connecticut Department of Transportation.

FHWA. Federal Highway Administration, U.S. Department of Transportation.

MUTCD. The Manual of Uniform Traffic Control Devices.

NICET. National Institute for Certification in Engineering Technologies.

BMS (Bridge Management System). A system designed to optimize the use of available resources for the inspection, maintenance, rehabilitation, and replacement of bridges. (PONTIS is an example of a BMS)

1.5 STANDARD REFERENCES AND GUIDES

The primary references for use in conjunction with this Manual are the most current edition of the following Manuals along with any interims:

AASHTO, *"Manual for Condition Evaluation of Bridges."*

FHWA, *"Bridge Inspectors Training Manual."* ("BITM 90")

FHWA *"Bridge Inspectors Manual for Movable Bridges"*

FHWA, *"Recording and Coding Guide for the Structure Inventory and Appraisal of the Nation's Bridges."* ("FHWA Coding Guide")

This Manual provides interpretive and supplemental information to assist the user in performing bridge inspections, evaluations, load ratings, and reporting findings in accordance with the above mentioned references and the NBIS.

Numerous other references provided by AASHTO and FHWA, including Technical Advisories, are part of the reference body of documents needed to conduct the work in accordance with FHWA guidelines and procedures. These documents include:

AASHTO, *Standard Specifications for Highway Bridges* with annual interim updated specifications.

AASHTO, *Guide Specifications for Strength Evaluation of Existing Steel and Concrete Bridges*.

AASHTO, *Guide Specifications for Fatigue Evaluation of Existing Steel Bridges*.

AASHTO, *Standard Specifications for Movable Highway Bridges*.

AITC, *Timber Construction Manual.*

FHWA, *Inspection of Fracture Critical Bridge Members.*

FHWA, *Culvert Inspection Manual*.

FHWA, *Nondestructive Testing Methods for Steel Bridges.*

FHWA, *HEC 18 Evaluating Scour at Bridges*, Pub. #FHWA-IP-90-017, April 1993.

FHWA, *HEC 20 Stream Stability at Highway Structures*, Pub. #FHWA-IP-90-014, Feb. 1991.

FHWA, *Underwater Inspection of Bridges.*

1.6 CONDITION EVALUATION

The condition evaluation establishes the physical and functional condition of the bridge components including the extent of deterioration and other defects. The evaluation forms the basis for load rating of the bridge, maintenance actions, and repair/rehabilitation programs. The biennial inspection cycle provides a continuous record of bridge condition and rate of deterioration (See Section 5.2 of this manual for inspection types).

The bridge inspector's primary responsibility is public safety. If defects are discovered that present a hazard to safe passage across the structure, or endanger the bridge's normal

performance, the Department's emergency response procedures, as described in Section 3.2.7 of this Manual, must be initiated immediately.

The condition of each bridge member is to be evaluated in accordance with the 0-9 numeric coding system described in the "FHWA Coding Guide." ConnDOT guidelines for interpreting defects and deterioration and assigning a numeric rating to the structural element are contained in Chapter 10 in this Manual.

1.7 LOAD RATING

This Section Removed 05/04/2017 – Please reference the CT DOT Load Rating Manual available at: http://www.ct.gov/dot/cwp/view.asp?a=4048&Q=562040&PM=1

1.8 QUALITY CONTROL AND QUALITY ASSURANCE

In order to maintain the accuracy and consistency of inspections and load ratings, ConnDOT is committed to a defined quality control, quality assurance program. Quality Control procedures are designed to maintain the caliber of bridge inspection and load rating at or above a specified standard. Quality Assurance measures are instituted to monitor the level of the overall program.

ConnDOT's Quality Control and Quality Assurance procedures and responsibilities are contained in Chapter 4 of this Manual.

CHAPTER 2

ORGANIZATION OF BRIDGE SAFETY AND EVALUATION

2.1 ORGANIZATION 2-1

2.2 JOB DESCRIPTION, QUALIFICATIONS, AND RESPONSIBILITIES 2-1

2.2.1 Manager of Bridge Safety and Evaluation 2-1
2.2.1.1 Description 2-1
2.2.1.2 Qualifications 2-1
2.2.1.3 Responsibilities 2-1
2.2.2 Transportation Supervising Engineer 2-2
2.2.2.1 Description 2-2
2.2.2.2 Qualifications 2-2
2.2.2.3 Responsibilities 2-2
2.2.3 Transportation Engineer III (Senior Engineer) 2-2
2.2.3.1 Description 2-2
2.2.3.2 Qualifications 2-2
2.2.3.3 Responsibilities 2-2
2.2.4 Transportation Engineer II and Transportation Engineer I 2-3
2.2.4.1 Description 2-3
2.2.4.2 Qualifications 2-3
2.2.4.3 Responsibilities 2-3
2.2.5 Lead Inspector (Team Leader) 2-3
2.2.5.1 Description 2-3
2.2.5.2 Qualifications 2-3
2.2.5.3 Responsibilities 2-3
2.2.6 Bridge Safety Inspector 2-3
2.2.6.1 Description 2-3
2.2.6.2 Qualifications 2-3
2.2.6.3 Responsibilities 2-4
2.2.7 Consultant Inspection Teams 2-4

2.3 LIAISON WITH OTHER DEPARTMENT SECTIONS 2-4

2.4 CONSULTANT COORDINATION 2-4

2.5 COORDINATION WITH OUTSIDE AGENCIES 2-4

CHAPTER 2

ORGANIZATION OF BRIDGE SAFETY AND EVALUATION

2.1 ORGANIZATION

The Bridge Safety and Evaluation Section of the Connecticut Department of Transportation is positioned within the Engineering Design Services of the Bureau of Engineering and Highway Operations. Charts detailing the organization of the Department of Transportation in general and the Bridge Safety and Evaluation Section in specific can be found in Appendix A of this manual.

2.2 JOB DESCRIPTION, QUALIFICATIONS, AND RESPONSIBILITIES

The National Bridge Inspection Standards establish minimum qualifications for the individual in charge of the unit responsible for bridge inspection, reporting, and inventory and for individuals in charge of inspection teams. The Department has developed more detailed qualifications for these positions, as well as other positions required to complete the bridge safety program. Additionally, qualifications for consultant inspection programs have been defined.

2.2.1 Manager of Bridge Safety and Evaluation

2.2.1.1 Description - Supervises the staff of the Bridge Safety and Evaluation Section including bridge engineers, inspectors and other staff members as assigned.

2.2.1.2 Qualifications - In addition to those qualifications listed in the NBIS, the Department requires a minimum of two (2) years supervisory experience in bridge and structural design, bridge construction or bridge repair projects, or hydraulic design of highway structures. The Department requires that the Manager of Bridge Safety and Evaluation maintain a Connecticut Professional Engineers license.

2.2.1.3 Responsibilities - Supervises the staff of the Bridge Safety and Evaluation Section; schedules, assigns, oversees and reviews the work of staff; provides staff training and assistance; conducts performance evaluations; determines priorities and plans Section work; establishes and maintains Section procedures; develops or makes recommendations on the development of policies and standards; acts as liaison with other operating units, agencies and outside officials regarding Section policies and procedures; prepares reports and correspondence; administers and coordinates an effective Bridge Safety Inspection Program for all bridges on State highways including both Federal-Aid Systems and State System; acts as specialized consultant in all matters pertaining to design, construction and maintenance of bridges and structures; supervises and coordinates work of the inspection crews; oversees

maintenance of bridge inventories and inspection records; supervises and conducts training programs for bridge inspectors and reviews performance; prepares detailed manuals on inspection procedures for staff and district personnel; oversees review and appraisal of inspection reports; assists in determining which bridge repairs can be undertaken by State personnel and which require an outside contract; evaluates field reports of programs for bridge structure replacement or major repairs; provides information to Bridge Design for contract repairs; interprets Federal and State policy and briefs staff; represents State on Federal/State committees and panels; makes recommendations directly to the Chief Engineer on unsafe bridges and structures; performs related duties as required.

2.2.2 Transportation Supervising Engineer

2.2.2.1 Description - Directs Transportation Engineer III, II, and I, Lead Inspectors, and Bridge Inspectors in the performance of the bridge inspection process.

2.2.2.2 Qualifications - A minimum of eight (8) years experience in the field of civil engineering (a bachelors degree may be substituted for four (4) of the eight (8) years experience). Two (2) years as an engineer with individual or supervisory responsibility in bridge engineering projects, and a minimum of one (1) year employment as a Transportation Engineer III in Bridge Design if a ConnDOT employee.

2.2.2.3 Responsibilities - Directs Engineers III, II, and I, Lead Inspectors, and Bridge Inspectors in the performance of bridge inspections; performs administrative duties utilizing communication skills, interpersonal skills, and problem solving; advises the Manager of Bridge Safety and Evaluation on bridge and structure related topics; acts as liaison with consultants for inspection and special projects as assigned.

2.2.3 Transportation Engineer III (Senior Engineer)

2.2.3.1 Description - A Transportation Engineer III acts as a working lead who assists a Supervising Engineer by supervising an inspection team, numerous inspection teams, or other section employees or consultants in their daily activities.

2.2.3.2 Qualifications - Seven (7) years of experience in civil engineering including one (1) year of supervisory experience are required for this position. A Bachelors degree in civil or structural engineering can be substituted for four (4) years of experience.

2.2.3.3 Responsibilities - Determines schedules for inspection of bridges in their assigned area and assists in in-depth inspections of complex bridges, to research and investigate problems encountered during the inspection process, to review the reports prepared by the inspection teams, prepare maintenance memorandums, and other tasks required for the inspection program.

2.2.4 Transportation Engineer II and Transportation Engineer I

2.2.4.1 Description - Transportation Engineer II and I have the same duties as described in section 2.2.3.1 above on tasks with less complexity.

2.2.4.2 Qualifications - Six (6) years experience for Transportation Engineer II and five (5) years experience for Transportation Engineer I in civil engineering with up to four (4) years experience substituted by a Bachelors degree in engineering.

2.2.4.3 Responsibilities - Similar to those assigned to the Transportation Engineer III and other tasks as determined by the Manager of the Bridge Safety and Evaluation Section.

2.2.5 Lead Inspector (Team Leader)

2.2.5.1 Description - Acts as Lead Inspector of a field inspection team responsible for technical inspection of bridges and related structures based on National Bridge Inspection Standards.

2.2.5.2 Qualifications - Five (5) years of experience in bridge inspection in a responsible technical capacity. College training in civil engineering may be substituted on the basis of fifteen (15) semester hours equaling one-half (1/2) year of experience to a maximum of two (2) years for an Associate's degree.

Has completed a comprehensive training course based on the BITM 90.

2.2.5.3 Responsibilities - Plans work flow and determines priorities; schedules, assigns, oversees, and reviews work; establishes and maintains procedures; assists in conducting performance evaluations; acts as liaison with operating units, agencies, and outside officials regarding policies and procedures; inspects bridges in accordance with this and all other applicable manuals mentioned in Section 1.5.; prepares inspection notes and sketches covering all bridge defects noted; operates bridge inspection equipment as required; evaluates seriousness of bridge defects and makes on-the-spot decisions as required; prepares accurate reports of all bridge inspections; ensures on-site traffic protection; performs semi-final bridge construction inspections; performs related duties as required.

2.2.6 Bridge Safety Inspector

2.2.6.1 Description - Independently performs a full range of tasks as a member of an inspection team assisting a Lead Inspector in the inspection of bridges and related structures in accordance with National Bridge Inspection Standards.

2.2.6.2 Qualifications - Four (4) years of experience in field construction inspection, field engineering survey work, or bridge maintenance work. College training in civil engineering may be substituted on the basis of fifteen (15) semester

hours equaling one-half (1/2) year of experience to a maximum of two (2) years for an Associate's degree. For State employees, one (1) year of experience in bridge maintenance work at or above the level of Department of Transportation Maintainer 3 may be substituted. Will complete a comprehensive training course based on the BITM 90 at the earliest possible date.

2.2.6.3 Responsibilities - Reviews bridge plans and previous inspection reports.; coordinates traffic control and equipment at inspection site; assists in the inspection of bridges; assists in the preparation of reports of all bridge inspections, including notes and sketches; operates bridge inspection equipment; performs related duties as required.

2.2.7 Consultant Inspection Teams

Any consultants utilized for the inspection of bridges for the Department shall maintain a staff of competent field and office personnel that have qualifications meeting the requirements of NBIS and as outlined above with other stipulations as detailed in the individual scopes of work.

2.3 LIAISON WITH OTHER DEPARTMENT SECTIONS

Should a need arise that requires assistance from other Department sections such as Design, Maintenance, Rail Systems, and the Testing Lab, arrangements will be made by contacting the Supervising Engineer in charge of the inspection area.

2.4 CONSULTANT COORDINATION

The Bridge Safety and Evaluation Section will assign the task of coordination of consultant inspection contracts to a Supervising Engineer. This person will be responsible for tracking the consultant's work, schedule, and billing. The Supervising Engineer will assign the day-to-day responsibilities of the coordination to a Transportation Engineer (liaison engineer) and other employees as necessary.

Consultants are responsible for notifying the Bridge Safety and Evaluation Section of their proposed schedule and any changes to that schedule in a timely manner.

2.5 COORDINATION WITH OUTSIDE AGENCIES

The Bridge Safety and Evaluation Section will arrange for railroad flagging protection on an as-needed basis. Flagging shall be arranged by the Engineer III and a request forwarded to the Supervising Engineer or to the support section in charge so that a purchase requisition can be prepared. This process will insure consistency in record keeping and tracking of flag usage. Consultant requests for flagging will be submitted to their liaison engineer at least two (2) weeks prior to need.

Coordination with other agencies, such as outside testing laboratories, local and state police, etc., should be discussed with the Supervising Engineer in charge of each inspection area.

CHAPTER 3

POLICIES

3.1 PERSONNEL POLICIES ..... 3-**Error! Bookmark not defined.**

3.1.1 Work Rules 3-1
3.1.2 Safety 3-1
3.1.3 Media/Public Relations 3-3

3.2 INSPECTION 3-3

3.2.1 Intensity of Inspection 3-3
3.2.2 Inspection Frequency 3-3
3.2.2.1 Inspection and Review Time Windows 3-3
3.2.2.2 Increased Inspection Interval 3-4
3.2.2.3 Decreased Inspection Interval 3-6
3.2.2.4 Diving Inspections 3-6
3.2.2.5 Overhead Sign Support (OHSS) Inspections 3-6
3.2.3 Inspection Team 3-6
3.2.4 Available ConnDOT Equipment 3-8
3.2.5 Maintenance and Protection of Traffic 3-8
3.2.6 Entry on Private Property 3-10
3.2.7 Critical Deficiency Reporting/Emergency Response - Flagging Procedures 3-10

3.3 LOAD RATING - QUALIFICATIONS & RESPONSIBILITIES 3-11

3.4 POSTING AND PERMITS 3-12

3.5 MAINTENANCE 3-12

3.6 BRIDGE FILES 3-13

3.6.1 Inspection Reports 3-13
3.6.2 Correspondence 3-13
3.6.3 Computations and Plans 3-13
3.6.4 Use of the Files 3-14

CHAPTER 3

POLICIES

3.1 PERSONNEL

3.1.1 Work Rules

All personnel should be familiar with the Department's *"Employee Handbook*." All supervisors shall also be familiar with the *"Personnel Handbook for Supervisors at All Levels*." This handbook is available to assist all supervisors to become more aware of their role, function, and authority, and to assist them in dealing with common types of employee problems.

3.1.2 Safety

It is the responsibility of each person involved in the inspection process to be familiar with the Department's handbook entitled *"Guidelines for Safe Practice"* and all applicable Administrative Memorandums.

Bridge Safety Inspectors should pay special attention to the following sections:

I. Accidents

III. General Safety for All Employees

IV. Clothing and Protective Wearing Apparel

V. Trucks and Passenger Cars

VI. Power Equipment
- 42 Rented Equipment and Trucks
- 43 Operators Qualifications
- 44 Condition of Equipment
- 45 Operation of Equipment
- 46 Gasoline Filling
- 47 Breakdown of Equipment

VII. Plants and Plant Operation
- 74 Movable Bridges and Electrical Repairs

IX. Use of Small Tools
- 93 General
- 94 Sharp Edge Tools
- 95 Tool Storage
- 98 Crowbars
- 910 Cold Chisels
- 102 Hand Hammers
- 103 Hand Shovels
- 105 Ladders
- 111 Wrenches

X. Job Protective Devices

XI. Operations - Field and Plant
- 120 Bridge Operation
- 121 Water Operations
- 125 Engineering Inspection and Survey
- 145 Traffic Status and Road Inventory
- 151 Bucket Truck Operations

Additionally, the OSHA publication *"Construction Industry OSHA Safety and Health Standards"* will be followed for those areas where it pertains to inspection work. A copy of the current OSHA Manual can be found in the office of the Manager of Bridge Safety and Evaluation. The sections pertaining to this type of work include (but are not limited to) the following:

1926.100 Head Protection
- 101 Hearing Protection
- 102 Eye and Face Protection
- 103 Respiratory Protection
- 104 Safety Belts, Lifelines, and Lanyards
- 106 Working Over or Near Water
- 107 Definitions Applicable to this Section

1926.300 General Requirements Hand and Power Tools
- 301 Hand Tools
- 302 Power Operated Hand Tools
- 303 Abrasive Wheels and Tools

1926.451 Scaffolding
- 452 Guardrails, Handrails, and Covers

1926.556 Aerial Lifts

1926.950 Power Transmission and Distribution

1926.1053 Ladders

The above listing is not all inclusive. OSHA regulations are comprehensive and many sections may apply in part. As the regulations are constantly revised, refer to the most recent OSHA manual for any updates and/or revisions.

3.1.3 Media/Public Relations

The Department maintains an Office of Communications, which has the responsibility of dealing with the media and other interested public agencies and/or parties. The field forces should respond to the public/media in a courteous manner. Any questions that arise during the course of an inspection should be referred to the Manager of Bridge Safety and Evaluation. It will be his responsibility to deal with the question or to refer the question to the Office of Communications.

3.2 INSPECTION

3.2.1 Intensity of Inspection

The intensity of the inspection will vary depending on the extent of available access to the structural elements and the type of inspection required (in-depth, routine, underwater, etc.). The intensity should be as described in the AASHTO "Manual for Condition Evaluation of Bridges" and as described elsewhere in this manual.

3.2.2 Inspection Frequency

Each qualifying structure will be inspected in accordance with ConnDOT procedures by qualified bridge inspectors at regular intervals of 24 months, unless they meet the increased or decreased inspection interval requirements explained below. The frequency of all inspections shall be reviewed after **each** inspection and adjusted as appropriate. All inspections and inspection reports shall meet the appropriate requirements of Title 23 part 650 subpart C of the Code of Federal Regulations.

3.2.2.1 Inspection and Review Time Windows

Inspections should be **started** on or before the inspection due date, but must be **completed** no later than 90 days after the inspection due date.

Inspection reports should be submitted within 21 days of the inspection completion date.

Inspection reports should be reviewed within 45 days of its submittal by an individual that meets the qualifications of a Transportation Engineer 3 or greater.

REVISED 06/17/05

Definitions for Section 3.2.2.1:

Completed Inspection: The overall completion of the field inspection of the structure. During the inspection, all components shall be observed from within the distances specified in this manual. This may require the use of the following equipment and/or personnel: underbridge inspection vehicle, railroad flagman, boat, manlift, and lane closures as necessary.

Completed Inspection Report: The completion of a paper report based on the completed inspection that meets all the requirements of this manual. This report must be signed by at least two qualifying bridge inspectors.

Completed Review: Signing the reviewed inspection report package, forwarding the BRI-19, and completing all correspondence to take care of the structure.

Inspection Due Date: The last inspection date plus the inspection frequency.

REVISED 06/17/05

3.2.2.2 Increased Inspection Interval

This Section removed 3/14/08.

REMOVED 03/14/08

This Page intentionally left blank.

REMOVED 03/14/08

3.2.2.3 Decreased Inspection Interval

Certain bridges may require inspection (full or partial) more frequently than at a two (2) year interval when known deficiencies or questionable conditions exist. The following are some examples of structures that would be candidates for more frequent inspections:

- Bridges subjected to frequent overloads
- Bridges identified as vulnerable to sudden failure because of fracture, scour, overload or collision
- Other bridges with unique or unusual details, conditions or weaknesses

Generally, the decision to conduct inspections at less than a two (2) year interval, and the intended intensity of the inspection, will be proposed by the Engineer 3 in charge of the structure, approved by the Supervising Engineer, and submitted to the Manager of Bridge Safety and Evaluation for final approval. All requests shall consider the age, strength, design, conditions, traffic volume, loading, and other appropriate factors. Form BRI-8 "Inspection Frequency Change Request" must be completed for all change requests.

3.2.2.4 Diving Inspections

Diving inspections will normally be scheduled every two (2) years, one (1) month prior to the above water inspection. Diving inspection frequency can be increased or decreased to match the routine inspection frequency, up to a maximum of four (4) years. Generally, changes to the diving inspection frequency shall be proposed by the Transportation Engineer 3 in charge of the structure, approved by the Supervising Engineer, and submitted to the Manager of Bridge Safety and Evaluation for final approval. The proposal shall discuss the underwater condition of the bridge and its susceptibility to scour. Form BRI-8 "Inspection Frequency Change Request" must be completed for all change requests.

3.2.2.5 Overhead Sign Support (OHSS) Inspections

The interval for routine inspections of OHSS is four (4) years. These structures are not eligible for an increased inspection interval. The inspection and review time requirements for OHSS should generally match the requirements of Section 3.2.2.1. The inspection interval for OHSS can be decreased, as appropriate, following the guidelines in Section 3.2.2.3 “Decreased Inspection Interval”.

3.2.3 Inspection Team

The Inspection Team shall, at a minimum, consist of a Lead Inspector and a Bridge Inspector. The makeup of the team can vary depending on the complexity of the bridge and the difficulty of the proposed inspection. The following is a listing of the Inspection Team makeup for various bridge classes:

For Class I and Class II bridges requiring routine inspection, the team shall consist of the Lead Inspector and a Bridge Inspector. A Transportation Engineer III may participate in these inspections based on conditions, weight restrictions, or complex details at his/her discretion. The responsibility for preparation of the report lies with the Lead Inspector and Bridge Inspector.

Class III bridges requiring a routine inspection are to be inspected by a team consisting of a Lead Inspector and a minimum of one Bridge Inspector. If complexities and conditions warrant, an Engineer III and/or additional Bridge Inspectors may be added to the team. The responsibilities of the Engineer III will typically include, but not be limited to, fracture critical members, fatigue sensitive details, major deterioration, bridge hit along with damage, etc.

For Class I in-depth inspections, the team shall consist of a Lead Inspector and Bridge Inspector as a minimum. Additional personnel may be added as required.

For Class II in-depth inspections, the team will consist of a Lead Inspector and Bridge Inspector supplemented by an Engineer III for a minimum of 25% of the inspection. The Engineer III=s inspection shall concentrate on the more critical parts of the structure and shall sign the report noting those details inspected. Consultants assigned Class II in-depth inspections shall inspect the bridge with an inspection team that meets or exceeds the requirements as stated above.

Class III bridges requiring an in-depth inspection are to be inspected by a team consisting of an Engineer III, Lead Inspector, and Bridge Inspector for the duration of the inspection. The Engineer III will participate in the inspection and have the overall responsibility for final report preparation and signing. The Lead Inspector will also sign the report. The report will be reviewed by a Supervising Engineer or an Engineer III not involved with the inspection. Consultant Teams assigned Class III bridges for in-depth inspection will provide a team that meets NBIS qualifications.

Interim, damage, and complaint inspections will be performed by an Engineer III or Lead Inspector. Reports will be generated and signed by the person conducting these inspections.

Underwater inspections will be performed by a Team consisting of a Lead Inspector qualified under NBIS requirements and a certified diver. The team shall be supplemented with additional bridge inspectors and divers as required by the complexity of the structure.

3.2.4 Available ConnDOT Equipment

The Bridge Safety and Evaluation Section has access to a large inventory of equipment for its use in inspecting the State's bridges. The inspection teams have access to:

- Vehicle Mounted Telescopic Lifts
- 60' (18 m) reach Paxton Mitchell Snooper Underbridge Inspection Unit
- 56' (17 m) reach MOOG Underbridge Inspection Unit (as needed)
- Floating work platforms

Scheduling of the underbridge inspection units ("snoopers") is to be coordinated through a designated office staff member assigned to this task by the Manager of Bridge Safety and Evaluation. It should be noted that there is a Department policy requiring the use of a truck mounted impact attenuator vehicle whenever State snoopers are used. Teams may request approval to rent other access equipment as necessary.

Testing equipment available to the Inspection Team includes:

- "D" Meters for determining metal thickness
- Pachometer (concrete reinforcement locator)
- Half Cell Testing Kit
- Magnetic Particle Testing Kit
- Dye Penetrant Testing Kit
- Fiber Optic Inspection Lens (20' (6 m) length)
- Air Quality Meter
- Swiss Hammer

Other equipment is available from the Department's Testing Labs on an as-needed basis. Arrangements for this equipment should be made through the Supervising Engineer.

3.2.5 Maintenance and Protection of Traffic

During the course of the inspection it may be necessary to close lanes of highways to gain access to important parts of the bridge. The signing patterns utilized for this work shall be in conformance with the Department's *Traffic Control Patterns for Highway Maintenance Operations* (as revised) and the current edition of the *Manual for Uniform Traffic Control Devices (MUTCD).* The latest editions of these publications are available from the Bridge Safety office.

There will be instances when due to on/off ramp locations or intersections, the standard traffic control plans will not fit the actual field conditions. In such cases,

additional signs, cones, etc. may be required. Consultant Teams shall coordinate complex signing patterns with the Consultant's Project Engineer.

An impact attenuator truck shall be used to protect each workzone on all limited access highways.

For the Department's inspection teams, Maintenance forces will provide the signing pattern on an as-needed basis. Arrangements for patterns shall be coordinated through the Transportation Engineer III in charge of that inspection area. For Consultant Teams, the signing pattern shall be installed by the Consultant, or an agent of the Consultant, based on the above noted standards.

Procedure for obtaining lane closures:

1. Fill out the lane closure form (available from the Bridge Safety Office) for the following week's inspections. A line must be included for all closures, including shoulder closures on State Routes.
2. Submit the form to the Supervising Engineer for review.
3. The form is then submitted to Bridge Safety's designated Lane Closure Coordinator. The form should be submitted by mid-day on Wednesday for closures the following week.
4. Forms are reviewed, compiled and forwarded to the Highway Operations Unit on Thursday for the following week.
5. Daily closures should be confirmed each morning by the Supervising Engineers and a notice of confirmation or cancellation should be forwarded to the Lane Closure Coordinator by 8:30 AM for that days work.

Consultants shall provide a detailed two-week schedule of planned activities involving maintenance and protection of traffic to the following:

1. Manager of Bridge Safety and Evaluation (designated project representative)
2. First Elected Official of a town or city for local bridges
3. Other parties as identified by the Department

Generally, daytime lane closures are only permitted between the hours of 9:00 AM and 3:00 PM. The Department's *Structure Inspection Daytime Lane Closure Guide* shall be used as a guideline when scheduling lane closures. All lane closures will be terminated if extensive traffic backups occur, as ordered by the Maintenance Superintendent, or as ordered by the State Police. Additionally, the inspection team is responsible for monitoring traffic backups and having the traffic control signing

patterns removed should the backups become excessive. Lane closures are not permitted to exceed two miles in length.

Inspection teams are responsible for informing the highway operations center in the area whenever they close a lane on a State highway. For work in District 3, the Bridgeport Operations Center shall be notified at (203) 696-2690. For work in Districts 1, 2 & 4, the Highway Operations Center in Newington shall be notified at (860)-594-3447. Notification shall be given prior to the start of any lane closure, after the completion of the lane closure, and whenever it is necessary to change from one lane to another.

3.2.6 Entry on Private Property

Entry onto private property for the purpose of inspecting bridges and structures should not, for the most part, be required. Inspectors should, however, understand the rights of property owners and the restrictions on entering private property. The procedures for obtaining permission, should it be necessary, can be obtained by contacting the Bridge Safety office. An example entry letter is attached in "Appendix B" of this manual.

3.2.7 Critical Deficiency Reporting/Emergency Response - Flagging Procedures

When a critical defect affecting the safety of the bridge structure or the safety of the traveling public is found during an inspection, it is imperative that the Manager of the Bridge Safety and Evaluation Section be informed of the situation immediately. Some examples of critical defects include:

- Distress in primary members where the members may not be capable of safely carrying the imposed loads, and partial or total failure of the bridge is a possibility.

- Scour at or under a substructure unit is extensive enough that significant movement of the substructure unit is possible, which could cause the bridge to collapse.

- Substructure movement or distress that is so excessive that the substructure unit may not be capable of supporting the superstructure and partial or complete failure is a possibility.

- Suspected cracks in fracture critical members.

- Any situation where the structural integrity of the bridge is such that its safety is in question.

- Any situation that poses an immediate hazard to traffic on or under the bridge due to loose or broken components, severe deterioration of the bridge riding surface or materials that can drop to occupied areas below the bridge.

The following information should be noted for reporting critical defects:

1. Structure Number
2. Town
3. Route Number/Road Name
4. Features Crossed
5. Type of Bridge (i.e.: Thru Truss, 2 Girder, etc.)
6. Type of Defect Encountered
7. Location of Defect
   a. Span
   b. Girder/Floorbeam/Stringer No.
8. Other Pertinent Information

The above noted information is to be transmitted by the inspection team by telephone to a Senior Engineer (or above) who will in turn inform the Supervising Engineer for that inspection area. A written report accompanied by field sketches and photographs (if available) shall be forwarded to the Supervising Engineer within 24 hours of the initial report.

Consultant Teams that find critical defects shall immediately contact the Consultant's Project Engineer who will have the responsibility of assessing the problem and notifying the Bridge Safety and Evaluation Section.

Critical deficiencies identified outside of normal working hours, when the Bridge Safety office is not staffed, shall be reported to the Highway Operations Center in Newington at (860)-594-3447.

If it is deemed necessary, repair sketches and/or procedures may be required. Coordination with Bridge Maintenance will be performed by the Supervising Engineer.

3.3 LOAD RATING - QUALIFICATIONS & RESPONSIBILITIES

This Section Removed 05/04/2017 – Please reference the CT DOT Load Rating Manual available at: http://www.ct.gov/dot/cwp/view.asp?a=4048&Q=562040&PM=1

This Section intentionally left blank

3.4 POSTING AND PERMITS

See Chapter 8 of this manual for the latest posting and permit requirements.

3.5 MAINTENANCE

The inspection report reviewer, with input from the inspection team, will prepare a list of possible maintenance items that should be performed to extend the useful life of the structure and to ensure its continued safety. These items shall be presented in a memo to Bridge Maintenance and prioritized as indicated below:

Priority A - Critical - IMMEDIATE response by Bridge Maintenance utilizing Bridge Safety and Evaluation's traffic pattern still in place, where one is being used.

Priority B - Urgent, but not critical - Response within 1 WEEK.

Priority C - Important, but not urgent - Response within 2 MONTHS.

Priority D - Of lesser importance, but needing attention - Response within 6 MONTHS.

Priority E - Routine repairs - scheduled by Bridge Maintenance to coincide with other commitments of the same type or within the same general area. - Response within 2 YEARS.

For details and procedures regarding Maintenance Memorandums see Chapter 9.

When reviewing a bridge maintenance memorandum, sign support maintenance memorandum and/or a railroad maintenance memorandum, it is important that the repairs be meaningful to prolong the life of the structure (not cosmetic) and are cost effective when considering the life cycle costs of the structure.

3.6 BRIDGE FILES

The Bridge Safety and Evaluation Section will maintain a file for each bridge in its inventory in accordance with the NBIS and the AASHTO Manual for Condition Evaluation of Bridges.

The files are to be organized into three sections as follows:

1. Inspection Reports (in reverse chronological order)

2. Correspondence (in reverse chronological order)

3. Computations and Plans

(for smaller bridge files, 1 & 2 may be mixed in chronological order)

3.6.1 Inspection Reports

The reports, including all pertinent forms, field notes, photographs, and miscellaneous notes, are to be bound using a suitable, removable clip or binding. This will facilitate removal of portions of the report for reproduction.

3.6.2 Correspondence

This section shall include pertinent letters such as maintenance memos, letters to towns, letters to utility companies, permit information, etc. These documents should be arranged so that the order of documents is maintained. The correspondence shall be placed in reverse chronological order. For correspondence referring to multiple bridges, a reference sheet with the location of the complete document may suffice.

3.6.3 Computations and Plans

This portion of the file should contain the rating evaluation computations, special computations for deteriorated members, scour computations, etc. The first sheet of this package should contain a Rating Summary sheet with the results and dates of the latest rating or re-rating.

Plan sheets, preferably the as-built drawings, should be included in the file folder or the location of these plans referenced for easy retrieval.

3.6.4 Use of the Files

Since it is extremely important that the information contained in the inspection files be available in an emergency situation, the removal of the file from its assigned location or removal of portions of the individual file must be discouraged or monitored carefully.

To monitor the files the following policy shall apply:

1. No original file or portion thereof may be removed from the Bridge Safety and Evaluation Office without special approval from the Manager of Bridge Safety and Evaluation. Bridge files shall be reviewed in the Bridge Safety and Evaluation Office with the file reviewer making copies of information they wish to keep.

2. Files shall be kept in chronological order with all contents facing forward.

3. If it is necessary to separate or unbind any part of the file for making copies, you are expected to return this material to its original form and order.

4. When a folder is removed from a file, a reference card shall be filled out and inserted in place of the file. (Information on these cards shall include Name, Unit or Firm, Telephone Number, Date Taken, and Bridge No.)

5. Please do not re-file the folders. This will be done by designated staff members.

6. File folders in poor condition shall be given to the designated staff member for repair or replacement.

A form that includes the above noted instructions along with signature blocks and other pertinent information must be signed and submitted to the designated staff member prior to access to any files (See appendix for a copy of this form).

CHAPTER 4

QUALITY CONTROL/QUALITY ASSURANCE

4.1 GENERAL 4-1

4.2 PURPOSE AND SCOPE OF A QUALITY CONTROL/QUALITY ASSURANCE PLAN 4-1

4.3 QUALITY CONTROL PROCEDURES 4-2

4.3.1 General 4-2
4.3.2 Staff Qualifications 4-3
4.3.2.1 General 4-3
4.3.2.2 Tracking Staff Qualifications 4-3
4.3.3 Quality Control Office Review Procedures 4-4
4.3.3.1 Bridge Inspection Rotation of Consultants 4-4
4.3.3.2 The Bridge Safety and Evaluation Unit's Internal Procedures 4-4
4.3.3.3 Procedures for Review of Inspection Reports and Data 4-5
4.3.3.3.1 Consultant Reports 4-5
4.3.3.3.2 State Team Reports 4-7
4.3.4 Quality Control Field Performance of Inspection Team Procedures 4-8
4.3.5 Corrective Action for Quality Control 4-8

4.4 QUALITY ASSURANCE PROCEDURES 4-9

4.4.1 General 4-9
4.4.2 Procedures for Sampling of Bridges for Review 4-9
4.4.3 Duties of Quality Assurance Review Team 4-9
4.4.4 Duties of the Bridge Safety and Evaluation Unit 4-10
4.4.5 Corrective Actions 4-10
4.4.5.1 General 4-10
4.4.5.2 Disqualification Reasons for Consultant Inspection Firms 4-10
4.4.5.3 Disqualification Procedures for State Inspection Personnel 4-11
4.4.6 Meetings 4-11

CHAPTER 4

QUALITY CONTROL/QUALITY ASSURANCE

4.1 GENERAL

The following chapter is intended to satisfy the requirements of the National Bridge Inspection Standards (NBIS), *Code of Federal Regulations*, Title 23, Part 650, Subpart C, Section 650.313 (23 *CFR* 650.313):

> (g) *Quality control and quality assurance*. Assure systematic quality control and quality assurance procedures are used to maintain a high degree of accuracy and consistency in the inspection program. They include periodic field review of inspection teams, periodic bridge inspection refresher training for program managers and team leaders, and independent review of inspection reports and computations.

4.2 PURPOSE AND SCOPE OF A QUALITY CONTROL/QUALITY ASSURANCE PLAN

The Bridge Safety and Evaluation (BS&E) Unit's Quality Control (QC) and Quality Assurance (QA) plan provides a systematic approach to ensure the quality and consistency of data produced to assess the safety of in-service bridges.

Quality Control is the enforcement of procedures that are intended to maintain the caliber of bridge inspection, and documentation at or above the NBIS standard. Quality Control is the responsibility of every person involved in the daily activities of the BS&E Unit's bridge inspection program. Certain personnel shall be designated with specific responsibilities within the overall QC procedures.

Quality Assurance is a measurement of the level and consistency of the overall program. Quality Assurance will be performed by designated personnel within the BS&E Unit and utilizing outside consultants. The Quality Assurance engineers will perform regular reviews in order to measure the quality and uniformity of the inspection and documentation, and to identify specific items or procedures in the program where clarification, revision, or additional training is needed.

These procedures include, but are not limited to the qualifications of the staff, quality of field inspections, staff training, validation of data collected and entered into the Structure Management System (SMS), and the identification/resolution of data errors. The goal of this plan is to continuously improve the quality of the bridge inspection process.

The National Bridge Inventory (NBI) bridge inspections within the State are performed by Consultants retained and managed by BS&E or by BS&E personnel. Consultants are required to have an internal QC/QA program for bridge safety

inspections. The objective of this requirement is for each Consultant to have their own systematic approach in addition to the BS&E Unit requirements to ensure the quality and consistency of bridge inspections. The BS&E Unit's QC/QA procedures that are defined complement the internal QC/QA procedures provided by the Consultants to achieve the highest level of quality for bridge inspections. The BS&E Unit procedures include the following responsibilities for Consultant Project Managers regarding QC/QA:

- The Consultant shall have a (QC/QA) program for the project and provide the BS&E Unit with a plan on implementation and continuation of this program. The Consultant shall also provide a written *Quality Assurance Statement* at the start of the project. The Consultant QC/QA program, at a minimum, shall include procedures to ensure proper qualifications, data checking, and compliance with submittal requirements as described in Chapter 3.

- All inspection reports shall be reviewed for completeness, accuracy, and content prior to submission to the BS&E Unit. If the Prime Consultant engages the services of a Sub-consultant, it is the responsibility of the Prime Consultant to ensure all the QC/QA requirements of the Sub-consultant are satisfied. This includes compliance with the time requirements in Chapter 3.

- Periodically, the Consultant may be requested to attend meetings during the term of the contract to discuss any questions or concerns with the inspection process or quality of the inspection reports.

- The Consultant QC/QA Engineer shall have the same qualifications as the Consultant Project Manager..

The Consultant's QC/QA performance will be reviewed on a semi-annual basis as part of the BS&E Unit's overall Consultant Performance Evaluation procedures.

4.3 QUALITY CONTROL PROCEDURES

4.3.1 General

The objective of the procedures and requirements described in the following sections are intended to provide a systematic approach to ensure the quality and consistency of data produced to assess the safety of in-service bridges. These procedures will be reviewed periodically and updated as required to continually improve the efficiency and integrity of our bridge inspection program.

4.3.2 Staff Qualifications

4.3.2.1 General

All staff is required to have the minimum bridge inspection qualifications as defined in the NBIS, along with any additional requirements by the BS&E Unit.

Consultants are required to submit comprehensive documentation prior to receiving a Notice to Proceed, in order to begin an inspection contract. This documentation consists of, but is not limited to, the following:

1. Full disclosure of the proposed inspection personnel. This consists of the following:

    a. Listing of key personnel currently on staff that will be used for bridge inspection.
    b. Resumes of proposed key personnel.
    c. Applicable documentation showing compliance with staff qualifications defined herein.

2. Proof of certifications (PE license, training certificates, diplomas, etc.).

If there are changes to the Consultant inspection staff during the contract, the Consultant is required to submit all the above documentation to the BS&E Unit prior to the individual performing work for the BS&E Unit. The BS&E Unit also requires the Consultant to submit any other comprehensive inspection certification to the BS&E Unit, who will then determine if the qualifications of the individual meet the required criteria.

4.3.2.2 Tracking Staff Qualifications

The BS&E Unit electronically stores and tracks the qualifications of all personnel performing bridge inspections for the BS&E Unit. The qualifications of each individual are submitted to the BS&E Unit, along with proper certifications, and are entered into the electronic files. The inspection staff is required to provide updated information at the following times:

1. Upon any updates or changes to training courses or licensure
2. Upon staff changes or promotions
3. Upon request of BS&E

The BS&E Program Manager (or designee) and Consultant Project Manager are responsible to track staff qualifications of all bridge inspection personnel and maintain the electronic files containing these qualifications.

4.3.3 Quality Control Office Review Procedures

4.3.3.1 Bridge Inspection Rotation of Consultants

The Bridge Safety and Evaluation Unit changes Consultant assignments to reduce the probability of having the same inspectors inspect the same bridges, which may lead to complacency and potentially reduce the quality of the inspection. This enables the quality of each inspection to be independently checked by another inspection team. Also, this process creates another "check and balance" to document any significant discrepancies between inspection teams and inspections. If any significant discrepancies are found, then corrective action procedures will be implemented as documented herein. Consultants are typically assigned inspections in a particular geographic area of the state. When Consultant contracts change, the BS&E Unit will ensure that any previous Consultant will be assigned a new area. Exceptions can be made at the discretion of the BS&E Program Manager (or designee).

4.3.3.2 The Bridge Safety and Evaluation Unit's Internal Procedures

The Program Manager (or designee) is primarily responsible to track all bridge inspections and report submissions as a check to ensure inspections and reports are completed on time. This includes, but is not limited to, the following, which is subject to change as the BS&E Unit's procedures change:

- Preparing upcoming inspection lists.
- Keeping track of the inspection start and completion dates.
- Keeping track of the inspection report completion and submittal dates.
- Keeping track of the inspection report review dates.

The tracking of the above items is assisted by SMS filters.

The Program Manager shall assign a Transportation Engineer 3 (TE3) for each Consultant and State Team. The TE3's responsibilities include but are not limited to the review of the inspection reports and review of the inspection methods by the teams in field. As a minimum, the TE3 shall review 100% of the inspection reports with a numerical NBI condition rating of 5 or less for Items 58, 59, 60, or 62.

The Program Manager shall also assign a Transportation Supervising Engineer (TSE) for each Consultant and State Team. As a minimum, the TSE shall review 100% of the inspection reports with a numerical NBI condition rating of 4 or less for Items 58, 59, 60, or 62.

The TSE is responsible for ensuring that the defined QC procedures are enforced for his/her Consultants or State Teams. A review includes all aspects of functions to ensure adherence to the Federal and state inspection criteria, laws, codes, standards, and regulatory requirements. The review may also include the evaluation of inspection personnel's choice of inspection equipment, information retrieval methods, investigational processes, time and frequency of required inspection services, etc.

4.3.3.3 Procedures for Review of Inspection Reports and Data

4.3.3.3.1 Consultant Reports

The Consultant responsible for the bridge inspection is required to implement QC/QA procedures for their respective firm to ensure that all inspection reports are reviewed for completeness, accuracy and content prior to submission to the BS&E Unit.

Reports are to be completed in the BS&E Unit's SMS software.

In addition, the Consultant Project Manager is required to:

1. Verify the condition rating for Item 67 on the ConnDOT BRI-19 form.

2. Review Items 58 through 72 on the ConnDOT BRI-19 form.

3. Sign the ConnDOT BRI-19 Form.

4. Affix a Connecticut Professional Engineer (PE) stamp* on all reports. This can be accomplished by either of the following two methods:

    - Third party digital signature and PE stamp* placed on PDF copy of the Title Page prior to uploading to SMS.
    - Scanned copy of a stamped, signed and dated Title Page uploaded to SMS.

5. Attach a PE number in the Workflow section of the SMS report.

6. Review the Bridge Maintenance Memorandum (BMM) (if applicable).

* The Professional Engineer (PE) stamp shall be that of the Project Manager or QC/QA Engineer

The Consultant Team Leader is required to:

1. Assign the condition ratings for Items 58 through 62, 68, 69, 71, and 72 on the ConnDOT BRI-19 form.

2. Sign the ConnDOT BRI-19 form.

The following are general procedures performed by the TE3 for Consultant submittals:

1. Review the Inspection Report to ensure that the correct form has been used, that the correct bridge is identified, and that all required information has been entered into SMS.

2. Check that all information has been correctly entered in accordance with the Federal Highway Administration (FHWA) Coding Guide and the ConnDOT Bridge Inspection Manual criteria. This review will include, but is not limited to a check that proper coding conventions, format, significant digits, and correct units have been used.

3. Check to make sure that any critical findings were promptly reported to the BS&E Unit.

4. Check to make sure that proper documentation is submitted.

5. Check for posting recommendations, if any, and if the load rating should be revised based on the current inspection.

6. Check condition ratings for items 58 through 72 to make sure they are consistent with the field observations of the individual elements.

7. Check that there is adequate documentation for inspection sub-items with condition ratings of 6 or lower.

8. Check that all photographs and/or sketches have been included and properly cross referenced within the inspection report.

9. Check that there is consistency of information between the current inspection report and previous inspection reports, as well as the underwater inspection report and/or load rating analysis, if applicable.

10. Check that proper documentation was incorporated into the inspection report for any changes that may have occurred from the previous Structure Inventory and Appraisal (SI&A) and previous Field Inspection Report (ConnDOT BRI-18 form).

11. Review of all items in the SI&A after data entry to check that they have been properly and correctly entered.

12. For Initial Inventory Inspections, a check of the inventory data on the SI&A against the construction plans to ensure that the data is consistent.

13. For every routine or in-depth inspection, the TE3 shall review the Element Level inspection data, which was created as a part of the routine or in-depth inspection for accuracy, including elements, quantities and condition states.

14. Cross-check NBI condition ratings against the quantities assigned to the various element level condition states for relative consistency.

Additionally, a TSE shall perform the following:

1. Review 100% of the inspection reports with a numerical NBI condition rating of 4 or less for Items 58, 59, 60, or 62.

2. Review a minimum of 10% of all reports for completeness.

The Consultant Project Manager or the Consultant QAC/QA Engineer is required to affix his or her Connecticut PE stamp to the executive summary page of the submitted inspection report to attest to the content and accuracy of the report prior to formal submission to BS&E.

4.3.3.3.2 State Team Reports

The Transportation Supervising Engineer is required to implement the BS&E Unit's QC/QA procedures to ensure that all inspection reports are reviewed for completeness, accuracy and content prior to submission.

The BS&E Unit reviewer (TE3 level or higher) is required to:

1. Verify the condition rating for Item 67 on the ConnDOT BRI-19 form by going into SMS and activating the 'NBI CALC' function in the software.

2. Review Items 58 through 72 on the ConnDOT BRI-19 form.

3. Attach his or her signature in the Workflow section of the SMS report.

4. Write the Bridge Maintenance Memorandum (BMM) (if applicable).

5. Sign the ConnDOT BRI-19 form.

The BS&E Unit reviewer (TE3 level or higher) shall review all inspection reports prepared by the State inspection teams. The review procedures are the same as enumerated above for the review of Consultant inspection reports.

4.3.4 Quality Control Field Performance of Inspection Team Procedures

The Bridge Safety and Evaluation Unit will periodically perform a field performance review (a site visit during actual inspection) of inspection teams. The objective of this review is to make certain the inspection teams are providing a safe working environment for the public, provide a cursory check of their field inspection process, and to ensure that ConnDOT requirements are satisfied. By reviewing the daily logs, BS&E will arbitrarily select bridges at which to perform these visits without notifying the inspection teams in advance. Refer to the Inspection Team Field Performance Evaluation (see Appendix B) for the specific items documented during this field review.

4.3.5 Corrective Action for Quality Control

Upon review of an inspection report, field performance evaluation, or field verification of inspection report, the BS&E Unit reviewer will forward comments or request immediate action of the Consultant or State Team to correct any issues that are not satisfactory. The following summarizes the typical process for identification and resolution of issues:

1. The BS&E Unit reviewer shall communicate any comments on the inspection report via email and/or phone to the Consultant or State Team.

2. If the Consultant's performance is determined to be significantly deficient, the Consultant will be notified in writing for proper disposition and resolution. The responsible party shall correct the report and resubmit to BS&E within 5 working days of notification. The resolution of this matter may include the removal of work previously assigned to the Consultant.

3. If a State Team's performance is determined to be significantly deficient, the issue will be referred to the Program Manager for proper disposition and resolution. Re-training or re-assignment of duties may be required.

If a safety issue, misbehavior, or other hazardous situation is found during a field performance evaluation, the Consultant or State Team will be notified immediately to correct their action. If the issue is determined to be significant, the matter will be referred to the Program Manager for disposition and resolution. This may include, but not be limited to, disciplinary action, or re-assignment of State employee, or demotion, or suspension of Consultant staff. If Consultant's issues are significant, this may result in modification or termination of work.

4.4 QUALITY ASSURANCE PROCEDURES

4.4.1 General

Quality Assurance is defined as the required procedures performed by ConnDOT to sample and measure the adequacy of quality control procedures. The following procedures describe the process ConnDOT follows to provide Quality Assurance.

The BS&E Unit shall assign Consultants the responsibility to conduct QA inspections on both the State teams and other Consultants' teams. At least two QA inspections per Prime Consultant and two QA inspections per State Team shall be conducted each year.

4.4.2 Procedures for Sampling of Bridges for Review

The Bridge Safety and Evaluation Unit will define possible sampling parameters, bridges for review and field spot checks. Consideration for selection will also incorporate traffic control requirements and impacts to traveling public:

1. Bridges with critical findings
2. Structurally deficient status
3. Bridge posting
4. Bridges in need of rehabilitation/replacement
5. Bridges with an NBI condition rating for Items 58, 59, and 60 less than or equal to 5
6. Bridges with load capacity reduction

4.4.3 Duties of Quality Assurance Review Team

All Quality Assurance inspections will be conducted utilizing Consultant Inspection Teams (QA Team).

The QA Team will conduct and document an independent inspection of the bridge, and an independent bridge inspection report will be prepared. The Consultant's QA Engineer will then compare the results of the original inspection report with the results of the QA Team's inspection report, and submit the QA Team's inspection report along with the list of discrepancies to the BS&E Unit.

4.4.4 Duties of the Bridge Safety and Evaluation Unit

Differences between the QA Team's inspection report and the original inspection report will be discussed with the Consultant or State Team and the review process will be documented. The discussion and documentation will include notable practices and corrective action.

4.4.5 Corrective Actions

4.4.5.1 General

Corrective actions for Consultants that contain significant errors/omissions or hazardous situations encountered with an inspection report or field evaluation are discussed in the following sections.

4.4.5.2 Disqualification Reasons for Consultant Inspection Firms

Reasons for disqualifying a Consultant from performing bridge inspections for BS&E may be, but are not limited to, the following:

1. Lack of proper follow-up with the bridge owner for critical findings, such as damaged or deteriorated load carrying members, critical scour at foundations, vehicular impacts that could adversely affect load carrying members, bridges requiring closure, etc.

2. Lack of follow-up with the bridge owner for correcting load posting deficiencies.

3. Failure to correct findings from QC or QA reviews.

4. Miscoded condition ratings for critical components (i.e., Items 58 through 62).

5. Recurrent misclassification of National Bridge Elements, Bridge Management Elements, or Agency Defined Elements.

6. Recurrent failure to submit correct Bridge Maintenance Memoranda.

7. Lack of proper traffic control measures during a field inspection.

8. Recurrence of errors/omissions in reports.

9. Failure to attend required continuing education sessions as outlined in this manual.

10. Improper safety measures during inspection.

11. Recurrence of failure to submit timely daily logs and two-week schedules.

12. Failure to start a field inspection within the assigned frequency of the previous inspection date.

13. Failure to submit completed inspection data and/or corrections in a timely manner.

The BS&E Unit reserves the right to implement disqualification at any time (not only during QA review), or extend disqualification for other reasons based on the judgment of the Program Manager.
Disqualification can include the removal or demotion of staff, the reduction or suspension of work, and termination of contract.

Should disqualification be required, a letter to the Consultant will be issued. The letter will indicate the reason(s) for disqualification and request an action plan outlining the measures the Consultant will take to prevent the issue from recurring. However, the BS&E Unit may also issue a warning letter instead of formal disqualification if the Consultant's past performance has been satisfactory and the action plan appears to adequately address the issue. This will be based on the severity and frequency of the issue as determined by the Program Manager.

4.4.5.3 Disqualification Procedures for State Inspection Personnel

Corrective actions for State Team that contain significant errors/omissions or hazardous situations encountered with an inspection report or field evaluation will be referred to the Program Manager for proper disposition and resolution. Re-training or re-assignment of duties for the State Personnel may be required.

4.4.6 Meetings

Meetings will be held once a year at a minimum or as needed with the Consultant Project Manager, state inspection staff and the BS&E Unit Management to address quality issues. Meeting minutes will be generated. The objective of these meetings is to obtain feedback from staff, facilitate knowledge transfer, provide peer collaboration, identify problem areas, and implement corrective action(s) to continuously improve policies, procedures, and the inspection process.

CHAPTER 5

GENERAL INSPECTION PROCEDURES

5.1 PLANNING AND SCHEDULING 5-1

5.1.1 Document Review 5-1
5.1.2 Pre-Inspection 5-2
5.1.3 Coordination of Access and Equipment Needs 5-3
5.1.4 Weather Considerations 5-3

5.2 TYPES OF INSPECTION 5-4

5.2.1 Routine Inspections 5-4
5.2.2 In-depth Inspections 5-5
5.2.3 Interim and Miscellaneous Inspections 5-7
5.2.3.1 Interim Inspections 5-7
5.2.3.2 Damage Inspections 5-7
5.2.3.3 Flood Surveys 5-9
5.2.3.4 Deck Surveys 5-9
5.2.3.5 Fracture Critical and Fatigue Sensitive Member Inspections 5-11
5.2.4 Underwater Inspections 5-13
5.2.5 Semi-Final Construction Inspections 5-18

5.3 RECORD KEEPING AND DOCUMENTATION 5-19

5.3.1 Bridge Inspection Report Format 5-20
5.3.2 Executive Summary 5-21
5.3.3 Field Notes and Field Forms 5-22
5.3.4 Introduction to Condition Rating Coding System 5-22
5.3.5 Structure Inventory and Appraisal Forms 5-25
5.3.6 Photographs 5-26
5.3.7 Documentation For Items Rated '5' Or Less 5-28

CHAPTER 5

GENERAL INSPECTION PROCEDURES

The procedures outlined in this chapter are guidelines. Bridges vary too much for inspection procedures to be followed as you would a recipe in a cookbook. Defined procedures help prevent overlooking the inspection of any item, but they do not replace good judgement and a healthy curiosity. Inspect the bridges as though someone's life depends on you. **It does!**

5.1 PLANNING AND SCHEDULING

Proper planning and scheduling of bridge inspection activities promotes the effective and efficient completion of this monumental task. Without the proper preparation, it would be impossible to complete the thousands of bridge inspections that must be performed every year. Limited manpower and budgetary constraints make the efficient use of these resources paramount to the success of this program.

5.1.1 Document Review

The first step in preparing for a bridge inspection is to review the available information contained in the bridge file, such as:

- "As-Built" bridge plans and shop drawings, where available
- Any rehabilitation plans
- Previous inspection reports, including any special or interim reports (like underwater or "Bridge Hit" reports)
- Bridge maintenance memos
- Correspondence pertinent to any required work or work completed

Bridge Plans

The bridge plans contain information that shows what the bridge is constructed of and how it was put together. Member types and sizes, connection details, intended bearing details or deck joint configurations and the presence (or absence) of piles in the substructure are all bits of information, useful to the inspector, which should be available on the plans. The inspector should be able to recognize and question details in the field that do not agree with what is shown on the plans.

Previous Inspection Reports

Previous inspection reports should make the inspector aware of any areas of concern on the bridge that might warrant special attention. They also provide a standard with which to gage the progress of previously noted deterioration. Special equipment or access requirements necessary to complete the inspection should be noted in previous reports. A thorough review of the last inspection report not only gives the inspector a "feel" for the bridge, but helps to ensure completeness in the inspection and consistency in the evaluation ratings.

Maintenance and Repair Records/Correspondence

Maintenance and repair records make the inspector aware of repairs requested or performed. The bridge inspection should confirm the completion and evaluate the quality of repair work that was previously requested.

Additional Data

Correspondence from towns, citizens reporting unusual noises, etc. may indicate problems to be reviewed or resolved. Accident reports or flood data may give information useful in understanding conditions found during the inspection. Construction memos may give information regarding past, present or future work being done on the bridge or in the vicinity of the structure.

5.1.2 Pre-Inspection

Pre-inspection visits to the bridge site, if appropriate, are useful for determining access requirements (or impediments to normal access), establishing the need for and type of any maintenance and protection of traffic required and observing the overall condition of the bridge to gage time requirements. These visits may be as simple as driving by a smaller bridge, to see that there is no construction activity in the area that might interfere with access or maintenance and protection of traffic patterns. On a new bridge, it may require more investigation such as determining what size bucket truck or ladder are required, or finding out what key is necessary to open a box beam hatch. Areas that may require cleaning for proper inspection viewing or trees that need to be cut back to permit snooper access, are items that should be defined during a pre-inspection. The pre-inspections themselves can be effectively scheduled by performing them when the crew is in the vicinity of the bridge doing other work or by doing several pre-inspections in one geographic area at the same time. Another advantage of pre-inspection visits is that they may make the inspection team aware of more than one structure in a close proximity that could be inspected together using a single traffic control pattern or more than one bridge in a particular area that may require similar special access equipment.

5.1.3 Coordination of Access and Equipment Needs

The document review process and pre-inspection are intended to familiarize the inspector with the bridge prior to actually arriving at the bridge site to perform the inspection. During these reviews, the equipment and access requirements necessary for the inspector to properly perform the inspection are identified.

- Will traffic control be required?

- The type of traffic pattern necessary should be relayed to the Bridge Safety and Evaluation Section a minimum of 2 weeks prior to the anticipated inspection date. Indicate if a flagman or police assistance will be required, and if an impact attenuator vehicle should be used in the traffic pattern.

- Will access to any locked or gated areas be required?

- Hatches on box beams, fenced in areas, machinery pit areas on movable bridges, are all areas where a key may be required to gain access to the structural elements to be inspected.

- Will a bucket truck or snooper be required?

- The need for a larger bucket truck; 40' or 60' snooper, should be coordinated with the Bridge Safety and Evaluation office at least 2 weeks prior to the anticipated inspection date.

- Will special equipment be required?

  Scaffolding, rigging, boats, rafts or other special equipment needs should be discussed with the Bridge Safety and Evaluation office well in advance of the anticipated inspection date.

5.1.4 Weather Considerations

Considering the possible weather conditions when scheduling inspections can permit a more thorough and comfortable inspection. Large, open structures over water are most uncomfortable to inspect in the middle of the winter. Severe cold also impacts inspections involving climbing and snow/ice conditions preclude traffic control operations. Conversely, the inspection of box beam members should not be scheduled during summer months when the temperatures inside closed members can reach unhealthy highs.

Structures over water should be scheduled during periods of low water or coordinated at times of low tide to permit complete inspection of the substructure by wading, where possible.

5.2 TYPES OF INSPECTION

General

Each inspection must be conducted systematically so that all items are inspected with a minimum of duplication or lost motion.

Some bridges have areas to be inspected that are extremely difficult to reach and may be inaccessible by snooper or bucket truck. These areas may be viewed with binoculars on inspections that are not in-depth. Note on the report that normal access was not possible and record the distance from which the area was viewed. On in-depth inspections, or if any defects are found or suspected, closer access should be gained by using rigging, scaffolding, specialized equipment or free-climbing. (See chapter 6 for additional guidance on inspection distance requirements.)

Any area that cannot be inspected because of an accumulation of pigeon waste or other debris, and areas covered by poison ivy or heavy brush, should be reported to the Bridge Safety and Evaluation Section so a request for cleaning can be made to Maintenance. Following the cleaning, the area must be re-inspected.

5.2.1 Routine Inspections

Routine bridge safety inspections are conducted every two years on all qualifying structures defined by the Bridge Safety & Evaluation Section. Typically, these are structures that have been assigned a bridge number and have spans of 20’. (6 m) or greater. The Bridge Safety and Evaluation Section provides each inspection team with a computer listing of the bridges in the team's assigned area to be inspected during the upcoming period (contract period for Consultants). The team leader then schedules the individual inspections to comply with the appropriate inspection cycle.

The primary purpose of routine inspections is to identify any critical problems or deficiencies so corrections can be made before these items present a hazard to the public. Non-critical deficiencies will also be noted and these deficiencies will be called to the attention of the Bridge Maintenance Section for their attention.

While some variation in the inspection sequence may be necessary or desirable for particular bridges, the following sequence is suggested for most bridges:

1. Inspect the deck from the top.
2. Inspect the bridge approaches.
3. Inspect the underside of the deck.
4. Inspect the bearings.
5. Inspect the beams/superstructure.
6. Inspect the abutments and wings.
7. Inspect the piers.

8. Inspect the waterway. The requirements are the same as listed in Section 5.2.2.

Specific requirements for various types of bridges and bridge components are contained in Chapter 6 of this manual.

5.2.2 In-depth Inspections

In compliance with current Department practice, an in-depth inspection should be conducted on all qualifying structures every 10 years. The biennial routine inspection is not normally conducted in the year that the in-depth inspection is made. An in-depth inspection consists of a "hands-on" examination of all exposed parts of a bridge to assess and record the physical condition of the bridge, to ascertain that the bridge is functioning as shown on the original plans and to ensure that the bridge is adequate to safely carry the intended loads.

A Senior Engineer, knowledgeable in bridge design and inspection, should be present to assist the normal 2-person bridge inspection team during in-depth field inspections in accordance with the provisions of Section 3.2.3 of this manual.

For bridges with piers or abutments in water, underwater inspection is mandatory. Where the waterway is shallow enough to be waded safely, this work will be performed by the inspection team and will consist of probing the base of all substructure units in the waterway to locate any scour. In slow moving, clear water, where the bottom is clearly visible, the inspection team should attempt to perform the necessary probing and soundings using a raft. If any signs of scour or settlement, etc. are noted in water that is too deep to wade, then divers should be requested. A stream cross section is to be provided showing water depths along the upstream bridge fascia and along each substructure unit located within the waterway. The intervals between measurement points should not exceed approximately 20’ (6 m). Bridges over waterways that are too large or deep to be safely waded will have the underwater portion inspected by the underwater inspection team. Requirements for underwater diving inspections are included in Section 5.2.4.

Bridges over roadways or railroads shall have a new clearance diagram prepared for each span over a roadway or rail line and for any fixed obstructions above the inventory route. Specific directions for completing clearance diagrams are contained in Chapter 6.

A prepared set of drawings, representative of the entire bridge, or photocopies of the original construction plans should be used to delineate any and all deficiencies on the bridge. These drawings or photocopies will become part of the inspection report, and should include dimensions, descriptions and sizes of both the structure and the deficiencies. A blank copy of these drawings or photocopies should be kept in the bridge file to be used for future in-depth inspections or to have on hand as needed.

Prior to the inspection, parts of the bridge may require cleaning by means of hand tools, water blasting or other methods. Access to structural members may be gained by climbing the structure or by using ladders, rigging, scaffolding or mobile equipment, such as bucket trucks and snoopers.

A visual examination may identify signs of distress, distortions, latent defects, loss of section or deterioration. If these signs are found, further detailed examinations may be necessary. Such examinations include using non-destructive testing such as dye penetrant, ultrasonic, radiographic (x-ray) and magnetic particle tests; using a "D" meter to check the thickness of metal remaining; taking cores or drilling for laboratory testing and/or dismantling assemblies. This work should only be performed under the supervision of an experienced bridge engineer.

Every component and member of the structure must be physically inspected during an in-depth inspection. The use of binoculars to observe areas that are difficult to get to is not permitted. Only in extenuating circumstances and with the prior approval of the Supervising Engineer shall these procedures be excused. If any pre-approved areas do not receive "hands-on" inspection, they shall be so noted in the inspection report.

A complete photographic record of the bridge shall be taken at each in-depth inspection. In addition to the bridge identification photo, a sufficient number of clear, color photographs shall be taken to illustrate the following:

a) Appearance of bridge from both approaches.

b) Appearance of both approaches from the bridge (omit these if the bridge is short enough for the bridge approaches to be viewed when looking through the bridge structure in "a" above)

c) Appearance of bridge in each elevation (several photos may be required to show bridges that cross a number of features).

d) Appearance of upstream and downstream channels on water crossings.

e) Typical condition and configuration of major superstructure and substructure types.

f) Typical utility installations.

g) Identification and description of any significant problem areas as described in Chapter 6.

5.2.3 Interim and Miscellaneous Inspections

5.2.3.1 Interim Inspections

Interim inspections may be required to monitor a particular known or suspected deficiency such as: scour, settlement, deteriorated member condition, usage of a load posted bridge, bearing or parapet joint measurements, pin and hanger measurements, etc.

5.2.3.2 Damage Inspections

Damage inspections are normally conducted immediately following any incident that may have an effect on the structural integrity of a bridge. The inspection is conducted by various personnel assigned by the Manager of Bridge Safety and Evaluation depending on the seriousness of the incident.

Bridge Hit:

1. Assess the damage. This may require getting traffic control to allow access to the damaged area.

    - Inspect the damaged members to determine the extent and seriousness of the damage. Determine if the bridge is safe to carry traffic, if emergency repairs are needed or if the bridge should be closed.

    - Notify the Supervising Engineer if there is a safety problem.

    - Document the damage with diagrams and photographs.

2. Prepare a Bridge Hit Report (Use AIncident Report≅ form in Appendix E).

    - Check and record if the bridge is posted for less than legal weight limits, for a vertical clearance restriction or for a reduced speed. Also check to see that posting signs are in place and legible.

    - Record the date and time (if available) that the bridge was hit.

"D" Numbers and "B" Numbers

Whenever a state-owned bridge is involved in an accident, ConnDOT personnel are required to inspect the bridge for damage. Special numbers are created to charge time and material costs to. The charge numbers are as follows:

"D" *numbers are created by the appropriate District Maintenance office when maintenance work is required to repair damage to a bridge. Both Maintenance and Bridge Safety personnel charge to this number.*

"B" *numbers originate in the Bridge Safety and Evaluation office and are used when only bridge inspection is required and damage is not significant enough to warrant repairs by Maintenance.*

After inspection or repair work is performed by the Department personnel, a ***Maint.-014*** *form is filled-out by the office staff. This form is sent to Accounts Receivable. The Department's Accounts Receivable section is charged with billing the responsible party(s) to reimburse the State for costs incurred.*

- Record the name of the owner and the type of vehicle that damaged the bridge. Note the length, height, estimated weight and number of axles of the vehicle. Attempt to determine if an overheight/overweight vehicle was involved and if it was a vehicle requiring a permit, that the permits were obtained and current.

- Check and record the direction the vehicle was traveling at the time of the accident. Request a copy of the police report or accident report. It may be necessary to check the accident report to determine the direction the vehicle was traveling.

- Describe and document the damage with field sketches (including a plan view and details), verbal description and photographs.

- Document any actions, such as closing the bridge or restricting speeds, which were taken. Describe your recommendations for additional action to be taken by others.

- Record the date that repairs are completed by maintenance forces. Repairs will likely not be completed while you are

inspecting the damage, and it may require a follow-up visit to the bridge to answer this question.

- Record any additional remarks concerning the damage.
- Attach a copy of the accident report, if possible.
- Submit the Bridge Hit Report immediately after the initial inspection. Submit a supplemental report (a photocopy of the original) when repairs have been made. A clearance diagram should also be submitted for an overhead type collision.

5.2.3.3 Flood Surveys

Flood surveys are usually conducted by the Hydraulics and Drainage Section and information collected kept in their files.

5.2.3.4 Deck Surveys

Deck surveys for concrete decks are taken to more accurately determine the overall condition of the deck than is done by normal visual inspection. Deck surveys may be performed to determine if a deck can be effectively repaired or if replacement is required. These surveys may also be used to outline areas that will be repaired as part of a project.

The survey includes a compilation of visual examination, hammer tapping to locate delaminations on bare decks and additional testing as deemed necessary. The most common testing procedures include electric potential ("Half Cell") tests to determine if reinforcing steel is in a passive or active corrosion state, and chloride ion analysis where concrete powder samples are removed from the deck for laboratory analysis to determine if the chloride ion content is high enough to create an environment that is conducive to corrosion of the steel. Electric potential tests are performed on bare deck surfaces, while chloride ion test samples can be taken even when the deck is overlayed.

The procedure for performing a deck survey is as follows:

1. Coordinate:

    a) The necessary traffic control.
    b) Materials testing personnel if chloride ion tests will be done.
    c) Obtain drilling and testing equipment required to perform electric potential tests and to collect chloride samples if necessary.

The weather should be good enough to permit traffic control operations and the deck relatively dry to obtain reasonable test results.

2. Prepare sketches (to scale) of the topside of the deck for each span. Layout a 10’ x 10’ max. (3 m x 3 m) grid on the top of deck sketch to be used for taking the electric potential readings and locating areas of deck deterioration. Start the grid 1' - 2' (0.5 m(±)) off each curb line.

3. Once traffic control has been placed, layout and mark the grid on the bridge deck to match what is on the prepared sketch. Work in stages using available lane closure area.

4. If electric potential readings are to be taken:

   - Locate a reinforcing bar in the deck that can be used for the electrical connection for the test. An exposed bar in a spalled or bituminous patched area is best, if this is not available, use a pachometer to locate an encased bar. Locating a bar near the center of the span will minimize the length of wire required.

   - Drill a hole to the bar or otherwise expose it to allow connection of the half-cell lead wire. The bar should be cleaned or slightly gouged to permit connection to clean steel.

   - Take and record electrical readings at each grid point.

   - Repair drill holes with approved patching material upon completion of testing.

5. Check for deterioration.

   - Chain drag or hammer tap bare decks to locate delaminations.

   - Visually check the deck surface for cracking, spalling, scaling, etc. and plot these deteriorations on the prepared to scale sketches noting sizes and using the marked grid for reference. Estimate the percentage of the area previously repaired. For overlayed decks, inspect the condition of the overlay noting any past maintenance repairs to the overlay or deck itself. Cracks and patches may indicate that there is deterioration of the deck surface beneath the overlay. Patches that do not hold and must be continuously redone are a sign of deterioration of the deck surface. Look for signs of

discoloration or cement paste on the overlay around cracks and patches. This may indicate that the deck surface is deteriorating and the cement is pumping up through the overlay.

- Visually inspect the underside of the bridge deck locating areas of deterioration and noting their size on the prepared underside sketch. The coincidence of bad areas on the bottom with those found on the top should be noted.

- If hatched or shaded areas or abbreviations are used on the sketches, a legend that explains their meaning should be included.

- If the deck has no noticeable deterioration, it should be noted as such on the sketches.

6. Inspect the condition of the deck joints as described in Chapter 6. Note the type and quantity of deterioration. Attempt to determine if the joint is waterproof and functioning as intended.

7. Take pictures:

   - Show typical condition areas: General views and close-up of both the topside and underside.

   - Show areas with significant deterioration.

   - Show areas of major repairs.

   - Record joint conditions.

8. Upon completion of the deck survey, ensure that the deck surface is clear of any debris from the testing operations and that traffic control is removed.

5.2.3.5 <u>Fracture Critical and Fatigue Sensitive Member Inspections</u>

For the most part, the fracture critical and fatigue sensitive member inspection will be performed with the biennial inspection as noted in the specific sections of Chapter 6. The following is a general list of what shall be inspected:

1. All exposed surfaces of metal load path nonredundant superstructure elements shall receive a 100% close-up, "hands-on" visual inspection

during each inspection. Areas to receive this "hands-on" inspection include areas subject to tension stress and stress reversal. Members may consist of riveted, bolted, or welded construction. For bridge inspection purposes, superstructures consisting of two girders (including box girders) or trusses are considered load path nonredundant. [Refer to the FHWA manual *"Inspection of Fracture Critical Bridge Members"*].

2. All exposed surfaces of metal load path nonredundant pier caps (cap girders) shall receive a 100% close-up, "hands-on" visual inspection during each inspection. This includes areas subject to tension stress and stress reversal.

3. For bridges with redundant load path superstructures, all AASHTO fatigue category D, E, or E' details [Refer to BITM '90 Section 18.5.3 and FHWA manual "Inspection of Fracture Critical Bridge Members", Chapter 3] shall receive a 100% close-up, "hands-on" visual inspection as part of each inspection for bridges carrying interstate or limited access highways. For bridges not carrying interstate or other limited access highway, a rotating 25% of these details shall receive "hands-on" inspection at each routine inspection.

4. All exposed surfaces of all pin and hanger details and all exposed primary member surfaces within 3 ft (1 m) of pin and hanger details shall receive a 100% close-up, "hands-on" visual inspection during each inspection. This shall be done regardless of redundancy. See Chapter 6 for additional information and documentation requirements for pin and hanger inspections.

5. Tension and stress reversal zones of metal members shall be examined for the presence of tack welds, remaining original welded erection aids, remaining original groove weld back-up bars, plug welded holes, and other existing weld details, situations, or conditions not part of the original design. If any of these situations exist, they shall receive a 100% close-up, "hands-on" visual inspection during each inspection. This shall be done regardless of redundancy.

6. All fracture critical zones, all load path nonredundant members, fatigue prone weld details and all other areas identified as requiring a 100% close-up, "hands-on" inspection shall be clearly delineated in a specially prepared "Fracture Critical Data Sheet" for each appropriate bridge inspection report. Whenever an inspection report has a "Fracture Critical Data Sheet" (See Appendix C) to highlight special items of inspection concern, the section shall be preceded by a title

cover sheet boldly stating, "Details or Situations Requiring Special Attention During Inspection."

7. In general, all connections welded to a primary member shall be considered part of the primary member.

8. When a bridge element receives a 100% close-up, "hands-on" visual inspection under these provisions, a note shall be placed under Additional Notes on inspection form BRI-18 stating that the required 100% "hands-on" inspection was performed. This note shall specifically list those elements of the bridge that received the required 100% "hands-on" inspection.

9. Other details, situations, or conditions of special concern may be highlighted for special inspection emphasis even if the specific situation is not itemized in this list of elements to be inspected.

5.2.4 Underwater Inspections

An underwater inspection shall generally be performed on any qualifying structure where the water depth around any of the substructure units is greater than 30 inches, and inspection using hip boots and/or a raft is impossible or impractical because of poor underwater visibility, swift current, soft bottom conditions, accumulated debris or low headroom.

Underwater inspections involve visually and tactually inspecting all the exposed underwater components of the structure. This includes, but is not limited to, abutments, piers, footings, piles, and fender systems. Also, soundings of the channel are taken to identify scour problems. This work shall be performed in conformance with all Federal and State regulations including Title 29 OSHA regulations Part 1910 Subpart T "Commercial Diving Operations" of the Code of Federal Regulations, Chapter 17 of the BITM '90, and the FHWA's manual *Underwater Inspection of Bridges* (UIB).

Routine Underwater Inspections are performed along with the above-water inspections. (See Section 3.2.2.4.) These inspections will generally be 80% Level I and 20% Level II as defined in the UIB. If deterioration is found or suspected, an inspection of the deteriorated areas shall proceed to higher levels depending on the seriousness of the deficiency and criticality of the component being inspected. In some cases, the underwater inspection team will be required to perform a *Full Inspection*, which involves inspecting the entire structure. (See Section 5.2.1.)

Interim Underwater Inspections are routine underwater inspections performed more frequently than every two years.

Special Underwater Inspections are performed in order to monitor known or

suspected deficiencies such as scour, pile deterioration or foundation undermining, and to determine the impacts of flood conditions. This inspection will generally be focused only on a specific area or member. The inspection report should give an update of the condition that precipitated the special inspection. This type of report should contain Report Content Item Nos. 1, 3, and parts of 4 through 8.

Report Content

1. *Cover Sheet*: A cover sheet with the bridge number, feature carried, feature crossed, type and frequency of inspection performed (Routine Full, Routine Underwater or Interim), name of company performing the inspection, and date of inspection. The Project Manager, or an Engineer above the level of Project Manager, shall sign, date and affix his/her P.E. stamp to the cover. At the bottom of the cover sheet, a signature line shall be provided for the signature of the Bridge Safety staff member performing the in-house review.

2. *Table of Contents*

3. *Executive Summary:* This section shall list all recommended corrective actions and an estimate of repair quantities for significant or enumerated defects.

This section shall also summarize the scour history at the bridge including any maintenance work performed. The portions of the structure that are constructed on pile foundations or ledge shall be indicated. A statement shall be made of the susceptibility of the stream and/or the streambed to change, including past or potential horizontal stream migration and vertical stream degradation or aggradation. Information on all scour countermeasures present at the bridge, such as rip rap, spur dikes, protective walls, etc., shall be provided along with general construction dimensions and descriptions of current condition.

4. *BRI-59:* The Standard Bridge Inspection Form BRI-59 is the General Information Form. This form will be used to inventory the location of the structure and the site conditions.

5. *BRI-58*: The Standard Bridge Inspection Report Form BRI-58 is the Condition Rating Form. The ratings shall reflect the directions given in Chapter 6 of the BIM and the FHWA "Coding Guide", as revised. Additionally, a narrative description shall be provided for each applicable item rated "7" or less.

6. *Drawings:* All drawings should be prepared/updated using the Department's current digital CADD file format. **In order to maintain historical data, new measurements and deficiencies should be plotted using existing sounding grids, cross sections, and plan and elevation views, when prior CADD files are available.** If existing drawings (grids) are not available, or there are major errors in the layout of the drawing (grid), a proposed drawing (grid) format, using the guidelines below, should be submitted to the Manager of Bridge Safety for approval.

The maximum size of the drawings should be 11 inches x 17 inches. The orientation of all substructure units should be referenced as previously established in prior inspection reports. Note that all dimensions shall be in English units.

A. Stream Plan Views

The plan views shall show the elevations of the stream bottom from a reference datum. Whenever possible, from the original plans or survey data, the reference datum shall be tied to a National Geodetic Vertical Datum (NGVD) or other established elevation datum. Elevations of the stream bottom shall be determined by sounding, fathometers, or other Department approved means. The datum from the previous report and the soundings from that datum shall be shown in English units in parentheses on the drawing so that comparisons can easily be made to the previous inspection cycle.

For structures with a span length of less than or equal to 50 feet, soundings shall be taken on a 10 foot by 10 foot grid around and between all substructure units beginning with the vertical face of the substructure unit. The grid should extend 50 feet up stream and 50 feet downstream from the ends of the substructure units to show changes in the adjacent stream bottom. See Figure 5.2.4a. No grid is required through a box culvert unless there is debris or sediment buildup. However, a grid of the stream is required upstream and downstream of the box culvert.

For structures with span lengths greater than 50 feet, the grid shall consist of four parallel rows of soundings at 1 foot, 10 feet, 25 feet and 50 feet from the longitudinal face of the substructure units. Beyond this point, the grid intervals are 50 feet. Under the structure, the grid (starting at each end of the substructure unit) shall be 3 spaces at 10 feet then continue at 15-foot intervals. The spacing of the rows of the soundings upstream and downstream of the structure shall be at 1 foot, 10 feet, 25 feet, 50 feet, and 100 feet from the ends of the substructure units. See Figure 5.2.4b. Additional soundings should also be taken at the upstream and downstream centerline of the piers. Soundings shall be taken at each point where the grid intersects.

Additional soundings shall be taken if a non-linear surface profile greater than 1 foot / 10 feet is identified. Furthermore, if the top of the footing is exposed, an additional row of soundings shall be taken at the face of the footing.

Bathymetric surveys are also performed on selected bridges in place of the above soundings. If this is required for a particular structure, a completed survey shall be included in the report. The contour interval shall not exceed 2 feet. The survey shall extend 175 feet upstream and downstream from the ends of the pier or abutment footings. The prior datum should always be maintained.

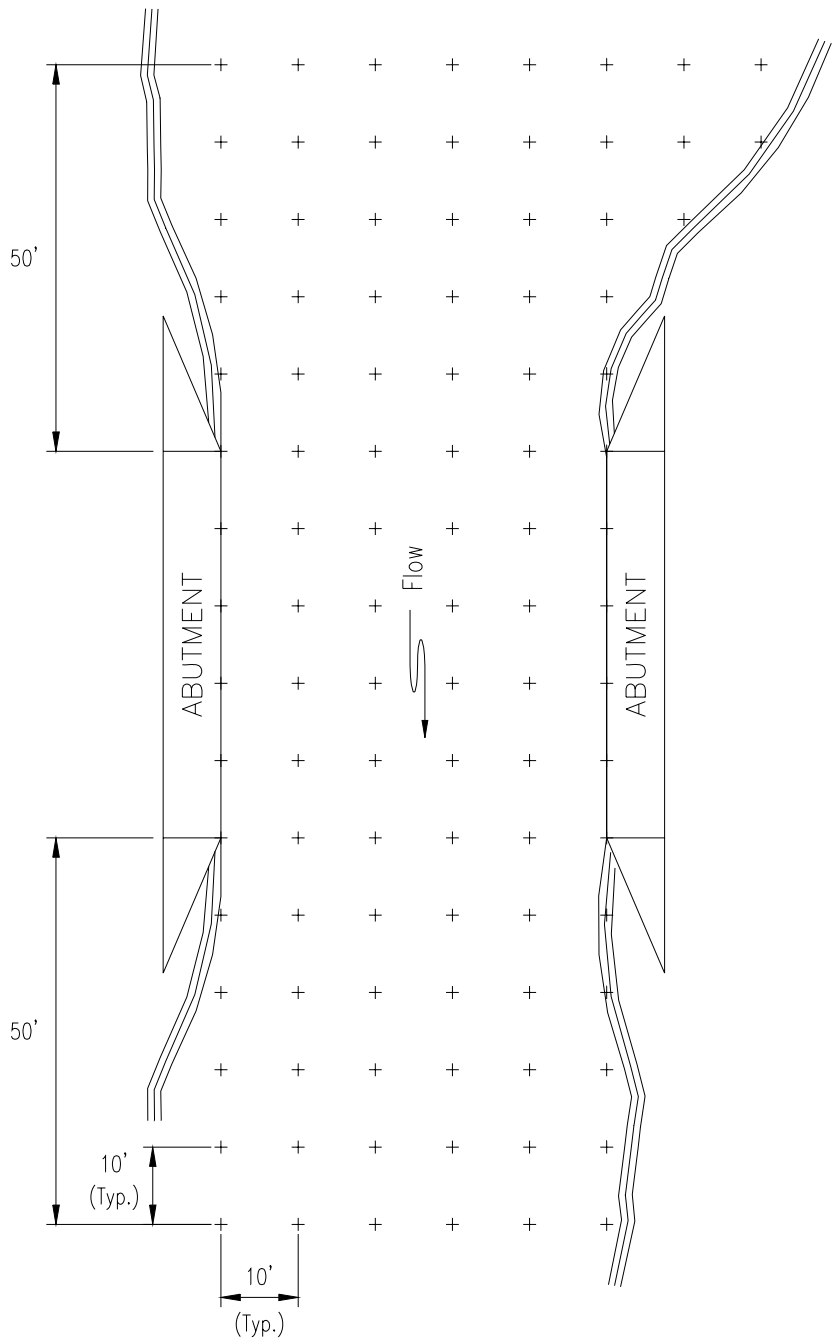

NOTES:

No grid is required through box culverts unless there is debris or sediment build up. However, the grid is required upstream and downstream of the box culvert.

Figure 5.2.4a – Sounding Grid for Bridges with Span Lengths ≤ 50Feet

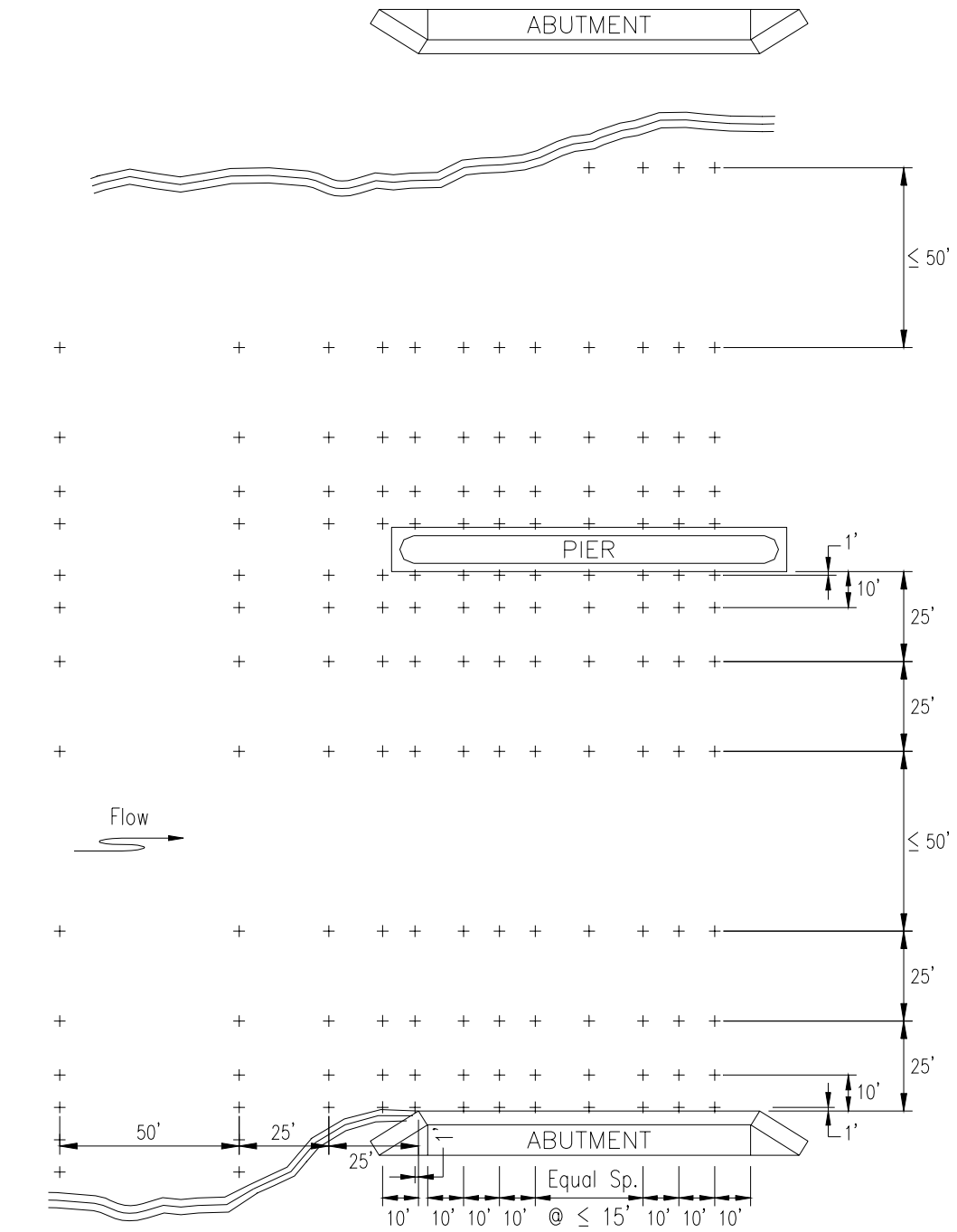

NOTES:

1. The first row of soundings from the foundation footing should be referenced to the face of the column stem for future soundings.

2. Additional soundings shall be taken if the surface profile is greater than 10% slope to show irregularity and the results shall be shown in the drawings.

Figure 5.2.4b – Sounding Grid for Bridges with Span Lengths over 50 Feet

B. Stream Cross Sections

The cross section should be taken 1 foot from the upstream face of the substructure units looking downstream. The limits of the cross section shall be the apparent high water mark.

The cross section shall contain the most recent stream cross section as well as all past stream cross sections in order to show a historical representation of the movement of the stream bottom over the life of the structure. (See Figure A-12-3 in Appendix 6.12.)

Where information is available from original construction plans or other investigations, the foundation type shall be given including the type, size and length of the piles or note if founded on bedrock. When an undermining condition exists, cross sections of the undermined portion of the substructure must be provided with dimensions of the undermined area.

C. Substructure Plan and Elevation Views

The report shall contain plan and elevation views of each substructure unit inspected. All deficiencies found during the inspection shall be plotted on the drawings and described by their size (i.e. length, width, depth) and location. Approximate bottom of footing lines, below the mudline, should be shown as dashed, "hidden" lines, on the substructure elevation views.

7. *Photographs:* Photographs of upstream and downstream approaches, elevations of the bridge and typical substructure units, and any deterioration causing a rating of "5" or less shall be provided. Underwater photographs are generally not required but may be submitted if underwater visibility permits and the subject is of particular importance. All photographs shall be taken using digital cameras.

8. *Field Notes*: All field notes, field forms and other sketches actually prepared in the field at the time of the inspection shall be submitted with the report.

5.2.5 Semi-Final Construction Inspections

Semi-final bridge construction inspections are conducted as bridge construction operations near completion while the Contractor is still available to make corrections. The purpose of the Semi-final inspection is to prepare a "punch list" of items that need completion or correction. An in-depth inspection of the **newly completed construction** is performed to complete the "punch list" and to provide a condition and dimensional "bench mark" that will be referenced on future inspections. On new structures the entire bridge will receive the in-depth inspection. This will include preparing all the required Structure Inventory and Appraisal information. On rehabilitation projects, only the repair areas require an in-depth

level of inspection. Ideally, the entire bridge should receive its normally scheduled biennial inspection at the same time as the Semi-final construction inspection. Bridge safety inspectors should realize when preparing the "punch list" that the Contractor cannot be required to perform any work outside the scope defined in the construction contract, plans and specifications. This should not prevent the inspector from preparing a second, separate list of items on the bridge that might require attention. If it is deemed necessary, some repairs might be added as extra work to be completed by the Contractor on site.

Semi-final construction inspections require close attention to detail. The bridge is not only being inspected for safety, but also for consistency with the construction contract documents and for quality in the completed product.

It is imperative that the inspectors have access to the construction plans and specifications prior to performing the Semi-final inspection and that they make themselves thoroughly familiar with the work done.

The Bridge Safety Inspector must coordinate the timing of the semi-final construction inspection with the Construction Inspector on the project. The Contractor should be aware of the Bridge Safety Inspector's presence on the job site. Inspection access may be provided by the Contractor after arrangement with the project Construction Inspector.

5.3 RECORD KEEPING AND DOCUMENTATION

A good bridge inspection reporting system is essential in order to protect the lives of the public and to protect the public's investment in bridge structures. It is necessary to employ a uniform bridge inspection reporting system because of the requirements that must be fulfilled for the National Bridge Inspection Standards (NBIS). A uniform reporting system is essential in evaluating, correctly and efficiently, the condition of a structure. Furthermore, it is a valuable aid in establishing maintenance priorities and replacement priorities, and in determining structure capacities and the cost of maintaining the nation's bridges. The information necessary to make these determinations must come largely from the bridge inspection reporting system. Consequently, the importance of clear and complete inspection reports cannot be overemphasized.

5.3.1 Bridge Inspection Report Format

The bridge inspection report is a complete record of the bridge inspection. It contains the field notes and sketches completed during the inspection, completed standard inspection forms, supporting photographs, an executive summary, and possibly a Bridge Maintenance Memo, if required. Inspection reports may contain bridge plans if they were not previously on file or rehabilitation plans if work has been done on the bridge. Load rating calculations may be submitted under separate cover if there has been deterioration, modifications or a change in the dead loads on the bridge since the last inspection.

ConnDOT bridge inspection forms BRI-18, BRI-19, and BRI-25 (See Appendix C) form the core of a highway bridge inspection report. Form BRI-18 is a complete description of the condition of each component of the bridge. Field notes, sketches, and photographs that are used to more clearly describe or supplement the information recorded on form BRI-18 should be referenced on this form. Form BRI-19 gives all the Inventory data relative to the bridge, and form BRI-25 provides Inventory data on any state numbered routes that pass under the structure.

In general, the format of the completed bridge inspection report will be:

1. Cover page with bridge identification.

2. Table of Contents (BRI-27).

3. Executive Summary.

4. Form BRI-18 with any attached sheets, such as mechanical or electrical reports, as necessary, to clarify items on the BRI-18.

5. Field Notes/Sketches. Clearance diagrams, which are used for the BRI-19, 25 or 39 forms, are placed first. The remainder of the field notes are put in the same order as the items they support on the BRI-18 (deck, superstructure, substructure, waterway, approaches).

6. Photographs.

7. Calculations - Repair Quantities or Deterioration Percentages.

Additional forms/information that is submitted with the inspection report, but not bound together with the above material:

1. Inventory Coding Forms BRI-19 (or BRI-39 for railroad structures) and BRI-25 (if required). These forms are submitted with, but not bound into the inspection report so that they can be separated for computer data entry

2. Maintenance Memorandum (if required). See Chapter 9. The Bridge or Rail Maintenance Memorandum is not bound into the inspection report so that it can be forwarded to the Bridge Maintenance Department.

3. Form BRI-11, Seismic Screening Data Sheet, or Form BRI-12, Fracture Critical Inspection Data Sheet, only if these are not already on file in the bridge record. New forms may be required, however, if the bridge has been rehabilitated or modified.

4. PONTIS element data collection form/report.

5. Bridge Plans or Rehabilitation Plans. These are submitted only if they are not already on file in the bridge record.

5.3.2 Executive Summary

An Executive Summary is required to be submitted with the inspection report on all Class 3 inspections (routine and in-depth) and all Class 2 in-depth inspections. The Executive Summary, located in the beginning of the inspection report, should provide a general description of the structure and give the overall condition of the main components. Specific, serious deficiencies may also be highlighted in the summary to call attention to their presence.

The following information should appear in the first paragraph of the summary to describe a bridge: Bridge number, feature carried, feature crossed, town, number of spans, type of construction, overall length of structure, width of roadway carried, date of construction, dates of any major rehabilitations, the current load capacity of the structure.

The overall condition rating of the structure should then be given followed by the condition of each main structure component; Deck, Superstructure, Substructure, Channel, Culvert, Approach. A statement that reflects the **overall** condition of each main component should include minor deteriorations that do not require repair.

e.g.: "**Superstructure** The superstructure is in satisfactory condition (Overall Rating = 6) with areas of light rust along the bottom flanges."

Following the overall condition description for each component, should be a list of

deficiencies that require repair or items that should be monitored on future inspections. Items that require repair should include an estimated quantity for the required repairs.

e.g.: 1.) There is an area of heavy rusting on the fascia of beam 1 at the south abutment. Clean and spot paint 4 SF.

2.) The bearing anchor bolts are missing at beam 3 at the west abutment. Weld bearing keeper angles at this bearing.

5.3.3 Field Notes and Field Forms

Field notes and field forms, including sketches, are completed at the bridge site to record conditions observed during the inspection. Field notes and sketches allow the inspector to describe the type, size, and location of defects observed more completely than the limited space on form BRI-18 allows. For this reason, it is important to cross reference the detailed statements contained in the field notes to the more general descriptions contained on the BRI-18.

All field notes should be neatly prepared and every effort should be taken during the inspection to keep sheets presentable during the course of the inspection. All field notes are part of the "historic record" of the inspection and must be submitted with the inspection report. Sheets that are neat do not need to be recopied. As a minimum, all field note sheets must be identified with the bridge number, date the sheet was worked on in the field, and the inspection crew names.

5.3.4 Introduction to Condition Rating Coding System

The condition of an element, member, or component is an evaluation of its current physical state compared to the as-built (new) condition.

The inspector should evaluate each element of a given component and assign to it a broad descriptive condition rating of "good," "fair," or "poor," based on the deficiencies found on the individual element. The following guidelines should be used in establishing an element's condition rating:

∃ Good - element is limited to only minor problems.

∃ Fair - structural capacity of element is not affected by minor deterioration, section loss, spalling, cracking, or other deficiency.

∃ Poor - structural capacity of element is affected or jeopardized by advanced deterioration, section loss, spalling, cracking, or other deficiency.

To ensure a comprehensive inspection and as a part of the requirements of record keeping and documentation, an inspector should record the type, size, quantity, and severity of deterioration and deficiencies for each element in a given component.

The *FHWA "Recording and Coding Guide for the Structure Inventory and Appraisal of the Nation's Bridges"* uses a numerical condition rating system to evaluate the condition of various bridge components. These rating guidelines can be applied to the various items on ConnDOT Structure Appraisal Form BRI-18.

Broad Description	**Code**	**Description**
	N	NOT APPLICABLE
AGood≅	9	EXCELLENT CONDITION
AGood≅	8	VERY GOOD CONDITION - no problems noted.
AGood≅	7	GOOD CONDITION - some minor problems.
AFair≅	6	SATISFACTORY CONDITION - structural elements show some minor deterioration.
AFair≅	5	FAIR CONDITION - all primary structural elements are sound but may have minor section loss, cracking, spalling, or scour.
APoor≅	4	POOR CONDITION - advanced section loss, deterioration, spalling, or scour.
APoor≅	3	SERIOUS CONDITION - loss of section, deterioration, spalling, or scour have seriously affected primary structural components. Local failures are possible. Fatigue cracks in steel or shear cracks in concrete may be present.
ACritical"	2	CRITICAL CONDITION - advanced deterioration of primary elements. Fatigue cracks in steel or shear cracks in concrete may be present or scour may have removed substructure support. Unless closely monitored it may be necessary to close the bridge until corrective action is taken.
ACritical"	1	"IMMINENT" FAILURE CONDITION - major deterioration or section loss present in critical structural components, or obvious vertical or horizontal movement affecting structure stability. Bridge is closed to traffic, but corrective action may put bridge back in light service.
	0	FAILED CONDITION - out of service; beyond corrective action.

The numerical condition ratings should characterize the general condition of the entire component being rated. They should not attempt to describe localized or nominally occurring instances of deterioration or disrepair. Correct assignment of a condition rating must, therefore, consider both the severity of the deterioration or

disrepair and the extent that it is widespread throughout the component being rated. However, in some cases, a deficiency will occur on a single element or in a single location. If that one deficiency reduces the load carrying capacity or serviceability of the component, then the element can be considered a "weak link" in the structure, and the rating of the component should be reduced accordingly.

5.3.5 Structure Inventory and Appraisal Forms

Structure Inventory and Appraisal (SI&A) forms are a graphic representation of the data elements collected for each bridge (qualifying structure) to comprise the National Bridge Inventory (NBI) database. The pertinent data needed to describe the type, size, location, condition, etc. of each bridge is collected and coded on these forms in accordance with the FHWA *"Recording and Coding Guide for the Structure Inventory and Appraisal of the Nation's Bridges."*

It is important to note that the SI&A sheet is not an inspection form. Rather, it is a summary sheet of bridge data required by the FHWA to effectively monitor and manage the National Bridge Inspection Program and the Highway Bridge Rehabilitation and Replacement Program.

ConnDOT Forms BRI-19 and BRI-25 (See Appendix C) are used to code and record the necessary NBI data as described in the FHWA "Coding Guide." Form BRI-19 contains the inventory data for the road on the bridge plus the bridge structure itself. Form BRI-25 is used to code inventory information for routes that pass under the bridge, generally State numbered highways. While every structure has one (1) BRI-19 form associated with it, there may be no BRI-25 form (as for structures over water) or several BRI-25 forms for large structures in interchange areas.

The information contained on the forms is a compilation of both office data and field inspection results. Measurements and dimensions are normally taken from the original plans and verified in the field. Once a bridge has been inventoried, the majority of the SI&A items will remain unchanged. Only specific items, which are identified on the BRI-19 and 25 forms, need to be coded or verified on every inspection.

Inspectors should carefully explain changes in coded items when there is no obvious reason (like a rehabilitation project) to explain why certain dimensions or coded values ought to change. For example, a paving project or restripping of a roadway under a bridge might cause under clearance dimensions to change. Unless explained, it might not be obvious why these values are being changed on the form. Furthermore, coded dimensions may not coincide with original design plans because field measurements proved that a particular item has been repaired, replaced or not built according to plan. Office personnel should not adjust coded values based on plan information without confirming that field conditions match the plans.

5.3.6 Photographs

The old saying "A picture is worth a thousand words" is certainly applicable to bridge inspection reporting. Sometimes, no amount of written description can convey the same information like a simple photograph can. For this reason, photographs form an important part of every bridge inspection report and all bridge inspectors should be familiar with basic camera operation and photographic techniques. Reading the operation manual that came with the camera you are using will normally provide enough basic information and guidelines to allow you to take the commonly required photographs.

All inspection photographs shall be taken using digital cameras. Digital cameras shall have a minimum photo quality of 756 x 506 pixels with 24-bit color. A video camera, available from the main office, may be used where specially required.

It is important to keep track of photos taken. For this reason, it is necessary to keep a photo log of the pictures taken at each structure (See Figure 5.3.6a). The structure identifier, date, and description of what is in the photo (including exact location of detail shots) should appear next to the number of the photo. Photographs in the inspection report should be printed two to a page with both photos viewable from the same direction and individually labeled. Labels must be legible while viewing the mounted print.

Bridge No. _____ Date

Town _____ Inspectors

Carried _____ Crossing

Photo #	Image Description
1	Bridge ID
2	East Elevation
3	Bridge from South Approach
4	Typical Underside (Span 4)
5	Span 3, Beam 4 Bearing Pedestal Spalled at Pier 3

Figure 5.3.6a - Sample Photo Log

Photographing the bridge:

Upon arrival at a bridge site, before shooting bridge images, take a picture of the bridge number located on the bridge. If the number is known, but cannot be found or is not legible, photograph the number after writing it on a sheet of white paper. Use large text and a dark, thick tipped marker when writing numbers and letters to be photographed. This insures legibility, even if the photo is slightly out of focus.

After taking the ID photo, the following general descriptive photos should be taken:

1) An elevation (side view) of the bridge.

2) A picture of the bridge from the approach showing the roadway on the bridge (preferably from the On-Traffic side so that signs are readable and railing transitions are visible).

3) A typical underside photo showing the main superstructure.

These photos may be omitted if the existing photos available in the file (See section 5.1.1) are adequate to show the general configuration and description of the bridge.

There are other photos required for in-depth inspections that are discussed in Section 5.2.2

Documentation photographs for an inspection should include photos of significant defects and photos necessary to describe deterioration conditions. As a minimum this should include photos of items rated "5" or less and items that will require maintenance repairs. Conditions found during the inspection that might cause you to change a previously coded condition rating (up or down) may be desirable to photograph to show changes in condition that justify your coding. Keep in mind, that it is easier to photograph something when you are there than to have to go back. This is especially true when special access equipment or traffic control is involved.

Hint In the course of photographing some details (like steel or concrete cracking) there may be an inclination to get a close-up of a small detail. Sometimes this is necessary or desirable, but frequently it is more helpful to back-up enough to show the overall picture such that the significance of the defect can be related to its location on the bridge. For example, a close-up picture of a crack in a piece of steel may not give any scale and may look like any other crack. However, an overall picture that shows the whole connection detail, with the crack, gives the crack some graphic description of its size and the criticality that it presents to the total connection. When it isn't possible to do this successfully, it may be desirable to take both the detailed photo and the overall picture.

Be aware that while photos are important and can be a great help in clarifying conditions, they are **not** a replacement for good notes and sketches. The photograph will not give you the amount of steel section loss shown or otherwise quantify deteriorations being illustrated. One way to partially accomplish this is to include some type of ruler or measuring device in the photo to lend scale to the image. Another helpful technique to use when taking detail pictures is to label the detail being photographed. Draw an arrow to the defect, using keil or a marker, and label the exact location right on the member to be photographed.

5.3.7 Documentation For Items Rated "5" Or Less

All items with a condition rating of "5" or less should be documented with sketches in sufficient detail to allow for as-inspected rating calculations to be performed, and such that future inspections can determine if the condition has deteriorated. This documentation should include sketches and/or photographs of the deteriorated areas.

All sketches should be prepared in accordance with Section 5.3.2 *Field Notes and Field Forms*. Sketches should be drawn to scale as much as possible. Sketches should contain a North arrow, or other means of providing proper orientation (i.e. stream flow direction, geographic features, etc.). All members should be labeled using the nomenclature from the design plans (if it is known) or another nomenclature defined on the sketch (i.e. “Stringers numbered from North to South”). Documentation of deteriorated areas should include the size of the deterioration (i.e. height, width, length, depth, etc.) and location along the member (i.e. distance from nearest support, etc.). All dimensions should be labeled as either field measured (i.e. using ruler, calipers, etc.) or estimated.

All photographs should be taken in accordance with Section 5.3.5 *Photographs*. Sufficient photographs should be taken to show the full extent of the deteriorated area (i.e. close up views), and its location along the member receiving the condition rating (i.e. panoramic views). The location of each photograph should be noted in the field notes.

CHAPTER 6

CONDITION EVALUATION PROCEDURES

GENERAL 6-1

Structure Identifier Requirements and Procedure 6-1
I. Structure Identifier Requirements 6-1
II. Procedure For Assigning Structure Numbers 6-2
Bridge Component Labeling Systems for Inspection Reporting 6-4
Measuring Clearances and Preparing Clearance Diagrams 6-6

6.1 DECK INSPECTION 6-10

6.1.1 Timber Decks 6-10
6.1.2 Concrete Decks 6-13
6.1.3 Metal Decks 6-19
6.1.4 Overlays 6-25
6.1.5 Curbs 6-30
6.1.5.1 Mountable Curbs 6-32
6.1.6 Medians 6-35
6.1.7 Sidewalks 6-36
6.1.8 Parapets 6-40
6.1.9 Bridge Railings 6-44
6.1.10 Drainage Systems 6-48
6.1.11 Lighting and Utilities 6-52
6.1.12 Deck Joints 6-57

6.2 SUPERSTRUCTURE INSPECTION 6-65

6.2.1 Bearings 6-65
6.2.1.1 Pin and Hanger Assemblies 6-77
6.2.1.2 Joint Measurements 6-87
6.2.2 Reinforced Concrete Slabs 6-90
6.2.3 Reinforced Concrete T-Beams 6-93
6.2.4 Concrete Rigid Frames and Closed Spandrel Arches 6-98
6.2.5 Open Spandrel Concrete Arches 6-103
6.2.6 Prestressed and Post Tensioned Concrete Superstructures 6-109
6.2.7 Steel Mult-Girders 6-113
6.2.7.1 Steps to Follow when Fatique Cracks are Observed 6-119
6.2.8 Steel Girder and Floorbeam Systems 6-122
6.2.9 Steel Box Girders 6-128
6.2.10 Trusses and Metal Arches 6-133
6.2.11 Moveable Bridges 6-143

6.2.12 Timber Superstructures 6-163
6.2.13 Stone Masonry Arches 6-168

6.3 SUBSTRUCTURE INSPECTION 6-173

6.3.1 Concrete Substructures 6-173
6.3.2 Masonry Substructures 6-178
6.3.3 Timber Substructures 6-185

6.4 WATERWAYS 6-191

6.4.1 Channel and Channel Protection 6-191
6.4.2 Waterway Adequacy 6-196

6.5 CULVERTS 6-198

6.6 APPROACHES 6-204

CHAPTER 6 APPENDICES

6.1 Fatigue Sensitive Details
6.2 Steel Section Loss Measurements
6.3 Crack Arresting Detail
6.4 Definitions of Concrete Deterioration and Cracking
6.5 Inspection Measurements Required for Various Culvert Shapes
6.6 Typical Deck Joint Sketches
6.7 Stone Masonry Arches
6.8 Timber Decay and Deterioration
6.9 Concrete Open and Closed Arches and Frames
6.10 Waterways
6.11 Trusses
6.12 Scour and Stream Section Documentation

CHAPTER 6

CONDITION EVALUATION PROCEDURES

GENERAL

STRUCTURE IDENTIFIER REQUIREMENTS AND PROCEDURE

I. Structure Identifier Requirements

Structures that meet identifying requirements are given a unique structure identifier. The federal and state regulations are listed below.

I a. Federal Requirements

The National Bridge Inventory (NBI) has the following requirements:

- Structure numbers must be unique.
- An official structure number must be recorded for all highway bridges twenty feet or greater in length (6.08 meters).
- Structures with Closed Medians should be considered one structure.

I b. State Requirements

- An official, unique structure number is recorded for all inspectable structures that impact the traveling public, as follows:

  1) Structures meeting NBI requirements (greater than twenty feet and carrying public highway traffic) are given a number. These structures are part of the NBI and are reported to the FHWA.

     Note: Span Length is measured parallel to and along the centerline of roadway, as directed in the FHWA Recording and Coding Guide.

  2) Structures less than twenty feet in length (6.08 m) and greater than 6 feet in length (1.83 m) will be inventoried by the State. Steel culverts and concrete pipe structures with spans of less than ten feet in length (3.05 m) will not be inventoried or inspected.

  3) Structures carrying rail traffic within State owned Rights of Way, and with spans greater than five feet (1.32 m) in length will be inventoried by the State.

4) Overhead Sign Support Structures – All State owned or maintained sign structures over highways, including sign bridge structures, cantilever structures, and structure mounted signs.

II. Procedure For Assigning Structure Numbers

The State of Connecticut assigns a structure number (usually a five or six character number, sometimes with an alpha character suffix) to structures that meet the identifier requirements. These requirements are listed above under State Requirements.

In addition, the structure identifier field (Item 8) in the National Bridge Inventory (NBI) allows a fifteen digit number. When reporting the NBI number to the federal government, the fifteen digit format will consist of a leading blank space, the agency structure number and then remaining blank spaces will be used to fill in the remaining digits.

The structures that meet numbering requirements, as defined, are assigned in blocks as follows:

State and NBI Local Structures	00001 – 06299 06500 – 07999
DEP Structures	06300 – 06499
Overhead Sign Support Structures	20000 – 21999
Locally Owned Town Structures - Less than 20 feet (6.08 m) - First three digits - Town number - Next three digits - Bridge number in that town	001 - 001 to 169 - 999
Railroad Structures	*nnnnnR – nnnnnR & 08000R – 09999R

*Note: Some RR structures were numbered using existing bridge numbers and adding an R suffix.

A new structure number will only be assigned to new structures in new locations or newly discovered structures. Bridge structures that are removed and completely replaced in the same location will retain the same structure number. Bridge structure numbers will be assigned to a structure in a location and the number will be kept for that location even if the alignment has changed provided that the structure is performing the same function. The Supervising Engineer in charge of that area will be responsible for archiving all information relating to the old structure in that location.

The Bridge Design Unit can request bridge numbers for planned structures at project initiation. These bridge numbers will be allotted on a project-by-project basis. Bridge

numbers that are then assigned to bridges on that project should be reported to Bridge Safety with a brief description of the bridge for inventory purposes.

Structures without any common substructure elements will be given separate structure numbers. Structures with any common substructure elements and an open median will be numbered using suffixes (i.e. A, B etc.). The bridge with traffic in the log direction is designated with the suffix "A" and the bridge in the reverse direction with the suffix "B".

Structures with any common substructure elements and closed medians will be given one structure number. Closed medians may have either mountable or non-mountable curbs or barriers.

BRIDGE COMPONENT LABELING SYSTEMS FOR INSPECTION REPORTING

Reference: BITM 90 Section 5.3.2

The proper labeling of bridge components is necessary to be able to record and describe the locations of deficiencies. Normally, the labeling system used on the original construction plans should be used. If, however, the labeling system on the plans involves duplication of component numbers that would be confusing in the field, a new labeling system should be adopted after consultation with the Supervising Engineer for the bridge. Examples of labeling systems that should be avoided are those that start near the middle of a structure and move outward toward the abutments or those that start with Span "A1" and continue with Spans "P1, P2, ...".

When the above situations arise or when plans for the bridge are not available, bridge components should be numbered as shown in Figure 6.0a. This labeling system is based on the logged direction of the route carried by the bridge. Labeling advances from the beginning to the end of the bridge progressing in the log direction. Beams are numbered from left to right facing in the log direction.

On town roads, where a log direction may not be established, log should be taken as either from South to North or from West to East depending on bridge orientation. Abutments should be referenced by compass direction, in addition to number, to allow someone in the field to easily orient the labeling system (e.g.: South Abutment (#1) and North Abutment (#2)). When establishing the bridge orientation, the original construction plans or a compass should be referenced for a North direction. Bridge orientation should be taken as either West to East or South to North (Do not use designations such as Southwest Abutment). Note that it is possible (and common) to have a West to East bridge on a roadway logged North or a South to North bridge on a roadway logged East. Bridges carrying Interstate 95 in Connecticut are a good example of structures that frequently have West (#1) and East (#2) abutments carrying a South to North roadway. Remember that compass direction is independent of which way the roadway is logged.

Once a bridge labeling system is determined, a key plan should be prepared that shows the labeling for all the bridge components. This key plan should remain a part of the permanent file and be referenced for all subsequent inspections. Changes to the key plan should not be made without the approval of the Supervising Engineer.

Some special features on bridges may have specific identification numbers associated with them such as light poles, motorist aid call boxes, fire department stand pipes, etc. When reporting problems with one of these facilities, try to include the specific identification number on the unit, in addition to the bridge labeling system reference (e.g.: Light Pole #3 West Parapet (CL&P #5374)). This will make it easier for the maintaining agency to locate the problem and make repairs.

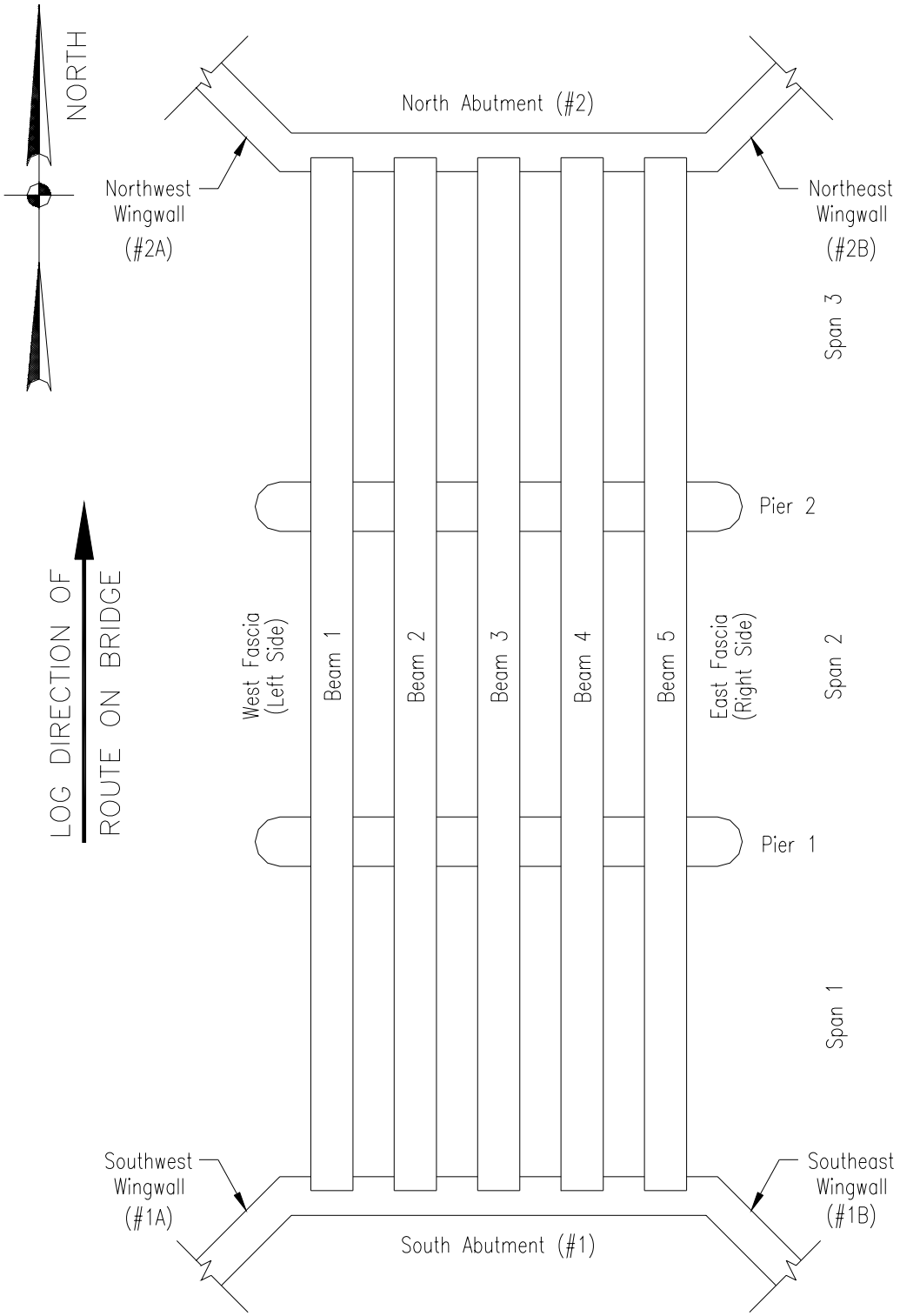

Figure 6.0a – Bridge Component Labeling System

MEASURING CLEARANCES AND PREPARING CLEARANCE DIAGRAMS

Reference: The Department's Policy on Posting Vertical Clearances

Clearance diagrams must be on file for all bridges over roadways or railroad. These diagrams give the necessary horizontal and vertical clearance information needed to complete the coding items required by the *FHWA Recording and Coding Guide for the Structure Inventory and Appraisal of the Nation's Bridges* (Ref. FHWA Coding Guide Items 10, 47, 50, 51, 53, 54, 55, 56). These measurements provide important information on maximum size vehicles that can pass under or through the bridge structure. Where these measurements are less than legal minimums, they are used for establishing posted limits on the bridge.

Clearance diagrams should be drawn as a plan view of the bridge showing all lane markings and curblines on the roadway, or the position of all train tracks. Roadside or trackside obstacles including guide rail, substructure elements, top or toe of slopes steeper than 3:1, etc., should also be shown. Minimum dimensions that are to be coded for the FHWA Items above, should be labeled on the clearance diagram. See the example in Figure 6.0b.

For multi span bridges, it may be necessary to provide a sketch for each roadway crossing to adequately record the necessary clearance measurements. For through type structures, (like a truss) or if the bridge is located in a multi level interchange with roadways overhead, a clearance diagram for overbridge clearances will be required in addition to an underbridge clearance diagram.

A new clearance diagram shall be completed on each in-depth inspection. This will permit complete access to measurement locations by using the traffic control patterns in place for the bridge inspection. A new clearance diagram will also be required if there is not one currently on file or any time a change to the roadways at the bridge cause measurements to change. These changes could include the roadway being overlaid or milled, lane positions being relocated/adjusted, the addition or relocation of guide rail or traffic barriers, the addition of a new sign bridge over the structure, etc.

On routine inspections, a copy of the clearance diagram from the last in-depth inspection shall be included in the inspection report. All minimum clearances shall be verified in each span of the bridge and enough additional measurements shall be checked to verify that changes to the roadway (i.e.: lane relocation, overlaying, etc.) have not taken place. The controlling vertical and horizontal clearances in each span shall be verified on every inspection. When verifying measurements, dimensions should not normally change unless there has been some work done to change the measurement. The minimum clearance dimensions are what is desired. Do not change previously coded clearance measurements without documentation as to why they have changed.

Vertical Measurements

For spans over railroads, take vertical clearances at each rail of each track and at both fascias of each span that crosses tracks. For spans over roadways, vertical clearances should be taken at each painted line marking (one at the center of double lines), each curbline, at the edge of pavement, and at all visible breaks in grade where the cross slope on the road changes direction. These measurements are duplicated at both fascias in each span that crosses a roadway. When there are no pavement markings on a roadway, clearances should be taken at the edges of where each lane of traffic is expected to travel, but as a minimum at each curbline (or edge of roadway) and at the center of the road. Measurements for **overbridge clearances** are taken to the underside of the above structure or all sign structures over the roadway, but <u>not</u> light standards, trees, or overhead wires.

It is important to remember that the objective of these measurements is to locate a minimum clearance. As such, it may be necessary to take different or additional measurements when minimum clearances are not at the usual edge of lane or fascia locations.

Example:

- The roadway beneath the bridge may have a cross slope with a crown that is not located right on a lane line. Take the clearance at the crown of the road.

- If the roadway beneath the bridge has a rise beneath the bridge or is on a vertical crest curve that peaks beneath the bridge, the minimum vertical clearance may be located near the middle of the bridge rather than at the fascias. Be aware of this possibility particularly on very wide bridges.

- If the road beneath the bridge dips significantly at the bridge, it may be possible for long vehicles to get stuck under the structure due to "bridging" of the truck chassis. If it is suspected that this potential exists, additional investigation should be requested. Surveying may be necessary to determine the effective vertical clearance.

- If the roadway beneath the bridge is on a grade, the vertical clearance to one side of a fascia beam may be less than the other. Check the fascia edge and interior edge. This will be more prominent on wide beams like box beams.

- If a bridge beam has a bolted splice or other attachment to the underside that protrudes from the bottom of the structure, the vertical clearance at this location should be checked.

- Always check and record the vertical clearances at locations of impact damage on the bridge.

Item #10 in the FHWA coding guide is intended to identify the largest (tallest) vehicle that can move beneath the structure within a 10' (3.05 m) lane width. If the lane widths where measurements were taken are greater than the typical 12' (3.66 m), then additional measurements should be taken to code Item #10. Locate the maximum vertical clearance at the largest (tallest) lane opening under the bridge. Take an additional vertical clearance measurement 10' (3.05 m) to either side of this maximum clearance.

When measuring vertical clearances, only a direct reading vertical measuring rod should be used (bridges with clearances in excess of the normal 25' (8 m) measuring rod are an exception). Survey leveling rods are not appropriate for this work. The rod must be held vertical to get the proper measurement. This should be checked using a bubble level on the rod or by having another inspection team member sight the rod to insure it is plumb. The rod may be swept back and forth to ensure that the minimum clearance is obtained. Vertical measurements should be taken to the nearest inch with fractional inches truncated (i.e.: 14'-5 3/4" is recorded as 14'-5").

Currently, vertical clearances of less than 14'-3" (4.34 m) require the structure to be posted for the low clearance. All clearances less than the posting limit should be carefully verified. Current policy is to post structures for 3" less than the minimum measured clearance to account for snowfall, vehicle bounce, etc.

Horizontal Clearance Measurements

Lateral clearances must be measured in accordance with the FHWA coding guide items 47, 51, 55 and 56. All lane widths, shoulder widths, distances to guide rails, fences, and substructure units or toe/top of slope (greater than 3:1) should be measured and shown. Lateral clearance measurements from the edge of travel way to a roadside obstruction or substructure unit should be taken at each fascia of the bridge to locate the minimum in case the roadway is skewed to the bridge or curved. When measuring clearances at railroad tracks, measure from the nearest trackside obstruction to the closest rail as well as distance between rails and distance to adjacent tracks. Caution: Do not lay metallic measuring tapes across railroad tracks, as they can affect rail signal systems.

When measuring lane widths, note that standard highway designs and normal paving equipment produce standard size lane widths such as the 12' (3.66 m) lane. Minor deviations in lane stripping should not be used to show atypical lane configuration if plans are available to indicate that standard sizes were intended. In general, indicate the typical lane widths if actual measurements are within $\pm$3" ($\pm$ 0.08 m). Likewise, paved shoulder widths are normally intended to be in multiples of 6" (0.15 m). Lateral clearance measurements from the edge of the traveled way (not the shoulder) to the nearest roadside or trackside obstacle should be recorded exactly as measured.

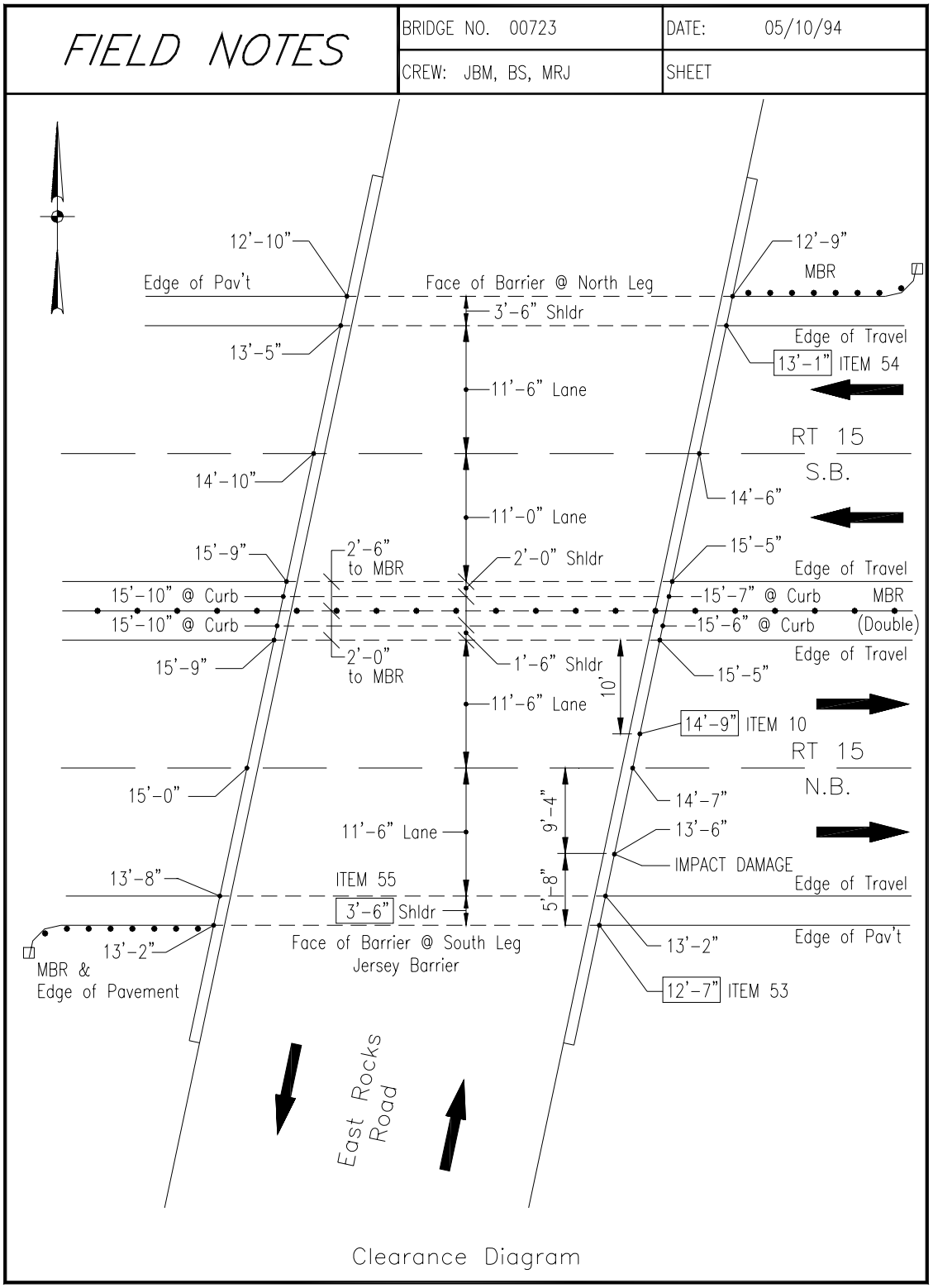

Figure 6.0b – Example Clearance Diagram

6.1 DECK INSPECTION

6.1.1 TIMBER DECKS

Reference: BITM 90 Sections 4.2, 7.2, 15.2, 16.2

Inspection Requirements

Routine Inspections:

- Inspect the deck in accordance with BITM 90 Section 7.2.

- Inspect the top of deck visually observing the condition of the top surface or overlay. The entire top surface should be observed within a distance of approximately 12 feet (3 m).

- Inspect the entire underside of deck checking for signs of decay, weathering, and damage. Normally, observation of the decking during the course of the superstructure inspection will provide an adequate inspection distance.

- On the exposed surfaces of the timber decking, discolored areas and areas of suspected decay or parasite damage should be tapped with a hammer or probed with an ice pick in an effort to determine the presence of internal decay or voids. *Be careful of frozen timber that may have internal deterioration but sounds solid due to water frozen in internal cavities.*

- On laminated timber decks, the laminated surfaces should be examined for separation. Fasteners connecting the decking to the floor system should be examined for loosening.

Documentation for Routine Inspections:

- Note the type and depth of any overlay on the bridge. Measure the overlay depth at the edge of deck or at a spalled location if possible. Measure the height of the curb reveal at several locations along each curb. This may be used to estimate the overlay thickness if a direct measurement is not possible. Do not attempt to drive a chisel, spike, etc., through the overlay to determine its thickness. Doing so may damage any waterproof membrane that might be in place.

- Deck notes should be organized in a span by span manner. Top of deck deterioration should be located with sufficient detail to correlate to the underside of deck.
- For the top surface and underside of decking, note the size and location of splits, fungus decay and parasite damage. Also note the location of loose

attachments to the floor system and the cause of this condition (wood shrinkage, decay, crushing). Where these cannot be simply described, a sketch shall be made showing the size and location of the deficiency.

- For decks with bituminous overlays, note the size and location of bituminous patches and spalls. Where these cannot be simply described, a sketch shall be made showing the size and location of the deficiency.

- Typical conditions and deteriorations causing a condition rating of less than or equal to "5" shall be photographed as outlined in Chapter 5.

In-Depth Inspections:

- In addition to the requirements of routine inspections, "hands-on" access shall be provided to the entire underside of the deck.

- Approximately 20% of all exposed surfaces of the timber decking shall be tapped with a hammer or probed with an ice pick to determine the presence of internal decay. Special attention should be given to areas that are wet or show obvious signs of deterioration.

- All exposed surfaces of the timber decking showing surface decay shall be probed with an ice pick to determine the depth of the decay.

- Timber decks with bituminous overlays shall be inspected and locations of cracking or deteriorated overlay located.

Documentation for In-Depth Inspections:

- Sketches of both the top and underside of the deck on a span by span basis will be required. Top of deck deficiencies should be located with sufficient detail to make correlation with underside of deck notes possible.

- The thickness of the timber decking should be measured and recorded. Give the actual, not nominal dimension.

- A good quality photograph of both the top and underside of the decking, that documents its overall condition and supports the condition rating, should be included.

Report Review

- Review the inspection findings in accordance with established Quality Control and Quality Assurance procedures.

- The inspection report reviewer should determine if the pattern, quantity and severity of the deteriorations found support the numerical condition rating given. The reviewer should compare the present inspection report to past reports.

Maintenance Concerns

- Proper drainage should be maintained by removing any accumulations of sand or debris that might trap or hold water on the deck and promote decay.

- Any inspection bore holes created should be plugged.

- Loose or damaged planks should be repaired or replaced where possible. Also, loose or protruding hardware should be tightened, repaired or replaced.

Figure 6.1.1a – Deterioration of Timber Plank Deck Surface

6.1.2 CONCRETE DECKS

Reference: BITM 90 Sections 4.3, 7.1, 7.3, 15.3, 16.3

Inspection Requirements

Routine Inspections:

- Inspect the deck in accordance with BITM 90 Section 7.3.

- Walk the top of deck visually inspecting its condition. The entire top of deck should be observed (all spans, both directions) within a distance of approximately 12 feet (3 m). Normally this can be done safely from the shoulders without the need for traffic control operations. However, if the roadway is narrow or traffic speed or volume considerations make it unsafe to walk the deck without protection, lane closures should be scheduled.

- The underside of deck should be viewed from a distance and with sufficient lighting to detect cracks 1/32" (0.5 mm) wide and larger. Normally, observation of the deck during the course of the superstructure inspection will provide an adequate inspection distance.

- On the underside of deck, all areas of suspected delamination and at least 10% of those areas showing cracking, scaling, wetness or staining shall be tapped with a hammer to determine soundness.

- For precast deck slabs, in addition to the normal concrete deck inspection, the deck panel anchorages and connections should be inspected (if possible).

- Inspection of bridges with stay in place forms should follow the procedures for concrete decks, except rusting will be the primary visible deterioration on the underside. For bridges with severely rusted forms, spot locations may have the forms removed and the concrete inspected.

Documentation for Routine Inspections:

- Note the type and depth of any overlay on the bridge. Measure the overlay depth at the edge of deck or at a spalled location if possible. Measure the height of the curb reveal at several locations along each curb. This may be used to estimate the overlay thickness if a direct measurement is not possible. Do not attempt to drive a chisel, spike, etc., through the overlay to determine its thickness. Doing so may damage any waterproof membrane that might be in place.

- For decks with bituminous overlays note the size and location of bituminous patches, spalls and any concrete staining. Where these cannot be simply described, a sketch shall be made showing the size and location of the deficiency.

- For bare concrete decks and the underside of all decks, note the size and location of cracks, spalls, delaminations, etc., along with any signs of efflorescence, rusting, leakage, etc. Where these cannot be simply described, a sketch shall be made showing the size and location of the deficiency.

- Deck notes should be organized in a span by span manner. Top of deck deficiencies should be located with sufficient detail to make correlation with underside of deck notes possible. Size/areas of deficiencies shall be quantified in sufficient detail to estimate repair quantities and to determine the percentage of deck deterioration. The "Concrete Deterioration Worksheet", shown in Figure 6.1.2a on the next page, shall be completed for all bridges with concrete decks.

- Typical conditions and deteriorations causing a condition rating of less than or equal to "5" shall be photographed as outlined in Chapter 5.

In-Depth Inspections:

- In addition to the requirements for routine inspections, "hands-on" access shall be provided to the entire underside of deck and to all portions of bare concrete on the top of deck. Scheduling of traffic control operations will be required.

- An in-depth inspection of the deck surface should be performed whenever the overlay or wearing surface is removed for rehabilitation or replacement

- A ADeck Survey≅ shall be conducted on all bare concrete decks in accordance with the procedure described in Chapter 5 of this manual.

- Decks with a bituminous overlay shall be inspected and locations of cracking, or deteriorated overlay located.

- On the underside of deck, all areas of cracking, scaling, wetness or staining shall be sounded with a hammer. A random sampling of at least 25% of the areas showing no apparent signs of deterioration shall also be sounded using a frequency adequate to detect delaminations.

Bridge No.: _____ Date: _____ Prepared By: _____ Checked By: _____

CONCRETE DETERIORATION WORKSHEET

Form BRI-10, Rev. 9/01

	Deterioration By Span - In Square Feet										
	Span Number										
Deterioration Type	1	2	3	4	5	6	7	8	9	10	Total
Spalled and Delaminated Areas	Top:	Top:	Top:	Top:	Top:	Top:	Top:	Top:	Top:	Top:	Top:
	Bot:	Bot:	Bot:	Bot:	Bot:	Bot:	Bot:	Bot:	Bot:	Bot:	Bot:
Scale (Moderate to Severe Only)	Top:	Top:	Top:	Top:	Top:	Top:	Top:	Top:	Top:	Top:	Top:
	Bot:	Bot:	Bot:	Bot:	Bot:	Bot:	Bot:	Bot:	Bot:	Bot:	Bot:
Cracks: w/Efflorescence (use 6 in. width x length)	Bot:	Bot:	Bot:	Bot:	Bot:	Bot:	Bot:	Bot:	Bot:	Bot:	Bot:
w/o Efflo. (use 3 in. width x length)	Bot:	Bot:	Bot:	Bot:	Bot:	Bot:	Bot:	Bot:	Bot:	Bot:	Bot:
Map Cracking: w/Efflorescence (use full area)	Bot:	Bot:	Bot:	Bot:	Bot:	Bot:	Bot:	Bot:	Bot:	Bot:	Bot:
w/o Efflo. (use 50% of area)	Bot:	Bot:	Bot:	Bot:	Bot:	Bot:	Bot:	Bot:	Bot:	Bot:	Bot:
Honeycombed Areas (only areas more than 1 1/2 in. deep)	Bot:	Bot:	Bot:	Bot:	Bot:	Bot:	Bot:	Bot:	Bot:	Bot:	Bot:
Total Span Area (Square Feet)											
% Spalled and Delaminated on Top											
% Deterioration on Bottom											

Figure 6.1.2a - Concrete Deterioration Worksheet

- For decks with metal stay in place forms, spot locations of heavily rusted forms may need to be removed to inspect the underlying concrete. It is not necessary to remove forms that show only minor deterioration.

Documentation for In-Depth Inspections:

- Sketches of both the top and underside of deck, on a span by span basis, are required with sizes and types of deteriorations noted.

- A good quality photograph of both the top and underside of deck, which documents its overall condition and supports the condition rating, should be included.

Report Review

- Review the inspection findings in accordance with established Quality Control and Quality Assurance procedures.

- The inspection report reviewer should determine if the pattern, quantity and severity of the deteriorations found support the numerical condition ratings given. The reviewer should compare the present inspection report to past reports.

- Low condition ratings that are caused by extensive widespread deterioration should be reason to request supplemental testing to better determine the condition of the deck slab and whether rehabilitation or replacement is warranted. The true condition of an overlay bridge deck may not be apparent until removal of the overlay for rehabilitation.

Maintenance Concerns

- Repair of spalled areas on the underside of deck is not normally necessary. At most locations, any loose or hollow concrete should be removed and the spalled area cleaned and coated with an appropriate material that will protect any exposed reinforcing steel and prevent further deterioration. Spalls that extend up past the bottom mat of reinforcing steel should be patched to cover the reinforcing.

- Beam haunches have shown a susceptibility to spalling. Loose haunch concrete, or any loose concrete, warrants immediate removal if it is located over areas of vehicular, navigation or pedestrian traffic.

- Preventing intrusion of water and de-icing salts into the concrete deck has proven to be effective at preventing or slowing deterioration. The current preferred method of accomplishing this is to install a waterproofing

membrane and a bituminous concrete overlay. Before application of an overlay, it is important to repair all deteriorated concrete on the top of the deck. The structure should also be analyzed to determine the effect of the additional dead load.

- Spalls and hollow areas on top of a deck should be patched with an approved cementitious repair material. Bituminous cold patch is suitable for a temporary repair to the riding surface, but should not be considered a permanent repair.

Figure 6.1.2b - Top of Bare Concrete Deck with Patched, Spalled and Hollow Areas.

Figure 6.1.2c - Typical Underside of Concrete Deck. Note Cracking with Efflorescence and Formwork Remaining from Full Depth Patching.

6.1.3 METAL DECKS

Reference: BITM90 Sections 4.3, 4.4, 7.4

Types of metal bridge decks include:

- Grid Decks - Can be open, filled with concrete, half-filled or exodermic.
- Orthotropic - Steel plate
- Isotropic - Aluminum panel
- Corrugated Deck Pan
- Buckle Plate (not common - found on older bridges)

Examples of some of these metal deck types are shown in Figures 6.1.3a-c.

Inspection Requirements

Routine Inspections:

- Inspect the deck in accordance with BITM90 Section 7.4.

- Inspect the top of the deck visually observing the condition. The entire top surface should be examined (all spans, both directions) within a distance of approximately 12 feet (3 m).

- All areas suspected of deterioration or damage and all areas where water can be trapped should be observed "hands-on."

- At least 10% of the bearing areas and connections should be observed "hands-on." If this inspection reveals significant deteriorations, then additional "hands-on" inspection is required.

- Inspectors need to be aware of the difference between Stay-In-Place (SIP) forms, used to construct some concrete decks, and corrugated steel flooring ("deck pans"). SIP forms support the uncured concrete deck when it is originally placed. After approximately 28 days, the reinforced concrete deck hardens and becomes the structural deck system that carries the traffic loads on the bridge. On the other hand, corrugated steel flooring is only filled with bituminous concrete to form a wearing surface. In this case, the steel flooring is the structural deck that carries the traffic loads on the bridge. For this reason, rusting of corrugated steel flooring should be considered a more serious structural deterioration whereas rusting of SIP forms is not structurally significant in and of itself. Rusting of SIP forms may indicate leakage through the concrete deck with possible deterioration of the concrete above. In the case of SIP forms, sections of form can be removed to inspect the condition of the concrete deck above.

Figure 6.1.3a – Underside of Asphalt Filled Metal Deck Pans.

- Orthotropic decks have a large number of smaller members connected together to form the deck system. The connections are normally made by welding that results in a large number of intersecting welds. These intersecting welds, or copes in members to avoid intersecting welds, should be checked for fatigue cracking that may originate at these locations.

- Open grid decks are prone to rusting because water, salt, sand and debris can pass through the deck and collect on top of the supporting members and hold moisture that accelerates deterioration in these areas. Inspectors should be alert for the possibility of main bearing bar deterioration where debris accumulates against these bars on top of the supporting members. This condition will generally be most common at the "on-traffic" ends of the bridge where vehicles carry this sand, etc., onto the bridge from the approaches.

- Aluminum isotropic decks are made-up of individual extrusions welded together into panels in the shop. These panels are then bolted together in the field to form the deck. Welds between extruded sections should be inspected for fatigue cracking and the bolted splices between panels should be inspected for proper connection. The connection of the panels to the supporting beams should also be observed where possible.

Documentation for Routine Inspections:

- Note the type and depth of any overlay on the bridge. Measure the overlay depth at the edge of deck or at a spalled location if possible. Measure the height of the curb reveal at several locations along each curb. This may be used to estimate the overlay thickness if a direct measurement is not possible. Do not attempt to drive a chisel, spike, etc., through the overlay to determine its thickness. Doing so may damage any waterproof membrane that might be in place.

- For decks with bituminous overlays, note the size and location of bituminous patches, spalls and any concrete staining. Where these cannot be simply described, a sketch shall be made showing the site and location of the deficiency.

- For filled grid decks with a bare top surface, note the condition of the top surface of the concrete. Note areas of heavy scale and soft concrete. Where these cannot be simply described, a sketch shall be made showing the size and location of the deficiency.

- Deck notes should be organized in a span by span manner. Top of deck deficiencies should be located with sufficient detail to make correlation with underside of deck notes possible.

- Typical conditions and deteriorations causing a condition rating of less than or equal to "5" shall be photographed as outlined in Chapter 5.

In-Depth Inspections:

- In addition to the requirements for routine inspections, "hands-on" access shall be provided to all deck bearing areas and connections.

- An in-depth inspection of the deck surface should be performed whenever the overlay or wearing surface is removed for rehabilitation or replacement
- Decks with a bituminous overlay shall be inspected and locations of cracking or deteriorated overlay noted.

Documentation for In-Depth Inspections:

- Sketches of both the top and underside of the deck will be required.
- A good quality photograph of both the top and underside that documents its overall condition and supports the condition rating should be included.

Figure 6.1.3b – Underside of Orthotropic Steel Plate Deck

Report Review

- Review the inspection findings in accordance with established Quality Control and Quality Assurance procedures.

- The inspection report reviewer shall determine if the pattern, quantity, and severity of the deteriorations found support the numerical condition given.

- If areas of severe rusting are noted that result in steel section loss, a structural evaluation may be warranted.

Maintenance Concerns

- It is desirable to clean out all areas of open steel grids that may be filled with sand or debris. This can usually be accomplished with compressed air or high pressure water blasting and should be done prior to the inspection to allow inspection of these areas.

- Missing connections or broken attachments between the deck and the support system can permit deck "bouncing" under traffic and accelerate deterioration of the deck. Shimming, reattachment or other maintenance should be recommended. However, no welding to support beams should be undertaken without discussion with a qualified engineer.

- Fatigue cracks should be repaired to prevent crack propagation.

- Rusted out areas of steel grid should have repair plates installed or be considered for replacement.

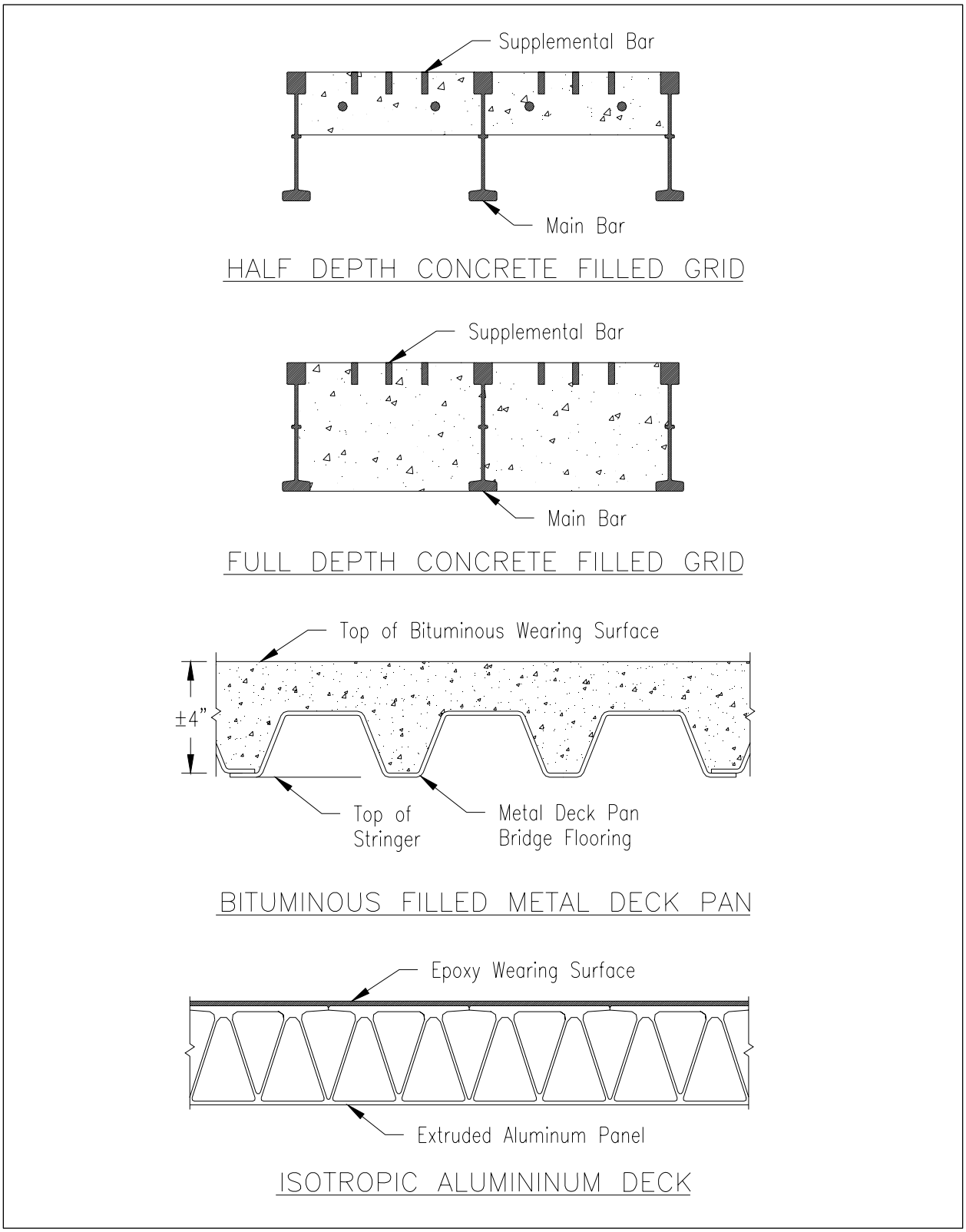

Figure 6.1.3c – Typical Metal Deck Configurations

6.1.4 OVERLAYS

Reference: BITM 90, Sections 7.2.2, 7.3.2, 7.4.2 and 15.3

The overlay is the top most layer of material applied to the deck. It is intended to provide a smooth riding surface, in addition to protecting the structural deck from the effects of weathering and traffic wear. Overlays may be constructed from a number of materials including: bituminous concrete, epoxy concrete, timber running boards or latex modified concrete (LMC). Because it is porous, bituminous concrete is usually placed with membrane waterproofing between the overlay and the deck. Inspectors should be aware of this ConnDOT standard detail and check plans for its presence. During inspections, the presence of a waterproof membrane may be indicated by 1 1/2" diameter PVC weep pipes on the underside of the deck. These pipes serve to remove water that gets through the bituminous concrete overlay and is trapped on top of the membrane.

For Timber Wearing Surfaces:

- Inspect the timber wearing surface for excessive wear, cracking, splitting, splintering, weathering, decay (especially in areas exposed to drainage), impact damage (snow plows), parasite infestation, areas of ponding, debris build-up, loose or missing fasteners, crushing and other defects.

- Evaluate the condition of the overlay and its effectiveness in protecting the deck and providing a smooth travel surface.

- Observe the performance of the wearing surface under live load to determine if crushing is noted. This may be a sign of internal decay.

- Areas that exhibit deflection (crushing) or deterioration shall be inspected closely to determine the extent of deterioration or reason for deflection and whether or not the problem extends into the structural deck.

For Concrete Overlays:

- Unless contract plans, previous inspection reports or other forms of documentation explicitly indicate that a bridge has a concrete overlay, the concrete riding surface shall be assumed to be an integral part of the structural deck and shall be inspected in accordance with Section 6.1.2 of this manual on "Concrete Decks."

- Inspect the concrete overlay for cracking, scaling, spalling, exposed reinforcement with or without corrosion, delamination, full or partial depth failures, excessive wear, impact damage or other defects. Spalls over 2" (50 mm) in depth and any spall that exposes reinforcement should be considered structural in nature and be accounted for in the overall condition rating of the deck.

- Inspect the overlay for flexure cracks in areas of negative bending.

- Evaluate the effectiveness of the overlay to direct water to the drainage system and whether or not ponding occurs. Inspect areas near drainage inlets for general deterioration.

- Evaluate the skid resistance of the concrete overlay. Note in the report if the surface has been "polished" smooth by traffic wear, such that it could be excessively slippery when wet.

- Inspect all cold joints for cracking, spalling or other defects.

- Examine repaired areas to determine if repair materials are in place and functioning as designed. Hammer tap patched areas to determine if the patch is sound and adhering to the base material.

- Areas of suspected deterioration should be inspected using physical inspection methods, such as hammer tapping or chain drag, to determine the limits of deterioration. (Note that traffic control may be required to implement these methods.)

- Areas of excessive deterioration should be inspected closely to determine the extent of the deterioration and whether or not the problem extends into the structural deck.

For Bituminous Concrete Overlays:

- Inspect bituminous concrete overlays for cracking, rutting, excessive wear, impact damage, deflections under live load, spalling and other defects.

- Inspect areas near drainage inlets for general deterioration.

- Inspect the overlay for flexure cracks in areas of negative bending.

- Evaluate the effectiveness of the overlay to direct water to the drainage system and whether or not ponding occurs.

- Measure the curb reveal at spot locations to verify the thickness of the bituminous concrete overlay. If the field calculated thickness of the bituminous concrete layer, based on the curb reveal, is greater than plans or maintenance records indicate, additional testing may be desirable to determine the actual overlay thickness for dead load analysis and the need for a new load rating should be evaluated.

- Areas of excessive wear or deterioration should be inspected closely to determine the extent of the deterioration and whether or not the problem extends into the structural deck.

Inspection Requirements

Routine Inspections:

- Inspect the bridge overlay and wearing surface in accordance with BITM 90, Sections 7.2.2, 7.3.2 and 7.4.2.

- The entire overlay should be inspected from a distance of not greater than 24 ft. (8 m) to detect deficiencies and deteriorations as outlined below. Special exceptions to this requirement should be discussed in advance with the Supervising Engineer.

Documentation Required for Routine Inspections:

- Describe deterioration such as cracking, spalling, rutting, excessive wear, impact damage, deflection under live load, exposed reinforcing bars, scaling, decay, pest infiltration, weathering, debris build-up, etc. Generally, deterioration noted should include surface area dimensions, depth of loss, and the relative location on the deck.

- Describe repairs and evaluate the condition of the repair and whether or not the repair material is adhering to the base material.

- Describe all ponding on wearing surface due to depressions, spalls or pot holes and whether or not debris build-up prevents adequate drainage.

- Particular care shall be given to documenting any increased quantity or size of deterioration that have changed since the last inspection. If the condition rating has changed since the last inspection, a photograph and explanation of why the rating has changed shall accompany the inspection report.

- Notes should be made describing the current condition of all previously recorded problems so that a rate of deterioration can be established for monitoring purposes.

- Typical conditions and conditions causing a condition rating of less than or equal to "5" shall be photographed as outlined in Chapter 5.

- A plan view of the deck area should be provided showing the locations of all structurally significant problems or problems that cannot be adequately documented with words. Detailed sketches of specific findings shall be provided as required. The plan sketch may also include notes for the sidewalks, curbs, railings, median, parapets, lighting standards and drainage system as applicable.

In-Depth Inspections:

- The entire overlay shall be inspected from a distance of not greater than 18 feet (5 m).

- All areas of cracking, scaling and spalling shall be sounded with a hammer to locate delaminations and determine the limits and extent of deterioration.

- At least 50% of the overall surface area (100% of accessible surface) of all concrete overlays showing no apparent signs of deterioration shall be initially inspected using physical inspection methods such as hammer tapping or chain drag survey to determine the need for more extensive investigation.

- "Half-Cell" tests shall be conducted on most exposed concrete deck surfaces in accordance with the procedures in Chapter 5. Discussion with the Supervising Engineer is required to determine those structures that will **not** have "half-cell" tests performed. Normally, decks with cathodic protection systems, latex modified or epoxy concrete overlays will not be tested due to the potential damage to the protective system caused by exposing reinforcing steel for making the electrical connections.

Documentation for In-Depth Inspections:

- A plan view of the deck area shall be provided showing locations of deteriorations and repairs. Detailed sketches of specific findings shall be provided as required. This plan sketch may also include notes for the sidewalk, curb, railing, median, parapets, lighting standards and drainage system as applicable.

- Documentation as a whole should clearly describe the overlay condition and serve as an accurate benchmark to which future inspections can be compared.

- A good quality photograph of the wearing surface or overlay that documents the overall condition, as well as detail photographs that support the condition rating ,shall be provided.

Report Review

- Review the inspection findings in accordance with established Quality Control and Quality Assurance procedures.

- Cross reference the inspection report, inspection field notes and photographs to ensure they are mutually supportive of their documentation.

- The inspection reviewer should determine if patterns of deterioration or progressive deterioration are taking place. Progression will be determined by comparing past and present inspection reports.

- Review all field notes to determine if further Non-Destructive Testing (NDT) and/or Destructive Testing (DT) is warranted. All recommendations for further testing shall be forwarded to the Supervising Engineer and implemented only on approval from the Supervising Engineer.

Maintenance Concerns

- Overlays are designed to provide a smooth riding surface for motorists, absorb the wear and tear of the passing vehicular and/or pedestrian traffic and protect the structural deck below. Deterioration of the overlay, and subsequently the deck (i.e. potholes and rough surfaces), increases localized impact stresses, accelerates deterioration of the overlay and deck, and can present safety hazards to the traveling public. Therefore, all attempts should be made to arrest and repair deteriorations in the overlay in the early stages to avoid costly rehabilitation projects in the future.

- Debris build-up, potholes and rough surfaces in the deck overlay can cause ponding of water during rainstorms, snow melt, etc. These ponds may promote accelerated decay or other deterioration and may also produce hazards from hydroplaning, icing, skidding, and reduced visibility from water spray. Routine maintenance should be scheduled to clear debris, unclog drains, etc., to reduce the hazard to public safety and reduce accelerated deterioration of the deck caused by ponding.

6.1.5 CURBS

Reference: BITM 90, Section 7.7

Inspection Requirements

Routine Inspections:

- Inspect the curbs in accordance the BITM 90, Section 7.7.
- All curb components should be inspected from a distance of not greater than 24 ft (8 m).
- Inspect the curbs for deterioration such as:

Stone Masonry	-	Crushed, spalled, weathered, chemically damaged, displaced, or cracked stones, lost joint mortar.
Concrete	-	Cracked, scaled, spalled, delaminated, displaced, or crushed concrete.
Steel	-	Rust, section loss, cracks and loose, bent or displaced members.
Timber	-	Fungus growth, parasite infestation, fire damage, weathering, warping splitting, checking, crushed or displaced members and chemical damage. Check for adequate attachment to the deck.

- Inspect curbs for impact damage or elements that stick up presenting tripping hazards to pedestrians or snagging hazards to passing traffic.
- Inspect the curb/overlay interface for cracks or openings through which water may pass to the deck.
- Make spot measurements of the curb reveal to determine if it is constant over the length of the bridge and consistent with the as-built value. If the curb is designed to be non-mountable, compare the inspected reveal value with current ConnDOT standards to ensure compliance.
- Inspect curbs at expansion joints for exposed blunt ends that could present a hazard to passing vehicles. If plates, covers, or other devices are in place to provide continuity between the two curbs, check for adequate anchorage.
- Evaluate the ability of the curb to direct water runoff to the drainage system and whether or not leakage occurs through the curb or curb/deck interface.
- If accumulated snow, ice or sand obscure a significant portion of the curb (more than approximately 30% of its length), then this should be noted along

with the condition of that portion that is visible. A supplement to the inspection report, describing the condition of the covered areas, will be required when the snow/ice has melted or the sand has been removed.

Documentation for Routine Inspections:

- Document any deterioration or deficiency found on the curbs. These notes may be incorporated into the field notes for the deck. Documentation should include the size and relative location on the bridge for the noted deficiency and deterioration.

- Note the curb reveal value and whether or not it complies with current ConnDOT standards for mountable or non-mountable curbs.

- Note the condition of curb expansion devices and whether or not the joint opening seems reasonable for to the ambient temperature.

- Document the current condition of previously noted problems.

- Typical conditions as well as deteriorations causing a condition rating of less than or equal to "5" should be photographed as outlined in Chapter 5. This may be incorporated into the typical top of deck condition photo.

In-Depth Inspections:

- In addition to the requirements for a routine inspection, a close inspection (within 6 feet) of the entire curb shall be made.

Documentation for In-Depth Inspections:

- The same documentation required for routine inspections is required for in-depth inspections.

Report Review

- Review the inspection findings in accordance with established Quality Control and Quality Assurance procedures.

- Cross reference the inspection report, inspection field notes, and photographs to ensure they are mutually supportive of their documentation.

- Review the inspection findings to determine if any deficiencies or deteriorations exist that present a safety hazard to the traveling public (vehicular or pedestrian).

- Verify whether or not the field measured curb reveal meets or exceeds current ConnDOT standards if the curbs are designed to be non-mountable. Check current measurements against the last inspection to verify if the deck

has been overlay. If the deck has been overlay, the need for a new load rating should be evaluated.

Maintenance Concerns

- Non-mountable curbs are designed to deflect errant vehicles and keep them within the travel lane boundaries of the bridge. Therefore, any condition such as spalled or cracked stone or concrete, decayed, infested or split timber, rusted steel or other deterioration or deficiencies that negates the ability of the curb to achieve this should be repaired. All repairs shall utilize approved design procedures and materials.

- Components of curbs that are deteriorated to the point where they are breaking up or displaced into traffic can present possible accident causing hazards to both vehicles and pedestrians. These areas should be repaired as soon as possible.

- Curbs on bridges with large movements due to thermal expansion may have sliding plates attached to the curbs that provide continuity between the curb ends on either side of the joint. If these plates are not positioned correctly for the ambient temperature they may bind causing increased stress and possible failure of these plates. General deterioration or impact damage may also cause failure of these plates. If failure occurs, these plates can become snagging hazards to passing vehicles as can the exposed curb ends. Therefore, loose, displaced, or missing slide plates should be repaired or replaced using approved methods and materials as soon as possible.

6.1.5.1 MOUNTABLE CURBS

Ref: AASHTO "A Policy on Geometric Design of Highways and Streets, 1990" (Pages 344-349)

Mountable curbs are designed so that vehicles can cross them readily when required. Barrier curbs are relatively high and steep-faced, designed to inhibit or at least discourage vehicles from leaving the roadway.

In general, mountable curbs will conform to all of the following:

- Less than or equal to 6" (1500 mm) high.
- Front face sloped to some degree.
- Top corner well rounded.

Typical bituminous concrete lip curbing is considered mountable.

The following curb types, typically used in Connecticut, should be considered barrier curbs (non-mountable):

- Granite curbs - faces typically vertical, no radius on top corner.
- Typical concrete curbs greater than 4" (100 mm) high that have vertical or close to vertical face.
- Jersey type barriers.

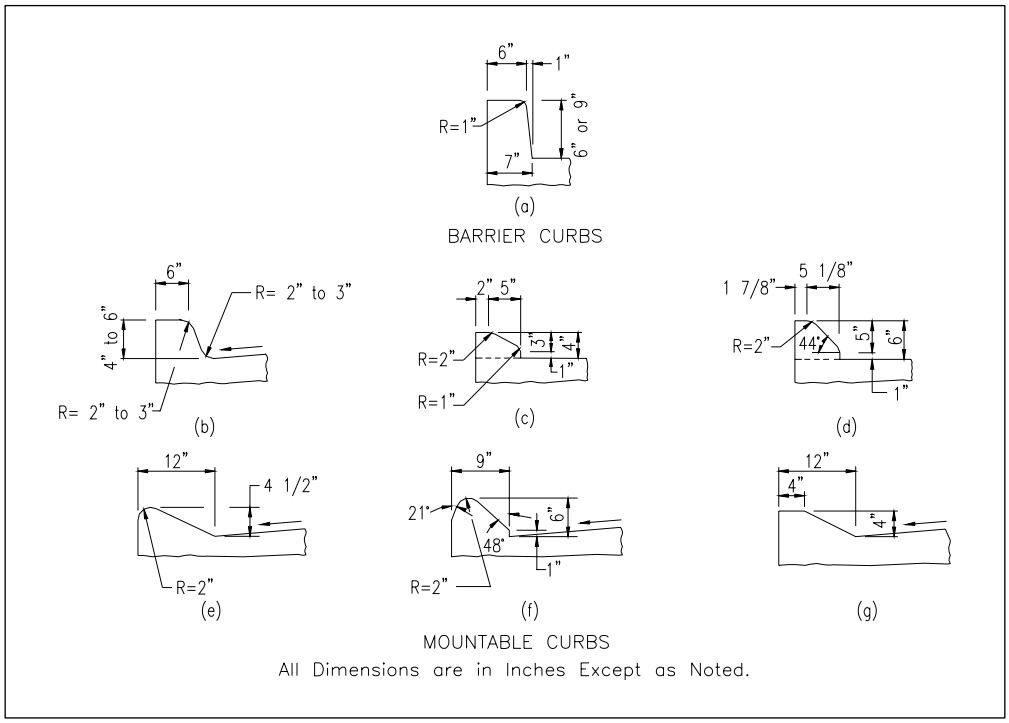

Figure 6.1.5a – Typical Highway

AASHTO "A Policy on Geometric Design of Highway and Streets, 1990"

Figure 6.1.5b –Sloped Granite Curb on Concrete Parapet.

Figure 6.1.5c – Typical Concrete Curb with Safety Walk

6.1.6 MEDIANS

Reference: BITM, Section 7.7.5

Inspection Requirements

- Inspect the median system in accordance with the Inspection Requirements, Report Review and Maintenance Concerns guidelines as outlined below:

  - Median Curbs : Use Section 6.1.5 Curbs
  - Median Barriers: Use Section 6.1.8 Parapets or Section 6.1.9 Railings
  - Asphalt Raised Median: Use Section 6.1.4 Overlays
  - Concrete Raised Median: Use Section 6.1.7 Sidewalks
  - Steel Grid Median: Use Section 6.1.3 Metal Decks

- Deterioration on the underside of a median is typically part of the structural deck system and should be evaluated as part of that inspection.

6.1.7 SIDEWALKS

Reference: BITM 90 Section 7.1 thru 7.6

Inspection Requirements

Routine Inspection:

- Inspect sidewalk components in accordance with BITM 90 Section 7.1 thru 7.6.

- Inspect the sidewalk visually by walking the full length of the sidewalk. If there is more than one sidewalk on the bridge, each sidewalk should be walked for its full length. All areas of suspected deterioration should be inspected closely to determine the limits and extent of deterioration.

- Inspect sidewalks with bituminous concrete overlays in accordance with section 6.1.4 Overlays.

- Inspect the underside of the sidewalk in accordance with Sections 6.1.1. thru 6.1.3. If the sidewalk is supported by the bridge deck, then deterioration below the sidewalk should be documented as part of the deck inspection. If the sidewalk is cantilevered off the bridge or supported independent of the roadway, then the condition of the supporting elements should be documented here.

- Inspect sidewalks for cracks, scaling, delamination, spalling, exposed reinforcing, excessive wear, parasite infestation, weathering, splitting, checking, signs of overstress, rust, section loss, broken connections or other deterioration.

- Inspect the sidewalk in the vicinity of the railing posts, light standards, utility access covers, signs and signal posts or other mechanical devices for cracks, delamination, spalling or other deterioration that adversely affects the ability of the sidewalk or deck to provide adequate anchorage to the device.

- Inspect all repaired areas to determine if repair materials are in-place and functioning as designed. Hammer tap repaired areas to determine if they are sound and adhering to the base material.

- Evaluate the ability of the sidewalk to direct water runoff to the drainage system and whether or not ponding or leakage occurs on or through the sidewalk.
- Make note of debris build-up. If accumulated snow, ice or sand obscure a significant portion of the sidewalk (more than approximately 30% of its

length), this should be noted along with the condition of that portion that is visible. A supplement to the inspection report, describing the condition of the covered areas, will be required when the snow/ice has melted or the sand has been removed.

- Inspect joints for cracking, spalling or other deterioration.

- Locate all uneven areas or obstructions that constitute a pedestrian tripping hazard (obstructions over 1" in height).

Documentation for Routine Inspections:

- Document deteriorations and deficiencies found in the sidewalks. These notes may be recorded directly on the BRI-18 or be incorporated into any sketches prepared as part of the top of deck inspection. Deficiencies and deterioration should be located with sufficient detail so that correlation can be made between the top and underside areas. Sizes, depths, areas, etc., of deficiencies and deteriorations shall be quantified in sufficient detail to estimate repair quantities and to determine the percentage of sidewalk deterioration. When sketches are not made, a field estimate of total spalled/hollow area and the percentage of sidewalk deterioration shall be made.

- Detail sketches shall be provided as necessary to adequately describe the deterioration or deficiencies noted.

- Document the current condition of all previously noted problems.

- Typical conditions, as well as deteriorations causing a condition rating of less than or equal to "5", should be photographed as outlined in Chapter 5. If typical conditions are documented in the top of deck photo, this will be considered adequate for this purpose.

In-Depth Inspections:

- In addition to the requirements for routine inspections, close access shall be provided to the entire sidewalk.

- Bare concrete sidewalks should be sounded or chain dragged at an interval sufficient to detect delaminations greater than 1 foot (300 mm) in diameter.

- Timber sidewalks should be sounded, or probed with an ice pick to locate interior deteriorations.

Documentation for In-Depth Inspections:

- All documentation required for routine inspections shall be required for in-depth inspections. Sketches of the top and underside condition of the sidewalks shall be included with the deck sketches.

- A good quality photograph of the sidewalk that documents the overall condition and supports the condition rating shall be provided.

Report Review

- Review the inspection findings in accordance with established Quality Control and Quality Assurance procedures.

- Cross reference the inspection report, inspection field notes, and photographs to ensure they are mutually supportive of their documentation.

- Review the inspection findings to determine if any deficiencies or deteriorations exist that present a safety hazard to pedestrians.

- Review the report for indications of widespread or extensive deterioration that may indicate the need for additional testing to accurately determine the current condition of the sidewalk.

Maintenance Concerns

- Sidewalk deteriorations that present a safety hazard to pedestrian traffic should be recommended for repair in the near future.

- Debris should be removed from the sidewalk as required to help prevent standing water on the sidewalk and possible subsequent deterioration.

- For concrete sidewalks, repair of small spalled areas on the underside of the deck is normally not necessary. At most locations, the loose or hollow concrete is removed and the spalled area is cleaned and coated with an appropriate material that will protect any exposed reinforcement to prevent further deterioration. Spalls that extend above the bottom mat of reinforcing steel should be patched to cover the reinforcing. All repair materials and details shall conform to current ConnDOT standards. All loose concrete found over areas where people or vehicles are likely to pass should be removed as soon as possible.
- Spalls and hollow areas on the top of concrete sidewalks should be patched with concrete. Bituminous concrete cold patch is suitable for a temporary repair to the travel surface in areas not in the vicinity of railing, utility, signal, sign, or other post attachments. However, this shall be considered to be a temporary repair. All temporary repairs and all repairs in the vicinity of

post attachments shall be made utilizing approved materials and methods that conform to current ConnDOT standards.

Figure 6.1.7a – Concrete Sidewalk with Pedestrian Fence and Traffic Divider.

6.1.8 PARAPETS

Reference: BITM 90, Section 7.7

Inspection Requirements

Parapets are defined as any solid and substantial wall located along the curb or fascia that is designed to function as either a traffic or pedestrian barrier. Parapets are normally constructed of concrete but some solid steel parapets, composed of stacked structural shapes do exist. Concrete jersey type median barriers, which separate traffic lanes, will be inspected as part of the AMedian≅ item.

Routine Inspection:

- Inspect all parapet components in accordance with BITM 90, Section 7.7.
- Parapets should be inspected from a distance of not greater than 24 feet (8 m). All problem areas should be inspected "hands-on."
- The parapet system should be inspected for cracking, scaling, delamination, spalling, exposed reinforcement, or other deterioration, such as rusting on steel parapets.
- Inspect all parapet components for impact damage, and displacements that present exposed, blunt ends or snagging hazards to passing vehicles.
- Inspect all parapet expansion joint devices for integrity and proper function. Note if expansion joint elements are missing, exposing the blunt ends of the parapets on either side of the joint.
- Note if the parapets do not appear to be in compliance with current ConnDOT standards for traffic barrier or pedestrian barrier.
- Look for openings at joints that may be large enough to constitute a pedestrian hazard (especially for children). Openings greater than 6" (150 mm) will be considered a hazard in parapets that form part of a pedestrian barrier along sidewalks or in areas where there is significant pedestrian traffic.
- If accumulated snow, ice or sand obscure a significant portion of the parapet (more than approximately 30% of its length), this should be noted along with the condition of that portion that is visible. A supplement to the inspection report, describing the condition of the covered areas, will be required when the snow/ice has melted or the sand has been removed.

Documentation for Routine Inspections:

- Document deterioration or deficiencies found on the parapets. These notes may be recorded directly on the BRI-18 form or be incorporated into the sketches made as part of the top of deck inspection. Documentation should include the size and relative location along the bridge of noted deficiencies or deteriorations.

- Document the condition of the parapet expansion joint devices and whether or not the joint opening appears reasonable for the ambient temperature.

- Sketches should be provided as required to adequately describe the deterioration or deficiency noted.

- Document the current condition of all previously noted problems.

- Typical conditions, as well as deteriorations causing a condition rating of less than or equal to "5", should be photographed as outlined in Chapter 5. If typical conditions are documented in the top of deck photo, this will be adequate for this purpose.

In-Depth Inspections:

- In addition to the requirements for a routine inspection, "hands-on" inspection shall be provided to all parapet elements.

- A random sampling of approximately 30% of the parapet face should be hammer tapped to locate delaminated areas on concrete parapets. If delaminations are found, additional sampling should be done.

Documentation for In-Depth Inspections:

- The same documentation required for routine inspections is required for in-depth Inspections.

- A good quality photograph of the parapet(s) that documents the overall condition and supports the condition rating shall be provided.

Report Review:

- Review the inspection findings in accordance with established Quality Control and Quality Assurance procedures.

- Cross reference the inspection report, inspection field notes, and photographs to ensure they are mutually supportive of their documentation.

- Review the inspection findings to determine if any deficiencies or deteriorations exist that present a safety hazard to the traveling public (vehicular and/or pedestrian).

- Review the parapet configuration for compliance with current ConnDOT standards for traffic and/or pedestrian barriers depending on bridge site usage. Recommendations for upgrading substandard parapets should be made.

Figure 6.1.8a – Concrete Parapet with Older Style 2-Pipe Rail. Note Spalling with Exposed, Shallow Rebar.

Maintenance Concerns

- Deterioration, spalls, impact damage, impact displacement or any deficiency that diminishes the ability of the parapet to perform its design function of redirecting errant vehicles should be repaired or replaced immediately.

- Parapets designed as pedestrian barriers that have significant deterioration, impact damage or displacement that affect the ability of the parapet to protect pedestrians should be repaired as soon as possible.

- Components of parapets that are deteriorated to the point where they are breaking up or displaced into traffic can present possible accident causing hazards to both vehicles and pedestrians. All deterioration of this nature, which can not be removed immediately by the inspection team, should be repaired as soon as possible.

- Parapets on bridges with large movements due to thermal expansion can have sliding plates attached to the parapets that provide continuity between the parapet ends on either side of the joint. If these plates are not positioned correctly for the ambient temperature, they may bind, causing increased stress and possible failure of these plates. General deterioration or impact may also cause failure of these plates. If failure occurs, these plates can become snagging hazards to passing vehicles as can the parapet ends once exposed. Therefore, loose, displaced, or missing slide plates should be repaired or replaced as soon as possible.

6.1.9 BRIDGE RAILINGS

Reference: BITM 90 Section 7.7

Inspection Requirements

Railings will be defined as any barrier along the curb or along the fascia, constructed of timber, steel, aluminum or other metal, that is designed to function as either a traffic barrier or pedestrian barrier. Many concrete parapets have metal railing systems mounted on top of them. Concrete balustrades that are not solid but are constructed with a top rail and spindles will be considered a railing.

Routine Inspection:

- Inspect all railings in accordance with BITM 90, Section 7.7.
- All rail components should be inspected from a distance of not greater than 24 feet (8 m). All problem areas shall be inspected "hands-on."
- Inspect components of the railing system for cracks, scaling, spalls, rust, section loss, loose or broken fasteners, cracked welds, parasite infestation, weathering, splitting, checking, impact damage or other deterioration.
- Inspect railing components for impact damage, missing components or displacement that present exposed, blunt ends or snagging hazards to passing vehicles and/or pedestrians.
- Look for openings at joints that may be large enough to constitute a pedestrian hazard (especially for children). Openings greater than 6” (150 mm) in the bottom 27" (685 mm) of the railing, or openings greater than 8" (200 mm) in the top portion of the railing, will be considered a hazard in railings that form part of a pedestrian barrier along sidewalks, or in areas where there is significant pedestrian traffic.
- Observe rail post anchorages to determine if the railing is securely fastened to the deck or parapet.
- Inspect railing expansion joint devices or end treatments to see if they are in place and functioning properly. Note whether or not expansion joint or end treatment components are missing, exposing the blunt ends of the railing on either side of the joint.
- Note if the railings do not appear to be in compliance with current ConnDOT standards for traffic barrier or pedestrian barrier.

- If accumulated snow, ice or sand obscure a significant portion of the railing or rail anchorage (more than approximately 30% of its length), this should be noted along with the condition of the visible portion. A supplement to the inspection report, describing the condition of the covered areas, will be required when the snow/ice has melted or the sand has been removed.

Documentation for Routine Inspections:

- Document deterioration or deficiencies found on the railings. These notes may be recorded directly on the BRI-18 form or be incorporated into the sketches made as part of the top of deck inspection. Documentation should include the size and relative location along the bridge of noted deficiencies.

- Document the condition of railing expansion joint devices and end treatments, and whether or not the joint opening appears appropriate for the ambient temperature.

- Detailed sketches may be provided, as required, to adequately describe the deterioration or deficiency noted.

- Document the current condition of all previously noted problems.

- Typical conditions, as well as deteriorations causing a condition rating of less than or equal to "5", should be photographed as outlined in Chapter 5. If typical conditions are documented in the top of deck photo, this will be adequate for this purpose.

In-Depth Inspections:

- In addition to the requirements for a routine inspection, "hands-on" inspection should be provided to all railing elements.

- A random sampling of approximately 50% of rail post anchor bolts should be hammer tapped to determine if they are sound.

Documentation for In-Depth Inspection:

- All documentation required for routine inspection will be required for in-depth inspection.

Report Review

- Review the inspection findings in accordance with established Quality Control and Quality Assurance procedures.

- Cross reference the inspection report, inspection field notes and photographs to ensure they are mutually supportive in their documentation.

- Review the inspection findings to determine if any deficiencies or deteriorations exist that present a safety hazard to the traveling public (vehicular and pedestrian).

- Review the structural and geometric characteristics of the railing system and indicate if the railing appears to comply with current design standards. If necessary, recommend upgrading alternatives.

Figure 6.1.9a – Steel 2-Pipe Rail with Deterioration Frequently Found at Rail Posts.

Maintenance Concerns

- Railings that are designed to deflect errant vehicles and keep them within the travel lane boundaries of the bridge rely on their position, integrity and firm attachment to the deck or sidewalk. Therefore, areas of severe deterioration, impact damage or impact displacement that diminish or negate the ability of the railing to achieve its design function should be repaired or replaced immediately.

- Touching-up of protective coatings should be scheduled as required to prevent deterioration of the base material.

Figure 6.1.9b – Pedestrian Fence atop Concrete Parapet.

6.1.10 DRAINAGE SYSTEMS

Reference: BITM 90, Section 7.6

The drainage system is designed to remove water runoff and hazards associated with water from the structure. The purpose of inspecting this component of the bridge is twofold: 1.) to evaluate the structural integrity of the system and 2.) to evaluate the hydraulic adequacy of the system to handle the volume of water runoff. It is therefore most advantageous to inspect this component of the bridge during periods of rain or snow melt. This will give the inspector the best overview as to the adequacy of the drainage system and the presence of hazards to the public associated with a poor drainage system. In lieu of inspection during inclement weather, the inspector should look for signs that the drainage system is not operating correctly such as deterioration of the structural components around the drainage system, water staining, debris buildup and other signs as described in this section.

Note that in Connecticut, it is common to install PVC weepholes in concrete decks with waterproof membranes to remove water from on top of the membrane that has seeped through the overlay. These pipes are not intended to carry surface runoff. PVC weep-pipes are typically not connected to the drainage collection system and they need not extend more than approximately 3 in. (80 mm) below the bottom of the deck unless an extension is necessary to prevent the pipe from discharging onto parts of the superstructure or substructure below.

Inspection Requirements

Routine Inspections:

- Inspect the drainage system in accordance the BITM 90, Section 7.6.

- The effective drainage of water runoff through the drainage system is of vital importance to the structure itself. Ineffective drainage can accelerate deterioration of the various bridge components, particularly components of deck joints, and superstructure and substructure elements in the vicinity of outlet pipes and downspouts. Troughs can quickly fill with dirt and other debris, particularly during the winter when sand is used to aid traffic traction. If not maintained regularly and effectively, this problem can cause significant damage to the structure that requires major rehabilitation efforts.

- Ponding of water on the deck of the structure can cause significant safety hazards to both pedestrian and vehicular traffic. Sudden slowing or evasive actions by drivers trying to avoid standing water may cause accidents. Other hazards associated with water buildup are splashing, hydroplaning, breakdowns (i.e. engine flooding), and freezing. Often, ponds of water remain on the bridge long after the rain has stopped and long after driver attention to such hazards has diminished.

- All drainage system components shall be inspected from a distance of not greater than 16 feet (5 m) using adequate lighting to detect corrosion, impacted rust, section loss, cracks, dings, gouges, impact damage, missing components and other defects. Any problem areas found shall be inspected "hands-on." Under normal conditions, inspection of the drainage system in conjunction with the superstructure, substructure and deck inspections is sufficient.

- Evaluate the ability of the drainage system to effectively channel runoff water away from superstructure and substructure members and to adequately handle the volume of runoff from the deck.

- Inspect the deck drains for partial or total clogging with debris, ponding, or signs of sediment build-up on the deck around the deck drain due to ponding. Note any vegetation growth in the drain.

- Inspect the structural integrity of the deck drain grating and evaluate its ability to safely support live load. Note any safety hazards associated with grating bars parallel to the direction of traffic flow in areas with high bicycle usage.

- Inspect the outlet pipes, used on bridges that do not pass over roadways, for adequate ability to lead water away from the deck drains. If the outlet pipe extends only a few feet below the deck, inspect other bridge components for signs that drainage water is being wind-blown and causing deterioration.

- Inspect the downspouts, typically used for bridges that pass over other roadways, for their ability to transfer the drainage water from the deck drain to the ground or storm sewer system.

- Inspect open joint drainage troughs thoroughly for debris buildup, section loss, perforations, and other deterioration, and evaluate the overall effectiveness at directing water runoff to the pipe outlets. Water staining and rusting of surrounding superstructure elements gives indication of ineffectiveness.

- Drainage troughs under deck joints are to be inspected and rated under this item.

Documentation for Routine Inspections:

- Note any deterioration or deficiencies discovered during the inspection such as advanced section loss on the drainage system components, missing components, clogged drains, vegetation growth, or other defects.

- Evaluate the drainage system as a whole for draining the water away from the deck superstructure and substructure. If the drainage system is in a deteriorated state, note the adverse effects this is causing to the bridge components such as section loss, delamination, scaling, spalling, etc.

- If possible, note whether ponding occurs on the deck and any adverse effects this is having on the traffic flow (i.e., reduced visibility due to splashing, reduced speeds, traffic backup, etc.).

- Typical conditions and deteriorations causing a condition rating of less than or equal to "5" shall be photographed as outlined in Chapter 5.

In-Depth Inspections:

- In addition to the requirements of the routine inspection, "hands-on" access shall be provided to the entire superstructure.

Documentation for In-Depth Inspections:

- All documentation required for the routine inspection shall be included in the in-depth documentation.

- Documentation, as a whole, shall clearly describe the structural condition and adequacy of the drainage system. It shall serve as an accurate bench mark to which future inspections can be compared.

Report Review

- Review the inspection findings in accordance with established Quality Control and Quality Assurance procedures.

- Cross reference the inspection report, inspection field notes, and photographs to ensure they are mutually supportive of their documentation.

- The inspection reviewer should determine if hazards exist to traffic both on the structure (due to ponding, etc.) and below the structure (due to falling water, etc.). Recommendations to correct these deficiencies should be included in the Bridge Maintenance Memo.

Maintenance Concerns

- Water leaking through faulty drainage systems as well as water splashing over parapet walls or railings can cause damage or injury to vehicles and pedestrians passing below the structure and should be considered during maintenance operations.

- Properly designed drainage systems that experience problems with clogging should be scheduled for routine cleaning.

- Outdated or inadequate drainage systems that have problems with clogging should be recommended for redesign and replacement.

Figure 6.1.10a – Downspout Pipe Disconnected at Scupper Connection.

6.1.11 LIGHTING AND UTILITIES

Reference: BITM 90, Section 7.8.2

Inspection Requirements

Routine Inspection:

Lighting:

- Inspect lighting devices including highway lighting, pedestrian lighting, traffic control lighting, aerial obstruction lighting, navigation lighting and sign lighting in accordance with BITM 90 Section 7.8.2. In most cases, inspection of lighting devices may be conducted concurrently with the deck, superstructure and substructure inspections.

- Verify that lighting devices are operating properly and are in compliance with current ConnDOT standards and applicable U.S. Coastguard, Federal Aviation Administration (FAA) and U.S. Army Corps of Engineers guidelines and regulations. All lights should be clearly visible.

- Traffic control lights, aerial obstruction lights or navigation lights that are not operational should be immediately reported in accordance with the Critical Deficiency Reporting/Emergency Response procedures outlined in Section 3.2.7.

- Inspect all lighting support components such as brackets, connections, poles, base plates, etc., for rust, cracks, impact damage, loose or missing fasteners, rot, animal or insect infestation, splitting, weathering, crushing or other deterioration or deficiency that may affect the stability of the device or present a safety hazard to traffic.

- Inspect all lighting devices for exposed wires and electrical shock danger.

Utilities:

- All utilities and utility support devices such as pipes, ducts, conduits, wires, junction boxes, utility expansion devices, valves, vents, insulation, hangers, rollers and braces, shall be inspected. In most situations, inspection of utilities may be conducted concurrently with the superstructure inspection.

- Inspect the utilities for cracks, breaks, sags, rust, deteriorated insulation and other deterioration or deficiency.

- Inspect the support systems for cracks, loose or missing fasteners, frozen rollers or other expansion devices, rust, broken or ineffective support devices, cracked welds, impact damage or other deterioration.

- If pier or abutment displacement or settlement has occurred, look for adverse effects on the utility and utility support devices (i.e. breaks, expansion joint problems, bowing or sagging of the pipes, etc.).

- Note if the utilities reduce the vertical clearance or free board of the bridge.

- Inspect all utilities for any evidence of leakage. Where gas lines are carried on a bridge, the smell of gas should be considered evidence of leakage and a potential hazard. If an odor of gas is present, the inspector should **immediately** notify the Bridge Safety and Evaluation Office in accordance with the Critical Deficiency Reporting/Emergency Response procedure outlined in Section 3.2.7.

- Inspect all electrical utilities for loose wires or poor insulation that might present a shock hazard.

- Inspect the valves and drains of all pressurized utilities for cracks, leaks or other deterioration.

- Inspect junction boxes. Note whether or not covers are in place and secure.

- Evaluate the utilities for excessive vibration. If excessive vibration is noted, inspect the utilities and support connections for fatigue damage.

- Inspect the utilities for damage caused by lack of thermal expansion and contraction due to malfunctioning expansion devices.

Documentation for Routine Inspection:

- Document the location of all inoperable lighting devices.

- Describe deteriorations and/or deficiencies noted on utilities, lighting devices and/or support device components.

- Note if the condition of the lighting systems appear to be in compliance with current ConnDOT, FAA, USCG and USACOE specifications, standards and regulations as applicable.

- Document all utility leakage as well as any adverse affects on the deck, superstructure, substructure or other utilities.

- Document any adverse effects on utilities, utility support devices or bridge structural components due to lack of proper expansion and contraction.

- Document any loss in vertical clearance or freeboard due to installation of utilities.

In-Depth Inspections:

- In addition to the requirements for routine inspections, a closer inspection shall be performed in accordance with the distance requirements for the superstructure type being inspected.

Documentation for In-Depth Inspections:

- All documentation required for Routine inspections shall be included in the in-depth inspection documentation.

- A good quality photograph that documents the overall condition and supports the condition rating of the lighting or utility systems shall be provided.

Report Review

- Review the inspection findings in accordance with established Quality Control and Quality Assurance procedures.

- Cross reference the inspection report, inspection field notes and photographs to ensure they are mutually supportive in their documentation.

- Review the inspection report and field notes for documentation of lighting devices that are inoperable or present hazardous conditions (deteriorations, limited visibility, shock hazard etc.) to traffic. Ensure that the procedures for "Critical Deficiency Reporting" have been followed, if applicable.

- Review the field notes for evidence that lighting systems are in compliance with current ConnDOT standards, Federal guidelines and/or USCG, FAA and USACOE regulations. Devices or systems that do not comply with applicable regulations should be documented as to the specific causes for noncompliance.

- Review the inspection findings for evidence of utility leakage or unsafe conditions. If leakage or serious deteriorations are noted, ensure that the responsible utility company or department is notified. If unsafe conditions were found, ensure that the procedures for "Critical Deficiency Reporting" have been followed.

- Review the inspection findings for changes in vertical clearance or freeboard due to utilities. If any changes are noted, verify whether or not the field measured vertical clearance is still within the limits of the current posting (if posted) or still meets the ConnDOT standards for exemption from posting (if not posted). If either of these conditions are not met, recommendations for height posting of the bridge should be made.

- Review the inspection field notes for evidence the utility expansion joint devices are not functioning as designed and whether or not adverse effects are present on the utilities, support devices or bridge structural components. If adverse conditions are noted on the expansion joint devices, the utility owner should be notified.

Figure 6.1.11a – Typical Under-Bridge Utility Installation

Maintenance Concerns

- It is important for the safety of pedestrian, highway, air and waterway traffic that damaged, deteriorated or inoperable lighting devices are repaired or replaced and obstructed lights be moved or cleared of obstructions so adequate visibility is maintained.

- Lighting systems that do not comply with current standards, guidelines or regulations should be upgraded as required. Maintenance will be responsible for evaluating lighting systems.

- Utility owners should be made aware of deficiencies to correct unsafe conditions, prevent unnecessary bridge deterioration and to avoid utility service outages.

6.1.12 DECK JOINTS

Reference: BITM 90 Section 7.5

Deck joints are very important to the successful operation of a structure as a whole unit. They serve two primary functions. One is to fill the gap between the deck sections, or between the deck and the abutment or approach roadway. The second more important function, is to allow the spans to expand or contract with temperature variations (expansion joint). Expansion joints may be located at abutments, piers or at pin and hanger connections. Deck joints also serve as a smooth transition from the approach roadway to the bridge deck.

Joints, both fixed and expansion, may be either opened or closed. Open joints allow water and other debris to pass through the joint. Formed joints, which may either be armored or non-armored, and finger joints are common types of open joints. Open joints require a supplemental drainage system to carry any water away from structural components around and below the joint once the water passes through the joint.

Closed joints are designed so that water and debris can not pass through the joint. At a fixed joint, this is achieved by placing a material in the joint to fill the gap. At an expansion joint, the material must be flexible/compressible to accommodate the expansion and contraction of the joint while remaining water tight. These types of joints serve to divert the water away from the joint to the primary drainage system on the structure.

There are a number of expansion joint types in use in Connecticut as generalized below (see examples in Appendix 6.6):

Span	Span Limits	Type of Joint
Short	Under 100'	Asphaltic Plug Poured sealant Compression seal Gland Segmental
Medium	100' - 150'	Asphaltic Plug Gland Segmental
Long	Over 150'	Segmental Modular Finger joint

Expansion Joint Devices:

Gland-type expansion joint devices vary by manufacturer, but generally consist of continuous, flexible sealing glands held in place by steel or aluminum extrusions. The extrusions are anchored to either structural steel supports or directly to the concrete deck. The extrusions should be firmly anchored. The sealing gland must be positively secured to the extrusion and be intact to prevent water leakage through the joint. Examples of the various gland-type joints are shown in Appendix 6.6, Figures A-6-2, (a) through (e).

Modular expansion joint devices (see Appendix 6.6, Figure A-6-1) may be comprised of a series of continuous cells or glands secured to retainers. The intermediate retainers are supported by support bars, which in turn are supported by the major joint elements embedded in the concrete on each side of the expansion joint. The spaces between the retainers (as shown by dimension "W" on Appendix 6.6, Figure A-6-1) should be equal and each space should be the same width throughout the entire length of the joint.

The segmental type of expansion joint device is fabricated of steel and elastomeric material in short sections. Leakage between abutting sections and at curb areas is a common problem. Two examples of segmental-type expansion joints are given in Appendix 6.6, Figure A-6-4 and Figure A-6-5.

A typical finger joint with drainage trough is shown in Appendix 6.6, Figure A-6-3. The space between the fingers is designed to be kept open to allow for expansion and contraction. A trough is required beneath this type of joint to carry water away from the bearings, pins and hangers, windlocks, and main load carrying members beneath the joint.

Inspection Requirements

Routine Inspections:

- Inspect all joints in accordance with BITM 90, Section 7.5.

- All joint components should be inspected on top of the deck from a distance not greater than 24' (8 m) and on the underside of the deck from a distance not greater than 9' (3 m). Any problem areas found should be inspected up-close.

- Check all joints and supporting elements for deterioration due to corrosion, impacted rust, cracks, excessive vibration, loose or missing fasteners, etc. Remove sand and debris as required to properly inspect the joint and supporting elements

- Check joints for loose, damaged or broken components. These may present hazards to the traveling public in the form of protrusions that may puncture tires or become snagging hazards, or may become loose debris that can be kicked up at other vehicles or pedestrians.

- Check for loose fasteners.
- Check for cracked welds.
- Check joint above deck for impact damage from snowplows.
- Check to see if the joint is paved over and the condition of the pavement.
- Check to see if any portion of the deck joint presents a snagging hazard to passing vehicles.
- Check the joint for vertical displacement across the two halves of the joint in the direction of traffic.
- Check to see if open joints are clogged with debris that may effect the ability of the joint to open and close with expansion and contraction of the bridge or to pass water to the drainage system below. Drainage troughs under deck joints are to be inspected and rated under the deck "Drainage Systems" item.
- Check to see if joint sealant is in place and operating as designed or if there are signs of leakage through the joint (closed joint) or any other damage or deterioration. Also observe if water backs up around the joint on the deck due to the inadequacy or blockage of the primary drainage system.
- Check for ruptured or torn seals, glands and segmental components.
- Inspect for any concrete deterioration adjacent to the joint supports or faces.
- Listen for any unusually loud noises when traffic passes over the joint.
- Observe the joint when traffic passes over for excessive movement and deflection.
- Check to see if the joint gap is what you would expect for the current ambient temperature (i.e. hot weather, smaller gap; cold weather, larger gap). An excessively open or closed joint for the ambient temperature condition may indicate possible problems with the expansion bearings, movement of the substructure, or improper installation of the joint. The existence of this problem warrants further investigation.

Documentation for Routine Inspections:

- Joint devices that are excessively loose or broken, such that they move under traffic and/or have the potential to break free, should be reported to the Manager of Bridge Safety and Evaluation in accordance with the Critical Deficiency Reporting/Emergency Response procedures outlined in Section 3.2.7.

- Note any deterioration or deficiencies discovered during the inspection. Particularly note deterioration due to the infiltration of water through closed joints and any loud or unusual noises or vibration during vehicle impact.

- Measure the joint parapet opening at each fascia and note the temperature at which the measurement was taken. (See Section on Joint Measurements, for instructions for measuring joint openings.)

- Document all steel losses by noting the area and depth of the loss as well as it's relative location along the length of the joint measured from a fixed point.

- Document locations of all loose bolts/rivets found.

- Document locations and lengths of all cracks found. Mark these locations on the joint with permanent marker or keel. Note the date found and the extent of the crack in such a manner that subsequent inspections may determine the extent of crack propagation.

- Particular care will be given to documenting any increased quantity or size of deteriorations that have changed since the last inspection. If the condition rating has changed from the last inspection, a photograph and explanation of why the rating has changed shall be included in the inspection report.

- Notes should be made describing the current condition of all previously noted problems so a rate of deterioration can be established for monitoring purposes.

- Typical conditions and deteriorations causing a condition rating of less than or equal to "5" shall be photographed as outlined in Chapter 5.

- The presence of fatigue cracks, should be called out with suggestions for any recommended repairs.

In-Depth Inspections:

- In addition to those requirements for a routine inspection, "hands on" access should be provided to the underside of all joint elements. Top sides should be inspected from within 12 feet (3 m).

- Clean all debris from the joint in order to facilitate the inspection.

- Check for any signs that the deck joint may not be tightly anchored to the superstructure (loose fasteners or cracked welds) or deck (deteriorated concrete or exposed anchor studs).

Documentation for In-Depth Inspections:

- All documentation required for a routine inspection will be included in the in-depth documentation except as noted in this section.

- Documentation, as a whole, should clearly describe the structural condition and serve as an accurate benchmark to which future inspections can be compared.

- A good quality photograph of the deck joint, that documents the overall condition as well as detail photographs of any deteriorations, shall be provided.

Report Review

- Review the inspection findings in accordance with established Quality Control and Quality Assurance procedures.

- Cross reference the inspection report, inspection field notes and photographs to ensure they are mutually supportive of their documentation.

- The inspection reviewer should determine if patterns of deterioration or progressive deterioration are taking place. Progression will be determined by comparing present to past inspection reports.

- The sudden appearance or continued propagation of fatigue cracks should be a flag to the reviewer, and brought to the attention of the bridge owner. If fatigue problems are evident, they should be monitored closely. Corrective actions (immediate, short term, and long term) should be addressed as soon as possible.

Maintenance Concerns

- Although the condition of the joints is not directly incorporated into the condition rating of the deck, superstructure and substructure, their condition and ability to perform their designed function can influence those ratings. Leaking or improperly draining joints can lead to excessive corrosion of the superstructure and bearings, or deterioration of the substructure below. Therefore, routine maintenance should be requested as necessary, to address deck joint problems, and prevent the need for major rehabilitation in the future.

- Improperly functioning joints over pin and hanger details can lead to deterioration of these details, much of which is not visible from the outside of the assembly. This deterioration could lead to the unexpected brittle fracture of elements in these details. Therefore, inspectors and maintenance personnel should approach deck joints over pin and hangers with a heightened sense of awareness of the adverse effects on the superstructure due to improperly functioning joints. All problems noted should be addressed immediately in order to reduce the possibility of failure in one of these superstructure details.

- Loose joint devices can produce increased localized impact stresses in the joint, that can accelerate localized deterioration of the concrete deck or, deformation of steel superstructure elements to which it is connected. Unchecked, these stresses can cause failure of the joint over time and create possible safety hazards to the traveling public. Therefore, loose joint elements (usually accompanied by loud banging noises upon impact) should be tightened or repaired as soon as possible.

- Routine maintenance should be requested as necessary clear deck joints of debris, repair or patch waterproofing seals, replace or tighten fasteners and repair deteriorated concrete.

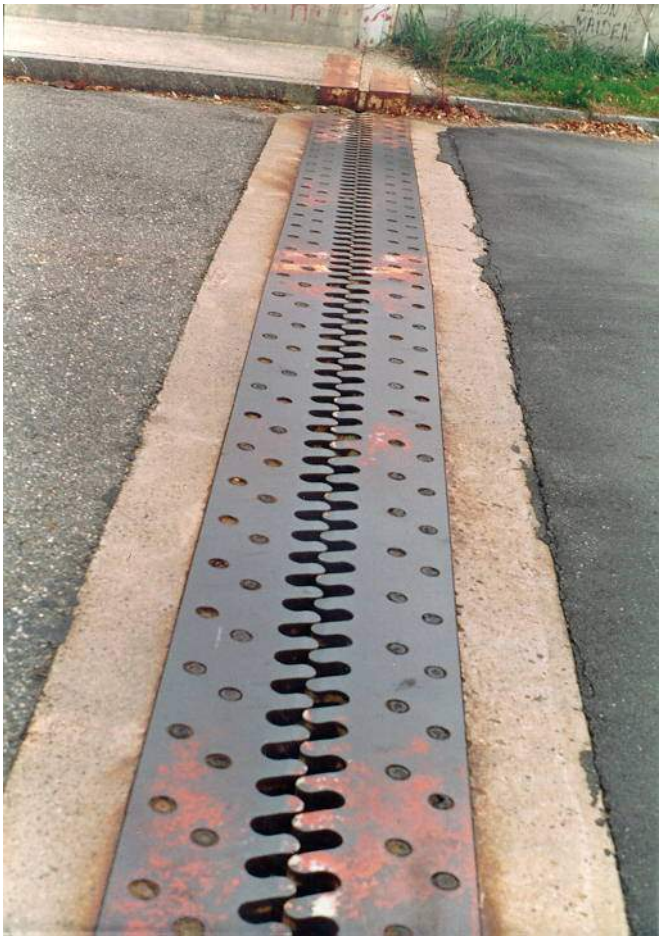

Figure 6.1.12a – Steel Finger Joint.

Figure 6.1.2c – Modular Type Expansion Joint.

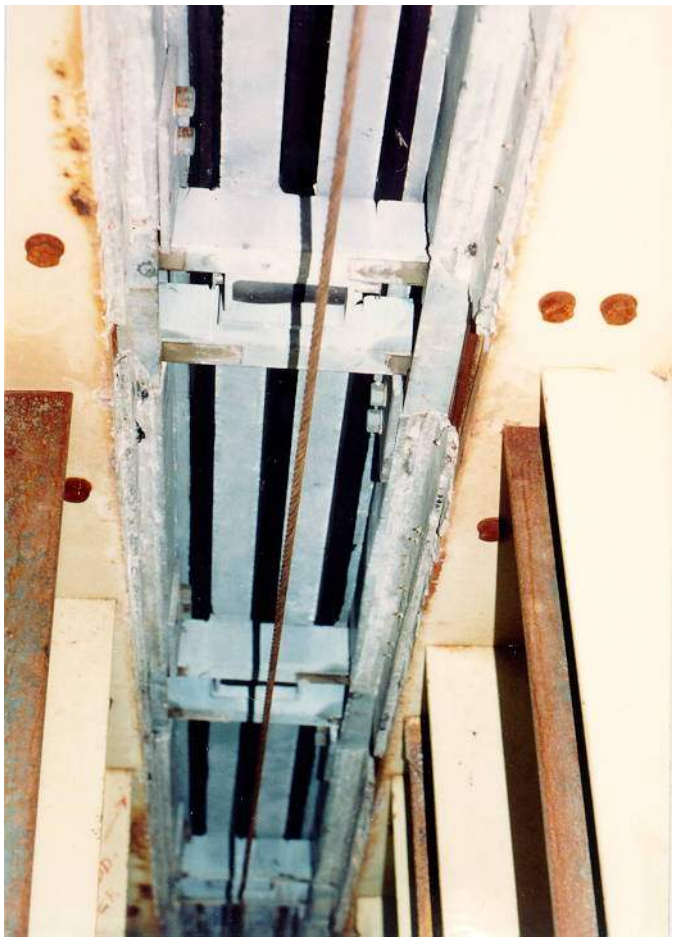

Figure 6.1.12d – Underside of Modular Joint.

6.2 SUPERSTRUCTURE INSPECTION

6.2.1 BEARINGS

Reference: BITM90 Chapter 11

Expansion Bearings

Bridges are continually moving due to thermal expansion and contraction, deflections under loads, unanticipated substructure movements and other forces. These movements are accommodated by bearings. Expansion bearings must be free to move as designed if the bridge is to function properly. Movement may be absorbed within the structure if the span length is short. However, frozen bearings on longer bridges will impart thermal forces into the bridge members and force the movement to occur at points where movement was not anticipated. One or more spans may move together, exerting forces on abutments, piers or connections for which they were not designed. Nearly all types of bearings are susceptible to freezing. Freezing, as applied to bridge bearings, means that movement has been prevented by corrosion, mechanical binding, intrusion of dirt or other interference to the point that the bearing does not operate properly or is held in a rigid condition. Normally, a frozen bearing will exhibit no signs of movement. Movement can usually be detected by the presence of polished surfaces on the visible sliding surfaces, broken paint between the fixed and moveable part of the bearing, crushed material under a rocker bearing, etc. The only true method to determine if a bearing is frozen, however, is to compare bearing measurements taken at different temperatures (i.e.. measurements taken during warm weather should be different from those taken during cold weather.)

The most common types of expansion bearings found in Connecticut are self-lubricating bronze sliding bearings, steel rocker bearings, elastomeric bearings and pot bearings. Another special type of bearing seen on a number of structures is the pin and hanger bearing. Most bridges that contain pin and hanger systems have been retrofitted to provide redundancy or otherwise reduce the potential for failure in the pins and hangers (See Section 6.2.1.1). Examples of the typical bearings are shown in Figures 6.2.1a - 6.2.1e and Figures 11-7 to 11-12 in the BITM90.

Inspection Requirements

Routine Inspections:

- Inspect all the bearings in accordance with BITM90 Section 11.3.
- "Hands-on" inspection of all bearings will be required to adequately determine if expansion bearings are behaving as they were designed.

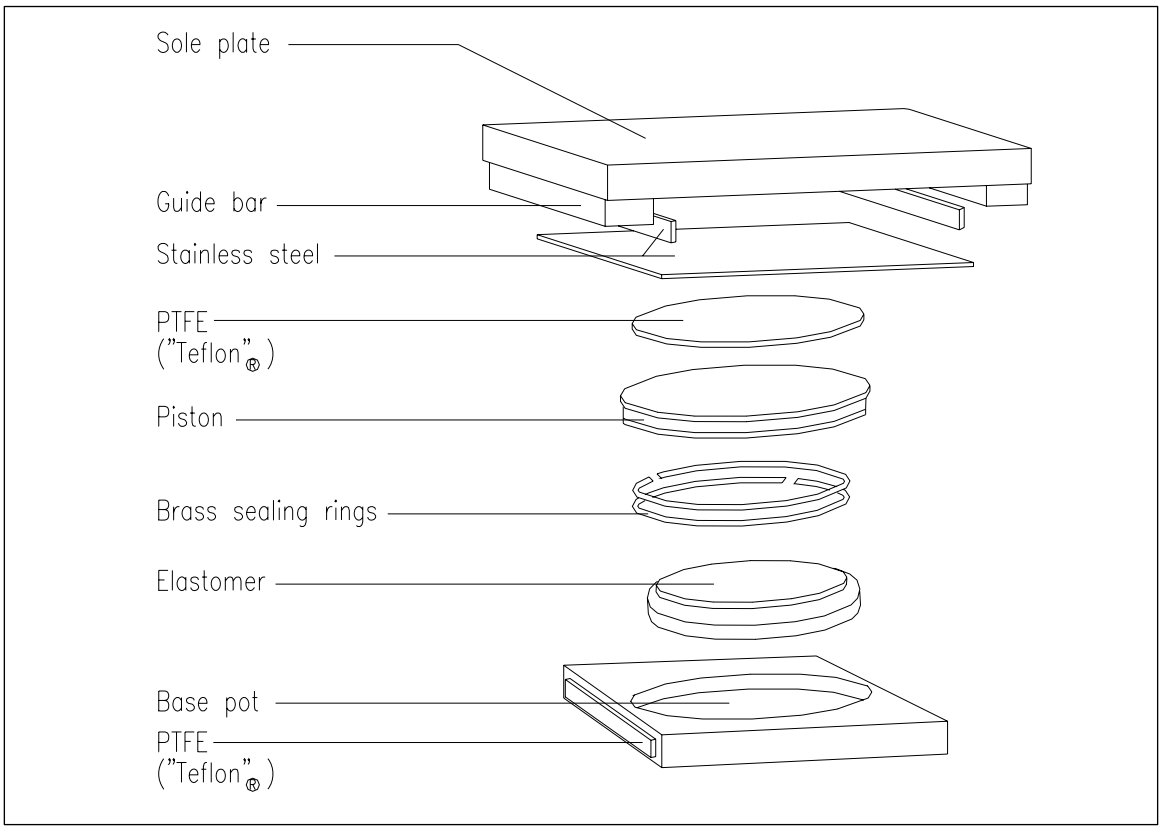

Figure 6.2.1a – Typical Guided Pot Bearing Components

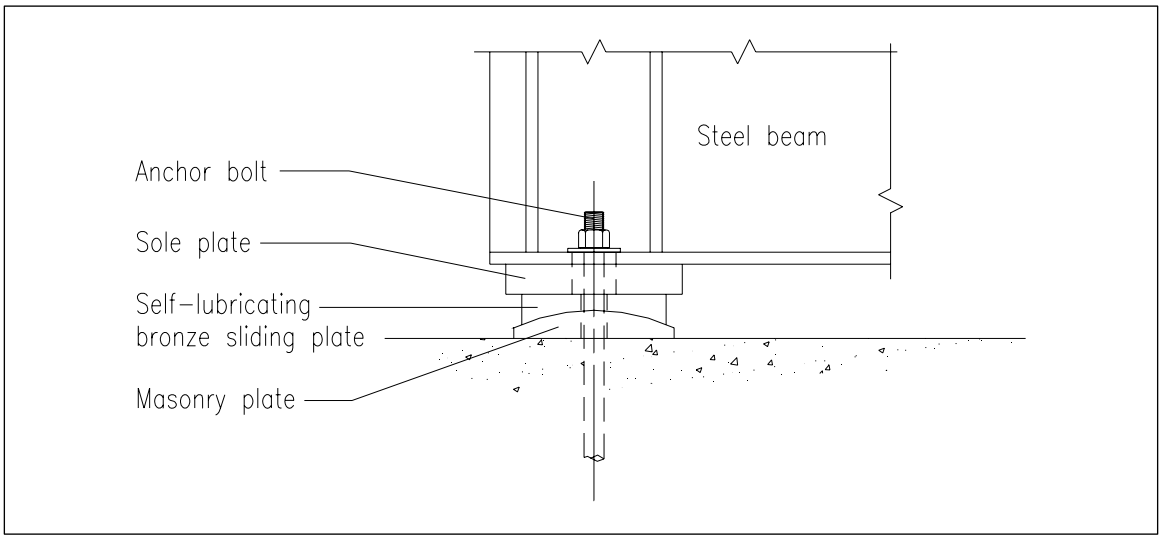

Figure 6.2.1b – Typical Bronze Sliding Plate Bearing

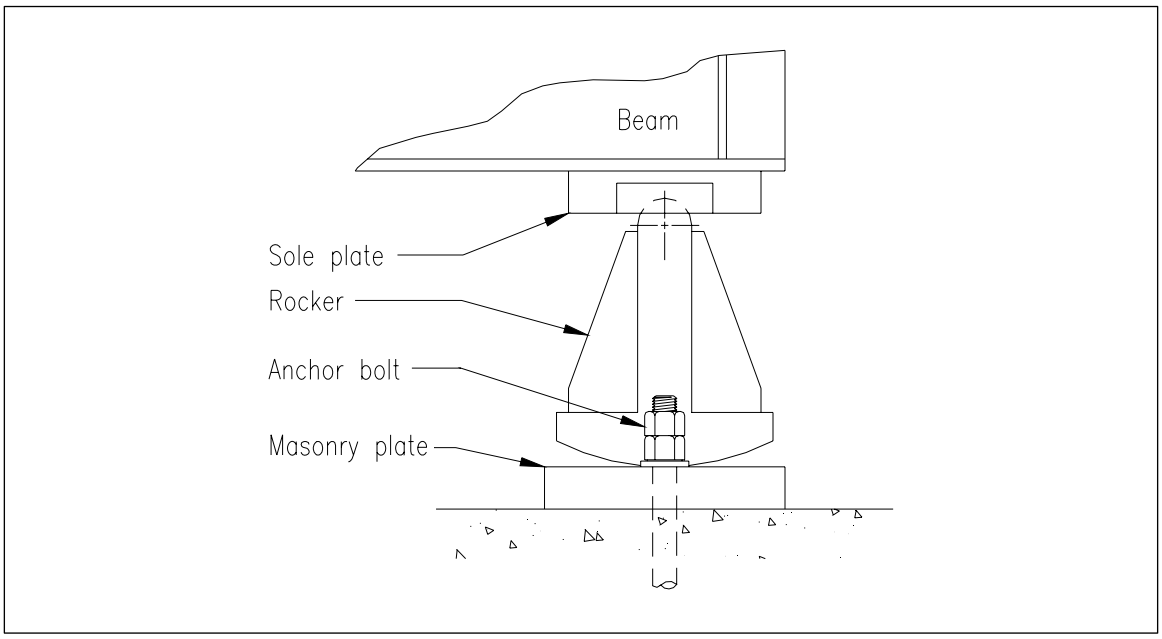

Figure 6.2.1c – Typical Rocker Bearing

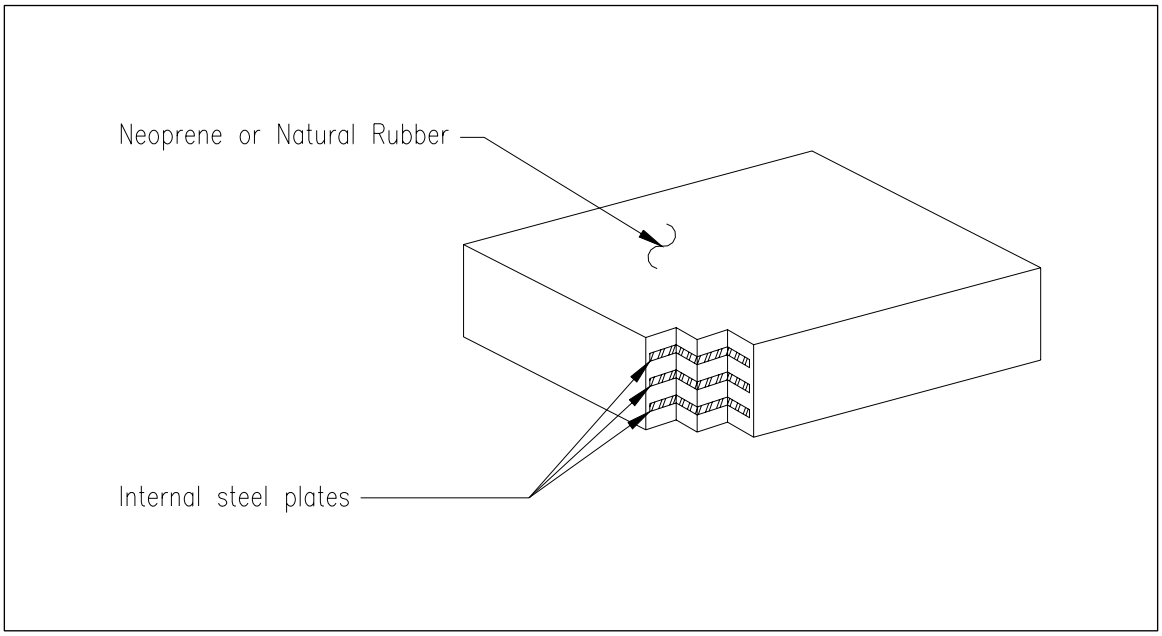

Figure 6.2.1d – Typical Steel Reinforced Elastomeric Bearing

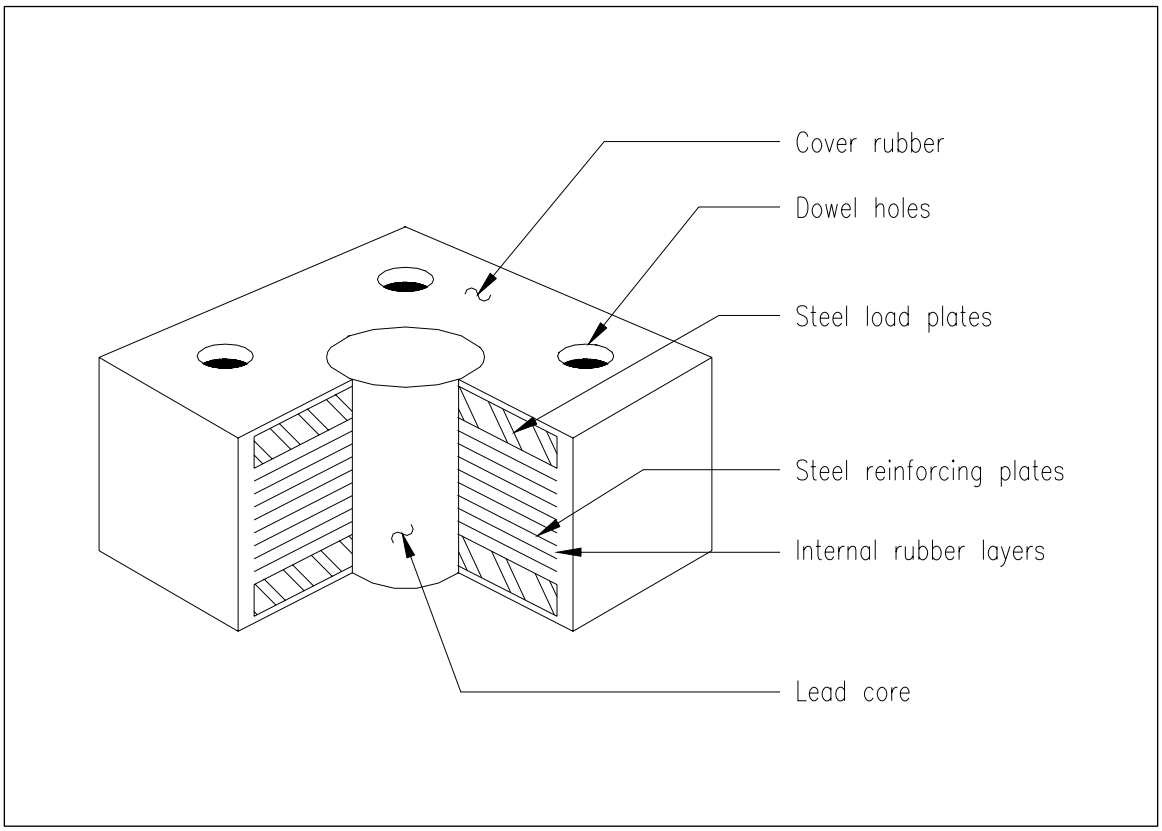

Figure 6.2.1e – Dynamic Isolation Bearing for Seismic Protection

- Bearing areas must be cleaned, as necessary, or referred to Maintenance for cleaning to permit an adequate inspection of the bearings.

- A random sampling (approximately 25%) of the bearing anchor bolts should be tapped with a hammer to determine if they are intact and solidly anchored to the substructure. The frequency of sampling should be increased if defective bolts are found.

Documentation for Routine Inspections:

- The condition of fixed bearings and elastomeric bearings may be described narratively on the inspection forms or on framing plans if included. Special or unusual problems should be sketched.

FIELD NOTES	BRIDGE NO.	DATE:
	CREW:	SHEET

SLIDING BEARING MEASUREMENTS

Form BRI-14, Rev. 9/01

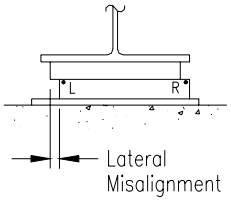

FRONT VIEW

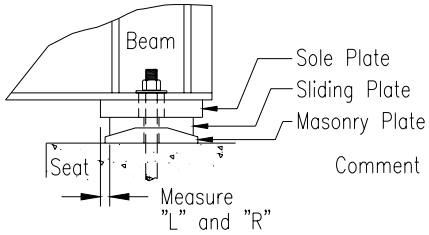

SIDE VIEW

Span No. = _____

Substructure Unit = _____

Temperature = _____°F

Comment On:
- Presence of keepers or work done on bearings.
- Undermining of bearing. Attach sketch with dimensions.
- Cracking of plates or welds.
- Condition of anchor bolts.

Beam	Movement				Condition			Comments
	"L"	"R"	Mode Exp. or Contr.	Lateral Misalign.	Bearing Frozen?	Normal Mov't?	Rust ? H/M/L	

Figure – 6.2.1f – Sliding Bearing Measurement Form

FIELD NOTES	BRIDGE NO.	DATE:
	CREW:	SHEET

ROCKER BEARING MEASUREMENTS

Form BRI-15, Rev. 9/97

Span No. = _____

Substructure Unit = _____

Temperature = _____ °F

$\theta = \sin^{-1} (F-B)/W$

$Y = R \tan \theta$

The "Front" of the bearing is the side facing the fixed bearing.

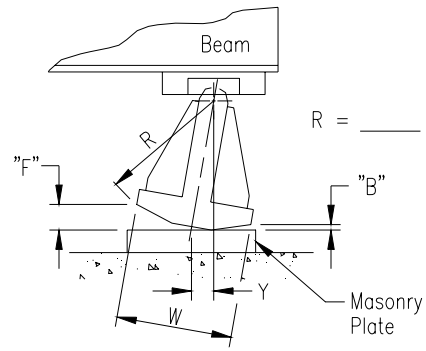

R = _____

W = _____

NOTE:

"F" & "B" should be measured at the left side corners of the rocker or on the side closest to to the front face of the substructure on skewed bridges.

Beam	"F"	"B"	Y	Cont. or Exp.	Comments

Figure 6.2.1g – Rocker Bearing Measurement Form

FIELD NOTES	BRIDGE NO.	DATE:
	CREW:	SHEET

POT BEARING MEASUREMENTS

Form BRI-16, Rev. 9/97

Note: Guided expansion bearing shown, non-guided expansion bearings do not have keeper bars. (see notes below)

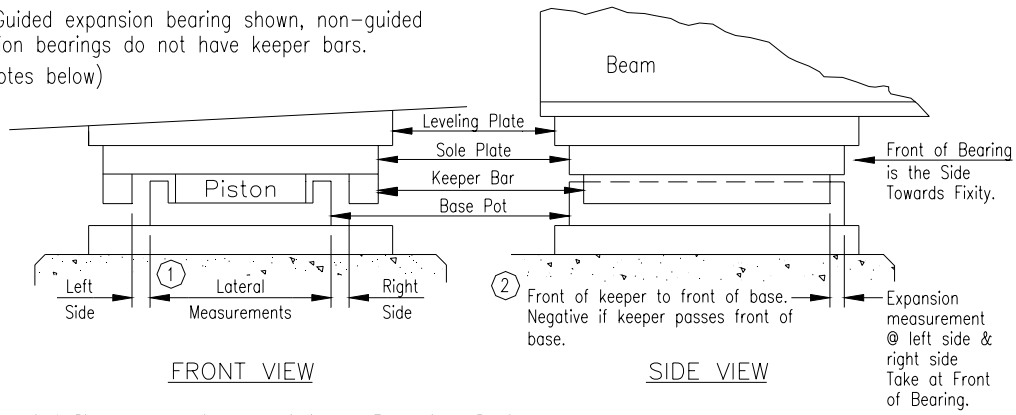

1 –Left & Right are determined when facing the Front of the Bearing.
–For non-guided bearings, measure from side of sole plate to side of piston @ center line of piston.

2 –For non-guided bearings, measure expansion from front of sole plate to front of piston @ center line of bearing.

Span No. & Substructure Unit = _____ Temperature = ____°F

Beam	Expansion			Lateral		Comments
	Exp. Measurement		Side of Brg.	Left	Right	
	L	R	(N,S,E,W)			

Figure 6.2.1h – Pot Bearing Measurement Form

- The bearing conditions may be described directly on the BRI-18 form unless the bearings have a condition rating of "5" or less. When the bearings are rated "5" or less, and the span length is greater than 50' (15 m), the measurements shown in Figures 6.2.1f - 6.2.1h shall be taken at the fascia beam bearings and at least one additional bearing near the center of the bridge. Also, any bearing that appears "frozen" should be measured. The appropriate measurement sheets should be completed to show the necessary measurements.

- Representative photographs of bearings that appear to be frozen, are rated "5" or less, or exhibit major deficiencies should be included.

In-Depth Inspections:

- In addition to the requirements for routine inspections, measurements of steel expansion bearings will be required to complete the forms shown in Figures 6.2.1f-6.2.1h. Typically, the fascia beam bearings and one beam near the center of the bridge should be measured in each span. Measurements will not be required for spans under 50' (15 m). All bearing anchor bolts will be tapped with a hammer to determine if they are firmly anchored to the substructure.

Documentation for In-Depth Inspections:

- In addition to the documentation required for routine inspections, bearing measurement sheets will be completed for steel expansion bearings.

Report Review

- The condition of the bearings should be compared to that noted in the last inspection reports.

- Expansion bearing measurements should be compared to those in the last inspection report to determine if there is a reasonable change in measurement based on the difference in temperatures at the time the bearings were measured.

- Comparison of bearing measurements should determine if there is lack of movement or a progressive movement taking place.

Maintenance Concerns

- Bearings must be relatively clean to function properly. Accumulated debris on a bridge seat, that tends to interfere with a bearing's movement and hold moisture around the bearing, should be removed.

- Normally, frozen bearings will develop irregularities, along their movement surfaces, that cause mechanical binding and prevent normal movement. Simply cleaning these bearings does not usually remove or correct the irregularities that cause the binding and, therefore, is not normally effective unless the deterioration is minor.

- On bridge spans under 100' (30 m), the amount of thermal movement is less than on longer spans and may be accommodated in the superstructure. If there are no signs of distress, the replacement of frozen bearings may not be justified.

- On bridges over 100' (30 m) or where a large number of bearings appear to be frozen, replacement of the bearings with elastomeric pads or other suitable type bearings should be requested.

Figure 6.2.1i – Over Extended Rocker Bearing.

Note: Front of Rocker in Contact with Underside of Sole Plate.

Figure 6.2.1j – Bronze Sliding Plate Bearing with a Gap Between the Sole Plate and the Sliding Plate.

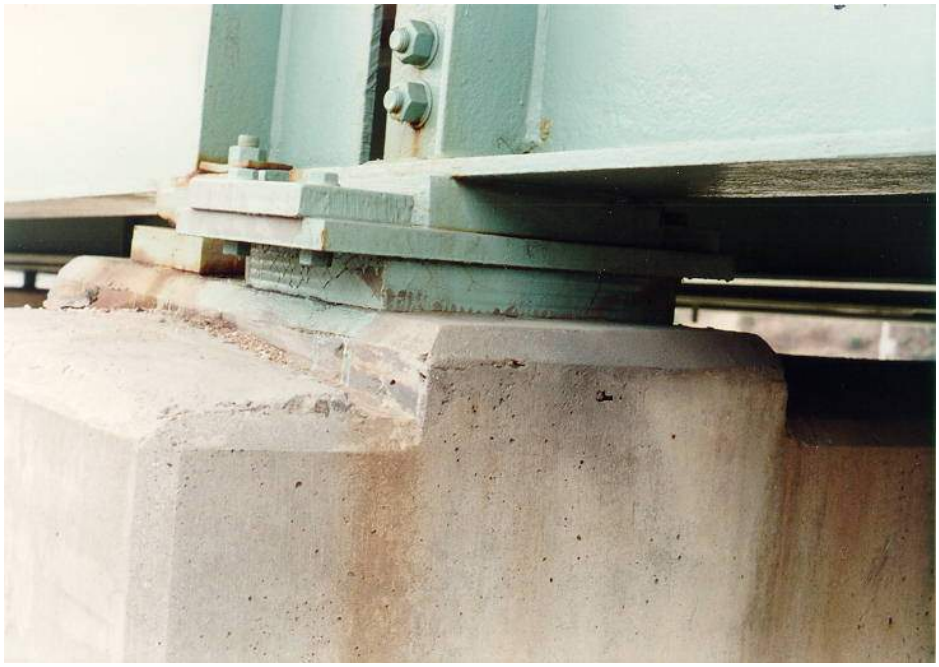

Figure 6.21k – Retrofit Detail. Elastomeric Bearing Installed to Replace Bronze Sliding Plate Bearing.

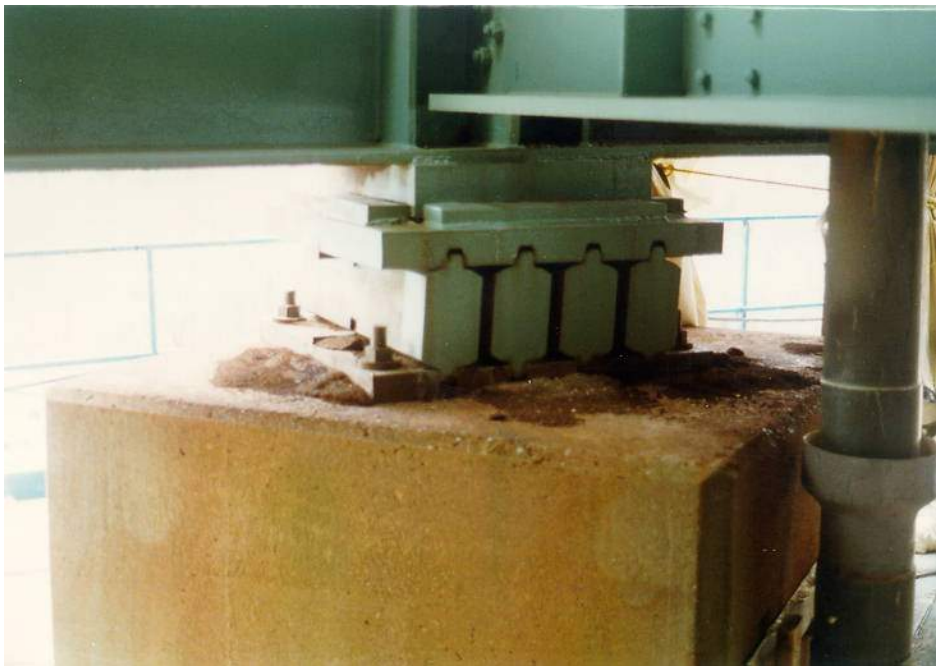

Figure 6.2.1l – Nested Rocker Bearing Used for Very Large Spans.

Figure 6.2.1m – Elastomeric Bearing. Note the Uneven Bearing Surfaces Causing Bulging and Cracking at the Rear of the Elastomeric Bearing Pad.

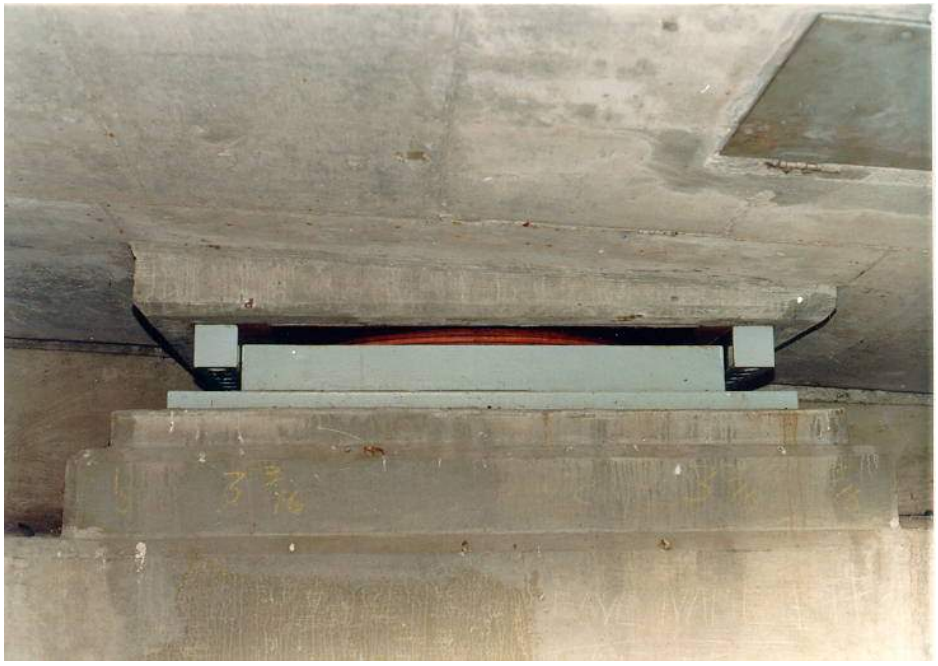

Figure 6.2.1n – Pot Bearing with Side Guide Bars

Figure 6.2.1o – Center Guided Pot Bearing

6.2.1.1 PIN AND HANGER ASSEMBLIES

Reference: BITM 90 Section 10.4.2, 11.2.4 and 11.3.1

Inspection Requirements

Routine Inspections:

- Inspect the pin and hanger assemblies in accordance with BITM 90, Sections 10.4.2 and 11.3.1.

- All pin and hanger assemblies should be treated as fracture critical, regardless of whether or not the girders they support are redundant. All pin and hangers will be inspected in accordance with the guidelines established in this section and in Chapter 5 for Fracture Critical Member Inspection.

Special Note:

- *Pin and hanger assemblies are put in bridges to permit thermal expansion and rotation of the bridge superstructure. If only rotation of the joint is desired, one pin is used to form a hinge in the beam. Where longitudinal expansion is also required, a system consisting of two pins with a hanger between them is used.*

- *Hangers are typically designed for pure tension forces. However, hangers may actually see both tension and bending. Bending may result from corrosion binding the hanger and preventing rotation. Out-of-plane bending (perpendicular to the wide face) in the hanger bar may result from misalignment or skewed geometry due to transverse forces imparted by impacted rust, improper erection, etc.*

- *Pins are normally designed for shear and bearing on the full thickness of the hanger. In pins that have "shoulders" (changes in pin diameter at the threads), the pin can be subjected to excessive bearing stress if the hanger shifts off the pin shoulder and onto the threaded area. Pins can also see very high torsional forces if corrosion inhibits or prevents their ability to rotate freely.*

- Pin and hanger assemblies shall be inspected "hands-on" using adequate lighting to detect corrosion, impacted rust, section loss, hairline cracks (external), impact or collision damage, or other deterioration. This should be done in conjunction with the inspection of the superstructure elements.

- Measurements are required for all pin and hanger assemblies to complete the inspection forms shown in Figures 6.2.1.1a & 6.2.1.1b.

PIN & HANGER DATA SHEET

Form BRI-29, Rev. 6/99

Measurements Taken By: _____ Date: _____

Bridge No.: _____ Town: _____

Hanger Location: _____ Effective span for Movement: _____ (ft)

Page: _____ of _____

Beam No.	V (in)	J (in)	T*r* (in)	B*r* (in)	T*l* (in)	B*l* (in)	Out to Out (in)	Secondary System Type	Gap[1] (Y/N)	Nut Restraint System	Temp	**Comments**
1												
2												
3												
4												
5												
6												
7												
8												
9												
10												

Notes:

1) For Pin & Hanger assemblies with a redundant support system, indicate if there is a gap between the redundant system (bearing) and the bottom flange of the suspended girder.

2) All measurements are taken in reference to log direction.

V : Vertical misalignment of girders @ left edge of girder's bottom flange.

J : Joint opening between webs, measured just above the bottom flange fillet, on the left face of the girder's web.

Out to Out : The out-to-out of hangers taken at the leading edge, based on log direction.

3) Use a permanent marker to indicate locations of field measurements.

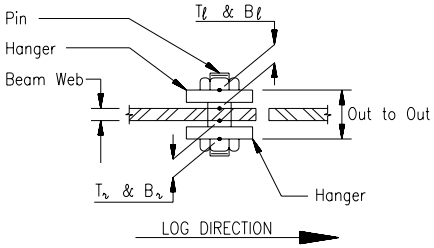

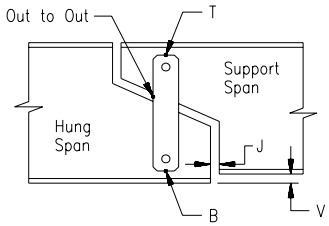

Figure 6.2.1.1a – Expansion Hanger Measurement Form

HINGE DATA SHEET

Form BRI-30, Rev. 9/97

Measurements Taken By: _____ Date: _____

Bridge No.: _____ Town: _____ Date: _____

Hinge Located: _____ Effective span for Movement: _____ (ft) Page: _____ of _____

Beam No.	V (in)	J (in)	R (in)	L (in)	Secondary System Type	Gap[1] (Y/N)	Nut Restraint System	**Comments**
1								
2								
3								
4								
5								
6								
7								
8								
9								
10								

Notes:

1) For Hinge assemblies with a redundant support system, indicate if there is a gap between the redundant system (bearing) and the bottom flange of the suspended girder.

2) All measurements are taken in reference to log direction.

V : Vertical misalignment of girders @ left edge of girder's bottom flange.

J : Joint opening between webs, measured just above the bottom flange fillet, on the left face of the girder's web.

3) Use a permanent marker to indicate locations of field measurements.

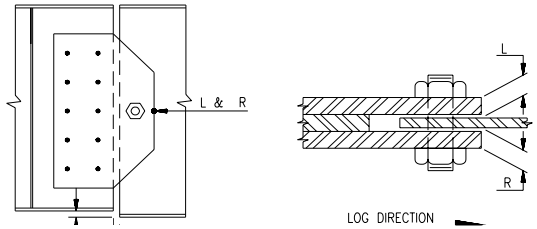

Figure 6.2.1.1b – Hinge (Fixed Hanger) Measurement Form

- Inspect the webs and flanges of the connected beams at all pin and hanger assemblies for proper alignment. This may be checked with a straight edge or plumb bob. Misalignment may indicate lateral movement caused by impacted rust.

- Inspect pin and hanger components for evidence that deck drainage is entering the assembly.

- Inspect the backside of hangers to the extent possible utilizing lights and inspection mirrors for impacted rust. It may be helpful to probe with a wire or slender steel ruler.

- Visually inspect the pin to the extent that it is visible and tap the pin with a hammer to check for gross looseness of the pin, nut and/or retainer cap. Measure the amount of any negative thread noted on each pin nut (the amount that the pin is recessed into the nut). Check the retainer cap to see if it is bent or deformed in any way. Verify that the face of the cap is flat with a straight edge. Verify that the nuts that hold retainer caps in place are tight and that a cotter pin or tack weld between the pin and nut are present and not bent or broken.

- Inspect components for signs of rotation that may be evidenced by cracked and/or worn paint between the hanger and web plates of the connected members. Differential movement between the hanger and web plates may also be noted during live load passage.

- When defects or deteriorations are found in a particular location on a pin and hanger assembly, all other pin and hanger assemblies shall be inspected for the presence of similar defects.

Special Note:

- *If differential movement around the pin and hangers is excessive or if there is significant vertical movement with live load passage, the pins or pin holes may be excessively worn.*

- Inspect all rotating components for signs of movement and wear at the interface with other components. This may be evidenced by the presence of red or orange abrasion dust ("bleeding" rust).

- Inspect the hangers closely for signs of fatigue cracking. The critical areas most likely to develop cracks are outlined below and shown in Figure 6.2.1.1c:

  - at welds used to connect hanger plates.

- at welds used to connect web doubler plates.
- in the base metal at the ends of hangers adjacent to pin holes.
- in the base metal at the juncture between heads and shanks of eyebars.

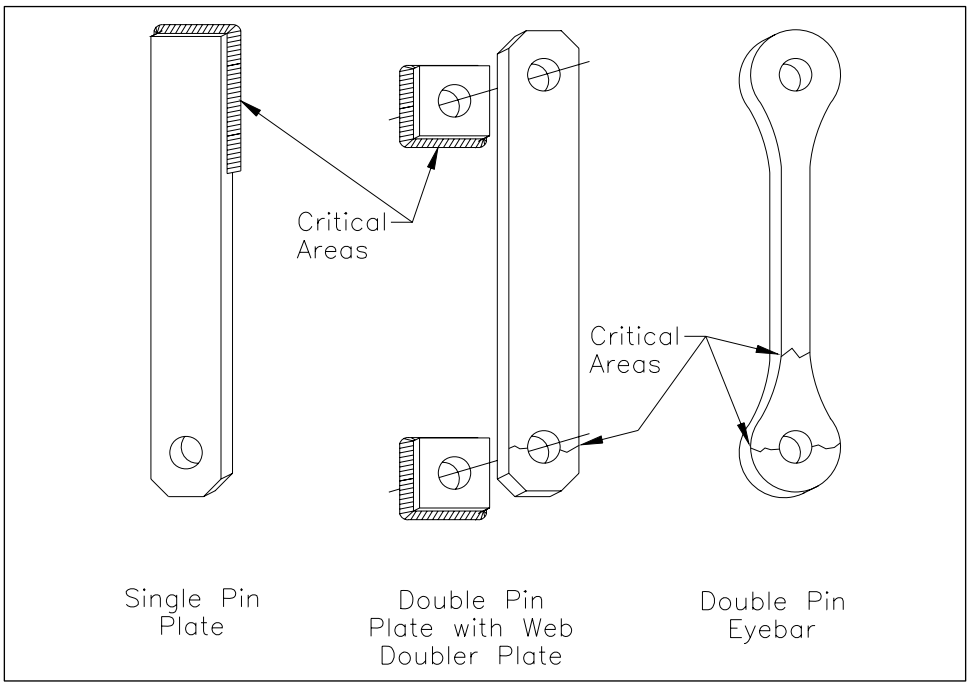

Figure 6.2.1.1c – Fatigue Cracks in Pin and Hanger Assemblies

- All suspected cracks shall undergo Nondestructive Testing (NDT) to attempt to confirm the existence and extent of the crack. All confirmed fatigue cracks shall immediately be reported in accordance with the Critical Deficiency Reporting/Emergency Response procedures outlined in Section 3.2.7.

- Inspect retrofit systems, such as supplemental hangers, saddles or "catcher's mitts", for missing components, corrosion, section loss, cracks and other deterioration. These "back-up" systems are normally designed to catch and support the beam in the event of a hanger failure. Measure the gap between the beams and the retrofit detail. Note if the gap appears too large (excessive impact loads would be applied at failure) or too small (joint movement is restrained). Compare measured gap values with design values. If a neoprene bearing pad is included in the assembly to lessen impact, evaluate the condition and integrity of the pad. Evaluate the ability of the retrofit to function in its design capacity.

Special Note:

Disassembly of Pin and Hanger assemblies for inspection:

- ***No portion of any pin and hanger assembly should ever be disassembled by bridge inspection personnel.*** *Partial or total disassembly of a pin and hanger joint shall be undertaken only by approved personnel after proper engineering design is performed with auxiliary support supplied.*
- *Removal of the retainer nuts or caps should not be attempted unless an alternate means of retaining the hanger on the pin is in place.*
- *Hangers and pins are generally difficult to remove even after the retaining assemblies are taken off. This is not always true, however, and a pin that is subjected to high torsional stresses due to impacted rust can rotate or fail suddenly if the nut is loosened. Hangers that are subjected to bending stress due to impacted rust may slip off the "shoulder" or pin itself once the nut is loosened.*
- *Partial or full disassembly of pin and hanger assemblies shall never be undertaken until all live load is removed from the structure. Live load shall remain off the structure until reassembly is complete.*

Nondestructive Testing:

- *Ultrasonic testing is currently the best means available for checking pins in place for internal flaws. However, the presence of "dead spaces" within the pin (locations where sound waves can not reach due to the geometry of the pin surface relative to the transducer) may skew test results.*
- *Only trained, certified technicians, knowledgeable in the theory and limitations of ultrasonic testing should perform and evaluate the test results.*

- Inspect seated beam assemblies and spliced beam type retrofit details using the inspection guidelines established in Sections 6.2.1 Bearings, 6.2.7 Steel Multi-Girders or 6.2.8 Steel Girder and Floorbeam Systems.

Documentation for Routine Inspections:

- The pin and hanger measurement forms shown in Figures 6.2.1.1a & 6.2.1.1b shall be completed for all hangers and hinges.

- Document the presence of all loose, missing or cracked components or cracked welds on the pin and hanger assemblies. Mark these locations on the bridge in the vicinity of the assembly with a permanent marker or lumber crayon in such a manner that subsequent inspections may find the locations easily.

- Document all steel losses by noting the area and depth of the loss as well as its relative location on the pin and hanger assembly. Whenever possible, calipers or other measuring devices shall be used to measure the remaining section where deteriorations are noted instead of estimating loss. See Appendix 6.2 for typical examples of documenting steel deterioration.

- Document whether or not rotation within the pin and hanger assembly was observed.

- Document the location and amount of any impacted rust found and whether or not rotation of the hanger assembly is affected.

- Particular care will be given to documenting the current condition of all previously noted deteriorations so the rate of deterioration can be established. If increased quantity or size of deteriorations causes the condition rating to change from the last inspection, a photograph and explanation of why the rating has changed shall be included in the inspection report.

- Note the existence of all leakage or drainage onto the pin and hangers.

- Typical conditions and deteriorations causing a condition rating of less than or equal to "5" shall be photographed as outlined in Chapter 5.

In-Depth Inspections:

- In addition to the requirements for routine inspections, ultrasonic testing shall be performed on all pin and hanger assemblies if **either** of the following conditions exist:

  1) The superstructure containing the pin and hanger details is load path non-redundant (superstructure composed of 2 or 3 girders).

  2) The pin and hanger assemblies are not retrofit with redundant support assemblies, as defined above and shown in Figures 6.2.1.1d & e.

- All ultrasonic testing must be pre-approved by the Supervising Engineer in charge of the structure.

- Bridge Maintenance personnel or a contractor may be required to provide temporary restraint for hanger bars or to temporarily support beams where pin caps must be removed to perform the ultrasonic testing.

Special Note:

- *The condition of the pin assemblies, based on visual inspection and engineering judgement, as well as the service history, may increase or reduce the need for this NDT requirement. However, changes to this requirement shall only be by approval of the Supervising Engineer.*

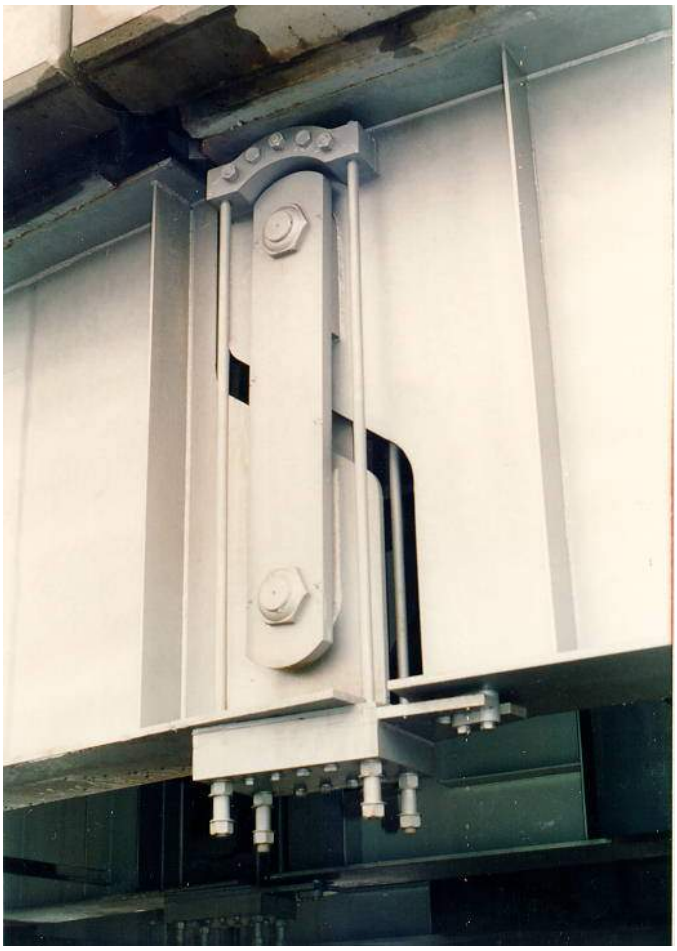

Figure 6.2.1.1d – Expansion Hanger with Sling Backup System Installed.

Documentation for In-Depth Inspections:

- All documentation required for routine inspections shall be included in the in-depth documentation plus the results of all ultrasonic testing performed.

- Documentation as a whole should clearly describe the structural condition and serve as an accurate benchmark to which future inspections can be compared.

- A good quality photograph, that documents the overall condition of the pin and hanger assemblies as well as detail photographs that support the condition rating, shall be provided. All fatigue cracks noted shall be photographed.

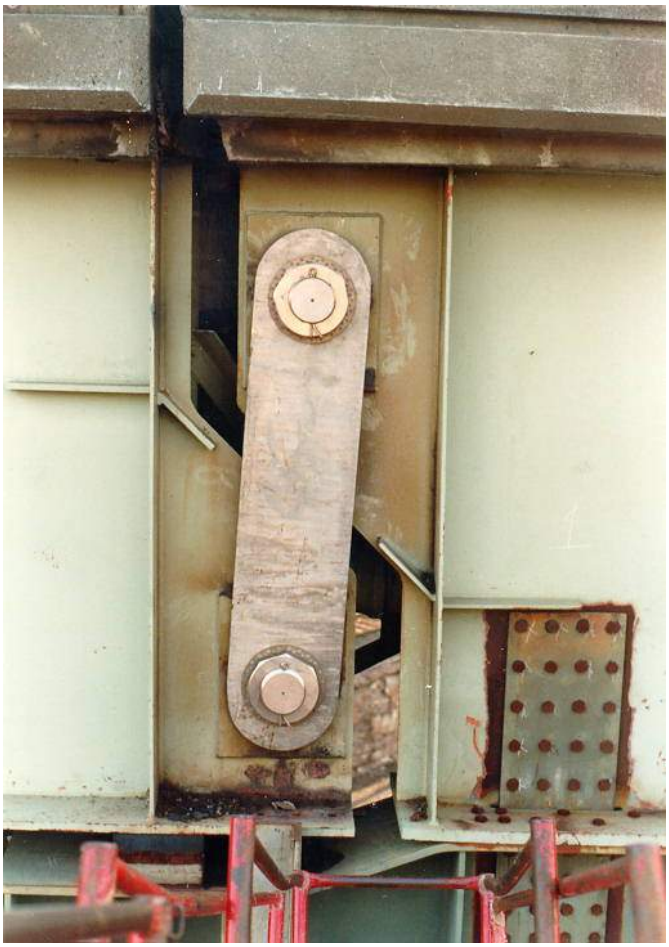

Figure 6.2.1.1e – New Stainless Steel Hanger with "Catchers Mitt" Support Beam Installed.

Report Review

- Review the inspection findings in accordance with established Quality Control and Quality Assurance procedures.

- Cross reference the inspection report, inspection field notes and photographs to ensure they are mutually supportive of their documentation.

- The inspection reviewer shall determine if fatigue problems have been noted on the pin and hanger assemblies and whether or not patterns of deterioration or progressive deterioration are taking place. If fatigue cracks are noted, the reviewer shall insure that the procedures for "Critical Deficiency Reporting" have been initiated. Progression shall be determined by comparing past and present inspection reports.

Maintenance Concerns

- Remove debris and impacted rust to the extent possible without disassembly. Paint or spot paint the pin and hanger assemblies as required to cover exposed steel.

- Ensure that retainer cap nuts are tight and that anti-loosening devices such as cotter pin, tack welds, double nuts, etc., are in place and functioning as designed.

- Perform maintenance on the drainage system as outlined in Section 6.1.10 Drainage Systems, to prevent leakage onto the pin and hanger assemblies.

- If load has been transferred to the backup system, the performance of the backup system should be reviewed and returning the load to the primary system should be considered.

6.2.1.2 JOINT MEASUREMENTS

Measuring the joint opening in bridge parapets at superstructure joints, and comparing the measurement to others taken at the same location at different temperatures, provides a quick and easy method of determining whether the superstructure bearings are responding (as intended or otherwise) to changes in temperature and allowing movement of the superstructure. Measurements that show a predictable change based on a known temperature difference, give confidence that bearing devices are functioning to permit superstructure expansion/contraction.

Parapet joint opening measurements will be taken at every biennial inspection and the temperatures at the time of the measurements recorded. At structures where the operation of the bearing devices is in question, additional measurements at a more frequent interval may be requested at different extremes in temperature. All measurements will be taken to the nearest 1/16" and recorded using the form shown in Figure 6.2.1.1a.

The parapet joint opening to be recorded will be the perpendicular opening at the joint, measured at a point approximately 3" (75 mm) down from the top. The location where the measurement is taken should be marked with a chisel and a small spot of orange paint. Figure 6.2.1.2b shows how to take the measurement at various parapet configurations. In some locations there may not be an approach or wingwall parapet that eliminates the parapet joint at the abutment. In these instances, an alternate measurement should be taken, and the location of the measurement marked and noted on the measurement form. Alternate locations might include measuring from the end of the superstructure beam to the face of the backwall at the fascias or the curb joint opening if there is a definite joint and the approach curb is a substantial, rigid element (not bituminous concrete lip curb or other curbing that is subject to approach settlement). The important concept to remember is that you want to measure between something on the superstructure that is moving and something on the substructure or approach that is fixed. Alternate measurements should be taken at a location that is easy to locate and easy to duplicate.

JOINT MEASUREMENT

Form BRI-17, Rev 6/99

Bridge #: **Location:** **Town 0f:**

Deck Joint Location	Deck Joint Type	Effect Span (ft.)	Winter Measurement			Summer Measurement			Differential Movements			Comment	Difference between Actual & Calc. Movements	
			TEMP deg	Date.. Left (in)	Right (in)	TEMP deg	Date.. Left (in)	Right (in)	Actual Left	Actual Right	by Formula		Left (in)	Right (in)
									0	0	0		0	0
									0	0	0		0	0
									0	0	0		0	0
									0	0	0		0	0
									0	0	0		0	0
									0	0	0		0	0
									0	0	0		0	0
									0	0	0		0	0
									0	0	0		0	0
									0	0	0		0	0
									0	0	0		0	0
									0	0	0		0	0
									0	0	0		0	0
									0	0	0		0	0
									0	0	0		0	0
									0	0	0		0	0
									0	0	0		0	0
									0	0	0		0	0
									0	0	0		0	0
									0	0	0		0	0
									0	0	0		0	0
									0	0	0		0	0
									0	0	0		0	0
									0	0	0		0	0
									0	0	0		0	0
									0	0	0		0	0
									0	0	0		0	0

*** Note:** **Place the higher temperature measurements to the right side of the table.**
A negative differential movement indicates possible abnormal movement.
The "Effective Span" is the length contributing to expansion at the joint. This should be 0 at fixed joints.

Figure – 6.2.1.2a – Parapet Joint Measurement Form

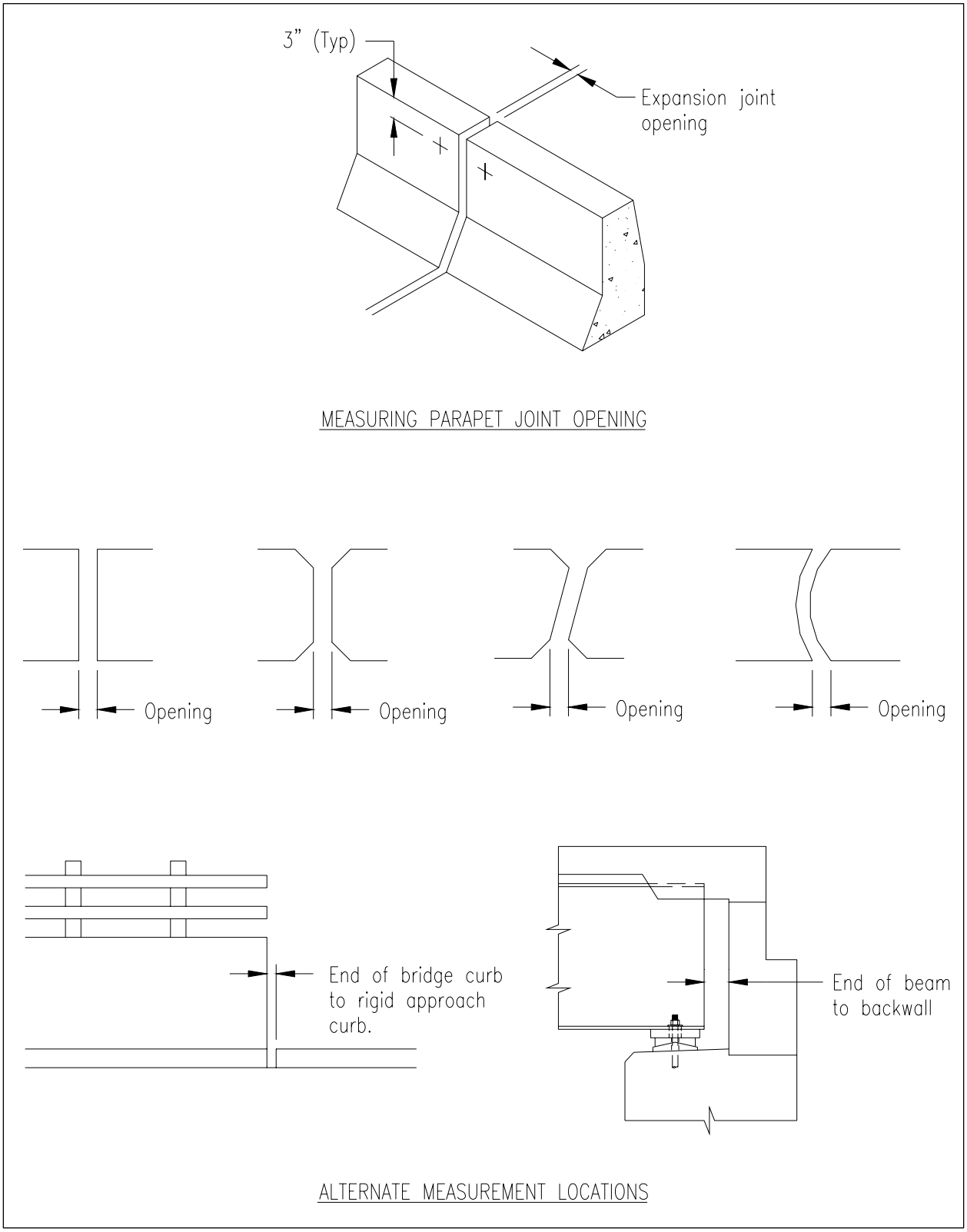

Figure 6.2.1.2b – Joint Measurements

6.2.2 REINFORCED CONCRETE SLABS

Reference: BITM 90 Sections 4.3, 9.2.1, 15.3, 16.3

This section describes the inspection requirements for reinforced concrete slab superstructures. The requirements for concrete decks are discussed in Section 6.1.2. A concrete slab superstructure is a slab that is supported directly on the substructure. This type of superstructure is also known as an "Integral Deck" superstructure because the superstructure is also the riding surface or "deck." Refer to Section 10.1 for instructions on determining condition ratings for integral deck superstructures.

Inspection Requirements

Routine Inspections:

- Inspect the slab in accordance with BITM 90 Section 9.2.1.
- The underside of the slab should be viewed from a distance not greater than 15’ (5 m) using adequate lighting to detect cracks 1/32” (0.5 mm) wide and larger.
- All areas of suspected delamination and at least 25% of those areas on the bottom of the slab showing cracking, scaling, wetness or staining shall be tapped with a hammer to determine soundness.
- The ends of cracks that are 1/8” (3 mm) wide or larger and any cracks that appear to be tension or shear cracks shall have their ends marked with a permanent marker or chisel mark and spot of paint so that extension may be monitored on subsequent inspections.

Documentation for Routine Inspections:

- The size and location of cracks, spalls, delaminations, etc., shall be noted. Where these cannot be simply described, a sketch of the slab underside shall be made that shows the size, location and orientation of deficiencies found. Cracks with rust staining should be documented as such since they may be indicative of leakage through the slab and deterioration of the reinforcing steel. Spalls that expose reinforcing steel should be specifically noted and any deterioration or section loss on the exposed steel documented.

- Particular care shall be paid to document increased quantity or size of deteriorations that have changed since the last inspection. If the condition rating has changed from the last inspection (up or down), a photograph or explanation of why the rating has changed should be included.

- Notes should be made describing the current condition of any previously discovered item that was being monitored.

- Typical conditions and deteriorations causing a condition rating of less than or equal to "5" shall be photographed as outlined in Chapter 5.

In-Depth Inspections:

- In addition to the requirements for routine inspections, "hands-on" access shall be provided to the entire slab underside.

- All areas of cracking, scaling, wetness or staining shall be sounded with a hammer and a random sampling of at least 50% of the areas showing no apparent signs of deterioration shall be sounded using a frequency adequate to detect deficiencies.

Documentation for In-Depth Inspections:

- A sketch of the underside or a copy of the plans is required to show all deteriorations found..

- A good quality photograph of the underside of the slab, that documents its overall condition and supports the condition rating, shall be included.

Report Review

- Review the inspection findings in accordance with established Quality Control and Quality Assurance procedures.

- The inspection report reviewer should determine if patterns of deterioration or progressive deterioration is taking place. Progression will be determined by comparing present to past inspection reports.

- The sudden or progressive appearance of flexure or shear cracks may indicate the need for a new structural evaluation and/or posting of the bridge structure for a weight restriction.

- Low condition ratings, which are caused by extensive widespread deterioration, should be reason to request supplemental testing to better determine the condition of the slab and whether rehabilitation or replacement is warranted.

Maintenance Concerns

- Due to the difficulty inherent with overhead concrete patching and the non-structural nature of the bottom surface concrete in typical simple span slabs, repair of spalled areas on the undersides of slabs is not normally necessary, except in slab bearing areas. At most locations, loose or hollow concrete should be removed and the spalled area cleaned and coated with an appropriate material that will protect exposed reinforcing steel and prevent further deterioration.

- Waterproofing methods can be the best way to prevent or slow the deterioration of reinforced concrete members. Care must be taken in the application of waterproofing systems to ensure that they are not applied in such a way as to prevent existing moisture in the slab from exiting.

Figure 6.2.2a – Typical Concrete Slab Bridge.

6.2.3 REINFORCED CONCRETE T-BEAMS

Reference: BITM 90 Sections 9.2.1, 9.2.2, 15.3, 16.3

This type of superstructure is also known as an "Integral Deck" superstructure because the superstructure is also the riding surface or "deck." Refer to Section 10.1 for instructions on determining condition ratings for integral deck superstructures.

Inspection Requirements

Routine Inspections:

- Inspect the superstructure in accordance with BITM 90, sections 9.2.1 and 9.2.2.
- The stem and flanges of the T-beams should be inspected from a distance of not greater than 15' (5 m) using adequate lighting to detect cracks 1/32" (0.5 mm) wide or larger.
- All areas of suspected delamination and at least 25% of those areas showing cracking, scaling, wetness, staining or other deterioration shall be tapped with a hammer to determine soundness and/or extent of deterioration.
- All areas of exposed reinforcing bars will be inspected for any section loss from a distance of less than 3' (1 m).
- Examine the bearing areas for spalling and crushing due to friction from thermal movement and high bearing pressure.
- Investigate the area near the supports for the presence of diagonal (shear) cracks. These will occur on the side of the stem and project up from the supports toward midspan (See Appendix 6.4 for typical locations).
- Inspect tension zones for deteriorating concrete (delaminations, spalls, and cracks with efflorescence, etc), which could cause debonding of the tension reinforcement.
- The tension areas should be examined for flexure cracks. Look for flexure cracks on the bottom of the beam stem near mid-span and, for continuous spans, in the top of the beam stem near the intermediate supports (See Appendix 6.4 for typical locations).
- Examine cracks for rust stains. This indicates possible rusting of the steel reinforcement.

- Check areas exposed to drainage for concrete spalling and scaling. This may be particularly evident along the curbline, at scuppers or other thru-deck drains, and at the ends of beams where drainage seeps through deck joints.

- Investigate areas that have been damaged, due to collision, for concrete damage (compression zone) and rebar damage (tension zone).

- Examine repaired areas to determine if repair materials are in place and functioning as designed. Hammer tap patched areas to determine if the patch is sound and adhering to the base material.

Documentation for Routine Inspections:

- A simple framing plan shall be provided showing locations of deteriorations and other noted problems. Elevations, cross sections and other detail sketches shall be drawn as required to clearly show the locations and extent of noted deterioration.

- Describe cracks, spalls, scaling, delaminations, dampness, leakage, etc., by noting the size, length, width, surface area and orientation or direction, as applicable, as well as the relative location along the member from a fixed point. Cracks should include a length and width description, as defined in Appendix 6.4, and indicate whether efflorescence and/or rust staining is present. Spalls and scaling should include the depth of loss and the surface area covered. All exposed rebar locations shall be noted along with all section loss of the steel.

- Notes should be made describing the current condition of all previously noted problems so a rate of deterioration can be established for monitoring purposes. If the condition rating has changed from the previous inspection due to increased quantity or size of deterioration, photographs, documentation, and an explanation of why the rating has changed should be included in the inspection report.

- Cracks 1/8” (3 mm) or wider, should have their ends marked on the bridge with a permanent marker, or chisel and paint mark, along with the date they were found. This will allow subsequent inspections to determine extent and rate of crack propagation.

- Typical conditions, and deteriorations causing a condition rating of less than or equal to "5", shall be photographed as outlined in Chapter 5.

In-Depth Inspections:

- In addition to the requirements for a routine inspection, "hands on" access shall be provided to the entire superstructure.

- All primary members will be inspected "in depth" regardless of extent of damage or deterioration, from a distance of less than 3’ (1 m).

- All areas of cracking scaling, wetness, or staining shall be sounded with a hammer to determine extent and limits of deterioration.

- At least 50% of the areas showing no apparent signs of deterioration shall be initially inspected using physical inspection methods such as hammer sounding or chain drag survey to determine the need for a more extensive investigation.

- Areas that are suspected of needing additional investigation shall be documented and discussed with the Field Senior to determine the possible courses of action and appropriate NDT methods to be employed.

Documentation for In-Depth Inspections:

- All documentation required for a routine inspection shall be included in the in-depth documentation except as noted in this section.

- Documentation as a whole should clearly describe the structural condition and serve as an accurate benchmark to which future inspections can be compared.

- A good quality photograph of the superstructure, that documents the overall condition as well as detail photographs that support the condition rating, shall be provided.

Report Review

- Low condition ratings that are caused by extensive or widespread deterioration should be reasons to request supplemental testing to better determine the condition of the T-beams and whether rehabilitation or replacement is warranted.

- Review the inspection findings in accordance with established Quality Control and Quality Assurance procedures.

- Cross reference the inspection report, inspection field notes and photographs to ensure they are mutually supportive of their documentation.

- The inspection reviewer should determine if patterns of deterioration or progressive deterioration are taking place. Progression will be determined by comparing present to past inspection reports.

- The sudden or progressive appearance of flexure or shear cracks may indicate the need for a new load analysis and/or weight restriction of the bridge structure.

Figure 6.23a – Concrete T-Beams with Large Spalls Exposing the Bottom Layer of Reinforcing Steel.

Maintenance Concerns

- Due to the difficulty inherent with overhead concrete patching, and the non-structural nature of bottom surface concrete in typical simple span T-beams, repair of minor spalled areas on the bottom of the T-beam stem is normally not necessary. At most locations, loose or hollow concrete, which does not extend beyond the depth of the bottom layer of reinforcement, should be removed and the spalled areas cleaned and coated with an approved material that will protect any exposed reinforcing steel and prevent further deterioration. However, if the spall is deeper than the bottom layer of reinforcing steel, patching operations should be conducted.

- Certain structural cracks may be repaired using chemical repair techniques. Engineering judgement and discussion with the Supervising Engineer are required for specific applications.

- Waterproofing methods can be the best way to prevent or slow the deterioration of reinforced concrete members. However, care must be taken in the application of waterproofing systems to insure they are not applied in such a way as to prevent existing moisture in the T-beams from exiting.

6.2.4 CONCRETE RIGID FRAMES AND CLOSED SPANDREL ARCHES

Reference: BITM 90 Sections 9.1, 9.2.6, 9.2.7

This type of superstructure is also known as an "Integral Deck" superstructure because the superstructure may also be the riding surface or "deck." Refer to Section 10.1 for instructions on determining condition ratings for integral deck superstructures. See Appendix 6.9 for sketches and nomenclature.

Inspection Requirements

Routine Inspections:

- Inspect the concrete rigid frame or closed spandrel arch in accordance with BITM 90 Sections 9.1, 9.2.6, and 9.2.7.

- The entire superstructure shall be inspected from a distance of not greater than 15 ft. (5 m) using adequate lighting to detect cracking, scaling, spalling, exposed reinforcing (with or without corrosion loss), delamination, impact damage or other defects.

- Suspect areas should be inspected "hands-on" to determine the type and extent of deterioration or deficiency.

- Inspect the area of the arch ring/skew back interface for deterioration. (See Appendix 6.9, Figure A-9-10.)

- Inspect the arch or frame intrados for longitudinal cracks that may indicate differential vertical movement across the transverse section. Look for transverse tension cracks near the crown that may indicate an overload/overstress condition.

- Inspect the arch ring/spandrel wall interface for cracks and spalls that may indicate deflection of the wall or differential movement of the arch ring.

- Inspect the spandrel walls for bulging, tilting, or other signs of deterioration and signs of fill material exfiltration.

- Inspect the top of the roadway for signs of cracking parallel to the centerline of the arch or for depressed pavement. Depressions or signs that the pavement has been patched may indicate loss of fill material or rotation of the spandrel walls.

Special Note:

- *In closed spandrel arch structures that are earth filled, the spandrel walls are primary members. They act as retaining walls and serve to resist the lateral earth pressures that develop in the fill material during transfer of dead and live loads to the arch ring. Cracks and spalls, which are large enough to allow exfiltration of fill material, reduce the effective transfer of load and can cause voids to develop below the roadway pavement. They should be sealed to prevent further exfiltration and monitored for recurrence.*

- *Because asphalt pavements and/or fill material are porous, water can easily penetrate to the inside surfaces of arch rings, spandrel walls and frame legs. If weepholes are ineffective and water is retained, deterioration may take place on the inside face long before water seepage, staining, or other signs of deterioration are noticeable on the outside face. Once cracks or spalls penetrate to the outside surface, water can accelerate exfiltration of fill material.*

- Check all areas exposed to drainage for concrete spalling and scaling. This may be particularly evident below the roadway curbline, and around scuppers and weepholes.

- Check that scuppers are not clogged and that surface water drains away properly so that it does not saturate the fill material and/or penetrate to the structural concrete.

- Check weepholes to see if they appear clear to permit proper drainage of the backfill.

- Check for shear cracks that initiate at the intersection of the frame leg and intrados and propagate upward into the frame slab toward midspan or downward into the leg. (See Appendix 6.9, Figure A-9-11 for typical locations.)

- Check the tension zones in frames for flexure cracks, cracks with rust stains or efflorescence, exposed or corroded tensile reinforcement, or deteriorated concrete that could cause debonding of the tension reinforcement. (See Appendix 6.9, Figure A-9-12 for typical locations.)

- Check the frame legs for horizontal cracks that could indicate excessive backfill pressure, and for loss of section due to spalling or scaling that would increase the compressive stresses. Check for exposed reinforcement.

- Investigate areas that have been damaged due to impact for concrete damage (compression zones) and reinforcement damage (tensile zones).

- Inspect repaired areas to determine if repair materials are in place and functioning as designed. Hammer tap patched areas to determine if the patch is sound and adhering to the base material.

- Look for spalling, scaling or delaminated concrete that is located above roadway travel lanes and could cause problems if it were to become loose and drop to the roadway below.

Documentation for Routine Inspections:

- Document deficiencies and deteriorations observed. Dimensions should include the length, width, height, depth of loss, orientation and location relative to a fixed point.

- Elevation and plan drawings may be provided to show the layout of the arch ring, frame, spandrel walls and foundation, along with all noted deteriorations. If required, additional sectional views and detail drawings shall be provided as necessary to adequately describe the extent of deficiencies noted. Sketches should always be provided if significant deterioration is found.

- Notes shall be made describing the current condition of all previously noted problems so that a rate of deterioration can be established for monitoring purposes. If a condition rating has changed from the previous inspection due to increased quantity or size of deterioration, or if the deterioration has been repaired, photographs, documentation and an explanation of why the condition rating has changed shall accompany the report.

- All shear cracks in the spandrel walls, frame slab or frame legs and any transverse cracks in the arch ring or frame legs that are greater than 1/8” (3 mm) in width shall have their ends marked on the structure with a permanent marker or chisel and paint mark along with the date they were found. This will allow subsequent inspections to determine the extent and rate of crack propagation.

- Typical conditions and deteriorations causing a condition rating of less than or equal to "5" shall be photographed as outlined in Chapter 5.

In-Depth Inspections:

- In addition to the requirements of the routine inspection, "hands-on" access shall be provided to the entire superstructure.

- Elevation and plan drawings shall be provided to show the layout of the arch ring, frame, spandrel walls and foundation along with all deteriorations noted. Section views and detail drawings shall be provided as required to adequately describe the extent of deficiencies noted.

- All areas of cracking, scaling, spalling, wetness, or staining on the spandrel walls shall be sounded with a hammer to determine the extent and limits of deterioration.

- At least 50% of the areas of the arch or frame intrados, spandrel walls, and frame legs showing no apparent signs of deterioration shall be initially inspected using physical inspection methods such as hammer sounding or chain drag survey to locate delaminated areas. If delaminations are found, additional areas shall be sounded.

Documentation for In-Depth Inspections:

- All documentation required for the routine inspection shall be included in the in-depth documentation except as noted in this section.

- Documentation, as a whole, shall clearly describe the structural condition and serve as a benchmark to which all future inspections can be compared.

- A good quality photograph of the superstructure, that documents the overall condition as well as detail photographs that support the condition rating, shall be provided.

Report Review

- Review the inspection findings in accordance with established Quality Control and Quality Assurance procedures.

- Check to ensure the inspection report, inspection field notes, and photographs are cross referenced and mutually supportive of their documentation.

- The inspection reviewer should determine if patterns of deterioration or progressive deterioration is taking place. Progression will be determined by comparing present and past inspection reports.

- Transverse cracking in the arch ring may indicate possible differential deflection of the arch ring and can seriously effect the ability of the arch ring to carry load. If these cracks are noted, further investigation as to the cause and effects should be considered.

- Rigid frames rely on the integrity of the moment connection between the slab and leg to transfer dead and live load moments to the footings. Cracking, spalling, exposed rebar or other deterioration noted in this area, particularly in the tension area, should be monitored closely and further investigation as to the cause and effects should be considered.

Maintenance Concerns

- Spalls noted during the inspection should be patched utilizing approved materials and details. If exposed reinforcing bars are present, they should be cleaned of all rust and coated with an approved protective coating prior to patching operations. Consideration should be given to replacing severely corroded sections of reinforcing bars and/or utilizing wire mesh to reinforce the patch.

- Weepholes and scuppers should be cleaned as needed to insure proper drainage.

- Debris buildup on the roadway should be removed as needed to allow water runoff to drain effectively.

- Potholes and/or spalls in the roadway surface should be patched utilizing approved materials and procedures to prevent increased impact stresses and further deterioration.

Figure 6.2.4a – A Closed Spandrel Reinforced Concrete Arch Bridge.

6.2.5 OPEN SPANDREL CONCRETE ARCHES

Reference: BITM 90 Sections 9.1, 9.2.5

NOTE: The inspection criteria described in this section conservatively assumes that transverse floorbeams act integrally with the spandrel columns to form a rigid frame system. Also, it is assumed that any spandrel beams spanning longitudinally between the spandrel columns create a rigid frame configuration and should be inspected as such. Floorbeams supported on top of the longitudinal spandrel beams should be inspected as a continuous beam with cantilevered ends.

Inspection Requirements

Routine Inspections:

- Inspect the open spandrel concrete arches in accordance with BITM 90 Sections 9.1 and 9.2.5.

- All superstructure elements shall be inspected on all sides from a distance not greater than 15 ft. (5 m) using adequate lighting to detect cracking, scaling, spalling, exposed reinforcing (with or without corrosion loss), delamination, impact damage or other defects.

- All suspect areas shall be inspected "hands-on" to determine the type and extent of deterioration or deficiency.

- Inspect the arch rib/spandrel column interface for horizontal cracks that may indicate excessive bending in the column due to overloads or differential arch rib deflection. (See Appendix 6.9, Figure A-9-2.)

- Inspect the spandrel column/floorbeam interface for diagonal cracks that begin at the interface corner and propagate upward over the column. These may indicate differential arch rib deflection. (See Appendix 6.9, Figure A-9-2.)

- Inspect the tension zones of floorbeams and spandrel beams for deteriorated concrete that could cause debonding of the tensile reinforcement.

- Inspect the area near the floorbeam and spandrel beam supports for the presence of shear cracks. These cracks will appear on the sides of the beams and project upward toward the beam=s midspan. (See Appendix 6.4 for typical locations).

- Tension areas of floorbeams and spandrel beams shall be inspected for the presence of flexure cracks. These cracks will appear at the bottom of the beam near midspan. In the case of continuous spandrel beams or cantilevered floorbeams, these cracks may also appear at the top of the beams at the supports.

- When arch ribs are connected with struts, check the arches near the strut connection for diagonal cracks due to torsional shear caused by differential arch rib deflections.

- Inspect the arch ribs for cracks. Longitudinal cracks along the centerline of the rib or transverse cracks may indicate an overstress condition.

- Inspect the arch ribs for any section loss due to spalling that will increase the compressive stresses at the area of loss. Maximum compressive stresses in the arch ribs occur at the connection to the substructure.

- Inspect the spandrel columns for buckling due to eccentric loading. (See Appendix 6.9, Figure A-9-4 for further description.) If a column is discovered to be buckled, the arch rib adjacent to the column should be inspected for torsional distortion.

- Examine all floorbeams and spandrel beams at bearing areas for spalling or crushing due to high bearing pressure.

- Examine all cracks for rust stains. This indicates possible rusting of the steel reinforcement.

- Check areas exposed to water drainage for concrete spalling and scaling. This may be particularly evident along the curblines, at scuppers, and at deck joints.

- Investigate areas that have been damaged due to collision for concrete damage (compressive zones) and reinforcement damage (tension zones).

- Inspect repaired areas to determine if repair materials are in place and functioning as designed. Hammer tap patched areas to determine if the patch is sound and adhering to the base material.

- Inspect the arch superstructure elements above the floorbeams/bent caps using the procedures outlined in other sections of this manual as applicable.

Documentation for Routine Inspections:

- Document deficiencies and deteriorations observed. Dimensions should include the length, width, height, depth of loss, orientation and location relative to a fixed point.

- A framing plan of the deck system and an elevation of the arch rib should be provided to show the layout of the superstructure. All notable deteriorations should be located on these sheets. Section views and detail drawings shall be provided as necessary to adequately describe the extent of deficiencies noted. Also note that very detailed descriptions and locations of deteriorations are required to avoid confusion as to the exact location. (See Appendix 6.9, Figures A-9-1 and A-9-5 thru A-9-9 for typical arch nomenclature, labeling system and field note examples.)

- Notes shall be made describing the current condition of all previously noted problems so that a rate of deterioration can be established for monitoring purposes. If a condition rating has changed from the previous inspection due to increased quantity or size of deterioration, or if the deterioration has been repaired, photographs, documentation and an explanation of why the condition rating has changed shall accompany the report.

- All structural cracks that are greater than 1/8” (3 mm) in width shall have their ends marked on the structure with a permanent marker or chisel and paint mark along with the date they were found. This will allow subsequent inspections to determine the extent and rate of crack propagation.

- Typical conditions and deteriorations causing a condition rating of less than or equal to "5" shall be photographed as outlined in Chapter 5.

In-Depth Inspections:

- In addition to the requirements of the routine inspection, "hands-on" access shall be provided to the entire superstructure.

- All areas of cracking, scaling, spalling, wetness, or staining on the arch ribs, spandrel columns, spandrel beams and floor system shall be sounded with a hammer to determine the extent and limits of deterioration.

- At least 25% of the areas of the arch ribs, spandrel columns, spandrel beams, and floor system showing no apparent signs of deterioration shall be inspected using physical inspection methods such as hammer sounding to locate delaminations. If delaminated areas are found, additional areas shall be sounded.

Documentation for In-Depth Inspections:

- All documentation required for the routine inspection shall be included in the in-depth documentation except as noted in this section.

- Documentation, as a whole, shall clearly describe the structural condition and serve as a benchmark to which all future inspections can be compared.

- A good quality photograph of the superstructure, that documents the overall condition as well as detail photographs that support the condition rating, shall be provided.

Report Review

- Review the inspection findings in accordance with established Quality Control and Quality Assurance procedures.

- Check to ensure the inspection report, inspection field notes, and photographs are cross referenced and mutually supportive of their documentation.

- The inspection report reviewer should determine if patterns of deterioration or progressive deterioration is taking place. Progression will be determined by comparing present and past inspection reports.

- The sudden or progressive appearance of cracks in the tension zones of any arch superstructure members or at any of the interfaces described in this section may indicate the need for a new load analysis and/or weight restriction on the structure.

- Because of the nature of open spandrel arches, with multiple elevation views of individual arch ribs, columns, spandrel beams and floorbeams, it is easy to inadequately document the location of defects. Therefore, the inspection report reviewer should review the field notes to ensure that correct nomenclature is used and that section and detail sketches are correctly drawn and adequately described.

- It is very unlikely the spandrel columns and arch ribs of the arch superstructure will act in pure compression (as theory would describe) due to eccentric loading of the spandrel columns. Therefore, tensile stresses may develop in the columns and torsional stresses may develop in the arch rib below the column. The reviewer should review the inspection report and field notes for documentation of columns (particularly long columns), that appear to have flexure cracks, and ribs that have torsional cracks. If these cracks are noted, additional investigation as to the cause and effect is warranted.

- Review the inspection report and field notes for evidence of cracking caused by differential deflection of the arch ribs. These cracks are most common at the column/arch rib interface, the column/floorbeam/spandrel beam connection and arch strut/arch rib interface. Signs of arch rib differential deflection shall be closely monitored and may warrant further investigation as to the long term effects on the structure.

- Section loss due to spalls in compression members will cause higher compressive stresses in the member at the location of loss. Review the inspection report and field notes for locations of excessive section loss that may warrant further investigation.

Figure 6.2.5a – Open Spandrel Concrete Arch Bridge.

Maintenance Concerns

- Spalls noted during the inspection should be patched utilizing approved materials and details. If exposed reinforcing bars are present, they should be cleaned of all rust and coated with an approved protective coating prior to patching operations. Consideration should be given to replacing severely corroded sections of reinforcing bars and/or utilizing wire mesh to reinforce the patch.

- Scuppers and deck joints should be cleaned as needed to insure proper drainage.

- Debris buildup on the roadway should be removed as needed to allow runoff to drain effectively.

- Potholes and/or spalls in the roadway surface should be patched utilizing approved materials and procedures to prevent increased impact stresses and further deterioration.

- Certain structural cracks may be repaired using chemical repair techniques. Engineering judgement and discussion with the Supervising Engineer are required for specific applications.

6.2.6 PRESTRESSED AND POST TENSIONED CONCRETE SUPERSTRUCTURES

Reference: BITM 90 Sections 4.3, 9.3, 21.4

Inspection Requirements

Routine Inspections:

- Inspect the superstructure in accordance with BITM 90 Sections 9.3 and 21.4.

- Some of the larger post tensioned bridges in the state, such as the Baldwin Bridge in Old Saybrook, have custom inspection procedure manuals that were created by the bridge's designer. The procedures described in these manuals shall be referenced and followed when inspecting these structures.

- Bearing areas, and anchorages should be viewed from a distance not greater than 3' (1 m) using adequate lighting to detect hairline cracks. The remainder of the superstructure should be viewed from as close as practical, using binoculars, where appropriate, with adequate lighting to detect cracks 1/32" (0.5 mm) and larger.

- All areas of suspected delamination, scale, cracks with efflorescence, wetness, rust staining, and cracks 1/32" (0.5 mm) and larger, shall be tapped with a hammer to determine soundness. Cracks less than 1/32" (0.5 mm) shall be tapped with a hammer at sufficient intervals to detect patterns of delamination.

- The ends of cracks greater than 1/32" (0.5 mm) shall have their ends marked with a chisel or permanent marker so that extension may be monitored on subsequent inspections. Cracks, that were found and marked on previous inspections, shall be checked for extension beyond the previous end mark. If extension is noted, the new end of the crack should be marked and the amount of extension noted in the inspection report.

- The interiors of box beams/girders should be inspected whenever possible. Documentation/monitoring of deterioration/cracking will be done primarily from the interior of the boxes. Inspection of the interiors of box beams requires additional safety precautions. Refer to the section on inspection of steel box girders for comments on safety.

Documentation for Routine Inspections:

- The size and location of cracks, spalls, delaminations, etc., shall be noted. Where these cannot be simply described, a sketch of the superstructure element shall be made that shows the size, location, and orientation of deficiencies found.

- Flexure and shear cracks larger than 1/32” (0.5 mm) shall be measured and accurately located. Smaller, nonstructural cracks need not be measured, but their general size, length, direction, location, and quantity should be noted in the inspection report. Where cracking is extensive, the amount of documentation required should be discussed with the Supervising Engineer.

- Particular care shall be paid to documenting increased quantity or size of deteriorations that have changed since the last inspection. If the condition rating has changed from the last inspection (up or down), a photograph and explanation of why the rating has changed should be included.

- Notes should be made describing the current condition of any item previously discovered and noted for monitoring.

- Typical conditions and deteriorations causing a condition rating of less than or equal to "5" shall be photographed as outlined in Chapter 5.

In-Depth Inspections:

- In addition to the requirements for routine inspections, "hands-on" access shall be provided to the entire superstructure.

- All areas of suspected delamination, scale, cracking, and a random sampling of at least 25% of the areas showing no apparent signs of deterioration shall be sounded to locate delaminations using a frequency adequate to detect deficiencies.

Documentation for In-Depth Inspections:

- A simple framing plan shall be drawn or a copy of the plans made and all deficiencies referenced to that framing plan. All deterioration shall be sketched noting the size, length, direction, depth, etc., of deterioration. If the deterioration is limited, placing the information on the framing plan will usually be sufficient, however, in most cases sketches of individual members that show all exposed faces will be required.

- In some cases the quantity of cracks will preclude measurement and documentation of all cracks within a reasonable length of time. In this case, it is important that the significant cracks and deterioration are fully documented, and that the pattern and quantity of other deterioration is noted.

- The notes as a whole should clearly describe the structural condition and serve as an accurate benchmark to which future inspections can be compared.

- A good quality photograph of the superstructure that documents its overall condition and supports the condition rating shall be included.

Report Review

- Review the inspection findings in accordance with established Quality Control and Quality Assurance procedures.

- The inspection reviewer should determine if patterns of deterioration or progressive deterioration is taking place. Progression will be determined by comparing present to past inspection reports.

- The sudden or progressive appearance of flexure or shear cracks may indicate the need for a new load rating analysis and/or posting of the bridge structure for a weight restriction.

Maintenance Concerns

- Repairs to prestressed concrete members will generally be structural in nature and may have an effect on the load carrying capacity. Repairs should be detailed and performed under the direction of an engineer. Only very loose concrete that is in danger of falling onto traffic should be removed with a light (less than 15 pound) jackhammer prior to consultation with the engineer. At no time should drilling or the use of powder actuated fasteners be permitted on prestressed members.

- Certain structural cracks may be repaired using chemical repair techniques. Engineering judgement and discussion with the Supervising Engineer are required for specific applications.

Figure 6.2.6a – Prestressed Concrete Deck Units with Severe Deterioration due to Leakage Between the Beams.

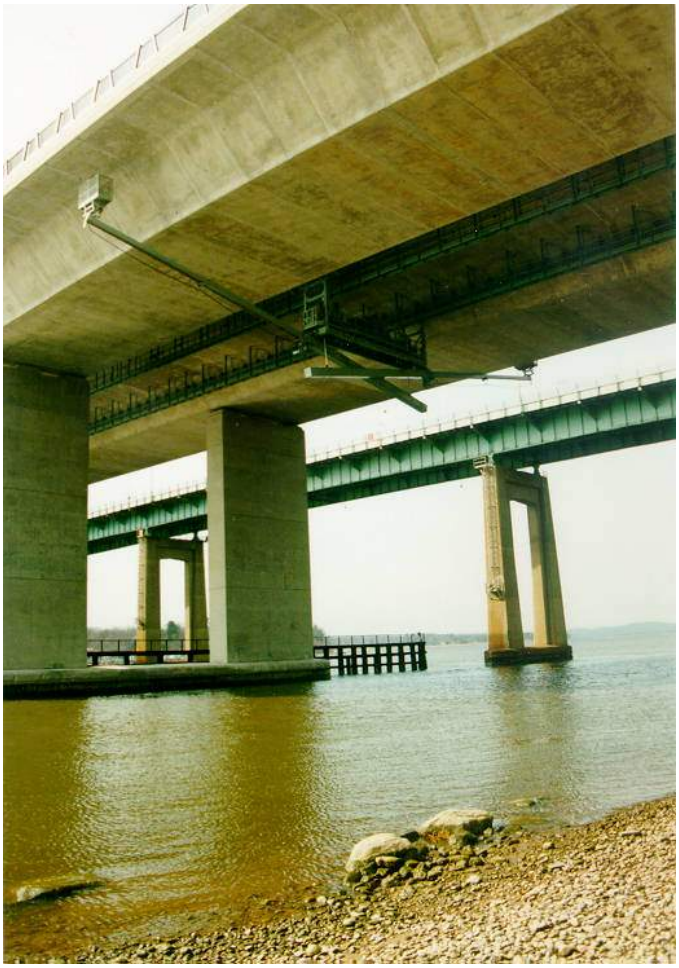

Figure 6.2.6b – Post Tensioned Segmental Box Girder Bridges with Special Inspection Access Built-In to the Bridge Structure.

6.2.7 STEEL MULTI-GIRDERS

Reference: BITM 90 Sections 4.4, 10.1,10.2, 10.3 and 15.4

Inspection Requirements

Routine Inspections:

- Inspect the superstructure in accordance with BITM 90, Sections 10.1, 10.2, 10.3 and 15.4.

- The entire superstructure will be inspected from a distance of not greater than 15' (5 m) using adequate lighting to detect corrosion, impacted rust, section loss, cracks, dings, gouges, impact damage and other defects. Particular emphasis will be placed on areas of maximum moment (midspan for simple span beams and the area over the piers for continuous beams), ends of cover plates (or other locations of abrupt change in member cross section), bearing areas and diaphragm connections.

- Suspect areas shall be inspected Ahands on≅ to determine the extent of deterioration or deficiency.

- Areas of heavy rusting shall be inspected "hands-on" to establish the depth of any section loss. Rust scale or "laminated rust" shall be removed with chipping hammers, scrapers or wire brushes, as necessary, in order to measure the minimum remaining thickness of steel or maximum depth of section loss. This will be most critical on beam flanges in high moment areas and beam webs in the vicinity of supports. Refer to the procedures in Appendix 6.2 for documenting steel section losses..

- Impact damaged areas should be inspected "hands-on" for the presence of tears or cracks.

- Sight along the flanges of beams for evidence of compression flange buckling or dead load deflection ("negative camber").

- Girder/beam webs should be checked for signs of web crippling (out-of-plane bending) or beam tipping at all support locations. A plumb bob may be used for this purpose.

- On bridges carrying limited access highways, the ends of **all** partial length welded cover plates should be inspected "hands on" for fatigue cracks or other defects. For all other bridges, 25% of all the cover plate ends should be inspected "hands on" during each routine inspection. It should be clearly indicated in the inspection report, which beam cover plates were inspected "hands on." A different 25% shall be inspected on each subsequent inspection. This provides for a "hands on" inspection of all the cover plate ends after four routine inspections.

- Welded repairs, diaphragm or utility connections, and any miscellaneous welds in the tension zones of beams that can be accessed without special equipment should be inspected closely for fatigue cracks or other defects (See Appendix 6.1 for typical details.). If defects are found, arrangements should be made to permit a "hands-on" inspection of all similar details on the structure.

- All suspected cracks should undergo Nondestructive Testing (NDT) to confirm their existence and determine the extent of crack. All confirmed fatigue cracks shall be immediately reported in accordance with the Critical Deficiency Reporting/Emergency Response procedures outlined in Section 3.2.7.

- Bolts and rivets should be visually checked for tightness and section loss. Broken paint or bleeding rust around a bolt or rivet may indicate a loose or broken fastener. Suspect fasteners should be tapped with a hammer to confirm their integrity.

- Check the girder webs at approximately 25% of the welded diaphragm connection plates for fatigue cracks due to out-of-plane bending. See Appendix 6.1 for typical locations of fatigue cracks.

- Twenty-five percent (25%) of all welded girder web to lateral bracing gusset plate connections in the area of maximum bending moment, shall be inspected "hands-on" for fatigue cracks due to out-of-plane bending in the girder web. See Appendix 6.1 for typical locations of fatigue cracks.

- All pin and hanger details shall be inspected in accordance with Section 6.2.1.1.

- When defects are found in a particular detail or location on a member, all other similar details or member locations will be inspected "hands on" for similar defects.

Some Pointers to Remember
About Weld Inspection

- *Visual inspection tells most. However, locations of ends of cracks may be erroneous as sub-surface crack propagation may be more extensive than surface propagation.*
- *Radiographic inspection permits looking into the weld for defects that fall within the sensitivity range of the process. It provides a permanent record of the results.*
- *Magnetic-particle inspection is outstanding for detecting surface cracks and is used to advantage on heavy weldments and assemblies.*
- *Dye-penetrant is easy to use in detecting surface cracks. Its indicators are readily interpreted.*
- *Ultrasonic inspection is excellent for detecting subsurface discontinuities, but requires expert interpretation.*

Documentation for Routine Inspection:

- Note the extent and severity of all rusting. Significant loss, whether from past or current rusting, should be noted in sufficient detail for a load rating analysis to be performed. Engineering judgement is required in the field to determine the significance of areas with loss, but as a guideline specific notes are required when:

  a) Greater than 15% (typically 1/8” (3 mm)) of the flange thickness is lost in areas of high moment.

  b) Greater than 30% (typically 1/8” (3 mm)) of the web thickness is lost in areas of high shear.

  Less significant losses (typically <1/8” (3 mm)) should be noted, but exact measurements are not required.

- Document steel losses by noting the area and depth of the loss as well as its relative location along the length of the beam measured from a fixed point (e.g. 12” (300 mm) H x 12” (300 mm) W x 1/8” (3 mm) deep loss on girder web at the bottom flange, beginning 3’ (1 m) from the west bearing on girder G1). Whenever possible, where deterioration is noted, calipers or other measuring devices shall be used to measure the remaining section instead of estimating the loss. Notes should clearly indicate whether an "estimated loss" or measured remaining thickness is being given. See Appendix 6.2 for typical examples of documenting steel section loss.

- Note locations and condition of all welded repairs or connections and other miscellaneous welds in the tension zones of the beams if they were not detailed on the construction plans or noted in the last in-depth inspection.

- Note the location and condition of all significant (deeper than a paint scrape) impact damage.

- Document in the field notes, the locations of all loose bolts/rivets, and also mark locations on the bridge with a permanent marker or lumber crayon along with the date they were found.

- Document locations and lengths of all cracks found. Mark these locations on the bridge with permanent marker or lumber crayon. Note the date found and the limit of crack propagation in such a manner that subsequent inspections may determine additional crack propagation. The method of inspection should also be noted as the crack may have propagated farther than may show visually. If any retrofit has been made to an old crack or holes drilled to arrest existing cracks, evaluate the effectiveness of the retrofit and note whether or not the crack has propagated past the arresting hole.

- Particular care shall be given to documenting any increased quantity or size of deteriorations that have changed since the last inspection. If the condition rating has changed from the last inspection, a photograph and explanation of why the rating has changed shall be included in the inspection report.

- Notes should be made describing the current condition of all previously noted problems so a rate of deterioration can be established for monitoring purposes.

- A simple framing plan should be provided showing locations of deteriorations and other noted problems. Member elevations and cross sections should be provided as required to adequately describe deterioration found.

- Typical conditions and deteriorations causing a condition rating of less than or equal to "5" shall be photographed as outlined in Chapter 5.

In-Depth Inspections:

- In addition to the requirements for a routine inspection, "hands-on" access shall be provided to the entire superstructure.

- All primary and secondary members should be inspected "hands-on" regardless of extent of damage or deterioration.

Documentation for In-Depth Inspections:

- All documentation required for a routine inspection will be included in the in-depth documentation except as noted in this section.

- A simple framing plan, and elevations (as required), of all primary members should be provided. All deterioration or deficiencies found should be noted on these sheets to include size, length, direction, depth, etc. Sections and other detail sketches should be drawn as required to clearly show the locations and extent of deterioration or deficiencies noted.

- Documentation as a whole should clearly describe the structural condition and serve as an accurate benchmark to which future inspections can be compared.

- A good quality photograph of the superstructure, that documents the overall condition as well as detail photographs that support the condition rating, shall be provided.

Report Review

- Review the inspection findings in accordance with established Quality Control and Quality Assurance procedures.

- Cross reference the inspection report, inspection field notes and photographs to ensure they are mutually supportive of their documentation.

- The inspection reviewer should determine if patterns of deterioration or progressive deterioration are taking place. Progression will be determined by comparing present to past inspection reports.

- The reviewer should verify that the current structural evaluation on file for the bridge is valid based on conditions found during the inspection.

- The appearance of new or sudden propagation of existing fatigue cracks may warrant a new load rating or fatigue analysis, and/or posting of the bridge structure for a weight restriction. The reviewer should insure that all new fatigue cracks found were reported in accordance with the established procedures for "Critical Deficiency Reporting."

Maintenance Concerns

- Most repairs to steel members will be structural in nature and may have an effect on the load carrying capacity of the structure. Repairs should be detailed and performed under the direction of a qualified engineer.

- Fatigue cracks, that show little or no crack propagation for extended periods, can suddenly resume propagation, possibly resulting in member failure. Therefore, all cracks found shall be immediately reported and corrective action should be taken as soon as possible to ensure the integrity of the structure and safety of the public.

- Areas of section loss, gouges, dings, and impacted rust are all stress risers in steel members and should be monitored closely or repaired.

- Areas of severe rusting should be cleaned and coated to prevent further deterioration.

Figure 6.2.7a – Typical Rolled Multi-Stringer Superstructure with Ends of Partial Length Welded Cover Plates Visible.

6.2.7.1 STEPS TO FOLLOW WHEN FATIGUE CRACKS ARE OBSERVED

Fatigue cracks are most detrimental to the safety and performance of a structure or component when they are orientated in a direction perpendicular to the applied stress. If a crack is detected, the following steps are recommended:

For the Inspector:

1. Report the fatigue crack immediately in accordance with the Critical Deficiency Reporting/Emergency Response procedures outlined in Section 3.2.7. A sketch and photographs shall be prepared so that the crack location, size and orientation can be evaluated.

2. Determine the locations of the ends of the crack visually. The crack tip will, in general, extend beyond the crack in the paint film and beyond any oxide indication.

3. Examine any other identical details on the bridge. Additional fatigue cracks are likely to occur at any time in similar details at the same relative location within the detail. Those details attached to members located under the most heavily traveled truck lanes should be examined first in multiple girder bridges.

4. When examining other similar details, look carefully for breaks in the paint and the formation of oxide dust at the location where the first crack originated.

5. If a suspect area is located in a detail found in many areas throughout the bridge, a more detailed examination of all such details should be carried out, such as having the paint removed in the area and applying dye penetrant or a visual examination with a 10X power magnifier.

For the Bridge Engineer:

1. Evaluate the significance of the crack on the load-carrying capacity of the bridge, considering the crack size, known material characteristics, and temperature. Steel is much more brittle during periods of extreme low temperature, and brittle fracture is more likely to occur in cold weather than during warm weather.

2. If the crack is moving perpendicular to the stress field in the member, it is desirable to arrange to have holes drilled, at the crack ends, immediately. The holes should be 3/4” (20 mm) to 1” (25 mm) in diameter. The edge of the holes should be placed at the presumed end of the crack. After holes are drilled, it is desirable to check the hole to insure that the crack tip has been removed and does not pass through the hole (see Appendix 6.3 for typical example). This is generally a temporary retrofit pending development of a permanent repair.

4. Determine if special nondestructive tests are desirable at other locations (i.e. dye penetrant, mag-particle, ultrasonic testing or a more thorough visual examination).

5. Review results of examination of other locations on the bridge. Determine if a pattern develops related to truck traffic lanes and geometry of the structure.

6. Determine if the crack or cracks have developed from normal fabrication conditions or as a result of an unusual flaw.

7. Develop a repair and retrofit scheme for the fatigue damaged area(s).

8. Determine whether or not other structures exist with similar details and conditions. Those structures located on the more heavily traveled roads with the highest average daily truck traffic should receive the highest priority for any subsequent inspection.

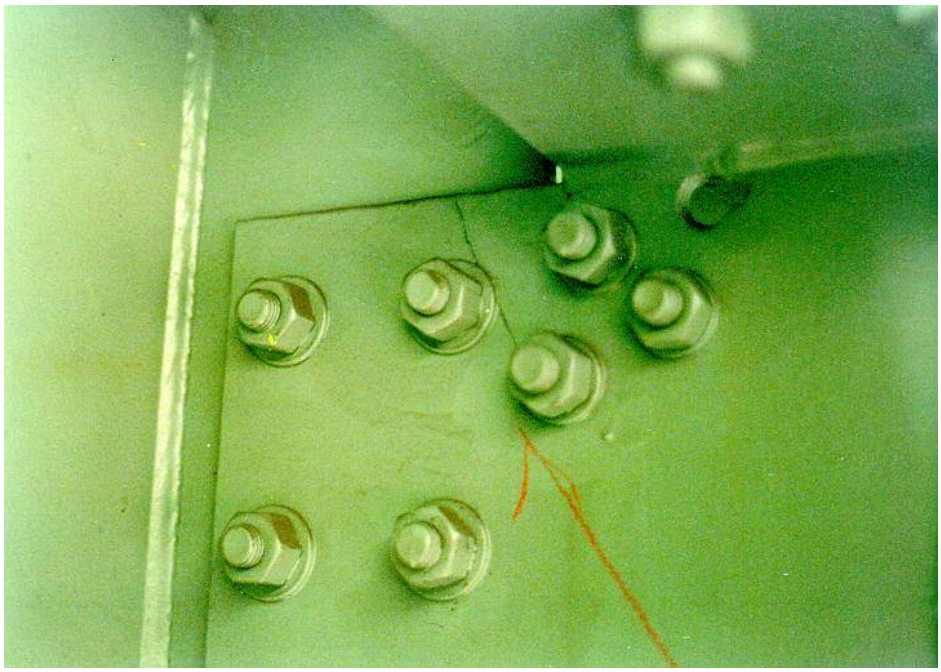

Figure 6.2.7.1a – Fatigue Cracks in the Web of a Floorbeam at the Top Flange Cope. Stopper Holes Have Been Drilled and Bolts Installed in the Holes.

Figure 6.2.7.1b – Fatigue Crack in a Diaphragm Connection Angle on a Girder.

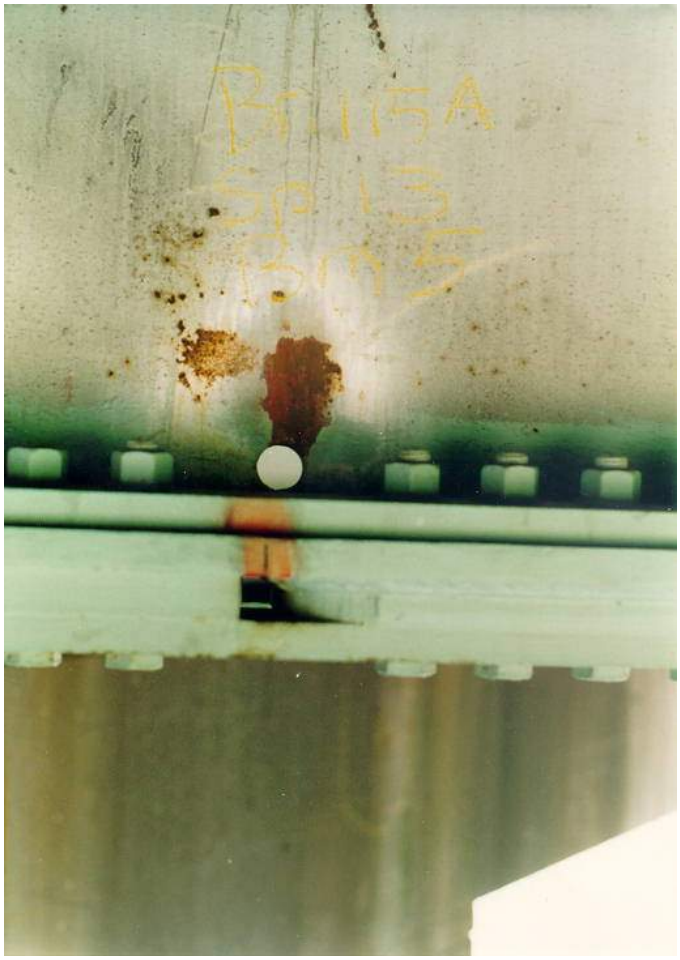

Figure 6.2.7.1c – Fatigue Crack Through the Bottom Flange of a Rolled Stringer at the End of a Partial Length Welded Cover Plate. A Stop Hole Has Been Drilled in the Web and Splice Plates Have Been Bolted to the Bottom Flange

6.2.8 STEEL GIRDER AND FLOORBEAM SYSTEMS

Reference: BITM 90 Sections 10.4, 10.5 & 15.4

Inspection Requirements

Routine Inspections:

- Inspect the superstructure in accordance with BITM 90, Sections 10.4 and 10.5.

- Depending on the number of steel girders that make up the superstructure and the spacing of the floorbeams, the girders and floorbeams may be Fracture Critical. A detailed study of the structure shall be conducted prior to initiation of the inspection to confirm the existence and locations of Fracture Critical Members (FCM's), as well as identifiable Fatigue Sensitive Details. All FCM's shall be inspected in accordance with the guidelines established in this section and Chapter 5, Fracture Critical Member Inspection.

- The entire superstructure will be inspected from a distance of not greater than 10 ft. (3 m) using adequate lighting to detect corrosion, impacted rust, section loss, cracks, dings, gouges, impact damage and other defects. Particular emphasis will be placed on areas of maximum moment (midspan for simple span girders and the areas over the piers for continuous girders), ends of cover plates (or other locations of abrupt change in member cross section), bearing areas and floorbeam connections.

- Suspect areas shall be inspected "hands-on" to determine the type and extent of deterioration or deficiency.

- Compression flanges shall be inspected for flange buckling due to overloads.

- Section loss, gouges, dings, and impacted rust are all stress risers in steel members and shall be monitored closely.

- Girder webs shall be checked for signs of web crippling (out-of-plane bending) at all support locations. Where visual observation indicates the possibility of distortion in the web, the web should be checked with a plumb bob.

- All welded repairs, connections, cover plates, utility connections and any other miscellaneous welds in the tension zone of the girders and floorbeams shall be inspected "hands-on" for fatigue cracks or other defects. See Appendix 6.1 for typical details.

- All suspected cracks should undergo Nondestructive Testing (NDT) to confirm their existence and determine the extent of the crack. All suspected fatigue cracks, that are not definitively dismissed after NDT, shall be immediately reported in accordance with the Critical Deficiency Reporting/Emergency Response procedures outlined in Section 3.2.7.

- Bolts and rivets shall be visually checked for tightness and section loss. Broken paint or bleeding rust around the bolt or rivet may indicate a loose or broken fastener. Suspect fasteners shall be tapped with a hammer to confirm their integrity.

- Check the top and bottom of the girder webs at the floorbeam connections for fatigue cracks due to out-of-plane bending. See Appendix 6.1 for typical locations.

- Welded girder web to lateral bracing gusset plate connections shall be inspected for fatigue cracks due to out-of-plane bending in the girder web. This is more prevalent where the gusset plate is welded to the girder web but not to the floorbeam.

- When defects are found in a particular detail or location on a member, all other similar details or member locations will be inspected "hands-on" for the presence of similar defects.

Documentation for Routine Inspection:

- A simple framing plan shall be provided showing locations of deteriorations and other problems noted. Member elevations and cross sections shall be provided, as required, to adequately describe deterioration found.

- Note the extent and severity of all rusting. Significant loss, whether from past or current rusting, should be noted in sufficient detail for a load rating analysis to be performed. Engineering judgement is required in the field to determine the significance of areas with loss, but as a guideline, specific notes are required when:

  a) Greater than 15% (typically 1/8” (3 mm)) of the flange thickness is lost in areas of high moment.

b) Greater than 30% (typically 1/8” (3 mm)) of the web thickness is lost in areas of high shear.

Less significant losses (typically <1/8” (3 mm)) should be noted, but exact measurements are not normally required.

- Document steel losses by noting the area and depth of the loss as well as its relative location along the length of the girder, floorbeam or stringer, measured from a fixed point (e.g. 12” (300 mm) H x 12” (300 mm) W x 1/8” (3 mm) deep loss on girder web at the bottom flange, beginning 3’ (1 m) from the west bearing on the north face of girder G1.) Whenever possible, where deterioration is noted, calipers or other measuring devices shall be used to measure the remaining section instead of estimating the loss. Notes should clearly indicate whether an "estimated loss" or measured remaining thickness is being given. See Appendix 6.2 for typical examples of documenting deterioration.

- Note locations and condition of welded repairs, connections, cover plates, utility connections and other miscellaneous welds in the tension zones of the girders, floorbeams and stringers.

- Determine the approximate percentage of bolts/rivets with section losses in the head/bolt and document extent of loss (e.g. 20% of rivets exhibit 10% head loss or all rivets at deck joints exhibit 50% head loss).

- Document, in the field notes, locations of loose bolts/rivets found and mark locations on the bridge with a permanent marker or lumber crayon along with the date found.

- Document locations and lengths of all cracks found. Mark these locations on the bridge with permanent marker or lumber crayon. Note the date found and the extent of the crack in such a manner that subsequent inspections may determine additional crack propagation. The method of inspection shall also be noted as the crack may have propagated farther than may show visually. If any retrofit has been made to an old crack or holes drilled to arrest existing cracks, evaluate the effectiveness of the retrofit and note whether or not the crack has propagated past the arresting hole.

- Particular care should be given to documenting the current condition of all previously noted problems so a rate of deterioration can be established for monitoring purposes. If increased quantity or size of deteriorations causes the condition rating to change from the last inspection, a photograph and explanation of why the rating has changed shall be included in the inspection report.

- Typical conditions and deteriorations causing a condition rating of less than or equal to "5" shall be photographed as outlined in Chapter 5.

In-Depth Inspections:

- In addition to the requirements for a routine inspection, "hands-on" access shall be provided to all primary and secondary superstructure elements.

- All welded connections shall receive a close visual inspection.

- The following details shall be inspected using ultrasonic non-destructive testing procedures:

    1. All transverse, full penetration groove welds found in the tensile zones of fracture critical members.

    2. All pin and hanger assemblies that are not retrofitted with redundant backup systems.

    3. If any welded detail on the bridge has experienced fatigue cracking in the past, all similar details shall be considered for testing. The need for additional NDT shall be determined by the Supervising Engineer.

Documentation for In-Depth Inspections:

- All documentation required for a routine inspection shall be included in the in-depth documentation except as noted in this section.

- A simple framing plan shall be provided showing locations of deteriorations and other problems noted. Member elevations and sections of all Fracture Critical Members shall be provided showing all deteriorations found as well as the location and classifications of all Fatigue Sensitive Details as defined by AASHTO. Member elevations and cross sections of other members shall be provided as required to adequately describe deteriorations found.

- Documentation, as a whole, shall clearly describe the structural condition and serve as an accurate benchmark to which future inspections can be compared.

- A good quality photograph of the superstructure, that documents the overall condition as well as detail photographs that support the condition rating, shall be provided.

Report Review

- Review the inspection findings in accordance with established Quality Control and Quality Assurance procedures.

- Cross reference the inspection report, inspection field notes and photographs to ensure they are mutually supportive of their documentation.

- The inspection reviewer shall determine if fatigue problems have been noted and whether or not patterns of deterioration or progressive deterioration are taking place. If fatigue cracks are noted, the reviewer shall ensure that procedures for reporting critical deficiencies have been initiated. Rate of deterioration progression will be determined by comparing present to past inspection reports.

- The appearance of new, or the sudden propagation of existing, fatigue cracks may warrant a new load or fatigue analysis and/or load posting of the bridge structure. A note should be placed in the file stating that fatigue problems are evident and that they should be monitored closely.

Maintenance Concerns

- Most repairs to steel members will be structural in nature and may have an effect on the load carrying capacity of the structure. Repairs should be detailed and performed under the direction of a qualified engineer.

- Fatigue cracks, that show little or no crack propagation for extended periods, can suddenly resume propagation possibly resulting in member failure. Therefore, all cracks found shall be immediately reported and corrective action should be taken as soon as possible to ensure the integrity of the structure and safety of the public.

- Areas of section loss, gouges, dings, and impacted rust are all stress risers in steel members and should be monitored closely or repaired.

- Areas of severe rusting should be cleaned and coated to prevent further deterioration.

Figure 6.2.8a – Large Girder-Floorbeam-Stringer Bridge.

Figure 6.2.8b – Typical Framing on a Girder-Floorbeam-Stringer Superstructure.

6.2.9 STEEL BOX GIRDERS

Reference: BITM 90 Sections 4.4, 10.6

Inspection Requirements

Safety Precautions: Inspection of the interiors of box beams requires additional safety precautions:

- Adequate lighting is required along with backup flashlights for emergency use.
- Air quality should be checked before entering the box girder in conformance with the Department's Confined Space Policy.
- It is important that at least one (1) crew member remain outside of the box to be able to obtain emergency help if necessary. This person should monitor the inspection progress from the hatch entrance, and should not enter the box until help is sent for, and then only if it is safe to do so.
- Many boxes contain dust and pigeon debris. Dust masks should be worn if this material is present during the inspection. If the amount of debris is too great for safe inspection, or obscures your vision of the areas to be inspected, then arrangements should be made for Maintenance to clean the box before continuing with the inspection.

Routine Inspections:

- Inspect the steel box girder in accordance with BITM 90 Section 10.6.
- A one or two box beam bridge is fracture critical and shall be inspected 100% "hands-on." Particular attention should be made to all connections, both internal and external to the box beam.
- For a bridge with three or more boxes, fatigue sensitive details and connections to primary load carrying members need to be checked "hands-on." The interiors of the box beams shall be inspected full length, with sufficient light to detect hairline cracks greater than 5 mm (1/4") in length in any portion of the box. Listed below are areas requiring "hands-on" inspection. Areas not listed shall be inspected from a distance not to exceed 5 m (16').

a) For straight box beams the areas requiring "hands-on" inspection include: webs and stiffeners in bearing areas, welded transitions in tension zones, bolted web and flange splices, internal diaphragms and internal bracing.

b) For curved box beams the areas requiring "hands-on" inspection include: all areas for straight box beams plus all external diaphragms.

- All drain holes in the box beam shall be checked to make sure they are clear. All drain pipes that pass through the box girder shall be checked to ensure that they are not leaking into the box girder.

Documentation for Routine Inspections:

- Note any deficiencies or deterioration found. These may be described in narrative form, however, where defects cannot be simply described sketches should be prepared. Significant deficiencies, such as impact damage, section loss, fatigue cracks, etc., shall be located on a framing plan, either sketched or copied from the plans.

- If cracks are detected, at least one sketch and photo shall be made of each type found. Other similar cracks can be noted in narrative form. The ends of cracks should be marked for monitoring. The Bridge Safety office should be immediately notified, in accordance with the Critical Deficiency Reporting/Emergency Response procedures outlined in Section 3.2.7., when previously undocumented cracks are found in main members.

- Note the extent and severity of any rusting. Significant loss, whether from past or current rusting, should be noted in sufficient detail for a load rating analysis to be performed. Engineering judgement is required in the field to determine the significance of areas with loss, but as a guideline specific notes are required when:

  a) Greater than 15% (typically 1/8” (3 mm)) of the flange thickness is lost in areas of high moment.

  b) Greater than 30% (typically 1/8” (3 mm)) of the web thickness is lost in areas of high shear.

  Less significant losses (typically <1/8” (3 mm)) should be noted, but exact measurements are not normally required.

- Document steel losses by noting the area and depth of the loss as well as its relative location along the length of the beam measured from a fixed point (e.g. 12” (300 mm) H x 12” (300 mm) W x 1/8” (3 mm) deep loss on girder web at the bottom flange, beginning 3’ (1 m) from the west bearing on girder G1). Whenever possible, where deterioration is noted, calipers or other measuring devices shall be used to measure the remaining section instead of estimating the loss. Notes should clearly indicate whether an "estimated loss" or measured remaining thickness is being given. See Appendix 6.2 for typical examples of documenting steel section loss.

- Particular care shall be paid to documenting increased quantity or size of deteriorations that have changed since the last inspection. If the condition rating has changed since the last inspection (up or down), a photograph or explanation of why the rating was changed should be included.

- Notes should be made describing the current condition of any item previously discovered and noted for monitoring.

- Typical conditions and deteriorations causing a condition rating of less than or equal to "5" shall be photographed as outlined in Chapter 5.

In-Depth Inspections:

- In addition to the requirements for a routine inspection, 100% of the superstructure, both internal and external to the boxes, is to be inspected "hands-on."

Documentation for In-Depth Inspections:

- All documentation required for routine inspections, will be required for in-depths along with greater use of sketches for in-depth inspections.

- All deficiencies are to be quantified and clearly described in narrative or sketch form. A framing plan shall be drawn (or a copy of the plans used) and deficiencies found shall be located on that framing plan.

- A good quality photograph of the box beam, that documents its overall condition (inside and out) and supports the condition rating, shall be included.

Report Review

- Review the inspection findings in accordance with established Quality Control and Quality Assurance procedures.

- The inspection reviewer should determine if patterns of deterioration or progressive deterioration is taking place. Progression will be determined by comparing present to past inspection reports.

- Sudden or progressive geometric displacements, loss of greater than 15% of the flange thickness in areas of maximum moment, or loss of greater than 30% of the web thickness in bearing areas may indicate the need for a new load rating analysis and/or posting of the structure for a weight restriction.

Maintenance Concerns

- To prevent the intrusion of pigeons and other birds all hatches should normally be kept closed. All openings large enough to permit the entry of birds should be covered with wire mesh.

- Drain holes should be kept clear to prevent the buildup of water in the boxes. The cause of any leakage into the box girders should be investigated and corrected.

- Most repairs to steel members will be structural in nature and may have an effect on the load carrying capacity of the structure. Repairs should be detailed and performed under the direction of a qualified engineer.

- Fatigue cracks, that show little or no crack propagation for extended periods, can suddenly resume propagation, possibly resulting in member failure. Therefore, all cracks found shall be immediately reported and corrective action should be taken as soon as possible to ensure the integrity of the structure and safety of the public.

- Areas of section loss, gouges, dings, and impacted rust are all stress risers in steel members and should be monitored closely or repaired.

- Areas of severe rusting should be cleaned and coated to prevent further deterioration.

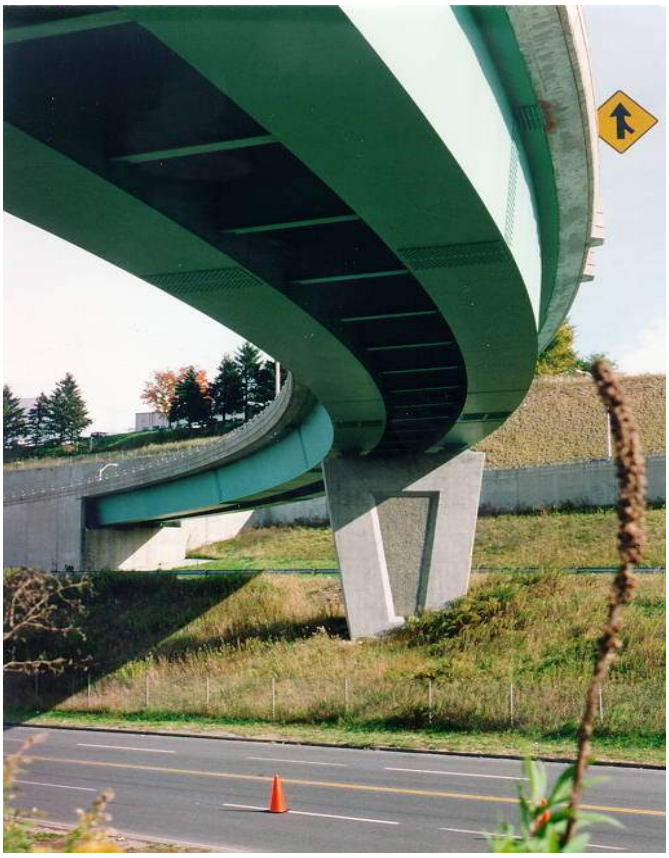

Figure 6.2.9a – Curved Steel Box Girder Bridge.

6.2.10 TRUSSES AND METAL ARCHES

(For Corrugated Metal Pipe Arches see Chapter 6.5 "Culverts")

Reference: BITM 90, Sections 10.7, 10.8, 10.9, 10.10

Inspection Requirements

Routine Inspections:

General:

- Inspect the trusses and metal arches in accordance with BITM 90 Section 10.7, 10.8, 10.9 and 10.10.

- Before the inspection begins, a study of the structure shall be done to determine the locations of all Fracture Critical Members (FCM's) and Fatigue Sensitive Details (FSD's). All FCM's shall be marked for inspection in accordance with the guidelines given in Chapter 5 for Fracture Critical Member Inspection. Unless otherwise shown by detailed analysis, all built up, rolled and eyebar type tension members, as well as all cable hangers, shall be considered to be FCM=s and inspected as such. Girders, floorbeams or stringers may be identified as FCM=s based on detailed analysis, engineering judgment and appropriate Federal Guidelines.

- All superstructure elements shall be inspected on all sides from a distance of not greater than 15 ft. (5 m) (Fracture Critical Members will always be inspected Ahands-on≅) using adequate lighting to detect corrosion, impacted rust, section loss, cracks, dings, gouges, impact damage and other defects. Particular emphasis shall be placed on truss member connections, areas of maximum moment, maximum shear, maximum axial load, locations of FSD's as outlined in Appendix 6.1, bearing areas and floor system connections.

- Suspect areas shall be inspected Ahands-on≅ to determine the type and extent of deterioration or deficiency.

- Bolts and rivets shall be visually checked for tightness and section loss. Broken paint or bleeding rust around the fastener may indicate a loose or broken fastener. Suspect fasteners shall be tapped with a hammer to confirm their integrity.

- When defects are found in a particular detail or location on a member, all other similar details or member locations will be inspected Ahands-on≅ for similar defects.

- Section loss, gouges, dings, and impacted rust are all stress risers in steel members and shall be monitored closely.

Floor System:

- Girders, floorbeams and stringers that comprise the floor system of trusses, deck arches and through arches shall be inspected in accordance with the guidelines outlined in Section 6.2.8 Steel Girder and Floorbeams.

Pins:

- Pin and hanger details shall be inspected in accordance with Section 6.2.1.1 of this manual.

- Inspect all panel point pins for corrosion, impacted rust and signs of scoring and wear (abrasion dust). Ultrasonic testing will be performed on a rotating 20% of the truss pins at each biennial inspection to detect internal flaws not visible to the inspector. The pins to be tested will be selected and pre-approved by the Supervising Engineer prior to performing any testing. Pins that exhibit excessive deterioration or wear shall be considered for additional Nondestructive Testing.

- Inspect spacer plates, nuts, retaining caps, cotter pins and keys for proper positioning, alignment and installation. Check that pin nuts are fully threaded onto the pins.

- Inspect all pins for signs of rotation. Abrasion dust around the nut or spacer plates is an indicator that rotation occurs. Cracked paint around pin nuts may indicate rotation or may indicate the nut is loose. If this condition is noted, the nut should be tapped with a hammer to determine tightness.

Truss and Metal Arch Tension Members:

- This section shall cover all truss tension members, as well as axially loaded members that are in a constant state of tension in braced ribbed and spandrel braced deck and through arches.

- Members that undergo force reversal shall be inspected as tension members.

- Inspect all tension members for signs of corrosion, section loss, wear, impacted rust, fatigue induced cracks, impact damage, signs of misalignment, debris build up, loose, missing or deteriorated fasteners , and other deterioration.

- Check alignment of tension members. Buckling or bowing due to causes other than impact, may be indicative of permanent force reversal, and may be caused by settlement, tilting or other displacement of the substructure elements. If bowing or buckling is observed, a thorough investigation as to the causes and effects shall be conducted.

- All welded repairs, connections, cover plates, utility connections and any other miscellaneous welds on tension members shall be inspected "hands-on" for fatigue cracks or other defects. See Appendix 6.1 for typical details. Particular attention shall be placed on inspection of welds that are transverse to the direction of applied stress.

- All suspected cracks shall undergo NDT to confirm their existence and determine the extent of the crack. All confirmed fatigue cracks shall be immediately reported in accordance with the Critical Deficiency Reporting/Emergency Response procedures outlined in Section 3.2.7.

- Inspect counter members to see if they are laterally movable by hand. Counters are designed to be stressed during live load application only. Inability to move counters during dead load application only indicates that unanticipated loads are being applied to the member.

- Inspect counter eyebars within a panel for contact, abrasion dust or wear between the eyebars at the cross over.

- Inspect eyebars for corrosion and cracks along their entire length. Particular attention shall be paid to forged joints between rolled bars and their cast eye. See Appendix 6.1, Section 1.3.1.5.2.

- Inspect threaded rod eyebars and turnbuckles for corrosion, impacted rust, tack welds and cracks. Inspect the threaded portion of the rod for signs that the turnbuckle is loosening.

Truss Compression Members and Metal Arch Ribs:

- This section shall cover all truss compression members as well as axially loaded members that are in a constant state of compression in braced ribbed deck and through arches.

- Inspect all compression members for signs of buckling, web crippling, corrosion, section loss, impacted rust, collision damage, wrinkles or waves in flanges, welds, misalignment, debris buildup, loose, missing or deteriorated fasteners or other deterioration. Buckling, warping, wrinkling, etc., may indicate member overstress. Section loss, tears, misalignment, etc., may

result in possible loss of load capacity. Both conditions warrant analysis to determine the effects on the structure.

- Inspect the condition of lacing bars, stay plates and batten plates. Note that the condition of these items will not normally be considered when assigning a condition rating to the compression member. However, if deterioration extends into the compression member base metal or if the alignment of compression member components is affected (impacted rust causing bent flanges, web plates, etc.), sound judgement shall be used to determine if and to what extent the condition rating should be adjusted.

- Truss top chord members that are integral with the bridge deck or that support portions of the floor system between panel points, shall be inspected as both axially loaded and bending members.

- Inspect all splice plates for loose, missing or deteriorated fasteners, cracks and impacted rust.

Spandrel Members:

- Inspect the spandrel columns for signs of buckling, corrosion, impacted rust at connections, and loose, missing or deteriorated fasteners.

- Inspect the spandrel columns for fatigue cracks at floorbeam connections.

Cable Hangers:

- In addition to the inspection requirements of this section, cable hangers shall be inspected in accordance with the guidelines given for Truss and Metal Arch Tension Members, and in Chapter 5 for Fracture Critical Members.

- Inspect the cable hangers for corrosion, broken or misaligned wire strands, collision damage, welded attachments and proper alignment.

- Note locations where superstructure steel, utility supports or other members are in hard contact with the cable hangers and note the extent of any abrasion caused by this contact.

- Inspect the cable hanger connection details to the truss and floor system or tie girder for fatigue induced cracks, loose, missing or broken fasteners, misalignment, debris buildup, corrosion and other deterioration.

Metal Arch Tie Girder:

Special Note:

- *If the size of the tie girder is large enough to permit access, the interior should be inspected. Precautions should be taken to check and monitor the air quality inside the girder and to determine the need for forced air ventilation. Refer to the Department's policy on confined space entry.*

- *Special attention should be given to the "knuckle area" of the tie girder. This is the area where the arch rib and tie girder join. Mirrors, boroscopes or fiberscopes might be needed to thoroughly view this complex area.*

- Inspect the tie girder at the connection with the cable hangers for fatigue induced cracks in the tie girder base metal.

- Inspect the tie girder web plates at the floorbeam connections where partial depth interior diaphragms may cause fatigue cracks in the unstiffened portion of the web plate (see Appendix 6.1, Item 3.1).

- Inspect the tie girder for fatigue cracks along the web/flange interface at internal diaphragms. This detail is similar to that shown in Appendix 6.1, Item 2.4.

- Inspect the tie girder webs at longitudinal stiffener plates for fatigue cracks as outline in Appendix 6.1, Item 1.3.

- Inspect the tie girder web to flange interface for back up bars used to make corner welds. If present carefully examine to see if they are continuous. Fatigue cracks may initiate at locations where the back up bars are butt welded together or tack welded to the base metal (see Appendix 6.1, Item 1.7).

Secondary Members:

- Inspect the top chord, bottom chord and floor system lateral bracing, sway bracing and knee braces for cracks, corrosion, impacted rust, loose, missing or deteriorated fasteners, proper alignment, debris buildup, impact damage and other deterioration.

Documentation for Routine Inspections:

- Document all steel losses by noting the area and depth of the loss as well as the relative location along the length of the member measured from a fixed point (e.g. 12” (300 mm) H x 12” (300 mm) W x 1/8” (3 mm) deep loss on the north web plate of member U3L4, North truss, beginning 3” (1 m) from L4). Whenever possible, where deterioration is noted, calipers or other measuring devices shall be used to measure the remaining section instead of estimating the loss. Notes should clearly indicate whether an "estimated loss" or measured remaining thickness is being given. See Appendix 6.2 for typical examples of documenting deterioration.

- Note the locations and condition of all welded repairs, connections, cover plate ends, utility connections and other miscellaneous welds on all truss and metal arch tension members and in tension zones of all girders and beams.

- Determine the approximate percentage of bolts/rivets with section loss in the head/bolt and document the extent of the loss (e.g. 20% of rivets exhibit 10% section loss).

- Document, in the field notes, locations of all loose bolts/rivets and also mark locations on the bridge with a permanent marker or lumber crayon along with the date found.

- Document locations and lengths of all cracks found. Mark these locations on the bridge with a permanent marker or lumber crayon. Note the date found and the limit of crack propagation in such a manner that subsequent inspections may determine additional crack propagation. The method of inspection shall also be noted as the crack may have propagated farther than may show visually. If any retrofit has been made to an old crack or holes drilled to arrest existing cracks, evaluate the effectiveness of the retrofit and note whether or not the crack has propagated past the arresting hole.
- Particular care shall be given to documenting the current condition of all previously noted problems so a rate of deterioration can be established for monitoring purposes. If increased quantity or size of deteriorations causes the condition rating to change from the last inspection, a photograph and explanation of why the rating has changed shall be included in the inspection report.

- The results of all NDT performed shall be included in the inspection report.

- Typical conditions and deteriorations causing a condition rating of less than or equal to "5" shall be photographed as outlined in Chapter 5.

- A simple framing plan shall be provided showing locations of deteriorations and other problems noted. Member elevations and cross sections shall be provided as required to adequately describe deteriorations noted.

In-Depth Inspections:

- In addition to the requirements for a routine inspection, Ahands-on≅ access shall be provided to all primary and secondary superstructure members.

- All welded connections shall receive a close visual inspection.

- The following details, with the approval of the Supervising Engineer, shall be inspected using ultrasonic NDT procedures:

    1. All transverse, full penetration groove welds, found in the tensile zones of fracture critical members.

    2. All pin and hanger assemblies.

    3. If any welded detail on the bridge has experienced fatigue cracking in the past, all similar details shall be considered for testing. The need for additional NDT shall be determined by the Supervising Engineer.

Documentation for In-Depth Inspections:

- All documentation required for a routine inspection will be included in the in-depth documentation except as noted in this section.

- A simple framing plan shall be provided showing locations of deteriorations and other problems noted. Member elevations and cross sections of all FCM=s shall be provided showing all deteriorations found, as well as the location and classification of all Fatigue Sensitive Details as defined by AASHTO. Member elevations and cross sections of all other members shall be provided as required to adequately describe deteriorations found.

- Documentation, as a whole, shall clearly describe the structural condition and serve as an accurate benchmark to which future inspections can be compared.

- A good quality photograph of the superstructure, that documents the overall condition as well as detail photographs that support the condition rating, shall be provided.

Report Review

- Review the inspection findings in accordance with established Quality Control and Quality Assurance procedures.
- Cross reference the inspection report, inspection field notes and photographs to ensure that they are mutually supportive of their documentation.

- The inspection reviewer shall determine if fatigue problems have been noted and whether or not patterns of deterioration or progressive deterioration are taking place. If fatigue cracks are noted, the reviewer shall ensure that procedures for reporting critical deficiencies have been initiated. Rate of deterioration progression will be determined by comparing present to past inspection reports.

- The appearance of new, or the sudden propagation of existing, fatigue cracks may warrant a new load or fatigue analysis and/or load posting of the bridge structure. A note should be placed in the file stating that fatigue problems are evident and that they should be monitored closely.

Maintenance Concerns

- Most repairs to steel members will be structural in nature and may have an effect on the load carrying capacity of the structure. Repairs should be detailed and performed under the direction of a qualified engineer.

- Fatigue cracks, that show little or no crack propagation for extended periods, can suddenly resume propagation, possibly resulting in member failure. Therefore, all cracks found shall be immediately reported and corrective action should be taken as soon as possible to ensure the integrity of the structure and safety of the public.

- Areas of section loss, gouges, dings, and impacted rust are all stress risers in steel members and should be monitored closely or repaired.

- Areas of severe rusting should be cleaned and coated to prevent further deterioration.

Figure 6.2.10a – Historic Steel Through Truss Bridge.

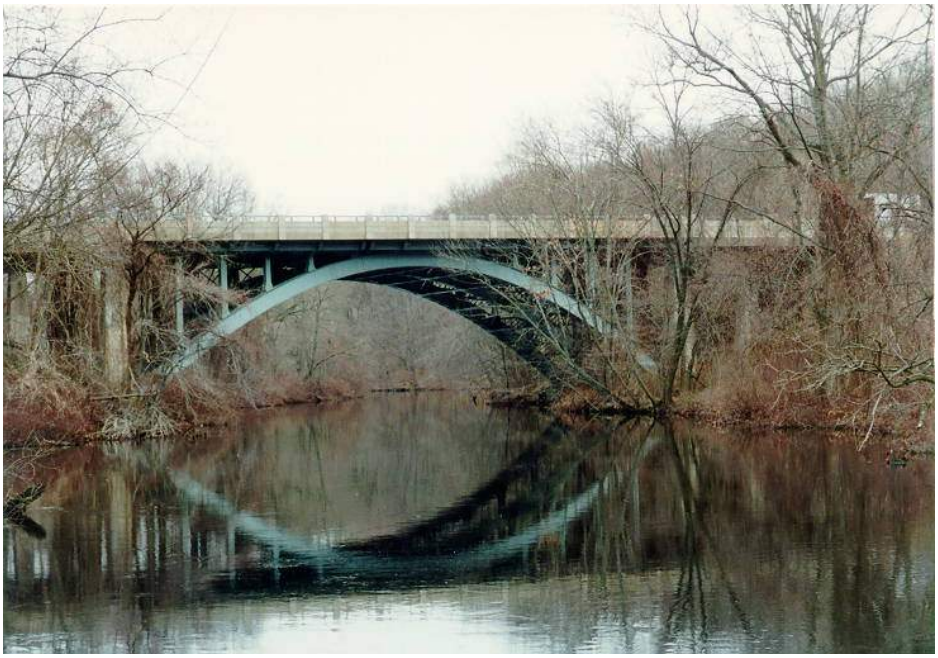

Figure 6.2.10b – Steel Deck Arch Bridge.

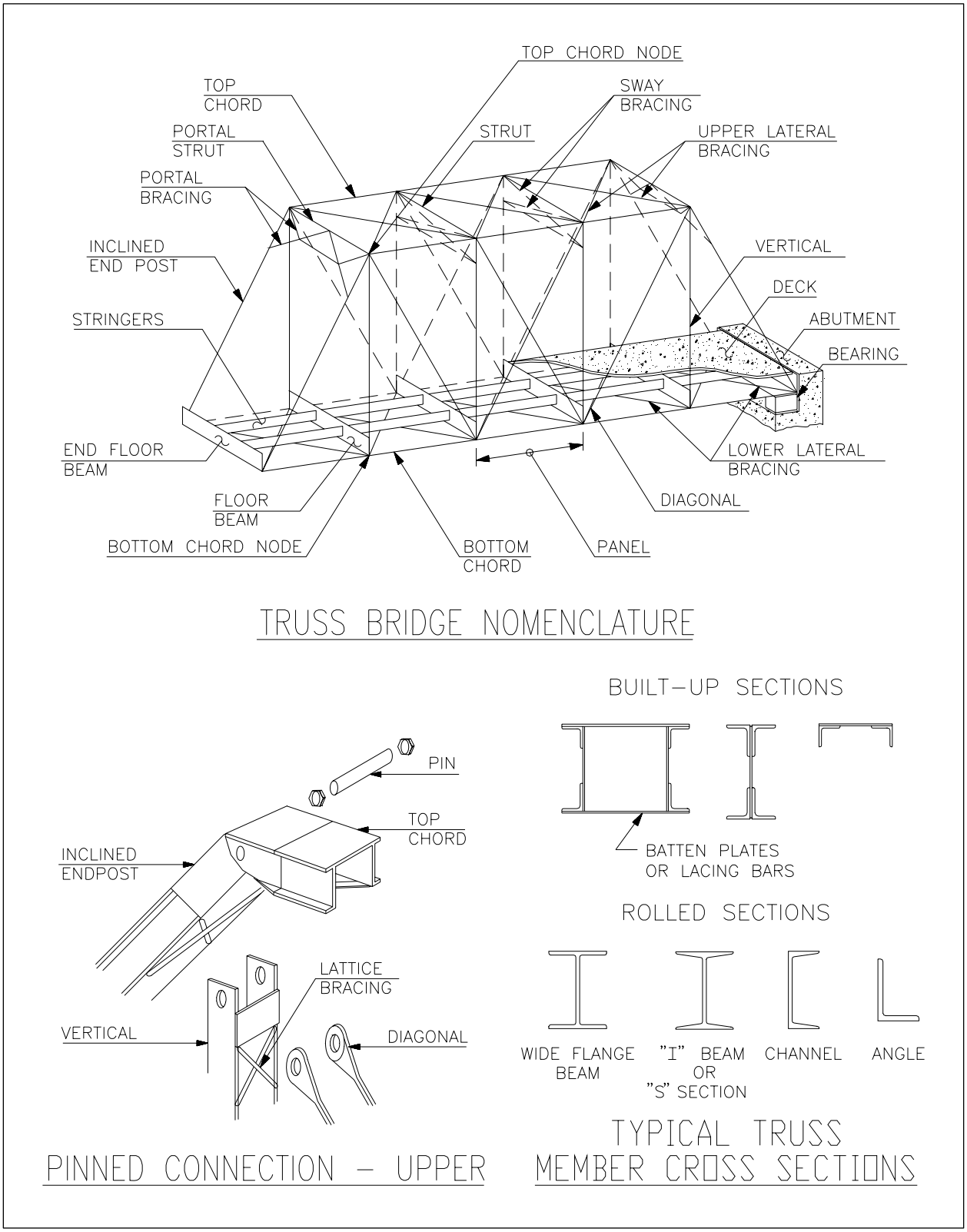

Figure 6.2.10c – Truss Bridge Nomenclature and Details.

6.2.11 MOVABLE BRIDGES

Reference: BITM 90 Section 20, and the Current Manual for Inspection, Evaluation and Maintenance of Movable Bridges

General:

The components of a movable bridge comprise seven distinct functional systems: support, balance, drive, control, interlocking, navigation guidance, and traffic control.

A movable bridge is a complex machine and the diagnosis of defects in its operation is difficult. The movable bridge inspector should understand these systems and their inspection. The inspector should evaluate the operation of the bridge from the systems standpoint as well as evaluate the condition and functional capacity of the individual components that comprise the systems.

Prior to starting any movable bridge inspection, the inspector should consult with the mechanical and electrical maintainers of the bridge, as well as with the bridge operator, to determine if there are any known defects, operating difficulties or other problems with the normal operation of the bridge. These people, who have daily experience with the operation of the bridge, may notice subtle changes over time that could go unnoticed during the relatively short duration of an inspection.

Moveable bridges present a number of hazards to the inspector due to energized electrical equipment, moving machinery and crushing hazards when the bridge operates. Coordination with the bridge operator and appropriate lock-out/tag-out procedures are imperative to protect inspectors working around the machinery and to prevent unexpected movement of the bridge.

Inspection Techniques:

In addition to the visual condition and measuring techniques available to the inspector, signs of distress may become apparent to the inspector by:

Looking for telltale signs of wear in moving parts such as:

- Orange abrasion dust from the rubbing together of unlubricated ferrous metals.
- Lubricant accumulations full of metal particles or grit.
- Sloppy fit evidenced by relative motion in machine parts during operation.

Assessing unusual odors that can provide useful information as follows:

- Hot brake lining odor from a thrustor or solenoid brake may indicate it is improperly adjusted and drags.
- Wire insulation has a distinctive odor when overheated.

- Fluids such as leaking hydraulic oil, diesel, or gasoline can be identified and/or located by odor.

Assessing excessive vibration through bridge parts that assists the inspector to:

Trace a noise through the structure by feeling the parts with the fingertips to detect the vibrations associated with the particular noise. The vibrations increase as the fingers move closer to the source of noise. Locate defects that are not visible by probing with the fingers (Not while the parts are moving).

Riding the structure can give a "seat of the pants" feel for any operational defects.

Assessing unusual sounds that can help the inspector to:

Focus on problem areas. A mild power hum from the motors is expected as the span accelerates. Each individual bridge will have some chronic sounds that may be acceptable, but a noise is acceptable only after the inspector identifies and assesses it. If an adjustment can be made to make it less noisy, it should be considered. Unnecessary sounds interfere with hearing the important noises indicating distress.

Determine the type of problem. Groaning or squealing noises during operation generally indicate poor lubrication of moving parts. Snapping, banging, clicking or clanging noises generally indicate stick-slip of moving parts and/or advanced wear and damage that may be a potential hazard.

Inspection Requirements for Functional Systems:

The operation of a movable bridge can be separated into seven distinct functional systems: support, balance, drive, control, interlocking, navigation guidance, and traffic control. Each system may be comprised of structural, mechanical, hydraulic and/or electrical components. Because of the varying types of components, specialty inspectors may be required to inspect certain functional systems and their components.

Special Note:

It is important that inspectors and maintainers understand the purpose of each functional system, and are able to evaluate the operation of each system, as well as assess the condition of individual components. An experienced inspector should be able to identify a component problem, evaluate the impact on the functional system, and extend the findings to determine the impact on bridge operation. Without understanding the functional systems, it would be difficult for an inspector observing an operational problem to diagnose the possible cause. The ability to view a movable bridge as a series of functional systems will assist the inspector in better understanding movable bridge operation.

Support System:

This assemblage of substructure and superstructure components provides span support in the open, operating, and closed positions. Instability, overstress, or other serious distress in its components requires immediate action to determine if the condition represents a potential hazard to the stability and/or continued support of the movable span. Typical components include:

Piers and Abutments, trusses, girders, bearings, etc.
Rolling track girders, segmental girders, and tread plates
Main trunnions and trunnion supports, bearings and journals
Double bascule heel stops or shear locks
Lift span cables
Swing span rim bearing wheels or center bearings
Wedges and live load shoes

Inspection requirements:

Observe support system components under typical loading conditions for unusual movement, vibration or sound. Riding the span as it moves may be necessary in some cases to properly accomplish this task. If inspectors are to ride the movable span, the operator must be so informed. The inspectors should carefully select tie-off locations to be clear of moving parts at all times, and should utilize required personal and fall protection equipment.

Evaluate smoothness of swing span motion. Span drive motor amperage draw should be consistent with the motors operated at constant speed, in the absence of outside forces such as wind. The span arms should not wobble up and down. On rim-bearing swings, all rim bearing wheels should turn synchronously. One wheel moving slower than the others, skidding, or not moving at all, means that it is not carrying its full share of the load. Center bearing swing balance wheels should not snap, crunch, grind or wobble in motion.

Evaluate smoothness of bascule motion. Sudden changes in span drive motor amperage should not occur except in response to wind or other external effects. A smooth rise or fall in motor current can be caused by the motion of the span center of gravity through an arc during span motion. Current AASHTO standards require a small positive toe reaction on bascules. This code requirement means that the true span center of gravity (c.g.) must be forward of the center of rotation (c.r.). If the c.g. is vertically located higher than the c.r., it may go over center or move rotationally with the span upward and backward until it moves to a point above and to the rear of the c.r. during the latter part of span motion. This type of structure would then decrease load on the span motors as it opened until it went over center, at which time the span should begin to accelerate slightly at constant power.

Evaluate smoothness of lift span motion. This may vary somewhat because span motion is strongly affected by guide track alignment and lubrication conditions. Slight variation from perfect parallel guide track alignment or dry spots where lubrication is absent can cause some oscillation of span drive motor power. Towers often lean due to foundation movement, and can cause major jamming and/or power fluctuation. If it is suspected that tracks are misaligned or out-of-plumb, a survey should be done to check the towers for plumb and alignment.

Balance System:

This system provides stability during motion. It is composed of structural and mechanical balancing counterweights, roller chains, and support members that prevent swing spans from tipping, and reduce machinery loads on lift spans and bascules.

Special Note:

A poorly balanced span or bascule leaf puts excessive loads on drive system components that are designed to work in conditions of near perfect balance. Machinery, from the drive motor through the final drive pinion and rack, may fail unexpectedly and without warning due to these loads. Poor balance can also cause tipping, binding and failure of structural elements. All possible steps should be taken to correct the unbalanced span once the condition is discovered. Many factors can cause an unbalanced condition. Wind, rain, and snow-loading cause temporary imbalance, but are unavoidable. Other conditions, such as accumulation of several coats of paint, removal or addition of counterweight blocks, and trunnion shaft misalignment cause a continuing unbalanced condition to persist.

The balance system is one of the most important design features and is often overlooked or not fully understood by inspectors. Inspectors should be aware of the function of balance in the continued safe operation of a movable bridge.

Inspection requirements:

Inspect gear teeth to see if one side of the tooth is more worn than the other. If there is a fairly consistent pattern of teeth wearing more on one side than the other, the span is probably not well balanced.

Inspect gear teeth to see if the face of the teeth that make contact during the opening cycle are more worn than the face that are in contact during the closing cycle. This indicates the bridge is "span-heavy." If the latter faces of the gear teeth are more worn, the leaf is counterweight heavy .

Inspect the counterweight pit for standing water that can alter span balance by reducing the heel weight as the heel submerges.

Inspect asymmetric swing spans for the correct amount and placement of balance components. Inspect symmetric swing spans for alterations that may have changed span balance from its initially balanced condition.

Consult available design and rehabilitation plans to determine the basic design configuration of the counterweight system and the locations of all adjustment pockets or trays. Often loose balance adjustment blocks are placed in closed spaces constructed into the counterweight assembly. Inspectors should determine how many balance adjustment blocks are present and where they are grouped. A large number of blocks or an asymmetric placement may indicate the span was difficult to balance when it was built or balance was adjusted to correct an operating problem. The presence, in one pocket, of multiple types of blocks may indicate balancing has been required more than once during the life of the bridge.

Check for new overlays, paint, railings, or removal of overlay, paint or railing that can significantly affect span weight and span balance. Span balance should be checked during every inspection of a movable bridge by appropriate methods presented in Appendix 12 Movable Bridges.

Observe the balance system at rest and during span motion. Focus particular attention on localized corrosion or other defects that could cause balance blocks or counterweights to break loose from their support. Signs of previous rebalancing efforts should be carefully reviewed.

Inspect the interface of concrete counterweights and steel support members embedded in the counterweight for line corrosion at the interface. Steel members, especially the counterweight support links should be carefully inspected for corrosion losses. A failure of one of the structural counterweight support members could initiate collapse of the counterweight, or could create unbalance, binding, interference, or other operational problems.

Drive System:

The drive system consists of electromechanical, hydraulic, and/or other components that provide motion to the movable span. The support and balance systems are designed to provide low friction and a manageable degree of span imbalance to the drive system. Operation of the drive system is monitored, sequenced, and directed by the control and interlock systems.

The drive system can be separated into several subsystems, as follows:

Power:

- Electric Motors
- Hydraulic Motors
- Hydraulic Pumps

- Generators
- Auxiliary Motor/Generator sets
- Hand Drive or Manual Drive (Capstan, T-bar, etc.)
- Pneumatic (Air) Drive

Power Transmission:

- Shafts
- Couplings
- Bearings
- Wire Rope
- Chains
- Differentials
- Hydraulic Cylinders

Brakes:

- Motor Brakes (Thrustor or Solenoid Brakes are common types)
- Span Brakes
- Locking Pawls
- Lockbars
- Buffer Cylinder
- Automatic Drive Power Limiters (slow-seating provisions in control system)

Speed Reduction:

- Pinions
- Gears
- Enclosed Reducers

The drive serves to open and close the movable span. Drive systems are designed for loads that occur when the span is nearly balanced, and is properly maintained and lubricated. A drive system powering a bridge supported by a poorly lubricated, corroded, high-friction support system, or that must move a significantly unbalanced span, may be severely overloaded.

Overloaded drive systems are subject to chronic maintenance problems (such as breakers tripping, fuses blowing, motor burnout, etc.) and in worst case conditions may lead to potentially hazardous drive system failure accompanied by uncontrolled span motion. Inspectors should investigate and report any observed overload condition.

Inspection requirements:

Observe drive system components under typical operating conditions and check each component individually as described elsewhere in this Manual.

Look for relative motion between shafts and bearings or between pinions and gears or racks. Listen for unusual sounds, feel for unusual vibrations and smell for any out of the ordinary odors such as overheated wire insulation or overheated brake liners. Smells are usually precursors of trouble.

Check span balance by recording drive system amperages during opening and closing operations. The basic concept of measuring motor amperage to determine span balance of a bascule or lift span, and to verify that a swing span is rotating in a horizontal plane, is that the motor effort (as represented by amperage) should be similar during opening and closing operations for a steady motor running speed. This can also be done with hydraulic pressure readings for hydraulic systems. As-inspected values for amperage should be evaluated against wire size, breaker/fuse capacity and operating specifications in the electrical drawings (if available) for all phases of the motor circuit. If the operators console has amperage gauges, it may be possible to determine motor amperage by turning off unnecessary electrical devices (heaters, incinerating toilets, etc.) and operating the span while watching the ammeter. The gauge reading with the span operating, with the only item drawing power being the drive motor, will be the drive motor amperage. The problem is that for some systems it is difficult to be certain that no other component is drawing power. However, it may not matter that other items (such as motor brakes, etc.) are drawing current if they draw the same current opening and closing.

Special Note:

It is important to note that amperage measurements can be skewed, when the electric motors on which the measurements are taken, are of the type that can generate current flow when being pushed by outside forces such as imbalance or wind. Thus, it is recommended that this method of evaluating span balance only be employed when other more sophisticated methods (such as strain gauging) are not available. For systems without ammeters, installed portable magnetic induction ammeters, available at low cost, can be employed for testing.

Electrical testing with inductive hand held ammeters requires opening electrical panels and should only be done by properly trained personnel and in conformance with all Federal, State and local regulations and the National Electrical Safety Code.

Control System:

The control system governs the operation of the movable span. The control system serves as the command interface between operator and machine, allowing the operator to direct the bridge to open and close. Movable bridge controls should operate in conjunction with the interlock system in a manner that is capable of producing a sequence designed to prevent the bridge operator from inadvertently causing machinery damage, or operating the bridge in a manner that creates a risk to public safety for vehicles, pedestrians or vessels.

The control system may be electrical, mechanical, manual, hydraulic or a combination of these or other types. It may be as simple as a pair of push-buttons marked "UP" and "DOWN", or as complex as a programmable logic controller (PLC) with instrumentation to monitor critical operating parameters and telemetry that reports monitoring results periodically to a control maintenance management office. All control systems perform the same basic task regardless of type or complexity.

The control system consists of the operator's panel and associated indicator boards, panels, wiring, hydraulic control levers, programmable logic controllers, relays, switches, and/or other operator accessible actuators that are designed to govern the operation of the movable span.

The controls on a movable bridge may be classified as manual, semi-automatic, or automatic. Manual controls have no system of control logic and very little interlocking to prevent operator error. If the operator does not activate controls in the proper sequence, damage to machinery or unsafe conditions may result. A manual bridge control system may allow the operator to engage the span drive motors without releasing the span locks. Semi-automatic and automatic controls have increasing degrees of logic and interlocking devices that prevent certain types of operator error. Newer control designs are more likely to have interlocks and control logic required by current AASHTO specifications.

Inspection requirements:

> Monitor the function of the controls during a number of cycles of span operation from different vantage points. Verify that all functions shown on the operator's console are functional and that the span is operating in a manner consistent with Operator Control Inputs.
>
> Verify, by interviewing the operator, and by inspection of limit switches, wiring diagrams, and control circuitry, that controls are interlocked as bridge files indicate.
>
> Manually activate limit switches and/or use a magnetic induction ammeter to measure current flows in limit switch circuitry. Verify that control logic and interlocks are functional as designed.

Special Note:

It is not unusual for limit switches to be bypassed and interlocking to be disconnected as a temporary measure to solve an operation fault. Inspectors should look for such bypass wiring and any other alterations to control/interlock systems and record all findings in the inspection and deficiency reports.

Bypasses and/or rewiring of controller interlock components or circuits, remove safeguards against operator actions that could lead to potentially hazardous situations. The control and interlock systems are designed specifically to provide span operations in a controlled sequential manner. The design intent is to make it impossible for an inattentive or distracted

operator to open the span before stopping all traffic or to try to open a span without disengaging the span locks.

Bypass of interlock and/or control system components changes the way the control system can be operated. The inspector must be alert to detect changes that may require investigation of the control system operation in greater depth, or possibly to request further investigations by others to determine whether potentially hazardous situations may result from such changes.

Interlock System:

The interlock system is the electromechanical and/or hydraulic components, logic devices and circuitry that monitor bridge motion and regulate the sequence of movable span operation in conjunction with the control systems.

The interlock system is the most subtle functional system on the structure. Its elements are dispersed throughout the structure and all components may not be readily identifiable. The purpose of the interlock system is to regulate when movable span components function during the various sequences of bridge operation. Since out-of-sequence operation may be hazardous to public safety, or might damage operating machinery and/or the structure, it is appropriate to include devices in the design that prevent operation of the movable span in an unsafe manner. The interlock system serves that purpose. A partial list of components include:

Limit switches and wiring.
Detectors, sensors and wiring that indicate the position of moving parts.
Cams and other mechanical trip mechanisms.
Internal position detectors in hydraulic ram pistons.
Software in PLCs dedicated to sequence of operations control.

The interlock systems of many existing movable bridges rely on limit switches that use older electromechanical switches. These devices are prone to failure from wear, corrosion, intrusion of dirt and debris and numerous other environmental attacks.

The difficulty with limit switches is that they are, at present, usually low tech, highly unreliable, but absolutely vital to safe operation in the proper sequence. The fairly common practice of bypassing limit switches with patches in wiring when one of them fails is not readily apparent to the untrained eye, and therefore requires knowledge and a high standard of care by the inspector of such components.

Inspection requirements:

Determine the intended function of each limit switch (whether it is a normally open or normally closed type). Verify that each switch functions as intended by activating switches manually and monitoring the effects.

Determine the cause of malfunction for each limit switch that fails to function as designed. Clearly note which limit switches are nonfunctioning and which have been bypassed.

Evaluate hazardous conditions caused by the presence by malfunctioning or bypassed limit switches, other position sensing devices, wiring or other components in the interlock system that do not function properly. Clearly report same.

Navigation Guidance System:

The navigation guidance system directs the travel path of an approaching vessel from the open channel through the bridge opening and allows for controlled passage of vessels through a movable bridge site.

The navigation guidance system includes numerous separate communication, lighting, vessel guidance, navigation and channelizing devices, functioning to allow controlled passage of vessels through a movable bridge site.

The guidance systems should be in conformance with USACOE, USCG, and CFR requirements. This system also requires provision for efficient communication by audible and visual signals between the bridge operator and vessels.

A partial list of the components of this system includes:

Marine Radio Communication
Lights, Whistles, Horns
Retroreflective Panels
Radar Reflectors and/or Racons (radar signal emitters)
Fog Signals
Fender systems and other substructure protection devices
White/Red Flags at Control Tower
Underclearance Gauges and Tide Gauges
Permit Drawings showing Legal Channel Width and Underclearance
NOAA Navigation Charts
Navigation Lighting

Inspection requirements:

Review the procedure for passage of vessels though the bridge opening. This includes but is not limited to, bridge operation signals, fixed markings in the channel and on the structure, channel alignment and control markings, radio communications, presence, placement, adequacy and condition of pier protection devices, navigational lighting and other aspects relating to safe passage of a vessel.

Inspect visual and audible signals required by current regulations. They should be effective during daytime, nighttime and inclement weather conditions from the

perspective of not only an approaching vessel, but also from other vessels in the vicinity of the bridge. Signals should be distinct and recognizable to multiple vessels on either side of the bridge and should clearly indicate which approaching or waiting vessel should traverse first and when the next is to proceed.

Determine if the bridge site has an adequate holding area in which approaching vessels may safely await the bridge opening, clear of the bridges range of motion. If there is no holding area, evaluate the radio communication/bridge opening timing sequence to determine if it is adequate and consistent with current navigation rules for the structure. Determine if the vessel is properly signaled to proceed by the bridge operator via radio, light or other signal once the bridge has completed its opening sequence and brakes have been set.

Review and evaluate procedures for navigation restrictions, such as restricted hours of operation, or opening only by prior notice, to determine if they meet the requirements for the structure. Any movable bridge that has unlisted temporary or permanent restrictions on openings such that it cannot be opened on demand may constitute a hazard to navigation.

Review the permit drawing designating required channel width and underclearance of the bridge in the closed and open positions. Inspect the underclearance gauges for closed bridges for accuracy and legibility.

Inspect the navigation guidance lighting to determine if it is in coordination with the bridge motion; i.e. red span lights should not change to green, signaling vessels to begin passage, until the bridge has completed its motion and the brakes have been set.

Verify that the superstructure is clear of the horizontal and vertical channel clearance envelope in the open position. Some existing structures exhibit full open positions that do not clear the navigation envelope. Bascules should be checked by climbing the leaf in the open position and dropping a plumb line or by other means if climbing is not feasible. It is also vital that the span be securely locked in the open position by the brakes or other means to ensure that it cannot drift during vessel transit. Swing bridges with inoperative brakes present a potential hazard if a wind gust causes the span to move during vessel transit.

Determine if bascule or lift span brakes are fully operational. Holding the span open by stalling the drive machinery against the stops is a dangerous practice and is not acceptable for any reason except dire emergency involving other overriding threats to public safety.

Determine whether or not the navigational guidance system adequately recognizes when the transiting vessel as well as any other vessel in the bridge proximity are well beyond the bridge range of motion so that the bridge may return to closed position. If this is done through "visual observation" by the bridge operator, determine if there

are areas that are obstructed from the operators view and large enough to hold a vessel. If this is the case, recommendations for additional detection methods should be made to cover these areas.

Traffic Control System:

The traffic control system serves to manage and control the traffic flow through a movable bridge span, and to stop and store the vehicles safely during bridge openings.

The traffic control system includes visual and audible signals, signs, and physical barriers coordinated according to MUTCD and AASHTO regulations. All visual and audible signals are required to be effective at all times and in any weather condition from the perspectives of vehicular and pedestrian traffic and the bridge operator. Traffic control should be integrated, and should work in proper sequence with the other functional systems.

A partial listing of this system includes:

Lights, Bells, Sirens
STOP signs, Warning signs
Traffic gates
Resistance gates
Retroreflective panels

Inspection requirements:

Review the overall traffic control procedures and sequencing of events for bridge opening and closing, as well as the physical condition of the individual components.

Determine if traffic control procedures occur smoothly and sequentially. The following sequence should be observed:

A request for opening is received.

Traffic is first warned with sirens, bells, and flashing lights. Inspectors should check that all lights are working effectively and that backup lights are available. All lighting defects should be documented and reported.

Traffic lights turn from green to amber to red. The traffic control system must allow for adequate time delay on traffic signals for driver reactions. To verify that traffic has stopped, a bridge operator is required to have good visibility of the roadway.

After the amber light has changed to red, or bells have stopped ringing and STOP signs appear, traffic gates are activated. These traffic gates are required to extend across the entire roadway, or separate gates must be provided for each lane, in conformance with MUTCD.

Once all traffic gates are down, barrier gates are activated, if present. Barrier gates are designed to physically stop a moving vehicle well in advance of an open bridge. Inspectors shall verify complete closure of all gates in proper sequence.

Inspect gates to insure they are effectively interlocked to function in sequence with span movement; i.e. gates must be down before the spans are unlocked for bridge movement. Ensure there are manual controls for gates in case of power failure. Ensure that override controls are available to stop gate closure at any point. Ensure that gate opening is continuous.

Inspect the traffic control interlock to ensure the bridge closure sequence is complete and locked before gates and barriers can be raised or retracted. Also, ensure that traffic signals do not turn off until all gates are fully raised.

For high speed roadways and curved approaches, determine the presence, placement, adequacy and condition of advance warning lights, signs, and/or signals.

Inspect traffic signs, barricades and signalization, and structural support elements for cracks, deterioration, loose, missing or deteriorated fasteners, unexpected movement or other defects during operation.

Inspect barricades for impact damage and evaluate their ability to perform their design function.

Inspection Requirements for Structural Components:

Typical structural components (such as floorbeams, trusses, stringers, etc.), which are common to fixed and movable bridges, shall be inspected in accordance with Sections 6.1, 6.2 and 6.3 of this manual.

Inspection of unique structural components that occur primarily on movable bridges, and special considerations of typical structural components due to the nature of movable bridge operations, shall be covered in the following sections.

Special Note:

Lubricants and other coatings will tend to accumulate under movable bridge machinery on structural members. These coatings interfere with the inspection of the members they coat and should be removed to permit close inspection.

Before the inspection is commenced, a study of the structure shall be done to determine the locations of all Fracture Critical Members (FCM's) and Fatigue Sensitive Details (FSD's). The study shall include identification of all force reversal members due to opening and closing operations. All FCM's shall be marked for inspection in accordance with the guidelines given in Chapter 5 for Fracture Critical Member Inspection. Unless otherwise shown by detailed analysis, all built up, rolled and eyebar type tension members shall be

considered to be FCM's and inspected as such. Girders, floorbeams or stringers may be identified as FCM's based on detailed analysis, engineering judgment and appropriate Federal Guidelines.

Certain structural components are most heavily loaded during span opening and closing operations. The critical design load of such members often does not include vehicle live load. The inspection of such components should be based upon the knowledge that distress may be present due to loads resulting from span operation, which are not necessarily vertical loads in all cases.

Substructure:

Inspect piers for rocking or other movement when the leaf or span is opened. This is an indicator of a serious deficiency and should be reported immediately in accordance with the Critical Deficiency Reporting/Emergency Response procedures outlined in Section 3.2.7.

Check the braces, bearings and all housings for cracks especially where stress risers would tend to occur.

Inspect concrete and masonry for cracks in areas where machinery bearing plates or braces are attached. Note the tightness of bolts and the tightness of other fastening devices used. Loose anchorages can cause movement of machinery and result in misalignment and accelerated deterioration of the substructure elements.

Inspect the substructure elements during opening and closing operations for span or counterweight contact. Contact between these elements is an indication of unbalance or misalignment. Interference between substructure and bridge elements during operations can also affect the horizontal and vertical clearances within the navigational channel limits.

Superstructure:

Inspect the live load bearings and span lock bars for proper fit, alignment and if applicable, the amount of lift. When span locks are provided to hold the span in the open position, check for movement under wind load.

Inspect all joints between fixed and movable portions of the structure for adequate longitudinal clearance to provide for thermal expansion and allow for vertical movement under heavy loads.

Decks:

Inspect open grid decks for adequate skid resistance, broken bearing bars, cracked welds, etc. Grating without studs or notches that have worn smooth under traffic can be slippery when wet. Check whether warning signs are present for such deck conditions. Check the roadway surface for evenness of grade and joints for adequate thermal clearance where the movable span meets the fixed span.

If a solid concrete roadway is positioned over the pier areas (pivot or bascule pier), inspect the deck for water leakage or areas through which debris can fall into the machinery space or onto piers.

Ship Ladders, Walkways and Platforms:

Inspect ship ladders, walkways, platforms and all support connections for loose or missing fasteners, cracked welds or fatigue cracks and other deficiencies.

Inspect stair treads and walkway surfaces for loose or missing components and adequate connection to their supports. Check surfaces for traction deficiencies or accumulation of lubricants or debris that may create a slipping or tripping hazard.

Inspect all railing connections for loose or missing fasteners, cracked welds, fatigue cracks or other deterioration.

Inspect all bridge structural components that support ship ladders, walkways and/or platforms for evidence of distress or deterioration.

Counterweights and Counterweight Pits:

Inspect counterweights to determine if they are sound and are properly affixed to the structure. Also check temporary supports for the counterweights that are intended for use during bridge repair and bumpers that prevent bascule leaf overtravel.

Where steel members pass through or are embedded in concrete, check for corrosion of the steel member and for rust stains on the concrete. On multi-trunnion bascule bridges, check the strut connecting the counterweight trunnion to the counterweight for fatigue cracks. Cracks may develop in the webs and bottom flange near the gusset connection at the end nearest the counterweight. This crack will be most noticeable when the span is open.

Inspect the counterweight pits for standing water. Buoyancy forces on the counterweight can affect span balance and overload machinery and motors causing unexpected movements of the bridge. Check sump pumps, if present, for proper function.

Fender Systems and Other Channel Protection Devices:

Inspect fender system elements and other channel protection devices, such as dolphins and pier protective cells, for loose or missing elements and fasteners, and elements exhibiting cracks, splits, decay, parasite infestation, impact damage, fire damage, corrosion, section loss, spalling, cracking or exposed rebar.

Inspect the channel face of the fender system for debris that protrudes beyond the whaler face and presents snagging hazards to passing marine traffic. Check that the whaler surface is straight, smooth and continuous.

Check to see if whaler connection bolts are properly countersunk with at least 1 in. (25 mm) of wearing surface above the head of the fastener. Check to see if countersunk holes are filled with tar or other protective mastic material.

Inspect all fender systems and other channel protection devices for adequate lighting and ensure that it is visible to marine traffic.

Operator Control House:

Evaluate the Operator Control House for the following:

- Unobstructed view of the navigation channel and approach roadways during all phases of the bridge movement cycle

- Adequate protection to the bridge operator and controls from the environment, (weatherproof, insulation, etc.), traffic, and other detrimental forces.

- Proper installation and function of smoke alarms, fire extinguishers and fire fighting systems as required by current federal, state and local regulations.

- Adequate support and security of bridge machinery controls.

- Growth of marine life and plants on the foundation or supports.

Structural Components for Drive Mechanisms:

Supports components that make up the supports for gears, cranks, shafts, motors, brakes, reducers, pinions, etc., are not considered mechanical parts and are frequently not included during the inspection of machinery. However, their failure could cause severe damage to adjacent machinery components and affect bridge operations. These supports are subject to vibration and should be inspected for signs of fatigue or fracture. Fasteners used to connect supporting members or used to secure the support to the substructure should be inspected for tightness and cracks.

Inspect supports during operation of the span to determine if relative movement occurs. Look for deflection in the support or frame. If machinery components move on the support or the support on the pier, foundation anchor bolts or other fasteners may be loose or cracked.

If a support deflects noticeably, it may be inadequately constructed for the loads transmitted through it. Inspect for cracks around mounting flanges especially near bolt holes, fillets and welds. Any area suspected of cracking should be watched carefully during operation. Normally, a crack will open under live load making it more visible. Dye penetration, magnetic particle or ultrasonic testing shall be used to confirm the existence of all suspected cracks.

Inspect supports partially imbedded in concrete or resting on concrete. These areas may be subjected to severe corrosion at the concrete interface. If corrosion exists on the member, the condition should be evaluated promptly to prevent substantial weakening or failure resulting from continued corrosion.

Inspect anchor bolts that hold machinery elements and supports to the substructure elements for deteriorated concrete and loose, corroded or missing fasteners or anchor bolts.

Control and Interlock Equipment

Inspect control and interlocking system structural components for loose or missing fasteners, cracked welds, fatigue cracks or other deterioration.

Inspect structural components in the vicinity of the control or interlock equipment components for members that may impede the movement of the components or otherwise affect the function.

Inspect structural components that support control equipment components for evidence of distress or deterioration.

Inspection Requirements for Mechanical Components:

Mechanical components discussed in this chapter are those elements of the support, balance, drive, stand by drive, control, interlocking, navigation guidance and traffic control systems that comprise the mechanism that creates motion.

Mechanical components are intended to provide a controlled, appropriate type of motion. Controlled means moving only when authorized and at the correct speed. Appropriate motion means that only the intended motion (e.g. horizontal rotation) is provided while other types of motion (vertical rotation, horizontal translation (sliding) and vertical motion) are prevented by the machinery.

Open Gearing:

Open gearing, in movable bridge terminology, refers to individual gears mounted upon individual bearings or in a fabricated machinery frame instead of being contained in a sealed housing. Typical open gearing consists of spur gears, spur racks and bevel gears. Spur gears transmit power and regulate the speeds of parallel shafts, while bevel gears perform the same function for shafts that are mounted at an angle to one another, usually ninety degrees.

Assembly and alignment of open gears in the field is difficult and for such installations initial misalignment was a common problem. The misalignment condition can be exacerbated if the support bearings were not properly secured and worked loose on the mounting during operation. Shop assembly is more likely to achieve correct initial alignment as well as continued integrity of the bearing mountings. In either case, field or

shop assembly, wear of open gears is compounded by the elements and the presence of abrasive, foreign materials that lodge in the mesh.

In order to offer some protection to the exposed teeth, sheet metal protective covers are sometimes placed over the gearing to assist in keeping dirt and debris from entering the mesh. These covers do not completely seal off the gears to protect them from environmental influences, but will generally shed debris falling from above.

Special Note:

To accurately assess the presence of wear or other deterioration in gears, it is imperative that the lubrication in the inspection areas be thoroughly removed from the gear so that problems can be seen. If problems are noted after cleaning off a few teeth, additional cleaning and inspection will be required.

Before the lubrication is removed, the inspector should note any patterns that have formed in the lubricant. Areas being worn will often have the lubricant pushed out to other locations.

Gloves should be worn by inspectors while inspecting mechanical components for protection against solvents as well as metal shavings that may be present in the lubrication.

Replace all lubricant removed during the inspection with an approved, lubricant compatible with the existing.

Inspection Requirements:

- Inspect open gearing for proper lubrication.

- Inspect open gearing for evidence of uneven or excessive wear indicating misalignment between drive components as follows:

  More wear on one side of the tooth than the other, indicates that the span is either toe heavy (faces of gears in contact during the opening sequence are more worn) or heel heavy (faces of gears in contact during the closing sequence are more worn).

  More wear occurs on one end of the tooth than the other:

  - if excessive wear on opposite faces of the tooth occurs at opposite ends, it indicates that the gear shafts of the gear set are not parallel in the vertical plane and that cross bearing is occurring.

  - if excessive wear on opposite faces of the tooth occurs at the same end, the gear shafts are not parallel in the horizontal plane causing an end loading condition.

A "step" worn into the tooth, indicates that the gears of the gear set are spaced too far apart. If this condition is excessive, one pair of teeth may lose contact before the next pair engages. The teeth will then slam into engagement and impart impact shock loads on the teeth that are then carried throughout the drive system.

Tooth heads are rounded and tooth valleys show signs of wear, indicates that the gears of the gear set are spaced too close together. This condition can cause rapid wear and binding of the gear teeth as well as "wiping" of the lubricant so that insufficient lubricant is present.

Gears of the gear set are misaligned axially with bearing contact between the teeth only over a portion of the length of the tooth. This condition increases the stress on the teeth, accelerates tooth wear and may cause premature failures of the gear teeth.

Maintenance Concerns:

- Proper lubrication of all moving parts must be performed on a regular basis. Excess lubricant should always be removed when new lubricant is added.

- The operation of each of the functional systems should be reviewed and appropriate steps taken to correct or adjust system deficiencies.

Figure 6.2.11a – Swing Span Truss Bridge.

Figure 6.2.11b – Bascule Bridge in the Open Position.

6.2.12 TIMBER SUPERSTRUCTURES

Reference: BITM 90 Section 4.2, 8, 15.2, USDA Forest Service Publication "Timber Bridges: Design, Construction, Inspection and Maintenance"

Inspection Requirements

Routine Inspections:

- Inspect the timber superstructure in accordance with BITM 90, Chapter 8, and Sections 4.2 and 15.2.

- The entire superstructure shall be inspected from a distance of not greater than 15 ft. (5 m) using adequate lighting to detect fungus growth, parasite infestation, fire damage, impact or collision damage, weathering or warping, splitting, cracking, checking, signs of overstress or chemical damage.

- All areas found to be deteriorated or deficient during the visual inspection survey will be subsequently inspected "hand-on" to determine the type and extent of deterioration or deficiency.

- Check timber members for signs of crushing at bearing areas and at stringer/floorbeam connections. Look for signs of overstress in areas of maximum bending stress.

- Check for signs of decay and parasite damage at ends of members where dirt, debris, and moisture tend to accumulate and at the superstructure/ deck interface. Deteriorated areas may also occur at locations of field constructed connections where the paint or preservative system has been damaged or disrupted. (See Appendix 6.8 for types of decay and deterioration.) Areas that have evidence of serious deterioration, decay or infestation should be discussed with the Bridge Engineer to determine the need for possible further investigation by Non-Destructive Testing (NDT) and Destructive Testing (DT) methods (such as Increment Boring).

- 25% of all surface areas showing no apparent deterioration shall be hammer tapped or probed with an ice pick to determine soundness of member. If the preservative treatment of the member is damaged by probing it should be "touched-up" with new preservative. *Be careful of frozen timber that may have internal deterioration but sounds solid due to water frozen in the internal cavities.*

- Note all fire damaged areas and whether or not the damage is superficial (scorched) or if loss of effective section has occurred. Note the depth of char.

- Check for horizontal shear cracks in solid sawn members and delamination between laminas in glue-laminated members. Cracks and delaminations at mid-height of the member are more critical than those nearer the top or bottom surface. Horizontal cracks will cause the member to act as two smaller members, independent of each other, in the vicinity of the crack or delamination.

- Secondary members may be timber or steel members. For timber, check for deterioration, proper fit, cracked or split members and corroded, loose or missing fasteners. For steel members, check for section loss, loose or missing fasteners and bowing or buckling of the member.

- Timber members are best connected with seated, bearing type connections. Check bolted, framed, or nailed connections for member deterioration or connection failure.

- Areas on the underside of the deck that are below repaired or deteriorated areas of the wearing surface or overlay shall be inspected "hands-on" to evaluate the condition of the repair or limits of deterioration.

- Check primary members for excessive deflection, sagging and vibration as well as for proper alignment.

- Evaluate the condition and effectiveness of the roof and siding of covered bridges as well as the protective coating (paint or pressure treatment).

Documentation Required for Routine Inspections:

- Document all deterioration such as debris build-up, fungus growth, parasite infestation, fire damage, impact or collision damage, weathering and warping, splitting, cracking, checking, chemical damage and signs of overstress. All deteriorations noted shall include the size and relative location on the member. Where possible, measurements will be taken to determine the remaining effective section of the member.

- Document any horizontal shear cracks, splits, or delaminations in bending members. Note whether or not the cracks, splits, or delaminations pass entirely or partially through the member and measure the depth of the crack, if possible. Also dimension the height of the member halves above and below the crack as well as the member base and the amount that the crack has opened.

- A simple framing plan shall be provided showing locations of deteriorations and other noted problems. Member elevations and sections shall be provided as required to adequately document the deterioration or other problems found.

- Particular care shall be given to documenting any increased quantity or size of deteriorations that have changed since the last inspection. If the condition rating has changed since the last inspection, a photograph and explanation of why the rating has changed shall accompany the inspection report.

- Notes should be made describing the current condition of all previously noted problems so that a rate of deterioration can be established for monitoring purposes.

- Typical conditions and deteriorations causing a condition rating of less than or equal to "5" shall be photographed as outlined in Chapter 5.

In-Depth Inspections:

- In addition to the requirements of the routine inspection, "hands-on" access shall be provided to the entire superstructure.

- All primary and secondary members shall be inspected "hands-on" regardless of extent of damage or deterioration.

- Severe internal decay may be taking place even though the surface condition appears good. Therefore, random probing of 50% of the structural members shall be conducted with an ice pick or awl to locate voids or areas of internal deterioration. Emphasis shall be placed on locations of wetness or staining. *Be careful of frozen timber that may have internal deterioration but sounds solid due to water frozen in the internal cavities.*

Special Note:

All destructive testing shall have prior approval of the Senior Engineer.

Documentation for In-Depth Inspections:

- All documentation required for routine inspections shall be included in the in-depth documentation except as noted in this section.

- Documentation, as a whole, should clearly describe the structural condition and serve as an accurate benchmark to which future inspections can be compared.

- A good quality photograph of the superstructure, which documents the overall condition as well as detail photographs that support the condition rating, shall be provided.

Report Review

- Review the inspection findings in accordance with established Quality Control and Quality Assurance procedures.

- Cross reference the inspection report, inspection field notes and photographs to ensure they are mutually supportive of their documentation.

- The inspection reviewer should determine if patterns of deterioration or progressive deterioration are taking place. Progression will be determined by comparing past and present inspection reports.

- Review all field notes to determine if further non-destructive testing and/or destructive testing is warranted.

Maintenance Concerns

- The most common type of preventive maintenance for wood structures is to deny the food source to the fungus or parasite. This is done through application of preservative treatment, paint or other protective coatings.

- Pressure treatments typically do not penetrate through the entire cross-section of the member. Therefore, as with non-treated members, interior deterioration due to parasite infestation may still occur despite the solid appearance of the exterior.

- Loose connections may occur due to timber shrinkage, cracking, checking, decay or crushing around the connector. These connectors may need to be tightened or replaced with larger connectors over time.

- Clean debris to avoid moisture accumulation.

- Cut vegetation from around wet areas and areas prone to debris buildup to better allow air circulation for drying action.

Figure 6.2.12a - Timber Truss Pedestrian Bridge with Timber Bent Substructure.

6.2.13 STONE MASONRY ARCHES

Reference: BITM 90 Section 4.5.1, 9.2.6 and 19.3.10

Inspection Requirements

Note: Stone masonry arches may have concrete, stone or other type of construction for the spandrel portion of the arch structure. Spandrels that are comprised of stone masonry shall be inspected in accordance with this section. Spandrels constructed of concrete shall be inspected according to the guidelines outlined in Section 6.2.4, Concrete Rigid Frames and Closed Spandrel Arches.

Routine Inspections:

- Inspect the superstructure in accordance with BITM 90, Section 4.5.1 and 19.3.10.

- The entire stone masonry arch superstructure shall be inspected from a distance of not greater than 15 ft. (5 m) to detect crushed, spalled, disintegrated, weathered, chemically damaged, displaced, missing or cracked stones, missing joint mortar, efflorescence, deformations in the arch ring or spandrel walls or other defects. All problem areas observed shall be subsequently inspected "hands-on" to determine the extent of the deterioration.

- Inspect the arch stones for signs of possible failure from any of the following failure modes:

  1. Crushing of stones (See the special note below).
  2. Sliding of one arch stone on another.
  3. Rotation of an arch stone, or series of arch stones, about an edge of a joint creating an opening at the joint.

  (See Appendix 6.7 for a greater description of these failure modes)

- Probe areas where joint mortar is missing to determine the average depth of loss and the location of maximum loss.

- Stones adjacent to joints with missing mortar shall be inspected for displacement, tilting, cracking, heaving, spalling, and crushing due to the freeze thaw effects of penetrating water and the effects of non-uniform bearing pressure.

- Check stones that have experienced cracking to determine whether or not the pieces are still in tight contact with the adjacent stones and still providing adequate stability to the arch.

- Where visible, inspect the footing areas for signs of displacement due to the horizontal forces induced by the arching action in the structure.

- Where visible, inspect the extrados area to see if a waterproof membrane is in place and functioning.

- Inspect the arch spandrel walls for distress (large shear cracks initiating from the arch stones) or deterioration (spalls, map cracking, delamination, loss of joint mortar, etc.)

- Check to see if the arch and spandrel walls are plumb. Visually sight along the walls and thru the arch barrel to try to detect bulges or deformations.

- Inspect the roadway for signs of cracking parallel to the center line of the arch as well as sagging and depressions. Also, look for signs that fill or asphalt has been used to level the roadway. This may indicate loss of backfill material.

Documentation Required for Routine Inspections:

- Document all deficiencies and deteriorations observed. Dimensions shall include the length, width, height, depth of loss, orientation and location relative to a fixed, identifiable point.

- When deficiencies can not be easily described or if the condition rating is a "5" or less, elevation drawings as well as topside and underside plan drawings shall be provided to show the layout of the stone masonry joints and noted deterioration. Sectional views and detail drawings shall be provided, as required, to adequately describe the extent of noted deficiencies.

- Note areas of water leakage (infiltration and exfiltration).

- Notes shall be made describing the current condition of all previously noted problems so that a rate of deterioration can be established for monitoring purposes. If the condition rating has changed from the previous inspection due to increased quantity or size of deterioration or if the deterioration has been repaired, photographs, documentation and an explanation of why the condition rating has changed shall accompany the inspection report.

- Typical conditions and deteriorations causing a condition rating of less than or equal to "5" shall be photographed as outlined in Chapter 5.

In-Depth Inspections:

- In addition to the requirements of the routine inspection, "hands-on" access shall be provided to the entire superstructure.

- Measure the clear waterway opening at the spring line. Also measure the vertical dimension from the spring line to the bottom of the arch ring at the quarter points along the spring line of each fascia (See Figure 6.2.13a). The first time this is done on a structure, it may be necessary to drill holes or use a "Ram-Set" to install anchors that the ends of the string line can be tied to. If practical, permanent marks should be made on the arch ring where the measurements are taken so that future measurements can be taken at the same location.

Documentation for In-Depth Inspections:

- All documentation required for the routine inspection shall be included in the in-depth documentation except as noted in this section.

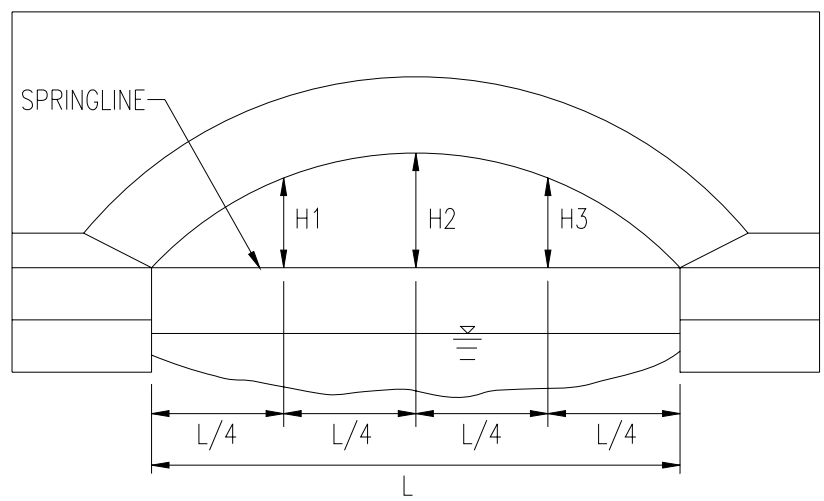

Stretch a string accross the waterway from abutment to abutment face to approximate the springline length (L) and location. Measure the height from the springline to the Arch Ring at the quarter points (H1, H2 & H3) as shown.

Figure 6.2.13a – Arch Measurements

- Elevation drawings, as well as topside and underside plan drawings, shall be provided to show the layout of the stone masonry joints and noted deterioration. Sectional views and detail drawings shall be provided as required to adequately describe the extent of deficiencies noted.

- Documentation, as a whole, shall clearly describe the structural condition and serve as an accurate benchmark to which future inspection can be compared.

- A good quality photograph of the superstructure, that documents the overall condition as well as detail photographs that support the condition rating, shall be provided.

Report Review

- Review the inspection findings in accordance with established Quality Control and Quality Assurance procedures.

- Cross reference the inspection report, inspection field notes and photographs to ensure they are mutually supportive of their documentation.

- Crushing or spalling of the arch ring stones may be an indication the stone is being overstressed and is deteriorating. This may be caused by an increased loading condition or a shifting of the neutral axis within the stone. Crushing or spalling of any one arch ring stone approaching 1/3 of its total height means that large localized stresses are being applied to that stone. This can lead to a sudden total failure of the stone. Subsequent total failure of the arch is then possible. All field notes should be reviewed closely for indications that this condition exists. Any arch ring stone crushing warrants close monitoring and thorough consideration of more detailed analysis to determine any adverse effects on the integrity of the arch.

- Low condition ratings caused by extensive or widespread deterioration should be reasons to request supplemental testing or analysis to better determine the condition and stability of the stone masonry arch and whether rehabilitation or replacement is warranted.

- The inspection reviewer should determine if patterns of deterioration or progressive deterioration are taking place. Progression will be determined by comparing present to past inspection reports.

- The sudden or progressive appearance of cracks or movements in the arch stones may indicate the need for a new load analysis and/or weight restriction of the bridge.

Maintenance Concerns

- Arches originally constructed without mortar between the stones ("dry laid") do not need to be pointed. Arches originally constructed with mortared joints however, should normally have missing or deteriorated mortar repaired.

- The object of joint mortar, when incorporated into the design, is to furnish a cushion for adjacent stones that helps to distribute the pressure uniformly, relieve the stone of transverse stresses and relieve stresses from concentrated crushing pressures to which the projecting points are subjected when in contact with other stones. Therefore, loss of joint mortar can increase the stresses in the stone to the point where crushing or cracking may occur. Lost joint mortar should be replaced.

- Cracks in stones, cracks in joint mortar and openings in joints provide access to water seepage that can further deteriorate the stone or joint through freeze/thaw action or allow exfiltration of fill material. All cracks and joint openings shall be considered for injection or other repair depending on their location and proximity to the arch ring. Engineering judgement and discussion with the Field Senior is required prior to conducting repair work to determine the extent and criticality of the problem, effects on public safety and cost/benefit ratio of the repair.

Figure 6.2.13b – Stone Masonry Arch Viaduct

6.3 SUBSTRUCTURE INSPECTION

6.3.1 CONCRETE SUBSTRUCTURES

Reference: BITM 90 Sections 4.3, 6.2.3, Chapter 12, Chapter 13, 15.3, 16.3

Inspection Requirements

Routine Inspections:

- Inspect the substructure in accordance with BITM 90 Chapter 12.
- Abutments, wingwalls and piers should be carefully observed from the ground on all sides using binoculars where appropriate (non-critical areas).
- "Hands-on" access will be required for all bearing seat areas and the front faces of abutments and piers in the vicinity of bearings.
- "Hands-on" access will be required to the faces of pier caps in areas of high tension or shear stresses (typically over columns).
- Areas of cracking, scaling, wetness or staining should be tapped with a hammer to determine if the concrete is sound.
- Spalling or scaling of bearing seats that has caused (or may cause) a loss of bearing area for a superstructure member should be measured.
- The length and width of tension or shear cracks found in pier caps should be measured.
- Where movement (tipping or settlement) of an element is suspected, plumb bob measurements and joint opening or misalignment measurements should be taken. The location where measurements were taken should be clearly marked (with chisel and paint spot) so that measurements can be made in a similar manner at the same location during follow-up inspections. (See Figure 6.3.1a)
- All substructure elements in, or adjacent to, waterways shall be checked for the presence of scour and undermining. Scour shall be checked by wading and probing around the entire base of every element exposed to potential scour. Areas that cannot be accessed with available equipment should be referred for underwater inspection (See Appendix 6.12).

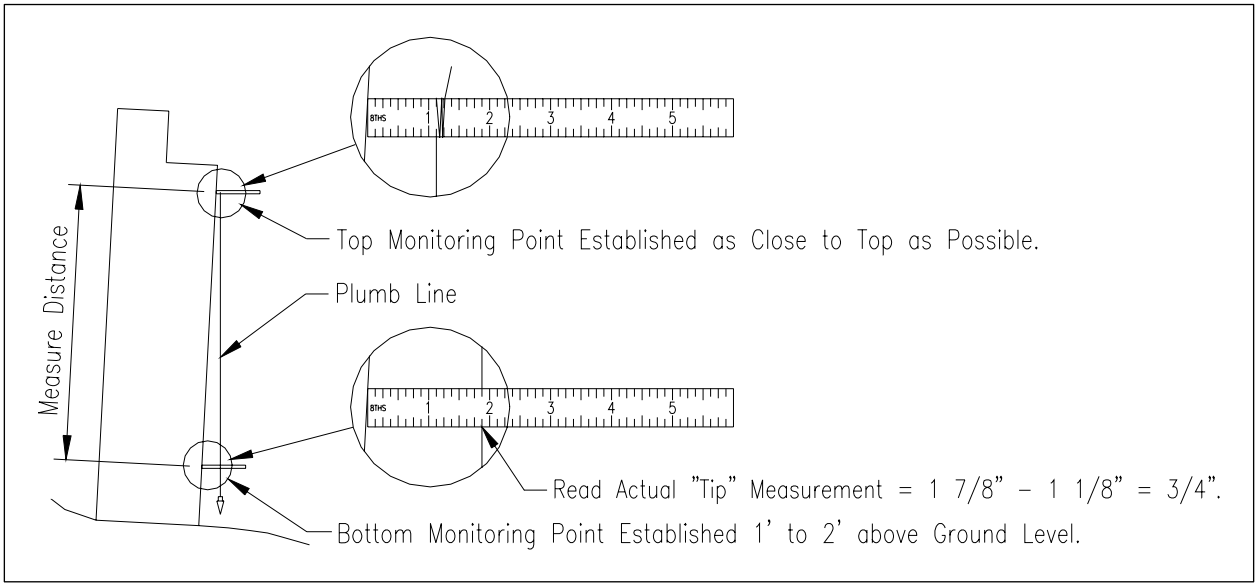

Figure 6.3.1a – Recommended Method for Measuring Substructure Tipping Using a Plumb Line. ("Hold-Off" Method illustrated for use where face of substructure interferes with free movement of plumb bob)

Documentation for Routine Inspections:

- A narrative description of defects found will be adequate when it is possible to fully describe them.

- Sketches will be required if <u>any</u> of the following situations exist:

  1) The bridge is more than 3 spans and the individual substructure unit rating would be "5" or less.

  2) There is a loss of bearing due to spalling or scaling (or potential loss).

  3) Scour under a footing.

  4) The defects found cannot be simply described as to size, orientation and location.

  5) Structural cracks (tension or shear cracks) are found in a pier cap. Additionally, it may be desirable to set-up a "crack inventory" to monitor the lengths and widths of cracks in a specific area or at a specific element.

Note: Whenever possible, make a good quality "original" sketch before going to the field. Then make a photocopy of the original to record information on and save the original sketch in the file to be copied for use on the next inspection.

- If stream scour condition exists that could influence the substructure at some time in the future, a reference should be made to conditions described under Channel & Channel Protection.

- Photographs should be taken of any defect causing a condition rating of "5" or less. Photographs and/or explanations should also be provided when conditions warrant changing a rating number from a previous inspection (either up or down).

- Sketches indicating measurements for monitoring purposes should be made or copied from the previous inspection report. If a previously used sketch is copied, a revision block should clearly show the date and crew using the copied sketch. Do not re-use a sketch to the point where the difference between new and old notes is no longer discernable.

Note: When working on large structures, a photocopy of the General Plan & Elevation of the bridge can be helpful for shading in areas on the bridge that have been inspected when it is necessary to track progress over several days.

In-Depth Inspections:

- In addition to the above requirements for routine inspections, "hands-on" access shall be provided for all substructure elements.

- All suspected areas of deterioration (cracked, scaled, wet, or showing efflorescence) and a random sampling over at least 20% of those areas without apparent defects shall be tapped with a hammer using a reasonable frequency to determine soundness. If defects are found in an area that appeared sound, then the sampling rate and area to be hammered should be increased.

Documentation for In-Depth Inspections:

- A sketch of each substructure element will be required. All defects found should be documented.

- Detailed sketches of specific problem areas should be made.

- Representative photographs should be taken that document the overall condition of the substructure and support the condition rating used.

- Similar to routine inspections, monitoring measurements, and explanations or photographs of items that cause ratings to change, will be required.

Report Review

- Findings should be reviewed in accordance with the established Quality Control and Quality Assurance procedures.

- The inspection report reviewer should determine if the pattern, quantity or severity of the deteriorations found support the numerical condition ratings.

- Verify that critical defects (evidence of movement, presence of scour, structural cracks) have been measured for comparison with previous measurements or that adequate monitoring points have been established. Progression of these defects may be cause for a lower rating and/or the need for stabilization work.

- Bridges with large or ongoing settlement/movement problems should be referred to the Soils and Foundations section for their review.

- Scour problems, other than simple run-off erosion, should be referred to the Hydraulics section for their review.

Maintenance Concerns

- Concrete deterioration is most commonly the result of a leaking deck joint or defective drainage system. The cause of the deterioration (joint or drainage) should always be repaired before, or in addition to, any recommended concrete repairs.

- Certain structural cracks may be repaired using chemical repair techniques. Engineering judgement and discussion with the Supervising Engineer are required for specific applications.

- Waterproofing methods can be the best way to prevent or slow the deterioration of reinforced concrete members. Care must be taken in the application of waterproofing systems to insure that they are not applied in such a way as to prevent entrapped moisture in the concrete from exiting.

- A determination by an Engineer as to what is a structural repair and what is a "cosmetic" or non-essential repair, may help to limit repair quantities to a manageable level. Typically, spalls on massive concrete elements like abutments and solid shaft piers may not need repair if structural reinforcing steel is not exposed and aesthetics are not a concern.

- Repair of scour problems, other than simple run-off erosion, should not be proposed without discussion with the Hydraulics section.

- Addressing movement of substructure elements is normally beyond the scope of maintenance repairs and will require individual attention.

- When removing deteriorated concrete for repair of pier columns, generally the reinforcing steel should not be exposed for more than 6 ft. (2 m) on one face at a time.

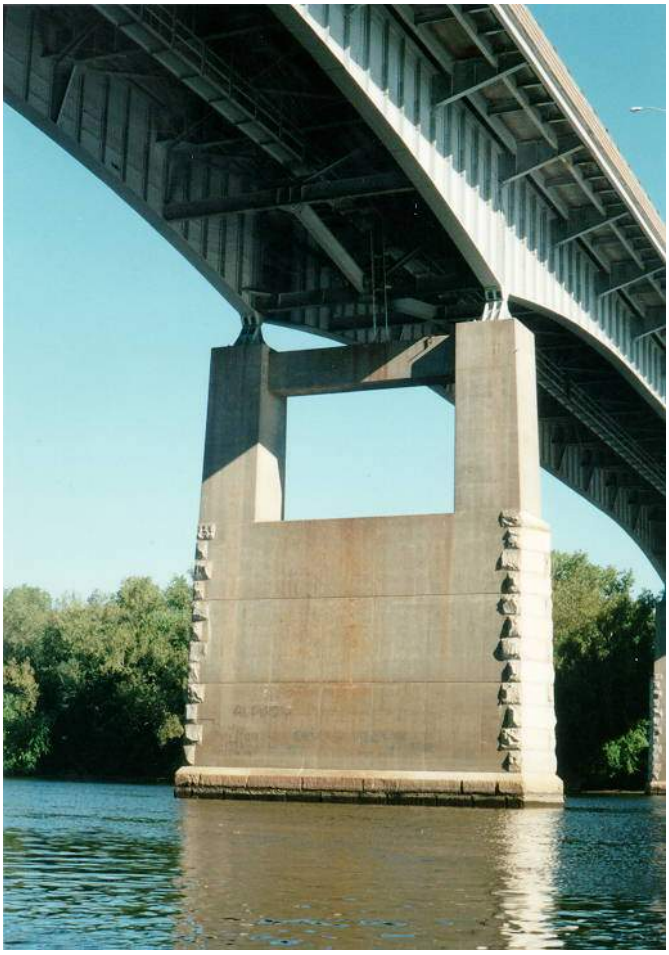

Figure 6.3.1b – Tall Concrete Pier with Decorative Stone Masonry Facing.

6.3.2 MASONRY SUBSTRUCTURES

Reference: BITM 90 Section 12

Inspection Requirements

Routine Inspections:

- Inspect the substructure in accordance with BITM 90, Section 12.

- The entire stone masonry substructure shall be inspected from a distance of not greater than 15 ft. (5 m) for crushed, spalled, disintegrated, weathered, chemically damaged, displaced, missing or cracked stones, missing joint mortar, efflorescence, vegetation growth, deformations, impact damage due to ice, debris or marine or vehicular traffic, and other deteriorations or deficiencies. Problem areas observed should be inspected "hands-on" to determine the extent of the deterioration or deficiency.

- Inspect the substructure elements for tilting, settlement, rotation or other movement. If any of the following are noted, further investigation may be warranted:

  1. Check to see if the substructure elements are plumb (Note: check to see if the design calls for a battered or sloped face).

  2. Note whether or not the horizontal mortar joints appear parallel with the surface of the water if applicable.

  3. Inspect abutment weepholes, if present, to see if they are clogged. A build up of water behind the abutments can generate hydrostatic pressures that can cause lateral movement.

  4. Inspect abutments for signs of hydrostatic piping. This is caused when perforated drain pipes or weepholes become clogged, forcing water to seep through the embankment material, under the abutment footing, and discharge through the fill in front, possibly bringing with it sizable amounts of backfill material. Look for deep ruts in the fill in front of the abutment with possible exposure of the footing. The roadway or the approach slab may also show settlement.

  5. Visually sight along the faces of the substructure elements to try to detect bulges, tilting, settlement or other deformation.

  6. Inspect the masonry stones for vertical cracks through several courses of stone in the same general area.

7. Evaluate the following items from the bearing, approach and joint inspections that may indirectly indicate substructure movement:

   - Gaps between the bearings and the pedestals.

   - Positioning of the bearing elements on the pedestals, i.e. longitudinal or transverse misalignment, lack of full contact in the bearing area between the sole plate, bent or broken anchor bolts.

   - Vertical misalignment between the approach roadway slab and bridge deck. However, pavement expansion and approach fill expansion could conceivably cause vertical movement in the approach slab.

   - Gaps between the superstructure elements and abutment backwalls that are significantly greater or less than the design value or that expected for the ambient temperature.

   - If the superstructure is in contact with the backwall, it may indicate that the abutment is moving.

Special Note:

If movement of a substructure element occurs, the effects of that movement on bearings, joints, etc., may be visible at adjacent substructure elements, not at the element where the movement occurred. For example, over rotation of rocker bearings at a pier may be caused by movement of an adjacent abutment or pier with fixed bearings.

- Probe areas where joint mortar is missing to determine the average depth of loss and the location of maximum loss.

- Stones with missing mortar below deck joints should be inspected for displacement, tilting, cracking, heaving, spalling, and crushing due to the freeze thaw effects of penetrating water.

- Check stones that have experienced cracking to determine whether or not the pieces are still in tight contact with the adjacent stones and still providing adequate stability to the substructure element.

- Inspect the substructure stones for signs of possible failure from crushing. Particular attention should be paid in the vicinity of bearings.

- All substructure elements, in or adjacent to waterways, shall be checked for the presence of scour and undermining. Scour shall be checked by wading

and probing around the entire base of every element exposed to potential scour. Areas that cannot be accessed with available equipment should be referred for underwater inspection (See Appendix 6.12).

Special Note:

After maximum local scour has occurred during peak flow periods, sediment may backfill the scour hole during low flow periods giving false indication to the inspector as to the actual extent of the scour problem. Probing through the soft surface sediment to the hard packed substrate with a probing rod will help to a limited degree, but only by performing soil borings will the actual scour depth be found.

Documentation Required for Routine Inspections:

- Document deficiencies and deteriorations observed. Dimensions of deteriorations should include the length, width, height, depth of loss, orientation and location relative to a fixed, identifiable point.

- When deficiencies cannot be easily described, or if the condition rating is a "6" or less, elevation drawings shall be provided of the substructure elements to show the layout of the stone masonry joints and deteriorations noted. Sectional views and detailed drawings should be provided, if necessary, to adequately describe the extent of noted deficiencies.

- Document areas of water staining and deterioration due to water leakage from deck joints.

- Document all scour as well as all signs of undermining of the substructure elements. Excessive scour conditions and any undermining condition, regardless of extent, shall be brought to the attention of the Field Senior in accordance with the established procedures for critical deficiency reporting. Depths of scour holes shall be measured utilizing probing rods, survey rods, sonic equipment or other measuring device and the presence of any backfilled sediment should be noted.

- Document any impact damage on the substructure elements due to ice, debris and marine or vehicular traffic.

- Document any signs of crushing of the stones in the area of bearings.

- Notes should be made describing the current condition of all previously noted problems so that a rate of deterioration can be established for monitoring purposes. If the condition rating has changed from the previous inspection due to increased movement or quantity or size of deterioration or if a deteriorated area has been repaired, photographs, documentation and an

explanation of why the condition rating has changed shall accompany the inspection report.

- Typical conditions and deteriorations causing a condition rating of less than or equal to "5" shall be photographed as outlined in Chapter 5.

In-Depth Inspections:

- In addition to the requirements of the routine inspection, "hands-on" access shall be provided to the entire substructure.

- A plumb bob should be used to check for plumbness on all substructure units.

Documentation for In-Depth Inspections:

- All documentation required for the routine inspection shall be included in the in-depth documentation except as noted in this section.

- Elevation drawings shall be provided to show the layout of the stone masonry joints and deterioration noted. Sectional views and detailed drawings shall be provided if necessary to adequately describe the extent of deficiencies noted.

- Documentation as a whole shall clearly describe the structural condition and serve as an accurate benchmark to which future inspection can be compared.

- A good quality photograph of the substructure, that documents the overall condition as well as detail photographs that support the condition rating, shall be provided.

Report Review

- Review the inspection findings in accordance with established Quality Control and Quality Assurance procedures.

- Cross reference the inspection report, inspection field notes and photographs to ensure they are mutually supportive of their documentation.

- Review the inspection field notes for signs of tilting, settlement or rotation of any substructure elements. The reviewer shall also check for signs of contraction and local scour around substructure elements. If either of these conditions are noted for the first time, or if additional movement or scour is noted from the previous inspection, or if movement or scour is having serious adverse effects on the stability of the substructure element, the reviewer shall make recommendations to correct the observed deficiencies.

- Review the inspection field notes for signs of crushing of the substructure stones particularly in the area of bearings that may indicate the stone is being over stressed. If crushing is noted for the first time or if additional crushing is noted from the previous inspection, the reviewer should investigate the need for a revised load rating or make recommendations to correct the observed deficiencies.

- Low condition ratings that are caused by extensive or widespread deterioration should be reasons to request supplemental testing or analysis to better determine the condition and stability of the substructure element and whether rehabilitation or replacement is warranted.

- The inspection reviewer should determine if patterns of deterioration or progressive deterioration are taking place. Progression will be determined by comparing present to past inspection reports.

- The sudden or progressive appearance of cracks or movements in the substructure stones may indicate the need for a new load analysis and/or weight restriction of the bridge structure.

Maintenance Concerns

- The object of joint mortar, when incorporated into the design, is to furnish a cushion for the stones that helps to distribute the pressure uniformly across the stone surface. It also relieves the stone of transverse stresses and concentrated crushing pressures to which the projecting points are subjected when in contact with other stones. Therefore, loss of joint mortar can increase the stresses in the stone to the point where crushing or cracking may occur. Lost joint mortar should be replaced with an approved material utilizing approved procedures.

- Stone masonry set without mortar (dry laid) does not need to have joints mortared as a maintenance repair. In some cases, to do so may actually be worse. For example, by preventing water from draining through an abutment, a build-up of hydrostatic pressure behind the abutment may cause tipping.

- Cracks in stone, cracks in joint mortar and openings in joints provide access to water seepage that can further deteriorate the stone or mortar joint through freeze/thaw action. Cracks and open joints should be considered for sealing, injection or other repair depending on their location and severity. Only cracks that are allowing water to enter should be sealed. Cracks that are allowing water from behind the abutment to exit should not be sealed unless it is determined that this is causing a larger problem. Engineering judgement

and discussion with the Field Senior is required prior to conducting repair work in order to determine the extent and criticality of the problem, effects on public safety and cost/benefit ratio of the repair.

- Settlement or tipping of substructure elements may be caused by erosion of the foundation material caused by scour. If the waterway at the bridge site has a history of scour problems, consideration shall be given to the design and construction of waterway protection devices such as rip rap, gabions, cofferdams, check dams, etc., to reduce the adverse effects of scour. However, if the bridge is a movable bridge or if a traffic intersection is located at one end of the bridge, movement of the substructure elements may occur due to the longitudinal forces induced by vehicles decelerating and stopping for bridge openings and traffic signals.

- If the substructure elements are regularly impacted by ice and debris, consideration shall be given to the design and construction of protection devices to divert or absorb the impact forces. This will have a secondary benefit of moving waterway blockages and turbulence away from the substructure elements. However, this should also require a hydraulic analysis to be sure the hydraulic capacity of the structure is not reduced appreciably.

- All substructure impact protection devices (guardrail, fender system, ice breaker, etc.) shall be routinely checked to ensure that adequate protection is maintained. All damaged protection devices should be repaired in a timely manner to maintain the integrity of the system.

Figure 6.3.2a – Tall Stone Masonry Bridge Abutment with Newer

6.3.3 TIMBER SUBSTRUCTURES

Reference: BITM 90 Chapters 12, 17 and Sections 4.2, 15.2, 16.2.4, and the USDA Forest Service Publication "Timber Bridges: Design, Construction, Inspection and Maintenance"

Inspection Requirements

Routine Inspections:

- Inspect the timber substructure elements in accordance with BITM 90, Section 12.

- The entire substructure shall be inspected from a distance of not greater than 15 ft. (5 m) using adequate lighting to detect fungus growth, parasite infestation, fire damage, impact or collision damage, weathering or warping, splitting, cracking, checking, signs of over stress, chemical damage or other deterioration.

- Areas found to be deteriorated or deficient during the visual inspection will be inspected "hands-on" to determine the type and extent of deterioration or deficiency.

- Check timber members for signs of crushing at timber pile/concrete footing interface (if exposed), pile/bent cap interface, or other bearing areas. Look for buckling, cracking and other signs of over stress along the length of axially loaded piles and in areas of maximum bending stress on pier bent caps.

- Check for signs of decay and parasite damage in the tidal area of timber piles or in areas frequently exposed to wetting/drying cycles for non-tidal waterways. Deterioration may also occur at locations of connections where the paint or preservative system has been damaged or disrupted. (See Appendix 6.8 for types of decay and deterioration.) Areas that have evidence of serious deterioration, decay or infestation should be brought to the attention of the Field Senior to determine the need for further investigation by Non-Destructive Testing or Destructive Testing methods (such as Increment Boring).

- A representative sample of the timber surface area showing no surface deterioration shall be hammer tapped or probed with an ice pick in an attempt to locate internal deterioration. If deterioration is found, additional probing shall be performed. *Be careful of frozen timber that may have internal deterioration but sounds solid due to water frozen in the internal cavities.*

- Inspect the substructure elements for tilting, settlement, rotation or other movement.

> ***Special Note:***
>
> *If movement of a substructure element occurs, the effects of that movement on bearings, joints, etc., may be visible at adjacent substructure elements, not at the element where the movement occurred. For example, over rotation of rocker bearings at a pier may be caused by movement of an adjacent abutment or pier with fixed bearings.*

- The area around the base of timber piles should be inspected for signs of contraction or local scour as outlined in Appendix 6.10 & 6.12.

- Suspected areas of local scour shall be probed with a probing rod to attempt to determine the limits of scour.

> ***Special Note:***
>
> *After maximum local scour has occurred during peak flow periods, sediment may backfill the scour hole during low flow periods giving false indication to the inspector as to the actual extent of the scour problem. Probing through the soft surface sediment to the hard packed substrate with a probing rod will help to a limited degree, but only by utilizing core samples or other methods will the actual scour depth be determined.*

- Note all fire damaged areas and whether or not the damage is superficial (scorched) or if loss of effective section has occurred. Note the depth of char.

- Check for shear cracks parallel to the longitudinal axis of piles and pier caps. If there are any glue-laminated members (pier caps), look for shear cracks between the laminas. For bending members, horizontal shear cracks will cause the member to split and act as two smaller members, independent of each other. Therefore, horizontal cracks and delaminations at mid-height of the member are more critical than those nearer the top or bottom surface.

- Secondary bracing members may be constructed of timber or steel members. For timber, check for deterioration, proper fit, cracked or split members and corroded, loose or missing fasteners. For steel members, check for section loss, loose or missing fasteners and bowing or buckling of the member.

- Timber members are best connected with seated, bearing type connections. Check bolted, framed, or nailed connections for member deterioration or connection failure.

- Check bent caps for excessive deflection, sagging and vibration as well as for proper alignment.

Documentation for Routine Inspections:

- When deficiencies can not be easily described, or if the condition rating is a "6" or less, provide elevation drawings of substructure elements to show the layout of the timber members and noted deteriorations. Sectional views and detailed drawings shall be provided as required to adequately describe the extent of noted deficiencies.

- Document deterioration such as debris build-up, fungus growth, parasite infestation, fire damage, weathering and warping, splitting, cracking, checking, chemical damage and signs of overstress. All deteriorations noted shall include their size and relative location on the member. Where possible, measurements will be taken to determine the remaining effective section on the member.

- Document horizontal cracks, splits, or delaminations in bending members. Note whether or not the cracks, splits, or delaminations pass entirely or partially through the member and measure the depth of the crack, if possible. Dimension the height of the member halves above and below the crack, the member width and the amount the crack has opened.

- Document signs of substructure settlement, tilting or other misalignment and whether or not adverse effects on the superstructure elements were noted.

- Document areas of water staining and deterioration due to water leakage from deck joints.

- Document conditions of contraction and local scour. Excessive scour conditions shall be reported immediately in accordance with the Critical Deficiency Reporting/Emergency Response procedures outlined in Section 3.2.7. Depths of scour holes and the presence of backfilled sediment shall be noted.

- Document impact damage on the substructure elements due to ice, debris and marine or vehicular traffic.

- Particular care shall be given to documenting any increased quantity or size of deteriorations that have changed since the last inspection. If the condition rating has changed since the last inspection, a photograph and explanation of why the rating has changed shall accompany the inspection report.

- Notes should be made describing the current condition of all previously noted problems so a rate of deterioration can be established for monitoring purposes.

- Typical conditions and deteriorations causing a condition rating of less than or equal to "5" shall be photographed as outlined in Chapter 5.

In-Depth Inspections:

- In addition to the requirements of the routine inspection, "hands-on" access shall be provided to the entire substructure.

- All primary and secondary members shall be inspected "hands-on" regardless of extent of damage or deterioration.

- Severe internal decay may be taking place even though the surface condition appears good. Therefore, random probing of 50% of the structural members shall be conducted with an ice pick or awl to locate voids or areas of internal deterioration. Emphasis shall be placed in tidal zones, areas of wet/dry cycles or areas of water staining.

Documentation for In-Depth Inspections:

- All documentation required for routine inspections shall be included in the in-depth documentation except as noted in this section.

- Elevation drawings shall be provided to show the layout of the timber members and deterioration noted. Sectional views and detailed drawings shall be provided, as required, to adequately describe the extent of deficiencies noted.

- Documentation, as a whole, should clearly describe the structural condition and serve as an accurate benchmark to which future inspections can be compared.

- A good quality photograph of the substructure, that documents the overall condition as well as detail photographs that support the condition rating, shall be provided.

Report Review

- Review the inspection findings in accordance with established Quality Control and Quality Assurance procedures.

- Cross reference the inspection report, inspection field notes and photographs to ensure they are mutually supportive of their documentation.

- The inspection reviewer should determine if a pattern of deterioration or progressive deterioration is taking place. Progression shall be determined by comparing past and present inspection reports.

- Review the inspection field notes for signs of tilting, settlement or scour, splitting, cracking or impact damage. Determine if conditions require additional analysis or immediate repair.

- Low condition ratings that are caused by extensive or widespread deterioration should be reasons to request supplemental non-destructive or destructive testing or analysis to better determine the condition and stability of the substructure element, and whether rehabilitation or replacement is warranted.

Maintenance Concerns

- The most common type of preventive maintenance for wood structures is the application of preservative treatment, paint or other protective coatings to protect the timber from fungus or parasites and the elements. Preservative treatment or paint shall be applied as required to protect the timber elements. It should be noted that preservative treatments typically do not penetrate through the entire cross-section of the member. Therefore, as with non-treated or painted members, interior deterioration due to parasite infestation may still occur despite the solid appearance of the exterior.

- Loose connections may occur due to timber shrinkage, cracking, checking, decay or crushing around the connector or deterioration of the fastener itself. Loose fasteners should be tightened, and broken, missing or deteriorated fasteners (exhibiting greater than 20% section loss) should be replaced.

- Remove debris to avoid moisture accumulation.

- Cut vegetation from around wet areas and areas prone to debris buildup to allow better air circulation for drying action.

- If the substructure elements have been properly designed and show little deterioration, movement of substructure elements may likely be caused by scour. If substructure elements at a particular bridge site have a history of, or high susceptibility to the effects of contraction and local scour, consideration shall be given to the design and construction of waterway protection devices such as rip rap, gabions, cofferdams, check dams, etc., to reduce the adverse effects of scour.

- If the substructure elements are regularly impacted by ice and debris, consideration shall be given to the design and construction of protection devices to divert or absorb the impact forces. This will have a secondary benefit of reducing waterway blockages and turbulence around the substructure elements.

- Substructure impact protection devices (guardrail, fenders, dolphins, ice breakers, etc.) shall be routinely checked to ensure adequate protection is maintained. All damaged protection devices should be repaired to maintain the integrity of the system.

Figure 6.3.3a – Timber Pile Bent with Freeze-Thaw Damage in the Tidal Zone.

6.4 WATERWAY

Reference: BITM 90, Section 13

6.4.1 CHANNEL AND CHANNEL PROTECTION

Inspection Requirements

Routine Inspections:

- Inspect the channel and all channel protection devices in accordance with BITM 90, Section 13.

- All rip-rap, gabions, spurs, spur dikes and other types of channel and flood plain protection devices shall be inspected for signs of joint separation, broken or deteriorated retention cages, missing or displaced stones, cracked, spalled or deteriorated concrete, impact damage, erosion, loss or lack of vegetated cover, tilting, displacement and other deterioration.

- If the channel is navigable, protection devices such as timber, rubber, concrete or steel fender systems, dolphins, protective islands, etc., shall be inspected for deteriorations, deficiencies or impact damage and evaluated as to their effectiveness in providing adequate impact protection to the bridge structure from marine vessels. Navigation guidance systems (signs, lights, etc.) shall be inspected for deteriorated or broken devices, adequate visibility to marine vessels and compliance with current Coast Guard standards.

- Evaluate the overall effectiveness of the channel protection devices at redirecting or absorbing the energy of the water flow by estimating the flow velocity (fast or slow) and observing the flow characteristics (calm, turbulent, swirling, above normal flow depths, etc.), upstream, downstream and through the hydraulic opening.

- Inspect all rigid protection devices in the channel such as gabions and concrete walls, for signs of local or contraction scour as defined in Appendix 6.10. Inspect non-rigid protection devices such as riprap or earthen dikes, for local scour of the base material (look for sloughing of the construction material) or erosion of the construction material itself.

- Probe all areas of suspected local scour to determine the limits of scour.

- The problem of accurately determining maximum local scour and rate of change of local scour over time is one of the most difficult aspects of bridge inspection, yet it is one of the most important aspects of evaluating bridge safety. In order to effectively evaluate the scour potential of a structure, it is

essential to develop a bridge diary dealing with scour. By referring and updating this document with each inspection, (which should also contain information about general and contraction scour and any lateral movement of the waterway), a clear picture of the extent and rate of scour development can be seen. This is essential to plan the proper maintenance efforts required to arrest scour damage (See Appendix 6.10 & 6.12).

Special Note:

After maximum local scour has occurred during peak flow periods, sediment may backfill the scour hole during low flow periods giving false indication to the inspector as to the actual extent of the scour problem. Probing through the soft surface sediment to the hard packed substrate with a probing rod will help to determine actual scour depth.

- Look for irregularities in the surface slope of the protective devices (dips, depressions, sink holes, etc.), which can be a first indication of erosion or scour of the base material.

- Inspect the channel for signs of general scour (degradation) and aggradation as defined in Appendix 6.10.

- Inspect the banks of the channel for signs of erosion and sloughing of the bank material or vegetation.

- Inspect the channel for misalignment with the bridge substructure elements. If misalignment is observed, estimate the degree of misalignment.

- Inspect the channel for debris accumulation from ice, vegetation, etc., that constricts the water flow through the hydraulic opening. This accumulation may accelerate contraction or local scour, due to increased water flow velocity and development of water vortices.

- Inspect the channel for signs of lateral movement since the last inspection.

Documentation for Routine Inspections:

- Document deficiencies and deteriorations found in the channel protection devices. A site plan that shows the location and orientation of the channel and channel protection devices shall be provided. A bridge plan and channel cross section drawing will be required in accordance with Appendix 6.12.

- Estimate and record the flow characteristics of the channel, (fast, slow, high, low, turbulent, etc.), at the time of inspection.

- Record the direction and distribution of flow between piers and between piers and abutments.

- Document all conditions of general, contraction and local scour as well as any signs of undermining of the protective device elements. Excessive scour conditions and any undermining condition, regardless of extent, shall be reported in accordance with the Critical Deficiency Reporting/Emergency Response procedures outlined in Section 3.2.7. Depths of all scour holes shall be measured utilizing probing rods, survey rods or sonic equipment and the presence of any backfilled sediment shall be noted.

- Document accumulation of any ice, debris, vegetation, etc., which constricts or disrupts the water flow through the hydraulic opening or around the protection devices.

- Document any recent construction activity in the area that may effect the stream flow under the bridge (i.e., changes in drainage area, land use, topography, etc.).

- Document the presence of sediment buildup immediately downstream of the bridge structure that may indicate the presence of contraction scour.

In-Depth Inspections:

- In addition to the requirements for a routine inspections, the actual water flow velocity shall be measured upstream, downstream and through the hydraulic opening. If flow meters are not available, the velocity may be estimated using the method outlined in Appendix 6.10 or similar approved method.

Documentation for In-Depth Inspections:

- All documentation required for routine inspections shall be provided for in-depth inspections.

- Record the actual water flow velocity upstream, downstream and through the hydraulic opening.

Report Review

- Review the inspection findings in accordance with established quality control and quality assurance procedures.

- Cross reference the inspection report, inspection field notes, and photographs to ensure they are mutually supportive of their documentation.

- If excessive debris build-up or degradation of the channel is noted, check to see if any adverse effects due to scour were noted in the substructure section of the report.

- Review the inspection report for signs that a pattern of deterioration or progressive deterioration is occurring in the channel or with the channel protection devices. Progression shall be determined by comparing present and past inspection reports.

Maintenance Concerns

- Misalignment between the channel and substructure elements of the bridge and high water flow velocities can cause serious scour problems with the substructure elements. Channel protection devices are designed to reduce this scour potential by redirecting the flow, improving alignment and absorbing energy from the flow. Periodic maintenance may be required to repair damaged or deteriorated channel protection devices or replace scoured or eroded materials so that adequate protection for the bridge substructure remains in place. If misalignment or water velocity contribute to local scour of the substructure elements despite the presence and good condition of the channel protection devices, a study may be required to determine the need for redesigning the channel protection system (moving existing devices or building new devices).

- Debris accumulation in the channel or at the bridge opening will constrict the water flow around protective devices or through the hydraulic opening of the bridge and potentially contribute to localized scour due to vortex development. Debris removal may be required as part of regular maintenance of the structure.

Figure 6.4.1a – Timber Fender System with Navigation Lights.

Figure 6.4.1b – Sand Bar and Vegetation Growth in the Channel.

6.4.2 WATERWAY ADEQUACY

Inspection Requirements

Routine Inspections:

- Observe whether or not the lowest elevation of any component of the bridge superstructure is higher than the lowest point in the approach roadway. This gives indication that the approach roadways will be topped by flood water before the bridge superstructure is subjected to lateral forces due to the flood water.

- Observe whether or not waterborne debris is hung up in the bridge superstructure or around bearings. This indicates that the maximum hydraulic opening has been exceeded or that past flooding has come close to exceeding the maximum hydraulic opening.

- Observe the location of any high water mark. This may be indicated by displaced vegetation, deposited debris, water staining on the bridge elements, etc.

- Observe whether significant aggregation or degradation has occurred that effects the hydraulic opening of the structure.

- Observe whether or not the superstructure has moved laterally in the direction of flow on the bearing plates or pedestals. This may indicate displacement during past flood conditions.

Documentation for Routine Inspections:

- Document the high water mark, the presence of vegetation or debris deposited on substructure elements or hung up on superstructure elements or any other indication that flooding has approached or has exceeded the maximum hydraulic opening.

- Evaluate the adequacy of the waterway, based on observed site conditions and the history of flooding at the site.

In-Depth Inspections:

- In addition to the requirements for routine inspections, the hydraulic opening shall be estimated using the procedure outlined in Appendix 6.10.

Documentation for In-Depth Inspections:

- All documentation required for routine inspections shall be provided for in-depth inspections.

- Record the hydraulic opening as outlined in Appendix 6.10.

Report Review

- Review the inspection findings in accordance with established quality control and quality assurance procedures.

- Investigations should be considered for bridges that have experienced flow rates exceeding their maximum design flood value or for bridges that are at high risk for having their maximum design flood exceeded. Conclusions drawn from such investigations may indicate the need to employ preventative measures, as described above, or the need to rehabilitate existing protective devices meant for use during flood conditions. If new design or rehabilitation is warranted, detailed analysis to determine the backwater effect caused by these devices shall be conducted. Detrimental effects caused by diversion or back-up of water (i.e. increased flooding in town/cities, etc.) may mitigate the implementation of the preventive maintenance measures.

Maintenance Concerns

- High flow volumes and velocities during flood conditions can have serious detrimental effects on bridges if the hydraulic opening is exceeded. Bridges that have had their roadway overtopped should be inspected after flooding recedes.

6.5 CULVERTS

Reference: BITM 90 Section 13, 19 and FHWA Report #FHWA-IP-86-2, Culvert Inspection Manual

Inspection Requirements

Routine Inspection:

Approach Roadway and Embankment:

- Inspect the roadway for settlement due to culvert flattening, for evidence that the roadway has been patched or otherwise built-up, for cracks running parallel to the culvert centerline and for signs of erosion or failure of the side slope over the culvert. Look for signs of sink holes over the culvert that may be due to "piping" of the fill material through joints in the culvert.

- Evaluate the approach roadway for alignment, clearances, adequate shoulder profile, and safety features such as guide rails. These observations will not affect the condition code of the culvert, but should be included in the inspection report.

- Inspect the approach embankments for erosion protection such as slope paving or vegetation. Note the overall adequacy of this protection and note any vegetation near the culvert whose roots may damage the culvert.

Waterway:

- Note any observed changes in stream/culvert horizontal or vertical alignment that might affect the hydraulic adequacy of the culvert or cause scour. Note whether or not the stream bed fluctuates between high and low flow volumes.

- Note any observed changes in the ground cover or land use that might change the volume of water the culvert must pass.

- Document any changes in the amount, type or location of any channel erosion and streambed aggradation/degradation.

- Document any observable high water mark relative to the culvert barrel.

- Measure and document the volumetric flow rate and velocity of the water flow upstream, downstream and through the culvert (if possible). Simple methods for approximating water flow velocity and volumetric flow rate are outlined in Appendix 6.10, Waterways.

- Document any debris buildup or other obstructions in the waterway upstream and downstream from the culvert and any effects the obstruction is having on the hydraulic adequacy.

Culvert Barrel and End Treatments:

- Check the culvert headwall, wingwalls, cutoff walls, slope protection and energy dissipaters for any deficiencies and deterioration[1], undermining, scour, piping, tipping settlement and slope failure.

- Check the culvert barrel for deformations, settlement (either a smooth slope over the length of the culvert or an abrupt change at a joint), leaking or distressed joints and other deficiencies or deteriorations[1]. Check for evidence that lateral earth pressure is causing bulging, flattening, peaking, sliding or rotation in the barrel or barrel components as outlined in Appendix 6.5 and Appendix 6.7.

- Document any debris or sediment build-up within the barrel.

- Verify the minimum required measurements of the culvert as outlined in Appendix 6.5. Dimensions should be taken at the inlet, outlet, mid-length and at 24 ft. (8 m) intervals (maximum) as applicable, if access to the interior of the culvert is possible. Locations of sagging, bulging, flattening or peaking should also be measured.

- Check the barrel footings for scour and undermining (typically found in culverts that pass the natural stream bed through the culvert) and around the inlet and outlet of closed barrel sections.

- Probe all areas of scour, undermining and joint mortar loss and note the average depth at each location and maximum depth overall.

- Check to see if the culvert barrel has separated from the headwalls or cutoff walls.

- Check to make sure headwalls and wingwalls are adequately retaining the embankment material and protecting it against erosion.

- Where practical, the floors of metal pipe culverts should be sounded with a metal rod in an attempt to locate voids due to undermining.

[1] As defined in the coding guidelines, Section 10.9.

Special Note About Corrugated Metal Culverts:

- *Culverts with mitered ends (ends cut to match the embankment slope) and ends of skewed culverts (where the end is cut parallel to the centerline of the roadway) have reduced strength in these areas and have increased susceptibility to buckling. Therefore, even minor deformations are significant.*

- *Projections of culvert ends beyond the embankment lead to increased probability of erosion and piping around the culvert barrel.*

Aprons, Energy Dissipaters and Flumes:

- Check the apron, which reduces erosion at the inlet and outlet (typically a concrete slab or rip-rap), for deterioration, missing stones, undermining of slab, movement of stones due to scour and deterioration of the joint between the apron slab and headwall. Deterioration of this allows leakage of water to the soil behind the headwall.

- Check the energy dissipaters, which reduce out flow velocity and downstream erosion (typically rip-rap or concrete basin), for missing stones, movement of stones, scour, undermining, deterioration of the basin and overall effectiveness of the dissipater.

- Check the flumes (typically concrete, bituminous material or rip-rap) for deterioration, erosion, debris and signs of water bypass.

Documentation Required for a Routine Inspection:

- Document all observed deficiencies and deteriorations. Dimensions should include length, width, height, depth of loss, orientation and location relative to a fixed, easily identifiable point.

- Estimate and record the depth of fill and pavement over the culvert.

- Draw a site plan that shows the orientation of all the culvert elements relative to the roadway. Sketch and dimension the boundaries of the waterway for the length necessary to show the alignment with the culvert (100 ft. (30 m) minimum). The sketch shall include both the inlet and outlet sides of the culvert, and dimension the typical width, depth, estimated velocity and direction of flow of the waterway, as well as all major changes in waterway cross section. All obstructions, deficiencies, changes in land use, changes in topography, sediment buildup, erosion, etc., shall be noted on the sketch (see Figure A-5-1 in Appendix 6.5 for an example sketch).

- Particular care shall be given to documenting any increase in quantity or size of deteriorations, erosion, sediment buildup, changes in waterway centerline,

etc., which have changed since the last inspection. If the condition rating has changed since the last inspection, a photograph and detailed explanation of why the rating has changed shall be included in the report.

- Document any recent construction activity in the area that may affect the water flow through the culvert (i.e. changes in drainage area, land use, topography, etc.)

- Photographs taken shall include, but not be limited to the following:

  - View of the roadway above the culvert, taken from each roadway approach toward the culvert.

  - View looking at the culvert inlet and outlet taken from the waterway centerline or edge upstream and downstream of the culvert. The distance at which these photographs are taken shall be the distance sufficient to give the overall view of the culvert and waterway at the culvert.

  - View looking upstream from the culvert inlet and downstream from the culvert outlet.

  - Typical views of all major components where deficiencies, erosion, sediment buildup, obstructions, etc., were noted. Include detailed photographs as necessary.

  (Note: Pictures taken of the roadway from the approaches and detail photos of deficiencies, erosion, deterioration, etc., may be omitted if photos from previous inspections adequately reflect the current condition. However, all photos taken of the waterway approaches and culvert openings should be updated during each inspection so that lateral movement and changes in alignment over time can be documented.)

In-Depth Inspections:

- In addition to the requirements for routine inspections, all exposed surfaces of concrete culverts should be tapped with a hammer to locate delaminations.

Documentation for In-Depth Inspection:

- Same requirements as for routine inspection.

Report Review

- Review the inspection findings in accordance with established Quality Control and Quality Assurance procedures.

- Cross reference the inspection report, inspection field notes and photographs to ensure they are mutually supportive of their documentation.

- The inspection reviewer should determine if a pattern of deterioration or progressive deterioration is taking place. Progression will be determined by comparing present and past inspection reports.

- Special attention shall be given to field note documentation indicating changes in the culvert shape, the presence of scour, piping or other problem that may warrant further investigation.

- Culverts are usually designed to use the vertical and horizontal earth pressures to maintain their stability and increase their live load capacity. Therefore, any change in the "As-Built" condition of the soil surrounding the culvert (addition or removal) should be noted and possibly analyzed for effects on the stability and capacity of the culvert.

Changes in drainage area, land use and topography, which increase the depth or velocity of the waterway, should be assessed in terms of how they may effect the long term waterway stability (i.e. lateral movement, aggradation, degradation, etc.) and hydraulic adequacy of the culvert.

Maintenance Concerns

- By the nature of their construction, culverts constrict the flow of water in the waterway. This constriction increases the potential for waterway blockage with debris and sediment, and increases the probability of scour around the culvert especially if high outlet velocity or high inlet turbulence exist. Therefore, any blockages noted should be removed as soon as possible (during the inspection if possible).

- Culverts typically have steep approach embankments, as well as large, abrupt drop-offs at the culvert crossings. Headwalls and wingwalls may be exposed to traffic presenting collision hazards to passing vehicles. Routine maintenance should include safety considerations (i.e. guide rails) as well as structural and hydraulic considerations.

- The addition of cut-off walls should be considered where "piping" or seepage around the outside of the culvert structure is found or suspected.

- Severely deteriorated culverts may be reviewed for repair by relining the culvert barrel.

Figure 6.5a - Cast-In-Place Concrete Culvert with Erosion at the Outlet.

6.6 APPROACHES

Approaches are normally considered to extend approximately 100' (30 m) from each end of the bridge.

Approach pavement should be checked for cracking, rutting, unevenness, settlement, and roughness. General observations should be made as to its rideability and its effectiveness in transitioning traffic on and off the bridge without inducing excessive impact loads. If pavement depressions are noted, the area of the depression and the estimated depth should be recorded. Observations as to the depth and extent of patching previously performed to fill in depressions in the approach pavement shall be noted. Also, particular attention should be given to signs of pavement pumping, that will result in the loss of subbase material and eventual approach slab failure or approach pavement failure. The inspector should note how well (or how poorly) the approach roadway aligns with the bridge.

Pressure relief joints should be inspected for condition and rideability. If observations of the approach highway or bridge components indicate that a pressure relief joint is needed where none exists, it should be so noted.

Examine joints where the approach slab meets the abutment backwall. Look for signs of joint leakage, joint openings filling up with debris, or loss of original joint material. Record any deficiencies.

Inspect approach shoulders, approach railing, embankment slopes, and approach drainage system. Document any deficiencies that are noted, including poor original design.

Inspect the advance warning signs on bridges with height or weight restrictions. These signs may be close to the bridge or located at the nearest alternate route intersection.

Photograph both approaches to the bridge on in-depth inspections.

Appendix 6.1

FATIGUE SENSITIVE DETAILS

The following is a compilation of common fatigue sensitive details found on steel superstructure bridges that are most susceptible to fatigue cracking. They are taken from the Manual for Inspecting Bridges for Fatigue Damage Conditions written for the Pennsylvania Department of Transportation. The location of the fatigue crack shown in each detail represents the location where the crack is most likely to occur. This does not mean, however, that it is the only possible location. Inspectors should scrutinize the entire area prone to fatigue for the existence of cracks. For a more in-depth discussion on inspection techniques, AASHTO categories of fatigue strength, fatigue damage at welded, riveted and bolted details, and estimation of fatigue life, the Penn-DOT manual should be reviewed.

General Notes About Fatigue Cracks:

- Fracture of steel members due to fatigue is a three step process that involves fatigue crack initiation, crack propagation (slow growth) and brittle fracture (rapid growth).

- High residual tensile stresses can develop in the weld metal due to the rapid heating and subsequent cooling during the welding process. These residual stresses can often exceed the service stresses due to dead and live load. As a result, the net tensile stress in the weld metal of tension members or in tension zones can exceed the net tensile stress in the base metal. In compression members or in compression zones, weld metal can have net tensile stress even though adjacent base metal is in compression.

- Fatigue cracks in welds on compression members or in compression zones, generally do not propagate by fatigue crack growth. Their presence, however, should not be overlooked or ignored.

- Fatigue cracks generally initiate at an internal flaw within the weld or weldment produced during the welding process. Welds that are perpendicular to applied bending or axial stress are more susceptible to fatigue cracking than those parallel to applied stress.

- Oxide dust (Ableeding rust≅) forms within the fatigue crack due to abrasion of adjacent sides of the crack during flexure action. The presence of oxide dust in a line along a connection or around a fastener is a general indicator of the presence of a fatigue crack.

- The absence of paint cracks does not preclude the presence of fatigue cracks. Fatigue cracks can propagate from 1/4 to 1/2 of the plate thickness before the paint film cracks.

- Cleaning a suspect area by means of grinding or sand blasting may result in smearing the surface of the crack giving erroneous evidence as to the presence or extent of the crack. Care should be exercised when cleaning the area under investigation to avoid smearing.

Fatigue Damage in Welded Details

1) Fatigue Cracks in Main Members

1.1 Ends of Welded Cover Plates

- Cracks typically occur at the toe of the fillet weld where it attaches the cover plate to the flange.
- Details with flange thicknesses of greater than 0.8” (20mm) are more prone to fatigue cracking.
- In transverse end welds (weld "B"), multiple cracks may initiate and join to become one large crack increasing the possibility of brittle fracture.
- In details without transverse end welds, cracks typically develop and propagate from the end of the longitudinal weld (weld "A") into the flange plate.

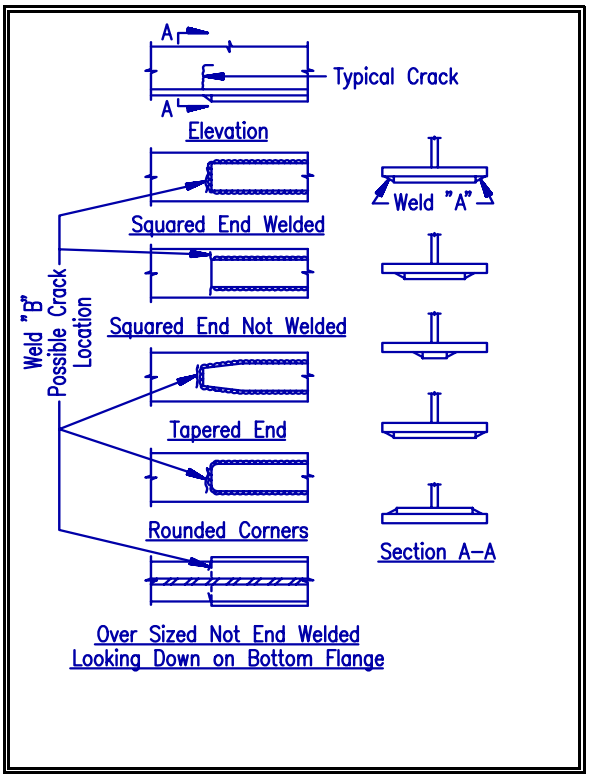

1.2 Transverse Groove Welds in Flange Plates

- Cracks at these locations are often not detectable through visual methods prior to brittle fracture. Other forms of NDT, such as Ultra-sonic testing, may have to be employed to evaluate these details.

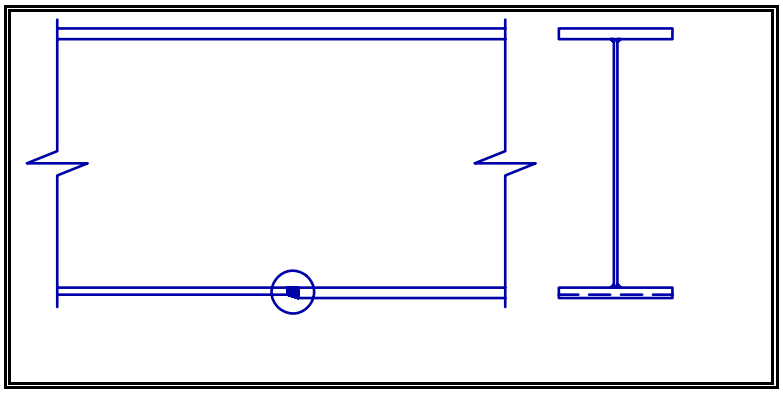

- Due to improved methods of non-destructive testing during fabrication, fatigue problems are not expected at this location on newer structures (1980+).

- Tension flanges fabricated with this detail prior to 1970 or by electroslag methods are highly susceptible to fatigue cracking.

1.3 Butt welds in Longitudinal Stiffeners

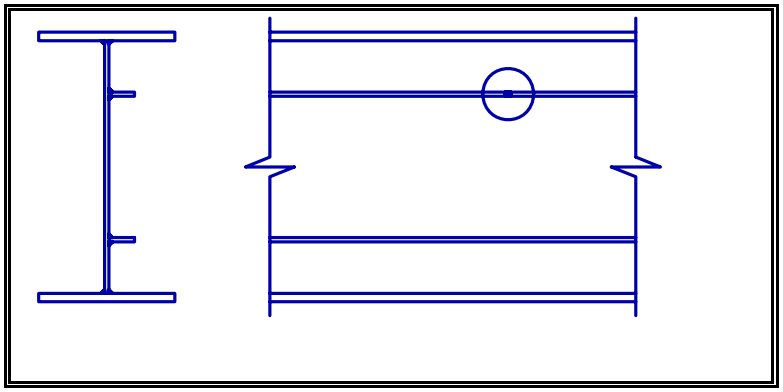

- Cracks may initiate in the butt weld between the plates or at the intersection of the butt weld and stiffener longitudinal fillet weld.

- Cracks may propagate through the longitudinal stiffener fillet weld into the girder web or longitudinal stiffener plate.

- Longitudinal stiffeners in compression zones of girders have low fatigue susceptibility.

1.4 Web Plates with Cutouts and Filler Welds

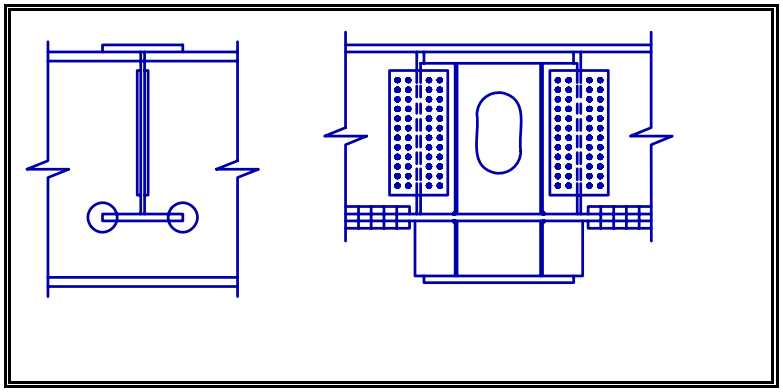

- Girder bottom flanges from adjacent spans connected via splice plate through the web of the transverse cross girder may be welded on one or both sides of the web of the cross girder.

- Fatigue cracks may occur in the cross girder web at the toe of the fillet weld connecting the splice plate to the cross girder. Both sides of the cross girder web should be checked.

- Found primarily on newer bridges (1970+), this detail is likely to develop fatigue cracks.

1.5 Intersecting Groove Welds in Insert Plates

- Insert plates may occur over large areas, such as over piers, to increase haunch depth or as web repair plates (any size) occurring at any location on the girder.

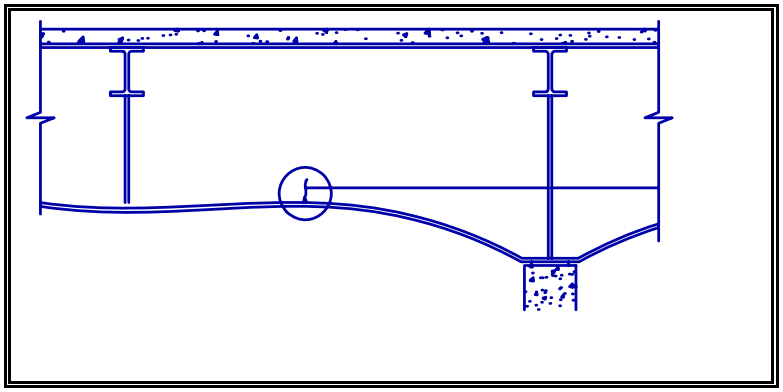

- Cracks may initiate at the intersection of the longitudinal and transverse groove weld and may propagate into the web or flange of the girder.

- Particular attention should be paid to welds that are perpendicular to the applied bending or axial stress.

1.6 Mis-drilled Holes Filled with Weld Material and Plug Welds

- Misplaced holes in the tension zone of superstructure members that are filled with weld metal or plug welded serve as potential fatigue crack locations.

- Rough, un-ground welds are indicators that weld quality is poor and fatigue crack probability is high.

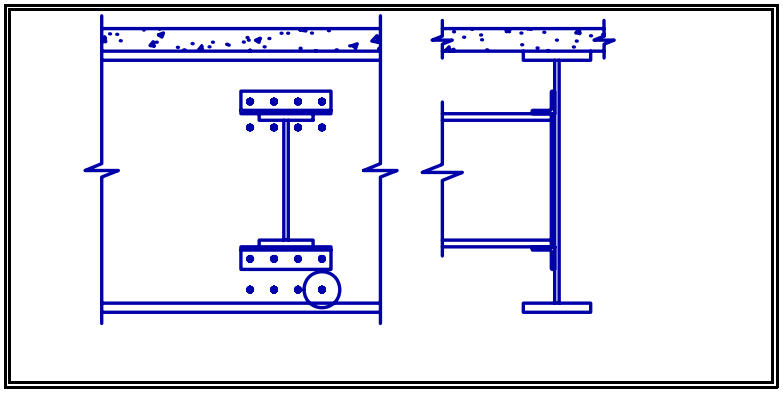

1.7 Butt welded and Tack Welded Backup Bars

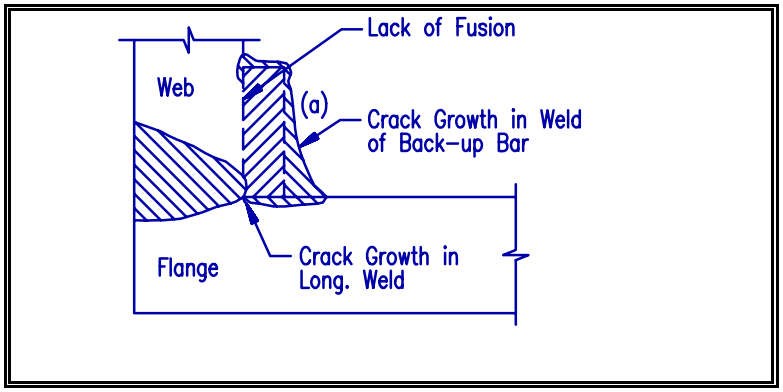

- Backup bars used in the groove weld process are often made continuous through butt welds and are usually held in place during the welding process using tack welds. These butt welds and tack welds are sources of low quality welds and the possibility of fatigue cracks at these locations is high.

- Fatigue cracks that initiate at butt welds or tack welds can propagate into the main member base metal via the full penetration groove weld. These cracks may be transverse to the direction of computed stress, which significantly increases the potential for brittle fracture of the member.

- If back up bars are orientated transversely to the direction of computed stress and not removed after the welding process, the probability of fatigue crack initiation is increased.

2) Fatigue Cracks in Members at Connections and Attachments

2.1 Cut Short Flanges, Coped Beam Ends and Blocked Flange Plates

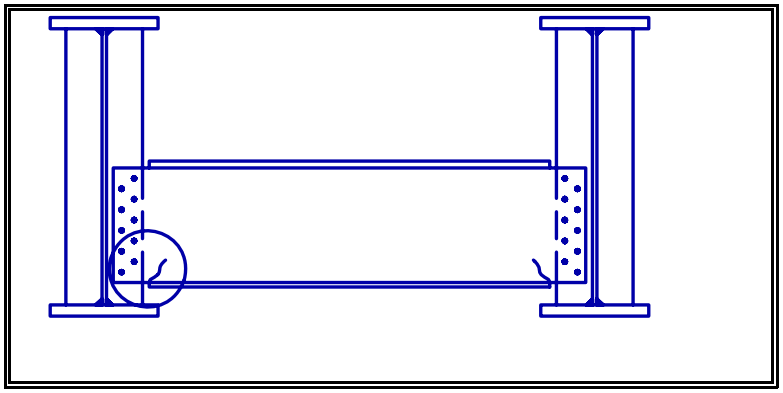

- Coping, blocking and shortening of member flanges, can cause a significant reduction in member stiffness and the process of flame cutting may induce high residual tensile stresses.

- Rough surface finish, dings, and gouges as well as sharp re-entrant corners without transitions at the copes or blocks make these areas highly susceptible to fatigue cracking. Fatigue cracks in these details are most likely to initiate at the re-entrant corner.

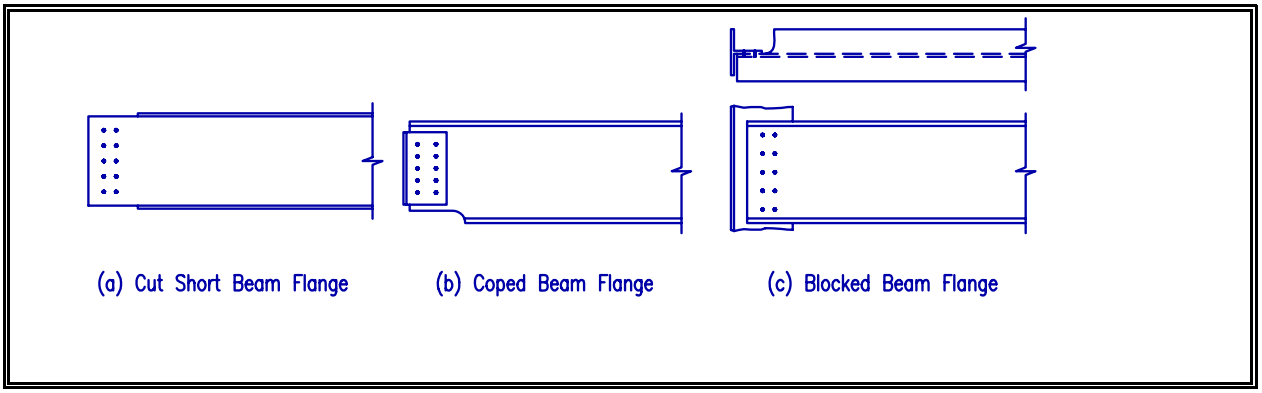

2.2 Welded Rigid Connections of Cross Girders at Bents

- Cross girder top and bottom flanges pass through the column web plate and are welded to the column walls parallel to the cross girder (weld "A").

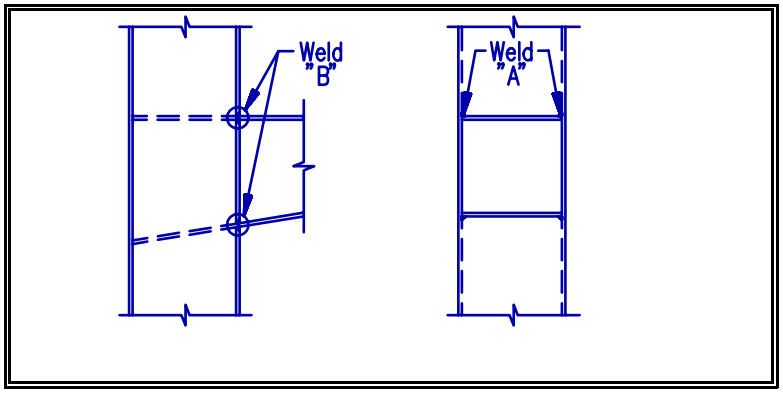

- The cross girder flanges are also connected to the transverse column web plate with welds that often incorporate backup bars (weld "B"). These welds and backup bars are transverse to the direction of stress in the cross girder and are highly susceptible to fatigue cracking.

- Cracks are most likely to form at the intersection of welds "A" and "B".

- Similar welds connecting the compression flange with the column web plate should also be checked for fatigue cracks.

2.3 Welded Flange Attachments

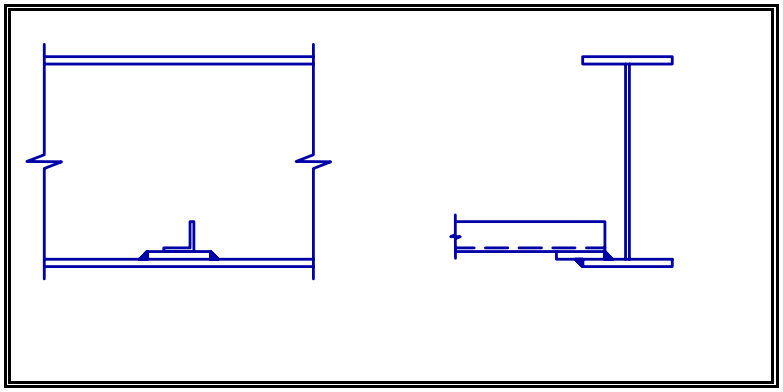

- Attachments may be butt welded to the edge of the flange or overlap the top or bottom surface of the flange and be attached with fillet welds.

- Unless the detail provides for a gradual change in geometry at the flange to plate intersection, it is highly prone to fatigue cracks. Cracks typically initiate at the weld terminations.

- All welds to tension flanges, such as brackets for anchoring catwalk hangers, drainage pipes, utilities, etc., should be examined closely.

2.4 Intersecting Welds at Gussets and Diaphragms

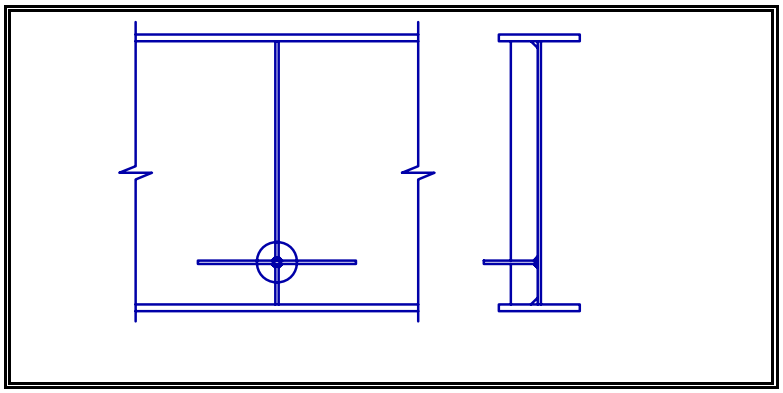

- The longitudinal horizontal weld between the gusset plate and the web, and the transverse horizontal weld between the gusset plate and the diaphragm connection plate, intersect the vertical weld between the diaphragm connection plate and the web, creating a detail highly prone to fatigue cracking.

- Defects generally originate in the weld between the gusset plate and diaphragm connection plate.

- Other possible locations where intersecting welds may cause fatigue problems are at interior plate diaphragms of box girders, intersections of longitudinal and transverse stiffener plates, diaphragm connection plates on girder webs, floorbeam end bracket connections to girder web and flanges etc.

3) Fatigue Damage due to Out-Of-Plane or Transverse Forces and Deflection

3.1 Girder Webs at Floorbeam and Diaphragm Connections

- In negative moment regions, where the top flange is rigidly embedded in the concrete deck and the floorbeam or diaphragm connection plate is not connected to the top flange, out-of-plane fatigue cracks may develop in the web gap region between the longitudinal flange to web weld and the top of the floorbeam or diaphragm connection plate.

- Look for horizontal cracks in the web of the girder at the top of the floorbeam connection plate. These cracks may propagate as an upside down "U" along the upper ends of the fillet welds of the connection plate (figure "A"). Cracks may also show in the girder web along the toe of the flange to web fillet weld on the opposite side of the floorbeam connection (figure "B")

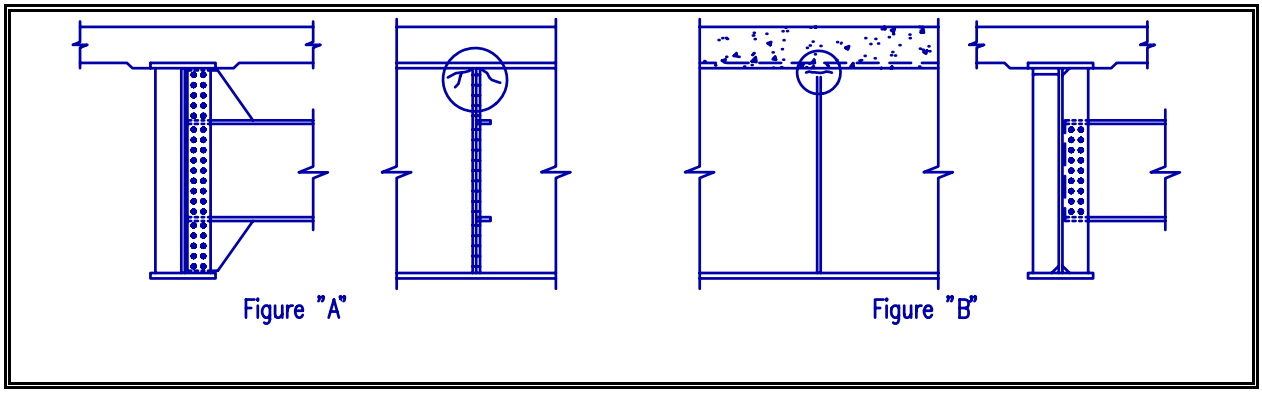

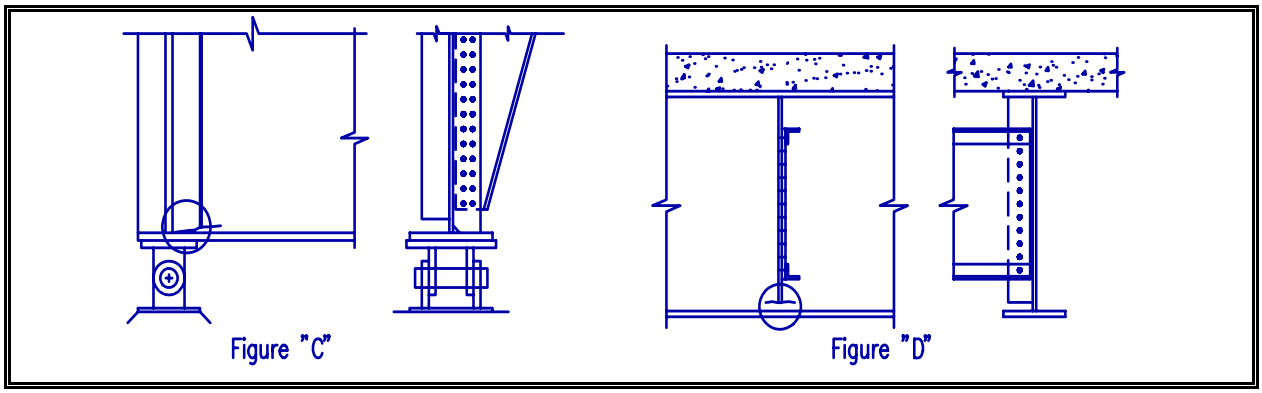

- In areas of positive moment where the floorbeam or diaphragm connection plate is not connected to the bottom flange, fatigue problems as described above may develop. The flange in these areas is not restrained against lateral movement. This reduces, but not eliminate, the effects of out-of-plane bending (figure "D").

- Floorbeam and diaphragm connections at bearing areas may experience this fatigue problem as the bottom flange is restrained against lateral movement by its connection to the bearing (figure "C").

- Highly skewed bridges with diaphragms and floorbeam connections perpendicular to the girders and bridges with staggered diaphragms, have increased probability of developing fatigue cracks because of large differential deflections between adjacent girders.

3.2 Ends of Diaphragm connection plates

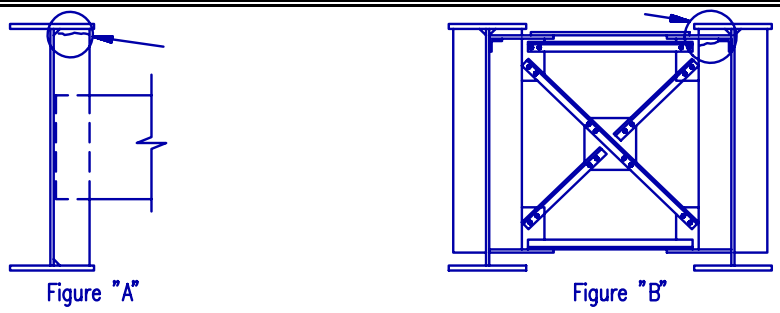

- When the diaphragm connection plate is welded to the flange of the girder, fatigue cracks may develop along the weld to the flange (figure "A").
- This fatigue crack may propagate along the weld through the connection plate and completely sever the connection plate creating a detail like that described in section 3.1.

- Where diaphragms are connected to the connection plate via small gusset plates (figure "B"), fatigue cracks may develop in the ends of the weld connecting the gusset plate to the connection plate.

3.3 Box Girder Webs

- Webs of box girders at unattached ends of diaphragm connection plates are susceptible to the same kind of out-of-plane deflections and fatigue cracking that occurs in longitudinal girder webs.

- The occurrence of fatigue cracks at locations described for longitudinal girders are expected to be higher in all box girder types, especially curved box girders and those subject to torsional forces.

3.4 Lateral Gusset Plate Connections at Floorbeam or Diaphragm Connections

- Unequal lateral forces from bracing members introduces lateral deflection and twisting in the girder web in the direction perpendicular to the web.

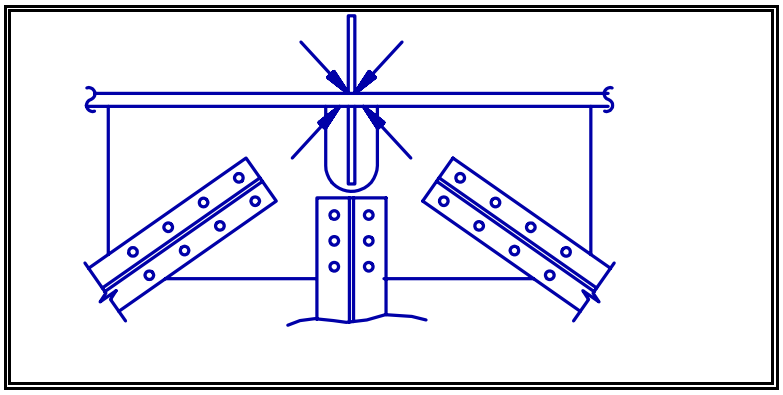

- When the gusset plate is not rigidly attached to the floorbeam or diaphragm connection plate, fatigue cracks may develop as described below:

  - At either end of the weld connecting the gusset plate to the web. However, the crack is more likely to develop at the end closest to the web gap.

  - Along the girder web at the toe of the fillet weld connecting the transverse stiffener to the girder web on the opposite side of the floorbeam or diaphragm connection.

3.5 Floorbeam and Cantilever Bracket Connections to Girders

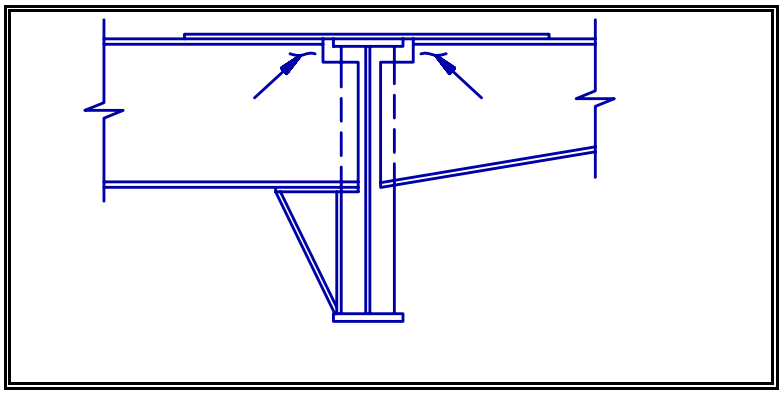

- Where stringers are supported on top of the floorbeam and tie plates connect the floorbeam and cantilever bracket top flanges, displacement induced fatigue cracks may develop in the floorbeam or cantilever bracket webs along the top flange fillet at the connection with the girder.

- Displacement induced fatigue cracks may develop in similar types of details at connections to tied arch girders and to truss bridge lower chord panel points when the stringers are placed above the floorbeams and cantilever brackets.

Fatigue Damage in Riveted and Bolted Bridges

4) Fatigue Damage to End Connections

4.1 Cracking (Prying) of Rivets and Bolts

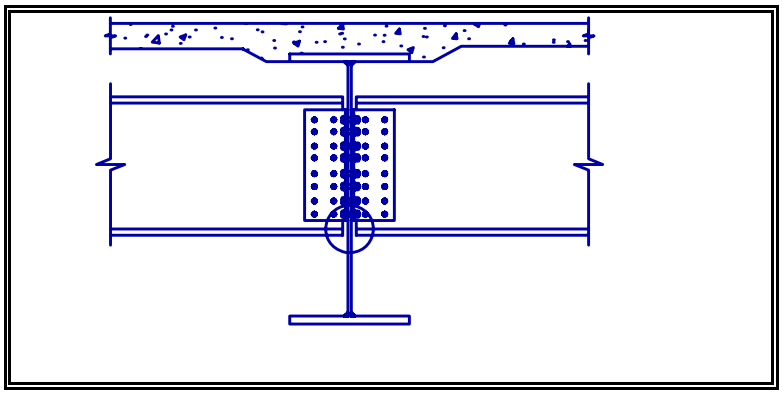

- In simple connections, rivets and bolts are subject to prying action. Those furthest away from the centroid of the connection are most susceptible to fatigue cracking.

- Missing bolt or rivet heads, oxide dust around the bolt or rivet head, a small gap between the fastener and the connection angle and a dull sound when the head is tapped are evidence of fatigue damage.

- Fatigue cracking may occur along the fillet of the connection angle generally initiating at the bottom end of the connection angle and propagating upward along the fillet.

4.2 Girder Webs at Floorbeam Connections

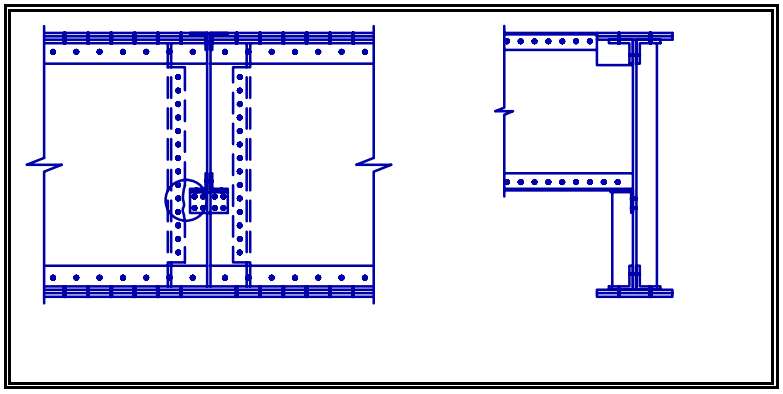

- Girder webs are susceptible to fatigue cracking when girder stiffeners on the opposite side of the floorbeam connection are offset from the connection.

- Fatigue cracking may occur in the unstiffened region between the floorbeam seat angle or clip angle, and the girder stiffener, due to out-of-plane bending caused by the floorbeam end moment.

- Bridges with relatively deep girders, subject to frequent heavy loads are more susceptible to fatigue cracking in this area.

4.3 Floorbeam and Cantilever Bracket Connections to Girders

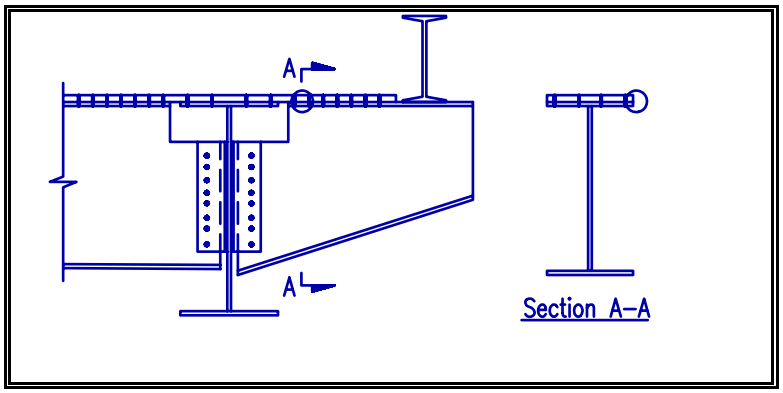

- Similar fatigue cracks as described in the section for welded members, may develop in riveted or bolted floorbeam and cantilever bracket connections.

- Tie plates that are rigidly attached to a girder flange are subject to significant horizontal bending stresses due to the relative displacement between the girder and floorbeam and cantilever bracket. Fatigue cracks may develop at the rivets or bolts closest to the girder.

- Tack welds used to aid construction in this area increase the likelihood of fatigue damage.

4.4 Diaphragm Connections to Girders

- Differential deflections between girders produces forces within the diaphragm that pull or push the diaphragm member against the connection angle.

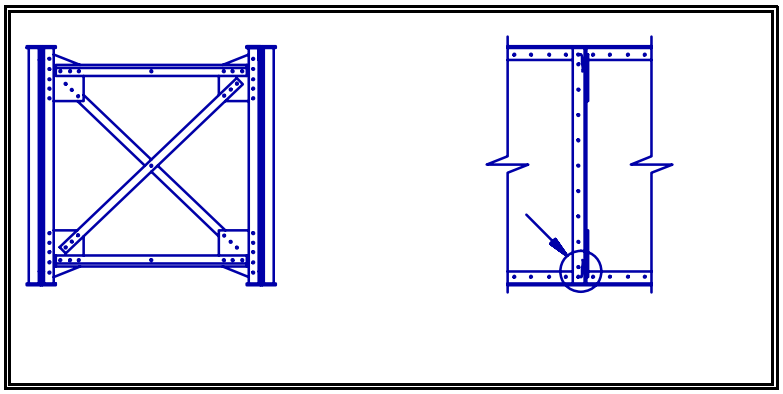

- Fatigue cracks may develop in the leg of the connection angle that is parallel with the girder in the area between the fillet of the angle and the first line of fasteners, or in the fastener below the head.

- If the connection angle does not overlap the flange angle and there is a small gap between the two angles, a fatigue crack may develop in the web of the girder in this gap.

4.5 Truss Tension Members

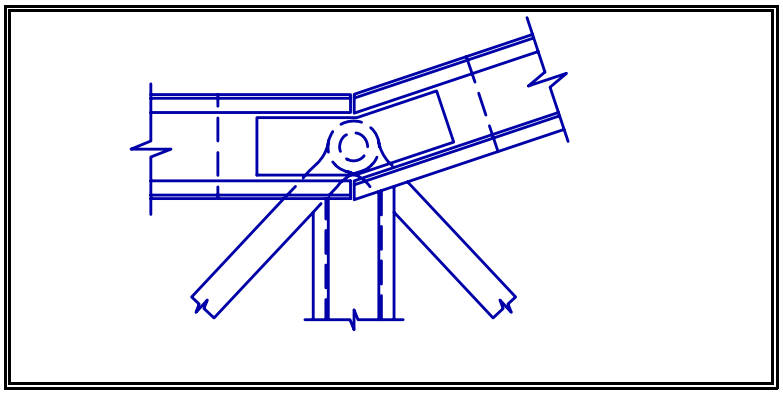

- One of the primary accelerants of fatigue damage in truss members, such as built up lower chord members, vertical hangers, or diagonal eyebars, is the build up of corrosion that prevents rotation of pinned connections.

- "Frozen" pin connections prevent the chord members, hangers and eyebars from rotating properly, and bending stresses are introduced into the members.

- Fatigue cracks may develop at rivet holes or other points of stress concentration.

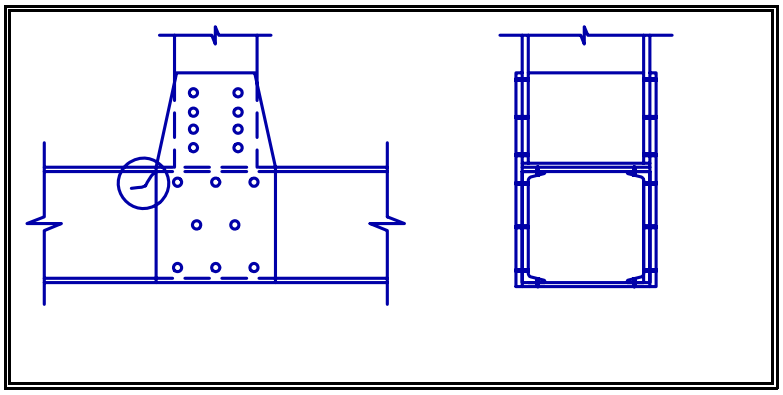

- Tack welds used to position and align elements during construction, create weld defects and residual stresses. All tack welds on tension members should be examined closely.

Appendix 6.2

STEEL SECTION LOSS MEASUREMENTS

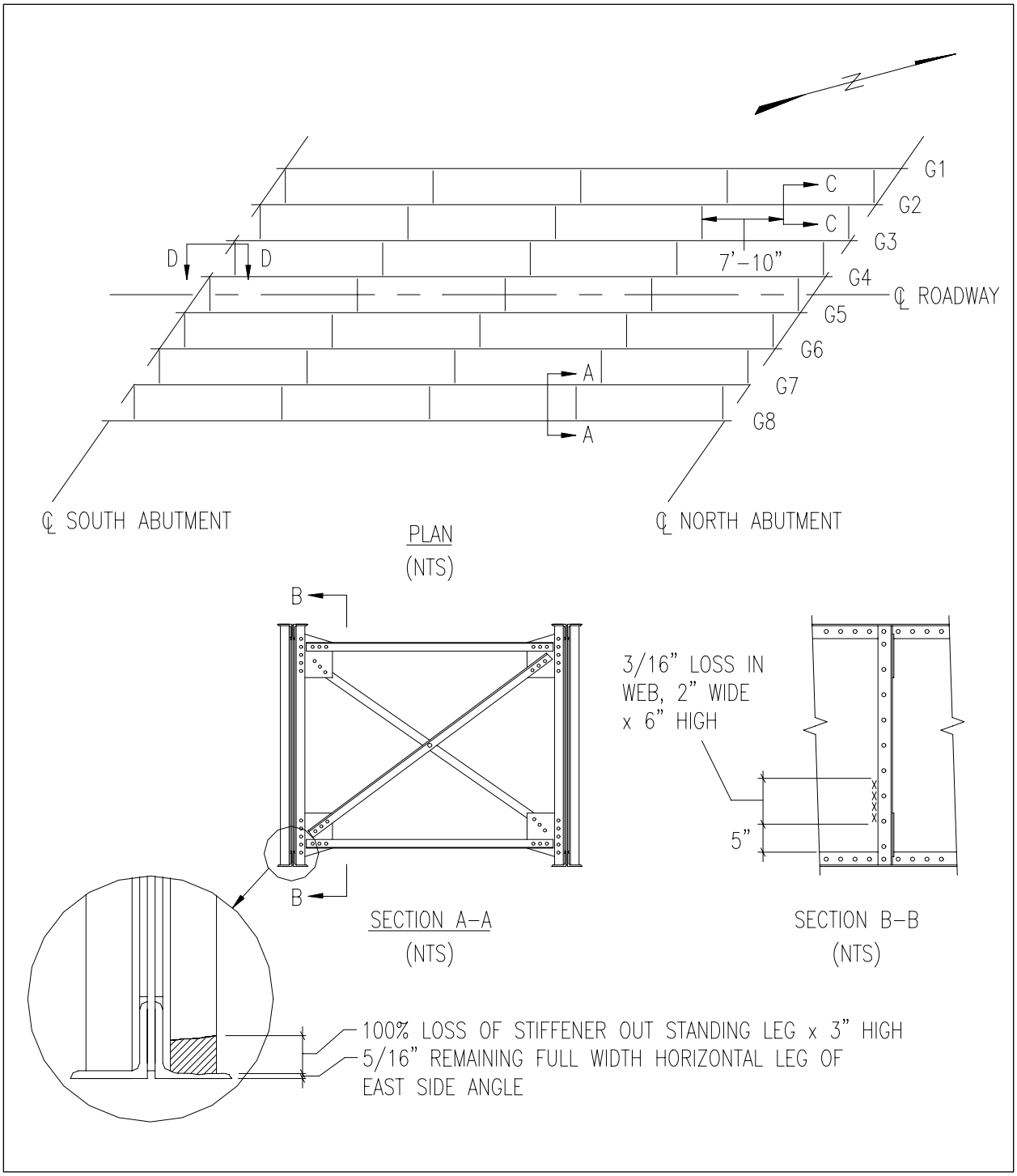

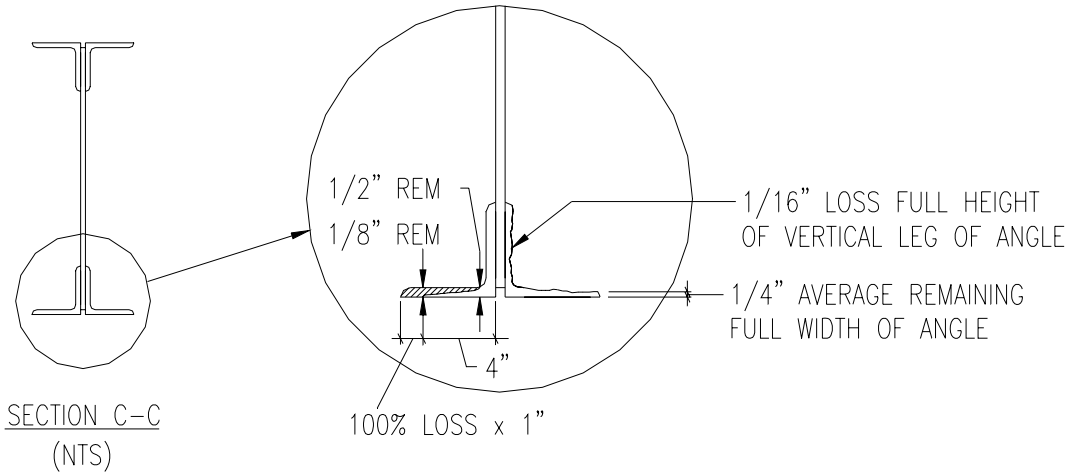

SECTION C–C
(NTS)

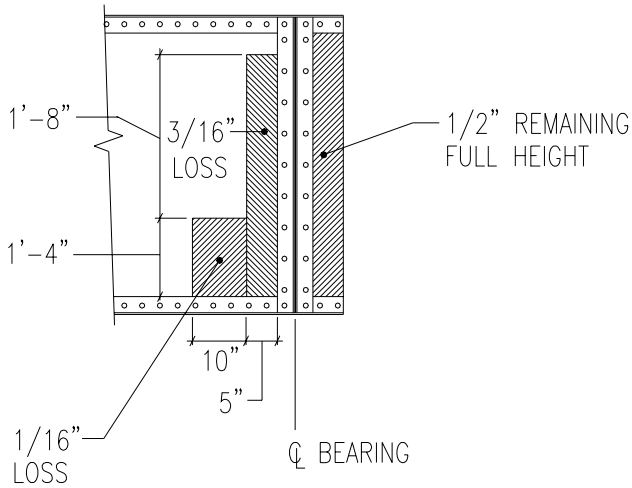

SECTION D–D
(NTS)

Appendix 6.3

CRACK ARRESTING DETAIL

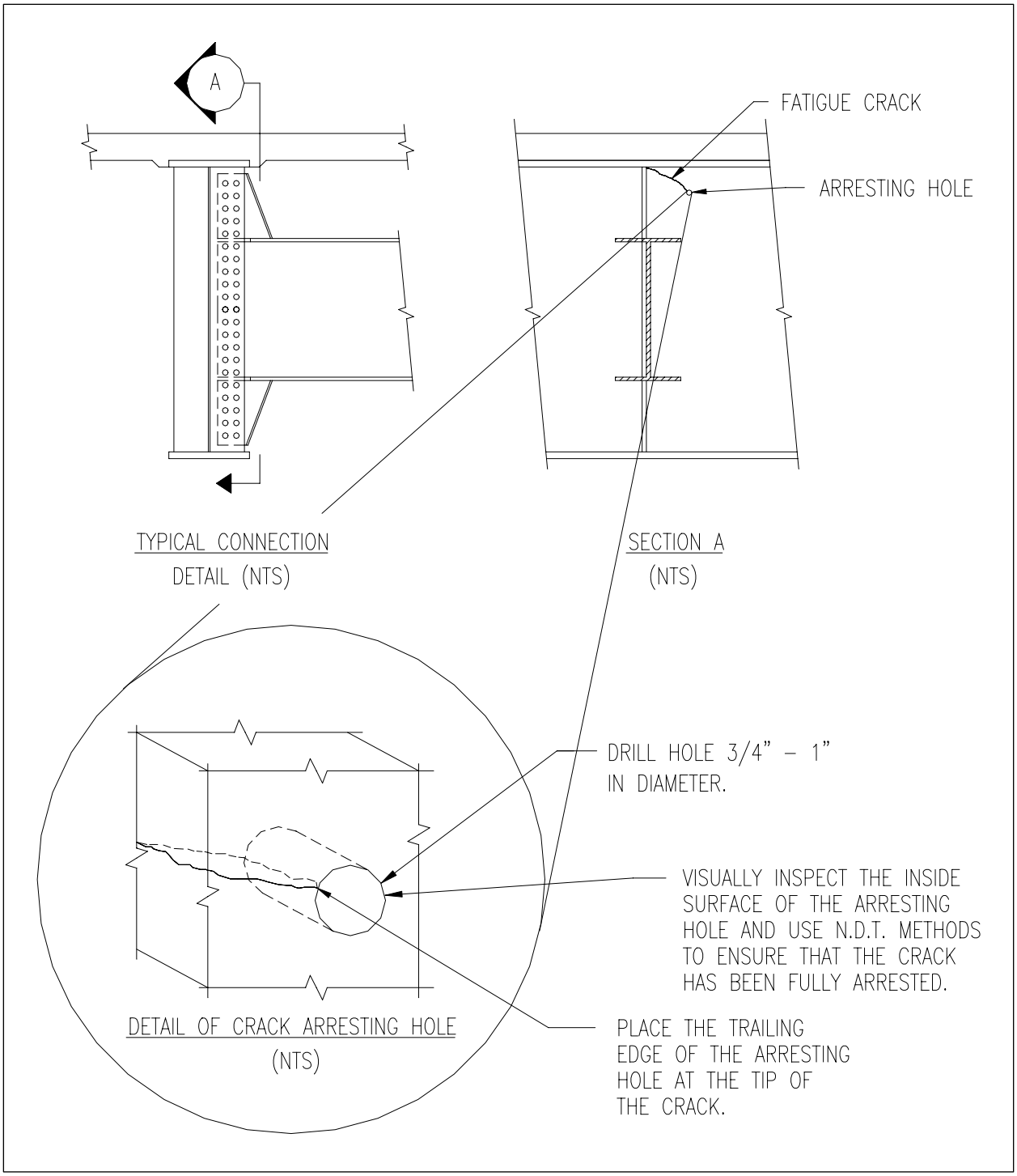

Appendix 6.4

CONCRETE DETERIORATION AND CRACKING

ADVANCED CONCRETE INSPECTION TECHNIQUES

Non Destructive Testing:

- Acoustic wave sonic/ultrasonic velocity measurements
- Delamination detection machinery
- Electrical methods
- Flat jack testing
- Ground-penetrating radar
- Impact-echo testing
- Infrared thermography
- Laser ultrasonic testing
- Magnetic field disturbance
- Neutron probe for detection of chlorides
- Nuclear methods
- Pachometer
- Rebound and penetration methods
- Ultrasonic testing

Destructive Testing:

- Carbonation
- Concrete permeability
- Concrete strength
- Endoscopes
- Moisture content
- Reinforcing steel strength

Figure A-4-1. *Advanced Concrete Inspection Techniques*

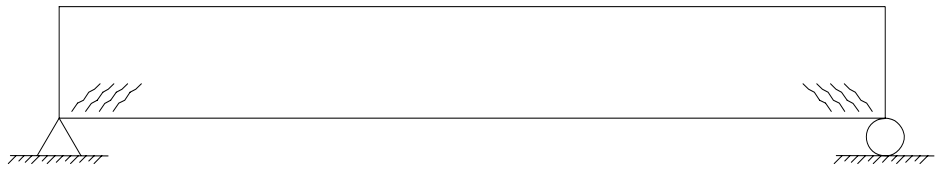

Figure A-4-2. *Typical Shear Crack Locations and Orientation.*

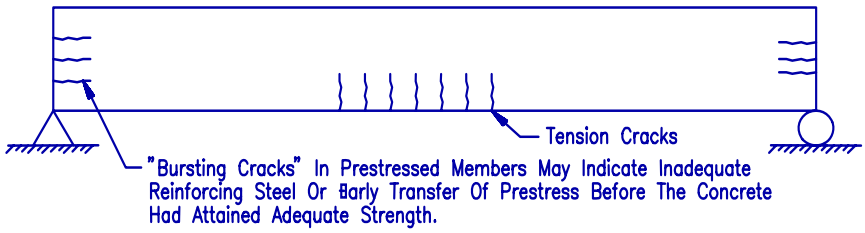

Figure A-4-3. *Typical Flexure Crack Locations*

Crack Width Defined*:

Hairline:	Less than 1/32 in. (0.8 mm)
Fine:	1/32 in. to 1/16 in. (0.8 mm to 1.5 mm)
Medium:	1/16 in. to 1/8 in. (1.5 mm to 3 mm)
Wide:	Greater than 1/8 in. (3 mm)

* Cracks which are categorized as fine or hairline, unless widespread or very concentrated, usually are caused by the curing process of the concrete (shrinkage temperature change, etc.) and pose no real threat to the integrity of the concrete component. When noted in field notes or a report, it is sufficient to express their presence by calling out the type of crack and not the actual width. However, when the crack has visibly opened (medium and wide cracks), the actual crack width should be noted in the field notes and the maximum size called out in the report (i.e. numerous wide cracks, up to ¼ in. (6 mm) noted.)

Scaling Classification:**

Light:	0 in. to ¼ in. (0 mm to 6 mm) in depth with no coarse aggregate exposed.
Medium:	¼ in to ½ in. (6 mm to 13 mm) in depth with coarse aggregate exposed.
Heavy:	½ in. to 1 in. (13 mm to 25 mm) in depth with coarse aggregate projecting from surface.
Severe:	Over 1in. (25 mm) (1 in.) in depth with loss of coarse aggregate.

** Most reinforced concrete members in service for any time and exposed to weather will show some light scale. This condition need not be considered a serious deterioration and its presence can be documented in a general note. Individual areas of light scaling do not need to be measured or called out.

Figure A-4-4. *Cracking and Scaling Definitions.*

Appendix 6.5

CULVERTS

The following information is condensed from the Federal Highway Administration report number FHWA-IP-86-2, Culvert Inspection Manual.

This information is presented in order to allow the inspector to become familiar with the various types of culverts that may be encountered in the field, to understand how culverts function hydraulically and structurally, and to understand those factors that affect the durability of the culvert.

This appendix reviews the most common culvert shapes, sizes and materials such as corrugated steel and aluminum, pre-cast concrete and cast-in-place concrete. The behavioral characteristics of stone masonry culverts are discussed in Appendix 6.7, Stone Masonry Arches and Culverts.

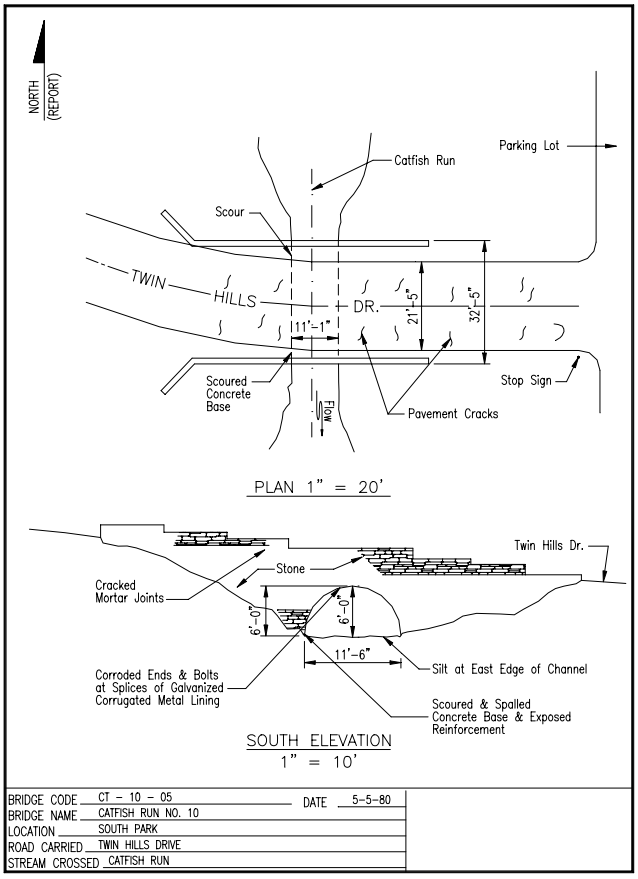

Figure A-5-1. *Example Field Note: Inspection Site Layout*

SHAPE	RANGE OF SIZES	COMMON USES
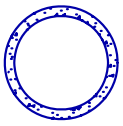 Circular	300 to 5000 mm reinforced 100 to 900 mm non-reinforced	Culverts, storm drains and sewers.
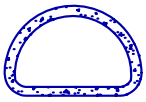 Pipe Arch	40 to 3400 mm equivalent diameter	Culverts, storm drains and sewers. Used where vertical clearance is limited.
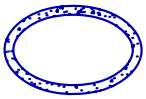 Horizontal Ellipse	Span x Rise 450 to 4000 mm equivalent diameter	Culverts, storm drains and sewers. Used where vertical clearance is limited.
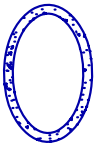 Vertical Ellipse	Span x Rise 900 x 4000 mm equivalent diameter	Culverts, storm drains and sewers. Used where lateral clearance is limited.
 Rectangular (Box Section)	Span 1 m to 4 m	Culverts, storm drains and sewers. Used for wide openings with limited vertical clearance.
 Arch	Span 7 m to 13 m	Culvert and storm drains. For low, wide waterway enclosures.

Table A-5-1. *Standard Concrete Pipe Shapes*

SHAPE	RANGE OF SIZES	COMMON USES
Round 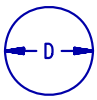	150 mm to 8000 mm	Culverts, subdrains, sewers, service tunnels, etc. All plates have the same radius. For medium and high fills or trenches.
Vertically Elongated (Ellipse) 5% elongation is common 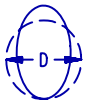	1 m to 7 m nominal; before elongating	Culverts, sewers, service tunnels and recovery tunnels. Plates of varying radii, shop fabrication. For appearance and where backfill compaction is only moderate.
Pipe Arch 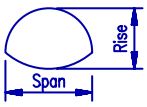	Span x Rise 450 mm x 300 mm to 6300 mm x 5400 mm	Where headroom is limited. Has hydraulic advantages at low flows. Corner plate radius: 450 mm or 800 mm for structural plate.
Underpass* 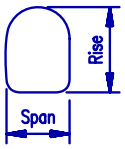	Span x Rise 1700 mm x 1800 mm to 6200 mm x 5400 mm	For pedestrian, livestock or vehicle passage (structural plate).
Arch 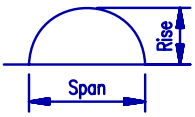	Span x Rise 1800 mm x 450 mm to 7600 mm x 3800 mm	For low clearance large waterway openings and aesthetics (structural plate).
Horizontal Ellipse	Span 6 m to 12 m	Culverts, grade separations, storm sewers and tunnels.
Pear	Span 7 m to 9 m	Grade separations, culverts, storm sewers and tunnels.
High Profile Arch 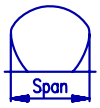	Span 6 m to 14 m	Culverts, grade separations, storm sewers, tunnels, ammunition magazines, and earth covered storage.
Low Profile Arch 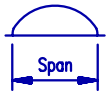	Span 6 m to 15 m	Low-wide waterway enclosures, culverts and storm sewers.
Box Culverts 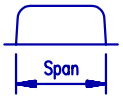	Span 3.0 m to 6.4 m	Low-wide waterway enclosures, culverts and storm sewers.
Special	Various	For lining old structures or other special purposes. Special fabrication.

* For equal area or clearance, the round shape is generally more economical and simpler to assemble.

Table A-5-2. *Standard Corrugated Steel Culvert Shapes*

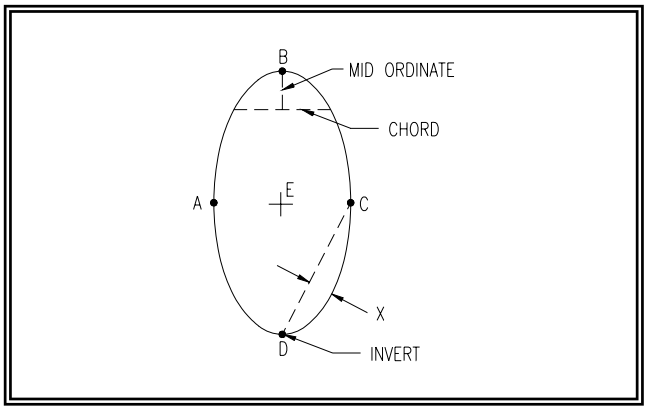

Figure A-5-2. *Vertical Elongated Corrugated Metal Pipe*

Circular or Vertical Elongated Corrugated Metal Pipe

- Inspector notes:

  1. Minimum required measurements:
     Span = AC
     Rise = BD
  2. If flattening is observed, measure the chord and mid ordinate (X) of the flattened area.
  3. If horizontal span AC exceeds design value by more than 10%, measure vertical diameter = BD.

- Vertical deflection is expected during construction, slightly increasing the as-built horizontal span (AC).

- Barrels with shallow cover tend to have the sides pushed inward due to high lateral-to-vertical pressure ratios, decreasing the as-built horizontal span (AC). Barrels with deep cover tend to have sides pushed outward due to low lateral-to-vertical pressure ratios, increasing the as-built horizontal span (AC).

- Flattening of the top arc of the pipe is caused by unstable backfill. This may be compounded by the barrels reduced ability to transmit compressive forces when deteriorated.

- Flattening of the top arc is more serious than flattening of the invert as long as flattening of the invert is not excessive.

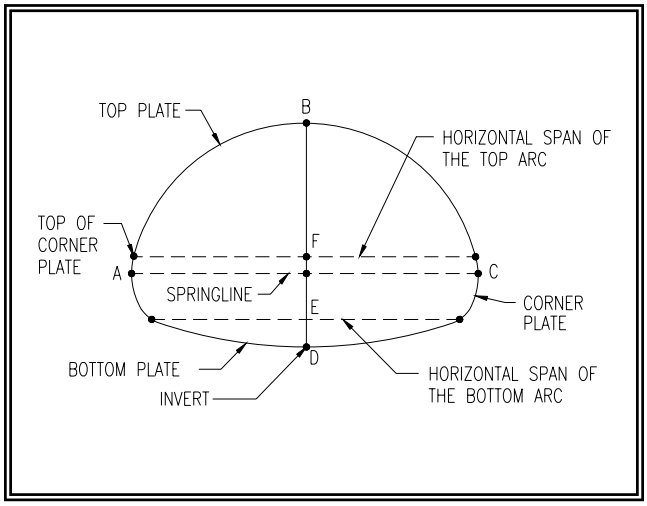

Figure A-5-3a. *Corrugated Metal Pipe Arch*

Corrugated Metal Pipe Arch

- Inspector notes:

  1. Minimum required measurements:
     Span = AC
     Rise = BD
  2. If AC exceeds the design value by 3% or more, measure BF, ED, the horizontal span of the top arc, and the horizontal span of the bottom arc.

- The load is transmitted to the foundation primarily at the connection of the corner plates to the bottom plate. Soil pressure at the invert is relatively small.

- Inadequate soil support under the exterior portions of the bottom plate may cause the ends of the bottom plate to push down while the center of the bottom plate stays in place. This may give the appearance that the bottom plate has been pushed up relative to its ends.

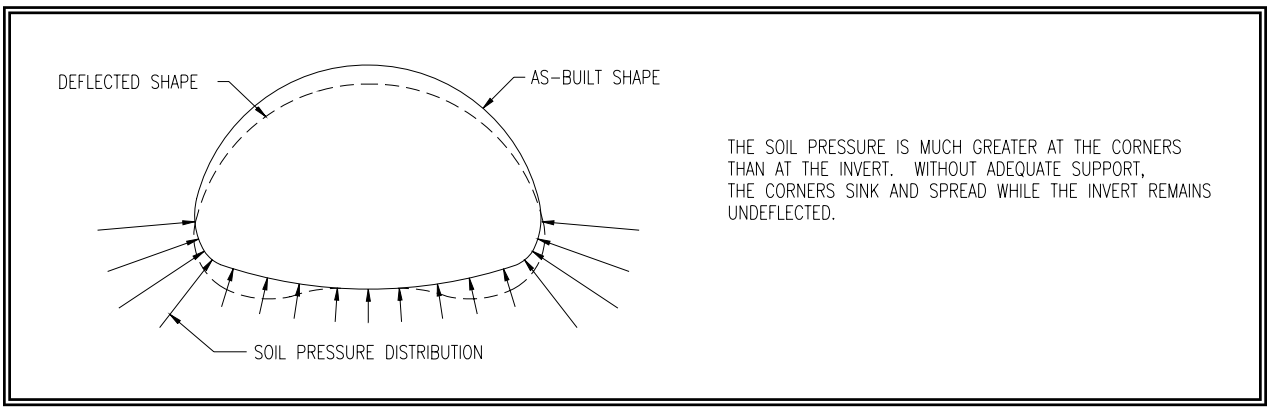

Figure A-5-3b. *Culvert Soil Distribution and Typical Deflected Shape*

- The bottom plate should be inspected for flattening and the side plates should be inspected for spreading.

- The top plate should be inspected for flattening.

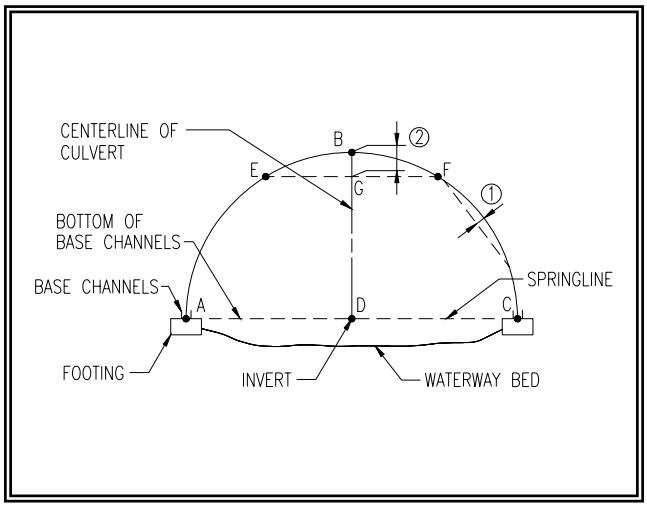

Figure A-5-4. *Structural Plate Arch*

<u>Structural Plate Arch</u>

- Inspector notes:

  1. Minimum required measurements:
     Span = AD + DC
     (AD should = DC)
     Rise = BD
     (Measured at the culvert centerline)
  2. Minimum required elevation:
     Point B.
  3. If BD is greater than design by 5% or more, check side curvature for flattening.
  4. If AD and DC are not equal, racking has occurred and the side curvature on both sides should be checked by measuring the half arc-mid-ordinates (point 1). Record the chord length used.
  5. If BD is less than design by 5% or more, check the top curvature at the centerline of the arch (point 2) by measuring the mid-ordinate BG of chord EF. Record the chord length (EF) used.

- Flattened sides and peaked crown indicate lateral forces due to backfill are much greater than vertical forces due to cover fill. Flattening of the top arc indicates high vertical forces and possible unstable backfill on the sides of the arch.

- Racking of the arch (tilting of the arch to one side giving a nonsymmetrical X-section about

the centerline), indicates a poor job of backfilling or erosion of the backfill material on one side adjacent to the culvert barrel.

- If dimension AD differs from DC by 10” (250 mm) or 5% of the span length (which ever is less), racking has occurred and measurements as described in item #4 , should be taken to determine the extent of arch flattening on the side opposite the racking.

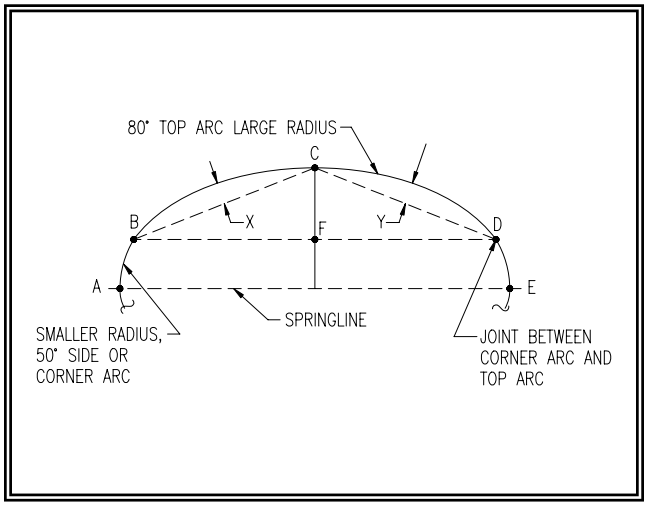

Figure A-5-5. *Typical Crown Section*

<u>Crown Section of Long Span Culverts</u>
(Low Profile, High Profile, Pear Shaped, Horizontal Ellipse)

- Inspector notes:

  1. Minimum required measurement:
     Span = AE
  2. Minimum required elevations:
     Points B, C, and D
  3. Calculate the value of CF:

$$CF = Elev.C - \frac{(Elev.B + Elev.D)}{2}$$

  4. If CF is greater than or less than the design value by 10% or more, measure the top arc chord = BD.
  5. If BD differs by more than 3% from the design value, measure, for each half of the top arc, the chord length and half top arc mid-ordinate = X & Y.

- The critical shape factor for the crown section of long span culverts is the top arc geometry.

- Top arc and side arcs should appear to be smooth in curvature (no distortion, flattening,

peaks or cusps) and symmetrical (no racking) about the centerline of the culvert.

- Elevation measurements are required to monitor the rate of settlement, if settlement has occurred or is continuing.

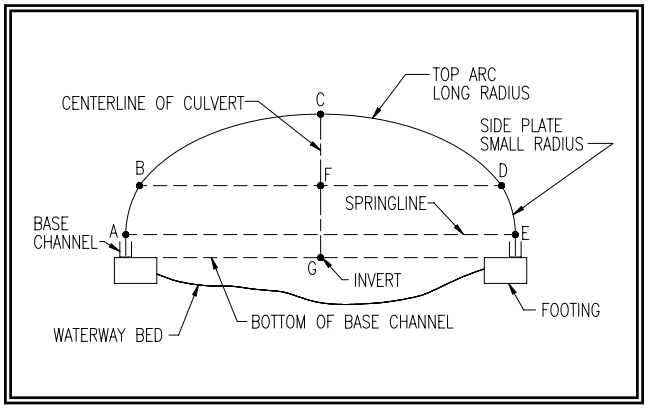

Figure A-5-6. *Low Profile Arch, Long Span Culvert*

<u>Low Profile Arch Long-Span Culvert</u>

- Inspector notes:
  1. Minimum required measurements:
     Span = AE
     Rise = CG
     Top Arc Chord = BD
     (Note: BD is measured at the joint between top plate and side plates.)
  2. Minimum required elevations:
     Points B, C, and D.
  3. Calculate the value of CF:

$$CF = Elev.C - \frac{(Elev.B + Elev.D)}{2}$$

- Because of the arch configuration, lateral soil pressures will attempt to flatten the sides and raise the top.

- If the base channels into which the ends of the culvert barrel are fitted and anchored, are not parallel to the centerline of the structure, or if the backfill is not placed symmetrically during construction, racking may occur during erection.

- If racking has occurred, the crown (point C) will move laterally causing the curvature on one side to flatten while the curvature of the other side increases. Backfill pressures may cause this condition to worsen.

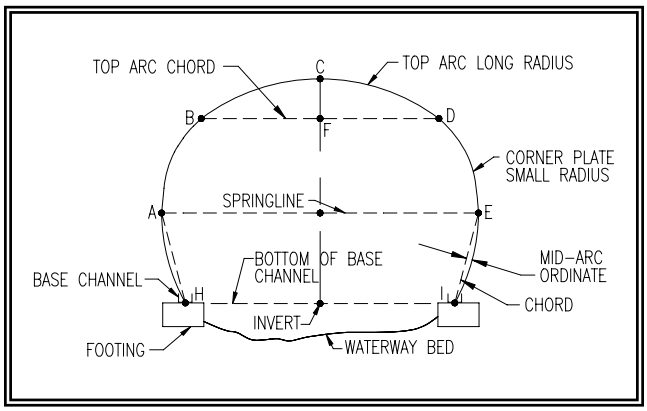

Figure A-5-7. *High Profile, Long Span Culvert*

High Profile Arch Long-Span Culvert

- Inspector notes:

  1. Minimum required measurements:
     Span = AE
  2. Minimum required elevations:
     Points B, C, D, H, and I.
  3. Calculate the value of CF:

$$CF = Elev.C - \frac{(Elev.B + Elev.D)}{2}$$

- High profile arches are similar to low profile arches except the radius of curvature of the portion of the culvert barrel below the springline is significantly increased.

- Shallow fills or minimum cover over the crown may cause the lateral soil pressure on the side walls to exceed the loads over the culvert. This condition will cause the side wall to flatten or buckle inward or cause the crown to peak.

- Racking may occur if the soil pressures are not symmetrical around the culvert or if the backfill was not placed symmetrically during construction.

- If flattening of the sidewalls is observed, the mid-ordinate shall be measured at the location of flattening.

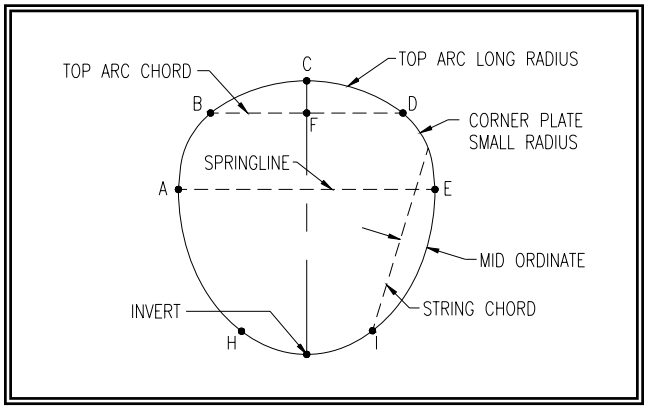

Figure A-5-8. *Pear Shape Long Span Culvert*

<u>Pear Shape Long-Span Culvert</u>

- Inspector notes:

  1. Minimum required measurements:
     Span = AE.
  2. Minimum required elevations:
     Points B, C and D.
  3. When flattening is observed in the side plates, check the mid-ordinate of the flattened area. Record the chord length used.

- Crown sections of pear shaped culverts differ from that of other long span culverts in that the small radius corner arcs stop above the spring line and the large radius side plates extend above the plane of the horizontal span. Therefore, when measuring for flattening of the side plates, the entire arc section should be used as indicated above.

- Side flattening, particularly in shallow fill situations, is the most critical shape factor.

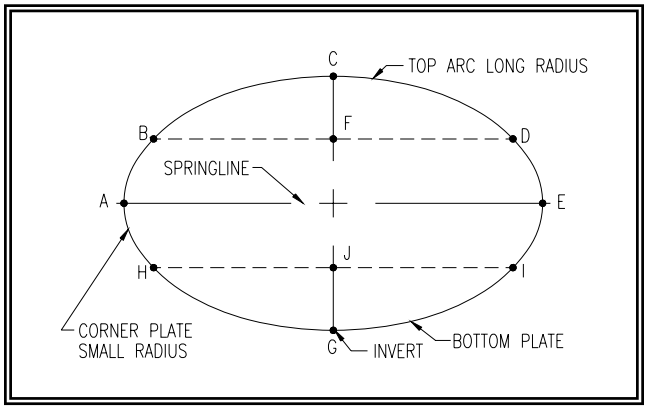

Figure A-5-9. *Horizontal Ellipse Long-Span Culvert*

Horizontal Ellipse Long-Span Culvert

- Inspector notes:

  1. Minimum required measurement:
     Span = AE
  2. Minimum required elevations:
     Points B, C, D and G
     (if possible).
  3. When bottom flattening is observed, Measure bottom plate curvature:
     a. Bottom arc chord = HI
     b. Bottom arc middle ordinate = JG

- Adequate curvature in the crown section is the critical shape factor.

- Soil pressure distribution is similar to that of the pipe arch with the greatest pressures occurring at the 4 o'clock and 8 o'clock positions. Pressure at the invert is relatively minor.

- The ends of bottom plate tend to push down into the soil while the center of the bottom plate does not move. This will give the appearance that the bottom plate has been pushed up.

- Look for differential settlement between the sides and bottom of the culvert barrel.

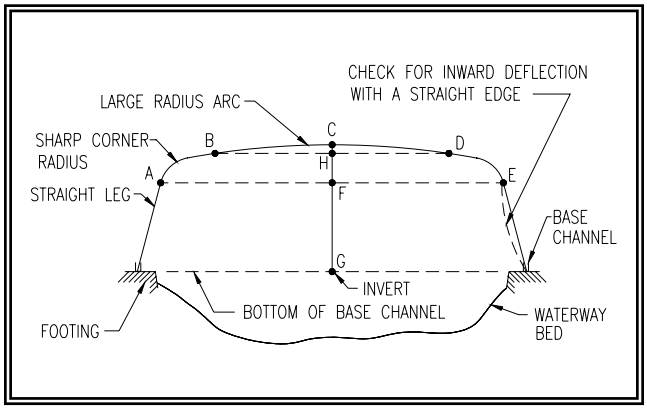

Figure A-5-10. *Corrugated Metal Box Culvert*

Corrugated Metal Box Culvert

- Inspector notes:

  1. Minimum required measurements:
     Span = AE
     Rise = CG
  2. If it is not possible to measure CG, measure BD and CH.
  3. If CG differs from design by more than 12% or AE differs from design by more than 3%, measure:
     a. Top arc chord = BD
     b. Top arc middle ordinate = CH

- This structure type relies more on its own internal structural capacity in shear and moment to carry the vertical loads than it does on the lateral earth pressure as with other culvert shapes.

- The geometry of the top arc is very flat to begin with and cannot withstand significant deflections before partial or total failure occurs.

- An inward deflection of the side walls is more critical than an outward deflection as the latter would be restrained by the soil pressure.

Appendix 6.6

DECK JOINTS

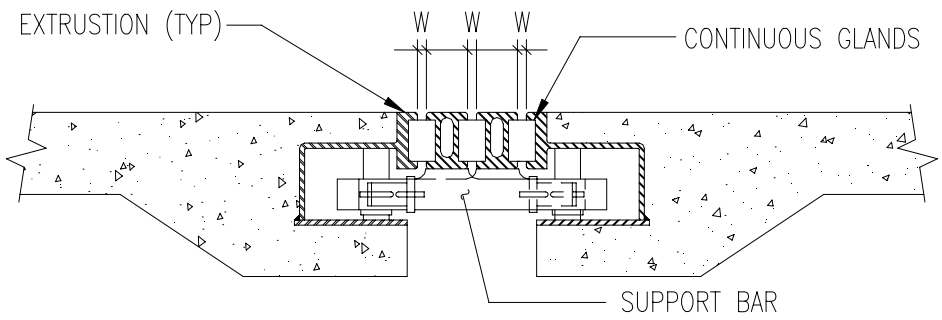

Figure A-6-1 *– Modular Type Expansion Joint*

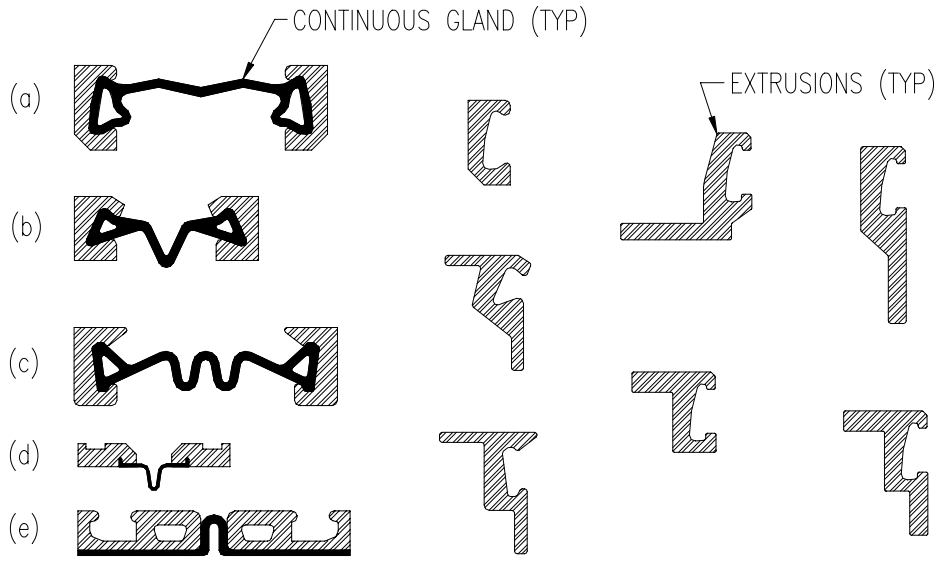

Figure A-6-2 *– Gland Type (a) through (e)*

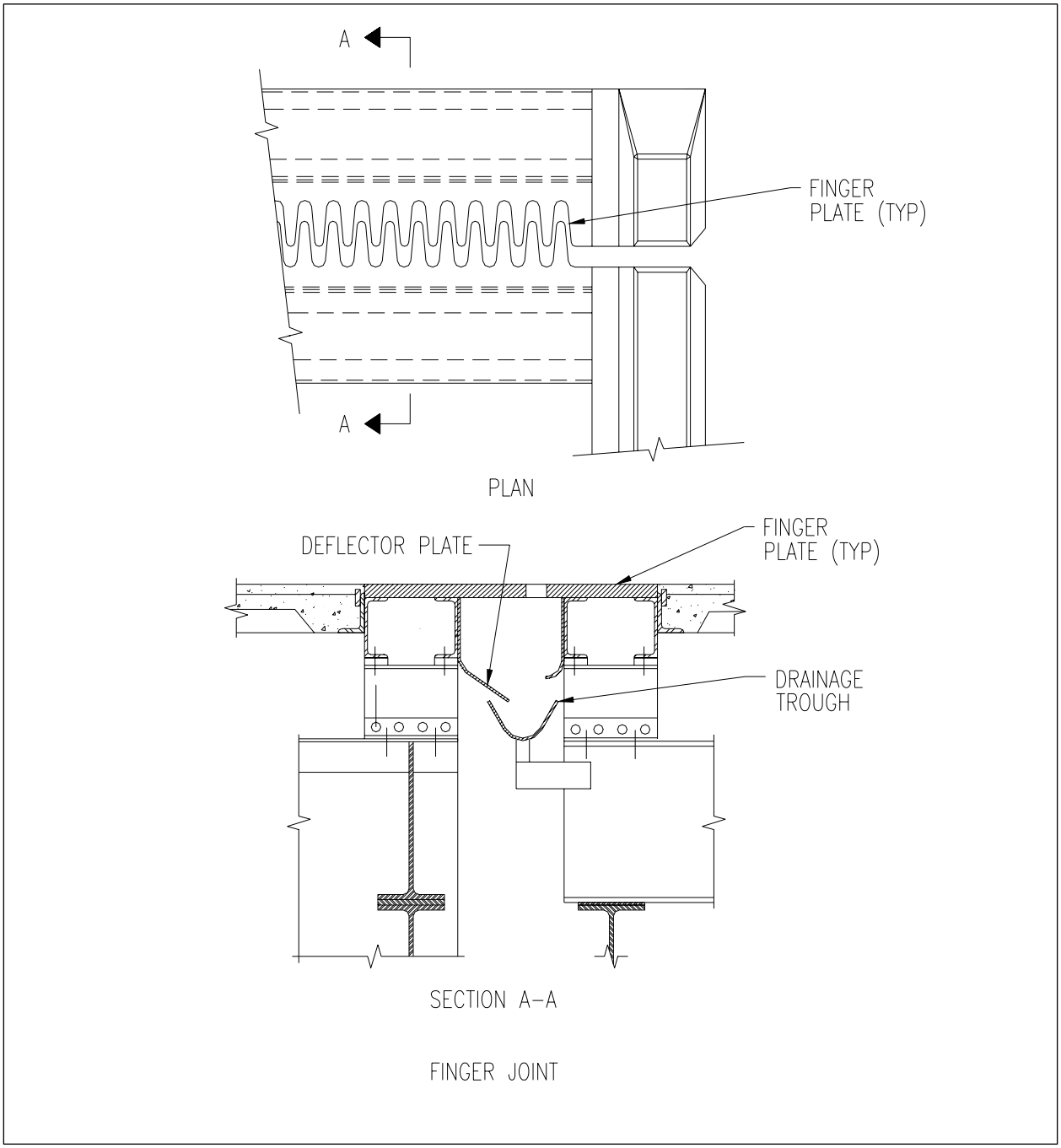

Figure A-6-3 *– Typical Finger Joint*

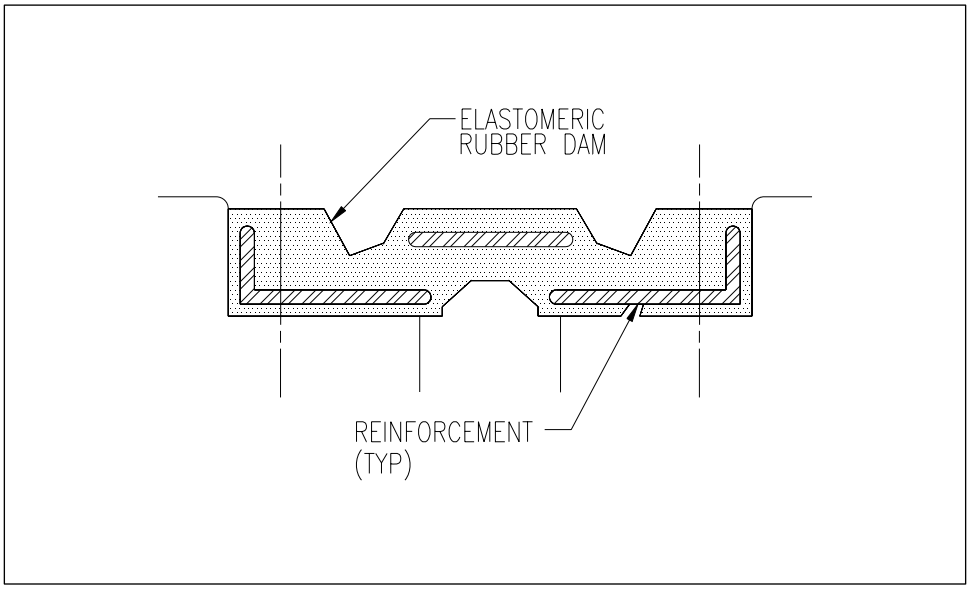

Figure A-6-4 *– Transflex Type Joint*

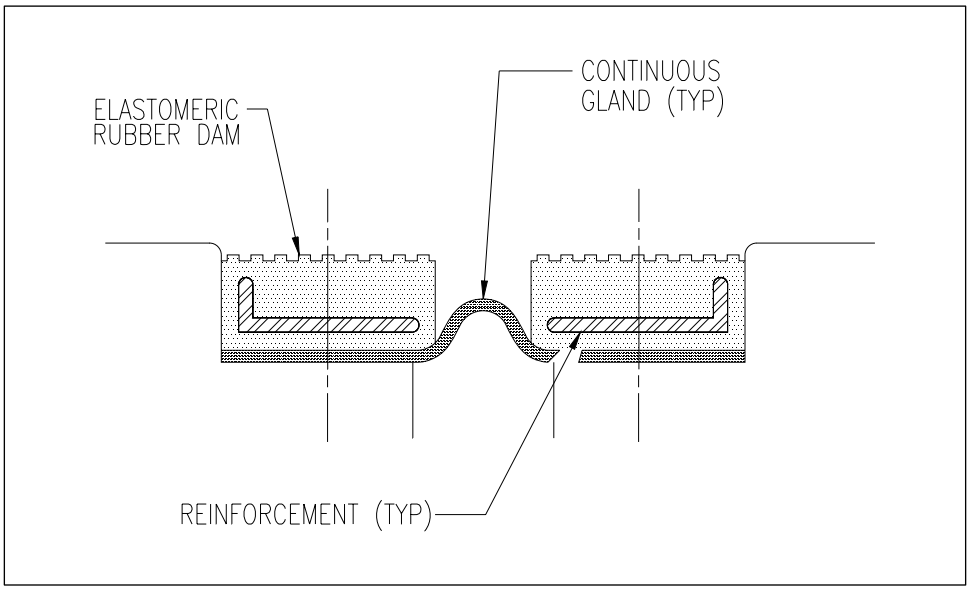

Figure A-6-5 *– Segmental Expansion Joint Device*

Appendix 6.7

STONE MASONRY ARCHES AND CULVERTS

The following description of failure modes for stone masonry arches and culverts was taken from A Treatise on Masonry Construction by Barker, Chapter 18. It is intended to give the field inspector a better understanding of the masonry arch and culvert behavior so that field observations can be more accurately assessed as to their possible cause and criticality. This information however, does not cover all cause and effect conditions, nor should they be considered the only cause and effect conditions possible for stone masonry arches or culverts. As required, a thorough detailed investigation and analysis should be conducted to determine actual cause and effect conditions.

Figure A-7-1 illustrates the nomenclature used throughout this appendix and in Sections 6.2.13 and 10.7 of this manual.

Construction Techniques:

Stone masonry culverts, arch rings and spandrel walls are constructed using one of two methods of construction. The first method is called "dry laid." In this method, the stones are placed against one another with no joint filler material and rely totally on the friction forces developed between adjacent stones to keep the stones from sliding. The advantage of this construction is that the stability of the joint does not rely on the presence and integrity of the joint material. Only the percentage of surface area in contact is of importance and is usually adversely affected only over long periods of time. The disadvantage of this method is that the large voids between stones are readily susceptible to freeze/thaw action due to penetrating water. The second method utilizes joint material that conforms to the surface contours of the stone. The joint material may be either pointed mortar or concrete. The use of joint material provides an even stress distribution across the joint and increases sliding resistance by increasing the surface area that resists displacement forces. The joint relies on the presence and integrity of the joint material to function properly. Missing or ineffective joint material can serve to increase bearing and frictional stresses to the point where the stone may crush or displace.

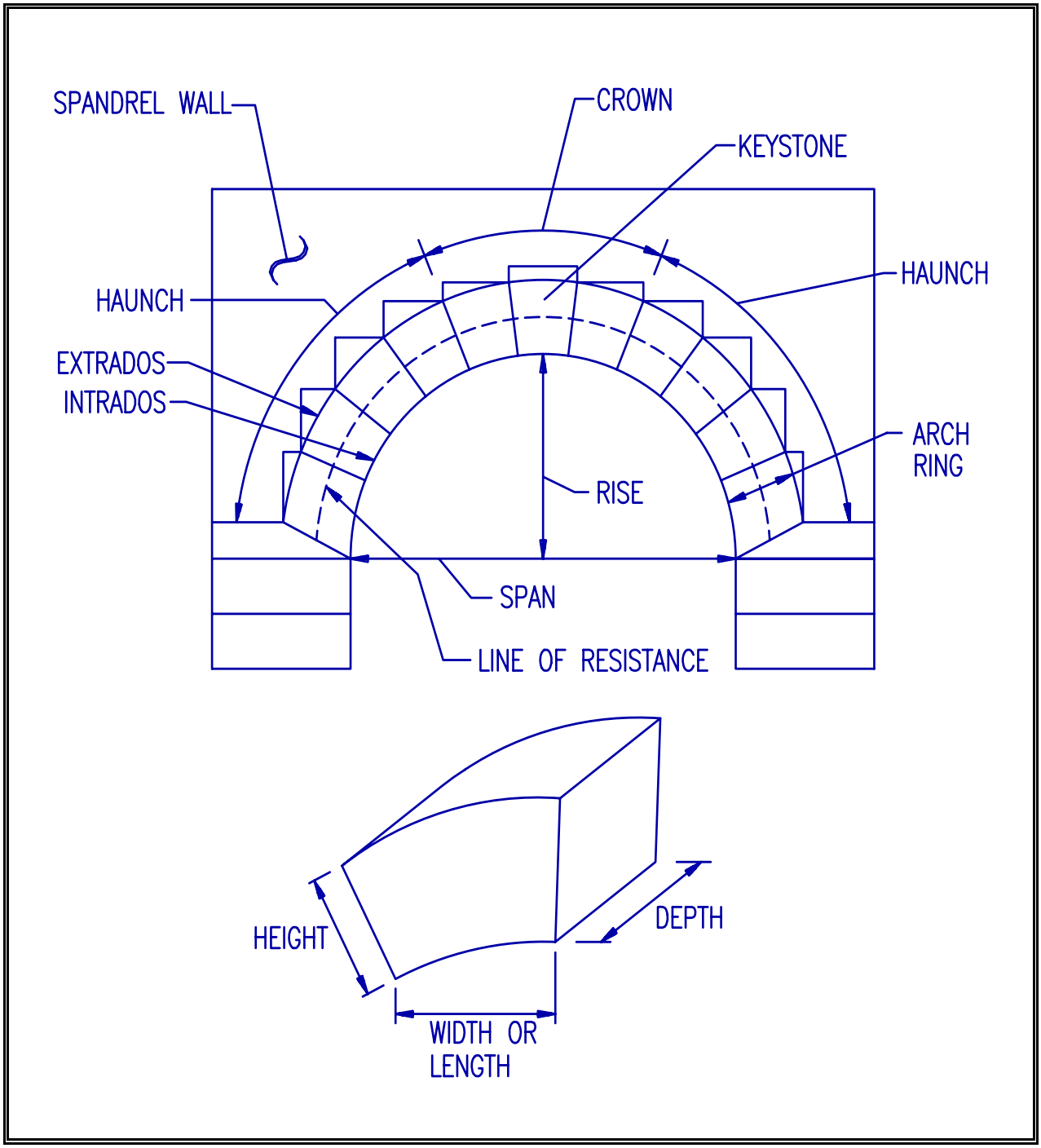

Figure A-7-1. *Typical Arch/Culvert Nomenclature*

Crushing:

To illustrate the effects of crushing of stone masonry, the following example is used. Figure A-7-2(a) shows the stress distribution on the end of a stone in reaction to applied Force P. The compressive stress in the extreme fiber of the stone (point B) has not yet reached the ultimate crushing strength of the stone (represented by the dashed line). Figure A-7-2(b) represents the same stone in which the location of the applied Force P has shifted, or the magnitude of the force has increased, resulting in the edge of the stone reaching the ultimate crushing strength of the stone. In Figure A-7-2(c), force P has further increased or shifted such that a portion of the stone cross section has reached ultimate crushing strength and has failed (represented by the hatched area). Figure A-7-2(d) represents the stress distribution just prior to total failure of the stone in which the location where Force P is applied approaches the inner limit of the portion of the cross section which has reached ultimate crushing strength (point A'). When the location where Force P is applied becomes coincidental with point A', total failure of the stone will occur resulting in serious reduction in capacity and potential failure of the arch or culvert superstructure.

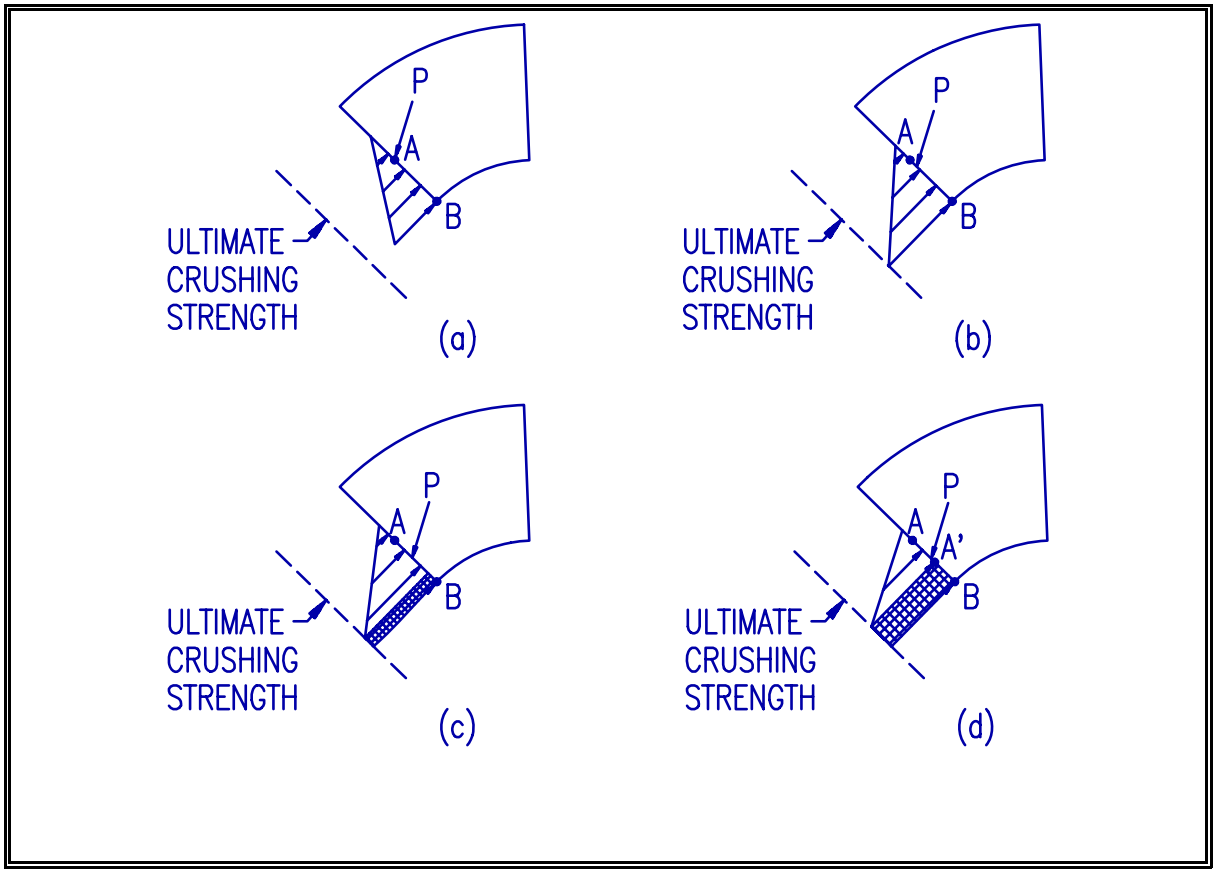

***Figure A-7-2. S**tress Distribution on Arch or Culvert Ring Stones*

Sliding:

Sliding of one arch or culvert ring stone against another is resisted by the friction force (Force F) that exists between surfaces at a joint (see Figure A-7-3). The ring stone is stable against sliding when the line of resistance makes with the normal an angle less than the angle of friction between the joint mortar and the stone. If this angle is exceeded, due a shifting of the line of resistance or an increase in load, the component of the reaction resultant force parallel with the joint (Force X) will exceed the frictional force between the stone and mortar and sliding may occur.

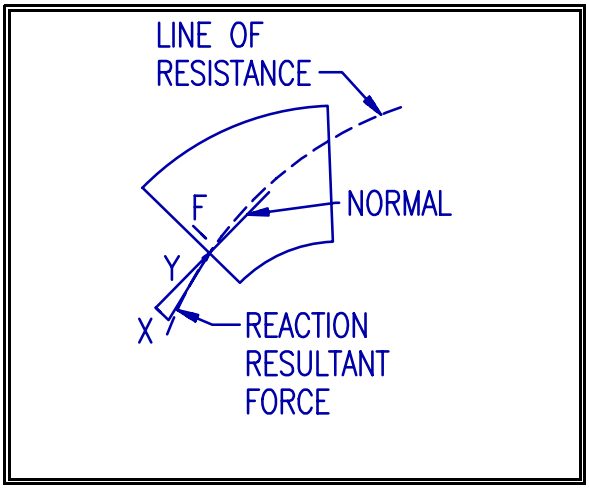

Figure A-7-3. *Friction Force Model for Arch and Culvert Ring Stones*

Figure A-7-4(a) and (b) represents the two possible failure modes due to sliding. Figure (a) shows the haunches of the arch sliding out and the crown slipping down and represents the situation where the rise is less than the span. In Figure (b), the rise is greater than the span and the crown will tend to push up and the haunches push in.

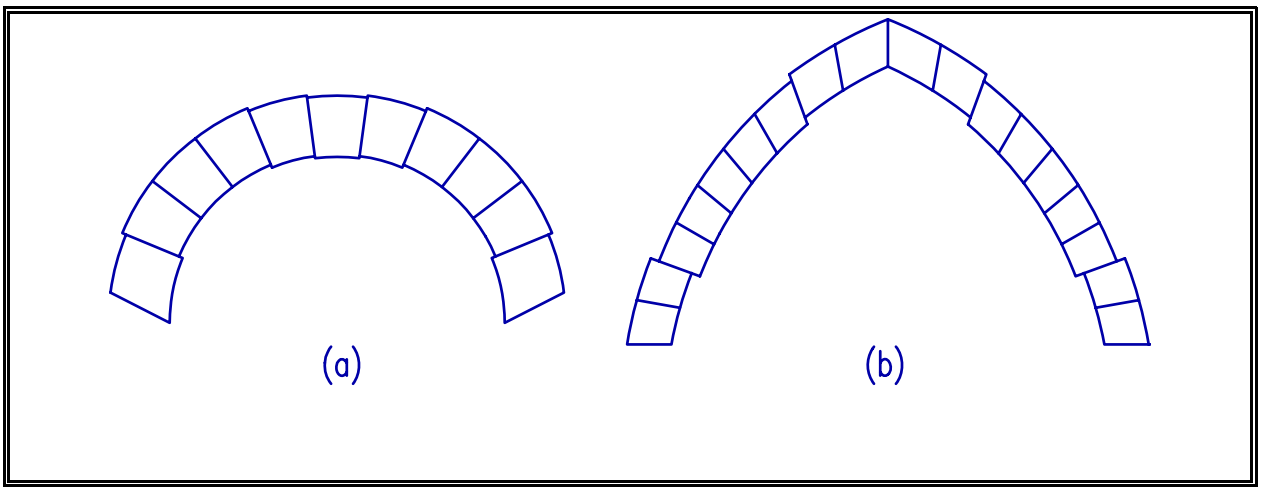

Figure A-7-4. *Sliding of Arch or Culvert Ring Stones Due to Overstress*

Rotation:

It is frequently prescribed that the line of resistance shall pass through the middle third of each joint. If the line of resistance departs from the middle third, the remote edge of the joint will be in tension. If the joint is unable to resist tension, it will open on the side farthest from the line of resistance. The figures below represent two possible methods by which the arch may give way due to rotation. Figure A-7-5(a) represents the failure mode most frequent for flat arches and Figure A-7-5(b) represents the failure mode most frequent for pointed arches. Openings along the extrados are more serious than those along the intrados because the former allows for the infiltration of water and possible increased deterioration due to freeze/thaw action.

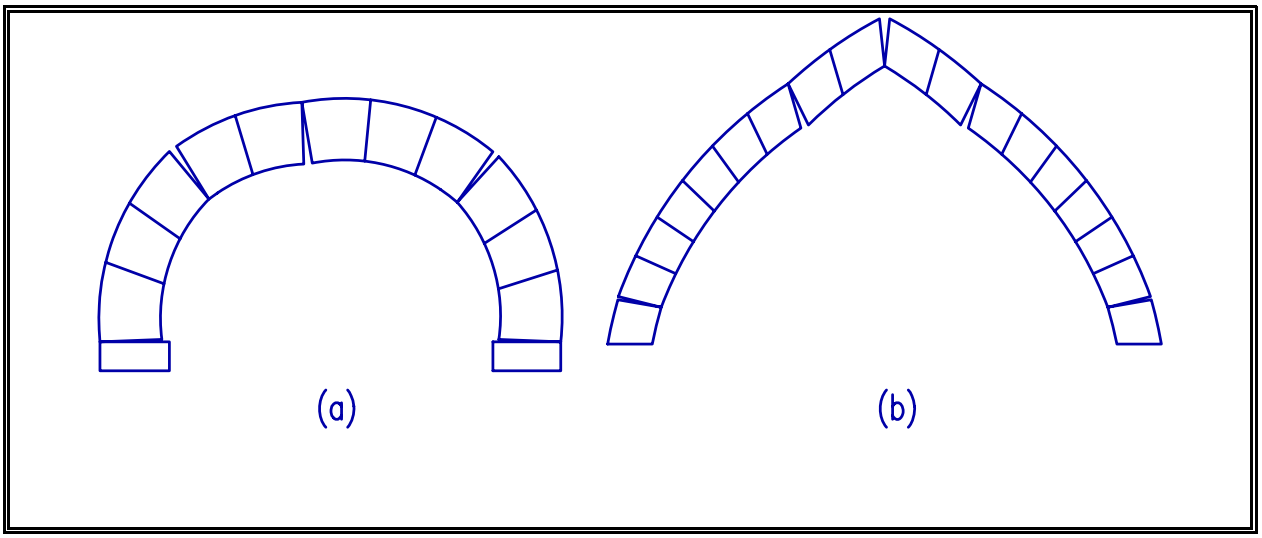

***Figure A-7-5. Rotation** of culvert or arch ring stones due to a shifting of the line of resistance.*

Appendix 6.8

TIMBER DECAY AND DETERIORATION

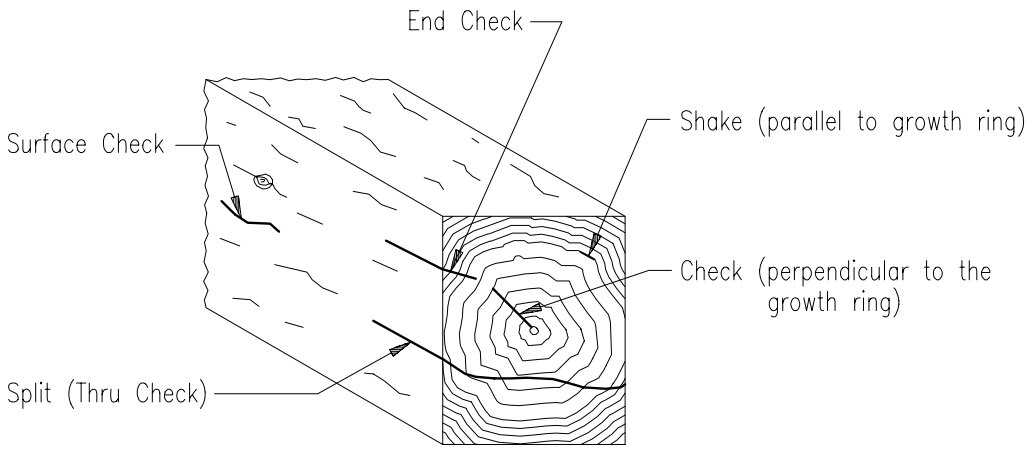

Figure A-8-1. *Timber Defect Nomenclature*

FUNGI TYPES:

- Molds and Stains: Superficial discoloration with no decay. Their presence, however, creates favorable conditions for other destructive fungi growth.
- Soft Rot: Only the surface of the wood is attacked. Therefore, the member is not normally significantly weakened.
- Brown Rot: Fungi feeds on the cellulose of the wood cells turning them brown in color and crumbly in texture. The result of their presence may reduce the load carrying capacity of the member.
- White Rot: Fungi feeds on the cellulose and lignin of the wood cells turning the wood white in color and stringy in texture. The result of their presence may reduce the load carrying capacity of the member.

[Note: Look for fruiting bodies (Concs) that release fungus spores and promote timber decay; typically fan shaped growing horizontal to the timber surface.]

CONDITIONS FAVORABLE TO FUNGI GROWTH:

- Sufficient Oxygen (≥ 20%)
- Favorable Temperature Range (01C (321F) to 321C (901F))
- Adequate food supply (the wooden structure itself)
- Adequate supply of moisture (30% minimum)

PARASITE TYPES:

- Termites: Pale colored, soft bodied parasites that eat and digest the wood. All damage is to the interior of the timber member and is therefore not noticeable on the surface. Look for long white mud shelter tubes or runways extending up from the ground.

- Marine Borers: Water-borne parasites that do not occur in fresh water. Damage is most extensive between mean high and mean low tide levels, although damage may extend down to the mudline. Borers may use the wood for nourishment creating relatively small holes on the surface while excavating the interior (Figure A-8-2), or burrow small excavations into the wood for shelter. As waves and tidal action breakdown the thin covering of wood fiber over the burrow, the borers dig deeper into the member resulting in progressive deterioration over time. Look for the typical hour glass shape of the timber member between tidal zones (Figure A-8-3).

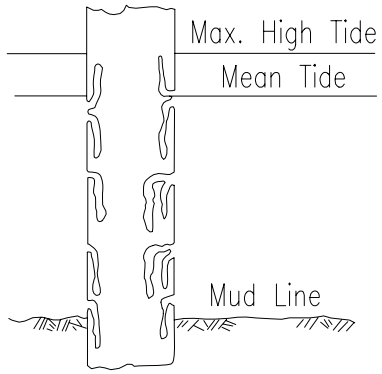

Figure A-8-2. *Timber Damage by Marine Borers - Type 1*

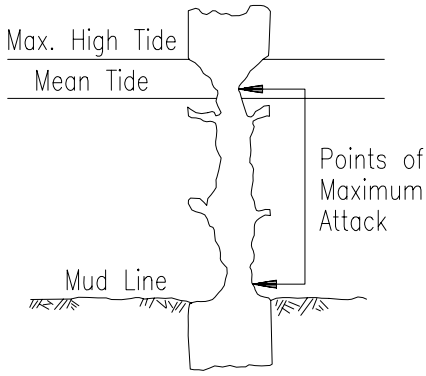

Figure A-8-3. *Timber Damage by Marine Borers Type 2*

- Carpenter Ants: Large black ants that hollow out the interior of timber members to make nests. Look for sawdust piles at the base of the timber and ants in the vicinity of, or moving in or out of, access holes.

- Powder Post Beatles: Small beetles that burrow into the timber and leave the timber surface pot-marked with holes. A powdery dust is usually dislodged from the holes and the entire interior of the timber may be excavated.

- Caddis flies: Insects, which while in the larva and pupa stages, burrow under the surface of the wood for protection. Found in fresh or brackish water.

ADVANCED TIMBER INSPECTION TECHNIQUES

Non-Destructive Testing

- Pol-Tek
- Spectral Analysis
- Ultrasonic Testing
- Hammer Tapping

Destructive Testing

- Boring, Coring, or Drilling
- Moisture Content
- Probing
- Shigometer

Appendix 6.9

CONCRETE OPEN AND CLOSED ARCHES AND FRAME

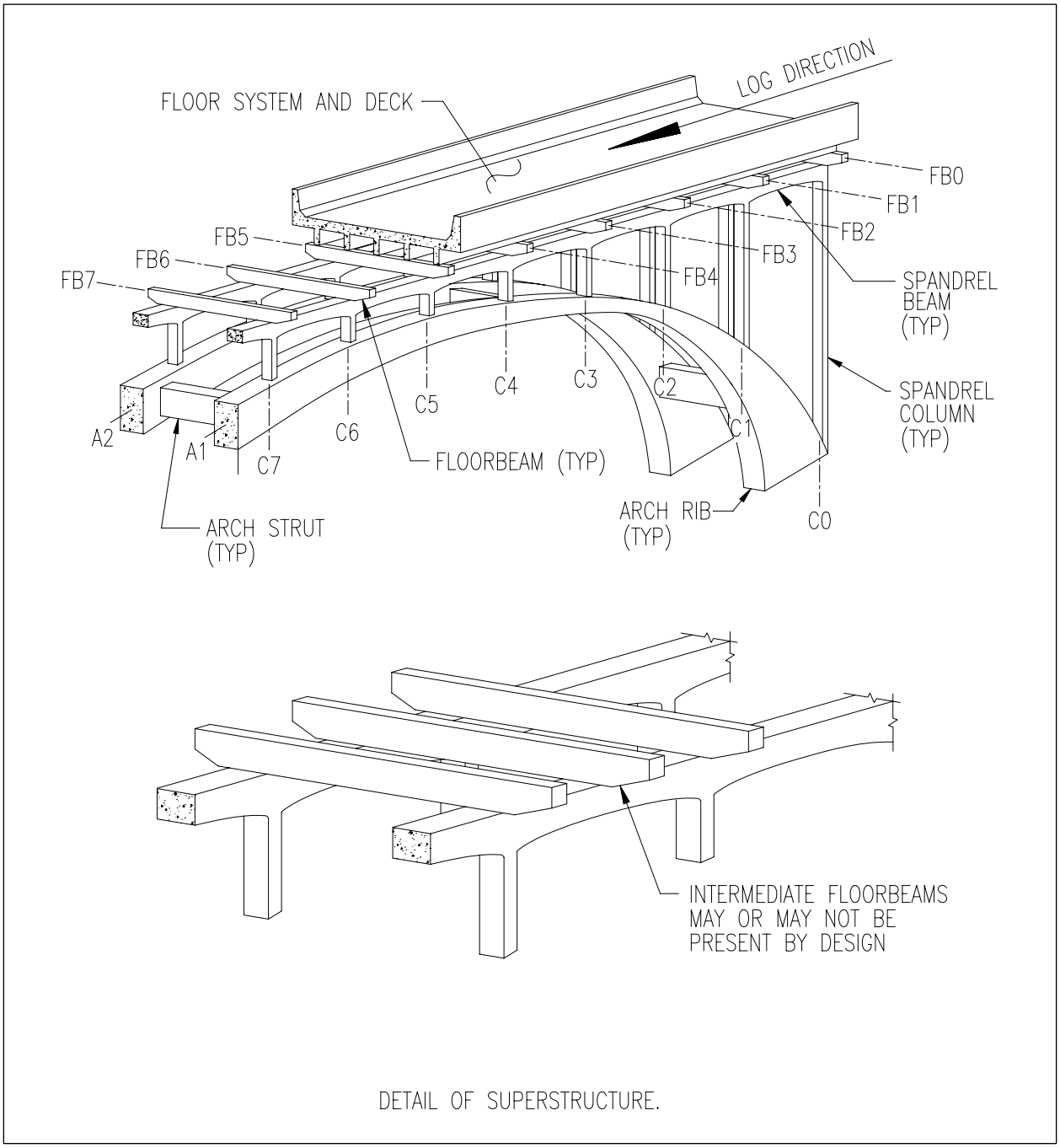

Figure A-9-1 *- Open Spandrel Arch Configuration and Nomenclature*

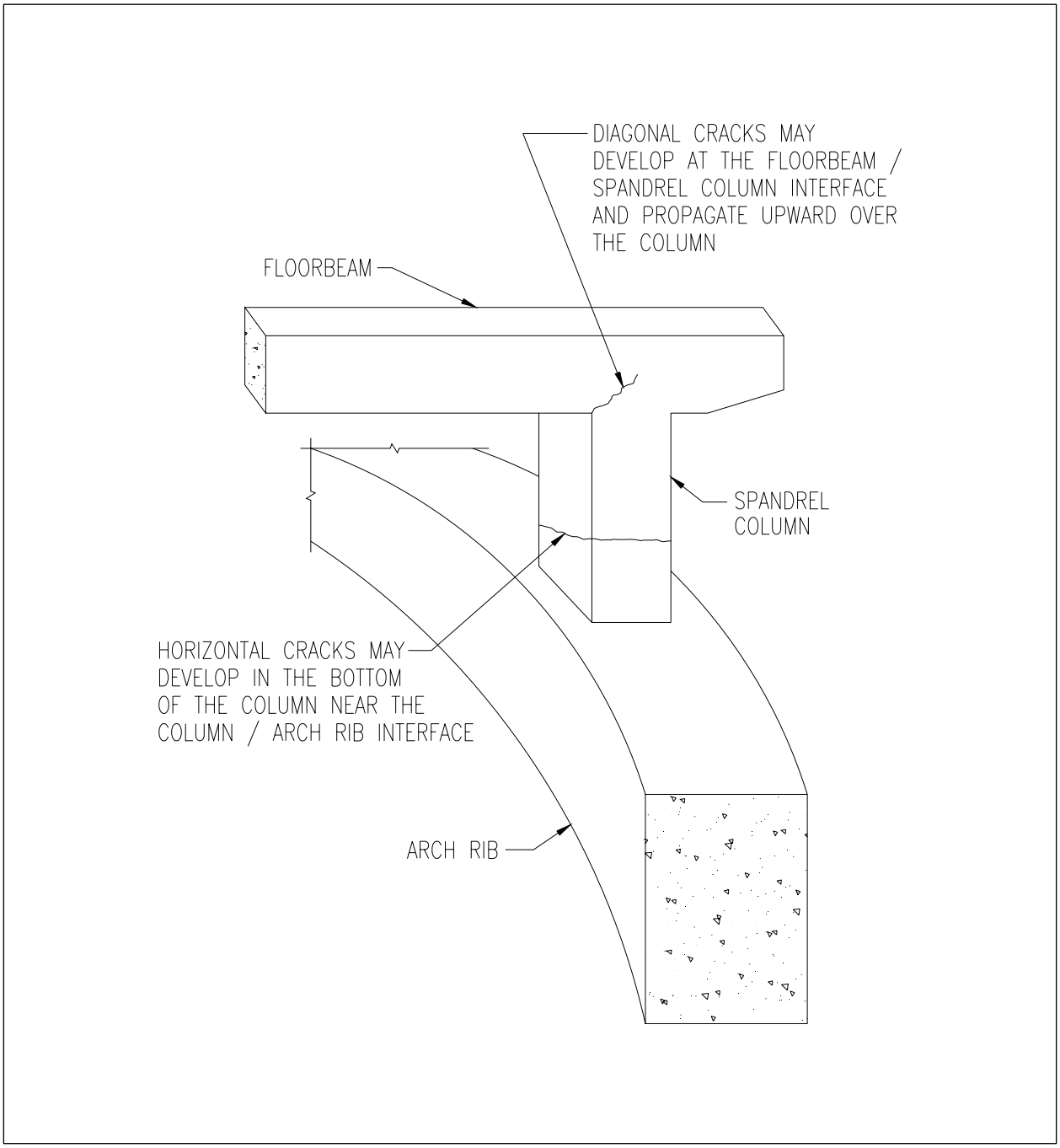

Figure A-9-2 *– Concrete Cracking Due to Differential Arch Rib Deflection*

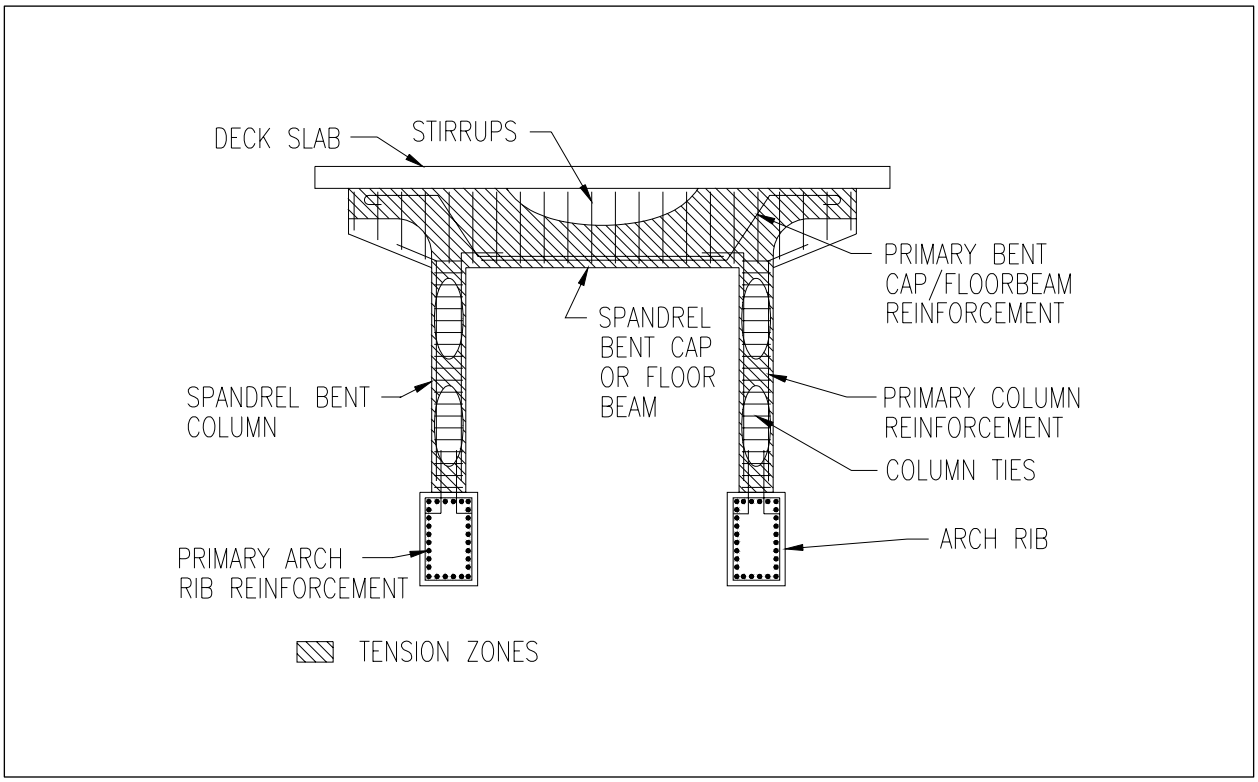

Figure A-9-3 *- Open Spandrel Arch Reinforcement and Tension Zones*

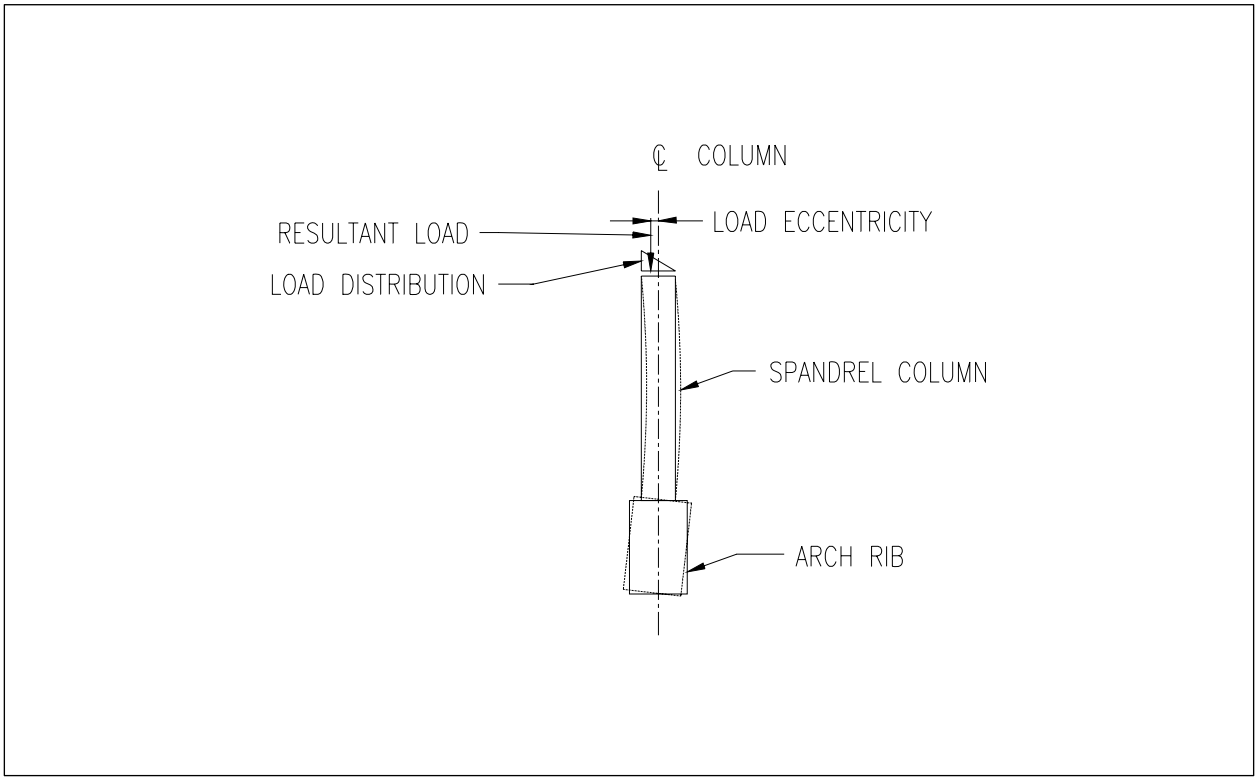

Figure A-9-4 *- Spandrel Column Eccentric Loading*

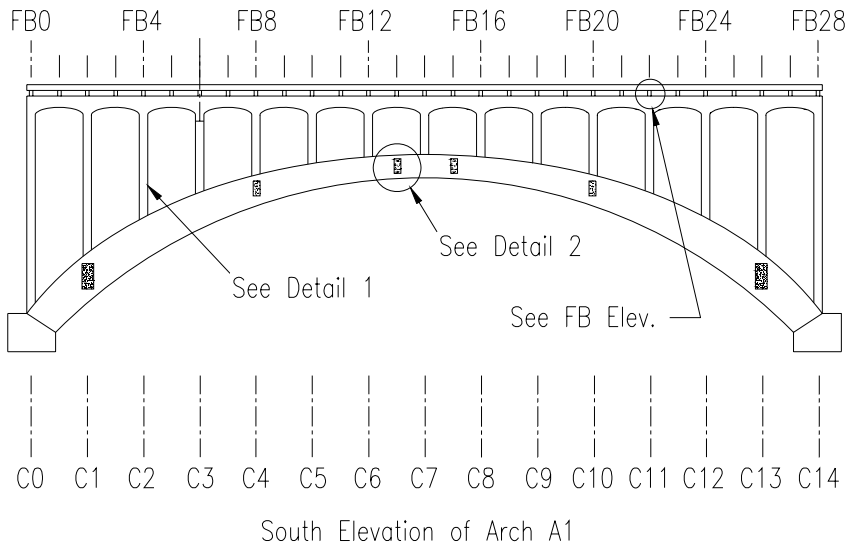

***Figure A-9-5** – Typical Elevation*

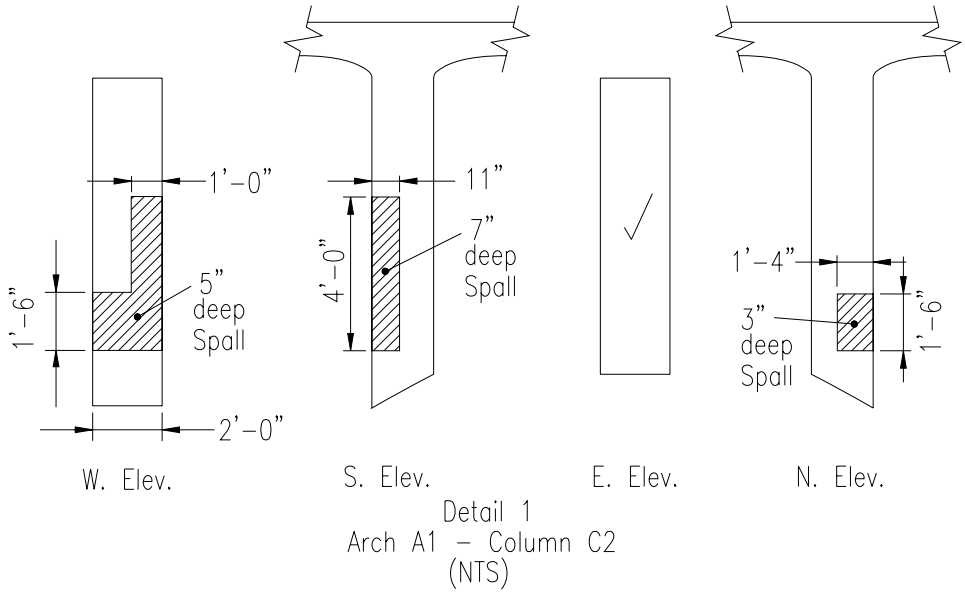

***Figure A-9-6** – Documentation of Inspection Deterioration*

EXAMPLE FIELD NOTE

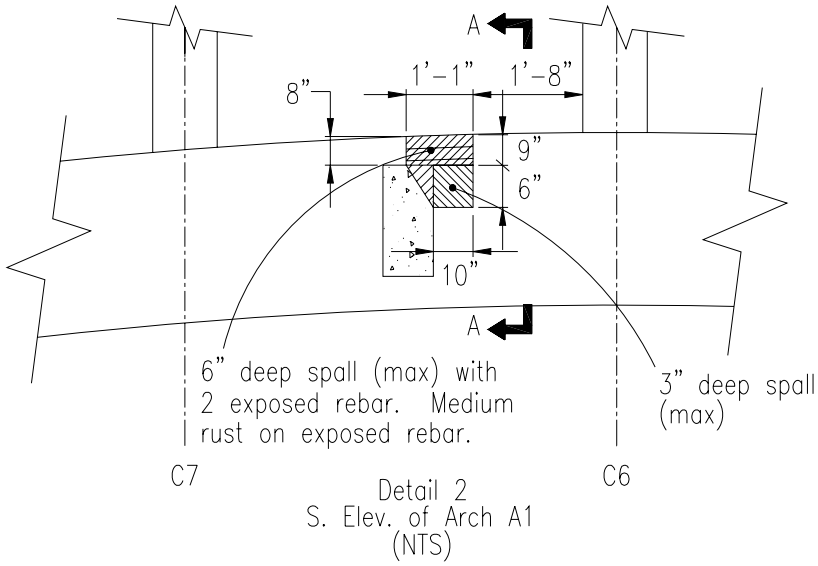

***Figure A-9-7** – Documentation of Inspection Deterioration*

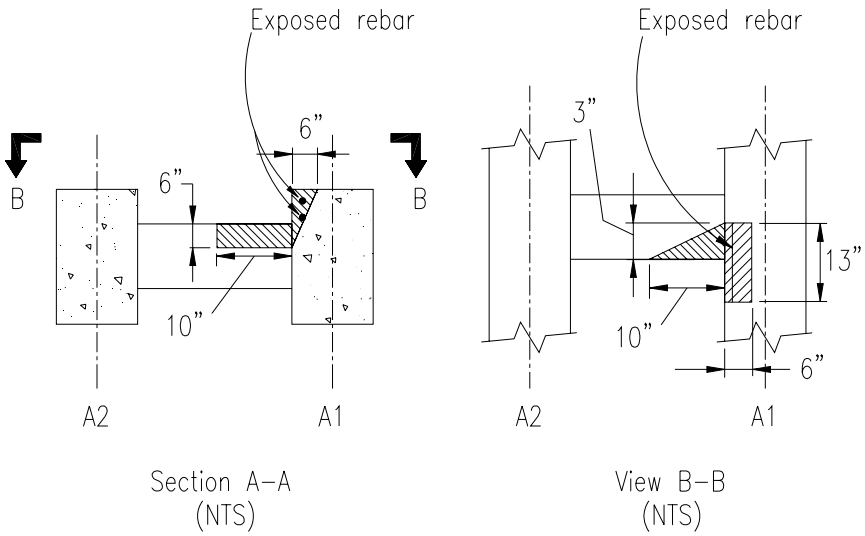

***Figure A-9-8** – Documentation of Inspection Deterioration*

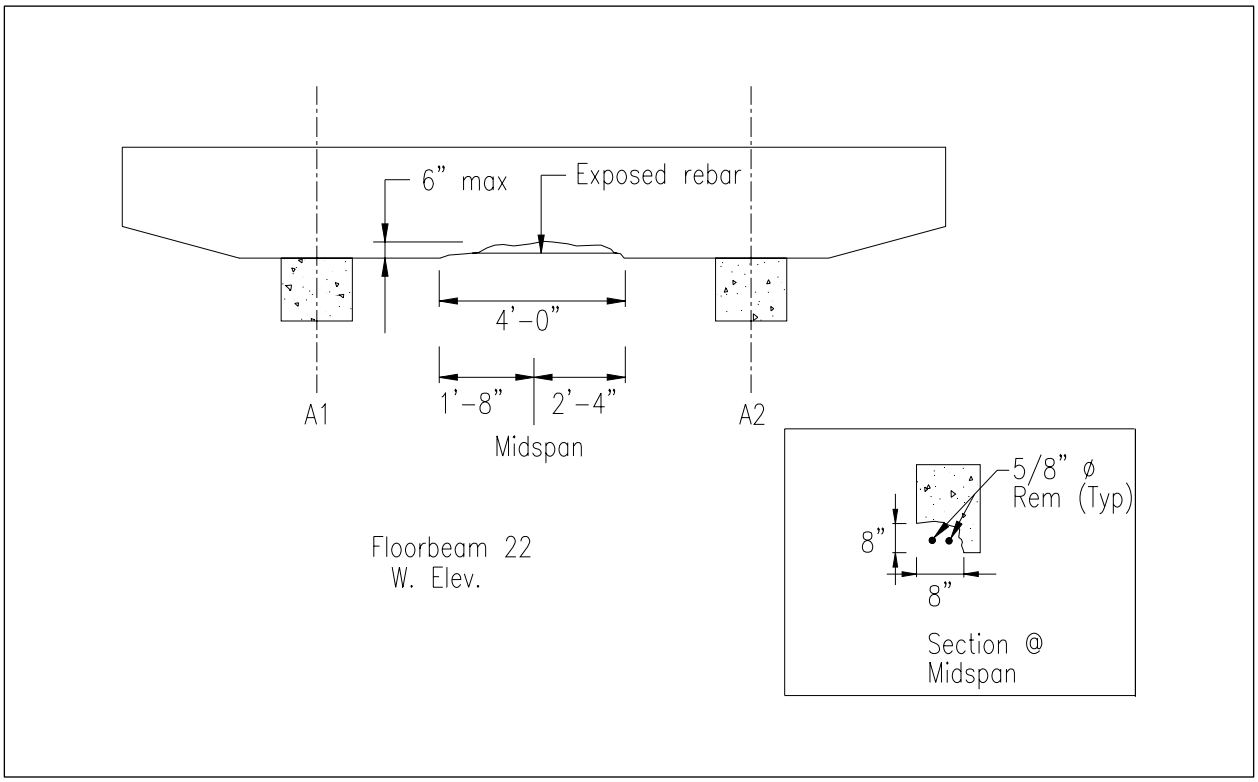

***Figure A-9-9** – Documentation of Inspection Deterioration*

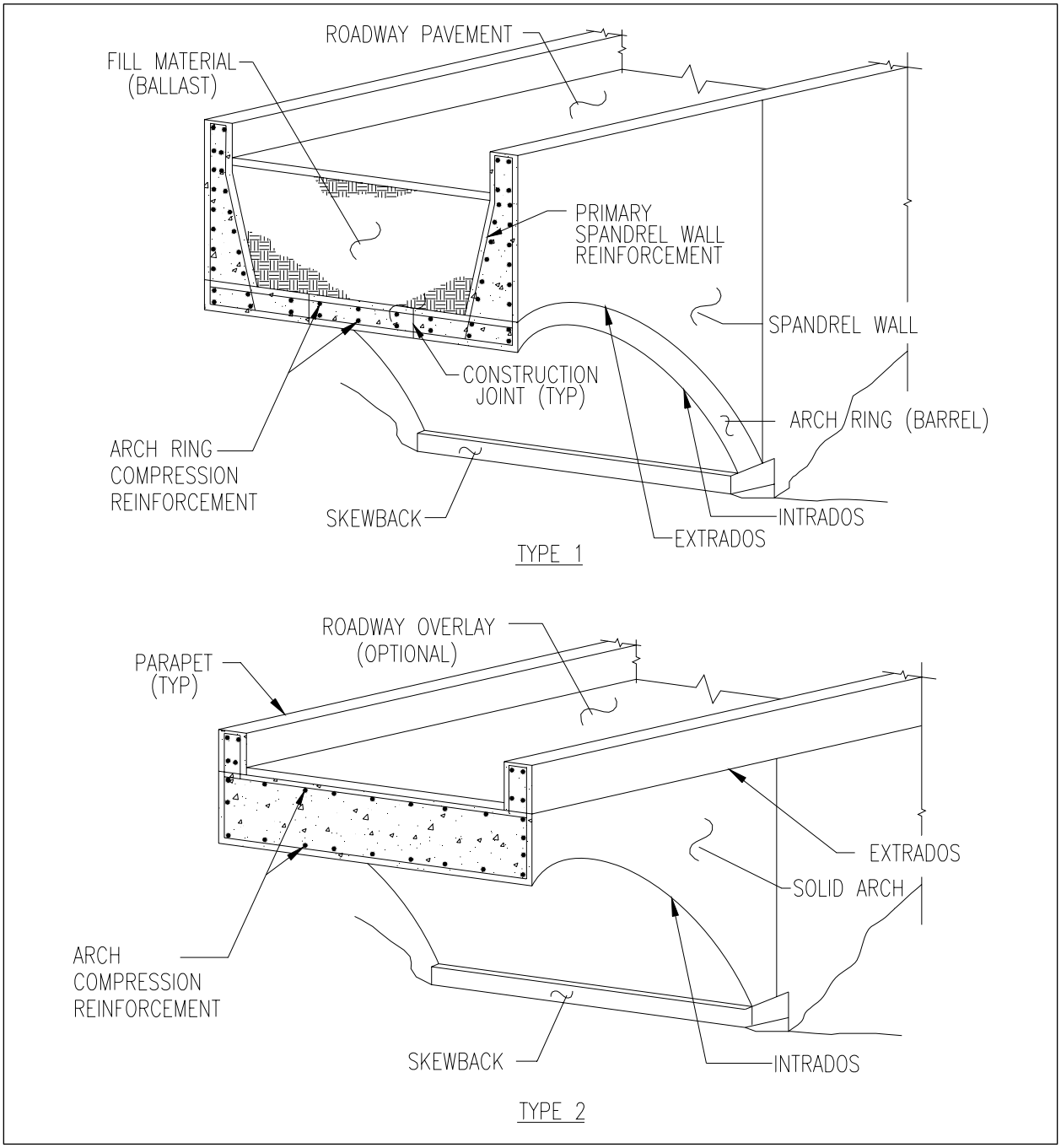

Figure A-9-10 *– Closed Spandrel Arch Configuration and Nomenclature*

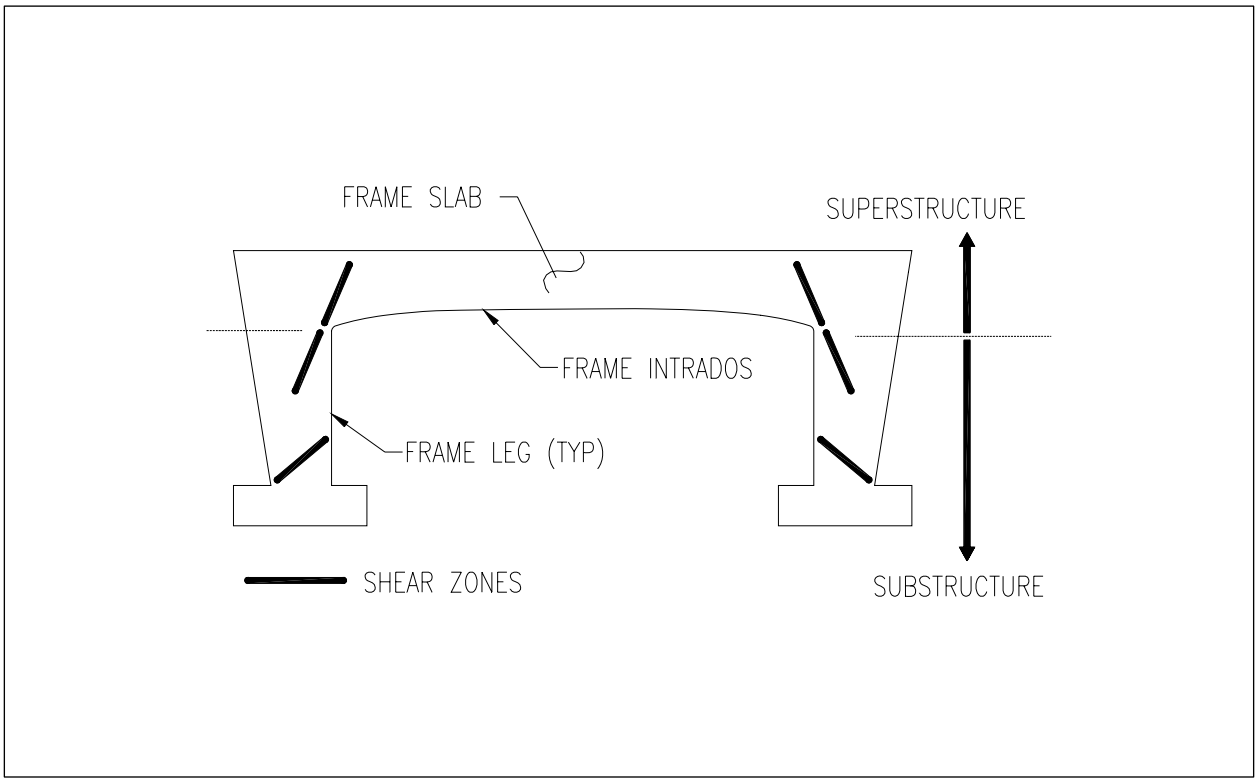

Figure A-9-11 *– Single Span Rigid Frame Nomenclature and Shear Zones*

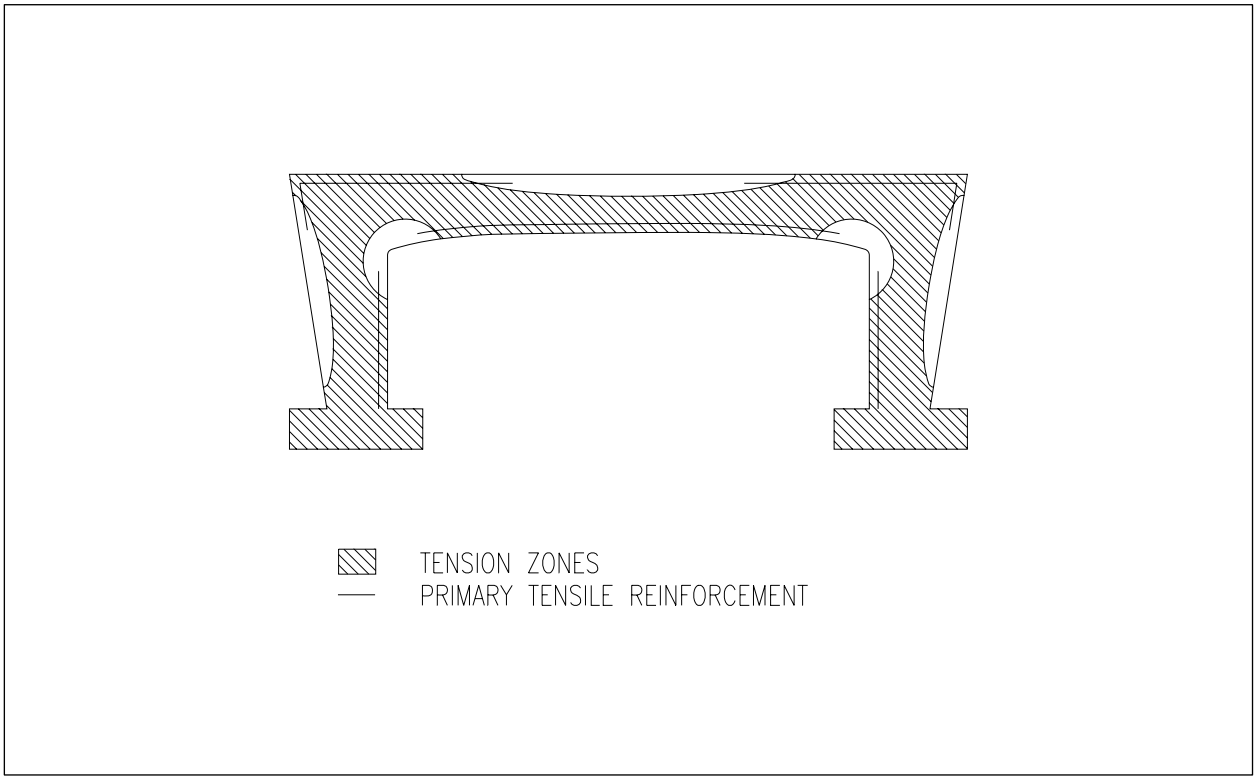

Figure A-9-12 *– Single Span Rigid Frame Tension Zones*

Appendix 6.10

WATERWAYS

A.10.1 CHANNEL AND CHANNEL PROTECTION

Rivers are the most geomorphic system engineers must cope with in the design and maintenance of bridges. The geomorphic features of the river can change dramatically with time. During normal flow conditions lateral movement, aggradation and degradation of the channel can disrupt the water flow in such a way that the long term stability of the bridge or approach roadways may be affected. During major floods, significant changes can occur in short periods of time. The increased flow rates and volumes associated with flood conditions can create conditions in which the capacity of the hydraulic opening is exceeded. While waterway channels are dynamic, bridges are not usually designed to move other than in keeping with planned structural movements and deflections due to thermal forces and anticipated static and dynamic loadings of the structure. Therefore, it is very important for the inspector to understand the nature of slow changes over time as well as rapid changes that may occur in waterways and the impact of these changes on the bridge's stability.

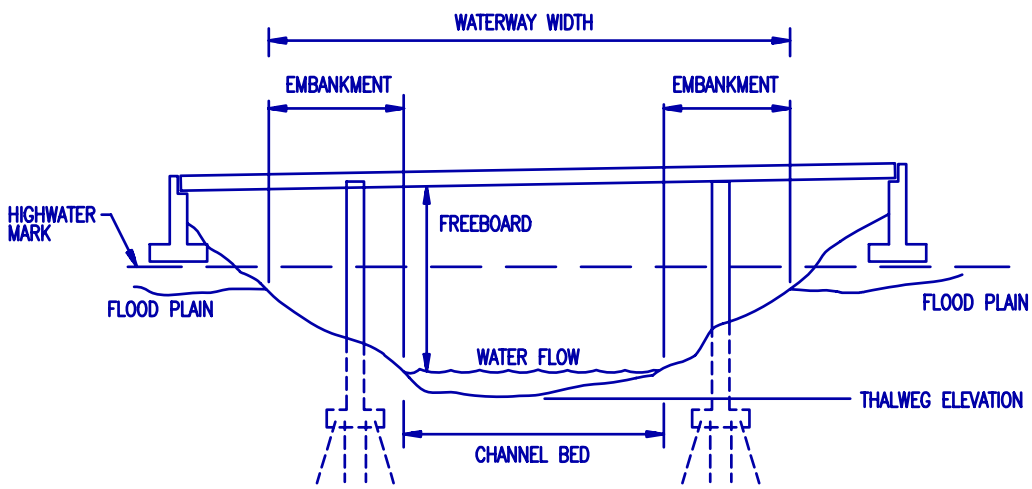

Figure A-10-1. *Typical waterway layout and nomenclature.*

A.10.1.1 Channel Protection

Channel protection for waterways is designed to protect the bridge from the detrimental effects of aggradation, scour, bank erosion, degradation and lateral movement of the waterway bed. Typical types of channel protection, as shown in Figure A-10-2, are designed to re-direct the flow of the waterway in a direction away from an endangered slope or bridge element, or dissipate the energy of the flow, which results in a reduction of the flow velocity. Channel protection may also be used to redirect the upstream water flow to reduce misalignment between the water flow and the substructure elements.

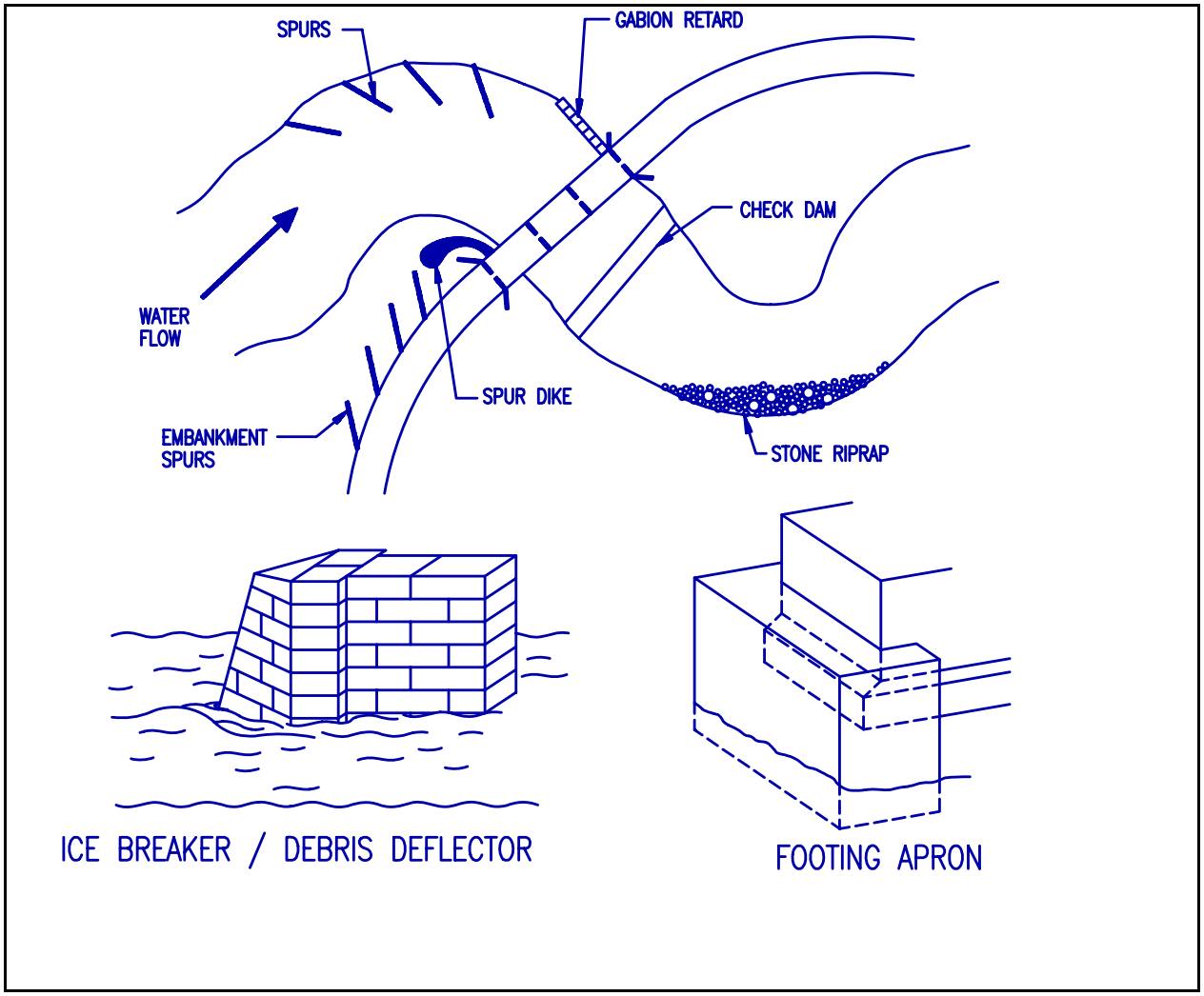

Figure A-10-2. *Types of waterway protection devices.*

A.10.1.2. Waterway Misalignment:

Waterway misalignment, generally caused by lateral movement of the waterway over time due to significant bank erosion during flooding or high velocity flows, describes the condition where the alignment of the flow has changed relative to the bridge abutments and piers. Generally, this means the direction of the water flow is no longer parallel with the piers and abutment faces. As the angle of attack (ι) increases, a greater surface area of the pier or abutment is being impacted by the flowing water, producing increased vortex action in the water and greater potential for local scour. However, to accurately assess if channel misalignment has occurred, a review of past inspection reports, review of the alignment at the time of construction, or review of aerial photographs over time is necessary.

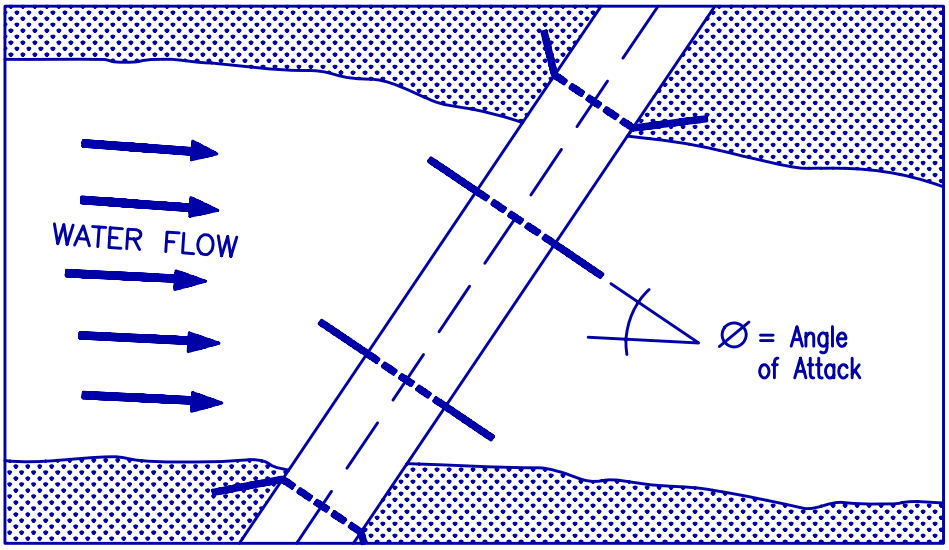

Figure A-10-3. *Misalignment between water flow and substructure elements.*

A.10.1.3 Scour:

Scour is the removal of material from the riverbed due to normal movement of the water through the hydraulic opening or due to localized vortices created by movement of the water around piers, abutments, or other obstacles in the water. See Appendix 6.12 for examples of required documentation to describe stream cross sections and scour at substructure elements. Three types of scour that require evaluation during inspection are as follows:

1. **General Scour:**

   General scour is the natural erosion of the riverbed that occurs over a period of years. It usually occurs over long lengths in a river and is accelerated by natural cutoffs that steepen the gradient of the waterway increasing the velocity and flow volume. However, human influences may cause or accelerate general scour. Upstream water developments, river diversions, dam outlets, changes in waterway alignment, changes in waterway dimensions or urbanization of a watershed all may affect the riverbed downstream.

2. **Contraction Scour:**

Contraction scour is scour that occurs only in the riverbed or flood plain below the structure. It is caused by the hydraulic opening having less width than the upstream waterway, or the hydraulic opening being substantially reduced by debris build-up. As a result, the water flow is constricted by the bridge abutments, intermediate piers and/or debris as it passes through the structure. Because the volumetric flow rate must remain constant, the velocity of the water increases as it passes through the structure. This increase in velocity causes increased scour of the waterway bed below the structure. Immediately downstream of the bridge, if the waterway widens to its upstream configuration or if debris no longer blocks the channel, the velocity will slow to its original speed allowing the scoured material to settle. The presence of downstream aggradation in conjunction with contraction conditions indicates the existence of contraction scour.

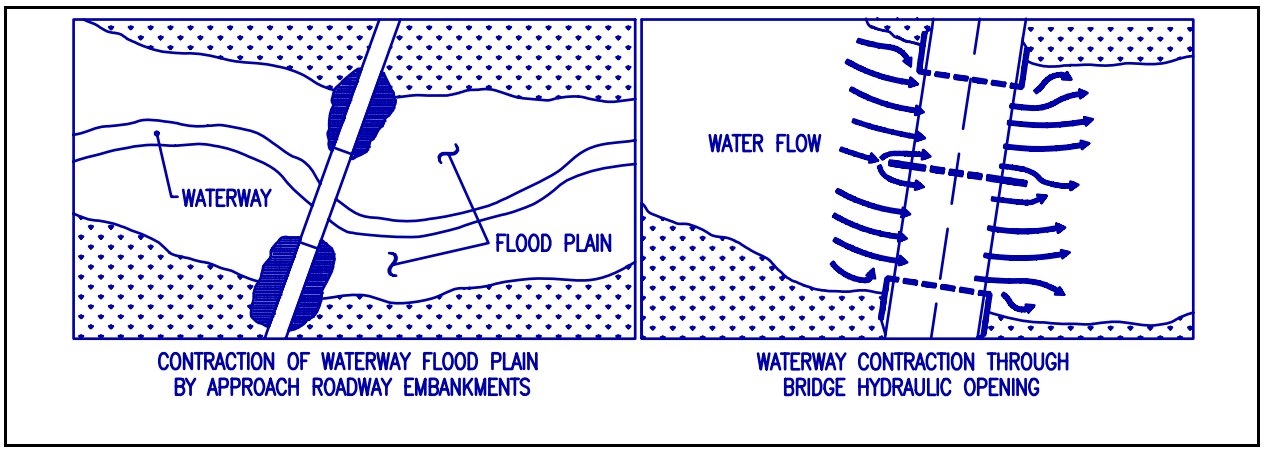

Figure A-10-4. *Waterway contraction*

3. **Local Scour:**

Local scour occurs at substructure elements that are within the channel or flood plain limits. They are created when constrictions of the water flow, caused by abutments, piers and debris build-up, as well as misalignment between the water flow and substructure elements, cause vortices or turbulence to develop along the faces of the substructure elements. These vortices remove sedimentary particles from the sides of the substructure elements and may eventually begin to undermine the elements. Scour depths caused by local scour, which are greatly influenced by the velocity of the water flow and configuration of the constriction, can be up to ten times greater than the depths caused by general scour.

Bridges in tidal zones are particularly vulnerable to local scour. The periodic reversal of the tide typically has imbalances between the input and output sediment

transport rates. This, combined with complex vortices created by the tidal currents, produces large scour holes that can have a negative affect the stability of the bridge.

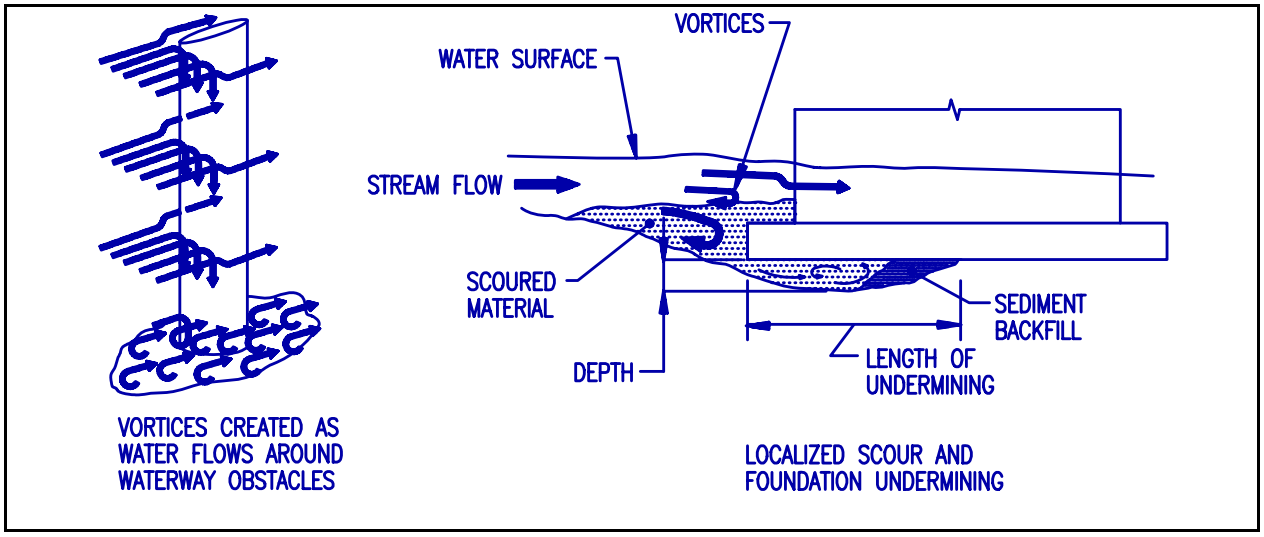

Figure A-10-5. *Local Scour*

A.10.2 Waterway Adequacy:

Waterway adequacy is an appraisal of the ability of a bridge to pass the water flow through the bridge during maximum and seasonal flood conditions. The appraisal considers all movement of the water regardless of path taken (i.e. through the hydraulic opening, around the structure or over the structure). The hydraulic opening is defined as the maximum cross-sectional area at the bridge opening through which water may pass, and is calculated as shown in figure A.10.6. Special care should be taken when choosing the locations where h_1, h_2, etc. are measured. They should be recorded in the field notes and bridge diary so future inspections will use the same points and maintain consistency between inspections. This will also aid in determining whether or not aggradation or degradation of the riverbed is occurring (See Appendix 6.12 for additional information).

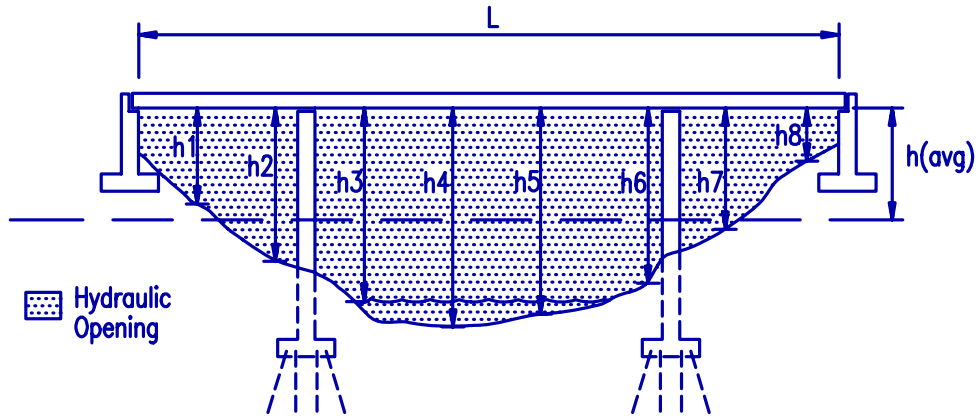

h1, h2... = Height from the ground or waterway bed to the bottom of the superstructure.
L = Length from face to face of abutment.
h(avg) = Average of all heights measured (h1, h2, etc.).
A(piers) = Sum of the cross sectional areas of all intermediate piers.
Approximate Hydraulic Opening = L x h(avg) – A(piers).

Figure A-10-6. *Hydraulic Opening*

In order to accurately appraise waterway adequacy, accurate knowledge of the maximum flood design value and actual history of flooding in the waterway must be known. This information can be gathered from historical files that document past flood limits, previous inspection reports and the first hand knowledge of residents who have lived in the area for long periods of time. Information regarding the classification of the road, volume of traffic and detour routes must also be known. Unless documentation gathered by the inspector shows a clear pattern of flooding, the appraisal of waterway adequacy is left up to the subjectivity of the inspection.

The following things should be considered during the appraisal:

- The presence of debris hanging in the superstructure or on the substructure elements indicating that the hydraulic opening has been exceeded or has come close to being exceeded during past flood conditions.

- The size and shape of the flood plain, and whether or not the cross sectional area of the maximum design or documented flood flow, whichever is greater, exceeds the value of the hydraulic opening. This indicates that the bridge superstructure may be, or may have already been, subjected to lateral forces that it was not designed to withstand.

- Whether or not the lowest point of the approach roadways is higher, lower or equal to the lowest elevation of the bridge superstructure. This gives indication as to whether or not the approach roadways will be topped by flood water before the

bridge is topped. If these elevations are relatively even or if the approach roadway is at a higher elevation than the bridge, the bridge will be subjected to buoyancy forces once the superstructure begins to become submerged. These buoyancy forces counteract the dead load of the bridge and will increase to a maximum once the entire bridge structure becomes submerged. As buoyancy forces increase, the net downward force the structure applies to the substructure will be reduced. This in-turn will reduce the frictional forces between the superstructure and substructure elements that resist the lateral forces applied to the bridge by the water flow. The combination of these two actions may displace the structure off the bearing pedestals or off the substructure elements entirely.

- The potential for flash aggradation or degradation during flood conditions that can diminish the hydraulic opening and create instability of the bridge structure.

SPECIAL NOTE:

Inspectors should be aware that riverbeds that are experiencing active aggradation and degradation, or that are stable, have both positive and negative effects associated with them as noted below and that all aspects should be evaluated when inspecting the waterway.

Aggradation:	• *Reduces the potential for scour and undermining of the substructure elements.*	• *Reduces the Hydraulic Opening of the bridge and affects flow patterns.*
Degradation: (General Scour)	• *Increases the Hydraulic Opening of the bridge.*	• *Increases the potential for scour and undermining of the substructure elements.*
Stable:	• *Hydraulic opening remains constant.*	• *Potential for scour and undermining of substructure elements during abnormal flow conditions.*

Appendix 6.11

TRUSSES

Trusses are normally designed so that members experience axial loads only and that no bending occurs in any member. In order to properly inspect a truss, the inspector must know the typical layout, nomenclature and function of the various truss members (see Figure A-11-1).

Trusses come in three basic types as shown in Figure A-11-2. Each type may be constructed as simply supported (as shown), continuous or cantilevered. Note the advantages and disadvantages for each truss type. Knowledge of these (particularly the disadvantages), helps to highlight causes of potential problems and identify areas that require special attention.

Through Truss:

Advantages:	Long spans, greater freeboard (under clearance).
Disadvantages:	Limited vertical and horizontal clearance for the roadway, members susceptible to impact damage, members susceptible to corrosion particularly at roadway/sidewalk level.

Pony Truss:

Advantages:	Unlimited vertical clearance, greater freeboard (under clearance).
Disadvantages:	Limited horizontal clearance for the roadway, short spans (under 120 ft. (36.5m)), members susceptible to impact damage, members susceptible to corrosion particularly at sidewalk/ roadway level.

Deck Truss:

Advantages:	Unlimited vertical and horizontal clearances, members are not susceptible to vehicular impact damage, required substructure heights are reduced.
Disadvantages:	Less freeboard (under clearance), more susceptible to the damaging effects during flooding and marine traffic impact damage.

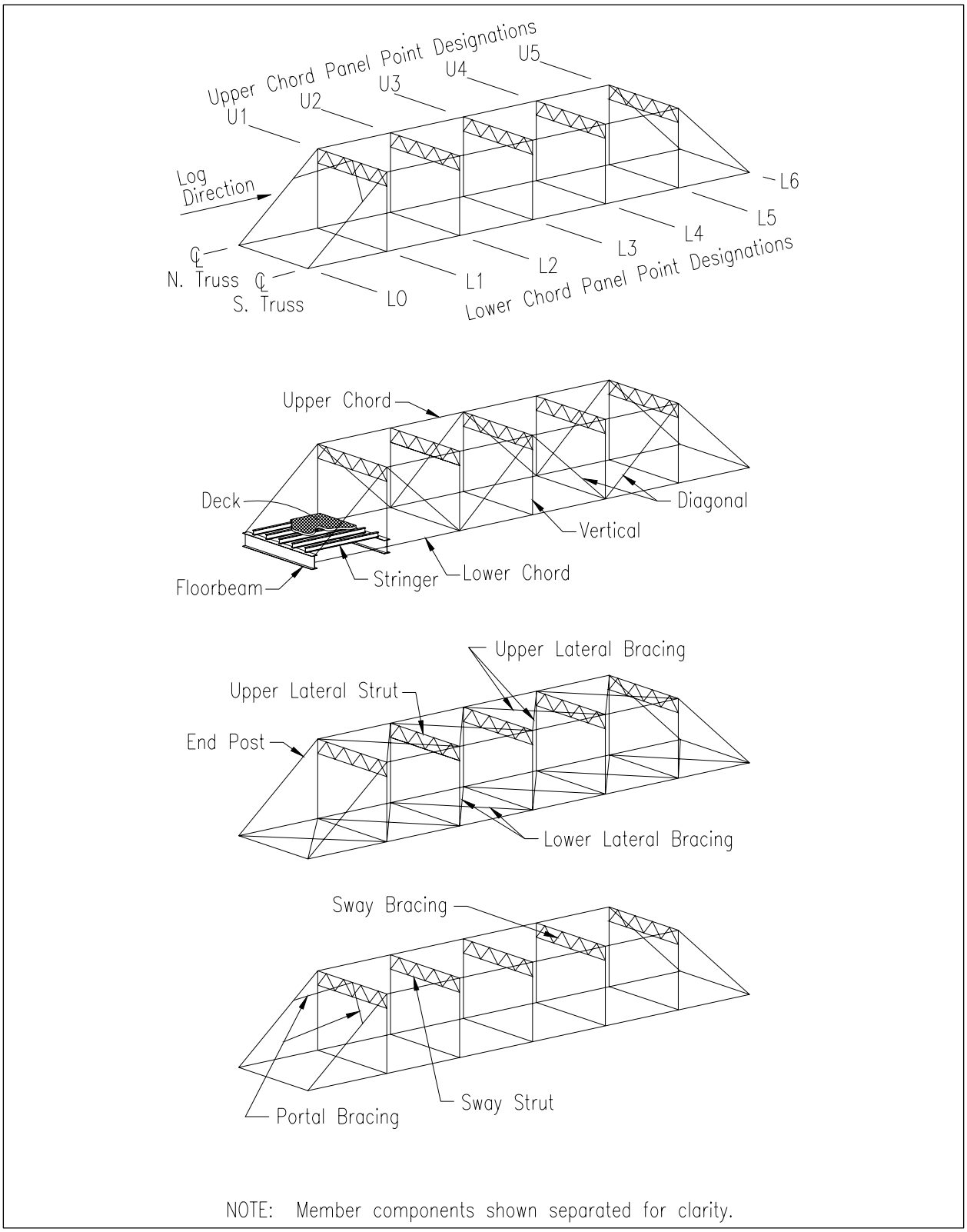

Figure A-11-1 – Truss layout and nomenclature

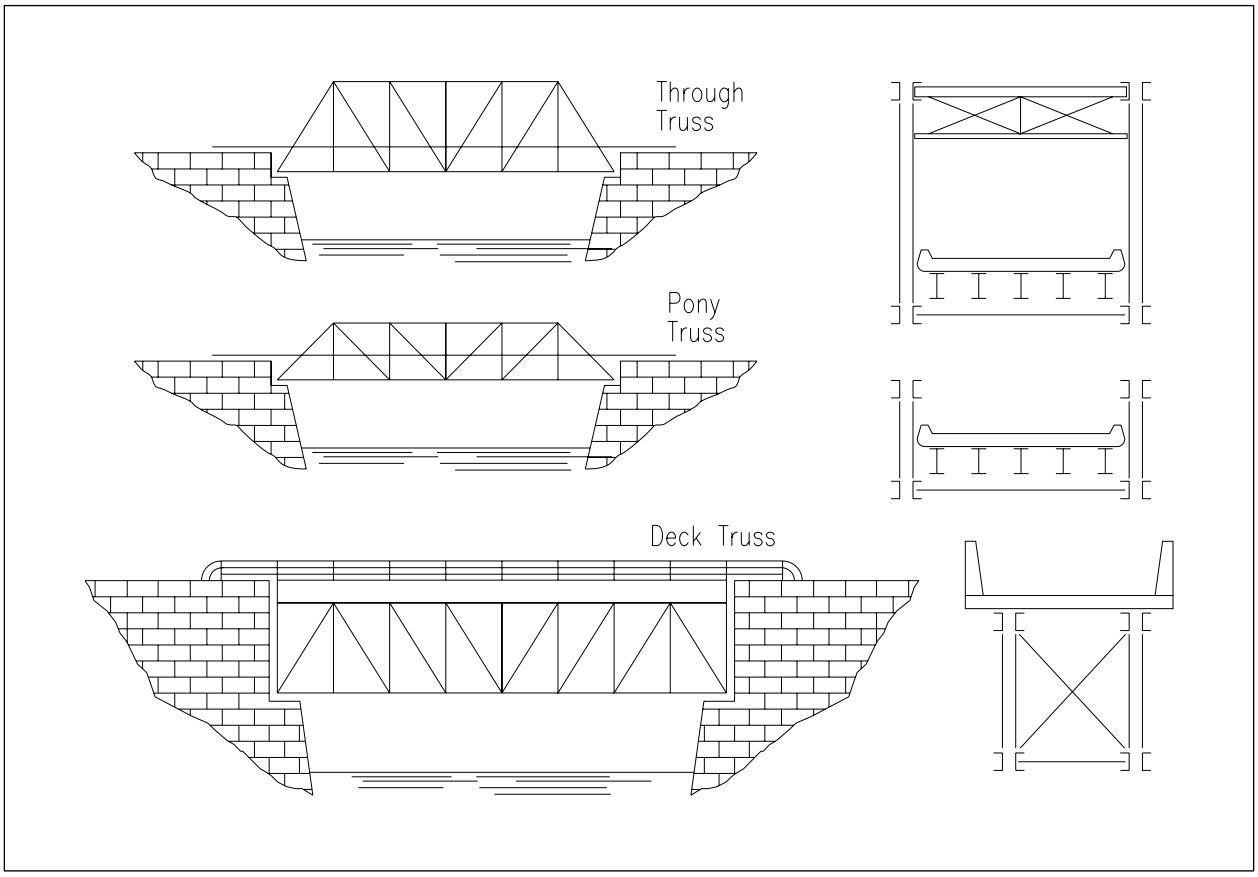

Figure A-11-2 *– Truss type comparisons*

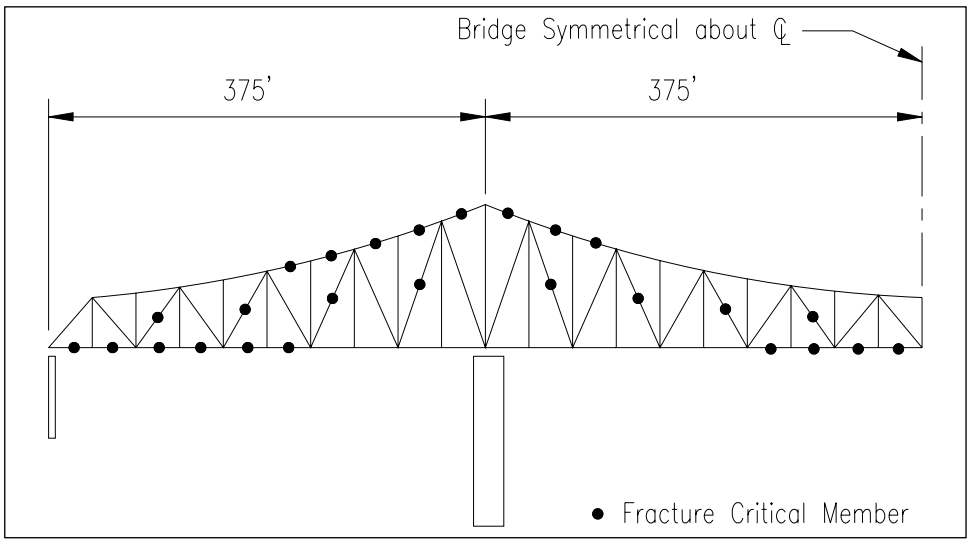

Figure A-11-3 *– FCM location identification*

Truss Member Force Prediction

Trusses are considered non-redundant because there are typically only two load paths to the substructure elements. The failure of certain critical members will usually result in the failure of the truss and the subsequent collapse of the structure. Even in the case where there are three or more trusses per span, the spacing of the trusses may be large enough so that loss of one truss will result in partial or total failure of the structure. Only detailed analysis by a competent structural engineer can determine if loss of one member within a truss will cause failure of the truss and whether or not loss of one truss will result in the loss of the entire structure. In lieu of detailed analysis, all tension members should be considered fracture critical members. Tension members may be chords, diagonals or verticals depending on the member arrangement and should be identified and marked for "hands-on" inspection prior to inspection initiation (see Figure A-11-3). If a detailed analysis can not be performed, field expedient methods for stress prediction can be employed. In figure A-11-4, force prediction in truss diagonals is predicted by connecting pairs of diagonals with imaginary arches or cables depending on their downward or upward slope toward midspan. Member pairs that

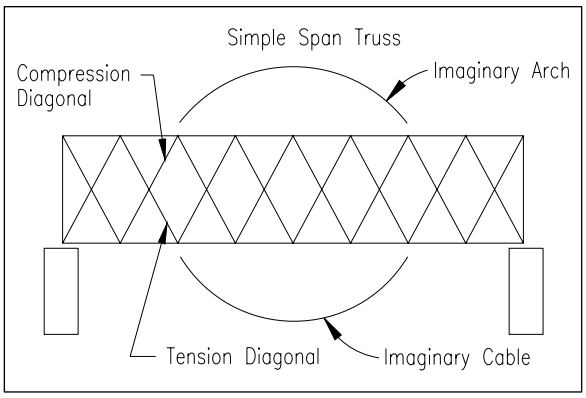

Figure A-11-4 *– Method for predicting Type of Force in Truss Diagonals*

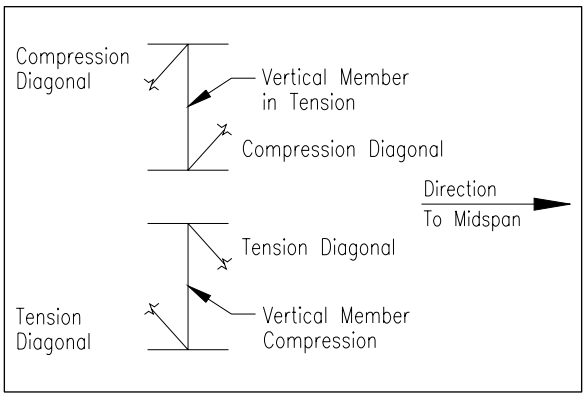

Figure A-11-5 *– Method for predicting Type of Force in Truss Verticals*

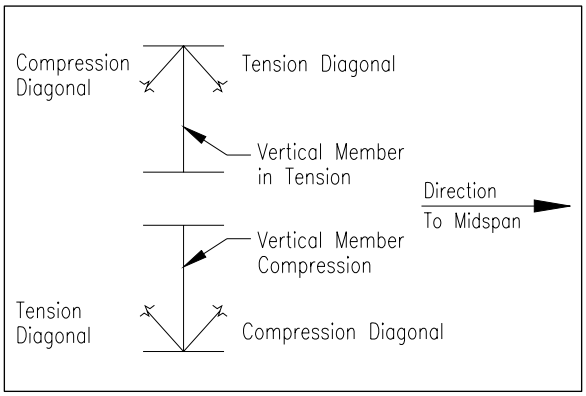

Figure A-11-6 *– Method for predicting Type of Force in Truss Verticals*

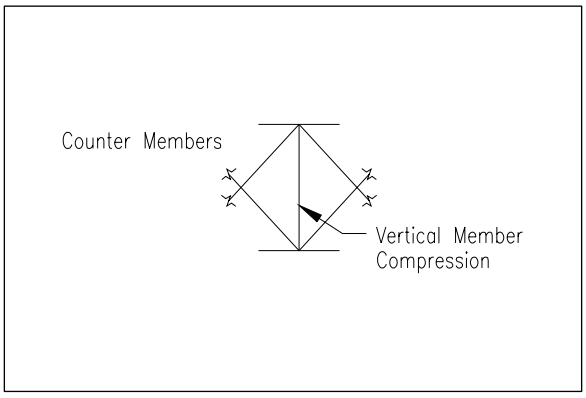

Figure A-11-7 *– Method for predicting Type of Force in Truss Verticals*

form "arches" are said to be compression members and pairs that form "cables" are said to be in tension. Figures A-11-5, -6 and -7 predict force type in truss verticals based on the forces in diagonals that frame into it. Note, however that these field expedient methods are only valid for simply supported trusses.

Riveted or Bolted Built Up Truss Members

Redundancy within the tension member itself plays an important roll in determining susceptibility to fatigue crack propagation. Common fatigue crack locations for various truss details are outlined in Appendix 6.1, Item 4.5.

Riveted or bolted truss members have the advantage of being internally redundant (see Figure A-11-8). A crack initiating in one component of a truss member such as the flange angle, can not readily propagate into another component of that member. This configuration offers the greatest degree of internal redundancy and the least degree of susceptibility to failure due to fatigue.

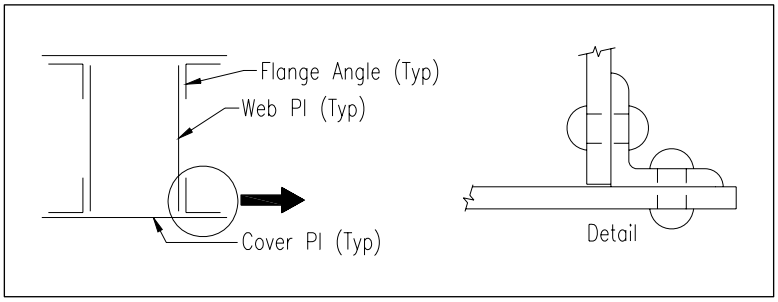

***Figure A-11-8** – Riveted or built-up member*

Welded Built Up Truss Members

Welded members, however, do not have this internal redundancy and a crack initiating at any portion of the cross section may propagate to any other point through the weld (see Figure A-11-9). The
weld itself has high susceptibility to fatigue crack initiation if good quality control measures are not used during the fabrication of the member. Excessive porosity (pitting), rollovers and arc strikes,

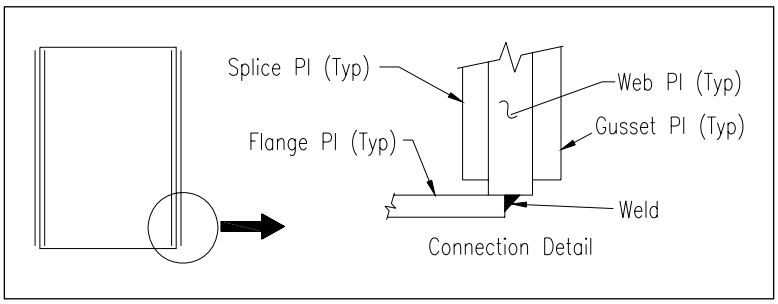

***Figure A-11-9** – Welded built-up member at connection*

unequal leg fillet welds, excessive convexity, excessive concavity, undersize welds, undercutting of the base metal, weld spatter and excessive reinforcement, lack of penetration, underfill, unfilled craters, uneven weld profile and slag are typical weld defects that increase susceptibility to fatigue crack initiation. The type of weld (groove, fillet, plug etc.) and where it is placed also plays an important roll in fatigue crack development. Appendix 1 of this manual details many common fatigue sensitive details that apply to truss members.

One unusual problem with welded, built up members results in the cracking of welds not from fatigue stress but rather corrosion stress. The detail shown in figure A-11-9 shows a welded built up member configured for a panel point connection. In this detail, if there is a gap between the interior splice plate and the bottom flange plate, dirt, debris and moisture can pack in the gap and accelerate deterioration until impacted rust fills the gap and begins to force the bottom flange plate down. When this occurs, as shown in figure A-11-10, the weld that connects the web plate and flange plate is subjected to tensile stresses that can lead to cracking of the weld.

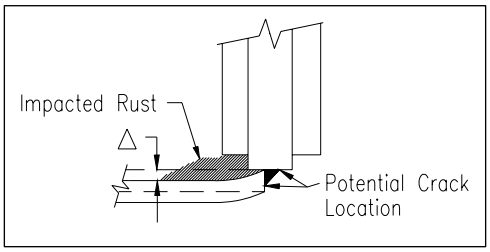

***Figure A-11-10** – Corrosion induced weld crack*

Eyebar Truss Members

Eyebar members are usually rectangular bars that have enlarged ends that have a hole in them. They are found in trusses that are pin connected and are used exclusively for tension members or members designed to primarily resist tension forces. Eyebar members are normally fracture critical although there may be some internal redundancy in members that are composed of a number of eyebars.

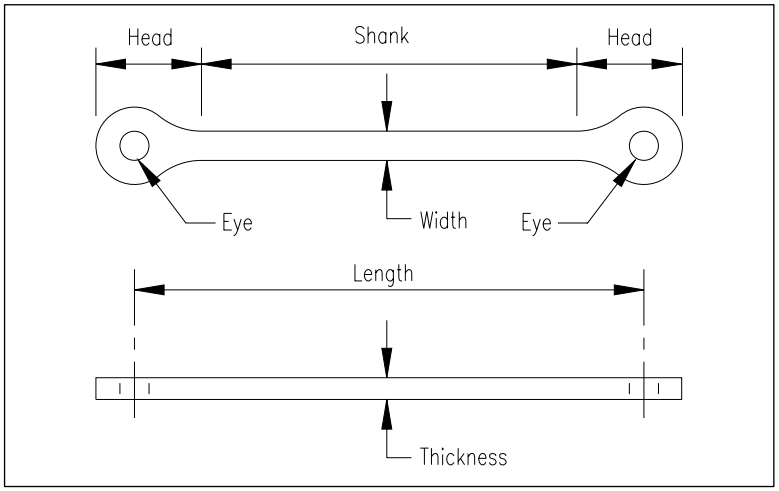

***Figure A-11-11** – Eyebar dimensions and nomenclature*

Appendix 6.12

SCOUR AND STREAM SECTION DOCUMENTATION

Bridge inspectors should accurately record the present condition of the bridge, including channel cross section measurements, pier or abutment protection, and existence of rip rap. Conditions indicative of potential problems with scour or stream stability should be identified. Original structure design plans that show substructure details and bottom of foundation elevations should be available to inspectors and inspectors should be aware of the stream bed elevation that will cause a bridge to become unstable. Inspectors are referred to FHWA Publication HI-96-018, *Stream Stability and Scour at Highway Bridges* for a more detailed discussion on this topic.

Elevations of the stream bottom shall be determined by sounding or other means when appropriate. The inspection team shall establish a datum that can be referenced and tied into the bridge structure. The same datum used in previous inspections should be used unless there is a need for a change that should be approved by the Senior Engineer.

Soundings shall be taken at a minimum of 5 points along the upstream fascia in each span. The distance between measurement locations should not exceed approximately 25' (8 m). Choose an interval that allows the channel to be accurately defined. The interval may be varied or unequal if site conditions warrant. The horizontal position at which the vertical elevations are taken should be clearly indicated. Whenever possible, these measurements should be taken at landmark positions on the bridge, such as diaphragm or rail post locations so that they can be easily duplicated in the future. The edges of the waterway should also be located and elevation measurements must be taken across the entire span opening to describe the embankment slopes. Whenever there is evidence of scour around a substructure element, soundings shall also be taken at a minimum of three (3) points (spacing not to exceed approximately 25') along the face of each substructure element. Bridges that are inspected by the Underwater Inspection Team shall be inspected in accordance with the requirements of the Underwater Inspection Contract and the guidelines outlined in Chapter 5 of this manual.

Examples of required documentation are shown on the following pages. The stream cross section measurements shown in Figure A-12-1 must be taken in the field on each inspection. These elevation measurements will be used to plot the stream cross section profiles as shown in Figure A-12-3. This cross section should be drawn in the office using CAD (which can be reused on subsequent inspections) or plotted as a scale drawing, showing foundation types and bottom of foundation elevations from as-built drawings. Where information is available, the estimated top of rock profile should also be shown. It is important that the stream cross section clearly and accurately show the position of the waterway with respect to the bottom of foundation positions. This historic record will be monitored over time to detect long term channel change trends.

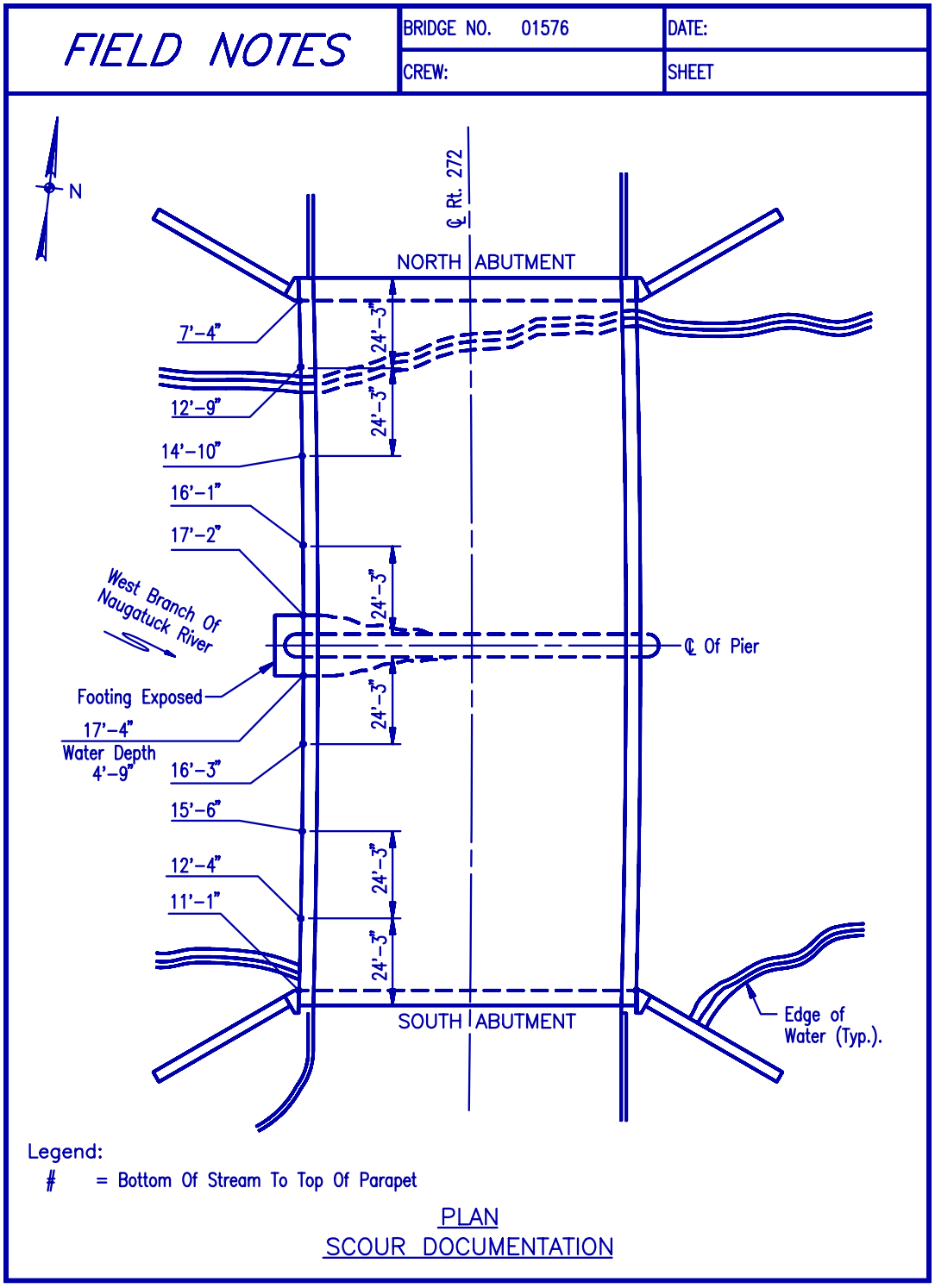

Figure A-12-1. Example of required field measurements for plotting stream cross section.

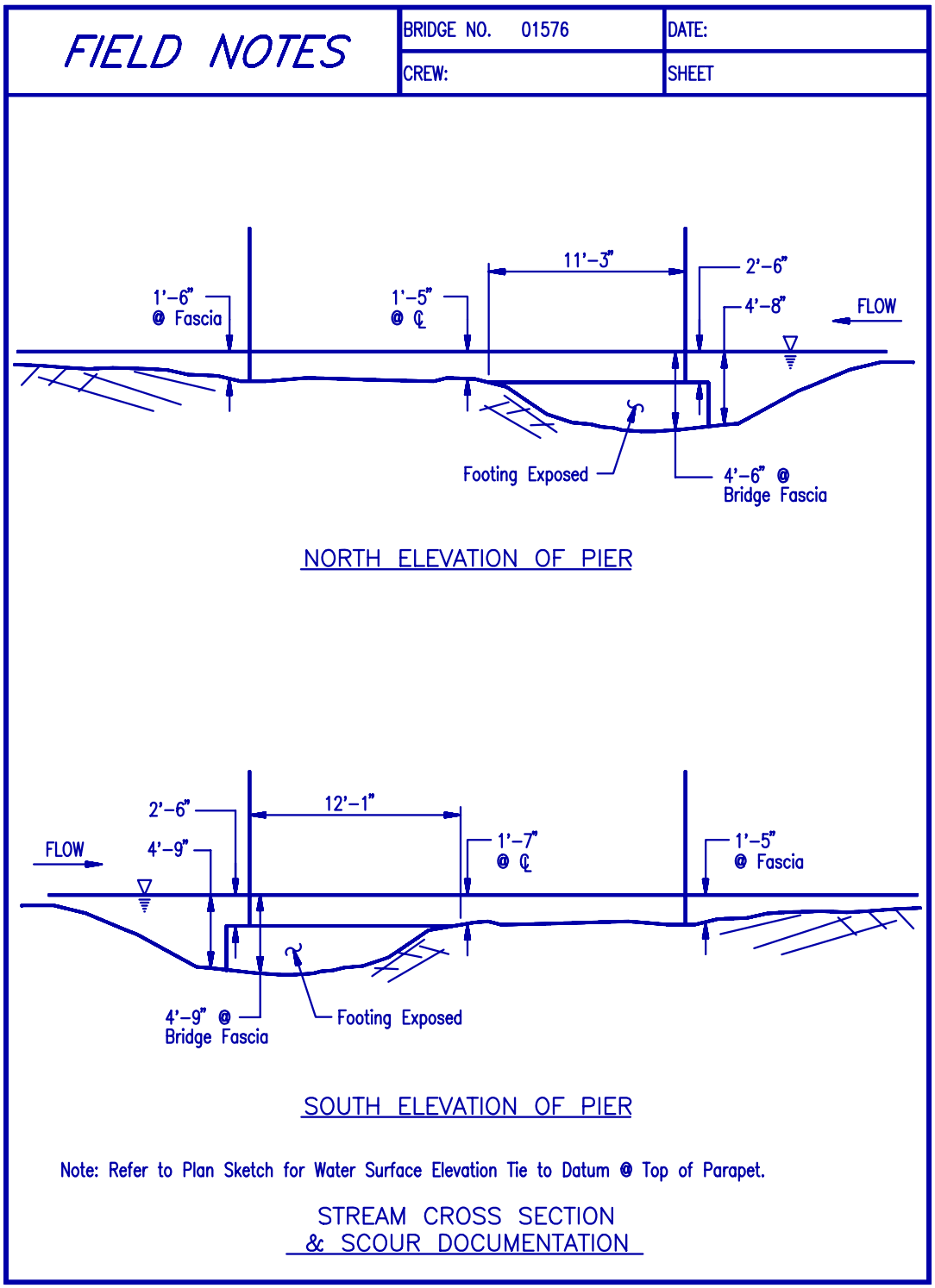

Figure A-12-2. Example documentation for scour at a substructure element.

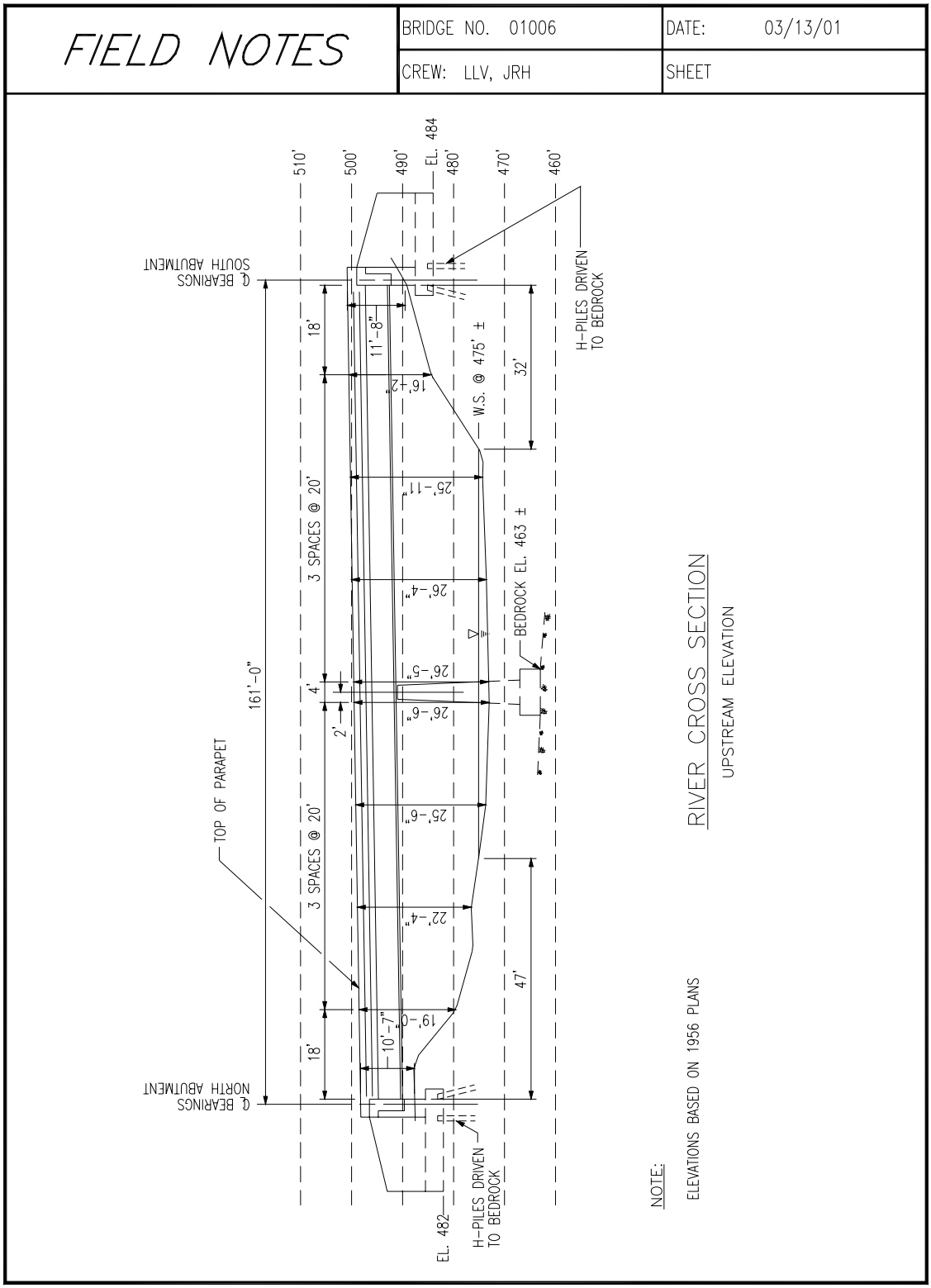

Figure A-12-3 – Example River Cross Section

Stream Cross Section Measurement

How Often?

Scour Susceptible /Critical Bridges: Every inspection and at each flood event as requested by The Supervising Engineer.

(Scour Susceptible is Item 113 = 4 or 5; Scour Critical is Item 113 = 3 or less)

All other bridges over water: At each in-depth inspection.

New bridges: A benchmark cross section at first inspection.

What is required?

Datum for all required structures: A datum line should be clearly marked on diagram as to where it is located along with a statement as to how it is being used should be included as necessary.

Scour Susceptible/Critical Bridges: An upstream cross section facing downstream is required for each span over the flood plain. A minimum of five shots per span is required. The shots do not need to be evenly spaced but should be located as required to accurately portray the cross section of the stream bed (i.e. a shot at each significant change in slope).

If exposed footings/undermining: Provide an elevation view along the entire face of the substructure unit where the problem is noted. Elevations should be taken as necessary to accurately portray the scour conditions. In the case of undermining, a plan view and/or cross section of the abutment/pier footing should be provided to clearly illustrate the extent of the undermining.

Box Culverts: Provide an elevation view of the cutoff walls at the inlet and outlet only showing distances from the top to the channel bottom. If the cutoff walls are not exposed, no measurements are necessary.

Please note that if a bridge is on the list for underwater inspection, the diving team will be required to provide the stream cross section information.

How to gather the data?

Datum Line: Datum line should be measured from a point where access is easiest and can easily be duplicated.

ADDED 11/29/04

Stream Cross Sections: This information may be obtained from the bridge deck by suspending a weighted line over the parapet and reading the distance from the top of the parapet to the channel bottom at various locations. The horizontal distance from the abutment/pier face should be noted at each sounding location.
The other method may utilize a rod such as a vertical clearance pole to obtain water depths. When soundings are required at locations which are above water, the rod may be sighted using a lock level by the other inspector to obtain elevations relative to the benchmark. At each inspection the waterline should be carefully referenced to the benchmark, which can be any easily accessible fixed point on the structure (i.e. the beam underside or the top of parapet). Again, each measurement taken should be referenced horizontally to a substructure unit.

Sounding Grid Measurement

How Often ?

Scour Critical Bridges: Every inspection

Scour Susceptible Bridges: As requested by the Supervising Engineer

(Scour Susceptible is Item 113 = 4 or 5; Scour Critical is Item 113 = 3 or less)

All other bridges over water: At each in-depth inspection.

New bridges over water: A benchmark sounding grid at first inspection.

What is required?

Datum for all required structures: A datum line should be clearly marked on diagram as to where it is located along with a statement as to how it is being used should be included as necessary.

Scour Critical bridges: A sounding grid (plan view) is required at each inspection as outlined in the Underwater Inspection and Reports section of the BIM (5.2.4).

For structures with a span length of less than or equal to 50 feet, soundings shall be taken on a 10 foot by 10 foot grid around and between all substructure units beginning with the vertical face of the substructure unit. The grid should extend 50 feet up stream and 50 feet downstream from the ends of the substructure units to show changes in the adjacent stream bottom. See Figure 5.2.4a. No grid is required through a box culvert unless there is debris or sediment buildup. However, a grid of the stream is required upstream and downstream of the box culvert.

ADDED 11/29/04

For structures with span lengths greater than 50 feet, the grid shall consist of four parallel rows of soundings at 1 foot, 10 feet, 25 feet and 50 feet from the longitudinal face of the substructure units. Beyond this point, the grid intervals are 50 feet. Under the structure, the grid (starting at each end of the substructure unit) shall be 3 spaces at 10 feet then continue at 15-foot intervals. The spacing of the rows of the soundings upstream and downstream of the structure shall be at 1 foot, 10 feet, 25 feet, 50 feet, and 100 feet from the ends of the substructure units. See Figure 5.2.4b. Additional soundings should also be taken at the upstream and downstream centerline of the piers. Soundings shall be taken at each point where the grid intersects.

If, when completing the soundings, a non-linear surface profile of greater than 1 foot/10 feet (10%) is identified then additional sounding shall be taken to show the irregularity and the results shall also be shown in the drawings. Furthermore, if the top of the footing is exposed, an additional row of soundings shall be taken at the face of the footing.

Box Culverts: No grid is required through box culverts unless there is debris or sediment builds up. However, a grid should extend upstream and downstream 15 meters from the box culvert.

Please note that if a bridge is on the list for underwater inspection, the diving team will be required to provide the sounding grid information.

How to gather the data?

Datum Line: Datum line should be measured from a point where access is easiest and can easily be duplicated.

Sounding Grid: When a grid is required the inspection team should start by laying out the grid pattern on the shore. At each upstream or downstream location one inspector should remain on the shore while the other obtains the soundings at the required locations. At times there may be the need for a three-person team to obtain all the necessary measurements. The person doing the sounding should determine his location by using a 100' tape with the help of the person on the shore. Soundings that are above the water level should be obtained using a lock level as described above. Additional points should be provided if there is a drastic elevation change located between fixed grid points. In the case where there is not a constant water surface elevation care must be taken that all stream bottom elevations are referenced to the same datum. This may involve using a lock level to obtain some of the soundings or by measuring the waterline elevations at each different location.

ADDED 11/29/04

CHAPTER 7

LOAD RATINGS

7.1 GENERAL LOAD RATING REQUIREMENTS 1

7.2 APPROACH FOR LOAD RATING ANALYSIS 1

7.3 FORMAT FOR SUBMISSION 3

7.4 SELECTION OF MEMBERS FOR EVALUATION 4

7.5 MISCELLANEOUS RATING PROCEDURES & REQUIREMENTS 5

7.6 USING DESIGN CALCULATIONS FOR LOAD RATINGS 6

7.7 COMPUTER SOFTWARE..... 6

7.8 SPECIFICATIONS.....6

7.9 DOCUMENTATION OF LOSSES 8

7.10 RE-EVALUATION 8

7.11 BRIDGES WITH UNKNOWN COMPONENT DETAILS. 9

7.12 GUIDELINES FOR DETERMINING COMPACTNESS IN STEEL BEAMS 11

7.12.1 Riveted/Bolted Built-Up Members 11
7.12.2 Positive Moment Sections of Composite Steel I-Beams 11
7.12.3 Negative Moment Sections of Composite Steel I-Beams.....12
7.12.4 Positive Moment Sections of Composite Steel Box Girders 13
7.12.5 Negative Moment Sections of Composite Steel Box Girders 14
7.12.6 Positive Moment Sections of Curved Composite Steel I-Girders 14
7.12.7 Negative Moment Sections of Curved Composite/Noncomposite Steel I-Girders 15
7.12.8 Positive Moment Sections of Curved Composite Steel Box Girders 17
7.12.9 Neg. Moment Sections of Curved Composite/Non-Composite Steel Box Girders 19
7.12.10 Tension Members 20

7.13 FIELD INVESTIGATION FORMS FOR LOAD RATING EVALUATIONS 21

CHAPTER 7

LOAD RATINGS

7.1 GENERAL LOAD RATING REQUIREMENTS

This Section Removed 05/04/2017 – Please reference the CT DOT Load Rating Manual available at: http://www.ct.gov/dot/cwp/view.asp?a=4048&Q=562040&PM=1

7.2 APPROACH FOR LOAD RATING ANALYSES

This Section Removed 05/04/2017 – Please reference the CT DOT Load Rating Manual available at: http://www.ct.gov/dot/cwp/view.asp?a=4048&Q=562040&PM=1

This Page intentionally left blank

7.3 FORMAT FOR SUBMISSION

This Section Removed 05/04/2017 – Please reference the CT DOT Load Rating Manual available at: http://www.ct.gov/dot/cwp/view.asp?a=4048&Q=562040&PM=1

7.4 SELECTION OF MEMBERS FOR EVALUATION

This Section Removed 05/04/2017 – Please reference the CT DOT Load Rating Manual available at: http://www.ct.gov/dot/cwp/view.asp?a=4048&Q=562040&PM=1

7.5 MISCELLANEOUS RATING PROCEDURES & REQUIREMENTS

This Section Removed 05/04/2017 – Please reference the CT DOT Load Rating Manual available at: http://www.ct.gov/dot/cwp/view.asp?a=4048&Q=562040&PM=1

7.6 USING DESIGN CALCULATIONS FOR LOAD RATINGS

This Section Removed 05/04/2017 – Please reference the CT DOT Load Rating Manual available at: http://www.ct.gov/dot/cwp/view.asp?a=4048&Q=562040&PM=1

7.7 COMPUTER SOFTWARE

This Section Removed 05/04/2017 – Please reference the CT DOT Load Rating Manual available at: http://www.ct.gov/dot/cwp/view.asp?a=4048&Q=562040&PM=1

7.8 SPECIFICATIONS

This Section Removed 05/04/2017 – Please reference the CT DOT Load Rating Manual available at: http://www.ct.gov/dot/cwp/view.asp?a=4048&Q=562040&PM=1

.

7.9 DOCUMENTATION OF LOSSES

The amount of material remaining and the location and extent of losses on steel members must be recorded for use in the analysis.

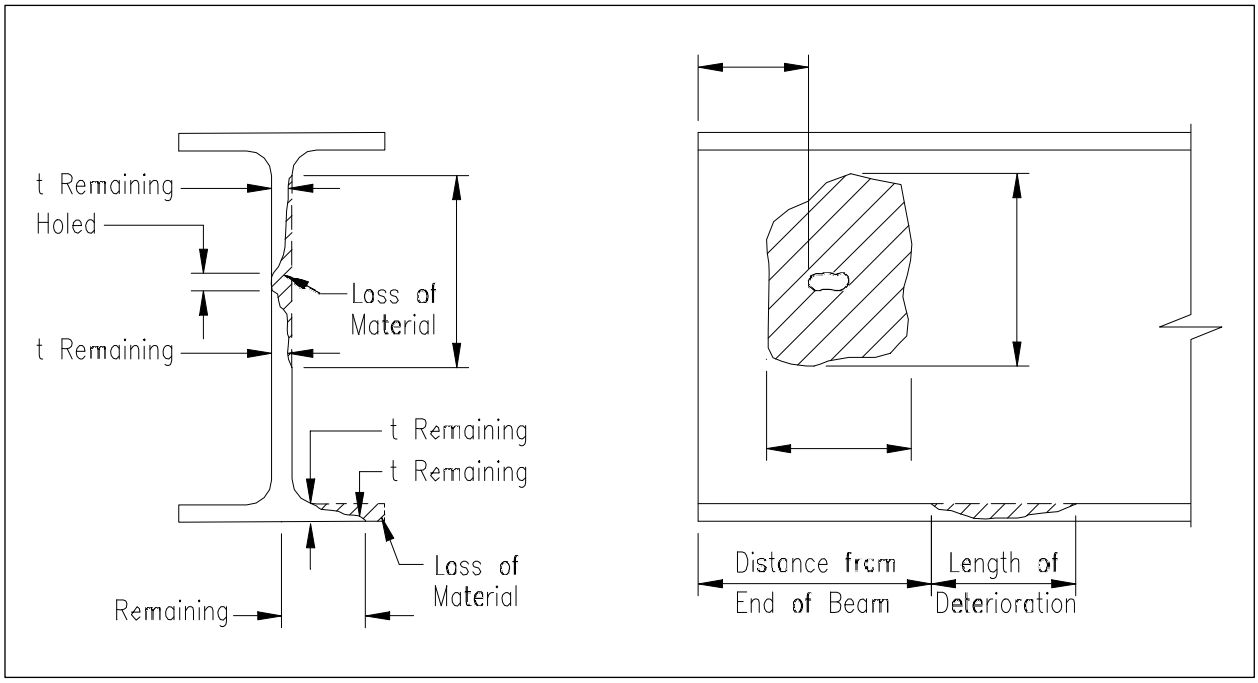

Additionally, the size, number and relative location of bolts or rivets that affect the "net area" in tension members should be accounted for in the analyses. For compression members, misalignments, bends and kinks that may result in eccentric loading or possible buckling should be carefully located and measured since these defects may have a great effect on the load carrying capacity of the member.

7.10 RE-EVALUATION

If during the course of an inspection it is determined in the field that considerable deterioration is present, the inspector should notify the Transportation Engineer III of the conditions found and should complete the ARequest for Bridge Evaluation Load Ratings≅ form (see Appendix for a copy of the form) and forward it to the Supervising Engineer. The Supervising Engineer will determine the need for a re-evaluation and deliver the request to the appropriate office personnel. If the inspection is performed by a Consultant Team, the Consultant will request approval from the Bridge Safety office to perform the load rating.

Inspectors can reference the guidelines presented in Section 6.2.7 for assistance in determining the severity of deterioration and the possible need for a re-evaluation.

7.11 BRIDGES WITH UNKNOWN COMPONENT DETAILS

For load path redundant bridges, where the details of the structure are hidden from view and no structural plans are available, an inspection by a qualified bridge inspector and an evaluation by a qualified engineer may be adequate to determine approximate Inventory and Operating ratings (see the latest posting policy in Chapter 8 of this manual). This determination shall be discussed with the appropriate Supervising Engineer and the final rating determination made by the Manager of Bridge Safety and Evaluation.

It should be the practice of the inspection team to determine the dimensions and details of the necessary components if possible (i.e.: reinforcement steel size and spacing can be determined by measurement in spalled areas, depths of steel beams may be determined by measuring up from the bottom of encasement and down from the top of deck, etc.). If these dimensions and properties are not measurable, sufficient sketches and photographs should be taken to adequately document the conditions for the purpose of providing an evaluation of load capacity.

In some instances it will be possible to gain further insight into the makeup of the structural elements of the bridge by using non-destructive testing methods. A "D" Meter will show the thickness of steel sections when one surface is exposed. Pachometers can be utilized to determine spacing of reinforcement steel as well as some indication of concrete cover if the bar size is known or bar size if the cover is known. Prior to requesting any specialized NDT procedure, the Supervising Engineer shall be notified and the process discussed.

The following guidelines are provided to show the required dimensions for bridges with unknown component details:

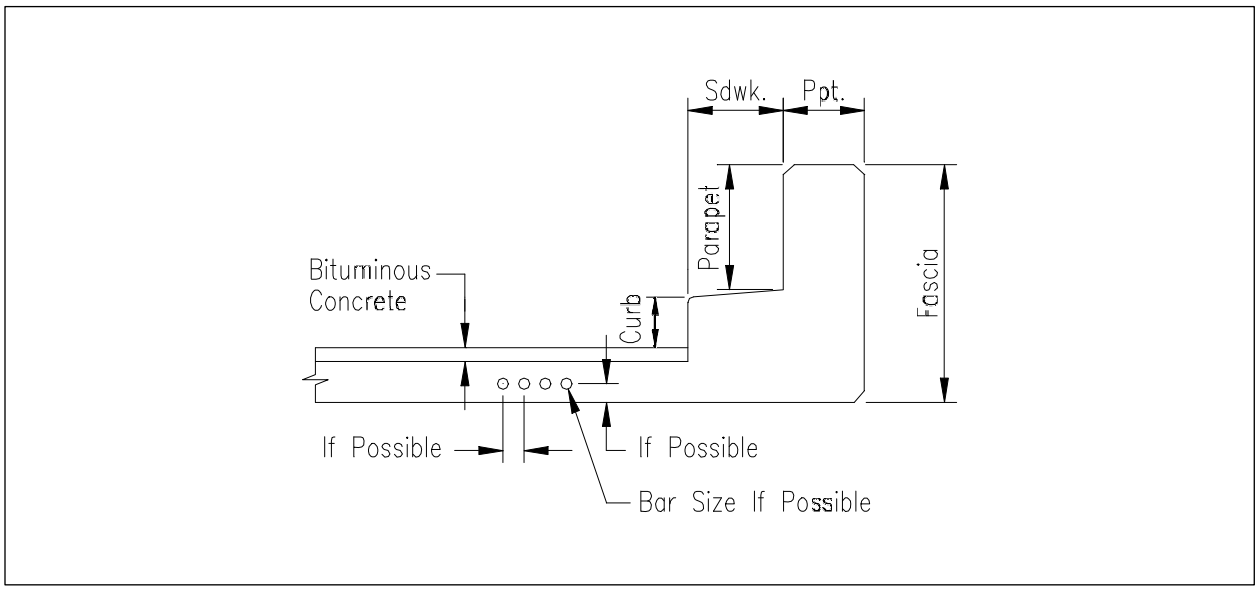

Concrete Slabs

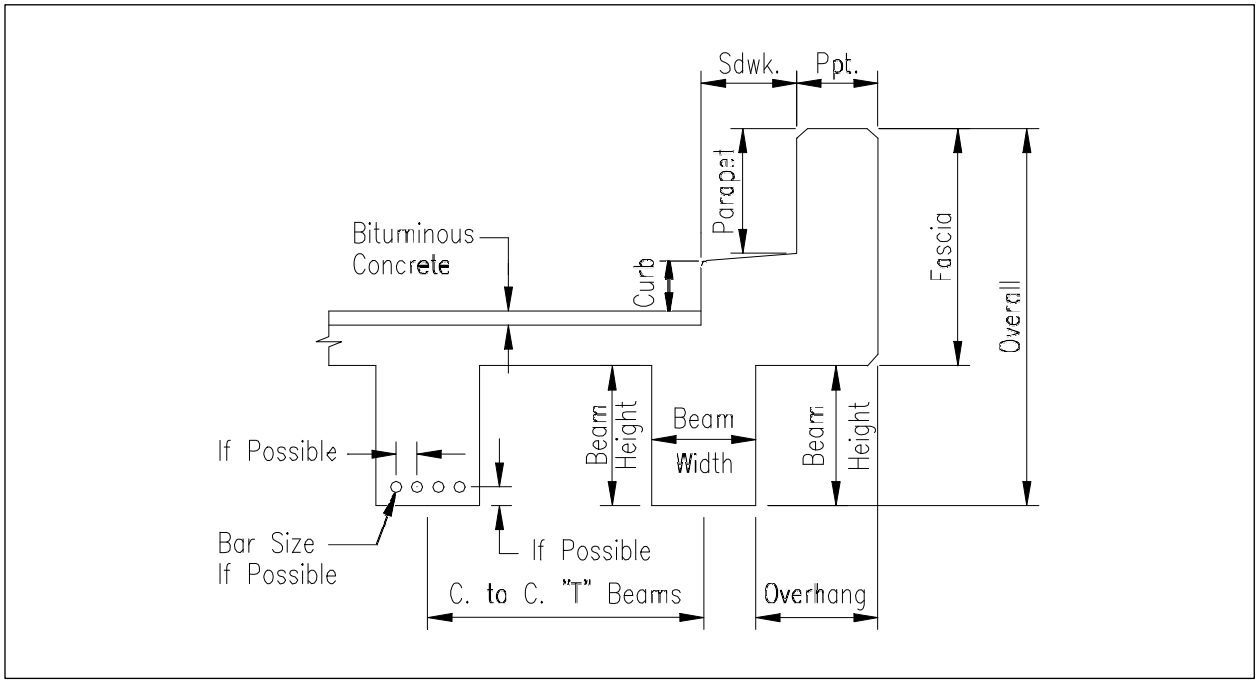

Concrete T Beams

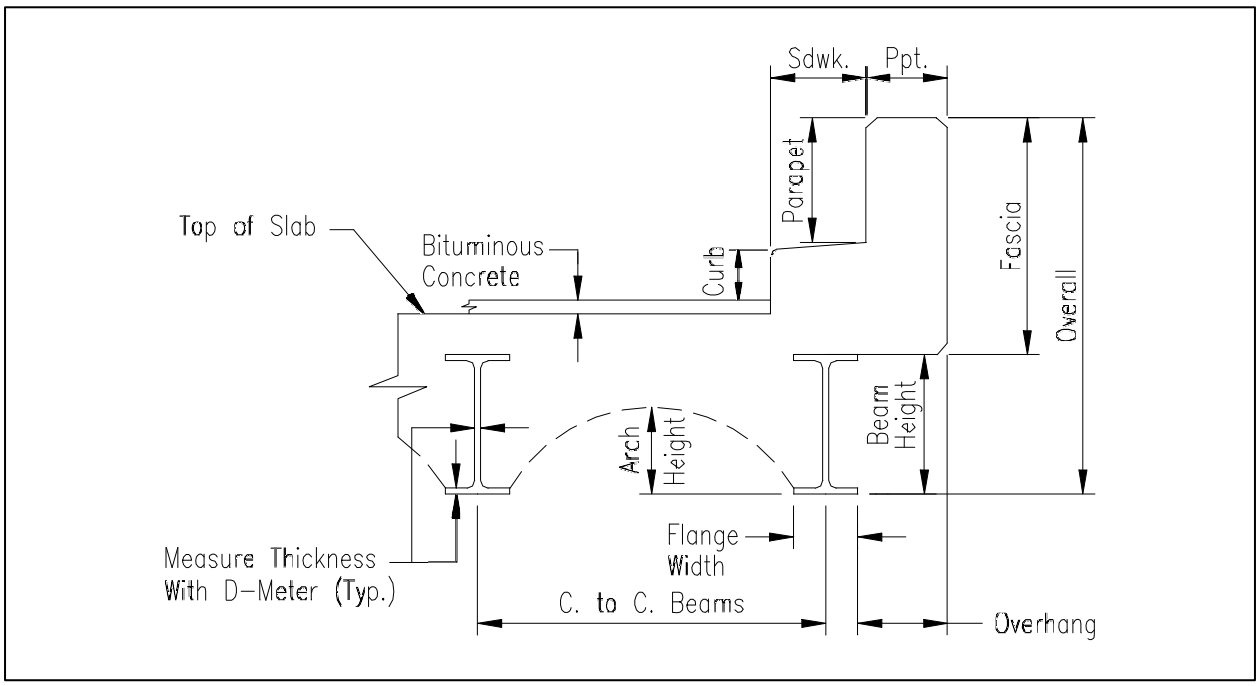

Arch Pan Deck Slab

7.12 GUIDELINES FOR DETERMINING COMPACTNESS IN STEEL BEAMS

This Section Removed 05/04/2017 – Please reference the CT DOT Load Rating Manual available at: http://www.ct.gov/dot/cwp/view.asp?a=4048&Q=562040&PM=1

7.11.1 Riveted/Bolted Built-Up Members

This Section Removed 05/04/2017 – Please reference the CT DOT Load Rating Manual available at: http://www.ct.gov/dot/cwp/view.asp?a=4048&Q=562040&PM=1

711.2 Positive Moment Sections of Composite Steel I-Beams

This Section Removed 05/04/2017 – Please reference the CT DOT Load Rating Manual available at: http://www.ct.gov/dot/cwp/view.asp?a=4048&Q=562040&PM=1

7.11.3 Negative Moment Sections of Composite Steel I-Beams

This Section Removed 05/04/2017 – Please reference the CT DOT Load Rating Manual available at: http://www.ct.gov/dot/cwp/view.asp?a=4048&Q=562040&PM=1

7.11.4 Positive Moment Sections of Composite Steel Box Girders

This Section Removed 05/04/2017 – Please reference the CT DOT Load Rating Manual available at: http://www.ct.gov/dot/cwp/view.asp?a=4048&Q=562040&PM=1

7.11.5 Negative Moment Sections of Composite Steel Box Girders

This Section Removed 05/04/2017 – Please reference the CT DOT Load Rating Manual available at: http://www.ct.gov/dot/cwp/view.asp?a=4048&Q=562040&PM=1

7.11.6 Positive Moment Sections of Curved Composite Steel I-Girders

This Section Removed 05/04/2017 – Please reference the CT DOT Load Rating Manual available at: http://www.ct.gov/dot/cwp/view.asp?a=4048&Q=562040&PM=1

.

7.11.7 Negative Moment Sections of Curved Composite/Non-Composite Steel I-Girders

This Section Removed 05/04/2017 – Please reference the CT DOT Load Rating Manual available at: http://www.ct.gov/dot/cwp/view.asp?a=4048&Q=562040&PM=1

This Page intentionally left blank

7.11.8 Positive Moment Sections of Curved Composite Steel Box Girders

This Section Removed 05/04/2017 – Please reference the CT DOT Load Rating Manual available at: http://www.ct.gov/dot/cwp/view.asp?a=4048&Q=562040&PM=1

This Page intentionally left blank

7.11.9 Negative Moment Sections of Curved Composite/Non-Composite Steel Box Girders

This Section Removed 05/04/2017 – Please reference the CT DOT Load Rating Manual available at: http://www.ct.gov/dot/cwp/view.asp?a=4048&Q=562040&PM=1

7.11.10 Tension Members

This Section Removed 05/04/2017 – Please reference the CT DOT Load Rating Manual available at: http://www.ct.gov/dot/cwp/view.asp?a=4048&Q=562040&PM=1

7.12 FIELD INVESTIGATION FORMS FOR LOAD RATING EVALUATIONS

The field forms on the following pages may be used to document structure dimensions for use in performing load rating evaluations and to document deterioration of steel members.

FIELD NOTES	BRIDGE NO.	DATE:
	CREW:	SHEET

SPAN AND STRUCTURE LENGTH

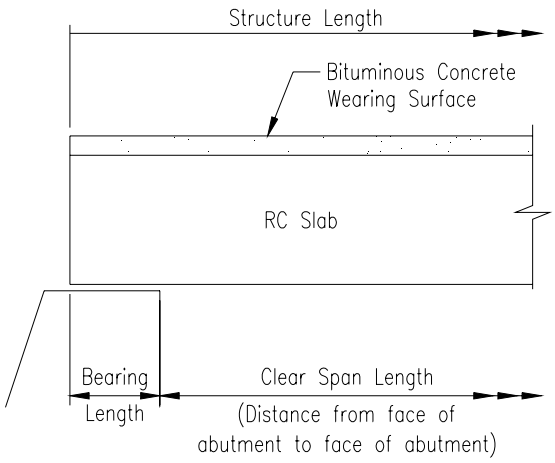

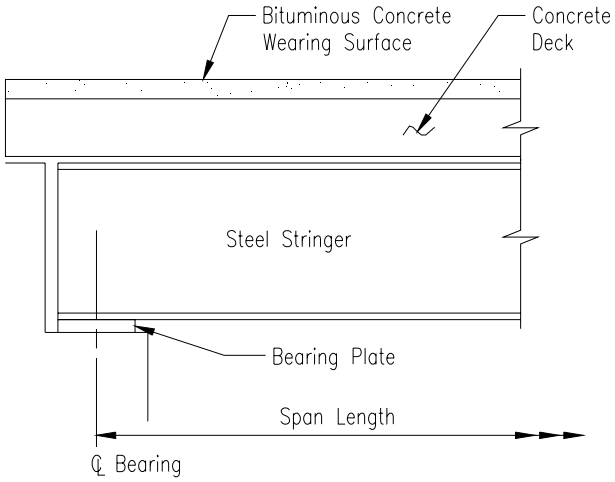

FIELD NOTES	BRIDGE NO.	DATE:
	CREW:	SHEET

STRINGER SPACING

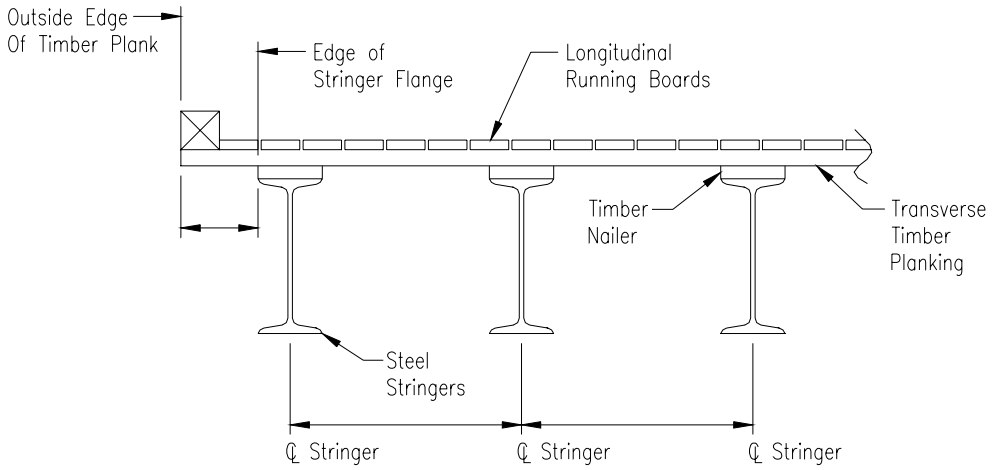

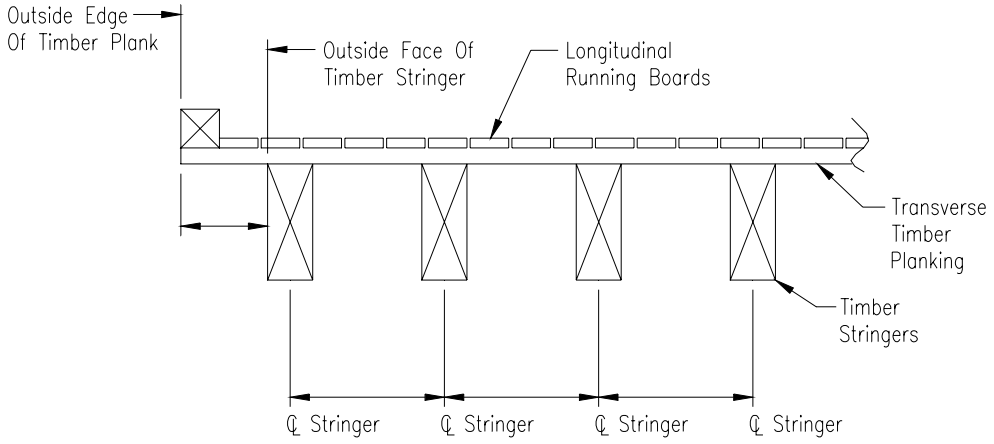

FIELD NOTES	BRIDGE NO.	DATE:
	CREW:	SHEET

CONCRETE ENCASED STRINGER

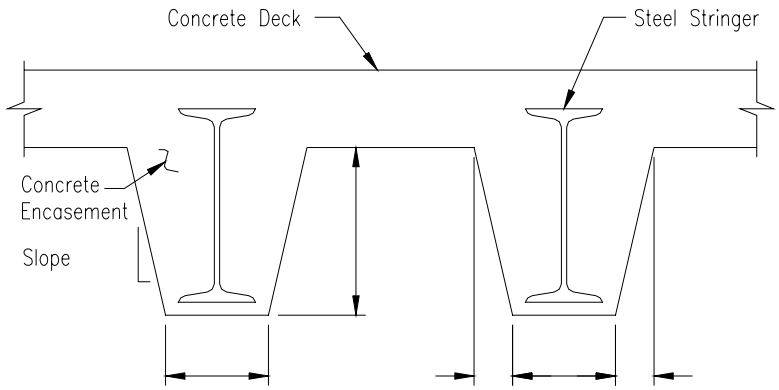

* Measure size of concrete encasement.
Width at lower flange.
Width adjacent to concrete deck.
Height of concrete encasement, measured from underside of deck to bottom flange of stringer.

FIELD NOTES	BRIDGE NO.	DATE:
	CREW:	SHEET

SPAN AND STRUCTURE LENGTH

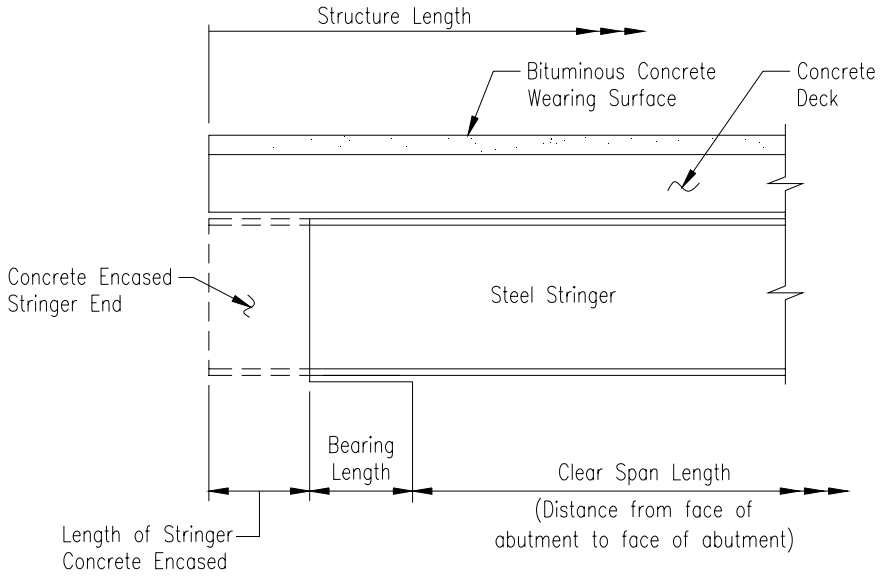

FIELD NOTES	BRIDGE NO.	DATE:
	CREW:	SHEET

THICKNESS OF CONCRETE DECK

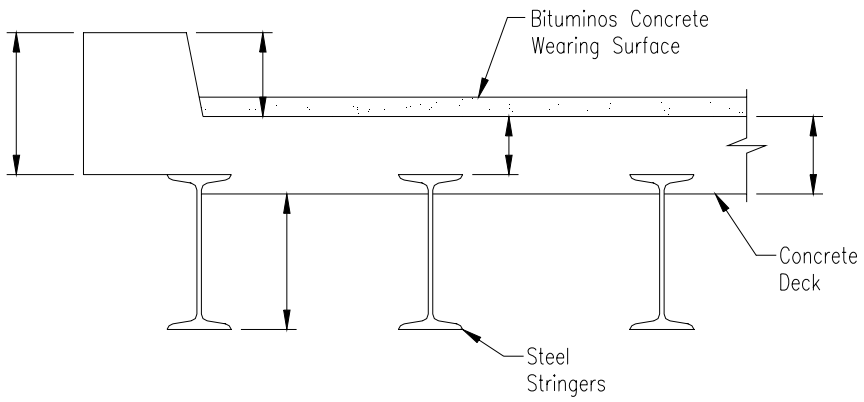

FIELD NOTES	BRIDGE NO.	DATE:
	CREW:	SHEET

DIAPHRAGM SPACING

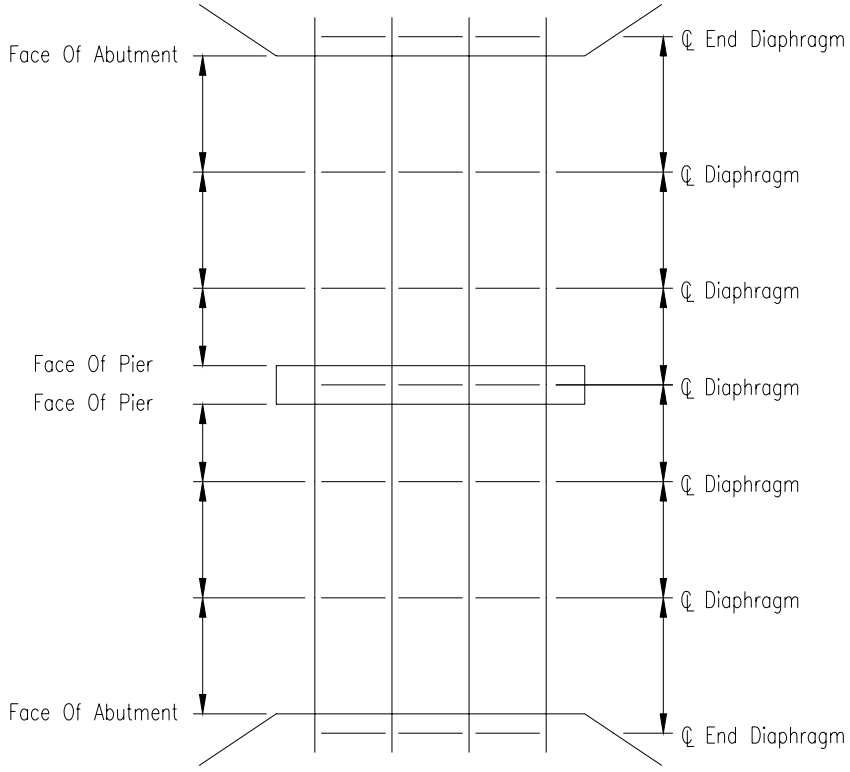

FIELD NOTES	BRIDGE NO.	DATE:
	CREW:	SHEET

STRINGER SPACINGS

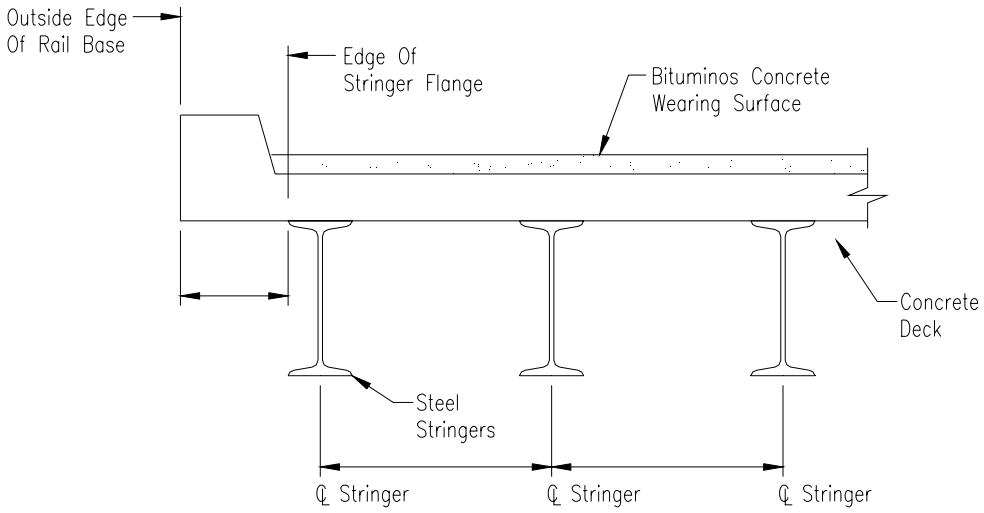

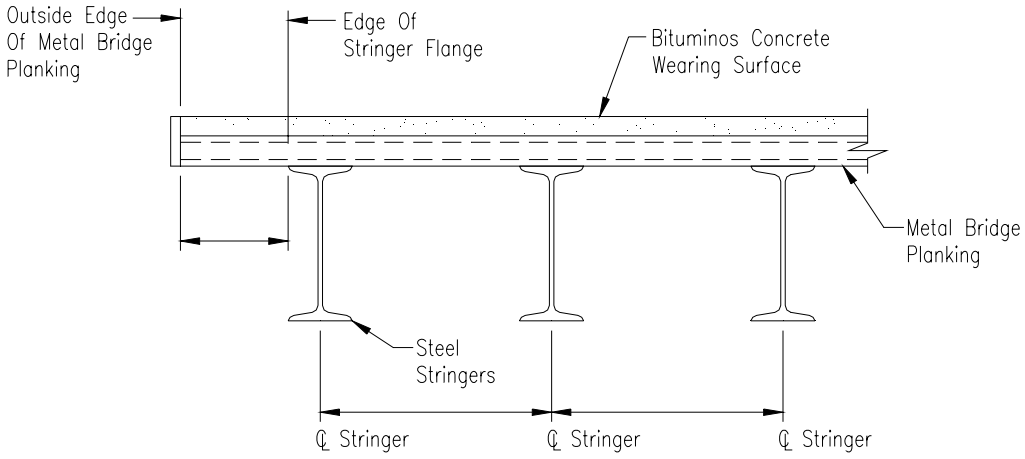

FIELD NOTES	BRIDGE NO.	DATE:
	CREW:	SHEET

SPAN AND STRUCTURE LENGTH

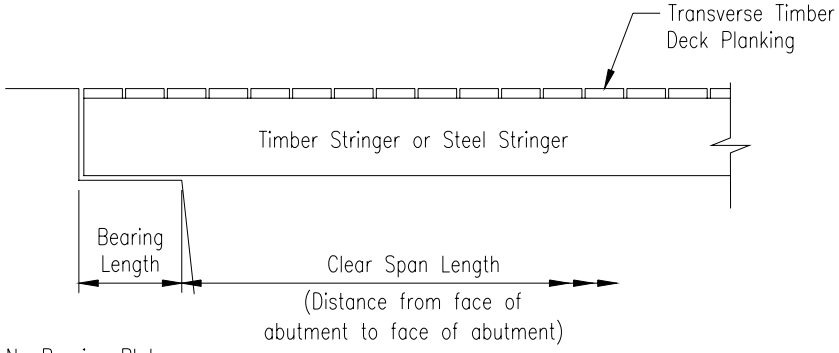

No Bearing Plates.
The Timber Or Steel Stringer Seating
On The Abutment Or Pier Seat.

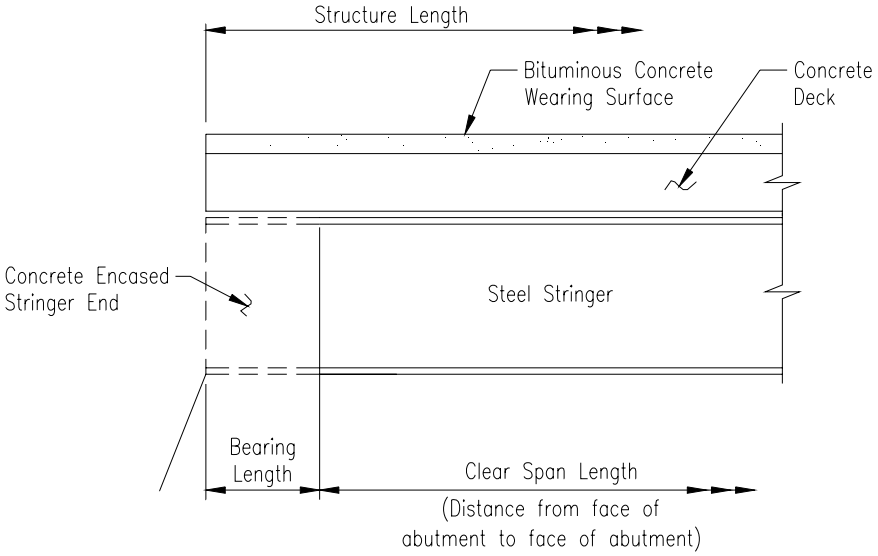

FIELD NOTES	BRIDGE NO.	DATE:
	CREW:	SHEET

CORRUGATED METAL BRIDGE PLANKING

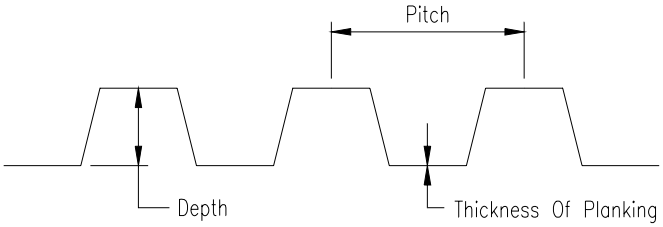

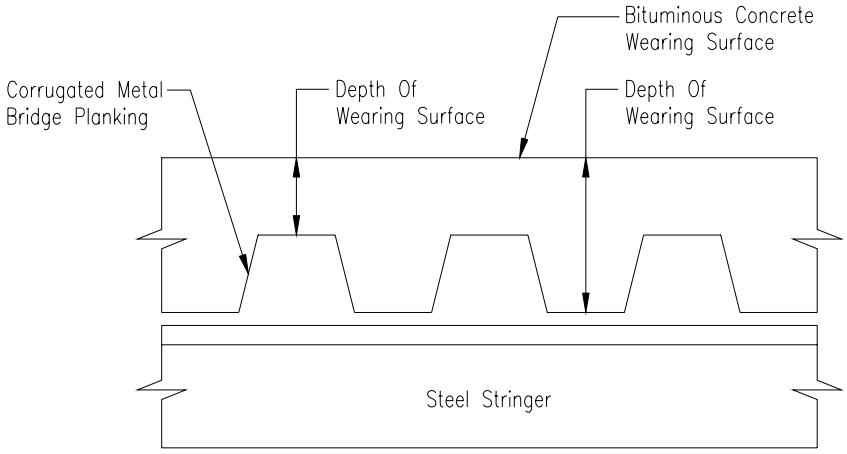

FIELD NOTES	BRIDGE NO.	DATE:
	CREW:	SHEET

STRINGER SPACING

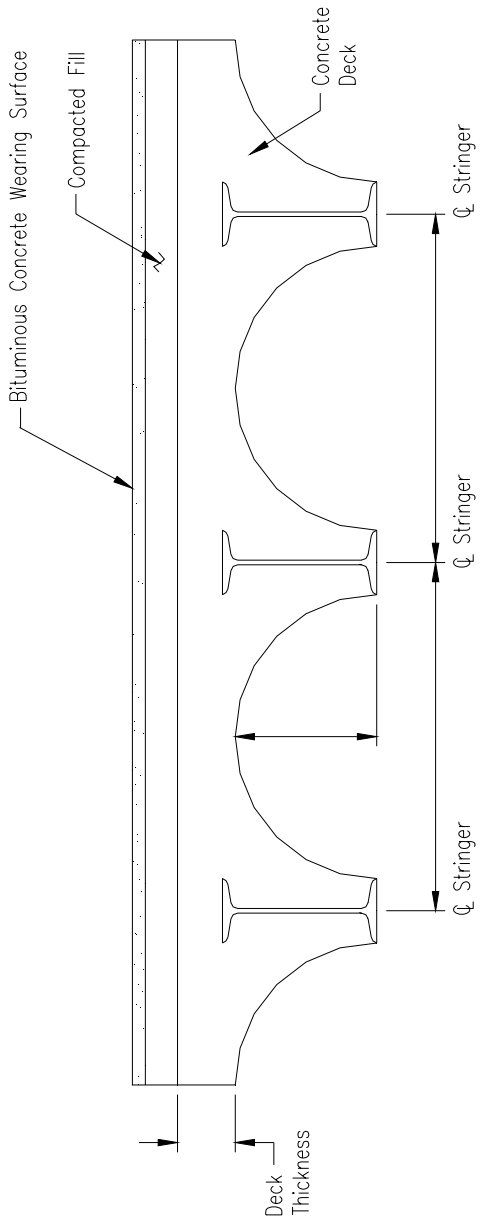

FIELD NOTES	BRIDGE NO.	DATE:
	CREW:	SHEET

S-SHAPE BEAM

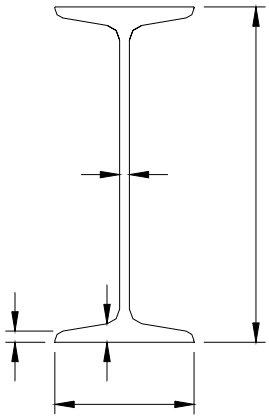

Beam No. _____

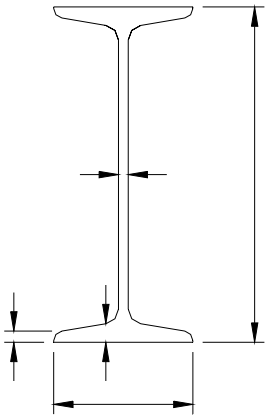

Beam No. _____

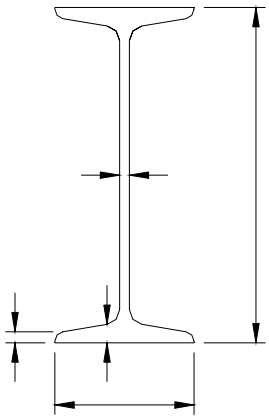

Beam No. _____

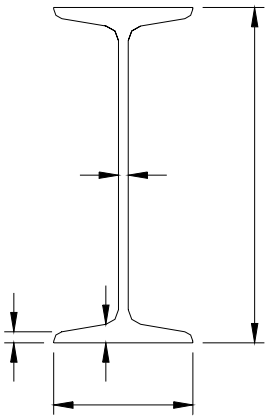

Beam No. _____

FIELD NOTES	BRIDGE NO.	DATE:
	CREW:	SHEET

W–SHAPE BEAM

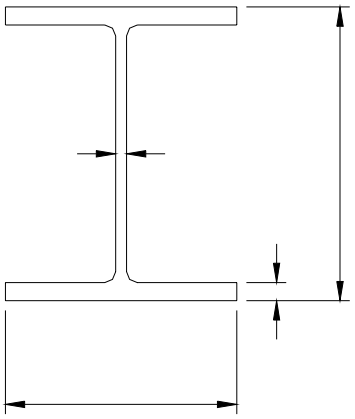

Beam No. _____

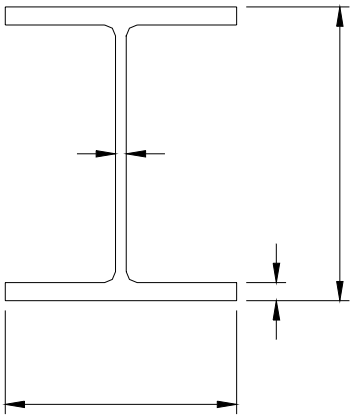

Beam No. _____

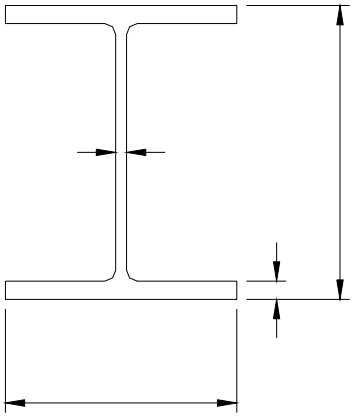

Beam No. _____

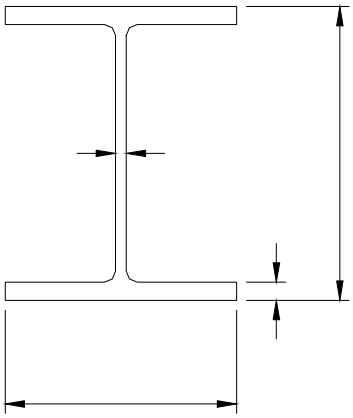

Beam No. _____

FIELD NOTES	BRIDGE NO.	DATE:
	CREW:	SHEET

W–SHAPE BEAM WITH COVER PLATE

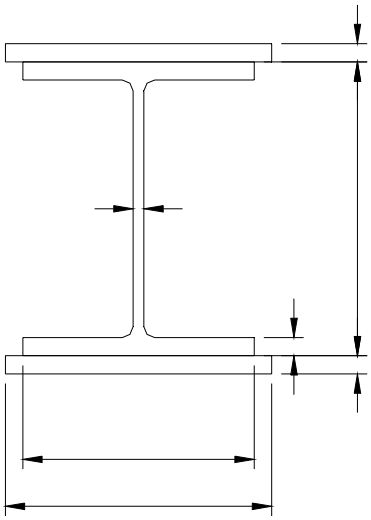

Beam No. _____

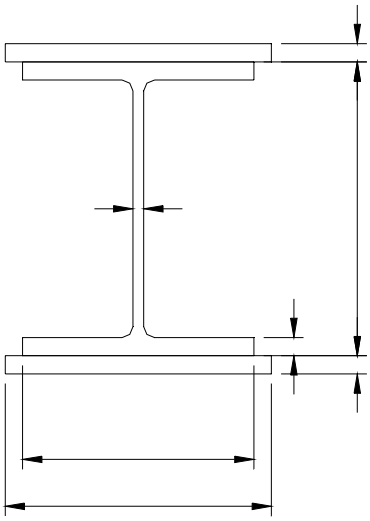

Beam No. _____

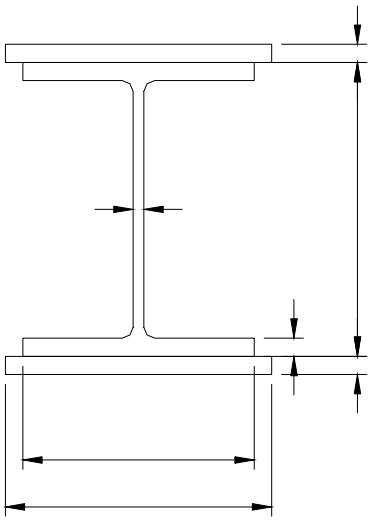

Beam No. _____

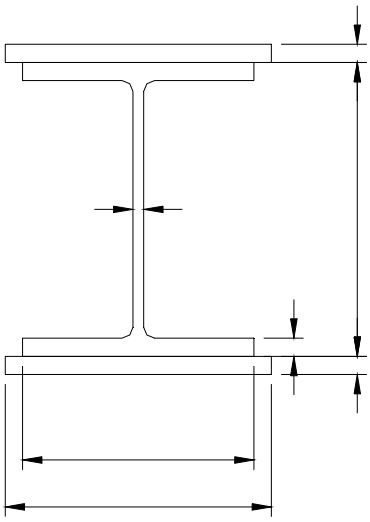

Beam No. _____

FIELD NOTES	BRIDGE NO.	DATE:
	CREW:	SHEET

SECTION LOSS NOTES

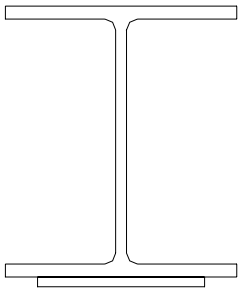

W–Shape Beam
With Cover Plate

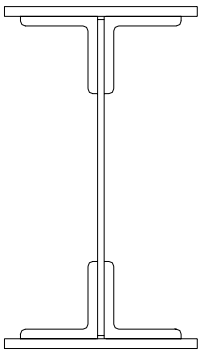

Plate Girder

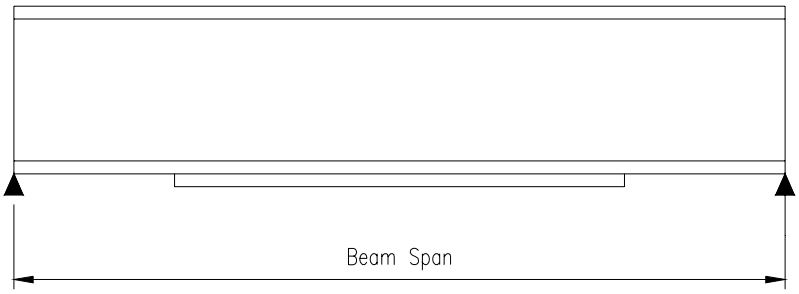

Elevation View

Beam No. _____ Span No. _____

FIELD NOTES	BRIDGE NO.	DATE:
	CREW:	SHEET

SECTION LOSS NOTES

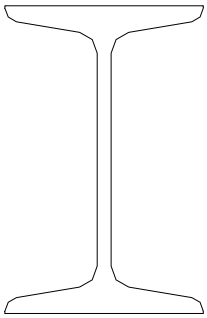

S–Shape Beam

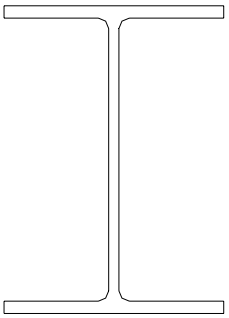

W- Shape Beam

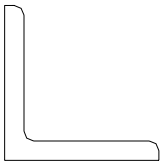

Angle

Channel

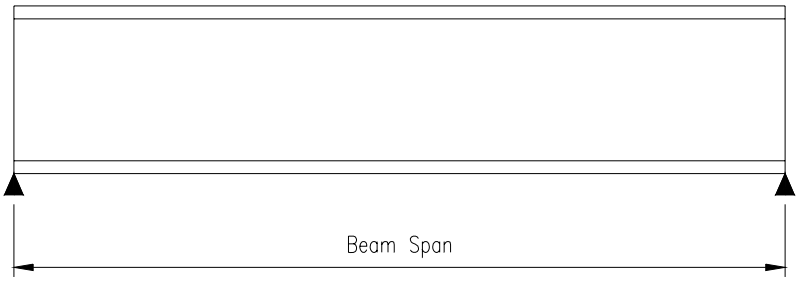

Elevation View

Beam No. _____ Span No. _____

CHAPTER 8

POSTING AND PERMIT PRACTICES

8.1 POSTING 8-1

8.2 PERMITS 8-4

LOAD RATING PROCEDURE 8-5

CHAPTER 8

POSTING AND PERMIT PRACTICES

8.1 POSTING

The Department has developed a Posting Procedure for the purpose of providing a uniform approach to the load posting of the State's bridges. The procedure is as follows:

1. **Definitions**

   Evaluation Staff - The Transportation Engineer III, and staff that are responsible for performing and/or reviewing load capacity evaluations within the Bridge Safety and Evaluation Section.

   Inventory Rating and Operating Rating - See Chapter 6 of the AASHTO *Manual for Condition Evaluation of Bridges - 1994,* as revised.

   H & HS Vehicles - See AASHTO *Standard Specifications for Highway Bridges,* as revised.

   Posting Review Committee:

Chairman	-	Manager of Bridge Safety and Evaluation
Secretary	-	Supervising Engineer in charge of the Evaluation Staff
Members	-	Supervising Engineer in charge of the inspection area where the bridge is located.
	-	Transportation Engineer III in charge of load evaluations.
	-	Manager of Bridge Operations

2. This procedure is intended to include all bridges that carry vehicular traffic currently inventoried by the Department.

3. Structures shall be evaluated using the "Load Factor Method" when adequate plans for the bridge exist or when sufficient information can be obtained by a field review without the use of destructive test methods. An Inventory and Operating rating shall be established for the HS20 vehicle. When plans are not obtainable and only destructive means would provide adequate information, a structure shall be assessed a judgement Inventory and Operating rating by the evaluation staff. In accordance with Section 7.4.1 of AASHTO's *Manual for Condition Evaluation of Bridges,* a concrete bridge whose details of reinforcement are not known need not be posted for

restricted loading when it has been carrying normal traffic for an appreciable length of time and shows no signs of distress. However, until such time as the bridge is either strengthened or replaced, the bridge shall be inspected at frequent intervals, as determined by the Posting Review Committee, for signs of distress that may develop.

4. Whenever the Inventory rating for the HS20 vehicle is less than 34 tons, ratings shall also be computed for the following vehicles:

   a. The standard 18-wheel tractor/trailer combination (3S2) with a gross vehicle weight of 80,000#, and an overall wheelbase of 51 feet (12k on front axle, 36k on front tandem, 32k on rear tandem). Axles are spaced at 11', 4', 32' & 4' (front to rear).

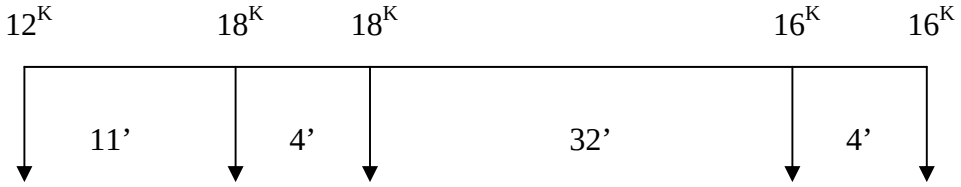

3 S2 Vehicle

   b. The standard single unit vehicle (H20) with a gross vehicle weight of 40,000# and a wheelbase of 14 feet (8k on front axle and 32k on rear axle).

In addition, whenever the Operating rating for the HS20 vehicle is less than 58 tons, ratings shall be computed for the following vehicle:

The four axle single unit construction vehicle (4 Axle) with a gross vehicle weight of 76,500# with an overall wheelbase of 18.2 feet (13.5k on front axle and 18.0k, 22.5k & 22.5k on the rear three axles). Axles are spaced at 9.6', 4.1' & 4.5' (front to rear).

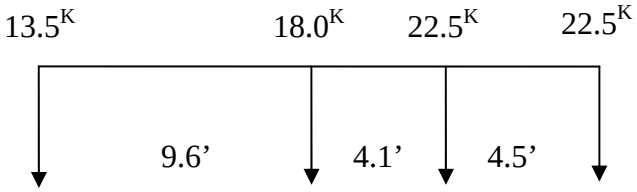

4 – Axle Construction Vehicle

Revised 11/24/2004

4. All structures shall be reviewed by the Posting Review Committee if the structure's Inventory capacity is less than 30 tons for the "HS20" vehicle, 35 tons for the "3S2" vehicle or 18 tons for the "H20" vehicle, or the gross tonnage of the "4 Axle" vehicle exceeds the structure's Operating capacity. The Posting Review Committee shall determine the appropriate action to be taken. Factors to be taken into consideration may include, but are not be limited to:

   - The presence of fracture critical members.
   - The presence of fatigue prone details.
   - The character and volume of traffic.
   - The likelihood of overweight vehicles.
   - The enforceability of the posting.
   - The type of design.
   - The location of the weak component.
   - Alternate evaluation/testing methods.
   - The posted weight limit need not be less than 15% above the structure's Inventory rating and shall never exceed the structure's Operating rating.
   - In general, all bridges that are rated for less than three tons will be closed.
   - In general, structures with an average daily traffic volume below 10,000 and low truck traffic shall be posted at or near the Operating rating for the structure. Structures with an average daily traffic above 10,000, having high truck traffic, or having a superstructure rating (Item 59) of 4 or less shall be posted closer to 15 percent above the structure's Inventory rating.

6. The Secretary of the Posting Review Committee shall be responsible for keeping an accurate report of the Committee's resolutions. This report shall be put in the bridge file upon completion.

7. In general, the current ConnDOT procedure is to post with pictorial signs for the standard AASHTO "H", "HS" and "4 Axle" vehicles. The posting sign may contain one to all three of these vehicles. The 3S2 vehicle may be substituted for the HS vehicle in certain cases. The minimum posting shall be 3 tons for the "H" vehicle, 14 tons for the "HS" vehicle and 14 tons for the "4 Axle" vehicle (single unit only). The posting signs shall be located at the structure and at preceding intersections so that overweight vehicles may take appropriate action.

Revised 11/24/2004

8. Bridges owned and maintained by the State will be posted by the State; bridges owned and maintained by municipalities will be posted by those municipalities. Orphan bridges will be posted by the municipality where the bridge is located. The State's procedure is to notify municipalities when their bridges are found to have deficiencies and when their bridges require posting or closure. The State also notifies the municipalities when State bridges within their boundaries will require posting or closure so that they can alert their school, police and fire departments, etc. All posting shall be in accordance with the latest edition of the Federal Highway Administration's "*Manual on Uniform Traffic Control Devices"*.

9. In general, the enforcement of the postings of State owned bridges shall be the responsibility of the State; the enforcement of the postings of the municipality owned bridges and orphan bridges shall be the responsibility of the municipalities. Any bridges whose load posting cannot be adequately enforced (especially those bridges whose ratings are very low) shall be considered for closure to ensure the safety of the traveling public.

8.2 PERMITS

The current practice for issuing permits for overweight vehicles involves both the Motor Transport Division and the Bridge Safety and Evaluation Section.

Permits are issued by the Motor Transport Division for vehicles with gross vehicle weights that exceed the maximum legal loads defined by the Connecticut General Statutes 14-267a, as revised. Vehicles with gross vehicle weight (GVW) over these amounts or special vehicles are forwarded to the Bridge Safety and Evaluation Section for evaluation of the specific structures on the proposed route.

Blanket permits are issued annually for vehicles with multiple moves.

Under no circumstances are permits allowed for vehicles that produce ratings in excess of the Operating level for the critical member of the structure.

LOAD RATING PROCEDURE

This Section Removed 05/04/2017 – Please reference the CT DOT Load Rating Manual available at: http://www.ct.gov/dot/cwp/view.asp?a=4048&Q=562040&PM=1

CHAPTER 9

TYPICAL MAINTENANCE ACTIVITIES

One of the most important objectives of the bridge safety inspection program is to identify deficiencies and areas of deterioration for maintenance repairs in order to extend the useful life of the structure.

There are two types of deficiencies that should be noted; critical and noncritical.

Critical deficiencies are those that, if left unattended, will create a hazard to the traveling public or severely limit the use of the structure. Examples of critical deficiencies are:

- Cracked steel members
- Holes in decks
- Bearing pads not supporting bridge bearings
- Severely damaged or missing bridge rail/parapets
- Major distortion/bowing/buckling of steel members
- Obvious sagging or deflection of concrete members
- Broken/loose steel deck joint sections
- Loose concrete above travel ways
- Obvious scour or undermining of substructure elements
- Navigation lights not functioning
- Overhead signs or supports that have been severely damaged by impact or deterioration

If critical deficiency items are discovered during the inspection process, they should be immediately reported in accordance with Section 3.2.7 - Critical Deficiency Reporting.

A written Maintenance Memorandum shall be prepared as a follow up to the phone notifications.

Noncritical deficiencies are those that if left unattended will lead to further deterioration of the bridge. These deficiencies are to be called out in a Maintenance Memorandum that outlines the problem areas and gives the scope of the required remediation. These repairs will be programmed into a maintenance schedule and be performed by state maintenance forces, by a contractor on call to the maintenance section, or be reason for inclusion of the bridge in a bridge rehabilitation/replacement project through the Design Section.

The involvement of Bridge Maintenance in the necessary repairs is a function of the ability of the Maintenance Section to perform the repairs and the scope of the area requiring repair.

Maintenance forces have developed the expertise to facilitate most bridge related repairs. Their ability to perform these repairs is constrained by their budget and available forces. Types of repairs that maintenance can undertake are:

- Bearing Replacement
- Temporary Deck Joint Repairs and Replacement of Pourable Sealant Joints
- Steel Repairs/Splicing
- Concrete Patching (surface and full depth)
- Bridge Railing Repairs
- Spot Painting (in conjunction with other repairs)
- Remove or repair damaged overhead signs or supports.

It is imperative that the correspondence sent to Maintenance fully identify the size and location of the required repairs and that the priority of each repair be indicated.

The attached flow chart indicates the procedures for correcting deficiencies found during the inspection.

A system to monitor the completion of the repairs is in place. The Bridge Maintenance Section notifies the Bridge Safety and Evaluation Section of the repair items performed as well as informing them of those items that they did not perform. The site will be re-visited to verify the repairs and provide an initialed and dated copy of the Maintenance Memorandum to be filed with the latest inspection report.

It is not the intention of Bridge Safety and Evaluation to enumerate basic and routine maintenance items in Maintenance Memorandums. These items may be included in the inspection report, but will not be called out for repair if they do not have a significant effect on the bridge structure or public safety.

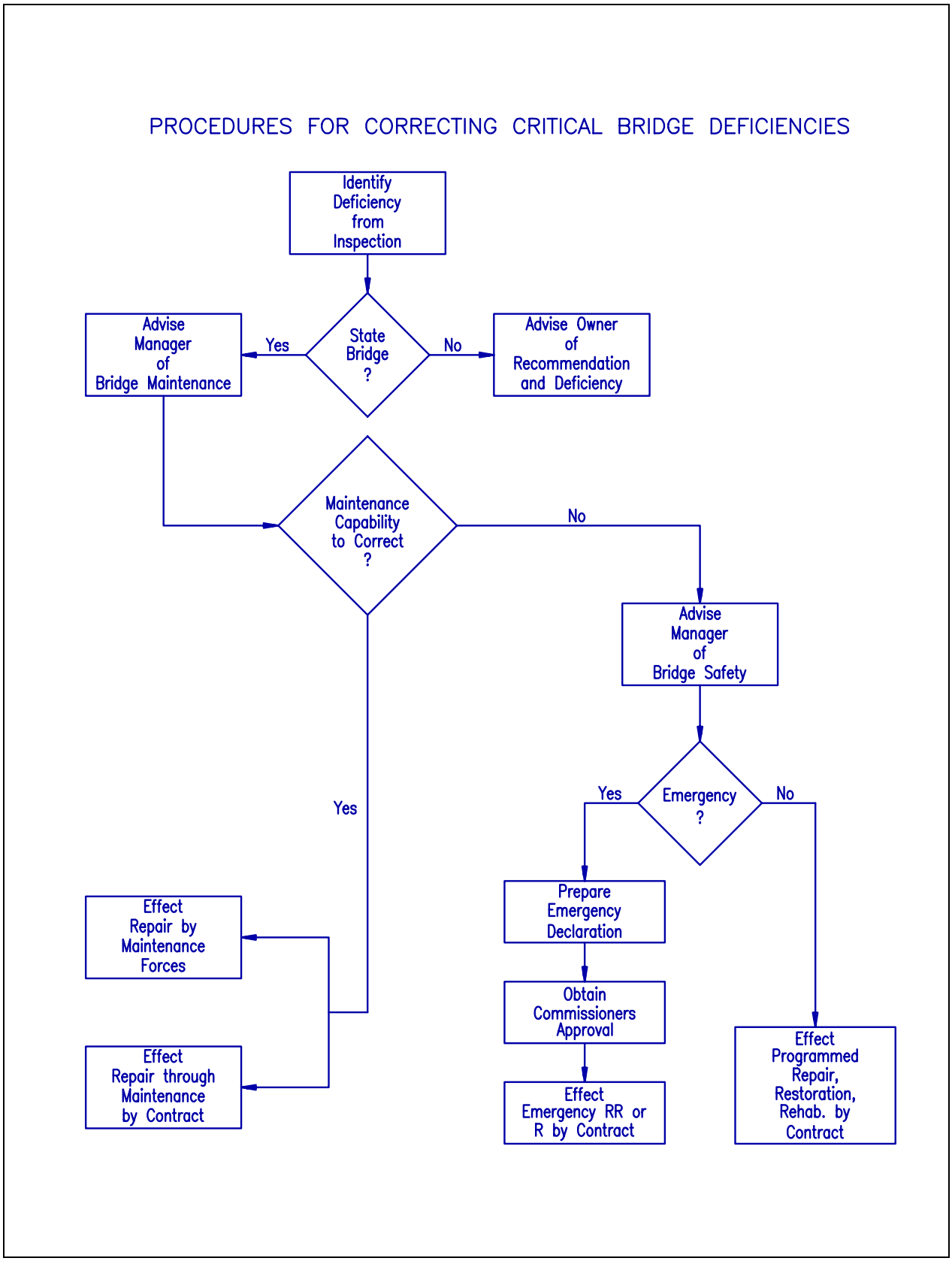
PROCEDURES FOR CORRECTING CRITICAL BRIDGE DEFICIENCIES
Identify Deficiency from Inspection
State Bridge ?
Yes
No
Advise Manager of Bridge Maintenance
Advise Owner of Recommendation and Deficiency
Maintenance Capability to Correct ?
No
Yes
Advise Manager of Bridge Safety
Emergency ?
Yes
No
Prepare Emergency Declaration
Obtain Commissioners Approval
Effect Emergency RR or R by Contract
Effect Programmed Repair, Restoration, Rehab. by Contract
Effect Repair by Maintenance Forces
Effect Repair through Maintenance by Contract

Priority Codes for Work Items

The following priority codes and respective response times will be used when specifying required repairs to bridges and sign supports. The examples listed are only general guidelines and should not be considered a complete listing. The criticality of any defect should be reviewed on a case-by- case basis and may require that the repairs be performed in a more timely fashion or allow them to be programmed as routine maintenance.

Critical Finding A: IMMEDIATE response by Maintenance forces. The inspection team must contact the office immediately upon discovery and not remove any inspection traffic pattern until instructed otherwise.

Examples of Critical Finding A deficiencies:

- Cracks in main steel members.
- Substantial section loss on steel members requiring immediate strengthening.
- Holes through decks or sidewalks.
- Critical bearing deficiencies such as but not limited to: severely spalled concrete bearing pedestal not supporting masonry plate, cracked bronze bearing plate or severely tilted rocker bearing.
- Severely damaged or missing bridge rail/parapets/fence.
- Major distortion/bowing/buckling of primary steel members.
- Obvious sagging or deflection of concrete members.
- Broken and protruding metal steel deck joint sections requiring immediate action.
- Loose concrete above vehicular or pedestrian travel ways.
- Significant undermining of substructure elements.
- Overhead signs or supports that have been severely damaged by impact or deterioration.

Critical Finding B: Response within 1 WEEK. The inspection team must contact the office immediately upon discovery and not remove any inspection traffic pattern until instructed otherwise.

Examples of Critical Finding B deficiencies:

- Substantial section loss on steel members.
- Loose deck joint components.
- Navigation lights not functioning.
- Spalls in a sidewalk surface that pose a pedestrian hazard.
- Uneven sidewalk transitions (critical approach settlement). Notify appropriate owner.
- Damaged pedestrian barriers (rail, fence or parapet) with openings 6 inches or greater in diameter.
- Damaged protective barrier over Electrified Railroad. Notify appropriate owner.

Priority Repair: Structural or safety concerns - Examples of Priority Repair deficiencies:

- Missing structural fasteners. Provide location, quantity and size (i.e. diameter, length and grade).
- Settlement at the bridge joints that causes uneven roadway.
- Uneven sidewalk transitions (>1 inch). Notify appropriate owner.
- Exposed strands on prestressed concrete members.
- Isolated defective bridge expansion bearings.
- Weep pipes draining onto steel structural members.
- Impact damage to guide rail to parapet attachment sections.
- Debris in a waterway that affects hydraulic capacity or scour.
- Damaged protective fencing over non-electrified Railroad (for protective fencing ownership other than the State, notify appropriate owner instead of creating a work item).
- Fully clogged scuppers.
- Dents/gouges in beams.
- Cracked welds affecting primary elements (i.e. cover plate welds).
- Minor undermining of substructure.
- Large voids, shifting or cracked stones in masonry elements.
- Missing sections of bridge rail that do not pose an immediate safety hazard.
- Intact hollow concrete over a vehicular or pedestrian travel way.

Routine Repair: Of lesser importance, but needing attention

Examples of Routine Repair deficiencies:

- Cohesion cracks or extensive adhesion cracks in asphaltic plug joints.
- Active leaking through deck joints.
- Locations of severe rusting on steel members (isolated locations are assigned to Bridge Maintenance).
- Cleaning pigeon debris. May be a higher priority if needed for inspection access.
- Isolated severe or widespread moderate spalls or severe scale with exposed reinforcing steel (the intent is not to create a work item for every miscellaneous spall or area of scale).
- Weep pipes draining onto concrete structural members.
- Debris that is affecting structural components.
- Missing, damaged or non-functioning drainage components.
- Scour along substructure.
- Significant masonry repointing necessary.
- Spot painting needs.
- Cracked welds affecting secondary members or welds that could propagate to affect primary members.
- Damaged pedestrian barriers (rail, fence or parapet) with openings less than 6 inches in diameter.

Work Item Assignment:
The following work items will be assigned to Bridge Management by the Bridge Safety project engineer:

- Painting for full length of beams or full lines of beam ends.
- Replacing full lines of bearings.
- Installation of elastomeric bearing pads.
- Confined space entry issues.
- Scour mediation needs.

Non Work Items

These items require an e-mail with pictures to Bridge Operations and will not be generated as work items.

Examples of E-Mail Items:

- Potholes in a bridge deck or approach that could damage a vehicle or cause a driver or motorcyclist to lose control of their vehicle.
- Cutting back vegetation that impedes traffic vision.
- Damaged Approach Guide Rail.
- Damaged impact attenuator systems.
- Drainage systems discharging into the travel way.
- Electrical work (missing hand hole and junction box covers, damaged light standards, burned out bulbs, etc.).
- Tree and brush cutting for inspection access – provide 3 months advance notice, if possible.
- Embankment Erosion or undermining of roadway beyond wingwalls.
- Damaged/missing posting signs.

Commentary:

- Hollow haunches should be a separate work item from hollow concrete.
- Dirt approach path transitions to sidewalks don't warrant a work item.
- All work items shall be based on the current needs of the bridge. The lead inspector is responsible for reviewing open work items or BMM's to determine if the work is still required based on the above criteria.
- Since the repairs are tracked by structural component, you may need to create more than one work item for the same defect. For example, if there are hollow areas on the abutments and deck, you need to create one work item for "Hollow Concrete – Substructure" and one for "Hollow Concrete – Deck"
- All work items should have a photo of the deficiency if available. Note - only the first attached photo will appear on the printout that Maintenance receives. Sketches may be attached in pdf format to clarify the location of deficiencies.
- For bridges that have a project going into construction within the next year, check the plans to see if the deficiencies are to be addressed under the project. If they are, do not create work items unless they are for immediate safety concerns. If they are not included in the project, contact the designer to see if they can be added. Bridges still in early design, unless a replacement is planned, should still have work items – which should be incorporated into the design.
- The inspection team should contact the office regarding work item deficiencies that are discovered in a location that requires a complex pattern, road/ramp closure or other difficult traffic control aspect so that Maintenance has the option to utilize the inspection traffic pattern.
- In the event the office cannot be reached for notification of a critical deficiency, the inspection team should contact the appropriate highway operations office.

CHAPTER 10

CONDITION RATING GUIDELINES

10.1 REINFORCED CONCRETE DECKS 10-1

10.2 BEARINGS 10-7

10.3 REINFORCED CONCRETE 10-12

10.4 PRESTRESSED CONCRETE 10-18

10.5 STEEL 10-25

10.6 TIMBER 10-29

10.7 STONE MASONRY 10-32

10.8 WATERWAYS 10-36

10.8.1 Channel and Channel Protection 10-36
10.8.2 Waterway Adequacy 10-39

10.9 CULVERTS 10-40

10.9.1 Round Or Vertical Elongated Corrugated Metal Pipe Barrels 10-40
10.9.2 Corrugated Metal Pipe Arch Barrels 10-43
10.9.3 Structural Plate Arch Barrels 10-45
10.9.4 Low Profile Arch Long-Span Culvert Barrels 10-47
10.9.5 High Profile Arch Long-Span Culvert Barrels 10-50
10.9.6 Pear Shaped Long-Span Culvert Barrels 10-53
10.9.7 Horizontal Ellipse Long-Span Culvert Barrels 10-55
10.9.8 Corrugated Metal Box Culvert Barrel 10-58
10.9.9 Precast Concrete Culvert Barrels 10-61
10.9.10 Cast-In-Place Concrete Culvert Barrels 10-63
10.9.11 Masonry Culvert Barrels 10-65

10.10 RATING OF APPROACH CONDITIONS 10-67

10.11 TRAFFIC SAFETY FEATURES 10-74

10.12 MOVABLE BRIDGE CONDITION EVALUATION CODING 10-75

10.13 SUBSTRUCTURE CODING 10-86

10.14 RATING GUIDELINES FOR FORM BRI-18 "SUB-ITEMS" 10-92

Item 58 - Deck 10-92
Item 59 - Superstructure 10-101
Item 60 - Substructure..... 10-108
Item 61 - Channel Protection 10-114
Item 62 - Culverts & Retaining Walls 10-119
Approach Condition..... 10-122
Additional Notes/Comments..... 10-124

CHAPTER 10

CONDITION RATING GUIDELINES

10.1 REINFORCED CONCRETE DECKS

The following guidelines have been developed for the condition rating of Reinforced Concrete Decks. They are intended to supplement the FHWA Recording and Coding Guide to make it easier to determine the most appropriate condition rating to be assigned to the reinforced concrete deck (See Item 58 of the FHWA Recording and Coding Guide).

These rating guidelines shall apply to cast in place concrete decks as well as precast concrete deck panels. The condition of the overlay, railings, joints, etc., shall not influence the overall rating of the reinforced concrete deck.

Decks integral with the superstructure, such as concrete slabs, "T"-beams, box beams, rigid frames (without fill), etc., shall be rated based on the condition of the riding surface only. The condition of the underside of the integral deck will not be taken into account when rating the deck but will be considered in the superstructure rating. For integral superstructure bridges where the approach pavement is carried across the bridge on top of fill material, such as filled arches, frames or culverts, there is no deck and the overall deck rating will be "N". However, the condition of any deck elements present (overlay, railings, etc.) should be noted and the condition rating of those individual items coded on the BRI-18 Form.

Definitions:

Deficiency - Lack or shortage of a structural component from the quantity specified in design, (i.e. missing concrete components such as haunches or reinforcing bar spacing or size other than that specified by design, etc.). Construction defects such as honeycombing.

Deterioration - Areas exhibiting cracks (Reference Appendix 6.4), spalls, impact damage, map cracking, efflorescence, exposed reinforcing bars (with or with out corrosion), delaminations, scaling, abrasion or any other defect, on the topside or underside of the deck, which affects the ability of the reinforced concrete deck to function in its design capacity. On the topside of overlaid bridges, deterioration may be indicated by problems in the bituminous overlay such as map cracking, depressions or evidence of concrete staining coming through the overlay.

% Deterioration - A span by span estimation of the total surface area of deteriorated concrete relative to the total deck surface area as calculated on form BRI-10 - "Concrete Deterioration Worksheet" contained in Section 6.1.2 of this manual. Coincident areas are counted only once and superficial defects, such as light scale, hairline shrinkage or temperature cracks (parallel to slab reinforcement), tight map cracked areas without efflorescence or dry areas of efflorescence that do not appear to have active leakage, shall generally not be included in this calculation. Repaired areas, as defined below, should not be included unless they are of a temporary nature (bituminous concrete patches) or are themselves deteriorated (hollow patches).

Contamination - Intrusion of chlorides or other contaminants into the concrete. The extent of contamination is measured by laboratory tests. Generally, a deck is considered contaminated if it contains greater than 2.0 lbs. per cubic yard of concrete (1.2 kg/m;). Efflorescence is <u>not</u> an indication of contamination.

Repaired Area - Areas of the deck that have been repaired using an approved concrete mix (including Duracal, Set45, etc.), and approved repair details, which are sound and functioning as designed. Pop-outs on the underside of a deck that do not extend above the lower layer of reinforcement, and are coated with a protective epoxy type coating, should be considered permanent repairs. Any nonpermanent repairs, such as bituminous patches, are not considered a repaired area.

Coincident Area - Areas of deterioration in the same relative location on the top and bottom of the deck.

Code	**Description**
9	Excellent Condition - No maintenance or rehabilitation concerns. • No noticeable deficiencies or deterioration.
8	Very Good Condition - No maintenance or rehabilitation concerns. • No spalls, scaling or delamination noted. • Isolated hairline cracks noted with no affect on serviceability of the deck. • None of the electrical potential readings are above 0.35 volts, if half-cell testing was conducted. • None of the chloride test results indicate over 2.0 lbs./CY (1.2 kg/m;), if test was conducted. • Less than 5% of the deck is deteriorated.

7 Good Condition - Potential exists for minor maintenance.

- Isolated hairline cracks noted on the top or bottom of the deck with no negative affect on the serviceability of the deck.
- Minor efflorescence bleeding from cracks in concrete may be present.
- Isolated spalls up to 1 in. (25 mm) (1 in) with no exposed reinforcing steel noted on the bottom of the deck.
- Less than 2% of the top of deck surface is delaminated with no visible spalls noted. Rideability of the deck is not affected.
- None of the electrical potential readings are greater than 0.35 volts, if half-cell testing was conducted.
- None of the chloride test results indicate more than 2.0 lbs./CY, (1.2 kg/m;), if test was conducted.
- Light surface scaling, abrasion and/or minor honeycombing noted.
- Less than 10% of the deck is deteriorated.
- Decks that have been rehabilitated with a waterproof membrane and new overlay may be placed in this category based on the premise that the membrane will protect the deck from additional contamination and thereby slow the rate of deterioration. Decks must, however, show no evidence of water leakage.

6 Satisfactory Condition - Potential exists for major maintenance.

- Random fine cracks noted on the top or bottom of the deck may have minor efflorescence bleeding from them.
- Areas of map cracking may be present in the overlay or on the underside but without heavy efflorescence or wetness.
- Random spalls up to 1 in. (25 mm) deep with no exposed mild steel reinforcing bars or isolated spalls deep enough to expose the mat of steel reinforcing bars closest to the surface on the under side of the deck. Light surface corrosion on the reinforcing bars with no section loss.
- No more than 2% of the top of deck surface is spalled or delaminated. Rideability of the deck is minimally affected.
- Less than 15% of the electrical potential readings are greater than 0.35 volts.
- Less than 15% of the chloride test results indicate greater than 2.0 lbs./CY (1.2 kg/m;).
- Less than 20% of the deck is deteriorated.

- Medium surface scaling, abrasion and/or medium honeycombing may be present.

5 Fair Condition - Potential exists for minor rehabilitation.

- Widespread hairline to fine cracking on the top or bottom of the deck.
- Moderate efflorescence bleeding from cracks in concrete may be present.
- Widespread spalls up to 1 in. (25 mm) deep with no exposed mild steel reinforcing bars or random spalls deep enough to expose the mat of steel reinforcing bars closest to the surface. There may be corrosion on the reinforcing bars with minor section loss.
- Between 2% and 10% of the top of deck surface is spalled or delaminated. Rideability of the deck is moderately affected.
- Less than 30% of the deck is deteriorated.
- Less than 30% of the electrical potential readings are greater than 0.35 volts.
- Less than 30% of the chloride test results indicate over 2.0 lbs./CY, (1.2 kg/m;).
- Heavy surface scaling, abrasion and/or significant honeycombing noted (up to 1/2 in. (13 mm) in depth) over up to 25% of the deck surface area.
- Widespread discoloration or wet staining on concrete surfaces.

4 Poor Condition - Potential exists for major rehabilitation.

- Widespread fine to medium cracking noted on the top or bottom of the deck.
- Heavy efflorescence may be noted bleeding from cracks in concrete.
- Spalls on the bottom of the deck are widespread enough and/or deep enough to significantly affect the serviceability of the element. Moderate section loss on exposed steel reinforcing bars.
- Between 10% and 25% of the top of deck surface is spalled or delaminated. Rideability of the deck is affected.
- Less than 40% of the deck is deteriorated.
- Up to 40% of the electrical potential readings are greater than 0.35 volts.
- Up to 40% of the chloride test results indicate greater than 2.0 lbs./CY (1.2 kg/m;).

- Severe surface scaling, abrasion and/or significant honeycombing noted (between 1/2 in. (13 mm) and 1 in. (25 mm) in depth) over up to 25% of the deck surface area.
- Active water leakage through cracks and/or spalls in the deck.

3 Serious Condition - Rehabilitation or repair required immediately.

- Widespread cracking of greater than 1/8 in. (3.0 mm) noted on the top or bottom of the deck.
- Heavy efflorescence may be noted bleeding from cracks in concrete.
- Spalls on the bottom of the deck are widespread enough and/or deep enough to significantly affect the serviceability of the deck. There may be advanced section loss on exposed steel reinforcing bars.
- Greater than 25% of the top of deck surface is spalled or delaminated. Rideability of the deck is significantly affected.
- More than 40% of the deck is deteriorated.
- More than 40% of the electrical potential readings are greater than 0.35 volts.
- More than 40% of the chloride test results indicate greater than 2.0 lbs./CY (1.2 kg/m;).
- Severe surface scaling, abrasion and/or significant honeycombing noted (over 1 in. (25 mm) in depth).
- Heavy water leakage through cracks and/or spalls in the deck.

2 Critical Condition - Need for immediate repairs or rehabilitation is urgent.

- Severe cracking or spalling makes local "punch-throughs" possible.
- Structural capacity and/or rideability of the deck is severely reduced.
- Closure of the bridge to traffic may be required until corrective action is taken.

1 "Imminent" Failure Condition - Concrete deck is in danger of failing.

- Local failures have occurred.
- Deck is closed and studies are required to see if rehabilitation is feasible.

0 Failed Condition - Concrete deck has failed.

- Deck is closed and beyond repair.

10.2 BEARINGS

The following have been developed as the condition rating guidelines for bearings. In order to determine the most appropriate condition rating for the bearings, the evaluator should be knowledgeable of both the physical condition of the bearing components, (cracks, section loss, impacted rust, etc.), as well as the functional condition of the bearing. When considering functional condition, the evaluator shall look at expansion, contraction and rotation and evaluate both the degree to which these are occurring and whether or not the observed position of expansion, contraction and rotation is within the range expected for the ambient temperature. The evaluator shall also observe whether or not noted deficiencies and deteriorations occur at multiple bearings at one particular substructure element (i.e. all bearings at an abutment or pier).

Under certain circumstances, the evaluator may consider the condition of the substructure when assigning the condition rating to the bearing. If deterioration of the substructure elements is severe, specifically in the area of the bearings (such as severe undermining of the bearing plate), engineering judgement shall be used to determine the degree to which the functional capacity of the bearing is affected and the condition rating adjusted accordingly. In a similar manner, the condition of the bearings should not normally influence the condition rating assigned to the superstructure. However, if the condition of the bearings is such that the superstructure is being adversely affected by imposed forces resulting from the failure of the bearings to perform their design function, the condition rating for the superstructure may be affected.

These rating guidelines shall apply to all types of fixed and expansion bearings. The rating condition should be assigned based on the condition of the worst line of bearings on the bridge.

Definitions:

Deficiency - Lack or shortage of a structural component (i.e. fasteners, under sizing, etc.) from the quantity specified in design.

Deterioration - Areas exhibiting corrosion, shavings, pitting, impacted rust, section loss, cracks, dings, gouges, impact damage, fire damage, loose fasteners or any other defect that affects the ability of the structural component to function in its design capacity.

Code	**Description**
9	Excellent Condition - No maintenance or rehabilitation concerns.
	• No noticeable deficiencies or deterioration.
8	Very Good Condition - No maintenance or rehabilitation concerns.

- No noteworthy deficiencies or deterioration, minor surface rust may be present.

7 Good Condition - Potential exists for minor maintenance.

- Light to medium rust on less than 25% of the steel surface area. No section loss observed.
- Minor surface cracking observed in elastomeric pads.
- Minor accumulation of debris on and/or around bearings.
- Bearing is centered on both the masonry and sole plates with no signs of unexpected lateral movements, shifting or extrusion of bearing elements.
- Expansion, contraction and rotation are within the limits expected for the ambient temperature.
- Impacted rust between bearing elements is showing signs of impeding the normal expansion, contraction and rotation of the bearing (span length < 100’ (30 m)).
- Light to medium rust observed on bearing anchor bolts. Anchor bolts are firmly embedded in the substructure elements.
- Anchor bolt nuts are in place.

6 Satisfactory Condition - Potential exists for major maintenance.

- Light to medium rust on greater than 25% of the steel surface area.
- Severe rust on less than 25% of the steel surface area. Minor section loss (<5%) noted on bearing elements.
- Moderate cracking observed in elastomeric pads or minor shaving accumulation from pot bearings.
- Moderate accumulation of debris on and/or around bearings. Debris accumulation has the potential to interfere with normal expansion, contraction or rotation of the bearing or provides wet conditions that may accelerate deterioration of the bearing elements.
- Minor unexpected transverse movement, shifting or extrusion of bearing elements noted. There may be up to 5% loss of bearing area.
- Impacted rust is showing signs of forming and impeding the normal expansion, contraction and rotation of the bearing (span length > 100’ (30 m)).
- Moderate impacted rust between bearing elements with partial range of bearing expansion, contraction and/or rotation impeded (span length < 100’ (30 m)).
- Bearings exhibit minor over/under expansion, contraction or rotation for the ambient temperature.
- Anchor bolts are firmly embedded in the substructure, but have some minor deterioration noted. Nuts are in place.

5 Fair Condition - Potential exists for minor rehabilitation

- Severe rust on greater than 25% of the steel surface area. Moderate section loss (5% to 10%) noted on a recurrent basis throughout the bearing elements.
- Severe cracking or exposed shim plates noted on elastomeric pads.
- Moderate accumulation of elastomer or PTFE shavings from pot bearings.
- Moderate to heavy accumulation of debris on and/or around bearing elements that is interfering with the normal expansion, contraction or rotation of the bearing. Wet conditions attributed to debris buildup are accelerating deterioration of the bearing elements.
- Moderate unexpected transverse movement, shifting or extrusion of bearing elements noted. Between 6% and 10% loss of bearing area.
- Moderate impacted rust between bearing elements with partial range of bearing expansion/contraction and/or rotation impeded (span length > 100’ (30 m)).
- Bearing elements appear frozen with no evidence of normal movement or rotation observed (span length < 100’ (30 m)) and no damage to the substructure noted.
- Bearings exhibit moderate over/under expansion, contraction, or rotation for the ambient temperature.
- Up to 15% of all anchor bolts are bent, sheared, loose, or are severely deteriorated. Minor loss in ability to supply anchorage to the bearing elements.

4 Poor Condition - Potential exists for major rehabilitation.

- Severe rust with advanced section loss (10% to 20%) on bearing elements.
- Elastomeric pads are heavily deteriorated with section loss on exposed shim plates.
- PTFE sliding surface is loose or peeling.
- Heavy accumulation of debris on and/or around bearing is severely impeding the normal expansion, contraction or rotation of the bearings and causing heavy deterioration of the bearing elements.
- Severe transverse movement, shifting or extrusion of bearing elements noted between the masonry plate and sole plates (i.e. 25% of the sliding plate is extruded or one roller in a roller nest is off the masonry plate). Between 11% and 25% loss of bearing area.
- Severe impacted rust between expansion elements prevents the bearing from expanding or contracting.
- No evidence of normal movement and/or rotation of bearing elements discernable.

- Bearings are in a state of advanced over expansion or contraction for the ambient temperature.
- 15% to 25% of all anchor bolts are bent, sheared, loose, or are severely deteriorated. Moderate loss in ability to supply anchorage to the bearing.

3 Serious Condition - Rehabilitation or repair required immediately.

- Heavy rust with severe section loss (>20%) on bearing elements. No evidence of normal movement or rotation noted. Localized failure of bearing elements possible.
- 25% to 33% of all anchor bolts are bent, sheared, loose, have loose nuts or are severely deteriorated at any one pier or abutment. Severe reduction in ability to supply anchorage to the bearings as designed.
- 50% of the anchor bolts at any one line of bearings, are bent, sheared, loose, or are severely deteriorated so as to prevent their ability to supply anchorage to the bearing as designed.
- Bearing elements are severely misaligned and/or extruded (i.e. more than one roller in a roller nest type bearing is off the masonry plate) with 26% to 50% of loss of bearing area.
- Bearing elements are severely over expanded or contracted for the ambient temperature and are in danger of rotating or sliding off the masonry plate.
- Minor effects of increased stress noted in other superstructure elements due to lack of expansion and/or contraction.

2 Critical Condition - Need for immediate repairs or rehabilitation is urgent.

- Heavy rust with severe section loss. Complete failure of one or more bearing elements. No normal expansion, contracting, or rotation of bearing elements noted.
- Greater than 33% of all anchor bolts are bent, sheared, loose, have loose nuts or are severely deteriorated at any one pier or abutment, so as to prevent their ability to supply anchorage to the bearings as designed.
- Greater than 50% of the anchor bolts at any one bearing location, are bent, sheared, loose, have loose nuts or are severely deteriorated so as to prevent their ability to supply anchorage to the bearing as designed.
- Bearing elements are severely misaligned or extruded with greater than 50% loss of bearing area.
- Increased stress in other superstructure elements due to the lack of expansion, contraction, rotation or failure of bearings is readily apparent.

1 "Imminent" Failure Condition - Bearings are non-functional and/or failed.

- Study should determine feasibility of repair or rehabilitation.

0 Failed Condition - Bearings are non-functional and/or failed.

- Bearings are beyond repair or rehabilitation.

10.3 REINFORCED CONCRETE

The following guidelines have been developed for the condition rating of reinforced concrete members. They are intended to supplement the FHWA Recording and Coding Guide to make it easier to determine the most appropriate condition rating to be assigned to reinforced concrete members. These guidelines should be used in conjunction with the FHWA Recording and Coding Guide, Item 59.

These rating guidelines apply to reinforced concrete T-beams, girders, arch ribs, arch spandrels, floorbeams and other concrete members reinforced with mild steel. Reinforced concrete decks shall be rated utilizing Section 10.1, Reinforced Concrete Decks. When a reinforced concrete deck is integral with a superstructure member (i.e. concrete slabs, "T-Beams", box girders, etc.), structural deterioration of the deck may influence the superstructure rating. In these instances, the deck is rated based on the top surface (See Section 10.1) and the superstructure rating is affected by the underside condition.

The condition of the bearings, joints, etc., will not normally influence the rating of reinforced concrete superstructure members. Deteriorations noted on previous inspection reports, which have been repaired, should not be considered in assigning condition rating unless the repairs are temporary or inadequate.

Definitions:

Deficiency - Lack or shortage of a structural component from the quantity specified in design, (i.e. reinforcing bar spacing or size other than that specified by design, etc.). Construction defects such as honey combing or irregularities caused by defective formwork.

Deterioration - Areas exhibiting cracks, spalls, scaling, impact damage, map cracking, efflorescence, exposed reinforcing bars with or without corrosion and section loss, delaminations (hollow areas), abrasion or any other defect that reduces the ability of the structural component to function in its design capacity.

Critical Cracks - Cracks, other than temperature and shrinkage cracks, which depending on their location, length, width and orientation to the member being rated, indicate the possibility of one or more of the following:

- an over stressing condition of the concrete and/or reinforcing steel.
- a reduction in the structural integrity of the member.
- an immediate need for further investigation.

These cracks may allow water and contaminant infiltration with subsequent corrosion of the reinforcing steel and delamination of the concrete possibly reducing the capacity of the member. The width of the cracks may indicate the progressive level of the over stress condition. Cracks that form in member compression zones or at bearing interfaces, indicating excessive compressive stresses, may be accompanied by crushing of the concrete around the cracks and may lead to non-ductile failure of the member. Cracks in tension zones, indicating excessive tensile stresses, may visibly open and close with application of live load. Cracks that are diagonal in orientation to the member indicate over stress in shear.

Non-critical Cracks - Cracks caused by temperature changes or shrinkage and other cracks that do not pose an immediate threat to the structural integrity of the member but allow penetration of water, corrosion producing agents and other contaminants that may cause further deterioration of the concrete, reinforcing steel, anchor bolts, etc., and negatively effect the structure over the long term. Spalling, due to freeze/thaw action and bleeding efflorescence may be noted around these cracks.

Special Note:

- *Sections 6.2.3, 6.2.4, 6.2.5, 6.3.1, 6.5, as well as Appendices 4, 5, and 9 detail some of the areas that should be inspected for critical cracks.*
- *Reference Appendix 6.4 for definitions of crack width and scaling classifications.*

Code	**Description**
9	Excellent Condition - No maintenance or rehabilitation concerns. • No noticeable deficiencies or deterioration.
8	Very Good Condition - No maintenance or rehabilitation concerns. • Very minor construction or fabrication defects that do not affect the capacity or function of the member.
7	Good Condition - Potential exists for minor maintenance. ∃ Non-critical, hairline cracks (up to 1/32 in. (0.8 mm)) noted that do not affect the serviceability of the member. • No critical cracks noted.

- Isolated small spalls up to 1 in. (25 mm) deep with no exposed reinforcing bars.
- A few small locations of concrete delamination are possible in non-critical areas.
- Light surface scaling, abrasion and/or minor honeycombing noted.
- Minor discoloration or wet staining on concrete surfaces that indicates porous concrete.

6 Satisfactory Condition - Potential exists for major maintenance.

- Non-critical hairline or fine cracks (up to 1/16 in. (1.5 mm) wide) noted to an extent that may have minor effects on the serviceability of the member.
- No critical cracks noted.
- Minor efflorescence bleeding from cracks in concrete may be present.
- Random small spalls up to 1 in. (25 mm) deep with no exposed reinforcing bars or isolated small spalls from 1 in. (25 mm) to 2 in. (51 mm) deep, or deep enough to expose the mat of reinforcing bars closest to the surface. Light surface corrosion on the exposed reinforcing bars with no section loss.
- Small areas of medium to heavy scaling, abrasion and/or honeycombing noted with no exposed reinforcing steel.
- Moderate discoloration or wet staining on concrete surfaces noted. Concrete surface sounds solid when struck with a hammer.
- Concrete may be delaminated (concrete surface sounds hollow when struck with a hammer) on less than 10% of any individual structure unit (i.e.: 10% of one beam).
- Impact damage, which is not structurally significant, may be present.

5 Fair Condition - Potential exists for minor rehabilitation.

- Non-critical cracks up to 1/8 in. (3 mm) wide noted to an extent that may moderately affect the serviceability of the member. Minor deterioration or section loss of the concrete reinforcing bars or anchor bolts in the vicinity of the cracks may be present.
- Isolated, hairline critical cracks may be present, but no consistent pattern of overload or over stress is observed.
- Moderate efflorescence bleeding from cracks.

- Widespread spalls up to 1 in. (25 mm) deep with no exposed reinforcing bars or random spalls from 1 in. (25 mm) to 2 in. (51 mm) deep, or deep enough to expose the mat of reinforcing bars closest to the surface. Minor section loss may be present on exposed reinforcing bars.
- Severe surface scaling, abrasion and/or significant honeycombing noted.
- Delaminations (concrete surface sounds hollow when struck with a hammer) may be more wide spread, up to 25% of the surface area on any individual structure element.
- Widespread discoloration, efflorescence or wetness on concrete surfaces noted.
- Impact damage that exposes reinforcing steel.

4 Poor Condition - Potential exists for major rehabilitation.

- Non-critical cracks greater than 1/8 in (3 mm) wide noted to an extent that may significantly affect the serviceability of the member. Moderate deterioration of the concrete, reinforcing bars or anchor bolts in the vicinity of the cracks.
- Critical cracks (up to 1/16 in. (5 mm)) noted on one or more members.
- Heavy efflorescence bleeding from cracks may be noted.
- Spalls are widespread enough and/or deep enough so as to significantly affect the serviceability of the element. Moderate section loss on exposed reinforcing bars.
- Severe surface scaling, abrasion and/or significant honeycombing noted. Large areas are involved with exposed reinforcing steel.
- Active water leakage through cracks and/or spalls in concrete members noted.
- Extensive concrete delaminations in areas that are not structurally critical.
- Impact damage to a large area of a member or causing damage to reinforcing steel.

3 Serious Condition - Rehabilitation or repair required immediately.

- Non-critical cracks greater than 1/8 in. (3 mm) wide noted to an extent that may severely affect the serviceability of the member. Advanced deterioration of the concrete, reinforcing bars or anchor bolts in the vicinity of the cracks.
- Critical cracks up to 1/8 in. (3 mm) wide noted creating significant effects on the structural integrity of the member.

- Spalls are widespread enough and/or deep enough so as to affect the strength of the member or significantly affect the serviceability of the member. Advanced section loss on exposed reinforcing bars.
- Heavy leakage of water through cracks and/or spalls noted on concrete members.
- Widespread concrete delaminations in structurally significant areas or delaminated concrete that is loose and poses a potential hazard to pedestrian, vehicular or marine traffic.
- Impact damage noted with heavy damage or distortion of the structural member.
- Partial failure of member is possible due to a deficiency or deterioration.

2 Critical Condition - Need for immediate repairs or rehabilitation is urgent.

- Severe deterioration of the concrete, reinforcing bars or anchor bolts in the vicinity of cracks.
- Failure of the member is possible due to deficiency or deterioration.
- Critical cracks greater than 1/8” (3 mm) wide creating a severe effect on the structural integrity of the member.
- Severe, widespread deterioration of concrete and reinforcing bars in the vicinity of spalls. Possible localized failure of element possible.
- Large spalls or severe scale are severely affecting the strength and/or serviceability of the member or an adjacent member.
- Extensive concrete delamination leading to spalling in structurally significant locations and/or loose concrete is dropping to areas where it may cause damage or injury to people or property below.
- Impact damage with severe effects on member strength or serviceability.
- Closure of the bridge or a portion of the structure may be necessary until repairs are made.

1 "Imminent" Failure Condition - Reinforced Concrete element is non-functional and/or failed.

- Structure is closed.
- Study should determine feasibility of repair or rehabilitation.

0 Failed Condition - Reinforced Concrete element is non-functional and/or failed.

- Member is beyond rehabilitation.

10.4 PRESTRESSED CONCRETE

The following guidelines have been developed for the condition rating of prestressed concrete members. They are intended to supplement the FHWA Recording and Coding Guide to make it easier to determine the most appropriate condition rating to be assigned to prestressed concrete members. These guidelines should be used in conjunction with the FHWA Recording and Coding Guide, Item 59.

These rating guidelines shall apply to prestressed and post-tensioned closed web box girders (slab beams and box beams), open web girders (I-beams), arches, floorbeams and other prestressed or post-tensioned concrete members. In the case of "integral deck" superstructures, the condition of the top surface of the deck shall not be considered in the rating of the superstructure (See Section 10.1). On large box beam bridges, where access to the inside of the box is possible, the condition of the underside of the deck, if it is integral with the beam, should be considered when assigning a condition rating to the superstructure. Normally, the condition of the bearings, joints, etc., shall not influence the rating of the prestressed concrete superstructure members.

Because of the design characteristics of prestressed concrete members, deteriorations in the superstructure, noted on previous inspection reports that have since been retrofitted, must be evaluated using sound engineering judgement. Once a prestressed member has lost load capacity due to concrete and/or steel tendon section loss, it is difficult to restore the member to its original capacity. Repairs undertaken may be cosmetic in nature, intended only to prevent further deterioration of the concrete and/or steel tendons, or they may be intended to restore lost load capacity by rehabilitation of the member incorporating either internal or external post-tensioning details. In the case of cosmetic repairs, the ability of the repair material to protect the base materials (concrete and/or prestressing tendons) from further deterioration shall be noted in the condition evaluation report but shall not be considered in assigning the condition rating. Repairs designed to restore the member to its original capacity, and have documentation as such, shall be evaluated considering the condition of the repair and its continued ability to add strength to the member. In either case, sound engineering judgement must be employed when assigning a condition rating to the member.

The quantities given in the following guidelines for the number of exposed prestressing tendons and/or broken strands are intended to give the inspector a guide for assigning the condition rating to the member. A greater or lesser degree of deterioration on a single member, or on a series of members, may prove to be more or less critical than indicated in these guidelines. The degree to which it is critical can only be determined through engineering analysis, knowledge of the as-built section(s) and understanding of the prestressing system behavior.

Definitions:

Reinforcing Bar - Mild steel (non-prestressed) reinforcing steel. Most commonly placed transverse to the longitudinal centerline of the prestressed member for use as shear reinforcement

Tendon - A high strength cable, strand, wire or bar used for prestressing or post-tensioning.

Strand - Fabricated by twisting wires together, the seven-wire strand is the most common type of prestressing steel in the United States.

Wire - Single wires or parallel wire cables. Parallel wire cables are commonly used in post-tensioning.

Deficiency - Lack or shortage of a structural component from the quantity specified in design, (i.e. missing concrete components, tendon spacing or size other than that specified by design, etc.). Construction defect such as honey combing.

Deterioration - Areas exhibiting cracks, spalls, impact damage, map cracking, efflorescence, exposed reinforcing bars or prestressing tendons with or without corrosion and section loss, delaminations, water staining, scaling, abrasion or any other defect that affects the ability of the structural component to function in its design capacity.

Critical Cracks - Cracks, other than temperature and shrinkage cracks, that depending on their location, length, width and orientation to the member being rated, indicate the possibility of one or more of the following:

- a reduction in prestressing force within the steel tendons
- an over stressing condition of the concrete and/or mild reinforcing steel
- a reduction in the structural integrity of the member
- an immediate need for further investigation.

These cracks may allow water and contaminant infiltration that may cause an increased rate of deterioration of the prestressing tendons and debonding of the concrete, possibly reducing the capacity of the member. The width of the cracks may indicate the progressive level of the over stressing condition. Cracks that form in member compression zones or at bearing interfaces indicating excessive compressive stresses, may be accompanied by crushing of the concrete around the cracks and may lead to nonductile failure of the member. Cracks in prestressed tension zones, indicating a relaxing of the prestressing tendons or excessive tensile stresses in the concrete,

may occur at tendon anchorages and/or locations of maximum live load bending moment. They may be hairline to fine in width and under extreme conditions, may open and close with vehicular live load application. Cracks that are diagonal in orientation to the member indicate over stress in shear.

Non-critical Cracks - Cracks, to include temperature, shrinkage and other cracks that do not pose an immediate threat to the structural integrity of the member but allow penetration of water, corrosion producing agents and other contaminants that cause further deterioration of the concrete, mild reinforcing steel, anchor bolts, etc., and affect the structure over the long term. Spalling, due to freeze/thaw action and bleeding efflorescence may be present around these cracks.

Critical Spalls - Spalls that, depending on their location, surface area and depth, could effect the strength, serviceability and stability of the member. Spalls in pre-prestressing tension areas may expose the prestressing tendons, that are highly susceptible to corrosion due to the high stress state and relatively small cross sectional area of the tendons and individual wires. The presence of these spalls may indicate a decrease in bond between the concrete and the prestressing tendons, and/or increase in localized concrete and mild steel stresses, that could lead to a nonductile failure of the member with possible partial failure of the structure. A critical spall condition may also exist if the presence of non-critical spalls is widespread enough on a particular member so that the combined effect of the spalling action constitutes a serious situation requiring a large degree of repair or rehabilitation.

Code	**Description**
9	Excellent Condition - No maintenance or rehabilitation concerns. • No noticeable deficiencies or deterioration.
8	Very Good Condition - No maintenance or rehabilitation concerns. • Very minor construction or fabrication defects that do not affect the capacity or function of the member.
7	Good Condition - Potential exists for minor maintenance. • Non-critical, hairline cracks (up to 0.8 mm (1/32 in) wide) that do not affect the serviceability of the member. • No critical cracks present. • No exposure of prestressing tendons noted.

- Light surface scaling, abrasion and/or minor honeycombing present.
- Minor discoloration or wetness on concrete surfaces.

6 Satisfactory Condition - Potential exists for major maintenance.

- Non-critical cracks up to 1/16 in. (1.5 mm) wide noted to an extent that may have minor effects on the serviceability of the member.
- No critical cracks present.
- Minor efflorescence bleeding from cracks in concrete may be present.
- Isolated, small spalls up to 1 in. (25 mm) deep with no exposed mild steel reinforcing bars noted.
- No exposure of prestressing tendons noted.
- Medium surface scaling, abrasion and/or moderate honeycombing present.
- Moderate discoloration or wetness on concrete surfaces. Concrete surface sounds solid when struck with a hammer.
- Small isolated areas of delaminated concrete may be present.
- Impact damage noted with minor effects on member serviceability. No exposed reinforcing steel.

5 Fair Condition - Potential exists for minor rehabilitation.

- Non-critical cracks up to 1/8 in. (3 mm) wide noted to an extent that may moderately affect the serviceability of the member. Minor deterioration or section loss of the concrete, mild steel reinforcing bars or anchor bolts in the vicinity of the cracks may be present.
- Isolated, hairline critical cracks may be present on a small number of members, but no consistent pattern of overload or over stress is observed.
- Moderate efflorescence bleeding from cracks.
- Spalls up to 1 in. (25 mm) deep with no exposed mild steel reinforcing bars or random non-critical spalls from 1 in. (25 mm) to 2 in. (51 mm) deep, or deep enough to expose the mat of mild steel reinforcing bars closest to the surface. Minor section loss may be present on these reinforcing bars. Moderate effect on member serviceability. No more than one (1) prestressing tendon per beam may be exposed with no section loss or broken wires present.
- Heavy surface scaling, abrasion and/or significant honeycombing present.

- Widespread discoloration or wetness on concrete surfaces. Concrete sounds hollow when struck with a hammer.
- Impact damage noted that exposes reinforcing steel or up to two (2) prestressing tendons with no corrosion or damage to the tendons.

4 Poor Condition - Potential exists for major rehabilitation.

- Non-critical cracks greater than 1/8 in. (3 mm) wide noted to an extent that may significantly effect the serviceability of the member. Moderate deterioration of the concrete, mild steel reinforcing bars or anchor bolts in the vicinity of the cracks.
- Critical cracks up to 1/16 in. (1.5 mm) wide present. Moderate effects on the structural integrity of the member.
- Heavy efflorescence bleeding from cracks may be present.
- Non-critical spalls are widespread enough and/or deep enough so as to significantly affect the serviceability of the member. Moderate section loss on exposed mild steel reinforcing bars.
- Critical spalls moderately affect the strength and/or serviceability of the member. Few (< 3 per unit) exposed prestressing tendons with moderate surface corrosion and up to one (1) wire broken.
- Severe surface scaling, abrasion and/or significant honeycombing present.
- Active water leakage through cracks and/or spalls in concrete members.
- Locations within the pre-prestressed compression zone of the member exhibit advanced delaminations of the concrete.
- Locations within the pre-prestressed tension zone of the member exhibit moderate delaminations of the concrete.
- Impact damage with up to two (2) prestressing tendons damaged.

3 Serious Condition - Rehabilitation or repair required immediately.

- Non-critical cracks greater than 1/8 in. (3 mm) wide noted to an extent that may severely affect the serviceability of the member. Advanced deterioration of the concrete, mild steel reinforcing bars or anchor bolts in the vicinity of the cracks.
- Critical cracks up to 1/8 in. (3 mm) wide noted creating significant effects on the structural integrity of the member.
- Non-critical spalls are widespread enough and/or deep enough so as to significantly affect the serviceability of the member. Advanced section loss on exposed reinforcing bars.

- Critical spalls significantly affect the strength and/or serviceability of the member. Prestressing tendons are exposed with minor section loss and few broken wires (< 2 wires per unit).
- Heavy, active water leakage through cracks and/or spalls noted on concrete members.
- Impact damage with up to two (2) wires of one (1) tendon broken or one (1) wire on each of two (2) tendons broken.
- Delaminated concrete is widespread or structurally significant.
- Delaminated concrete has the potential to drop to areas below the structure causing a risk of injury or property damage.
- Partial failure of member is possible due to a deficiency or deterioration.

2 Critical Condition - Need for immediate repairs or rehabilitation is urgent.

- Severe deterioration of the concrete, mild steel reinforcing bars or anchor bolts in the vicinity of the non-critical cracks.
- Critical cracks of greater than 1/8 in. (3 mm) noted creating a severe effect on the structural integrity of the member.
- Severe, widespread deterioration of concrete and reinforcing bars in the vicinity of non-critical spalls. Critical spalls severely affect the strength and/or serviceability of the member or an adjacent member. Prestressing tendons are exposed with moderate section loss. Several tendons are broken.
- Locations within the pre-prestressed compression zone of the member exhibit severe delaminations of the concrete.
- Locations within the pre-prestressed tension zone of the member exhibit severe delaminations of the concrete.
- Delaminated concrete is dropping to areas below the structure causing a risk of injury or property damage.
- Impact damage noted with severe effects on member serviceability.
- Closure of the bridge or a portion of the structure may be necessary until corrective action is taken.

1 "Imminent" Failure Condition - Prestressed Concrete element is non-functional and/or failed.

- Study should determine feasibility of repair or rehabilitation.

0 Failed Condition - Prestressed Concrete element is non-functional and/or failed.

- Member is beyond rehabilitation.

10.5 STEEL

The following guidelines have been developed for the condition rating of steel superstructures. They are intended to supplement the FHWA Recording and Coding Guide to make it easier to determine the most appropriate condition rating to be assigned to the superstructure and should be used in conjunction with the FHWA Recording and Coding Guide, Item 59.

These rating guidelines shall apply to steel multi-girder, girder-floorbeam, box girder, truss, arch, and movable bridge superstructures. In the case of composite superstructures, the condition of the deck normally will not influence the condition rating of the superstructure. However, deck condition should be considered if deterioration affects the ability of the superstructure to act compositely with the deck as designed. (See Item 59 of the FHWA Recording and Coding Guide.) The condition of the bearings, joints, paint system, etc., generally will not influence the rating of the superstructure. Deficiencies in the superstructure noted in previous inspection reports, that have since been retrofitted, shall only consider the condition of the retrofit when establishing the condition code.

The percentages of loss presented in the following condition coding guide represent estimates for the purposes of aiding the inspector in applying a condition code rating to the member. It does not, however, relieve the inspector of the responsibility of seeking sound engineering judgement when dealing with elements with excessive section loss.

Definitions:

Deficiency - Lack or shortage of a structural component (i.e. missing fasteners, lattice bars, stiffener plate, under sizing, etc.) from the quantity specified by design that affects the ability of the structural component to function in its design capacity.

Deterioration - Areas exhibiting corrosion, pitting, impacted rust, section loss, cracks, dings, gouges, impact or construction damage, fire damage, loose fasteners or any other defect that detracts from the "As-Built" condition of the member.

Critical Section - That component of a structural element whose integrity is vital to the success of the element carrying out its design intent. For bending members, the critical section at the bearing areas is the area of the web. For bending members in areas of maximum moment, the critical section is the area of the flanges. For axially loaded members, the critical section is the adjusted gross area as defined in AASHTO Manual for Condition Evaluation of Bridges.

Code	**Description**
9	Excellent Condition - No maintenance or rehabilitation concerns. • No noticeable deficiencies or deterioration
8	Very Good Condition - No maintenance or rehabilitation concerns. • Very minor construction or fabrication defects that do not affect the capacity or function of the member.
7	Good Condition - Potential exists for minor maintenance. • Minor deficiencies such as missing fasteners in isolated locations of secondary member connections. • Minor deterioration such as loose fasteners in isolated locations. • Light to medium rust on less than 25% of the steel surface area. (No section loss.)
6	Satisfactory Condition - Potential exists for major maintenance. • Deficiencies noted on reoccurring basis and/or discernible pattern. • Light to medium rust on greater than 25% of the steel surface area. • Severe rust (< 1/16” (1.5 mm) section loss) on less than 25% of the steel surface area of a critical section.
5	Fair Condition - Potential exists for minor rehabilitation. • Deficiencies noted on a regular basis and/or regular pattern. • Severe rust on greater than 25% of the steel surface area and/or section loss (up to 5% of the total flange cross sectional area or up to 25% of the total web cross sectional area) noted in a critical section on one or more members. • Fatigue, or out-of-plane distortion, cracks may be present in secondary members with no means of propagation into a primary member.

4 Poor Condition - Potential exists for major rehabilitation.

- Deficiencies are beginning to affect the ability of primary structural components to safely function in their design capacity.
- Severe rust with advanced section loss (5% to 25% of total flange cross sectional area, 25% to 50% of total web cross sectional area) noted in a critical area on one or more members.
- Fatigue, or out-of-plane distortion, cracks may be present in secondary members where there is means of propagation into the primary member.
- Pin & hangers or hinges are frozen due to impacted rust.
- Load carrying capacity of primary structural members may be affected.

3 Serious Condition - Rehabilitation or repair required immediately.

- Deficiencies significantly affect the ability of structural components to safely function in their design capacity.
- Severe rust throughout the member and severe section loss (25% to 35% of the total flange cross sectional area or 50% to 75% the total web cross sectional area) in a critical area on one or more members.
- Fatigue, or out-of-plane distortion, cracks may be present in primary members.
- Local failures of structural components may have occurred in secondary members.
- Significant weakening of primary members evident.

2 Critical Condition - Need for immediate repairs or rehabilitation is urgent.

- Severe deterioration of the primary structural elements (>35% of the total flange cross sectional area or >75% of the total web cross sectional area) noted in a critical section of one or more members.
- Local failures of structural components have occurred in primary members.
- Severe weakening of primary elements is evident.
- Partial or total closure of the structure may be required.

1 "Imminent" Failure Condition - Structure is Closed.

- Study should determine feasibility of repair or rehabilitation.

0 Failed Condition - Structure is Closed.

- Structure is beyond repair or rehabilitation.

10.6 TIMBER

The following guidelines have been developed for the condition rating of Timber Bridges. They are intended to supplement the FHWA Recording and Coding Guide to make it easier to determine the most appropriate condition rating to be assigned to the timber elements and should be used in conjunction with the FHWA Recording and Coding Guide.

These ratings shall apply to all solid sawn and glued laminated timber bridge superstructures and decks. The condition of bearings, joints, paint system, etc., shall not influence the rating of the bridge elements. Deficiencies or decay noted in previous inspection reports that have since been retrofitted shall only consider the condition of the retrofit when establishing the condition code.

Definitions:

Deficiency - Lack or shortage of a structural component (i.e., missing fasteners, under sizing, etc.) from the quantity specified in design that affects the ability of the structural component to function in its design capacity.

Deterioration - Areas exhibiting fungus growth, decay, parasite infestation, fire damage, collision or impact damage, section loss, weathering or warping, splitting, cracking, checking, chemical damage, or signs of overstress that detracts from the "As-Built" condition of the member.

Code	Description
9	Excellent Condition - No maintenance or rehabilitation concerns. • No noticeable deficiencies or deterioration.
8	Very Good Condition - No maintenance or rehabilitation concerns. • No decay, cracking, or splitting of beams, stringer or axially loaded members. • Deck flooring has no crushing, rotting or splitting and is tightly secured to the superstructure members.
7	Good Condition - Potential exists for minor maintenance. • Minor decay, cracking or splitting of beams, stringers or axially loaded members in non-critical locations. • Timber deck has minor splitting or checking or a few loose planks.

6 Satisfactory Condition - Potential exists for major maintenance.

- Minor decay, cracking or splitting of beams, stringers or axially loaded members.
- Less than 30% of the deck planks have checks and splits, but are sound. Some loose planks.
- Fire damage is limited to surface scorching with no measurable section loss.
- Some wet areas noted with no measurable loss of effective section.

5 Fair Condition - Potential exists for minor rehabilitation.

- Moderate decay or deterioration, cracking, splitting, or minor crushing of beams, stringers or axially loaded members.
- Fire damage limited to surface charring with minor measurable section loss.
- Numerous (30% to 40%) deck planks are checked, split, rotted, or crushed. Many planks are loose. Less than 10% of the deck planks need replacement.

4 Poor Condition - Potential exists for major rehabilitation.

- Advanced decay or deterioration, cracking and splitting with moderate crushing of beams, stringers or axially loaded members.
- Fire damage is significant with moderate section loss.
- Over 40% of the deck planks are rotted, crushed, cracked or split with over 10% in need of replacement.

3 Serious Condition - Rehabilitation or repair required immediately.

- Severe decay or deterioration, cracking and splitting with advanced crushing of beams, stringers, or axially loaded members.
- Major fire damage with advanced section loss.
- Local failures may be evident.
- Severe signs of distress in deck planks.

2 Critical Condition - Need for immediate repairs or rehabilitation is urgent.

- Severe decay or deterioration is causing severe weakening and significant local failures of primary bridge elements.
- Partial or total closure of the structure may be warranted.

1 "Imminent" Failure Condition - Structure is closed.

- Study should determine feasibility of repair or rehabilitation.

0 Failed Condition - Structure is closed.

- Structure is beyond repair or rehabilitation.

10.7 STONE MASONRY

The following guidelines have been developed for the condition rating of stone masonry. They are intended to supplement the FHWA Recording and Coding Guide to make it easier to determine the most appropriate condition rating to be assigned to the stone masonry and should be used in conjunction with the FHWA Recording and Coding Guide.

These rating guidelines were developed based on Ashlar type masonry and shall be applied to stone masonry used in the bridge superstructure. In general, these guidelines shall apply to other types and shapes of stone masonry. However, these guidelines will have to be adjusted based on engineering judgement if the stone masonry was designed for dry laid conditions. These condition codes evaluate the structural integrity of the stone and joint material and include items such as alignment, settlement and deterioration. In all cases where these guidelines are applied, sound engineering judgment shall be incorporated to ensure an accurate rating is assigned.

For the stones that comprise the arch ring, integrity of the structure depends on these stones remaining aligned and in bearing with adjacent stones in the compression ring. If any rotation, sliding, crushing or loss of joint mortar occurs, the bearing area between stones will be reduced increasing the stress in the remaining area. If displacement occurs and stone on stone contact is made, the uneven surface characteristic of stone masonry will produce locations of concentrated stress that could lead to cracking of the stone. In addition, the characteristics of stone behavior are such that minor displacements can suddenly and without warning experience major displacements due to increased stress. Therefore, although minor rotation, sliding, crushing, heaving, settlement or other deterioration noted may not indicate the arch is at that moment unstable, their presence does indicate that the load path is being altered or that the load path has been altered and is now stabilized. (Note that it is impossible to discern from visual observation whether or not stabilization has occurred.) The presence of rotation, sliding, crushing, etc., also indicates that stress concentrations are developing, and that close monitoring is warranted. For stones in the spandrel walls, deterioration such as cracking, crushing, heaving, and settlement are generally less serious than those in the arch ring unless the conditions are severe or widespread. However, similar to the arch ring stones, spandrel stones can experience sudden, major displacements due to increased stress. If failure of one spandrel stone occurs, the bearing capacity of the soil fill within the spandrel walls may be seriously affected. Therefore, deformations and displacements of spandrel stones still warrants close monitoring to determine the rate of deterioration and any adverse effects, (both immediate and future), on the integrity of the spandrel wall.

Concrete components of the arch superstructure (i.e. concrete spandrels on a stone masonry arch ring) shall be coded in accordance with Section 10.3, Reinforced Concrete.

Definitions:

Deficiency - Lack or shortage of a structural component from the quantity specified by design that affects the ability of the structure to function in its design capacity.

Deterioration - Areas exhibiting cracking, spalling, crushing, loss of joint mortar, efflorescence, displaced, loose cracked or missing stones, weathering or other defects.

Displacement - Sliding, tilting, heaving, rotating or settling of the masonry stones. Displacements may be caused by but are not limited to such things as collision, deterioration, water infiltration and freeze/thaw action, and settlement of the substructure.

Code	**Description**
9	Excellent Condition - No maintenance or rehabilitation concerns. • No noticeable deficiencies or deterioration.
8	Very Good Condition - No maintenance or rehabilitation concerns. • Very minor construction defects that do not affect the capacity or function of the structure. • Isolated locations of lost joint pointing and widespread cracking of joint pointing observed.
7	Good Condition - Potential exists for minor maintenance. • Widespread loss of joint pointing with interior joint mortar in good condition. • Light efflorescence bleeding from joints. • Evidence of minor water leakage noted at isolated locations through the spandrel or arch ring stones.
6	Satisfactory Condition - Potential exists for major maintenance. • Widespread loss of joint pointing material. Cracking and/or minor loss of interior joint mortar observed. • Moderate efflorescence bleeding from the joints. • Minor deterioration of spandrel stones noted. • Evidence of moderate water leakage noted throughout the spandrel or arch ring stones.

5 Fair Condition - Potential exists for minor rehabilitation.

- Widespread loss of joint pointing material. Widespread cracking with moderate loss of interior joint mortar noted.
- Minor displacements or deteriorations of spandrel stones noted with no adverse effect on the structural integrity or capacity of the spandrel wall.
- Isolated spandrel stones cracked. Pieces of stone on both sides of the crack are tight.
- Heavy efflorescence bleeding from the joints.
- Moderate deterioration of the spandrel stones noted.
- Heavy leakage of water through the arch ring and spandrel walls with minor deteriorations present.

4 Poor Condition - Potential exists for major rehabilitation.

- Severe loss and cracking of joint pointing and interior mortar materials.
- Minor displacements or deformations of spandrel stones noted with potential to have adverse effects on the structural integrity or capacity of the spandrel walls.
- Cracks extend through two or more horizontal stone courses in the spandrel area. Pieces adjacent to crack may be loose.
- Signs of minor crushing or other deterioration on the surface of the arch ring stones.
- Signs of minor sliding or rotating of the arch ring stones.
- Advanced deterioration of the spandrel stones noted.
- Advanced deterioration due to water penetration with minor displacements noted.

3 Serious Condition - Rehabilitation or repair required immediately.

- Severe loss and cracking of joint pointing and interior mortar materials.
- Moderate displacements or deformations of spandrel stones with moderate adverse effects on the structural integrity or capacity of the spandrel walls.
- Crushing is noted on one or more arch ring stones.
- Cracks extend full height of the spandrel wall at one or more locations. Pieces adjacent to the crack may be loose or tight.
- Moderate sliding or rotating of the arch ring stones observed.
- Serious deterioration of the spandrel stones noted.
- Serious deterioration due to water penetration with moderate displacements noted.

2 Critical Condition - Need for immediate repairs or rehabilitation is urgent.

- Severe loss and cracking of joint pointing and interior mortar materials.
- Major displacements or deformations of spandrel stones with severe adverse effects on the structural integrity or capacity of the spandrel walls.
- Crushing is noted on one or more arch ring stones. Localized total failure of stones may have occurred.
- Advanced signs of sliding or rotating of the arch ring stones. Localized failures may have occurred.
- Severe deterioration of spandrel stones noted.
- Severe deterioration due to water penetration with major displacements of stones noted.

1 "Imminent" Failure Condition - Structure is closed.

- Multiple locations of stone failure due to deterioration or displacement of the stone.
- Study should determine feasibility of repair or rehabilitation.

0 Failed Condition - Structure is closed.

- The arch superstructure has failed by sliding, rotation, or crushing.
- Structure is beyond repair or rehabilitation.

10.8 WATERWAYS

10.8.1 Channel and Channel Protection

The following guidelines have been developed for the condition rating of the channel and channel protection devices. They are intended to supplement the FHWA Recording and Coding Guide to make it easier to determine the most appropriate condition rating to be assigned to the channel and channel protection and should be used in conjunction with the FHWA Recording and Coding Guide, Item 61.

The guidelines presented in this section describe the physical conditions associated with the water flow such as stream stability, condition of scour protection devices such as riprap, spur dikes, and gabions, and slope protection. The inspector should be particularly concerned with excessive water velocity or turbulence, which may cause degradation of the channel, scour and undermining of the channel protection devices or substructure elements, erosion of the banks, lateral movement of the channel or aggradation of the channel bed.

Accumulation of debris deposited on the superstructure or substructure elements shall not influence the condition code assigned to the channel and channel protection. However, accumulation of debris in the channel, as described in Section 6.4, Appendix 6.10 and this section, shall have direct influence on the condition code assigned as applicable.

Code	Description
9	Excellent Condition - No maintenance or rehabilitation concerns. • No notable deficiencies on protective devices. • No bank erosion, scour or undermining of substructure elements. • No channel debris observed.
8	Very Good Condition - No maintenance or rehabilitation concerns. • No debris accumulation in the channel or along the banks that disrupts water flow through the hydraulic opening. • No water turbulence noted around substructure elements or protective devices. No signs of channel scour noted. • Channel protection devices are properly functioning with very minor deterioration or impact damage noted. • Channel banks are stable, well vegetated and show no signs of erosion. • Channel is stable with no signs of aggradation, degradation or lateral movement.
7	Good Condition - Potential exists for minor maintenance.

- There may be minor misalignment between the channel and the substructure elements (up to 25 degrees).
- Debris buildup in the channel or along the banks is causing minor increases in water flow velocity and turbulence through the hydraulic opening.
- Water turbulence and/or increased water flow velocity caused by channel contractions and/or high flow rates are producing minor contraction scour and general scour. No adverse effects on the bridge structure.
- Channel protection devices are properly functioning with minor deterioration or impact damage. No undermining or exposure of footings noted.
- Channel banks are well vegetated but experiencing minor erosion.
- Channel bed is experiencing minor aggradation or degradation with no lateral movement observed.

6 Satisfactory Condition - Potential exists for major maintenance.

- Debris buildup in the channel or along the banks is causing moderate increases in waterflow velocity and turbulence through the hydraulic opening.
- Water turbulence and/or increased water flow velocity caused by channel contractions and/or high flow rates are producing moderate contraction scour and general scour. Potential exists for bridge structure to be affected by local scour.
- Moderate deterioration or impact damage to channel protection devices. Footings are partially exposed with no signs of undermining. Serviceability is slightly diminished.
- Channel banks are experiencing moderate erosion. Sloughing of bank material and vegetation present.
- Moderate aggradation or degradation of the channel noted.
- Minor upstream lateral movement of the channel noted since the last inspection.

5 Fair Condition - Potential exists for minor rehabilitation.

- Heavy debris buildup in the channel or along the banks is causing significant increase in waterflow velocity and turbulence through the hydraulic opening.
- Water turbulence and/or increased water flow velocity caused by channel contractions and/or high flow rates are producing extensive contraction scour and general scour. Bridge structure is being affected by local scour but is stable.

- Heavy deterioration or impact damage to channel protection devices. Footings are exposed and have experienced minor undermining with no signs of displacement, tilting, settlement or other movement.
- Channel banks are experiencing extensive erosion. Moderate sloughing of bank material and vegetation present.
- Extensive aggradation or degradation of the channel noted.
- Moderate upstream lateral movement of the channel noted since the last inspection.

4 Poor Condition - Potential exists for major rehabilitation.

- Heavy debris buildup in the channel or along the banks is causing a severe increase in waterflow velocity and turbulence through the hydraulic opening.
- Water turbulence and/or increased water flow velocity caused by channel contractions and/or high flow rates are producing severe contraction scour and general scour. Potential exists for the stability of the bridge structure to be affected by local scour.
- Severe deterioration or impact damage to channel protection devices. Footings are fully exposed and are experiencing undermining with signs of displacement, tilting, settlement or other movement. Only partial effectiveness remains.
- Channel banks are experiencing severe erosion. Heavy sloughing of bank material and vegetation present.
- Severe aggradation or degradation of the channel noted.
- Extensive upstream lateral movements of the channel noted since the last inspection. Potential exists for lateral movement to adversely affect the approach roadway.

3 Serious Condition - Rehabilitation or repair required immediately.

- Severe general scour, contraction scour or local scour is adversely affecting the stability of the substructure elements.
- Severe deterioration and undermining, displacement, tilting, settlement or other movement have caused the channel protection devices to fail or become ineffective.
- Channel aggradation, degradation or lateral movement threatens the stability of the structure or approach roadway.

2 Critical Condition - Need for immediate repairs or rehabilitation is urgent.

- The structure or approach is severely weakened by channel misalignment.
- Structure or approach is in danger of collapse.
- Debris accumulation blocks hydraulic opening.

1 "Imminent" Failure Condition - Structure is closed.

- Study should determine feasibility of repair or rehabilitation.

0 Failed Condition - Structure is closed.

- Structure or approach roadway have failed and are beyond repair or rehabilitation.

10.8.2 Waterway Adequacy

The condition rating guidelines to be used in the appraisal of waterway adequacy are those developed in the FHWA Recording and Coding Guide for Item 71.

10.9 CULVERTS

The following guidelines have been developed for the condition rating of culverts. They are intended to supplement the FHWA Recording and Coding Guide to make it easier to determine the most appropriate condition rating to be assigned to the culvert and should be used in conjunction with the FHWA Recording and Coding Guide.

These rating guidelines shall apply to concrete, steel, aluminum, and stone masonry culverts. This condition code evaluates the alignment, settlement, joints, structural condition, scour and other items associated with culverts. The rating code is intended to be an overall condition evaluation of the culvert. Hydraulic Adequacy, Channel and Channel Protection shall be evaluated using the separate condition rating guidelines provided in section 10.8, Waterways. Integral wingwalls to the first construction or expansion joint shall be included in the evaluation. Wingwall construction beyond the first construction or expansion joint shall be inspected in accordance with Section 6.5 Culverts, but shall not influence the overall condition rating of the culvert unless severe deterioration is observed that is having an adverse effect on the stability of the backfill or other primary components of the culvert.

Definitions:

Deficiency - External factors (debris buildup, aggregation or degradation of stream bed, change in flow mass, etc.) and/or lack or shortage of a structural component from the quantity specified by design that affects the ability of the structure to function in its hydraulic design capacity.

Deterioration - General: Excessive abrasion, joint or seam defects, water exfiltration, backfill infiltration, scour, undermining, piping, construction or impact damage, fire damage or other defect described below that detracts from the "As-Built" condition of the culvert.

Steel or Aluminum: Areas exhibiting corrosion, pitting, impacted rust, section loss, cracks, dings, gouges, racking, peaking, flattening, sagging, bulging, or bent, loose or missing fasteners.

Concrete: Areas exhibiting cracking, spalling, crushing, scaling, delamination, exposed reinforcing bars, efflorescence, water or rust staining or map cracking.

Masonry: Areas exhibiting cracking, spalling, crushing, loss of joint mortar, displaced, loose or missing stones or weathering.

10.9.1 Round Or Vertical Elongated Corrugated Metal Pipe Barrels

Code **Description**

9 Excellent Condition - No maintenance or rehabilitation concerns.

- No noticeable deficiencies or deterioration.

8 Very Good Condition - No maintenance or rehabilitation concerns.

- Barrel shape has good, smooth curvature. Horizontal span within 10% of design.
- Seams and joints are tight with no openings.
- Superficial corrosion with slight pitting on aluminum components.
- Light rust with no pitting on steel components.

7 Good Condition - Potential exists for minor maintenance.

- Barrel shape has good curvature. Top half has smooth curvature but minor flattening of bottom half has occurred. Horizontal span is within 10% of design.
- Seams and joints have minor cracking at a few bolt holes and minor joint or seam openings with potential for backfill infiltration.
- Moderate corrosion of aluminum components. No attack of core alloy.
- Medium rust with light pitting on steel components.

6 Satisfactory Condition - Potential exists for major maintenance.

- Barrel shape is fair. Top half has smooth curvature. Significant flattening of bottom half has occurred. Horizontal span is within 10% of design.
- Minor cracking at bolts is prevalent in one seam in lower half of pipe. Evidence of backfill infiltration through joints and seams.
- Significant corrosion with minor attack of core alloy on aluminum components.
- Heavy rust with medium pitting on steel components.

5 Fair Condition - Potential exists for minor rehabilitation.

- Barrel shape is fair. Significant distortion at isolated locations in top half and extreme flattening at invert. Horizontal span is 10% to 15% greater than design.
- Moderate cracking at bolt holes along one seam near the bottom of the pipe. Evidence that backfill infiltration through joints and seams has caused deflection of the pipe.
- Significant corrosion with moderate attack of core alloy on aluminum components.
- Advanced section loss with heavy pitting on steel components.

4 Poor Condition - Potential exists for major rehabilitation.

- Barrel shape has significant distortion throughout the length of the pipe and lower third may be kinked. Horizontal span is 10% to 15% greater than design.
- Moderate cracking at bolt holes along one seam near the top of the pipe. Evidence that backfill infiltration through joints and seams has caused deflection of the pipe.
- Extensive corrosion with significant attack of core alloy on aluminum components.
- Advanced section loss with heavy pitting and isolated perforations on steel components.

3 Serious Condition - Rehabilitation or repair required immediately.

- Barrel shape is poor with extreme deflection at isolated locations and flattening of the crown with a radius of 6 to 9 meters (20 to 30 feet). Horizontal span is 15% to 20% greater than design.
- Barrel seams have 3 in. (75 mm) long cracks at bolt holes on one seam.
- Extensive corrosion and attack of core alloy with scattered perforations on aluminum components.
- Advanced section loss with heavy pitting and scattered perforations on steel components.

2 Critical Condition - Need for immediate repairs or rehabilitation is urgent.

- Barrel shape critical with extreme deflection, distortion and flattening of the crown with radius over 30 ft. (10 m) throughout the pipe. Horizontal span in excess of 20% greater than design.
- Barrel seams have cracks spanning from bolt to bolt on one seam.
- Extensive perforations due to corrosion on aluminum components.
- Advanced section loss and extensive perforations on steel components.

1 AImminent≅ Failure Condition - Structure is closed.

- Barrel shape is partially collapsed with crown in reverse curvature.
- Barrel seams have failed.
- Study should determine feasibility of repair or rehabilitation.

0 Failed Condition - Structure is closed.

- Barrel shape has totally failed.

- Structure is beyond repair or rehabilitation.

10.9.2 Corrugated Metal Pipe Arch Barrels

Code	Description
9	Excellent Condition - No maintenance or rehabilitation concerns. • No noticeable deficiencies or deterioration.
8	Very Good Condition - No maintenance or rehabilitation concerns. • Barrel shape has good, smooth curvature. Horizontal span is less than 3% greater than design. • Seams and joints are tight with no openings. • Minor construction defects with the protective coating intact. • Superficial corrosion with slight pitting on aluminum components. • Light rust with no pitting on steel components.
7	Good Condition - Potential exists for minor maintenance. • Barrel shape has good curvature. Top half has smooth curvature and bottom half has flattened but is still curved. Horizontal span is 3% to 5% greater than design. • Seams and joints have minor cracking at a few bolt holes and minor openings with potential for backfill infiltration. • Moderate corrosion of aluminum components. No attack of core alloy. • Medium rust with light pitting on steel components.
6	Satisfactory Condition - Potential exists for major maintenance. • Barrel shape is fair. Top half has smooth curvature and the bottom half is flat. Horizontal span is no more than 5% greater than design. • Minor cracking at bolts along one seam. Minor joint and seam openings with evidence of backfill infiltration. • Significant corrosion with minor attack of core alloy on aluminum components. • Heavy rust with medium pitting on steel components.
5	Fair Condition - Potential exists for minor rehabilitation. • Barrel shape is fair. Significant distortion in the top in one location with slight reverse curvature in one location in the bottom. Horizontal span is 5% to 7% greater than design.

- Moderate cracking at bolt holes along a seam in one section. Backfill is being lost through the seam or joint causing slight deflections in the pipe barrel.
- Significant corrosion with moderate attack of core alloy on aluminum components.
- Advanced section loss with heavy pitting on steel components.

4 Poor Condition - Potential exists for major rehabilitation.

- Barrel shape has significant distortion all along the top of the arch. The bottom has reverse curvature. Horizontal span is more than 7% greater than design.
- Moderate cracking at bolt holes along one seam with backfill infiltration causing major deflections.
- Extensive corrosion with significant attack of core alloy on aluminum components.
- Advanced section loss with heavy pitting and isolated perforations on steel components.

3 Serious Condition - Rehabilitation or repair required immediately.

- Barrel shape poor. Extreme deflection in top arch in one location. Arch bottom has reverse curvature throughout. Horizontal span more than 7% greater than design.
- Barrel seams have 3 in. (75 mm) long cracks at bolt holes on one seam.
- Extensive corrosion and attack of core alloy with scattered perforations on aluminum components.
- Advanced section loss with heavy pitting and scattered perforations on steel components.

2 Critical Condition - Need for immediate repairs or rehabilitation is urgent.

- Barrel shape critical. Extreme deflection and distortion along top of the pipe. Horizontal span more than 7% greater than design.
- Barrel seams have cracks spanning from bolt to bolt on one seam.
- Extensive perforations due to corrosion on aluminum components.
- Advanced section loss and extensive perforations on steel components.

1 AImminent" Failure Condition - Structure is closed.

- Barrel shape is partially collapsed.
- Barrel seams have failed.
- Study should determine feasibility of repair or rehabilitation.

0 Failed Condition - Structure is closed.

- Barrel shape has totally failed.
- Structure is beyond repair or rehabilitation.

10.9.3 Structural Plate Arch Barrels

Code	Description

9 Excellent Condition - No maintenance or rehabilitation concerns.

- No noticeable deficiencies or deterioration.

8 Very Good Condition - No maintenance or rehabilitation concerns.

- Barrel shape has good, smooth symmetrical curvature. Rise is within 3% of design.
- Seams and joints are tight with no openings.
- Minor construction defects with the protective coating intact.
- Superficial corrosion with slight pitting on aluminum components.
- Light rust with no pitting on steel components.
- Footing are in good condition with no erosion.

7 Good Condition - Potential exists for minor maintenance.

- Barrel shape is good with smooth, symmetrical curvature. Slight flattening of the top or sides in one section. Rise is within 3% to 4% of design.
- Seams and joints have minor cracking at a few bolt holes and minor openings with potential for backfill infiltration.
- Moderate corrosion of aluminum components. No attack of core alloys.
- Medium rust with light pitting on steel components.
- Moderate erosion causing differential settlement and minor cracking in footing.

6 Satisfactory Condition - Potential exists for major maintenance.

- Barrel shape is fair with smooth but non-symmetrical curvature. Slight flattening of the top or sides throughout. Rise is within 4% to 5% of design.
- Minor cracking at bolts along one or more seams. Minor joint and seam openings with evidence of backfill infiltration.
- Aluminum has significant corrosion and minor attack of core alloy.

- Heavy rust with medium pitting on steel components.
- Footings show moderate cracking and differential settlement due to extensive scour.

5 Fair Condition - Potential exists for minor rehabilitation.

- Barrel shape is fair with significant distortion and deflection in one section, sides beginning to flatten or non-symmetrical shape. Rise is within 5% to 7% of design.
- Moderate cracking at bolt holes along a seam in one section. Backfill is being lost through the seam or joint causing slight deflections in the pipe barrel.
- Significant corrosion of aluminum components. No attack of core alloy.
- Advanced section loss with heavy pitting on steel components.
- Footings show significant undercutting, extreme differential settlement, and major cracking

4 Poor Condition - Potential exists for major rehabilitation.

- Barrel shape has significant distortion all along the top of the arch. Sides flattened with radius 100% greater than design. Rise is within 7% to 8% of design.
- Major cracking of seam near crown exists; infiltration of soil is causing major deflection.
- Extensive corrosion with significant attack of core alloy on aluminum components.
- Advanced section loss with heavy pitting and isolated perforations on steel components.
- Footings have rotated due to erosion and undercutting. Settlement has caused damage to metal arch.

3 Serious Condition - Rehabilitation or repair required immediately.

- Barrel shape is poor with extreme deflection in one section. Sides are virtually flattened. Extremely non-symmetrical. Rise is within 8% to 10% of design.
- Barrel seams are cracked 3” (75 mm) to either side of bolts.
- Extensive corrosion and attack of core alloy with scattered perforations on aluminum components.
- Advanced section loss with heavy pitting and scattered perforations on steel components.
- Footings are rotated, severely undercut with major cracking and spalling.

2 Critical Condition - Need for immediate repairs or rehabilitation is urgent.

- Barrel shape is critical with extreme deflection throughout. Sides are flattened. Extremely non-symmetrical. Rise is greater than 10% of design.
- Barrel seams have cracks spanning from bolt to bolt with significant amounts of backfill infiltration.
- Extensive perforations due to corrosion on aluminum components.
- Advances section loss and extensive perforations on steel components.
- Severe differential settlement in footings has caused distortion and kinking of metal arch.

1 AImminent≅ Failure Condition - Structure is closed.

- Barrel shape is partially collapsed with local reverse curve of crown and sides.
- Barrel seams have failed with backfill pushing in.
- Study should determine feasibility of repair or rehabilitation.

0 Failed Condition - Structure is closed.

- Barrel shape has totally failed.
- Structure is beyond repair or rehabilitation.

10.9.4 Low Profile Arch Long-Span Culvert Barrels

Code	Description
9	Excellent Condition - No maintenance or rehabilitation concerns.

- No noticeable deficiencies or deterioration.

8 Very Good Condition - No maintenance or rehabilitation concerns.

- Barrel shape has good, smooth symmetrical curvature.
- Top arc mid-ordinate is within 11% of design.
- Horizontal span is within 5% of design.
- Seams and joints are tight with no openings.
- Minor construction defects with the protective coating intact.
- Superficial corrosion with slight pitting on aluminum components.
- Light rust with no pitting on steel components.
- Footing are in good condition with no erosion.

7 Good Condition - Potential exists for minor maintenance.

- Barrel shape is good with smooth, symmetrical curvature.
- Top arc mid-ordinate is within 11% to 15% of design.
- Horizontal span is within 5% of design.
- Seams and joints have minor cracking at a few bolt holes and minor joint or seam openings with potential for backfill infiltration.
- Moderate corrosion of aluminum components. No attack of core alloy.
- Medium rust with light pitting on steel components.
- Moderate erosion causing differential settlement and minor hairline cracking in footing.

6 Satisfactory Condition - Potential exists for major maintenance.

- Barrel shape is fair with smooth but non-symmetrical curvature.
- Top arc mid-ordinate is within 15% of design.
- Horizontal span is within 5% of design.
- Minor cracking at bolts along one or more seams. Minor joint and seam openings with evidence of backfill infiltration.
- Aluminum has significant corrosion, minor attack of core alloy.
- Heavy rust with medium pitting on steel components.
- Footings show moderate cracking and differential settlement due to extensive erosion.

5 Fair Condition - Potential exists for minor rehabilitation.

- Shape is fair with significant distortion and deflection in one section. Half top arcs are beginning to flatten and mid-ordinate of half top arc is 30% less than design.
- Top arc mid-ordinate is within 15% to 20% of design
- Horizontal span within 5% of design.
- Moderate cracking at bolt holes along a seam in one section. Backfill is being lost through the seam or joint causing slight deflections in the pipe barrel.
- Significant corrosion with moderate attack of core alloy on aluminum components.
- Advanced section loss with heavy pitting on steel components.
- Footings show significant undercutting, extreme differential settlement, and major cracking.

4 Poor Condition - Potential exists for major rehabilitation.

- Barrel shape has significant distortion throughout. Mid-ordinate of the half top arc is less than 50% of design.
- Top arc mid-ordinate is within 15% to 20% of design.

- Horizontal span is within 5% to 6% of design.
- Major cracking of seam near crown exists; infiltration of soil is causing major deflection.
- Extensive corrosion with significant attack of core alloy on aluminum components.
- Advanced section loss with heavy pitting and isolated perforations on steel components.
- Footings have rotated due to erosion and undercutting. Settlement has caused damage to metal arch.

3 Serious Condition - Rehabilitation or repair required immediately.

- Barrel shape is poor with extreme distortion and deflection in one section. Ordinate of half top arc is 50% to 70% less than design.
- Top arc mid-ordinate is 20% to 30% less than design.
- Horizontal span is within 6% to 8% of design.
- Barrel seams are cracked 3” (75 mm) to either side of bolts.
- Extensive corrosion and attack of core alloy with scattered perforations on aluminum components.
- Advances section loss with heavy pitting and scattered perforations on steel components.
- Footings are rotated, severely undercut with major cracking and spalling.

2 Critical Condition - Need for immediate repairs or rehabilitation is urgent.

- Barrel shape is critical with extreme distortion and deflection throughout. Mid-ordinate of top half arc is more than 70% less than design.
- Top arc mid-ordinate is more than 30% less than design.
- Horizontal span is more than ∀8% percent of design.
- Barrel seams have cracks spanning from bolt to bolt with significant amounts of backfill infiltration.
- Extensive perforations due to corrosion on aluminum components.
- Advanced section loss and extensive perforations on steel components.
- Severe differential settlement in footings has caused distortion and kinking of metal arch.

1 AImminent≅ Failure Condition - Structure is closed.

- Barrel shape is partially collapsed with top arc curvature flat or reverse curved.
- Barrel seams have failed with backfill pushing in.
- Study should determine feasibility of repair or rehabilitation.

0 Failed Condition - Structure is closed.

- Barrel shape has totally failed.
- Structure is beyond repair or rehabilitation.

10.9.5 High Profile Arch Long-Span Culvert Barrels

Code	Description

9 Excellent Condition - No maintenance or rehabilitation concerns.

- No noticeable deficiencies or deterioration.

8 Very Good Condition - No maintenance or rehabilitation concerns.

- Barrel shape has good, smooth symmetrical curvature.
- Top arc mid-ordinate is within 11% of design.
- Horizontal span is within 5% of design.
- Seams and joints are tight with no openings.
- Minor construction defects with the protective coating intact.
- Superficial corrosion with slight pitting on aluminum components.
- Light rust with no pitting on steel components.
- Footing are in good condition with no erosion.

7 Good Condition - Potential exists for minor maintenance.

- Barrel shape is good with smooth, symmetrical curvature.
- Top arc mid-ordinate is within 11% to 15% of design.
- Horizontal span is within 5% of design.
- Side plates are flattened with arc-mid-ordinate is 50% to 65% less than design.
- Seams and joints have minor cracking at a few bolt holes and minor joint or seam openings with potential for backfill infiltration.
- Moderate corrosion of aluminum components. No attack of core alloy.
- Medium rust with light pitting on steel components.
- Moderate erosion causing differential settlement and minor hairline cracking in footing.

6 Satisfactory Condition - Potential exists for major maintenance.

- Barrel shape is fair with smooth but non-symmetrical curvature.
- Top arc mid-ordinate is within 15% of design.
- Horizontal span is within 5% of design.

- Side plates flattened with arc-mid-ordinate 65% to 75% less than design.
- Minor cracking at bolts along one or more seams. Minor joint and seam openings with evidence of backfill infiltration.
- Aluminum has significant corrosion, minor attack of core alloy.
- Heavy rust with medium pitting on steel components.
- Footings show moderate cracking and differential settlement due to extensive erosion.

5 Fair Condition - Potential exists for minor rehabilitation.

- Shape is fair with significant distortion and deflection in one section. Half top arcs are beginning to flatten and mid-ordinate of half top arc is 30% less than design.
- Top arc mid-ordinate is within 15% to 20% of design
- Horizontal span within 5% of design.
- Side plates flattened with arc-mid-ordinate 75% to 80% less than design.
- Moderate cracking at bolt holes along a seam in one section. Backfill is being lost through the seam or joint causing slight deflections in the pipe barrel.
- Significant corrosion with moderate attack of core alloy on aluminum components.
- Advanced section loss with heavy pitting on steel components.
- Footings show significant undercutting, extreme differential settlement and major cracking.

4 Poor Condition - Potential exists for major rehabilitation.

- Barrel shape has significant distortion throughout. Mid-ordinate of the half top arc is less than 50% of design.
- Top arc mid-ordinate is within 15% to 20% of design.
- Horizontal span is within 5% to 6% of design.
- Side plates flattened with arc-mid-ordinate 80% to 88% less than design.
- Major cracking of seam near crown exists; infiltration of soil is causing major deflection.
- Extensive corrosion with significant attack of core alloy of aluminum components.
- Advanced section loss with heavy pitting and isolated perforations on steel components.
- Footings have rotated due to erosion and undercutting. Settlement has caused damage to metal arch.

3 Serious Condition - Rehabilitation or repair required immediately.

- Barrel shape is poor with extreme distortion and deflection in one section. Ordinate of half top arc is 50% to 70% less than design.
- Top arc mid-ordinate is 20% to 30% less than design.
- Horizontal span is within 6% to 8% of design.
- Side plates flattened with arc-mid-ordinate 88% to 90% less than design.
- Barrel seams are cracked 3” (75 mm) to either side of bolts.
- Extensive corrosion and attack of core alloy with scattered perforations of aluminum components.
- Advances section loss with heavy pitting and scattered perforations on steel components.
- Footings are rotated, severely undercut with major cracking and spalling.

2 Critical Condition - Need for immediate repairs or rehabilitation is urgent.

- Barrel shape is critical with extreme distortion and deflection throughout. Mid-ordinate of top half arc is more than 70% less than design.
- Top arc mid-ordinate is more than 30% less than design.
- Horizontal span is more than ∀8% percent of design.
- Side plates flattened with arc-mid-ordinate 90% to 99% less than design.
- Barrel seams have cracks spanning from bolt to bolt with significant amounts of backfill infiltration.
- Extensive perforations due to corrosion of aluminum components.
- Advanced section loss and extensive perforations on steel components.
- Severe differential settlement in footings has caused distortion and kinking of metal arch.

1 AImminent≅ Failure Condition - Structure is closed.

- Barrel shape is partially collapsed with top arc curvature flat or reverse curved.
- Barrel seams have failed with backfill pushing in.
- Side plates are flat or have reverse curvature
- Study should determine feasibility of repair or rehabilitation.

0 Failed Condition - Structure is closed.

- Barrel shape has totally failed.
- Structure is beyond repair or rehabilitation.

10.9.6 Pear Shaped Long-Span Culvert Barrels

Code	Description
9	Excellent Condition - No maintenance or rehabilitation concerns. • No noticeable deficiencies or deterioration.
8	Very Good Condition - No maintenance or rehabilitation concerns. • Barrel shape has good, smooth symmetrical curvature. • Top arc mid-ordinate is within 11% of design. • Horizontal span is within 5% of design. • Side plates have smooth curvature. • Seams and joints are tight with no openings. • Minor construction defects with the protective coating intact. • Superficial corrosion with slight pitting of aluminum components. • Light rust with no pitting on steel components.
7	Good Condition - Potential exists for minor maintenance. • Barrel shape is good with smooth, symmetrical curvature. • Top arc mid-ordinate is within 11% to 15% of design • Horizontal span is within 5% of design. • Side plates flattened, mid-ordinate less than 50% of design. • Seams and joints have minor cracking at a few bolt holes and minor joint or seam openings with potential for backfill infiltration. • Moderate corrosion with no attack of core alloy of aluminum components. • Medium rust with light pitting on steel components.
6	Satisfactory Condition - Potential exists for major maintenance. • Barrel shape is fair with smooth but non-symmetrical curvature. • Top arc mid-ordinate is within 15% of design. • Horizontal span is within 5% to 6% of design. • Side plate flattened, mid-ordinate less than 35% of design. • Minor cracking at bolts along one or more seams. Minor joint and seam openings with evidence of backfill infiltration. • Aluminum has significant corrosion, minor attack of core alloy. • Heavy rust with medium pitting on steel components.

5 Fair Condition - Potential exists for minor rehabilitation.

- Shape is fair, with significant distortion and deflection in one section. Half top arcs are beginning to flatten and mid-ordinate of half top arc is 30% less than design.
- Top arc mid-ordinate is within 15% to 20% of design
- Horizontal span is within 5% to 6% of design.
- Side plates flattened, mid-ordinate less than 25% of design.
- Moderate cracking at bolts holes along a seam in one section. Backfill is being lost through the seam or joint causing slight deflections in the pipe barrel.
- Significant corrosion with moderate attack of core alloy on aluminum components.
- Advanced section loss with heavy pitting on steel components.

4 Poor Condition - Potential exists for major rehabilitation.

- Barrel shape has marginal significant distortion throughout. Mid-ordinate of the half top arc is less than 50% of design.
- Top arc mid-ordinate is within 15% to 20% of design.
- Horizontal span is within 5% to 6% of design.
- Side plates flattened, mid-ordinate less than 20% of design.
- Major cracking of seam near crown exists, infiltration of soil is causing major deflection.
- Extensive corrosion with significant attack of core alloy on aluminum components.
- Advanced section loss with heavy pitting and isolated perforations on steel components.

3 Serious Condition - Rehabilitation or repair required immediately.

- Barrel shape is poor with extreme distortion and deflection in one section. Mid-ordinate of half top arc is 50% to 70% less than design.
- Top arc mid-ordinate is 20% to 30% less than design.
- Horizontal span is within 6% to 8% of design.
- Side plate flattened, mid-ordinate less than 12% of design.
- Barrel seams are cracked 3” (75 mm) to either side of bolts.
- Extensive corrosion and attack of core alloy with scattered perforations on aluminum components.
- Advances section loss with heavy pitting and scattered perforations on steel components.

2 Critical Condition - Need for immediate repairs or rehabilitation is urgent.

- Barrel shape is critical with extreme distortion and deflection throughout. Top half arc mid-ordinate is more than 70% less than design.
- Top arc mid-ordinate is more than 30% less than design.
- Horizontal span is more than 8% of design.
- Side plates flattened, mid-ordinate less than 10% of design.
- Barrel seams have cracks spanning from bolt to bolt with significant amounts of backfill infiltration.
- Extensive perforations due to corrosion on aluminum components.
- Advanced section loss and extensive perforations on steel components.

1 AImminent≅ Failure Condition - Structure is closed.

- Barrel shape is partially collapsed with top arc curvature flat or reverse curved.
- Side plates flat or reversed curved.
- Barrel seams have failed with backfill pushing in.
- Study should determine feasibility of repair or rehabilitation.

0 Failed Condition - Structure is closed.

- Barrel shape has totally failed.
- Structure is beyond repair or rehabilitation.

10.9.7 Horizontal Ellipse Long-Span Culvert Barrels

Code **Description**

9 Excellent Condition - No maintenance or rehabilitation concerns.

- No noticeable deficiencies or deterioration.

8 Very Good Condition - No maintenance or rehabilitation concerns.

- Barrel shape has good, smooth symmetrical curvature.
- Top arc mid-ordinate is within 11% of design.
- Horizontal Span is within 5% of design.
- Bottom arcs have smooth curvature, mid-ordinate within 50% of design.
- Seams and joints are tight with no openings.
- Minor construction defects with the protective coating intact.
- Superficial corrosion with slight pitting on aluminum components.

- Superficial rust with no pitting on steel components.

7 Good Condition - Potential exists for minor maintenance.

- Barrel shape is good with smooth, symmetrical curvature.
- Top arc mid-ordinate is within 11% to 15% of design
- Horizontal span is within 5% of design.
- Bottom arc is flattened, mid-ordinate is less than 50% of design.
- Seams and joints have minor cracking at a few bolt holes and minor joint or seam openings with potential for backfill infiltration.
- Moderate corrosion with no attack of core alloy on aluminum components.
- Medium rust with light pitting on steel components.

6 Satisfactory Condition - Potential exists for major maintenance.

- Barrel shape is fair with smooth but non-symmetrical curvature.
- Top arc mid-ordinate is within 15% of design.
- Horizontal span is within 5% to 6% of design.
- Bottom arc flattened and irregular, mid-ordinate less than 50% of design.
- Minor cracking at bolts along one or more seams. Minor joint and seam openings with evidence of backfill infiltration.
- Aluminum has significant corrosion, minor attack of core alloy.
- Heavy rust with medium pitting on steel components.

5 Fair Condition - Potential exists for minor rehabilitation.

- Shape is fair, with significant distortion and deflection in one section. Half top arcs are beginning to flatten and mid-ordinate of half top arc is 30% less than design.
- Top arc mid-ordinate is within 15% to 20% of design
- Horizontal span is within 5% to 6% of design.
- Bottom arc is virtually flat over center half of arc.
- Moderate cracking at bolt holes along a seam in one section. Backfill is being lost through the seam or joint causing slight deflections in the pipe barrel.
- Significant corrosion with moderate attack of core alloy on aluminum components.
- Advanced section loss with heavy pitting on steel components.

4 Poor Condition - Potential exists for major rehabilitation.

- Barrel shape has significant distortion throughout. Mid-ordinate of the half top arc is less than 50% of design.

- Top arc mid-ordinate is within 15% to 20% of design.
- Horizontal span is within 5% to 6% of design.
- Bottom arc is virtually flat over center half of the arc and deflected down at the ends of the arc.
- Major cracking of seam near crown exists; infiltration of soil is causing major deflection.
- Extensive corrosion with significant attack of core alloy on aluminum components.
- Advanced section loss with heavy pitting and isolated perforations on steel components.

3 Serious Condition - Rehabilitation or repair required immediately.

- Barrel shape poor with extreme distortion and deflection in one section. Half top arc mid ordinate 50% to 70% less than design.
- Top arc mid-ordinate is 20% to 30% less than design.
- Horizontal span is within 6% to 8% of design.
- Bottom arc has reverse curvature.
- Barrel seams are cracked 3 in. (75 mm) to either side of bolts.
- Extensive corrosion and attack of core alloy with scattered perforations on aluminum components.
- Advanced section with heavy pitting and scattered perforations on steel components.
- Footing is rotated and severely undercut. Major cracking and spalling has occurred with significant damage to structure.

2 Critical Condition - Need for immediate repairs or rehabilitation is urgent.

- Barrel shape critical. Extreme distortion and deflection throughout. Top half arc mid-ordinate more than 70% less than design.
- Top arc mid-ordinate is more than 30% less than design.
- Horizontal span is more than ∀8% of design.
- Bottom arc is reverse curved in center and bulged out at the sides.
- Barrel seams have cracks spanning from bolt to bolt with significant amounts of backfill infiltration.
- Extensive perforations due to corrosion on aluminum components.
- Advanced section loss and extensive perforations steel components.
- Severe differential settlement of footing has caused distortion and kinking of metal arch.

1 AImminent≅ Failure Condition - Structure is closed.

- Barrel shape is partially collapsed with top arc curvature flat or reverse curved.

- Barrel seams have failed with backfill pushing in.
- Study should determine feasibility of repair or rehabilitation.

0 Failed Condition - Structure is closed.

- Barrel shape has totally failed.
- Structure is beyond repair or rehabilitation.

10.9.8 Corrugated Metal Box Culvert Barrel

Code	Description

9 Excellent Condition - No maintenance or rehabilitation concerns.

- No noticeable deficiencies or deterioration.

8 Very Good Condition - No maintenance or rehabilitation concerns.

- Barrel shape has good, smooth symmetrical curvature.
- Top arc mid-ordinate is within 11% of design.
- Horizontal span is within 5% of design.
- Side leg slightly deflected inward or outward and curvature smooth.
- Seams and joints are tight with no openings.
- Minor construction defects with the protective coating intact.
- Superficial corrosion with slight pitting on aluminum components.
- Light rust with no pitting on steel components.
- Footings are good with no erosion.

7 Good Condition - Potential exists for minor maintenance.

- Barrel shape has generally good smooth, symmetrical curvature.
- Top arc mid-ordinate is within 11% to 15% of design.
- Horizontal span is within 5% of design.
- Side leg slightly deflected inward or moderately deflected outward, curvature smooth.
- Seams and joints have minor cracking at a few bolt holes and minor openings with potential for backfill infiltration.
- Moderate corrosion with no attack of core alloy on aluminum components.
- Medium rust with light pitting on steel components.
- Footings show minor differential settlement due to erosion and minor hairline cracking.

6 Satisfactory Condition - Potential exists for major maintenance.

- Barrel shape is fair with smooth but non-symmetrical curvature.
- Top arc mid-ordinate is within 15% of design.
- Horizontal span within 5% to 6% of design.
- Side leg moderately deflected inward or extremely deflected outward, curvature smooth.
- Minor cracking at bolts along one or more seams. Minor joint and seam openings with evidence of backfill infiltration.
- Aluminum has significant corrosion, minor attack of core alloy.
- Heavy rust with medium pitting on steel components.
- Footing shows differential settlement due to extensive erosion and moderate cracking.

5 Fair Condition - Potential exists for minor rehabilitation.

- Shape is fair with significant distortion and deflection in one section. Half top arcs are beginning to flatten and mid-ordinate of half top arc is 30% less than design.
- Top arc mid-ordinate is within 15% to 20% percent of design.
- Horizontal span is within 5% to 6% of design.
- Side leg bowed significantly inward or outward for less than 25% of the span length.
- Moderate cracking at bolt holes along a seam in one section. Backfill is being lost through the seam or joint causing slight deflections in the pipe barrel.
- Significant corrosion with moderate attack of core alloy on aluminum components.
- Advanced section loss with heavy pitting on steel components.
- Footing shows significant undercutting and extreme differential settlement with major cracking.

4 Poor Condition - Potential exists for major rehabilitation.

- Barrel shape has significant distortion throughout. Mid-ordinate of the half top arc is less than 50% of design.
- Top arc mid-ordinate is within 20% to 30% of design.
- Horizontal span is within 5% to 6% of design.
- Side leg bowed significantly inward or outward over 25% to 50% of the span length, curvature irregular.
- Major cracking of seam near crown exists, infiltration of soil is causing major deflection.
- Extensive corrosion with significant attack of core alloy on aluminum components.
- Advanced section loss with heavy pitting and isolated perforations on steel components.

- Footings are rotated due to erosion and undercutting. Settlement has caused damage to metal arch.

3 Serious Condition - Rehabilitation or repair required immediately.

- Barrel shape is poor with extreme distortion and deflection in one section. Ordinate of half top arc is 50% to 70% less than design.
- Top arc mid-ordinate is 30% to 40% less than design.
- Horizontal span is within 6% to 8% design.
- Side leg extremely bowed inward over 50% to 100% of the span length or leg bowed outward causing severe bulges in metal.
- Barrel seams cracked 3 in. (75 mm) or more to either side of bolts.
- Extensive corrosion and attack of core alloy with scattered perforations on aluminum components.
- Advanced section loss with heavy pitting and scattered perforations on steel components.
- Footing is rotated and severely undercut. Major cracking and spalling has occurred with significant damage to structure.

2 Critical Condition - Need for immediate repairs or rehabilitation is urgent.

- Barrel shape is critical with extreme distortion and deflection throughout. Mid-ordinate of top half arc is more than 70% less than design.
- Top arc mid-ordinate is more than 40% less than design.
- Horizontal span is more than ∀8% of design.
- Side leg extremely bowed inward over 50% to 100% of the span length or leg bowed outward severely causing bulges or kinking in metal.
- Barrel seams have cracks spanning from bolt to bolt with significant amounts of backfill infiltration.
- Extensive perforations due to corrosion on aluminum components.
- Advanced section loss and extensive perforations on steel components.
- Severe differential settlement of footing has caused distortion and kinking of metal arch.

1 AImminent≅ Failure Condition - Structure is closed.

- Barrel shape is partially collapsed with top arc curvature flat or reverse curved.
- Barrel seams have failed with backfill pushing in.
- Study should determine feasibility of repair or rehabilitation.

0 Failed Condition - Structure is closed.

- Barrel shape has totally failed.
- Structure is beyond repair or rehabilitation.

10.9.9 Precast Concrete Culvert Barrels

Code	Description
9	Excellent Condition - No maintenance or rehabilitation concerns. • No noticeable deficiencies or deterioration.
8	Very Good Condition - No maintenance or rehabilitation concerns. • Alignment between sections is good with no settlement or misalignment. • Joints are tight with no defects apparent. • Concrete has no cracking, spalling or scaling present and surface is in good condition.
7	Good Condition - Potential exists for minor maintenance. • Alignment between sections is good with minor misalignment at joints and no settlement. • Joints have minor openings with possible infiltration/exfiltration. • Concrete has minor hairline cracking at isolated locations. Slight spalling or scaling present on invert.
6	Satisfactory Condition - Potential exists for major maintenance. • Alignment between sections is fair with minor misalignment and settlement at isolated locations. • Slight openings at joints causing minor backfill infiltration. Minor cracking or spalling at joints allowing exfiltration. • Concrete has extensive hairline cracks, some with minor delaminations or spalling and invert scaling less than 1/4 in. (6 mm) deep.
5	Fair Condition - Potential exists for minor rehabilitation. • Alignment between sections is fair with minor misalignment or settlement throughout with possible piping. • Joints are open and allowing backfill to infiltrate with significant cracking or joint spalling.

- Concrete cracks up to 1/8 in. (3 mm) wide with moderate delamination and moderate spalling exposing reinforcing steel at isolated locations. Areas on invert with surface scaling or spalls greater than 1/4 in. (6 mm) deep.

4 Poor Condition - Potential exists for major rehabilitation.

- Alignment between sections is poor with significant settlement. Evidence of piping. End sections are dislocated and about to drop off.
- Joints show differential movement and separation. Significant infiltration or exfiltration exists at joints.
- Concrete cracks open more than 1/8 in. (3 mm) with efflorescence and spalling at numerous locations. Spalls have exposed rebars that are heavily corroded. Extensive surface scaling on invert greater than 1/2 in. (13 mm) deep.

3 Serious Condition - Rehabilitation or repair required immediately.

- Alignment between sections is poor with significant ponding. End section drop off has occurred.
- Joints show significant openings. Dislocated joints in several locations are exposing fill material. Infiltration or exfiltration is causing misalignment and settlement or depressions in roadway.
- Concrete shows extensive cracking and spalling. Invert scaling has exposed reinforcing steel.

2 Critical Condition - Need for immediate repairs or rehabilitation is urgent.

- Alignment between sections is critical. Culvert is not functioning due to alignment problems.
- Concrete shows severe spalling of the culvert wall. Invert concrete is completely deteriorated in isolated locations.

1 AImminent≅ Failure Condition - Structure is closed.

- Culvert is partially collapsed.
- Study should determine feasibility of repair or rehabilitation.

0 Failed Condition - Structure is closed.

- Culvert and fill have totally failed.
- Structure is beyond repair or rehabilitation.

10.9.10 Cast-In-Place Concrete Culvert Barrels

Code	Description
9	Excellent Condition - No maintenance or rehabilitation concerns. • No noticeable deficiencies or deterioration.
8	Very Good Condition - No maintenance or rehabilitation concerns. • Alignment between sections is good with no settlement or misalignment. • Joints are tight with no apparent defects. • Concrete has no cracking, spalling or scaling. • Footings are in good condition with no invert scour.
7	Good Condition - Potential exists for minor maintenance. • Alignment between sections is good, with minor misalignment at joints and no settlement. • Joint material is deteriorated at isolated locations. • Concrete has minor hairline cracking at isolated locations, with slight spalling or scaling present on invert or the bottom of top slab. • Footings are in good condition with only minor invert scour.
6	Satisfactory Condition - Potential exists for major maintenance. • Alignment between sections is fair with minor misalignment and settlement at isolated locations. • Joint material is deteriorated with minor separation possible and minor cracking or spalling at joints is allowing infiltration or exfiltration. • Concrete has extensive hairline cracks, some with minor delaminations or spalling and invert scaling less than 1/4 in. (6 mm) deep or small spalls are present on invert or bottom of top slab. • Minor scour near footings.
5	Fair Condition - Potential exists for minor rehabilitation. • Alignment between sections is fair with minor settlement throughout the pipe with possible piping. • Joints are open and allowing backfill to infiltrate with significant cracking or joint spalling.

- Concrete cracks up to 1/8 (3 mm) wide with moderate delamination and spalling exposing reinforcing steel. Large areas of surface scaling greater than 1/4 in. (6 mm) deep.

4 Poor Condition - Potential exists for major rehabilitation.

- Alignment between sections is poor with significant settlement. Evidence of piping.
- Joints show differential movement and separation with significant infiltration or exfiltration.
- Concrete cracks are greater than 1/8 in. (3 mm) wide with efflorescence. Spalls have exposed rebar that is heavily corroded. Extensive surface scaling on invert is greater than 1/2 in. (13 mm).
- Scour along footing with slight undermining.

3 Serious Condition - Rehabilitation or repair required immediately.

- Alignment between sections is poor with significant ponding. End section drop off has occurred.
- Joints show significant openings and differential movement. Infiltration or exfiltration is causing misalignment and settlement or depressions in roadway.
- Extensive cracking with delaminations, spalling and slight differential movement. Scaling has exposed rebar in the bottom of the top slab or invert.
- Footing shows severe undermining with slight differential settlement causing minor cracking or spalling in footing and walls.

2 Critical Condition - Need for immediate repairs or rehabilitation is urgent.

- Alignment between sections is critical. Culvert is not functioning due to severe misalignment.
- Concrete shows severe cracks with significant differential movement. The concrete is completely deteriorated in isolated locations in the top slab or invert.
- Footings show severe undermining with significant differential settlement causing severe cracks.

1 AImminent≅ Failure Condition - Structure is closed.

- Culvert is partially collapsed.
- Footings show severe undermining resulting in partial collapse of structure.
- Study should determine feasibility of repair or rehabilitation.

0 Failed Condition - Structure is closed.

- Culvert and fill have totally failed.
- Structure is beyond repair or rehabilitation.

10.9.11 <u>Masonry Culvert Barrels</u>

<u>Code</u> <u>Description</u>

9 Excellent Condition - No maintenance or rehabilitation concerns.

- No noticeable deficiencies or deterioration.

8 Very Good Condition - No maintenance or rehabilitation concerns.

- Alignment of the stones is good with no settlement or misalignment.
- Mortar is tight with no defects apparent.
- Masonry shows no cracking or settlement. No missing or dislocated masonry are present.
- Footings are in good condition with no invert scour.

7 Good Condition - Potential exists for minor maintenance.

- Alignment of the stones is good with minor misalignment at joints and no settlement.
- Mortar shows shallow deterioration at isolated locations.
- Masonry shows surface deterioration at isolated locations.
- Footings are good with only minor invert scour.

6 Satisfactory Condition - Potential exists for major maintenance.

- Alignment of the stones is fair with minor misalignment and settlement.
- Mortar shows extensive areas of shallow deterioration. There is missing mortar at isolated locations. There is possible infiltration or exfiltration and minor cracking.
- Masonry shows minor cracking.
- Minor scour near footings.

5 Fair Condition - Potential exists for minor rehabilitation.

- Alignment of the stones is fair with minor misalignment or settlement.
- Mortar is generally deteriorated. There is loose or missing mortar at isolated locations and infiltration is apparent.

- Masonry exhibits minor cracking with slight dislocation. There are large areas of surface scaling.
- Moderate scour is present along footing.

4 Poor Condition - Potential exists for major rehabilitation.

- Alignment of the stones is poor with significant settlement.
- Mortar is severely deteriorated with significant loss. Significant infiltration or exfiltration noted.
- Masonry shows significant displacement.
- Scour along footing with slight undermining.

3 Serious Condition - Rehabilitation or repair required immediately.

- Alignment of the stones is poor with significant ponding. Stone "drop-off" from the ends of the barrel may have occurred.
- Extensive areas of missing mortar. Infiltration and exfiltration causing misalignment of the culvert and settlement or depressions in the roadway.
- Masonry in the lower part of the structure is missing or crushed.
- Footing shows severe undermining with slight differential settlement causing minor cracking or spalling in footing and minor distress in walls.

2 Critical Condition - Need for immediate repairs or rehabilitation is urgent.

- Alignment of the stones is critical. Culvert is not functioning due to severe misalignment.
- Masonry in the top of the culvert is missing or crushed.
- Footings show severe undermining with significant differential settlement causing severe cracks in footing and distress in walls.

1 AImminent≅ Failure Condition - Structure is closed.

- Culvert is partially collapsed.
- Footings show severe undermining resulting in partial collapse of structure.
- Study should determine feasibility of repair or rehabilitation.

0 Failed Condition - Structure is closed.

- Culvert and fill have totally failed.
- Structure is beyond repair or rehabilitation.

10.10 RATING OF APPROACH CONDITIONS

The following guidelines have been developed to assist in determining the condition rating of Approaches.

Definitions:

Approach Slab - A reinforced concrete slab on the bridge approach that is seated on the bridge abutment backwall on one end. It may or may not be tied into the backwall with reinforcing bars. Approach slabs are typically provided between concrete roadway pavements and the bridge or at other locations where settlement of fill material may cause a depression in the roadway behind the abutment. Approach slabs reduce impact stresses applied to the bridge by vehicles moving onto the span. Note: If an approach slab exists, but is overlaid, the item should be rated based on the condition of the riding surface. Do not indicate "not visible."

Relief Joints - Joints between the rigid concrete approach pavement and approach slab that are designed to absorb the thermal expansion and contraction stresses produced by the approach pavement, which if left unchecked, could induce overturning forces in the abutment backwall. The joints are filled with bituminous material and vary in length up to 15 ft. (5 m). Bituminous concrete overlays (particularly if freshly laid) may hide the relief joint from view. However, they are typically marked by cracking or saw cut joints, transverse to the roadway, at the relief joint/approach pavement and relief joint/approach slab interfaces.

Code	**Description**
9	Excellent Condition - No maintenance or rehabilitation concerns. • No noticeable deficiencies or deterioration
8	Very Good Condition - No maintenance or rehabilitation concerns. • No signs of cracking or spalling. • Transitions from the approach slabs to the bridge deck riding surface are smooth. • Relief joints are smooth and operating as designed. • No signs of cracking, pot holing or wearing. • Guardrails have no deterioration or impact damage. • No evidence that water infiltration is causing heaving or settlement through exfiltration of abutment fill material.

- Embankments are well vegetated and show no signs of instability.
- Moderate signs of erosion due to water runoff noted that does not effect slope stability.
- Minor signs of embankment material bulging around the abutment wingwalls, which may indicate exfiltration of the abutment fill material.

7 Good Condition - Potential exists for minor maintenance.

- Minor cracking, scaling or wearing. No spalling present.
- No evidence of heaving or settlement.
- Transitions from the approach slabs to the bridge deck riding surface are smooth.
- Minor deterioration or impact damage that does not affect the design capacity of the rail.
- Embankments are well vegetated and show no signs of instability.
- Minor signs of erosion due to water runoff present.

6 Satisfactory Condition - Potential exists for major maintenance.

- Medium cracking (up to 1/8 in. (3 mm) wide), medium scaling or wear.
- Spalls are up to 1/2 in. (13 mm) deep. Approach slabs show minor differential settlement up to 1/2 in. (13 mm) at the relief joint interface.
- Water infiltration is evidenced by minor heaving or settlement of the approach slabs.
- Minor increase in impact forces applied to the approach slabs and/or bridge deck riding surface due to bouncing vehicles.
- Relief joints have moderate cracking.
- Minor edge spalling.
- Moderate deterioration of the guide rail such as loose or missing fasteners or anchor bolts, surface rust, spalling with no exposed reinforcing bars, scaling, etc., with little or no effect on guide rail capacity.
- Moderate impact damage to the steel or aluminum rail.
- Wire ropes have slight loss of tension.
- No significant damage or displacement to the rail posts noted. Design capacity is not significantly affected.
- Approach guide rail has up to 25% loose or missing fasteners at the bridge rail transition connection.
- Gaps of less than 3 in. (75 mm) exist between the approach and bridge rail that could present hazards to pedestrians.

5 Fair Condition - Potential exists for minor rehabilitation.

- Approach slabs have cracks greater than 1/8 in. (3 mm) but less than 1/4 in. (6 mm) wide. Heavy scaling and wear.
- Spalls between 1/2 in. (13 mm) and 1 in. (25 mm) deep. Moderate differential settlement of between 1/2 in. (13 mm) and 1 in. (25 mm) noted at the relief joint interfaces.
- Moderate heaving of the approach slabs due to water infiltration or settlement of the approach slabs due to exfiltration of fill. Less than 25% of an individual approach slab area requires rehabilitation to maintain rideability.
- Moderate increase in impact forces applied to the approach slabs and/or bridge deck riding surface due to bouncing vehicles.
- Relief joints have heavy cracking.
- Moderate differential settlement at joint interfaces and heaving or settlement of the bituminous material up to 1-1/2 in. (40 mm) deep.
- Spalling or bituminous concrete patches cause rough surface.
- Significant deterioration of the guide rail such as loose or missing fasteners or anchor bolts, surface rust, spalling with exposed reinforcing bars (no section loss), scaling, etc., that may effect the design capacity of the rail system.
- Heavy impact damage to the steel or aluminum rail. Rail components remain continuous along their length but sections need to be replaced. Moderate loss of design capacity at locations of impact.
- Wire ropes have moderate loss of tension.
- Minor damage to or displacement of the rail posts.
- Approach guide rail has between 26% to 33% loose or missing fasteners at the bridge rail transition connection.
- Gaps from 3 in. (75 mm) to 6 in. (150 mm) exists between the approach and bridge rail that could present a hazard to pedestrians or blunt ends to motorists.
- Embankment material and vegetation are experiencing moderate sloughing indicating slope instability.
- Moderate to advanced signs of erosion due to water runoff noted that has the potential to adversely affect the stability or approach roadway or bridge abutment.
- Moderate signs of embankment material bulging around the abutment wingwalls that may indicate exfiltration of the abutment fill material.

4 Poor Condition - Potential exists for major rehabilitation.

- Approach slabs have cracks in the range of 1/4 in. (6 mm) to 1/2 in. (13 mm) wide. Excessive wear has the potential to cause vehicles to drift laterally. Heavy scaling makes the travel surface very rough.
- Spalls exist between 1 in. (25 mm) and 1-1/2 in. (38 mm) deep.

- Large differential settlements of between 1 in. (25 mm) and 1-1/2 in. (38 mm) at the relief joint interfaces.
- Advanced heaving or settlement of the approach slabs due to water infiltration. Replacement or extensive rehabilitation of between 25% and 50% of an individual approach slab is required to maintain rideability.
- Significant increase in impact forces applied to the approach slabs and/or bridge deck riding surface due to bouncing vehicles.
- Relief joints have extensive cracking.
- Large differential settlement at the joint interface and heaving or settlement of the bituminous material over 1-1/2 in. (38 mm) deep.
- Extensive spalling and/or bituminous patches cause rough ride. Joint should be milled smooth.
- Advanced deterioration of guide rail such as loose or missing fasteners or anchor bolts, surface rust, spalling with exposed reinforcing bars and section loss, scaling, etc., that significantly affects the design capacity of the rail system.
- Heavy impact damage to the steel or aluminum rail. Portions of the rail are non-continuous due to impact damage and may present blunt ends to motorists. Significant to total loss of design capacity at locations of impact.
- Wire ropes have significant loss of tension.
- Rail posts have sustained significant damage and displacement.
- Approach guide rail has 34% to 50% missing or loose fasteners at the bridge rail transition connection.
- Gaps of between 6 in. (150 mm) and 12 in. (300 mm) exists between the approach and bridge rail that could present a hazard to pedestrians or blunt ends to motorists.
- Embankment material and vegetation are experiencing advanced sloughing indicating slope instability. Large areas of the embankments are void of vegetation leaving them highly susceptible to erosion.
- Advanced signs of erosion due to water runoff noted. Erosion is beginning to cut into the roadway shoulder, beginning to remove material from the abutments and/or beginning to remove material from around guide rail posts or barriers. Stability of the approach roadway or bridge abutment is diminished.
- Advanced signs of embankment material bulging around the abutment wingwalls that may indicate exfiltration of the abutment fill material. Stability of the approach roadway and/or abutment is diminished.

3 Serious Condition - Rehabilitation or repair required immediately.

- Approach slabs have cracking in the range of 1/2 in. (13 mm) to 1" (25 mm) wide with edges along crack(s) beginning to spall. Severe wear causes vehicles to drift laterally.
- Severe spalling of between 1-1/2 in. (38 mm) and 2 in. (51 mm) deep. Roadway shows moderate differential settlement of between 1-1/2 in. (38 mm) and 2 in. (51 mm) at the relief joint interfaces. Danger to motorists exists due to the presence of pieces of concrete material that can be kicked up and from a very rough riding surface.
- Advanced heaving or settlement of the roadway surface due to water infiltration. Replacement or extensive rehabilitation of between 50% and 75% of an individual approach slab is required to maintain rideability.
- Severe increase in impact forces applied to the approach slabs and/or bridge deck riding surface due to bouncing vehicles.
- Relief joints have cracks in the range of 1/2 in. (13 mm) and 1 in. (25 mm) wide.
- Severe wear causes vehicles to drift lateral.
- Signs of overturning stress noted on abutment backwall due to failure of relief joint to absorb enough expansion stress imparted by the roadway slab.
- Severe deterioration of the guide rail such as loose or missing fasteners or anchor bolts, surface rust, spalling with exposed reinforcing bars and section loss, scaling, etc., severely affects the design capacity of the rail system.
- Severe impact damage to the steel or aluminum rail. Gaps in the rail due to impact damage are large enough to permit vehicles to pass through and may present blunt ends to motorists. Severe loss of design capacity at locations of impact.
- Wire ropes have advanced loss of tension.
- Rail posts have severe damage and displacement.
- Approach guide rail has 51% to 66% missing or loose fasteners at the bridge rail transition connection.
- Gaps of between 12 in. (300 mm) and 24 in. (600 mm) exists between the approach and bridge rails that could present a hazard to pedestrians or blunt ends to motorists.
- Embankment material and vegetation are experiencing severe sloughing indicating slope instability. Embankments are nearly void of all vegetation and are experiencing severe erosion.
- Severe erosion due to water runoff noted. Erosion has advanced through roadway shoulder and threatens the roadway. Signs of undermining of the approach roadway slab or removal of material from behind the abutment wingwalls. Portions of the guide rail or barrier are made ineffective due severe erosion. Stability of the approach roadway or bridge abutment is significantly diminished.

- Severe signs of embankment material bulging around the abutment wingwalls that may indicate exfiltration of the abutment fill material. Stability of the approach roadway and/or abutment is significantly diminished.

2 Critical Condition - Need for immediate repairs or rehabilitation is urgent.

- Approach slabs have cracking in excess of 1 in. (25 mm) wide. Severe wear causes vehicles to drift laterally. Potential for loss of control by motorists is significantly increased because of current condition.
- Spalling in excess of 2 in. (51 mm) deep. Replacement or extensive rehabilitation of greater than 75% of an individual approach slab is required to maintain rideability. Danger to motorists exists from pieces of concrete with can be kicked up by passing vehicles and from the very rough riding surface that can cause loss of control.
- Severe heaving, settlement and differential settlement of greater than 2 in. (51 mm) of the approach slab in general and at the relief joint interfaces noted.
- Severe increase in impact forces applied to the approach slabs and/or bridge deck riding surface due to bouncing vehicles. Potential for loss of control by motorists due to slab condition is significantly increased because of current condition.
- Relief joints have cracking in excess of 1 in. (25 mm) wide.
- Severe wear and spalling present a significant safety hazard to motorists.
- Spalling in excess of 2 in. (51 mm) deep.
- Signs of advanced overturning stress noted on abutment backwall due to failure of relief joint to absorb enough expansion stress imparted by the roadway slab.
- The condition of the guide rail is such that its integrity and ability to protect motorist and redirect errant vehicles is questionable.
- Embankment material and vegetation are experiencing severe sloughing. Embankments are nearly void of all vegetation and severely eroded.
- Severe erosion due to water runoff noted. Erosion is causing partial failure of the approach roadway. Erosion under the approach slab is causing severe settlement. Complete failure of the approach slab or approach roadway is possible if left unchecked. Guardrails or barriers are ineffective due to washout.
- Bulging of the embankment material is to the point where stability of the approach roadway, approach slab and/or abutments is questionable and total failure may occur.

1 AImminent≅ Failure Condition - Element is non-functional and/or failed.

- Study should determine feasibility of repair or rehabilitation.

0 Failed Condition - Element is non-functional and/or failed.

- Approach Slab is beyond rehabilitation.
- Relief Joints are beyond rehabilitation.
- Guardrails are beyond rehabilitation.
- Approach roadway surface is beyond rehabilitation.

10.11 TRAFFIC SAFETY FEATURES

The traffic safety features included in this item are the bridge railings, transitions between the approach and bridge railings, approach railings and the terminations of the approach railing (this includes concrete barriers and median barriers). The coding of each of these involves an evaluation of their adequacy as systems rather than an evaluation of their physical condition. The items are appraised as to whether they do or do not meet current acceptable ConnDOT and Federal standards. The appraisal includes such items as height, material strength, geometric features, increased stiffness of the approach rail at transitions, ability to absorb impact forces, ability to redirect errant vehicles, presence of exposed blunt ends, etc. The term "current" is stressed as standards are constantly evolving and systems in place that met applicable standards at some point in the past may no longer be in compliance due to changes to the standard.

The systems shall be coded in accordance with the coding guidelines established for Item 36 in the FHWA Recording and Coding Guide. Each system shall be appraised separately utilizing a one (1) digit code that indicates compliance or noncompliance with current standards or non-applicability. The Traffic Safety Features code shall be a four (4) digit code in which each digit represents the appraisal of one of the systems previously mentioned. The order in which these systems shall be presented in the four digit code shall be bridge railings, transitions, approach railing and approach guide rail terminations.

The physical condition of the bridge railing, transitions, approach railing and termination systems shall be evaluated and coded in accordance with Sections 6.1.9 and 10.10.

Rating Guidelines

1 Inspected feature meets currently acceptable standards.

0 Inspected feature does not meet currently acceptable standards, or a safety feature is required and none is provided. For items coded "0" provide an explanation on form BRI-18, on the line next to the coding, to describe what is deficient.

N Not applicable or a safety feature is not required.

The following are a few examples of traffic safety features that **Do Not** meet current standards (Ref. ConnDOT Highway Design Manual, Chapter 13):

- Parapet/bridge rail combinations that are less than 3'-6" (1 m) high with a curb or safety walk wider than 9" (230 mm).
- Two-cable guide rail on wood posts.
- Three-cable guide rail with steel bracket on steel or wood posts.
- Metal beam rail Type R-I and MD-I on weak steel posts.
- Metal beam rail Type R-B and MD-B with steel blockouts.
- Approach rail not attached to the bridge parapet/rail system.

10.12 MOVABLE BRIDGE CONDITION EVALUATION CODING

The condition evaluation code is used to describe the general condition of a component or system. The assignment of the condition evaluation code rating by the inspector is an important aspect of the bridge inspection process. The coding system serves to fulfill the requirements of the National Bridge Inspection Standards (NBIS) as presented in the Bridge Inspector's Training Manual/90 (BITM/90) by providing the data used to estimate structural integrity and for programming maintenance and replacement priorities.

Structural, Mechanical, Hydraulic and Electrical Components

For the purpose of achieving uniform evaluation of existing movable bridge structural, mechanical, hydraulic and electrical components by inspectors having different technical backgrounds, individual Agencies should develop a consistent coding system for field use that can be translated in the office to the other system(s) if necessary. Coding systems used by FHWA in the NBIS program are based on assessing the physical condition of the element and describing it with a numerical value, and presumably refer to structural bridge components. Therefore, established FHWA and guidelines should be used to assign condition evaluation codes to all structural and structural support systems and components.

Evaluation of electrical, hydraulic and mechanical elements is somewhat more subjective due to the sealed nature of some mechanical, hydraulic and electrical components. Table 10.12a provides an equivalent to the NBIS code and is recommended for general use.

To assist in the uniform application of the coding systems, the following broad definitions apply to the verbal descriptions given in Table 10.12a:

Condition	FHWA NBIS/BITM 90
Excellent	9
Very Good	8
Good	7
Satisfactory	6
Fair	5
Poor	4
Serious	3
Critical	2 (or 1 or 0)

Table 10.12a - Numeric Condition Evaluation Equivalents

EXCELLENT	No defects noted, component appears to be in new condition and functions as designed
GOOD	Minor deterioration or wear noted, component appears to be functional
FAIR	Obvious deterioration or wear noted, component appears to be functional, but no longer operating like new, component has useful remaining life
POOR	Significant deterioration or wear noted, component appears to be generally functional, but exhibits signs that failure will result from continued wear or deterioration, component is nearing the end of its useful life
CRITICAL	Significant deterioration or wear noted, component appears to be marginally functional and exhibits signs that failure will result from continued wear or deterioration in the immediate future. Corrective action is required as soon as possible to avoid failure. If failure has occurred, this should also be rated a critical condition and the element flagged for corrective action. Explanatory notes should be added concerning whether the particular component can be bypassed or jury-rigged to allow continued safe operation until repairs are completed.

Special Note:

FHWA coding does not make a strong objective distinction between codes 7 and 8 nor 5 and 6. They may be interpreted as different degrees of the same condition.

Evaluation Methods For Electrical and Hydraulic Components

For electrical and hydraulic components it is at times difficult to make objective condition evaluations based upon visual inspection. Electrical and hydraulic components are frequently sealed units that require substantial engineering expertise and time consuming functional testing to evaluate their condition. For these types of components there are two methods that may be used to inspect and make decisions for numeric condition evaluation coding:

Engineering Study - The responsible owner agency may design an appropriate inspection and testing program for the electrical or hydraulic system internal components of each individual movable bridge. This program should be carried out by experienced electrical or fluid power engineers or licensed electricians or hydraulic system mechanics.

Predicted Life - Agencies may opt to use a Predicted Life System of numeric condition evaluation, where each electrical and/or hydraulic component is assigned a predicted useful life. The condition evaluation code of each component starts at EXCELLENT when the component is new and lowers progressively as the component ages.

The major requirements of this system are as follows:

Component Life may be obtained by one of two methods: first, values may be selected from Table 10.12b and Table 10.12c that lists a conservative predicted life for various classes of electrical and hydraulic components on movable bridges, second, is to perform a component life evaluation for individual components and substitute the values determined by this study for the Table 10.12b and 10.12c values.

Component Labels are required on all electrical and/or hydraulic equipment subjected to the predicted life method. Component labels should be permanently attached weatherproof heat resistant metal or plastic engraved, stamped or indelibly printed on laminated tags or plaques that provide the following minimum information: tag number; bridge number; component name; date of manufacture; date of installation; date of last Engineering Study type inspection. The team that installs the tags should keep a log of all tag data that will then become a part of the bridge inventory file to permit replacement of damaged tags.

Numeric Condition Evaluation Coding can be based upon simple component age computation from the tag data and date of inspection. Components should be deemed to have the following condition ratings based upon age:

EXCELLENT - less than 15% of predicted life expended
GOOD - 15 to 35% of predicted life expended
FAIR - 35 to 65% of predicted life expended
POOR - 65 to 85% of predicted life expended
CRITICAL - more than 85% of predicted life expended

Electrical and/or hydraulic components that are rated critical by either of the above two methods are by definition subject to imminent failure. Owner agencies should take one of the following corrective actions:

Replace or rebuild the critical rated component(s).

Order the replacement part and make necessary preparations to replace before the next scheduled or anticipated necessary bridge opening.

Perform an Engineering study that includes sufficient performance testing of the component(s) to allow revising the predicted component life. The improvement of the predicted life of a component by this method should not exceed a 50% extension of Predicted Life (i.e. if life was predicted to be 50 years, the maximum extension of predicted life would be the results of the study or 75 years, which ever is less).

For some existing bridges there may be some difficulty in determining the age of in-service components. The age of electrical components containing or connected to wires insulated with asbestos or other fiber type insulation should not be assumed to be less than 30 years unless conclusive documented proof is available of their age. Components should be assumed to be of bridge original installation unless other documents are available showing the component to be a replacement part. Owners may at their option utilize a written professional opinion or written information obtained by request from a component manufacturer concerning the age of components in lieu of contract documentation. Documents used for determining component age should become part of the bridge file and should be included in subsequent inspection reports. Components for which no age data can be obtained should be assumed to be not less than 30 years of age.

COMPONENT TYPE	PREDICTED LIFE FOR STATED CONDITIONS (IN YEARS)					
	AVERAGE USAGE 400 to 4000 openings per year		LOW USAGE Less than 400 openings per year		HIGH USAGE More than 4000 openings per year	
	Open to environment	Closed room or sealed unit	Open to environment	Closed room or sealed unit	Open to environment	Closed room or sealed unit
Motors and Generators (Overall)	36	70	34	66	30	50
Brushes in DC Brush-Type Motors/ Generators	10	16	10	20	8	12
Limit Switches	10	14	10	18	6	10
Motor Switches	30	60	24	50	20	40
Open Wiring	20	50	18	46	16	40
Wiring in Conduit	40	60	36	54	32	50
Wiring Terminals	20	40	16	32	14	30
Contactors	36	50	34	46	30	40

Table 10.12b - Predicted Electrical Component Life

Additional Codes

There are occasions when an item cannot be coded for condition. In these situations, the item should be coded NOT APPLICABLE, INACCESSIBLE, or UNKNOWN.

NOT APPLICABLE **(NA)** is used for an item that does not and should not exist on the bridge being inspected. For example, the item programmable Logic Controllers would be coded NA for a manually operated swing bridge.

INACCESSIBLE **(IA)** is used for an item that cannot be reached by reasonable non-destructive means during inspection. For example, steel members covered by concrete encasement would be coded IA. When an item is coded IA, a note should be added explaining why the item could not be accessed and whether it might be accessed in the future.

UNKNOWN **(UN)** is to be used for items that are not feasible to investigate within the scope of the particular inspection but which could be determined by a more in-depth procedure. For example, a structural inspector might code foundation details "UN" if plans were unavailable and a test pit was not included in the scope of his inspection.

COMPONENT TYPE	PREDICTED LIFE FOR STATED CONDITIONS (IN YEARS)					
	AVERAGE USAGE 400 to 4000 openings per year		LOW USAGE Less than 400 openings per year		HIGH USAGE More than 4000 openings per year	
	W/O Fluid Testing	With Fluid Testing per Chapter 4.4	W/O Fluid Testing	With Fluid Testing per Chapter 4.4	W/O Fluid Testing	With Fluid Testing per Chapter 4.4
Accumulator, Reservoirs, Pumps and Motors or Rotary Actuators*	36	50	34	44	24	34
Cylinders*	20	40	18	36	16	30
Operating Valves and Hydraulic Systems Sensors other than electromechanical limit switches*	16	30	14	28	10	20
Welded Pipe or Flanged Pipe with O-Rings	36	50	34	44	24	34
Tubing	18	25	16	22	12	18
Flexible Hoses	10	14	10	18	6	10

*Note if systems have a history of contamination or overheating a 50% reduction in the tabulated values shall be assumed for components subject to accelerated wear of seals, o-rings and other soft parts that can be easily damaged by grit or varnish accumulation.

Table 10.12c - Predicted Hydraulic Component Life

Guidelines for Condition Coding

The procedure for condition coding of bridge components and systems requires a careful examination of many complex and often conflicting factors that the inspector may encounter during a typical inspection. In order to ensure that the coding process is performed in a consistent manner, general guidelines are presented to assist the inspector in selecting the most appropriate code for a particular item. During the condition evaluation process the inspector should use a three-step approach when gathering information for a movable bridge system or component. These steps represent different levels of condition information, which when evaluated and documented with each step refines the inspectors decision on selecting the appropriate coding.

Routine Condition Examination: Condition information is gathered and documented by the inspector based on external signs of deterioration or defects, (e.g. corrosion, wear, abrasion, cracking, misalignment, allowable clearances, fluid levels, proper lubrication, exposed wiring, etc.)

Functional Examination: The component or system is inspected during operation of the bridge. The inspector observes the component, noting overall performance, unusual sounds, vibrations, temperature increase, unusual odors, and/or looseness in shafts, bearings, etc.

Special Examination: The component or system is disassembled or investigated by various nondestructive techniques (magnetic particle, ultrasonic, radiography, etc.).

Special Note:

Trial openings should be made, as necessary, to verify that all components and systems are functioning properly. Trial openings for the purpose of functional examinations should be made separately from the opening for passage of navigational traffic so as not to divert the bridge operator's attention between the two interests. Additionally, it may not be possible to perform functional examinations if it is not safe to open the bridge. In this case, or other unusual circumstances, the inspector should make note of why functional examination could not be performed

Critical Deficiency Procedures

When a component or functional system has been rated as critical, it is imperative to report this information to the bridge owner as soon as possible. If emergency repairs are required to maintain safe operation, they should begin as soon as possible. A critical deficiency report should be prepared in the field the same day and distributed in accordance with Section 3.2.7. If critical conditions, that affect safe bridge operation, cannot be corrected before the next bridge opening, the appropriate authorities within the owner agency and affected navigation regulatory agencies should be notified as soon as possible.

SUPERSTRUCTURE INSPECTION:

Inspect in accordance with Chapter 6, as applicable.

Must also inspect for stress reversal during opening and closing operations (cantilevered spans from piers for both bascule and swing types)

Girders and Beams: Segmental girder fatigue cracking (fillets of bottom flange angle and between rivet/bolt holes in horizontal leg of bottom flange angle)? Vertical Stiffeners buckled (typically at bottom flange)? Curved tread plate wear excessive? Loose bolts that hold the segments of curved tread plate together? Corrosion?

Tread plates excessively worn, cracked at lugs?

Bearings: Live load shoes in full bearing (possibly due to malfunctioning of buffer cylinder)? Gap between live load shoe and masonry plate that does or does not close under live load application? Signs of rotation (frozen)? Alignment with strike plates?

Floor System: Increased potential for corrosion and section loss because of open deck that allows water and deicing chemicals to fall onto superstructure. Debris buildup? Fatigue Cracking?

Rivets and Bolts: Increased potential for corrosion and section loss because of open deck (see Floor System). Rivets and bolts that hold sections of the tread plate together loose, missing or broken? Rivets and bolts that hold sections of the curved segmental girder tread plates to the segmental girder loose?

Welds: On FCM's. Utility connections, drain supports, electrical conduits, access ladder supports, etc., in tension zones of beams and girders (remember force reversal during opening and closing sequences) and on tension members in trusses? Tack Welds? Repair Welds? Plug welds? Fatigue cracking? Quality of weld? Weld defects such as undercutting and porosity?

Member Alignment: Between members in one leaf and between leaves. i.e. Counterweight scrapes against the rack support when bridge opens and closes and tread plate teeth are worn unevenly?

Between moving portions of the bascule and adjacent stationary portions like leaf members rub against adjacent sidewalk during opening and closing operations.

Paint: Ability to protect steel base metal. Peeling Paint? Rust (heavy, medium, light) ?

Collision Damage: Bends in flanges or chord members?. Resulting cracks? Loss of connections? Loss of counterweight material?

Load Deflection/Load Vibration: Excessive? Because of shear lock condition?

SUBSTRUCTURE:

General: Spalls, cracks, efflorescence, delaminations, exposed rebar, water staining, trunnion pedestals, scour.

Pier Caps: Deteriorations under bearings

Swing Pier: General Deterioration under track girder

Piles: Timber deterioration.

Fender System: General Condition. Evaluate ability to protect the bridge. Previous impacts? Fire Damage?

DECK:

Inspect in accordance with Section 6.1.1 through 6.1.3. Purlin condition?

Lighting: In conformance with current ConnDOT and USCG standards and regulations? Refer to section 6.1.11 Lighting.

Safety Devices: Are crash barriers present? Traffic Control Signals? Traffic Gates? Guide rails to protect the superstructure elements (trusses)?

Are they in conformance with current CONNDOT and USCG standards and regulations? Refer to sections 6.1.5 to 6.1.9 as applicable.

Curbs: Inspect in accordance with Section 6.1.5. Impact Damage?

Sidewalks: Inspect in accordance with Section 6.1.7. Are approach sidewalks at same elevation as bridge sidewalks (tripping hazard).

Deck Joints: Inspect in accordance with Section 6.1.12. Is wearing surface at approach at same elevation as joint? Impact damage due to snow plows?

MECHANICAL COMPONENTS:

General: Observe the opening and closing sequence several types from different vantage points (Safety first!). Listen and look for out of place movements, noises, grinding, slippage. Observe any misalignment and wear caused by misalignment.

Note the condition of machinery casings and anchor bolts

Shear Locks (Bascule): Observe the action of the shear locks. Are there loose/missing bolts? Gap between the shear key and shear lock saddle? Look for wear of components. Do

the spans translate transversely or vertically during engagement and disengagement of locks? Could be because of misalignment.

Lubrication: Check to see that a lubrication chart is maintained and adhered to by the maintenance crew. This should include specifics about what component gets how much of what kind of lubrication at what interval.

Look for good lubrication of components. Contaminated from shavings and abrasion particles or roadway debris? Should be replaced? Oil leaks (ruptured seals)? Is there enough lube and is the correct lubrication being used for specific components per component specification and lubrication chart? Are lubrication fittings in place?

Gears: Look for tooth wear, finning(?) and/or scouring on gears. Plastic deformation of teeth? Uniform or non-uniform (on either side of the tooth or from one end to the other end of the tooth)?

Rack and Rack Pinions: Similar to Gears. Inspect to see if the root clearance between the teeth and rack is zero such that vertical dead load is being transferred through the rack pinion to the rack and the rack support system. Adjustments need to be made to relieve this stress. (make adjustments at the tread plate?)

Buffers: Look for loose buffer screws

Buffer Cylinders: Inspect to see if the buffer cylinder rods are bent preventing proper function of cushioning the closure forces.

Reducers: Is the oil level in the reducers at the appropriate levels? Leaking oil observed?

Bearings: (trunnion, center, rim, rack pinion, live load) Check to see if the bearing bushings are protruded from the bearings. Are there keeper devices in place to prevent protrusion? Welded? Are spacer devices being used? Are they supposed to be in place? Do the bushings rotate along the perimeter of the bearing in the bearing when the bridge operates? Corrosion level on components

Strike Plates (Swing): Check for wear from contact with live load shoes and for proper alignment with lifting devices.

Live Load Shoe Machinery: Check condition of hydraulic actuators and rods that seat live load shoes for corrosion, and proper alignment. Check for presence of interior bumpers or cushions that soften the impact during live load shoe placement.

Shafts: Note rust and corrosion on shafts.

Centering Guides and Latch Bar Machinery: Note Proper function and clearances within tolerance.

Rollers or balance wheels(swing): Note alignment, wear, contact with upper and lower tread plates, lubrication, attachment to radial shafts

ELECTRICAL COMPONENTS:

General: Check for operator's manual that outlines step by step instructions for operating the bridge. Is this manual being used by the operator?

Motors: Check to see if motors are properly housed and protected from the elements (especially those below the deck {toe lock motors, live load shoe motors, centering device motors, etc.}).

Check leaf span balance by checking voltage at main drive motors during opening and closing operations. Difference in voltage indicates unbalanced span. Are voltage readings for this test and for tests of all electrical components within acceptable +/- tolerances? Evaluate variances.

Test ability to begin opening and closing operations at different levels of openness. Should require same voltage at all stages. If not, unbalance has occurred?

Dead man switches are in place and functioning?

Check for presence and function of manual release levers, limit switches, functioning indicator lights at operator console (brake release, etc.).

Check that all operator switches operate as designed, and that sequential switches operate correctly.

Are proper operating sequences used (right switch/motor used to do the correct function, i.e. using the lift motor to slow down the bridge during closing operations instead of the brakes for what ever reason)?

Note the presence and type of back up system for opening and closing the bridge. If the back up system is pneumatic or manual, note if there are step by step instructions to follow to manually close/open the bridge in case of power failure? Are all items required to open/close the span by back up systems present on site (i.e. compressor for pneumatic operations)? If emergency power is the back up, is there a back up to that?

Brakes: Proper operation, pitting or scouring of brake drum, worn pads,

Traffic Signals and safety devices: Outline sequence used and note whether it functions properly. Are devices within guidelines of current ConnDOT code? Do switches at console indicate steps (i.e. a lamp that indicates the lights are green, yellow or red) so that the operator knows at what point the sequence is.

MISCELLANEOUS ITEMS:

Counter Weight Pit Sump Pumps: Ability to handle water load? All functioning?

10.13 SUBSTRUCTURE

The following guidelines have been developed for the condition rating of bridge substructure units. They are intended to supplement the FHWA Recording and Coding Guide to make it easier to determine the most appropriate condition rating to be assigned to the substructure and should be used in conjunction with the FHWA Recording and Coding Guide, Item 60.

These rating guidelines shall apply to steel, concrete, masonry and timber substructures. They shall be used to rate the substructure unit's overall stability and the condition of the substructure material(s). The condition of bearings, joints, paint system, etc., generally will not influence the rating of the substructure. Deficiencies in the substructure noted in previous inspection reports that have since been retrofitted, shall only consider the condition of the retrofit when establishing the condition code.

In the event the condition of the substructure unit's overall stability (i.e. ability to support the superstructure) and the condition of the substructure unit's materials are different, the lower rated condition shall be used.

Definitions:

Deficiency - Lack or shortage of structural component (missing fasteners, undersized members, etc.) from the quantity specified by the design that affects the ability of the structural component to function in its design capacity.

Deterioration - Areas exhibiting conditions which decrease their capacity (concrete: cracks, delamination, efflorescence, scale, spalls, etc.; steel: cracks, rust, section loss, etc.; timber: checks, cracks, fire damage, insect damage, rot, etc.; masonry: cracks, joint deterioration, missing stones, etc.); movement (vertical, lateral, or rotational) due to settlement; vehicle or vessel impact damage, etc.; loss of bearing area (scour, undermining, etc.); or any other defect that detracts from the "As-Built" condition of the unit.

Code	Description
9	Excellent Condition – No maintenance or rehabilitation concerns. • No noticeable deficiencies or deterioration.
8	Very Good Condition – No maintenance or rehabilitation concerns. • Very minor construction or fabrication defects (minor honeycombing of concrete members, minor fabrication or installation dents in steel members, etc.) that do not affect the capacity or function of the member. • Isolated locations of lost joint pointing or cracking of joint pointing observed in masonry units. *(Masonry joint pointing is defined as surface applied mortar in dry laid masonry or the outer 1 1/2" - 2" of the mortar bed in cement rubble masonry.)*

7 Good Condition – Potential exists for minor maintenance.

- Isolated locations of embankment erosion.
- Noncritical, hairline cracks (up to 1/32 in. (0.8 mm)) noted in concrete units that do not affect the serviceability of the member.
- Isolated locations of delamination, scaling, or small spalls up to 1 in. (25 mm) deep in concrete units with no exposed reinforcing bars.
- Isolated locations of loose or missing fasteners.
- Light to medium rust on less than 25% of the steel surface area with no section loss.
- Minor cracking or splitting of timber members with no section loss.
- Widespread (up to 70%) loss of joint pointing with interior joint mortar of masonry units in good condition (maximum depth of loss = 2" (50 mm) for mortar laid construction).
- Minor efflorescence bleeding or water leakage from joint mortar of masonry units.

6 Satisfactory Condition – Potential exists for major maintenance.

- Numerous or large areas of embankment erosion. No evidence of undermining and/or scour is evident.
- Minor opening of vertical expansion joints with no evidence of substructure tipping.
- Noncritical hairline or fine cracks (up to 1/16 in. (1.5 mm) wide) with minor efflorescence noted in concrete units.
- Isolated spalls or scale of concrete units deep enough to expose the mat of reinforcing bars closest to the surface. Light surface corrosion on the exposed reinforcing bars with no section loss.
- Concrete may be delaminated (concrete surface sounds hollow when struck with a hammer) on less than 10% of any individual substructure unit.
- Minor crushing, denting, section loss, etc. due to impact damage, (i.e. damage that is not structurally significant).
- Light to medium rust on greater than 25% of the steel surface area.
- Severe rust (< 1/16” (1.5 mm) section loss) on less than 25% of the steel surface area of a critical section.
- Minor decay, cracking, splitting, fire damage, or wet areas of main timber members (Negligible section loss).
- Widespread (up to 70%) loss of joint pointing material, cracking and/or minor loss of interior joint mortar observed in masonry units (maximum depth of loss = 4" (100 mm) for mortar laid construction). Stones are firmly set in their original positions (no settlement).
- Moderate efflorescence bleeding or water leakage from joints of masonry units.

5 Fair Condition – Potential exists for minor rehabilitation.

- Advanced erosion or minor scour exists with no undermining.
- Vertical joints in the substructure unit may show differential opening.
- Noncritical cracks, spalls, scale, or impact damage in concrete units which expose the top mat of steel reinforcement, with minor deterioration or section loss of the reinforcing bars.
- Delaminations (concrete surface sounds hollow when struck with a hammer) may be more wide spread, up to 25% of the surface area on any individual substructure element.
- Widespread discoloration, efflorescence or wetness on concrete surfaces indicating porous or saturated concrete (not joint leakage), with moderate efflorescence bleeding from cracks in concrete units.
- Severe rust on greater than 25% of the steel surface area with section loss.
- Moderate decay, cracking, splitting, fire damage, or wet areas of main timber members with measurable section loss.
- Extensive loss of joint pointing material, cracking and/or minor loss of interior joint mortar (6" (150 mm) maximum depth) observed in masonry units. Few stones may be loose but still in original position.
- Widespread efflorescence bleeding or water leakage from joints of masonry units.

4 Poor Condition – Potential exists for major rehabilitation.

- Advanced scour, isolated areas of minor undermining may exist.
- Vertical joints in the abutment are opened wide enough to allow exfiltration of the backfill material.
- Tipping of the substructure unit measured at less than 1% (from original position, accounting for original batter, if any).
- Noncritical cracks, spalls, scale, or impact damage in concrete units which expose the top mat of steel reinforcement, with moderate deterioration or section loss of the reinforcing bars.
- Critical cracks (up to 1/32 in. (0.8 mm)) noted on one or more concrete units.
- Extensive efflorescence and/or active water leakage from cracks/spalls in concrete units.
- Extensive concrete delaminations in backwalls, bridge seats and cap beams (not under bearings), footings (except at connection to columns of piles), wingwalls, secondary members, and other areas not in the direct load path of the structure.
- Severe rust on greater than 25% of the steel surface area and/or section loss (up to 5% of the total flange cross sectional area or up to 25% of the total web cross sectional area) noted in a critical section on one or more

members.

- Advanced decay, cracking, splitting, fire damage, or wet areas of main timber members with advanced section loss.
- Severe loss and cracking of joint pointing and interior mortar materials of masonry units, with minor displacements or deformations of stones (mortar loss up to 12" (305 mm) deep).
- Cracks extend through two or more horizontal stone courses of masonry units. Pieces adjacent to crack may be loose.

3 Serious Condition – Rehabilitation or repair required immediately.

- Advanced undermining/scour, causing a loss of contact between the foundation and support material. No evidence of deterioration or settlement of the substructure units caused by the undermining.
- Tipping of the substructure unit is less than 2% (from original position, accounting for original batter, if any).
- Noncritical cracks, spalls, scale, or impact damage which exposes top mat of steel reinforcement, with advanced deterioration or section loss of the reinforcing bars.
- Critical cracks up to 1/16 in. (1.5 mm) wide noted creating significant effects on the structural integrity of the member.
- Severe leakage of water through cracks and/or spalls noted on concrete units.
- Extensive concrete delaminations in bearing seats, columns, footings (at connection to columns or piles), piles, or other areas in the direct load path of the structure. Delaminated concrete is loose and poses a potential hazard to pedestrian, vehicular or marine traffic.
- Severe rust throughout steel members with severe section loss.
- Severe decay, cracking, splitting, fire damage, or wet areas of main timber members with severe section loss.
- Severe loss and cracking of joint pointing and interior mortar materials of masonry units, with moderate displacements or deformations of stones.
- Cracks extend full height of masonry units. Pieces adjacent to cracks may be loose.

2 Critical Condition – Need for immediate repairs or rehabilitation is urgent.

- Advanced undermining/scour, causing a loss of contact between the foundation and support material in bearing. Item #113 is coded a "2".
- The substructure has moved from its design location and is not providing adequate support for the superstructure. The substructure's ability to remain in service without corrective action should be investigated.
- Tipping of the substructure unit is severe enough for possible displacement of the superstructure.
- Severe deterioration of the concrete, reinforcing bars or anchor bolts in

the vicinity of cracks, spalls, scale or impact damage.

- Critical cracks greater than 1/16” (1.5 mm) wide in concrete members creating a severe effect on the structural integrity of the member.
- Extensive concrete delamination leading to spalling in critical areas and/or loose concrete is dropping to areas where it may cause damage or injury to people or property below.
- Severe loss and cracking of joint pointing and interior mortar materials of masonry units, with major displacements or deformations of stones.
- Severe deterioration of primary structural elements.
- Local failures of structural components have occurred in primary members.

1 “Imminent” Failure Condition – Structure is closed.

- Item #113 is coded a "1".
- Multiple locations of local member failure.
- The substructure has moved from its design location and is not providing adequate support for the superstructure. The substructure is unable to remain in service without corrective action.

0 Failed Condition – Structure is closed.

- Item #113 is coded a "0".
- The substructure is not supporting the superstructure, as a result of excessive movement or deterioration, and is beyond repair or rehabilitation. Replacement is required.

Scour Critical Bridges

Item 113 - "Scour Critical Bridges", indicates a bridge's susceptibility to failure due to scour. This item is coded by the office staff based on a scour evaluation of the structure. Bridges that have a rating for Item 113 of "3" or less are considered to be "scour critical". Whenever a rating of "3" or below is assigned to Item 113, the rating for Item 60 - Substructure, should also be reviewed to reflect the severity of actual scour conditions, and resultant damage to the bridge. The rating factor given to Item 60 should be consistent with the one given to Item 113 whenever a rating factor of 2 or below is determined for Item 113 - Scour Critical Bridges.

Coding Guidance for Item 60 - Substructure, when Item 113 is "3" or less:

Code 3 **Serious Condition:** for scour having partially removed foundation support, removal of stream bed material below the top of footing for spread footings or exposing the tops of piles. Bridge foundation is potentially unstable. Item 113 is rated "3".

Code 2 **Critical Condition:** extensive scour has occurred at bridge foundations and they have been determined to be unstable. Item 113 is rated "2".

Code 1 **"Imminent" Failure Condition:** scour has removed foundation material resulting in major deterioration of critical structural components with obvious vertical or horizontal movement. Bridge is closed to traffic, but corrective action may put it back in light service. Item 113 is rated "1".

Code 0 **Failed Condition:** Bridge has failed and is closed to traffic. Item 113 is rated "0".

Note: If there is no evidence of scour present, the condition rating should be based solely on the structural condition of the substructure element. Likewise, the above numbers should be considered "maximum" ratings for substructure elements that exhibit the amount of scour indicated. The rating of elements in poor structural condition may be controlled by the structural condition and be less than the "scour ratings" given above.

10.14 RATING GUIDELINES FOR FORM BRI-18 "SUB-ITEMS"

ITEM 58 - DECK

OVERLAY

What to Rate

Elements to be rated in this section include the overlay, or wearing surface, located on top of the deck (e.g.: bituminous concrete, timber planking, etc.). If the wearing surface is integral with the structural deck (e.g.: a concrete wearing surface poured monolithically with a concrete deck, the top surface of a steel grating, etc.), then the item *Overlay* shall be rated "N". The deck topside condition notes should still be recorded in this space on the BRI-18 form. The actual deck topside condition shall be evaluated under the item *Deck Structural Condition*.

Conditions to Consider

The condition rating shall consider the physical condition of the overlay (e.g.: cracks, spalls/potholes, broken welds or fasteners, etc.), as well as the quality of the riding surface (e.g.: ruts, rippling, evenness at joint locations, etc.).

Rating Guidelines

9	Excellent	No defects.
8-7	Good	Some minor defects (e.g. hairline cracks, shallow ruts, etc.) which do not yet require maintenance repairs.
6-5	Fair	Areas of moderate deterioration with minimal impact on the rideability of the wearing surface (e.g. wide cracks, small potholes, minor splitting of boards, areas of wear, etc.). Maintenance repairs required.
4-3	Poor	Large areas of deterioration or areas of severe deterioration that affect the rideability of the wearing surface (e.g. extensive cracking, large potholes in bituminous concrete; broken, loose, or missing timber planks, etc.). Major rehabilitation or replacement required.
2-1	Failed	Overlay has deteriorated such that it is no longer functioning as intended. Replacement required.

DECK STRUCTURAL CONDITION

What to Rate

Elements to be rated include the deck, and any stay-in-place formwork used to construct cast-in-place concrete decks.

Conditions to Consider

The condition rating shall consider the physical condition of the deck (e.g.: concrete decks: cracks, delaminations, scale, spalls/potholes, leakage/efflorescence, etc.; steel decks: broken welds, failed/missing fasteners, rusting and section loss, etc.; timber decks: timber decay, failed/missing fasteners, splitting, etc.), as well as the quality of the riding surface (e.g. ruts, rippling, evenness at joint locations, etc.).

Rating Guidelines

The deck structural condition shall be rated in accordance with the following criteria:

Concrete Decks	-	See Section 10.1 Reinforced Concrete Decks
Steel Decks	-	See Section 10.5 Steel
Timber Decks	-	See Section 10.6 Timber

If the approach roadway pavement is carried on fill over the structure (filled arches, frames or culverts) there is no "deck" and the *Deck Structural Condition* is coded "N". In this case, the deck overall rating shall be coded as "P" (Partial) on Form BRI-18 so that the condition ratings and descriptions of the deck sub-items will still be printed.

CURBS

What to Rate

Elements to be rated in this section include the curb along each side of each travelway (concrete, stone, steel, timber, etc.). Stone facing which is inlaid in concrete barriers or parapets shall also be included in this item.

Conditions to Consider

The condition rating shall consider the physical condition of the curb (e.g. chips, cracks, spalls, timber decay, rust/section loss, broken welds or fasteners, etc.), as well as the ability of the curb to perform it's design functions (e.g.: channel water into the drainage system, impede vehicles from mounting the sidewalk, etc.).

Rating Guidelines

9	Excellent	No defects.
8-7	Good	Some minor defects such as hairline cracks or light to moderate scale in concrete; light rust in steel; hairline cracks, minor chips in stone; checks in timber; etc., which do not yet require routine maintenance.
6-5	Fair	Moderate deterioration such as wide cracks, heavy scale, small spalls in concrete; moderate rust, loose or missing fasteners in steel; wide cracks, missing mortar, small spalls, in stone; gouges, cracks, minor splits, loose or missing fasteners in timber; etc.). Maintenance repairs required.

4-3	Poor	Areas of significant deterioration such as large spalls, severe scale, exposed reinforcing bars in concrete; heavy rust, section loss, broken or missing sections in steel; large spalls, broken sections in stone; decay/rot, splitting, broken or missing sections in timber; etc.). Major rehabilitation required.
2-1	Failed	Curb has deteriorated such that it is no longer functioning as intended. Replacement required.

MEDIAN

What to Rate

Elements to be rated in this section include the longitudinal median barrier (concrete barrier, guide rail, etc.) that separates travelways across the bridge. Stone facing which is inlaid in concrete barriers shall not be included in this item; it shall be rated under the item *Curbs*.

Conditions to Consider

The condition rating shall consider the physical condition of the median (e.g. cracks, spalls, section loss, broken fasteners, impact damage, etc.)

Rating Guidelines

9	Excellent	No defects.
8-7	Good	Some minor defects such as hairline cracks or light-moderate scale in concrete; light rust, small dents in guide rail; etc., which do not yet require routine maintenance.
6-5	Fair	Areas of deterioration such as wide cracks, heavy scale, small spalls in concrete; moderate rust, large dents, loose or missing fasteners in guide rail; etc.). Maintenance repairs required.
4-3	Poor	Areas of significant deterioration such as large spalls, severe scale, exposed reinforcing bars in concrete; heavy rust, section loss, broken or missing sections in guide rail; etc.). Major rehabilitation required.
2-1	Failed	Median has deteriorated such that it is no longer functioning as intended. Replacement required.

SIDEWALKS

What to Rate

Elements to be rated include the sidewalk deck located above the floor system (including all visible faces: top, bottom, and fascia), and any stay-in-place formwork used to construct cast-in-place concrete sidewalk decks.

Conditions to Consider

The condition rating shall consider the physical condition of the sidewalk deck (e.g. concrete decks: cracks, delamination, leaching, scale, and spalls/potholes; steel decks: broken welds, failed/missing fasteners, and section loss; timber decks: crushing, failed/missing fasteners, and section loss, etc.), as well as the quality of the riding surface (e.g. ruts, rippling, evenness at joint locations, etc.).

Rating Guidelines

The sidewalk shall be rated in accordance with the following criteria:

Concrete Sidewalk	-	See Section 10.1 Reinforced Concrete Decks
Steel Sidewalk	-	See Section 10.5 Steel
Timber Sidewalk	-	See Section 10.6 Timber

PARAPET

What to Rate

Elements to be rated include the parapet (concrete, steel, timber, masonry, etc.). Anchor bolts or connections to approach guide rail or bridge rail shall be rated under the item *Railing* and the Approach Condition item *Approach Guide Rail* respectively.

Conditions to Consider

The condition rating shall consider the physical condition of the parapet (e.g. cracks, spalls, section loss, broken fasteners, impact damage, etc.) and not the adequacy of the parapet system with regard to traffic safety. Parapets that are adjacent to pedestrian walkways must be evaluated based on the maximum opening sizes specified in the AASHTO Specifications (no joint openings greater than 6" (152 mm)).

Rating Guidelines

9	Excellent	No defects.
8-7	Good	Some minor defects or scrapes (hairline cracks or light-moderate scale in concrete; light rust, small dents in steel; hairline cracks, minor chips in masonry; checks in timber; etc.) which do not yet require routine maintenance.
6-5	Fair	More extensive or more serious areas of deterioration, areas of impact damage (wide cracks, heavy scale, small spalls in concrete; moderate rust, large dents, loose or missing fasteners in steel; wide cracks, small spalls, areas of loose or missing mortar in masonry; cracks, minor decay/rot, loose or missing fasteners in timber; etc.). Maintenance repairs required.
4-3	Poor	Significant areas of deterioration or sections with significant impact damage (large spalls, severe scale, exposed reinforcing bars in concrete; heavy rust, section loss, broken or missing sections in steel; loose or missing stones,

extensive areas of missing mortar, section loss in masonry; severe decay/rot, section loss, broken or missing sections in timber; etc.). Major rehabilitation required.

2-1	Failed	Parapet has deteriorated or been damaged such that it is no longer capable of safely retaining and redirecting an errant vehicle. Replacement required.

RAILING

What to Rate

Elements to be rated include the railing along both fascias of the bridge (open concrete balustrades, steel, aluminum, timber, etc.), as well as any anchor bolts or fasteners to the parapet or deck. In the event more that one railing system is present (e.g. bridge railing and pedestrian railing), the railing with the lower rated condition will be recorded.

Conditions to Consider

The condition rating shall consider the physical condition of the railing (e.g. cracks, spalls, section loss, broken fasteners, impact damage, etc.) but not the adequacy of the traffic rail system. This is rated under the Traffic Safety Features. Pedestrian railings should be evaluated for conformance with the AASHTO Specifications (No opening greater than 6" (152 mm) wide in the lower 27" (685 mm) of the rail system and no opening greater than 8" (203 mm) wide in the band between 27 and 42 inches (685 mm - 1067 mm) above the walking surface).

Rating Guidelines

9	Excellent	No defects.
8-7	Good	Some minor defects (hairline cracks or light-moderate scale in concrete; light rust, small dents in steel; small dents in aluminum rail; checks in timber; etc.) which do not yet require routine maintenance.
6-5	Fair	Areas of deterioration with minor section loss (wide cracks, heavy scale, small spalls in concrete; moderate rust, large dents, loose or missing fasteners in steel; large dents, loose or missing fasteners in aluminum guide rail; minor decay/rot, loose or missing fasteners in timber; etc.). Pedestrian rail openings are in excess of AASHTO Specifications at few random locations due to damage or deterioration. Maintenance repairs required.
4-3	Poor	Areas of deterioration with significant section loss (large spalls, severe scale, exposed reinforcing bar in concrete; heavy rust, section loss, broken or missing sections in steel; broken or missing sections in aluminum guide rail; severe decay/rot, section loss, broken or missing sections in timber; etc.). Pedestrian rail openings are in excess of AASHTO Specifications at numerous locations - rail system does not comply with current Specifications. Major rehabilitation required.

2-1	Failed	Railing has deteriorated such that it is no longer functioning as intended. Replacement required.

FENCE

Fences shall be rated in accordance with the Railing instructions above.

DRAINS

What to Rate

Elements to be rated include all components of the bridge drainage system (scuppers, gratings, downspouts, troughs under deck joints, weep pipes, etc.). All supports for bridge drainage system elements shall also be rated under this item.

Conditions to Consider

The condition rating shall consider the physical condition of the bridge drainage system and its supports (e.g. cracks, spalls, section loss, broken fasteners, impact damage, etc.), as well as the system's ability to remove roadway runoff from the bridge and approach roadway.

The physical condition of the bridge drainage system shall be rated in accordance with the following criteria:

Concrete Elements	-	See Section 10.3 Reinforced Concrete
Steel Elements	-	See Section 10.5 Steel
Timber Elements	-	See Section 10.6 Timber

The systems ability to remove roadway runoff from the bridge and approach roadway shall be rated in accordance with the Rating Guidelines below. In the event the bridge drainage system's physical condition and its ability to remove roadway runoff are not equal, the lower of the rated conditions shall be recorded.

Rating Guidelines

9	Excellent	No defects.
8-7	Good	Light debris accumulation in gutters, troughs, gratings, etc. which is correctable through routine maintenance. Debris accumulation has little or no impact on drainage system's ability to remove roadway runoff.
6-5	Fair	Areas of minor standing water on roadway (due to moderate debris accumulation in gutters, troughs, gratings, etc.; system inadequacy to remove required runoff volume; etc.) or on bridge superstructure or substructure surfaces below deck level (due to drainage onto these areas). Maintenance repairs required.

4-3	Poor	Areas of significant standing water on roadway (due to heavy debris accumulation in gutters, troughs, gratings, etc.; system inadequacy to remove required runoff volume; etc.) or on bridge superstructure or substructure surfaces below deck level (due to drainage onto these areas). Major rehabilitation required.
2-1	Failed	Drainage system has deteriorated such that it is no longer functioning as intended. Replacement required.

LIGHTING STANDARD

What to Rate

Elements to be rated include lighting standards and supports (concrete, steel, aluminum, timber, masonry, etc.), as well as any anchor bolts or fasteners to the parapet or deck. Different types of lighting to be rated include: roadway lighting, underbridge lights, sign lighting, permanent traffic control lighting, advance warning lighting (common on movable spans, bridges on poor alignments, bridge approaches with poor sight distance, etc.), aerial obstruction lights, etc. Navigation lighting shall not be rated under this item; it shall be rated under the Channel Protection item *Navigation Lights*.

Conditions to Consider

The condition rating shall consider the physical condition of the lighting standards and supports (e.g. cracks, spalls, section loss, broken fasteners, impact damage, etc.). Any condition, which may create a safety hazard (e.g. exposed electrical wires, broken support or conduit hanging above traffic, etc.), shall be noted and described.

Rating Guidelines

The lighting standards and supports shall be rated in accordance with the following criteria:

Concrete Elements	-	See Section 10.3 Reinforced Concrete
Steel Elements	-	See Section 10.5 Steel
Timber Elements	-	See Section 10.6 Timber
Masonry Elements	-	See Section 10.7 Stone Masonry

The condition of aluminum elements shall be rated in accordance with the general deterioration descriptions (i.e. cracks, section loss, etc) contained in Section 10.5 Steel.

UTILITIES TYPE/SIZE

What to Rate

Elements to be rated include the utilities, utility conduits, and supports (concrete, steel, aluminum, timber, masonry, PVC pipe etc.), as well as any anchor bolts or fasteners to the parapet, deck. or cross frames.

Conditions to Consider
The condition rating shall consider the physical condition of the utilities, utility conduits, and utility supports. Any condition, which may create a safety hazard (e.g. exposed electrical wires, broken support or conduit hanging above traffic, etc.), shall be noted and described.

Rating Guidelines
The utilities, utility conduits and supports shall be rated in accordance with the following criteria:

Concrete Elements	-	See Section 10.3 Reinforced Concrete
Steel Elements	-	See Section 10.5 Steel
Timber Elements	-	See Section 10.6 Timber
Masonry Elements	-	See Section 10.7 Stone Masonry

The condition of aluminum elements and PVC pipe shall be rated in accordance with the general deterioration descriptions (i.e. cracks, section loss, etc) contained in Section 10.5 Steel.

CONSTRUCTION JOINTS

What to Rate
Elements to be rated include construction, or "cold" joints in concrete.

Conditions to Consider
The condition rating shall consider the physical condition of the concrete (e.g. cracks, spalls, leaching/efflorescence, impact damage, etc.).

Rating Guidelines
The construction joints shall be rated in accordance with the following criteria:

Concrete Elements	-	See Section 10.3 Reinforced Concrete

EXPANSION JOINT

What to Rate
Elements to be rated include deck expansion joints (asphaltic plug joints, strip seals, armored joints, sliding plates, modular joints, etc.) as well as the concrete header, fasteners and supports securing the expansion joint to the deck or superstructure. The evenness of the roadway over the joint shall also be rated under this item.

Conditions to Consider
The condition rating shall consider the physical condition of the expansion joint (e.g. cracks, rips or tears in joint glands, wear of neoprene joint cover, loose or broken fasteners, rust, section loss,

impact damage, etc.), concrete header (e.g. cracks, spalls, scale, etc.), fasteners, and joint supports (e.g. cracks, spalls, rust, section loss, etc.). The surface of the expansion joint shall be checked for it's vertical alignment with the roadway surface on both sides of the joint with and without liveload applied above or near the joint (i.e. the joint surface is even with the roadway surface, it does not create a bump or rut in the roadway). Paved-over deck ends shall not be rated as deck joints but their condition shall be noted under the *Overlay* item.

Drainage elements that are part of expansion joints (i.e. troughs under finger joints) shall not be rated under this item; they shall be rated under the item *Drains*. Construction joints in concrete decks shall not be rated under this item; they shall be rated under the item *Construction Joints*.

Rating Guidelines

The concrete and steel elements of the expansion joints shall be rated in accordance with the following criteria:

Concrete Elements	-	See Section 10.3 Reinforced Concrete
Steel Elements	-	See Section 10.5 Steel

The remaining elements of the expansion joints shall be rated as follows:

9	Excellent	No defects.
8-7	Good	Some minor defects (hairline cracks in glands or seals, light wear of joint cover, etc.) which do not yet require routine maintenance.
6-5	Fair	Areas of deterioration with minor section loss (wide cracks or tears in joint glands or seals, heavy wear of joint cover, unevenness of roadway surface across joint, etc.). Maintenance repairs required.
4-3	Poor	Areas of deterioration with significant section loss (holes in joint glands or seals, complete loss of joint cover with wear of joint assembly, differential movement of joint and/or roadway under liveload, etc.). Major rehabilitation required.
2-1	Failed	Expansion joint has deteriorated such that it is no longer functioning as intended. Replacement required.

ITEM 59 - SUPERSTRUCTURE

BEARING DEVICES

What to Rate
Elements to be rated include fixed and expansion bearings and anchor bolts. Additionally, the condition of the substructure may be included if deterioration of the substructure elements (bearing seat, pier or bent cap, etc.) is so severe it is judged to be affecting the capacity of the bearing.

Conditions to Consider
The condition rating shall consider the physical condition of the bearing (rust, cracks, loose or broken fasteners, section loss, alignment, etc.), anchor bolts (rust, loose or broken fasteners, etc.), and substructure (undermining of bearing) when applicable.

Rating Guidelines
The bearing devices shall be rated in accordance with Section 10.2 *Bearings*.

STRINGERS, GIRDERS & FLOORBEAMS

What to Rate - Stringers
Elements to be rated include the stringers, stringer connections, and stringer diaphragms that are part of a stringer/floorbeam floor system. Beams on multi-beam bridges (bridges with longitudinal beams and no transverse beams) shall not be rated under this item; they shall be rated under the Item *Girders*.

What to Rate - Girders
Elements to be rated include the girders, girder connections, and girder diaphragms. Beams on multi-beam bridges (bridges with longitudinal beams and no transverse beams) shall be rated under this item as well as the girder portions of girder-floorbeam-stringer bridges.

What to Rate - Floorbeams
Elements to be rated include the floorbeams and floorbeam connections.

Conditions to Consider
The condition rating shall consider the physical condition of the member, member connections, and diaphragms (cracks, spalls, rust, section loss, broken fasteners, impact damage, etc.). The condition rating of the primary structural element should be the same as the overall condition rating for Item 59 - *Superstructure*.

Rating Guidelines
Stringers, floorbeams and girders shall be rated in accordance with Sections 10.3 -10.6 of this manual, as applicable.

TRUSSES

What to Rate

Trusses-General: Elements to be rated include the primary truss members (top chord, bottom chord, diagonals, and verticals) and their connections.

Trusses-Portals: Rate the secondary support members connecting two or more trusses above the deck level, and their connections. Includes portals, upper lateral bracing and sway bracing.

Trusses-Bracing: Rate the secondary support members connecting two or more trusses below the deck level and their connections. Includes lower lateral bracing, wind bracing and sway frames on deck trusses.

Conditions to Consider

The condition rating shall consider the physical condition and alignment of the truss members, portals, bracing, and connections (rust, section loss, broken fasteners, impact damage, cracks, splits/checks, bowing, tipping, tilting, etc.).

Rating Guidelines

Truss components shall be rated in accordance with Section 10.5 *Steel* or Section 10.6 *Timber*, as applicable.

PAINT

What to Rate

Elements to be rated include the paint, or protective coating, on all superstructure members (bearing devices, stringers, floorbeams, girders, trusses, etc.).

Conditions to Consider

The condition rating shall consider the physical condition of the paint or protective system, and its ability to protect the surfaces where it has been applied. This rating is not based on the severity of corrosion, if any, on the protected surfaces.

Rating Guidelines

9	Excellent	No defects.
7	Good	Paint system is generally smooth and uniform. The system may exhibit isolated areas (less than 10%) of peeling or delaminations in the top or inner layers; however, the primer is still intact and able to protect against the environment. Isolated areas of cracking or excessive chalking may be present (less than 10%). Less than 5% of painted surfaces may exhibit rusting.

5	Fair	Paint system is showing signs of deterioration. Peeling or delamination in top or inner layers of the system is more prevalent. Less than 50% of painted surfaces are rusting. Most of the rusting is located at the beam ends and diaphragms where members have been subjected to leakage.
3	Serious	Paint system shows significant deteriorations. Greater than 50% of painted surfaces are rusted. Peeling is noted throughout the painted surfaces.
1	Failed	Paint system has fully deteriorated. Greater than 90% of painted surfaces are rusted and/or peeling.

RUST

What to Rate
All steel superstructure elements should be considered in this item,

Conditions to Consider
The rating shall consider the extent and severity of rusting and section loss on the overall functionality and capacity of the steel members.

Rating Guidelines
This item shall be coded in accordance with Section 10.5 *Steel*.

MACHINERY MOVABLE SPAN

What to Rate
Elements to be rated include all machinery and components of the operating systems of movable bridges (motors, gears, shafts, cables, chains, sprockets, racks, pinions, etc.) as well as their supports and connections.

Conditions to Consider
The rating shall consider the physical condition of the operating machinery, supports, and connections (cracks, spalls, rust, section loss, broken fasteners, impact damage, etc.) as well as the functional capacity of the machinery and components.

Rating Guidelines
The machinery components shall be rated in accordance with Section 10.12 *Movable Bridge Condition Evaluation Coding*.

COLLISION DAMAGE

What to Rate
Evaluate the extent to which superstructure elements have been damaged by vehicle, shipping or flood debris impacts.

Conditions to Consider

The rating shall consider the extent of the collision damage on the member (bends, crushed members, dents, exposed steel reinforcement, etc.) and the member's capacity to carry the design load.

Collision damage typically occurs at the point of minimum vertical clearance (for bridges over roadways), minimum horizontal clearance, or the first location where the bridge restricts the roadway opening (fascia girders, ends of deck girders (for thru-girders) truss portals, truss endposts (for through trusses), etc.).

Rating Guidelines

These rating guidelines are to be used for the described defects when found on primary members. Defects located on secondary members should be not be rated as severely as similar defects located on primary members.

9	Excellent	No evidence of collision damage.
8-7	Good	Some evidence of minor collision(s) (minor scrapes or nicks in steel, concrete, or timber members; etc.) which do not require maintenance repairs.
6-5	Fair	Areas of collision damage with minor losses (moderate bends, dents or tears in steel, concrete, or timber members; minor crushing of timber members; crushing with exposed steel reinforcing bars in concrete members, etc.). Maintenance repairs required.
4-3	Poor	Areas of collision damage with significant losses (severe bends, dents or tears in steel, concrete, or timber members; severe crushing of timber members; crushing with significant damage to reinforcing steel and distortion of concrete members, etc.). Major rehabilitation required.
2-1	Failed	Member has been damaged such that it is no longer functioning as intended. Replacement required.

MEMBER ALIGNMENT

What to Rate

Evaluate the overall alignment of members with respect to each other and their original/design location.

Conditions to Consider

The rating shall consider the vertical and horizontal alignment of members and potential reasons for any misalignment (construction defect, overstress, thermal movement, etc.).

Rating Guidelines

These rating guidelines are to be used for the described defects when found on primary members. Defects located on secondary members should be not be rated as severely as similar defects located on primary members.

9	Excellent	No defects.
8-7	Good	Minor misalignment that appears to be the result of a construction defect, such as minor negative camber. No repairs required.
6-5	Fair	Areas of misalignment that appear to be the result of a moderate construction defect, minor thermal movement, or minor overstress such as minor tipping of beam ends, measurable negative camber or rotation of bearing assemblies, etc. Maintenance repairs required.
4-3	Poor	Areas of misalignment which appear to be the result of a significant construction defect, moderate thermal movement or moderate overstress such as significant bowing or tipping of beam ends, significant movement along an entire line or bearings, significant negative camber, etc. Major rehabilitation required.
2-1	Failed	Member is misaligned such that it is no longer functioning as intended. Replacement required.

DEFLECTION UNDER LOAD

What to Rate

Evaluate the deflection of individual members or entire spans under live load.

Conditions to Consider

The rating shall consider the vertical deflection in relation to design standards and user (vehicles and pedestrians) safety and comfort.

Rating Guidelines

"N" - Normal Deflection that does not: create a safety hazard, alarm users (vehicles or pedestrians), or affect the strength or serviceability of the structure. Live load deflection is estimated by the inspector to be within design parameters (typically L/800 for most vehicular bridges (L/500 for timber bridges) or L/1000 for bridges with pedestrian traffic. L= Span Length).

"E" - Excessive Deflection that does: create a safety hazard, alarm users (vehicles or pedestrians), or affect the strength or serviceability of the structure. The live load deflection is estimated to be in excess of design parameters.

VIBRATION UNDER LOAD

What to Rate
Evaluate the vibration of individual members or entire spans under live load.

Conditions to Consider
The rating shall consider the vibration direction (vertical and transverse) as well as the length of time vibration continues after the load has passed. Settled approaches or raised deck joints may result in impact loads on the bridge that cause excessive vibrations.

Rating Guidelines
"N" - Normal Vibration that does not: create a safety hazard, cause discomfort to users (vehicles or pedestrians), or affect the strength or serviceability of the structure.

"E" - Excessive Vibration that does: create a safety hazard, cause discomfort to users (vehicles or pedestrians), or affects the strength or serviceability of the structure.

STAND PIPES

What to Rate
Fire department standpipes; dry piped connections installed to permit water to be supplied to the deck level from below the bridge. Evaluate the piping, pipe connections and the attachment of the standpipe to the structure.

Conditions to Consider
The condition rating shall consider the physical condition of the piping and its connections as well as its ability to function as intended.

Rating Guidelines
Rate "N" if there are no standpipes present on the structure.

9	Excellent	No defects.
8-7	Good	Little or no deterioration noted. Pipes may have areas of light rust. No repairs required.
6-5	Fair	Piping has spotty areas of severe rust with no section loss, pipe caps are missing at the outlets, vegetation or accumulated debris is blocking or obscuring immediate access to the connections, standpipe attachments to the bridge are loose or have minor damage. Maintenance repairs required.
4-3	Poor	Piping has severe rust with areas of section loss (any section loss should be considered "poor" for pressure pipe), pipe outlets are damaged or plugged with debris, standpipe attachments are broken or missing, there is impact or thermal movement damage to any of the piping or fittings. Major rehabilitation required.

2-1	Failed	Standpipe has been damaged such that it is no longer functional. Replacement required.

BARREL LADDERS

What to Rate
Permanently installed access ladders and the attachment of the ladder to the structure.

Conditions to Consider
The condition rating shall consider the physical condition of the ladders and their connections, as well as compliance with OSHA regulations (29 CFR 1926.1053).

Rating Guidelines
Rate "N" if there are no ladders present on the structure.

9	Excellent	No defects.
8-7	Good	Light rust on the ladder. No repairs required.
6-5	Fair	Severe rust with no section losses, minor dents or bends in the rails. Maintenance repairs required.
4-3	Poor	Severe rust with section losses noted, broken or missing rungs, cleats or steps, broken or split rails. Major rehabilitation required.
2-1	Failed	Ladder has been damaged such that it is no longer functional. Replacement required.

The Critical Deficiency Response procedures described in Section 3.2.7 should be followed for any fixed ladder with deficiencies resulting in a rating of "4" or below. The ladder should immediately be blocked-off or clearly tagged "DO NOT USE" until repairs can be made.

ARE BARREL LADDERS OSHA COMPLIANT?

"NA" - There are no permanently mounted access ladders on the bridge.

"Y" - The permanent ladders on the bridge comply with OSHA regulations (29 CFR 1926.1053).

"N" - The permanent ladders on the bridge do not comply with OSHA regulations (29 CFR 1926.1053). Indicate in the description field next to *Barrel Ladders* what part of the installation is non-compliant.

ITEM 60-SUBSTRUCTURE

ABUTMENTS-STEM

What to Rate
Elements to be rated include the abutment stem, bridge seat, and pedestals of the abutments.

Conditions to Consider
The condition rating shall consider the physical condition of the stem (cracks, delamination, leaching, scale, spalls, missing stones, loose or missing mortar joints, etc.).

Rating Guidelines
The stem shall be rated in accordance with Section 10.13 Substructure.

ABUTMENTS-BACKWALL

What to Rate
Elements to be rated include the abutment backwall.

Conditions to Consider
The condition rating shall consider the physical condition of the backwall (cracks, delamination, leaching, scale, spalls, missing stones, loose or missing mortar joints, etc.).

Rating Guidelines
The backwall shall be rated in accordance with Section 10.13 Substructure.

ABUTMENTS-FOOTINGS

What to Rate
Elements to be rated include the abutment footing.

Conditions to Consider
The condition rating shall consider the physical condition of the footing (cracks, delamination, leaching, scale, spalls, etc.) as well as the alignment (scour, thermal movement, etc.). Settlement of the footing shall not be included under this item; it shall be rated under the Item *Abutments-Settlement*.

Rating Guidelines
The footing shall be rated in accordance with Section 10.13 Substructure. If the footings are covered and not visible, code this item "N" and indicate "Not Visible" in the description field.

ABUTMENTS-SETTLEMENT

What to Rate
Elements to be rated include settlement of the abutment.

Conditions to Consider
The condition rating shall consider settlement of the abutment from its original constructed position.

Rating Guidelines
Abutment settlement shall be rated in accordance with Section 10.13 Substructure.

ABUTMENTS-WINGWALLS

What to Rate
Elements to be rated include the abutment wingwalls and cheekwalls.

Conditions to Consider
The condition rating shall consider the physical condition of the wingwalls (cracks, delamination, leaching, scale, spalls, missing stones, loose or missing mortar joints, etc.).

Rating Guidelines
The wingwalls shall be rated in accordance with Section 10.13 Substructure.

PIERS/BENTS-CAPS

What to Rate
Elements to be rated include pier or bent caps, including bearing seats and pedestals.

Conditions to Consider
The condition rating shall consider the physical condition of the caps (cracks, delamination, leaching, scale, spalls, rust, section loss, missing stones, loose or missing mortar joints, etc.).

Rating Guidelines
The caps shall be rated in accordance with Section 10.13 Substructure.

PIERS/BENTS-COLUMNS

What to Rate
Elements to be rated include pier or bent columns.

Conditions to Consider
The condition rating shall consider the physical condition of the columns (cracks, delamination, leaching, scale, spalls, rust, section loss, checks, decay, splits, etc.).

Rating Guidelines

The columns shall be rated in accordance with Section 10.13 Substructure.

PIERS/BENTS-FOOTINGS

What to Rate
Elements to be rated include pier or bent footings.

Conditions to Consider
The condition rating shall consider the physical condition of the footing (cracks, delamination, leaching, scale, spalls, etc.). Settlement of the footing shall not be included under this item; it shall be included under the Item *Piers/Bents-Settlement*.

Rating Guidelines
The footings shall be rated in accordance with Section 10.13 Substructure. If the footings are covered and not visible, code this item "N" and indicate "Not Visible" in the description field.

PIERS/BENTS-SETTLEMENT

What to Rate
Elements to be rated include settlement of piers or bents.

Conditions to Consider
The condition rating shall consider settlement of piers or bents from their original constructed position.

Rating Guidelines
Pier or bent settlement shall be rated in accordance with Section 10.13 Substructure.

EROSION - SCOUR

What to Rate
Elements to be rated include the erosion or scour of embankment or foundation materials.

Conditions to Consider
The condition rating shall consider the exposed portions of the substructure (abutments, wingwalls, piers, bents, footings, piles, etc.), particularly areas where the elevation of embankment or foundation material is lower than the original design elevation, or the elevation documented in past inspection reports.

Rating Guidelines
Erosion and scour shall be rated in accordance with Section 10.13 Substructure.

CONCRETE CRACK – SPALL

What to Rate
Concrete and prestressed concrete abutments, piers, wingwalls, piles, etc., that are part of the bridge substructure. Fender system elements shall not be rated under this item; they shall be rated under the Channel Protection Item - *Fender System*.

Conditions to Consider
The rating shall consider the extent and severity of cracking and spalling on the overall functionality and capacity of the concrete members.

Rating Guidelines
This item shall be coded in accordance with Section 10.3 Concrete or Section 10.4 Prestressed Concrete.

STEEL CORROSION

What to Rate
Steel bents, pier caps, columns, piles, etc., which are part of the bridge substructure. Fender system elements shall not be rated under this item; they shall be rated under the Channel Protection Item - *Fender System*.

Conditions to Consider
The rating shall consider the extent and severity of rusting and section loss on the overall functionality and capacity of the steel members.

Rating Guidelines
This item shall be coded in accordance with Section 10.5 Steel.

PAINT

What to Rate
Elements to be rated include the paint, or protective coating, on all substructure members (abutments, bearing seats, columns, piers or bents, pier or bent caps, etc.).

Conditions to Consider
The condition rating shall consider the physical condition of the paint or protective system, and its ability to protect the surfaces where it has been applied. This rating is not based on the severity of corrosion of the protected surfaces.

Rating Guidelines
See *Paint* under Item 59 - *Superstructure.*

TIMBER DECAY

What to Rate

Timber piles, columns and pier caps that are part of the bridge substructure. Fender system elements shall not be rated under this item; they shall be rated under the Channel Protection Item - *Fender System*.

Conditions to Consider

The rating shall consider the extent of deterioration and the severity of any damage to the members (cracks, splits, rot, crushing, freeze-thaw damage, insect damage, etc.) and the member's capacity to carry the design load.

Rating Guidelines

Timber conditions shall be rated in accordance with Section 10.6 Timber.

COLLISION DAMAGE

What to Rate

Evaluate the extent to which substructure elements have been damaged by vehicle, shipping or flood debris impacts. Fender system elements shall not be rated under this item; they shall be rated under the Channel Protection Item - *Fender System*.

Conditions to Consider

The rating shall consider the extent of the collision damage on the member (bends, crushed members, dents, exposed steel reinforcement, etc.) and the member's capacity to carry the design load.

Rating Guidelines

9	Excellent	No evidence of collision damage.
8-7	Good	Some minor collision scrapes which do not require corrective maintenance.
6-5	Fair	Areas of collision damage with minor losses (moderate bends or dents in steel, concrete, or timber members; minor crushing of timber members; crushing with exposed reinforcing steel in concrete members, etc.). Maintenance repairs required.
4-3	Poor	Areas of collision damage with significant losses (severe bends or dents in steel, concrete, or timber members; severe crushing of timber members; crushing of concrete members with significant damage to reinforcing steel and/or significant distortion of member; etc.). Major rehabilitation required.
2-1	Failed	Member has been damaged such that it is no longer functioning as intended. Replacement required.

DEBRIS

What to Rate

Elements to be rated include areas of debris and/or water accumulation. Typical areas include abutment seats (around bearings and/or between beam ends and the abutment backwall), pier or bent caps, horizontal surfaces on individual members, etc.

Conditions to Consider

The rating shall consider the amount of debris and/or water accumulation and its affect on the physical condition of the members with which it is in contact. The rating shall also consider any interference with structure expansion/contraction caused by debris accumulation (debris covering expansion bearings, debris filling expansion area between beam ends and abutment backwall, etc.).

If a portion of the structure is not visible because it is covered or shielded by debris, a Bridge Maintenance Memorandum should be written requesting removal of the debris.

Rating Guidelines

9	Excellent	No defects.
8-7	Good	Some minor debris accumulation on the bridge seats with no noticeable affect on the structure. No cleaning required.
6-5	Fair	Accumulation of debris with minor affect on the structure (minor deterioration of structure). Cleaning required.
4-3	Poor	Major accumulation of debris with significant affect on the structure (debris interferes with the proper movement of the bearings or is contributing to serious deterioration of the structure). Major cleaning and some rehabilitation required.
2-1	Failed	Debris accumulation has caused failure of structural member. Replacement required.

ITEM 61 - CHANNEL PROTECTION

CHANNEL SCOUR

What to Rate
Elements to be rated include the erosion or scour of the channel banks and bottom. The channel shall be rated as far upstream and downstream from the structure as is necessary to observe changes that may affect the integrity of the bridge or approaches.

Conditions to Consider
The condition rating shall consider the loss of material from the channel bottom or banks. Areas of high water velocity (i.e. narrow sections, shallow sections, channel constrictions, items protruding into the channel from the bottom or banks, etc.) are particularly vulnerable to scour.

Rating Guidelines
Channel scour shall be rated in accordance with Section 10.8 Waterways.

EMBANKMENT EROSION

What to Rate
Elements to be rated include the embankment on both sides of the channel. The bridge embankment shall not be rated under this item; it shall be rated under the Substructure Item "Erosion/Scour". Riprap or other embankment protection shall not be rated under this item; it shall be rated under "Riprap".

Conditions to Consider
The condition rating shall consider the loss of material from the channel embankments. Areas of minimal vegetation, along the ends of embankment protection (i.e. riprap, slope paving, gabions, etc.), or in the path of roadway runoff are particularly vulnerable to erosion.

Rating Guidelines
Embankment erosion shall be rated in accordance with Section 10.8 Waterways.

DEBRIS

What to Rate
Elements to be rated include debris that affects the normal flow of the channel.

Conditions to Consider
The rating shall consider debris which has accumulated in the channel (i.e. on the bottom, along the banks, against piers or other channel obstructions, etc.).

Rating Guidelines
Debris shall be rated in accordance with Section 10.8 Waterways.

VEGETATION

What to Rate
Elements to be rated include the vegetation cover along the channel banks and embankments.

Conditions to Consider
The rating shall consider the condition of the vegetation along the channel banks and embankments, and its ability to protect these areas from erosion or its tendency to obstruct the waterway.

Rating Guidelines
Vegetation shall be rated in accordance with Section 10.8 Waterways.

CHANNEL CHANGE

What to Rate
Elements to be rated include changes (natural or man-made) in the channel width, bottom profile, or alignment, and the affect of these changes on the integrity of the bridge and approaches.

Conditions to Consider
The rating shall consider the extent of change in the channel width, bottom profile or alignment, and the severity, or potential severity, of these changes on the integrity of the bridge and approaches. Long term aggradation/degradation of the streambed and migration of the stream channel shall be evaluated under this Item

Rating Guidelines
Channel change shall be rated in accordance with Section 10.8 Waterways.

FENDER SYSTEM

What to Rate
Elements to be rated include all components of pier or abutment protection systems (dolphins, fenders, etc.).

Conditions to Consider
The rating shall consider the physical condition of the protection system (cracks, delamination, leaching, scale, spalls, rust, section loss, loose or broken fasteners, checks, decay, splits, impact damage, etc.) and its ability to protect the bridge.

Rating Guidelines

9	Excellent	No defects.
8-7	Good	Some minor defects (reinforced concrete: hairline noncritical cracks, light-moderate scale, small spalls, minor efflorescence, etc.; prestressed concrete:

hairline noncritical cracks, light-moderate scale, minor efflorescence, etc.; steel: light rust on less than 25% of surface area, few isolated loose fasteners in primary members or missing fasteners in secondary members, etc.; timber: minor decay, cracks, checks, or splits, etc.). Maintenance repairs not yet required.

6-5	Fair	Areas of deterioration with minor section loss (reinforced concrete: wide cracks, heavy scale, small spalls or impact damage resulting in section loss on exposed steel reinforcing bars, moderate efflorescence, etc.; prestressed concrete: wide cracks, heavy scale, small spalls, moderate efflorescence, or impact damage resulting in section loss on exposed steel reinforcing bars or exposure of up to two (2) prestressing tendons, etc.; steel: severe rust with section loss on greater than 25% of surface area, isolated missing fasteners in primary members, etc.; timber: moderate decay, cracks, checks, splits with minor section loss, etc.). Maintenance repairs required.
4-3	Poor	Areas of deterioration with significant section loss (reinforced concrete: large spalls, severe scale, severe section loss on exposed steel reinforcing bars, etc.; prestressed concrete: large spalls, severe scale, severe section loss on exposed steel reinforcing bars, up to two (2) broken wires in one (1) tendon or one (1) broken wire in each of two (2) tendons, etc.; steel: severe rust with section loss throughout member, multiple broken or missing fasteners in primary members, fatigue cracks, out of plane distortion, etc.; timber: severe decay, cracks, checks, splits with advanced section loss, etc.). Major rehabilitation required.
2-1	Failed	Member has deteriorated such that it is no longer functioning as intended. Replacement required.

SPUR DIKES & JETTIES

What to Rate

Elements to be rated include all portions of spur dikes and jetties, above and below the water line.

Conditions to Consider

The rating shall consider the physical condition of the spur dikes and jetties (erosion, scour, missing stones, impact damage, etc.) and their ability to protect the bridge (from high flow velocities, which may cause scour, vessel impact, etc.).

Rating Guidelines

9	Excellent	No defects.
8-7	Good	Minor defects (isolated minor erosion, widespread loss of joint pointing (less than 2" deep) with interior joint mortar of masonry members in good

condition, etc.) which do not yet require routine maintenance.

6-5	Fair	Minor areas of deterioration (advanced erosion with minor scour, heavy loss of joint pointing material, cracking and/or minor loss of interior joint mortar observed in masonry members, etc.). Maintenance repairs required.
4-3	Serious	Areas of severe deterioration (advanced undermining/scour, severe loss and cracking of joint pointing and interior mortar materials of masonry members, moderate displacements or deformations of stones, etc.). Major rehabilitation required.
2-1	Failed	Element has deteriorated such that it is no longer functioning as intended. Replacement required.

RIPRAP

What to Rate

Elements to be rated include riprap or other erosion protection (slope paving, gabions, etc.) lining the channel and/or located along the channel embankments or banks. Vegetation that serves as erosion protection shall not be included under this item; it shall be rated under the Item *Vegetation*.

Conditions to Consider

The rating shall consider the physical condition of the riprap or other erosion protection (loose or missing mortar, missing stones, etc.), and its ability to protect the surface where it has been installed. The actual condition of the surface to be protected, (severity of erosion, if any) shall not be rated under this item; it shall be rated under the Substructure Item *Embankment Erosion*.

Rating Guidelines

Riprap or other erosion protection shall be rated in accordance with the guidelines under *Spur Dikes & Jetties*.

NAVIGATION LIGHTS

What to Rate

Elements to be rated include navigation lights (aviation and marine) and their supports.

Conditions to Consider

The rating shall consider the working condition of the navigation lighting (are they working, are they visible, etc.) and the physical condition of their supports.

Rating Guidelines

9	Excellent	No defects.
8-7	Good	Minor defects (loose conduit supports, globe cracked, etc.) which do not yet require maintenance repairs.
6-5	Fair	Visibility is partially impaired (bulb or globe replacement required, loose supports, etc.). Maintenance repairs required.
4-3	Poor	Light is not operating (supports broken, wiring exposed, etc.). Major rehabilitation required.
2-1	Failed	Navigation light has defects that keep if from functioning as intended. Replacement required.

ITEM 62-CULVERTS & RETAINING WALLS

BARREL

What to Rate
Elements to be rated include the barrel of the culvert.

Conditions to Consider
The condition rating shall consider the physical condition of the barrel (cracks, spalls, rust, section loss, broken fasteners, impact damage, etc.) as well as the barrel alignment (deformation, lateral movement, settlement, tipping, etc.).

Rating Guidelines
The barrel shall be rated in accordance with Section 10.9 *Culverts*.

HEADWALL, CUTOFF WALL, & RETAINING WALL STEM

What to Rate - Headwall
Elements to be rated include the headwall that retains the embankment material above the barrel at each end of the culvert.

What to Rate – Cutoff Wall
Elements to be rated include the cutoff wall the inhibits scour under the floor at each end of the culvert.

What to Rate – Retaining Wall Stem
Elements to be rated include the retaining wall stems (wingwalls) at each end of the culvert.

Conditions to Consider
The condition rating shall consider the physical condition of the element (cracks, spalls, broken or missing masonry stones, etc.), their alignment (lateral movement, settlement, tipping, etc.), their ability to retain the embankment material, and their ability to prevent flow from passing under or around the outside of the culvert barrel.

Rating Guidelines

9	Excellent	No defects.
8-7	Good	Some minor defects (concrete: hairline non-critical cracks, light-moderate scale, small spalls, minor efflorescence, etc.; steel: light rust on less than 25% of surface area, isolated loose fasteners, etc.; timber: minor decay, cracks, checks, or splits, etc.; masonry: widespread loss of joint pointing with interior joint mortar in good condition, light efflorescence bleeding or water leakage from joint mortar, etc.; isolated embankment erosion, etc.) which do not yet require repair.

6-5	Fair	Areas of deterioration with minor section loss (concrete: wide cracks, heavy scale, small spalls or impact damage resulting in section loss on exposed steel reinforcing bars, moderate efflorescence, etc.; steel: severe rust with section loss on greater than 25% of surface area, isolated missing fasteners, etc.; timber: moderate decay, cracks, checks, splits with minor section loss, etc.; masonry: heavy loss of joint pointing material, cracking and/or minor loss of interior joint mortar, widespread efflorescence bleeding or water leakage from joints, etc.; advanced erosion with minor scour; etc.). Maintenance repairs required.
4-3	Poor	Areas of deterioration with significant section loss (concrete: large spalls, severe scale, heavy active water leakage through cracks/spalls, severe section loss on exposed steel reinforcing bars, etc.; steel: severe rust with section loss throughout member, multiple broken or missing fasteners, out of plan distortion, etc.; timber: severe decay, cracks, checks, splits with advanced section loss, etc.; masonry: severe loss and cracking of joint pointing and interior mortar, moderate displacements or deformations of stones, etc.; advanced undermining/scour, etc.). Major rehabilitation required.
2-1	Failed	Member has deteriorated such that it is no longer functioning as intended. Replacement required.

DEBRIS

What to Rate

Evaluate the degree to which any debris affects the normal flow through the culvert.

Conditions to Consider

The rating shall consider debris which has accumulated inside the culvert (on the bottom, against the sides, etc.) as well as outside the culvert (against headwalls, cutoff walls, retaining wall stems, on the bottom, etc.) on both the upstream and downstream sides. Debris located in the channel shall not be included in this item; it shall be rated under Item 61-3 Debris.

Rating Guidelines

9	Excellent	No defects.
8-7	Good	Minor debris accumulation the in culvert is not affecting water flow velocity or turbulence through the hydraulic opening. No repairs required.
6-5	Fair	Debris accumulation in culvert is causing an increase in water flow velocity and turbulence through the hydraulic opening or increasing the upstream backwater elevations. Maintenance cleaning is required.
4-3	Poor	Debris accumulation in culvert is causing severe increase in water flow velocity and turbulence through the hydraulic opening which is affecting the

stability of culvert elements (scour, erosion, undermining, etc.) or barrel blockage is increasing the upstream backwater elevations and threatening to by-pass the culvert. Major rehabilitation required.

2-1	Failed	Debris accumulation in culvert has caused severe increase in water flow velocity and turbulence through the hydraulic opening, which has caused failure of culvert elements (scour, erosion, undermining, etc.). Complete blockage of the culvert barrel has caused the waterway to by-pass or overtop the culvert. Replacement required.

FOOTINGS

What to Rate

Elements to be rated include all footings (culvert barrel, headwall, retaining wall stems, etc.)

Conditions to Consider

The rating shall consider the physical condition of the footings (cracks, spalls, section loss, impact damage, etc.) as well as the alignment (deformation, lateral movement, settlement, tipping, etc.).

Rating Guidelines

The footings shall be rated in accordance with Section 10.13 Substructure Coding.

APPROACH CONDITION

APPROACH SLAB

What to Rate
Elements to be rated include the approach slab on each approach to the bridge.

Conditions to Consider
The condition rating shall consider the physical condition of the approach slab (cracks, spalls, settlement, alignment with bridge, etc.). If an approach slab is not visible (located underground, covered by wearing surface, etc.), the presence of the approach slab shall be verified (review design plans, maintenance records, etc.), and the condition rating shall be based on the condition of the approach roadway above the approach slab.

Rating Guidelines
The approach slab shall be rated in accordance with the guidelines in Section 10.10. Rating of Approach Conditions.

RELIEF JOINTS

What to Rate
Elements to be rated include the joints between the concrete approach pavement and the concrete approach slab on each approach to the bridge.

Conditions to Consider
The condition rating shall consider the physical condition of the relief joint (cracks, settlement, alignment, etc.). If a relief joint is covered by the bituminous pavement and is not visible, the presence of the joint shall be verified (review design plans, maintenance records, etc.), and the condition rating shall be based on the condition of the bituminous pavement above the relief joint.

Rating Guidelines
The relief joints shall be rated in accordance with the guidelines in Section 10.10. Rating of Approach Conditions.

APPROACH GUIDERAIL

What to Rate
Elements to be rated include the approach guide rail, approach guide rail end treatments, and transitions between the approach guide rail and bridge rail on each side of each approach to the bridge.

Conditions to Consider
The condition rating shall consider the physical condition of the approach guide rail, approach guide rail end treatments, and transitions between the approach guide rail and bridge rail. The railing elements shall be rated based on their physical condition only, compliance of these elements with appropriate code documents shall not be included under this item; this shall be rated under Item 36 - Traffic Safety Features.

Rating Guidelines
The approach guide rail shall be rated in accordance with the guidelines in Section 10.10. Rating of Approach Conditions.

APPROACH PAVEMENT

What to Rate
Elements to be rated include the wearing surface on each approach to the bridge.

Conditions to Consider
The condition rating shall consider the physical condition of the wearing surface (cracks, spalls, unevenness, etc.).

Rating Guidelines
The approach pavement shall be rated in accordance with the guidelines in Section 10.10. Rating of Approach Conditions.

APPROACH EMBANKMENT

What to Rate
Elements to be rated include the embankment on each side of each approach to the bridge.

Conditions to Consider
The condition rating shall consider the physical condition of the embankment (vegetation cover, erosion, sloughing, etc.)

Rating Guidelines
The approach embankments shall be rated in accordance with the guidelines in Section 10.10. Rating of Approach Conditions.

Item 36 - TRAFFIC SAFETY FEATURES

What to Rate
Elements to be rated include bridge railings, transitions, approach guide rail, and approach guide rail ends in accordance with the FHWA Coding Guide.

Conditions to Consider

The condition rating shall consider the compliance of these elements with the appropriate code documents (AASHTO, ConnDOT, etc.). The physical condition of these elements shall not be rated under this item; the physical condition of the bridge rail shall be rated under the Deck Item - Railing, and the physical condition of the transitions, approach guide rail, and approach guide rail end treatments shall be rated under the Approach Item - Approach Guide Rail.

Rating Guidelines
Item 36 - Traffic Safety Features shall be rated in accordance with the FHWA Coding Guide and the guidelines in Section 10.11 Traffic Safety Features.

ADDITIONAL NOTES/COMMENTS

Information to be included in this section includes:

- A statement indicating if the structure identification number is labeled on the bridge and the condition/readability of the label.
- Comment on the presence of any construction being done to the structure (or recently completed) and include state project numbers whenever possible.
- Identify any significant condition changes since the last inspection and if possible, identify the cause of the problem and what may be required to correct the problem.
- If any special access is required for the inspection, such as access on private property or keys needed for locks, identify the property contact person or the location/number of the required key to the lock.
- If various forms of access equipment are required to complete the inspection, comment on the types of equipment used in each area and the duration of time they are required. This information may be omitted if provided elsewhere in the report.

CHAPTER 11

CODING GUIDELINES FOR CONNDOT INVENTORY ITEMS

11.1 HIGHWAY BRIDGE CODING ITEMS 11-1

11.2 RAILROAD BRIDGE CODING ITEMS 11-10

11.3 OVERHEAD SIGN SUPPORT CODING ITEMS 11-14

CHAPTER 11

CODING GUIDELINES FOR CONNDOT INVENTORY ITEMS

11.1 HIGHWAY BRIDGE CODING ITEMS (Form BRI-19)

The instructions contained in this section are intended to supplement the FHWA Coding Guide and provide guidance in completing the BRI-19 & BRI-25 Forms. Exceptions to the instructions in the FHWA Coding Guide are also noted. The instructions are organized to follow the items as they appear on the BRI-19 & BRI-25 Forms.

GUIDELINES FOR ENTERING DATA IN THE BRI-19 INSPECTION BLOCK

The inspection block is that portion of the BRI-19 where information is found on the latest inspection dates and types of inspections required on a particular structure. Information shown in the shaded areas of the inspection block is data currently stored in the structure's database.

Item (90) Inspection Date .....(6 digits)

Code the month, day and year of the starting date of routine or in-depth inspections as follows:

MM DD YY

The inspection date shown on the BRI-18 should be the same as the date entered on the BRI-19, Item 90. If the inspection requires visits on more than one day, the first date of the inspection should be entered.

Inspection Team .....(2 digits)

The field personnel performing the inspection are to enter the number corresponding to the inspection team to which they are assigned. Consultant inspection teams will be assigned numbers by the Bridge Safety and Evaluation office. The inspection team number that appears in the shaded block is the assigned inspection team and may be different from the team actually performing the inspection.

Item (91) Frequency .....(2 digits)

This field contains a 2-digit code to indicate the desired number of months between inspections. The maximum interval between bridge inspections in Connecticut shall be in accordance with Section 3.2.2 of this manual. Load restricted or other poor condition structures that require a complete inspection on a more frequent basis, will generally be coded as 06, indicating a "semi-annual inspection".

Special cases may warrant other inspection frequencies. The inspection frequency will be reviewed, and revised if necessary, following each inspection by the person reviewing the report.

Example:	Code
Bridge in good condition	24
Posted or poor condition bridge	06
Quarterly inspections of an entire structure	03
Bridge in good condition meeting the extended inspection requirements listed on Form BRI-8 and approved by the FHWA	48

Every effort is made to group together the inspections of town maintained structures. Inspection frequency changes must be requested using Form BRI-8.

Class .....(2 digits)

This is a two digit code, which indicates the complexity of a structure with 1 being the simplest and 3 being the most complex. The class of structure will be determined by the BS&E office staff. Consultant engineers are currently conducting the routine and in-depth inspections of Class 3 structures and the in-depth inspections of Class 2 structures. State inspectors are currently conducting all inspections of Class 1 structures and routine inspections of the Class 2 structures. In addition, State forces conduct most semi-annual, quarterly and monthly inspections, regardless of the class of the structure.

Indepth Insp .....(6 digits)

All structures 20 feet or greater in length are to have an in-depth inspection once every ten years. This is to include a “close” inspection of all structural components in accordance with the requirements in Chapter 6 of this Manual. The starting date of an in-depth inspection is to be entered by field personnel at the time of an in-depth inspection and is to be recorded in the same format as Item 90 – Inspection Date. Both the Item 90 - Inspection Date and Indepth Insp fields should be completed whenever an in-depth inspection is performed.

Deck Survey .....(6 digits)

The date is to be entered by field personnel at the time of the deck survey. The date is to be recorded in the same format as Item 90.

Access .....(2 digits)

The field personnel will enter the appropriate code for any specialized inspection equipment required during the inspection of a structure. **NOTE:** Code the minimum equipment required to complete the inspection, not the equipment actually used (i.e.: if a 60' snooper was used, but a 40' snooper would normally reach, code "11". Likewise, if a 30' bucket truck was used, but the maximum bridge height is less than 25' code "00".). See the following table for the appropriate codes to be used:

ACCESS CODES

CODE	EQUIPMENT USED
00	None required

Underbridge inspection vehicle, (U.B.I.) i.e., Snooper, MOOG, Bridge Master, etc.

11	Less than 40 ft. reach
12	Less than 40 ft. reach, buckets required
15	Over 40 ft. reach
16	Over 50 ft. reach
17	Over 60 ft. reach

Add a "B" after the number if a safety boat is also needed for work over water (e.g.: "11B").

Bucket truck, or manlift required

21	Skyvan or similar, 30 ft. reach (Bridge Ht. $\geq$ 25')
22	30 – 40 ft. reach required
23	40 – 50 ft. reach required
24	over 50 ft. reach required

Underbridge Insp. Vehicle and Bucket Truck - Combination

31	40 ft. U.B.I. and 30 ft. lift required
32	40 ft. U.B.I. and 40 ft. lift required
33	40 ft. U.B.I. and 50 ft. lift required
34	40 ft. U.B.I. and >50 ft. lift required
35	>40 ft. U.B.I. and 30 ft. lift required
36	>40 ft. U.B.I. and 40 ft. lift required
37	>40 ft. U.B.I. and 50 ft. lift required
38	>40 ft. U.B.I. and >50 ft. lift required

Add a "B" after the number if a safety boat is also needed for work over water (e.g.: "35B").

40	Boat or raft (other than inflatable boats issued to inspection teams)
50	Rigging or scaffolding
51	>40 ft. U.B.I. and Rigging to access areas not reachable with snooper
99	Other (specify in comments of BRI-19)

If portions of a structure cannot be accessed during an inspection, these areas shall be indicated on a plan view sketch of the structure and noted in the report.

Flagman .....(2 digits)

This item shall be completed for each structure over an active rail line that requires the services of a railroad flagman to properly complete the inspection of a structure. The field personnel will fill in the appropriate Railroad Flagman code based on who the track custodian is. This can be determined from the Bureau of Public Transportation railroad map. “00” should be coded if no flagman is required. Codes from the following table shall be used in the coding of this item.

FLAGMAN CODES

CODE	DESCRIPTION
00	No railroad flagman required
01	Metro-North
02	Amtrak
03	Conrail
04	Boston & Maine
05	Providence & Worcester
06	Central Vermon
07	Valley Railroad Company
08	Connecticut Central Railroad
09	Central New England Railroad
10	Connecticut Southern Railroad
11	Housatonic Railroad
12	Naugatuck Railroad
13	New England Central Railroad
14	Branford Steam Railroad
99	Other (specify in comments of BRI-19)

CRITICAL FEATURE INSPECTIONS

The Critical Feature Inspection fields shall be coded for those structures which:

A) have fracture critical members,
B) require underwater inspections,
C) require other special inspections or any combination thereof.

These items indicate the type of critical feature inspection, the desired frequency, the team performing the inspection and the latest date of inspection for the critical feature. If there are no critical features, these items are to be left blank. The “Y” or “N” noted in the Coding Guide need not be entered. The “Y” is implied in fields where there is data entered. Likewise, the “N” is implied for those fields that are blank.

"Fracture" - Fracture Critical Member Inspection

If the structure has any fracture critical members (FCM’s), fill in the "Type" with the appropriate code for the fracture critical member from the following table. The person reviewing the inspection report shall determine the desired inspection "Frequency", in months. Code the inspection "Team" performing the fracture critical inspection and the start "Date" of the inspection, as described above.

Revised 04/03/2003

Examples of Fracture Critical Members:

I. Two Girder System (1. Single Span, 2. End Span of Continuous Span Units)
   - Code A - With fixed hanger suspended spans
   - B - With suspended spans
   - C - Welded plate girders
   - D - Riveted or bolted plate girders

II. Truss Systems (1. Simple Spans, 2. Continuous Spans)
   - Code E - Eyebar trusses
   - F - Welded trusses
   - G - Riveted trusses
   - H - Trusses with suspended spans

III. Steel Pier Caps
   - Code J - Welded box or plate girders
   - K - Riveted box or plate girders

IV. Longitudinal Box Beams
   - Code L - Single welded box
   - M -Single riveted or bolted box

"<u>Uwater" - Underwater Inspection</u>

If the structure requires an underwater inspection, enter the desired "Frequency" of inspection in months. In general, the frequency will be 24 months for most underwater inspections. If the structure has had an underwater inspection, the "Team" performing the inspection and the start "Date" of the underwater inspection shall be entered in the appropriate boxes.

"Special" Inspections

If the structure has various components that require periodic inspections, i.e. monitoring, code the "Special" box with the "Type" of special inspection from the following table and enter the desired inspection "Frequency" in months. The "Team" performing the special inspection and the "Date" of the inspection shall also be recorded.

CODE	TYPE OF SPECIAL INSPECTION
A	Pin & hanger or hinge measurements
B	Shiplap measurements
C	Tipping/settlement of substructure
D	Lateral movement of beams/bearings
E	Temporary bents/supports
F	Crack growth
G	Check of scour or undermining
X	Any combination of the above (specify in comments section of BRI 19)
Z	Other (specify in comments section of BRI-19)

In general, both the type of special inspection and the desired inspection frequency will be determined by the person reviewing the report.

IDENTIFICATION

Bridge Name: This field should contain the official name of the bridge. There is no limit to the number or type of characters in this field.

GEOMETRIC DATA

Deck Area: The deck area for the structure is the total deck area calculated between out-to-out of deck and end-to-end of the structure. Where deck widths vary, the actual area of the deck is calculated accounting for the actual widths present.

BRIDGE COMMENTS

This field is used to provide structure specific information. This may include the status of a construction project involving the bridge or information related to special access requirements, such as the key number for locks on box beam bridges.

CLASSIFICATION

Report Class ..... (1 digit)

This field is completed by the Bridge Safety office staff to indicate the class of bridge for reporting purposes. Valid options are:

A - Adopted
D - DEP
L - Local
O - Orphan

P - Pedestrian
R - Railroad
S - State
T - Tunnel
V - Private

WATERWAY

Drainage Basin Code .....(4 digits)

This is a four digit code maintained by the Bridge Safety office that indicates the Drainage Basin Code for the bridge based on the location of the bridge.

PROPOSED IMPROVEMENTS

Program List No.....(2 digits)

This field contains the Program List Number if the bridge is on a program for rehabilitation.

Project No. .....(6 digits)

If this bridge is part of a construction or rehabilitation project, this field will contain the project number.

POSTED SIGNS & UTILITIES

Other Posted Signs 1, 2, 3 ..... (1 digit)

Using the coding below, indicate type of posted signs other then for load restrictions or vertical clearance. There is provision for storing up to three posted signs.

OTHER POSTED SIGNS CODING

1 Speed limit lower than the Inventory route
2 Narrow bridge
3 Directional & Route information signs
4 Bridge under construction signs
5 Merge
6 Lane closed
7 Sharp curve
8 Other warning signs

Actual & Recommended Posted Loads .....(2 digits)

For each of the following truck types, record the "Actual" posted load restriction (if any) in tons:

Single Unit ("H" Loading) Truck
Semi-Trailer ("HS" Loading) Truck
4 Axle Truck
3S2 Truck

The "Recommended" posted load for each vehicle will be entered by the Bridge Safety office.

Posted Vertical Clearance On Bridge: If there is a sign displaying the vertical clearance on the bridge, enter the posted height in feet and inches.

Posted Vertical Underclearance: If there is a sign displaying the vertical clearance under the bridge, enter the posted height in feet and inches.

Posted Speed Limit: If there is a posted speed limit specifically for the bridge, enter the posted limit in miles per hour

Utilities ..... (1 digit)

Record the utilities that are located within the structure's limit as shown below. There is no limit to the number of utilities that can be entered for a bridge. If there are not enough blank boxes on the form, write the numbers for the desired utilities under the boxes.

Leave item blank if there are no utilities within the structure's limit.

UTILITIES CODING:

0 Other

1	Gas
2	Water
3	Electric
4	Telephone
5	Steam line
6	Cable TV
7	Sewer
8	Chemical line
9	Fuel line
F	Fiber Optics
U	Unknown duct

* Do not include wires supported on poles that are not attached to the structure.

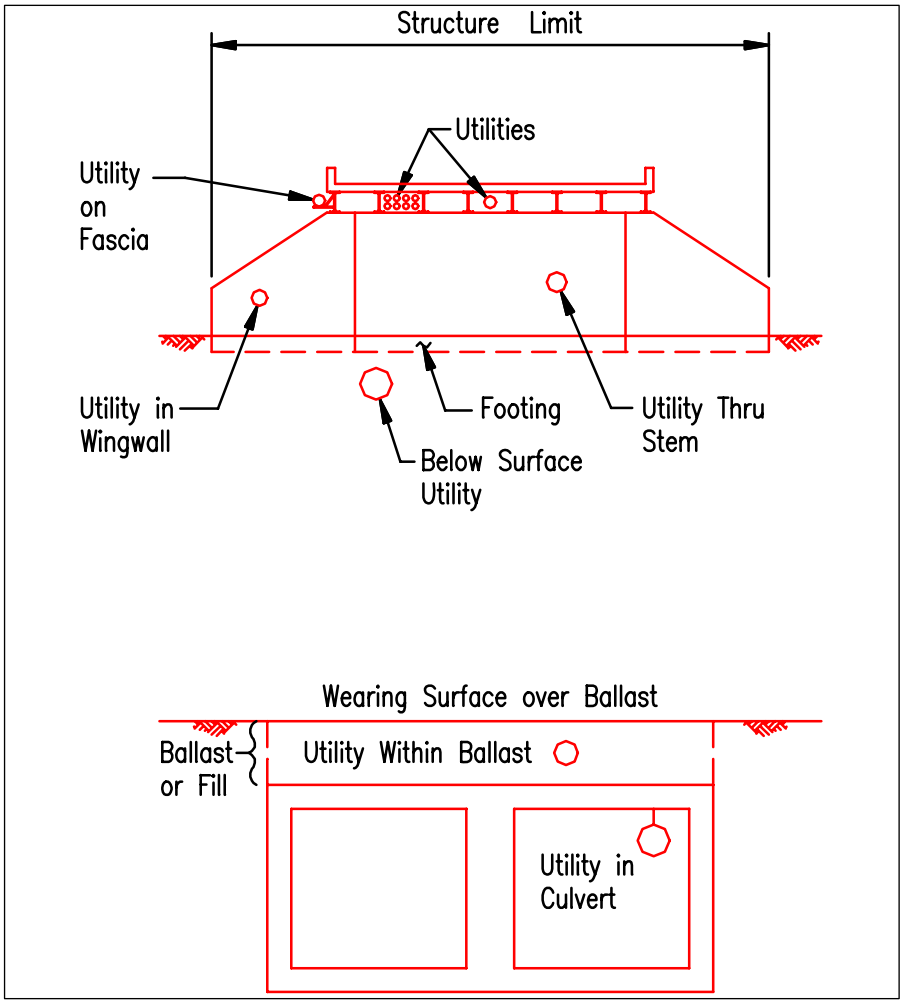

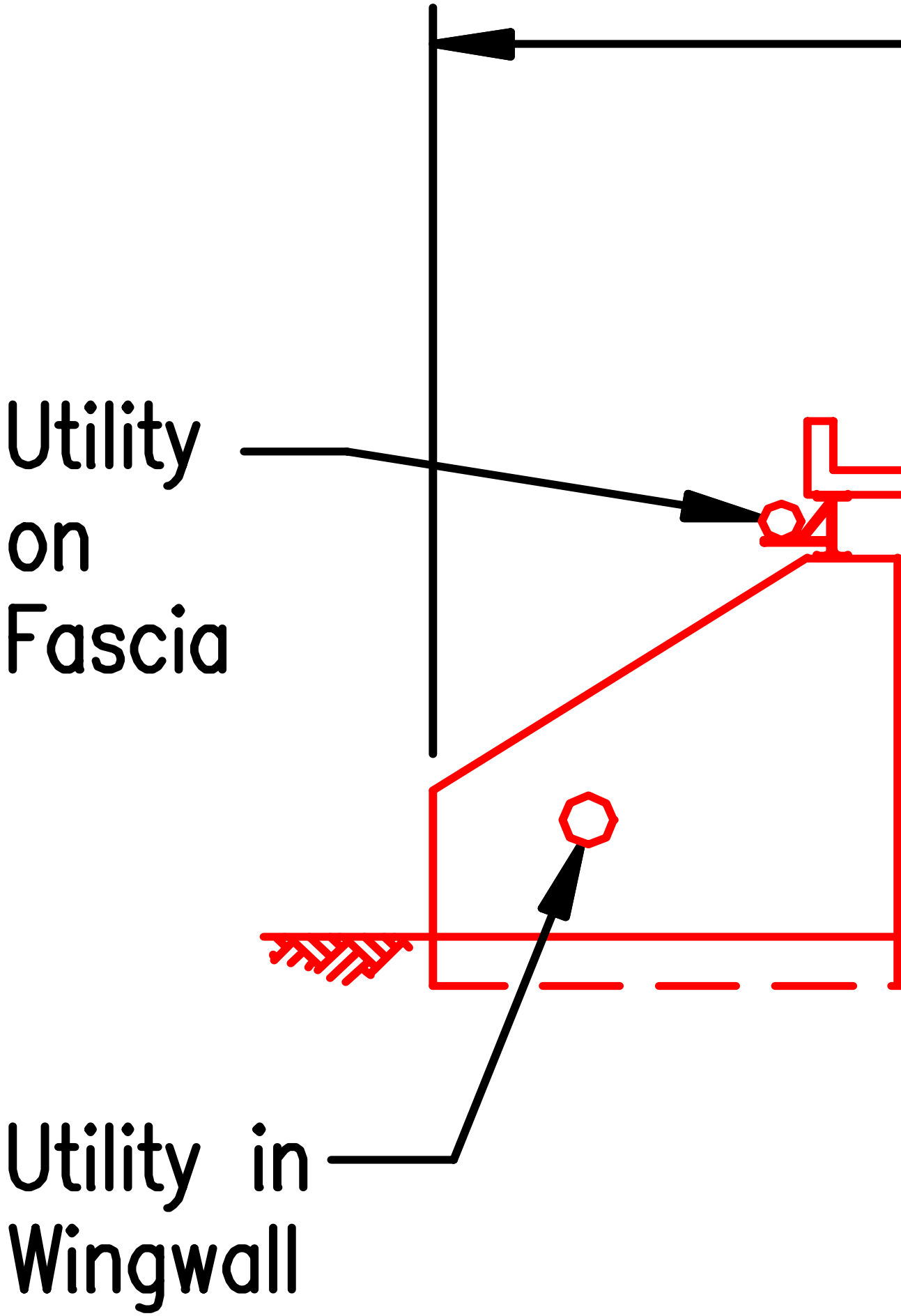
Utility
on
Fascia
Utility in
Wingwall

LOAD RATING AND POSTING

Item 64 - Operating Rating and Item 66 - Inventory Rating shall be coded in accordance with the FHWA Recording and Coding Guide with the following exception. The ratings, in tons, should be entered to one decimal place and values over 99.9 should be entered as calculated (XXX.X).

Items 63 & 65 - OPERATING/INVENTORY RATING TYPE shall be coded as follows:

"TYPE" Code	Description	Corresponding Evaluation Code
1	Load Factor (LF)	L
2	Allowable Stress (AS)	E or T
3	Load and Resistance Factor (LRFD)	E
4	Load Testing	E
5	No rating analysis performed	J or C or R

EVALUATION CODE: Valid entries are:

L - Load Factor
E - Evaluated
R - Evaluation Required
J - Judgement Rating
C - Concrete Judgement Rating
T - Timber

YEAR OF EVALUATION: Enter the four digit year of the evaluation

OTHER FEATURES

- **Fence Required** — This is a *Yes/No* field and will be completed by Bridge Safety office personnel.

- **Fence Present** — This is a *Yes/No* field. Only fences on bridges are to be coded. Fences on approaches or culverts do not qualify.

- **Fence Height** — Enter the height of the fence, measured from the top of roadway or sidewalk (for walkways greater than two feet wide). The dimension shall be coded in feet, in the format XX.X.

- **Fence Type** — This field describes the type of fence on the bridge.
  Valid entries are:
  1 Expanded Metal
  2 Chain Link
  3 Solid Panel
  4 Combination
  5 Other

- **Fence Material** Code one of the following fence materials:
  1 Aluminum
  2 Chain Link
  3 Wood
  4 Other

- **Fence Top Type** This field describes the top of the fence. Code one of the following:
  1 Vertical
  2 Return

- **Barrel Ladder** Enter *Yes* if a permanently installed, caged barrel ladder exists on the bridge.

- **Standpipes** Enter *Yes* if fire department standpipes are present on the bridge. Standpipes are dry pipes with fire department connections that can be used to supply water from below the bridge up to the deck level.

- **Catwalks** Enter *Yes* if catwalks are present on the bridge.

- **Movable Inspection System** Enter *Yes* if there is a Movable Inspection Access System on the bridge (traveler platform, C.I.D., etc.).

INSPECTION COMMENTS

Proposed Next Indepth Insp Year: Enter the four digit year of the proposed next in-depth inspection. This is typically ten (10) years from the previous in-depth inspection date for bridges over twenty feet long. Bridges not requiring an in-depth inspection should be coded "9999".

11.2 RAILROAD BRIDGE CODING ITEMS (Form BRI-39)

The following items are to be used for completing Form BRI-39 (Note: some items on Form BRI-39 are the same as on Form BRI-19 - see Section 11.1)

OWNER .....(2 digits)

Use the codes listed below to indicate the rail line owner.

Code	Description
01	Amtrak
02	Boston & Maine (B & M)
03	Branford Steam Railroad
04	CONNDEP
05	CONNDOT
06	Conrail
07	New England Railroad
08	D'Addario Industries
09	Maybrook Properties
10	Providence & Worcester (P & W)
11	PENNCTRL
12	Private
13	Tilcon
14	Housatonic RR
15	Naugatuck RR
16	New England Central RR
17	Connecticut Southern RR
18	Central New England RR
19	CXS Corp.
20	Other

OPERATOR .....(2 digits)

Use the codes listed below to indicate the rail line operator.

Code	Description
01	Amtrak
02	Boston & Maine (B&M)
03	Branford Steam Railroad
04	Abandoned Railroad
05	Valley Railroad
06	CONN Central Railroad
07	Housatonic Railroad
08	Inactive Railroad
09	Metro-North Railroad
10	Providence & Worcester (P&W)
11	Conrail
12	New England Railroad
13	Danbury Terminal
14	Other
15	Housatonic RR
16	Naugatuck RR
17	New England Central RR
18	Connecticut Southern RR
19	Central New England RR
20	CXS Corp.

LINE NAME .....(20 digits)

The information to be recorded for this item shall be the actual line name. There are 20 digits allowed for coding of this item. Abbreviations may be used, but effort shall be made to keep them meaningful. Line names are listed in the master railroad bridge inventory.

MILEPOST .....(5 digits)

Code a 5-digit number to represent the mile point location of the structure. The 5-digit code will be to the hundredth of a mile. The mile point shall reference the beginning of the structure in the direction of the track line inventory.

OTHER TRACKAGE RIGHTS .....(2 digits)

This item provides information concerning the use of the inventory rail line by other rail facilities. The 2-digit coding will be from the *Operator* list above. Four 2-digit codings are available if more than one rail facility uses the same rail line.

CO-OWNER BRIDGE .....(2 digits)

This item provides information concerning structures that share ownership of a structure. The 2-digit coding will be from the *Operator* list above.

CATWALK WIDTHS .....(3 digits)

The information to be recorded for this item is a 3-digit measurement for the most restrictive width of a catwalk measured to the nearest tenth of a foot. "Left" and "Right" should be determined on the basis of direction of inventory.

ELECTRIFICATION ..... (1 digit)

The type of service on the bridge is indicated by a 1-digit code. If electrified, code "Y" (YES), if not electrified code "N" (NO).

NUMBER OF TRACKS STRUCTURE DESIGNED FOR .....(2 digits)

The information to be recorded for this item is the actual number of tracks the substructure was designed to carry.

NUMBER OF TRACKS PRESENTLY ON STRUCTURE .....(2 digits)

The information to be recorded for this item is the actual number of tracks presently on the substructure. This number includes all tracks whether in use or not in use.

NUMBER OF TRACKS IN SERVICE .....(2 digits)

The information to be recorded for this item is the actual number of tracks actively in use. Active use will include tracks used infrequently. An example might include a once a week freight delivery.

NUMBER OF TRAINS/DAY .....(4 digits)

The information to be recorded for this item is the actual number of trains that cross the structure in both directions utilizing all tracks. The count will be for (A) passenger trains and (B) freight trains. If the track carries INFREQUENT freight trains (less than once a day) the coding will be coded "001".

YEAR OF CENSUS .....(2 digits)

The year of census will be the most recent year of record, relative to the time of the inspection.

AVERAGE PASSENGERS/TRAIN .....(4 digits)

The number recorded for this item is the total number of passengers using the train or trains in both directions divided by the number of trains in a given day. This average is calculated over a one year period of time.

FREIGHT CARLOADS/YEAR .....(5 digits)

The number recorded for this item reflects the total freight cars that cross the structure in both directions as documented in the most recent year of record.

DECK TYPE ..... (1 digit)

Code	Description
1	Open deck
2	Concrete slab
3	Concrete/Ballast
4	Steel plate/Ballast
5	Other

DEPTH OF BALLAST .....(3 digits)

Code a 3-digit number to the tenth of a foot (XX.X) to indicate the depth of ballast on the bridge. Code zeros if the item does not apply.

SUBSTRUCTURE TYPE ..... (1 digit)

This item is to be coded in two parts "A", the material that makes up the primary portion of the substructure and "B", the foundation type. Use the codes listed below which best define "A", the material and "B", the foundation type.

"A" Code	Description
1	Stone
2	Concrete
3	Timber
4	Steel
5	Other

"B" Code	Description
1	Full height stem
2	Stub abutment
3	Pile bent
4	Crib
5	Other

PASSENGER TRACK SPEED .....(3 digits)

The number recorded for the track speed of a passenger train over the structure is an established railroad safe speed based on approach alignment and local conditions. This track speed is implied, not posted.

FREIGHT TRACK SPEED .....(3 digits)

The number recorded for track speed of a freight train over the structure is an established railroad safe speed based on approach alignment, impact on structure and local conditions. This track speed is implied, not posted.

MAXIMUM ALLOWABLE LOAD .....(3 digits)

The number recorded for this item is the actual tons the structure is analyzed to safely carry after considerations such as age, section loss, and damage or other indeterminate considerations are made. (See Item, *E-Cooper Rating*)

R-O-W INFO. FILE LOCATION OF MAPS, PLANS, ETC.

The information to be recorded for this item is the descriptive location of maps, plans, etc. for future reference. Abbreviations may be used, but they must be meaningful.

E-COOPER RATING BY TRACK NUMBER .....(3 digits)

Code two 3-digit codings for each track carried by the structure. The two codings are:

1. Normal – Inventory Rating
2. Maximum – Operating Rating

11.3 OVERHEAD SIGN SUPPORT CODING ITEMS (Form BRI-49)

The following guidelines are to be used for completing form BRI-49.

HEADER

SIGN STRUCTURE NUMBER .....(5-6 digits)

The sign support structure number will be a unique number assigned to each structure starting with 20000. This number will be stenciled on the right side vertical post of the sign support, approximately five (5) feet off the ground, using 2" – 4" high numbers and should be visible from the roadway, written vertically.

In the case of a bridge mounted frame, each sign will have a number stenciled on the frame written horizontally. Where there is more than one bridge mounted frame at any given location, the number stenciled on the frame will be the same except for a letter A, B, C, etc., added at the end of the number. The assigning of letters will be from right to left in the direction of traffic starting with the letter "A".

OLD STRUCTURE NUMBER .....(13 digits)

This item is the original structure number assigned to the sign support previous to 1995. The old structure number consists of town #, route #, direction and mile point.

INSPECTED BY .....(text)

This item contains the names of the crew members that inspected the sign support as identified in the BRI-48.

INSPECTION DATE .....(6 digits)

Code this item with the date of the current inspection. If the sign support structure takes more than one day to inspect, code this item with the first date of the inspection.

TEAM .....(3 digits)

Code this item with the designated inspection team code for the current project.

FREQUENCY OF INSPECTION .....(2 digits)

This item is the number of months between scheduled inspection cycles.

IDENTIFICATION

BRIDGE NUMBER (If sign is attached to a bridge) .....(5-6 digits)

This item is the bridge number to which the sign support structure is attached. Sign frames attached to the side of the parapet or sign posts attached to the top of the bridge are included as part of this item.

INVENTORY ROUTE:

DIRECTION ..... (1 digit)

Code the direction of the inventory route passing under the structure. If the structure spans two directions of traffic code this item as a "5" or a "6" to denote both directions traveling under the structure.

Code	Description
0	Not applicable (i.e. town road)
1	North
2	East
3	South
4	West
5	North & South
6	East & West

ROUTE SIGNING PREFIX ..... (1 digit)

Identify the route signing prefix for the inventory route passing under the structure using one of the codes below. If two or more routes pass under the structure, the highest class of route will be coded. The hierarchy is in the order listed below.

Code	Description
1	Interstate Highway
2	U.S. Numbered Highway
3	State Highway
4	County Highway
5	City Street
6	Federal Lands Road
7	State Lands Road
8	Town Road
9	Other

ROUTE NUMBER .....(5-6 digits)

Code the route number presently assigned to the roadway. If the roadway passing under the sign structure is a town road, code this item "00000". If two or more

routes pass under the structure, the highest class of route will be coded to coincide with the Item *Route Signing Prefix*. The hierarchy is in the order listed above in the Item *Route Signing Prefix*. In the example of Routes 5 and 15, U.S. Route 5 would be coded over CT Route 15. (This item can only be changed under the Maintain Structures item on the Main Menu of the Program).

LEVEL OF SERVICE ..... (1 digit)

Identify the designated level of service for the inventory route passing under the structure using one of the codes below. If two or more routes pass under the structure, the highest level of service will be coded and should coincide with the Item *Route Signing Prefix*. The hierarchy is in the order listed below.

Code	Description
0	None of the above
1	Mainline
2	Alternate
3	Bypass
4	Spur
5	Business
6	Ramp, wye, connector, etc.
7	Service and/or unclassified frontage road

DISTRICT .....(2 digits)

Code the district where the structure is located using the Connecticut District Map.

Code	Description
01	District 1
02	District 2
03	District 3
04	District 4

ITEM (4) PLACE CODE .....(5 digits)

Code this item with the State of Connecticut designated place codes for each town. (This item can only be changed under the Maintain Structures item on the Main Menu of the program.)

LOCATION .....(text)

This item is a description of the sign structure location. It is recommended that the location be referenced to a highway exit number, a nearby intersection or some other landmark discernable on a roadway map.

Examples: I-95 NB between Exit 12 and 13
I-91 SB @ Exit 36 to RT 178

MILE POINT .....(5 digits)

Identify the mile point that references the inventory route of the structure in the log direction using the “Highway Log of Connecticut State Numbered Roads", most recent edition. If the roadway passing under the sign is a town road, code this item "000.00".

KM POINT .....(5 digits)

This item is the equivalent kilometer point to the Item *Mile Point* above. This item will be automatically entered into the computer when the mile point has been entered.

LATITUDE .....(6 digits)

For all structures, code the latitude in degrees, minutes and seconds. Take the coordinate at the centerline of the roadway.

LONGITUDE .....(6 digits)

For all structures, code the longitude in degrees, minutes and seconds. Take the coordinate at the centerline of the roadway.

HIGH SYSTEM (ON or OFF) ..... (1 digit)

Identify this item using one of the codes below. Refer to the National Highway System (NHS) list.

Code	Description
0	Structure is not on the NHS
1	Structure is on the NHS

DATE OF PREVIOUS INSPECTION .....(6 digits)

This item is automatically coded with the previous inspection date.

AGE AND SERVICE

ITEM (27) YEAR BUILT .....(4 digits)

Code the year in which construction of the structure was completed. This is the installation date of the sign support structure not the sign panels. If the year built is unknown, code this item "0000".

NO. LANES UNDER STRUCTURE .....(1-2 digits)

Code the number of lanes passing under the sign support structure. Include all lanes carrying highway traffic, which are striped, or otherwise operating as a full width traffic lane. This shall include any full width merge lanes and ramp lanes.

When the sign support structure fully spans a divided two directional highway, the sum of the lanes in both directions is coded. When the sign is side mounted to a bridge, the number of full lanes passing under the sign is coded.

CURB TO CURB - LOG DIRECTION .....(5 digits)

Code the width of roadway directly under the structure in the log direction. This might be edge of road to edge of road when no curb exists. When the sign support structure spans only a reverse log roadway, code this item "000.00".

CURB TO CURB - REVERSE LOG DIRECTION .....(5 digits)

Code the width of roadway directly under the structure in the reverse log direction. This might be edge of road to edge of road when no curb exists. When the sign support structure spans only a log direction roadway, code this item "000.00".

Note: When the sign support fully spans a divided two directional highway, code both log and reverse log curb to curb dimensions. When the sign support spans an undivided two directional highway, code the log direction with the entire curb to curb dimension and leave the reverse log curb to curb dimension blank. When the sign support structure spans a one directional highway and a divided ramp, code the curb to curb dimension with both dimensions for the ramp and the mainline.

TYPE OF TRAFFIC SAFETY FEATURES .....(2 digits)

A) Left Log Direction
B) Right Log Direction
C) Left Reverse Log Direction
D) Right Reverse Log Direction

Identify the type of traffic safety feature found at the sign support post for log and reverse log directions using one of the codes listed below. When the sign support is a bridge mounted frame or when no traffic safety features exist, code this item "00". If the traffic safety feature is not one of the items mentioned below, code

this item as "07" and describe the type of traffic safety feature in the comment field.

Code	Description
00	None
01	Metal Beam Rail
02	Jersey Barrier
03	Wood Post Guide Rail
04	Three Cable Guide Rail
05	Noise Barrier
06	Attenuator System
07	Other

AVERAGE DAILY TRAFFIC (ADT) .....(6 digits)

Code this item using the State of Connecticut Department of Transportation Manual for Traffic Volumes for the State Maintained Highway Network, latest version, which shows the most recent average daily traffic (ADT) volume for the inventory route. Included in this item are the trucks referred to under, *Truck ADT*.

If the sign support structure spans only one direction of a divided two directional highway, code the item with one half of the total ADT.

YEAR OF ADT .....(4 digits)

Record the year represented by the ADT above.

TRUCK ADT .....(1-2 digits)

Code the percentage of truck traffic traveling on the roadway. This item is a percent estimated from *Average Daily Traffic (ADT)*. Do not include vans, pickup trucks and other light delivery trucks in this percentage.

If this information is not available, an estimate that represents the average percentage for the category of road under the sign is coded.

STRUCTURE CONDITION

SIGNS AND ILLUMINATION ..... (1 digit)

STRUCTURE ..... (1 digit)

FOUNDATION ..... (1 digit)

TRAFFIC SAFETY FEATURES ..... (1 digit)

OVERALL CONDITION OF THE STRUCTURE ..... (1 digit)

This information is automatically imported from the overall ratings entered in the BRI-48 form. The BRI-48 form must be completely filled out and entered into the computer prior to printing the BRI-49. Refer to the description of these five items for clarification on coding.

GEOMETRIC DATA

SPAN LENGTH/ARM LENGTH (A & B)

Code the span length or the arm length where applicable. Use the "B" dimension only for 2-armed or 2-spanned structures. This dimension should be measured from the centerline of the posts. If the sign support is a frame side mounted to a bridge parapet, code both "0.00".

LOG DIRECTION MINIMUM VERTICAL CLEARANCE (METRIC)

Code this item with the minimum vertical clearance in the log direction. Measure from the roadway surface to the bottom of the sign. In the field following this code, enter an "A" to denote an actual measurement or an "E" to denote an estimated measurement. Code this item "00.00" when the sign support structure spans a roadway in the reverse log direction only.

REVERSE LOG MINIMUM VERTICAL CLEARANCE (METRIC)

Code this item with the minimum vertical clearance in the reverse log direction. Measure from the roadway surface to the bottom of the sign. In the field following this code enter an “A” to denote an actual measurement or an “E” to denote an estimated measurement. Code this item "00.00" when the sign support structure spans a roadway in the log direction only.

Note: When the sign support structure spans a divided two directional highway, code both the log & reverse log minimum vertical clearance. Where more than one sign panel is attached to a structure, code the minimum dimension of all the signs facing the same direction.

LOG DIRECTION MINIMUM VERTICAL CLEARANCE (ENGLISH)

This item is equivalent to *Log Direction Minimum Vertical Clearance (Metric)* except that it is in English units. Note that the code for this item is automatically converted when the information is entered above.

REVERSE LOG MINIMUM VERTICAL CLEARANCE (ENGLISH)

This item is equivalent to *Reverse Log Minimum Vertical Clearance (Metric)* except that it is in English units. Note that the code for this item is automatically converted when the information is entered above.

STRUCTURE DATA

STRUCTURE TYPE .....(2-5 digits)

Identify the type of sign support structure using the codes below.

Code	Description Of Sign Support Structure
21M	Single Arm Monotube Cantilever Sign Support
21T	Single Arm Tubular Cantilever Sign Support
21NS	Single Arm Non-Standard Cantilever Sign Support
22	Double Arm Cantilever Sign Support
23CS	Truss Arm Cantilever Sign Support (Type 1-3)
23RC	Truss Arm Cantilever Sign Support (Type 1-7)
25	Double Arm Butterfly Sign Support
41M	Monotube Span Bridge Sign Support
41T	Tubular Span Bridge Sign Support
41NS	Non-Standard Single Tube Span Bridge
42I	Box Truss Span Bridge Sign Support Type I
42II	Box Truss Span Bridge Sign Support Type II
42III	Box Truss Span Bridge Sign Support Type III
42OTS	Box Truss Span Bridge Sign Support Type OTS
42NS	Non-Standard Box Truss Span Bridge Sign Support
BM	Structure-Mounted Sign Support

STRUCTURE MATERIAL:

MATERIAL A .....(2 digits)

Identify the type of material the sign support structure is made of using the codes below. If a structure is coded (05-Other), please add a note in *COMMENTS* to explain the type of structure material.

CODE	DESCRIPTION
01	A-36 Steel
02	A-588 Steel
03	Extruded Aluminum
04	Cast Aluminum
05	Other
06	A-53 Steel
07	A-595 Steel
08	A-242 Steel
09	A-575 Steel

MATERIAL B .....(2 digits)

If a structure is a combination of two materials, then code the tower material under the Item *Material A* and code the horizontal member material under the Item *Material B.*

NUMBER OF SPANS ..... (1 digit)

Code this item using numbers 0-9 to denote the number of spans. If the structure has two support posts, code this item as a “1”. If the structure has three support posts, code this item as a “2” and so forth. When the sign support is a frame, side mounted to a bridge parapet, code this item as a “0”. Code cantilever type structures as a "1", unless it is a Butterfly shape which is coded a “2”. If the structure has two posts with a cantilever attached to one side then code as a “2”.

PAINT/COATING .....(2 digits)

Identify the type of coating found on the structure using one of the codes below:

CODE	DESCRIPTION
01	Paint (Any Color)
02	Hot Dipped Galvanized Coating
03	Paint with Galvanized Coating
04	None

FOUNDATION BURIED (Y/N) ..... (1 digit)

A foundation is considered buried if the anchor pad and anchor bolts for the structure need to be unearthed in order to complete the inspection. Code this item with a “Y” if the foundation is buried. Code this item with a “N” if the foundation is not buried.

GOVERNING CSR RATING .....(3 digits)

Code the governing Combined Stress Ratio (CSR) as analyzed.

YEAR OF RATING .....(4 digits)

Identify the year that the most recent structural analysis was performed.

SIGNS PANELS:

ID ..... (1 digit)

In alphabetical order, assign each sign panel with a letter. Panels are lettered top-to-bottom (crown panel before main panel) and left-to-right (facing the sign panels), starting with the panels over the log direction of the highway. Be sure not to skip letters.

WIDTH (FT) .....(4 digits)

Record the width in feet of each sign panel attached to the structure.

HEIGHT (FT) .....(4 digits)

Record the height in feet of each sign panel attached to the structure.

MESSAGE .....(text)

When recording the message on the sign, report exactly what is written on the sign. The following are some typical abbreviations:

Down Arrow	D.A.
Up Arrow	U.A.
Right Arrow	R.A.
Left Arrow	L.A.

DIRECTION .....(text)

Code this item the direction of travel in which the sign panel faces.

CODE	DESCRIPTION
Log	Log Direction
Rev Log	Reverse Log Direction

PANEL OVER LANE TYPES .....(2 digits)

Code this item using the codes below to describe the types of lanes under each sign panel in a given direction of travel (Log or Rev Log). The lanes shall be described facing the front of the sign panels from left to right. Up to four lane type codes may be used per a sign panel. The code "CCC" shall only be used if there is a single lane of traffic in one direction or if there are three travel lanes in one direction. The codes "LCL" and "RCL" shall only be used if there are four or more lanes in one direction.

CODE	DESCRIPTION
LSH	Left Shoulder in Direction of Travel
LE1	Left Exit Lane Closest to Left Travel Lane
LE2	Second Left Exit Lane from Left Travel Lane
LE3	Third Left Exit Lane from Left Travel Lane
LLN	Left Lane in Direction of Travel
LCL	Left Center Lane (for 4 Travel Lanes)
CCC	Center Lane (for Single Lane or 3 Travel Lanes)
RCL	Right Center Lane (for 4 Travel Lanes)
RLN	Right Lane in Direction of Travel
RE1	Right Exit Lane Closest to Right Travel Lane
RE2	Second Right Exit Lane from Right Travel Lane
RSH	Right Shoulder
MED	Median
HOV	High Occupancy Vehicle Lane
GOR	Gore
OTH	Other

PANEL TYPE .....(2 digits)

Code this item using one of the codes below to describe the type of sign panel.

CODE	DESCRIPTION
01	Variable Message
02	Stop Ahead
03	Extruded Aluminum
04	Sheet Aluminum
05	Other

YEAR CLIPS TORQUED .....(4 digits)

Record the year that the sign clips were torqued for the sign panel. In the field following, enter an “A” if all the clips were torqued for the sign panel or a “P” if only a partial number of the clips were torqued.

ADDITIONAL COMMENTS

COMMENTS

This item is used for any additional comments or information that may be pertinent to the inspection of the overhead sign support structure.

CHAPTER 12

OVERHEAD SIGN SUPPORT INSPECTIONS

12.0 INSPECTION REQUIREMENTS 12-1

12.0.1 Minor Maintenance Required 12-2

12.0.2 Testing Required 12-2

12.1 DOCUMENTATION FOR INSPECTION 12-2

12.1.1 OHSS Inspection Report Format 12-4

12.2 REPORT REVIEW 12-5

12.3 MAINTENANCE CONCERNS 12-5

CHAPTER 12

OVERHEAD SIGN SUPPORT INSPECTIONS

12.0 INSPECTION REQUIREMENTS

- Inspect sign panels for legibility, reflectivity, evidence of deterioration or damage, and conformance with traffic safety standards. Check panel attachment bolts, particularly between crown and main sign panels. Check sign panel attachment clips.

- Inspect the structure (posts, arms, trusses, etc.) for rust, section loss, cracks, misalignment, impact damage, signs of overstress, loose or missing fasteners, or other signs of deterioration or distress. Check for gaps between connected plates at arm-to-post connections.

- Inspect bolts for tightness and section loss. Check load indicator washers for indication of proper bolt tension.

- Inspect welds for fatigue cracks or other defects. All suspected cracks should undergo NDT (dye penetrant) to confirm their existence and determine the extent of the crack. All confirmed fatigue cracks should be immediately reported in accordance with the Critical Deficiency Reporting procedures outlined in Chapter 3.

- Inspect the paint or galvanizing coating for signs of deterioration. Estimate the % of overall area deteriorated or rusted.

- Check posts for plumb, both longitudinally and transverse to the roadway. Note that many posts are tapered, and the taper must be considered in the plumb measurements.

- Inspect the foundation and grout pads for cracking, scaling, efflorescence, settlement, misalignment or impact damage. Check for rusted, loose or missing anchor bolts, or any other signs of deterioration or distress. A random sampling of anchor bolts (approximately 25%) should be struck with a hammer to determine if they are intact and solidly anchored to the foundation. The frequency of sampling should be increased if defective bolts are found. For structures with buried foundations, a Maintenance Memorandum shall be submitted approximately 2 months prior to the anticipated inspection date, requesting the top of the foundation to be unearthed.

- Inspect the sign ID number for legibility. Re-stencil the ID number if missing or illegible. All numbers should be 2 to 4 inches (50 mm-100 mm) high. Post identification numbers should be placed approximately 5 feet (1.5 m) above the ground facing the centerline of the road and written vertically. Bridge mounted (BM

type) sign supports should have the identification number stenciled on the frame visible from the low speed shoulder.

- Inspect traffic safety features for signs of impact damage or deterioration, and for conformance with current standards.

12.0.1 Minor Maintenance Required

- Torque all sign clip nuts over closed sections of roadway. Aluminum sign clips should be torqued to 143 in-lb (16.2 Nm) and stainless steel sign clips should be torqued to 247 in-lb (27.9 Nm).

- On cantilever sign supports, torque all anchor bolt nuts to 50% of the maximum permissible torque. Anchor bolt torqueing shall be completed prior to performing the required ultrasonic testing described below.

- Perform other minor maintenance, as required, to address correctable deficiencies during the inspection: torque any loose anchor bolt nuts, replace damaged or missing sign clips, replace damaged or missing U-bolts if available, replace damaged or missing post caps if available, etc.

12.0.2 Testing Required

- Ultrasonic testing shall be performed on all foundation anchor bolts of all free standing cantilever sign supports. Ultrasonic testing shall be performed by experienced, qualified personnel with a Level II or Level III Certification and in accordance with the American Welding Society and the American Society of Non-Destructive Testing.

- Measure the wall thickness of all posts on four (4) sides at two inches (50 mm) up from the base plate, using a “D” meter. If any section losses are detected, additional measurements should be taken and a cross section of the post drawn to describe the section losses, with the wall thickness measurements shown.

12.1 DOCUMENTATION FOR INSPECTION

- A clearance diagram shall be provided showing the vertical and horizontal clearances in accordance with bridge inspection clearance criteria. Horizontal clearances should also include the distance from the post to the face of the guide rail on each side of the roadway. Where the post foundation is exposed, and is 2' or taller, such that it would be a vehicular hazard, the lateral clearance shall be taken to the edge of the foundation. Minimum vertical clearances should be recorded for each sign panel, and the dimension from a post to the location of each minimum vertical clearance should be recorded. Clearance diagrams shall be prepared to scale using the Department's standard Microstation CADD format.

- Elevations, cross sections, and other detail sketches should be drawn, as required, to clearly show the locations and extent of noted significant conditions. Note the extent of any significant rusting. Section losses, whether from past or current rusting, should be noted in sufficient detail for a structural analysis to be performed.

- Record the size, length, location, and condition of all welded repairs or connections and other miscellaneous welds in tension zones of members if they were not detailed on the construction plans or recorded in the last inspection report.

- Note the size, location, and condition of all significant (deeper than a paint scratch) impact damage.

- A Sign Clip Report shall be completed for all signs that require clips to be torqued. The number of missing, loose and broken clip nuts/bolts shall be recorded for each sign panel.

- Record the length and location of all cracks. Mark the end of the crack with a permanent marker for comparison during future inspections. If any retrofit has been installed, or holes drilled, to arrest existing cracks, evaluate the effectiveness of the retrofit and note whether or not the crack has propagated past the arresting hole.

- Notes should be made describing the current condition of all previously noted problems so a rate of deterioration can be established for monitoring purposes. If the condition rating has changed from the previous inspection due to increased quantity or size of deterioration, a photograph and explanation of why the condition rating has changed should be included in the inspection report.

- Take photographs of all deterioration and other conditions noted during the inspection. Additionally, photographs should be taken of the Sign ID number and front and back elevations of the sign structure. The photographs of the sign structure should be taken such that the sign text is readable in the photograph and the position of the sign panels is distinguishable relative to the roadway below.

- Typical conditions and deteriorations causing a condition rating of less than or equal to “5” should be photographed as outlined in Chapter 5.

- A Sign Support Maintenance Memorandum (SSMM) shall be prepared, if necessary, to highlight deficiencies requiring repair. The format of the memorandum and priority of the repairs shall be as described in Chapter 9.

- Note whether maintenance repairs requested in previous SSMM's have been addressed and if the repairs performed are adequate.

12.1.1 OHSS Inspection Report Format

All OHSS inspection reports shall contain, but not be limited to the following:

1. *Cover Sheet:* The cover sheet shall include a descriptive identifier of the structure including the date of the inspection, structure identification number, structure type, town, route, route direction, mile point, a table of contents for the report, and the names and signatures of the report preparers and reviewers.

2. *Executive Summary:* The Executive Summary shall include:
   a.) Summary of Findings - a brief description of the visual inspection findings and the structure's overall condition ratings.
   b.) Strength Analysis - if applicable, results of the structural analysis performed.
   c.) Test Results - results of any testing performed.
   d.) Recommendations - recommendations for any Emergency Repair or Rehabilitation & Maintenance Recommendations.

3. *BRI-49 Form:* A completed inventory and appraisal sheet.

4. *BRI-48 Form:* A completed structure inspection sheet.

5. *Clearance Diagrams:* Updated CADD clearance diagram.

6. *Photographs:* Printed copies of digital photographs, two per page, with descriptive labels.

7. *Structural Analysis:* The structural analysis, if performed, including a summary sheet of the analysis, and all computer program input and output sheets.

7. *Non-Destructive Testing Results:* The results of any ultrasonic testing performed on cantilever sign anchor bolts.

8. *Field Notes & Sketches:* All field notes or sketches made during the field inspection of the structure.

9. *Plans:* Standard half size construction plans for all new or modified sign support structures.

12.2 REPORT REVIEW

- Review the inspection findings in accordance with established Quality Control and Quality Assurance procedures.

- Cross reference the inspection report, inspection field notes, and photographs to ensure they are mutually supportive of their documentation.

- The inspection reviewer should determine if patterns of deterioration or progressive deterioration are taking place. Progression will be determined by comparing present to past inspection reports.

- The reviewer should verify that the existing structural evaluation on file for the sign structure is valid based on conditions found during the inspection.

- The appearance of new fatigue cracks, or sudden propagation of existing fatigue cracks, may warrant a structural analysis. The reviewer should ensure that all new fatigue cracks found were reported in accordance with the established procedures for Critical Deficiency Reporting outlined in Chapter 3.

12.3 MAINTENANCE CONCERNS

- Most repairs to main members will be structural in nature and may have an effect on the capacity of the structure. Repairs should be detailed and performed under the direction of a qualified Engineer.

- Fatigue cracks that show little or no crack propagation for extended periods can suddenly resume propagation, possibly resulting in member failure. Therefore, all cracks found should be immediately reported and corrective action should be taken as soon as possible to ensure the integrity of the structure and safety of the public.

- Areas of section loss, gouges, dings, and impacted rust are all stress risers in steel members, and should be monitored closely or repaired.

- Areas of severe rusting should be cleaned and coated to prevent further deterioration.

- Missing handhole covers that expose electrical wires, in areas where pedestrian traffic is likely, should be replaced.

STATE OF CONNECTICUT
DEPARTMENT OF TRANSPORTATION
ORGANIZATION CHART

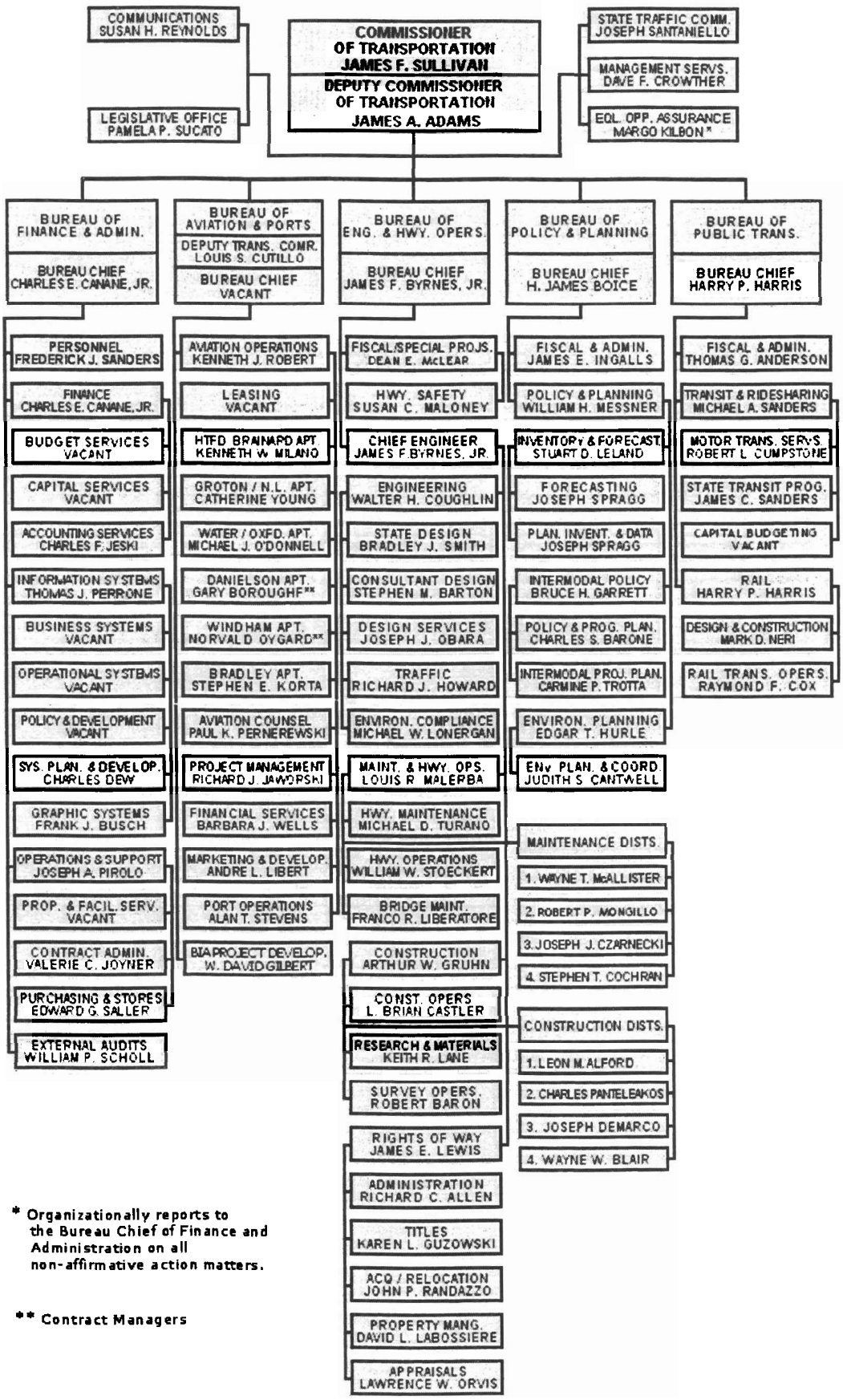

* Organizationally reports to the Bureau Chief of Finance and Administration on all non-affirmative action matters.

** Contract Managers

James F. Sullivan, Commissioner
JUNE 2001

APPENDIX A

ORGANIZATION CHARTS

- State of Connecticut Department of Transportation
- Office of Engineering & Highway Operations
- Bridge Safety & Evaluation

OFFICE OF ENGINEERING & HIGHWAY OPERATIONS

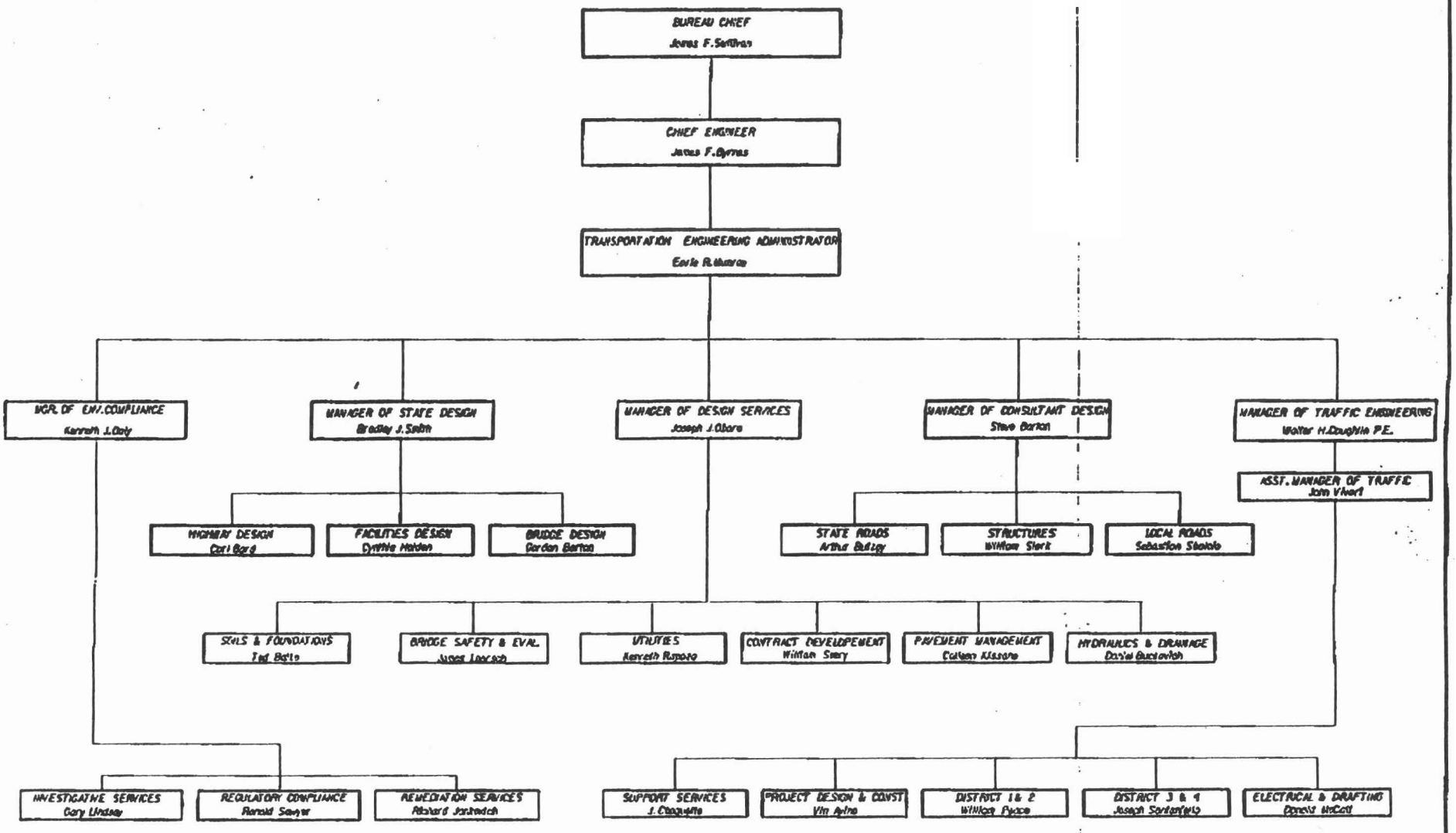

APRIL 10,1996
P180 0180:SMITH.DOT

Office of Engineering & Highway Operations, Bridge Safety & Evaluation Section

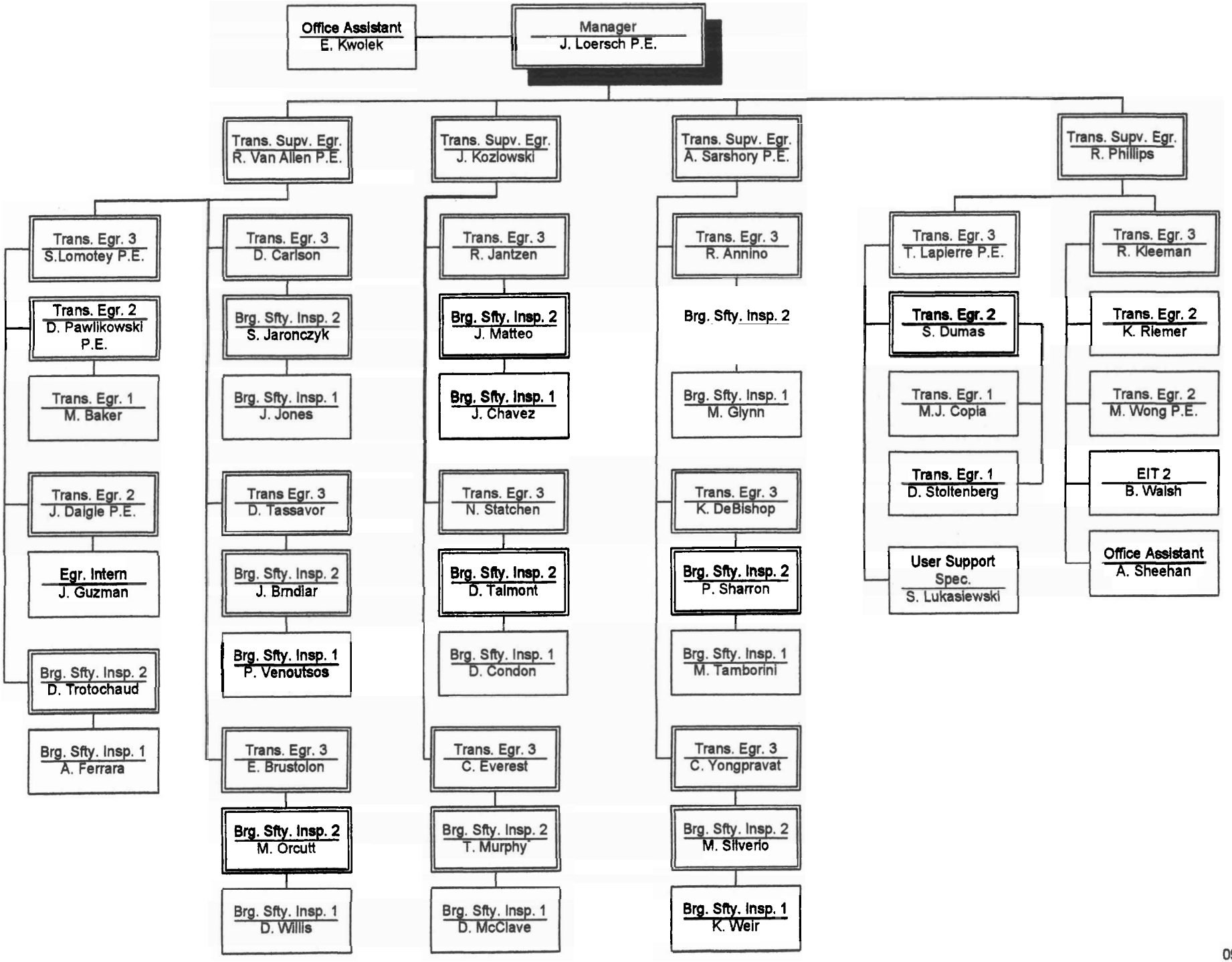

09/24/01

APPENDIX B

ADMINISTRATIVE FORMS

- Letter Requesting Permission for Entry on Private Property
- Instructions and Authorization Form for Use of Bridge Safety and Evaluation Files
- Request for Bridge Evaluation Load Ratings
- Field Review Checklist
- Maintenance Crew Leader's Report, Form MAINT. 014, Rev. 5/93

STATE OF CONNECTICUT

DEPARTMENT OF TRANSPORTATION

2800 BERLIN TURNPIKE, P.O. BOX 317546
NEWINGTON, CONNECTICUT 06131-7546

Name: _____
Address: _____
_____
_____

Bridge and Overhead Sign Support Safety Inspection
Town: _____
Route: _____
Bridge / OHSS ID:_____

Dear Property Owner:

Section 13a-60 of the General Statutes of Connecticut, as revised, provides that the Transportation Commissioner or his agent may enter upon private property for the purpose of conducting bridge or overhead sign support structure safety inspections on existing highways.

In the course of performing any component safety inspection, it may be necessary to temporarily utilize your property for access needs; to set markers; place traffic control signage, including traffic management or warning cones of various types, adjacent to or on your property. The placement of these markers or signage does not necessarily indicate the location of a highway or other facility, or property limits, by the Department of Transportation.

Section 13a-60 provides that the Transportation Commissioner, or designated agent, shall use care that no unnecessary damage shall result, and that the State shall pay damage to the Owner of any damage or injury caused to the Owner by such entrance or use.

Your consent to the Transportation Commissioner, or designated agent, to enter upon your property for the purpose of carrying out the provisions of this statute is requested.

Please sign in the space provided below and return in the enclosed self-addressed stamped envelope or by email to (add Name and email address).

Thank you for your cooperation.

Very truly yours,

Theodore H. Nezames, P.E.
Manager of Bridges
Bureau of Engineering and Construction

I hereby give my consent to the Transportation Commissioner, or his agent, to enter upon my property in order to carry out the provisions of Sec. 13a-60 of the 1969 Supplement to the General Statutes and for the purposes as checked.

_____Inspection Owner or Authorized Agent_____Date_____

_____Other Phone / Email _____Date_____

STATE OF CONNECTICUT
DEPARTMENT OF TRANSPORTATION

Subject: Care of Bridge Files

memorandum

date: October 25, 1995

to: TO ALL PERSONNEL USING BRIDGE SAFETY AND EVALUATION FILES

from: James P. Loersch
Manger of Bridge Safety and Evaluation
Bureau of Engineering and Highway Operations

The following shall apply when using Bridge Safety and Evaluation files:

1. No original file or portion thereof may be removed from the Bridge Safety and Evaluation Office without special approval from the Manager of Bridge Safety and Evaluation. Bridge files shall be reviewed in the Bridge Safety and Evaluation Office with the file reviewer making copies of information they wish to keep.

2. Files shall be kept in chronological order with all contents facing front.

3. If it is necessary to separate or unbind any part of the file for making copies you are expected to return this material to its original form and order.

4. When a folder is removed from a file, a reference card shall be filled out and inserted in place of the file (Information on these cards: Name, Unit or Firm, Telephone Number, Date Taken, and Bridge No.).

5. Please do not refile folders, this shall be done by designated staff members.

6. File folders in poor condition shall be given to the designated staff member for repair or replacement.

I have read the above and agree to follow these instructions:

Name/Telephone:_____

Date:_____

Firm or Unit:_____

Address:_____

_____

Signed:_____

This approval for access to our files ends:

_____

Request for Bridge Evaluation Load Ratings

Date: _____

To: Richard Van Allen
or Ted Lapierre
Bridge Safety
(860) 594-3172
(860) 594-3175 (fax)

From: _____
_____
Bridge Safety
Area No. _____
Phone No. _____

Subject: Town _____

Bridge No. _____

Location _____

Reason For Evaluation: (town letter, V.I.P. project, review current load ratings, painting platform, new structure, change in condition or other.)

_____

_____

_____

_____

_____

Date Requested By: _____ (Please, allow ample time for your request to be fulfilled.)

Date of Last Inspection: _____
Location of Inspection Report: _____

_____

_____

Attachments: [ ] Bridge Plans [ ] Photo
[ ] Inspection Report [ ] Sketches
[ ] Other

If new structure or the structure has been rehabed, give project number.

Do Not Write Below This Line. For Evaluation Staff Only.

Given To: _____ Date: _____
Date Completed: _____

Checked By: _____ Date: _____
Date Returned to Requestee: _____

FIELD REVIEW CHECKLIST

Inspection Team: _____ Bridge No.:_____ Town: _____

Inspectors: _____ Team Leader _____ Inspector 2

_____ Inspector 3 _____ Inspector 4

Type of Inspection (In-Depth, Routine, Underwater, etc.):_____

Date: _____ Quality Control Engineer Performing Review: _____

1. Did the inspectors review the plans before the inspection to determine details (welds or otherwise) that will require special attention during the inspection? _____
_____
_____

2. Is the inspector reviewing the latest inspection report to determine previous problem areas, before performing the inspection? _____
_____
_____

3. Is proper access for the inspection available? What is provided and what else is needed?
_____
_____

4. Does the team have the following materials available to them:

   a) ConnDOT Bridge Inspection Manual [ ]
   b) BITM '90 [ ]
   c) FHWA Structure Appraisal and Coding Guide for the Nations Bridges [ ]
   d) Basic inspection equipment [ ]

5. Does it appear that adequate safety is being used? _____
_____
_____

6. Is the direction of orientation and component labeling system properly determined? _____
_____

7. Are nonredundant members receiving the proper close-up visual inspection? _____
_____

8. Are sketches prepared to locate and size deficiencies of major elements? Are they neatly done in the field? _____
_____

FIELD REVIEW CHECKLIST

9. Are stream cross sections being taken and properly documented for all spans over water? _____

10. Does it appear that the condition rating scale is being used properly? Be specific on problem areas. _____

11. Is the majority of the bridge inspection report being completed in the field? _____

12. Are all notes and sketches neat and legible? _____

13. Do the Inspectors have any specific questions? If so, what? _____

14. Do the Inspectors feel the need for additional training? If so, what? _____

15. Comments: _____

MAINT. 014 REV. 5/93
CREWLEADERS REPORT
(302-06-0366)

STATE OF CONNECTICUT
DEPARTMENT OF TRANSPORTATION
BUREAU OF ENGINEERING & HIGHWAY OPERATIONS

E	ROUTE NO.	BRIDGE FEATURE	
W.O. NO.	TOWN	BRIDGE NO.	D#

ACTIVITY CODE	LABOR COST						EQUIPMENT COST			
NAME	GRADE	HOURS REG.	HOURS OT	RATE REG.	RATE OT	AMOUNT	EQUIPMENT NUMBER	HOURS	RATE	AMOUNT
	REG.									
	Q									
	REG.									
	Q									
	REG.									
	Q									
	REG.									
	Q									
	REG.									
	Q									
	REG.									
	Q									
	REG.									
	Q									
	REG.									
	Q									
					TOTAL LABOR COST	$	TOTAL EQUIPMENT COST			$

WORK DESCRIPTION

MATERIALS OR SERVICES USED

STORES REQ. NO. OR PURCHASE ORDER NO.	CATALOG NO. OR PART NO.	DESCRIPTION ITEM OR SERVICE	NO. UNITS	UNIT COST	AMOUNT

CREW LEADER	DATE	TOTAL MATERIAL COST	$
GENERAL SUPV.	DATE	TOTAL SERVICES COST	$

APPENDIX C

BRIDGE SAFETY & EVALUATION FORMS

Element Data Collection Form - Example PONTIS Input Form

BRI- 8	Inspection Frequency Change Request
BRI- 9	Construction Punch List
BRI-10	Concrete Deterioration Worksheet
BRI-11	Seismic Data Sheet
BRI-12	Fracture Critical Data Sheet
BRI-13	Photo Log
BRI-14	Sliding Bearing Measurement Sheet
BRI-15	Rocker Bearing Measurement Sheet
BRI-16	POT Bearing Measurement Sheet
BRI-17	Joint Measurement Sheet
BRI-18	Bridge Inspection Report Form
BRI-19	Structure Inventory & Appraisal Form (Highway Bridge)
BRI-24	Incident Report Form
BRI-25	Under Entry Structure Inventory & Appraisal Form
BRI-27	Inspection Report Transmittal Form
BRI-29	Pin & Hanger Data/Analysis Form
BRI-30	Hinge Data/Analysis Form
BRI-31	Inspection Scheduling Form
BRI-39	Structure Inventory & Appraisal Form (Railroad Bridge)
BRI-48	Sign Structure Inspection Report Form
BRI-49	Sign Structure Inventory & Appraisal Form
BRI-58	Underwater Inspection Report Form
BRI-59	Underwater Inspection Structure Data Form

Bridge: 00014 **Inspection:** 11/1/95

1 Condition | 2 Notes | 3 Appraisal | 4 Descrip | 5 Custom | 6 Schedule

BI Rating: Deck (58):	4 Poor	Culvert (62):	N N/A (NBI)
Superstructure (59):	5 Fair	Waterway (71):	N Not applicable
Substructure (60):	6 Satisfactory	**Unrepaired spalls:**	-1.000 sq.m.
Channel (61):	N N/A (NBI)	**Review Required:**	☒

Structural unit: 0 - Main Span - 3 Steel - 02 Stringer/Girder 1 of 1

Elem/Env		State 1	State 2	State 3	State 4	State 5
14 / 3	P Conc Deck/AC Ovly (ea)					4285 sq.
Percent		100.0	0.0	0.0	0.0	0.0
Quantity		4285	0	0	0	0
301 / 3	Pourable Joint Seal					44 m.
Percent		98.0	0.0	2.0	0.0	0.0
Quantity		43	0	1	0	0
305 / 3	Asphaltic Plug Joint					722 m
Percent		90.0	0.0	10.0	0.0	0.0
Quantity		650	0	72	0	0
331 / 3	Conc Bridge Railing					460 m.
Percent		96.0	4.0	0.0	0.0	0.0
Quantity		442	18	0	0	0
107 / 3	Paint Stl Opn Girder					2050 m.
Percent		0.0	36.0	60.0	4.0	0.0
Quantity		0	738	1230	82	0
311 / 3	Moveable Bearing					70 ea.
Percent		0.0	94.0	6.0	0.0	0.0
Quantity		0	66	4	0	0
313 / 3	Fixed Bearing					70 ea.
Percent		99.0	1.0	0.0	0.0	0.0
Quantity		69	1	0	0	0
205 / 3	R/Conc Column					32 ea.
Percent		38.0	53.0	9.0	0.0	0.0
Quantity		12	17	3	0	0
215 / 3	R/Conc Abutment					78 m.
Percent		90.0	8.0	2.0	0.0	0.0
Quantity		70	6	2	0	0
234 / 3	R/Conc Cap					153 m.
Percent		87.0	7.0	6.0	0.0	0.0
Quantity		133	11	9	0	0
359 / 3	Soffit Smart Flag (ea)					1 ea.
Percent		0.0	0.0	100.0	0.0	0.0
Quantity		0	0	1	0	0

STATE OF CONNECTICUT
DEPARTMENT OF TRANSPORTATION
BRIDGE SAFETY & EVALUATION

INSPECTION FREQUENCY CHANGE REQUEST

FORM BRI 8 ISSUED 4/00

BRIDGE NUMBER	TOWN NAME	NBIS

FACILITY CARRIED	FEATURE CROSSED

(90) INSP. DATE	(91) FREQ	(90I) INDEPTH DATE

(93B) UW INSP. DATE & FREQ.		(93C) SPEC. INSP. DATE & FREQ.	

PROPOSED			
(90P) INSP. DATE		FREQ.	
UW INSP. DATE		UW FREQ.	
SPEC. INSP. DATE		SPEC.FREQ.	
(Prop. inspection & uwater dates should match)		(Max. inspection freq 48 mos.)	

BS&E RECEIVED ☐ DATA ENTRY DATE _____
COPIES MADE ☐ DATA ENTERED BY _____

Submitted by: _____ Date _____

Reviewed by: _____ Date _____

Structure Inventory Data

(43) Structure Type					
(45) No. of Spans			(54) Min. Vert. Clearance >=14'0"		
(48) Max. Span Lgth <=100'			(27) Year Built <=75 yrs. old		
(49) Structure Lgth			(106) Year Rebuilt >=4 yrs. old		
(29) ADT <=125,000			(66) Inv. Rating >=30 tons		
(109) ADTT <=10%			(64) Operating Rating		
Struc. Operational Status:			Evaluation type & year:		

Condition Rating

(58) Deck	
(59) Superstructure	
(60) Substructure	
(61) Channel	
(62) Culverts	
(113) Scour Critical Bridge	
Scour screening susceptibility rating	

An assessment of frequency and degree of overload that is anticipated on the structure has been made and found to be:
Acceptable ☐ Not Acceptable ☐ Date: __/__/__ By: _____

Has there been major maintenance or structural repairs performed during the past two years? If yes, explain.

Comments:

Approved by: _____ Date: _____

Manager, Bridge Safety & Evaluation Section

Approved by: _____ Date: _____

Federal Highway Administration

NOTES:
...rm is to be used to increase or decrease inspection frequency.

...r to proposing to change inspection frequency, the submitter must review the bridge inspection file and Bridge Inspection Manual (BIM) section 3.2.2.2 "INCREASED INSPECTION INTERVAL" as approved by the FHWA. All requirements of this section must be met unless otherwise noted below.

For non-NBIS structures, there are no scour susceptibility index ratings nor item 113 "scour critical bridge" assignments. Thus, visual scour evidence, history of scour at the structure, channel stability and vulnerability of the structure to failure due to scour should be considered and utilized instead.

BRIDGE SAFETY AND EVALUATION

DATE: _____

CONSTRUCTION PUNCH LIST

Form BRI-9, Rev. 9/97

Construction Project Number: _____

Bridge No. _____ Town: _____ Route: _____

Feature Intersected: _____

Bridge Type: _____

Mile Point: _____ Construction District: _____

Construction Company Name: _____

D.O.T. Construction Inspector's Name: _____

List of Items to be Corrected or Completed:

1. _____
2. _____
3. _____
4. _____
5. _____
6. _____
7. _____
8. _____
9. _____
10. _____

DATE: _____

CONSTRUCTION PUNCH LIST Form BRI-9, Rev. 9/97

Bridge No. _____

Photo Log:

1. _____
2. _____
3. _____
4. _____
5. _____

Additional Comments (If any):

_____

_____

_____

_____

_____

_____

Date copy sent to Construction: _____

Submitted By: _____ Date: _____

Checked By: _____ Date: _____

CONCRETE DECK DETERIORATION WORKSHEET

Purpose: This form is used to tally the deteriorated areas on both the topside (of bare concrete decks) and underside of the deck. The areas tallied are then used to calculate what percentage of the deck is deteriorated. The maximum % deterioration in any one span and the total % deterioration for the structure are then reviewed to determine the concrete deck condition rating in accordance with Section 10.1.

Instructions for completing Form BRI-10:

1. Estimate the area (in square feet) of each type of deterioration in each span. This can be done by totaling all the individual areas drawn on a deck sketch or by some rational method of estimating the area.

   Example: 25% of each 6' x 20' bay has map cracking with efflorescence. Assume there are 8 bays. The number to be recorded under "Map Cracking: w/Efflorescence" = 25% x 6' x 20' x 8 bays = 240 sq. ft.

   For multi-span structures, total the deteriorations for the whole bridge across each row to the column on the right side of the form.

2. Calculate the deck area of each span using the plans. This should be the out-to-out of deck dimension multiplied by the center to center of deck joints dimension. For multi-span structures, total the deck area for the whole bridge across to the column on the right side of the form.

3. Calculate the % spalled and delaminated on the topside of bare decks in each span by dividing the spalled and delaminated area by the total span area. Do the same in the total column (total % deterioration is calculated by summing the areas of deterioration and dividing by the total deck area, not by summing the individual span %'s).

4. Calculate the % deterioration on the bottom by adding the spalled, delaminated, scaled, cracked and honeycomb areas, and dividing by the total span area in each span. Do the same in the total column (total % deterioration is calculated by summing the areas of deterioration and dividing by the total deck area, not by summing the individual span %'s).

Bridge No.: _____ Date: _____ Prepared By: _____ Checked By: _____

CONCRETE DETERIORATION WORKSHEET

Form BRI-10, Rev. 9/01

	Deterioration By Span - In Square Feet										
	Span Number										
Deterioration Type	1	2	3	4	5	6	7	8	9	10	Total
Spalled and Delaminated Areas	Top:	Top:	Top:	Top:	Top:	Top:	Top:	Top:	Top:	Top:	Top:
	Bot:	Bot:	Bot:	Bot:	Bot:	Bot:	Bot:	Bot:	Bot:	Bot:	Bot:
Scale (Moderate to Severe Only)	Top:	Top:	Top:	Top:	Top:	Top:	Top:	Top:	Top:	Top:	Top:
	Bot:	Bot:	Bot:	Bot:	Bot:	Bot:	Bot:	Bot:	Bot:	Bot:	Bot:
Cracks: w/Efflorescence (use 6 in. width x length)	Bot:	Bot:	Bot:	Bot:	Bot:	Bot:	Bot:	Bot:	Bot:	Bot:	Bot:
w/o Efflo. (use 3 in. width x length)	Bot:	Bot:	Bot:	Bot:	Bot:	Bot:	Bot:	Bot:	Bot:	Bot:	Bot:
Map Cracking: w/Efflorescence (use full area)	Bot:	Bot:	Bot:	Bot:	Bot:	Bot:	Bot:	Bot:	Bot:	Bot:	Bot:
w/o Efflo. (use 50% of area)	Bot:	Bot:	Bot:	Bot:	Bot:	Bot:	Bot:	Bot:	Bot:	Bot:	Bot:
Honeycombed Areas (only areas more than 1 1/2 in. deep)	Bot:	Bot:	Bot:	Bot:	Bot:	Bot:	Bot:	Bot:	Bot:	Bot:	Bot:
Total Span Area (Square Feet)											
% Spalled and Delaminated on Top											
% Deterioration on Bottom											

PREPARED BY: _____ DATE:_____

FIELD VERIFIED BY: _____DATE:_____

ENTERED BY: _____DATE:_____

SEISMIC DATA SHEET

Form BRI11, Rev 9/97

BRIDGE#:_____

Town:_____

Feature Crossed:_____

Feature Carried:_____

PIER/ABUTMENT#:_____

PIER HEIGHT:_____FT

SPAN#: _____

EFFECTIVE SPAN LENGTH:_____FT

ADT_____ YR OF ADT_____ *note:* if A/B bridge, use total ADT for both bridges

MAJOR RIVER CROSSING? Yes No

PROXIMITY TO A HOSPITAL? Yes No

TWO-GIRDER OR THREE-GIRDER DESIGN SUPERSTRUCTURE? Yes No

DETOUR LENGTH: _____ Miles

EXPANSION BEARING TYPE: _____ IF ROCKER, HEIGHT: _____ Inches

EXPANSION BEARING LONGITUDINAL SUPPORT LENGTH: _____ Inches

ARE BEARINGS ON PEDESTALS? Yes No

(Bearing Pad > 6 Inches High)

ARE EXPANSION BEARINGS TRANSVERSELY RESTRAINED: Yes No

TRANSVERSE SUPPORT LENGTH:_____Inches

PRELIMINARY SEISMIC SCREENING

INTRODUCTION

Preliminary seismic screening is the first step of the seismic retrofitting program which will rate and identify the need for further evaluation and the potential upgrading of the seismic resistance of existing highway bridges. This guideline has been established by the Bridge Safety and Evaluation Section for gathering data required for the preliminary seismic screening of the eligible structures in Connecticut.

The data noted in this guideline are the primary source for calculating the Seismic Rating (SER). The SER is a numeric value (similar to the Sufficiency Rating) in which 100 represents an entirely seismically sufficient bridge (with no need for further evaluation or seismic retrofitting) and, 0 represents an entirely seismically insufficient bridge (with greatest need for further evaluation and/or seismic retrofitting). Ultimately, a prioritized list of all structurally vulnerable NBIS bridges will be developed for next phase of the seismic retrofitting program.

In an effort to eliminate unnecessary input, most of the data required for calculating **Importance** will be obtained from the NBI database and, the data required for **Seismicity** will be gathered by the office staff utilizing the National Highway Institute Map of Horizontal Acceleration. The information for **Vulnerability** are mostly will be obtained from the completed Seismic Data Sheets.

II. ELIGIBLE STRUCTURES

Generally, the following structure types with an NBIS bridge length greater than or equal to twenty feet are considered seismically sensitive, marked on the six-month inspection list, and they **will** be run through the preliminary seismic screening:

Type Number	Structure Type
303	Steel Two-Girder/Floorbeam System
306	Steel Box Beam-Single or Spread
309	Steel Truss Deck
310	Steel Truss Thru
312	Steel Arch Thru
315	Steel Movable Lift
316	Steel Movable (Bascule)
317	Steel Continuous Movable- Swing
402	Steel Continuous Multi-Stringer/Girder
403	Steel Continuous Two-Girder/Floorbeam System
405	Steel Continuous Box Beam
406	Steel Continuous Box Beam-Single or Spread
502	Prestressed Concrete Stringer/Girder
505	Prestressed Concrete Box Beam
506	Prestr. Concrete Box Beam-Single or Spread
602	Prestr. Concrete Continuous Stringer/Girder
605	Prestr. Concrete Continuous Box Beam
606	Prestr. Concrete Continuous Box Beam-Single or Spread

Generally, the following structures are not considered seismically sensitive and thus **will not** be run through the preliminary seismic screening:

Culverts
Rigid Frame Structures [steel or concrete]
Concrete Slabs

Furthermore, structures scheduled for Replacement and under 20' structures also **will not** be run through the seismic screening.

III. SEISMIC RATING (SER) FORMULA

The seismic rating formula is a method of evaluating data for three separate factors: Importance, Vulnerability, and Seismicity. The resulting numeric value will indicate the need for evaluation and possible seismic retrofit.

$$SER = 100 - V\,[\,(0.4V) + (0.4I) + (11.764S)]$$

IMPORTANCE (I)	Considers:	Average Daily Traffic Length of Detour Route Proximity to Hospitals If Structure is on an Interstate Highway If Structure Crosses a Major River
SEISMICITY (S)	Considers:	Acceleration Coefficient of Structure (Based on AASHTO map of Coefficients)
VULNERABILITY (V)	Considers:	Type of Bearing Support Length (Longitudinal/Transverse) Restraint (Longitudinal/Transverse) Column/Pier Height

IV. DATA COLLECTION PROCEDURE

Prior to the biennial inspection for each of the eligible structures, the field senior engineer should obtain all appropriate structural plans and inspection reports and prepare a Seismic Data Sheet (SDS).

The field senior should review the profile of each structure to identify the effective span associated with the tallest pier or group of piers. Judgement should be used to determine if it is necessary to select one or two other critical locations.

For most structures: It should be sufficient to check one location in order to identify the most seismically sensitive section of the structure. (i.e. The tallest pier, the maximum effective span and least available seat width).

For complex multi-span bridges: (usually with more than 15 spans and varied pier heights and bearing types) it might be necessary to check more than one pier.

Completed Seismic Data Sheets for each critical location should be forwarded by the senior engineer to the appropriate inspection teams prior to the start of the biennial inspection. (Completed SDS for all CE Bridges shall be sent to the CE project engineer).

All recorded information on the SDS should be verified for accuracy by the field inspection team. Special attention should be given to the support length measurements and bearing types. The completed SDS shall be attached to the regular inspection reports and forwarded to the office.

The office staff will then input the SDS data when the structure inventory (BRI-19's) are updated.

V. DETAILS

There will be instances that structures encountered do not conform to one or more of the items presented below. While these situations should be brought to the attention of the supervisor, any assumptions or reasons justifying the coded information should be noted on a attached sheet.

Piers and/or Abutments:

The most critical element to analyze is the tallest pier. The height of the tallest pier will govern regardless if it is located at a fixed or expansion bearing. Circle either Pier or Abutment and record the number:

1. Pier Height :

   Measured from the top of the footing to the top of the pier cap of the tallest pier.

2. Abutment Height :

   Measured as follows:

   a) For SIMPLE SPAN structures:

   H = 0

   b) For MULTIPLE SPAN structures:

   H= height of tallest pier

Span Number:

Identify the Longest Effective Span Length. Record the span numbers used in the effective span length. This may include one or many spans or parts of spans.

Effective Span Length:

Record the effective span length in feet. This is measured as the length of the deck from expansion joint to expansion joint.

ADT:

For most structures, the ADT will be obtained from the NBI database. This value should be checked and updated if necessary. For parallel bridges carrying each direction of a divided highway and reported as two different numbers (i.e. an A/B bridge), calculate and record the ADT for both sister bridges. These structures in a seismic event both would be impacted in a similar fashion.

Major River Crossing

The rivers in the State of CT considered major rivers are as follows:

-Connecticut River	-Norwalk River	-Yantic River
-Housatonic River	-Saugatuck River	-Mystic River
-Thames River	-Yellow Mill River	-Quinebaug River
-Quinnipiac River	-Byram River	-Shetucket River
-Naugatuck River	-Farmington River	
-Pequonnock River	-Niantic River	

If the bridge crosses one of these rivers, then it is considered to cross a major river and Yes should be circled on the Seismic Data Sheet. If not, then circle No.

Proximity to Hospital

If the closure of the structures will close off a large amount of traffic from accessing a hospital, and/or if the bridge is within a city block of a hospital, then the structure is considered adjacent to the hospital and one should circle Yes. If not, then circle No.

Two-Girder or Three-Girder Design Superstructure

If the superstructure is a two-girder or a three-girder design circle Yes. If not, then circle No.

Detour Length:

For most structures, the Detour Length will be obtained from the NBI database. This value should be checked and updated if necessary. For parallel bridges carrying each direction of a divided highway where the ADT has been combined, detour length should be determined without utilizing the parallel structure. Detour Length must be compatible with the ADT used on the SDS.

Type of Bearing:

Record the type of expansion bearing present on the structure. If the bearing is a Rocker, record the rocker height for the highest bearing, in inches (measured from the center line of the top pin to the top of the concrete bearing pad).

Expansion Bearings--Longitudinal Support Length:

Record the longitudinal support length in inches.

Measure the support length normal to the edge of the supporting substructure or pedestals. Refer to the attached diagrams.

Bearing Seat:

If the tallest bearing pad is higher than 6 inches, the bearing seat is considered to be a pedestal. If the tallest bearing pad is less than 6 inches high, then the bearing seat is considered to be continuous.

Expansion Bearings--Transverse Restraint:

If the Expansion Bearings are restrained against transverse movement, circle YES. Concrete Keeper blocks are the only acceptable type of transverse restraint.

Expansion Bearings--Transverse Support Length:

Record the minimum transverse support length in inches.

Transverse support length at expansion bearings needed to be obtained only for Two-Girder or Three-Girder Design Superstructures and/or **any** structure which is supported on pedestals. Refer to the attached diagrams.

Even though limited transverse restraint is provided by pintels (rocker bearings), anchor bolts and cheek walls, the resistance provided by these and other elements were not specifically designed for seismic, therefore, the elements are ignored for the Preliminary Seismic Screening.

Bearing Pad greater than 6 inches high

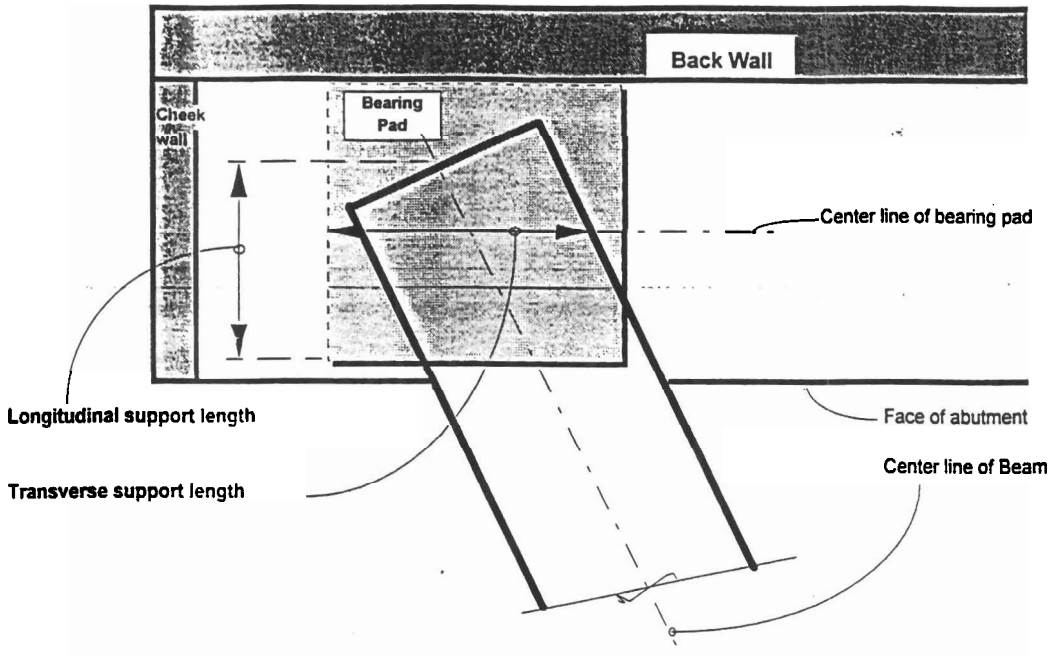

Bearing Pad less than 6 inches high

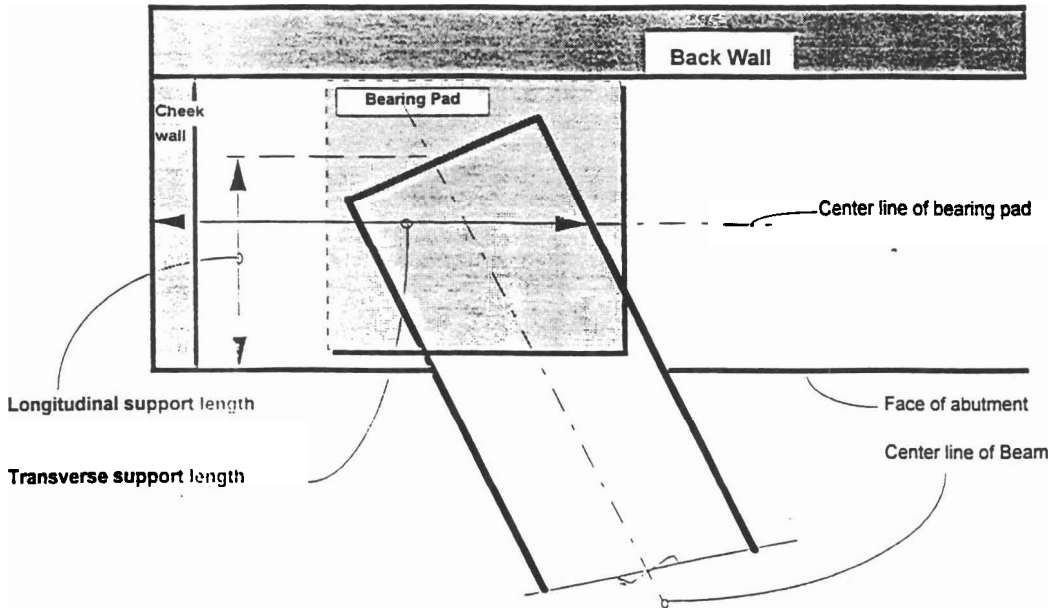

CONNECTICUT DEPARTMENT OF TRANSPORTATION
FRACTURE CRITICAL MEMBERS/FATIGUE PRONE DETAILS
INSPECTION DATA SHEET

Form BRI12, Rev 9/97

Fracture Critical Inspection Date:

FC Insp Freq: Months **FC Type Code:**

Bridge No:

Year Built:

Town: ADT: Year of ADT:

Facility Carried: Structure Type: % Truck:

Feature Intersected:

Access Equipment Needed:

Traffic Control Required:

Reference to Plans:

MEMBER/DETAIL TYPE #

Member/Detail Type: Fracture Critical

Fatigue Category: Steel Type: Fatigue Prone

Description:

Inspection Procedure:

MEMBER/DETAIL TYPE #

Member/Detail Type: Fracture Critical

Fatigue Category: Steel Type: Fatigue Prone

Description:

Inspection Procedure:

CONNECTICUT DEPARTMENT OF TRANSPORTATION
FRACTURE CRITICAL MEMBERS/FATIGUE PRONE DETAILS
INSPECTION DATA SHEET

Form BRI12, Rev 9/97

MEMBER/DETAIL TYPE # ☐

Member/Detail Type: ☐ Fracture Critical

Fatigue Category: ☐ Steel Type: ☐ ☐ Fatigue Prone

Description:

Inspection Procedure:

MEMBER/DETAIL TYPE ☐

Member/Detail Type: ☐ Fracture Critical

Fatigue Category: ☐ Steel Type: ☐ ☐ Fatigue Prone

Description:

Inspection Procedure:

MEMBER/DETAIL TYPE ☐

Member/Detail Type: ☐ Fracture Critical

Fatigue Category: ☐ Steel Type: ☐ ☐ Fatigue Prone

Description:

Inspection Procedure:

MEMBER/DETAIL TYPE ☐

Member/Detail Type: ☐ Fracture Critical

Fatigue Category: ☐ Steel Type: ☐ ☐ Fatigue Prone

Description:

Inspection Procedure:

INSTRUCTIONS FOR FILLING OUT THE FRACTURE CRITICAL MEMBERS / FATIGUE PRONE DETAILS INSPECTION DATA SHEET

- Information for General Bridge Data -

The Bridge No, Year Built, Town, AT, Year of AT, Facility Carried, Structure Type, % Truck, and Feature Intersected along with any of the Fracture Critical information within the bold faced box are all loaded directly from the NBIS data base.

"Access Equipment Needed:" - List any special equipment required to inspect the areas outlined below. This may include the 40 or 60 foot under bridge inspection vehicle, bucket trucks, climbing gear, safety boats, inspection rafts, air meter or any other type of special inspection equipment. On larger structures where there may be different equipment required in different spans, the information should be listed out which spans need what equipment.

"Traffic Control Required:" - List any lane closures, crash trucks or under bridge inspection vehicle back-up required for the inspection. On larger structures where there may be different traffic control required in different spans, the information should be listed out which spans need what traffic control. This should also include any required railroad flagman.

"Reference to Plans:" - List the project and map file numbers for the bridge including any major rehabilitation projects. Also include whether a copy of the plans are in the Bridge Safety and Evaluation bridge file or plan storage, on microfilm or at the Departments Engineering Records Storage Facility at 160 Pascone Place in Newington.

- " MEMBER / DETAIL TYPE " -

Each type or category of Fracture Critical Member and/or Fatigue Prone Detail will be broken down to separate sections within the inspection data sheet. Use as many sections as needed to accurately represent the conditions of the bridge.

The AASHTO Guide Specification for Fracture Critical Bridge Members explains "Fracture Critical Members or member components (FCMs) are tension members or tension components of members whose failure would be expected to result in the collapse of the bridge." Examples are one or two girder bridges, pin and hangers, pier cap girders, through trusses, tied arches and suspension bridges. Any detail which is AASHTO category E, E' or F is considered a Fatigue Prone Detail. See "Fatigue Category" below.

"Member / Detail Type: " - Choose from a pick list, a code and description that best describes this type of Fracture Critical Member and/or Fatigue Prone Detail which is going to be inventoried in this section. Each type or category will be placed in a separate section. These codes and list are taken from Pontis and will be updated as required. A list of the codes and description appears below.

Code	Description
A	One or two steel girder systems
B	Hinges with pin hanger assemblies
	Steel bent caps sustaining tensile stresses
D	Steel trusses
E	Steel tension elements consisting of less than 3 multiple eyebars
F	Suspension or cable structures
G	Single and multiple cell steel box girders
H	Highly fatigue prone details in tension areas
I	High strength steel girders
J	Horizontally curved girders
K	Details that promote out of plane bending (staggered cross frames, etc.)
L	Electroslag welding fabrication procedures.
M	Partial length welded cover plates
N	Exposed prestress tendons
O	Super/sub integral framing details (floor beam/stringers)
P	Tied arches

" **Fracture Critical / Fatigue Prone** " - On the right hand of each section, there are two small squares (on the paper worksheet) or circles (on the computer screen) labeled Fracture Critical and Fatigue Prone. For the member/detail described in this section, check off if the structure is Fracture Critical and/or if it is Fatigue Prone. If it is both, which is the condition to be inspected most closely, enter both squares or circles.

"**Fatigue Category:** " - From a selection list, choose A, B, B', C, D, E, E', or F. These categories are stated in AASHTO Section 10.3 and are summarized in the FHWA Manual 90 Section 18.5.3 . Only Categories E, E' and F are considered Fatigue Prone and should be examined at every inspection.

"**Steel Type:** " - From a selection list, choose what type of steel the member or detail is constructed from. The choices are A-36, A-242, A-514, A-572, A-588, A-709, A-373, A-7 or Other .

"**Description:** " - Enter a specific description of the F.C. member and/or F.P. detail. This should include where (beam numbers and spans) the member/detail is and how many of this type are at these locations.

"**Inspection Procedure:** " This should describe what type of inspection methods should be performed at this location and any special instructions. Examples of different types of special inspection procedures would include 100% close up hands-on, ultrasonic testing, or magnetic particle.

PHOTO LOG

Form BRI-13, Rev. 9/97

Bridge Information System

Image Inventory

Bridge No. _____ Date _____

Town: _____ Photographer: _____

Carried / Crossed: _____

Film Frame #	Image Description

FIELD NOTES	BRIDGE NO.	DATE:
	CREW:	SHEET

SLIDING BEARING MEASUREMENTS

Form BRI-14, Rev. 9/01

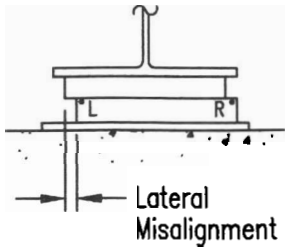

FRONT VIEW

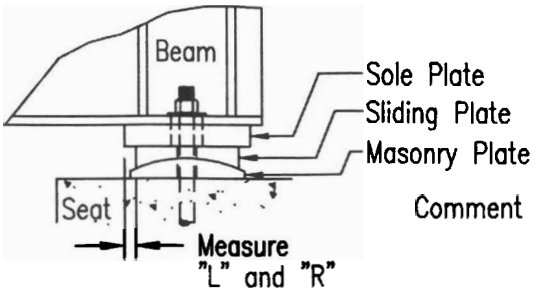

SIDE VIEW

Span No. = _____

Substructure Unit = _____

Temperature = ____°F

Comment On:
- Presence of keepers or work done on bearings.
- Undermining of bearing. Attach sketch with dimensions.
- Cracking of plates or welds.
- Condition of anchor bolts.

Beam	Movement				Condition			Comments
	"L"	"R"	Mode Exp. or Contr.	Lateral Misalign.	Bearing Frozen?	Normal Mov't?	Rust ? H/M/L	

FIELD NOTES	BRIDGE NO.	DATE:
	CREW:	SHEET

ROCKER BEARING MEASUREMENTS

Form BRI-15, Rev. 9/97

Span No. = _____

Substructure Unit = _____

Temperature = _____ °F

$\theta = \sin^{-1} (F-B)/W$

$Y = R \tan \theta$

The "Front" of the bearing is the side facing the fixed bearing.

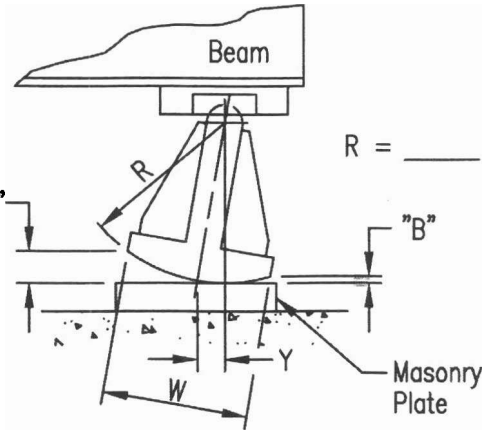

R = _____

W = _____

NOTE:

"F" & "B" should be measured at the left side corners of the rocker or on the side closest to to the front face of the substructure on skewed bridges.

Beam	"F"	"B"	Y	Cont. or Exp.	Comments

FIELD NOTES	BRIDGE NO.	DATE:
	CREW:	SHEET

POT BEARING MEASUREMENTS

Form BRI-16, Rev. 9/97

Note: Guided expansion bearing shown, non-guided expansion bearings do not have keeper bars. (see notes below)

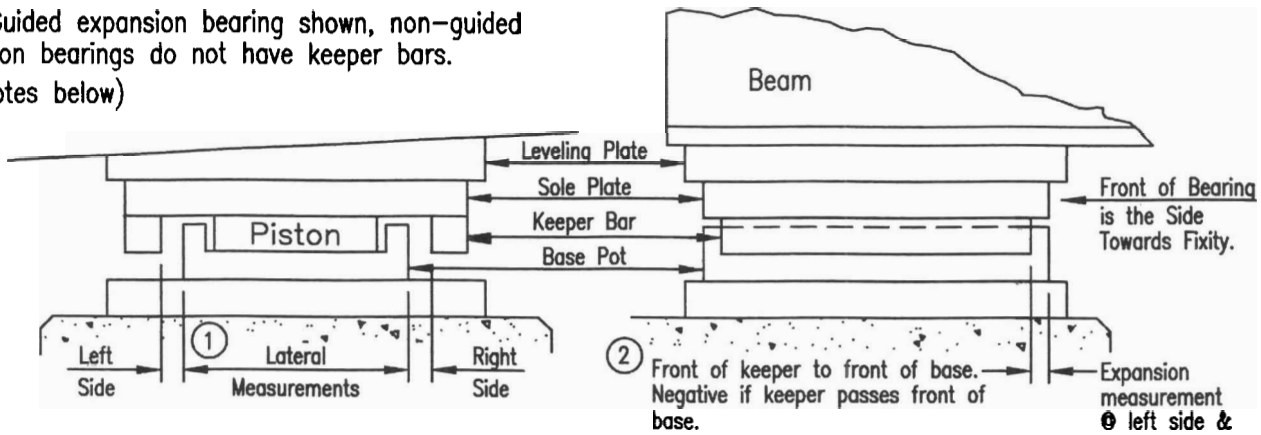

FRONT VIEW

SIDE VIEW

(1) –Left & Right are determined when facing the Front of the Bearing.
–For non-guided bearings, measure from side of sole plate to side of piston @ center line of piston.

(2) –For non-guided bearings, measure expansion from front of sole plate to front of piston @ center line of bearing.

Span No. & Substructure Unit = _____ Temperature = ____°F

Beam	Expansion			Lateral		Comments
	Exp. Measurement		Side of Brg.	Left	Right	
	L	R	(N,S,E,W)			

JOINT MEASUREMENTS

Form BRI-17, Rev. 9/97

Measurements Taken By: _____

Measurements Reviewed By: _____

Bridge No.: _____ _____ **Town:** _____

Deck Joint Location	Deck Joint Type[1]	Effect Span[2] (ft.)	Winter Measurements			Summer Measurements			Differential Movements			Comments	Difference Between Actual & Calc'd Mov't	
			Temp °F	Date: Left (in.)	Right (in.)	Temp °F	Date: Left (in.)	Right (in.)	Actual Left (in.)	Actual Right (in.)	by Formula		Left (in.)	Right (in.)

1. The "Deck Joint Type" should be "plug" for Asphaltic Plug joints, "strip" for Strip Seals, "seg." for Segmental Joints, etc.
2. The "Effective Span" is the length contributing to expansion at the joint. This should be 0 at fixed joints of single span bridges.

Connecticut Department of Transportation

Bridge Inspection Report BRI-18

BRIDGE #: | **INSPECTION DATE:**

INSPECTION TYPE: | **PREVIOUS INSPECTION DATE:** | **SNOOPER REQUIRED:**

INSPECTION PERFORMED BY: | **SNOOPER USED:**

TOWN: | **FEATURE CARRIED:** | **YEAR BUILT:**

LOCATION: | **FEATURE INTERSECTED** | **YEAR REBUILT:**

MAIN MATERIAL: | **MAIN DESIGN:**

INSPECTION VISITS: | **INSPECTORS:**

58. DECK

OVERALL RATING

	RATING	
OVERLAY		
DECK STR. CONDITION		
CURBS		
MEDIAN		
SIDEWALKS		
PARAPET		
RAILING		
PAINT		
FENCE		
DRAINS		
LIGHTING STANDARD		
UTILITIES TYPE/SIZE		
CONSTRUCTION JOINTS		
EXPANSION JOINTS		

59. SUPERSTRUCTURE

OVERALL RATING

	RATING	
BEARING DEVICES		
STRINGERS		
GIRDERS		
FLOOR BEAMS		
TRUSSES-GENERAL		
TRUSSES-PORTALS		
TRUSSES-BRACING		
PAINT		
RUST		
MACHINERY MOV SPAN		

Connecticut Department of Transportation

Bridge Inspection Report BRI-18

BRIDGE #: **INSPECTION DATE:**

RIVETS & BOLTS	
WELDS & CRACKS	
TIMBER DECAY	
CONCRETE CRACKING	
COLLISION DAMAGE	
MEMBER ALIGNMENT	
DEFLECT. UNDER LOAD	
VIBR. UNDER LOAD	
STAND PIPES	
BARREL LADDERS	

ARE BARREL LADDERS OSHA COMPLIANT?

60. SUBSTRUCTURE **OVERALL RATING**

	RATING	
ABUTMENTS-STEM		
ABUTMENTS-BACKWALL		
ABUTMENTS-FOOTINGS		
ABUT.-SETTLEMENT		
ABUTMENTS-WINGWALLS		
PIERS/BENTS-CAPS		
PIERS/BENTS-PILE BENT		
PIERS/BENTS-COLUMN		
PIERS/BENTS-FOOTINGS		
PIERS/BENTS-SETTLEMent		
EROSION-SCOUR		
CONCRETE CRACK-SPALL		
STEEL CORROSION		
PAINT		
TIMBER DECAY		
COLLISION DAMAGE		
DEBRIS		

61. CHANNEL PROTECTION **OVERALL RATING**

	RATING	
CHANNEL SCOUR		
EMBANKMENT EROSION		
DEBRIS		
VEGETATION		

Connecticut Department of Transportation

Bridge Inspection Report BRI-18

BRIDGE #: **INSPECTION DATE:**

CHANNEL CHANGE
FENDER SYSTEM
SPUR DIKES & JETTIES
RIP RAP

62. CULVERTS & RETAINING WALL **OVERALL RATING**

RATING

BARREL
CONCRETE
STEEL
TIMBER
HEADWALL
CUTOFF WALL
DEBRIS
RETAINING WALL STEM
FOOTING

APPROACH CONDITION **OVERALL RATING**

RATING

APPROACH SLAB
RELIEF JOINTS
APPROACH GUIDE RAIL
APPROACH PAVEMENT
APPROACH EMBANKMENT

TRAFFIC SAFETY FEATURES:

BRIDGE RAILINGS
TRANSITIONS
APPROACH GUARDRAILS
APPR. GUARDRAIL ENDS

LOAD POSTING

SINGLE UNIT (TONS)
HS (TONS)
4 AXLE (TONS)
2S3 (TONS)
ADVANCE WARNING Y/N
LEGIBILITY
VISIBILITY/LOCATION

Connecticut Department of Transportation

Bridge Inspection Report BRI-18

BRIDGE #: _____ **INSPECTION DATE:** _____

MISC.

MIN VERT. UNDERCLR.	___' ___"	
POSTED CLR. UNDER BRIDGE	___' ___"	
POSTED CLR. ON BRIDGE	___' ___"	
ADVANCE WARNING (Y/N)		
SPEED LIMIT (IF ANY)	___ MPH	
CHARACTER OF TRAFFIC		

ADDITIONAL NOTES

ADDITIONAL COMMENTS:

Inspectors' Signatures:

1) _____ Date: __/__/__

2) _____ Date: __/__/__

3) _____ Date: __/__/__

4) _____ Date: __/__/__

P.E. Signature: _____ Date: __/__/__

P.E.#: _____

Reviewed by: _____ CDOT Date: __/__/__

Bridge Numt

Inspected By: _____ & _____

Sufficiency Rating

Previous Inspection Date

BS&E Received ☐ Data Entry By: _____

Copies Made ☐ Data Entry Date: _____

STATE OF CO' CTICUT

DEPARTMENT OF TR..SPORTATION

BRIDGE SAFETY & EVALUATION

STRUCTURE EVALUATION

SHEET 1 OF 2 FORM BRI-19 REV 10/00

SHEET_____ OF_____ (INSP. REPORT)

90) Inspection Date | Inspection Team | 91) Fr ncy Class

Indepth Insp | Deck Survey | Access | Flagman

CRITICAL FEATURE INSPECTIONS

	Type	Frequency	Team	Date
Fracture:				
Uwater:				
Special:				

RED FLAG

IDENTIFICATION

Bridge Name

Town Name Town Code

5) Inventory Route:

A) Record Type D) Route Number

B) Signing Prefix E) Directional Suffix

C) Level of Service

6) Feature Intersected

7) Facility Carried

9) Location

11) Milepoint Mile

16) Latitude deg min sec deg min . sec

17) Longitude deg min sec deg min . sec

98) Border Bridge:

A) State Code B) Percent Responsibility %

C) Border Town Name

99) Border Bridge Structure No

STRUCTURE TYPE AND MATERIAL

43) Structure Type, Main:

A) Material B) Design Type

44) Structure Type, Approach:

A) Material B) Design Type

45) Number of Spans, Main Unit

46) Number of Approach Spans

107) Deck Structure Type

108) Wearing Surface/Protective System:

A) Type of Wearing Surface

B) Type of Membrane

C) Type of Deck Protection

AGE AND SERVICE

27) Year Built 106) Year Reconstructed

42) Type of Service:

A) On B) Under

28) Number of Lanes:

A) On B) Under

29) Average Daily Traffic

109) Percent Truck %

30) Year of ADT

19) Bypass, Detour Length miles

GEOMETRIC DATA

48) Length of Max Span ft

49) Structure Length ft

50) Curb or Sidewalk Widths:

A) Left ft . B) Right ft ft

51) Brg Rdwy width,curb-curb ft ft

52) Deck Width, Out-Out ft ft

32) Approach Roadway Width ft ft

33) Bridge Median

Deck Area sqft sq

34) Skew Angle deg

35) Structure Flared

10)Inv. Rte. Min. Vert Clearance ft in ft in

47) Log Inv. Rte. Total Horiz Clr.: ft ft

47) RLog Inv. Rte. Total Horiz. Clr.: ft

53) Min Vert Clearance Over Bridge ft in ft

54) Min Vert Under Clearance Ref ft in Ref ft in

55) Min Lat Under Clearance on Right Ref ft Ref ft

56) Min Lat Under Clearance on Left ft ft

BRIDGE COMMENTS

STRUCTURE EVALUATION

SHEET 2 OF 2 FORM BRI-19 REV 10/00

SHEET_____ OF_____ (INSP. REPORT)

Bridge Number		NBIS Length
Town Name		
Facility Carried		
Feature Crossed		

Inspected By: _____ & _____

CLASSIFICATION

112) NBIS Bridge Length
104) Highway System
26) Functional Class
100) Defense Highway
101) Parallel Structure
102) Direction of Traffic
103) Temporary Structure
110) Designated National Network
20) Toll
21) Maintain
22) Owner
Report Class
37) Historical Significance

LOAD RATING AND POSTING

31) Design Load
63) Operating Rating Type
64) Operating Rating
65) Inventory Rating Type
66) Inventory Rating

Evaluation Code
Year of Evaluation
70) Bridge Posting
41) Structure Status

WATERWAY

DrainageBasinCode
38) Navigation Control
39) Navigation Vert Clr.
40) Navigation Horiz Clr.
116) Vert-Lift Brg Nav Min
111) Pier Abutment Protection

CONDITION

	Rating	By
58) Deck		
59) Superstructure		
60) Substructure		
61) Channel & Chan. Protection		
62) Culverts		

APPRAISALS

	Rating	By
67) Structure Evaluation		
68) Deck Geometry		
69) Under Clear Vert & Horiz		
71) Waterway Adequacy		
72) Approach Rdwy Alignment		
113) Scour Critical		

Items 58 Thru 72 Checked By: _____

36) Traffic Safety Features:
A) Bridge Railings
B) Transitions
C) Approach Guardrail
D) Approach Guardrail End

PROPOSED IMPROVEMENTS

75A) Type of Work Proposed
75B) Work Done By
76) Length of Struct. Improvement ft
94) Bridge Improvement Cost $
95) Roadway Improvement Cost $
96) Total Project Cost $
97) Year of Improvement Cost Est. ft
114) Future ADT
115) Year Future ADT
List No. Project No. Advertised

OTHER FEATURES

Fence Required
Fence Present
Fence Height ft
Fence Type
Fence Material
Fence Top Type

Barrel Ladder
Stand Pipes
Cat Walks
Movable Inspection System
Loose Concrete Checked?

POSTED SIGNS & UTILITIES

Other Posted Signs 1
Other Posted Signs 2
Actual P.L. Single Unit Truck tons
Rec. P.L. Single Unit Truck tons
Actual P.L. Semi-TrailerTruck tons
Rec. P.L. Semi-TrailerTruck tons
Rec. P.L. All Vehicles tons
Posted Vert Clearance On Bridge ft in
Posted Vert UnderClearance ft in
Posted Speed Limit mph
Utility
Utility

Actual P.L. 4Axle Truck tons
Rec. P.L. 4Axle Truck tons
Actual P.L. 3S2 Truck tons
Rec. P.L. 3S2 Truck tons
Actual P.L. All Vehicles tons
ft In
ft In
mph

INSPECTION COMMENTS

Proposed Next Indepth Insp Year

REVIEWED BY _____ Date _____

State of Connecticut
Department of Transportation
Bureau of Highways

Sheet___Of___
Form BRI-24, Rev. 9/97

INCIDENT REPORT

Town:_____ Bridge No.:_____
Route/Street:_____
Over:_____ Type:_____
Inspected by:_____ Date:____/____/____

Date of Incident:____/____/____ Time of Incident:_____ "D" no.:_____

Details of Incident:_____

Immediate Actions Taken:_____

Additional Remarks:_____

BRIDGE NUMBER	TOWN NAME	NBIS BRG LGTH
FACILITY CARRIED	FEATURE CROSSED	

STATE OF CONNECTICUT
DEPARTMENT OF TRANSPORTATION
DIVISION OF BRIDGE SAFETY EVALUATION

INVENTORY ROUTE UNDER STRUCTURE EVALUATION

FORM BRI-25 REV 10/00

INSPECTED BY: _____

REVIEWED BY: _____ DATE: _____

SHEET_____ OF_____ (INSP. REPORT)

IDENTIFICATION

DESCRIPTION:

5) INVENTORY ROUTE:
- A) RECORD TYPE
- B) ROUTE SIGNING PREFIX
- C) DESIGNATED LEVEL OF SERVICE
- D) ROUTE NO.

11) MILE POINT (INV.RTE)

AGE & SERVICE

+ 28B) NUMBER OF INV.ROUTE LANES
* 29) ADT (INV. RTE)
* 109) TRUCK ADT % (INV.RTE)
* 30) YEAR OF ADT (INV. RTE)
* 41) INV ROUTE OPERATIONAL STATUS
19) BYPASS DETOUR LENGTH Miles

GEOMETRIC DATA

+ 10) INV. RTE. MIN. VERT. CLEARANCE ft in ft in
+ 47) LOG INV. RTE. TOTAL HORIZ CLR. ft ft
+ 47) RLOG INV. RTE. TOTAL HORIZ CLR. ft ft
+ 53) LOG MIN VERT CLR OVER BRG RDWAY ft in ft in
+ 53) RLOG MIN VERT CLR OVER BRG RDWAY ft in ft in
+ 55) MIN LAT UNDERCLR ON RIGHT ft ft
+ 56) MIN LAT UNDERCLR ON LEFT ft ft

CLASSIFICATION

26) INV. RTE. FUNCT CLASSIFICATION
100) DEFENSE HIGHWAY DESIGNATION
** 102) DIRECTION OF TRAFFIC
104) HIGHWAY SYSTEM OF INV. ROUTE
110) DESIGNATED NATIONAL NETWORK

POSTED SIGNS

+ POSTED VERT. CLR UNDER BRIDGE ft in ft in

COMMENTS:

* FILL OUT ON EVERY INSPECTION 29, 109, 30, 41

\+ VERIFY EVERY INSPECTION 28B, 10, 47, 53, 55, 56 & POSTED VERT CLEARANCE UNDER THE BRIDGE

** MUST BE FILLED OUT OR VERIFIED ON THE FIRST INSPECTION MADE BASED ON THE NEW FHWA GUIDE 102

STATE OF CONNECTICUT
DEPARTMENT OF TRANSPORTATION
BUREAU OF HIGHWAYS

INSPECTION REPORT TRANSMITTAL FORM

Form BRI-27, Rev. 9/97

Structure No. _____ Town _____

Inspectors _____ Date ___/___/___

TABLE OF CONTENTS

Loose Forms (not bound in report)	No. of Sheets Enclosed
Maintenance Memo	
Flagging Memos	
BRI-11, Seismic Screening Data Sheet	
BRI-12, Fracture Critical Inspection Data Sheet	
BRI-19, HWY Bridge SI&A Form	
BRI-25, Under Entry SI&A Form	
BRI-39, RR Bridge SI&A Form	
BRI-49, Sign Structure SI&A Form	
PONTIS Element Data Collection Form	
Plan Sheets . . . . . Check here if already on file: ☐	

Bound Report Pages	
Title Cover Sheet	
Table of Contents	
Executive Summary	
BRI-18, Bridge Inspection Form	
BRI-48, Sign Structure Inspection Form	
Field Notes (Include Forms BRI-10, BRI-13, BRI-14, BRI-15, BRI-16, BRI-17, BRI-29, BRI-30)	
Calculations :	
Load Rating Evaluation	
Quantities & Cost Estimate	
Photo Sheets	
Negatives	

PIN & HANGER DATA SHEET

Form BRI-29, Rev. 6/99

Measurements Taken By: _____ Date: _____

Bridge No.: _____ _____ Town: _____

Hanger Location: _____ Effective span for Movement: _____ (ft)

Page: _____ of _____

Beam No.	V (in)	J (in)	Tr (in)	Br (in)	Tl (in)	Bl (in)	Out to Out (in)	Secondary System Type	Gap[1] (Y/N)	Nut Restraint System	Temp	Comments
1												
2												
3												
4												
5												
6												
7												
8												
9												
10												

Notes:

1) For Pin & Hanger assemblies with a redundant support system, indicate if there is a gap between the redundant system (bearing) and the bottom flange of the suspended girder.

2) All measurements are taken in reference to log direction.

V : Vertical misalignment of girders @ left edge of girder's bottom flange.

J : Joint opening between webs, measured just above the bottom flange fillet, on the left face of the girder's web.

Out to Out : The out-to-out of hangers taken at the leading edge, based on log direction.

3) Use a permanent marker to indicate locations of field measurements.

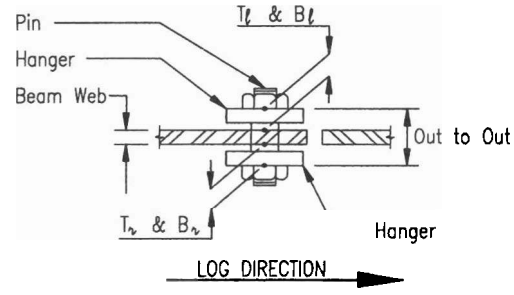

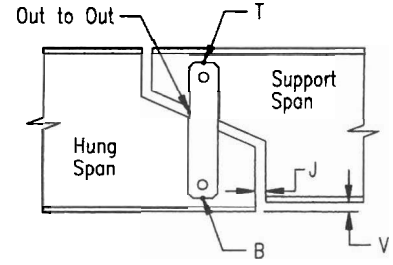

PIN & HANGER DATA SHEET

Form BRI-29, Rev. 6/99

Measurements Taken By: _____ Date: _____

Bridge No.: 0 0 Town: 0

Hanger Location: 0 Effective span for Movement: 0

Page: _____ of _____

Beam No.	V (in)	J (in)	Tr (in)	Br (in)	Tl (in)	Bl (in)	Out to Out (in)	Secondary System Type	Gap[1] (Y/N)	Nut Restraint System	Temp	Comments
1												
2												
3												
4												
5												
6												
7												
8												
9												
10												

Notes:

1) For Pin & Hanger assemblies with a redundant support system, indicate if there is a gap between the redundant system (bearing) and the bottom flange of the suspended girder.

2) All measurements are taken in reference to log direction.

V : Vertical misalignment of girders @ left edge of girder's bottom flange.

J : Joint opening between webs, measured just above the bottom flange fillet, on the left face of the girder's web.

Out to Out : The out-to-out of hangers taken at the leading edge, based on log direction.

3) Use a permanent marker to indicate locations of field measurements.

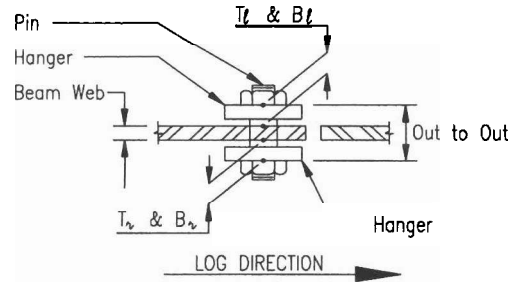

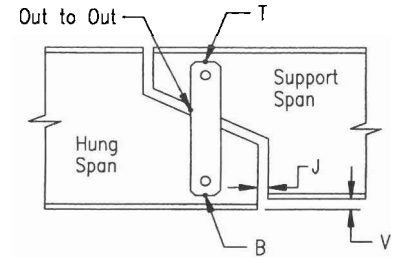

PIN & HANGER ANALYSIS SHEET

Form BRI-29, Rev. 6/99

Measurements Reviewed By: _____ Date: _____

Bridge No.: 0 _____ 0 _____ Town: 0

Hanger Location: 0 _____ Effective span for Movement: 0 (ft) page: _____ of _____

Beam No.	CALCULATED DIFFERENCES BETWEEN MEASUREMENTS ON DATA1 & DATA2							Differential Movement by Formula "J " (in)	Difference Between Actual & Calc. J (in)	Reviewer's Comments
	V (in)	J (in)	Tr (in)	Br (in)	Tl (in)	Bl (in)	Out to Out (in)			
1	0	0	0	0	0	0	0	0	0	
2	0	0	0	0	0	0	0	0	0	
3	0	0	0	0	0	0	0	0	0	
4	0	0	0	0	0	0	0	0	0	
5	0	0	0	0	0	0	0	0	0	
6	0	0	0	0	0	0	0	0	0	
7	0	0	0	0	0	0	0	0	0	
8	0	0	0	0	0	0	0	0	0	
9	0	0	0	0	0	0	0	0	0	
10	0	0	0	0	0	0	0	0	0	

Additional Review Comments:

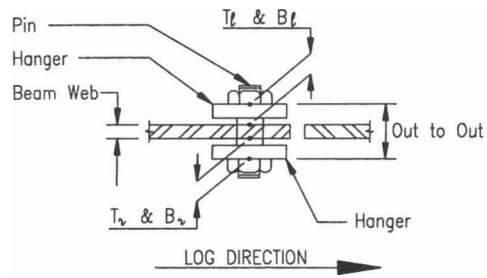

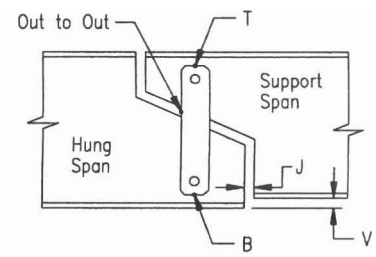

HINGE DATA SHEET

Form BRI-30, Rev. 9/97

Measurements Taken By: _____ Date: _____

Bridge No.: _____ _____ Town: _____ _____ Date: _____

Hinge Located: _____ Effective span for Movement: _____ (ft) Page: _____ of _____

Beam No.	V (in)	J (in)	R (in)	L (in)	Secondary System Type	Gap[1] (Y/N)	Nut Restraint System	Comments
1								
2								
3								
4								
5								
6								
7								
8								
9								
10								

Notes:

1) For Hinge assemblies with a redundant support system, indicate if there is a gap between the redundant system (bearing) and the bottom flange of the suspended girder.

2) All measurements are taken in reference to log direction.

V : Vertical misalignment of girders @ left edge of girder's bottom flange.

J : Joint opening between webs, measured just above the bottom flange fillet, on the left face of the girder's web.

3) Use a permanent marker to indicate locations of field measurements.

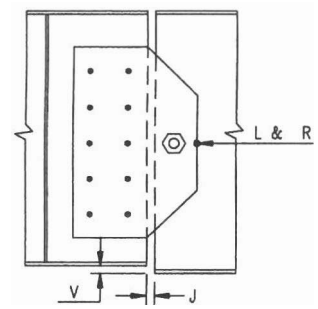

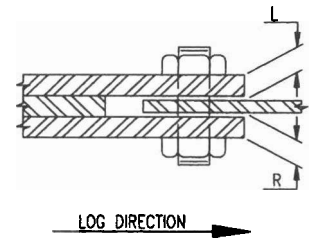

HINGE DATA SHEET

Form BRI-30, Rev. 6/99

Measurements Taken By: _____ Date: _____

Bridge No.: _____ _____ Town: _____ _____ _____

Hinge Located: _____ Effective span for Movement: _____ (ft) Page: _____ of _____

Beam No	V (in)	J (in)	R (in)	L (in)	Secondary System Type	Gap[1] (Y/N)	Nut Restraint System	Comments
1								
2								
3								
4								
5								
6								
7								
8								
9								
10								

Notes:

1) For Hinge assemblies with a redundant support system, indicate if there is a gap between the redundant system (bearing) and the bottom flange of the suspended girder.
2) All measurements are taken in reference to log direction.
   - **V** : Vertical misalignment of girders @ left edge of girder's bottom flange.
   - **J** : Joint opening between webs, measured just above the bottom flange fillet, on the left face of the girder's web.
3) Use a permanent marker to indicate locations of field measurements.

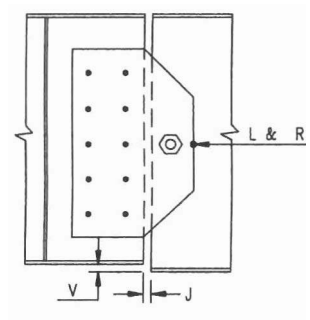

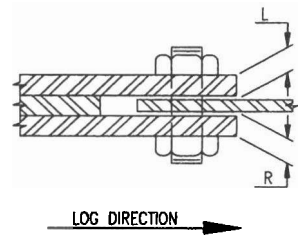

HINGE ANALYSIS SHEET

Form BRI-30, Rev. 9/97

Measurements Reviewed By: Date: _____

Bridge No.: 0 _____ 0 _____ Town: 0

Hanger Location: 0 Effective span for Movement: 0 (ft) Page: _____ of _____

Beam No.	CALCULATED DIFFERENCES BETWEEN MEASURMENTS ON DATA1 & DATA2				Reviewer's Comments
	V (mm)	J (mm)	R (mm)	L (mm)	
1	0	0	0	0	
2	0	0	0	0	
3	0	0	0	0	
4	0	0	0	0	
5	0	0	0	0	
6	0	0	0	0	
7	0	0	0	0	
8	0	0	0	0	
9	0	0	0	0	
10	0	0	0	0	

Additional Review Comments:

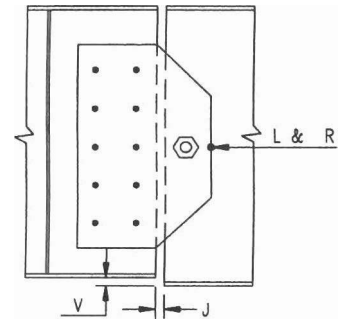

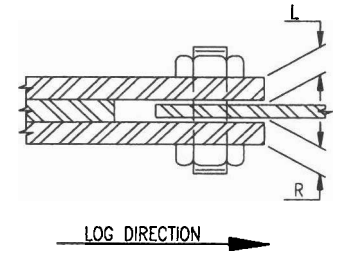

INSPECTION SCHEDULING - SERVICE REQUEST FORM

Form BRI-31, Rev. 9/97

Under Bridge Inspection Units, Sign Patterns and Lane Closures

(1) Date: _____ (2) Date Required: _____

(3) Bridge No.: _____ (4) Town Bridge: Yes _____ No _____

(5) Town: _____ (6) District: _____

(7) Feature Carried: _____

(8) Feature Crossed: _____

(9) Lane Closures: _____

---

(10) Request By: _____ (11) Inspection Team: _____

(12) Equipment Needed: _____

(13) Backup Needed: _____

(14) Backup From: _____ Phone: _____

(15) Comments: _____

(16) If requested unit is unavailable, is substitute acceptable? Yes____ No____

(17) Scheduled By: _____ Date: _____

---

(1) Date: _____ (2) Date Required: _____

(3) Bridge No.: _____ (4) Town Bridge: Yes _____ No _____

(5) Town: _____ (6) District: _____

(7) Feature Carried: _____

(8) Feature Crossed: _____

(9) Lane Closures: _____

---

(10) Request By: _____ (11) Inspection Team: _____

(12) Equipment Needed: _____

(13) Backup Needed: _____

(14) Backup From: _____ Phone: _____

(15) Comments: _____

(16) If requested unit is unavailable, is substitute acceptable? Yes____ No____

(17) Scheduled By: _____ Date: _____

BRIDGE #: TOWN:
OPERATOR:
LINE NAME:
FEATURE INTERSECTED:
PREVIOUSLY INSPECTED ON:

STATE OF CONNECTICUT
DEPARTMENT OF TRANSPORTATION
BRIDGE SAFETY & EVALUATION
RAILROAD STRUCTURE INVENTORY
SHEET 1 OF 1 FORM BRI-39 10/99

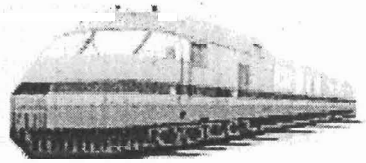

REL

TEAM: INSPECTED BY: & INSPECTION DATE:
PROJECT NUMBER: 91) FREQUENCY: FLAG MAN: ACCESS: IN-DEPTH INSPECTION:

CRITICAL FEATURES INSPECTIONS	A) FRACTURE CRITICAL B) UNDERWATER C) SPECIAL	TYPE: TYPE:	92A) FRAC. CRITICAL FREQ: 92B) UNDERWATER FREQ: 93C) OTHER FREQ:	93A) INSPECTION DATE: 93B) UNDERWATER: 93C) OTHER:

IDENTIFICATION

300) OWNER:
303) MILEPOST:
9) LOCATION:
304) OTHER TRACKAGE RIGHTS:
A) B) C) D)
16) LATITUDE: ° '
17) LONGITUDE: ° '
305) CO-OWNER BRIDGE:
ADJACENT OWNER BRIDGE:

GEOMETRIC DATA

48) LENGTH OF MAX. SPAN FT
49) STRUCTURE LENGTH: FT
52) DECK WIDTH, OUT TO OUT: FT
306) CATWALK WIDTHS: LEFT FT
RIGHT FT
DECK AREA: SQ FT
34) SKEW ANGLE: DEG
53) MIN VERT CLEAR OVER: ' "
54) MIN VERT UNDER CLR: ' "
55) MIN LAT UNDER CLR R: '
56) MIN LAT UNDER CLR L: '

RESTRICTIONS + UTILITIES

318) PASSENGER TRACK SPEED: MPH
319) FREIGHT TRACK SPEED MPH
UTILITIES CARRIED BY THE BRIDGE:

APPRAISALS

67) STRUCTURE EVALUATION:
69) UNDER CLR VERT AND HORIZ:
71) WATERWAY ADEQUACY:

AGE AND SERVICE

27) YEAR BUILT:
106) YEAR RECONSTRUCTED:
42) TYPE OF SERVICE: A) ON
B) UNDER
307) ELECTRIFICATION:
308) # OF TRACKS STRUC. DESIGNED FOR:
309) # OF TRACKS PRESENTLY ON STRUC:
310) NUMBER OF TRACKS IN SERVICE:
311) NUMBER OF TRAINS:
A) PASSENGER TRAINS/DAY
B) FREIGHT TRAINS/MONTH
312) YEAR OF CENSUS:
313) AVERAGE PASSENGERS/DAY:
314) FREIGHT CARLOADS/YEAR:

WATERWAY

W9) DRAINAGE BASIN WATERWAY CODE:
38) NAVIGATION CONTROL:
39) NAVIGATION VERT CONTROL:
40) NAVIGATION HORIZ CLEARANCE:
116) VERT-LIFT BRG NAV MIN:
111) PIER NAV PROTECTION:
113) SCOUR CRITICAL BRIDGE

CONDITION

	Rating	By
58) DECK:		
59) SUPERSTRUCTURE:		
60) SUBSTRUCTURE:		
61) CHANNEL/ PROTECTION:		
62) CULVERTS:		

COMMENTS:

STRUCTURE TYPE AND MATERIAL

43) STRUCTURE TYPE, MAIN:
A) MATERIAL
B) DESIGN TYPE
315) DECK TYPE:
316) DEPTH OF BALLAST:
44) STRUCTURE TYPE, APPROACH:
A) MATERIAL
B) DESIGN TYPE
45) NUMBER OF SPANS, MAIN UNIT:
46) NUMBER OF APPROACH SPANS:
317) SUBSTRUCTURE TYPE:
A) MATERIAL
B) FOUNDATION TYPE

CLASSIFICATION + R-O-W INFORMATION

101) PARALLEL STRUCTURE:
103)TEMPORARY STRUCTURE:
21) MAINTAINER:
322)R-O-W FILE LOCATION OF MAPS AND PLANS:

LOAD RATING

31) DESIGN LOAD:
41) STRUCTURE OPERATIONAL STATUS:
323)COOPER E RATING BY TRACK NUMBER:

	MAXIMUM	NORMAL		MAXIMUM	NORMAL
1)			5)		
2)			6)		
3)			7)		
4)			8)		

REVIEWED BY DATE ___/___/___

Monday, September 24, 2001 9:21:5

Connecticut Department of Transportation
Overhead Sign Structure Inspection Report BRI-48

STRUCTURE #: NEW **TOWN:** 00000 NEW SIGN **ROUTE:** **YEAR BUILT:**

INSPECTION DATE: 01/01/80 **PREVIOUS INSPECTION DATE:**

INSPECTORS 1): **3):** **INSPECTION VISITS:**

2): **4):**

SIGNS & ILLUMINATION	**RATING**	**OVERALL RATING**
1. REFLECTIVITY		
2. LEGIBILITY		
3. FACE PANELS		
4. SUPPORT FRAMES		
5. ATTACHMENTS		
6. BULBS/ELECTRICAL		

STRUCTURE:	**RATING**	**OVERALL RATING**
1. BASE PLATES		
2. VERTICAL POSTS/ BRACINGS		
3. HORIZONTAL MEMBERS/ BRACING		
4. CONNECTIONS		
5. BOLTS & FASTENERS		
6. WELDS		
7. RUST		
8. ALIGNMENT OF MEMBERS		
9. COATING		

FOUNDATION:	**RATING**	**OVERALL RATING**
1. CONCRETE		
2. GROUT PAD		
3. ANCHOR BOLT		
4. SETTLEMENT		
5. COLLISION DAMAGE		
6. PARAPET		

TRAFFIC SAFETY FEATURES:	**RATING**	**OVERALL RATING**
1. EMBANKMENT/ EROSION		
2. GUIDE RAILING		
3. IMPACT ATTENUATOR		

INSPECTORS APPRAISAL OF OVERALL STRUCTURE CONDITION:

Connecticut Department of Transportation
Overhead Sign Structure Inspection Report BRI-48

STRUCTURE #: NEW **TOWN:** 00000 NEW SIGN **ROUTE:** **YEAR BUILT:**

INSPECTION DATE: 01/01/80 **PREVIOUS INSPECTION DATE:**

MINOR MAINTENANCE PERFORMED (brief description and material used):

MAINTENANCE REQUIRED (brief description and material required):

ADDITIONAL NOTES:

Inspectors' Signatures: 1) _____ **Date:** __/__/__

2) _____ **Date:** __/__/__

3) _____ **Date:** __/__/__

4) _____ **Date:** __/__/__

P.E. Signature: _____ **Date:** __/__/__

P.E.#: _____

Reviewed by: _____ **CDOT** **Date:** __/__/__

(400) Sign Structure Number: NEW

Inspected By:

STATE OF CONNECTICUT
DEPARTMENT OF TRANSPORTATION
BRIDGE SAFETY and EVALUATION

OVERHEAD SIGN STRUCTURE INVENTORY

FORM BRI-49 9/99

Town: NEW SIGN

(420) Inspection Date: 01/01/80

(427) Team:

(477) Frequency: (mos)

IDENTIFICATION

(401) Bridge # if attached to a bridge:

(402) Inventory Route: A) Direction:

B) Signing Prefix:

C) Number:

D) Level of Service:

(403) District:

(4) Place Code: 00000 NEW SIGN

(404) Location:

(405) Mile Point:

(406) KM Point:

(407) Latitude: ° ' "

(408) Longitude: ° ' "

(409) Highway System (On/Off): Off

(410) Previous Inspection Date:

AGE AND SERVICE

(27) Year Built: Year Rehabed: Year Replaced:

(421) No. Lanes Under Structure:

(422) Curb to Curb:

A) Log Direction:

B) Reverse Log Direction: 0

(424) Avg. Daily Traffic (ADT):

(425) Year of ADT:

(426) Truck ADT: %

(423) Type of Traffic Safety Features:

A) Left Log Direction: SafetyFeaturesA

B) Right Log Direction: SafetyFeaturesB

C) Left Reverse Log Direction: SafetyFeaturesC

D) Right Reverse Log Direction: SafetyFeaturesD

STRUCTURE CONDITION

(450) Signs and Illumination

(451) Structure

(452) Foundation

(453) Traffic Safety Feature

(454) Overall Condition

GEOMETRIC DATA

(440) Span Length/Arm Length: A)

B)

(441) Log Direction Minimum Vertical Clearance: 0.00 (m)

(442) Reverse Log Direction Min Vertical Clearance: 0.00 (m)

(443) Log Direction Minimum Vertical Clearance: 0 (ft) 0 (in)

(444) Reverse Log Direction Min Vertical Clearance: 0 (ft) 0 (in)

STRUCTURE DATA

(430) Type:

(431A) Material: A)

(431B) Other Material B)

(432) No. of Spans:

(434) Paint/Coating: Paint Coating

(475) CSR Rating: 0

(476) Year of Cons. Rating:

(433) Sign Panels:

Panel Width (m)	Height (m)	Message	Direction	Panel Over Lane Types	Panel Type	Year Clips Torqued	Clips Torqued

ADDITIONAL COMMENTS

(460) Comments:

P.E. Signature_____ Date____/____/____

Reviewed By:_____CDOT Date____/____/____

Connecticut Department of Transportation

UNDERWATER INSPECTION

BRI-58 Form

Bridge No: 00001
Inspection Date: 06/22/02

Town: GREENWICH
Route Carried: 00095
Feature Crossed: RAM RIVER,S WATER ST

ITEM	*RATING*	*REMARKS*
60. SUBSTRUCTURE		
ABUTMENT 1:		
STEM		
FOOTING		
EROSION		
SETTLEMENT		
SCOUR		
WINGWALLS		
General remarks:		
ABUTMENT 2:		
STEM		
FOOTING		
EROSION		
SETTLEMENT		
SCOUR		
WINGWALLS		
General remarks:		
PIER NO. 1		
PILES		
STEM		
FOOTING		
SCOUR		
SETTLEMENT		
General remarks:		
61. CHANNEL& CHANNEL PROTECTION:		
CHANNEL SCOUR		
EMBANKMENT EROSION		
DEBRIS		

Connecticut Department of Transportation

UNDERWATER INSPECTION

BRI-58 Form

Bridge No: 00001

Inspection Date: 06/22/02

Town: GREENWICH

Route Carried: 00095

Feature Crossed: RAM RIVER,S WATER ST

ITEM	*RATING*	*REMARKS*
VEGETATION		
CHANNEL CHANGE		
FENDER SYSTEM		
SPUR DIKES & JETTIE		
RIP RAP		
General remarks:		

Inspected by: _____ **Date:** _____

Inspected by: _____ **Date:** _____

D.O.T. reviewed by: _____ **Date:** _____

Connecticut Department of Transportation

UNDERWATER INSPECTION

BRI-59 Form

Bridge No: 00001 **Date Inspected:** 06/22/02

Job Number:
Client: Connecticut D.O.T.
Route: 00095 **Mile point:** 0.00
City: GREENWICH
FeatureCrossed: BYRAM RIVER,S WATER ST
State: CT
Inspector:
Assistants:
Time Arrived:
Time Departed:
Time In Water:
Time Out of Water:
Type of Inspection:
Year built: 0 **Total Length:** 1262 **No. Spans:** 3
Bridge Type:
Total Number of Piers: 0
Piers in the Water:
Type of Piers:
Abutments:
Bottom Composition:
Previous U/W Insp:
Marine Growth:
Max. Water Depth:
Max. Depth at Pier/Abut.:
Current Strength:
U/W Visibility:
Type of Water:
Access to Bridge:
Remarks:

Inspection Equipment

Number of Boats: 0 **RR Protection:** No
Boat Size: 0 **Equipment Comments:**
Dive Station: No

Inspected by: _____ **Date:** _____

Inspected by: _____ **Date:** _____

.T. reviewed by: _____ **Date:** _____

APPENDIX D

PROCEDURAL MEMORANDUMS

- Bridge Classifications (March 5, 1996)
- Priority Codes for Sign Support and Bridge Repairs (December 26, 1996)

STATE OF CONNECTICUT
DEPARTMENT OF TRANSPORTATION

Subject: Bridge Classifications

m e m o r a n d u m

date: March 5, 1996

to: BRIDGE SAFETY AND EVALUATION STAFF

from: James P. Loersch
Manager of Bridge Safety
and Evaluation
Bureau of Engineering
and Highway Operations

LICHTENSTEIN

The following parameter shall be used as quidelines to determining the class of any structure:

The following structure types shall, regardless of deck area of condition, be classified as a Class 1 structure:

101	119	201	219	601
319	701	702	819	709
504	522	710	919	

The following structure types shall, regardless of deck area or condition, be classified as Class 2 structure:

018	818	518	511
200	307	308	

The following structure types shall always, regardless of deck area or condition, be classified as a Class 3 structure:

306	315	316	417
312	406	506	605
607	408	606	409
309			

The remaining structure types shall be classified as either Class 1, 2, or 3 based on the following parameters:

Structure Type	Parameters
104	Class 1: deck area < 7500 sf Class 2: deck area >= 7500 sf and deck area < 25000 sf Class 3: deck area >= 25000 sf
107	Class 1: Span < 60' Class 2: Span >=60' Class 3: None
111	Class 1: Span < 60' Class 2: Span >= 60' and span < 100' Class 3: All open spandrel arches or span > 110'

Bridge Safety and Evaluation Staff

111	Class 1: Span < 60' Class 2: Span >= 60' and span < 110' Class 3: All open spandrel arches or span > 110'
204	same as 104
207	same as 107
302	Class 1: deck area < 7500 sf Class 2: deck area >= 7500 sf and < 25000 sf Class 3: deck area >= 25000 sf
303	Class 1: deck area < 3000 sf Class 2: deck area >= 3000 sf or deck area < 15000 sf Class 3: deck area >= 15000 sf All two girder structures that carry railroads shall be classified as R2. All two girder structures that carry pedestrians shall be classified P1.
310	Class 1: Pedestrian structures Class 2: All pony trusses (span < 100') Class 3: All through trusses (span >= 100') All trusses that carry railroads shall be classified R2 or R3 accordingly. All trusses that carry pedestrians shall be classified as P1.
311	Class 1: All pipe arches (span <50') Class 2: no class 2 structures Class 3: All open spandrel arches (spans >= 50')
402	Same as 302
403	Same as 303
407	Class 1: no class 1 structures Class 2: the remaining structures Class 3: all K frame structures
501	Class 1: deck area < 7500 sf Class 2: deck area >= 7500 sf and < 25000 sf, and all post tensioned tube slabs (spans > 80') Class 3: deck area >= 25000 sf
502	Same as 501

Bridge Safety and Evaluation Staff

505	Class 1: deck area < 7500 sf Class 2: deck area >= 7500 sf and deck area < 25000 sf Class 3: deck area >= 25000 sf and all cast-in-place single span post tensioned box girders (spans > 120')
602	Unless the deck area exceeds 25000 sf all 602's shall be classified as a Class 2 structures.
811	Class 1: Span < 50' Class 2: Span >= 50' and < 100' Class 3: Span >= 100'

Please note that these guidelines are to be used when assigning the class of a structure. As with all things, extenuating circumstances that may exist.

James P. Loersch/eks
cc: Joseph J.Obara
James P. Loersch
g:bridge

STR TYPE - Structure type for the main span(s) composed of two segments.

A - Kind of material and/or design

- 1 - Concrete
- 2 - Concrete continuous
- 3 - Steel
- 4 - Steel Continuous
- 5 - Prestressed Concrete
- 6 - Prestressed Concrete Continuous
- 7 - Timber
- 8 - Masonry
- 9 - Aluminum, Wrought Iron, or Cast Iron
- 0 - Other

B - Type of design and/or construction

- 01 - Slab
- 02 - Stringer/Multi-beam or Girder
- 03 - Girder and floorbeam System
- 04 - Tee Beam
- 05 - Box Beam or Girders - multiple
- 06 - Box Beam or Girders - single or spread
- 07 - Frame
- 08 - Orthotropic
- 09 - Truss - Deck
- 10 - Truss - Thru
- 11 - Arch - Deck
- 12 - Arch - Thru
- 13 - Suspension
- 14 - Stayed Girder
- 15 - Movable - Lift
- 16 - Movable - Bascule
- 17 - Movable - Swing
- 18 - Tunnel
- 19 - Culvert
- 20 - Mixed types
- 21 - Segmental Box Girder
- 22 - Channel Beam
- 00 - Other

STATE OF CONNECTICUT
DEPARTMENT OF TRANSPORTATION

BRIDGE TYPES

101 concrete slab
104 concrete tee beam
107 concrete frame
111 concrete deck arch
118 concrete tunnel
119 concrete culvert
200 concrete continuous other
201 continuous concrete slab
204 continuous concrete tee beam
207 continuous concrete frame
219 continuous concrete culvert
302 steel stringer / multi-beam or girder
303 steel girder and floor beam system
306 steel box beam or girders - single or spread
307 steel frame
308 steel orthotropic
309 steel deck truss
310 steel thru truss
311 steel deck truss
312 steel thru arch
315 steel moveable lift
316 steel moveable - bascule
319 steel culvert
402 continuous steel stringer / multi-beam or girder
403 continuous steel girder and floor beam system
406 continuous steel box beam or girders - single or spread
407 continuous steel frame
408 continuous steel orthotropic
409 continuous steel deck truss
417 continuous steel moveable - swing
501 prestressed / post tensioned concrete slab
502 prestressed / post tensioned concrete stringer/multi-beam or girder
504 prestressed/post tensioned concrete tee beam
505 prestressed / post tensioned concrete box beams or girders - multiple
506 prestressed / post tensioned concrete box beams or girders - single or spread
511 prestressed / post tensioned concrete deck arch
518 prestressed/ post tensioned concrete tunnel
522 prestressed/post tensioned concrete channel beam
601 continuous prestressed/ post tensioned concrete slab
602 continuous prestressed / post tensioned concrete stringer/multi-beam or girder
605 continuous prestressed / post tensioned concrete box beams or girders - multiple
606 continuous prestressed / post tensioned concrete box beams or girders - single or spread
607 continuous prestressed/post tensioned concrete frame
701 timber slab
702 timber stringer/multi-beam or girder
709 timber deck truss
710 timber thru truss
811 masonry deck arch
818 masonry tunnel
819 masonry culvert
919 aluminum, wrought iron, or cast iron culvert
018 other tunnel

STATE OF CONNECTICUT
DEPARTMENT OF TRANSPORTATION

Subject: Priority Codes for Sign Support and Bridge Repairs

memorandum

date: December 26, 1996

to: Bridge Safety & Eval. Staff
Bureau of Engineering
and Highway Operations

from: James P. Loersch
Manager of Bridge Safety
and Evaluation
Bureau of Engineering
and Highway Operations

Attached is a copy of the new "Priority Codes for Sign Support and Bridge Repairs" established by Mr. Franco R. Liberatore, Office of Bridge Maintenance. This listing will replace the current priority system established by this office and will become effective January 1, 1997.

When writing a bridge maintenance memorandum, sign support maintenance memorandum and/or a railroad maintenance memorandum, it is important that the repairs be meaningful in that they prolong the life of the structure (not cosmetic) and are cost effective when reviewing the life cycle costs of the structure.

Items that were considered Priority "D" in the past should now be Priority A, B, C or D depending on the time frame the work needs to be done to meet the inspection schedule. For example, if a box beam bridge needs to be cleaned of debris and the inspection is ongoing, you want this work to be completed in a timely fashion and would assign the work a Priority B.

Thank you for your attention in this matter. If you have any questions or concerns, please contact me at ext. 3156.

Attachment

MGI

cc: James F. Byrnes, Jr.
Earle R. Munroe
Joseph J. Obara
James P. Loersch - Maureen G. Izzo
Walter Coughlin - Manu Patel
Donald M. Doherty - David Chase - Lev Laber
Gordon Barton
William R. Stark

STATE OF CONNECTICUT
DEPARTMENT OF TRANSPORTATION

m e m o r a n d u m

subject: Priority Codes for Sign Support and Bridge Repairs

date: December 13, 1996

to: Mr. James P. Loersch
Manager of Bridge Safety and Evaluation
Bureau of Engineering and Highway Operations

from: Franco R. Liberatore x2624
Manager of Bridge Operations
Bureau of Engineering and Highway Operations

This will serve to confirm the conclusions reached at our December 11, 1996 meeting whereby effective January 1, 1997 the following priority codes and respective response times, for the repairs of our bridges and sign supports, will replace the current ones:

Priority A: Critical - IMMEDIATE response by Bridge Maintenance utilizing Bridge Safety and Evaluation's traffic pattern still in place, where they are using one.

Priority B: Urgent, but not critical - Response within 1 WEEK.

Priority C: Important, but not urgent - Response within 2 MONTHS.

Priority D: Of lesser importance, but needing attention - Response within 6 MONTHS.

Priority E: Routine repairs - scheduled by Bridge Maintenance to coincide with other commitments of the same type or within the same general area. - Response within 2 YEARS.

FRL/abg
cc: James F. Byrnes, Jr.
Louis R. Malerba-Michael D. Turano
Victor J. LaBarre
Wayne T. McAllister
Norman S. Hannibal
Richard H. Poole
Richard Annino
William Papp
Earle R. Munroe
Joseph J. Obara
Franco R. Liberatore

APPENDIX E

BRIDGE INSPECTION MANUAL COMMENT FORM

BRIDGE INSPECTION MANUAL
COMMENT FORM

All users of this manual are encouraged to submit comments/corrections to:

Manager of Bridge Safety and Evaluation
Connecticut Department of Transportation
2800 Berlin Turnpike
P.O. Box 317546
Newington, CT 06131-7546

Date Submitted: _____
Submitted by (optional): _____ Organization/Team # : _____

Chapter	Page	Comment

P:\1702\MANUAL\COMMENT.FRM

GLOSSARY OF TERMS

AASHTO American Association of State Highway and Transportation Officials.

Abrasion Weathering action, wearing or grinding away of material by water laden with sand, gravel, or stones, or by rubbing together of two adjacent bridge parts.

Abutment A substructure supporting the ends of a single span or the extreme ends of a multi-span superstructure and, in general, retaining or supporting the approach embankment.

Acceleration Coefficient Dimensionless coefficient used to describe ground motion due to seismic forces.

ACI American Concrete Institute.

Acidity The measure of acids in a solution typically represented by a pH factor less than seven. In surface water, acidity is initiated by carbon dioxide in the air which forms carbonic acid.

Acute Angle An angle less than 90 degrees.

Admixture A material other than Portland cement, aggregates, or water, which is added to a concrete batch prior to or during mixing.

ADT Average Daily Traffic.

ADTT Average Daily Truck Traffic.

Aggradation General and progressive raising of the streambed by accumulation of sediment.

Aggregate The sand, gravel, or broken stone with which a cementing material is mixed to form a mortar or concrete.

Air Entrainment The process of adding air to concrete in order to increase durability while causing only a small decrease in strength. Used in bridge construction to minimize freeze-thaw damage.

AISC American Institute of Steel Construction.

AITC American Institute of Timber Construction.

Alignment The relative horizontal and vertical positioning between the bridge and approach roadways.

Alkalinity The measure of negative ions in water, typically represented by a pH factor greater than seven.

Alligator Cracking See "Map Cracking".

Allowable Stress Design AISC designation for Working Stress Design

Alloy A mixture of two or more metals to form a new base metal.

Alternate Design Method - ACI designation for Working Stress Design.

Alternate Load Factor Design - Another name for the Autostress Design Method; see LOAD FACTOR DESIGN.

Approach Pavement Pavement, or wearing surface, on the roadway on either end of a bridge.

Appurtenance A feature that serves the overall functionality of the bridge site (e.g., railing, lighting, signing, etc.).

AREMA American Railway Engineering and Maintenance-of-Way Association.

As-Built Plans Plans issued after the construction of a structure reflecting any field changes made to the final design plans

ASCE American Society of Civil Engineers.

Anchorage The complete assemblage of members and parts designed to hold in correct position a portion or part of a structure.

Anchor Bolt A shaft-like piece of metal, commonly threaded and fitted with a nut and washer at one end only, used to secure in a fixed position upon the substructure, the bearings of a bridge, the base of a column, a pedestal, shoe, or other member of a structure.

Anchor Span The span that counterbalances, and holds in equilibrium, the fully cantilevered portion of an adjacent span.

Angle A basic member shaped like an L; usually made of steel.

Anisotropy The property of some materials, such as wood, exhibiting different strengths in different directions.

Anode The positively charged pole of a corrosion cell at which oxidation occurs.

ANSI American National Standards Institute.

Anti-Friction Bearing A ball or roller-type bearing that does not resist horizontal or frictional loads.

Appraisal Rating A judgement of a bridge component condition in comparison to current standards.

Approach Portion of roadway leading to a bridge

Approach Slab A reinforced concrete slab placed on the approach embankment adjacent to and usually resting upon the abutment back wall. The function of the approach slab is to carry wheel loads on the approaches directly to the abutment, thereby eliminating any approach roadway misalignment due to approach embankment settlement.

Apron A form of scour protection consisting of timber, concrete, riprap, paving, or other construction placed adjacent to abutments and piers to prevent undermining.

Arch A curved structure element, primarily in compression, which produces at its supports reactions having both vertical and horizontal components.

Arch Barrel A single arch member that extends the width of the structure.

Arch Rib The main support element used in open spandrel arch construction; also known as an arch ring.

Armor A secondary steel member installed to protect a vulnerable part of another member, e.g., steel angles placed over the edges of a joint or at the leading edge of a river pier.

As-built Rating Rating based on original condition and configuration of the structure.

ASD Allowable Stress Design.

Asphalt Black surface material made from mineral hydrocarbons containing petroleum used as a binder with sand and crushed gravel. Also known as "Bituminous Concrete".

ASTM American Society for Testing and Materials.

Auger Drill used to retrieve soil samples; see BORING.

Autostress Design Method - An extension of Load Factor Design using enhanced limit states criteria; see LOAD FACTOR DESIGN.

AWS American Welding Society.

Axial In line with the centroid of the area.

Axle Load The load borne by one axle of a traffic vehicle, a movable bridge, or other motive equipment or device and transmitted through a wheel or wheels.

Back See EXTRADOS.

Backfill Material, usually soil, used to fill the unoccupied portion of a substructure excavation.

Backing A material or device placed against the backside of the joint, or at both sides of a weld in electroslag and electrogas welding, to support and retain molten weld metal. The material may be partially fused or remain unfused during welding and may be either metal or nonmetal.

Backstay A cable or chain attached at the top of a tower and extending to, and secured upon, the anchorage to resist overturning stresses exerted upon the tower by a suspended span.

Backwall The topmost portion of an abutment, above the elevation of the bridge seat, functioning primarily as a retaining wall with a live load surcharge; it may serve also as a support for the extreme end of the bridge deck and the approach slab.

Backwater The water upstream from an obstruction in which the free surface is elevated above the normal water surface profile.

Balustrade An open railing system comprised of short columns, called balusters, which are connected together by a rail.

Bank Sloped sides of a waterway channel or approach roadway, short for embankment.

Barrel The tunnel portion of a culvert.

Bascule Bridge A bridge on which one or two leaves rotate from a horizontal position to a near vertical position to open the navigation channel.

Base Course A layer of compacted material directly under the wearing surface, typically consisting of mineral aggregates and additives that are compacted to support the pavement.

Base Metal The surface of a steel element to be incorporated in a welded joint; also known as structure metal or parent metal.

Base Plate A rectangular slab of steel, whether cast, rolled or forged, connected to a column, bearing or other member to transmit and distribute its load to the substructure.

Batten Plate A plate used in lieu of lacing to tie together the shapes comprising a built-up member.

Batter The inclination of a surface in relation to a horizontal or a vertical plane; commonly designated on bridge detail plans as so many feet to one foot; see RAKE.

Battered Pile A pile driven in an inclined position to resist horizontal forces as well as vertical forces.

Bay The area of a bridge floor system between adjacent longitudinal multi-beams.

Beam A linear structural member designed to span from one support to another.

Bearing A support element transferring loads from superstructure to substructure while permitting limited movement capability.

Bearing Capacity The load per unit area which a structural material, rock, or soil can safely carry.

Bearing Failure A crushing of material under extreme compressive load.

Bearing Pile A pile which provides support through the tip (or lower end) of the pile.

Bearing Plate A steel plate that is used to transmit loads from the superstructure to the substructure.

Bearing Pressure The bearing load divided by the area to which it is applied.

Bearing Pad A prepared horizontal surface at or near the top of a substructure unit upon which the bearings are placed.

Bearing Stiffener A vertical web stiffener at the bearing location

Bearing Stress See BEARING PRESSURE.

Bearing-Type Connection - A riveted or bolted connection in which movement is restricted primarily by the bolt shank.

Bedding The soil or backfill material used to support pipe culverts.

Bedrock The undisturbed hard rock layer below the surface of the soil.

Benchmark An established reference point used to document dimensions, elevations and movement.

Bending Moment The internal force within a beam which causes a bending effect.

Bent A substructure unit made up of two or more column or column-like members connected at their top-most ends by a cap, strut, or other member holding them in their correct positions.

Berm The line which defines the location where the top surface of an approach embankment or causeway is intersected by the surface of the side slope.

Beveled Washer A wedge-shaped washer used in connections involving members with sloped flange legs, e.g. channels and S-beams.

Binder Course A layer between the wearing surface and base course made of a bituminous material and aggregate.

BITM 90 The *Bridge Inspector's Training Manual/90* issued by FHWA, dated July 1991, as revised. Replaced the previously issued BITM 70.

Bitumen A black sticky mixture of hydrocarbons obtained from natural deposits or from distilling petroleum.

Bituminous Concrete See ASPHALT.

Blanket A stream bed protection against scour placed adjacent to abutments and piers.

BMS Bridge Management System, a system designed to optimize the use of available resources for the inspection, maintenance, rehabilitation and replacement of bridges.

Bolster A block-like member used to support a bearing on the top of a pier cap or abutment bridge seat; see PEDESTAL.

Bolt A mechanical fastener with machine threads at one end to receive a nut, and usually a hexagonal head at the other end.

Bond In reinforced concrete, the grip of the concrete on the reinforcing bars, thereby preventing slippage of the bars.

Bond Stress A term commonly applied in reinforced concrete construction to the stress developed by the force tending to produce movement or slippage at the interface between the concrete and the reinforcement bars.

Boring The act of drilling a hole into the ground to remove soil samples for laboratory testing. A soil sample removed from the ground for laboratory testing.

Bottom Chord The bottom horizontal member of a truss.

Bowstring Truss A general term applied to a truss of any type having a polygonal arrangement of its top chord members conforming to or nearly conforming to the arrangement required for a parabolic truss.

Box Beam A hollow structural beam with a square, rectangular, or trapezoidal cross-section. Also called Box Girder.

Box Culvert A culvert of rectangular or square cross-section.

Bleeding A phenomenon whose external manifestation is the appearance of water on the surface after concrete has been placed and compacted but before it has set. Also, crushed rust particles exuding from adjacent meshing parts.

Bracing A system of secondary members that maintain the geometric configuration of primary members.

Bracket A projecting support fixed upon two intersecting members to strengthen and provide rigidity to the connection.

Breastwall The portion of an abutment between the wings and beneath the bridge seat; the breast wall supports the superstructure loads, and retains the approach fill; see STEM.

Bridge A structure, including supports, erected over a depression or an obstruction, such as water, highway, or railway, and having a track or passageway for carrying traffic or other moving loads, over an opening of greater than or equal to 20 ft. (6.08m).

Bridge Deficiency A defect in a bridge component or member that makes the bridge less capable or less desirable for use.

Bridge Pad The raised, leveled area upon which the pedestal, masonry plate or other corresponding element of the superstructure takes bearing by contact; also called bridge seat or bearing area.

Bridge Roadway Width The most restrictive minimum distance between curbs or rails.

Bridge Seat The top surface of an abutment or pier upon which the superstructure span is placed and supported; for an abutment it is the surface forming the support for the superstructure and from which the backwall rises; for a pier it is the entire top surface.

Bridge Site The selected position or location of a bridge and its surrounding area.

Bridging A carpentry term applied to the cross-bracing fastened between timber beams to increase the rigidity of the floor construction, distribute more uniformly the live load and minimize the effects of impact and vibration.

Brittle Fracture A sudden failure of a steel element prior to plastic deformation typically occurring at a sharp change of section properties.

Brush Curb A narrow curb, 9 inches or less in width, which prevents a vehicle from brushing against the railing or parapet.

Buckle To fail by an inelastic change in alignment as a result of compression.

Buckling Deflection in an axially loaded member under compression.

Built-Up Member A column or beam composed of plates and angles or other structural shapes united by bolting, riveting or welding.

Bulb T-Girder A T-girder with a bulb shape at the bottom of the girder cross-section.

Bulkhead A retaining wall-like structure commonly composed of driven piles supporting a wall of a barrier of widen timbers or reinforced concrete members.

Buoyancy Upward pressure exerted by the fluid in which an object is immersed.

Butt Joint The joint between two pieces of metal in the same plane, which have been bolted or welded together.

Buttress A bracket-like wall, of full or partial height, projecting from another wall. The buttress strengthens and stiffens the wall against overturning forces. All parts of a buttress act in compression.

Buttressed Wall A retaining wall designed with projecting buttresses to provide strength and stability.

Butt Weld A weld joining two pieces of metal that are in the same plane.

Cable A tension member comprised of numerous individual steel wires twisted and wrapped in such a fashion to form a rope of steel; see SUSPENSION BRIDGE.

Cable Band A steel casting with clamp bolts which fixes a floor system suspender cable to the main cable of a suspension bridge.

Cable-Stayed Bridge A bridge in which the superstructure is directly supported by cables, or stays, passing over or attached to towers located at the main piers.

Caddis Flies A winged insect closely related to the moth and butterfly whose aquatic larvae seek shelter by digging small shallow holes into underwater timber elements.

Caisson A rectangular or cylindrical chamber for keeping water or soft ground from flowing into an excavation.

Camber The slightly arched form or convex curvature provided in beams to compensate for dead load deflection. In general, a structure built with perfectly straight lines appears to sag slightly.

Cantilever A structural member which has a free end projecting beyond its supporting wall or column; length of span overhanging the support.

Cantilever Abutment An abutment that resists the lateral thrust of earth pressure through the opposing cantilever action of a vertical stem and horizontal footing.

Cantilever Bridge A general term applying to a bridge having a superstructure utilizing cantilever design.

Cantilever Span A superstructure span composed of two cantilever arms, or of a suspended span supported by one or two cantilever arms.

Cap The topmost piece of a pier or a pile bent serving to distribute the loads upon the columns or piles and to hold them in their proper relative positions; see PIER CAP, PILE CAP.

Cap Beam The top beam in a bent which ties together the supporting columns or piles.

Capstone The topmost stone of a masonry pillar, column or other structure requiring the use of a single capping element.

Carbon Steel Steel owing its properties principally to its carbon content; ordinary, unalloyed steel.

Carpenter Ants Large black ants that hollow out the interior of timber members to make nests.

Cast Iron Relatively pure iron, smelted from iron ore, containing 1.8 to 4.5% free carbon and cast to shape.

Cast-in-Place The act of placing and curing concrete within formwork to construct a concrete element in its final position.

Catch Basin A receptacle, commonly box shaped and fitted with a grilled inlet and a pipe outlet drain, designed to collect the rain water and floating debris from the roadway surface and retain the solid material to that it may be periodically removed.

Catchment Area See DRAINAGE AREA.

Catenary The curve obtained by suspending a uniform rope or cable between two points; as in the main cables of a suspension bridge. An overhead electric wire used to provide power for electric railroad traction.

Cathode The negatively charged pole of a corrosion cell that accepts electrons and does not corrode.

Cathodic Protection A means of preventing metal from corroding. This is done by making the metal a cathode through the use of impressed direct current and by attaching a sacrificial anode.

Catwalk An elevated, narrow walkway providing access to some part of a structure.

Causeway An elevated roadway used to cross long expanses of water, swamps, or wetlands.

Cellular Abutment An abutment in which the space between wingwalls, breast wall, approach slab, and footings is hollow. Also known as a vaulted abutment.

Cement A powder that hardens when mixed with water; an ingredient used in concrete.

Cement Mortar A mixture of four parts sand to one part cement with enough water to make it plastic

Cement Paste The plastic combination of cement and water that supplies the cementing action in concrete.

Center of Gravity The point at which the entire mass of a body acts. The balancing point of an object.

Centroid The point about which the static moment of all the elements of area is equal to zero.

Chain Drag A series of short medium weight chains attached to a T-shaped handle. Used as a preliminary technique for inspecting a concrete deck for delaminations.

Chamfer A notched or angled edge or corner typically formed in concrete at a 45 degree angle.

Channel A waterway connecting two bodies of water or containing moving water.

Channel A rolled steel member having a C-shaped cross section.

Channel Profile A cross-section of a channel along its centerline.

Channel Protection Devices that redirect or absorb the energy of the water flow and prevent erosion and scour. Channel protection devices include rip-rap, gabions, spurs, and spur dikes.

Charpy V-Notch Test A test that evaluates the resistance to fracture in the presence of a notch.

Check A partial depth crack in wood occurring parallel with the grain and through the rings of annual growth.

Cheekwall A return of the abutment backwall at its ends to enclose the bridge seat on three of its sides.

Chipping Hammer A welder's tool for cleaning slag from steel after welding. A hammer with a pointed tip.

Chord A generally horizontal member of a truss.

Chloride Component in deicing agents which can cause corrosion in concrete and steel bridge elements.

Circular Arch An arch in which the intrados surface has a constant radius.

Clearance The unobstructed vertical and horizontal space provided between two objects.

Clear Headway The vertical clearance beneath a bridge structure available for navigational use.

Clear Span The unobstructed space or distance between support elements of a bridge or bridge member.

Clip Angle See CONNENCTION ANGLE.

Closed Position The position of a movable bridge when it is open to allow passage of vehicular traffic and the channel is closed to navigational traffic.

Closed Spandrel Arch A stone or reinforced concrete arch span having longitudinal walls above the fascia on each side of the arch. These walls, called spandrel walls, serve to retain the fill between the arch and the roadway and/or to support the floor system of the structure.

Coarse Aggregate Aggregate which stays on a sieve of 5mm square opening.

Coating A material that provides a continuous film over a surface. A film formed by the material.

Coefficient of Thermal Expansion - The unit strain produced in a material by a change of one degree in temperature.

Cofferdam A temporary dam-like structure constructed around an excavation to exclude water; see SHEET PILE COFFERDAM

Cold Chisel A chisel used for cold-cutting soft metals when struck with a hammer.

Cold Joint Joint between old or hardened concrete and new concrete.

Column A general term applying to a vertical member resisting compressive stresses and having, in general, a considerable length in comparison with its transverse dimensions.

Column Bent A bent shaped pier, using columns integrated with a cap beam.

Component A general term reserved to define a bridge deck, superstructure or substructure; subcomponents e.g. floor beams are considered elements.

Composite Action The contribution of a concrete deck to the moment resisting capacity of the superstructure beams.

Composite Construction A method of construction where by a concrete deck is mechanically attached to a superstructure system by shear connectors.

Compression A type of stress involving pressing together, tends to shorten a member; opposite of tension.

Compression Failure Buckling, crushing, or collapse caused by compression stress.

Compression Flange The part of a beam which is compressed; due to a bending moment.

Compression Seal Joint A joint assembly typically consisting of an extruded neoprene elastic seal squeezed into a joint opening.

Concentrated Load A force applied over a small contact area; also known as a point load

Concrete A mixture of aggregate, water, and a binder, usually portland cement, which hardens to a stone-like mass.

Concrete Beam A structural member of reinforced concrete.

Concrete Pile A pile constructed of reinforced concrete, either precast and driven into the ground or cast-in-place in a hole bored into the ground.

Condition Evaluation Establishes the physical and functional condition of the bridge components including the extent of deterioration and other defects.

Condition Rating A judgement of a bridge component condition in comparison to its original as-built condition, used to provide an overall characterization of the general condition of the component being rated.

Conductor A metal that is suitable for carrying electric current.

Connection Angle A piece of steel angle serving to connect two elements of a member or two members of a structure; also known as clip angle.

ConnDOT Connecticut Department of Transportation.

Connection Plate A steel plate which connects two elements.

Consolidation The time dependent change in volume of a soil mass under compressive load caused by water slowly escaping from the pores or voids of the soil.

Construction Joint A pair of adjacent surfaces in reinforced concrete where concrete was intentionally stopped and continued later.

Contaminant A salt or other element not normally present in the atmosphere which may react with steel to produce corrosion.

Continuous Beam A general term applied to a beam that spans uninterrupted over one or more intermediate supports.

Continuous Bridge A bridge designed to extend without joints over one or more intermediate supports.

Continuous Footing A footing beneath a wall.

Continuous Spans Spans designed to extend without joints over one or more intermediate supports.

Continuous Truss A truss having its chord and web members arranged to continue uninterrupted over one or more intermediate points of support.

Continuous Weld A weld extending throughout the entire length of a connection.

Contraction The action of drawing together.

Cope The cutout flange and web area at the end of a beam.

Coping A course of stone laid with a projection beyond the general surface of the masonry below it, and forming the topmost portion of a wall. A course of stone capping the curved or V shaped extremity of a pier, providing a transition to the pier head proper, when so used it is commonly termed the “starling coping,” “nose coping,” the “cutwater coping” or the “pier extension coping”.

Corbel A projection from the surface of a wall, column or other portion of a structure to serve as a support for another member.

Core A cylindrical sample of concrete or stone removed for laboratory testing. To drill a hole with an open center bit that produces a plug or a "core".

Corrosion The general disintegration of surface metal through oxidation (rust).

Corrugated A material (usually metal) with alternating ridges and valleys used for elements such as stay-in-place forms.

Corrugated Steel Flooring - Steel flooring, normally filled with bituminous concrete, that is the structural deck that carries the traffic loads on the bridge. Also known as deck pan.

Cosmetic Repairs An aesthetic repair. A repair that is not required to address a structural or safety related deficiency.

Counter A truss web member which functions only when the span is partially loaded; the dead load of the truss does not stress the counter; see WEB MEMBER.

Counterfort A bracket-like wall projecting from a retaining wall on the side of the retained material to stabilize it against overturning. A counterfort, as opposed, to a buttress, acts entirely in tension.

Counterforted Abutment - An abutment which develops resistance to bending moment in the stem by use of counterforts. This permits the breast wall to be designed as a horizontal beam or slab spanning between counterforts, rather than as a vertical cantilever slab

Counterforted Wall A retaining wall designed with projecting counterforts to provide strength and stability.

Counterweight A weight which is used to balance the weight of a movable member. In bridge applications counterweights are used to balance a leaf or span so that it rotates or lifts with minimum resistance.

Couple Two forces that are equal in magnitude, opposite in direction, and parallel with respect to one another.

Coupon A portion of steel (or other material) taken from a bridge component to be used for laboratory testing.

Course A layer of bricks or stone bedded in mortar.

Cover	In reinforced concrete, the clear thickness of concrete between a reinforcing bar and the surface of the concrete; the depth of backfill over the top of a pipe.
Covered Bridge	A bridge, generally of timber construction, having its roadway protected by a roof and enclosing sides.
Cover Plate	A plate used in conjunction with flange angles or other structural shapes to provide additional flange section in a beam, column, or similar member.
Crack	A break without complete separation of parts; a fissure.
Crack Arresting Detail	A hole drilled at the tip of a crack to stop further crack propagation.
Crack Initiation	The beginning of a crack usually at some submicroscopic defect.
Crack Propagation	The growth of a crack due to energy supplied by repeated stress cycles.
Cracking (Reflection)	Visible cracks in an overlay indicating cracks in the concrete underneath.
Crazing	Hairline, discontinuous surface cracking that appears in hardened concrete.
Creep	An inelastic deformation that increases with time while the stress is constant.
Creosote	An oily liquid obtained by the distillation of wood tar and used as a wood preservative.
Crest	Used to describe a vertical curve formed by an upward tangent followed by a downward tangent.
Crib	A structure consisting of a foundation grillage combined with a superimposed framework providing compartments or coffers which are filled with gravel, concrete or other material to serve as a bridge abutment or pier.
Cribbing	A construction consisting of wooden, metal or reinforced concrete units so assembled as to form an open, cellular-like structure for supporting a superimposed load or for resisting horizontal or overturning forces acting against it.
Critical Deficiencies	Deficiencies that, if left unattended, will create a hazard to the traveling public or severely limit the capacity of the bridge.
Critical Section	The weakest section of a member.
Cross Section	The shape of an object cut transversely to its length.
Cross Bracing	Transverse bracing between two main longitudinal members; see DIAPHRAGM, BRACING.
Cross Frame	Members placed in an “X” configuration to act as diaphragms.
Cross Girder	Girders supported by bearings which supply transverse support for longitudinal beams or girders.
Cross-Sectional Area	The area of a cross-section.
Crown	The highest point of a pipe, arch, cross-sloped roadway or vertical curve.

Crown of Roadway The vertical dimension describing the total amount the surface is convexed or raised from gutter to centerline; this is sometimes termed the cross fall of roadway.

Culvert A drainage structure beneath an embankment.

Curb A short barrier paralleling the side limit of the roadway to guide the movement of vehicle wheels and safeguard constructions and pedestrian traffic existing outside the roadway limit from collision with vehicles and their loads.

Curb Inlet See SCUPPER.

Curtain Wall A term commonly applied to a thin wall between main supports not designed to withstand superimposed loads either vertically of transversely.

Curvature The degree of curving of a line or surface.

Cut A term used to define a region of excavation, as in cut and fill.

Cut-off Wall A short vertical projection of a concrete culvert floor, intended to prevent erosion of the culvert bedding material at the inlet and outlet.

Cutwater A sharp-edged structure built around a bridge pier to protect it from the flow of water and debris in the water.

Damage Inspection An inspection conducted immediately following any incident that may have an effect on the structural integrity of a bridge.

Dead Load A static load due to the weight of the structure itself.

Dead Man A large, heavy object attached to a structure and buried to act as an anchor.

Debris Any material including floating wood trash, suspended sediment, or bed load, moved by a flowing stream.

Deck That portion of a bridge, which provides direct support for vehicular and pedestrian traffic.

Deck Bridge A bridge in which the supporting members are all beneath the roadway.

Decking A term specifically applied to bridges having wooden floors and used to designate the flooring only; it does not include the members serving to support the flooring.

Deck Joint A joint between the deck sections, or between the deck and the abutment or approach roadway that allows for some rotation and/or translation.

Deck Pans See CORRUGATED STEEL FLOORING.

Deficiency See BRIDGE DEFICIENCY.

Deflection Elastic movement of a structural member under a load.

Deformation Distortion of a loaded structural member; includes plastic, non-recoverable movement.

Deformed Bars Concrete reinforcement consisting of steel bars with projections or indentations to increase the mechanical bond between the steel and concrete.

Degradation Progressive lowering of the stream bed by erosion.

Delamination Subsurface separation of concrete into layers.

Design Load The force for which a structure is designed; the worst possible combination of loads.

Deterioration Decline in quality over a period of time due to chemical or physical action of the environment.

DHV Design Hourly Volume.

Diagonal A sloping structural member of a truss or bracing system.

Diagonal Stay A cable support in a suspension bridge extending diagonally from the tower to the roadway system to add stiffness to the structure and diminish the deflection of the deck under live load.

Diagonal Tension The principal tensile force due to horizontal and vertical shear in a beam.

Diaphragm A member placed within a member or superstructure system to distribute stresses and improve strength and rigidity; see BRACING.

Diaphragm Wall A transverse wall built across an arch to tie together and reinforce the spandrel walls. May also provide support for the floor system. Also known as a cross wall.

Differential Settlement Uneven settlement of individual or independent elements of a substructure.

Dike An earthen embankment constructed to retain floodwater. When used in conjunction with a bridge, it prevents stream erosion and localized scour, and/or directs the stream current such that debris does not accumulate. Also known as dyke; see SPUR DIKE.

Discharge The volume of fluid per unit of time flowing along a pipe or channel.

Displacement Induced Stress - Stresses caused by differential deflection of adjacent members.

Distributed Load A load uniformly applied along the length of an element or component of a bridge.

Ditch A trough-like excavation made to collect water.

Diver A specially trained individual who inspects the underwater portion of a bridge substructure and the surrounding channel.

Dolphin A group of piles driven close together and placed to protect portions of a bridge exposed to marine traffic.

Double Movable Bridge A bridge in which the clear span for navigation is produced by joining the arms of two adjacent swing spans or the leaves of two adjacent bascule spans at or near the center of the navigable channel. See MOVABLE BRIDGE.

Dowel A short length of bar embedded in two parts of a structure to hold the parts in place and to transfer stress.

Drainage A system designed to remove water from a structure.

Drainage Area An area in which surface run-off collects and from which it is carried by a drainage system; also known as catchment area.

Drape Placement of prestressing/post-tensioning strands such that they are in the bottom flange in the high moment region, typically midspan, and rise to the upper half of the member at the ends.

Drawbridge A general term applied to a bridge over a navigable body of water having a movable superstructure span of any type permitting the channel to be freed of its obstruction to navigation.

Drift Bolt A short length of metal bar use to connect and hold in position wooden members placed in contact. Similar to a dowel.

Drip Notch A recess cast on the underside of a parapet that prevents water from following the concrete onto the supporting beams and causing deterioration of the members.

Drop Hammer A large, heavy block acting as hammer in a pile driver.

Drop Inlet A type of inlet structure that conveys the water from a higher elevation to a lower outlet elevation smoothly without a free fall at the discharge.

Drop Line A line extended from the bridge deck to a water crossing underneath used to generate channel cross sections.

Dry Laid Masonry Masonry constructed without mortar between the stones.

Duct The void in a prestressed concrete member in which the prestressing tendon is placed.

Ductile Capable of being molded or shaped without breaking; plastic.

Ductile Fracture A fracture characterized by plastic deformation.

Ductility The ability to withstand nonelastic deformation without rupture.

Dumbbell Pier A pier consisting of two cylindrical or rectangular shaped columns joined by a web constructed integral with them.

Durability The ability of a material to resist weathering action.

E The modulus of elasticity of a material. The stiffness of a material.

Effective Width In composite construction, the width of a concrete slab which functions as the top flange of a composite T-shape section.

Efflorescence A white deposit on concrete or brick caused by crystallization of soluble salts brought to the surface by moisture in the masonry or concrete.

Elastic Capable of sustaining deformation without permanent loss of shape.

Elastic deformation Nonpermanent deformation. When the stress is removed, the material returns to its original shape.

Elasticity The property whereby a material changes its shape under the action of loads but recovers its original shape when the loads are removed.

Elastomer A natural or synthetic rubber-like material.

Elastomeric Pad A pad made of a synthetic rubber that compresses under loads and is used in bearings.

Electrode A material which, when combined with the base metal, helps form the weld between two pieces of metal.

Electrolyte A medium of air, soil, or liquid carrying ionic current between two metal surfaces, the anode and the cathode.

Electrolytic Cell A device for producing electrolysis consisting of the electrolyte and electrodes.

Electrolytic Corrosion Corrosion of a metal associated with the flow of electric current in an electrolyte.

Elevation A vertical distance from a fixed reference (datum). Also used to denote a view along the length of a member or structure.

Elliptic Arch An arch in which the intrados surface is a full half of the surface of an elliptical cylinder.

Elongation The elastic or plastic extension of a member.

Embankment A bank of earth constructed above the natural ground surface to carry a road or to prevent water from passing beyond desirable limits; also known as bank.

End Block On a prestressed concrete beam, the increase in beam web width at the end to provide adequate anchorage bearing for the post tensioning steel and to resist high cracking stresses.

End Post The end compression member of a truss, either vertical or inclined in position and extending from top chord to bottom chord.

End Section A concrete or steel appurtenance attached to the end of a culvert for the purpose of hydraulic efficiency and anchorage.

End Span A span adjacent to an abutment.

Epoxy A synthetic resin which cures or hardens by chemical reaction between components which are mixed together shortly before use.

Epoxy Coating A protective coating that inhibits corrosion.

Epoxy Concrete A mixture of aggregates with an epoxy polymer as the sole binder.

Equilibrium In statics, the condition in which the forces acting upon a body are such that no external effect (or movement) is produced.

Equivalent Uniform Load - A load having a constant intensity per unit of its length producing an effect equal to that of a live load consisting of vehicle axle or wheel concentrations spaced at varying distances.

Erosion Wearing away of soil by flowing water

Expansion An increase in size or volume.

Expansion Bearing A bearing designed to permit the longitudinal movements resulting from temperature changes and superimposed loads without transmitting a horizontal force to the substructure; see BEARING.

Expansion Dam The part of an expansion joint serving as an end form for the placing of concrete at a joint; also applied to the expansion joint device itself.

Expansion Joint A joint designed to provide means for expansion and contraction movements produced by temperature changes, loadings or other forces.

Expansion Rocker A bearing device at the expansion end of a beam or truss that allows the longitudinal movements resulting from temperature changes and superimposed loads through a rocking motion.

Expansion Roller A cylinder so mounted that by revolution it facilitates expansion, contraction or other movements resulting from temperature changes, loadings or other forces.

Expansion Shoe An expansion bearing member, or assembly, designed to provide means for expansion and contraction; also known as an expansion pedestal. In general, the term "shoe" is applied to an assemblage of structural plates permitting movement by sliding, while the term "pedestal" is used to describe assemblages of castings, or built-up members, providing for movement either by sliding or by rolling.

Expansion Support A support designed to accommodate both rotation and longitudinal translation.

Exterior Girder An outermost girder supporting the bridge floor. The fascia beam.

Extrados The curve defining the exterior surface of an arch, also known as the back.

Eyebar A member consisting of a rectangular bar with enlarged forged ends having holes through them for engaging connecting pins.

Facial Referring to the surface of an element.

Factor of Safety A factor applied to the failure stress assumed to exist in a structure to provide a conservative margin in the strength of a structure compensating for irregularities existing in structural materials and workmanship, uncertainties involved in mathematical analysis and stress distribution, service deterioration and other unevaluated conditions.

Failure A condition at which a structure reaches a limit state such as cracking or deflection; usually does not involve fracture since failing structures are deemed unsafe, therefore unusable, before they collapse.

Falsework A temporary wooden or metal framework built to support the weight of a structure during the period of its construction and until it becomes self-supporting.

Fascia The longitudinal exterior face of a structure.

Fascia Girder An exposed outermost girder of a span sometimes treated architecturally or otherwise to provide an attractive appearance.

Fatigue The tendency of a member to fail at a lower stress when subjected to cyclical loading rather than when subjected to static loading.

Fatigue Crack Any crack caused by repeated cyclic loading.

Fatigue Damage Member damage (crack formation) due to cyclic loading.

Fatigue Life The anticipated length of service of a member prior to the development of cyclic induced cracking.

Fatigue Resistance The ability of a structural component to withstand cyclical tension stress without onset of fatigue cracking.

Fatigue Sensitive Details - Components and details susceptible to load induced fatigue. AASHTO detail categories are grouped according to their fatigue resistance, A being the best and E' the worst.

Fender A structure that acts as a buffer to protect the portions of a bridge exposed to floating debris and marine traffic; sometimes called an ice guard in regions with ice flows.

Fender Pier A pier-like structure which performs the same service as a fender but is generally more substantially built; see GUARD PIER.

FHWA Federal Highway Administration, U.S. Department of Transportation.

Field Coat A coat of paint applied after the structure is assembled and its joints completely connected; quite commonly a part of the field erection procedures.

Fill Materials, usually earth, used to change the surface contour of an area, or to construct an embankment.

Filler A piece used primarily to fill a space beneath a batten, splice plate, gusset, connection angle, stiffener or other element; also known as a filler plate.

Filler Metal Metal prepared in wire, rod, electrode or other adaptable form to be fused with the structure metal in the formation of a weld.

Filler Plate See FILLER.

Fillet A curved portion forming a junction of two surfaces which would otherwise intersect at an angle.

Fillet Weld A structural weld with the general shape of an isosceles right triangle. The size of the weld is given by the length of the leg. Fillet welds are generally used to join two surfaces approximately at right angles to each other.

Fine Aggregate Sand or grit for concrete which passes a sieve mesh of 5 mm square.

Finger Joints An expansion joint in which the opening is spanned by meshing steel fingers or teeth.

Fish Belly A term applied to a girder or a truss having its bottom flange or its bottom chord constructed either haunched or bow-shaped with the convexity downward; see LENTICULAR TRUSS.

Fixed Beam A beam that is restrained from expanding or contracting at both ends.

Fixed Bearing A bearing which does not allow any longitudinal movement; see BEARING.

Fixed Bridge A non-movable bridge.

Fixed End The end of a member or span where expansion and contraction are restrained.

Fixed-Ended Arch See VOUSSOIR ARCH.

Fixed Span A non-movable span.

Fixed Support A support designed to accommodate rotation only.

Flange The horizontal parts of a rolled I-shaped beam or of a built-up girder extending transversely across the top and bottom of the web.

Flange Angle An angle used to form a flange element of a built-up girder, column, strut or similar member.

Flexural Rigidity The ability of a beam to resist bending.

Floating Bridge See PONTOON BRIDGE.

Floating Foundation Used to describe a soil supported raft or mat foundation with low bearing pressure.

Flood Frequency The average time interval in years in which a flow of a given magnitude will recur.

Flood Plain Area adjacent to a stream or river subject to flooding.

Floor See DECK.

Floor System The complete framework of members supporting the bridge deck and the traffic loading.

Floorbeam A horizontal member located transversely to the general bridge alignment.

Flow Capacity Maximum flow rate that a channel, conduit, or culvert structure is hydraulically capable of carrying.

Flux A material which protects the weld from oxidation during the fusion process.

Footbridge A bridge designed and constructed to provide for pedestrian traffic only; also known as a pedestrian bridge.

Footing The enlarged, lower portion of a substructure, which distributes the structure load either to the earth or to supporting piles; the most common footing is the concrete slab; footer is a local term for footing.

Foot Wall See TOE WALL.

Force An influence that tends to accelerate a body or to change its movement.

Forms The constructions that hold concrete in place while it is hardening; also known as form work, shuttering. See LAGGING, STAY-IN-PLACE-FORMS.

Form Work See FORMS.

Foundation The supporting material upon which the substructure portion of a bridge is placed.

Foundation Excavation The excavation made to accommodate a footing for a structure; also known as foundation pit.

Foundation Failure Failure of a foundation by differential settlement or by shear failure of the soil.

Foundation Grillage A construction consisting of steel, timber, or concrete members placed in layers; each layer is normal to those above and below it and the members within a layer are generally parallel, producing a crib or grid-like effect. Usually placed under very heavy loads.

Foundation Pile See PILE.

Foundation Pit See FOUNDATION EXCAVATION.

Foundation Seal A mass of concrete placed underwater within a cofferdam to form the base portion of a structure, or to close or seal the cofferdam against incoming water; see TREMIE.

Fracture Critical Member - A member in tension, or with a tension element, whose failure would probably cause a portion of or the entire bridge to collapse.

Frame A structure having its parts or members so arranged and secured that the entire assemblage may not be distorted when supporting the loads, forces, and physical pressures considered in its design.

Framing The arrangement and manner of joining the component members of a bridge structure to insure a condition wherein each element and member may function in accord with the conditions governing its design.

Framing Plan A plan view of the bridge used to show the layout geometry, and properties of superstructure primary, and secondary members.

Free End The end of a member or span where expansion and contraction are not restrained.

Fretting Wear resulting from repetitive rubbing or abrasion.

Friction Pile A pile which provides support through friction resistance along the lateral surface of the pile.

Friction Roller A roller placed between members intended to facilitate change in their relative positions by reducing the frictional resistance to translation movement.

Frost Action Freeze-thaw cycles.

Frost Heave The upward movement of and force exerted by soil due to freezing of retained moisture.

Frost Line The depth to which soil may be frozen.

Frozen Bearings Movement has been prevented by corrosion, mechanical binding, intrusion of dirt or other interference to the point that the bearing does not operate properly or is held in a rigid condition.

Fungi Mold, rot or decay that feeds on wood.

G The shear modulus of a material; the ratio of shear stress to shear strain during initial elastic behavior.

Gabion Rock filled wire baskets used to retain earth or provide erosion control.

Galvanic Action Electrical current between two unlike metals.

Galvanize To coat with zinc.

Ganged Forms Reusable forms that are prefabricated and assembled to make a complete unit.

Gauge The distance between parallel lines of rails, rivet holes, etc. A measure of thickness of sheet metal, or wire; also known as a gage.

Girder A flexural member which is the main or primary support for the structure, and which usually receives loads from floor beams and stringers; any large beam, especially if built up.

Girder Bridge A bridge whose superstructure consists of two or more girders supporting a separate floor system as differentiated from a multi-beam bridge or a slab bridge.

Girder Span A span in which the major longitudinal supporting members are girders.

Glued-Laminated Timber (Glulam) - An engineered, stress-rated product of a timber laminating plant comprising assemblies of specially selected and prepared wood laminations securely bonded with adhesives.

Grade The fall or rise per unit horizontal length; see GRADIENT. Also refers to the strength rating of various materials.

Grade Crossing A term applicable to an intersection of two highways, two railroads or one railroad and one highway at a common grade or elevation; now commonly accepted as meaning the last of these combinations.

Grade Intersection The location where two roadway slopes meet in profile.

Grade Separation Roadways crossing each other at different elevations; see OVERPASS, UNDERPASS.

Gradient The rate of inclination of roadway or stream bed surfaces from horizontal applying to a bridge and its approaches; it is commonly expressed as a percentage relation of horizontal to vertical dimensions.

Grating See GRID FLOORING.

Gravity Abutment A heavy abutment which resists horizontal earth pressure through its own dead weight.

Gravity Wall A retaining wall which is prevented from overturning by its weight alone.

Grid Flooring (Decks) A steel floor system comprising a lattice pattern that may or may not be filled with concrete.

Grillage A platform-like construction used to insure distribution of loads upon unconsolidated soil material; see FOUNDATION GRILLAGE.

Groin A wall built out from a riverbank to check scour.

Group Loading A combination of loads (i.e. live load, wind load, earthquake load, shrinkage, etc.).

Grout A mortar having a sufficient water content to render it a free-flowing mass, used for filling (grouting) the joints in masonry, for fixing anchor bolts and for filling cored spaces where water may accumulate.

Groove Weld A structural weld made in a groove between the edges of two parts to be joined. Groove welds generally are used to connect two plates lying in the same plane (butt joint), but they also are used for tee and corner joints.

Guard Pier A pier-like structure built to protect the swing span in its open position from collision with passing vessels or other waterborne materials; may be equipped with a rest pier upon which the swing span in its open position may be supported. See FENDER PIER.

Guardrail See GUIDE RAIL.

Guide Rail A safety feature element intended to contain and safely redirect an errant vehicle.

Gunite Portland cement mortar which is blown onto a surface using compressed air. Also known as Shotcrete.

Gusset A plate which connects the members of a structure and holds them in correct position at a joint; see SPLICE, STAY PLATE.

Gutter A paved drain commonly constructed in conjunction with the curbs of the roadway.

Gutter Grating A perforated or barred cover placed upon an inlet to a drain to prevent the entrance of debris.

Guy A cable member used to hold a structure in a desired position.

Hairline Cracks Very small cracks that form in the surface of concrete.

Half-Cell Tests An electric potential test used to determine if reinforcing steel is in a passive or active corrosion state.

Half-Through Truss A bridge with the deck placed above the bottom chord such that lateral and sway bracing cannot be placed between the top chords. Also called a Pony Truss.

Hammerhead Pier A pier with a single cylindrical or rectangular shaft and a relatively long, transverse cap; also known as a tee pier.

Hand Hole Holes provided in box sections to permit access to the interior for maintenance and construction purposes.

Hand Rail Commonly applies only to sidewalk railing presenting a latticed, barred, balustered or other open web construction.

Hands-On Access Arm's length; close enough to the member or component so that it can be touched with the hands.

Hanger A tension member serving to suspend an attached member.

Haunched Girder A member whose cross-sectional depth varies from support to support.

H-Beam A rolled steel member having an H-shaped cross section and commonly used for piling; also known as an H-pile.

Haunch An increase in the depth of a member, usually at points of support; the outside areas of a pipe between the spring line and the bottom of the pipe. That portion of a concrete deck that is above the top of the supporting member and below the bottom of the structural deck thickness.

HDPE High-Density Polyethylene Pipe.

Head A measure of water pressure expressed in terms of an equivalent weight or pressure exerted by a column of water; the height of the equivalent column of water is the head.

Headloss The loss of energy between two points along the path of a flowing fluid due to fluid friction reported in feet of head.

Headwall A vertical or slightly inclined wall at the ends of a culvert to protect the embankment slopes from erosion and anchor the culvert.

Headwater The source or the upstream waters of a stream.

Heat Treatment Any of a number of various operations involving heating and cooling that are used to impart specific properties to metals; examples are tempering, quenching, annealing, etc.

Heave The upward movement of soil which can be caused by moisture, excavation, pile driving, etc.

Heel The rear face of a footing. The end of a cantilever beam, such as a bascule girder, nearest to the point of support.

Helical Having the form of a spiral.

High Strength Bolt Bolt and nut made of high strength steel, usually ASTM A325 or stronger.

Hinge A point in a structure at which a member is free to rotate.

Hinged Joint A joint constructed with a pin, cylinder segment, spherical segment or other device permitting movement by rotation.

Hip Joint The juncture of the inclined end post with the end top chord member of a truss; also known as the hip truss.

Hip Vertical The vertically placed tension member engaging the hip joint of a truss and supporting the first panel floor beam in a through truss span, or instead, only the bottom chord in a deck truss span.

"H" Loading A hypothetical design truck developed by AASHTO that comes in two types, H20-44 and H15-44.

Honeycomb An area in concrete with a lack of mortar to fill in the spaces between the coarse aggregate.

Horizontal Alignment The mathematical description of a roadway's centerline or baseline alignment in the horizontal plane.

Horizontal Cracks Cracks which are parallel to the longitudinal axis of the member and thus parallel to the primary stress.

Horizontal Curve A curve in the plan location defining the alignment.

Howe Truss A truss of the parallel chord type with a web system composed of vertical (tension) rods at the panel points with an X pattern of diagonals.

HPS High Performance Steel, a weathering steel with superior weldability and toughness as compared to conventional steels of similar strength.

"HS" Loading A hypothetical design truck used as a model for the typical semitrailer truck which was developed by AASHTO that comes in two types, HS20-44 and HS15-44.

Hybrid Girder A girder with load-bearing plates of varying steel types (e.g., high-strength steel used for flanges and lower strength for webs).

Hydraulic Capacity The amount of water that will pass through a structure without obstruction from the superstructure usually defined by the maximum design flood (i.e. 100 year) that will pass underneath.

Hydraulics The mechanics of fluids, primarily water.

Hydrology The science of water related to its properties and distribution in the atmosphere, on the land surface, and beneath the surface of the land.

I-Beam A structural member with a cross-sectional shape similar to the capitol letter “I”.

Ice Guard See FENDER.

Impact Amplification effect on live load due to dynamic and vibratory effects of a moving load.

Impacted Rust Rust forming between connected parts which as it expands tends to separate the connected parts.

In-Depth Inspection Bridge safety inspection conducted every ten years on all qualifying structures defined by the Bridge Safety & Evaluation Section. An in-depth inspection consists of a “hands-on” examination of all exposed parts of a bridge to assess and record the physical condition of the bridge, to ascertain that the bridge is functioning as shown on the original plans and to ensure that the bridge is adequate to safely carry the intended loads.

Incomplete Fusion A weld flaw where the weld metal has not combined metallurgically with the base metal.

Indeterminate Stress A stress induced by the use of a redundant member in a truss or an additional reaction in a beam rendering stress distributions unable to be determined by the principles of statics.

Inelastic Compression Compression beyond the yield point.

Inlet An opening in the deck of a bridge leading to a drain. The upstream entry of a culvert.

Integral Deck Superstructure - A deck that is designed to share with the superstructure, the load carrying capabilities of the bridge and not merely to transfer loads to the superstructure.

Intermittent Weld A non-continuous weld commonly composed of a series of short welds separated by spaces of equal length.

Intrados The curve defining the interior surface of the arch; also known as the soffit.

Inventory Item Data contained in the structure file pertaining to bridge identification, structure type and material, age and service, geometric data, navigational data, classification, load rating and posting, proposed improvements, and inspections.

Inventory Rating Load which can safely utilize the structure for an indefinite period.

Invert The bottom layer or lowest point of the internal surface of the transverse cross section of a pipe or culvert.

Isotropic An object having the same material properties in all directions, e.g., steel.

Jack Arch A deck support system comprised of a brick or concrete arch springing from the bottom flanges of adjacent steel beams.

Jacket A protective lining surrounding a pile.

Jacking The lifting of an element or group of elements using hydraulic or other types of jacks and, if needed, a temporary support system.

Jersey Barrier A concrete barrier named after the New Jersey Department of Transportation, which first developed it. Also known as traffic barrier, median barrier, shape barrier, and concrete barrier.

Joint In stone masonry, the space between individual stones; in concrete, a division in continuity of the concrete; in a truss, point at which members of a truss frame are joined.

Keeper Plate A plate which is bolted or welded to a sole plate to prohibit a beam from being disconnected from the bearing.

Key A notched or raised protrusion of concrete located on one face of a construction joint which fits into a recess on the other face.

Keystone The symmetrically shaped, wedge-like stone located in a head ring course at the crown of the arch; the final stone placed, thereby closing the arch.

King-Post The post member in a “king-post” type truss; also known as king rod.

King-Post Truss Two triangular panels with a common center vertical; the simplest of triangular system trusses.

Kip A kilopound (1000 lb.); convenient unit for structural calculations.

Knee Brace A short member engaging at its ends two other members which are jointed to form a right angle or a near-right angle to strengthen and stiffen the connecting joint.

Knee Wall A return of the abutment backwall at its ends to enclose the bridge seat on three of its sides; also called a cheekwall.

Knife Edge A condition in which corrosion of a steel member has caused a thin, sharp edge.

Knuckle An appliance forming a part of the anchorage of a suspension bridge main suspension member permitting movement of the anchorage chain.

K-Truss A truss having a web system wherein the diagonal members intersect the vertical members at or near the mid-height; the assembly in each panel forms a letter "K".

L-Abutment A cantilever abutment with the stem flush with the toe of the footing forming an L in cross section.

Laced Column A column built up from several members with lacing.

Lacing Small flat plates used to connect individual sections of built up members; see LATTICE.

Lagging Forms used to produce curved surfaces; see FORMS.

Laitance The residue created when concrete is subject to bleeding. Water rises in the channels within concrete, carrying with it very fine particles of cement, sand, and clay and depositing them in the form of a scum at the concrete surface.

Lamellar Tearing A cracking phenomenon that starts underneath the surface of plates as a result of excessive strain. The tear has a step like appearance consisting of a series of terraces parallel to the surface.

Laminate Two or more pieces of wood which are joined together, typically with adhesive or nails.

Laminated Timber Small timber planks glued or nailed or otherwise fastened together to form a large member

Lane Loading A hypothetical design load used to simulate a train of trucks moving across a bridge.

Lateral Bracing The bracing assemblage engaging a member perpendicular to the plane of the member; intended to resist lateral movement and deformation; also provides resistance against raking of primary parallel elements in truss bridges and girder bridges; see BRACING.

Latex Modified Concrete (LMC) - Concrete with a latex admixture that forms a continuous and coherent polymer film.

Lattice A crisscross assemblage of diagonal bars, channels or angles on a truss; also known as latticing, lacing.

Lattice Truss In general, a truss having its web members inclined but more commonly the term is applied to a truss having two or more web systems composed entirely of diagonal members at any interval and crossing each other without reference to vertical members.

Lay Pitch length of a wire helix. Common term used for wire cables.

Leaching The action of removing substances from a material by passing water through it.

Lead Line A weighted chord incrementally marked, used to determine the depth of a body of water; also known as a sounding line.

Leaf The movable span of a bascule bridge.

Lenticular Truss A truss having parabolic top and bottom chords curved in opposite directions with their ends meeting at a common joint; also known as a fish belly truss.

Levee An embankment built to prevent flooding of low-lying land.

Leveling Course A layer of asphalt or binder used to smooth together two sections of pavement.

LFD See Load Factor Design.

Light-Weight Concrete No-fines concrete, aerated concrete, or concrete made of lightweight aggregate.

Limit States Design A method of design based on the ability of a structure to fulfill its function. This ability is defined by limit states defining safety and serviceability.

Link A hanger plate in a pin and hanger assembly.

Live Load A dynamic load such as vehicular traffic that is applied to a structure; also accompanied by vibration or movement affecting its intensity.

Load The weight carried by a structure.

Load Factor Design A form of limit states design used by AASHTO as an alternative to Working Stress Design. Commonly abbreviated as LFD.

Load Indicating Bolt A bolt whose head carries small projections on its underside which compress as the bolt is tightened, giving a direct indication of the bolt tension that has been achieved.

Load Rating An engineering exercise to determine the ability of a bridge to carry load. The member with the minimum capacity controls the rating of the structure.

Local Buckling Localized buckling of one of a beam's plate elements which can potentially lead to failure of the member.

Locked-coil Strand An arrangement of wires resembling structural strands except that the wires in some layers are shaped to lock together when in place around the core.

Longitudinal Used to describe the axis of a bridge which proceeds from abutment to abutment.

Longitudinal Bracing Bracing that runs lengthwise with a bridge and provides resistance against longitudinal movement and deformation of transverse members.

Lower Chord See BOTTOM CHORD.

LRFD Load and Resistance Factor Design, a form of limit states design used by AISC and AASHTO as an alternative to Working Stress or Load Factor Design.

Luminaire A lighting fixture.

Main Beam A beam which supports the span and bears directly on the substructure.

Maintenance The preservation and upkeep of a structure, component or system to its as installed, or subsequently rehabilitated condition.

Maintenance and Protection of Traffic - The control of traffic through a work zone that ensures safety to both vehicles and construction personnel.

Mandrel A thin steel shell used in the placement of cast-in-place concrete piles.

Map Cracking An interlocking pattern of fine cracks that form a network resembling the lines on a map.

Marine Borers Parasites that burrow small excavations into wood and destroy it in a saltwater environment.

Masonry That portion of a structure composed of stone, brick or concrete block placed in layers and in some cases cemented with mortar.

Masonry Plate A steel plate attached to the substructure to support a superstructure bearing and to distribute the load to the masonry beneath.

Mattress A mat-like protective covering composed of brush and poles compacted by wire and placed upon riverbeds and banks to prevent erosion and scour by stream flow.

Meander A twisting, winding action from side to side; characterizes the serpentine curvature of a narrow, slow flowing stream in a wide flood plain.

Median The area between opposing lanes of highway traffic; also known as median strip.

Member An individual angle, beam, plate, or built-up piece intended ultimately to become an integral part of an assembled frame or structure.

Metal Corrosion An electrical process involving an electrolyte (moisture), an anode (the metallic surface where oxidation occurs), a cathode (the metallic surface that accepts electrons and does not corrode), and a conductor (the metal piece itself).

Midspan A general reference point halfway between the supports of a beam or span.

Military Loading A loading configuration used to simulate heavy military vehicles passing over a bridge. Also known as Alternate Military Loading.

Mill Scale Black iron oxide on iron or steel which has been forged or hot worked.

Minimum Vertical Clearance - Minimum vertical distance over the bridge roadway to any superstructure restriction.

Modular Joint A deck expansion joint, used to accommodate large movements, consisting of multiple strip or compression seals.

Moisture Content The amount of water in a soil mass expressed as a percent by weight.

Moment The couple effect of forces about a given point; see BENDING MOMENT.

Monolithic Forming a single mass without joints.

Mountable Curb Curbs that are designed so that vehicles can cross them readily when required.

Mortar A paste of cement, sand, and water laid between bricks, stones or blocks.

Movable Bridge A bridge having one or more spans capable of being raised, turned, lifted, slid or otherwise moved from its normal service location to provide for the passage of navigation.

Movable Span A general term applied to a superstructure span designed to be raised, turned, lifted, slid or otherwise moved from its normal service location to provide for the passage of navigation.

Moving Load Live load which is moving, for example, vehicular traffic.

MUTCD The Manual of Uniform Traffic Control Devices.

Nail Laminated A timber member created by nailing two or more pieces of lumber together.

Navigation Lights Lighting attached or adjacent to a bridge that aids in the guidance of an approaching vessel from the open channel through the bridge opening and allows for controlled passage of vessels through a bridge site.

NBIS National Bridge Inspection Standards. Federal regulations establishing requirements for inspection purposes, frequency of inspections, qualifications of personnel, inspection reports, and preparation and maintenance of bridge inventory records. The NBIS apply to all structures defined as bridges located on or over all public roads.

NCHRP National Cooperative Highway Research Program. A research agency of the federal government.

Necking The elongation and contraction in area which occurs when a ductile metal fails in tension.

Negative Bending Bending of a member characterized by the downward curvature of the member ends.

Negative Moment Bending moment in a member such that tension stresses are produced in the top portions of the member; typically occurs in continuous beams and spans over the intermediate supports.

Neoprene A popular elastomer material for seal-type expansion joints made of polychloroprene.

Neutral Axis The internal axis of a member in bending along which the strain is zero.

NICET National Institute for Certification in Engineering Technologies

.

Node See PANEL POINT.

Non-Destructive Testing (NDT) - A method of checking the structural quality of materials that does not damage them.

Nonredundant A structural condition where there is one element of support.

Notch Effect Stress concentrations caused by an abrupt discontinuity or change in section.

Offset A horizontal distance measured at right angles to a survey line to locate a point off the line.

On Center A description of a typical dimension between the centers of the objects being measured. Also center-to-center.

Open Position The location of the movable spans on a movable bridge to allow passage of marine traffic. Closed to vehicles and pedestrians.

Open Spandrel Arch A bridge which has open spaces between the deck and the arch members allowing “open” visibility through the bridge.

Open Spandrel Ribbed Arch - A structure in which two or more comparatively narrow arch rings, called ribs, function in the place of an arch barrel. The ribs are rigidly secured in position by arch rib struts

located at intervals along the length of the arch. The arch ribs carry a column type open spandrel construction which supports the floor system and its loads.

Operator's House The building containing the power plant and operating machinery and devices required for the operator's (bridge tender's) work in executing the complete cycle of opening and closing a movable bridge span.

Operating Rating Maximum permissible load to which a structure may be subjected.

Orthotropic A description of the physical properties of a material that had pronounced differences in two or more directions at right angles to each other.

Orthotropic Deck A steel deck which is stiffened both longitudinally and transversely using open or closed ribs and floor beams, respectively.

OSHA Occupational Safety and Health Administration, a division of the U.S. Department of Labor.

Outlet In hydraulics, the discharge end of drains, sewers, or culverts.

Out-of-plane Distortion Distortion of a member in a plane other than that which the member was designed to resist.

Overbridge Clearances The measurement taken to the above structure or all sign structures over the roadway, but not light standards, trees, or overhead wires.

Overlay See WEARING SURFACE.

Overload A weight greater than the structure is designed to carry.

Overpass The uppermost feature in a grade separated crossing.

Overturning Tipping over or rotational movement.

Oxidation The chemical breakdown of a substance due to reaction with oxygen.

Pack A steel plate inserted between two others to fill a gap and fit them tightly together; also known as packing.

Pack Rust See IMPACTED RUST.

Paddleboard Striped, paddle-shaped signs or boards placed on the roadside in front of a narrow bridge as a warning of reduced roadway width. Also known as Object Markers.

Panel Point The point of intersection of primary web and chord members of a truss.

Panel The portion of a truss span between adjacent points of intersection of web and chord members. The longitudinal space between adjacent transverse members.

Parabolic Truss A Polygonal truss having its top chord and end post vertices coincident with the arc of a parabola, its bottom chord straight and its web system either triangular or quadrangular; also known as a parabolic arched truss.

Parallel-Wire Strand Individual wires arranged in a parallel configuration without the helical twist.

Parapet A low wall along the outmost edge of the roadway of a bridge to protect vehicles and pedestrians.

Pedestal Concrete or built-up metal member constructed on top of a bridge seat for the purpose of providing a specific bearing seat elevation.

Pedestal Pier One or more piers built in block-like form that may be connected by an integrally built web between them. When composed of a single, wide block-like form, it is called a wall or solid pier.

Pedestrian Bridge See FOOTBRIDGE.

Penetration When applied to treated lumber, the depth to which the surface wood is permeated by the preservative treatment. When applied to pile driving, the depth a pile tip is driven into the ground.

Permeability The ease with which a fluid can flow through a solid.

Pier A substructure unit that supports the spans of a multi-span superstructure at an intermediate location between its abutments.

Pier Cap The topmost portion of a pier which distributes uniformly over the pier the concentrated loads from the bridge.

Pile A shaft-like linear member which carries loads through weak layers of soil to those which are capable of supporting such loads.

Pile Bent A row of driven or placed piles with a pile cap to hold them in their correct positions; see BENT.

Pile Cap The uppermost portion of a pile which acts to secure the piles in position and provides a bridge seat to receive and distribute superstructure loads.

Pile Foundation A foundation reinforced by driving piles in sufficient number and to a depth adequate to develop the bearing resistance required to support the substructure load.

Pile Pier See PILE BENT.

Piling General term applied to groupings of piles in a construction; see PILE, SHEET PILES.

Pin A cylindrical bar used to connect.

Pin-connected Truss A general term applied to a truss of any type having its chord and web members connected at the panel points by pins.

Pinholes Small discontinuities in a weld.

Pin Joint A joint in a truss or other frame in which the members are assembled upon a cylindrical pin.

Pin Packing An arrangement of truss members on a pin at a pinned joint.

Pin Plate A plate rigidly attached upon the end of a member to develop the desired bearing upon a pin or pin-like bearing, and secure additional strength and rigidity in the member.

Pintle A relatively small steel pin engaging the rocker of an expansion bearing, in a sole plate and masonry plate, thereby preventing translation of the rocker ends.

Piping A process of subsurface erosion in which surface runoff flows along the outside of a culvert and with sufficient hydraulic gradient erodes and carries away soil around the culvert.

Pitch A grade or slope given to a surface, usually to provide for adequate drainage. Also the distance between rows of shear studs or complete revolutions in a spiral shear connector.

Pitting Selective localized formation of rounded cavities in a metal surface due to corrosion.

Plain Concrete Concrete with no structural reinforcement except light steel to reduce shrinkage and temperature cracking.

Plan Drawing that represents the top view of a structure and structure site.

Planimetry Topographic information detailing the location and/or elevation of non-terrain related features (e.g., vegetation, fences, catch basins, etc.).

Plastic Deformation A permanent deformation of a member due to loads that have been placed on a member for a given period of time.

Plastic Flow Deformation of metal beyond the elastic limit.

Plate A flat sheet of metal greater that 1/8 inch thick.

Plate Girder A large I-shaped beam composed of a solid web plate with flange plates attached to the web plate by flange angles or welds.

PLC Programmable Logic Controller, a control system with instrumentation to monitor critical operating parameters and telemetry that reports monitoring results periodically to a control maintenance management office.

Plug Weld A structural weld used to transmit shear in lap joints and to prevent buckling of lapped parts. Plug welds are made by depositing weld metal in circular or slotted holes in one lapped part.

Plumb Bob A weight hanging on a cord used to provide a true vertical reference.

Plumb Line A true vertical reference line established using a plumb bob.

Pneumatic Caisson A caisson in which the working chamber is kept full of compressed air at a pressure nearly equal to the water pressure outside it.

Pointing The compacting of the mortar in the outermost portion of a joint and the troweling of its exposed surface to secure water tightness or desired architectural effect.

Poisson's Ratio (ν)– The ratio of transverse to longitudinal strain under load.

Ponding Water backed up in a channel or ditch as the result of a culvert of inadequate capacity.

Pontoon Bridge A bridge which floats on pontoons moored to the riverbed. A portion may be removable to facilitate navigation.

Pony Truss A through truss having insufficient height to use a top chord system of lateral bracing.

Popout Conical fragment broken out of a concrete surface.

Porosity Cavity-type discontinuities in a weld formed by gas entrapment during solidification or in a thermal spray deposit.

Portal The clear unobstructed space of a through truss bridge forming the entrance to the structure.

Portal Bracing A system of sway bracing placed in the plane of the end posts of the trusses.

Positive Moment A bending moment which induces compression in the top fiber of a beam and tension in the bottom fiber.

Post A member resisting compressive stresses, located vertical to the bottom chord of a truss and common to two truss panels; sometimes used synonymously for vertical; see COLUMN.

Posted A limiting dimension, speed, or loading indicating larger dimensions and higher speeds and loads can not be safely taken by the bridge.

Post-Stressing See POSTTENSIONING

Post-tensioning A method of prestressing concrete in which tendons that run through the concrete are stressed after the concrete has cured.

Pot Bearing A bearing type that allows for multi-dimensional rotation by using a neoprene or spherical bearing element.

Pot Holes Irregular shaped, disintegrated areas of bridge deck or approach pavement concaved by the failure of the surface material.

Power Post Beatles Small beetles that burrow into timber and leave the timber surface pock-marked with holes.

Pratt Truss A truss with parallel chords and a web system composed of vertical posts with diagonal ties inclined outward and upward from the bottom chord panel points toward the ends of the truss; also known as an N-truss.

Precast Concrete Concrete members which are cast and cured before being placed into their final positions on a construction site.

Pressure Force per unit area, usually expressed in pounds per square inch (psi) in the US system of units.

Prestressed Concrete Concrete in which cracking and tensile forces are greatly reduced by compressing it with tensioned cables or bars.

Prestressing Applying forces to a structure to deform it in such a way that it will withstand its working loads more effectively; see POSTTENSIONING, PRETENSIONING.

Pretensioning A method of prestressing concrete in which tendons which run through the concrete are held in a stretched condition until the concrete has cured, then the pull on the tendons is released inducing internal compression into the concrete.

Primary Member A load bearing member which distributes loads longitudinally and is principally designed to resist flexure.

Priming Coat The first coat of paint applied to the metal or other material of a bridge; also known as base coat, shop coat.

Probing Investigating the location and condition of submerged footing foundation material using a rod or shaft of appropriate length; checking the surface condition of a timber member for decay using a pointed instrument, e.g., an ice pick.

Profile A section cut vertically through the center line of a roadway or waterway to show the original and final growth levels.

Protective System A system used to protect bridges from environmental forces that cause steel and concrete to deteriorate and timber to decay, typically a coating system.

PTFE Pads Bearings with sliding surfaces made of polytetrafluoroethylene (Teflon®).

Punching Shear Shear stress in a slab due to the application of a concentrated load.

Pylon A tower which transfers forces from the bridge to the foundation.

Queen-post Truss A parallel chord type of truss having three panels with the top chord occupying only the length of the center panel; unless center panel diagonals are provided, it is a trussed beam.

Railing A fence-like construction built at the outermost edge of the roadway or the sidewalk portion of a bridge to protect pedestrians and vehicles; see HANDRAIL.

Rake An angle of inclination of a surface in relation to vertical plane; also known as batter.

Ramp An inclined traffic-way leading from one elevation to another.

Range of Stress The algebraic difference between the minimum and maximum stresses in a member.

Raveling Cumulative loss of aggregate from a pavement made of bituminous material, which results in a poor riding surface.

Reaction The resistance of a support against the pressure of a loaded member.

Rebar See REINFORCING BAR.

Redundancy A structural condition where there are more elements of support than are necessary for stability.

Redundant Member A member in a bridge which renders it a statically indeterminate structure; the structure would be stable without the redundant member whose primary purpose is to reduce the stresses carried by the determinate structure.

Rehabilitation The restoration of bridge components (and subcomponents) to their original capacity (or that capacity determined by the owner).

Reinforced Concrete Concrete with steel reinforcing bars bonded within it to supply increased tensile strength and durability.

Reinforced Concrete Pipe - A concrete pipe designed with reinforcing steel to increase its surcharge carrying capability.

Reinforcement Rods or mesh embedded in concrete to strengthen it.

Reinforcing Bar A steel bar, plain or with a deformed surface, which bonds to the concrete and supplies tensile strength to the concrete.

Relaxation A decrease in capacity of prestressed and post-tensioned concrete members due to creep of the concrete.

Relief Joints Joints between the rigid concrete approach pavement and the bridge approach slab that are designed to absorb the thermal expansion and contraction stresses produced by the approach pavement without imparting them on the bridge structure.

Residual Camber Camber which results from a prestressing force minus a girder's dead load deflection.

Residual Stress Stress locked into a member after it has been formed to its final shape.

Resurfacing The overlay of wearing surface material on top of an existing approach and/or deck overlay to create a more uniform and smooth riding surface.

Retaining Wall A structure designed to restrain and hold back a mass of earth.

Retractile Draw Bridge A bridge with a superstructure designed to move horizontally either longitudinally or diagonally from "closed" to "open" position, the portion acting in cantilever being counterweighted by that supported on rollers; also known as a traverse draw bridge.

Rib Curved structural member supporting a curved shape or panel.

Rigger An individual who erects and maintains scaffolding or other inspection access equipment.

Rigid Frame A structural frame in which the members are connected together without hinges.

Rip-Rap Gabions, stones, blocks of concrete or other protective covering material of like nature deposited upon river and stream beds and banks, lake, tidal or other shores to prevent erosion and scour by water flow, wave or other movement.

Rivet A metal fastener used in pre-1970 construction; made with a rounded preformed head at one end and installed hot into a predrilled or punched hole; the other end was hammered into a similar shaped head thereby clamping the adjoining parts together.

Riveted Joint A joint in which the assembled members are fastened by rivets.

Roadway The portion of the road intended for the use of vehicular traffic.

Roadway Shoulder Area - The area immediately adjoining the roadway, used to accommodate stopped vehicles in emergencies.

Rocker Bearing A bridge support which accommodates expansion and contraction of the superstructure through a rocking action.

Rocker Bent A bent hinged or otherwise articulated at one or both ends to provide the longitudinal movements resulting from temperature changes and superimposed loads.

Rolled Shape Forms of rolled steel having "I", "H", "Z" or other cross sectional shapes.

Rolled Steel Section Any hot-rolled steel section including wide flange shapes, channels, angles, etc.

Roller A steel cylinder intended to provide longitudinal movements by rolling contact.

Roller Bearing A single roller or a group of rollers so housed as to permit longitudinal movement of a structure.

Roller Nest A group of steel cylinders used to facilitate the longitudinal movements resulting from temperature changes and superimposed loads.

Rolling Lift Bridge A bascule type movable bridge devised to roll backward and forward upon supporting girders when operated through an "open and closed" cycle.

Rope A group of strands laid helically around a core composed of either a strand or another wire rope.

Routine Inspection Bridge safety inspections that are conducted every two years on all qualifying structures defined by the Bridge Safety & Evaluation Section. The primary purpose of routine inspections is to identify any critical problems or deficiencies.

Rubble Irregularly shaped pieces of stone in the undressed condition obtained from a quarry and varying in size.

Runoff Water, typically the result of rainfall, which collects on a bridge deck or roadway and is channeled off by catch basins, scupper drains, etc.

Saddle A member located upon the topmost portion of the tower of a suspension bridge which acts as a bearing surface for the catenary cable passing over it.

Safe Load The load which a structure can safely support.

Safety Belt A harness or belt worn in conjunction with a safety line to prevent falling a long distance when working at heights.

Safety Curb A curb between 9 inches and 24 inches wide serving as a limited use refuge or walkway for pedestrians crossing a bridge.

Safety Factor See FACTOR OF SAFETY.

Sag To sink or bend downward due to weight or pressure.

Scab A plank bolted over the joint between two timber members to hold them in correct alignment and strengthen the joint. A short piece of I-beam or other structural shape attached to the flange or web of a metal pile to increase resistance to penetration; also known as scab piece.

Scaling The gradual deterioration of a concrete surface due to the failure of the cement paste caused by chemical attack or freeze/thaw cycles.

Schmidt Rebound Hammer - A spring controlled hammer that slides on a plunger used to check the surface hardness and uniformity of in-place hardened concrete.

Scour Erosion of a river bed area caused by steam flow.

Scour Critical Bridges A bridge with rating a of "4" of less on Item 113 of the BRI-19 form.

Scour Protection Protection of submerged material by steel sheet piling, rip rap, a gabion mattress, or combination of such methods.

Screed A long section of metal or wood which is dragged across freshly placed concrete to both smooth the surface and consolidate the concrete.

Scuba A portable breathing device for free swimming divers; acronym for **s**elf-**c**ontained **u**nderwater **b**reathing **a**pparatus.

Scupper An opening in the floor portion of a bridge to provide means for rain or other water accumulated upon the roadway surface to drain through it into the space beneath the structure.

Seal A closure material. Typically used in reference to deck joints and made out of neoprene. Used in strip seal and compression seal assemblies.

Seat A base on which an object or member is placed.

Seat Angle A piece of angle attached upon the side of a member to provide support for a connecting member either temporarily during its erection or permanently; also known as a shelf angle.

Secondary Member A member that is carried by other members and does not resist traffic loads.

Section Used to denote a view cut perpendicular through an element.

Section Loss Loss of a member's cross sectional area usually by corrosion or decay.

Seepage The slow movement of water through a material.

Segmental Constructed of individual pieces or segments which are collectively joined to form the whole.

Segmental Arch A circular arch in which the intrados is less than a semi-circle.

Segmental Concrete Girder - A girder composed of individual concrete units, which are generally precast and post-tensioned to form one integrated unit.

Segmental Joint An expansion joint containing elastomeric rubber dams with reinforcement and a continuous gland.

Semi-Stub Abutment Cantilever abutment founded part way up the slope, intermediate in size between a shoulder abutment and a stub abutment.

Service Life The expected duration of satisfactory operation of a structure, component, or system under routine operating and maintenance conditions.

Service Load Design AASHTO designation for Working Stress Design.

Settlement The movement of foundations or footings due to deformations and/or changes in soil properties.

Shear The loading acting across a beam near its support.

Shear Connector Devices used in composite construction which extended from the top flange of a girder and are embedded in the concrete slab, allowing the slab and girder to act as a unit.

Shear Spiral A type of shear connector found in older structures which consists of a coil-like assembly welded to the top flange of a girder.

Shear Stress The shear force per unit of cross-sectional area; also referred to as diagonal tensile stress.

Shear Stud A common form of shear connector which is bolt-shaped and attached to the top flange of a girder with an automatic stud welding gun.

Sheeting Vertical planks which are driven into the ground to act as temporary retaining walls permitting excavation.

Sheet Pile Cofferdam A wall-like barrier composed of driven piling constructed to surround the area to be occupied by a structure and permit dewatering of the enclosure for excavation.

Sheet Piles Flattened Z-shape interlocking piles driven into the ground to keep earth or water out of an excavation or to protect an embankment.

Sheet Piling A general or collective term used to describe a number of sheet piles installed to form a crib, cofferdam, bulkhead, etc; also known as sheeting.

Shim A thin plate inserted between two elements to fix their relative position and to transmit bearing stress.

Shoe A pedestal-shaped member beneath the superstructure bearing that transmits and distributes loads to the substructure bearing area.

Shock Load Any sudden, high impact force imparted to superstructure or machine component.

Shore A strut or prop placed against or beneath a structure to restrain movement.

Shoulder The portion of the roadway contiguous with the traveled way used for accommodation of stopped vehicles.

Shoulder Abutment A cantilever abutment extending from the grade line of the road below that of the road overhead. Usually set just off the shoulder.

Shoulder Area See ROADWAY SHOULDER AREA.

Shrinkage The natural (i.e., not load related) change in volume of concrete. This change in volume is typically decreasing (shrinking) and caused by moisture loss when drying.

SI&A Structure Inventory and Appraisal Sheet, a graphic representation of the data elements collected for each bridge (qualifying structure) to comprise the National Bridge Inventory (NBI) database.

Side Slope The slope on the side on an embankment.

Sidewalk Bracket Frame attached to and projecting from the outside of a bridge to serve as a support for the sidewalk stringers, floor and railing or parapet.

Sidewalk The portion of the bridge floor area serving pedestrian traffic only.

Sight Distance Length of roadway ahead visible to the driver. The distance is determined as that which is required to allow a vehicle to safely stop prior to reaching a stationary object (stopping sight distance)

Sight Triangle A triangle formed at intersecting streets used to define a region which must be free from obstructions (e.g., vegetation, signs, buildings, etc.) in order to ensure the safe operation of vehicles.

Signing Traffic or construction signs and their related support structures located at or near a work zone.

Simple Span The span of a bridge or element which begins at one support and ends at an adjacent support with no intermediate supports.

Silt Very finely divided siliceous or other hard rock material removed from its mother rock through erosive action rather than chemical decomposition.

SIP Stay-In-Place Forms.

Site The bridge and area surrounding the structure which either affects the bridge or is affected by the bridge.

Skew Angle The angle produced when the longitudinal members of a bridge are not perpendicular to the substructure; the skew angle is the acute angle between the alignment of the bridge and a line perpendicular to the centerline of the substructure units.

Skewback The inclined support at each end of a segmental arch.

Skewback Bridge The member transmitting the thrust of an arch to the skewback course or cushion course of an abutment or piers; also known as skewback pedestal.

Skewed Bridge A structure supported on substructure units that are not perpendicular to the longitudinal centerline of the bridge.

Slab A flat beam, usually of reinforced concrete, which supports load by flexure.

Slab Bridge A bridge having a superstructure composed of a reinforced concrete slab that is supported directly on the substructure.

Slag A nonmetallic product which shields the weld pool in electroslag welding.

Sliding Bearings Expansion bearings with a PTFE or polished metal surface that allow thermal translation of the supported member by sliding between the bearing surfaces.

Slip-Critical Connection - A bolted structural connection that relies on the tension in the bolts to create a friction force between the clamped components that will no slip.

Slip-form Forms which are moved along a cast-in-place concrete element during its construction. The form is moved as the section it leaves reaches sufficient strength.

Slope The inclination of a surface expressed as one unit of rise or fall for so many horizontal units.

Slope Protection A thin surfacing of stone, concrete or other material deposited upon a sloped surface to prevent its disintegration by rain, wind or other erosive action; also known as slope pavement.

Slot Weld See PLUG WELD.

Slough An area of soft, muddy ground.

Slump A measurement used to define the workability of concrete. Wet concrete is placed in a standard cone shaped mold. The cone is then removed, causing the wet concrete to settle, or "slump". The vertical distance from the top of the cone to the top of the settled concrete is the slump. The smaller the slump, the stiffer the concrete mix.

Soffit The underside of a bridge deck. See also INTRADOS.

Soldier Beam A steel pile driven into the earth with its projecting butt end used as a cantilever beam.

Soldier Pile Wall A series of soldier beams supporting horizontal lagging to retain an excavated surface; commonly used in limited right-of-way applications.

Sole Plate A plate attached to the bottom flange of a beam that distributes the reaction of the bearing to the beam.

Sounding A method of checking for voids in a concrete or timber member by banging with a hammer on the element and listening for hollow spots. Also a method of determining the depth of water by using an echo-sounder or sounding line.

Soundings Measurements of the elevation of a stream bottom.

Spall Circular or oval depression in concrete caused by a separation of a portion of the surface concrete, revealing a fracture parallel with or slightly inclined to the surface.

Span The distance between the supports of a beam; the distance between the faces of the substructure elements; the complete superstructure of a single span bridge or a corresponding integral unit of a multiple span structure; see CLEAR SPAN.

Spandrel The space bounded by the arch extrados and the horizontal member above it.

Spandrel Column A column constructed on the rib of an arch and serving as a support for the deck construction of an open spandrel arch; see OPEN SPANDREL ARCH.

Spandrel Fill The fill material placed within the spandrel space of a closed spandrel arch.

Spandrel Tie A wall or beam-like member connecting the spandrel walls of an arch and securing them against bulging and other deformation. In stone masonry arches the spandrel tie walls served to some extent as counterforts.

Spandrel Wall A wall built on the extrados of an arch filing the space below the deck; see TIE WALLS.

Specifications A detailed description of requirements, materials, dimensions, and other information required for construction which cannot be shown on the design drawings. Also known as specs.

Spillway A paved channel used to carry water from the top of a slope or through a dam to an adjacent outlet.

Splice A structural joint between members to extend their effective length.

Spread Footing A footing which is wide and usually made of reinforced concrete; ideally suited for foundation material with moderate bearing capacity.

Springing Line The horizontal line along the face of an abutment or pier at which the intrados of an arch takes its beginning or origin.

Spur Dike A projecting jetty-like construction placed adjacent to an abutment to prevent stream scour and undermining of the abutment foundation and to reduce the accumulation of stream debris against the upstream side of the abutment.

Staged Construction Construction that occurs in phases, usually to permit the uninterrupted flow of traffic through a construction site.

Staging Inspection access equipment consisting of a flat platform supported by horizontal wire-rope cables; the stage is then slid along the cables to the desired position.

Stalactite A downward pointing formation, hanging from the underside of a concrete or masonry surface, shaped like an icicle.

Stalagmite An upward pointing formation, resulting from deposited minerals leaking from the concrete or masonry surface above.

Stationing A system of measuring distance along a baseline.

Stay-In-Place Forms A corrugated metal sheet used to form uncured concrete, that will remain in place after the concrete has set; see FORMS.

Stay Plate A tie plate or diagonal brace to prevent movement.

Steel An alloy of iron, carbon, and various other elements and metals.

Stem The vertical wall portion of an abutment retaining wall, or solid pier; see BREASTWALL.

Stiffener A small member attached to another member to transfer stress and to prevent buckling.

Stiffening Girder A girder incorporated in a suspension bridge to distribute the traffic loads uniformly among the suspenders and reduce local deflections.

Stiffening Truss A truss incorporated in a suspension bridge to distribute the traffic loads uniformly among the suspenders and reduce local deflections.

Stirrup U-shaped bar providing a stirrup-like support for a member in timber and metal bridges. U-shaped bar placed in concrete construction to resist diagonal tension (shear) stresses.

Stone Masonry Construction comprised primarily of stone or rock. The stones may be mortared or dry laid.

Straight Abutment An abutment whose stem and wings are in the same plane or whose stem is included within a length of retaining wall.

Strain The change in length of a body produced by the application of external forces, measured in units of length. This is the proportional relation of the amount of change in length divided by the original length.

Strain-Hardening The increase in strain accompanied by a significant increase in stress that occurs beyond the yield point and after plastic yielding.

Strand A number of wires grouped together by twisting.

Strength Design AASHTO and ACI designation for Load Factor Design.

Strengthening A method employed to enhance the capacity of a structural member.

Stress The force acting across a unit area in a solid material.

Stress Concentration Those concentrations of stress caused by a sudden change of cross section in a member.

Stress Cycle The variation in stress at a point with the passage of live load; from initial dead load value to the maximum additional live load value and back.

Stress Riser A detail which causes stress concentration.

Stress Reversal Change of stress type from tension (+) to compression (-) or vice versa.

Stress Sheet A drawing showing all computed stresses resulting from the application of a system of loads together with the design composition of the individual members resulting from the application of assumed unit stresses for the material to be used in the structure.

Stringer A longitudinal beam supporting the bridge deck.

Strip Seal Joint A joint assembly typically consisting of a preformed neoprene seal which is fitted to dual steel rails anchored to the faces of the joint opening.

Structure Something, such as a bridge, that is built and designed to sustain a load.

Structural Analysis An engineering evaluation of a structure to determine the distribution of loads and the capacity of the members in a structural system.

Structural Capacity The allowable load that can be supported by a structure as determined by truck type, yield point of the steel and condition of the bridge, based on lowest member rating.

Structural Member An individual piece, like a beam or strut, which is an integral part of a structure.

Structural Redundancy The ability of a structural system to distribute force using multiple load paths through more than two main members.

Structural Shapes The various types of rolled iron and steel having flat, round, angle channel, “I”, “H”, “Z” and other cross sectional shapes adapted to the construction of the metal members incorporated in structures.

Structural Stability The ability of a structure to maintain its normal configuration, not collapse or tip in any way, under existing and expected loads.

Structural Tee A "T"-shaped rolled member formed by cutting a wide flange longitudinally along its web.

Strut A piece or member acting to resist compressive stress.

Stub Abutment An abutment perched at the top of an embankment slope having a relatively small vertical height; typically supported on piles Stubs may also be founded on gravel fill, the embankment, or natural ground itself.

Subbase A base course layer within a flexible pavement structure, placed between the base course and subgrade.

Sub-Panel A truss panel divided into two parts by an intermediate web member, generally by a subdiagonal or a hanger.

Substructure The abutments, piers, or other constructions built to support the span of a bridge superstructure.

Superelevation The difference in elevation between the inside and outside edges of a roadway in a horizontal curve; required to counteract the effects of centrifugal force.

Superimposed Dead Load - Dead load that is applied to a bridge after the concrete deck has partially cured; for example, the weight of parapets or railings placed after the concrete deck has achieved its initial set, usually 7 days after the pour.

Superstructure The entire portion of a bridge structure which primarily receives and supports traffic loads and in turn transfers these loads to the bridge substructure.

Surcharge A load, in addition to soil loads, acting on a retaining wall.

Surface Fatigue The failure of surface metal stressed repeatedly beyond the endurance limit of the metal.

Suspended Span A simple span supported from the free ends of cantilevers.

Suspender A wire cable, a metal rod or bar connecting to a catenary cable of a suspension bridge at one end and the bridge floor system at the other, thus transferring loads from the road to the main suspension members.

Suspension Bridge A bridge in which the floor system is supported by catenary cables which are supported upon towers and are anchored at their extreme ends.

Suspension Cable A catenary cable which is one of the main members upon which the floor system of a suspension bridge is supported.

Swale A shallow drainage channel used to carry runoff from the bridge and/or site. A swale can be made of earth, concrete, or other material.

Sway Anchorage A guy, stay cable or chain attached to the floor system of a suspension bridge and anchored upon an abutment or pier to increase the resistance of the suspension span to lateral movement; also known as sway cable.

Sway Bracing Diagonal bracing located at the top of a through truss, perpendicular to the truss itself and usually in a vertical plane, to resist horizontal forces.

Sway Frame A complete panel or frame of sway bracing.

Swing Bridge A bridge containing a movable span which rotates on a pivot pier to permit passage of marine traffic.

Tack Coat A thin layer of liquid bituminous material spayed on a new or existing bituminous surface prior to placing another layer.

Tack Weld A nonstructural weld used for temporary connections.

Tail Water Water ponded below the outlet of a waterway, thereby reducing the amount of flow through the waterway, see HEADWATER.

T-Beam Concrete beams built monolithically with the slab to form a shape like a "T".

Temperature Steel Reinforcement in a concrete member to prevent cracks due to stresses caused by temperature changes.

Temporary Bridge A structure built for emergency or interim use to replace a previously existing bridge rendered unserviceable.

Tendon A prestressing cable, strand, or bar.

Tensile Force A force caused by pulling at the ends of a member; see TENSION.

Tensile Strength The maximum load at which a specimen breaks in tension.

Tension Type of stress involving an action which pulls apart tending to elongate or separate.

Termites Pale colored, soft bodied parasites that eat and digest wood.

Thermal Movement Elongation or contraction of a bridge structure due to a change in temperature.

Three-Hinged Arch An arch which is hinged at each support and at the crown.

Through Arch An arch bridge in which the arches extend above the roadway level.

Through Bridge A bridge where the supporting members extend above the roadway level and traffic travels between the supporting parts.

Tie A member carrying tension.

Tied-Arch Bridge An arch with a tension member between the ends of the span. The tie relieves the foundation of thrust.

Tie Plate See STAY PLATE.

Tie Rod A rod-like member in a frame functioning to transmit tensile stress; also known as a tie bar.

Tie Walls One of the walls built at intervals above the arch ring to tie together and reinforce the spandrel walls; wall designed to serve as a restraining member to prevent bulging and distortion of two other walls connected thereby; see DIAPHRAGM WALL.

Timber Wood suitable for building purposes.

Tip The bottom end of a pile.

Toe The front portion of a footing from the intersection of the front face of the abutment to the front edge of the footing. The line where the side slope of an embankment meets the existing ground. The free end of a cantilevered beam, such as on a bascule span.

Toe of Slope The location defined by the intersection of the embankment slope with the surface existing at a lower elevation; also known as the toe.

Toe Wall A relatively low retaining wall placed near the "toe-of-slope" location of an embankment to protect against erosion or to prevent the accumulation of stream debris; also known as a footwall or scour wall.

Ton A unit of weight equal to 2,000 pounds.

Topography A representation of the bridge site composed of both relief and planimetric information.

Top Chord The top longitudinal member of a truss.

Torque The angular force causing rotation.

Torque Wrench A hand or power tool used to turn a nut on a bolt that can be adjusted to deliver a predetermined amount of torque.

Torsion Twisting perpendicular to the longitudinal axis of a member.

Torsional Rigidity The ability of a beam to resist torsion (i.e., twisting about the longitudinal axis).

Tower A pier or frame supporting the main cables of a suspension bridge.

Traffic Control Modification of normal traffic patterns by signs, cones, flagmen, etc.

Transducer A device that converts one form of energy into another form, usually electrical into mechanical or the reverse.

Transflex Joint An expansion joint containing an elastomeric rubber dam with reinforcement.

Transverse Used to describe the axis of a bridge which lies perpendicular or radial to the longitudinal centerline of the structure.

Transverse Bracing The bracing assemblage engaging the columns of bents and towers in planes transverse to the bridge alignment that resists the transverse forces tending to produce lateral movement and deformation of the columns.

Transverse Girder See CROSS GIRDER.

Travel Way The roadway.

Tremie A pipe or funnel, used for placing concrete in water whose top and bottom are open, allowing for concrete to be poured into it.

Trestle A bridge structure consisting of spans supported upon frame bents.

Truss A jointed structure made up of individual members arranged and connected usually in a triangular pattern, so as to support longer spans.

Truss Bridge A bridge having trusses for a superstructure.

Trussed Beam A beam stiffened to reduce its deflection by a steel tie-rod which is held at a short distance from the beam by struts.

Truss Panel See PANEL.

Tubular Sections Structural steel tubes, rectangular, square or circular; also known as hollow sections
.

Tubular Truss A truss whose chords and struts are composed of pipes or cylindrical tubes.

Tunnel An underground passage, open at both ends.

Turnbuckle A long, cylindrical, internally threaded nut used to connect the elements of adjustable rod and bar members.

Two-Hinged Arch A rigid frame which may be arch-shaped or rectangular but is hinged at both supports.

U-bolt A bar bent in the shape of the letter "U" and fitted with threads and nuts at its ends.

Ultimate Strength The highest stress which a material can withstand before breaking.

Ultimate Strength Design - Former ACI designation for Load Factor Design.

Ultrasonic Testing Nondestructive testing of a material's integrity using sound waves.

Undercut A reduction in the thickness of the base metal adjacent to the weld toe or weld root left unfilled by weld metal.

Underdrain A drainage conduit, usually placed in backfill material and used to transport runoff away from substructure elements.

Underpass The lowermost feature of a grade separated crossing; see OVERPASS.

Underwater Inspection Visually or tactually inspecting the exposed underwater components of a bridge, utilizing appropriate tools and methods. This includes but is not limited to abutments, piers, footings, piles, fender systems, and channel scour problems.

Uniform Load A constant load distributed along a member.

Unit Stress The stress per unit of surface or cross-sectional area.

Uplift A negative reaction or a force tending to lift a beam, truss, pile, or any other bridge element upwards.

Upper Chord See TOP CHORD.

Vertical Clearance The minimum height between the lower roadway surface and a bridge overpass, or other structure, which crosses the roadway.

Vertical Curve A sag or crest in the profile of a roadway.

Vertical Lift Bridge A bridge in which the span moves up and down to provide clearance for navigation while remaining parallel to the roadway.

Viaduct A series of spans carried on piers at short intervals.

Vibration The act of vibrating concrete to compact it.

Vierendeel Truss A Pratt truss without diagonal members and with rigid joints between top and bottom chords and the verticals.

V-I-P Contractor Vendor-In-Place contractor used for paving or various other maintenance functions.

Voided Slab A precast concrete deck unit containing cylindrical voids to reduce dead load.

Void An empty or unfilled space.

Voussoir One of the truncated wedge shaped stones composing a ring course in a stone arch; also known as ring stone.

Voussoir Arch An arrangement of wedge shaped blocks set to form an arched bridge.

Wale Bracing inside a sheeted pit or a cofferdam which runs along the inside walls of the structure.

Warren Truss A triangular truss consisting of sloping members between the top and bottom chords and no verticals; members from the letter "W".

Washer A small metal ring used beneath the nut or the head of a bolt to distribute the pressure.

Water/Cement Ratio The weight of water divided by the weight of cement in concrete; ratio controls the strength of the concrete.

Waterproofing Membrane - A protective sheet placed between a wearing surface and concrete deck or between a bridge element and retained fill material to shield the concrete from water and corrosive chemicals which could cause deterioration.

Waterway The available width for the passage of water beneath a bridge.

Wearing Surface The topmost layer of material applied upon a roadway to receive the traffic loads and to resist its abrasive action; also known as a Wearing Course.

Weathering Steel Steel that provides a resistance to atmospheric corrosion; usually at least four times that of structural carbon steel.

Web The portion of a beam located between and connected to the flanges.

Web Crippling A localized yielding in the web of a steel member which occurs when high compressive stresses occur as a result of a concentrated load.

Web Member The intermediate members of a truss, not including the end posts, usually vertical or inclined.

Web Plate The plate forming the web element of a plate girder, built-up beam or column.

Web Stiffener A small member attached to a beam web to prevent buckling of the web.

Weephole A hole in a concrete retaining wall to provide drainage of the water in the retained soil. A piped hole in a concrete bridge deck to remove water trapped between the wearing surface and the waterproof membrane.

Weld A joint between pieces of metal at faces which have been made plastic by heat or pressure.

Weldability A property of electrode and parent metal combined, estimated by the ability to make good welds by as many processes as possible.

Welded Joint A joint in which the assembled elements and members are united through fusion of metal.

Welding The process of making a welded joint.

Weld Layer A single thickness of weld metal composed of beads (runs) laid in contact to form a pad weld or a portion of a weld made up of superimposed beads.

Weld Metal The fused filler metal which is added to the fused structure metal to produce a welded joint or a weld layer.

Weld Penetration The depth beneath the original surface, to which the structure metal has been fused in the making of a fusion weld.

Weld Sequence The order of succession required for making the welds of a built-up piece or the joints of a structure, to avoid producing residual stresses.

Weld Toe Particularly in a filet weld, the thin end of the taper furthest from the center of the weld cross-section.

Wheel Load The load carried by and transmitted to the supporting structure by one wheel of a traffic vehicle, a movable bridge, or other motive equipment or device; see AXLE LOAD.

Whipple Truss A double-intersecting through Pratt truss where the diagonals extend across two panels.

Wide Flange A rolled I-shaped member having flange plates of rectangular cross section, differentiated from an S-beam (American Standard) in that the flanges are not tapered.

Wind Bracing The bracing which functions to resist the stresses induced by wind forces.

Wind Lock A restraining device designed to resist lateral forces resulting from wind on the structure. Typically found on steel girder and truss bridges with large pin and hanger assemblies.

Wingwall The retaining wall extension of an abutment intended to restrain and hold in place the side slope material of an approach roadway embankment.

Wire A single, continuous length of metal drawn from a cold rod.

Wire Mesh Reinforcement - A mesh made of steel wires welded together at their intersections used to reinforce concrete.

Wire Rope Steel Cable.

Working Stress The unit stress in a member under service or design load.

Wrought Iron Cast iron which has been mechanically worked to removed slag and undissolved carbon.

Yield	Permanent deformation which a metal piece takes when it is stressed beyond the elastic limit.
Yield Point	See YIELD STRESS.
Yield Stress	The stress at which noticeable, suddenly increased deformation occurs under slowly increasing load.