CONNECTICUT SITING COUNCIL

SUB-PETITION OF NEW CINGULAR WIRELESS PCS, LLC ("AT&T") TO THE CONNECTICUT SITING COUNCIL FOR CO-LOCATION AND EXTENSION OF AN EXISTING WIRELESS TELECOMMUNICATIONS FACILITY AT 500 QUEEN STREET SOUTHINGTON, CONNECTICUT	)	SUB-PETITION NO. 1133 AUGUST 26, 2016

SUB-PETITION FOR DECLARATORY RULING TO
APPROVE ELIGIBLE FACILITIES REQUEST FOR CO-LOCATION AND EXTENSION OF
EXISTING WIRELESS TELECOMMUNICATIONS FACILITY
WITHOUT SUBSTANTIAL PHYSICAL CHANGE TO EXISTING BASE STATION
500 QUEEN STREET, SOUTHINGTON, CONNECTICUT

I. Introduction

New Cingular Wireless PCS, LLC ("AT&T"), is applying for administrative approval of needed collocation and extension of an existing facility pursuant to Section 6409(a) of the Spectrum Act and published FCC guidance in the form of the October 14, 20014 Report and Order referenced as FCC-14-153. AT&T hereby petitions the Connecticut Siting Council ("Council") to modify the existing wireless telecommunication facility at 500 Queen Street, Southington, Connecticut (the "Site"). More specifically AT&T is proposing to extend the existing tower by twelve (12) feet to attach three (3) additional antennas and equipment. The existing concealment will be extended to shroud the extension in the same manner as the existing tower. None of this work represents a substantial change to the existing base station.

II. Existing Facility and Site Background

AT&T previously maintained a 74-foot guyed lattice tower attached to an automobile business at 500 Queen Street, Southington. Redevelopment of the Site as a new pharmacy/retail store prompted a new facility design. In Petition No. 862 the Council granted approval to install a 85-foot temporary monopole in the southwest corner of the lot to facilitate the Site's development. In lieu of a temporary monopole, AT&T subsequently received administrative approval for a cell on wheels facility (COW). Thereafter the Council approved the existing "flagpole" facility in Petition #880. This tower contains three internal panel antennas at the 77'6" AGL level of the tower along with tower-mounted amplifiers. An existing equipment shelter is located at the base of the tower inside a 30-foot by 30-foot fenced compound. Access to the tower utilizes the same access as rest of the Site. The property and surroundings are commercial in nature with a retail business to the south and hotel and restaurant to the east. I-84 is directly to the west of the Site.

III. Proposed Modification

AT&T plans to extend the tower using a new pipe mast. The existing antennas will be relocated to this new mast. AT&T will also add three (3) new Kathrein 800 -10891 model antennas onto the extended tower along with nine (9) small tower mounted amplifiers. The existing radio frequency transparent concealment will be extended to enclose the new mast, antennas and tower mounted amplifiers. New remote radio head units and other associated equipment will be installed in the existing shelter. The exiting compound will not change.

IV. The Modification Does Not Represent a Substantial Change to the Physical Dimensions of the Existing Base Station and is an Eligible Facilities Request

Section 6409 requires that within 60 days of submission a state or local agency must approve an "eligible facilities request for a modification of an existing wireless tower or base station that does not substantially change the physical dimensions of such tower or base station". Section 6409 and the FCC Order provide that a modification does not "substantially change" the physical dimensions of a tower or base station if it meets the following criteria:

A. Modification does not increase the height by more than 20 feet. The proposed extension requires only a twelve (12) foot extension and is within the 6409 Criteria.
B. Modification does not protrude from the edge of the tower more than twenty feet, or more than the width of the tower structure at the level of the appurtenance, whichever is greater; for those towers in the rights-of-way and for all base stations, it must not protrude from the edge of the structure more than six feet. The modification is for an extension of the concealed flagpole tower, requires no additional protrusion and will continue to have the same overall silhouette as the existing facility.
C. Proposal does not involve installation of more than the standard number of new equipment cabinets for the technology involved, but not to exceed four cabinets. No new cabinets are proposed. Additional equipment to be installed in the existing shelter includes three (3) small remote radio heads units and two (2) data user stations, one of which is a replacement for an existing but outmoded unit.
D. Proposal does not require excavation or deployment outside the current site of the tower or base station. No excavation is proposed or required for this modification.
E. The collocation does not defeat the existing concealment elements of the tower or base station. The existing tower incorporates closely mounted antennas enclosed within radio frequency transparent concealment panels. The extension will not defeat or moot the existing concealment elements of the tower and will conceal the new addition with the same enclosure.
F. The proposal complies with conditions associated with the prior approval of the tower or base station and any non-compliance is due to an increase in height, increase in width, addition of cabinets, or new excavation that does not exceed the corresponding "substantial change" thresholds. The tower will be raised above the height previously approved by the Council but within the parameters allowed under Section 6409.

In light of the foregoing AT&T's proposal constitutes an "eligible facilities request" under Section 6409 as it is a "collocation of new transmission equipment" at an existing facility/base station and does not constitute a substantial change to the physical dimensions of the existing facility.

V. Compliance with FCC MPE Limits

The facility will be less than 3% of the federal and state emission standards for the general public. As such, the total radio frequency power density will be well within standards adopted by the Connecticut Department of Environmental Protection as set forth in Section 22a-162 of the Connecticut General Statutes and the MPE limits established by the Federal Communications Commission for the public.

VI. Notice

Pursuant to Petition 1133, a notice letter and a copy of this Sub-Petition was provided to the Town of Southington and the abutting property owners. Copies of this correspondence may be found in Attachments 5 and 6.

VII. Conclusion

It is respectfully submitted that AT&T's proposal satisfies the criteria of Section 6409, while also enhancing wireless communication services to the community and enabling users to access a state-of-the-art, digital system for voice communications, messaging, and data transmission and reception.

Respectfully Submitted,

Daniel M. Laub
On behalf of AT&T

cc: Town of Southington
Abutting Property Owners
AT&T
Smartlink
Christopher B. Fisher, Esq.

ATTACHMENT 1

Town of Southington

Geographic Information System (GIS)

Date Printed: 8/25/2016

MAP DISCLAIMER - NOTICE OF LIABILITY

This map is for assessment purposes only. It is not for legal description or conveyances. All information is subject to verification by any user. The Town of Southington and its mapping contractors assume no legal responsibility for the information contained herein.

Approximate Scale: 1 inch = 150 feet

0 150 Feet

N W E S

ATTACHMENT 2

PROJECT INFORMATION

SCOPE OF WORK:

ITEMS TO BE MOUNTED ON THE EXISTING TOWER:
12' UNIPOLE EXTENSION,
(3) LTE 3C ANTENNAS, (6) TMAS, & (12) LINES OF 7/8" COAX.

ITEMS TO BE INSTALLED INSIDE THE EXISTING AT&T EQUIPMENT AREA:
(1) DUL TO DUS UPGRADE & (1) DUS WITHIN EXISTING LTE RACK, (3) RRHS & (12) PENTAPLEXERS

ITEMS TO REMAIN:
(3) LTE 2C ANTENNAS, (3) TMA'S, & (6) LINES 1-5/8" COAX

ITEMS TO BE REMOVED:
N/A

PTN: 2051A03JME

RFDS REVISION: PRELIMINARY DATE: 8/5/2016

SITE ADDRESS:	500 QUEEN STREET SOUTHINGTON, CT 06489
LATITUDE:	41.63029° N, 41° 37' 49.05"
LONGITUDE:	72.87469° W, 72° 52' 28.91"
USID:	16335
LANDLORD:	CROWN CASTLE
TYPE OF SITE:	UNIPOLE / EQUIPMENT SHELTER
TOWER HEIGHT:	EXISTING: 82'-0" PROPOSED: 94'-0"
RAD CENTER:	EXISTING: 77'-6" PROPOSED: 89'-0"
CURRENT USE:	TELECOMMUNICATIONS FACILITY
PROPOSED USE:	TELECOMMUNICATIONS FACILITY

FA NUMBER: 10092205
SITE NUMBER: CTL05251
SITE NAME: SOUTHINGTON INDUSTRIAL CENTER
500 QUEEN STREET
SOUTHINGTON, CT 06489

PROJECT: LTE 3C

PROJECT TEAM

CLIENT REPRESENTATIVE

COMPANY:	SMARTLINK, LLC
ADDRESS:	1997 ANNAPOLIS EXCHANGE PARKWAY, SUITE 200
CITY, STATE, ZIP:	ANNAPOLIS, MD 21401
CONTACT:	TIM BOYCE
PHONE:	(908) 333-3640
E-MAIL:	tboyce@smartlinkllc.com

RF ENGINEER

COMPANY:	AT&T MOBILITY – NEW ENGLAND
ADDRESS:	550 COCHITUATE ROAD SUITE 550 13 AND 14
CITY, STATE, ZIP:	FRAMINGHAM, MA 01701
CONTACT:	CAMERON SYME
PHONE:	(508) 596-7146
E-MAIL:	cs6970@att.com

SITE ACQUISITION

COMPANY:	SMARTLINK, LLC
ADDRESS:	85 RANGEWAY RD, SUITE 102
CITY, STATE, ZIP:	BILLERICA, MA 01862
CONTACT:	SHARON R. KEEFE
PHONE:	(978) 930-3918
E-MAIL:	sharon.keefe@smartlinkllc.com

CONSTRUCTION MANAGER

COMPANY:	SMARTLINK, LLC.
ADDRESS:	85 RANGEWAY RD, SUITE 102
CITY, STATE, ZIP:	BILLERICA, MA 01862
CONTACT:	MARK J. DONNELLY
PHONE:	(617) 515-2080
E-MAIL:	mark.donnelly@smartlinkllc.com

ENGINEERING

COMPANY:	HUDSON DESIGN GROUP, LLC.
ADDRESS:	1600 OSGOOD STREET BUILDING 20 NORTH, SUITE 3090
CITY, STATE, ZIP:	NORTH ANDOVER, MA 01845
CONTACT:	DANIEL P. HAMM, PE
PHONE:	(978) 557-5553
E-MAIL:	info@hudsondesigngroupllc.com

DRAWING INDEX

SHEET NO.	DESCRIPTION	REV.
T-1	TITLE SHEET	3
GN-1	GENERAL NOTES	3
A-1	COMPOUND & EQUIPMENT PLANS	3
A-2	ELEVATIONS	3
A-3	ANTENNA & TMA LAYOUTS	3
A-4	DETAILS	3
RF-1	RF PLUMBING DIAGRAM	3
G-1	GROUNDING DETAILS	3

VICINITY MAP

DIRECTIONS TO SITE:

START OUT GOING NORTHEAST ON ENTERPRISE DR TOWARD CAPITAL BLVD 0.3 MI. TURN LEFT ONTO CAPITAL BLVD 0.3 MI. TURN LEFT ONTO WEST ST 0.3 MI. TURN LEFT TO MERGE ONTO I-91 S TOWARD NEW HAVEN 1.8 MI. TAKE EXIT 22N TO MERGE ONTO CT-9 N TOWARD NEW BRITAIN 6.5 MI. TAKE EXIT 28 ON THE LEFT TO MERGE ONTO CT-72 W TOWARD BRISTOL 3.2 MI. MERGE ONTO I-84 W 3.7 MI. TAKE EXIT 32 FOR CT-10/QUEEN ST 0.3 MI. TURN RIGHT ONTO CT-10 S/QUEEN ST. DESTINATION WILL BE ON THE RIGHT.

GENERAL NOTES

1. THIS DOCUMENT IS THE CREATION, DESIGN, PROPERTY AND COPYRIGHTED WORK OF AT&T. ANY DUPLICATION OR USE WITHOUT EXPRESS WRITTEN CONSENT IS STRICTLY PROHIBITED. DUPLICATION AND USE BY GOVERNMENT AGENCIES FOR THE PURPOSES OF CONDUCTING THEIR LAWFULLY AUTHORIZED REGULATORY AND ADMINISTRATIVE FUNCTIONS IS SPECIFICALLY ALLOWED.
2. THE FACILITY IS AN UNMANNED PRIVATE AND SECURED EQUIPMENT INSTALLATION. IT IS ONLY ACCESSED BY TRAINED TECHNICIANS FOR PERIODIC ROUTINE MAINTENANCE AND THEREFORE DOES NOT REQUIRE ANY WATER OR SANITARY SEWER SERVICE. THE FACILITY IS NOT GOVERNED BY REGULATIONS REQUIRING PUBLIC ACCESS PER ADA REQUIREMENTS.
3. CONTRACTOR SHALL VERIFY ALL PLANS AND EXISTING DIMENSIONS AND CONDITIONS ON THE JOB SITE AND SHALL IMMEDIATELY NOTIFY THE AT&T MOBILITY REPRESENTATIVE IN WRITING OF DISCREPANCIES BEFORE PROCEEDING WITH THE WORK OR BE RESPONSIBLE FOR SAME.

72 HOURS

CALL BEFORE YOU DIG

CALL TOLL FREE 1-800-922-4455

OR CALL 811

UNDERGROUND SERVICE ALERT

APPROVALS

DISCIPLINE:	SIGNATURE:	DATE:
THE FOLLOWING PARTIES HEREBY APPROVE AND ACCEPT THESE DOCUMENTS & AUTHORIZE THE SUBCONTRACTOR TO PROCEED WITH CONSTRUCTION DESCRIBED HEREIN. ALL DOCUMENTS ARE SUBJECT TO REVIEW BY THE LOCAL BUILDING DEPARTMENT & MAY IMPOSE CHANGES OR MODIFICATIONS.		
SMARTLINK SITE ACQUISITION:		
SMARTLINK CONSTRUCTION MANAGER:		
AT&T PROJECT MANAGER:		

Hudson Design Group LLC
1600 OSGOOD STREET
BUILDING 20 NORTH, SUITE 3090
N. ANDOVER, MA 01845
TEL: (978) 557-5553
FAX: (978) 336-5586

smartlink
1997 ANNAPOLIS EXCHANGE PKWY
SUITE 200
ANNAPOLIS, MD 21401

SITE NUMBER: CTL05251
SITE NAME: SOUTHINGTON INDUSTRIAL CENTER
500 QUEEN STREET
SOUTHINGTON, CT 06489
HARTFORD COUNTY

at&t
500 ENTERPRISE DRIVE, SUITE 3A
ROCKY HILL, CT 06067

NO.	DATE	REVISIONS	BY	CHK	APP'D
3	08/19/16	REVISED CONSTRUCTION	RP	HC	DPH
2	06/27/16	REVISED FOR CONSTRUCTION	SB	HC	DPH
1	06/01/16	ISSUED FOR CONSTRUCTION	SB	HC	DPH
0	05/24/16	ISSUED FOR REVIEW	SB	HC	DPH

SCALE: AS SHOWN DESIGNED BY: HC DRAWN BY: SB

AT&T

TITLE SHEET
(LTE 3C)

SITE NUMBER	DRAWING NUMBER	REV
CTL05251	T-1	3

GROUNDING NOTES

1. THE SUBCONTRACTOR SHALL REVIEW AND INSPECT THE EXISTING FACILITY GROUNDING SYSTEM AND LIGHTNING PROTECTION SYSTEM (AS DESIGNED AND INSTALLED) FOR STRICT COMPLIANCE WITH THE NEC (AS ADOPTED BY THE AHJ), THE SITE-SPECIFIC (UL, LPI, OR NFPA) LIGHTING PROTECTION CODE, AND GENERAL COMPLIANCE WITH TELCORDIA AND TIA GROUNDING STANDARDS. THE SUBCONTRACTOR SHALL REPORT ANY VIOLATIONS OR ADVERSE FINDINGS TO THE CONTRACTOR FOR RESOLUTION.

2. ALL GROUND ELECTRODE SYSTEMS (INCLUDING TELECOMMUNICATION, RADIO, LIGHTNING PROTECTION, AND AC POWER GES'S) SHALL BE BONDED TOGETHER, AT OR BELOW GRADE, BY TWO OR MORE COPPER BONDING CONDUCTORS IN ACCORDANCE WITH THE NEC.

3. THE SUBCONTRACTOR SHALL PERFORM IEEE FALL-OF-POTENTIAL RESISTANCE TO EARTH TESTING (PER IEEE 1100 AND 81) FOR NEW GROUND ELECTRODE SYSTEMS. THE SUBCONTRACTOR SHALL FURNISH AND INSTALL SUPPLEMENTAL GROUND ELECTRODES AS NEEDED TO ACHIEVE A TEST RESULT OF 5 OHMS OR LESS.

4. METAL RACEWAY SHALL NOT BE USED AS THE NEC REQUIRED EQUIPMENT GROUND CONDUCTOR. STRANDED COPPER CONDUCTORS WITH GREEN INSULATION, SIZED IN ACCORDANCE WITH THE NEC, SHALL BE FURNISHED AND INSTALLED WITH THE POWER CIRCUITS TO BTS EQUIPMENT.

5. EACH BTS CABINET FRAME SHALL BE DIRECTLY CONNECTED TO THE MASTER GROUND BAR WITH GREEN INSULATED SUPPLEMENTAL EQUIPMENT GROUND WIRES, 6 AWG STRANDED COPPER OR LARGER FOR INDOOR BTS 2 AWG STRANDED COPPER FOR OUTDOOR BTS.

6. EXOTHERMIC WELDS SHALL BE USED FOR ALL GROUNDING CONNECTIONS BELOW GRADE.

7. APPROVED ANTIOXIDANT COATINGS (I.E., CONDUCTIVE GEL OR PASTE) SHALL BE USED ON ALL COMPRESSION AND BOLTED GROUND CONNECTIONS.

8. ICE BRIDGE BONDING CONDUCTORS SHALL BE EXOTHERMICALLY BONDED OR BOLTED TO GROUND BAR.

9. ALUMINUM CONDUCTOR OR COPPER CLAD STEEL CONDUCTOR SHALL NOT BE USED FOR GROUNDING CONNECTIONS.

10. MISCELLANEOUS ELECTRICAL AND NON-ELECTRICAL METAL BOXES, FRAMES AND SUPPORTS SHALL BE BONDED TO THE GROUND RING, IN ACCORDANCE WITH THE NEC.

11. METAL CONDUIT SHALL BE MADE ELECTRICALLY CONTINUOUS WITH LISTED BONDING FITTINGS OR BY BONDING ACROSS THE DISCONTINUITY WITH 6 AWS COPPER WIRE UL APPROVED GROUNDING TYPE CONDUIT CLAMPS.

12. ALL NEW STRUCTURES WITH A FOUNDATION AND/OR FOOTING HAVING 20 FT. OR MORE OF 1/2 IN. OR GREATER ELECTRICALLY CONDUCTIVE REINFORCING STEEL MUST HAVE IT BONDED TO THE GROUND RING USING AN EXOTHERMIC WELD CONNECTION USING #2 AWG SOLID BARE TINNED COPPER GROUND WIRE, PER NEC 250.50

GENERAL NOTES

1. FOR THE PURPOSE OF CONSTRUCTION DRAWING, THE FOLLOWING DEFINITIONS SHALL APPLY:

   CONTRACTOR – SMARTLINK
   SUBCONTRACTOR – GENERAL CONTRACTOR (CONSTRUCTION)
   OWNER – AT&T MOBILITY

2. PRIOR TO THE SUBMISSION OF BIDS, THE BIDDING SUBCONTRACTOR SHALL VISIT THE CELL SITE TO FAMILIARIZE WITH THE EXISTING CONDITIONS AND TO CONFIRM THAT THE WORK CAN BE ACCOMPLISHED AS SHOWN ON THE CONSTRUCTION DRAWINGS. ANY DISCREPANCY FOUND SHALL BE BROUGHT TO THE ATTENTION OF CONTRACTOR.

3. ALL MATERIALS FURNISHED AND INSTALLED SHALL BE IN STRICT ACCORDANCE WITH ALL APPLICABLE CODES, REGULATIONS, AND ORDINANCES. SUBCONTRACTOR SHALL ISSUE ALL APPROPRIATE NOTICES AND COMPLY WITH ALL LAWS, ORDINANCES, RULES, REGULATIONS, AND LAWFUL ORDERS OF ANY PUBLIC AUTHORITY REGARDING THE PERFORMANCE OF THE WORK. ALL WORK CARRIED OUT SHALL COMPLY WITH ALL APPLICABLE MUNICIPAL AND UTILITY COMPANY SPECIFICATIONS AND LOCAL JURISDICTIONAL CODES, ORDINANCES AND APPLICABLE REGULATIONS.

4. DRAWINGS PROVIDED HERE ARE NOT TO BE SCALED AND ARE INTENDED TO SHOW OUTLINE ONLY.

5. UNLESS NOTED OTHERWISE, THE WORK SHALL INCLUDE FURNISHING MATERIALS, EQUIPMENT, APPURTENANCES, AND LABOR NECESSARY TO COMPLETE ALL INSTALLATIONS AS INDICATED ON THE DRAWINGS.

6. "KITTING LIST" SUPPLIED WITH THE BID PACKAGE IDENTIFIES ITEMS THAT WILL BE SUPPLIED BY CONTRACTOR. ITEMS NOT INCLUDED IN THE BILL OF MATERIALS AND KITTING LIST SHALL BE SUPPLIED BY THE SUBCONTRACTOR.

7. THE SUBCONTRACTOR SHALL INSTALL ALL EQUIPMENT AND MATERIALS IN ACCORDANCE WITH MANUFACTURER'S RECOMMENDATIONS UNLESS SPECIFICALLY STATED OTHERWISE.

8. IF THE SPECIFIED EQUIPMENT CANNOT BE INSTALLED AS SHOWN ON THESE DRAWINGS, THE SUBCONTRACTOR SHALL PROPOSE AN ALTERNATIVE INSTALLATION SPACE FOR APPROVAL BY THE CONTRACTOR.

9. SUBCONTRACTOR SHALL DETERMINE ACTUAL ROUTING OF CONDUIT, POWER AND T1 CABLES, GROUNDING CABLES AS SHOWN ON THE POWER, GROUNDING AND TELCO PLAN DRAWING. SUBCONTRACTOR SHALL UTILIZE EXISTING TRAYS AND/OR SHALL ADD NEW TRAYS AS NECESSARY. SUBCONTRACTOR SHALL CONFIRM THE ACTUAL ROUTING WITH THE CONTRACTOR.

10. THE SUBCONTRACTOR SHALL PROTECT EXISTING IMPROVEMENTS, PAVEMENTS, CURBS, LANDSCAPING AND STRUCTURES. ANY DAMAGED PART SHALL BE REPAIRED AT SUBCONTRACTOR'S EXPENSE TO THE SATISFACTION OF OWNER.

11. SUBCONTRACTOR SHALL LEGALLY AND PROPERLY DISPOSE OF ALL SCRAP MATERIALS SUCH AS COAXIAL CABLES AND OTHER ITEMS REMOVED FROM THE EXISTING FACILITY. ANTENNAS REMOVED SHALL BE RETURNED TO THE OWNER'S DESIGNATED LOCATION.

12. SUBCONTRACTOR SHALL LEAVE PREMISES IN CLEAN CONDITION.

13. ALL CONCRETE REPAIR WORK SHALL BE DONE IN ACCORDANCE WITH AMERICAN CONCRETE INSTITUTE (ACI) 301.

14. ANY NEW CONCRETE NEEDED FOR THE CONSTRUCTION SHALL BE AIR-ENTRAINED AND SHALL HAVE 4000 PSI STRENGTH AT 28 DAYS. ALL CONCRETE WORK SHALL BE DONE IN ACCORDANCE WITH ACI 318 CODE REQUIREMENTS.

15. ALL STRUCTURAL STEEL WORK SHALL BE DETAILED, FABRICATED AND ERECTED IN ACCORDANCE WITH AISC SPECIFICATIONS. ALL STRUCTURAL STEEL SHALL BE ASTM A36 (Fy = 36 ksi) UNLESS OTHERWISE NOTED. PIPES SHALL BE ASTM A53 TYPE E (Fy = 36 ksi). ALL STEEL EXPOSED TO WEATHER SHALL BE HOT DIPPED GALVANIZED. TOUCHUP ALL SCRATCHES AND OTHER MARKS IN THE FIELD AFTER STEEL IS ERECTED USING A COMPATIBLE ZINC RICH PAINT.

16. CONSTRUCTION SHALL COMPLY WITH SPECIFICATIONS AND "GENERAL CONSTRUCTION SERVICES FOR CONSTRUCTION OF AT&T SITES."

17. SUBCONTRACTOR SHALL VERIFY ALL EXISTING DIMENSIONS AND CONDITIONS PRIOR TO COMMENCING ANY WORK. ALL DIMENSIONS OF EXISTING CONSTRUCTION SHOWN ON THE DRAWINGS MUST BE VERIFIED. SUBCONTRACTOR SHALL NOTIFY THE CONTRACTOR OF ANY DISCREPANCIES PRIOR TO ORDERING MATERIAL OR PROCEEDING WITH CONSTRUCTION.

18. THE EXISTING CELL SITE IS IN FULL COMMERCIAL OPERATION. ANY CONSTRUCTION WORK BY SUBCONTRACTOR SHALL NOT DISRUPT THE EXISTING NORMAL OPERATION. ANY WORK ON EXISTING EQUIPMENT MUST BE COORDINATED WITH CONTRACTOR. ALSO, WORK SHOULD BE SCHEDULED FOR AN APPROPRIATE MAINTENANCE WINDOW USUALLY IN LOW TRAFFIC PERIODS AFTER MIDNIGHT.

19. SINCE THE CELL SITE IS ACTIVE, ALL SAFETY PRECAUTIONS MUST BE TAKEN WHEN WORKING AROUND HIGH LEVELS OF ELECTROMAGNETIC RADIATION. EQUIPMENT SHOULD BE SHUTDOWN PRIOR TO PERFORMING ANY WORK THAT COULD EXPOSE THE WORKERS TO DANGER. PERSONAL RF EXPOSURE MONITORS ARE ADVISED TO BE WORN TO ALERT OF ANY DANGEROUS EXPOSURE LEVELS.

20. APPLICABLE BUILDING CODES:
    SUBCONTRACTOR'S WORK SHALL COMPLY WITH ALL APPLICABLE NATIONAL, STATE, AND LOCAL CODES AS ADOPTED BY THE LOCAL AUTHORITY HAVING JURISDICTION (AHJ) FOR THE LOCATION. THE EDITION OF THE AHJ ADOPTED CODES AND STANDARDS IN EFFECT ON THE DATE OF CONTRACT AWARD SHALL GOVERN THE DESIGN.
    BUILDING CODE: 2003 IBC WITH 2005 CT SUPPLEMENT, + 2009 & 2013 CT AMENDMENTS
    ELECTRICAL CODE: REFER TO ELECTRICAL DRAWINGS
    LIGHTENING CODE: REFER TO ELECTRICAL DRAWINGS

    SUBCONTRACTOR'S WORK SHALL COMPLY WITH THE LATEST EDITION OF THE FOLLOWING STANDARDS:

    AMERICAN CONCRETE INSTITUTE (ACI) 318; BUILDING CODE REQUIREMENTS FOR STRUCTURAL CONCRETE;

    AMERICAN INSTITUTE OF STEEL CONSTRUCTION (AISC)

    MANUAL OF STEEL CONSTRUCTION, ASD, FOURTEENTH EDITION;

    TELECOMMUNICATIONS INDUSTRY ASSOCIATION (TIA) 222-F, STRUCTURAL STANDARDS FOR STEEL

    EQUIPMENT AND ANTENNA SUPPORTING STRUCTURES; REFER TO ELECTRICAL DRAWINGS FOR SPECIFIC ELECTRICAL STANDARDS.

FOR ANY CONFLICTS BETWEEN SECTIONS OF LISTED CODES AND STANDARDS REGARDING MATERIAL, METHODS OF CONSTRUCTION, OR OTHER REQUIREMENTS, THE MOST RESTRICTIVE REQUIREMENT SHALL GOVERN. WHERE THERE IS CONFLICT BETWEEN A GENERAL REQUIREMENT AND A SPECIFIC REQUIREMENT, THE SPECIFIC REQUIREMENT SHALL GOVERN.

ABBREVIATIONS

AGL	ABOVE GRADE LEVEL	EQ	EQUAL	REQ	REQUIRED
AWG	AMERICAN WIRE GAUGE	GC	GENERAL CONTRACTOR	RF	RADIO FREQUENCY
BBU	BATTERY BACKUP UNIT	GRC	GALVANIZED RIGID CONDUIT	TBD	TO BE DETERMINED
BTCW	BARE TINNED SOLID COPPER WIRE	MGB	MASTER GROUND BAR	TBR	TO BE REMOVED
BGR	BURIED GROUND RING	MIN	MINIMUM	TBRR	TO BE REMOVED AND REPLACED
BTS	BASE TRANSCEIVER STATION	P	PROPOSED	TYP	TYPICAL
E	EXISTING	NTS	NOT TO SCALE	UG	UNDER GROUND
EGB	EQUIPMENT GROUND BAR	RAD	RADIATION CENTER LINE (ANTENNA)	VIF	VERIFY IN FIELD
EGR	EQUIPMENT GROUND RING	REF	REFERENCE		

Hudson Design Groupllc
1600 OSGOOD STREET
BUILDING 20 NORTH, SUITE 3090
N. ANDOVER, MA 01845
TEL: (978) 557-5553
FAX: (978) 336-5586

smartlink
1997 ANNAPOLIS EXCHANGE PKWY
SUITE 200
ANNAPOLIS, MD 21401

SITE NUMBER: CTL05251
SITE NAME: SOUTHINGTON INDUSTRIAL CENTER
500 QUEEN STREET
SOUTHINGTON, CT 06489
HARTFORD COUNTY

at&t
500 ENTERPRISE DRIVE, SUITE 3A
ROCKY HILL, CT 06067

NO.	DATE	REVISIONS	BY	CHK	APP'D
3	08/19/16	REVISED CONSTRUCTION	RP	HC	DPH
2	06/27/16	REVISED FOR CONSTRUCTION	SB	HC	DPH
1	06/01/16	ISSUED FOR CONSTRUCTION	SB	HC	DPH
0	05/24/16	ISSUED FOR REVIEW	SB	HC	DPH

SCALE: AS SHOWN | DESIGNED BY: HC | DRAWN BY: SB

AT&T

GENERAL NOTES
(LTE 3C)

SITE NUMBER	DRAWING NUMBER	REV
CTL05251	GN-1	3

NOTE:
REFER TO THE FINAL RF DATA SHEET FOR FINAL ANTENNA SETTINGS.

NOTE:

REFER TO STRUCTURAL ANALYSIS BY: HUDSON DESIGN GROUP, LLC, DATED: AUGUST 5, 2016, FOR THE CAPACITY OF THE EXISTING STRUCTURES TO SUPPORT THE PROPOSED EQUIPMENT.

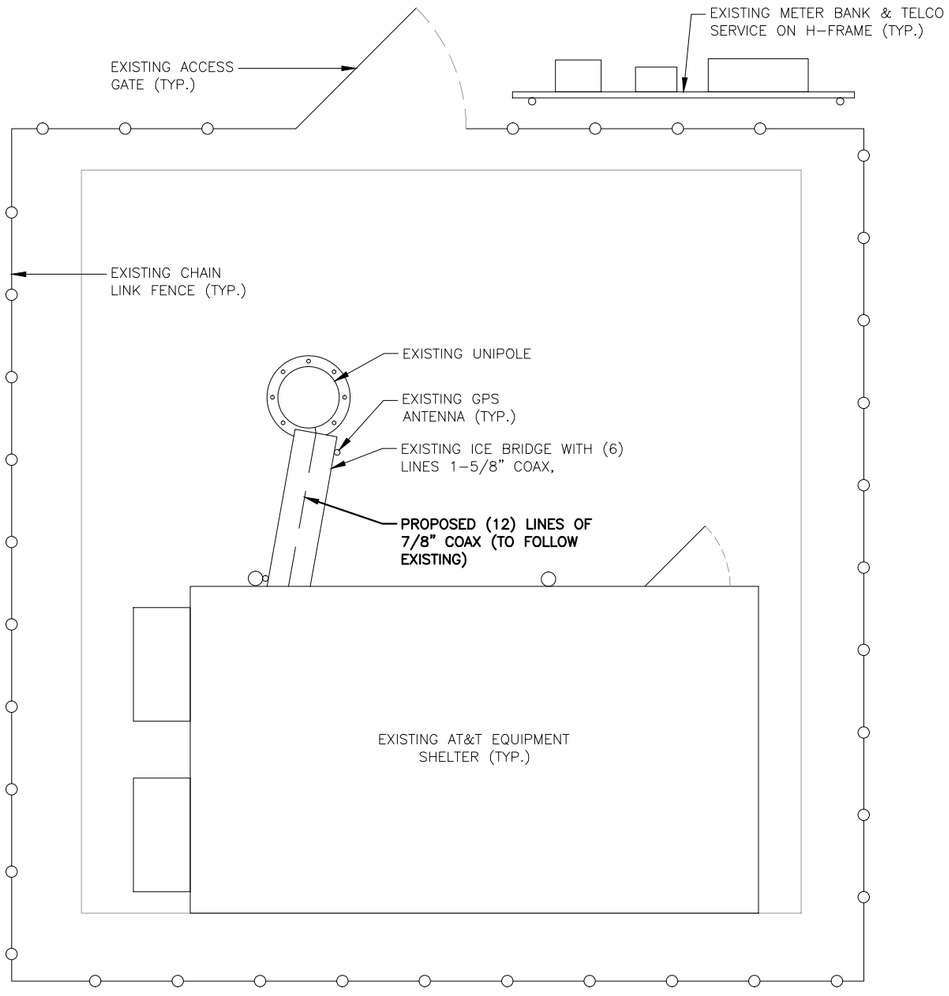

COMPOUND PLAN (1 / A-1)
22x34 SCALE: 3/8"=1'-0"
11x17 SCALE: 3/16"=1'-0"

0 1'-4" 2'-8" 5'-4" 8'-0"

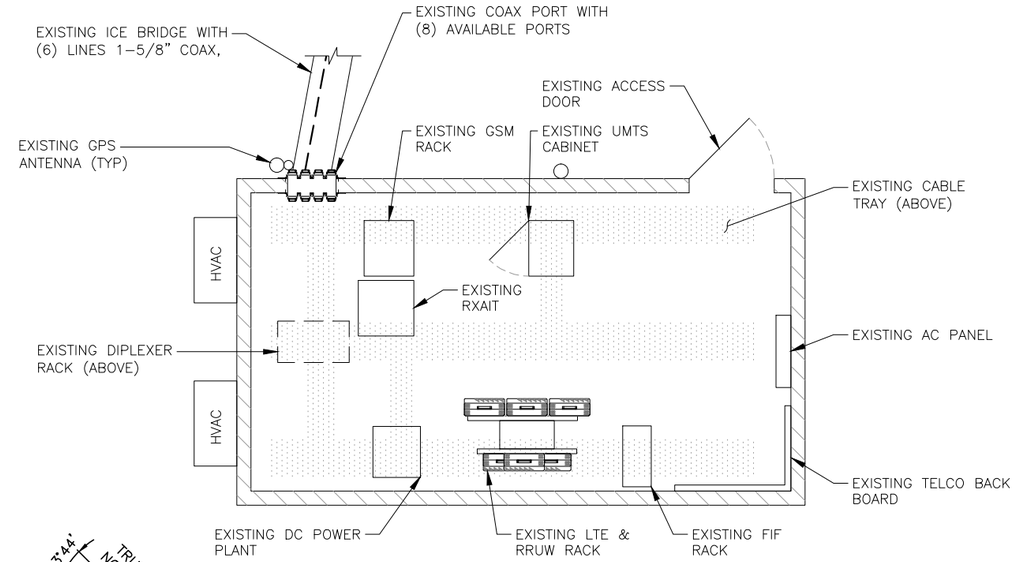

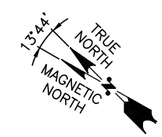

EXISTING EQUIPMENT PLAN (2 / A-1)
22x34 SCALE: 3/8"=1'-0"
11x17 SCALE: 3/16"=1'-0"

0 1'-4" 2'-8" 5'-4" 8'-0"

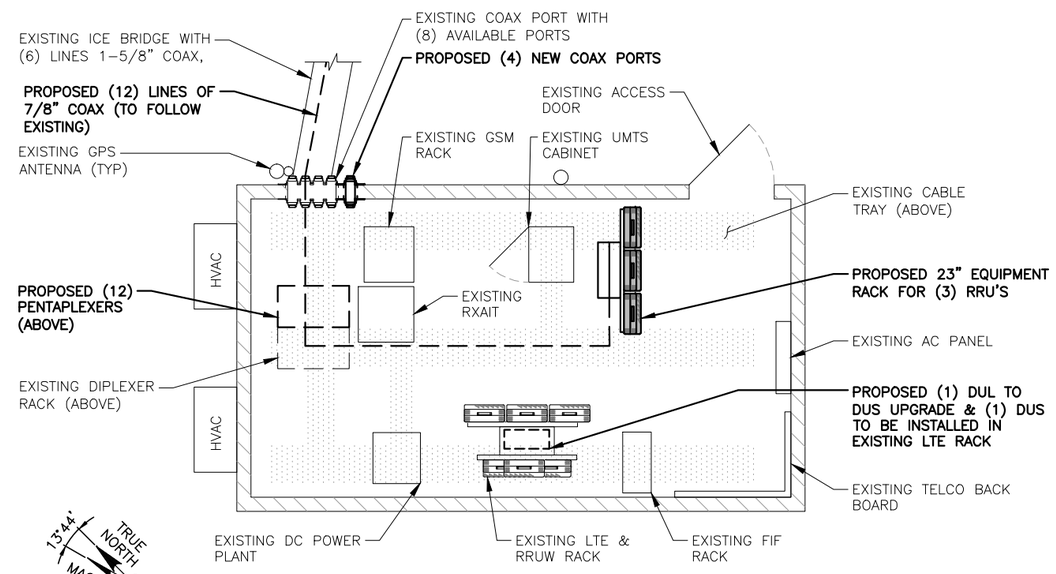

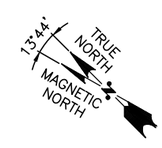

PROPOSED EQUIPMENT PLAN (3 / A-1)
22x34 SCALE: 3/8"=1'-0"
11x17 SCALE: 3/16"=1'-0"

0 1'-4" 2'-8" 5'-4" 8'-0"

Hudson Design Group LLC
1600 OSGOOD STREET
BUILDING 20 NORTH, SUITE 3090
N. ANDOVER, MA 01845
TEL: (978) 557-5553
FAX: (978) 336-5586

smartlink
1997 ANNAPOLIS EXCHANGE PKWY
SUITE 200
ANNAPOLIS, MD 21401

SITE NUMBER: CTL05251
SITE NAME: SOUTHINGTON INDUSTRIAL CENTER
500 QUEEN STREET
SOUTHINGTON, CT 06489
HARTFORD COUNTY

at&t
500 ENTERPRISE DRIVE, SUITE 3A
ROCKY HILL, CT 06067

NO.	DATE	REVISIONS	BY	CHK	APP'D
3	08/19/16	REVISED CONSTRUCTION	RP	HC	DPH
2	06/27/16	REVISED FOR CONSTRUCTION	SB	HC	DPH
1	06/01/16	ISSUED FOR CONSTRUCTION	SB	HC	DPH
0	05/24/16	ISSUED FOR REVIEW	SB	HC	DPH

SCALE: AS SHOWN | DESIGNED BY: HC | DRAWN BY: SB

AT&T

COMPOUND & EQUIPMENT PLANS
(LTE 3C)

SITE NUMBER	DRAWING NUMBER	REV
CTL05251	A-1	3

NOTE:
REFER TO THE FINAL RF DATA SHEET FOR FINAL ANTENNA SETTINGS.

NOTE:

REFER TO STRUCTURAL ANALYSIS BY: HUDSON DESIGN GROUP, LLC, DATED: AUGUST 5, 2016, FOR THE CAPACITY OF THE EXISTING STRUCTURES TO SUPPORT THE PROPOSED EQUIPMENT.

NOTE:

REFER TO STRUCTURAL MOD DESIGN BY PAUL J. FORD & COMPANY, DATED: AUGUST 2, 2016, FOR PROPOSED ANTENNA CONCEALMENT DESIGN.

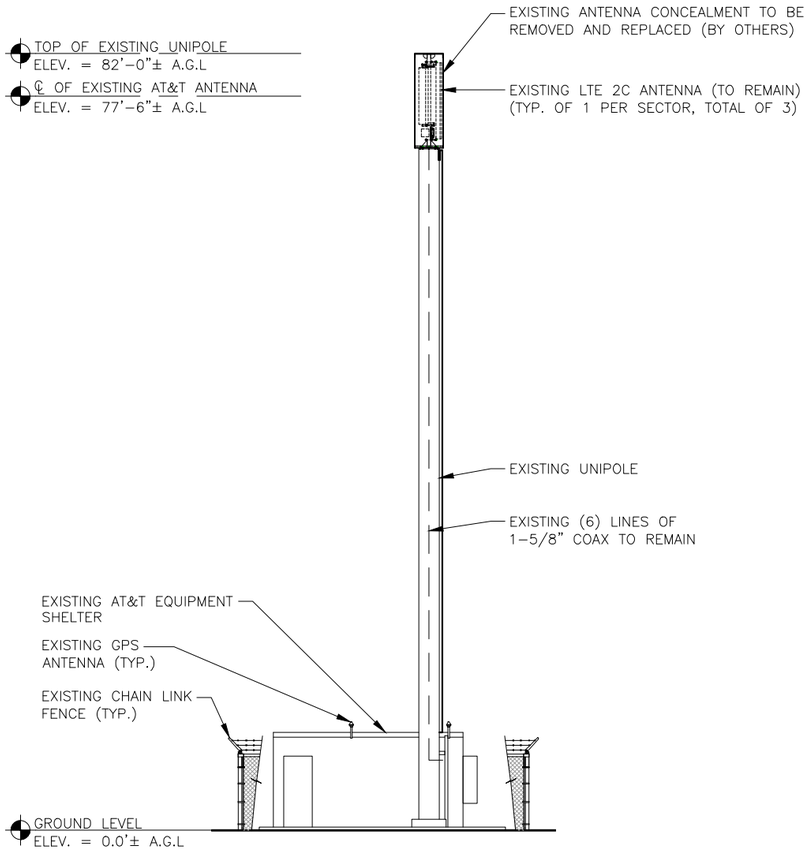

EXISTING NORTHEAST ELEVATION (1 / A-2)
22x34 SCALE: 1/8"=1'-0"
11x17 SCALE: 1/16"=1'-0"

0 4'-0" 8'-0" 16'-0" 24'-0"

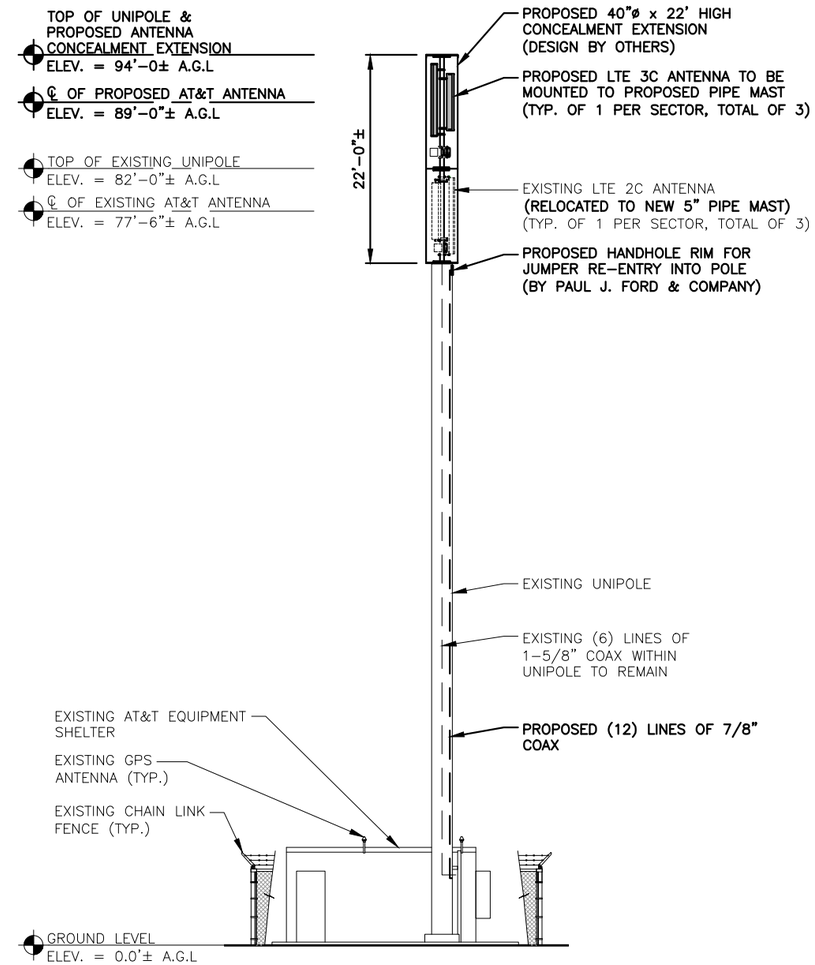

PROPOSED NORTHEAST ELEVATION (2 / A-2)
22x34 SCALE: 1/8"=1'-0"
11x17 SCALE: 1/16"=1'-0"

0 4'-0" 8'-0" 16'-0" 24'-0"

Hudson Design Group LLC
1600 OSGOOD STREET
BUILDING 20 NORTH, SUITE 3090
N. ANDOVER, MA 01845
TEL: (978) 557-5553
FAX: (978) 336-5586

smartlink
1997 ANNAPOLIS EXCHANGE PKWY
SUITE 200
ANNAPOLIS, MD 21401

SITE NUMBER: CTL05251
SITE NAME: SOUTHINGTON INDUSTRIAL CENTER
500 QUEEN STREET
SOUTHINGTON, CT 06489
HARTFORD COUNTY

at&t
500 ENTERPRISE DRIVE, SUITE 3A
ROCKY HILL, CT 06067

NO.	DATE	REVISIONS	BY	CHK	APP'D
3	08/19/16	REVISED CONSTRUCTION	RP	HC	DPH
2	06/27/16	REVISED FOR CONSTRUCTION	SB	HC	DPH
1	06/01/16	ISSUED FOR CONSTRUCTION	SB	HC	DPH
0	05/24/16	ISSUED FOR REVIEW	SB	HC	DPH

SCALE: AS SHOWN | DESIGNED BY: HC | DRAWN BY: SB

AT&T

ELEVATIONS
(LTE 3C)

SITE NUMBER	DRAWING NUMBER	REV
CTL05251	A-2	3

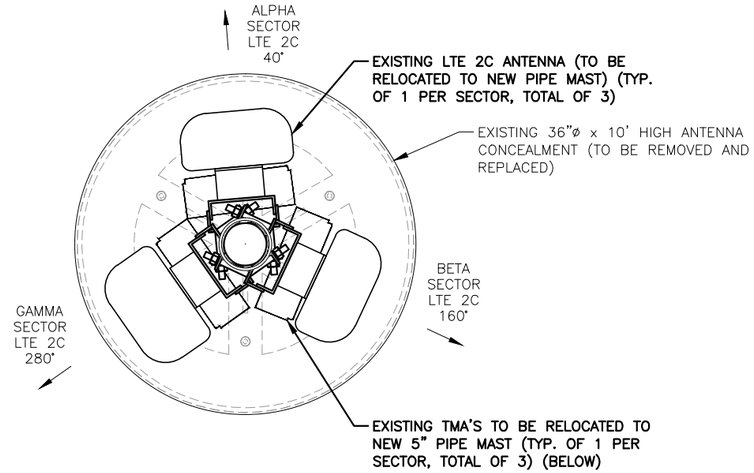

NOTE:
REFER TO THE FINAL RF DATA SHEET FOR FINAL ANTENNA SETTINGS.

NOTE:

REFER TO STRUCTURAL ANALYSIS BY: HUDSON DESIGN GROUP, LLC, DATED: AUGUST 5, 2016, FOR THE CAPACITY OF THE EXISTING STRUCTURES TO SUPPORT THE PROPOSED EQUIPMENT.

NOTE:

REFER TO STRUCTURAL MOD DESIGN BY PAUL J. FORD & COMPANY, DATED: AUGUST 2, 2016, FOR PROPOSED ANTENNA CONCEALMENT DESIGN.

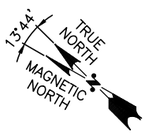

EXISTING ANTENNA LAYOUT
AT 77'-6" RAD CENTER (1 / A–3)
SCALE: N.T.S

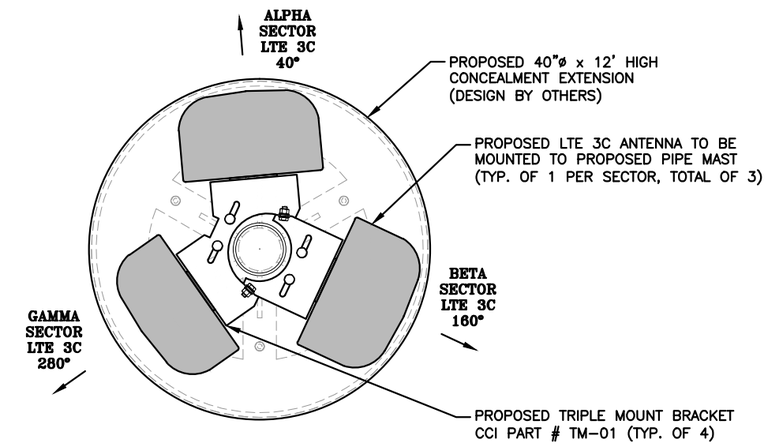

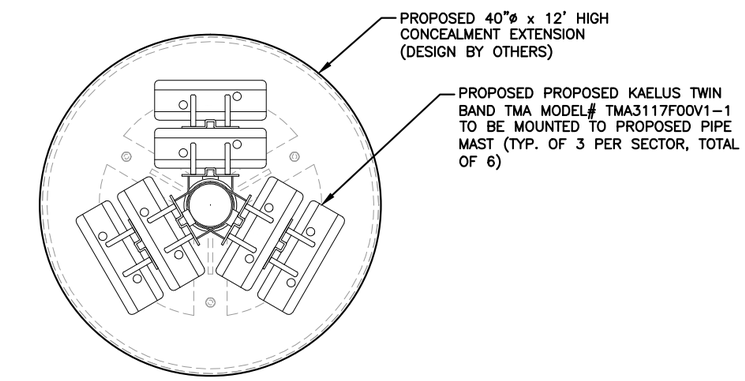

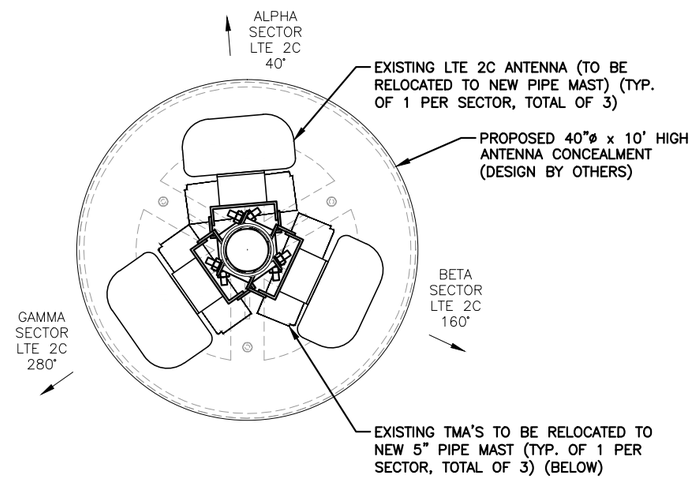

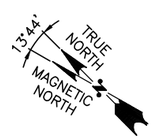

PROPOSED ANTENNA LAYOUT
AT 89'-0" RAD CENTER (3 / A–3)
SCALE: N.T.S

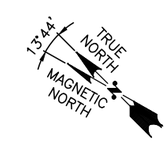

PROPOSED TMA LAYOUT (4 / A–3)
SCALE: N.T.S

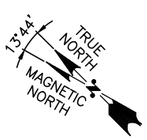

PROPOSED ANTENNA LAYOUT
AT 77'-6" RAD CENTER (1 / A–3)
SCALE: N.T.S

Hudson Design Group LLC
1600 OSGOOD STREET
BUILDING 20 NORTH, SUITE 3090
N. ANDOVER, MA 01845
TEL: (978) 557-5553
FAX: (978) 336-5586

smartlink
1997 ANNAPOLIS EXCHANGE PKWY
SUITE 200
ANNAPOLIS, MD 21401

SITE NUMBER: CTL05251
SITE NAME: SOUTHINGTON INDUSTRIAL CENTER
500 QUEEN STREET
SOUTHINGTON, CT 06489
HARTFORD COUNTY

at&t
500 ENTERPRISE DRIVE, SUITE 3A
ROCKY HILL, CT 06067

NO.	DATE	REVISIONS	BY	CHK	APP'D
3	08/19/16	REVISED CONSTRUCTION	RP	HC	DPH
2	06/27/16	REVISED FOR CONSTRUCTION	SB	HC	DPH
1	06/01/16	ISSUED FOR CONSTRUCTION	SB	HC	DPH
0	05/24/16	ISSUED FOR REVIEW	SB	HC	DPH

SCALE: AS SHOWN | DESIGNED BY: HC | DRAWN BY: SB

AT&T

ANTENNA & TMA LAYOUTS
(LTE 3C)

SITE NUMBER	DRAWING NUMBER	REV
CTL05251	A–3	3

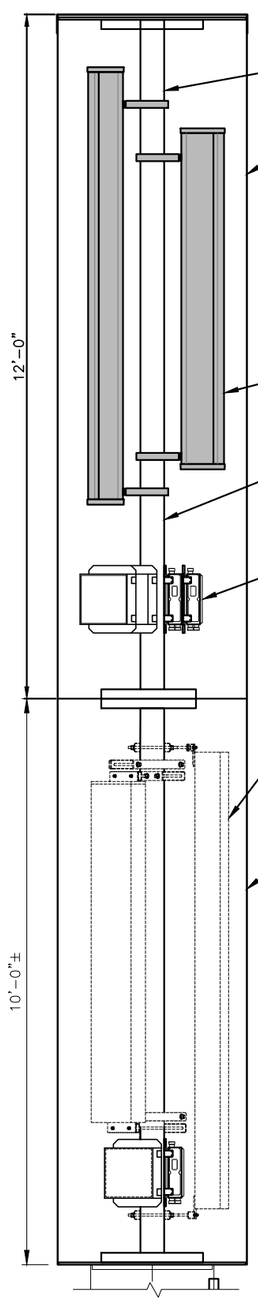

TOP OF UNIPOLE & PROPOSED ANTENNA CONCEALMENT EXTENSION
ELEV. = 94'-0± A.G.L

PROPOSED TRIPLE MOUNT BRACKET CCI PART # TM-01 (TYP. OF 4)

PROPOSED 40"ø x 12' HIGH ANTENNA CONCEALMENT EXTENSION (BY OTHERS)

℄ OF PROPOSED AT&T ANTENNA
ELEV. = 89'-0"± A.G.L

PROPOSED LTE 3C ANTENNA TO BE MOUNTED TO PROPOSED PIPE MAST (TYP. OF 1 PER SECTOR, TOTAL OF 3)

PROPOSED 5" STD. PIPE MAST

PROPOSED KAELUS TWIN BAND TMA MOUNTED TO PROPOSED PIPE MAST (TYP. OF 2 PER SECTOR, TOTAL OF 6)

TOP OF EXISTING UNIPOLE
ELEV. = 82'-0"± A.G.L

EXISTING LTE 2C ANTENNA (TO BE RELOCATED TO NEW PIPE MAST) (TYP. OF 1 PER SECTOR, TOTAL OF 3)

PROPOSED 40"ø x 10' HIGH ANTENNA CONCEALMENT EXTENSION (DESIGN BY OTHERS)

℄ OF EXISTING AT&T ANTENNA
ELEV. = 77'-6"± A.G.L

PROPOSED ANTENNA MOUNTING DETAIL (1 / A-4)
22x34 SCALE: 3/4"=1'-0"
11x17 SCALE: 3/8"=1'-0"

0 8" 1'-4" 2'-8" 4'-0"

NOTE:

REFER TO STRUCTURAL ANALYSIS BY: HUDSON DESIGN GROUP, LLC, DATED: AUGUST 5, 2016, FOR THE CAPACITY OF THE EXISTING STRUCTURES TO SUPPORT THE PROPOSED EQUIPMENT.

NOTE:
REFER TO THE FINAL RF DATA SHEET FOR FINAL ANTENNA SETTINGS.

NOTE:

REFER TO STRUCTURAL MOD DESIGN BY PAUL J. FORD & COMPANY, DATED: AUGUST 2, 2016, FOR PROPOSED ANTENNA CONCEALMENT DESIGN.

EXISTING & PROPOSED ANTENNA SCHEDULE

SECTOR	TECHNOLOGY	EXISTING/PROPOSED	RAD CENTER	AZIMUTH	MAKE	MODEL#	SIZE (INCHES) (L x W x D)
ALPHA	LTE 2C	EXISTING	77'-6"±	40°	ANDREW	AM-X-CD-16-65-00T-RET	72.0x11.8x5.9
	LTE 3C	PROPOSED	89'-0"±	40°	KATHERIN	800-10891	78.5x14.8x6.7
BETA	LTE 2C	EXISTING	77'-6"±	160°	ANDREW	AM-X-CD-16-65-00T-RET	72.0x11.8x5.9
	LTE 3C	PROPOSED	89'-0"±	160°	KATHERIN	800-10891	78.5x14.8x6.7
GAMMA	LTE 2C	EXISTING	77'-6"±	280°	ANDREW	SBNH-1D6565C	96.4x11.9x7.1
	LTE 3C	PROPOSED	89'-0"±	280°	KATHERIN	800-10891	78.5x14.8x6.7

NOTES:

1. REFER TO RF CONFIG & SECTOR SCHEMATICS FOR MODEL, TYPE & QUANTITY REQUIRED PER SECTOR

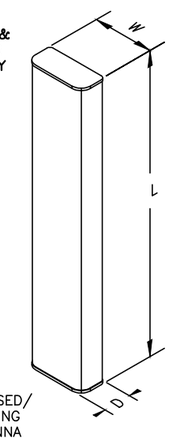

PROPOSED/ EXISTING ANTENNA

PROPOSED ANTENNA DETAIL (3 / A-4)
SCALE: N.T.S

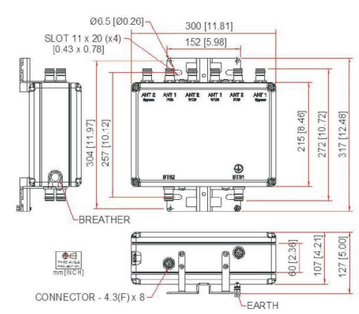

PROPOSED KAELUS TWIN BAND TMA
MODEL# TMA3117F00V1-1

NOTE:
MOUNT PER MANUFACTURER'S SPECIFICATIONS.

PROPOSED TMA DETAIL (2 / A-4)
SCALE: N.T.S

NOTE:

SEE RFDS FOR RRH FREQUENCY AND MODEL NUMBER

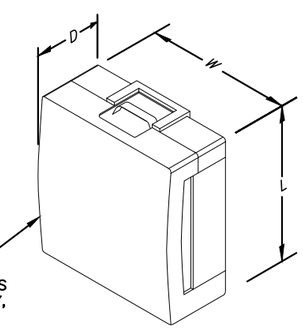

PROPOSED RRH
REFER TO THE FINAL RFDS AND CHART FOR QUANTITY, MODEL AND DIMENSIONS

NOTE:
MOUNT PER MANUFACTURER'S SPECIFICATIONS.

PROPOSED RRH DETAIL (4 / A-4)
SCALE: N.T.S

Hudson Design Group LLC
1600 OSGOOD STREET
BUILDING 20 NORTH, SUITE 3090
N. ANDOVER, MA 01845
TEL: (978) 557-5553
FAX: (978) 336-5586

smartlink
1997 ANNAPOLIS EXCHANGE PKWY
SUITE 200
ANNAPOLIS, MD 21401

SITE NUMBER: CTL05251
SITE NAME: SOUTHINGTON INDUSTRIAL CENTER
500 QUEEN STREET
SOUTHINGTON, CT 06489
HARTFORD COUNTY

at&t
500 ENTERPRISE DRIVE, SUITE 3A
ROCKY HILL, CT 06067

NO.	DATE	REVISIONS	BY	CHK	APP'D
3	08/19/16	REVISED CONSTRUCTION	RP	HC	DPH
2	06/27/16	REVISED FOR CONSTRUCTION	SB	HC	DPH
1	06/01/16	ISSUED FOR CONSTRUCTION	SB	HC	DPH
0	05/24/16	ISSUED FOR REVIEW	SB	HC	DPH

SCALE: AS SHOWN | DESIGNED BY: HC | DRAWN BY: SB

AT&T

DETAILS
(LTE 3C)

SITE NUMBER	DRAWING NUMBER	REV
CTL05251	A-4	3

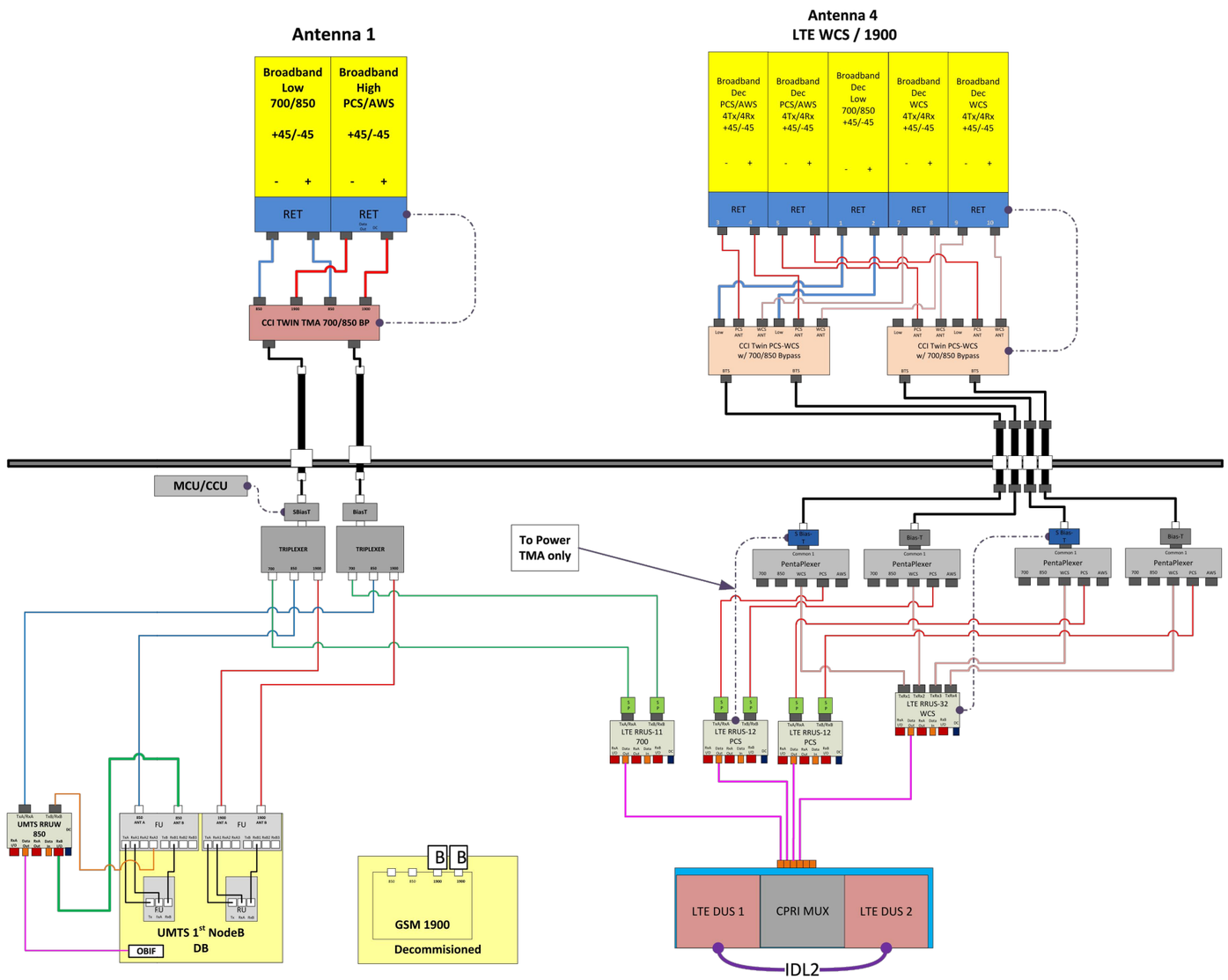

RF PLUMBING DIAGRAM (1 / RF–1)

SCALE: N.T.S

NOTE:
1. CONTRACTOR TO CONFIRM ALL PARTS.
2. INSTALL ALL EQUIPMENT TO MANUFACTURER'S RECOMMENDATIONS

NOTE:
REFER TO THE FINAL RF DATA SHEET FOR FINAL ANTENNA SETTINGS.

Hudson Design Group LLC
1600 OSGOOD STREET
BUILDING 20 NORTH, SUITE 3090
N. ANDOVER, MA 01845
TEL: (978) 557-5553
FAX: (978) 336-5586

smartlink
1997 ANNAPOLIS EXCHANGE PKWY
SUITE 200
ANNAPOLIS, MD 21401

SITE NUMBER: CTL05251
SITE NAME: SOUTHINGTON INDUSTRIAL CENTER
500 QUEEN STREET
SOUTHINGTON, CT 06489
HARTFORD COUNTY

at&t
500 ENTERPRISE DRIVE, SUITE 3A
ROCKY HILL, CT 06067

NO.	DATE	REVISIONS	BY	CHK	APP'D
3	08/19/16	REVISED CONSTRUCTION	RP	HC	DPH
2	06/27/16	REVISED FOR CONSTRUCTION	SB	HC	DPH
1	06/01/16	ISSUED FOR CONSTRUCTION	SB	HC	DPH
0	05/24/16	ISSUED FOR REVIEW	SB	HC	DPH

SCALE: AS SHOWN | DESIGNED BY: HC | DRAWN BY: SB

AT&T

RF PLUMBING DIAGRAM
(LTE 3C)

SITE NUMBER	DRAWING NUMBER	REV
CTL05251	RF–1	3

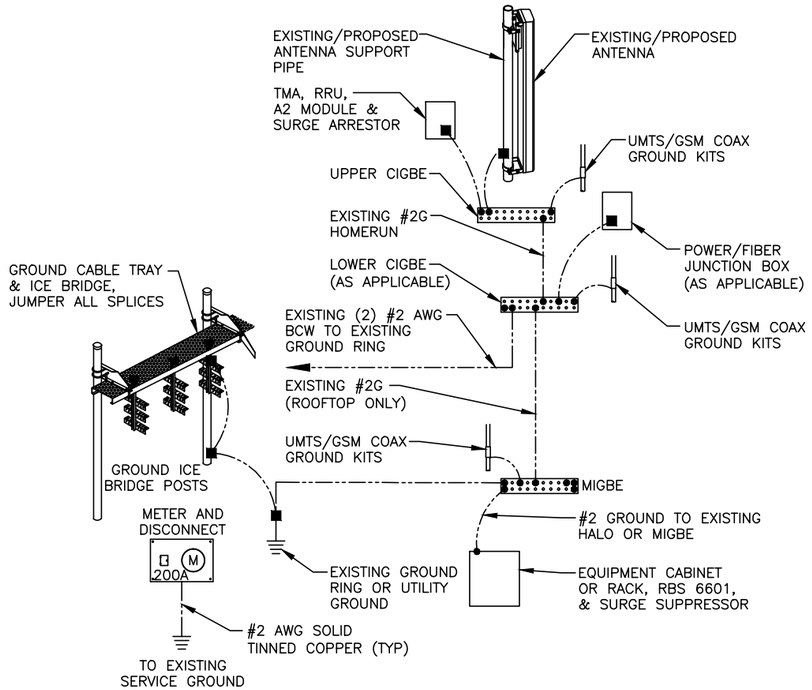

GROUNDING RISER DIAGRAM (1 / G–1)
SCALE: N.T.S

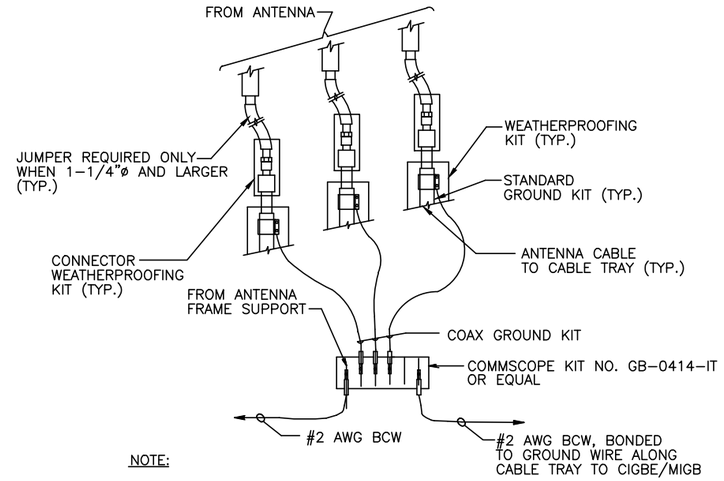

NOTE:

1. DO NOT INSTALL CABLE GROUND KIT AT A BEND AND ALWAYS DIRECT GROUND WIRE DOWN TO CIGBE.

GROUND WIRE TO GROUND BAR CONNECTION DETAIL (2 / G–1)
SCALE: N.T.S

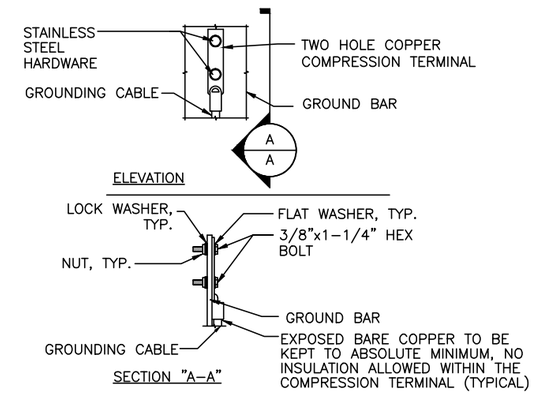

NOTE:

1. "DOUBLING UP" OR "STACKING" OF CONNECTION IS NOT PERMITTED.
2. OXIDE INHIBITING COMPOUND TO BE USED AT ALL LOCATION.
3. CADWELD DOWNLEADS FROM UPPER EGB, LOWER EGB, AND MGB

TYPICAL GROUND BAR CONNECTION DETAIL (3 / G–1)
SCALE: N.T.S

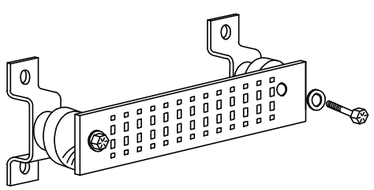

GROUND BAR - DETAIL (4 / G–1)
SCALE: N.T.S

EACH GROUND CONDUCTOR TERMINATING ON ANY GROUND BAR SHALL HAVE AN IDENTIFICATION TAG ATTACHED AT EACH END THAT WILL IDENTIFY ITS ORIGIN AND DESTINATION.

SECTION "P" – SURGE PRODUCERS

CABLE ENTRY PORTS (HATCH PLATES) (#2)
GENERATOR FRAMEWORK (IF AVAILABLE) (#2)
TELCO GROUND BAR
COMMERCIAL POWER COMMON NEUTRAL/GROUND BOND (#2)
+24V POWER SUPPLY RETURN BAR (#2)
–48V POWER SUPPLY RETURN BAR (#2)
RECTIFIER FRAMES.

SECTION "A" – SURGE ABSORBERS

INTERIOR GROUND RING (#2)
EXTERNAL EARTH GROUND FIELD (BURIED GROUND RING) (#2)
METALLIC COLD WATER PIPE (IF AVAILABLE) (#2)
BUILDING STEEL (IF AVAILABLE) (#2)

Hudson Design Group LLC
1600 OSGOOD STREET
BUILDING 20 NORTH, SUITE 3090
N. ANDOVER, MA 01845
TEL: (978) 557-5553
FAX: (978) 336-5586

smartlink
1997 ANNAPOLIS EXCHANGE PKWY
SUITE 200
ANNAPOLIS, MD 21401

SITE NUMBER: CTL05251
SITE NAME: SOUTHINGTON INDUSTRIAL CENTER
500 QUEEN STREET
SOUTHINGTON, CT 06489
HARTFORD COUNTY

at&t
500 ENTERPRISE DRIVE, SUITE 3A
ROCKY HILL, CT 06067

NO.	DATE	REVISIONS	BY	CHK	APP'D
3	08/19/16	REVISED CONSTRUCTION	RP	HC	DPH
2	06/27/16	REVISED FOR CONSTRUCTION	SB	HC	DPH
1	06/01/16	ISSUED FOR CONSTRUCTION	SB	HC	DPH
0	05/24/16	ISSUED FOR REVIEW	SB	HC	DPH

SCALE: AS SHOWN | DESIGNED BY: HC | DRAWN BY: SB

AT&T

GROUNDING DETAILS
(LTE 3C)

SITE NUMBER	DRAWING NUMBER	REV
CTL05251	G–1	3

ATTACHMENT 3

10-Port Antenna	R1	Y1	Y2	Y3	Y4
Frequency Range	698–960	1695–2690	1695–2690	1695–2690	1695–2690
Dual Polarization	X	X	X	X	X
HPBW	65°	65°	65°	65°	65°
Adjust. Electr. DT set by *FlexRET*	2°–12°	2°–14°	2°–14°	2°–14°	2°–14°

KATHREIN

AISG Antenna Interface Standards Group

10-Port Antenna 698–960/1695–2690/1695–2690/1695–2690/1695–2690 65°/65°/65°/65°/65° 16/16/16/17/16.5dBi 2°–12°/2°–14°/2°–14°/2°–14°/2°–14°T

Type No.		80010891			
Left side, low band		R1, connector 1–2			
		698–960			
Frequency Range	MHz	698 – 806	791 – 862	824 – 894	880 – 960
Gain at mid Tilt	dBi	15.5	15.9	16.0	16.3
Gain over all Tilts	dBi	15.4 ± 0.4	15.8 ± 0.3	15.9 ± 0.3	16.2 ± 0.3
Horizontal Pattern:					
Azimuth Beamwidth	°	66 ± 2.3	64 ± 1.6	64 ± 1.1	63 ± 3.0
Front-to-Back Ratio, Total Power, ± 30°	dB	> 23	> 25	> 26	> 28
Vertical Pattern:					
Elevation Beamwidth	°	10.6 ± 0.7	9.8 ± 0.5	9.5 ± 0.4	9.0 ± 0.5
Electrical Downtilt continuously adjustable	°	2.0 – 12.0			
Tilt Accuracy	°	< 0.5	< 0.4	< 0.4	< 0.4
First Upper Side Lobe Suppression	dB	> 15	> 17	> 20	> 20
Upper Side Lobe Suppression, 20° Sector above Main Beam	dB	> 15	> 17	> 18	> 17
Cross Polar Isolation	dB	> 30			
Port to Port Isolation	dB	> 28 (R1 // Y4) > 30 (R1 // Y1, Y2, Y3)			
Max. Effective Power per Port	W	400 (at 50 °C ambient temperature)			
Max. Effective Power Port 1–2	W	800 (at 50 °C ambient temperature)			

Values based on NGMN-P-BASTA (version 9.6) requirements.

936.4847/c ngmn 04.21.01.04 Subject to alteration.

Kathrein USA Greenway Plaza II, 2400 Lakeside Blvd., Suite 650, Richardson TX 75082
Phone: 214.238.8800 Fax: 214.238.8801 Email: info@kathrein.com

Left side, lower high band		Y1, connector 3–4				
		1695 – 2690				
Frequency Range	MHz	1695 – 1880	1850 – 1990	1920 – 2180	2300 – 2400	2490 – 2690
Gain at mid Tilt	dBi	15.3	15.8	15.9	15.5	16.4
Gain over all Tilts	dBi	15.2 ± 0.6	15.7 ± 0.4	15.8 ± 0.3	15.6 ± 0.6	16.3 ± 0.6
Horizontal Pattern:						
Azimuth Beamwidth	°	66 ± 4.5	63 ± 4.5	62 ± 2.9	64 ± 6.9	58 ± 5.5
Front-to-Back Ratio, Total Power, ± 30°	dB	> 23	> 25	> 25	> 25	> 25
Vertical Pattern:						
Elevation Beamwidth	°	10.6 ± 0.8	10.1 ± 0.5	9.7 ± 0.8	8.4 ± 0.4	7.7 ± 0.6
Electrical Downtilt continuously adjustable	°	2.0 – 14.0				
Tilt Accuracy	°	< 0.3	< 0.4	< 0.3	< 0.4	< 0.3
First Upper Side Lobe Suppression	dB	> 20	> 21	> 19	> 16	> 15
Upper Side Lobe Suppression, 20° Sector above Main Beam	dB	> 20	> 20	> 19	> 16	> 15
Cross Polar Isolation	dB	> 28				
Port to Port Isolation	dB	> 30 (Y1 // R1, Y2, Y3, Y4)				
Max. Effective Power per Port	W	200 (at 50 °C ambient temperature)				
Max. Effective Power Port 3–4	W	400 (at 50 °C ambient temperature)				

Values based on NGMN-P-BASTA (version 9.6) requirements.

Left side, upper high band		Y2, connector 5–6				
		1695 – 2690				
Frequency Range	MHz	1695 – 1880	1850 – 1990	1920 – 2180	2300 – 2400	2490 – 2690
Gain at mid Tilt	dBi	16.0	16.4	16.3	15.6	15.9
Gain over all Tilts	dBi	15.9 ± 0.7	16.3 ± 0.5	16.2 ± 0.6	15.6 ± 0.5	15.7 ± 0.6
Horizontal Pattern:						
Azimuth Beamwidth	°	59 ± 5.3	56 ± 3.9	58 ± 5.3	62 ± 4.0	65 ± 7.8
Front-to-Back Ratio, Total Power, ± 30°	dB	> 23	> 26	> 26	> 25	> 26
Vertical Pattern:						
Elevation Beamwidth	°	9.2 ± 0.5	8.7 ± 0.4	8.2 ± 0.7	7.3 ± 0.4	6.6 ± 0.5
Electrical Downtilt continuously adjustable	°	2.0 – 14.0				
Tilt Accuracy	°	< 0.4	< 0.4	< 0.4	< 0.5	< 0.4
First Upper Side Lobe Suppression	dB	> 17	> 19	> 19	> 20	> 18
Upper Side Lobe Suppression, 20° Sector above Main Beam	dB	> 16	> 16	> 16	> 18	> 14
Cross Polar Isolation	dB	> 28				
Port to Port Isolation	dB	> 30 (Y2 // R1, Y1, Y3, Y4)				
Max. Effective Power per Port	W	200 (at 50 °C ambient temperature)				
Max. Effective Power Port 5–6	W	400 (at 50 °C ambient temperature)				

Values based on NGMN-P-BASTA (version 9.6) requirements.

936.4847/c ngmn 04.21.01.04 Subject to alteration.

All specifications are subject to change without notice.
The latest specifications are available at www.kathreinusa.com

Kathrein USA Greenway Plaza II, 2400 Lakeside Blvd., Suite 650, Richardson TX 75082
Phone: 214.238.8800 Fax: 214.238.8801 Email: info@kathrein.com

Right side, lower high band		Y3, connector 7–8				
		1695 – 2690				
Frequency Range	MHz	1695 – 1880	1850 – 1990	1920 – 2180	2300 – 2400	2490 – 2690
Gain at mid Tilt	dBi	16.3	16.5	16.9	17.3	17.2
Gain over all Tilts	dBi	16.2 ± 0.4	16.5 ± 0.3	16.8 ± 0.5	17.1 ± 0.4	16.9 ± 0.4
Horizontal Pattern:						
Azimuth Beamwidth	°	65 ± 4.1	64 ± 3.3	63 ± 2.6	60 ± 2.1	60 ± 4.2
Front-to-Back Ratio, Total Power, ± 30°	dB	> 23	> 23	> 24	> 24	> 23
Vertical Pattern:						
Elevation Beamwidth	°	9.5 ± 0.7	8.9 ± 0.4	8.5 ± 0.6	7.5 ± 0.4	6.8 ± 0.5
Electrical Downtilt continuously adjustable	°	2.0 – 14.0				
Tilt Accuracy	°	< 0.4	< 0.4	< 0.5	< 0.4	< 0.3
First Upper Side Lobe Suppression	dB	> 17	> 18	> 19	> 19	> 18
Upper Side Lobe Suppression, 20° Sector above Main Beam	dB	> 17	> 18	> 17	> 17	> 17
Cross Polar Isolation	dB	> 28				
Port to Port Isolation	dB	> 30 (Y3 // R1, Y1, Y2, Y4)				
Max. Effective Power per Port	W	200 (at 50 °C ambient temperature)				
Max. Effective Power Port 7–8	W	400 (at 50 °C ambient temperature)				

Values based on NGMN-P-BASTA (version 9.6) requirements.

Right side, upper high band		Y4, connector 9–10				
		1695 – 2690				
Frequency Range	MHz	1695 – 1880	1850 – 1990	1920 – 2180	2300 – 2400	2490 – 2690
Gain at mid Tilt	dBi	15.9	16.2	16.4	16.9	16.5
Gain over all Tilts	dBi	15.8 ± 0.4	16.1 ± 0.2	16.4 ± 0.3	16.8 ± 0.3	16.3 ± 0.4
Horizontal Pattern:						
Azimuth Beamwidth	°	63 ± 2.6	62 ± 2.5	61 ± 2.3	58 ± 3.1	59 ± 3.4
Front-to-Back Ratio, Total Power, ± 30°	dB	> 25	> 24	> 25	> 25	> 21
Vertical Pattern:						
Elevation Beamwidth	°	9.6 ± 0.6	9.0 ± 0.5	8.6 ± 0.6	7.5 ± 0.5	6.6 ± 0.5
Electrical Downtilt continuously adjustable	°	2.0 – 14.0				
Tilt Accuracy	°	< 0.4	< 0.4	< 0.5	< 0.4	< 0.4
First Upper Side Lobe Suppression	dB	> 18	> 18	> 17	> 17	> 16
Upper Side Lobe Suppression, 20° Sector above Main Beam	dB	> 18	> 18	> 17	> 17	> 15
Cross Polar Isolation	dB	> 28				
Port to Port Isolation	dB	> 30 (Y4 // R1, Y1, Y2, Y3)				
Max. Effective Power per Port	W	200 (at 50 °C ambient temperature)				
Max. Effective Power Port 9–10	W	400 (at 50 °C ambient temperature)				

Values based on NGMN-P-BASTA (version 9.6) requirements.

936.4847/c ngmn 04.21.01.04 Subject to alteration.

Kathrein USA Greenway Plaza II, 2400 Lakeside Blvd., Suite 650, Richardson TX 75082
Phone: 214.238.8800 Fax: 214.238.8801 Email: info@kathrein.com

KATHREIN

Electrical specifications, all systems		
Impedance	Ω	50
VSWR		< 1.5
Return Loss	dB	> 14
Interband Isolation	dB	> 28
Passive Intermodulation	dBc	< –150 (2 x 43 dBm carrier)
Polarization	°	+45, –45
Max. Effective Power for the Antenna	W	1000 (at 50 °C ambient temperature)

Values based on NGMN-P-BASTA (version 9.6) requirements.

Mechanical specifications		
Input		10 x 4.3-10 female
Connector Position		bottom
Adjustment Mechanism		FlexRET, continuously adjustable
Wind load (at Rated Wind Speed: 150 km/h)	N | lbf	Frontal 1210 | 272 Lateral 400 | 90 Rearside 1270 | 286
Max. Wind Velocity	km/h mph	241 150
Height / Width / Depth	mm inches	1995 / 377 / 169 78.5 / 14.8 / 6.7
Category of Mounting Hardware		H (Heavy)
Weight	kg lb	34.0 / 36.2 (clamps incl.) 74.9 / 79.7 (clamps incl.)
Packing Size	mm inches	2196 / 397 / 212 86.5 / 15.6 / 8.3
Scope of Supply		Panel, FlexRET and 2 units of clamps for 42–115 mm | 1.7–4.5 inches diameter

Accessories (order separately if required)

Type No.	Description	Remarks mm | inches	Weight approx. kg | lb	Units per antenna
85010002	1 clamp	Mast diameter: 110 – 220 | 4.3 – 8.7	2.7 | 6.0	2
85010003	1 clamp	Mast diameter: 210 – 380 | 8.3 – 15.0	4.8 | 10.6	2
85010008	1 downtilt kit	Downtilt angle: 0° – 10°	4.3 | 9.5	1
86010154	Site Sharing Adapter	3-way (see figure below)	0.7 | 1.4	
86010155	Site Sharing Adapter	6-way (see figure below)	1.4 | 3.0	

Accessories (included in the scope of supply)

738546	1 clamp	Mast diameter: 42 – 115 | 1.7 – 4.5	1.1 | 2.4	2
86010153	FlexRET			

For downtilt mounting use the clamps for an appropriate mast diameter together with the downtilt kit.
Wall mounting: No additional mounting kit needed.

Material: **Reflector screen:** Aluminum.
Fiberglass housing: It covers totally the internal antenna components. The special design reduces the sealing areas to a minimum and guarantees the best weather protection. Fiberglass material guarantees optimum performance with regards to stability, stiffness, UV resistance and painting. The color of the radome is light grey.
All nuts and bolts: Stainless steel or hot-dip galvanized steel.

Grounding: The metal parts of the antenna including the mounting kit and the inner conductors are DC grounded.

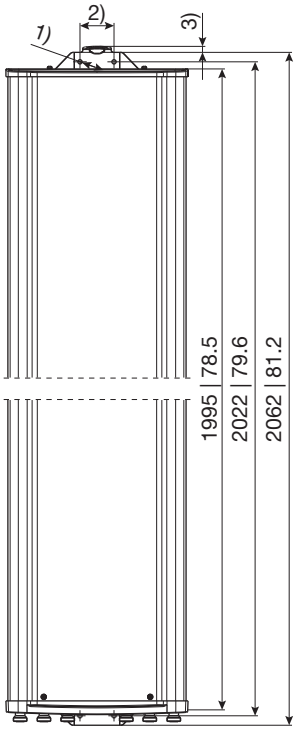

1) ∅ 9 | 0.4
2) 72 | 2.8
3) 13 | 0.5

All dimensions in mm | inches

Configuration example with Site Sharing Adapter 86010154

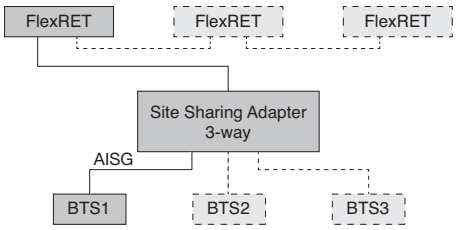

Configuration example with Site Sharing Adapter 86010155

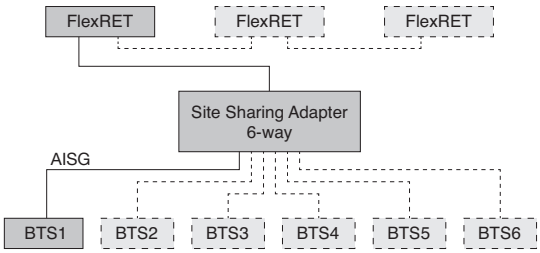

For more information please refer to the respective data sheets.

936.4847/c ngmn 04.21.01.04 Subject to alteration.

All specifications are subject to change without notice.
The latest specifications are available at www.kathreinusa.com

Kathrein USA Greenway Plaza II, 2400 Lakeside Blvd., Suite 650, Richardson TX 75082
Phone: 214.238.8800 Fax: 214.238.8801 Email: info@kathrein.com

Layout of interface:

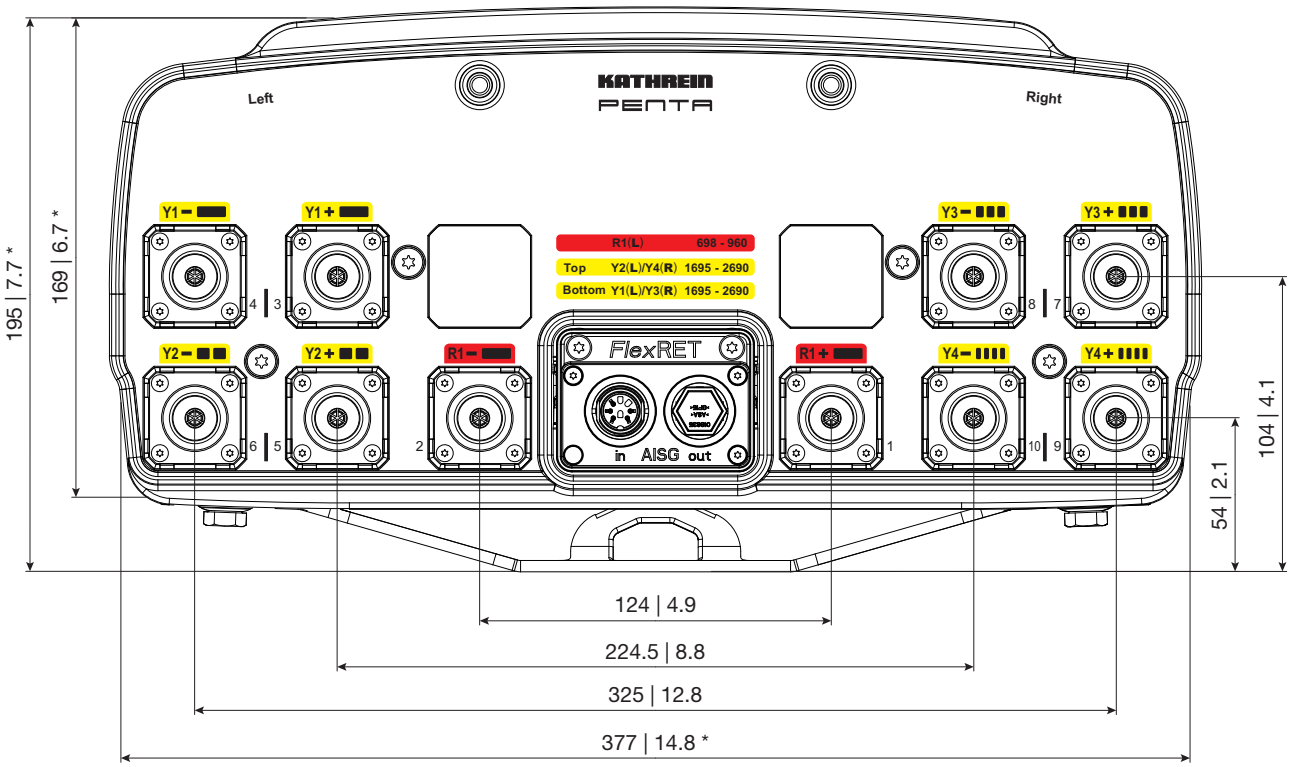

Bottom view
* Dimensions refer to radome
All dimensions in mm | inches

Correlation Table

Frequency range	Array	Connector
698– 960 MHz	R1	1–2
1695–2690 MHz	Y1	3–4
1695–2690 MHz	Y2	5–6
1695–2690 MHz	Y3	7–8
1695–2690 MHz	Y4	9–10

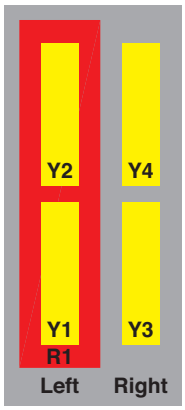

Order Information

Model	Description
80010891	Pentaband antenna with mounting bracket
80010891K	Pentaband antenna with mounting bracket and mechanical tilt bracket

936.4847/c ngmn 04.21.01.04 Subject to alteration.

Any previous data sheet issues have now become invalid.

All specifications are subject to change without notice.
The latest specifications are available at www.kathreinusa.com

Kathrein USA Greenway Plaza II, 2400 Lakeside Blvd., Suite 650, Richardson TX 75082
Phone: 214.238.8800 Fax: 214.238.8801 Email: info@kathrein.com

ATTACHMENT 4

PAUL J. FORD & COMPANY

Date: **August 04, 2016**

Andrew Bazinet
Crown Castle
3 Corporate Park Drive, Suite 101
Clifton Park, NY 12065

Paul J. Ford and Company
250 East Broad St, Suite 600
Columbus, OH 43215
614.221.6679

Subject: Structural Modification Report

Carrier Designation:	***AT&T Mobility* Co-Locate**	
	Carrier Site Number:	CTL05251
	Carrier Site Name:	Southington Industrial
Crown Castle Designation:	**Crown Castle BU Number:**	821898
	Crown Castle Site Name:	Southington Industrial
	Crown Castle JDE Job Number:	389544
	Crown Castle Work Order Number:	1281170
	Crown Castle Application Number:	357137 Rev. 8
Engineering Firm Designation:	**Paul J. Ford and Company Project Number:**	37516-2615.003.7700
Site Data:	**500 Queen St, Southington, Hartford County, CT**	
	Latitude *41° 37' 48.54"*, Longitude *-72° 52' 29.98"*	
	94 Foot - Monopole Tower	

Dear Andrew Bazinet,

Paul J. Ford and Company is pleased to submit this **"Structural Modification Report"** to determine the structural integrity of the above mentioned tower. This analysis has been performed in accordance with the Crown Castle Structural 'Statement of Work' and the terms of Crown Castle Purchase Order Number 933304, in accordance with application 357137, revision 8.

The purpose of the analysis is to determine acceptability of the tower stress level. Based on our analysis we have determined the tower stress level for the structure and foundation, under the following load case, to be:

LC4.5: Modified Structure w/ Existing + Proposed Equipment **Sufficient Capacity**
Note: See Table I and Table II for the proposed and existing loading, respectively.

The structural analysis was performed for this tower in accordance with the requirements of the 2005 Connecticut Building Code and the TIA/EIA-222-F Structural Standards for Steel Antenna Towers and Antenna Supporting Structures using a fastest mile wind speed of 80 mph with no ice, 37.6 mph with 0.75 inch ice thickness and 50 mph under service loads.

All modifications and equipment proposed in this report shall be installed in accordance with the attached drawings for the determined available structural capacity to be effective.

We at *Paul J. Ford and Company* appreciate the opportunity of providing our continuing professional services to you and Crown Castle. If you have any questions or need further assistance on this or any other projects please give us a call.

Respectfully submitted by:

Thomas J. Dehnke, EI
Project Designer
tdehnke@pjfweb.com

STATE OF CONNECTICUT
JUSTIN T. KLINE
No. 30301
LICENSED
PROFESSIONAL ENGINEER

8-5-16

tnxTower Report - version 7.0.5.1

TABLE OF CONTENTS

1) INTRODUCTION

2) ANALYSIS CRITERIA
- Table 1 - Proposed Antenna and Cable Information
- Table 2 - Existing Antenna and Cable Information
- Table 3 - Design Antenna and Cable Information

3) ANALYSIS PROCEDURE
- Table 4 - Documents Provided
- 3.1) Analysis Method
- 3.2) Assumptions

4) ANALYSIS RESULTS
- Table 5 - Section Capacity (Summary)
- Table 6 – Tower Components vs. Capacity
- 4.1) Recommendations

5) APPENDIX A
- tnxTower Output

6) APPENDIX B
- Base Level Drawing

7) APPENDIX C
- Additional Calculations

1) INTRODUCTION

This tower is a 94 ft Monopole tower designed by UNKNOWN in August of 2003. The tower was originally designed for a wind speed of 90 mph per TIA/EIA-222-F.

2) ANALYSIS CRITERIA

The structural analysis was performed for this tower in accordance with the requirements of the 2005 Connecticut Building Code and the TIA/EIA-222-F Structural Standards for Steel Antenna Towers and Antenna Supporting Structures using a fastest mile wind speed of 80 mph with no ice, 37.6 mph with 0.75 inch ice thickness and 50 mph under service loads.

Table 1 - Proposed Antenna and Cable Information

Mounting Level (ft)	Center Line Elevation (ft)	Number of Antennas	Antenna Manufacturer	Antenna Model	Number of Feed Lines	Feed Line Size (in)	Note
88.0	89.0	3	kathrein	80010891	12 (I)	7/8	--
	84.0	6	kaelus	TMA2117F00V1-1			
88.0	88.0	1	--	40" Dia x 12' Concealment			
77.0	77.0	1	--	40" Dia x 10' Concealment	--	--	--

Table 2 - Existing and Reserved Antenna and Cable Information

Mounting Level (ft)	Center Line Elevation (ft)	Number of Antennas	Antenna Manufacturer	Antenna Model	Number of Feed Lines	Feed Line Size (in)	Note
77.0	78.0	2	andrew	SBNH-1D6565C	6 (I)	1-5/8	1
		2	cci antennas	DTMABP7819VG12A			
	77.0	1	andrew	SBNH-1D6565C			
		1	cci antennas	DTMABP7819VG12A			
		1	--	36" Dia x 10' Concealment	--	--	2

Notes:
1) Existing Equipment
2) Equipment to be Removed
(I) Coax mounted internally and shielded from the wind. See coax layout in Appendix B.

Table 3 - Design Antenna and Cable Information

Mounting Level (ft)	Center Line Elevation (ft)	Number of Antennas	Antenna Manufacturer	Antenna Model	Number of Feed Lines	Feed Line Size (in)
--	--	--	--	--	--	--

3) ANALYSIS PROCEDURE

Table 4 - Documents Provided

Document	Remarks	Reference	Source
4-GEOTECHNICAL REPORTS	Dr. Clarence Welti, 11/24/2008	5688074	CCISITES
4-TOWER FOUNDATION DRAWINGS/DESIGN/SPECS	URS, 36928485.00000, 03/02/2009	5688077	CCISITES
4-TOWER MAPPING	TEP, 61471_33415, 06/15/2015	5688078	CCISITES
4-TOWER MANUFACTURER DRAWINGS	PJF, 31903-0050, 08/18/2003	5688078	CCISITES

3.1) Analysis Method

tnxTower (version 7.0.5.1), a commercially available analysis software package, was used to create a three-dimensional model of the tower and calculate member stresses for various loading cases. Selected output from the analysis is included in Appendix A.

3.2) Assumptions

1) Tower and structures were built in accordance with the manufacturer's specifications.
2) The tower and structures have been maintained in accordance with the manufacturer's specification.
3) The configuration of antennas, transmission cables, mounts and other appurtenances are as specified in Tables 1 and 2 and the referenced drawings.
4) For proposed modifications: monopole will be modified in conformance with the attached proposed modification drawings.

This analysis may be affected if any assumptions are not valid or have been made in error. Paul J. Ford and Company should be notified to determine the effect on the structural integrity of the tower.

4) ANALYSIS RESULTS

Table 5 - Section Capacity (Summary)

Section No.	Elevation (ft)	Component Type	Size	Critical Element	P (K)	SF*P_allow (K)	% Capacity	Pass / Fail
L1	94 - 82	Pole	P5.563x0.258	1	-0.64	120.37	39.8	Pass
L2	82 - 72	Pole	Pipe 5.563" x 0.750" (5 XXS)	2	-2.30	317.45	59.5	Pass
L3	72 - 40	Pole	P26x0.25	3	-5.58	549.02	32.6	Pass
L4	40 - 0	Pole	P26x0.312	4	-9.41	704.83	59.4	Pass
							Summary	
						Pole (L2)	59.5	Pass
						Rating =	59.5	Pass

Table 6 - Tower Component Stresses vs. Capacity

Notes	Component	Elevation (ft)	% Capacity	Pass / Fail
1	Anchor Rods	0	40.1	Pass
1	Base Plate	0	38.4	Pass
1	Base Foundation Soil Interaction	0	12.8	Pass
1	Base Foundation Structural Steel	0	2.9	Pass
1	Flange Connection	40	67.5	Pass
1	Flange Connection	72	50.8	Pass
1	Flange Connection	82	16.9	Pass

Structure Rating (max from all components) =	**67.5%**

Notes:
1) See additional documentation in “Appendix C – Additional Calculations” for calculations supporting the % capacity

4.1) Recommendations

The monopole and its foundation will have sufficient capacity to carry the proposed loading configuration once the proposed modifications are installed.

- Install the proposed modifications per the attached drawings.

APPENDIX A

TNXTOWER OUTPUT

Tower Input Data

There is a pole section.
This tower is designed using the TIA/EIA-222-F standard.
The following design criteria apply:

Tower is located in Hartford County, Connecticut.
Basic wind speed of 80.00 mph.
Nominal ice thickness of 1.0000 in.
Ice thickness is considered to increase with height.
Ice density of 56.00 pcf.
A wind speed of 37.60 mph is used in combination with ice.
Temperature drop of 50.00 °F.
Deflections calculated using a wind speed of 50.00 mph.
A non-linear (P-delta) analysis was used.
Pressures are calculated at each section.
Stress ratio used in pole design is 1.333.
Local bending stresses due to climbing loads, feed line supports, and appurtenance mounts are not considered.

Options

Consider Moments - Legs
Consider Moments - Horizontals
Consider Moments - Diagonals
Use Moment Magnification
√ Use Code Stress Ratios
√ Use Code Safety Factors - Guys
√ Escalate Ice
Always Use Max Kz
Use Special Wind Profile

Include Bolts In Member Capacity

Leg Bolts Are At Top Of Section
Secondary Horizontal Braces Leg
Use Diamond Inner Bracing (4 Sided)
SR Members Have Cut Ends
SR Members Are Concentric

Distribute Leg Loads As Uniform
Assume Legs Pinned
√ Assume Rigid Index Plate
√ Use Clear Spans For Wind Area
Use Clear Spans For KL/r
Retension Guys To Initial Tension
√ Bypass Mast Stability Checks
√ Use Azimuth Dish Coefficients
√ Project Wind Area of Appurt.

Autocalc Torque Arm Areas

Add IBC .6D+W Combination
Sort Capacity Reports By Component
Triangulate Diamond Inner Bracing
Treat Feed Line Bundles As Cylinder

Use ASCE 10 X-Brace Ly Rules
Calculate Redundant Bracing Forces
Ignore Redundant Members in FEA
SR Leg Bolts Resist Compression
All Leg Panels Have Same Allowable
Offset Girt At Foundation
√ Consider Feed Line Torque
Include Angle Block Shear Check
Use TIA-222-G Bracing Resist. Exemption
Use TIA-222-G Tension Splice Exemption

Poles

√ Include Shear-Torsion Interaction
Always Use Sub-Critical Flow
Use Top Mounted Sockets

Pole Section Geometry

Section	Elevation ft	Section Length ft	Pole Size	Pole Grade	Socket Length ft
L1	94.0000-82.0000	12.0000	P5.563x0.258	A53-B-35 (35 ksi)	
L2	82.0000-72.0000	10.0000	Pipe 5.563" x 0.750" (5 XXS)	A53-B-35 (35 ksi)	
L3	72.0000-40.0000	32.0000	P26x0.25	A53-B-35 (35 ksi)	
L4	40.0000-0.0000	40.0000	P26x0.312	A53-B-35 (35 ksi)	

Feed Line/Linear Appurtenances - Entered As Area

Description	Face or Leg	Allow Shield	Component Type	Placement ft	Total Number		C_AA_A ft^2/ft	Weight plf
LDF5-50A(7/8")	C	No	Inside Pole	82.0000 - 0.0000	12	No Ice	0.0000	0.33
						1/2" Ice	0.0000	0.33
						1" Ice	0.0000	0.33
						2" Ice	0.0000	0.33

Description	Face or Leg	Allow Shield	Component Type	Placement ft	Total Number		C_AA_A ft^2/ft	Weight plf
						4" Ice	0.0000	0.33
**								
LDF7-50A(1-5/8")	C	No	Inside Pole	77.0000 - 0.0000	6	No Ice	0.0000	0.82
						1/2" Ice	0.0000	0.82
						1" Ice	0.0000	0.82
						2" Ice	0.0000	0.82
						4" Ice	0.0000	0.82

Discrete Tower Loads

Description	Face or Leg	Offset Type	Offsets: Horz Lateral Vert ft ft ft	Azimuth Adjustment °	Placement ft		C_AA_A Front ft^2	C_AA_A Side ft^2	Weight K
**									
**									
80010891	A	From Leg	4.0000	0.0000	88.0000	No Ice	0.0000	0.0000	0.08
			0.00			1/2"	0.0000	0.0000	0.14
			1.00			Ice	0.0000	0.0000	0.21
						1" Ice	0.0000	0.0000	0.37
						2" Ice	0.0000	0.0000	0.77
						4" Ice			
80010891	B	From Leg	4.0000	0.0000	88.0000	No Ice	0.0000	0.0000	0.08
			0.00			1/2"	0.0000	0.0000	0.14
			1.00			Ice	0.0000	0.0000	0.21
						1" Ice	0.0000	0.0000	0.37
						2" Ice	0.0000	0.0000	0.77
						4" Ice			
80010891	C	From Leg	4.0000	0.0000	88.0000	No Ice	0.0000	0.0000	0.08
			0.00			1/2"	0.0000	0.0000	0.14
			1.00			Ice	0.0000	0.0000	0.21
						1" Ice	0.0000	0.0000	0.37
						2" Ice	0.0000	0.0000	0.77
						4" Ice			
(2) TMA2117F00V1-1	A	From Leg	4.0000	0.0000	88.0000	No Ice	0.0000	0.0000	0.02
			0.00			1/2"	0.0000	0.0000	0.02
			-4.00			Ice	0.0000	0.0000	0.03
						1" Ice	0.0000	0.0000	0.06
						2" Ice	0.0000	0.0000	0.13
						4" Ice			
(2) TMA2117F00V1-1	B	From Leg	4.0000	0.0000	88.0000	No Ice	0.0000	0.0000	0.02
			0.00			1/2"	0.0000	0.0000	0.02
			-4.00			Ice	0.0000	0.0000	0.03
						1" Ice	0.0000	0.0000	0.06
						2" Ice	0.0000	0.0000	0.13
						4" Ice			
(2) TMA2117F00V1-1	C	From Leg	4.0000	0.0000	88.0000	No Ice	0.0000	0.0000	0.02
			0.00			1/2"	0.0000	0.0000	0.02
			-4.00			Ice	0.0000	0.0000	0.03
						1" Ice	0.0000	0.0000	0.06
						2" Ice	0.0000	0.0000	0.13
						4" Ice			
**									
SBNH-1D6565C	A	From Leg	0.0000	0.0000	77.0000	No Ice	0.0000	0.0000	0.07
			0.00			1/2"	0.0000	0.0000	0.13
			1.00			Ice	0.0000	0.0000	0.21
						1" Ice	0.0000	0.0000	0.38
						2" Ice	0.0000	0.0000	0.82
						4" Ice			
SBNH-1D6565C	B	From Leg	0.0000	0.0000	77.0000	No Ice	0.0000	0.0000	0.07
			0.00			1/2"	0.0000	0.0000	0.13
			1.00			Ice	0.0000	0.0000	0.21
						1" Ice	0.0000	0.0000	0.38
						2" Ice	0.0000	0.0000	0.82

Description	Face or Leg	Offset Type	Offsets: Horz Lateral Vert ft ft ft	Azimuth Adjustment °	Placement ft		C_AA_A Front ft^2	C_AA_A Side ft^2	Weight K
						4" Ice			
SBNH-1D6565C	C	From Leg	0.0000	0.0000	77.0000	No Ice	0.0000	0.0000	0.07
			0.00			1/2"	0.0000	0.0000	0.13
			0.00			Ice	0.0000	0.0000	0.21
						1" Ice	0.0000	0.0000	0.38
						2" Ice	0.0000	0.0000	0.82
						4" Ice			
DTMABP7819VG12A	A	From Leg	0.0000	0.0000	77.0000	No Ice	0.0000	0.0000	0.02
			0.00			1/2"	0.0000	0.0000	0.03
			1.00			Ice	0.0000	0.0000	0.04
						1" Ice	0.0000	0.0000	0.06
						2" Ice	0.0000	0.0000	0.14
						4" Ice			
DTMABP7819VG12A	B	From Leg	0.0000	0.0000	77.0000	No Ice	0.0000	0.0000	0.02
			0.00			1/2"	0.0000	0.0000	0.03
			1.00			Ice	0.0000	0.0000	0.04
						1" Ice	0.0000	0.0000	0.06
						2" Ice	0.0000	0.0000	0.14
						4" Ice			
DTMABP7819VG12A	C	From Leg	0.0000	0.0000	77.0000	No Ice	0.0000	0.0000	0.02
			0.00			1/2"	0.0000	0.0000	0.03
			0.00			Ice	0.0000	0.0000	0.04
						1" Ice	0.0000	0.0000	0.06
						2" Ice	0.0000	0.0000	0.14
						4" Ice			
**									
Canister Load1	C	None		0.0000	94.0000	No Ice	11.8000	11.8000	0.13
						1/2"	12.0950	12.0950	0.27
						Ice	12.3900	12.3900	0.43
						1" Ice	12.9800	12.9800	0.74
						2" Ice	14.1600	14.1600	1.42
						4" Ice			
Canister Load2	C	None		0.0000	82.0000	No Ice	21.6333	21.6333	0.94
						1/2"	22.1742	22.1742	1.22
						Ice	22.7150	22.7150	1.49
						1" Ice	23.7967	23.7967	2.07
						2" Ice	25.9600	25.9600	3.31
						4" Ice			
Canister Load3	C	None		0.0000	72.0000	No Ice	9.8333	9.8333	0.82
						1/2"	10.0792	10.0792	0.94
						Ice	10.3250	10.3250	1.07
						1" Ice	10.8167	10.8167	1.33
						2" Ice	11.8000	11.8000	1.89
						4" Ice			
**									

Tower Pressures - No Ice

G_H = 1.690

Section Elevation ft	z ft	K_Z	q_z psf	A_G ft^2	Face	A_F ft^2	A_R ft^2	A_{leg} ft^2	Leg %	C_AA_A In Face ft^2	C_AA_A Out Face ft^2
L1 94.0000-82.0000	88.0000	1.323	21.68	5.563	A	0.000	0.000	0.000	0.00	0.000	0.000
					B	0.000	0.000		0.00	0.000	0.000
					C	0.000	0.000		0.00	0.000	0.000
L2 82.0000-72.0000	77.0000	1.274	20.87	4.636	A	0.000	0.000	0.000	0.00	0.000	0.000
					B	0.000	0.000		0.00	0.000	0.000
					C	0.000	0.000		0.00	0.000	0.000
L3 72.0000-40.0000	56.3286	1.165	19.02	69.333	A	0.000	69.333	69.333	100.00	0.000	0.000
					B	0.000	69.333		100.00	0.000	0.000
					C	0.000	69.333		100.00	0.000	0.000

Section Elevation ft	z ft	K_Z	q_z psf	A_G ft^2	Face	A_F ft^2	A_R ft^2	A_{leg} ft^2	Leg %	C_AA_A In Face ft^2	C_AA_A Out Face ft^2
L4 40.0000-0.0000	20.0000	1	16.38	86.667	A	0.000	86.667	86.667	100.00	0.000	0.000
					B	0.000	86.667		100.00	0.000	0.000
					C	0.000	86.667		100.00	0.000	0.000

Tower Pressure - With Ice

G_H = 1.690

Section Elevation ft	z ft	K_Z	q_z psf	t_Z in	A_G ft^2	Face	A_F ft^2	A_R ft^2	A_{leg} ft^2	Leg %	C_AA_A In Face ft^2	C_AA_A Out Face ft^2
L1 94.0000-82.0000	88.0000	1.323	4.79	1.1249	7.813	A	0.000	0.000	0.000	0.00	0.000	0.000
						B	0.000	0.000		0.00	0.000	0.000
						C	0.000	0.000		0.00	0.000	0.000
L2 82.0000-72.0000	77.0000	1.274	4.61	1.1070	6.481	A	0.000	0.000	0.000	0.00	0.000	0.000
						B	0.000	0.000		0.00	0.000	0.000
						C	0.000	0.000		0.00	0.000	0.000
L3 72.0000-40.0000	56.3286	1.165	4.20	1.0663	75.020	A	0.000	75.020	75.020	100.00	0.000	0.000
						B	0.000	75.020		100.00	0.000	0.000
						C	0.000	75.020		100.00	0.000	0.000
L4 40.0000-0.0000	20.0000	1	3.62	1.0000	93.333	A	0.000	93.333	93.333	100.00	0.000	0.000
						B	0.000	93.333		100.00	0.000	0.000
						C	0.000	93.333		100.00	0.000	0.000

Tower Pressure - Service

G_H = 1.690

Section Elevation ft	z ft	K_Z	q_z psf	A_G ft^2	Face	A_F ft^2	A_R ft^2	A_{leg} ft^2	Leg %	C_AA_A In Face ft^2	C_AA_A Out Face ft^2
L1 94.0000-82.0000	88.0000	1.323	8.47	5.563	A	0.000	0.000	0.000	0.00	0.000	0.000
					B	0.000	0.000		0.00	0.000	0.000
					C	0.000	0.000		0.00	0.000	0.000
L2 82.0000-72.0000	77.0000	1.274	8.15	4.636	A	0.000	0.000	0.000	0.00	0.000	0.000
					B	0.000	0.000		0.00	0.000	0.000
					C	0.000	0.000		0.00	0.000	0.000
L3 72.0000-40.0000	56.3286	1.165	7.43	69.333	A	0.000	69.333	69.333	100.00	0.000	0.000
					B	0.000	69.333		100.00	0.000	0.000
					C	0.000	69.333		100.00	0.000	0.000
L4 40.0000-0.0000	20.0000	1	6.40	86.667	A	0.000	86.667	86.667	100.00	0.000	0.000
					B	0.000	86.667		100.00	0.000	0.000
					C	0.000	86.667		100.00	0.000	0.000

Load Combinations

Comb. No.	Description
1	Dead Only
2	Dead+Wind 0 deg - No Ice
3	Dead+Wind 30 deg - No Ice
4	Dead+Wind 60 deg - No Ice
5	Dead+Wind 90 deg - No Ice
6	Dead+Wind 120 deg - No Ice
7	Dead+Wind 150 deg - No Ice
8	Dead+Wind 180 deg - No Ice
9	Dead+Wind 210 deg - No Ice
10	Dead+Wind 240 deg - No Ice
11	Dead+Wind 270 deg - No Ice
12	Dead+Wind 300 deg - No Ice

Comb. No.	Description
13	Dead+Wind 330 deg - No Ice
14	Dead+Ice+Temp
15	Dead+Wind 0 deg+Ice+Temp
16	Dead+Wind 30 deg+Ice+Temp
17	Dead+Wind 60 deg+Ice+Temp
18	Dead+Wind 90 deg+Ice+Temp
19	Dead+Wind 120 deg+Ice+Temp
20	Dead+Wind 150 deg+Ice+Temp
21	Dead+Wind 180 deg+Ice+Temp
22	Dead+Wind 210 deg+Ice+Temp
23	Dead+Wind 240 deg+Ice+Temp
24	Dead+Wind 270 deg+Ice+Temp
25	Dead+Wind 300 deg+Ice+Temp
26	Dead+Wind 330 deg+Ice+Temp
27	Dead+Wind 0 deg - Service
28	Dead+Wind 30 deg - Service
29	Dead+Wind 60 deg - Service
30	Dead+Wind 90 deg - Service
31	Dead+Wind 120 deg - Service
32	Dead+Wind 150 deg - Service
33	Dead+Wind 180 deg - Service
34	Dead+Wind 210 deg - Service
35	Dead+Wind 240 deg - Service
36	Dead+Wind 270 deg - Service
37	Dead+Wind 300 deg - Service
38	Dead+Wind 330 deg - Service

Maximum Member Forces

Section No.	Elevation ft	Component Type	Condition	Gov. Load Comb.	Force K	Major Axis Moment kip-ft	Minor Axis Moment kip-ft
L1	94 - 82	Pole	Max Tension	18	0.00	0.00	0.00
			Max. Compression	14	-1.65	0.00	0.00
			Max. Mx	5	-0.64	-5.48	0.00
			Max. My	2	-0.64	0.00	5.48
			Max. Vy	5	0.47	-3.62	0.00
			Max. Vx	2	-0.47	0.00	3.62
			Max. Torque	3			-0.00
L2	82 - 72	Pole	Max Tension	1	0.00	0.00	0.00
			Max. Compression	14	-4.54	0.00	0.00
			Max. Mx	5	-2.30	-18.24	0.00
			Max. My	2	-2.30	0.00	18.24
			Max. Vy	5	1.28	-13.15	0.00
			Max. Vx	2	-1.28	0.00	13.15
			Max. Torque	3			-0.00
L3	72 - 40	Pole	Max Tension	1	0.00	0.00	0.00
			Max. Compression	14	-9.25	0.00	0.00
			Max. Mx	5	-5.58	-92.07	0.00
			Max. My	2	-5.58	0.00	92.07
			Max. Vy	5	2.96	-92.07	0.00
			Max. Vx	2	-2.96	0.00	92.07
			Max. Torque	7			0.00
L4	40 - 0	Pole	Max Tension	1	0.00	0.00	0.00
			Max. Compression	14	-14.35	0.00	0.00
			Max. Mx	5	-9.41	-237.73	0.00
			Max. My	2	-9.41	0.00	237.73
			Max. Vy	5	4.29	-237.73	0.00
			Max. Vx	2	-4.29	0.00	237.73
			Max. Torque	7			0.00

Maximum Tower Deflections - Service Wind

Section No.	Elevation ft	Horz. Deflection in	Gov. Load Comb.	Tilt °	Twist °

Section No.	Elevation ft	Horz. Deflection in	Gov. Load Comb.	Tilt °	Twist °
L1	94 - 82	8.372	27	1.0843	0.0000
L2	82 - 72	5.846	27	0.8453	0.0000
L3	72 - 40	4.413	27	0.4529	0.0000
L4	40 - 0	1.656	27	0.3434	0.0000

Critical Deflections and Radius of Curvature - Service Wind

Elevation ft	Appurtenance	Gov. Load Comb.	Deflection in	Tilt °	Twist °	Radius of Curvature ft
94.0000	Canister Load1	27	8.372	1.0843	0.0000	3359
88.0000	80010891	27	7.032	0.9954	0.0000	2799
82.0000	Canister Load2	27	5.846	0.8453	0.0000	1605
77.0000	SBNH-1D6565C	27	5.060	0.6495	0.0000	2153
72.0000	Canister Load3	27	4.413	0.4529	0.0000	3950

Maximum Tower Deflections - Design Wind

Section No.	Elevation ft	Horz. Deflection in	Gov. Load Comb.	Tilt °	Twist °
L1	94 - 82	21.425	5	2.7748	0.0000
L2	82 - 72	14.963	5	2.1634	0.0000
L3	72 - 40	11.295	2	1.1594	0.0000
L4	40 - 0	4.240	2	0.8792	0.0000

Critical Deflections and Radius of Curvature - Design Wind

Elevation ft	Appurtenance	Gov. Load Comb.	Deflection in	Tilt °	Twist °	Radius of Curvature ft
94.0000	Canister Load1	5	21.425	2.7748	0.0000	1318
88.0000	80010891	5	17.996	2.5472	0.0000	1098
82.0000	Canister Load2	5	14.963	2.1634	0.0000	629
77.0000	SBNH-1D6565C	2	12.951	1.6624	0.0000	843
72.0000	Canister Load3	2	11.295	1.1594	0.0000	1546

Compression Checks

Pole Design Data

Section No.	Elevation ft	Size	L ft	L_u ft	Kl/r	F_a ksi	A in^2	Actual P K	Allow. P_a K	Ratio $\frac{P}{P_a}$
L1	94 - 82 (1)	P5.563x0.258	12.0000	0.0000	0.0	21.000	4.2999	-0.64	90.30	0.007
L2	82 - 72 (2)	Pipe 5.563" x 0.750" (5 XXS)	10.0000	0.0000	0.0	21.000	11.3404	-2.30	238.15	0.010
L3	72 - 40 (3)	P26x0.25	32.0000	0.0000	0.0	20.365	20.2240	-5.58	411.87	0.014
L4	40 - 0 (4)	P26x0.312	40.0000	0.0000	0.0	21.000	25.1788	-9.41	528.76	0.018

Pole Bending Design Data

Section No.	Elevation ft	Size	Actual M_x kip-ft	Actual f_{bx} ksi	Allow. F_{bx} ksi	Ratio $\frac{f_{bx}}{F_{bx}}$	Actual M_y kip-ft	Actual f_{by} ksi	Allow. F_{by} ksi	Ratio $\frac{f_{by}}{F_{by}}$
L1	94 - 82 (1)	P5.563x0.258	5.48	12.075	23.100	0.523	0.00	0.000	23.100	0.000

Section No.	Elevation ft	Size	Actual M_x kip-ft	Actual f_{bx} ksi	Allow. F_{bx} ksi	Ratio $\frac{f_{bx}}{F_{bx}}$	Actual M_y kip-ft	Actual f_{by} ksi	Allow. F_{by} ksi	Ratio $\frac{f_{by}}{F_{by}}$
L2	82 - 72 (2)	Pipe 5.563" x 0.750" (5 XXS)	18.24	18.100	23.100	0.784	0.00	0.000	23.100	0.000
L3	72 - 40 (3)	P26x0.25	92.08	8.568	20.365	0.421	0.00	0.000	20.365	0.000
L4	40 - 0 (4)	P26x0.312	237.73	17.854	23.100	0.773	0.00	0.000	23.100	0.000

Pole Shear Design Data

Section No.	Elevation ft	Size	Actual V K	Actual f_v ksi	Allow. F_v ksi	Ratio $\frac{f_v}{F_v}$	Actual T kip-ft	Actual f_{vt} ksi	Allow. F_{vt} ksi	Ratio $\frac{f_{vt}}{F_{vt}}$
L1	94 - 82 (1)	P5.563x0.258	0.47	0.217	14.000	0.015	0.00	0.000	14.000	0.000
L2	82 - 72 (2)	Pipe 5.563" x 0.750" (5 XXS)	1.27	0.223	14.000	0.016	0.00	0.000	14.000	0.000
L3	72 - 40 (3)	P26x0.25	2.96	0.293	14.000	0.021	0.00	0.000	10.880	0.000
L4	40 - 0 (4)	P26x0.312	4.29	0.341	14.000	0.024	0.00	0.000	14.000	0.000

Pole Interaction Design Data

Section No.	Elevation ft	Ratio $\frac{P}{P_a}$	Ratio $\frac{f_{bx}}{F_{bx}}$	Ratio $\frac{f_{by}}{F_{by}}$	Ratio $\frac{f_v}{F_v}$	Ratio $\frac{f_{vt}}{F_{vt}}$	Comb. Stress Ratio	Allow. Stress Ratio	Criteria
L1	94 - 82 (1)	0.007	0.523	0.000	0.015	0.000	0.530 ✔	1.333	H1-3+VT ✔
L2	82 - 72 (2)	0.010	0.784	0.000	0.016	0.000	0.793 ✔	1.333	H1-3+VT ✔
L3	72 - 40 (3)	0.014	0.421	0.000	0.021	0.000	0.435 ✔	1.333	H1-3+VT ✔
L4	40 - 0 (4)	0.018	0.773	0.000	0.024	0.000	0.791 ✔	1.333	H1-3+VT ✔

Section Capacity Table

Section No.	Elevation ft	Component Type	Size	Critical Element	P K	$SF*P_{allow}$ K	% Capacity	Pass Fail
L1	94 - 82	Pole	P5.563x0.258	1	-0.64	120.37	39.8	Pass
L2	82 - 72	Pole	Pipe 5.563" x 0.750" (5 XXS)	2	-2.30	317.45	59.5	Pass
L3	72 - 40	Pole	P26x0.25	3	-5.58	549.02	32.6	Pass
L4	40 - 0	Pole	P26x0.312	4	-9.41	704.83	59.4	Pass
							Summary	
						Pole (L2)	59.5	Pass
						RATING =	**59.5**	**Pass**

APPENDIX B

BASE LEVEL DRAWING

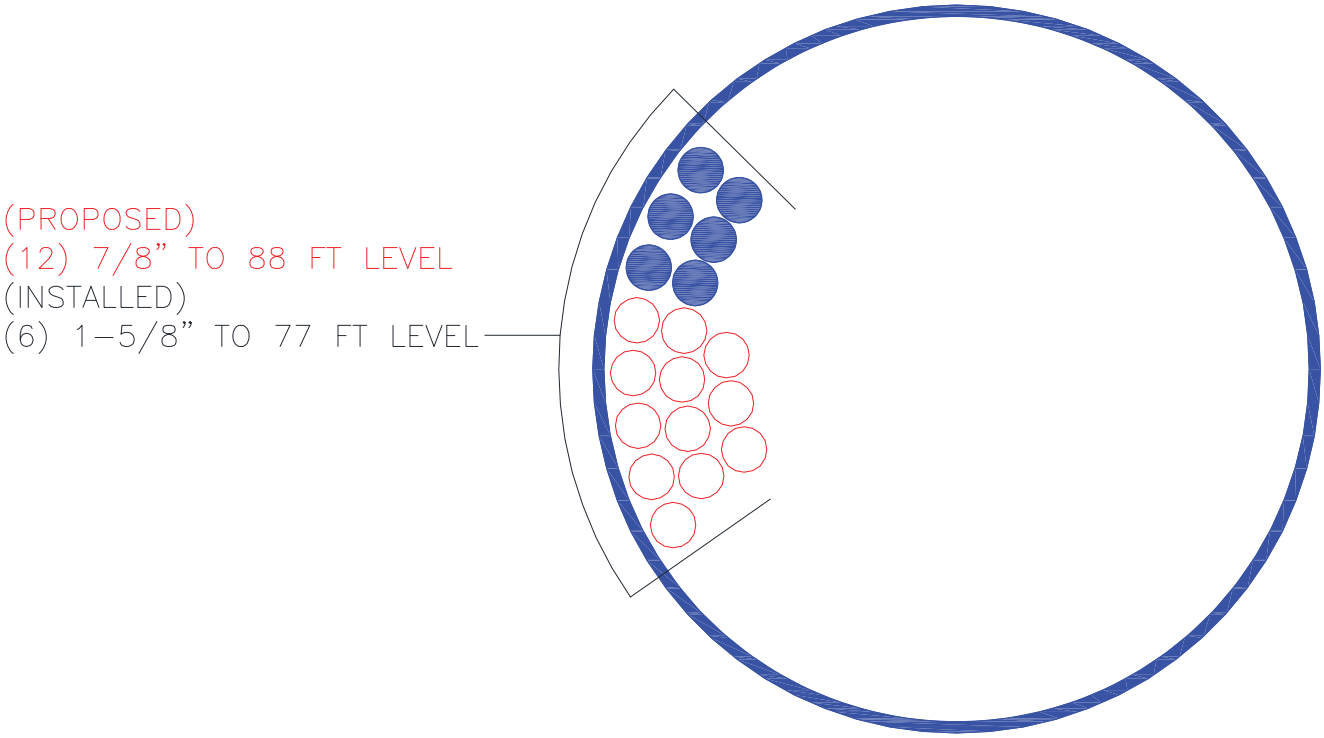
(PROPOSED)
(12) 7/8" TO 88 FT LEVEL
(INSTALLED)
(6) 1-5/8" TO 77 FT LEVEL

APPENDIX C

ADDITIONAL CALCULATIONS

Section	Size	Length (ft)	Grade	Weight (K)
1	P5.563x0.258	12.0000	A53-B-35	0.2
2	Pipe 5.563" x 0.750" (5 XXS)	10.0000		0.4
3	P26x0.25	32.0000		2.2
4	P26x0.312	40.0000		3.4
				6.2

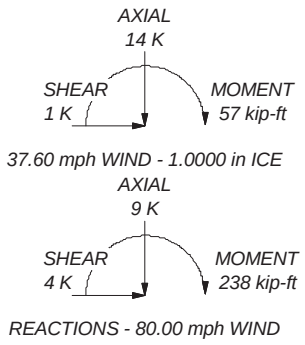

DESIGNED APPURTENANCE LOADING

TYPE	ELEVATION	TYPE	ELEVATION
Canister Load1	94	SBNH-1D6565C	77
80010891	88	DTMABP7819VG12A	77
80010891	88	DTMABP7819VG12A	77
(2) TMA2117F00V1-1	88	DTMABP7819VG12A	77
(2) TMA2117F00V1-1	88	SBNH-1D6565C	77
(2) TMA2117F00V1-1	88	SBNH-1D6565C	77
80010891	88	Canister Load3	72
Canister Load2	82		

MATERIAL STRENGTH

GRADE	Fy	Fu	GRADE	Fy	Fu
A53-B-35	35 ksi	60 ksi			

TOWER DESIGN NOTES

1. Tower is located in Hartford County, Connecticut.
2. Tower designed for a 80.00 mph basic wind in accordance with the TIA/EIA-222-F Standard.
3. Tower is also designed for a 37.60 mph basic wind with 1.00 in ice. Ice is considered to increase in thickness with height.
4. Deflections are based upon a 50.00 mph wind.
5. TOWER RATING: 59.5%

Paul J. Ford and Company
250 East Broad St, Suite 600
Columbus, OH 43215
Phone: 614.221.6679
FAX:

Job: ***82-Ft Concealment Pole / Southington Industrial***			
Project: ***37516-2615 / BU# 821898***			
Client: Crown Castle	Drawn by: TDehnke	App'd:	
Code: TIA/EIA-222-F	Date: 08/04/16	Scale: NTS	
Path:		Dwg No. E-1	

CCI Flagpole Tool

Site Data	
BU#:	
Site Name:	
App #:	

Code		
Code:	TIA/EIA 222-F	
Ice Thickness:	1	in
Windspeed (V):	80	mph
Ice Wind Speed (V):	37.6	mph

Tower Information		
Total Tower Height:	94	ft
Base Tower Height:	72	ft
Total Canister Length:	22	ft
Number of Canister Assembly Sections:	2	

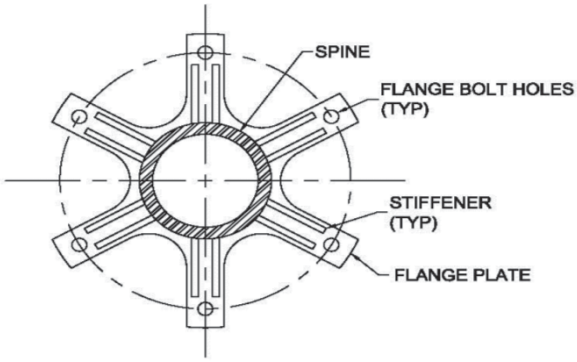

FLANGE PLATE
(TYPE 3: SOLIDITY RATIO 0.5)

Canister Section Number *:	Canister Assembly Length (ft):	Canister Assembly Diameter (in):	Number of Sides Canister Section	Plate Type:	Mating Flange Plate Thickness (in)**:	Mating Flange Plate Diameter (in):	Solidity Ratio	Plate Weight (Kip):	Canister Weight (Kip)
1	12	40	Round	3	2.00	40	0.5	0.713	0.251
2	10	40	Round	3	2.00	40	0.5	0.713	0.209

* Sections are numbered from the top of the tower down ** Mating Flange Plate Thickness at the bottom of canister section

Flag on Tower:	No

Truck Ball on Tower:	No

Geometry : Base Tower + Spine 37516-2615.001.7805.eri *(last saved 07/25 2:46 pm)*

Pole Height Above Base (ft)	Section Length (ft)	Lap Splice Length (ft)	Number of Sides	Top Diameter (in)	Bottom Diameter (in)	Wall Thickness (in)	Bend Radius (in)	Pole Material	Delete
94	12		0	5.563	5.563	0.258	n/a	A53-B-35	[x]
82	10		0	5.563	5.563	0.75	n/a	A53-B-35	[x]
72	32		0	26	26	0.25	n/a	A53-B-35	[x]
40	40		0	26	26	0.312	n/a	A53-B-35	[x]

Discrete Loads : C_FA_F for Canister Assembly								
Canister Loading	Apply C_FA_F at Elevation(z) (ft)	C_FA_F No Ice (ft^2)	C_FA_F 1/2" Ice (ft^2)	C_FA_F 1" Ice (ft^2)	C_FA_F 2" Ice (ft^2)	C_FA_F 4" Ice (ft^2)	Canister Assembly Weight No Ice (Kip)	Canister Assembly Weight 1/2" Ice (Kip)
Canister Load 1	94	11.800	12.095	12.390	12.980	14.160	0.126	0.274
Canister Load 2	82	21.633	22.174	22.715	23.797	25.960	0.943	1.215
Canister Load 3	72	9.833	10.079	10.325	10.817	11.800	0.817	0.941

Deflection Check Required:	**Yes**	Import Deflection Results
3% Spine Deflection Check		
Allowable (3%) Horizontal Spine Deflection (inches)	Actual Deflection ***(inches)	Sufficient/ Insufficient
7.920	3.959	Sufficient

*** Relative deflection under service level wind speed

Stiffened or Unstiffened, Ungrouted, Circular Base Plate - Any Rod Material

TIA Rev F

Site Data

BU#:	
Site Name:	
App #:	
Pole Manufacturer:	*Other*

Reactions		
Moment:	238	ft-kips
Axial:	9	kips
Shear:	4	kips

Anchor Rod Data		
Qty:	8	
Diam:	1.625	in
Rod Material:	Other	
Strength (Fu):	125	ksi
Yield (Fy):	105	ksi
Bolt Circle:	30.5	in

If No stiffeners, Criteria:	AISC ASD	<-Only Applcable to Unstiffened Cases

Anchor Rod Results

Maximum Rod Tension:	45.7	Kips	Non-Rigid
Allowable Tension:	114.0	Kips	Service, ASD
Anchor Rod Stress Ratio:	40.1%	**Pass**	Fty*ASIF

Plate Data		
Diam:	35	in
Thick:	1.5	in
Grade:	50	ksi
Single-Rod B-eff:	10.21	in

Base Plate Results Flexural Check

Base Plate Stress:	19.2	ksi	Non-Rigid
Allowable Plate Stress:	50.0	ksi	Service ASD
Base Plate Stress Ratio:	38.4%	**Pass**	0.75*Fy*ASIF
			Y.L. Length: 15.00

Stiffener Data (Welding at both sides)		
Config:	0	*
Weld Type:		
Groove Depth:		in **
Groove Angle:		degrees
Fillet H. Weld:		<-- Disregard
Fillet V. Weld:		in
Width:		in
Height:		in
Thick:		in
Notch:		in
Grade:		ksi
Weld str.:		ksi

n/a

Stiffener Results

Horizontal Weld :	n/a
Vertical Weld:	n/a
Plate Flex+Shear, fb/Fb+(fv/Fv)^2:	n/a
Plate Tension+Shear, ft/Ft+(fv/Fv)^2:	n/a
Plate Comp. (AISC Bracket):	n/a

Pole Results

Pole Punching Shear Check: n/a

Pole Data		
Diam:	26	in
Thick:	0.3125	in
Grade:	35	ksi
# of Sides:	0	"0" IF Round
Fu	58	ksi
Reinf. Fillet Weld	0	"0" if None

Stress Increase Factor		
ASIF:	1.333	

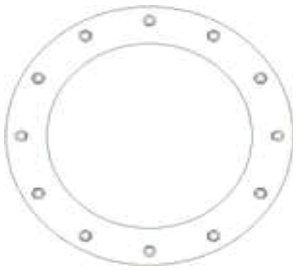

* 0 = none, 1 = every bolt, 2 = every 2 bolts, 3 = 2 per bolt

** Note: for complete joint penetration groove welds the groove depth must be exactly 1/2 the stiffener thickness for calculation purposes

Stiffened or Unstiffened, Interior Flange Plate - Any Bolt Material TIA Rev F

Site Data

BU#:	
Site Name:	
App #:	

Manufacturer:	Other

Reactions

Moment:	92.08	ft-kips
Axial:	5.58	kips
Shear:	2.96	kips
Exterior Flange Run, T+Q:		kips

Elevation: 40 feet

Bolt Data

Qty:	8			
Diam:	1	Bolt Fu:	120	
Bolt Material:	A325	Bolt Fy:	92	
N/A:	100	<-- Disregard	Bolt Fty:	44.00
N/A:	75	<-- Disregard		
Circle:	22	in		

Interior Flange Bolt Results

Maximum Bolt Tension:	24.4	Kips, Ext. T=Interior T
Allowable Tension:	46.1	Kips
Bolt Stress Ratio:	53.0%	Pass

Plate Data

Plate Outer Diam:	25.375	in
Plate Inner Diam:	18	in (Hole @ Ctr)
Thick:	1	in
Grade:	50	ksi
Effective Width:	7.75	in

Interior Flange Plate Results Flexural Check

Controlling Bolt Axial Force:	25.8	Kips, Ext. C= Interior C
Plate Stress:	33.7	ksi
Allowable Plate Stress:	50.0	ksi
Plate Stress Ratio:	67.5%	Pass

Stiffener Data (Welding at Both Sides)

Config:	0	*
Weld Type:		
Groove Depth:		in **
Groove Angle:		degrees
Fillet H. Weld:		<-- Disregard
Fillet V. Weld:		in
Width:		in
Height:		in
Thick:		in
Notch:		in
Grade:		ksi
Weld str.:		ksi

n/a

Stiffener Results

Horizontal Weld :	n/a
Vertical Weld:	n/a
Plate Flex+Shear, fb/Fb+(fv/Fv)^2:	n/a
Plate Tension+Shear, ft/Ft+(fv/Fv)^2:	n/a
Plate Comp. (AISC Bracket):	n/a

Pole Results

Pole Punching Shear Check:	n/a

Pole Data

Pole OuterDiam:	26	in
Thick:	0.3125	in
Pole Inner Diam:	25.375	in
Grade:	35	ksi
# of Sides:	0	"0" IF Round
Fu	58	ksi

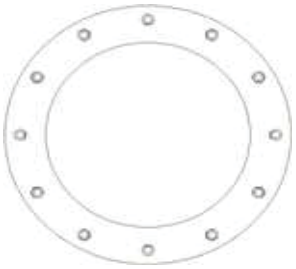

Stress Increase Factor

ASIF:	1.333	

* 0 = none, 1 = every bolt, 2 = every 2 bolts, 3 = 2 per bolt

** Note: for complete joint penetration groove welds the groove depth must be exactly 1/2 the stiffener thickness for calculation purposes

PAUL J. FORD & COMPANY
250 E Broad St, Ste 600 • Columbus, OH 43215
Phone 614.221.6679 www.pauljford.com

(c) Copyright 2015 by Paul J. Ford and Company, all rights reserved.

Job Number:		Page:	1 of 1
Engineer:		Date:	8/4/2016
Site Name:		Version:	v1.1.
Site Number:		Effective:	6/3/2015

CODE:	TIA-222-F
ASIF:	1.33

72 FT CONCEALMENT FLANGE CONNECTION CALCULATIONS

BOLT INFORMATION

Qty:	6.00	ea.
Diameter:	1.00	in.
Specification:	A325	
Bolt Fy	90	ksi
Bolt Fu	120	ksi
Bolt Circle:	20.0	in.

FLANGE REACTIONS

Moment (Mu):	18.24	kip*ft
Axial (Pu):	2.30	kips
Shear (Vu):	1.27	kips
Elevation:	72.00	ft
Max Ratio:	105%	

CONCEALMENT FLANGE INFORMATION

Spoke Thickness (t):	2.50	in.
Spoke Width (w):	3.00	in.
Steel Grade (Fy):	36	ksi

CONCEALMENT SPINE INFORMATION

Diameter:	5.56	in.
Thickness:	0.26	in.
Steel Grade (Fy):	35	ksi

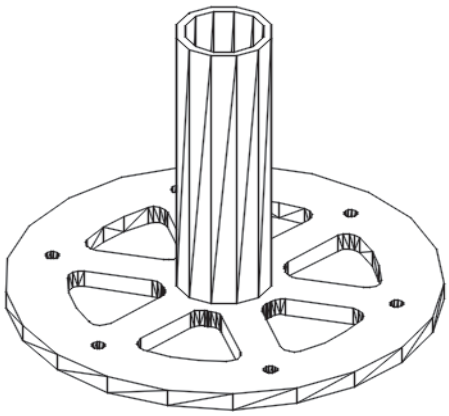

STIFFENER INFORMATION

Configuration:	0	No Stiffeners
Weld Size:	0.375	in.
Width:	5.00	in.
Height:	5.00	in.
Thickness:	0.50	in.
Notch:	0.50	in.
Steel Grade:	36	ksi
Weld Strength:	70	ksi

FLANGE CONNECTION RESULTS

Flange Bolts:	15.8%	Passing

BASE POLE INFORMATION

Pole Diameter:	26.00	in.
Pole Thickness:	0.250	in.

BASE POLE FLANGE INFORMATION

Connected to:	Monopole			
Weld Type:	Groove			
Weld Size:	0.25	in.		
Weld Strength:	70	ksi		
Weld Length*:	13.35	in.		in. (Override)
Spoke Thickness (t):	2.5	in.	2.50	in. (Override)
Spoke Width (w):	3	in.		in. (Override)
Steel Grade (Fy):	36	ksi	36.00	ksi (Override)

Concealment Flange Plate:	50.8%	Passing
Base Pole Flange Plate:	18.8%	Passing
Base Pole Flange Weld:	16.4%	Passing

*Assumes a tributary length of the pole diameter based on the number of bolts.

Stiffened or Unstiffened, Exterior Flange Plate - Any Bolt Material TIA Rev F

Site Data

BU#:	
Site Name:	
App #:	

Pole Manufacturer:	Other

Bolt Data

Qty:	6		
Diameter (in.):	0.75	Bolt Fu:	120
Bolt Material:	A325	Bolt Fy:	92
N/A:	75	<-- Disregard	Bolt Fty:
N/A:	55	<-- Disregard	44.00
Circle (in.):	9.75		

Plate Data

Diam:	13.75	in
Thick, t:	2	in
Grade (Fy):	36	ksi
Strength, Fu:	58	ksi
Single-Rod B-eff:	2.91	in

Stiffener Data (Welding at Both Sides)

Config:	0	*
Weld Type:		
Groove Depth:		in **
Groove Angle:		degrees
Fillet H. Weld:		<-- Disregard
Fillet V. Weld:		in
Width:		in
Height:		in
Thick:		in
Notch:		in
Grade:		ksi
Weld str.:		ksi

Pole Data

Diam:	5.5625	in
Thick:	0.258	in
Grade:	35	ksi
# of Sides:	0	"0" IF Round
Fu	58	ksi
Reinf. Fillet Weld	0	"0" if None

Stress Increase Factor

ASIF:	1.333	

Reactions

Moment:	5.48	ft-kips
Axial:	0.64	kips
Shear:	0.47	kips
Elevation:	80	feet

If No stiffeners, Criteria: AISC ASD <-Only Applcable to Unstiffened Cases

Flange Bolt Results

			Rigid
Bolt Tension Capacity, **B**:	25.91	kips	Service, ASD
Max Bolt directly applied T:	4.39	Kips	Fty*ASIF
Min. PL "tc" for **B** cap. **w/o** Pry:	1.597	in	
Min PL "treq" for actual **T w/ Pry**:	0.501	in	
Min PL "t1" for actual **T w/o Pry**:	0.657	in	
T allowable w/o Prying:	25.91	kips	α'<0 case
Prying Force, Q:	0.00	kips	
Total Bolt Tension=T+Q:	4.39	kips	
Non-Prying Bolt Stress Ratio, T/B:	16.9%	**Pass**	

Exterior Flange Plate Results Flexural Check

			Rigid
Compression Side Plate Stress:	2.2	ksi	Service ASD
Allowable Plate Stress:	36.0	ksi	0.75*Fy*ASIF
Compression Plate Stress Ratio:	6.0%	**Pass**	Comp. Y.L. Length:
No Prying			8.01
Tension Side Stress Ratio, (treq/t)^2:	6.3%	**Pass**	

n/a

Stiffener Results

Horizontal Weld :	n/a
Vertical Weld:	n/a
Plate Flex+Shear, fb/Fb+(fv/Fv)^2:	n/a
Plate Tension+Shear, ft/Ft+(fv/Fv)^2:	n/a
Plate Comp. (AISC Bracket):	n/a

Pole Results

Pole Punching Shear Check: n/a

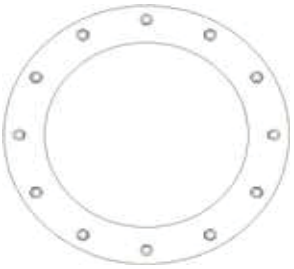

* 0 = none, 1 = every bolt, 2 = every 2 bolts, 3 = 2 per bolt

** Note: for complete joint penetration groove welds the groove depth must be exactly 1/2 the stiffener thickness for calculation purposes

foundation loads

Tower or Pole Weight =	**9**	kips
Total Horizontal Force =	**4**	kips
Overturning Moment =	**305.75**	ft-kips

soil properties

Safety factor against overturning =	**2**	
Soil density =	**110**	pcf
Allowable soil bearing =	**3**	ksf
Depth to water table =	**3.5**	ft

mat dimensions

depth to bottom of footing =	**4**	ft
Footing thickness =	**4**	ft
Footing Width =	**26**	ft
Footing Length =	**26**	ft
Tower/Pole Center Offset =	**0**	ft

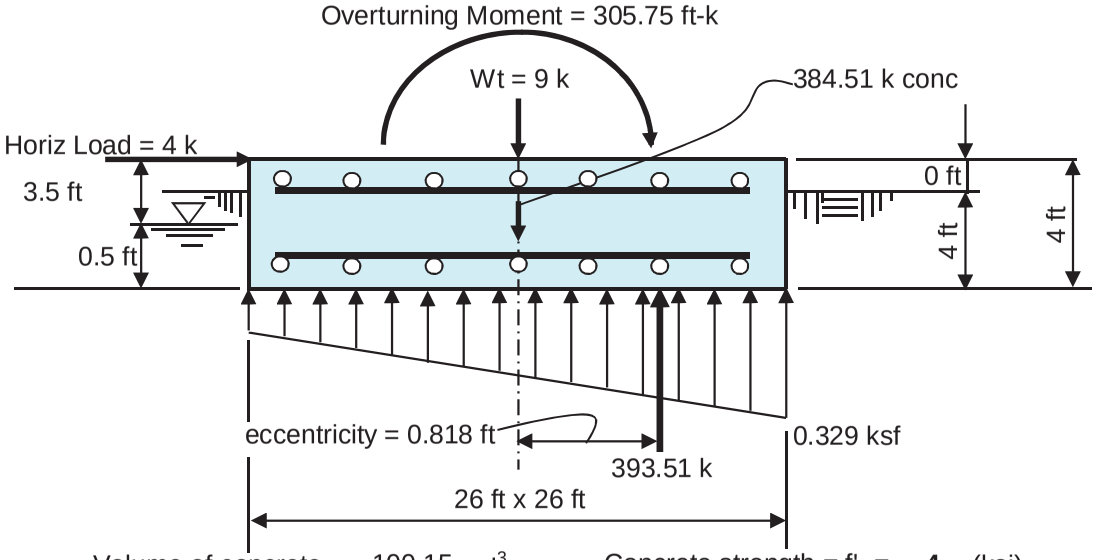

Volume of concrete = 100.15 yd^3 Concrete strength = f'_c = **4** (ksi)

Rebar = (152) #8 bars by 25.5 ft long

reinforcing steel = **(38) #8 @ 8.27 in o.c. ea way top and bottom**

Summary of analysis results

Rebar strength = F_y = **60** (ksi)

minimum cover over rebar = **3** inches

Overturning Moment: (Stress Ratio = 0.126) **< CONTROLLING CRITERIA**

Calculated Overturning Moment = 321.8 ft-kips

Resisting Moment = 5115.6 ft-kips

Factor of Safety against overturning = 15.899 **> 2 okay**

Soil Bearing (Stress Ratio = 0.11)

Net Soil Bearing Resistance = 3 ksf

Calculated Soil Bearing Pressure = 0.329 **ksf < 3 ksf okay**

Bending Moment (Stress Ratio = 0.028)

Ultimate Bending Moment Resistance = 5762 ft-kips

Calculated Ultimate Bending Moment = 161 **ft-kips < 5762 ft-kips okay**

Bending Shear (Stress Ratio = 0.019)

Ultimate Bending Shear Resistance = 1288 kips

Calculated Ultimate Bending Shear = 24 **kips < 1288 kips okay**

MODIFICATION OF AN EXISTING 72' MONOPOLE
STEALTH CING-20806W-02
BU #821898; SOUTHINGTON INDUSTRIAL

500 QUEEN ST
SOUTHINGTON, CONNECTICUT 06489
HARTFORD COUNTY
LAT: 41° 37' 48.54"; LONG: -72° 52' 29.98"
APP: 357137 REV. 8; WO: 1281170

PROJECT CONTACTS

STRUCTURE OWNER:
CROWN CASTLE
MOD PM: JAMES DONAHUE AT
JAMES.DONAHUE.VENDOR@CROWNCASTLE.COM
PH: (781) 771-1111
MOD CM: JASON D'AMICO AT JASON.D'AMICO@CROWNCASTLE.COM
PH: (860) 209-0104

ENGINEER OF RECORD:
PJFMOD@PJFWEB.COM

THIS PROJECT INCLUDES THE FOLLOWING ITEMS
REMOVAL OF EXISTING CONCEALMENT BULKHEADS & SHROUDS
INSTALLATION OF NEW CONCEALMENT SPINE, BULKHEADS & SHROUDS
PAINT MODIFICATIONS TO MATCH EXISTING POLE
INSTALL MISSING PORT COVERS
REPLACE INSTALLED FLANGE BOLT
INSTALL CONCEALMENT REINFORCING SOLUTIONS PER CROWN CASTLE DOC OPS-PRC-10127

SHEET INDEX

SHEET NUMBER	DESCRIPTION
T-1	TITLE SHEET
T-2	MI CHECKLIST
S-1	GENERAL NOTES
S-2	MONOPOLE PROFILE
S-3	PORT COVER & FLANGE DETAILS
S-4	CONCEALMENT ELEVATION DETAILS
S-5	CONCEALMENT FLANGE DETAILS
S-6	BULKHEAD DETAILS

WIND DESIGN DATA	
REFERENCE STANDARD	2005 CONNECTICUT BUILDING CODE AND TIA/EIA-222-F
LOCAL CODE	2006 IBC
BASIC WIND SPEED (FASTEST-MILE)	80 MPH
ICE THICKNESS	0.5 IN
ICE WIND SPEED	30 MPH
SERVICE WIND SPEED	50 MPH

THE ASSOCIATED FAILING SA WO NUMBER FOR THIS PROJECT IS 1274798

ATTENTION ALL CONTRACTORS, ANYTIME YOU ACCESS A CROWN SITE FOR ANY REASON YOU ARE TO CALL THE CROWN NOC UPON ARRIVAL AND DEPARTURE, DAILY AT (800) 788-7011.

© Copyright 2016, by Paul J. Ford and Company. All Rights Reserved. This document and the data contained herein, is proprietary to Paul J. Ford and Company, issued in strict confidence and shall not, without the prior written permission of Paul J. Ford and Company, be reproduced, copied or used for any purpose other than the intended use for this specific project.

PJF PAUL J. FORD & COMPANY
250 E Broad St, Ste 600- Columbus, OH 43215
Phone 614.221.6679 www.pauljford.com

CROWN CASTLE
3 CORPORATE PARK DRIVE, SUITE 101, CLIFTON PARK, NY 12065
PH: (585) 370-4766

MODIFICATION OF AN EXISTING 72' MONOPOLE
BU #821898; SOUTHINGTON INDUSTRIAL
SOUTHINGTON, CONNECTICUT

PROJECT No:	37516-2615.003.7700
DRAWN BY:	B.M.S.
DESIGNED BY:	T.J.D.
CHECKED BY:	
DATE:	8-4-2016

TITLE SHEET

T-1

37516-2615.003.DWG

MODIFICATION INSPECTION NOTES:

1. GENERAL

1.1. THE MODIFICATION INSPECTION (MI) IS A VISUAL INSPECTION OF TOWER MODIFICATIONS AND A REVIEW OF CONSTRUCTION INSPECTIONS AND OTHER REPORTS TO ENSURE THE INSTALLATION WAS CONSTRUCTED IN ACCORDANCE WITH THE CONTRACT DOCUMENTS, NAMELY THE MODIFICATION DRAWINGS, AS DESIGNED BY THE EOR.

1.2. THE MI IS TO CONFIRM INSTALLATION CONFIGURATION AND WORKMANSHIP ONLY AND IS NOT A REVIEW OF THE MODIFICATION DESIGN ITSELF, NOR DOES THE MI INSPECTOR TAKE OWNERSHIP OF THE MODIFICATION DESIGN. OWNERSHIP OF THE STRUCTURAL MODIFICATION DESIGN EFFECTIVENESS AND INTEGRITY RESIDES WITH THE EOR AT ALL TIMES.

1.3. ALL MI'S SHALL BE CONDUCTED BY A CROWN CASTLE ENGINEERING VENDOR (AEV) OR ENGINEERING SERVICE VENDOR (AESV) THAT IS APPROVED TO PERFORM ELEVATED WORK FOR CROWN CASTLE.

1.4. TO ENSURE THAT THE REQUIREMENTS OF THE MI ARE MET, IT IS VITAL THAT THE GENERAL CONTRACTOR (GC) AND THE MI INSPECTOR BEGIN COMMUNICATING AND COORDINATING AS SOON AS A PO IS RECEIVED. IT IS EXPECTED THAT EACH PARTY WILL BE PROACTIVE IN REACHING OUT TO THE OTHER PARTY. IF CONTACT INFORMATION IS NOT KNOWN, CONTACT YOUR CROWN CASTLE POINT OF CONTACT (POC).

1.5. REFER TO ENG-SOW-10007: MODIFICATION INSPECTION SOW FOR FURTHER DETAILS AND REQUIREMENTS.

2. MI INSPECTOR

2.1. THE MI INSPECTOR IS REQUIRED TO CONTACT THE GC AS SOON AS RECEIVING A PO FOR THE MI TO, AT A MINIMUM:

2.1.1. REVIEW THE REQUIREMENTS OF THE MI CHECKLIST.

2.1.2. WORK WITH THE GC TO DEVELOP A SCHEDULE TO CONDUCT ON-SITE INSPECTIONS, INCLUDING FOUNDATION INSPECTIONS.

2.1.3. THE MI INSPECTOR IS RESPONSIBLE FOR COLLECTING ALL GC INSPECTION AND TEST REPORTS, REVIEWING THE DOCUMENTS FOR ADHERENCE TO THE CONTRACT DOCUMENTS, CONDUCTING THE IN-FIELD INSPECTIONS, AND SUBMITTING THE MI REPORT TO CROWN CASTLE.

3. GENERAL CONTRACTOR

3.1. THE GC IS REQUIRED TO CONTACT THE MI INSPECTOR AS SOON AS RECEIVING A PO FOR THE MODIFICATION INSTALLATION OR TURNKEY PROJECT TO, AT A MINIMUM:

3.1.1. REVIEW THE REQUIREMENTS OF THE MI CHECKLIST.

3.1.2. WORK WITH THE MI INSPECTOR TO DEVELOP A SCHEDULE TO CONDUCT ON-SITE INSPECTIONS, INCLUDING FOUNDATION INSPECTIONS.

3.1.3. BETTER UNDERSTAND ALL INSPECTION AND TESTING REQUIREMENTS.

3.1.4. THE GC SHALL PERFORM AND RECORD THE TEST AND INSPECTION RESULTS IN ACCORDANCE WITH THE REQUIREMENTS OF THE MI CHECKLIST AND ENG-SOW-10007.

4. RECOMMENDATIONS

4.1. THE FOLLOWING RECOMMENDATIONS AND SUGGESTIONS ARE OFFERED TO ENHANCE THE EFFICIENCY AND EFFECTIVENESS OF DELIVERING AN MI REPORT:

4.1.1. IT IS SUGGESTED THAT THE GC PROVIDE A MINIMUM OF 5 BUSINESS DAYS NOTICE, PREFERABLE 10, TO THE MI INSPECTOR AS TO WHEN THE SITE WILL BE READY FOR THE MI TO BE CONDUCTED.

4.1.2. THE GC AND MI INSPECTOR COORDINATE CLOSELY THROUGHOUT THE ENTIRE PROJECT.

4.1.3. WHEN POSSIBLE, IT IS PREFERRED TO HAVE THE GC AND MI INSPECTOR ON-SITE SIMULTANEOUSLY FOR ANY GUY WIRE TENSIONING OR RE-TENSIONING OPERATIONS.

4.1.4. IT MAY BE BENEFICIAL TO INSTALL ALL TOWER MODIFICATIONS PRIOR TO CONDUCTING THE FOUNDATION INSPECTIONS TO ALLOW FOUNDATION AND MI INSPECTION(S) TO COMMENCE WITH ONE SITE VISIT.

4.1.5. WHEN POSSIBLE, IT IS PREFERRED TO HAVE THE GC AND MI INSPECTOR ON-SITE DURING THE MI TO HAVE ANY DEFICIENCIES CORRECTED DURING THE INITIAL MI. THEREFORE, THE GC MAY CHOOSE TO COORDINATE THE MI CAREFULLY TO ENSURE ALL CONSTRUCTION FACILITIES ARE AT THEIR DISPOSAL WHEN THE MI INSPECTOR IS ON SITE.

5. CANCELLATION OR DELAYS IN SCHEDULED MI

5.1. IF THE GC AND MI INSPECTOR AGREE TO A DATE ON WHICH THE MI WILL BE CONDUCTED, AND EITHER PARTY CANCELS OR DELAYS, CROWN CASTLE SHALL NOT BE RESPONSIBLE FOR ANY COSTS, FEES, LOSS OF DEPOSITS AND/OR OTHER PENALTIES RELATED TO THE CANCELLATION OR DELAY INCURRED BY EITHER PARTY FOR ANY TIME (E.G. TRAVEL AND LODGING, COSTS OF KEEPING EQUIPMENT ON-SITE, ETC.). IF CROWN CASTLE CONTRACTS DIRECTLY FOR A THIRD PARTY MI, EXCEPTIONS MAY BE MADE IN THE EVENT THAT THE DELAY/CANCELLATION IS CAUSED BY WEATHER OR OTHER CONDITIONS THAT MAY COMPROMISE THE SAFETY OF THE PARTIES INVOLVED.

6. CORRECTION OF FAILING MI'S

6.1. IF THE MODIFICATION INSTALLATION WOULD FAIL THE MI ("FAILED MI"), THE GC SHALL WORK WITH CROWN CASTLE TO COORDINATE A REMEDIATION PLAN IN ONE OF TWO WAYS:

6.1.1. CORRECT FAILING ISSUES TO COMPLY WITH THE SPECIFICATIONS CONTAINED IN THE ORIGINAL CONTRACT DOCUMENTS AND COORDINATE A SUPPLEMENT MI.

6.1.2. OR, WITH CROWN CASTLE'S APPROVAL, THE GC MAY WORK WITH THE EOR TO RE-ANALYZE THE MODIFICATION/REINFORCEMENT USING THE AS-BUILT CONDITION.

7. MI VERIFICATION INSPECTIONS

7.1. CROWN CASTLE RESERVES THE RIGHT TO CONDUCT A MI VERIFICATION INSPECTION TO VERIFY THE ACCURACY AND COMPLETENESS OF PREVIOUSLY COMPLETED MI INSPECTION(S) ON TOWER MODIFICATION PROJECTS.

7.2. ALL VERIFICATION INSPECTIONS SHALL BE HELD TO THE SAME SPECIFICATIONS AND REQUIREMENTS IN THE CONTRACT DOCUMENTS AND IN ACCORDANCE WITH ENG-SOW-10007.

7.3. VERIFICATION INSPECTION MAY BE CONDUCTED BY AN INDEPENDENT AEV/AESV FIRM AFTER A MODIFICATION PROJECT IS COMPLETED, AS MARKED BY THE DATE OF AN ACCEPTED "PASSING MI" OR "PASS AS NOTED MI" REPORT FOR THE ORIGINAL PROJECT.

8. PHOTOGRAPHS

8.1. BETWEEN THE GC AND THE MI INSPECTOR THE FOLLOWING PHOTOGRAPHS, AT A MINIMUM, ARE TO BE TAKEN AND INCLUDED IN THE MI REPORT:

8.1.1. PRECONSTRUCTION GENERAL SITE CONDITION

8.1.2. PHOTOGRAPHS DURING THE REINFORCEMENT MODIFICATION CONSTRUCTION/ERECTION AND INSPECTION

8.1.3. RAW MATERIALS

8.1.4. PHOTOS OF ALL CRITICAL DETAILS

8.1.5. FOUNDATION MODIFICATIONS

8.1.6. WELD PREPARATION

8.1.7. BOLT INSTALLATION AND TORQUE

8.1.8. FINAL INSTALLED CONDITION

8.1.9. SURFACE COATING REPAIR

8.1.10. POST CONSTRUCTION PHOTOGRAPHS

8.1.11. FINAL INFIELD CONDITION

8.1.12. PHOTOS OF ELEVATED MODIFICATIONS TAKEN FROM THE GROUND SHALL BE CONSIDERED INADEQUATE.

8.1.13. THIS IS NOT A COMPLETE LIST OF REQUIRED PHOTOS, PLEASE REFER TO ENG-SOW-10007.

9. INSPECTION AND TESTING

9.1. ALL WORK SHALL BE SUBJECT TO REVIEW AND OBSERVATION BY CROWN CASTLE'S REPRESENTATIVE AND CROWN CASTLE'S AUTHORIZED INDEPENDENT INSPECTION AND TESTING AGENCY.

9.2. INSPECTION SERVICES WHICH ARE FURNISHED BY OTHERS ARE STILL REQUIRED WHEN THE EOR PERFORMS SUPPORT SERVICES DURING CONSTRUCTION.

9.3. OBSERVED DISCREPANCIES BETWEEN THE WORK AND THE CONTRACT DOCUMENTS SHALL BE CORRECTED BY THE CONTRACTOR AT NO ADDITIONAL COST.

9.4. AN INDEPENDENT QUALIFIED INSPECTION/TESTING AGENCY SHALL BE SELECTED AND RETAINED FOR THE SOLE PURPOSE OF INSPECTING, TESTING, DOCUMENTING, AND APPROVING ALL WELDING AND FIELD WORK PERFORMED BY THE CONTRACTOR.

9.4.1. ACCESS TO ANY PLACE WHERE WORK IS BEING DONE SHALL BE PERMITTED AT ALL TIMES.

9.4.2. THE INSPECTION AGENCY SHALL SO SCHEDULE THIS WORK AS TO CAUSE A MINIMUM OF INTERRUPTION TO, AND COORDINATE WITH, THE WORK IN PROGRESS. IT IS THE CONTRACTOR'S RESPONSIBILITY TO COORDINATE THE WORK SCHEDULE WITH THE TESTING AGENCY. THE CONTRACTOR SHALL ALLOW FOR ADEQUATE TIME AND ACCESS FOR THE TESTING AGENCY TO PERFORM THEIR DUTIES.

9.5. THE INSPECTION AND TESTING AGENCY SHALL BE RESPONSIBLE TO PERFORM THE FOLLOWING SERVICES AND INSPECT THE FOLLOWING ITEMS IN ACCORDANCE WITH THE CONSTRUCTION DRAWINGS. THE TESTING AGENCY SHALL INSPECT ITEMS ON THIS LIST AND OTHER ITEMS AS NECESSARY TO FULFILL THEIR RESPONSIBILITY. THE TESTING AGENCY SHALL UTILIZE EXPERIENCED, TRAINED INSPECTORS INCLUDING AWS CERTIFIED WELDING INSPECTORS (CWI). INSPECTORS SHALL HAVE THE TRAINING, CREDENTIALS, AND EXPERIENCE APPROPRIATE FOR AND COMMENSURATE WITH THE SCOPE AND TYPE OF INSPECTION WORK TO BE PERFORMED.

9.6. GENERAL

9.6.1. PERFORM PERIODIC ON-SITE OBSERVATION, INSPECTION, VERIFICATION, AND TESTING DURING THE TIME THE CONTRACTOR IS WORKING ON-SITE. AGENCY SHALL NOTIFY CROWN CASTLE AND THE EOR IMMEDIATELY WHEN FIELD PROBLEMS OR DISCREPANCIES OCCUR.

9.7. FOUNDATIONS AND SOIL PREPARATION - (NOT REQUIRED)

9.8. CONCRETE TESTING PER ACI - (NOT REQUIRED)

9.9. STRUCTURAL STEEL

9.9.1. CHECK STEEL ON THE JOB WITH THE PLANS.

9.9.2. CHECK MILL CERTIFICATIONS. CALL FOR LABORATORY TEST REPORTS WHEN MILL CERTIFICATION IS IN QUESTION.

9.9.3. CHECK GRADE OF STEEL MEMBERS, AND BOLTS FOR CONFORMANCE WITH DRAWINGS.

9.9.4. INSPECT ALL STRUCTURAL BOLTS SHALL BE FIELD INSPECTED ACCORDING TO THE REQUIREMENTS OF THE AISC 'SPECIFICATION FOR STRUCTURAL JOINTS USING HIGH-STRENGTH BOLTS', DEC. 31, 2009.

9.9.5. INSPECT STEEL MEMBERS FOR DISTORTION, EXCESSIVE RUST, FLAWS AND BURNED HOLES.

9.9.6. CHECK STEEL MEMBERS FOR SIZES, SWEEP AND DIMENSIONAL TOLERANCES.

9.9.7. CHECK FOR SURFACE FINISH SPECIFIED, GALVANIZED.

9.9.8. CHECK THAT BOLTS HAVE BEEN TIGHTENED PROPERLY.

9.9.9. PRIOR TO ANY FIELD CUTTING THE CONTRACTOR SHALL MARK THE CUTOUT LINES ON THE STEEL AND THE INSPECTION/TESTING AGENCY SHALL VERIFY PROPOSED LAYOUT, LOCATION, AND DIMENSIONS. THE INSPECTION/TESTING AGENCY SHALL CLOSELY AND CONTINUOUSLY MONITOR THIS ACTIVITY.

9.10. WELDING:

9.10.1. VERIFY FIELD WELDING PROCEDURES, WELDERS, AND WELDING OPERATORS, NOT DEEMED PREQUALIFIED, IN ACCORDANCE WITH AWS D1.1.

9.10.2. INSPECT FIELD WELDED CONNECTIONS IN ACCORDANCE WITH THE REQUIREMENTS SPECIFIED AND WITH AWS D1.1.

9.10.3. APPROVE FIELD WELDING SEQUENCE.

9.10.4. A PROGRAM OF THE APPROVED SEQUENCES SHALL BE SUBMITTED TO CROWN CASTLE BEFORE WELDING BEGINS. NO CHANGE IN APPROVED SEQUENCES MAY BE MADE WITHOUT PERMISSION FROM CROWN CASTLE.

9.10.5. INSPECT WELDED CONNECTIONS AS FOLLOWS AND IN ACCORDANCE WITH AWS D1.1:

9.10.5.1. INSPECT WELDING EQUIPMENT FOR CAPACITY, MAINTENANCE, AND WORKING CONDITIONS.

9.10.5.2. VERIFY SPECIFIED ELECTRODES AND HANDLING AND STORAGE OF ELECTRODES FOR CONFORMANCE TO SPECIFICATIONS.

9.10.5.3. INSPECT PREHEATING AND INTERPASS TEMPERATURES FOR CONFORMANCE WITH AWS D1.1.

9.10.5.4. VISUALLY INSPECT ALL WELDS AND VERIFY THAT QUALITY OF WELDS MEETS THE REQUIREMENTS OF AWS D1.1. OTHER TESTS MAY ALSO BE PERFORMED ON THE WELDS BY THE TESTING AGENCY IN ORDER FOR THEM TO PERFORM THEIR DUTIES FOR THIS PROJECT.

9.10.5.5. SPOT TEST AT LEAST ONE FILLET WELD OF EACH MEMBER USING MAGNETIC PARTICLE.

9.10.5.6. INSPECT FOR SIZE, SPACING, TYPE AND LOCATION AS PER APPROVED DRAWINGS.

9.10.5.7. VERIFY THAT THE BASE METAL CONFORMS TO THE DRAWINGS.

9.10.5.8. REVIEW THE REPORTS BY TESTING LABS.

9.10.5.9. CHECK TO SEE THAT WELDS ARE CLEAN AND FREE FROM SLAG.

9.10.5.10. INSPECT RUST PROTECTION OF WELDS AS PER SPECIFICATIONS.

9.10.5.11. CHECK THAT DEFECTIVE WELDS ARE CLEARLY MARKED AND HAVE BEEN ADEQUATELY REPAIRED.

9.11. REPORTS:

9.11.1. COMPILE AND PERIODICALLY SUBMIT DAILY INSPECTION REPORTS TO CROWN CASTLE.

9.11.2. THE INSPECTION PLAN OUTLINED HEREIN IS INTENDED AS A DESCRIPTION OF GENERAL AND SPECIFIC ITEMS OF CONCERN. IT IS NOT INTENDED TO BE ALL-INCLUSIVE. IT DOES NOT LIMIT THE TESTING AND INSPECTION AGENCY TO THE ITEMS LISTED. ADDITIONAL TESTING, INSPECTION, AND CHECKING MAY BE REQUIRED AND SHOULD BE ANTICIPATED. THE TESTING AGENCY SHALL USE THEIR PROFESSIONAL JUDGMENT AND KNOWLEDGE OF THE JOB SITE CONDITIONS AND THE CONTRACTOR'S PERFORMANCE TO DECIDE WHAT OTHER ITEMS REQUIRE ADDITIONAL ATTENTION. THE TESTING AGENCY'S JUDGMENT MUST PREVAIL ON ITEMS NOT SPECIFICALLY COVERED. ANY DISCREPANCIES OR PROBLEMS SHALL BE BROUGHT IMMEDIATELY TO CROWN CASTLE'S ATTENTION. RESOLUTIONS ARE NOT TO BE MADE WITHOUT CROWN CASTLE'S REVIEW AND SPECIFIC WRITTEN CONSENT. CROWN CASTLE RESERVES THE RIGHT TO DETERMINE WHETHER OR NOT A RESOLUTION IS ACCEPTABLE.

9.11.3. AFTER EACH INSPECTION, THE TESTING AGENCY WILL PREPARE A WRITTEN ACCEPTANCE OR REJECTION WHICH WILL BE GIVEN TO THE CONTRACTOR AND FILED AS DAILY REPORTS TO CROWN CASTLE. THIS WRITTEN ACTION WILL GIVE THE CONTRACTOR A LIST OF ITEMS TO BE CORRECTED, PRIOR TO CONTINUING CONSTRUCTION, AND/OR LOADING OF STRUCTURAL ITEMS.

9.11.4. THE TESTING AGENCY DOES NOT RELIEVE THE CONTRACTOR'S CONTRACTUAL OR STATUTORY OBLIGATIONS. THE CONTRACTOR HAS THE SOLE RESPONSIBILITY FOR ANY DEVIATIONS FROM THE OFFICIAL CONTRACT DOCUMENTS. THE TESTING AGENCY WILL NOT REPLACE THE CONTRACTOR'S QUALITY CONTROL PERSONNEL.

MI CHECKLIST

CONSTRUCTION/INSTALLATION INSPECTIONS AND TESTING REQUIRED (COMPLETED BY EOR)	REPORT ITEM
PRE-CONSTRUCTION	
X	MI CHECKLIST DRAWINGS
X	EOR REVIEW
X	FABRICATION INSPECTION
X	FABRICATOR CERTIFIED WELD INSPECTION
X	MATERIAL TEST REPORT (MTR)
X	FABRICATOR NDE INSPECTION
NA	NDE REPORT OF MONOPOLE BASE PLATE (AS REQUIRED)
X	PACKING SLIPS
ADDITIONAL TESTING AND INSPECTIONS:	
CONSTRUCTION	
X	CONSTRUCTION INSPECTIONS
NA	FOUNDATION INSPECTIONS
NA	CONCRETE COMP. STRENGTH AND SLUMP TESTS
NA	POST INSTALLED ANCHOR ROD VERIFICATION
NA	BASE PLATE GROUT VERIFICATION
NA	CONTRACTOR'S CERTIFIED WELD INSPECTION
NA	EARTHWORK: PROVIDE PHOTO DOCUMENTATION OF EXCAVATION QUALITY AND COMPACTION
X	ON SITE COLD GALVANIZING VERIFICATION
NA	GUY WIRE TENSION REPORT
X	GC AS-BUILT DOCUMENTS
NA	MICROPILE/ROCK ANCHOR INSTALLER'S DRILLING AND INSTALLATION LOGS AND QA/QC DOCUMENTS
ADDITIONAL TESTING AND INSPECTIONS:	
POST-CONSTRUCTION	
X	MI INSPECTOR REDLINE OR RECORD DRAWING(S)
NA	POST INSTALLED ANCHOR ROD TARGET TENSION LOAD TESTING
NA	REFER TO MICROPILE/ROCK ANCHOR NOTES FOR SPECIAL INSPECTION AND TESTING REQUIREMENTS.
X	PHOTOGRAPHS
ADDITIONAL TESTING AND INSPECTIONS: FACT TIA INSPECTION PER CROWN CASTLE DOC OPS-SOW-10127	

NOTE: X DENOTES A DOCUMENT NEEDED FOR THE PMI REPORT
NA DENOTES A DOCUMENT THAT IS NOT REQUIRED FOR THE PMI REPORT

© Copyright 2016, by Paul J. Ford and Company. All Rights Reserved. This document and the data contained herein, is proprietary to Paul J. Ford and Company, issued in strict confidence and shall not, without the prior written permission of Paul J. Ford and Company, be reproduced, copied or used for any purpose other than the intended use for this specific project.

PJF PAUL J. FORD & COMPANY
250 E Broad St, Ste 600- Columbus, OH 43215
Phone 614.221.6679 www.pauljford.com

CROWN CASTLE
3 CORPORATE PARK DRIVE, SUITE 101, CLIFTON PARK, NY 12065
PH: (585) 370-4766

MODIFICATION OF AN EXISTING 72' MONOPOLE
BU #821898; SOUTHINGTON INDUSTRIAL
SOUTHINGTON, CONNECTICUT

PROJECT No:	37516-2615.003.7700
DRAWN BY:	B.M.S.
DESIGNED BY:	T.J.D.
CHECKED BY:	
DATE:	8-4-2016

MI CHECKLIST

T-2

37516-2615.003.DWG

MONOPOLE RETROFIT PROJECT MASTER NOTES DOCUMENT (REV. 3, 02/05/2015)

1. GENERAL NOTES

1.1. THE MONOPOLE STRUCTURE IN ITS EXISTING CONDITION DOES NOT HAVE THE STRUCTURAL CAPACITY TO CARRY ALL OF THE PROPOSED AND EXISTING LOADS FROM THE ATTACHED STRUCTURAL MODIFICATION REPORT AT THE REQUIRED MINIMUM WIND SPEEDS. DO NOT INSTALL ANY NEW LOADS UNTIL THE MONOPOLE REINFORCING SYSTEM IS COMPLETELY AND SUCCESSFULLY INSTALLED.

1.2. THESE DRAWINGS WERE PREPARED FROM INFORMATION PROVIDED BY CROWN CASTLE. THE INFORMATION PROVIDED HAS NOT BEEN FIELD VERIFIED BY THE ENGINEER OF RECORD (EOR) FOR ACCURACY AND THEREFORE DISCREPANCIES BETWEEN THESE DRAWINGS AND ACTUAL SITE CONDITIONS SHOULD BE ANTICIPATED. PRIOR TO FABRICATION AND INSTALLATION CONTRACTOR SHALL VERIFY ALL LENGTHS AND QUANTITIES GIVEN. LENGTH AND QUANTITIES PROVIDED ARE FOR QUOTING PURPOSES ONLY AND SHALL NOT BE USED FOR FABRICATION. THE CONTRACTOR SHALL COORDINATE WITH THE PROJECT DRAWINGS AND THEIR FIELD VERIFIED CONDITIONS AND DIMENSIONS BEFORE PROCEEDING WITH THE WORK. THE CONTRACTOR SHALL IMMEDIATELY REPORT ANY AND ALL DISCREPANCIES TO THE EOR AND CROWN CASTLE BEFORE PROCEEDING WITH THE WORK. ANY WORK PERFORMED WITHOUT A PREFABRICATION MAPPING IS DONE AT THE RISK OF THE GENERAL CONTRACTOR AND/OR THE FABRICATOR

1.3. IF MATERIALS, QUANTITIES, STRENGTHS OR SIZES INDICATED BY THE DRAWINGS OR SPECIFICATIONS ARE NOT IN AGREEMENT WITH THESE NOTES, THE BETTER QUALITY AND/OR GREATER QUANTITY, STRENGTH OR SIZE INDICATED, SPECIFIED OR NOTED SHALL BE PROVIDED.

1.4. THIS STRUCTURE IS DESIGNED TO BE SELF-SUPPORTING AND STABLE AFTER THE INSTALLATION OF THE REINFORCING REPAIR SYSTEM HAS BEEN SUCCESSFULLY COMPLETED. IT IS THE CONTRACTOR'S SOLE RESPONSIBILITY TO ENSURE THE SAFETY AND STABILITY OF THE MONOPOLE AND ITS COMPONENT PARTS DURING FIELD MODIFICATIONS. THIS INCLUDES, BUT IS NOT LIMITED TO, THE ADDITION OF WHATEVER TEMPORARY BRACING, GUYS OR TIE DOWNS THAT MAY BE NECESSARY. SUCH MATERIAL SHALL BE REMOVED AND SHALL REMAIN THE PROPERTY OF THE CONTRACTOR AFTER THE COMPLETION OF THE PROJECT.

1.5. ALL CONSTRUCTION MEANS AND METHODS; INCLUDING BUT NOT LIMITED TO, ERECTION PLANS, RIGGING PLANS, CLIMBING PLANS AND RESCUE PLANS SHALL BE THE RESPONSIBILITY OF THE GENERAL CONTRACTOR RESPONSIBLE FOR THE EXECUTION OF THE WORK CONTAINED HEREIN AND SHALL MEET ANSI/TIA-1019 (LATEST EDITION), OSHA AND GENERAL INDUSTRY STANDARDS. ALL RIGGING PLANS SHALL ADHERE TO ANSI/TIA-1019 (LATEST EDITION) INCLUDING THE REQUIRED INVOLVEMENT OF A QUALIFIED ENGINEER FOR CLASS IV CONSTRUCTION.

1.6. OBSERVATION VISITS TO THE SITE BY CROWN CASTLE AND/OR THE EOR SHALL NOT INCLUDE INSPECTIONS OF THE PROTECTIVE MEASURES OR THE CONSTRUCTION PROCEDURES. ANY SUPPORT SERVICES PERFORMED BY THE EOR DURING CONSTRUCTION ARE SOLELY FOR THE PURPOSE OF ACHIEVING GENERAL CONFORMANCE WITH THE CONTRACT DOCUMENTS. THEY DO NOT GUARANTEE THE CONTRACTOR'S PERFORMANCE AND SHALL NOT BE CONSTRUED AS SUPERVISION OF CONSTRUCTION.

1.7. ALL MATERIALS AND EQUIPMENT FURNISHED SHALL BE NEW AND OF GOOD QUALITY, FREE FROM FAULTS AND DEFECTS AND IN CONFORMANCE WITH THE CONTRACT DOCUMENTS. ANY AND ALL SUBSTITUTIONS MUST BE PROPERLY APPROVED AND AUTHORIZED IN WRITING BY CROWN CASTLE AND EOR PRIOR TO INSTALLATION. THE CONTRACTOR SHALL FURNISH SATISFACTORY EVIDENCE AS TO THE KIND AND QUALITY OF MATERIALS AND EQUIPMENT BEING SUBSTITUTED.

1.8. THE CONTRACTOR SHALL BE RESPONSIBLE FOR INITIATING, MAINTAINING, AND SUPERVISING ALL SAFETY PRECAUTIONS AND PROGRAMS IN CONNECTION WITH THE WORK. THE CONTRACTOR IS RESPONSIBLE TO ENSURE THAT THIS PROJECT AND RELATED WORK COMPLIES WITH ALL APPLICABLE LOCAL, STATE, AND FEDERAL SAFETY CODES AND REGULATIONS GOVERNING THIS WORK AS WELL AS CROWN CASTLE SAFETY GUIDELINES.

1.9. THE CONTRACTOR SHALL BE RESPONSIBLE FOR PROTECTING ALL EXISTING AND NEW COAXIAL CABLES AND OTHER EQUIPMENT DURING CONSTRUCTION.

1.10. ANY EXISTING ATTACHMENTS AND/OR PROJECTIONS ON THE POLE THAT MAY INTERFERE WITH THE INSTALLATION OF THE REINFORCING SYSTEM WILL HAVE TO BE REMOVED AND RELOCATED, REPLACED, OR RE-INSTALLED AS REQUIRED AFTER THE REINFORCING IS SUCCESSFULLY COMPLETED. THE CONTRACTOR SHALL IDENTIFY AND COORDINATE THESE ITEMS PRIOR TO CONSTRUCTION WITH CROWN CASTLE, TESTING AGENCY, AND EOR.

1.11. ANY AND ALL EXISTING PLATFORMS THAT ARE LOCATED IN AREAS OF THE POLE SHAFT WHERE SHAFT REINFORCING MUST BE APPLIED SHALL BE TEMPORARILY REMOVED OR OTHERWISE SUPPORTED TO PERMIT NEW CONTINUOUS REINFORCEMENT TO BE ATTACHED. AFTER THE CONTRACTOR HAS SUCCESSFULLY INSTALLED THE MONOPOLE REINFORCEMENT SYSTEM, THE CONTRACTOR SHALL RE-INSTALL THE PLATFORMS.

1.12. THE CLIMBING FACILITIES, SAFETY CLIMB AND ALL PARTS THEREOF SHALL NOT BE IMPEDED, MODIFIED OR ALTERED WITHOUT THE EXPRESS APPROVAL OF THE EOR.

1.13. FOR STANDARD CROWN PARTS SEE THE MOST RECENT VERSION OF THE "CCI APPROVED REINFORCEMENT COMPONENTS" CATALOG.

1.14. ALL SOLUTIONS FOR THE REPLACEMENT, RELOCATION OR MODIFICATION OF THE SAFETY CLIMB AND/OR ANY OF THE MONOPOLE CLIMBING FACILITIES SHALL BE COORDINATED WITH TUF-TUG PRODUCTS. CONTACT DETAILS:
3434 ENCRETE LANE, MORAINE, OHIO 45439
PHONE: 937-299-1213 EMAIL: TUFTUG@AOL.COM

2. STRUCTURAL STEEL

2.1. STRUCTURAL STEEL MATERIALS, FABRICATION, DETAILING, AND WORKMANSHIP SHALL CONFORM TO THE LATEST EDITION OF THE FOLLOWING REFERENCE STANDARDS:
- 2.1.1. BY THE AMERICAN INSTITUTE OF STEEL CONSTRUCTION (AISC):
  - 2.1.1.1. "SPECIFICATION FOR STRUCTURAL STEEL BUILDINGS."
  - 2.1.1.2. "SPECIFICATION FOR STRUCTURAL JOINTS USING ASTM HIGH STRENGTH BOLTS," AS APPROVED BY THE RESEARCH COUNCIL ON STRUCTURAL CONNECTIONS.
  - 2.1.1.3. "CODE OF STANDARD PRACTICE FOR STEEL BUILDINGS AND BRIDGES"
- 2.1.2. BY THE AMERICAN WELDING SOCIETY (AWS):
  - 2.1.2.1. "STRUCTURAL WELDING CODE – STEEL D1.1."
  - 2.1.2.2. "STANDARD SYMBOLS FOR WELDING, BRAZING, AND NONDESTRUCTIVE EXAMINATION"

2.2. ALL STRUCTURAL BOLTS SHALL BE INSTALLED AND TIGHTENED TO THE PRETENSIONED CONDITION ACCORDING TO THE REQUIREMENTS OF THE AISC 'SPECIFICATION FOR STRUCTURAL JOINTS USING ASTM HIGH STRENGTH BOLTS', DEC. 31, 2009.

2.3. ANY MATERIAL OR WORKMANSHIP WHICH IS OBSERVED TO BE DEFECTIVE OR INCONSISTENT WITH THE CONTRACT DOCUMENTS SHALL BE CORRECTED, MODIFIED, OR REPLACED AT THE CONTRACTOR'S EXPENSE.

2.4. WELDED CONNECTIONS SHALL CONFORM TO THE LATEST REVISED CODE OF THE AMERICAN WELDING SOCIETY, AWS D1.1. ALL WELD ELECTRODES SHALL BE E80XX UNLESS NOTED OTHERWISE ON THE DRAWINGS.

2.5. ALL WELDED CONNECTIONS SHALL BE MADE BY WELDERS CERTIFIED BY AWS. CONTRACTOR SHALL SUBMIT WELDERS' CERTIFICATION AND QUALIFICATION DOCUMENTATION TO CROWN CASTLE'S TESTING AGENCY FOR REVIEW AND APPROVAL PRIOR TO CONSTRUCTION.

2.6. STRUCTURAL STEEL PLATES SHALL CONFORM TO ASTM A572 GRADE 65(FY = 65 KSI MIN.) UNLESS NOTED OTHERWISE ON THE DRAWINGS.

2.7. SURFACES OF EXISTING STEEL SHALL BE PREPARED AS REQUIRED FOR FIELD WELDING PER AWS. SEE SECTION I NOTES REGARDING TOUCH UP OF GALVANIZED SURFACES DAMAGED DURING TRANSPORTATION OR ERECTION AND ASSEMBLY AS WELL AS FIELD WELDING.

2.8. NO WELDING SHALL BE DONE TO THE EXISTING STRUCTURE WITHOUT THE PRIOR APPROVAL AND SUPERVISION OF THE TESTING AGENCY.

2.9. FIELD CUTTING OF STEEL:
- 2.9.1. IMPORTANT CUTTING AND WELDING SAFETY GUIDELINES: THE CONTRACTOR SHALL FOLLOW ALL CROWN CASTLE CUTTING, WELDING, FIRE PREVENTION AND SAFETY GUIDELINES. PRIOR TO CONSTRUCTION, THE CONTRACTOR SHALL OBTAIN A COPY OF THE CURRENT CROWN CASTLE GUIDELINES. PER THE 12-01-2005 CROWN CASTLE DIRECTIVE: 'ALL CUTTING AND WELDING ACTIVITIES SHALL BE CONDUCTED IN ACCORDANCE WITH CROWN CASTLE POLICY 'CUTTING AND WELDING SAFETY PLAN' (DOC # ENG-PLN-10015) ON AN ONGOING BASIS THROUGHOUT THE ENTIRE LIFE OF THE PROJECT". ANY DAMAGE TO THE COAX CABLES, AND/OR OTHER EQUIPMENT AND/OR THE STRUCTURE, RESULTING FROM THE CONTRACTOR'S ACTIVITIES SHALL BE REPAIRED AT THE CONTRACTOR'S EXPENSE. THE INSPECTION/TESTING AGENCY SHALL CLOSELY AND CONTINUOUSLY MONITOR THIS ACTIVITY.
- 2.9.2. ALL REQUIRED CUTS SHALL BE CUT WITHIN THE DIMENSIONS SHOWN ON THE DRAWINGS. NO CUTS SHALL EXTEND BEYOND THE OUTLINE OF THE DIMENSIONS SHOWN ON THE DRAWINGS. ALL CUT EDGES SHALL BE GROUND SMOOTH AND DE-BURRED. CUT EDGES THAT ARE TO BE FIELD WELDED SHALL BE PREPARED FOR FIELD WELDING PER AWS D1.1 AND AS SHOWN ON THE DRAWINGS. CONTRACTOR TO AVOID 90 DEGREE CORNERS. IT MAY BE NECESSARY TO DRILL STARTER HOLES AS REQUIRED TO MAKE THE CUTS.

3. BASE PLATE GROUT - (NOT REQUIRED)

4. FOUNDATION WORK - (NOT REQUIRED)

5. CAST-IN-PLACE CONCRETE - (NOT REQUIRED)

6. EPOXY GROUTED REINFORCING ANCHOR RODS - (NOT REQUIRED)

7. TOUCH UP OF GALVANIZING

7.1. THE CONTRACTOR SHALL TOUCH UP ANY AND ALL AREAS OF GALVANIZING ON THE EXISTING STRUCTURE OR NEW COMPONENTS THAT ARE DAMAGED OR ABRADED DURING CONSTRUCTION. GALVANIZED SURFACES DAMAGED DURING TRANSPORTATION OR ERECTION AND ASSEMBLY AS WELL AS ANY AND ALL ABRASIONS, CUTS, FIELD DRILLING, AND ALL FIELD WELDING SHALL BE TOUCHED UP WITH TWO (2) COATS OF ZRC COLD GALVANIZING COMPOUND. FILM THICKNESS PER COAT SHALL BE: WET 3.0 MILS; DRY 1.5 MILS. APPLY PER ZRC (MANUFACTURER) RECOMMENDED PROCEDURES. CONTACT ZRC AT 1-800-831-3275 FOR PRODUCT INFORMATION.

7.2. CONTRACTOR SHALL CLEAN AND PREPARE ALL FIELD WELDS ON GALVANIZED AND PRIME PAINTED SURFACES FOR TOUCH-UP COATING IN ACCORDANCE WITH AWS D1.1. CROWN CASTLE'S TESTING AGENCY SHALL VERIFY THE PREPARED SURFACE PRIOR TO APPLICATION OF THE TOUCH-UP COATING.

7.3. CROWN CASTLE'S TESTING AGENCY SHALL TEST AND VERIFY THE COATING THICKNESS AFTER THE CONTRACTOR HAS APPLIED THE ZRC COLD GALVANIZING COMPOUND AND IT HAS SUFFICIENTLY DRIED. AREAS FOUND TO BE ADEQUATELY COATED, SHALL BE RE-COATED BY THE CONTRACTOR AND RE-TESTED BY THE TESTING AGENCY.

8. HOT-DIP GALVANIZING

8.1. HOT-DIP GALVANIZE ALL STRUCTURAL STEEL MEMBERS AND ALL STEEL ACCESSORIES, BOLTS, WASHERS, ETC. PER ASTM A123 OR PER ASTM A153, AS APPROPRIATE.

8.2. PROPERLY PREPARE STEEL ITEMS FOR GALVANIZING. DRILL OR PUNCH WEEP AND/OR DRAINAGE HOLES WITH EOR APPROVAL OF LOCATIONS.

8.3. ALL GALVANIZING SHALL BE DONE AFTER FABRICATION IS COMPLETED AND PRIOR TO FIELD INSTALLATION.

9. PERPETUAL INSPECTION AND MAINTENANCE BY THE OWNER

9.1. AFTER THE CONTRACTOR HAS SUCCESSFULLY COMPLETED THE INSTALLATION OF THE MONOPOLE REINFORCING SYSTEM AND THE WORK HAS BEEN ACCEPTED BY CROWN CASTLE, CROWN CASTLE WILL BE RESPONSIBLE FOR THE LONG TERM AND PERPETUAL INSPECTION AND MAINTENANCE OF THE POLE AND REINFORCING SYSTEM.

9.2. ANY FIELD WELDED CONNECTIONS ARE SUBJECT TO CORROSION DAMAGE AND DETERIORATION IF THEY ARE NOT PROPERLY MAINTAINED AND COVERED WITH CORROSION PREVENTIVE COATING SUCH AS THE ZRC GALVANIZING COMPOUND SPECIFIED PREVIOUSLY. THE STRUCTURAL LOAD CARRYING CAPACITY OF THE REINFORCED POLE SYSTEM IS DEPENDENT UPON THE INSTALLED SIZE AND QUALITY, MAINTAINED SOUND CONDITION AND STRENGTH OF THESE FIELD WELDED CONNECTIONS. ANY CORROSION OF, DAMAGE TO, FATIGUE, FRACTURE, AND/OR DETERIORATION OF THESE WELDS AND/OR THE EXISTING GALVANIZED STEEL POLE STRUCTURE AND THE WELDED COMPONENTS WILL RESULT IN THE LOSS OF STRUCTURAL LOAD CARRYING CAPACITY AND MAY LEAD TO FAILURE OF THE STRUCTURAL SYSTEM. THEREFORE, IT IS IMPERATIVE THAT CROWN CASTLE REGULARLY INSPECTS, MAINTAINS, AND REPAIRS AS NECESSARY, ALL OF THESE WELDS, CONNECTIONS, AND COMPONENTS FOR THE LIFE OF THE STRUCTURE.

9.3. CROWN CASTLE SHALL REFER TO TIA/EIA-222-F-1996, SECTION 14 AND ANNEX E FOR RECOMMENDATIONS FOR MAINTENANCE AND INSPECTION. THE FREQUENCY OF THE INSPECTION AND MAINTENANCE INTERVALS IS TO BE DETERMINED BY CROWN CASTLE BASED UPON ACTUAL SITE AND ENVIRONMENTAL CONDITIONS. THE EOR RECOMMENDS THAT A COMPLETE AND THOROUGH INSPECTION OF THE ENTIRE REINFORCED MONOPOLE STRUCTURAL SYSTEM BE PERFORMED YEARLY AND/OR AS FREQUENTLY AS CONDITIONS WARRANT. ACCORDING TO TIA/EIA-222-F-1996 SECTION 14.1, NOTE 1: "IT IS RECOMMENDED THAT THE STRUCTURE BE INSPECTED AFTER SEVERE WIND AND/OR ICE STORMS OR OTHER EXTREME LOADING CONDITIONS".

10. FIELD NDE MINIMUM REQUIREMENTS

10.1. ALL NDE SHALL BE IN ACCORDANCE WITH AWS D1.1.

10.2. FOR NEW BASE STIFFENERS (INCLUSIVE OF TRANSITION STIFFENERS) AND ANCHOR ROD BRACKETS, COMPLETE JOINT PENETRATION WELDS SHALL BE 100% INSPECTED BY UT. ALL PARTIAL JOINT PENETRATION AND FILLET WELDS SHALL BE 100% INSPECTED BY MT.

10.3. FOR NEW FLAT PLATE REINFORCEMENT AT THE BASE OF THE TOWER, COMPLETE JOINT PENETRATION WELDS SHALL BE 100% INSPECTED BY UT. ALL PARTIAL JOINT PENETRATION AND FILLET WELDS SHALL BE 100% INSPECTED BY MT, BUT MAY BE LIMITED TO A HEIGHT OF 10'-0".

10.4. FOR NDE OF THE EXISTING BASE PLATE CIRCUMFERENTIAL WELD, GC SHALL REFERENCE THE MI CHECKLIST FOR APPLICABILITY. PLEASE SEE ENG-SOW-10033: 'TOWER BASE PLATE NDE, AND ENG-BUL-10051: 'NDE REQUIREMENTS FOR MONOPOLE BASE PLATE TO PREVENT CONNECTION FAILURE'. NOTIFY THE EOR AND CROWN ENGINEERING IMMEDIATELY IF ANY CRACKS ARE SUSPECTED OR HAVE BEEN IDENTIFIED. THE NDE SHALL INCLUDE ALL EXISTING MODIFICATIONS THAT HAVE BEEN WELDED TO THE BASE PLATE.

10.5. ALL TESTING LIMITATIONS SHALL BE DETAILED IN THE NDE REPORT.

© Copyright 2016, by Paul J. Ford and Company. All Rights Reserved. This document and the data contained herein, is proprietary to Paul J. Ford and Company, issued in strict confidence and shall not, without the prior written permission of Paul J. Ford and Company, be reproduced, copied or used for any purpose other than the intended use for this specific project.

PJF PAUL J. FORD & COMPANY
250 E Broad St, Ste 600- Columbus, OH 43215
Phone 614.221.6679 www.pauljford.com

CROWN CASTLE
3 CORPORATE PARK DRIVE, SUITE 101, CLIFTON PARK, NY 12065
PH: (585) 370-4766

MODIFICATION OF AN EXISTING 72' MONOPOLE
BU #821898; SOUTHINGTON INDUSTRIAL
SOUTHINGTON, CONNECTICUT

PROJECT No:	37516-2615.003.7700
DRAWN BY:	B.M.S.
DESIGNED BY:	T.J.D.
CHECKED BY:	
DATE:	8-4-2016

GENERAL NOTES

S-1

37516-2615.003.DWG

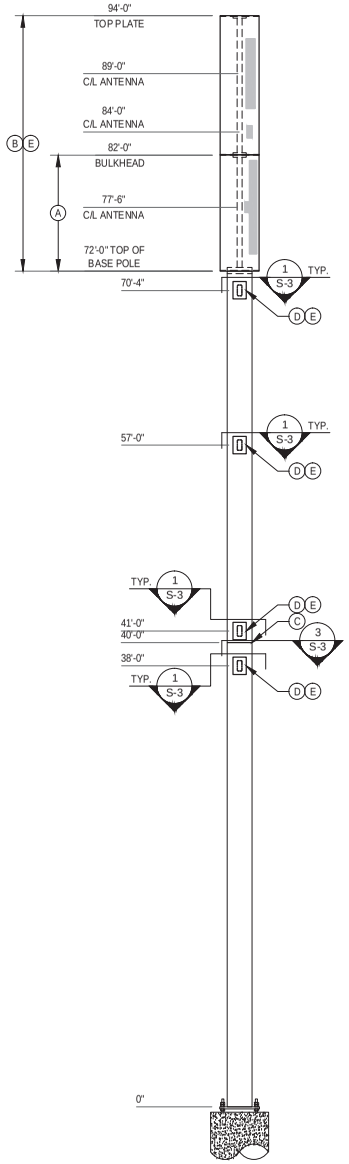

POLE ELEVATION 1/S-2

SHAFT SECTION DATA							
SHAFT SECTION	SECTION LENGTH (FT)	PLATE THICKNESS (IN)	LAP SPLICE (IN)	DIAMETER ACROSS FLATS (IN)		POLE GRADE (ksi)	POLE SHAPE
				@ TOP	@ BOTTOM		
1	32.00	0.2500		26.000	26.000	53	ROUND
2	40.00	0.3125		26.000	26.000	53	ROUND
NOTE: DIMENSIONS SHOWN DO NOT INCLUDE GALVANIZING TOLERANCES							

TOWER MODIFICATION SCHEDULE

	ELEVATION	TOWER MODIFICATION DESCRIPTION	REFERENCE SHEETS
A	72' TO 82'	REMOVE EXISTING CONCEALMENT SPINE AND SHROUDS	S-2
B	72' TO 94'	INSTALL NEW CONCEALMENT SPINE, BULKHEADS AND SHROUDS	S-4 TO S-6
C	40'	REPLACE EXSITING FLANGE BOLT	S-3
D	38', 41', 57'-4" & 70'-4"	INSTALL MISSING PORT COVERS	S-3
E	38', 41', 57'-4", 70'-4" & 72' TO 94'	PAINT MODIFICATIONS TO MATCH EXISTING POLE	S-2
F	72' TO 94'	INSTALL CONCELAMENT REINFORCING SOLUTION PER CROWN CASTLE DOC OPS-PRC-10127	S-4 TO S-6

1. EXISTING CONCEALMENT TO BE REMOVED AND REPLACED WITH THE NEW CONCEALMENT.
2. NEW CONCEALMENT IS TO BE BOLTED TO TOP FLANGE OF EXISTING BASE POLE. CONTRACTOR SHALL VERIFY EXISTING CONDITIONS PRIOR TO FABRICATION AND INSTALLATION.
3. CONTRACTOR SHALL SEND PAUL J. FORD & COMPANY THE FABRICATION DRAWINGS FOR APPROVAL PRIOR TO MANUFACTURING.
4. CONTRACTOR TO COORDINATE EQUIPMENT SHUT DOWN AND CONCEALMENT REMOVAL WITH CROWN CASTLE PROJECT PM AND CARRIERS. CONTRACTOR TO PROVIDE SCHEDULE THAT MINIMIZES DOWN TIME FOR CUSTOMER SYSTEMS. TEMPORARY POLES OR COWS MAY BE REQUIRED DURING THE INSTALLATION OF THE NEW CONCEALMENT AND MODIFICATIONS.

© Copyright 2016, by Paul J. Ford and Company. All Rights Reserved. This document and the data contained herein, is proprietary to Paul J. Ford and Company, issued in strict confidence and shall not, without the prior written permission of Paul J. Ford and Company, be reproduced, copied or used for any purpose other than the intended use for this specific project.

PJF PAUL J. FORD & COMPANY
250 E Broad St, Ste 600- Columbus, OH 43215
Phone 614.221.6679 www.pauljford.com

CROWN CASTLE
3 CORPORATE PARK DRIVE, SUITE 101, CLIFTON PARK, NY 12065
PH: (585) 370-4766

MODIFICATION OF AN EXISTING 72' MONOPOLE

BU #821898; SOUTHINGTON INDUSTRIAL
SOUTHINGTON, CONNECTICUT

PROJECT No:	37516-2615.003.7700
DRAWN BY:	B.M.S.
DESIGNED BY:	T.J.D.
CHECKED BY:	
DATE:	8-4-2016

MONOPOLE PROFILE

S-2

37516-2615.003.DWG

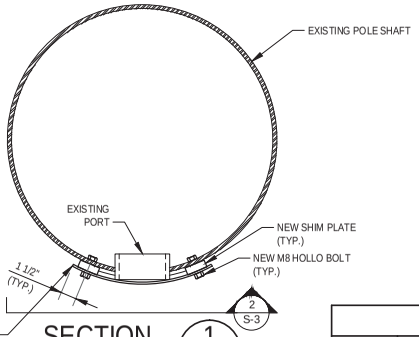

SECTION 1 / S-3

PORT INFORMATION					
#	ELEVATION	WIDTH	HEIGHT	PROJECTOIN	DIRECTION
1	38'-0"	5 1/4"	11 1/4"	1/2"	SW
2	38'-0"	5 1/4"	11 1/4"	1/2"	NE
3	41'-0"	5 1/4"	11 1/4"	1/2"	SW
4	41'-0"	5 1/4"	11 1/4"	1/2"	NE
5	57'-4"	5 1/4"	11 1/4"	1/2"	NW
6	57'-4"	5 1/4"	11 1/4"	1/2"	SE
7	70'-4"	5 1/4"	11 1/4"	1/2"	SW
8	70'-4"	5 1/4"	11 1/4"	1/2"	NE
ALL PORT INFORMATION OBTAINED FROM THE TEP MAPPING, JOB# 61471_33415, DATED 06-15-2015.					

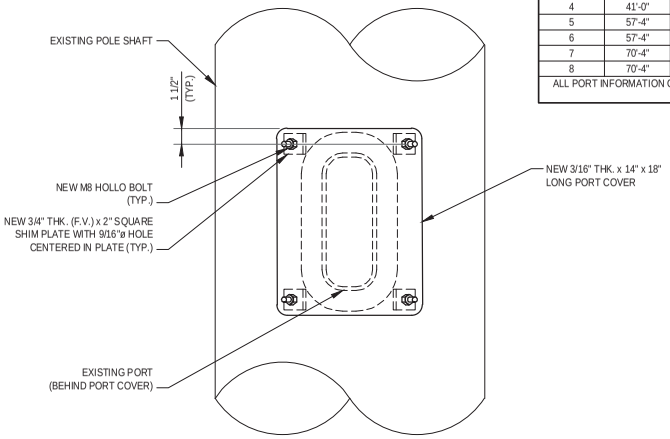

DETAIL 2 / S-3

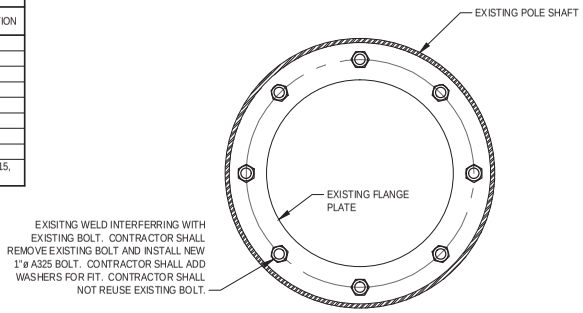

SECTION 3 / S-3
EL. 40'-0"

© Copyright 2016, by Paul J. Ford and Company. All Rights Reserved. This document and the data contained herein, is proprietary to Paul J. Ford and Company, issued in strict confidence and shall not, without the prior written permission of Paul J. Ford and Company, be reproduced, copied or used for any purpose other than the intended use for this specific project.

PJF PAUL J. FORD & COMPANY
250 E Broad St, Ste 600- Columbus, OH 43215
Phone 614.221.6679 www.pauljford.com

CROWN CASTLE
3 CORPORATE PARK DRIVE, SUITE 101, CLIFTON PARK, NY 12065
PH: (585) 370-4766

MODIFICATION OF AN EXISTING 72' MONOPOLE

BU #821898; SOUTHINGTON INDUSTRIAL
SOUTHINGTON, CONNECTICUT

PROJECT No:	37516-2615.003.7700
DRAWN BY:	B.M.S.
DESIGNED BY:	T.J.D.
CHECKED BY:	
DATE:	8-4-2016

PORT COVER & FLANGE DETAILS

S-3

37516-2615.003.DWG

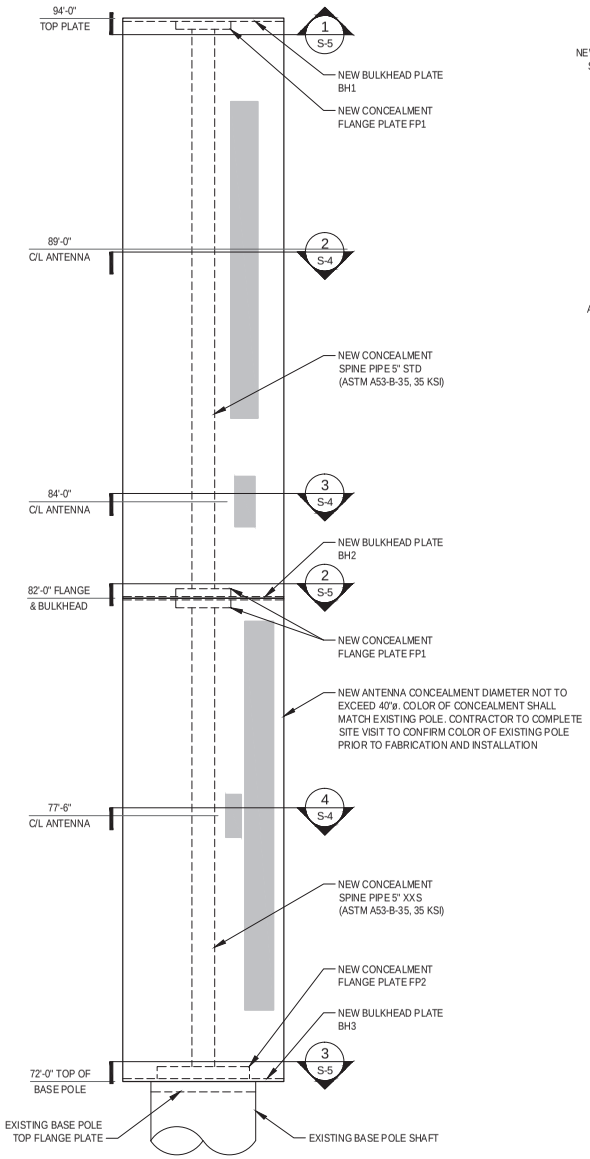

PARTIAL ELEVATION 1 / S-4

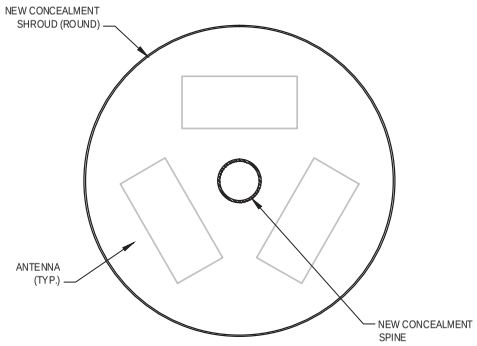

SECTION 2 / S-4
(PROPOSED ANTENNA FIT)

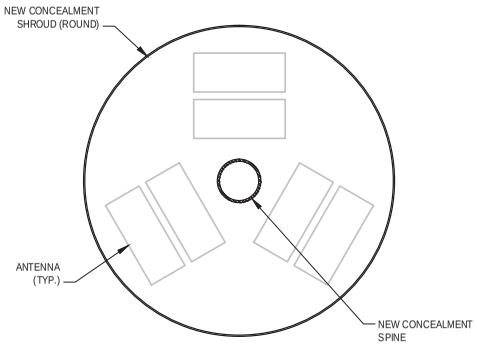

SECTION 3 / S-4
(PROPOSED ANTENNA FIT)

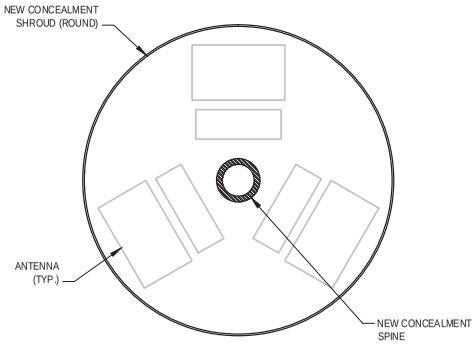

SECTION 4 / S-4
(PROPOSED ANTENNA FIT)

Antenna Model	QUANTITY	Antenna Centerline Elevation, ft	Height, in	Depth, in	Width, in
80010891	3	89	78.5	6.7	14.8
TMA2117F00V1-1	6	84	12.48	5	11.81
SBNH-1D6565C	2	77.5	96.4	7.1	11.9
DTMABP7819VG12A	3		10.63	3.78	11.02
SBNH-1D6565C	1		96.4	7.1	11.9
DTMABP7819VG12A	1		10.63	3.78	11.02

NOTE: ALL ANTENNA DIMENSIONS HAVE BEEN PROVIDED BY CROWN CASTLE. A 4" SPACING BETWEEN THE SPINE AND ANTENNA HAS BEEN ASSUMED.

Coax Model	QUANTITY	Elevation, ft	Nominal Diameter, in	Actual Diameter, in
LDF5-50A	12	88	7/8"	1.09
LDF7-50A	6	77	1-5/8"	1.98

NOTE: COAX LAYOUT AND FIT IS THEORETICAL. ACTUAL LAYOUT AND FIT MAY VARY PENDING EXISTING CONDITIONS.

© Copyright 2016, by Paul J. Ford and Company. All Rights Reserved. This document and the data contained herein, is proprietary to Paul J. Ford and Company, issued in strict confidence and shall not, without the prior written permission of Paul J. Ford and Company, be reproduced, copied or used for any purpose other than the intended use for this specific project.

PJF PAUL J. FORD & COMPANY
250 E Broad St, Ste 600- Columbus, OH 43215
Phone 614.221.6679 www.pauljford.com

CROWN CASTLE
3 CORPORATE PARK DRIVE, SUITE 101, CLIFTON PARK, NY 12065
PH: (585) 370-4766

MODIFICATION OF AN EXISTING 72' MONOPOLE
BU #821898; SOUTHINGTON INDUSTRIAL
SOUTHINGTON, CONNECTICUT

PROJECT No:	37516-2615.003.7700
DRAWN BY:	B.M.S.
DESIGNED BY:	T.J.D.
CHECKED BY:	
DATE:	8-4-2016

CONCEALMENT ELEVATION DETAILS

S-4

37516-2615.003.DWG

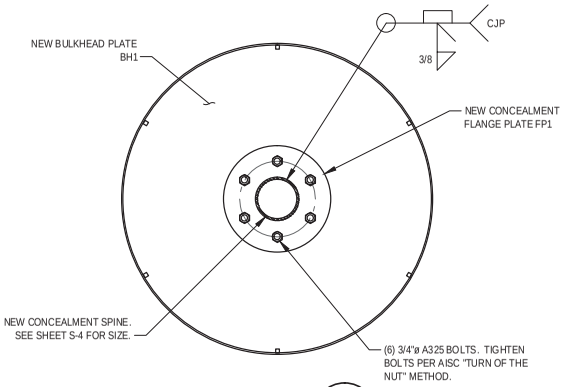

SECTION 1 / S-5
EL. 94'

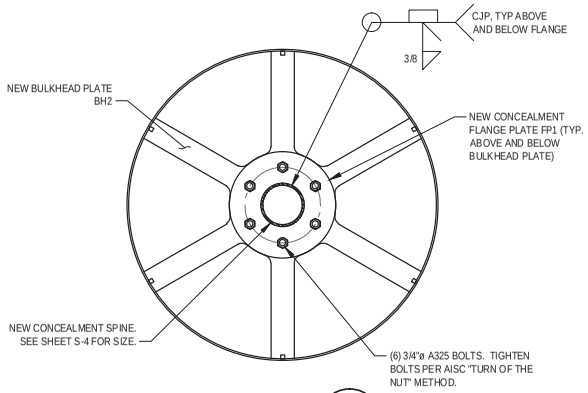

SECTION 2 / S-5
EL. 82'

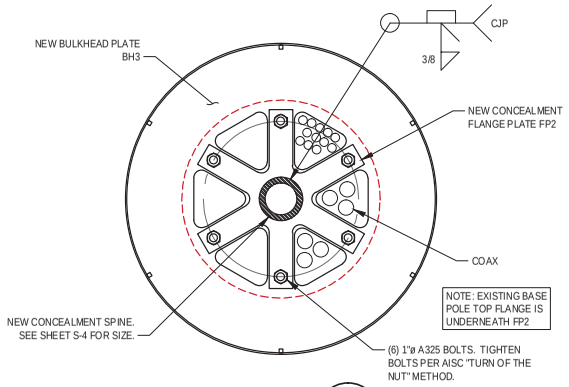

SECTION 3 / S-5
EL. 72'

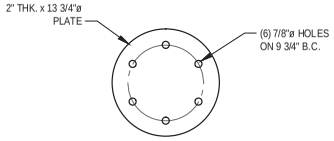

FLANGE PLATE MK~FP1
(3 REQUIRED) (ASTM A36)

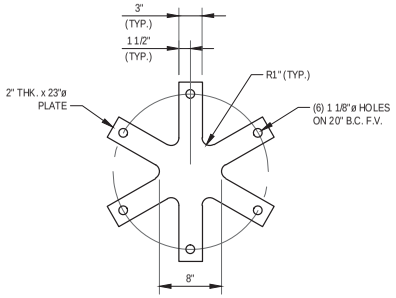

FLANGE PLATE MK~FP2
(1 REQUIRED) (ASTM A36)

© Copyright 2016, by Paul J. Ford and Company. All Rights Reserved. This document and the data contained herein, is proprietary to Paul J. Ford and Company, issued in strict confidence and shall not, without the prior written permission of Paul J. Ford and Company, be reproduced, copied or used for any purpose other than the intended use for this specific project.

PJF PAUL J. FORD & COMPANY
250 E Broad St, Ste 600· Columbus, OH 43215
Phone 614.221.6679 www.pauljford.com

CROWN CASTLE
3 CORPORATE PARK DRIVE, SUITE 101, CLIFTON PARK, NY 12065
PH: (585) 370-4766

MODIFICATION OF AN EXISTING 72' MONOPOLE

BU #821898; SOUTHINGTON INDUSTRIAL
SOUTHINGTON, CONNECTICUT

PROJECT No:	37516-2615.003.7700
DRAWN BY:	B.M.S.
DESIGNED BY:	T.J.D.
CHECKED BY:	
DATE:	8-4-2016

CONCEALMENT
FLANGE DETAILS

S-5

37516-2615.003.DWG

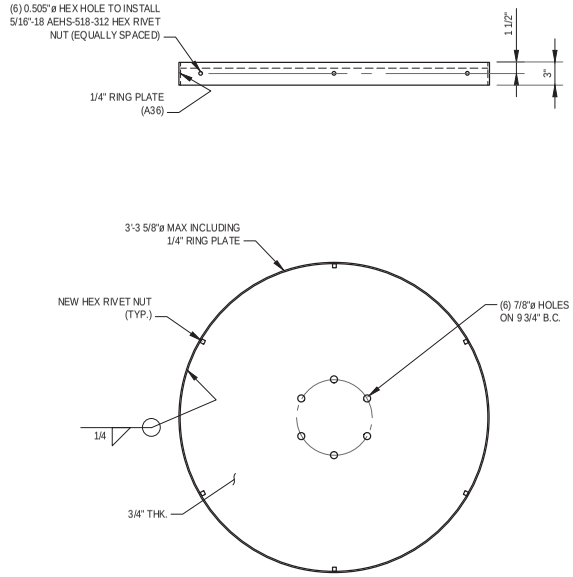

BULKHEAD PLATE MK~BH1

(1 REQUIRED) (ASTM A36)

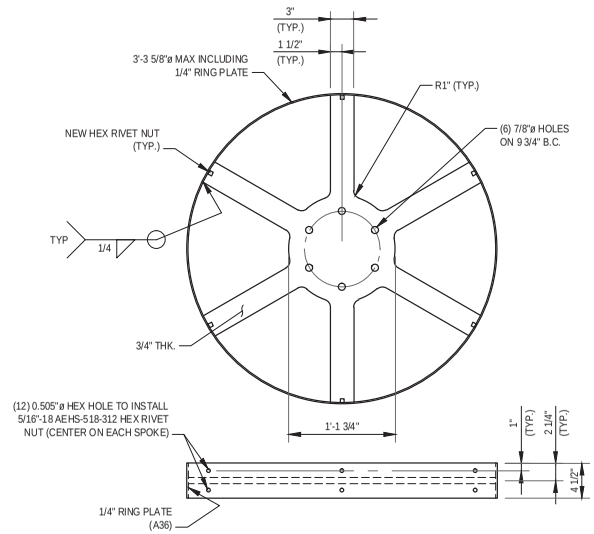

BULKHEAD PLATE MK~BH2

(1 REQUIRED) (ASTM A36)

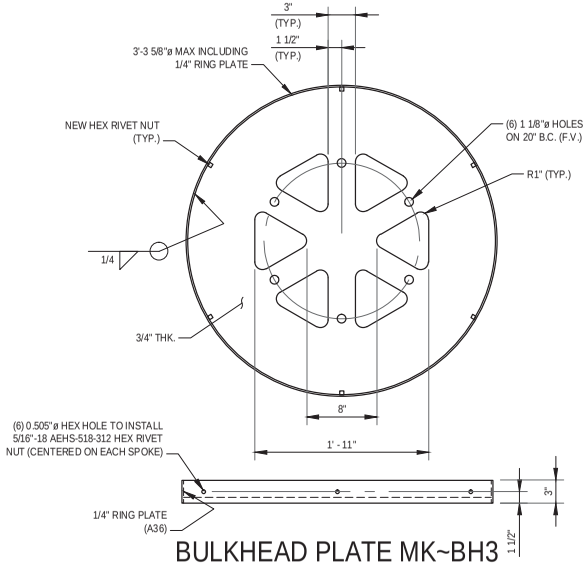

BULKHEAD PLATE MK~BH3

(1 REQUIRED) (ASTM A36)

© Copyright 2016, by Paul J. Ford and Company. All Rights Reserved. This document and the data contained herein, is proprietary to Paul J. Ford and Company, issued in strict confidence and shall not, without the prior written permission of Paul J. Ford and Company, be reproduced, copied or used for any purpose other than the intended use for this specific project.

PJF PAUL J. FORD & COMPANY
250 E Broad St, Ste 600- Columbus, OH 43215
Phone 614.221.6679 www.pauljford.com

CROWN CASTLE
3 CORPORATE PARK DRIVE, SUITE 101, CLIFTON PARK, NY 12065
PH: (585) 370-4766

MODIFICATION OF AN EXISTING 72' MONOPOLE
BU #821898; SOUTHINGTON INDUSTRIAL
SOUTHINGTON, CONNECTICUT

PROJECT No:	37516-2615.003.7700
DRAWN BY:	B.M.S.
DESIGNED BY:	T.J.D.
CHECKED BY:	
DATE:	8-4-2016

CONCEALMENT BULKHEAD DETAILS

S-6

37516-2615.003.DWG

MODIFICATION OF AN EXISTING 72' MONOPOLE
STEALTH CING-20806W-02
BU #821898; SOUTHINGTON INDUSTRIAL

500 QUEEN ST
SOUTHINGTON, CONNECTICUT 06489
HARTFORD COUNTY
LAT: 41° 37' 48.54"; LONG: -72° 52' 29.98"
APP: 357137 REV. 8; WO: 1281170

PROJECT CONTACTS

STRUCTURE OWNER:
CROWN CASTLE
MOD PM: JAMES DONAHUE AT
JAMES.DONAHUE.VENDOR@CROWNCASTLE.COM
PH: (781) 771-1111
MOD CM: JASON D'AMICO AT JASON.D'AMICO@CROWNCASTLE.COM
PH: (860) 209-0104

ENGINEER OF RECORD:
PJFMOD@PJFWEB.COM

THIS PROJECT INCLUDES THE FOLLOWING ITEMS
REMOVAL OF EXISTING CONCEALMENT BULKHEADS & SHROUDS
INSTALLATION OF NEW CONCEALMENT SPINE, BULKHEADS & SHROUDS
PAINT MODIFICATIONS TO MATCH EXISTING POLE
INSTALL MISSING PORT COVERS
REPLACE INSTALLED FLANGE BOLT
INSTALL CONCEALMENT REINFORCING SOLUTIONS PER CROWN CASTLE DOC OPS-PRC-10127

SHEET INDEX

SHEET NUMBER	DESCRIPTION
T-1	TITLE SHEET
T-2	MI CHECKLIST
S-1	GENERAL NOTES
S-2	MONOPOLE PROFILE
S-3	PORT COVER & FLANGE DETAILS
S-4	CONCEALMENT ELEVATION DETAILS
S-5	CONCEALMENT FLANGE DETAILS
S-6	BULKHEAD DETAILS

WIND DESIGN DATA

REFERENCE STANDARD	2005 CONNECTICUT BUILDING CODE AND TIA/EIA-222-F
LOCAL CODE	2006 IBC
BASIC WIND SPEED (FASTEST-MILE)	80 MPH
ICE THICKNESS	0.5 IN
ICE WIND SPEED	30 MPH
SERVICE WIND SPEED	50 MPH

THE ASSOCIATED FAILING SA WO NUMBER FOR THIS PROJECT IS 1274798

ATTENTION ALL CONTRACTORS, ANYTIME YOU ACCESS A CROWN SITE FOR ANY REASON YOU ARE TO CALL THE CROWN NOC UPON ARRIVAL AND DEPARTURE, DAILY AT (800) 788-7011.

STATE OF CONNECTICUT
JUSTIN T. KLINE
No. 3030
LICENSED
PROFESSIONAL ENGINEER
8-5-16

© Copyright 2016, by Paul J. Ford and Company. All Rights Reserved. This document and the data contained herein, is proprietary to Paul J. Ford and Company, issued in strict confidence and shall not, without the prior written permission of Paul J. Ford and Company, be reproduced, copied or used for any purpose other than the intended use for this specific project.

PJF PAUL J. FORD & COMPANY
250 E Broad St, Ste 600- Columbus, OH 43215
Phone 614.221.6679 www.pauljford.com
CROWN CASTLE
3 CORPORATE PARK DRIVE, SUITE 101, CLIFTON PARK, NY 12065
PH: (585) 370-4766

MODIFICATION OF AN EXISTING 72' MONOPOLE
BU #821898; SOUTHINGTON INDUSTRIAL
SOUTHINGTON, CONNECTICUT

PROJECT No:	37516-2615.003.7700
DRAWN BY:	B.M.S.
DESIGNED BY:	T.J.D.
CHECKED BY:	JTK
DATE:	8-4-2016

TITLE SHEET

T-1

37516-2615.003.DWG

MODIFICATION INSPECTION NOTES:

1. GENERAL
   - 1.1. THE MODIFICATION INSPECTION (MI) IS A VISUAL INSPECTION OF TOWER MODIFICATIONS AND A REVIEW OF CONSTRUCTION INSPECTIONS AND OTHER REPORTS TO ENSURE THE INSTALLATION WAS CONSTRUCTED IN ACCORDANCE WITH THE CONTRACT DOCUMENTS, NAMELY THE MODIFICATION DRAWINGS, AS DESIGNED BY THE EOR.
   - 1.2. THE MI IS TO CONFIRM INSTALLATION CONFIGURATION AND WORKMANSHIP ONLY AND IS NOT A REVIEW OF THE MODIFICATION DESIGN ITSELF, NOR DOES THE MI INSPECTOR TAKE OWNERSHIP OF THE MODIFICATION DESIGN. OWNERSHIP OF THE STRUCTURAL MODIFICATION DESIGN EFFECTIVENESS AND INTEGRITY RESIDES WITH THE EOR AT ALL TIMES.
   - 1.3. ALL MI'S SHALL BE CONDUCTED BY A CROWN CASTLE ENGINEERING VENDOR (AEV) OR ENGINEERING SERVICE VENDOR (AESV) THAT IS APPROVED TO PERFORM ELEVATED WORK FOR CROWN CASTLE.
   - 1.4. TO ENSURE THAT THE REQUIREMENTS OF THE MI ARE MET, IT IS VITAL THAT THE GENERAL CONTRACTOR (GC) AND THE MI INSPECTOR BEGIN COMMUNICATING AND COORDINATING AS SOON AS A PO IS RECEIVED. IT IS EXPECTED THAT EACH PARTY WILL BE PROACTIVE IN REACHING OUT TO THE OTHER PARTY. IF CONTACT INFORMATION IS NOT KNOWN, CONTACT YOUR CROWN CASTLE POINT OF CONTACT (POC).
   - 1.5. REFER TO ENG-SOW-10007: MODIFICATION INSPECTION SOW FOR FURTHER DETAILS AND REQUIREMENTS.

2. MI INSPECTOR
   - 2.1. THE MI INSPECTOR IS REQUIRED TO CONTACT THE GC AS SOON AS RECEIVING A PO FOR THE MI TO, AT A MINIMUM:
     - 2.1.1. REVIEW THE REQUIREMENTS OF THE MI CHECKLIST.
     - 2.1.2. WORK WITH THE GC TO DEVELOP A SCHEDULE TO CONDUCT ON-SITE INSPECTIONS, INCLUDING FOUNDATION INSPECTIONS.
     - 2.1.3. THE MI INSPECTOR IS RESPONSIBLE FOR COLLECTING ALL GC INSPECTION AND TEST REPORTS, REVIEWING THE DOCUMENTS FOR ADHERENCE TO THE CONTRACT DOCUMENTS, CONDUCTING THE IN-FIELD INSPECTIONS, AND SUBMITTING THE MI REPORT TO CROWN CASTLE.

3. GENERAL CONTRACTOR
   - 3.1. THE GC IS REQUIRED TO CONTACT THE MI INSPECTOR AS SOON AS RECEIVING A PO FOR THE MODIFICATION INSTALLATION OR TURNKEY PROJECT TO, AT A MINIMUM:
     - 3.1.1. REVIEW THE REQUIREMENTS OF THE MI CHECKLIST.
     - 3.1.2. WORK WITH THE MI INSPECTOR TO DEVELOP A SCHEDULE TO CONDUCT ON-SITE INSPECTIONS, INCLUDING FOUNDATION INSPECTIONS.
     - 3.1.3. BETTER UNDERSTAND ALL INSPECTION AND TESTING REQUIREMENTS.
     - 3.1.4. THE GC SHALL PERFORM AND RECORD THE TEST AND INSPECTION RESULTS IN ACCORDANCE WITH THE REQUIREMENTS OF THE MI CHECKLIST AND ENG-SOW-10007.

4. RECOMMENDATIONS
   - 4.1. THE FOLLOWING RECOMMENDATIONS AND SUGGESTIONS ARE OFFERED TO ENHANCE THE EFFICIENCY AND EFFECTIVENESS OF DELIVERING AN MI REPORT:
     - 4.1.1. IT IS SUGGESTED THAT THE GC PROVIDE A MINIMUM OF 5 BUSINESS DAYS NOTICE, PREFERABLE 10, TO THE MI INSPECTOR AS TO WHEN THE SITE WILL BE READY FOR THE MI TO BE CONDUCTED.
     - 4.1.2. THE GC AND MI INSPECTOR COORDINATE CLOSELY THROUGHOUT THE ENTIRE PROJECT.
     - 4.1.3. WHEN POSSIBLE, IT IS PREFERRED TO HAVE THE GC AND MI INSPECTOR ON-SITE SIMULTANEOUSLY FOR ANY GUY WIRE TENSIONING OR RE-TENSIONING OPERATIONS.
     - 4.1.4. IT MAY BE BENEFICIAL TO INSTALL ALL TOWER MODIFICATIONS PRIOR TO CONDUCTING THE FOUNDATION INSPECTIONS TO ALLOW FOUNDATION AND MI INSPECTION(S) TO COMMENCE WITH ONE SITE VISIT.
     - 4.1.5. WHEN POSSIBLE, IT IS PREFERRED TO HAVE THE GC AND MI INSPECTOR ON-SITE DURING THE MI TO HAVE ANY DEFICIENCIES CORRECTED DURING THE INITIAL MI. THEREFORE, THE GC MAY CHOOSE TO COORDINATE THE MI CAREFULLY TO ENSURE ALL CONSTRUCTION FACILITIES ARE AT THEIR DISPOSAL WHEN THE MI INSPECTOR IS ON SITE.

5. CANCELLATION OR DELAYS IN SCHEDULED MI
   - 5.1. IF THE GC AND MI INSPECTOR AGREE TO A DATE ON WHICH THE MI WILL BE CONDUCTED, AND EITHER PARTY CANCELS OR DELAYS, CROWN CASTLE SHALL NOT BE RESPONSIBLE FOR ANY COSTS, FEES, LOSS OF DEPOSITS AND/OR OTHER PENALTIES RELATED TO THE CANCELLATION OR DELAY INCURRED BY EITHER PARTY FOR ANY TIME (E.G. TRAVEL AND LODGING, COSTS OF KEEPING EQUIPMENT ON-SITE, ETC.). IF CROWN CASTLE CONTRACTS DIRECTLY FOR A THIRD PARTY MI, EXCEPTIONS MAY BE MADE IN THE EVENT THAT THE DELAY/CANCELLATION IS CAUSED BY WEATHER OR OTHER CONDITIONS THAT MAY COMPROMISE THE SAFETY OF THE PARTIES INVOLVED.

6. CORRECTION OF FAILING MI'S
   - 6.1. IF THE MODIFICATION INSTALLATION WOULD FAIL THE MI ("FAILED MI"), THE GC SHALL WORK WITH CROWN CASTLE TO COORDINATE A REMEDIATION PLAN IN ONE OF TWO WAYS:
     - 6.1.1. CORRECT FAILING ISSUES TO COMPLY WITH THE SPECIFICATIONS CONTAINED IN THE ORIGINAL CONTRACT DOCUMENTS AND COORDINATE A SUPPLEMENT MI.
     - 6.1.2. OR, WITH CROWN CASTLE'S APPROVAL, THE GC MAY WORK WITH THE EOR TO RE-ANALYZE THE MODIFICATION/REINFORCEMENT USING THE AS-BUILT CONDITION.

7. MI VERIFICATION INSPECTIONS
   - 7.1. CROWN CASTLE RESERVES THE RIGHT TO CONDUCT A MI VERIFICATION INSPECTION TO VERIFY THE ACCURACY AND COMPLETENESS OF PREVIOUSLY COMPLETED MI INSPECTION(S) ON TOWER MODIFICATION PROJECTS.
   - 7.2. ALL VERIFICATION INSPECTIONS SHALL BE HELD TO THE SAME SPECIFICATIONS AND REQUIREMENTS IN THE CONTRACT DOCUMENTS AND IN ACCORDANCE WITH ENG-SOW-10007.
   - 7.3. VERIFICATION INSPECTION MAY BE CONDUCTED BY AN INDEPENDENT AEV/AESV FIRM AFTER A MODIFICATION PROJECT IS COMPLETED, AS MARKED BY THE DATE OF AN ACCEPTED "PASSING MI" OR "PASS AS NOTED MI" REPORT FOR THE ORIGINAL PROJECT.

8. PHOTOGRAPHS
   - 8.1. BETWEEN THE GC AND THE MI INSPECTOR THE FOLLOWING PHOTOGRAPHS, AT A MINIMUM, ARE TO BE TAKEN AND INCLUDED IN THE MI REPORT:
     - 8.1.1. PRECONSTRUCTION GENERAL SITE CONDITION
     - 8.1.2. PHOTOGRAPHS DURING THE REINFORCEMENT MODIFICATION CONSTRUCTION/ERECTION AND INSPECTION
     - 8.1.3. RAW MATERIALS
     - 8.1.4. PHOTOS OF ALL CRITICAL DETAILS
     - 8.1.5. FOUNDATION MODIFICATIONS
     - 8.1.6. WELD PREPARATION
     - 8.1.7. BOLT INSTALLATION AND TORQUE
     - 8.1.8. FINAL INSTALLED CONDITION
     - 8.1.9. SURFACE COATING REPAIR
     - 8.1.10. POST CONSTRUCTION PHOTOGRAPHS
     - 8.1.11. FINAL INFIELD CONDITION
     - 8.1.12. PHOTOS OF ELEVATED MODIFICATIONS TAKEN FROM THE GROUND SHALL BE CONSIDERED INADEQUATE.
     - 8.1.13. THIS IS NOT A COMPLETE LIST OF REQUIRED PHOTOS, PLEASE REFER TO ENG-SOW-10007.

9. INSPECTION AND TESTING
   - 9.1. ALL WORK SHALL BE SUBJECT TO REVIEW AND OBSERVATION BY CROWN CASTLE'S REPRESENTATIVE AND CROWN CASTLE'S AUTHORIZED INDEPENDENT INSPECTION AND TESTING AGENCY.
   - 9.2. INSPECTION SERVICES WHICH ARE FURNISHED BY OTHERS ARE STILL REQUIRED WHEN THE EOR PERFORMS SUPPORT SERVICES DURING CONSTRUCTION.
   - 9.3. OBSERVED DISCREPANCIES BETWEEN THE WORK AND THE CONTRACT DOCUMENTS SHALL BE CORRECTED BY THE CONTRACTOR AT NO ADDITIONAL COST.
   - 9.4. AN INDEPENDENT QUALIFIED INSPECTION/TESTING AGENCY SHALL BE SELECTED AND RETAINED FOR THE SOLE PURPOSE OF INSPECTING, TESTING, DOCUMENTING, AND APPROVING ALL WELDING AND FIELD WORK PERFORMED BY THE CONTRACTOR.
     - 9.4.1. ACCESS TO ANY PLACE WHERE WORK IS BEING DONE SHALL BE PERMITTED AT ALL TIMES.
     - 9.4.2. THE INSPECTION AGENCY SHALL SO SCHEDULE THIS WORK AS TO CAUSE A MINIMUM OF INTERRUPTION TO, AND COORDINATE WITH, THE WORK IN PROGRESS. IT IS THE CONTRACTOR'S RESPONSIBILITY TO COORDINATE THE WORK SCHEDULE WITH THE TESTING AGENCY. THE CONTRACTOR SHALL ALLOW FOR ADEQUATE TIME AND ACCESS FOR THE TESTING AGENCY TO PERFORM THEIR DUTIES.
   - 9.5. THE INSPECTION AND TESTING AGENCY SHALL BE RESPONSIBLE TO PERFORM THE FOLLOWING SERVICES AND INSPECT THE FOLLOWING ITEMS IN ACCORDANCE WITH THE CONSTRUCTION DRAWINGS. THE TESTING AGENCY SHALL INSPECT ITEMS ON THIS LIST AND OTHER ITEMS AS NECESSARY TO FULFILL THEIR RESPONSIBILITY. THE TESTING AGENCY SHALL UTILIZE EXPERIENCED, TRAINED INSPECTORS INCLUDING AWS CERTIFIED WELDING INSPECTORS (CWI). INSPECTORS SHALL HAVE THE TRAINING, CREDENTIALS, AND EXPERIENCE APPROPRIATE FOR AND COMMENSURATE WITH THE SCOPE AND TYPE OF INSPECTION WORK TO BE PERFORMED.
   - 9.6. GENERAL
     - 9.6.1. PERFORM PERIODIC ON-SITE OBSERVATION, INSPECTION, VERIFICATION, AND TESTING DURING THE TIME THE CONTRACTOR IS WORKING ON-SITE. AGENCY SHALL NOTIFY CROWN CASTLE AND THE EOR IMMEDIATELY WHEN FIELD PROBLEMS OR DISCREPANCIES OCCUR.
   - 9.7. FOUNDATIONS AND SOIL PREPARATION - (NOT REQUIRED)
   - 9.8. CONCRETE TESTING PER ACI - (NOT REQUIRED)
   - 9.9. STRUCTURAL STEEL
     - 9.9.1. CHECK STEEL ON THE JOB WITH THE PLANS.
     - 9.9.2. CHECK MILL CERTIFICATIONS. CALL FOR LABORATORY TEST REPORTS WHEN MILL CERTIFICATION IS IN QUESTION.
     - 9.9.3. CHECK GRADE OF STEEL MEMBERS, AND BOLTS FOR CONFORMANCE WITH DRAWINGS.
     - 9.9.4. INSPECT ALL STRUCTURAL BOLTS SHALL BE FIELD INSPECTED ACCORDING TO THE REQUIREMENTS OF THE AISC "SPECIFICATION FOR STRUCTURAL JOINTS USING HIGH-STRENGTH BOLTS', DEC. 31, 2009.
     - 9.9.5. INSPECT STEEL MEMBERS FOR DISTORTION, EXCESSIVE RUST, FLAWS AND BURNED HOLES.
     - 9.9.6. CHECK STEEL MEMBERS FOR SIZES, SWEEP AND DIMENSIONAL TOLERANCES.
     - 9.9.7. CHECK FOR SURFACE FINISH SPECIFIED, GALVANIZED.
     - 9.9.8. CHECK THAT BOLTS HAVE BEEN TIGHTENED PROPERLY.
     - 9.9.9. PRIOR TO ANY FIELD CUTTING THE CONTRACTOR SHALL MARK THE CUTOUT LINES ON THE STEEL AND THE INSPECTION/TESTING AGENCY SHALL VERIFY PROPOSED LAYOUT, LOCATION, AND DIMENSIONS. THE INSPECTION/TESTING AGENCY SHALL CLOSELY AND CONTINUOUSLY MONITOR THIS ACTIVITY.
   - 9.10. WELDING:
     - 9.10.1. VERIFY FIELD WELDING PROCEDURES, WELDERS, AND WELDING OPERATORS, NOT DEEMED PREQUALIFIED, IN ACCORDANCE WITH AWS D1.1.
     - 9.10.2. INSPECT FIELD WELDED CONNECTIONS IN ACCORDANCE WITH THE REQUIREMENTS SPECIFIED AND WITH AWS D1.1.
     - 9.10.3. APPROVE FIELD WELDING SEQUENCE.
     - 9.10.4. A PROGRAM OF THE APPROVED SEQUENCES SHALL BE SUBMITTED TO CROWN CASTLE BEFORE WELDING BEGINS. NO CHANGE IN APPROVED SEQUENCES MAY BE MADE WITHOUT PERMISSION FROM CROWN CASTLE.
     - 9.10.5. INSPECT WELDED CONNECTIONS AS FOLLOWS AND IN ACCORDANCE WITH AWS D1.1:
       - 9.10.5.1. INSPECT WELDING EQUIPMENT FOR CAPACITY, MAINTENANCE, AND WORKING CONDITIONS.
       - 9.10.5.2. VERIFY SPECIFIED ELECTRODES AND HANDLING AND STORAGE OF ELECTRODES FOR CONFORMANCE TO SPECIFICATIONS.
       - 9.10.5.3. INSPECT PREHEATING AND INTERPASS TEMPERATURES FOR CONFORMANCE WITH AWS D1.1.
       - 9.10.5.4. VISUALLY INSPECT ALL WELDS AND VERIFY THAT QUALITY OF WELDS MEETS THE REQUIREMENTS OF AWS D1.1. OTHER TESTS MAY ALSO BE PERFORMED ON THE WELDS BY THE TESTING AGENCY IN ORDER FOR THEM TO PERFORM THEIR DUTIES FOR THIS PROJECT.
       - 9.10.5.5. SPOT TEST AT LEAST ONE FILLET WELD OF EACH MEMBER USING MAGNETIC PARTICLE.
       - 9.10.5.6. INSPECT FOR SIZE, SPACING, TYPE AND LOCATION AS PER APPROVED DRAWINGS.
       - 9.10.5.7. VERIFY THAT THE BASE METAL CONFORMS TO THE DRAWINGS.
       - 9.10.5.8. REVIEW THE REPORTS BY TESTING LABS.
       - 9.10.5.9. CHECK TO SEE THAT WELDS ARE CLEAN AND FREE FROM SLAG.
       - 9.10.5.10. INSPECT RUST PROTECTION OF WELDS AS PER SPECIFICATIONS.
       - 9.10.5.11. CHECK THAT DEFECTIVE WELDS ARE CLEARLY MARKED AND HAVE BEEN ADEQUATELY REPAIRED.
   - 9.11. REPORTS:
     - 9.11.1. COMPILE AND PERIODICALLY SUBMIT DAILY INSPECTION REPORTS TO CROWN CASTLE.
     - 9.11.2. THE INSPECTION PLAN OUTLINED HEREIN IS INTENDED AS A DESCRIPTION OF GENERAL AND SPECIFIC ITEMS OF CONCERN. IT IS NOT INTENDED TO BE ALL-INCLUSIVE. IT DOES NOT LIMIT THE TESTING AND INSPECTION AGENCY TO THE ITEMS LISTED. ADDITIONAL TESTING, INSPECTION, AND CHECKING MAY BE REQUIRED AND SHOULD BE ANTICIPATED. THE TESTING AGENCY SHALL USE THEIR PROFESSIONAL JUDGMENT AND KNOWLEDGE OF THE JOB SITE CONDITIONS AND THE CONTRACTOR'S PERFORMANCE TO DECIDE WHAT OTHER ITEMS REQUIRE ADDITIONAL ATTENTION. THE TESTING AGENCY'S JUDGMENT MUST PREVAIL ON ITEMS NOT SPECIFICALLY COVERED. ANY DISCREPANCIES OR PROBLEMS SHALL BE BROUGHT IMMEDIATELY TO CROWN CASTLE'S ATTENTION. RESOLUTIONS ARE NOT TO BE MADE WITHOUT CROWN CASTLE'S REVIEW AND SPECIFIC WRITTEN CONSENT. CROWN CASTLE RESERVES THE RIGHT TO DETERMINE WHETHER OR NOT A RESOLUTION IS ACCEPTABLE.
     - 9.11.3. AFTER EACH INSPECTION, THE TESTING AGENCY WILL PREPARE A WRITTEN ACCEPTANCE OR REJECTION WHICH WILL BE GIVEN TO THE CONTRACTOR AND FILED AS DAILY REPORTS TO CROWN CASTLE. THIS WRITTEN ACTION WILL GIVE THE CONTRACTOR A LIST OF ITEMS TO BE CORRECTED, PRIOR TO CONTINUING CONSTRUCTION, AND/OR LOADING OF STRUCTURAL ITEMS.
     - 9.11.4. THE TESTING AGENCY DOES NOT RELIEVE THE CONTRACTOR'S CONTRACTUAL OR STATUTORY OBLIGATIONS. THE CONTRACTOR HAS THE SOLE RESPONSIBILITY FOR ANY DEVIATIONS FROM THE OFFICIAL CONTRACT DOCUMENTS. THE TESTING AGENCY WILL NOT REPLACE THE CONTRACTOR'S QUALITY CONTROL PERSONNEL.

MI CHECKLIST

CONSTRUCTION/INSTALLATION INSPECTIONS AND TESTING REQUIRED (COMPLETED BY EOR)	REPORT ITEM
PRE-CONSTRUCTION	
X	MI CHECKLIST DRAWINGS
X	EOR REVIEW
X	FABRICATION INSPECTION
X	FABRICATOR CERTIFIED WELD INSPECTION
X	MATERIAL TEST REPORT (MTR)
X	FABRICATOR NDE INSPECTION
NA	NDE REPORT OF MONOPOLE BASE PLATE (AS REQUIRED)
X	PACKING SLIPS
ADDITIONAL TESTING AND INSPECTIONS:	
CONSTRUCTION	
X	CONSTRUCTION INSPECTIONS
NA	FOUNDATION INSPECTIONS
NA	CONCRETE COMP. STRENGTH AND SLUMP TESTS
NA	POST INSTALLED ANCHOR ROD VERIFICATION
NA	BASE PLATE GROUT VERIFICATION
NA	CONTRACTOR'S CERTIFIED WELD INSPECTION
NA	EARTHWORK: PROVIDE PHOTO DOCUMENTATION OF EXCAVATION QUALITY AND COMPACTION
X	ON SITE COLD GALVANIZING VERIFICATION
NA	GUY WIRE TENSION REPORT
X	GC AS-BUILT DOCUMENTS
NA	MICROPILE/ROCK ANCHOR INSTALLER'S DRILLING AND INSTALLATION LOGS AND QA/QC DOCUMENTS
ADDITIONAL TESTING AND INSPECTIONS:	
POST-CONSTRUCTION	
X	MI INSPECTOR REDLINE OR RECORD DRAWING(S)
NA	POST INSTALLED ANCHOR ROD TARGET TENSION LOAD TESTING
NA	REFER TO MICROPILE/ROCK ANCHOR NOTES FOR SPECIAL INSPECTION AND TESTING REQUIREMENTS.
X	PHOTOGRAPHS
ADDITIONAL TESTING AND INSPECTIONS: FACT TIA INSPECTION PER CROWN CASTLE DOC OPS-SOW-10127	

NOTE: X DENOTES A DOCUMENT NEEDED FOR THE PMI REPORT
NA DENOTES A DOCUMENT THAT IS NOT REQUIRED FOR THE PMI REPORT

STATE OF CONNECTICUT
JUSTIN T. KLINE
No. 30301
LICENSED
PROFESSIONAL ENGINEER
8-5-16

© Copyright 2016, by Paul J. Ford and Company. All Rights Reserved. This document and the data contained herein, is proprietary to Paul J. Ford and Company, issued in strict confidence and shall not, without the prior written permission of Paul J. Ford and Company, be reproduced, copied or used for any purpose other than the intended use for this specific project.

PJF PAUL J. FORD & COMPANY
250 E Broad St, Ste 600 Columbus, OH 43215
Phone 614.221.6679 www.pauljford.com

CROWN CASTLE
3 CORPORATE PARK DRIVE, SUITE 101, CLIFTON PARK, NY 12065
PH: (585) 370-4766

MODIFICATION OF AN EXISTING 72' MONOPOLE
BU #821898; SOUTHINGTON INDUSTRIAL
SOUTHINGTON, CONNECTICUT

PROJECT No:	37516-2615.003.7700
DRAWN BY:	B.M.S.
DESIGNED BY:	T.J.D.
CHECKED BY:	JTK
DATE:	8-4-2016

MI CHECKLIST

T-2

37516-2615.003.DWG

MONOPOLE RETROFIT PROJECT MASTER NOTES DOCUMENT (REV. 3, 02/05/2015)

1. **GENERAL NOTES**
   1.1. THE MONOPOLE STRUCTURE IN ITS EXISTING CONDITION DOES NOT HAVE THE STRUCTURAL CAPACITY TO CARRY ALL OF THE PROPOSED AND EXISTING LOADS FROM THE ATTACHED STRUCTURAL MODIFICATION REPORT AT THE REQUIRED MINIMUM WIND SPEEDS. DO NOT INSTALL ANY NEW LOADS UNTIL THE MONOPOLE REINFORCING SYSTEM IS COMPLETELY AND SUCCESSFULLY INSTALLED.
   1.2. THESE DRAWINGS WERE PREPARED FROM INFORMATION PROVIDED BY CROWN CASTLE. THE INFORMATION PROVIDED HAS NOT BEEN FIELD VERIFIED BY THE ENGINEER OF RECORD (EOR) FOR ACCURACY AND THEREFORE DISCREPANCIES BETWEEN THESE DRAWINGS AND ACTUAL SITE CONDITIONS SHOULD BE ANTICIPATED. PRIOR TO FABRICATION AND INSTALLATION CONTRACTOR SHALL VERIFY ALL LENGTHS AND QUANTITIES GIVEN. LENGTH AND QUANTITIES PROVIDED ARE FOR QUOTING PURPOSES ONLY AND SHALL NOT BE USED FOR FABRICATION. THE CONTRACTOR SHALL COORDINATE WITH THE PROJECT DRAWINGS AND THEIR FIELD VERIFIED CONDITIONS AND DIMENSIONS BEFORE PROCEEDING WITH THE WORK. THE CONTRACTOR SHALL IMMEDIATELY REPORT ANY AND ALL DISCREPANCIES TO THE EOR AND CROWN CASTLE BEFORE PROCEEDING WITH THE WORK. ANY WORK PERFORMED WITHOUT A PREFABRICATION MAPPING IS DONE AT THE RISK OF THE GENERAL CONTRACTOR AND/OR THE FABRICATOR
   1.3. IF MATERIALS, QUANTITIES, STRENGTHS OR SIZES INDICATED BY THE DRAWINGS OR SPECIFICATIONS ARE NOT IN AGREEMENT WITH THESE NOTES, THE BETTER QUALITY AND/OR GREATER QUANTITY, STRENGTH OR SIZE INDICATED, SPECIFIED OR NOTED SHALL BE PROVIDED.
   1.4. THIS STRUCTURE IS DESIGNED TO BE SELF-SUPPORTING AND STABLE AFTER THE INSTALLATION OF THE REINFORCING REPAIR SYSTEM HAS BEEN SUCCESSFULLY COMPLETED. IT IS THE CONTRACTOR'S SOLE RESPONSIBILITY TO ENSURE THE SAFETY AND STABILITY OF THE MONOPOLE AND ITS COMPONENT PARTS DURING FIELD MODIFICATIONS. THIS INCLUDES, BUT IS NOT LIMITED TO, THE ADDITION OF WHATEVER TEMPORARY BRACING, GUYS OR TIE DOWNS THAT MAY BE NECESSARY. SUCH MATERIAL SHALL BE REMOVED AND SHALL REMAIN THE PROPERTY OF THE CONTRACTOR AFTER THE COMPLETION OF THE PROJECT.
   1.5. ALL CONSTRUCTION MEANS AND METHODS; INCLUDING BUT NOT LIMITED TO, ERECTION PLANS, RIGGING PLANS, CLIMBING PLANS AND RESCUE PLANS SHALL BE THE RESPONSIBILITY OF THE GENERAL CONTRACTOR RESPONSIBLE FOR THE EXECUTION OF THE WORK CONTAINED HEREIN AND SHALL MEET ANSI/TIA-1019 (LATEST EDITION), OSHA AND GENERAL INDUSTRY STANDARDS. ALL RIGGING PLANS SHALL ADHERE TO ANSI/TIA-1019 (LATEST EDITION) INCLUDING THE REQUIRED INVOLVEMENT OF A QUALIFIED ENGINEER FOR CLASS IV CONSTRUCTION.
   1.6. OBSERVATION VISITS TO THE SITE BY CROWN CASTLE AND/OR THE EOR SHALL NOT INCLUDE INSPECTIONS OF THE PROTECTIVE MEASURES OR THE CONSTRUCTION PROCEDURES. ANY SUPPORT SERVICES PERFORMED BY THE EOR DURING CONSTRUCTION ARE SOLELY FOR THE PURPOSE OF ACHIEVING GENERAL CONFORMANCE WITH THE CONTRACT DOCUMENTS. THEY DO NOT GUARANTEE THE CONTRACTOR'S PERFORMANCE AND SHALL NOT BE CONSTRUED AS SUPERVISION OF CONSTRUCTION.
   1.7. ALL MATERIALS AND EQUIPMENT FURNISHED SHALL BE NEW AND OF GOOD QUALITY, FREE FROM FAULTS AND DEFECTS AND IN CONFORMANCE WITH THE CONTRACT DOCUMENTS. ANY AND ALL SUBSTITUTIONS MUST BE PROPERLY APPROVED AND AUTHORIZED IN WRITING BY CROWN CASTLE AND EOR PRIOR TO INSTALLATION. THE CONTRACTOR SHALL FURNISH SATISFACTORY EVIDENCE AS TO THE KIND AND QUALITY OF MATERIALS AND EQUIPMENT BEING SUBSTITUTED.
   1.8. THE CONTRACTOR SHALL BE RESPONSIBLE FOR INITIATING, MAINTAINING, AND SUPERVISING ALL SAFETY PRECAUTIONS AND PROGRAMS IN CONNECTION WITH THE WORK. THE CONTRACTOR IS RESPONSIBLE TO ENSURE THAT THIS PROJECT AND RELATED WORK COMPLIES WITH ALL APPLICABLE LOCAL, STATE, AND FEDERAL SAFETY CODES AND REGULATIONS GOVERNING THIS WORK AS WELL AS CROWN CASTLE SAFETY GUIDELINES.
   1.9. THE CONTRACTOR SHALL BE RESPONSIBLE FOR PROTECTING ALL EXISTING AND NEW COAXIAL CABLES AND OTHER EQUIPMENT DURING CONSTRUCTION.
   1.10. ANY EXISTING ATTACHMENTS AND/OR PROJECTIONS ON THE POLE THAT MAY INTERFERE WITH THE INSTALLATION OF THE REINFORCING SYSTEM WILL HAVE TO BE REMOVED AND RELOCATED, REPLACED, OR RE-INSTALLED AS REQUIRED AFTER THE REINFORCING IS SUCCESSFULLY COMPLETED. THE CONTRACTOR SHALL IDENTIFY AND COORDINATE THESE ITEMS PRIOR TO CONSTRUCTION WITH CROWN CASTLE, TESTING AGENCY, AND EOR.
   1.11. ANY AND ALL EXISTING PLATFORMS THAT ARE LOCATED IN AREAS OF THE POLE SHAFT WHERE SHAFT REINFORCING MUST BE APPLIED SHALL BE TEMPORARILY REMOVED OR OTHERWISE SUPPORTED TO PERMIT NEW CONTINUOUS REINFORCEMENT TO BE ATTACHED. AFTER THE CONTRACTOR HAS SUCCESSFULLY INSTALLED THE MONOPOLE REINFORCEMENT SYSTEM, THE CONTRACTOR SHALL RE-INSTALL THE PLATFORMS.
   1.12. THE CLIMBING FACILITIES, SAFETY CLIMB AND ALL PARTS THEREOF SHALL NOT BE IMPEDED, MODIFIED OR ALTERED WITHOUT THE EXPRESS APPROVAL OF THE EOR.
   1.13. FOR STANDARD CROWN PARTS SEE THE MOST RECENT VERSION OF THE "CCI APPROVED REINFORCEMENT COMPONENTS" CATALOG.
   1.14. ALL SOLUTIONS FOR THE REPLACEMENT, RELOCATION OR MODIFICATION OF THE SAFETY CLIMB AND/OR ANY OF THE MONOPOLE CLIMBING FACILITIES SHALL BE COORDINATED WITH TUF-TUG PRODUCTS. CONTACT DETAILS:
   3434 ENCRETE LANE, MORAINE, OHIO 45439
   PHONE: 937-299-1213 EMAIL: TUFTUG@AOL.COM

2. **STRUCTURAL STEEL**
   2.1. STRUCTURAL STEEL MATERIALS, FABRICATION, DETAILING, AND WORKMANSHIP SHALL CONFORM TO THE LATEST EDITION OF THE FOLLOWING REFERENCE STANDARDS:
   2.1.1. BY THE AMERICAN INSTITUTE OF STEEL CONSTRUCTION (AISC):
   2.1.1.1. "SPECIFICATION FOR STRUCTURAL STEEL BUILDINGS."
   2.1.1.2. "SPECIFICATION FOR STRUCTURAL JOINTS USING ASTM HIGH STRENGTH BOLTS," AS APPROVED BY THE RESEARCH COUNCIL ON STRUCTURAL CONNECTIONS.
   2.1.1.3. "CODE OF STANDARD PRACTICE FOR STEEL BUILDINGS AND BRIDGES"
   2.1.2. BY THE AMERICAN WELDING SOCIETY (AWS):
   2.1.2.1. "STRUCTURAL WELDING CODE – STEEL D1.1."
   2.1.2.2. "STANDARD SYMBOLS FOR WELDING, BRAZING, AND NONDESTRUCTIVE EXAMINATION"
   2.2. ALL STRUCTURAL BOLTS SHALL BE INSTALLED AND TIGHTENED TO THE PRETENSIONED CONDITION ACCORDING TO THE REQUIREMENTS OF THE AISC 'SPECIFICATION FOR STRUCTURAL JOINTS USING ASTM HIGH STRENGTH BOLTS', DEC. 31, 2009.
   2.3. ANY MATERIAL OR WORKMANSHIP WHICH IS OBSERVED TO BE DEFECTIVE OR INCONSISTENT WITH THE CONTRACT DOCUMENTS SHALL BE CORRECTED, MODIFIED, OR REPLACED AT THE CONTRACTOR'S EXPENSE.
   2.4. WELDED CONNECTIONS SHALL CONFORM TO THE LATEST REVISED CODE OF THE AMERICAN WELDING SOCIETY, AWS D1.1. ALL WELD ELECTRODES SHALL BE E80XX UNLESS NOTED OTHERWISE ON THE DRAWINGS.
   2.5. ALL WELDED CONNECTIONS SHALL BE MADE BY WELDERS CERTIFIED BY AWS. CONTRACTOR SHALL SUBMIT WELDERS' CERTIFICATION AND QUALIFICATION DOCUMENTATION TO CROWN CASTLE'S TESTING AGENCY FOR REVIEW AND APPROVAL PRIOR TO CONSTRUCTION.
   2.6. STRUCTURAL STEEL PLATES SHALL CONFORM TO ASTM A572 GRADE 65(FY = 65 KSI MIN.) UNLESS NOTED OTHERWISE ON THE DRAWINGS.
   2.7. SURFACES OF EXISTING STEEL SHALL BE PREPARED AS REQUIRED FOR FIELD WELDING PER AWS. SEE SECTION I NOTES REGARDING TOUCH UP OF GALVANIZED SURFACES DAMAGED DURING TRANSPORTATION OR ERECTION AND ASSEMBLY AS WELL AS FIELD WELDING.
   2.8. NO WELDING SHALL BE DONE TO THE EXISTING STRUCTURE WITHOUT THE PRIOR APPROVAL AND SUPERVISION OF THE TESTING AGENCY.
   2.9. FIELD CUTTING OF STEEL:
   2.9.1. IMPORTANT CUTTING AND WELDING SAFETY GUIDELINES: THE CONTRACTOR SHALL FOLLOW ALL CROWN CASTLE CUTTING, WELDING, FIRE PREVENTION AND SAFETY GUIDELINES. PRIOR TO CONSTRUCTION, THE CONTRACTOR SHALL OBTAIN A COPY OF THE CURRENT CROWN CASTLE GUIDELINES. PER THE 12-01-2005 CROWN CASTLE DIRECTIVE: "ALL CUTTING AND WELDING ACTIVITIES SHALL BE CONDUCTED IN ACCORDANCE WITH CROWN CASTLE POLICY 'CUTTING AND WELDING SAFETY PLAN' (DOC # ENG-PLN-10015) ON AN ONGOING BASIS THROUGHOUT THE ENTIRE LIFE OF THE PROJECT". ANY DAMAGE TO THE COAX CABLES, AND/OR OTHER EQUIPMENT AND/OR THE STRUCTURE, RESULTING FROM THE CONTRACTOR'S ACTIVITIES SHALL BE REPAIRED AT THE CONTRACTOR'S EXPENSE. THE INSPECTION/TESTING AGENCY SHALL CLOSELY AND CONTINUOUSLY MONITOR THIS ACTIVITY.
   2.9.2. ALL REQUIRED CUTS SHALL BE CUT WITHIN THE DIMENSIONS SHOWN ON THE DRAWINGS. NO CUTS SHALL EXTEND BEYOND THE OUTLINE OF THE DIMENSIONS SHOWN ON THE DRAWINGS. ALL CUT EDGES SHALL BE GROUND SMOOTH AND DE-BURRED. CUT EDGES THAT ARE TO BE FIELD WELDED SHALL BE PREPARED FOR FIELD WELDING PER AWS D1.1 AND AS SHOWN ON THE DRAWINGS. CONTRACTOR TO AVOID 90 DEGREE CORNERS. IT MAY BE NECESSARY TO DRILL STARTER HOLES AS REQUIRED TO MAKE THE CUTS.

3. **BASE PLATE GROUT - (NOT REQUIRED)**

4. **FOUNDATION WORK - (NOT REQUIRED)**

5. **CAST-IN-PLACE CONCRETE - (NOT REQUIRED)**

6. **EPOXY GROUTED REINFORCING ANCHOR RODS - (NOT REQUIRED)**

7. **TOUCH UP OF GALVANIZING**
   7.1. THE CONTRACTOR SHALL TOUCH UP ANY AND ALL AREAS OF GALVANIZING ON THE EXISTING STRUCTURE OR NEW COMPONENTS THAT ARE DAMAGED OR ABRADED DURING CONSTRUCTION. GALVANIZED SURFACES DAMAGED DURING TRANSPORTATION OR ERECTION AND ASSEMBLY AS WELL AS ANY AND ALL ABRASIONS, CUTS, FIELD DRILLING, AND ALL FIELD WELDING SHALL BE TOUCHED UP WITH TWO (2) COATS OF ZRC COLD GALVANIZING COMPOUND. FILM THICKNESS PER COAT SHALL BE: WET 3.0 MILS; DRY 1.5 MILS. APPLY PER ZRC (MANUFACTURER) RECOMMENDED PROCEDURES. CONTACT ZRC AT 1-800-831-3275 FOR PRODUCT INFORMATION.
   7.2. CONTRACTOR SHALL CLEAN AND PREPARE ALL FIELD WELDS ON GALVANIZED AND PRIME PAINTED SURFACES FOR TOUCH-UP COATING IN ACCORDANCE WITH AWS D1.1. CROWN CASTLE'S TESTING AGENCY SHALL VERIFY THE PREPARED SURFACE PRIOR TO APPLICATION OF THE TOUCH-UP COATING.
   7.3. CROWN CASTLE'S TESTING AGENCY SHALL TEST AND VERIFY THE COATING THICKNESS AFTER THE CONTRACTOR HAS APPLIED THE ZRC COLD GALVANIZING COMPOUND AND IT HAS SUFFICIENTLY DRIED. AREAS FOUND TO BE ADEQUATELY COATED, SHALL BE RE-COATED BY THE CONTRACTOR AND RE-TESTED BY THE TESTING AGENCY.

8. **HOT-DIP GALVANIZING**
   8.1. HOT-DIP GALVANIZE ALL STRUCTURAL STEEL MEMBERS AND ALL STEEL ACCESSORIES, BOLTS, WASHERS, ETC. PER ASTM A123 OR PER ASTM A153, AS APPROPRIATE.
   8.2. PROPERLY PREPARE STEEL ITEMS FOR GALVANIZING. DRILL OR PUNCH WEEP AND/OR DRAINAGE HOLES WITH EOR APPROVAL OF LOCATIONS.
   8.3. ALL GALVANIZING SHALL BE DONE AFTER FABRICATION IS COMPLETED AND PRIOR TO FIELD INSTALLATION.

9. **PERPETUAL INSPECTION AND MAINTENANCE BY THE OWNER**
   9.1. AFTER THE CONTRACTOR HAS SUCCESSFULLY COMPLETED THE INSTALLATION OF THE MONOPOLE REINFORCING SYSTEM AND THE WORK HAS BEEN ACCEPTED BY CROWN CASTLE, CROWN CASTLE WILL BE RESPONSIBLE FOR THE LONG TERM AND PERPETUAL INSPECTION AND MAINTENANCE OF THE POLE AND REINFORCING SYSTEM.
   9.2. ANY FIELD WELDED CONNECTIONS ARE SUBJECT TO CORROSION DAMAGE AND DETERIORATION IF THEY ARE NOT PROPERLY MAINTAINED AND COVERED WITH CORROSION PREVENTIVE COATING SUCH AS THE ZRC GALVANIZING COMPOUND SPECIFIED PREVIOUSLY. THE STRUCTURAL LOAD CARRYING CAPACITY OF THE REINFORCED POLE SYSTEM IS DEPENDENT UPON THE INSTALLED SIZE AND QUALITY, MAINTAINED SOUND CONDITION AND STRENGTH OF THESE FIELD WELDED CONNECTIONS. ANY CORROSION OF, DAMAGE TO, FATIGUE, FRACTURE, AND/OR DETERIORATION OF THESE WELDS AND/OR THE EXISTING GALVANIZED STEEL POLE STRUCTURE AND THE WELDED COMPONENTS WILL RESULT IN THE LOSS OF STRUCTURAL LOAD CARRYING CAPACITY AND MAY LEAD TO FAILURE OF THE STRUCTURAL SYSTEM. THEREFORE, IT IS IMPERATIVE THAT CROWN CASTLE REGULARLY INSPECTS, MAINTAINS, AND REPAIRS AS NECESSARY, ALL OF THESE WELDS, CONNECTIONS, AND COMPONENTS FOR THE LIFE OF THE STRUCTURE.
   9.3. CROWN CASTLE SHALL REFER TO TIA/EIA-222-F-1996, SECTION 14 AND ANNEX E FOR RECOMMENDATIONS FOR MAINTENANCE AND INSPECTION. THE FREQUENCY OF THE INSPECTION AND MAINTENANCE INTERVALS IS TO BE DETERMINED BY CROWN CASTLE BASED UPON ACTUAL SITE AND ENVIRONMENTAL CONDITIONS. THE EOR RECOMMENDS THAT A COMPLETE AND THOROUGH INSPECTION OF THE ENTIRE REINFORCED MONOPOLE STRUCTURAL SYSTEM BE PERFORMED YEARLY AND/OR AS FREQUENTLY AS CONDITIONS WARRANT. ACCORDING TO TIA/EIA-222-F-1996 SECTION 14.1, NOTE 1: "IT IS RECOMMENDED THAT THE STRUCTURE BE INSPECTED AFTER SEVERE WIND AND/OR ICE STORMS OR OTHER EXTREME LOADING CONDITIONS".

10. **FIELD NDE MINIMUM REQUIREMENTS**
   10.1. ALL NDE SHALL BE IN ACCORDANCE WITH AWS D1.1.
   10.2. FOR NEW BASE STIFFENERS (INCLUSIVE OF TRANSITION STIFFENERS) AND ANCHOR ROD BRACKETS, COMPLETE JOINT PENETRATION WELDS SHALL BE 100% INSPECTED BY UT. ALL PARTIAL JOINT PENETRATION AND FILLET WELDS SHALL BE 100% INSPECTED BY MT.
   10.3. FOR NEW FLAT PLATE REINFORCEMENT AT THE BASE OF THE TOWER, COMPLETE JOINT PENETRATION WELDS SHALL BE 100% INSPECTED BY UT. ALL PARTIAL JOINT PENETRATION AND FILLET WELDS SHALL BE 100% INSPECTED BY MT, BUT MAY BE LIMITED TO A HEIGHT OF 10'-0".
   10.4. FOR NDE OF THE EXISTING BASE PLATE CIRCUMFERENTIAL WELD, GC SHALL REFERENCE THE MI CHECKLIST FOR APPLICABILITY. PLEASE SEE ENG-SOW-10033: 'TOWER BASE PLATE NDE, AND ENG-BUL-10051: 'NDE REQUIREMENTS FOR MONOPOLE BASE PLATE TO PREVENT CONNECTION FAILURE'. NOTIFY THE EOR AND CROWN ENGINEERING IMMEDIATELY IF ANY CRACKS ARE SUSPECTED OR HAVE BEEN IDENTIFIED. THE NDE SHALL INCLUDE ALL EXISTING MODIFICATIONS THAT HAVE BEEN WELDED TO THE BASE PLATE.
   10.5. ALL TESTING LIMITATIONS SHALL BE DETAILED IN THE NDE REPORT.

STATE OF CONNECTICUT
JUSTIN T. KLINE
No. 30301
LICENSED
PROFESSIONAL ENGINEER
8-5-16

© Copyright 2016, by Paul J. Ford and Company. All Rights Reserved. This document and the data contained herein, is proprietary to Paul J. Ford and Company, issued in strict confidence and shall not, without the prior written permission of Paul J. Ford and Company, be reproduced, copied or used for any purpose other than the intended use for this specific project.

PJF PAUL J. FORD & COMPANY
250 E Broad St, Ste 600- Columbus, OH 43215
Phone 614.221.6679 www.pauljford.com
3 CORPORATE PARK DRIVE, SUITE 101, CLIFTON PARK, NY 12065
PH: (585) 370-4766

CROWN CASTLE

MODIFICATION OF AN EXISTING 72' MONOPOLE
BU #821898; SOUTHINGTON INDUSTRIAL
SOUTHINGTON, CONNECTICUT

PROJECT No:	37516-2615.003.7700
DRAWN BY:	B.M.S.
DESIGNED BY:	T.J.D.
CHECKED BY:	JTK
DATE:	8-4-2016

GENERAL NOTES

S-1

37516-2615.003.DWG

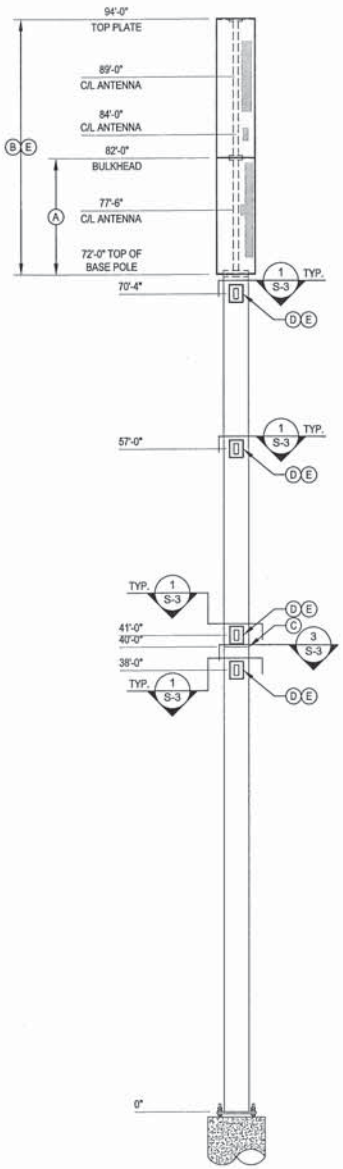

POLE ELEVATION 1 / S-2

SHAFT SECTION DATA							
SHAFT SECTION	SECTION LENGTH (FT)	PLATE THICKNESS (IN)	LAP SPLICE (IN)	DIAMETER ACROSS FLATS (IN)		POLE GRADE (ksi)	POLE SHAPE
				@ TOP	@ BOTTOM		
1	32.00	0.2500		26.000	26.000	53	ROUND
2	40.00	0.3125		26.000	26.000	53	ROUND
NOTE: DIMENSIONS SHOWN DO NOT INCLUDE GALVANIZING TOLERANCES							

TOWER MODIFICATION SCHEDULE

	ELEVATION	TOWER MODIFICATION DESCRIPTION	REFERENCE SHEETS
A	72' TO 82'	REMOVE EXISTING CONCEALMENT SPINE AND SHROUDS	S-2
B	72' TO 94'	INSTALL NEW CONCEALMENT SPINE, BULKHEADS AND SHROUDS	S-4 TO S-6
C	40'	REPLACE EXSITING FLANGE BOLT	S-3
D	38', 41', 57'-4" & 70'-4"	INSTALL MISSING PORT COVERS	S-3
E	38', 41', 57'-4", 70'-4" & 72' TO 94'	PAINT MODIFICATIONS TO MATCH EXISTING POLE	S-2
F	72' TO 94'	INSTALL CONCELAMENT REINFORCING SOLUTION PER CROWN CASTLE DOC OPS-PRC-10127	S-4 TO S-6

1. EXISTING CONCEALMENT TO BE REMOVED AND REPLACED WITH THE NEW CONCEALMENT.
2. NEW CONCEALMENT IS TO BE BOLTED TO TOP FLANGE OF EXISTING BASE POLE. CONTRACTOR SHALL VERIFY EXISTING CONDITIONS PRIOR TO FABRICATION AND INSTALLATION.
3. CONTRACTOR SHALL SEND PAUL J. FORD & COMPANY THE FABRICATION DRAWINGS FOR APPROVAL PRIOR TO MANUFACTURING.
4. CONTRACTOR TO COORDINATE EQUIPMENT SHUT DOWN AND CONCEALMENT REMOVAL WITH CROWN CASTLE PROJECT PM AND CARRIERS. CONTRACTOR TO PROVIDE SCHEDULE THAT MINIMIZES DOWN TIME FOR CUSTOMER SYSTEMS. TEMPORARY POLES OR COWS MAY BE REQUIRED DURING THE INSTALLATION OF THE NEW CONCEALMENT AND MODIFICATIONS.

STATE OF CONNECTICUT
JUSTIN T. KLINE
No. 30301
LICENSED
PROFESSIONAL ENGINEER
8-5-16

© Copyright 2016, by Paul J. Ford and Company, All Rights Reserved. This document and the data contained herein, is proprietary to Paul J. Ford and Company, issued in strict confidence and shall not, without the prior written permission of Paul J. Ford and Company, be reproduced, copied or used for any purpose other than the intended use for this specific project.

PJF PAUL J. FORD & COMPANY
250 E Broad St, Ste 600- Columbus, OH 43215
Phone 614.221.6679 www.pauljford.com
3 CORPORATE PARK DRIVE, SUITE 101, CLIFTON PARK, NY 12065
PH: (585) 370-4766

CROWN CASTLE

MODIFICATION OF AN EXISTING 72' MONOPOLE

BU #821898; SOUTHINGTON INDUSTRIAL
SOUTHINGTON, CONNECTICUT

PROJECT No:	37516-2615.003.7700
DRAWN BY:	B.M.S.
DESIGNED BY:	T.J.D.
CHECKED BY:	JTK
DATE:	8-4-2016

MONOPOLE PROFILE

S-2

37516-2615.003.DWG

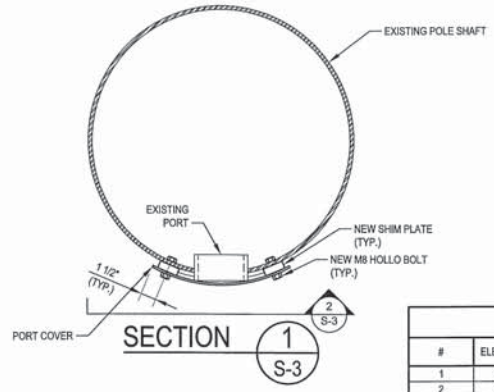

SECTION 1 S-3

PORT INFORMATION					
#	ELEVATION	WIDTH	HEIGHT	PROJECTOIN	DIRECTION
1	38'-0"	5 1/4"	11 1/4"	1/2"	SW
2	38'-0"	5 1/4"	11 1/4"	1/2"	NE
3	41'-0"	5 1/4"	11 1/4"	1/2"	SW
4	41'-0"	5 1/4"	11 1/4"	1/2"	NE
5	57'-4"	5 1/4"	11 1/4"	1/2"	NW
6	57'-4"	5 1/4"	11 1/4"	1/2"	SE
7	70'-4"	5 1/4"	11 1/4"	1/2"	SW
8	70'-4"	5 1/4"	11 1/4"	1/2"	NE
ALL PORT INFORMATION OBTAINED FROM THE TEP MAPPING, JOB# 61471_33415, DATED 06-15-2015.					

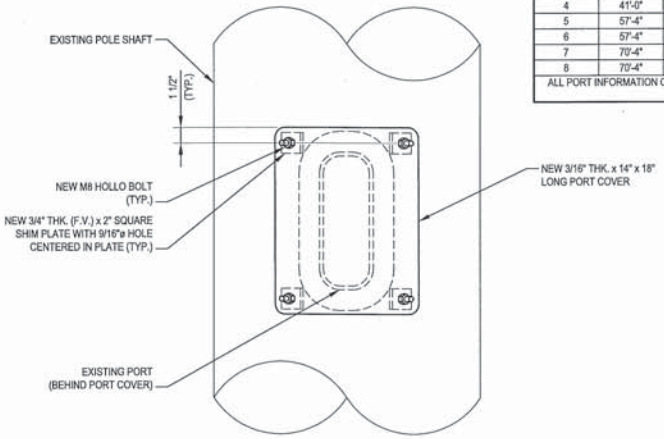

DETAIL 2 S-3

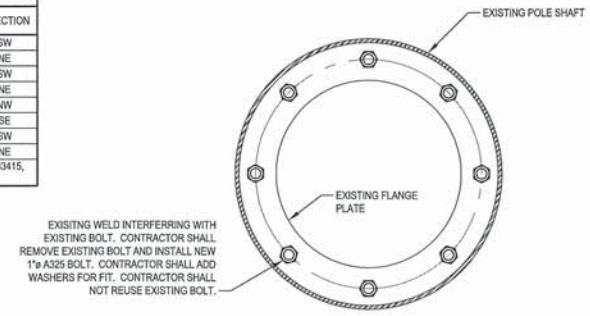

SECTION 3 S-3
EL. 40'-0"

© Copyright 2016, by Paul J. Ford and Company, All Rights Reserved. This document and the data contained herein, is proprietary to Paul J. Ford and Company, issued in strict confidence and shall not, without the prior written permission of Paul J. Ford and Company, be reproduced, copied or used for any purpose other than the intended use for this specific project.

PJF PAUL J. FORD & COMPANY
250 E Broad St, Ste 600- Columbus, OH 43215
Phone 614.221.6679 www.pauljford.com
CROWN CASTLE
3 CORPORATE PARK DRIVE, SUITE 101, CLIFTON PARK, NY 12065
PH: (518) 370-4766

MODIFICATION OF AN EXISTING 72' MONOPOLE

BU #821898; SOUTHINGTON INDUSTRIAL
SOUTHINGTON, CONNECTICUT

PROJECT No:	37516-2615.003.7700
DRAWN BY:	B.M.S.
DESIGNED BY:	T.J.D.
CHECKED BY:	JTK
DATE:	8-4-2016

PORT COVER & FLANGE DETAILS

S-3

37516-2615.003.DWG

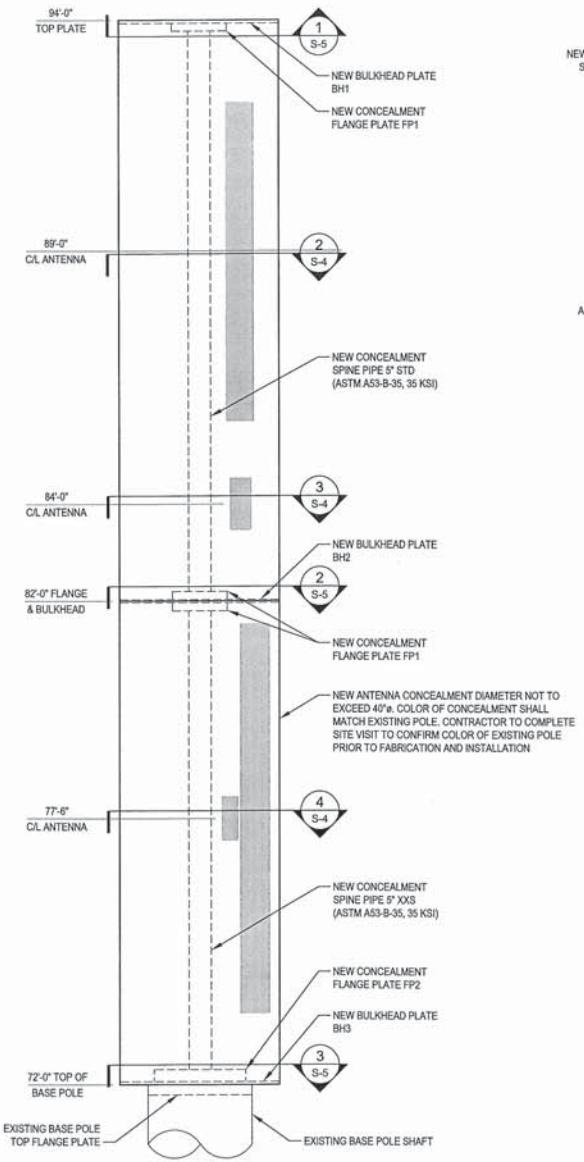

PARTIAL ELEVATION 1 / S-4

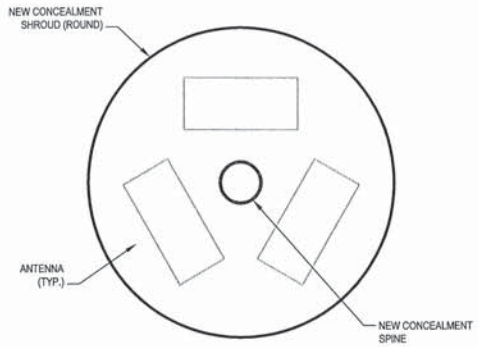

SECTION 2 / S-4
(PROPOSED ANTENNA FIT)

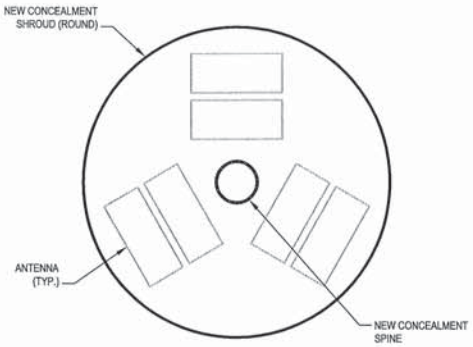

SECTION 3 / S-4
(PROPOSED ANTENNA FIT)

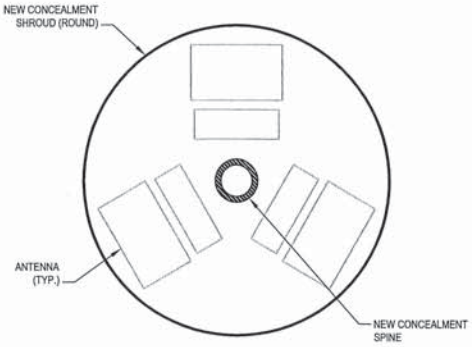

SECTION 4 / S-4
(PROPOSED ANTENNA FIT)

Antenna Model	QUANTITY	Antenna Centerline Elevation, ft	Height, in	Depth, in	Width, in
80010891	3	89	78.5	6.7	14.8
TMA2117F00V1-1	6	84	12.48	5	11.81
SBNH-1D6565C	2	77.5	96.4	7.1	11.9
DTMABP7819VG12A	3		10.63	3.78	11.02
SBNH-1D6565C	1		96.4	7.1	11.9
DTMABP7819VG12A	1		10.63	3.78	11.02

NOTE: ALL ANTENNA DIMENSIONS HAVE BEEN PROVIDED BY CROWN CASTLE. A 4" SPACING BETWEEN THE SPINE AND ANTENNA HAS BEEN ASSUMED.

Coax Model	QUANTITY	Elevation, ft	Nominal Diameter, in	Actual Diameter, in
LDF5-50A	12	88	7/8"	1.09
LDF7-50A	6	77	1-5/8"	1.98

NOTE: COAX LAYOUT AND FIT IS THEORETICAL. ACTUAL LAYOUT AND FIT MAY VARY PENDING EXISTING CONDITIONS.

8-5-16

© Copyright 2016, by Paul J. Ford and Company. All Rights Reserved. This document and the data contained herein, is proprietary to Paul J. Ford and Company, issued in strict confidence and shall not, without the prior written permission of Paul J. Ford and Company, be reproduced, copied or used for any purpose other than the intended use for this specific project.

PJF PAUL J. FORD & COMPANY
250 E Broad St, Ste 600- Columbus, OH 43215
Phone 614.221.6679 www.pauljford.com

CROWN CASTLE
3 CORPORATE PARK DRIVE, SUITE 101, CLIFTON PARK, NY 12065
PH: (585) 370-4766

MODIFICATION OF AN EXISTING 72' MONOPOLE
BU #821898; SOUTHINGTON INDUSTRIAL
SOUTHINGTON, CONNECTICUT

PROJECT No:	37516-2615.003.7700
DRAWN BY:	B.M.S.
DESIGNED BY:	T.J.D.
CHECKED BY:	JTK
DATE:	8-4-2016

CONCEALMENT ELEVATION DETAILS

S-4

37516-2615.003.DWG

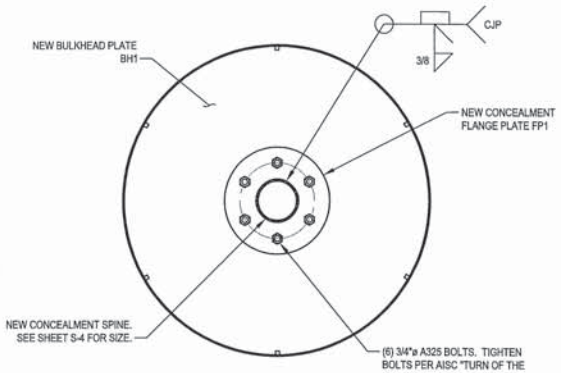

SECTION 1 / S-5
EL. 94'

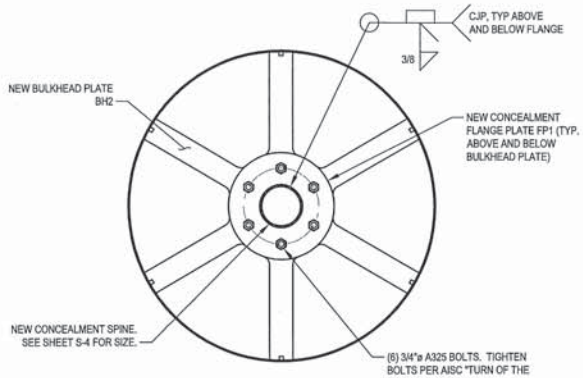

SECTION 2 / S-5
EL. 82'

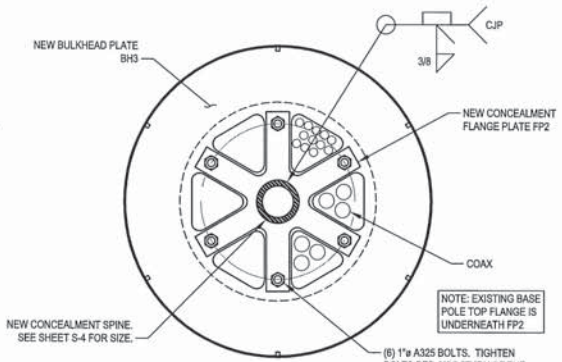

SECTION 3 / S-5
EL. 72'

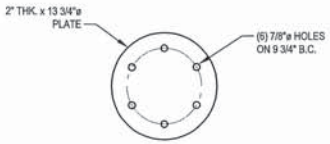

FLANGE PLATE MK~FP1
(3 REQUIRED) (ASTM A36)

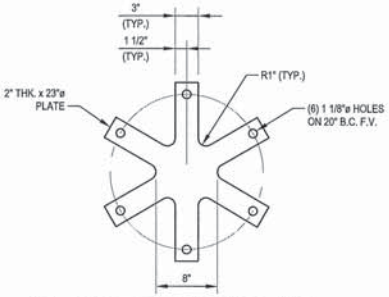

FLANGE PLATE MK~FP2
(1 REQUIRED) (ASTM A36)

8-5-16

© Copyright 2016, by Paul J. Ford and Company. All Rights Reserved. This document and the data contained herein, is proprietary to Paul J. Ford and Company, issued in strict confidence and shall not, without the prior written permission of Paul J. Ford and Company, be reproduced, copied or used for any purpose other than the intended use for this specific project.

PJF PAUL J. FORD & COMPANY
250 E Broad St, Ste 600- Columbus, OH 43215
Phone 614.221.6679 www.pauljford.com

CROWN CASTLE
3 CORPORATE PARK DRIVE, SUITE 101, CLIFTON PARK, NY 12065
PH: (585) 370-4766

MODIFICATION OF AN EXISTING 72' MONOPOLE
BU #821898; SOUTHINGTON INDUSTRIAL
SOUTHINGTON, CONNECTICUT

PROJECT No:	37516-2615.003.7700
DRAWN BY:	B.M.S.
DESIGNED BY:	T.J.D.
CHECKED BY:	JTK
DATE:	8-4-2016

CONCEALMENT FLANGE DETAILS

S-5

37516-2615.003.DWG

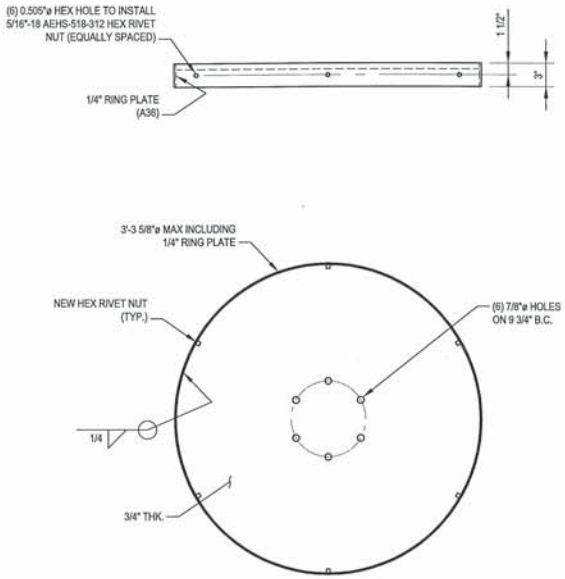

BULKHEAD PLATE MK~BH1

(1 REQUIRED) (ASTM A36)

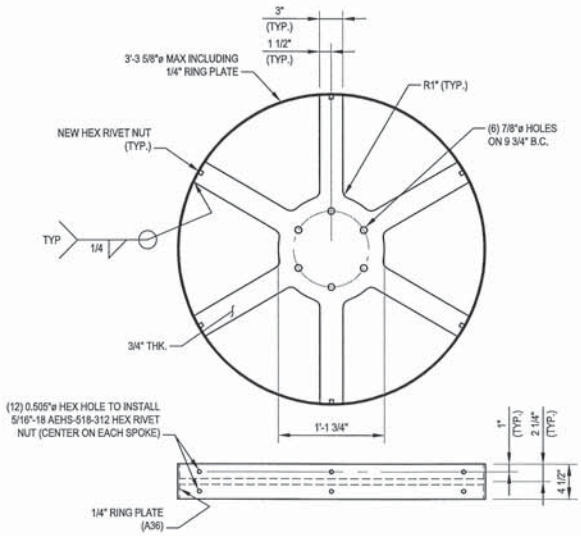

BULKHEAD PLATE MK~BH2

(1 REQUIRED) (ASTM A36)

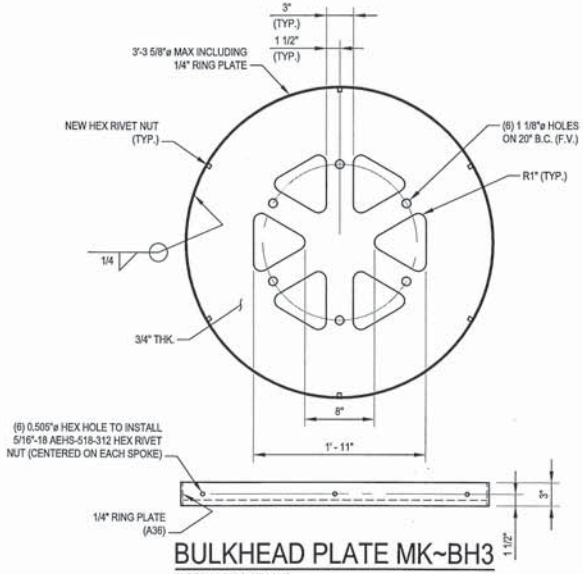

BULKHEAD PLATE MK~BH3

(1 REQUIRED) (ASTM A36)

STATE OF CONNECTICUT
JUSTIN T. KLINE
No. 30301
LICENSED
PROFESSIONAL ENGINEER
8-5-16

© Copyright 2016, by Paul J. Ford and Company. All Rights Reserved. This document and the data contained herein, is proprietary to Paul J. Ford and Company, issued in strict confidence and shall not, without the prior written permission of Paul J. Ford and Company, be reproduced, copied or used for any purpose other than the intended use for this specific project.

PJF PAUL J. FORD & COMPANY
250 E Broad St, Ste 600- Columbus, OH 43215
Phone 614.221.6679 www.pauljford.com

CROWN CASTLE
3 CORPORATE PARK DRIVE, SUITE 101, CLIFTON PARK, NY 12065
PH: (585) 370-4766

MODIFICATION OF AN EXISTING 72' MONOPOLE
BU #821898; SOUTHINGTON INDUSTRIAL
SOUTHINGTON, CONNECTICUT

PROJECT No:	37516-2615.003.7700
DRAWN BY:	B.M.S.
DESIGNED BY:	T.J.D.
CHECKED BY:	JTK
DATE:	8-4-2016

CONCEALMENT BULKHEAD DETAILS

S-6

37516-2615.003.DWG

MOUNT MAPPING REPORT

FOR

CT5251
500 QUEEN STREET
SOUTHINGTON, CT 06489

82'-0" MONOPOLE

PREPARED FOR:

Hudson Design Group LLC

1600 OSGOOD STREET
BUILDING 20 NORTH, SUITE 3090
N. ANDOVER, MA 01845

at&t

550 COCHITUATE ROAD
FRAMINGHAM, MA 01701

smartlink

1997 ANNAPOLIS EXCHANGE
PKWY SUITE 200
ANNAPOLIS, MD 21401

DATED: APRIL 27, 2016

PREPARED BY:

ProVertic

1600 OSGOOD ST, BLDG 20 N, SUITE 3058
N. ANDOVER, MA 01845
PHONE: 978.416.0122
www.ProVertic.com

ProVertic

MONOPOLE MAPPING FORM

Site Name: SOUTHINGTON INDUSTRIAL CENTER

Date of Inspection: MARCH 22, 2016

Carrier & Site Number: AT&T & CT5251

Mapped by: WIRELESS CONSTRUCTION, INC.

Site Address: 500 QUEEN STREET
SOUTHINGTON, CT 06489

Tower Latitude: 41° 37' 48.51" N

Tower Longitude: 72° 52' 30.00" W

Site Owner: N/A

Gate Combo: N/A

Site Contact & Info: N/A

Tower Manufacturer: N/A

Date Built: N/A

Tower Plate Information: N/A

Exposure Category: Open Wooded (Urban) Ocean Other:

Site Topography: (Flat) Ridge Hill Other:

Access Gate/Road Latitude: 41° 37' 51.21"

Access Gate/Road Longitude: 72° 52' 25.91"

Access Notes:

Site Access Description: N/A

General Comments/Observations:

N/A

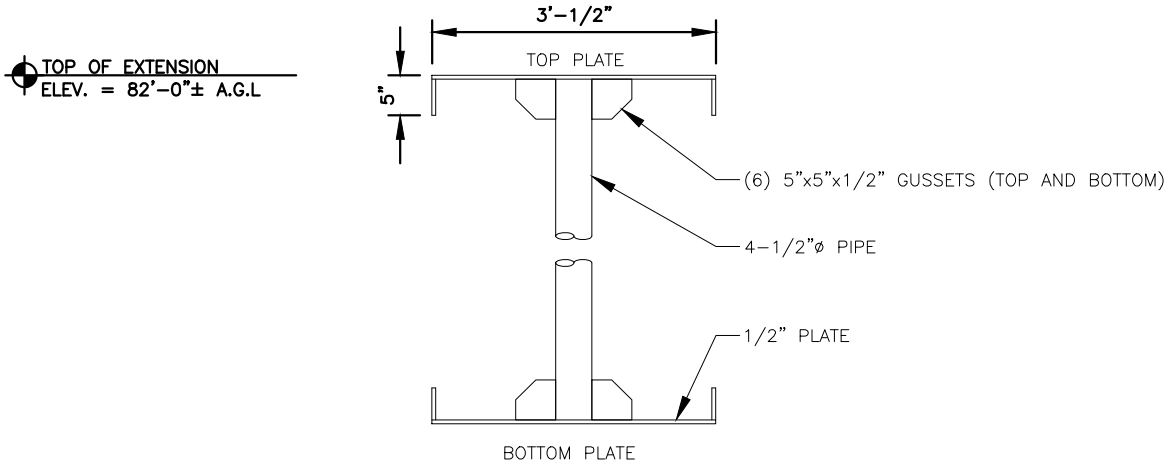

EXTENSION ELEVATION DETAIL

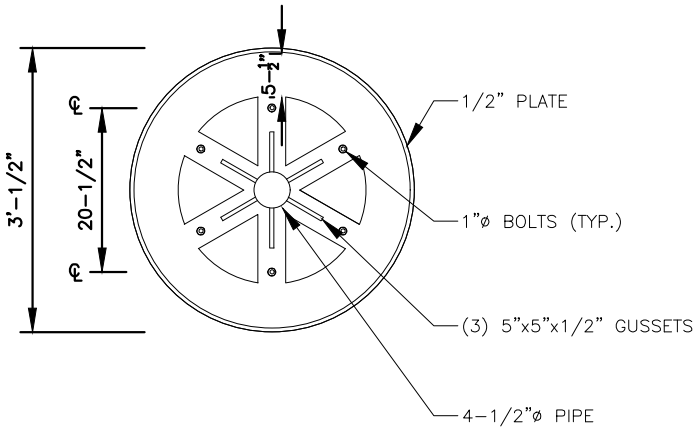

BOTTOM PLATE DETAIL

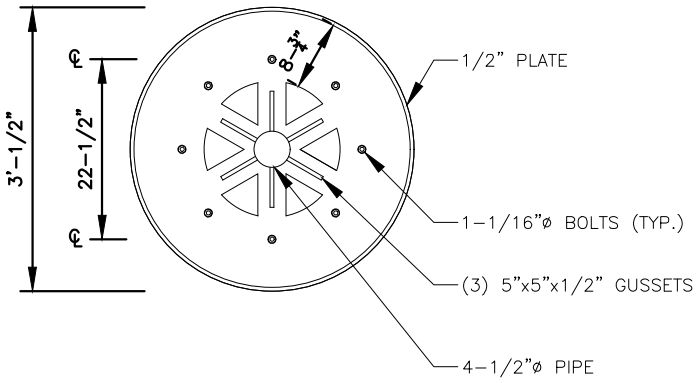

TOP PLATE DETAIL

PREPARED FOR:	PREPARED BY:	SITE NUMBER: CT5251	REVISION	DATE	DRAWN BY
smartlink 1997 ANNAPOLIS EXCHANGE PKWY SUITE 200 ANNAPOLIS, MD 21401	ProVertic 1600 OSGOOD STREET BUILDING 20 NORTH, SUITE 3058 N. ANDOVER, MA 01845	SITE NAME: SOUTHINGTON INDUSTRIAL CENTER 500 QUEEN STREET SOUTHINGTON, CT 06489 HARTFORD COUNTY	0	04-27-16	JR
			SITE TYPE: MONOPOLE		
			CHECKED BY: MSC		SK-1
			SCALE: N.T.S		

MONOPOLE MAPPING FORM

CARRIER	TOA ELEVATION	ATTACH. LOC. LEG/FACE	ANTENNA (OR OTHER APPURTENANCE)			MOUNT DESCRIPTION & SIZE	MOUNT ELEVATION	TRANSMISSION LINES		
			QUANTITY	AZIMUTH	SIZE AND DESCRIPTION OR MANUFACTURER AND MODEL			QUANTITY	SIZE/TYPE	ATTACH. LOC.
AT&T	82'-0"	A	1	40	KMW: AM-X-CD-16-65-00T-RET	4-1/2"ø PIPE	82'-0"	2	1-5/8"	---
AT&T	82'-0"	B	1	160	KMW: AM-X-CD-16-65-00T-RET	4-1/2"ø PIPE	82'-0"	2	1-5/8"	---
AT&T	82'-0"	C	1	280	ANDREW: SBNH-1D6565C	4-1/2"ø PIPE	82'-0"	2	1-5/8"	---

ProVertic

EXISTING TOWER

ATTACHMENT 5

CUDDY
+FEDER
LLP

445 Hamilton Avenue, 14th Floor
White Plains, New York 10601
T 914 761 1300
F 914 761 5372
cuddyfeder.com

Daniel M. Laub
dlaub@cuddyfeder.com

August 26, 2016

FIRST CLASS MAIL
Garry Brumback, Town Manager
Town of Southington
75 Main Street
P. O. Box 610
Southington, CT 06489

Re: Connecticut Siting Council Petition 1133
Extension of Existing Telecommunications Facility
500 Queen Street, Southington, Connecticut

Dear Mr. Brumback:

We are writing to you on behalf of our client New Cingular Wireless PCS, LLC ("AT&T") with respect to the above referenced matter and the filing today of a sub-petition for declaratory ruling ("Sub-Petition") with the Connecticut Siting Council ("Council") under Petition 1133 to allow a modification of the existing facility at the captioned facility. AT&T plans to extend the height of the existing tower by 12 feet to a total height of 94 feet and install three (3) additional antennas and related equipment. AT&T will enclose this extension with the same concealment as the existing tower so the appearance will remain the same as today but taller.

AT&T is submitting this Sub-Petition as an eligible facility request pursuant to Section 6409(a) of the Federal Middle Class Tax Relief and Job Creation Act of 2012 (codified at 47 USC Sec. 1455(a)) and as further clarified by the Federal Communications Commission in its October 21, 2014 Order (FCC-14-153).

This notice and the enclosed copy of the Sub-Petition is provided to you in keeping with the Council's ruling in Petition 1133. Any comments regarding this proposal should be provided to the Council within thirty (30) days of the date of this submission.

Should you have any questions please feel free to contact me at the address above or the Council at 860.827.2935.

Very truly yours,

Daniel M. Laub
Enclosure

ATTACHMENT 6

CUDDY
+FEDER
LLP

445 Hamilton Avenue, 14th Floor
White Plains, New York 10601
T 914 761 1300
F 914 761 5372
cuddyfeder.com

Daniel M. Laub
dlaub@cuddyfeder.com

August 26, 2016

FIRST CLASS MAIL
[ADDRESSEE]

Re: Extension of Existing Telecommunications Facility
500 Queen Street, Southington, Connecticut

Dear Sir or Madam:

We are writing to you on behalf of our client New Cingular Wireless PCS, LLC ("AT&T") with respect to the above referenced matter and the filing today of a sub-petition for declaratory ruling ("Sub-Petition") with the Connecticut Siting Council ("Council") to allow a modification of the existing facility at the captioned facility. AT&T plans to extend the height of the existing tower by 12 feet to a total height of 94 feet and install three (3) additional antennas and related equipment in the tower and the existing shelter. AT&T will enclose this extension with the same concealment as the existing tower so the appearance will remain the same as today but taller.

AT&T is submitting this Sub-Petition as an eligible facility request pursuant to Section 6409(a) of the Federal Middle Class Tax Relief and Job Creation Ac of 2012 (codified at 47 USC Sec. 1455(a)) and as further clarified by the Federal Communications Commission in its October 21, 2014 Order (FCC-14-153).

This notice and the enclosed copy of the Sub-Petition is provided to you as an abutting property owner in keeping with the Council's ruling in Petition 1133. Any comments regarding this proposal should be provided to the Council within thirty (30) days of the date of this submission.

Should you have any questions please feel free to contact me at the address above or the Council at 860.827.2935.

Very truly yours,

Daniel M. Laub
Enclosure

CERTIFICATION OF SERVICE

I hereby certify that on the 26th of August, 2016, a copy of the foregoing letter with copy of the noted sub-petition was mailed to each of the abutting properties owners on the accompanying list.[1]

August 26, 2016
Date

Daniel M. Laub
Cuddy & Feder LLP
445 Hamilton Avenue, 14th Floor
White Plains, New York 10601

Attorneys for:
New Cingular Wireless PCS, LLC ("AT&T")

ADJACENT PROPERTY OWNERS

Mary Ann Hall & Stephen J Barberino
1097 Farmington Ave
Bristol, CT 06010

State of Connecticut
24 Wolcott Hill Road
Wethersfield, CT 06109-1152

State of Connecticut
Department of Transportation
2800 Berlin Turnpike
Newington, CT 06111

500 Queen Street
RAP Properties LLC
PO Box 3165
Harrisburg PA 17105

MPD LLC
1 Center Street
Southington, CT 06489

[1] Please note that the Department of Transportation address was added manually to the list generated from the Town of Southington Geographic Information System due to the proximity of the Site to I-84. This was also added because while upon information and belief the Bureau of Highways was at one time located at 24 Wolcott Hill Road in Wethersfield, that address today is home only to the Department of Corrections and by all indication the proper party to notice should be the Department of Transportation.

Town of Southington

Geographic Information System (GIS)

Date Printed: 8/26/2016

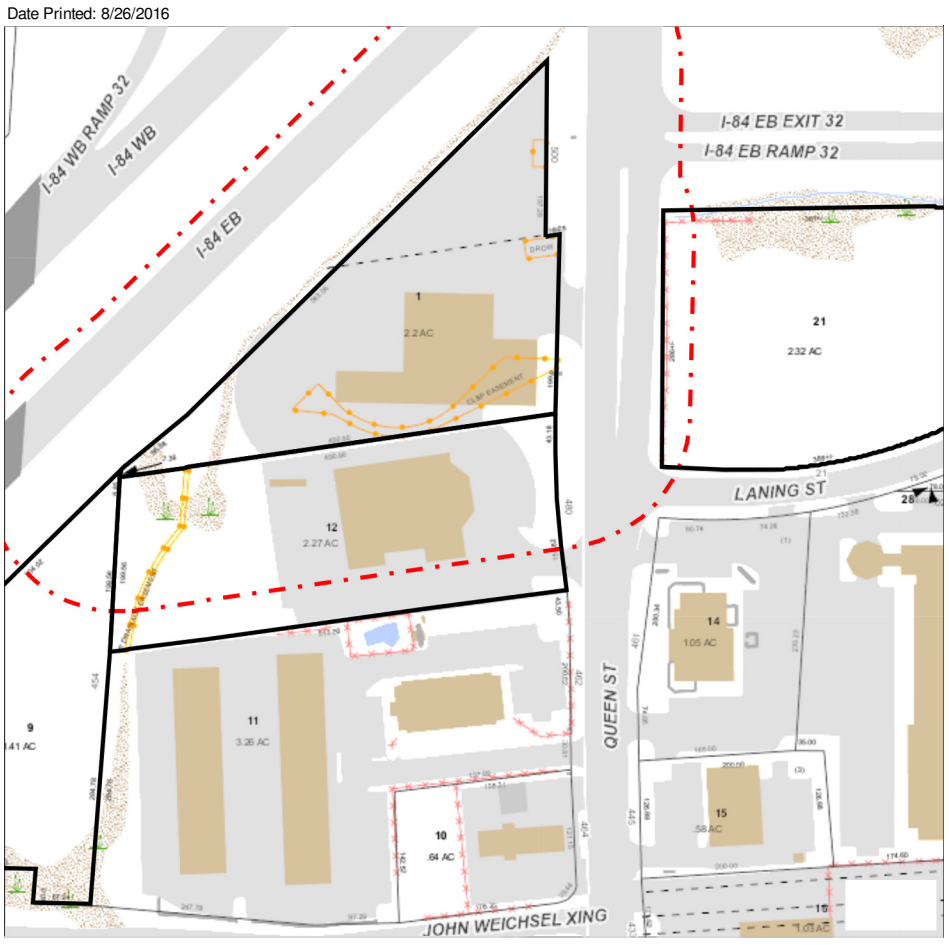

MAP DISCLAIMER - NOTICE OF LIABILITY

This map is for assessment purposes only. It is not for legal description or conveyances. All information is subject to verification by any user. The Town of Southington and its mapping contractors assume no legal responsibility for the information contained herein.

N
W E
S

157012
HALL MARY ANN & BARBERINO
1097 FARMINGTON AVE
BRISTOL CT 06010

169021
CONNECTICUT STATE OF
24 WOLCOTT HILL RD
WETHERSFIELD CT 06109-1

169001
RAP PROPERTIES LLC
PO BOX 3165
HARRISBURG PA 17105

157009
MPD LLC
1 CENTER STREET
SOUTHINGTON CT 06489