CUDDY +FEDER LLP

445 Hamilton Avenue, 14th Floor
White Plains, New York 10601
T 914 761 1300
F 914 761 5372
cuddyfeder.com

Daniel M. Laub
dlaub@cuddyfeder.com

September 7, 2018

VIA EMAIL AND OVERNIGHT DELIVERY
Melanie Bachman, Esq.
Executive Director
Connecticut Siting Council
10 Franklin Square
New Britain, Connecticut 06051

Re: Petition No. 1122 - New Cingular Wireless PCS LLC ("AT&T")
Request for Minor Modification and Extension
200 Edgemark Acres, Meriden, Connecticut

Dear Executive Director Bachman:

On behalf of New Cingular Wireless PCS, LLS ("AT&T") we respectfully request approval of a minor modification of the facility approved in Petition 1122 located at 200 Edgemark Acres in the city of Meriden.

AT&T plans to install an 8' x 8' clapboard sided walk in cabinet shelter with a single pitched roof in lieu of an 11' 6" x 12' clapboard sided shelter with single pitched roof approved by modification on October 23, 2017. In addition, AT&T will deploy a 20KW generator in lieu of the 30KW previously planned. No changes to the antennas are required but for wind loading purposes AT&T opted to add a "hand rai' kit" to further brace the antennas. No other alterations to other aspects of the facility are proposed. In support of this modification please find included with this letter: 1) correspondence from Eversource as tower owner confirming approval of this modification 2) drawings prepared by Centek last revised August 27, 2018 and 3) a structural report also prepared by Centek last revised August 16, 2018. In addition, AT&T hereby requests an extension of time from January 2019 to July 1, 2019 in case there are any further unanticipated delays in construction.[1]

Thank you once again for your consideration in this matter. Should you have any questions, please do not hesitate to contact me.

Very truly yours,

Daniel M. Laub

cc: Mayor Kevin Scarpati, Meriden
City Manager Timothy Coon, Meriden
Director of Development & Enforcement Bob Seale, Meriden
Dan Bilezikian, SAI
AT&T

Enclosures

[1] While the original January 8, 2015 approval preceded the Council's May 28, 2015 decision imposing a 3-year time limit to declaratory rulings, subsequent modifications in for this facility after that decision presumed, in excess of caution, the time limit applied. This request is therefore made in keeping with that record.

EVERSOURCE ENERGY

56 Prospect Street,
Hartford, CT 06103

P.O. Box 270
Hartford, CT 06141-0270
(860) 665-5000

August 31, 2018

Mr. Dan Bilezikian
SAI Communications
125 Tremont St.
Rehoboth, MA 02769

RE: AT&T Antenna Site, CT-2117, Edgemark Acres, Meriden, CT.

Dear Mr. Bilezikian:

Based on our reviews of the site drawings, the structural and foundation analyses provided by Centek Engineering and, along with a third party review performed by Paul J Ford & Company, we have reviewed and accept this new site proposal.

Eversource filed a request for evaluation (2017-ANE-4228-OE) with the FAA based on AT&T submittals provided. The FAA returned a Determination of No Hazard to Air Navigation for the subject site, with conditions. Eversource requests that AT&T and its vendors will provide supporting documentation requested by the FAA as part of the determination (such as as-built survey data), and that AT&T will file for future FAA aeronautical studies at other project sites as needed.

Please do not hesitate to contact me if I can be of further assistance.

Sincerely,

Joel Szarkowicz
Transmission Line Engineering

ref: 17010.08 CT2117 Meriden - NSB - CDs REV 9_18.08.27 (S&S).pdf
17010.08 - CT2117 Structural Analysis Rev6 18.08.16.pdf

WIRELESS COMMUNICATIONS FACILITY

CT2117
MERIDEN
EVERSOURCE UTILITY STRUCT. NO. 783
200 EDGEMARK ACRES
MERIDEN, CT 06451

GENERAL NOTES

1. ALL WORK SHALL BE IN ACCORDANCE WITH THE 2012 INTERNATIONAL BUILDING CODE AS MODIFIED BY THE 2016 CONNECTICUT STATE BUILDING CODE, INCLUDING THE TIA-222 REVISION "G" STRUCTURAL STANDARDS FOR STEEL ANTENNA TOWERS AND SUPPORTING STRUCTURES, 2016 CONNECTICUT FIRE SAFETY CODE AND, NATIONAL ELECTRICAL CODE AND LOCAL CODES.

2. THE COMPOUND, TOWER, PRIMARY GROUND RING, ELECTRICAL SERVICE TO THE METER BANK AND TELEPHONE SERVICE TO THE DEMARCATION POINT ARE PROVIDED BY SITE OWNER. AS BUILT FIELD CONDITIONS REGARDING THESE ITEMS SHALL BE CONFIRMED BY THE CONTRACTOR. SHOULD ANY FIELD CONDITIONS PRECLUDE COMPLIANCE WITH THE DRAWINGS, THE CONTRACTOR SHALL IMMEDIATELY NOTIFY THE ENGINEER AND SHALL NOT PROCEED WITH ANY AFFECTED WORK.

3. CONTRACTOR SHALL REVIEW ALL DRAWINGS AND SPECIFICATIONS IN THE CONTRACT DOCUMENT SET. CONTRACTOR SHALL COORDINATE ALL WORK SHOWN IN THE SET OF DRAWINGS. THE CONTRACTOR SHALL PROVIDE A COMPLETE SET OF DRAWINGS TO ALL SUBCONTRACTORS AND ALL RELATED PARTIES. THE SUBCONTRACTORS SHALL EXAMINE ALL THE DRAWINGS AND SPECIFICATIONS FOR THE INFORMATION THAT AFFECTS THEIR WORK.

4. CONTRACTOR SHALL PROVIDE A COMPLETE BUILD-OUT WITH ALL FINISHES, STRUCTURAL, MECHANICAL, AND ELECTRICAL COMPONENTS AND PROVIDE ALL ITEMS AS SHOWN OR INDICATED ON THE DRAWINGS OR IN THE WRITTEN SPECIFICATIONS.

5. CONTRACTOR SHALL FURNISH ALL MATERIAL, LABOR AND EQUIPMENT TO COMPLETE THE WORK AND FURNISH A COMPLETED JOB ALL IN ACCORDANCE WITH LOCAL AND STATE GOVERNING AUTHORITIES AND OTHER AUTHORITIES HAVING LAWFUL JURISDICTION OVER THE WORK.

6. CONTRACTOR SHALL SECURE AND PAY FOR ALL PERMITS AND ALL INSPECTIONS REQUIRED AND SHALL ALSO PAY FEES REQUIRED FOR THE GENERAL CONSTRUCTION, PLUMBING, ELECTRICAL AND HVAC. PERMITS SHALL BE PAID FOR BY THE RESPECTIVE SUBCONTRACTORS.

7. CONTRACTOR SHALL MAINTAIN A CURRENT SET OF DRAWINGS AND SPECIFICATIONS ON SITE AT ALL TIMES AND INSURE DISTRIBUTION OF NEW DRAWINGS TO SUBCONTRACTORS AND OTHER RELEVANT PARTIES AS SOON AS THEY ARE MADE AVAILABLE. ALL OLD DRAWINGS SHALL BE MARKED VOID AND REMOVED FROM THE CONTRACT AREA. THE CONTRACTOR SHALL FURNISH AN 'AS-BUILT' SET OF DRAWINGS TO OWNER UPON COMPLETION OF PROJECT.

8. LOCATION OF EQUIPMENT, AND WORK SUPPLIED BY OTHERS THAT IS DIAGRAMMATICALLY INDICATED ON THE DRAWINGS SHALL BE DETERMINED BY THE CONTRACTOR. THE CONTRACTOR SHALL DETERMINE LOCATIONS AND DIMENSIONS SUBJECT TO STRUCTURAL CONDITIONS AND WORK OF THE SUBCONTRACTORS.

9. THE CONTRACTOR IS SOLELY RESPONSIBLE TO DETERMINE CONSTRUCTION PROCEDURE AND SEQUENCE, AND TO ENSURE THE SAFETY OF THE EXISTING STRUCTURES AND ITS COMPONENT PARTS DURING CONSTRUCTION. THIS INCLUDES THE ADDITION OF WHATEVER SHORING, BRACING, UNDERPINNING, ETC. THAT MAY BE NECESSARY. MAINTAIN EXISTING BUILDING'S/PROPERTY'S OPERATIONS, COORDINATE WORK WITH BUILDING/PROPERTY OWNER.

10. DRAWINGS INDICATE THE MINIMUM STANDARDS, BUT IF ANY WORK SHOULD BE INDICATED TO BE SUBSTANDARD TO ANY ORDINANCES, LAWS, CODES, RULES, OR REGULATIONS BEARING ON THE WORK, THE CONTRACTOR SHALL INCLUDE IN HIS WORK AND SHALL EXECUTE THE WORK CORRECTLY IN ACCORDANCE WITH SUCH ORDINANCES, LAWS, CODES, RULES OR REGULATIONS WITH NO INCREASE IN COSTS.

11. ALL UTILITY WORK SHALL BE IN ACCORDANCE WITH LOCAL UTILITY COMPANY REQUIREMENTS AND SPECIFICATIONS.

12. ALL EQUIPMENT AND PRODUCTS PURCHASED ARE TO BE REVIEWED BY CONTRACTOR AND ALL APPLICABLE SUBCONTRACTORS FOR ANY CONDITION PER MFR.'S RECOMMENDATIONS. CONTRACTOR TO SUPPLY THESE ITEMS AT NO COST TO OWNER OR CONSTRUCTION MANAGER.

13. ANY AND ALL ERRORS, DISCREPANCIES, AND 'MISSED' ITEMS ARE TO BE BROUGHT TO THE ATTENTION OF THE AT&T CONSTRUCTION MANAGER DURING THE BIDDING PROCESS BY THE CONTRACTOR. ALL THESE ITEMS ARE TO BE INCLUDED IN THE BID. NO 'EXTRA' WILL BE ALLOWED FOR MISSED ITEMS.

14. CONTRACTOR SHALL BE RESPONSIBLE FOR ALL ON-SITE SAFETY FROM THE TIME THE JOB IS AWARDED UNTIL ALL WORK IS COMPLETE AND ACCEPTED BY THE OWNER.

15. CONTRACTOR TO REVIEW ALL SHOP DRAWINGS AND SUBMIT COPY TO ENGINEER FOR APPROVAL. DRAWINGS MUST BEAR THE CHECKER'S INITIALS BEFORE SUBMITTING TO THE CONSTRUCTION MANAGER FOR REVIEW.

16. THE CONTRACTOR SHALL FIELD VERIFY ALL DIMENSIONS, ELEVATIONS, ANGLES, AND EXISTING CONDITIONS AT THE SITE, PRIOR TO FABRICATION AND/OR INSTALLATION OF ANY WORK IN THE CONTRACT AREA.

17. COORDINATION, LAYOUT, FURNISHING AND INSTALLATION OF CONDUIT AND ALL APPURTENANCES REQUIRED FOR PROPER INSTALLATION OF ELECTRICAL AND TELECOMMUNICATION SERVICE SHALL BE THE SOLE RESPONSIBILITY OF THE CONTRACTOR.

18. ALL EQUIPMENT AND PRODUCTS PURCHASED ARE TO BE REVIEWED BY CONTRACTOR AND ALL APPLICABLE SUB-CONTRACTORS FOR ANY CONDITION PER THE MANUFACTURER'S RECOMMENDATIONS. CONTRACTOR TO SUPPLY THESE ITEMS AT NO COST TO OWNER OR CONSTRUCTION MANAGER.

19. ALL DAMAGE CAUSED TO ANY EXISTING STRUCTURE SHALL BE THE SOLE RESPONSIBILITY OF THE CONTRACTOR. THE CONTRACTOR WILL BE HELD LIABLE FOR ALL REPAIRS REQUIRED FOR EXISTING STRUCTURES IF DAMAGED DURING CONSTRUCTION ACTIVITIES.

20. THE CONTRACTOR SHALL CONTACT "CALL BEFORE YOU DIG" AT LEAST 48 HOURS PRIOR TO ANY EXCAVATIONS AT 1-800-922-4455. ALL UTILITIES SHALL BE IDENTIFIED AND CLEARLY MARKED PRIOR TO ANY EXCAVATION WORK. CONTRACTOR SHALL MAINTAIN AND PROTECT MARKED UTILITIES THROUGHOUT PROJECT COMPLETION.

21. CONTRACTOR SHALL COMPLY WITH OWNERS ENVIRONMENTAL ENGINEER ON ALL METHODS AND PROVISIONS FOR ALL EXCAVATION ACTIVITIES INCLUDING SOIL DISPOSAL. ALL BACKFILL MATERIALS TO BE PROVIDED BY THE CONTRACTOR.

SITE DIRECTIONS

FROM: 500 ENTERPRISE DRIVE
ROCKY HILL, CT

TO: 200 EDGEMARK ACRES
MERIDEN, CT

1. HEAD NORTHEAST ON ENTERPRISE DRIVE TOWARD CAPITAL BLVD	0.3 MI
2. TURN LEFT ONTO CAPITOL BLVD	0.3 MI
3. TURN LEFT ONTO WEST ST	0.3 MI
4. TURN LEFT TO MERGE ONTO I-91 S TOWARD NEW HAVEN	0.3 MI
5. MERGE ONTO I-91 S	8.8 MI
6. TAKE EXIT 18 FOR I-691 W TOWARD MERIDEN/WATERBURY	0.2 MI
7. EXIT 18 TURNS SLIGHTLY RIGHT AND BECOMES I-691 W	2.2 MI
8. TAKE EXIT 6 FOR LEWIS AVE TOWARD CT-71	0.2 MI
9. TURN RIGHT ONTO LEWIS AVE	0.8 MI
10. TURN RIGHT ONTO W MAIN ST	0.8 MI
11. SLIGHT LEFT ONTO JOHNSON AVE	417 FT
12. TAKE THE 1ST LEFT ONTO ALLEN AVE	0.9 MI
13. TURN LEFT ONTO EDGEMARK ACRES, AND THE DESTINATION WILL BE ON THE LEFT	0.4 MI

VICINITY MAP

SCALE: 1" = 1000'

NORTH

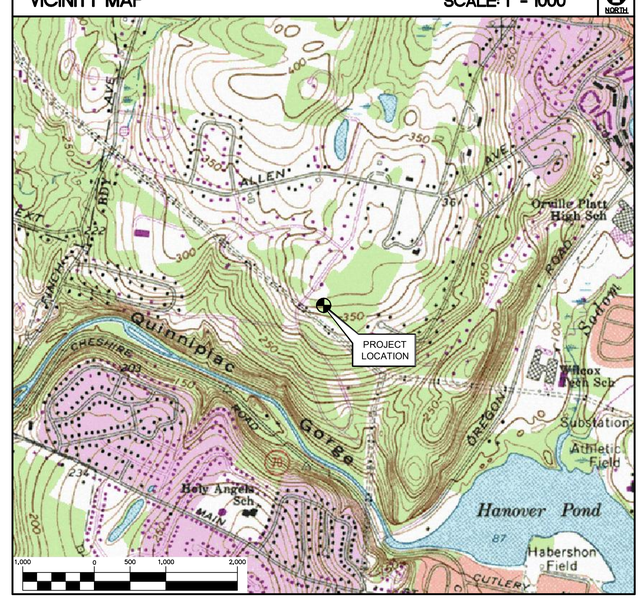

PROJECT SUMMARY

1. THE GENERAL SCOPE OF WORK CONSISTS OF THE FOLLOWING:

- INSTALL NEW AT&T ±8'X8' EQUIPMENT SHELTER WITH 20 KW DIESEL FUELED BACKUP POWER GENERATOR ON A CONCRETE SLAB-ON-GADE.
- A TOTAL OF NINE (9) DIRECTIONAL PANEL ANTENNAS ARE TO BE MOUNTED TO A ANTENNA MAST ATTACHED TO THE EXISTING ±80.1' TALL CL&P STRUCTURE #783 AT A CENTERLINE ELEVATION OF ±90' ABOVE THE EXISTING TOWER BASE PLATE.

2. POWER & TELCO UTILITIES WILL BE ROUTED UNDERGROUND FROM THE EXISTING UTILITY DEMARCS TO THE PROPOSED EQUIPMENT SHELTER. ALL UTILITY WORK AND ROUTING TO BE COORDINATED AND APPROVED BY THE LOCAL UTILITY COMPANIES AND LAND OWNER.

PROJECT INFORMATION

AT&T SITE NUMBER:	CT2117
AT&T SITE NAME:	MERIDEN
SITE ADDRESS:	EVERSOURCE STRUCTURE NO. 783 200 EDGEMARK ACRES MERIDEN, CT 06451
LESSEE/APPLICANT:	AT&T MOBILITY 500 ENTERPRISE DRIVE, SUITE 3A ROCKY HILL, CT 06067
ENGINEER:	CENTEK ENGINEERING, INC. 63-2 NORTH BRANFORD RD. BRANFORD, CT. 06405
PROJECT COORDINATES:	LATITUDE: 41°-31'-51.74"N LONGITUDE: 72°-50'-33.65"W GROUND ELEVATION: ±359.23' A.M.S.L. COORDINATES AND GROUND ELEVATION BASED ON FAA 1-A SURVEY CERTIFICATION AS PREPARED BY CENTEK ENGINEERING, INC., DATED JULY 8, 2017.

SHEET INDEX

SHT. NO.	DESCRIPTION	REV.
T-1	TITLE SHEET	9
N-1	NOTES AND SPECIFICATIONS	9
C-1.0	ABUTTERS MAP	9
C-1.1	SITE/SITE SURVEY PLAN	9
C-2	COMPOUND PLAN, ELEVATION AND ANTENNA MOUNTING DETAILS	9
C-3	SITE DETAILS	9
C-4	SITE DETAILS AND SHELTER ELEVATIONS	9
S-1	SHELTER FOUNDATION PLAN AND DETAILS	9
S-2	TOWER REINFORCEMENT DETAILS	9
E-1	SITE UTILITY PLAN	8
E-2	ELECTRICAL RISER DIAGRAM, NOTES AND LEGEND	8
E-3	ELECTRICAL GROUNDING SYSTEM	8
E-4	ELECTRICAL GROUNDING PLAN	8
E-5	N.U. GROUNDING PLAN, DETAILS AND NOTES	8
E-6	ELECTRICAL DETAILS	8
E-7	ELECTRICAL DETAILS	8
E-8	ELECTRICAL DETAILS	8
E-9	ELECTRICAL SPECIFICATIONS	8

REV.	DATE	DRAWN BY	CHK'D BY	DESCRIPTION
9	8/27/18	TJL	CAG	ISSUED FOR CONSTRUCTION
0	11/10/14	HMR	CFC	CONSTRUCTION - ISSUED FOR CLIENT REVIEW

PROFESSIONAL ENGINEER SEAL

CENTEK engineering
Centered on Solutions
(203) 488-0580
(203) 488-8587 Fax
63-2 North Branford Road
Branford, CT 06405
www.CentekEng.com

AT&T MOBILITY
WIRELESS COMMUNICATIONS FACILITY
MERIDEN
SITE NUMBER: CT2117
200 EDGEMARK ACRES
MERIDEN, CT 06451

DATE:	11/03/14
SCALE:	AS NOTED
JOB NO.:	13305.000
AMENDED JOB NO.:	17010.08

TITLE SHEET

T-1

Sheet No. 1 of 17

NOTES AND SPECIFICATIONS

DESIGN BASIS

GOVERNING CODE/STANDARD(S): 2012 INTERNATIONAL BUILDING CODE; (IBC) AS MODIFIED BY THE 2016 CT STATE SUPPLEMENT/ASCE 7–10

RISK CATEGORY: II (ASCE 7–10 TABLE 1.5–1)

SNOW LOAD

GROUND SNOW LOAD (Pg)	30 PSF	(2016 CSBC/2016 AMENDMENT: APPENDIX 'N')
IMPORTANCE FACTOR (Is)	1.1	(ASCE 7–10 TABLE 1.5–2)
EXPOSURE FACTOR (Ce)	1.0	(ASCE 7–10 TABLE 7–2)
THERMAL FACTOR (Ct)	1.0	(ASCE 7–10 TABLE 7–3)

TRANSMISSION TOWER

WIND LOAD: PER NESC C2–2012 SECTION 25 RULE 250C (TOWER & FOUNDATION) 110 MPH (3 SECOND GUST)

GENERAL NOTES:

1. ALL CONSTRUCTION SHALL BE IN COMPLIANCE WITH THE GOVERNING BUILDING CODE.
2. DRAWINGS INDICATE THE MINIMUM STANDARDS, BUT IF ANY WORK SHOULD BE INDICATED TO BE SUBSTANDARD TO ANY ORDINANCES, LAWS, CODES, RULES, OR REGULATIONS BEARING ON THE WORK, THE CONTRACTOR SHALL INCLUDE IN HIS WORK AND SHALL EXECUTE THE WORK CORRECTLY IN ACCORDANCE WITH SUCH ORDINANCES, LAWS, CODES, RULES OR REGULATIONS WITH NO INCREASE IN COSTS.
3. BEFORE BEGINNING THE WORK, THE CONTRACTOR IS RESPONSIBLE FOR MAKING SUCH INVESTIGATIONS CONCERNING PHYSICAL CONDITIONS (SURFACE AND SUBSURFACE) AT OR CONTIGUOUS TO THE SITE WHICH MAY AFFECT PERFORMANCE AND COST OF THE WORK.
4. DIMENSIONS AND DETAILS SHALL BE CHECKED AGAINST THE PRE MANUFACTURED EQUIPMENT BUILDING SHOP DRAWINGS.
5. THE CONTRACTOR SHALL VERIFY AND COORDINATE THE SIZE AND LOCATION OF ALL OPENINGS, SLEEVES AND ANCHOR BOLTS AS REQUIRED BY ALL TRADES.
6. ALL DIMENSIONS, ELEVATIONS, AND OTHER REFERENCES TO EXISTING STRUCTURES, SURFACE, AND SUBSURFACE CONDITIONS ARE APPROXIMATE. NO GUARANTEE IS MADE FOR THE ACCURACY OR COMPLETENESS OF THE INFORMATION SHOWN. THE CONTRACTOR SHALL VERIFY AND COORDINATE ALL DIMENSIONS, ELEVATIONS, ANGLES WITH EXISTING CONDITIONS AND WITH ARCHITECTURAL AND SITE DRAWINGS BEFORE PROCEEDING WITH ANY WORK.
7. AS THE WORK PROGRESSES, THE CONTRACTOR SHALL NOTIFY THE OWNER OF ANY CONDITIONS WHICH ARE IN CONFLICT OR OTHERWISE NOT CONSISTENT WITH THE CONSTRUCTION DOCUMENTS AND SHALL NOT PROCEED WITH SUCH WORK UNTIL THE CONFLICT IS SATISFACTORILY RESOLVED.
8. THE CONTRACTOR SHALL COMPLY WITH ALL APPLICABLE SAFETY CODES AND REGULATIONS DURING ALL PHASES OF CONSTRUCTION. THE CONTRACTOR IS SOLELY RESPONSIBLE FOR PROVIDING AND MAINTAINING ADEQUATE SHORING, BRACING, AND BARRICADES AS MAY BE REQUIRED FOR THE PROTECTION OF EXISTING PROPERTY, CONSTRUCTION WORKERS, AND FOR PUBLIC SAFETY.
9. THE CONTRACTOR IS SOLELY RESPONSIBLE TO DETERMINE CONSTRUCTION PROCEDURE AND SEQUENCE, AND TO ENSURE THE SAFETY OF THE EXISTING STRUCTURES AND ITS COMPONENT PARTS DURING CONSTRUCTION. THIS INCLUDES THE ADDITION OF WHATEVER SHORING, BRACING, UNDERPINNING, ETC. THAT MAY BE NECESSARY. MAINTAIN EXISTING SITE OPERATIONS, COORDINATE WORK WITH NORTHEAST UTILITIES
10. THE STRUCTURE IS DESIGNED TO BE SELF–SUPPORTING AND STABLE AFTER FOUNDATION REMEDIATION WORK IS COMPLETE. IT IS THE CONTRACTOR'S SOLE RESPONSIBILITY TO DETERMINE ERECTION PROCEDURE AND SEQUENCE AND TO ENSURE THE SAFETY OF THE STRUCTURE AND ITS COMPONENT PARTS DURING ERECTION. THIS INCLUDES THE ADDITION OF WHATEVER SHORING, TEMPORARY BRACING, GUYS OR TIEDOWNS, WHICH MIGHT BE NECESSARY.
11. THE CONTRACTOR SHALL LIMIT THE DURATION OF ANY FOUNDATION MODIFICATION WORK. THE EXISTING FOUNDATION WITHIN THE SHOWN LIMITS IS STABLE FOR WIND SPEEDS LESS THAN 50MPH WITHOUT ICE LOADING. IF HIGHER WIND SPEED OR ICE EVENT IS EXPECTED, THE EXCAVATION AREA SHALL BE FILLED WITH COMPACT FILL MATERIAL.
12. ALL DAMAGE CAUSED TO ANY EXISTING STRUCTURE SHALL BE THE SOLE RESPONSIBILITY OF THE CONTRACTOR. THE CONTRACTOR WILL BE HELD LIABLE FOR ALL REPAIRS REQUIRED FOR EXISTING STRUCTURES IF DAMAGED DURING CONSTRUCTION ACTIVITIES.
13. SHOP DRAWINGS, CONCRETE MIX DESIGNS, TEST REPORTS, AND OTHER SUBMITTALS PERTAINING TO STRUCTURAL WORK SHALL BE FORWARDED TO THE OWNER FOR REVIEW BEFORE FABRICATION AND/OR INSTALLATION IS MADE. SHOP DRAWINGS SHALL INCLUDE ERECTION DRAWINGS AND COMPLETE DETAILS OF CONNECTIONS AS WELL AS MANUFACTURER'S SPECIFICATION DATA WHERE APPROPRIATE. SHOP DRAWINGS SHALL BE CHECKED BY THE CONTRACTOR AND BEAR THE CHECKER'S INITIALS BEFORE BEING SUBMITTED FOR REVIEW.
14. NO DRILLING WELDING OR TAPING ON CL&P OWNED EQUIPMENT.
15. REFER TO DRAWING T1 FOR ADDITIONAL NOTES AND REQUIREMENTS.

SITE NOTES

1. THE CONTRACTOR SHALL CALL UTILITIES PRIOR TO THE START OF CONSTRUCTION.
2. ACTIVE EXISTING UTILITIES, WHERE ENCOUNTERED IN THE WORK, SHALL BE PROTECTED AT ALL TIMES. THE ENGINEER SHALL BE NOTIFIED IMMEDIATELY, PRIOR TO PROCEEDING, SHOULD ANY UNCOVERED EXISTING UTILITY PRECLUDE COMPLETION OF THE WORK IN ACCORDANCE WITH THE CONTRACT DOCUMENTS.
3. ALL RUBBISH, STUMPS, DEBRIS, STICKS, STONES AND OTHER REFUSE SHALL BE REMOVED OFF SITE AND BE LEGALLY DISPOSED, AT NO ADDITIONAL COST.
4. THE SITE SHALL BE GRADED TO CAUSE SURFACE WATER TO FLOW AWAY FROM THE EQUIPMENT AND TOWER AREAS.
5. NO FILL OR EMBANKMENT MATERIAL SHALL BE PLACED ON FROZEN GROUND. FROZEN MATERIALS, SNOW OR ICE SHALL NOT BE PLACED IN ANY FILL OR EMBANKMENT.
6. THE SUBGRADE SHALL BE COMPACTED AND BROUGHT TO A SMOOTH UNIFORM GRADE PRIOR TO FINISHED SURFACE APPLICATION.
7. THE AREAS OF THE COMPOUND DISTURBED BY THE WORK SHALL BE RETURNED TO THEIR ORIGINAL CONDITION.
8. CONTRACTOR SHALL MINIMIZE DISTURBANCE TO EXISTING SITE DURING CONSTRUCTION. EROSION CONTROL MEASURES, SHALL BE IN CONFORMANCE WITH THE LOCAL GUIDELINES FOR EROSION AND SEDIMENT CONTROL.
9. IF ANY FIELD CONDITIONS EXIST WHICH PRECLUDE COMPLIANCE WITH THE DRAWINGS, THE CONTRACTOR SHALL IMMEDIATELY NOTIFY THE ENGINEER AND SHALL PROCEED WITH AFFECTED WORK AFTER CONFLICT IS SATISFACTORILY RESOLVED.
10. DIMENSIONS AND DETAILS SHALL BE CHECKED AGAINST THE PRE MANUFACTURED EQUIPMENT BUILDING SHOP DRAWINGS.
11. THE CONTRACTOR SHALL VERIFY AND COORDINATE THE SIZE AND LOCATION OF ALL OPENINGS, SLEEVES AND ANCHOR BOLTS AS REQUIRED BY ALL TRADES.

EARTHWORK NOTES

1. COMPACTED GRAVEL FILL SHALL BE FURNISHED AND PLACED AS A FOUNDATION FOR STRUCTURES, WHERE SHOWN ON THE CONTRACT DRAWINGS OR DIRECTED BY THE ENGINEER.
2. CRUSHED STONE FILL SHALL BE PLACED IN 12" MAX. LIFTS AND CONSOLIDATED USING A HAND OPERATED VIBRATORY PLATE COMPACTOR WITH A MINIMUM OF 2 PAQSSES OF COMPACTOR PER LIFT.
3. COMPACTED GRAVEL FILL TO BE WELL GRADED BANK RUN GRAVEL MEETING THE FOLLOWING GRADATION REQUIREMENTS:

SIEVE DESIGNATION	% PASSING
1 ½"	100
No. 4	40–70
No. 100	5–20
No. 200	4–8

4. CRUSHED STONE TO BE UNIFORMLY GRADED, CLEAN, HARD PROCESS AGGREGATE MEETING THE FOLLOWING GRADATION REQUIREMENTS:

SIEVE DESIGNATION	% PASSING
1"	100
¾"	90–100
½"	0–15
⅜"	0–5

5. SELECT BACKFILL FOR FOUNDATION WALLS SHALL BE FREE OF ORGANIC MATERIAL, TOPSOIL, DEBRIS AND BOULDERS LARGER THAN 6".
6. GRAVEL AND GRANULAR FILL SHALL BE INSTALLED IN 10" MAX. LIFTS. COMPACTED TO 95% MIN. AT MAX. DRY DENSITY.
7. NON WOVEN GEOTEXTILE FOR SEPARATION PURPOSES SHALL BE MIRAFI 140N, OR ENGINEER APPROVED EQUAL.

FOUNDATION CONSTRUCTION NOTES

1. ALL FOOTINGS SHALL BE PLACED ON SUITABLE, COMPACTED SOIL HAVING ADEQUATE BEARING CAPACITY AND FREE OF ORGANIC CONTENT, CLAY, OR OTHER UNSUITABLE MATERIAL. ADDITIONAL EXCAVATION MAY BE REQUIRED BELOW FOOTING ELEVATIONS INDICATED IF UNSUITABLE MATERIAL IS ENCOUNTERED.
2. SUBGRADE PREPARATION: IF UNSUITABLE SOIL IS ENCOUNTERED, REMOVE ALL UNSUITABLE MATERIALS FROM BELOW PROPOSED STRUCTURE FOUNDATIONS AND COMPACT EXPOSED SOIL SURFACES. PLACE AND COMPACT APPROVED GRAVEL FILL. PLACEMENT OF ALL COMPACTED FILL MUST BE UNDER SUPERVISION OF AN APPROVED TESTING LABORATORY. FILL SHALL BE COMPACTED IN LAYERS NOT TO EXCEED 10" BEFORE COMPACTION. DETERMINE MAXIMUM DRY DENSITY IN ACCORDANCE WITH ASTM D1557–70 AND MAKE ONE (1) FIELD DENSITY TEST IN ACCORDANCE WITH ASTM D2167–66 FOR EACH 50 CUBIC YARDS OF COMPACTED FILL. BUT NOT LESS THAN ONE (1) PER LAYER, TO INSURE COMPACTION TO 95% OF MAX. DRY DENSITY.
3. ALL SOIL SURROUNDING AND UNDER ALL FOOTINGS SHALL BE KEPT REASONABLY DRY AND PROTECTED FROM FREEZING AND FROST ACTION DURING THE COURSE OF CONSTRUCTION.
4. WHERE GROUNDWATER IS ENCOUNTERED, DEWATERING SHALL BE ACCOMPLISHED CONTINUOUSLY AND COMPLETELY DURING FOUNDATION CONSTRUCTION. PROVIDE CRUSHED STONE AS REQUIRED TO STABILIZE FOOTING SUBGRADE.
5. ALL FOOTINGS ARE TO REST ON FIRM SOIL, REGARDLESS OF ELEVATIONS SHOWN ON THE DRAWINGS, BUT IN NO CASE MAY FOOTING ELEVATIONS BE HIGHER THAN INDICATED ON THE FOUNDATION PLAN, UNLESS SPECIFICALLY DIRECTED BY THE ENGINEER.
6. FOUNDATION WATERPROOFING AND DAMPPROOFING SHALL COMPLY WITH BUILDING CODE REQUIREMENTS UNLESS A MORE SUBSTANTIAL SYSTEM IS INDICATED OR SPECIFIED.

CONCRETE CONSTRUCTION NOTES

1. CONCRETE CONSTRUCTION SHALL CONFORM TO THE FOLLOWING STANDARDS:

ACI 211 – STANDARD PRACTICE FOR SELECTING PROPORTIONS FOR NORMAL AND HEAVYWEIGHT CONCRETE.

ACI 301 – SPECIFICATIONS FOR STRUCTURAL CONCRETE FOR BUILDINGS.

ACI 302 – GUIDE FOR CONCRETE FLOOR AND SLAB CONSTRUCTION

ACI 304 – RECOMMENDED PRACTICE FOR MEASURING, MIXING, TRANSPORTING, AND PLACING CONCRETE.

ACI 306.1 STANDARD SPECIFICATION FOR COLD WEATHER CONCRETING

ACI 318 – BUILDING CODE REQUIREMENTS FOR REINFORCED CONCRETE.

2. CONCRETE SHALL DEVELOP COMPRESSIVE STRENGTH IN 28 DAYS AS FOLLOWS:

SLABS ON GRADE	4,000 PSI
ALL OTHER CONCRETE	4,000 PSI

- PORTLAND CEMENT: ASTM C150, TYPE II, (540 LBS/CUBIC YARD)
- AGGREGATE: ASTM C33, No. 67, TYPICAL
- WATER: POTABLE WITH MAXIMUM WATER CEMENT RATIO OF .55
- SLUMP: 3" TO 4"
- ADMIXTURES: USE AIR ENTRAINING AGENT CONFORMING TO ASTM C260 WITH 4 TO 6% TOTAL AIR. USE WATER REDUCING AGENT CONFORMING TO ASTM C494, TYPE A, IN ALL CONCRETE. CALCIUM CHLORIDE MAY NOT BE USED TO ACCELERATE THE CONCRETE SETTING TIME.

3. REINFORCING STEEL SHALL BE 60,000 PSI YIELD STRENGTH.
4. WELDED WIRE FABRIC SHALL CONFORM TO ASTM– A–185.
5. ALL DETAILING, FABRICATION, AND ERECTION OF REINFORCING BARS, UNLESS OTHERWISE NOTED, MUST FOLLOW THE LATEST ACI CODE AND LATEST ACI "MANUAL OF STANDARD PRACTICE FOR DETAILING REINFORCED CONCRETE STRUCTURES".
6. CONCRETE COVER OVER REINFORCING SHALL CONFORM TO THE FOLLOWING, UNLESS OTHERWISE SHOWN:

CONCRETE CAST AGAINST & PERMANENTLY EXPOSED TO EARTH	3 INCHES
CONCRETE EXPOSED TO EARTH OR WEATHER:	
#6 THROUGH #18 BARS	2 INCHES
#5 BAR, W31 OR D31 WIRE, AND SMALLER	1–1/2 INCHES
CONCRETE NOT EXPOSED TO WEATHER OR IN CONTACT WITH THE GROUND:	
#14 THROUGH #18 BARS	1–1/2 INCHES
#11 BAR AND SMALLER	3/4 INCHES

7. NO STEEL WIRE, METAL FORM TIES, OR ANY OTHER METAL SHALL REMAIN WITHIN THE REQUIRED COVER OF ANY CONCRETE SURFACE.
8. ALL REINFORCEMENT SHALL BE CONTINUOUS UNLESS OTHERWISE NOTED. SPLICES SHALL BE WELL STAGGERED. ADDITIONAL BARS AND SPECIAL BENDING DETAILS ARE REQUIRED AT INTERSECTING WALLS AND AT JOINTS. SUCH DETAILS SHALL COMPLY WITH ACI 315 RECOMMENDATIONS UNLESS OTHERWISE SHOWN.
9. NO TACK WELDING OF REINFORCING WILL BE PERMITTED.
10. NO CALCIUM CHLORIDE OR ADMIXTURES CONTAINING MORE THAN 1% CHLORIDE BY WEIGHT OF ADMIXTURE SHALL BE USED IN THE CONCRETE.
11. UNLESS OTHERWISE NOTED, ALL LAP SPLICES SHALL BE 48 BAR DIAMETERS.
12. SLAB ON GRADE FINISHES:

EXTERIOR SLAB: NON–SLIP BROOM FINISH
INTERIOR SLAB: STEEL TROWEL FINISH

13. INSPECTION AND TESTING OF CONCRETE WORK SHALL BE PERFORMED BY AN INDEPENDENT TESTING LABORATORY, PAID BY THE OWNER, AND APPROVED BY THE ENGINEER. THE INSPECTOR SHALL OBSERVE CONDITION OF SOILS AND FORMWORK BEFORE FOOTINGS ARE PLACED, SIZE, SPACING AND LOCATION OF REINFORCEMENT, AND PLACEMENT OF CONCRETE.
14. THE TESTING COMPANY SHALL ALSO OBTAIN A MINIMUM OF THREE (3) COMPRESSIVE STRENGTH TEST SPECIMENS FOR EACH CONCRETE MIX DESIGN. ONE SPECIMEN TESTED AT 7 DAYS, ONE AT 28 DAYS, AND ONE HELD IN RESERVE FOR FUTURE TESTING, IF NEEDED.
15. FOUR COPIES OF ALL INSPECTION TEST REPORTS SHALL BE SUBMITTED TO THE ENGINEER WITHIN TEN (10) WORKING DAYS OF THE DATE OF INSPECTION.

STRUCTURAL STEEL

1. ALL STRUCTURAL STEEL IS DESIGNED BY ALLOWABLE STRESS DESIGN (ASD)

A. STRUCTURAL STEEL (W SHAPES)–––ASTM A992 (FY = 50 KSI)
B. STRUCTURAL STEEL (OTHER SHAPES)–––ASTM A36 (FY = 36 KSI)
C. STRUCTURAL HSS (RECTANGULAR SHAPES)–––ASTM A500 GRADE B, (FY = 46 KSI)
D. STRUCTURAL HSS (ROUND SHAPES)–––ASTM A500 GRADE B, (FY = 42 KSI)
E. PIPE–––ASTM A53 (FY = 35 KSI)
F. CONNECTION BOLTS–––ASTM A325–N
G. U–BOLTS–––ASTM A36
H. ANCHOR RODS–––ASTM F 1554
I. WELDING ELECTRODE–––ASTM E 70XX

2. CONTRACTOR TO REVIEW ALL SHOP DRAWINGS AND SUBMIT COPY TO ENGINEER FOR APPROVAL. DRAWINGS MUST BEAR THE CHECKER'S INITIALS BEFORE SUBMITTING TO THE ENGINEER FOR REVIEW. SHOP DRAWINGS SHALL INCLUDE THE FOLLOWING: SECTION PROFILES, SIZES, CONNECTION ATTACHMENTS, REINFORCING, ANCHORAGE, SIZE AND TYPE OF FASTENERS AND ACCESSORIES. INCLUDE ERECTION DRAWINGS, ELEVATIONS AND DETAILS.
3. STRUCTURAL STEEL SHALL BE DETAILED, FABRICATED AND ERECTED IN ACCORDANCE WITH THE LATEST PROVISIONS OF AISC MANUAL OF STEEL CONSTRUCTION.
4. PROVIDE ALL PLATES, CLIP ANGLES, CLOSURE PIECES, STRAP ANCHORS, MISCELLANEOUS PIECES AND HOLES REQUIRED TO COMPLETE THE STRUCTURE.
5. FIT AND SHOP ASSEMBLE FABRICATIONS IN THE LARGEST PRACTICAL SECTIONS FOR DELIVERY TO SITE.
6. INSTALL FABRICATIONS PLUMB AND LEVEL, ACCURATELY FITTED, AND FREE FROM DISTORTIONS OR DEFECTS.
7. AFTER ERECTION OF STRUCTURES, TOUCHUP ALL WELDS, ABRASIONS AND NON–GALVANIZED SURFACES WITH A 95% ORGANIC ZINC RICH PAINT IN ACCORDANCE WITH ASTM 780.
8. ALL STEEL MATERIAL (EXPOSED TO WEATHER) SHALL BE GALVANIZED AFTER FABRICATION IN ACCORDANCE WITH ASTM A123 "ZINC (HOT DIPPED GALVANIZED) COATINGS" ON IRONS AND STEEL PRODUCTS.
9. ALL BOLTS, ANCHORS AND MISCELLANEOUS HARDWARE SHALL BE GALVANIZED IN ACCORDANCE WITH ASTM A153 "ZINC COATING (HOT–DIP) ON IRON AND STEEL HARDWARE".
10. CONTRACTOR SHALL COMPLY WITH AWS CODE FOR PROCEDURES APPEARANCE AND QUALITY OF WELDS, AND WELDING PROCESSES SHALL BE QUALIFIED IN ACCORDANCE WITH AWS "STANDARD QUALIFICATION PROCEDURES". ALL WELDING SHALL BE DONE USING E70XX ELECTRODES AND WELDING SHALL CONFORM TO AISC AND D1.1 WHERE FILLET WELD SIZES ARE NOT SHOWN, PROVIDE THE MINIMUM SIZE PER TABLET J2.4 IN THE AISC "MANUAL OF STEEL CONSTRUCTION" 9TH EDITION. AT THE COMPLETION OF WELDING, ALL DAMAGE TO GALVANIZED COATING SHALL BE REPAIRED.
11. THE ENGINEER SHALL BE NOTIFIED OF ANY INCORRECTLY FABRICATED, DAMAGED OR OTHERWISE MISFITTING OR NON CONFORMING MATERIALS OR CONDITIONS TO REMEDIAL OR CORRECTIVE ACTION. ANY SUCH ACTION SHALL REQUIRE ENGINEER REVIEW.
12. CONNECTION ANGLES SHALL HAVE A MINIMUM THICKNESS OF 1/4 INCHES.
13. STRUCTURAL CONNECTION BOLTS SHALL CONFORM TO ASTM A325. ALL BOLTS SHALL BE 3/4" DIAMETER MINIMUM AND SHALL HAVE A MINIMUM OF TWO BOLTS, UNLESS OTHERWISE ON THE DRAWINGS.
14. LOCK WASHER ARE NOT PERMITTED FOR A325 STEEL ASSEMBLIES.
15. SHOP CONNECTIONS SHALL BE WELDED OR HIGH STRENGTH BOLTED.
16. MILL BEARING ENDS OF COLUMNS, STIFFENERS, AND OTHER BEARING SURFACES TO TRANSFER LOAD OVER ENTIRE CROSS SECTION.
17. FABRICATE BEAMS WITH MILL CAMBER UP.
18. LEVEL AND PLUMB INDIVIDUAL MEMBERS OF THE STRUCTURE TO AN ACCURACY OF 1:500, BUT NOT TO EXCEED 1/4" IN THE FULL HEIGHT OF THE COLUMN.
19. COMMENCEMENT OF STRUCTURAL STEEL WORK WITHOUT NOTIFYING THE ENGINEER OF ANY DISCREPANCIES WILL BE CONSIDERED ACCEPTANCE OF PRECEDING WORK.
20. INSPECTION AND TESTING OF ALL WELDING AND HIGH STRENGTH BOLTING SHALL BE PERFORMED BY AN INDEPENDENT TESTING LABORATORY.
21. FOUR COPIES OF ALL INSPECTION TEST REPORTS SHALL BE SUBMITTED TO THE ENGINEER WITHIN TEN (10) WORKING DAYS OF THE DATE OF INSPECTION.

STRUCTURAL LUMBER CONSTRUCTION:

1. STRUCTURAL LUMBER USED FOR JOISTS, RAFTERS AND COLUMNS SHALL BE NO. 2 GRADE DOUGLAS FIR AND SHALL HAVE NOT LESS THAN THE FOLLOWING ALLOWABLE UNIT STRESSES, BEFORE ADJUSTMENT FOR DURATION FACTORS, BASED ON 1997 NDS SPECIFICATION:

EXTREME FIBER IN BENDING	Fb 875 PSI
HORIZONTAL SHEAR	Fv 95 PSI
TENSION PARALLEL TO GRAIN	Ft = 575 PSI
COMPRESSION PERPENDICULAR TO GRAIN	Fc 625 PSI
COMPRESSION PARALLEL TO GRAIN .	Fc = 1,350 PSI
MODULUS OF ELASTICITY	E = 1,600,000 PSI

2. LIGHT FRAMING LUMBER USED FOR STUDS, PARTITIONS, AND MISCELLANEOUS FRAMING SHALL NOT BE LESS THAN STANDARD GRADE AND SHALL HAVE THE FOLLOWING MINIMUM ALLOWABLE UNIT STRESSES:

EXTREME FIBER IN BENDING	Fb 675 PSI
TENSION PARALLEL TO GRAIN	Ft = 450 PSI
COMPRESSION PARALLEL TO GRAIN	Fc 850 PSI
MODULUS OF ELASTICITY	E = 1,400,000 PSI

3. MOISTURE CONTENT OF ALL FRAMING LUMBER WHEN DELIVERED TO THE PROJECT SITE SHALL NOT EXCEED 19%.
4. EXCEPT WHERE STRICTER PROVISIONS ARE INDICATED, 2003 INTERNATIONAL RESIDENTIAL CODE SHALL GOVERN ALL WOOD CONSTRUCTION INCLUDING, BUT NOT LIMITED TO: MATERIALS, FASTENERS (TYPE, SIZE, SPACING, EMBEDMENT), SHOP AND FIELD FABRICATION, CONNECTIONS, AND INSTALLATION.
5. NOT USED
6. NAIL PENETRATION INTO WALL STUDS AND CORNER POSTS SHALL BE AT LEAST 1 3/4 INCHES.
7. PROVIDE AND INSTALL TIMBER POSTS (6x6 OR BUILT UP 2x6 MEMBERS) AT ALL EXTERIOR CORNERS AND ANCHOR TO FOUNDATION WALLS, AND BETWEEN EACH FRAMING LEVEL TO RESIST UPLIFT FORCES. PROVIDE AND INSTALL SIMPSON HDU5–SDS2.5 (HOLD DOWN) ANCHORS WITH SSTB24 ANCHOR RODS OR EQUIVALENT AT FOUNDATION WALLS. PROVIDE AND INSTALL HDU2–SDS2.5 ANCHORS WITH SSTB16 ANCHOR RODS AND POSTS EACH SIDE OF DOOR OPENINGS GREATER THAN 4'–0" IN EXTERIOR WALLS.
8. HORIZONTAL (SLOPED) DIAPHRAGMS: THE FLOOR AND ROOF ARE DESIGNED AS DIAPHRAGMS TO RESIST LATERAL LOADS. FLOOR SHEATHIING SHALL BE 3/4 INCH THICK APA RATED STURDI–FLOOR TONGUE AND GROOVE PLYWOOD. FLOOR SHEATHING SHALL BE ATTACHED TO FLOOR JOISTS WITH CONSTRUCTION ADHESIVE AND 8D NAILS. ROOF SHEATHIING SHALL BE 5/8 INCH THICK CDX PLYWOOD. ROOF SHEATHING SHALL BE ATTACHED TO RAFTERS WITH 8D NAILS.

   MAXIMUM NAIL SPACING OF FLOOR AND ROOF SHEATHING SHALL BE 6" o.c. ALONG ALL EDGES. ALL EDGES SHALL BE SUPPORTED WITH SOLID BLOCKING. FIELD NAILING SHALL BE 12" o.c. NAIL PENETRATION INTO SUPPORTING MEMBER SHALL BE AT LEAST 1–1 /2 INCHES.
9. ALL DOUBLE TOP PLATES, RIM JOISTS, AND HEADERS IN EXTERIOR WALLS ARE USED AS DIAPHRAGM CHORD MEMBERS. SPLICES IN DOUBLE TOP PLATES SHALL BE STAGGERED AND METAL STRAPS PROVIDED TO CONNECT RIM JOISTS WITH HEADER AND LINTEL BEAMS.
10. FRAMING ANCHORS AND RELATED CONNECTION HARDWARE SHALL BE FABRICATED BY SIMPSON STRONG–TIE COMPANY, INC., OR EQUAL. SUCH PRODUCTS SHALL BE PROPERLY INSTALLED WITH THE TYPE AND NUMBER OF FASTENERS SPECIFIED BY THE MANUFACTURER FOR THE INTENDED USE.

    JOIST AND BEAM HANGERS AND OTHER FRAMING ANCHORS SHALL BE SIZED FOR REACTIONS SHOWN ON THE DRAWINGS UNLESS A SPECIFIC HANGER OR FRAMING ANCHOR IS INDICATED. SUBMIT SHOP DRAWINGS INDICATING PROPOSED HANGER SIZE AND TYPE.

    CONNECTION HARDWARE AND FASTENERS SHALL BE GALVANIZED OR STAINLESS STEEL. FRAMING ANCHORS AND FASTENERS THAT ARE NOT EXPOSED TO THE WEATHER SHALL BE G90 GALVANIZED. FRAMING ANCHORS AND FASTENERS THAT ARE EXPOSED TO THE WEATHER SHALL BE STAINLESS STEEL.
11. ALL STRUCTURAL WOOD MEMBERS SHALL BE PROPERLY FIELD FABRICATED TO REQUIRED LENGTHS AND SPACING. PROVIDE SUITABLE CONNECTIONS, BEARING LENGTHS, STIFFENERS, BRIDGING, HEADERS, AND OTHER SPECIAL FRAMING AS INDICATED OR REQUIRED BY BUILDING CODE FOR COMPLETE INSTALLATION. ADDITIONAL JOISTS ARE REQUIRED AT FRAMED OPENINGS, AT CONCENTRATED LOADS, AND DIRECTLY BELOW PARTITIONS THAT ARE PARALLEL WITH JOISTS.
12. ALL FRAMING (ROOF, FLOORS, WALLS) SHALL BE PROPERLY ANCHORED TO EACH OTHER AND TO CONCRETE FOUNDATIONS AGAINST UPLIFT BY ADEQUATELY SPLICED AND NAILED ROOF AND WALL SHEATHING, BY METAL STRAPS, HURRICANE ANCHORS, OR SIMILAR CONNECTION HARDWARE.
13. PROVIDE HEAVY HEX NUTS AND WASHERS AT ALL ANCHOR BOLTS AND AT WOOD FRAME CONNECTIONS TO AVOID CRUSHING WOOD FIBERS.
14. PRESSURE TREATED LUMBER SHALL BE USED FOR FOUNDATION SILLS AND FOR ALL LUMBER EXPOSED TO THE WEATHER AND IN DIRECT CONTACT WITH CONCRETE OR MASONRY FOUNDATIONS.
15. PROVIDE SOLID BLOCKING BETWEEN ADJACENT FLOOR JOISTS AND ROOF RAFTERS, AT ALL SUPPORTS AND TOP FLANGE HANGERS, TO PREVENT MEMBER ROTATION. ALLOW SUFFICIENT CLEARANCE FOR CROSS VENTILATION AT ROOF.
16. PROVIDE SOLID BLOCKING AND/OR MINIMUM 1"x3" DIAGONAL BRIDGING AT 7 FEET ON CENTER MAXIMUM AT ALL WOOD FRAMING. IF SOLID BLOCKING IS USED, IT SHALL EXTEND THE FULL DEPTH OF THE MEMBER IT IS LATERALLY SUPPORTING, UNLESS OTHERWISE NOTD.
17. EXTERIOR WALLS AND INTERIOR LOAD–BEARING WALLS SHALL BE FRAMED WITH 2x6 STUDS SPACED AT 16 INCHES ON CENTER AND SHALL HAVE DOUBLE TOP PLATES. INTERIOR NON–LOAD–BEARING PARTITIONS SHALL BE FRAMED WITH 2x4 STUDS SPACED AT 16 INCHES ON CENTER. UNLESS OTHERWISE INDICATED, BEARING WALLS AND PARTITIONS THAT ARE PARALLEL WITH FLOOR JOISTS SHALL BE FULLY SUPPORTED BY DOUBLE JOISTS. INSTALL SOLID FULL–DEPTH BLOCKING BETWEEN JOISTS DIRECTLY BELOW BEARING WALLS AND PARTITIONS THAT ARE PERPENDICULAR WITH FLOOR JOISTS.

REV.	DATE	DRAWN BY	CHK'D BY	DESCRIPTION
9	8/27/18	TJL	CAG	ISSUED FOR CONSTRUCTION
0	11/10/14	HMR	CFC	CONSTRUCTION – ISSUED FOR CLIENT REVIEW

PROFESSIONAL ENGINEER SEAL

at&t

SAI communications

CENTEK engineering
Centered on Solutions™
(203) 488-0580
(203) 488-8587 Fax
63-2 North Branford Road
Branford, CT 06405
www.CentekEng.com

AT&T MOBILITY
WIRELESS COMMUNICATIONS FACILITY
MERIDEN
SITE NUMBER: CT2117
200 EDGEMARK ACRES
MERIDEN, CT 06451

DATE:	11/03/14
SCALE:	AS NOTED
JOB NO.:	13305.000
AMENDED JOB NO.:	17010.08

NOTES AND SPECIFICATIONS

N–1

MISCELLANEOUS SITE INFORMATION

DISTANCE TO NEAREST OFF SITE RESIDENCE*	=	±153'
NUMBER OF RESIDENTIAL STRUCTURES WITHIN 1000' OF TOWER	=	±42
DISTANCE TO NEAREST PROPERTY LINE*	=	±47'
DISTANCE TO NEARBY SCHOOLS AND CHILD DAY CARE CENTERS*:		
H.C. WILCOX HIGH SCHOOL	=	±0.63 mi
ORVILLE H. PLATT HIGH SCHOOL	=	±0.84 mi
LINCOLN MIDDLE SCHOOL	=	±1.03 mi
MERIDEN KINDERCARE	=	±1.11 mi
BENJAMIN FRANKLIN SCHOOL	=	±1.41 mi
CRUZ FAMILY DAYCARE	=	±1.78 mi

* DISTANCES TAKEN FROM CENTER OF TOWER

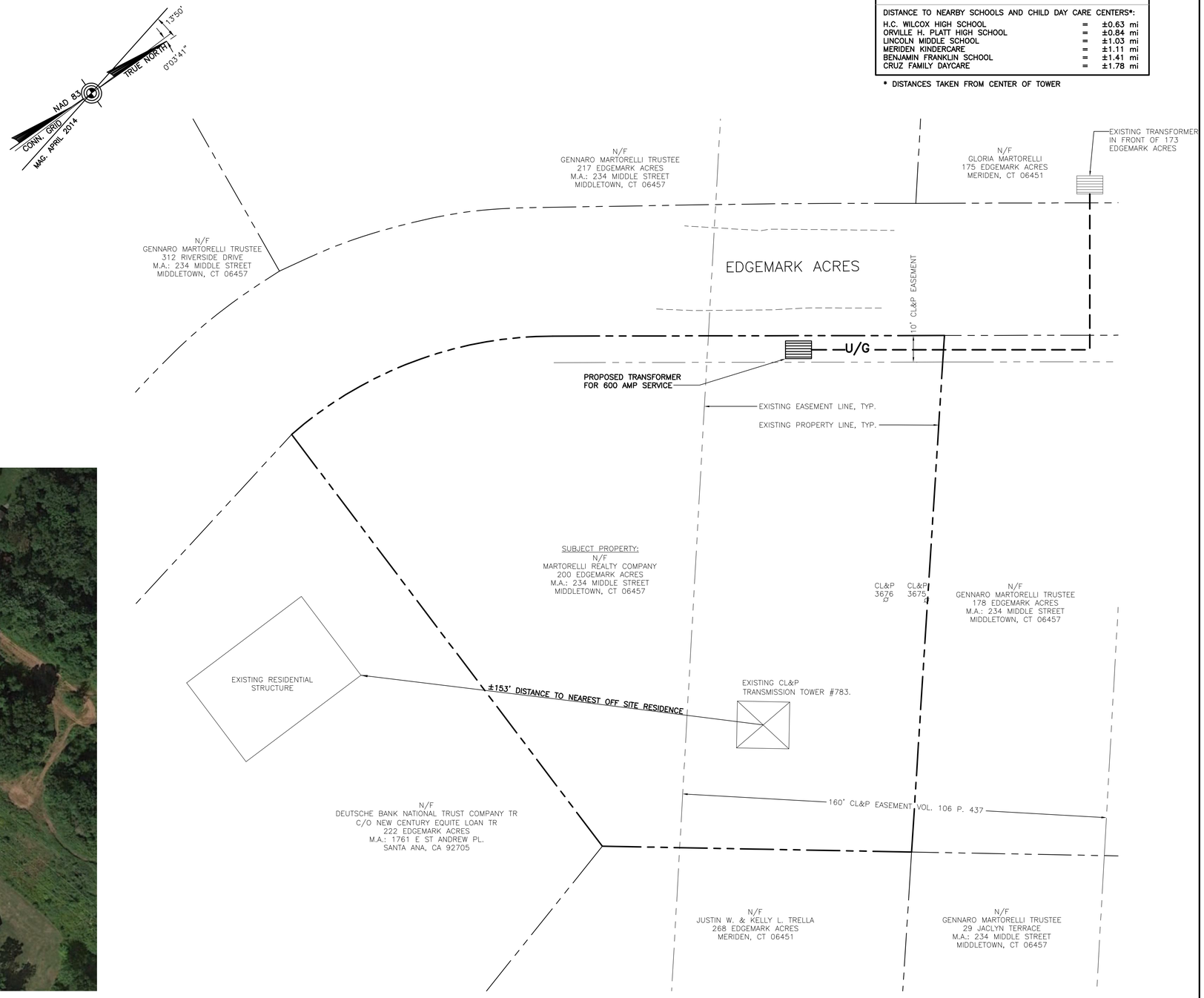

2 C-1.0 **AERIAL PHOTO**
SCALE: 1" = 100'

APPROXIMATE NORTH

GRAPHIC SCALE
100 0 50 100 200 400
(IN FEET)
1 inch = 100 ft.

1 C-1.0 **ABUTTERS MAP**
SCALE: 1" = 20'

GRAPHIC SCALE
20 0 10 20 40 80
(IN FEET)
1 inch = 20 ft.

REV.	DATE	DRAWN BY	CHK'D BY	DESCRIPTION
9	8/27/18	TJL	CAG	ISSUED FOR CONSTRUCTION
0	11/10/14	HMR	CFC	CONSTRUCTION – ISSUED FOR CLIENT REVIEW

PROFESSIONAL ENGINEER SEAL

STATE OF CONNECTICUT · CHRISTOPHER FARLEY CRAMER · 27517 · LICENSED PROFESSIONAL ENGINEER

at&t

SAI communications

CENTEK engineering
Centered on Solutions™
(203) 488-0580
(203) 488-8587 Fax
63-2 North Branford Road
Branford, CT 06405
www.CentekEng.com

AT&T MOBILITY

WIRELESS COMMUNICATIONS FACILITY

MERIDEN

SITE NUMBER: CT2117

200 EDGEMARK ACRES
MERIDEN, CT 06451

DATE:	11/03/14
SCALE:	AS NOTED
JOB NO.:	13305.000
AMENDED JOB NO.:	17010.08

ABUTTERS MAP

C-1.0

Sheet No. 3 of 17

SYMBOLS LEGEND

- PROPERTY LINE
- EASEMENT LINE
- DRIVE (EXISTING)
- 650 CONTOUR LINE
- 650 GRADING LINE
- UTILITY POLE
- MH EXISTING MANHOLE
- —x—x—x— FENCE LINE
- PROPOSED SPOT GRADE
- CB EXISTING CATCH BASIN
- WV EXISTING WATER VALVE
- GV EXISTING GAS VALVE

NOTES

USE OF METAL BASED TAPE MEASURES FOR PURPOSES OF TOWER AND ANTENNA HEIGHT MEASUREMENTS IS **PROHIBITED** WHEN THE HEIGHT OF THE TOWER/ANTENNA MAST IS **GREATER** THAN THE DISTANCE TO THE NEAREST POWER LINE.

HEIGHT OF TOWER/ANTENNA MAST (A.G.L)	=	±93'
DISTANCE TO NEAREST POWER LINE	=	±21'

SURVEY NOTES

THIS SURVEY AND MAP HAS BEEN PREPARED IN ACCORDANCE WITH SECTIONS 20–300B–1 THRU 20–300B–20 OF THE REGULATIONS OF CONNECTICUT STATE AGENCIES – "MINIMUM STANDARDS FOR SURVEYS AND MAPS IN THE STATE OF CONNECTICUT" AS ENDORSED BY THE CONNECTICUT ASSOCIATION OF LAND SURVEYORS, INC. ON SEPT. 26, 1996. THE LIMITED TOPOGRAPHIC SURVEY PORTION OF THIS PLAN CONFORMS TO A VERTICAL ACCURACY OF CLASS T–2 AND IS INTENDED TO BE USED TO DEPICT A PROPOSED TELECOMMUNICATION SITE.

THE PROPERTY/BOUNDARY LINES DEPICTED HEREON ARE COMPILED FROM OTHER MAPS, DEEDS AND LIMITED FIELD SURVEY. THESE LINES ARE NOT TO BE CONSTRUED AS A BOUNDARY OPINION AND ARE SUBJECT TO CHANGE AS AN ACCURATE FIELD SURVEY MAY DISCLOSE. PROPERTY MAY BE SUBJECT TO ENCUMBRANCES, EASEMENTS, RIGHTS OF WAY AS A TITLE SEARCH REPORT MAY DISCLOSE. PLANIMETRIC FEATURES SUCH AS PARKING AREAS, PAVED DRIVE ARE COMPILED FROM OTHER MAPS AND LIMITED FIELD SURVEY.

COORDINATES REFER TO NAD 83.

VERTICAL DATUM IS BASED ON NGVD 29.

PARCEL OWNER OF RECORD: MARTORELLI REALTY CO
234 MIDDLE STREET
MIDDLETOWN, CT 06457

PARCEL AREA = 0.83± ACRES.

PARCEL IS IN R–R ZONING DISTRICT.

PARCEL ID 0627–0225–004L–0043 ON THE MERIDEN ASSESSOR'S MAP.

SUBJECT PARCEL IS NOT IN A FLOOD ZONE AS SHOWN ON THE FLOOD INSURANCE RATE MAP, NEW HAVEN COUNTY, CONNECTICUT PANEL 164 OF 635, MAP NUMBER 09009C0164H, MAP EFFECTIVE DATE DECEMBER 17, 2010, BY FEDERAL EMERGENCY MANAGEMENT AGENCY.

REFERENCE IS MADE TO THE FOLLOWING MAPS:

1. SUBDIVISION, ROLLING HILLS PHASE II, MERIDEN, CT, SCALE 1"=100', DATED 5–6–88, REVISED THROUGH 12–6–90. RECORDED AS MAP #5119 OF THE MERIDEN LAND RECORDS.

NOT ALL IMPROVEMENTS SHOWN.

TO MY KNOWLEDGE AND BELIEF THIS MAP IS SUBSTANTIALLY CORRECT AS NOTED HEREON

THIS MAP IS NOT VALID WITHOUT A LIVE SIGNATURE AND SEAL

A. RAFAEL MARTINEZ LLS #18833 DATE

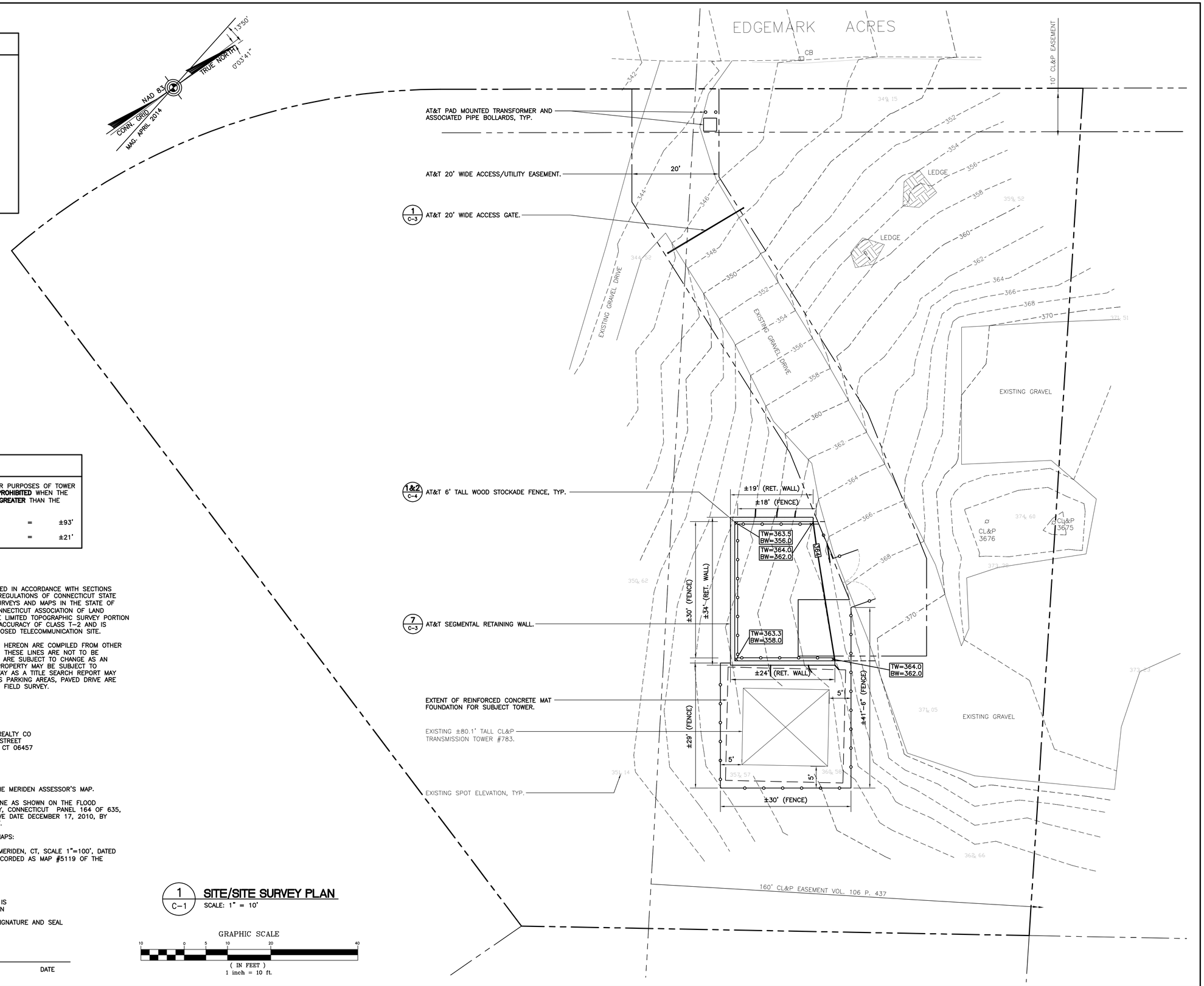

1 / C-1 **SITE/SITE SURVEY PLAN**
SCALE: 1" = 10'

GRAPHIC SCALE
10 0 5 10 20 40
(IN FEET)
1 inch = 10 ft.

REV.	DATE	DRAWN BY	CHK'D BY	DESCRIPTION
9	8/27/18	TJL	CAG	ISSUED FOR CONSTRUCTION
0	11/10/14	HMR	CFC	CONSTRUCTION – ISSUED FOR CLIENT REVIEW

PROFESSIONAL ENGINEER SEAL

STATE OF CONNECTICUT · CHRISTOPHER F. CRAMER · 28917 · LICENSED PROFESSIONAL ENGINEER

at&t

SAI communications

CENTEK engineering
Centered on Solutions™
(203) 488-0580
(203) 488-8587 Fax
63-2 North Branford Road
Branford, CT 06405
www.CentekEng.com

AT&T MOBILITY
WIRELESS COMMUNICATIONS FACILITY
MERIDEN
SITE NUMBER: CT2117
200 EDGEMARK ACRES
MERIDEN, CT 06451

DATE:	11/03/14
SCALE:	AS NOTED
JOB NO.:	13305.000
AMENDED JOB NO.:	17010.08

SITE/SITE SURVEY PLAN

C-1.1

Sheet No. 4 of 17

RF EQUIPMENT TABLE

SECTOR	PANEL ANTENNAS					FILTER	FROM TMA				TMA		FROM SHELTER		
	AZIMUTH	QTY.	MAKE: MODEL	RAD CENTER (AGL)	DOWNTILT	QTY.	JUMPER QTY.	JUMPER SIZE	JUMPER LENGTH	RET QTY.	QTY.	MAKE & MODEL	COAX SIZE	COAX QTY.	COAX LENGTH
ALPHA	0°	2	CCI: HPA-65R-BUU-H8	90.0'	2°E	0	20	1/2" Ø	15' ±	0	6	CCI TMABPDB7823VG12A	1-5/8"	36	120'±
		1	CCI: OPA-65R-LCUU-H8		0°M										
BETA	120°	2	CCI: HPA-65R-BUU-H8	90.0'	3°E	0	20	1/2" Ø	15' ±	0	6	CCI TMABPDB7823VG12A			120'±
		1	CCI: OPA-65R-LCUU-H8		0°M										
GAMMA	240°	2	CCI: HPA-65R-BUU-H8	90.0'	2°E	0	20	1/2" Ø	15' ±	0	6	CCI TMABPDB7823VG12A			120'±
		1	CCI: OPA-65R-LCUU-H8		0°M										

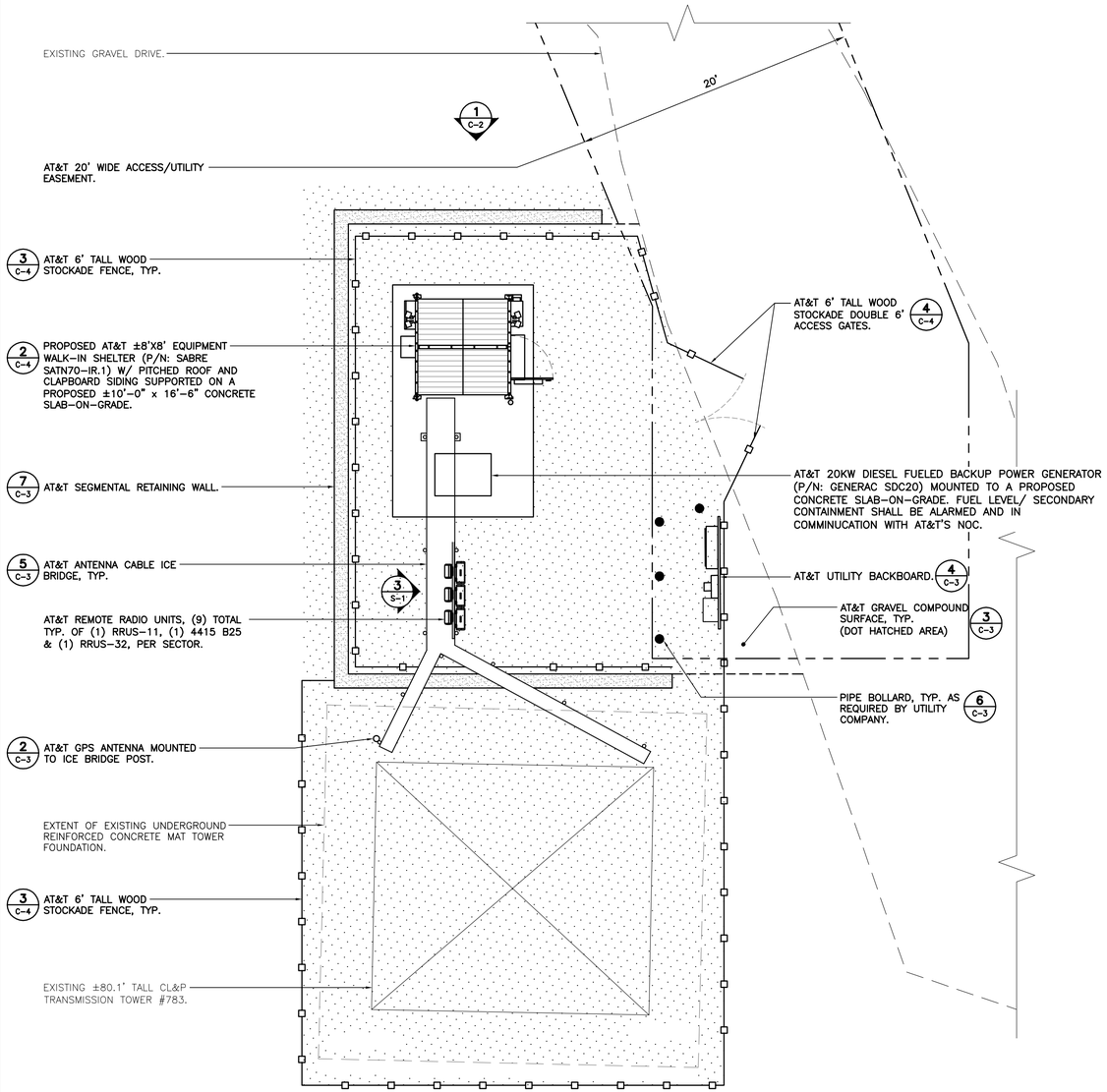

2 C-2 COMPOUND PLAN

SCALE: 1" = 5'

APPROXIMATE NORTH

GRAPHIC SCALE

5 0 2.5 5 10 20

(IN FEET)
1 inch = 5 ft.

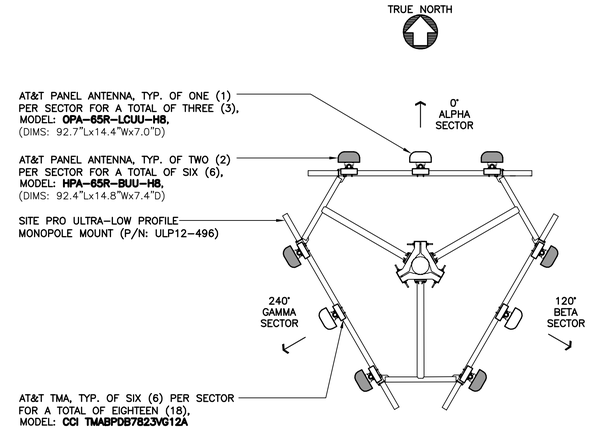

PLAN

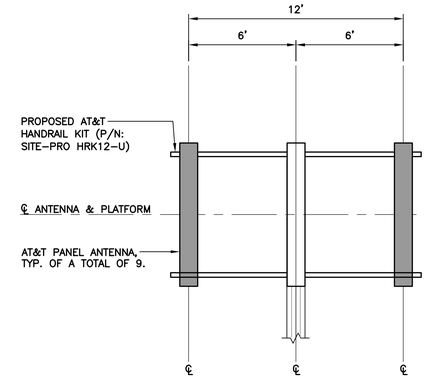

ELEVATION

3 C-2 ANTENNA MOUNTING CONFIGURATION DETAILS

SCALE: 1/4" = 1'

TOWER NOTES:

1. EXISTING 79.75' TALL EVERSOURCE STEEL TRANSMISSION STRUCTURE NO. 783.
2. REFER TO STRUCTURAL ANALYSIS REPORT AND TOWER REINFORCEMENT DESIGN DRAWINGS PREPARED BY CENTEK ENGINEERING, INC., PROJECT NO. 17010.08, DATED 08/16/18, (REV-6) FOR ADDITIONAL DETAILS AND REQUIREMENTS.
3. ALL ANTENNAS AND COAX TO BE INSTALLED IN ACCORDANCE WITH STRUCTURAL ANALYSIS AND FINAL AT&T RF DATA SHEET.

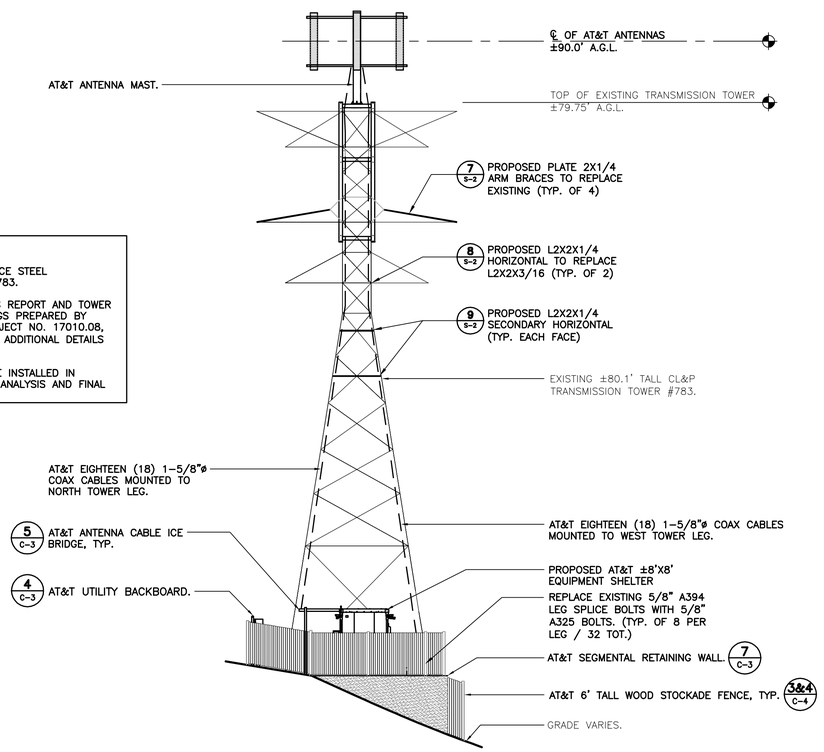

1 C-2 WESTERN ELEVATION

SCALE: 1" = 10'

GRAPHIC SCALE

10 0 5 10 20 40

(IN FEET)
1 inch = 10 ft.

REV.	DATE	DRAWN BY	CHK'D BY	DESCRIPTION
9	8/27/18	TJL	CAG	ISSUED FOR CONSTRUCTION
0	11/10/14	HMR	CFC	CONSTRUCTION - ISSUED FOR CLIENT REVIEW

PROFESSIONAL ENGINEER SEAL

STATE OF CONNECTICUT PROFESSIONAL ENGINEER

at&t

SAI communications

CENTEK engineering
Centered on Solutions™
(203) 488-0580
(203) 488-8587 Fax
63-2 North Branford Road
Branford, CT 06405
www.CentekEng.com

AT&T MOBILITY

WIRELESS COMMUNICATIONS FACILITY

MERIDEN

SITE NUMBER: CT2117

200 EDGEMARK ACRES
MERIDEN, CT 06451

DATE: 11/03/14
SCALE: AS NOTED
JOB NO.: 13305.000
AMENDED JOB NO.: 17010.08

COMPOUND PLAN, ELEVATION AND ANTENNA MOUNTING DETAILS

C-2

Sheet No. 5 of 17

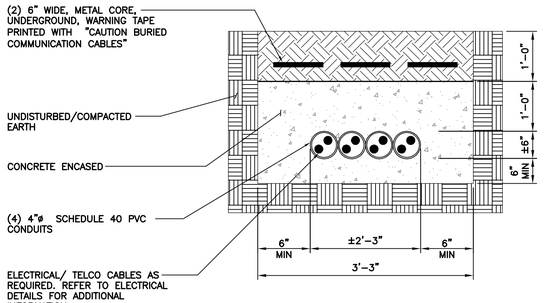

8 / C-3 UNDERGROUND COAX DUCT BANK SECTION

NOT TO SCALE

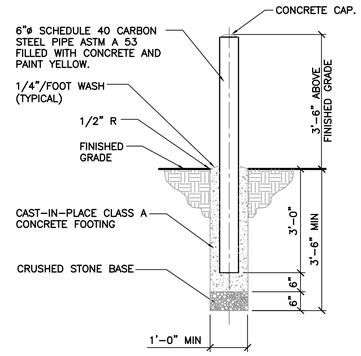

6 / C-3 BOLLARD DETAIL

NOT TO SCALE

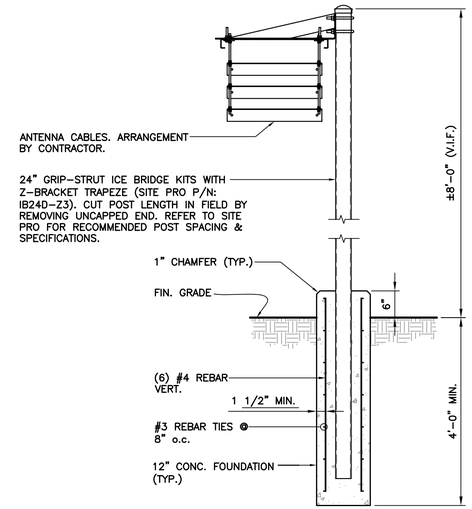

5 / C-3 ICE BRIDGE DETAIL

NOT TO SCALE

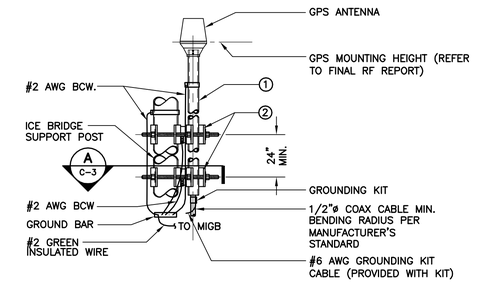

GPS ANTENNA MOUNTING BRACKET

BILL OF MATERIALS		
ITEM	DESCRIPTION	QUANTITY
1	2-1/2"ø SCH. 40 x 8'-0" LG. MAX SS OR GALV. PIPE	1
2	UNIVERSAL CLAMP SET.	2

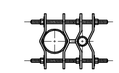

A / C-3 SECTION

NOT TO SCALE

NOTES:

1. THE ELEVATION AND LOCATION OF THE GPS ANTENNA SHALL BE IN ACCORDANCE WITH THE FINAL RF REPORT.
2. THE GPS ANTENNA MOUNT IS DESIGNED TO FASTEN TO A STANDARD 2-1/2" DIAMETER, SCHEDULE 40, GALVANIZED STEEL OR STAINLESS STEEL PIPE. THE PIPE MUST NOT BE THREADED AT THE ANTENNA MOUNT END. THE PIPE SHALL BE CUT TO THE REQUIRED LENGTH (MINIMUM OF 24 INCHES) USING A HAND OR ROTARY PIPE CUTTER TO ASSURE A SMOOTH AND PERPENDICULAR CUT. A HACK SAW SHALL NOT BE USED. THE CUT PIPE END SHALL BE DEBURRED AND SMOOTH IN ORDER TO SEAL AGAINST THE NEOPRENE GASKET ATTACHED TO THE ANTENNA MOUNT.
3. ATTACH TO ICE BRIDGE POST NEAREST ANTENNA CABLE PORT AT EQUIPMENT.
4. PRIOR TO INSTALLATION CONTRACTOR SHALL TEST GPS LOCATION WITH HAND HELD AND MOVE GPS ANTENNA TO OTHER ICE BRIDGE POSTS AS REQUIRED TO ACHIEVE ADEQUATE SIGNAL. FAILURE TO ACHIEVE ADEQUATE SIGNAL WITH A HAND HELD GPS SHALL BE REPORTED TO CONSTRUCTION MANAGER AND ENGINEER TO DETERMINE ALTERNATE INSTALLATION LOCATION FOR GPS ANTENNA.

2 / C-3 GPS GROUNDING/MOUNTING BRACKET DETAIL

NOT TO SCALE

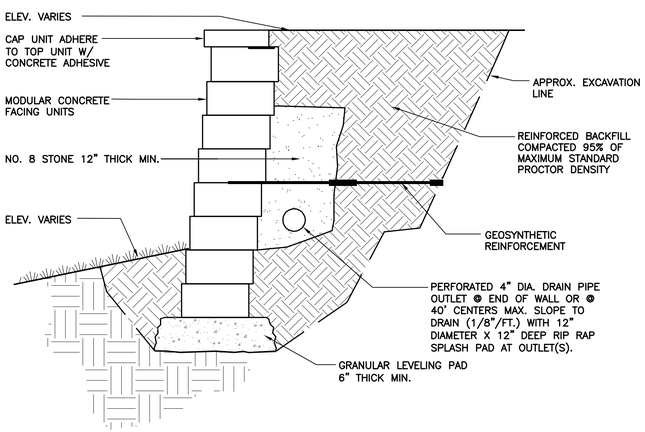

SEGMENTAL RETAINING WALL NOTES:

1. STRIP VEGETATION AND ORGANIC SOIL FROM WALL AND GEOSYNTHETIC ALIGNMENT.
2. BENCH CUT ALL EXCAVATED SLOPES.
3. DO NOT OVER EXCAVATE UNLESS DIRECTED BY SITE SOIL ENGINEER TO REMOVE UNSUITABLE SOIL.
4. SITE SOIL ENGINEER SHALL VERIFY FOUNDATION SOILS AS BEING COMPETENT PER THE DESIGN STANDARDS AND PARAMETERS.
5. BASE SHALL CONSIST OF COMPACTED GRAVEL, 6" THICK MIN.
6. CONTRACTOR MAY OPT FOR A LEAN CONCRETE PAD. CONCRETE PAD SHALL BE UNREINFORCED, 4" THICK.
7. MINIMUM EMBEDMENT OF WALL BELOW FINISH GRADE SHALL BE 2 COURSES OF BLOCK".
8. FOLLOW APPLICABLE PROVISIONS OF THE MANUFACTURER'S INSTALLATION INSTRUCTIONS AND WRITTEN SPECIFICATIONS.
9. NO. 8 CRUSHED STONE SHALL BE INSTALLED BEHIND THE WALL UP TO 18" FROM THE TOP OF THE WALL. CRUSHED STONE SHALL NOT EXTEND BELOW FINISHED GRADE IN FRONT OF WALL.
10. WHERE DRAIN PIPE IS USED, PROVIDE OUTLETS @ MAX. 40 FT C-C.
11. FOR UNITS TO BE EMBEDDED, COMPACT FILL IN FRONT OF UNITS AT THE SAME TIME BACKFILL BEHIND UNITS IS COMPACTED.
12. COMPACTION TESTS SHALL BE TAKEN AS THE WALL IS INSTALLED. THE MINIMUM NUMBER OF TESTS SHALL BE DETERMINED BY THE ENGINEER.
13. COMPACTION SHALL BE TO 95% OF MAXIMUM STANDARD PROCTOR DENSITY. (ASTM D-698)
14. SEE SHOP DRAWINGS FOR GEOSYNTHETIC TYPE, LENGTH AND LOCATION REQUIRED.
15. GEOSYNTHETIC SHALL BE THE TYPE AND LENGTH AS SHOWN ON SHOP DRAWINGS. PULL GEOSYNTHETIC TIGHT PRIOR TO BACKFILLING.
16. GEOSYNTHETIC SHALL BE PLACED WITH STRONGEST DIRECTION PERPENDICULAR TO WALL. FOLLOW GEOSYNTHETIC MANUFACTURER'S INSTALLATION INSTRUCTIONS AND WRITTEN SPECIFICATIONS.
17. THE CONTRACTOR SHALL SUBMIT A SHOP DRAWING SHOWING THE COMPLETE WALL SYSTEM AND ALL DETAILS BASED ON THE ACTUAL SOILS IN THE FIELD THESE SHOP DRAWINGS SHALL BE SIGNED AND SEALED BY A PROFESSIONAL ENGINEER LICENSED IN THE STATE OF CONNECTICUT
18. IF CONDITIONS ARE DIFFERENT THAN THOSE STATED IN THESE DRAWINGS AND SPECIFICATIONS, THE CONTRACTOR MUST CONTACT ENGINEER PRIOR TO PROCEEDING WITH THE CONSTRUCTION OF THE WALL.
19. IF WALL LEVELING PAD REQUIRES FILL IT SHALL BE COMPACTED GRAVEL FROM BOTTOM OF EXCAVATION TO SUITABLE SOIL TO BOTTOM OF WALL.

7 / C-3 SEGMENTAL RETAINING WALL DETAIL

NOT TO SCALE

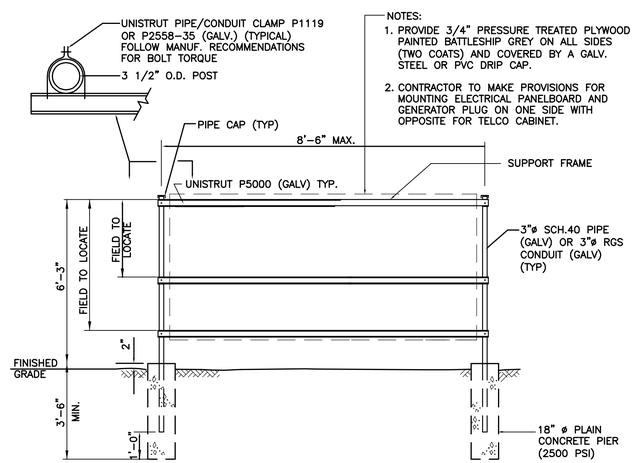

NOTES:
1. PROVIDE 3/4" PRESSURE TREATED PLYWOOD PAINTED BATTLESHIP GREY ON ALL SIDES (TWO COATS) AND COVERED BY A GALV. STEEL OR PVC DRIP CAP.
2. CONTRACTOR TO MAKE PROVISIONS FOR MOUNTING ELECTRICAL PANELBOARD AND GENERATOR PLUG ON ONE SIDE WITH OPPOSITE FOR TELCO CABINET.

4 / C-3 UTILITY SUPPORT FRAME (TYP)

NOT TO SCALE

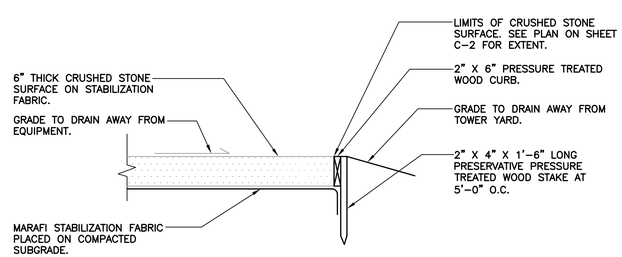

3 / C-3 COMPOUND SURFACING DETAIL

NOT TO SCALE

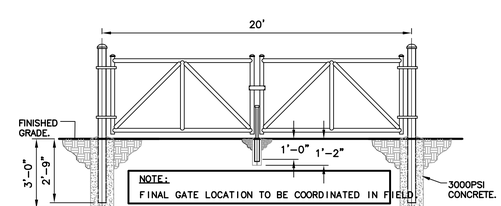

BARRIER GATE CONSTRUCTION NOTES

1. GATE POST 3" ø SCHEDULE 40 FOR GATE WIDTHS UP THRU 6 FEET OR 12 FEET FOR DOUBLE SWING BARRIER GATE PER ASTM-F1083.
2. GATE FRAME: 2" ø SCHEDULE 40 PIPE PER ASTM-F1083.
3. CENTER UPRIGHT AND ANGLE BRACES: 1 5/8" ø SCHEDULE 40 PIPE PER ASTM-F1083.
4. INDUSTRIAL OFFSET HINGES
5. INDUSTRIAL DROP ROD AND LATCH.
6. PROVIDE CAPS ON POSTS AND UPRIGHTS.

1 / C-3 BARRIER GATE DETAIL

NOT TO SCALE

SITE ENTRANCE

REV.	DATE	DRAWN BY	CHK'D BY	DESCRIPTION
9	8/27/18	TJL	CAG	ISSUED FOR CONSTRUCTION
0	11/10/14	HMR	CFC	CONSTRUCTION - ISSUED FOR CLIENT REVIEW

PROFESSIONAL ENGINEER SEAL

STATE OF CONNECTICUT · CHRISTOPHER FRANCIS CROSS · 28917 · PROFESSIONAL ENGINEER

at&t

SAI communications

CENTEK engineering
Centered on Solutions
(203) 488-0580
(203) 488-8587 Fax
63-2 North Branford Road
Branford, CT 06405
www.CentekEng.com

AT&T MOBILITY

WIRELESS COMMUNICATIONS FACILITY

MERIDEN

SITE NUMBER: CT2117

200 EDGEMARK ACRES
MERIDEN, CT 06451

DATE: 11/03/14
SCALE: AS NOTED
JOB NO.: 13305.000
AMENDED JOB NO.: 17010.08

SITE DETAILS

C-3

Sheet No. 6 of 17

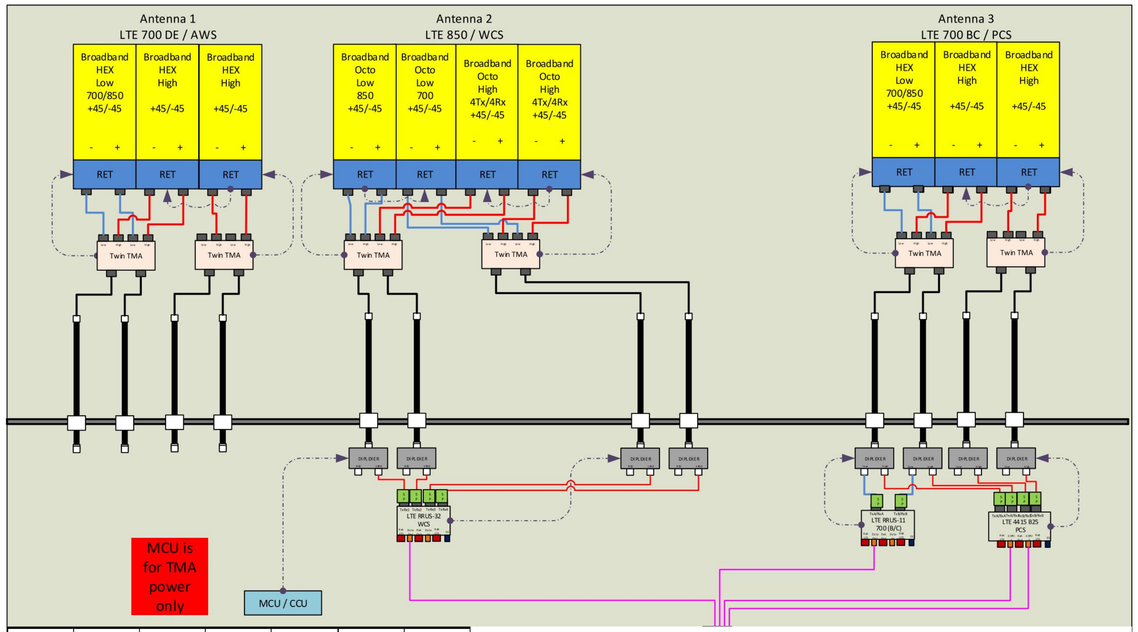

5216	A	B	C	D	E	F
	XMU2-3	XMU2-2	XMU2-1	XMU1-3	XMU1-2	XMU1-1

XMU 1	16	15	14	13	12	11	10	9	8	7	6	5	4	3	2	1
	PCS1 A	PCS2 A	700BC A	WCS A	PCS1 B	PCS2 B	700BC B	WCS B	DNU	PCS1 C	PCS2 C	700BC C	WCS C	XMU1-3	XMU1-2	XMU1-1

1 C-4 **TYP. RF PLUMBING DIAGRAM**
NOT TO SCALE

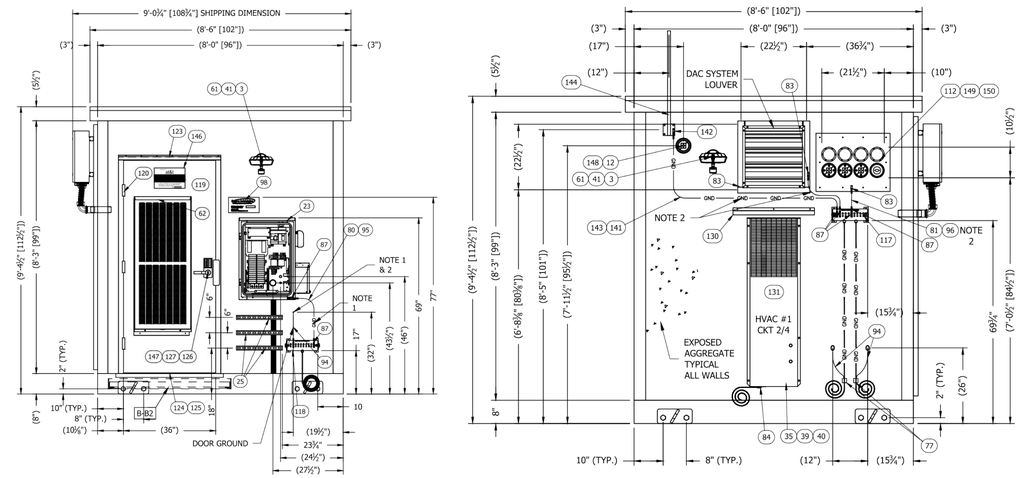

EQUIPMENT SHELTER		
EQUIPMENT	DIMENSIONS	WEIGHT
MAKE: SABRE INDUSTRIES MODEL: SATN70-IR.1	8'L x 8'W x 9'-4 1/2"H	±21,500 LBS.

NOTES:
1. CONTRACTOR TO COORDINATE FINAL EQUIPMENT MODEL SELECTION WITH AT&T CONSTRUCTION MANAGER PRIOR TO ORDERING.

2 C-4 **EQUIPMENT SHELTER DETAIL**
SCALE: NOT TO SCALE

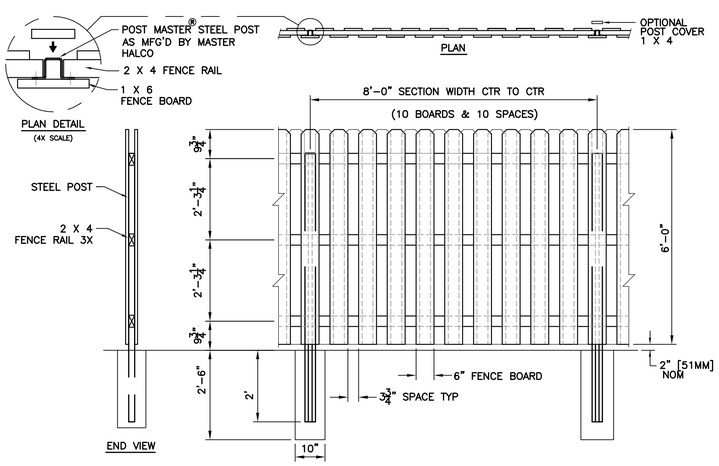

3 C-4 **FENCE DETAIL**
NOT TO SCALE

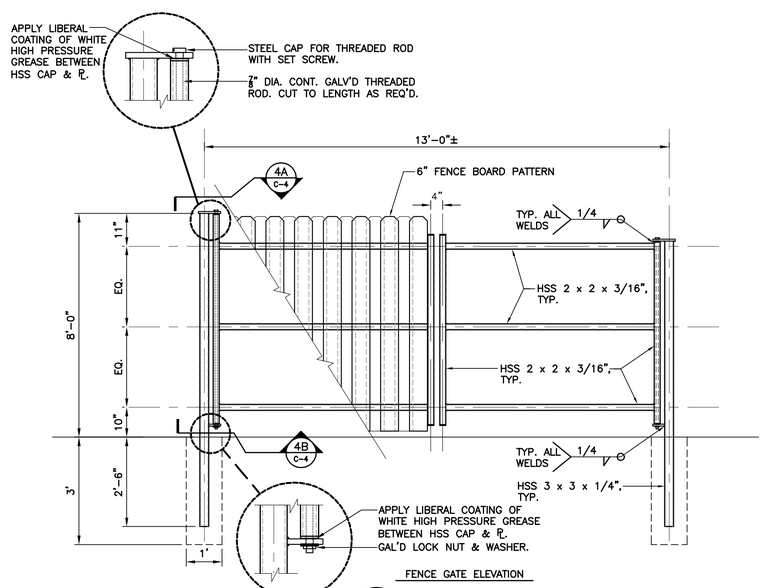

4 C-4 **FENCE GATE DETAIL**
NOT TO SCALE

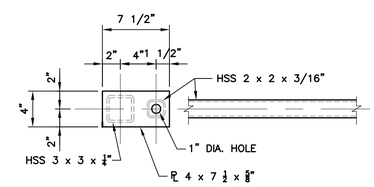

4A C-4 **UPPER POST SECTION**
NOT TO SCALE

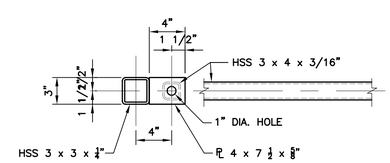

4B C-4 **UPPER POST SECTION**
NOT TO SCALE

FENCE & GATE NOTES:

1. ALL STEEL FENCE GATE COMPONENTS SHALL BE GALVANIZED. STEEL FENCE GATE MEMBERS SHALL BE SHOP WELDED AND GALV'D AFTER FABRICATION.
2. ALL WOOD COMPONENTS SHALL BE WHITE CEDAR. DIMENSIONS SHOWN ARE NOMINAL.
3. ALL METAL FENCE POSTS (OTHER THAN GATE) AND ASSOCIATED ACCESSORIES AND SCREWS ARE TO BE POST MASTER BY MASTER HALCO OR APPROVED EQUAL.
4. ALL VERTICAL GATE FRAMING MEMBERS SHALL HAVE ¼" WELDED END PLATE CAPS.

WOOD FENCE COMPONENT FINISH:

ALL WOOD COMPONENTS TO RECEIVE MINIMUM (2) COATS OF VALSPAR PREMIUM PENETRATING OIL DECK & SIDING TONER OR APPROVED EQUAL. FIRST COAT TO BE APPLIED PRIOR TO ASSEMBLY. APPLY COATING PER MANUFACTURER'S WRITTEN RECOMMENDATIONS.

FASTENERS:

WOOD-TO-STEEL: 1 ½" LNG #8-25 GA., FLUSH HEAD HILTI KWIK-PRO GALV'D SELF-DRILLING SCREWS (2 SCREWS AT EA. RAIL LOCATION, TYP.)

WOOD-TO-WOOD: REFER TO POST MASTER BY HALCO FOR REQUIRED FASTENERS.

REV.	DATE	DRAWN BY	CHK'D BY	DESCRIPTION
9	8/27/18	TJL	CAG	ISSUED FOR CONSTRUCTION
0	11/10/14	HMR	CFC	CONSTRUCTION – ISSUED FOR CLIENT REVIEW

PROFESSIONAL ENGINEER SEAL

at&t

SAI communications

CENTEK engineering
Centered on Solutions™
(203) 488-0580
(203) 488-8587 Fax
63-2 North Branford Road
Branford, CT 06405
www.CentekEng.com

AT&T MOBILITY
WIRELESS COMMUNICATIONS FACILITY
MERIDEN
SITE NUMBER: CT2117
200 EDGEMARK ACRES
MERIDEN, CT 06451

DATE:	11/03/14
SCALE:	AS NOTED
JOB NO.:	13305.000
AMENDED JOB NO.:	17010.08

SITE DETAILS AND SHELTER ELEVATIONS

C-4

Sheet No. 7 of 17

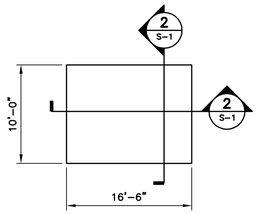

1 S-1 **FOUNDATION PLAN**
SCALE: 1/4" = 1'

NORTH

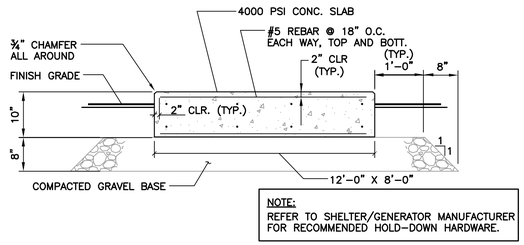

2 S-1 **GENERATOR PAD DETAIL**
NOT TO SCALE

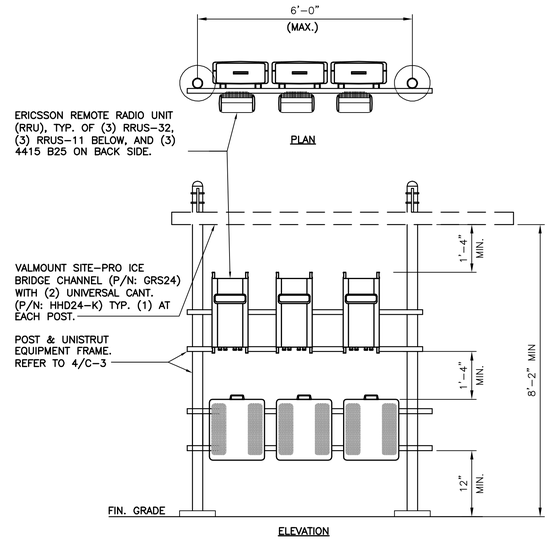

3 S-1 **TYPICAL RRU MOUNTING DETAILS**
SCALE: 1/2" = 1'

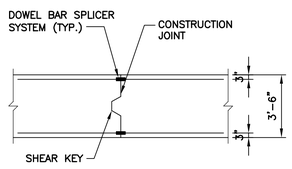

6 S-1 **CONSTRUCTION JOINT DETAIL**
SCALE: 1/4" = 1'-0"

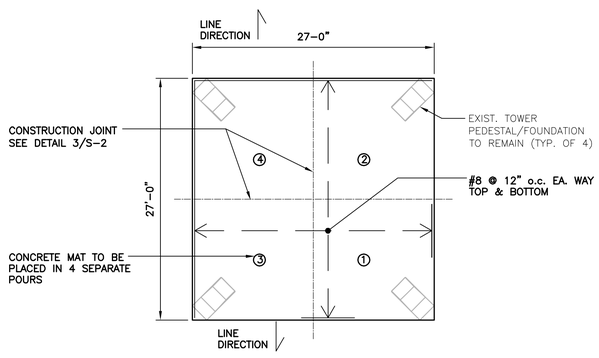

4 S-1 **FOUNDATION PLAN**
SCALE: 1/10" = 1'-0"

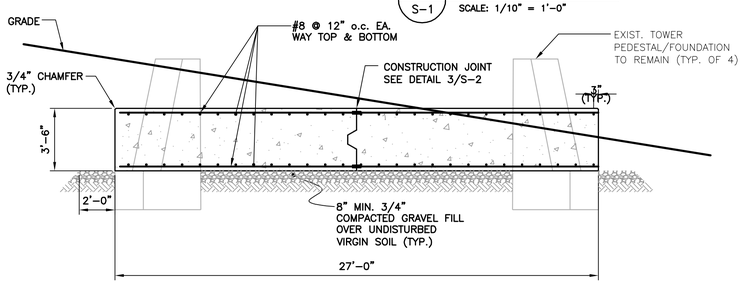

5 S-1 **FOUNDATION SECTION**
SCALE: 1/4" = 1'-0"

EQUIPMENT SHELTER VENDOR SELECTION BY AT+T. VERIFY ALL SHELTER DIMENSIONS, EQUIPMENT DIMENSIONS, EQUIPMENT LOCATIONS AND UTILITY OPENINGS WITH BUILDING SHOP DRAWINGS PRIOR TO COMMENCEMENT OF WORK.

SLAB ON GRADE FOUNDATION DESIGN CONFORMS TO THE REQUIREMENTS OF THE 2012 INTERNATIONAL BUILDING CODE AS MODIFIED BY THE 2016 CONNECTICUT STATE BUILDING CODE SUPPLEMENT SECTION 1809.5 'FROST PROTECTION' AND SEI/ASCE STANDARD 32-01 SECTION 7.1 'SLAB ON GRADE CONSTRUCTION'.

FOUNDATION PLAN NOTES:

1. BEARING SHIMS, TIE-DOWN PLATES AND ASSOCIATED INSTALLATION ANCHORS PROVIDED BY SHELTER MANUFACTURER. CONTRACTOR SHALL VERIFY ALL SHIM & TIE-DOWN QUANTITIES AND LOCATIONS AND ANY SPECIAL CONDITIONS WITH SHELTER MANUFACTURER PRIOR TO PERFORMING FOUNDATION WORK.
2. SLAB/ TOP OF WALL TOLERANCE IS 1/4"±
3. REFER TO NOTES ON DWG. N-1 FOR ADDITIONAL REQUIREMENTS.
4. PER NEC REQUIREMENTS, THE REBAR IN FOUNDATION AND FOOTING SHALL BE BONDED TO GROUND RING WITH A #2 AWG SOLID CONDUCTOR USING LISTED AND APPROVED METHODS.
5. PROVIDE PVC SLEEVES FOR UTILITY CONDUIT PASSAGE THROUGH FOUNDATION OR CAST CONDUITS IN PLACE. REFER TO ELECTRICAL DRAWINGS FOR CONDUIT SIZES AND QUANTITIES.

REV.	DATE	DRAWN BY	CHK'D BY	DESCRIPTION
9	8/27/18	TJL	CAG	ISSUED FOR CONSTRUCTION
0	11/10/14	HMR	CFC	CONSTRUCTION – ISSUED FOR CLIENT REVIEW

PROFESSIONAL ENGINEER SEAL

STATE OF CONNECTICUT · CAMERON A. GRAHAM · 27911 · LICENSED PROFESSIONAL ENGINEER

at&t

SAI communications

CENTEK engineering
Centered on Solutions™
(203) 488-0580
(203) 488-8587 Fax
63-2 North Branford Road
Branford, CT 06405
www.CentekEng.com

AT&T MOBILITY
WIRELESS COMMUNICATIONS FACILITY
MERIDEN
SITE NUMBER: CT2117
200 EDGEMARK ACRES
MERIDEN, CT 06451

DATE: 11/03/14
SCALE: AS NOTED
JOB NO.: 13305.000
AMENDED JOB NO.: 17010.08

EQUIPMENT SHELTER FOUNDATION PLAN AND DETAILS

S-1

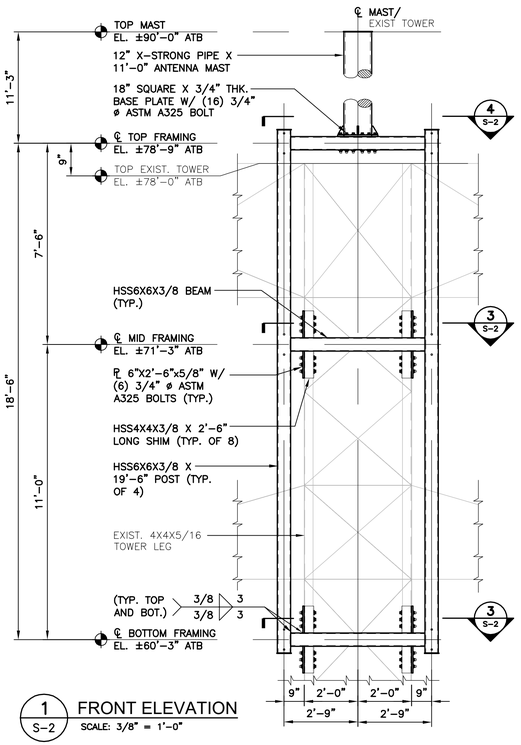

1 S-2 FRONT ELEVATION
SCALE: 3/8" = 1'-0"

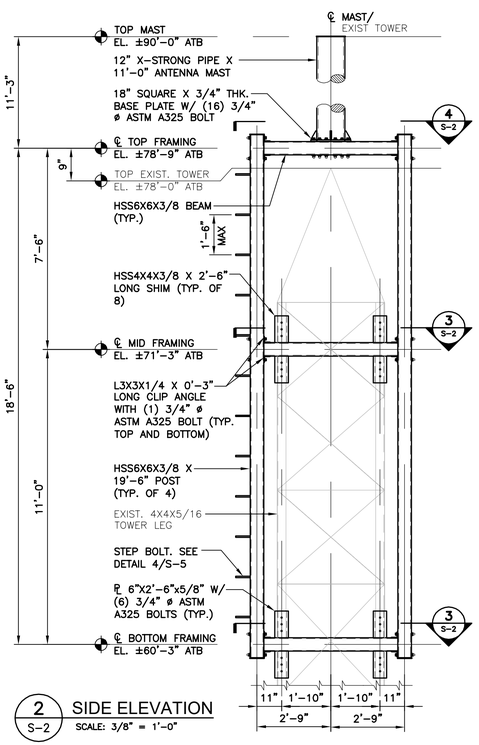

2 S-2 SIDE ELEVATION
SCALE: 3/8" = 1'-0"

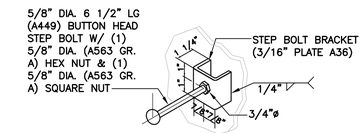

6 S-2 STEP BOLT DETAIL
SCALE: 3/4" = 1'-0"

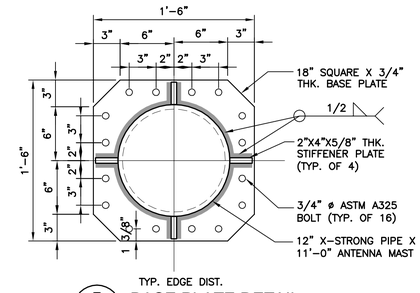

5 S-2 BASE PLATE DETAIL
SCALE: 1-1/2" = 1'-0"

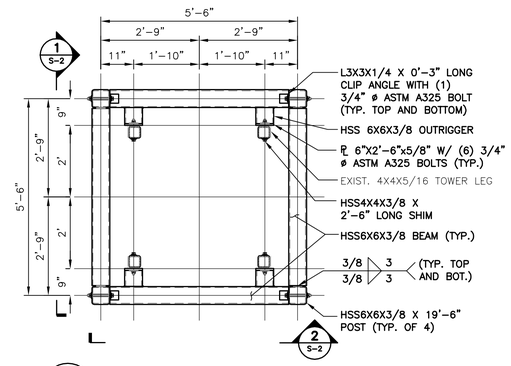

3 S-2 FRAMING PLAN BOTTOM & MIDDLE
SCALE: 1/2" = 1'-0"

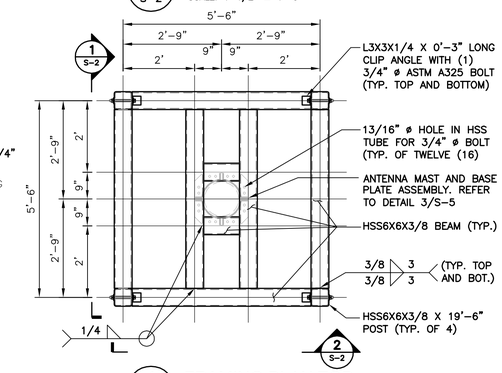

4 S-2 FRAMING PLAN TOP
SCALE: 1/2" = 1'-0"

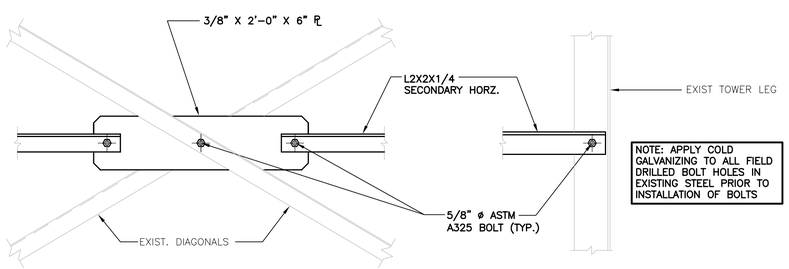

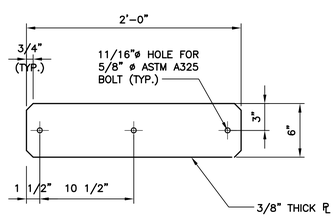

9 S-2 HORIZONTAL REPLACEMENT MEMBER DETAILS
SCALE: 1-1/2" = 1'-0"

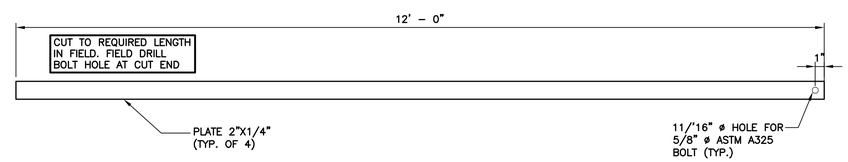

7 S-2 ARM BRACE REPLACEMENT MEMBER DETAILS
SCALE: 1-1/2" = 1'-0"

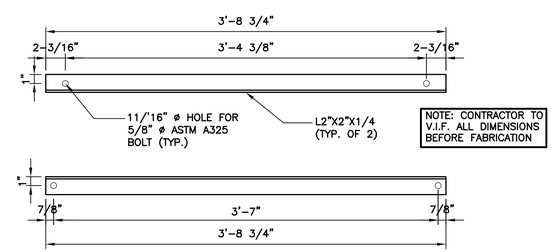

8 S-2 HORIZONTAL REPLACEMENT MEMBER DETAILS
SCALE: 1-1/2" = 1'-0"

REV.	DATE	DRAWN BY	CHK'D BY	DESCRIPTION
9	8/27/18			ISSUED FOR CONSTRUCTION
0	11/10/14			CONSTRUCTION – ISSUED FOR CLIENT REVIEW

PROFESSIONAL ENGINEER SEAL

CENTEK engineering
Centered on Solutions™
(203) 488-0580
(203) 488-8587 Fax
63-2 North Branford Road
Branford, CT 06405
www.CentekEng.com

AT&T MOBILITY
WIRELESS COMMUNICATIONS FACILITY
MERIDEN
SITE NUMBER: CT2117
200 EDGEMARK ACRES
MERIDEN, CT 06451

DATE: 11/03/14
SCALE: AS NOTED
JOB NO.: 13305.000
AMENDED JOB NO.: 17010.08

TOWER
REINFORCEMENT
DETAILS

S-2

Sheet No. 9 of 17

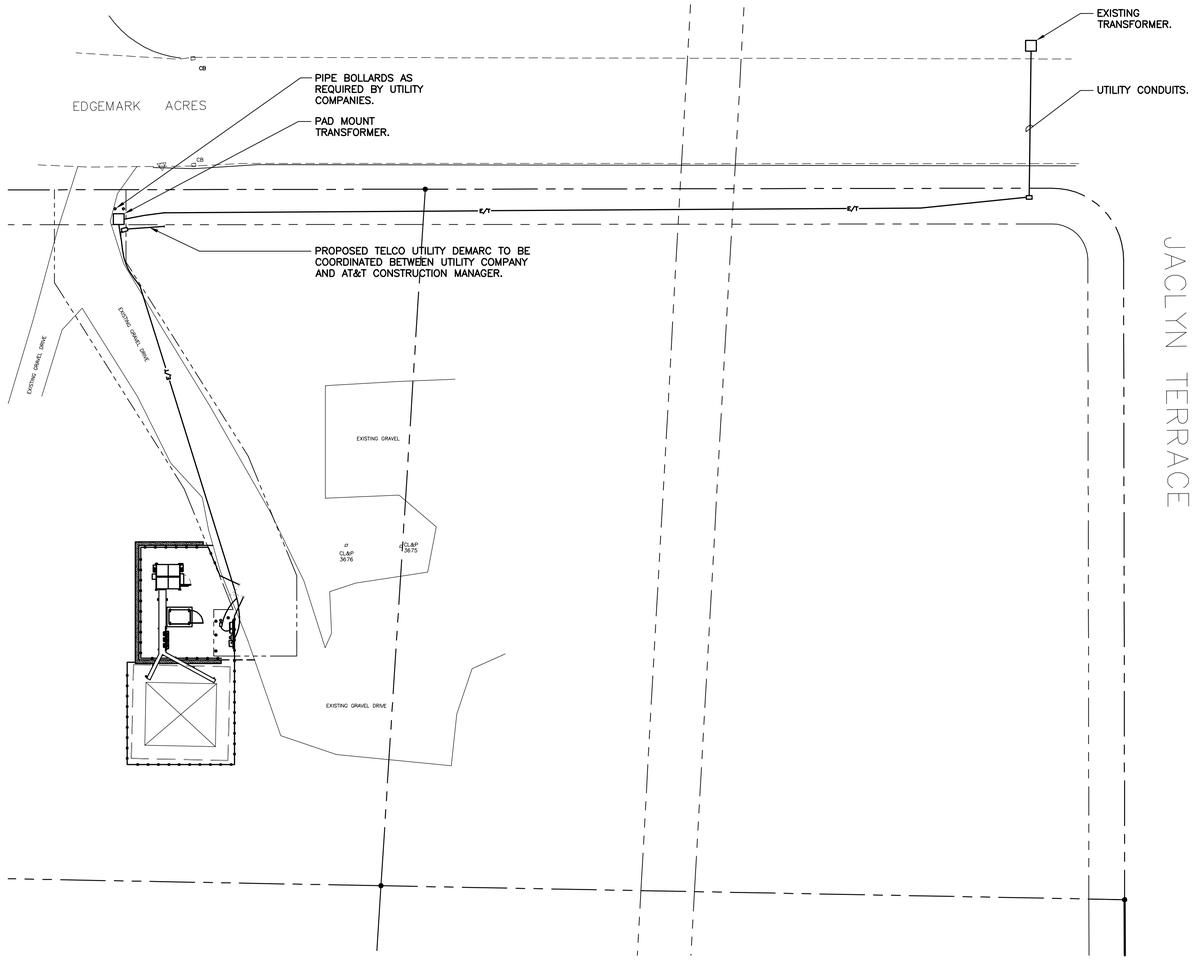

1 E-1 **UTILITY SITE PLAN**
SCALE: 1" = 20'-0"

APPROX. NORTH

GRAPHIC SCALE
20 0 10 20 40 80
(IN FEET)
1 inch = 20 ft.

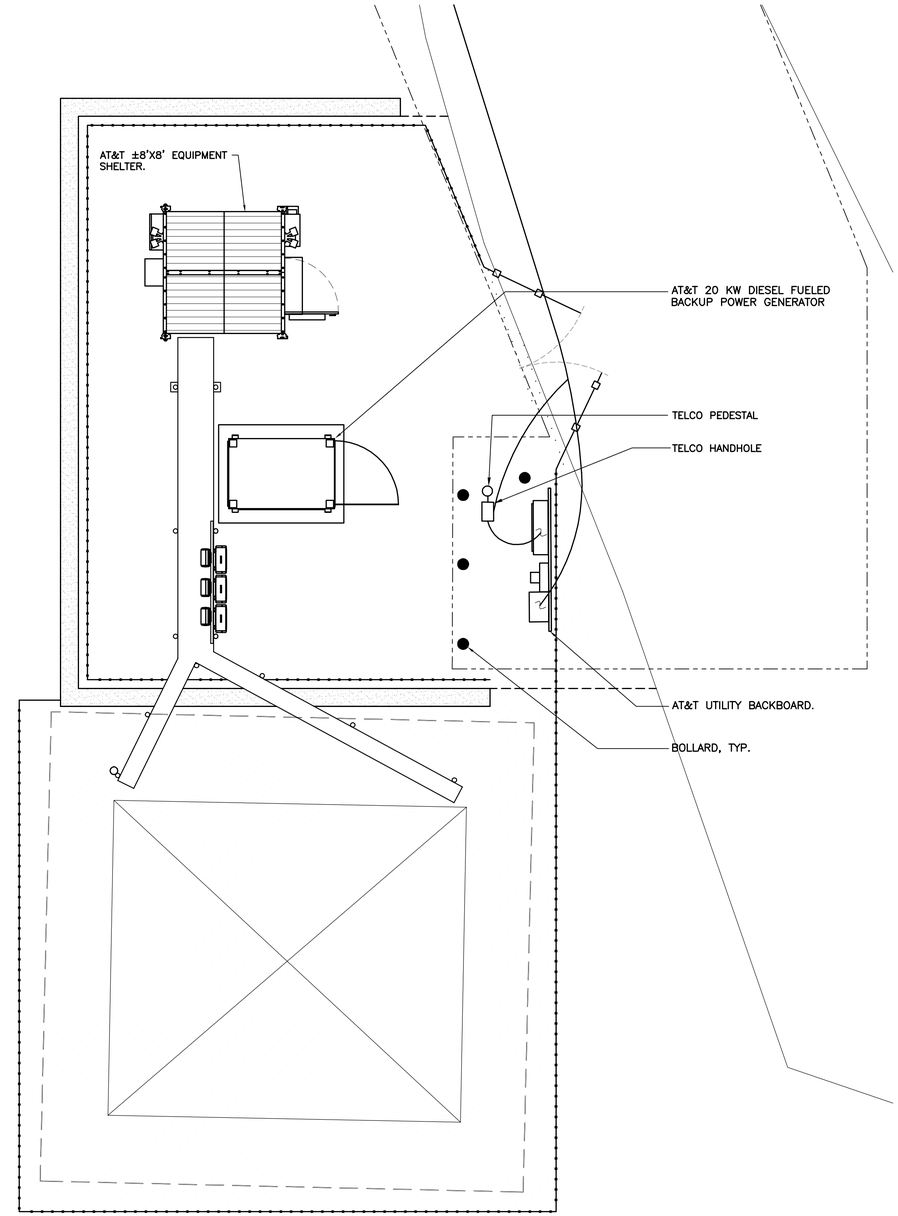

2 E-1 **COMPOUND PLAN**
SCALE: 1" = 4'-0"

APPROX. NORTH

GRAPHIC SCALE
4 0 2 4 8 16
(IN FEET)
1 inch = 4 ft.

ELECTRICAL LEGEND

SYMBOL	DESCRIPTION
—— - - ——	PROPERTY LINE
—— - - - ——	ACCESS/ UTILITY EASEMENT LINE (PROPOSED)
—— E/T ——	ELECTRICAL/TELCO CONDUIT RUN (UNDERGROUND)
—— O/H ——	UTILITY LINES (OVERHEAD BY UTILITY CO.)
O ▭	UTILITY PULL BOX/SILO
⌀	UTILITY POLE

UTILITY NOTES

1. COORDINATE WITH OWNER FOR ALL EASEMENT DOCUMENTS.
2. UTILITY ROUTING SHOWN ON THIS PLAN IS SCHEMATIC. CONTRACTOR SHALL COORDINATE FINAL ROUTING WITH RESPECTIVE UTILITY COMPANIES PRIOR TO PERFORMING ANY UTILITY TRENCH WORK. ALL UTILITY CONDUITS AND PULL BOXES SHALL BE LOCATED WITHIN THE EASEMENT AREA.
3. UTILITY PULL BOXES/SILOS TO BE INSTALLED IN APPROXIMATE LOCATIONS SHOWN ON THIS PLAN. CONTRACTOR TO COORDINATE FINAL PULL BOX LOCATIONS WITH RESPECTIVE LOCAL UTILITY COMPANIES.
4. ALL UTILITY EQUIPMENT SHALL BE LOCATED WITHIN THE EASEMENT AREA. PRIOR TO START OF CONSTRUCTION THE CONTRACTOR SHALL OBTAIN A VALID COPY OF THE EASEMENT MAP FROM THE OWNER.

REV.	DATE	DRAWN BY	CHK'D BY	DESCRIPTION
8	08/06/18	ASC	CAG	CONSTRUCTION – REVISED PER EVERSOURCE COMMENTS
7	06/25/18	TJB	TGK	CONSTRUCTION – REVISED EQUIPMENT SHELTER
5	05/16/18	TJB	TGK	CONSTRUCTION – REVISED EQUIPMENT SHELTER
4	08/03/17	JTD	CAG	CONSTRUCTION – REVISED CRITERIA PER CLIENT
3	07/12/17	JTD	CAG	CONSTRUCTION – REVISED CRITERIA PER CLIENT
2	06/27/17	DMD	TGK	CONSTRUCTION – REVISED CRITERIA PER CLIENT
1	11/20/14	TJB	CKD	CONSTRUCTION
0	11/10/14	TJB	CKD	CONSTRUCTION – ISSUED FOR CLIENT REVIEW

PROFESSIONAL ENGINEER SEAL

STATE OF CONNECTICUT ★ PROFESSIONAL ENGINEER ★ CAMILLO A. GLAVIRIA 27517 LICENSED

at&t

SAI communications

CENTEK engineering
Centered on Solutions™
(203) 488-0580
(203) 488-8587 Fax
63-2 North Branford Road
Branford, CT 06405
www.CentekEng.com

AT&T MOBILITY
WIRELESS COMMUNICATIONS FACILITY
MERIDEN
SITE NUMBER: CT2117
200 EDGEMARK ACRES
MERIDEN, CT 06451

DATE: 11/03/14
SCALE: AS NOTED
JOB NO.: 13305.000
AMENDED JOB NO.: 17010.08

SITE UTILITY PLAN

E-1

ELECTRICAL LEGEND

SYMBOL	DESCRIPTION
— — — —	GROUND RING
—T———T—	UNDERGROUND COMMUNICATION CONDUIT
—E———E—	UNDERGROUND ELECTRICAL CONDUIT AS INDICATED
	GROUND BAR
—o———o—	PERIMETER CHAIN LINK FENCE
⊗	5/8" DIAMETER x 10'–0" COPPER GROUND ROD **OR** 24"x24" GROUND PLATE ABOVE MATT FOUNDATION.
⊠	5/8" DIAMETER x 10'–0" COPPER GROUND ROD WITH ACCESS.
■	EXOTHERMIC WELD TYPE "TA"
●	MECHANICAL CONNECTION
⊛	GROUND WELL

GENERAL NOTES

1. REFER TO CIVIL DRAWINGS FOR ACTUAL LOCATIONS OF STRUCTURES ON SITE.
2. COORDINATION, LAYOUT AND FURNISHING OF CONDUIT, CABLE AND ALL APPURTENANCES REQUIRED FOR PROPER INSTALLATION OF ELECTRICAL/TELECOMMUNICATIONS SERVICES SHALL BE THE SOLE RESPONSIBILITY OF THE CONTRACTOR.
3. ALL UTILITY WORK SHALL BE IN ACCORDANCE WITH LOCAL UTILITY COMPANY REQUIREMENTS AND SPECIFICATIONS.
4. PROVIDE CADWELD CONNECTION STYLES: THROUGH (CABLE TO CABLE) TYPE "TA"
   (CABLE TO SURFACE) TYPE "LA" OR "VS" (PIPE)
   (CABLE TO ROD) TYPE "GT" OR "NC"
   (CABLE TO CABLE) TYPE "SS"

NOTES

1. CONTRACTOR TO VERIFY ALL CONDUIT ROUTING AND INSTALLATION REQUIREMENTS WITH LOCAL UTILITIES PRIOR TO INSTALLATION.
2. ALL CONDUITS SHALL HAVE EXPANSION COUPLINGS WHERE EXTENDING ABOVE GRADE.
3. ALL UTILITY SUPPLY CONDUITS, CONDUCTORS AND ASSOCIATED EQUIPMENT MUST BE LOCATED WITHIN THE LIMITS OF THE UTILITY EASEMENT. COORDINATE WITH OWNER FOR EASEMENT DOCUMENTATION.
4. REFER TO SITE UTILITY PLAN.
5. TELEPHONE EQUIPMENT SHOWN APPROXIMATE. COORDINATE WITH TELEPHONE UTILITY COMPANY AND PROVIDE ALL SPECIFIED EQUIPMENT.
6. COORDINATE SERVICE EQUIPMENT INTERRUPTING RATING WITH AVAILABLE FAULT CURRENT FROM UTILITY COMPANY. EQUIPMENT SHALL NOT BE RATED LESS THAN 65 KAIC.
7. ALL TELEPHONE AND ELECTRIC UTILITY WORK MUST BE COORDINATED WITH UTILITY COMPANY, AND ALL EQUIPMENT MUST BE UTILITY COMPANY APPROVED. CONTRACTOR SHALL PROVIDE ALL ELEMENTS NOT PROVIDED BY UTILITY COMPANIES.
8. CONDUCTOR SIZES SHALL NOT BE REDUCED OR SUBSTITUTED WITHOUT ENGINEERS APPROVAL.
9. INSTALL PULL ROPES IN ALL EMPTY CONDUITS.
10. ALL CONDUCTORS AND CONDUCTOR TERMINATIONS SHALL BE RATED FOR 75°C OPERATION.
11. COORDINATE WALL PENETRATIONS WITH SHELTER MANUFACTURER.

ELECTRICAL ABBREVIATIONS

ABBREVIATION	DESCRIPTION
AFF	ABOVE FINISHED FLOOR
AIC	AMPERE INTERRUPTING CAPACITY
AWG	AMERICAN WIRE GAGE
C	CONDUIT
EGR	EXTERIOR GROUND RING
G – GRD	GROUND
GFCI	GROUND FAULT CIRCUIT INTERRUPTER
IGR	INTERIOR GROUND RING MOUNTED 9'–0" ABOVE FINISHED FLOOR
KWH	KILO–WATT–HOUR
MCCB	MOLDED CASE CIRCUIT BREAKER
MDP	MAIN DISTRIBUTION PANEL
NC	NORMALLY CLOSED
OC	ON CENTER
SA	SURGE ARRESTOR
VM	VOLTAGE MONITOR
WP	WEATHERPROOF
ER	EXISTING TO REMAIN
RR	REMOVE AND RELOCATE
RE	RELOCATED EXISTING
RGS	RIGID GALVANIZED STEEL

NOTES

1. EXISTING TRANSFORMER AND TELCO PEDESTAL TO BE USED. REFER TO SITE SURVEY AND UTILITY PLAN. COORDINATE WITH EACH UTILITY COMPANY.
2. (1) 3" CONDUIT FOR PRIMARY ELECTRIC CONDUCTORS. CONDUCTORS PROVIDED BY UTILITY COMPANY FROM UTILITY POLE TO TRANSFORMER. PROVIDE ALL COUPLINGS, ADAPTERS, SWEEPS, AND ASSOCIATED HARDWARE. MATERIAL SHALL BE PER UTILITY COMPANY SPECIFICATIONS. PROVIDE CONCRETE ENCASEMENT (MIN. 3" COVER ALL AROUND) AS REQUIRED BY CL&P. REFER TO NEW SERVICE REQUEST # 229–7566.
3. TRANSFORMER PROVIDED BY UTILITY COMPANY. TRANSFORMER VAULT, HOUSING, AND GROUND GRID BY ELECTRICAL CONTRACTOR, PER UTILITY COMPANY SPECIFICATIONS.
4. PROVIDE TRANSFORMER GROUNDING PER NEC AND UTILITY COMPANY SPECIFICATIONS.
5. TWO SETS OF: (3) 600 KCMIL, (1) 1/0 AWG GROUND, 4"C.
6. TWO 4" CONDUITS WITH PULL ROPES FOR TELEPHONE COMPANY CONDUCTORS. CONDUCTORS PROVIDED BY TELEPHONE COMPANY FROM UTILITY POLE TO UTILITY BOARD. PROVIDE ALL COUPLINGS, ADAPTERS, SWEEPS, AND ASSOCIATED HARDWARE. MATERIAL SHALL BE PER TELEPHONE COMPANY SPECIFICATIONS. CONDUITS SHALL BE ENCASED IN CONCRETE WITH ELECTRICAL CONDUITS, PER AT&T AND U.I. SPECIFICATIONS. PROVIDE SEPARATION BETWEEN UTILITIES AS REQUIRED BY BOTH UTILITY COMPANIES.
7. PROVIDE CONDUIT WITH PULL ROPE BETWEEN HANDHOLE AND PEDESTAL. EXPECT TWO 4" CONDUITS, BUT FINAL SIZE AND QUANTITY PER TELEPHONE COMPANY.
8. TELEPHONE & ELECTRIC JUNCTION/SPLICE BOX. MUST BE TRAFFIC RATED. QUANTITY AND LOCATION PER EACH UTILITY COMPANY SPECIFICATIONS.
9. TELEPHONE COMPANY HANDHOLE. INSTALL PER TELEPHONE COMPANY SPECIFICATIONS.
10. TELEPHONE COMPANY PEDESTAL. INSTALL PER TELEPHONE COMPANY SPECIFICATIONS.
11. UTILITY BACKBOARD. REFER TO CIVIL DRAWINGS.
12. TWO 3'x4'x1' NEMA–3R TELEPHONE ENCLOSURES INSTALLED NEXT TO EACH OTHER ON UTILITY BACKBOARD. MAINTAIN APPROXIMATELY 1' SEPARATION BETWEEN AND INSTALL A SECTION OF 4" CONDUIT CONNECTING BOTH BOXES.
13. WALK–IN EQUIPMENT CABINET.
14. PROVIDE GROUND BAR AS REQUIRED BY TELEPHONE COMPANY.
15. #2 AWG GROUNDING CONDUCTOR IN 3/4" PVC CONDUIT, UNLESS OTHERWISE SPECIFIED BY TELEPHONE COMPANY. BOND TO GROUNDING TRIAD.
16. 800A, 240/120V, 1P, 65 KAIC RATED, NEMA–3R, MAIN CIRCUIT BREAKER MODULE WITH 800A/2P MAIN CIRCUIT BREAKER. (SQUARE–D: EZM1800CBU OR APPROVED EQUIVALENT.) MUST BE UTILITY COMPANY APPROVED.
17. 3–GANG MULTI–METER BRANCH DEVICES WITH 240V, 1P, 3W, 225A RATED METER SOCKETS. (SQUARE–D: EZML113225 OR APPROVED EQUIVALENT). MUST BE UTILITY COMPANY APPROVED. (LEAVE ROOM FOR FUTURE 3–GANG MODULE.)
18. UTILITY COMPANY APPROVED METER FOR AT&T IN AVAILABLE SOCKET. PROVIDE LABEL STATING "AT&T WIRELESS".
19. 200A/2P MAIN CIRCUIT BREAKER IN AVAILABLE POSITION CORRESPONDING TO METER FOR OWNER.
20. 3/0 AWG GROUNDING ELECTRODE CONDUCTOR IN 3/4 PVC CONDUIT BONDED TO GROUNDING TRIAD LOCATED AT UTILITY BACKBOARD. GROUNDING TRIAD SHALL BE BONDED TO COMPOUND GROUND RING WITH #2 AWG SOLID TINNED BARE COPPER WIRE.
21. (3) #3/0 AWG, (1) #6 AWG GROUND, 2–1/2"C.
22. PROVIDE LABEL AT METER LISTING TYPE AND LOCATION OF ON SITE STANDBY GENERATOR.
23. EXPANSION COUPLING, TYPICAL.
24. 4" PVC CONDUIT FOR TELEPHONE SERVICE. PROVIDE TELEPHONE CABLES AS REQUIRED BY TELEPHONE COMPANY AND OWNER.

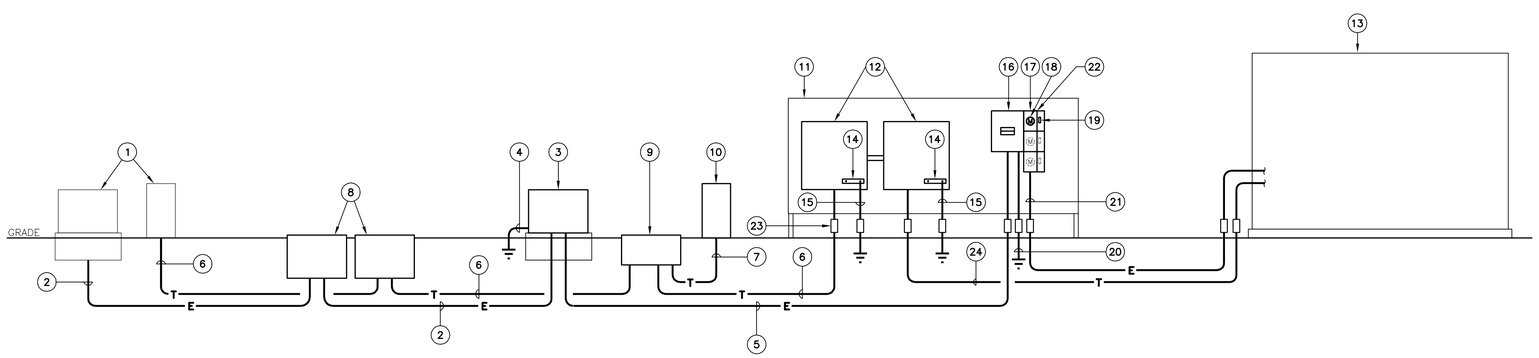

1 / E–2 **RISER DIAGRAM**
SCALE: N.T.S.

REV.	DATE	DRAWN BY	CHK'D BY	DESCRIPTION
8	08/06/18	ASC	CAG	CONSTRUCTION – REVISED PER EVERSOURCE COMMENTS
7	06/25/18	TJB	TGK	CONSTRUCTION – REVISED EQUIPMENT SHELTER
5	05/16/18	TJB	TGK	CONSTRUCTION – REVISED EQUIPMENT SHELTER
4	08/03/17	JTD	CAG	CONSTRUCTION – REVISED CRITERIA PER CLIENT
3	07/12/17	JTD	CAG	CONSTRUCTION – REVISED CRITERIA PER CLIENT
2	06/27/17	DMD	TGK	CONSTRUCTION – REVISED CRITERIA PER CLIENT
1	11/20/14	TJB	CKD	CONSTRUCTION
0	11/10/14	TJB	CKD	CONSTRUCTION – ISSUED FOR CLIENT REVIEW

PROFESSIONAL ENGINEER SEAL

at&t

SAI communications

CENTEK engineering
Centered on Solutions™
(203) 488-0580
(203) 488-8587 Fax
63-2 North Branford Road
Branford, CT 06405
www.CentekEng.com

AT&T MOBILITY
WIRELESS COMMUNICATIONS FACILITY
MERIDEN
SITE NUMBER: CT2117
200 EDGEMARK ACRES
MERIDEN, CT 06451

DATE: 11/03/14
SCALE: AS NOTED
JOB NO.: 13305.000
AMENDED JOB NO.: 17010.08

ELECTRICAL RISER DIAGRAM, NOTES AND LEGEND

E-2

Sheet No. 10 of 17

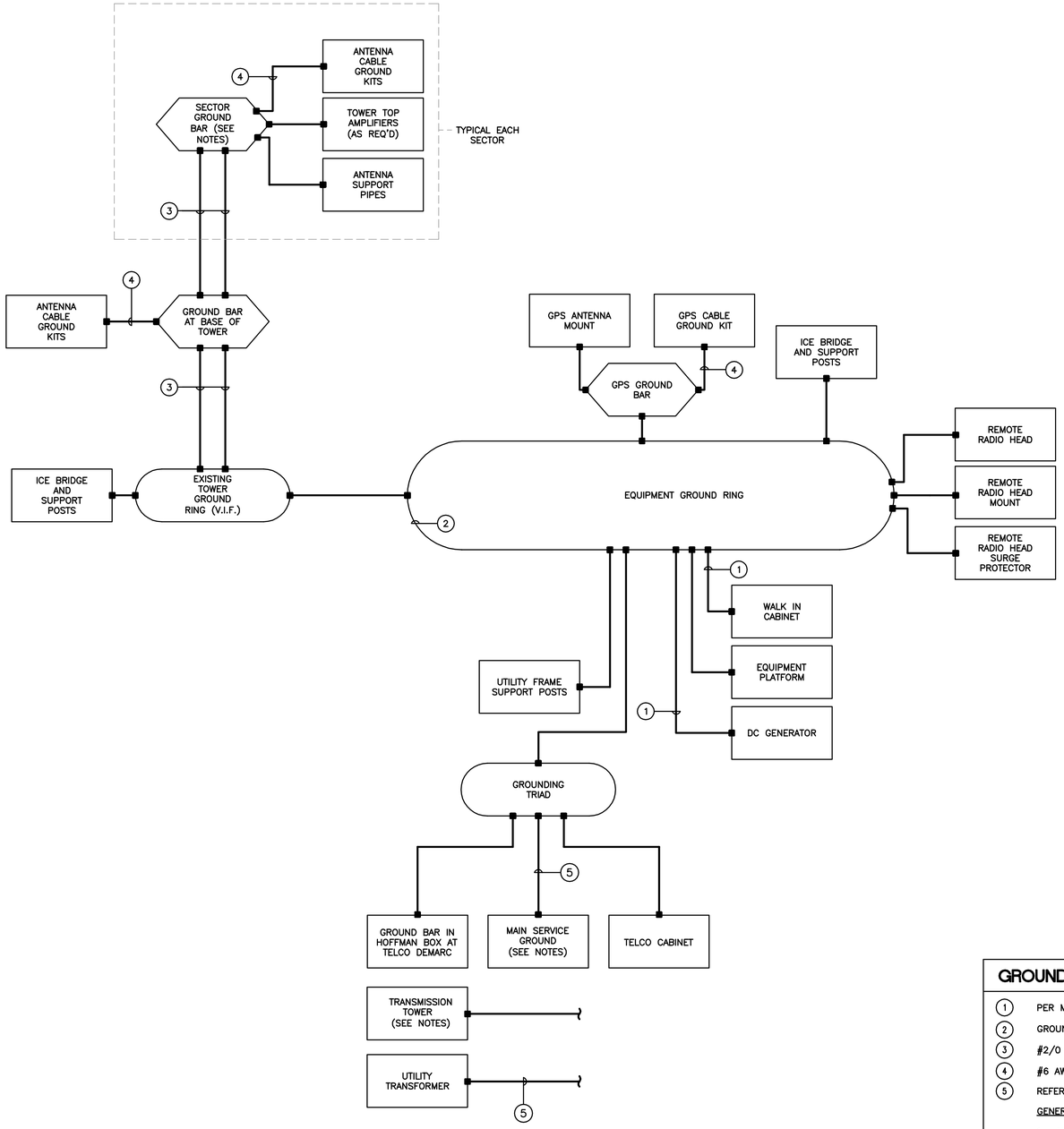

1 / E-3 **SCHEMATIC DIAGRAM-GROUNDING SYSTEM**
NOT TO SCALE

CELLULAR GROUNDING NOTES

OBJECTIVE

PROVIDE A CELLULAR GROUNDING SYSTEM WITH MAXIMUM ALTERNATING CURRENT RESISTANCE OF 5 OHMS BETWEEN ANY POINT ON THE GROUNDING SYSTEM AND REFERENCE GROUND. PROVIDE EXTERIOR GROUNDING SCHEME WITH OWNERS APPROVAL AS REQUIRED TO ACHIEVE DESIRED MAXIMUM AC RESISTANCE TO GROUND. CONNECT

TESTING

CONTRACTOR TO PROVIDE AN INDEPENDENT TESTING CONTRACTOR TO DETERMINE THE GROUNDING SYSTEM RESISTANCE BY USE OF THE THREE POINT TEST AND AN AEMC MODEL 4500, OR APPROVED EQUAL. TEST TO BE PERFORMED PRIOR TO CONNECTION OF POWER SUPPLY TO THE CELL SITE AND CONNECTION OF THE GROUNDING SYSTEM TO THE WATER MAIN OR AC SUPPLY AS APPLICABLE.

CONDUCTOR USED FOR CELLULAR GROUNDING SYSTEM

EGR – #2 AWG ANNEALED SOLID TINNED BARE COPPER
IGR – #2 AWG ANNEALED STRANDED (7 STRAND) 'THW' GREEN COLORED INSULATION
INTER-BUS EXTENSION (FROM IGR TO EGR) – SEE DETAILS
EXTERNAL BOND CONNECTIONS TO EGR – #2 ANNEALED SOLID TINNED BARE COPPER
INTERIOR BOND CONNECTIONS TO IGR – #6 ANNEALED STRANDED (7 STRAND) 'THW' GREEN COLORED INSULATION

MINIMUM BENDING RADIUS

IGR #2 : 1'–0" NOMINAL AND 8" MINIMUM
EGR #2 : 2'–0" NOMINAL AND 8" MINIMUM
CELLULAR GROUNDING CONDUCTOR SHALL BE AS STRAIGHT AS POSSIBLE WITH MINIMUM 6" BENDING RADIUS.

FASTENER FOR CELLULAR GROUNDING CONDUCTOR

USE NON–METALLIC FASTENER AND STANDOFF 'CLIC' (AVAIL. FROM NEFCO 203–289–0285) TO SURFACE SUPPORT CONDUCTOR 3" AWAY FROM SURFACES.

SPACING OF FASTENERS: 2'–0" O.C. OUTSIDE BUILDING
3'–0" O.C. INSIDE BUILDING

GROUNDING ELECTRODE

GROUNDING ELECTRODE SHALL BE 5/8" DIA. x 10'–0" l. COPPER CLAD STEEL ROD. ADJUST LOCATION OF GROUNDING ELECTRODE IF SOIL CONDITION IS NOT CONDUCTIVE (GRAVEL, SANDY SOIL, ROCKS). SPACE GROUNDING ELECTRODES 8'–0" TO 10'–0" APART. ELECTRODES SHALL BE DRIVEN ONLY WITH PROPER DRIVER SLEEVE TO PREVENT MUSHROOMING TOP OF ROD. WHEN ROCK BOTTOM IS ENCOUNTERED, THE ELECTRODE SHALL BE DRIVEN AT AN OBLIQUE ANGLE NOT TO EXCEED 45' FROM THE VERTICAL AWAY FROM STRUCTURES. TOP OF GROUNDING ELECTRODE SHALL BE MIN. 3'–6" BELOW FINISH GRADE.

CONNECTIONS ABOVE GRADE (MECHANICAL)

COMPRESSION LUG CONNECTOR – 15 TON COMPRESSION, 2 HOLE, LONG BARREL, ELECTRO TINNED PLATED, HIGH CONDUCTIVITY, COPPER 600V RATED. USE 1/4" ø BOLT, 3/4" SPACING LUGS TO BOND OBJECTS FROM THE IGR. (CONNECTOR SHALL BE BURNDY HYLUG SERIES OR EQUAL.)

EXOTHERMIC WELD LUG CONNECTOR – 2 HOLE, OFFSET, ELECTRO TINNED PLATED, HIGH CONDUCTIVITY, COPPER 600V. USE 1/2"ø BOLT, 1–3/4" SPACING LUGS. CONNECTOR SHALL BE CADWELD CONNECTION STYLE (CABLE TO SURFACE) TYPE LA, LUG SIZE 1/8 x 1. EXOTHERMIC WELD TO LUG AS REQUIRED.

C–TAP COMPRESSION CONNECTOR – HIGH CONDUCTIVITY COPPER FOR MAIN TO BRANCH LINE TAPPING. (CONNECTOR SHALL BE BURNDY HYTAP SERIES OR EQUAL.)

MECHANICAL CONNECTIONS

USE MATCHING MANUFACTURER TOOL AND DIE FOR COMPRESSION CONNECTION.

APPLY ANTI–OXIDANT CONDUCTIVITY ENHANCER COMPOUND ON SURFACES THAT ARE COMPRESSED.

SURFACES INTENDED TO BE CONNECTED WITH MECHANICAL CONNECTORS SHALL BE BARE METAL TO BARE METAL. PRIME AND PAINT OVER BONDED AREA TO PREVENT CORROSION.

WHEN BONDING #2 TO #2
EXTERIOR OF BUILDING – USE EXOTHERMIC WELD CONNECTION
INTERIOR OF BUILDING – USE COMPRESSION CONNECTION ON STRANDED CONDUCTORS ONLY.
– USE EXOTHERMIC WELD CONNECTION ON SOLID CONDUCTOR.

WHEN BONDING #2 TO FENCE POST

USE EXOTHERMIC WELD 'CADWELD TYPE VS' CONNECTION TO FENCE POST STEEL SURFACE. TEST WELD FOR POSSIBLE BURN THRU. PATCH WELDED AREA WITH GALVANIZED COATING AS REQUIRED FOR PROPER WELDED PERMANENT BOND. REFER TO MANUFACTURER'S REQUIREMENTS FOR DETAILS

GROUNDING SYSTEM INTERCONNECTION

BOND THE EGR DOWN CONDUCTORS, AND/OR BURIED GROUND RING TO ANY METALLIC OBJECT OR EXISTING GROUNDING SYSTEM WITHIN 6'.

WHEN BONDING #2 TO TOWER GROUND PLATE

TOWER GROUND PLATE SHALL BE 6" x 8" x 1/4" COPPER AND BE MADE AVAILABLE TO TOWER CONTRACTOR TO BE INSTALLED DURING TOWER CONSTRUCTION. USE EXOTHERMIC WELD 'CADWELD TYPE HS' TO TOWER GROUND PLATE TEST WELD FOR POSSIBLE BURN THRU. COORDINATE THE SIZE OF THE MOUNTING HOLE WITH TOWER CONTRACTOR.

METALLIC CONDUITS

BOND ALL STEEL CONDUITS TO PANELS AT POINT OF CONTACT WITH APPROVED GROUNDING BUSHING.

GROUNDING SCHEMATIC NOTES

1. PER MANUFACTURERS SPECIFICATIONS.
2. GROUND RING, #2 AWG BCW.
3. #2/0 GREEN INSULATED.
4. #6 AWG.
5. REFER TO RISER DIAGRAM FOR SPECIFICATIONS.

GENERAL NOTES:

1. ALL SURGE SUPPRESSION EQUIPMENT SHALL BE BONDED TO GROUND PER MANUFACTURER'S SPECIFICATIONS
2. GROUND CONDUCTORS SHOWN SHALL BE #2 AWG SOLID TINNED BCW UNLESS OTHERWISE NOTED OR REQUIRED BY CODE.
3. BOND CABLE TRAY AND ICE BRIDGE SECTIONS TOGETHER WITH #6 AWG STRANDED GREEN INSULATED JUMPERS.
4. ALL SECTOR GROUND BARS SHALL BE BONDED TOGETHER WITH #2 AWG SOLID TINNED BCW.
5. BOND ALL EQUIPMENT CABINETS AND BATTERY CABINETS TO GROUND PER MANUFACTURER'S SPECIFICATIONS.
6. REFER TO GROUNDING PLAN FOR LOCATION OF GROUNDING DEVICES.
7. REFER TO ALL ELECTRICAL AND GROUNDING DETAILS.
8. COORDINATE ALL TOWER MOUNTED EQUIPMENT REQUIREMENTS WITH OWNER.
9. ALL TOWER MOUNTED AMPLIFIERS AND ASSOCIATED EQUIPMENT SHALL BE BONDED TO THE SECTOR GROUND BAR PER MANUFACTURER'S SPECIFICATIONS.
10. ALL GROUNDING SHALL BE IN ACCORDANCE WITH NEC AND OWNER'S REQUIREMENTS.
11. REFER TO RISER DIAGRAM FOR SPECIFICATIONS OF SERVICE GROUND AND TRANSFORMER GROUND.
12. COORDINATE WITH CL&P TRANSMISSION DEPARTMENT REPRESENTATIVE TO DETERMINE ADDITIONAL GROUNDING REQUIREMENTS. PROVIDE ALL REQUIRED ELEMENTS TO MEET CL&P APPROVAL.
13. COORDINATE WITH TOWER OWNER BEFORE INSTALLING ANY GROUNDING ELEMENTS ON TOWER OR BONDING TO EXISTING TOWER GROUND RING.

REV.	DATE	DRAWN BY	CHK'D BY	DESCRIPTION
8	08/06/18	ASC	CAG	CONSTRUCTION – REVISED PER EVERSOURCE COMMENTS
7	06/25/18	TJB	TGK	CONSTRUCTION – REVISED EQUIPMENT SHELTER
5	05/16/18	TJB	TGK	CONSTRUCTION – REVISED EQUIPMENT SHELTER
4	08/03/17	JTD	CAG	CONSTRUCTION – REVISED CRITERIA PER CLIENT
3	07/12/17	JTD	CAG	CONSTRUCTION – REVISED CRITERIA PER CLIENT
2	06/27/17	DMD	TGK	CONSTRUCTION – REVISED CRITERIA PER CLIENT
1	11/20/14	TJB	CKD	CONSTRUCTION
0	11/10/14	TJB	CKD	CONSTRUCTION – ISSUED FOR CLIENT REVIEW

PROFESSIONAL ENGINEER SEAL

STATE OF CONNECTICUT ★ PROFESSIONAL ENGINEER ★ 27037

at&t

SAI communications

CENTEK engineering
Centered on Solutions™
(203) 488-0580
(203) 488-8587 Fax
63-2 North Branford Road
Branford, CT 06405
www.CentekEng.com

AT&T MOBILITY
WIRELESS COMMUNICATIONS FACILITY
MERIDEN
SITE NUMBER: CT2117
200 EDGEMARK ACRES
MERIDEN, CT 06451

DATE: 11/03/14
SCALE: AS NOTED
JOB NO.: 13305.000
AMENDED JOB NO.: 17010.08

ELECTRICAL GROUNDING SYSTEM

E-3

Sheet No. 11 of 17

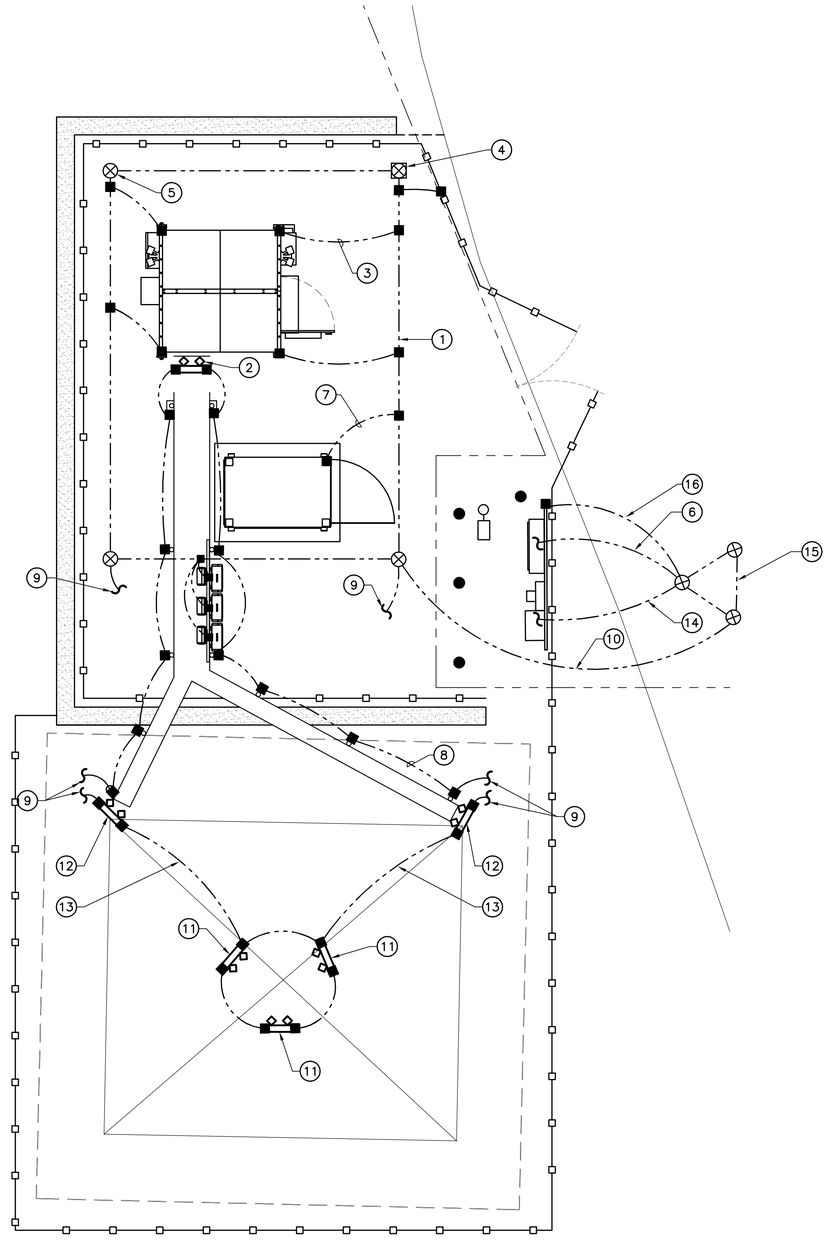

1 E-4 **GROUNDING PLAN**
SCALE: 1" = 4'

APPROX. NORTH

GRAPHIC SCALE
4 0 2 4 8 16
(IN FEET)
1 inch = 4 ft.

GROUNDING PLAN NOTES

1. #2 SOLID TINNED BCW GROUND RING (TYP. 2'-0" FROM OUTSIDE EDGE OF EQUIPMENT SHELTER FOUNDATION) (TYP.).
2. GROUND BAR SEE DETAIL.
3. BOND EQUIPMENT CABINET TO GROUND RING PER MANUFACTURERS SPECIFICATIONS.
4. GROUNDING ROD WITH ACCESS (TYP.) SEE DETAILS.
5. GROUNDING ROD (TYP.) SEE DETAILS.
6. TELEPHONE CABINET GROUNDING. (SEE RISER DIAGRAM).
7. BOND DC GENERATOR TO GROUND PER MANUFACTURERS SPECIFICATIONS.
8. BOND ALL ICE BRIDGE POSTS.
9. BOND TO EXISTING TOWER GROUND RING. CONTRACTOR TO VERIFY LOCATION/CONFIGURATION IN FIELD. COORDINATE WITH TOWER OWNER. (TYP.)
10. BOND GROUNDING TRIAD TO GROUND RING.
11. UPPER TOWER MOUNTED SECTOR GROUND BAR.
12. LOWER TOWER MOUNTED GROUND BAR.
13. BOND UPPER TOWER MOUNTED GROUND BAR TO LOWER TOWER MOUNTED GROUND BAR (2 GROUND LEADS).
14. MAIN SERVICE GROUND. (SEE RISER DIAGRAM).
15. GROUNDING TRIAD (REFER TO DETAIL).
16. BOND UTILITY FRAME SUPPORT POSTS TO GROUNDING TRIAD.

NOTES

1. COORDINATE WITH RISER DIAGRAM, GROUNDING SYSTEM SCHEMATIC DIAGRAM, AND ALL GROUNDING DETAILS.
2. REFER TO ALL ELECTRICAL AND GROUNDING DETAILS.
3. ALL GROUNDING WORK MUST BE COORDINATED WITH, AND APPROVED BY TOWER OWNER PRIOR TO INSTALLATION.
4. PROVIDE ANY ADDITIONAL GROUNDING ELEMENTS REQUIRED BY TOWER OWNER.
5. SOME LANDSCAPING NOT SHOWN FOR CLARITY. REFER TO CIVIL DRAWINGS.

REV.	DATE	DRAWN BY	CHK'D BY	DESCRIPTION
8	08/06/18	ASC	CAG	CONSTRUCTION – REVISED PER EVERSOURCE COMMENTS
7	06/25/18	TJB	TGK	CONSTRUCTION – REVISED EQUIPMENT SHELTER
5	05/16/18	TJB	TGK	CONSTRUCTION – REVISED EQUIPMENT SHELTER
4	08/03/17	JTD	CAG	CONSTRUCTION – REVISED CRITERIA PER CLIENT
3	07/12/17	JTD	CAG	CONSTRUCTION – REVISED CRITERIA PER CLIENT
2	06/27/17	DMD	TGK	CONSTRUCTION – REVISED CRITERIA PER CLIENT
1	11/20/14	TJB	CKD	CONSTRUCTION
0	11/10/14	TJB	CKD	CONSTRUCTION – ISSUED FOR CLIENT REVIEW

PROFESSIONAL ENGINEER SEAL

STATE OF CONNECTICUT LICENSED PROFESSIONAL ENGINEER 27517 JASON A. DARIA

at&t

SAI communications

CENTEK engineering
Centered on Solutions™
(203) 488-0580
(203) 488-8587 Fax
63-2 North Branford Road
Branford, CT 06405
www.CentekEng.com

AT&T MOBILITY
WIRELESS COMMUNICATIONS FACILITY
MERIDEN
SITE NUMBER: CT2117
200 EDGEMARK ACRES
MERIDEN, CT 06451

DATE: 11/03/14
SCALE: AS NOTED
JOB NO.: 13305.000
AMENDED JOB NO.: 17010.08

ELECTRICAL GROUNDING PLAN

E-4

Sheet No. 12 of 17

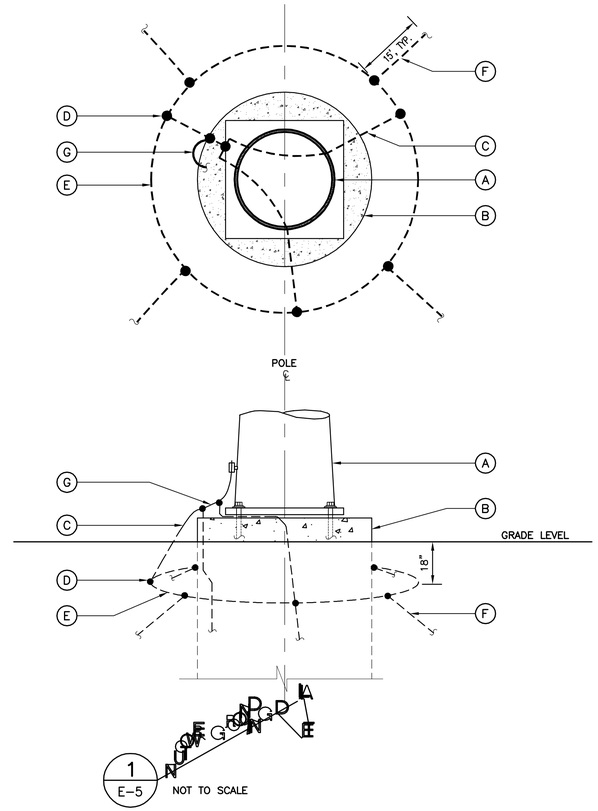

NU TOWER GROUNDING NOTES:

(NORTHEAST UTILITIES REQUIREMENTS)

- (A) STEEL HYBRID POLE.
- (B) CONCRETE CAISSON TYPE FOUNDATION.
- (C) STRANDED COPPERWELD SPOKE FROM POLE GROUND TO GRADING RING. SPOKES ARE A CONTINUATION OF STRANDED COPPERWELD COUNTERPOISE CONNECTING GRADING RING TO POLE GROUND. SPOKES TO SLOPE ON STRAIGHT LINE FROM GROND LEVEL TO GRADING RING.
- (D) PARALLEL GROVE CONNECTOR, NU SC190052.
- (E) GRADING RING @ 18" MINIMUM BELOW GRADE AND 24" TO 30" FROM TOWER FOUNDATION. GRADING RING TO BE 3 NO. 8 STRANDED ANEALED COPPERWELD.
- (F) COUNTERPOISE, 3 NO. 8 STRANDED ANEALED COPPERWELD (TYPICAL).
- (G) COPPERWELD POLE GROUND.

GENERAL NOTES:

1. THE INFORMATION ON THIS SHEET REPRESENTS TYPICAL NORTHEAST UTILITIES GROUNDING REQUIREMENTS. CONTRACTOR MUST COORDINATE WITH NORTHEAST UTILITIES SITE MANAGER FOR SPECIFIC (AND CURRENT) GROUNDING REQUIREMENTS AT THIS SITE.

NORTHEAST UTILITIES - TOWER GROUNDING SYSTEM NOTES

GENERAL–

1. THE OWNER WILL FURNISH THE WIRE, CONNECTORS, AND MISCELANEOUS MATERIAL ASSOCIATED WITH THE COUNTERPOISE GROUNDING SYSTEM.
2. THE CONTRACTOR SHALL FURNISH ALL LABOR, MATERIALS AND EQUIPMENT NECESSARY TO INSTALL THE GROUNDING SYSTEM AND TO REHABILITATE THE RIGHT–OF–WAY AS CLOSE AS POSSIBLE TO ITS ORIGINAL CONDITION.
3. THE CONTRACTOR SHALL HANDLE AND TRANSPORT THE OWNER SUPPLIED MATERIAL FROM THE OWNER'S STOREROOMS AND YARDS TO THE JOB SITE AND SHALL RETURN SURPLUS MATERIAL AND EMPTY REELS TO DESIGNATED STOREROOMS AND YARDS UPON COMPLETION OF THE CONTRACT.
4. NORTHEAST UTILITIES WILL BE RESPONSIBLE FOR PERFORMING TESTS FOR SURGE IMPEDANCE AND WAVE IMPEDENCE.

INSTALLATION–

1. UNLESS OTHERWISE DURECTED BY THE OWNER'S REPRESENTATIVE, COUNTERPOISE SHALL BE BURIED A MINIMUM OF 24" IN CULTIVATED AREAS AND 18" IN WOODED OR OTHER AREAS. IN ROCKY AREAS OR WHERE OBSTRUCTIONS ARE ENCOUNTERED, THE COUNTERPOISE SHALL BE DIVERTED AROUND SUCH OBSTRUCTIONS. ALL INSTALLATIONS SHALL INCLUDE CONNECTIONS TO EXISTING OR PROPOSED STRUCTURES, AND SUCH CONNECTIONS SHALL BE MADE BELOW GROUND USING BOLTED PARALLEL GROVE CONNECTORS.
2. WHERE MULTIPLE STUCTURE GROUNDS EXIST AT MULTI POLE STRUCTURES, THEY SHALL BE CONNECTED TOGETHER WITH BURIED COPPERWELD WIRE, BUT ONLY IF SUCH GROUNDS HAVE METALLIC CONNECTIONS UP THE POLES TO THE SHIELD WIRE(S). AT STRUCTURES THAT HAVE PALE GROUNDS AND ALSO POLE GUY GROUNDS, CONNECTIONS SHALL BE MADE ONLY TO THE POLE GROUNDS, AND THE MINIMUM SPACING BETWEEN THE COUNTERPOISE AND ANCHOR RODS SHALL BE 10'. AT WOOD POLE STRUCTURES WHERE NO SUCH POLE GROUND EXISTS, COUNTERPOISE CONNECTIONS SHALL BE MADE TO THE POLE TOP GUYS.
3. FOR SINGLE COUNTINUOUS (TYPE A) AND SINGLE BROKEN (TYPE B) COUNTERPOISE, THE WIRE SHALL IN GENERAL BE LAYED AT THE CENTERLINE OF THE TRANSMISSION LINE. FOR DOUBLE CONTINUOUS (TYPE C) AND DOUBLE BROKEN (TYPE D) COUNTERPOISE, THE WIRES SHALL IN GENERAL SHALL BE LAYED UNDER THE OUTSIDE PHASE WIRES OF THE TRANSMISSION LINE. COUNTERPOISE SHALL NOT BE INSTALLED ACROSS BROOKS, RIVERS, HIGHWAYS, RAILROADS, OR IN THE VICINITY OF TELEPHONE CABLES OR PIPELINES.
4. AT STEEL POLE STRUCTURES, A BURIED GRADING RING AND SPOKES SHALL ALSO BE INSTALLED AROUND THE STRUCTURE UNLESS THE STRUCTURE HAS A PAD AND PIER FOUNDATION OR UNLESS A RING ALREADY EXISTS. COUNTERPOISE WIRE SHALL BE CONNECTED AT TWO PLACES TO EACH RING, AND COPPERWELD SPOKES SHALL SLOPE LINEARLY UP TO THE STRUCTURE GROUND.
5. AT WOOD POLE STRUCTURES, AN 8' LENGTH OF PLASTIC MOULDING SHALL BE STAPLED OVER THE BOTTOM WITH 8' OF DOWNLEAD.

GROUND RODS–

1. WHERE GROUND RODS ARE REQUIRED, THEY SHALL BE SINGLE OR SECTIONAL WITH THE LENGTH SPECIFIED. THEY SHALL BE DRIVEN VERTICALLY INTO THE GROUND TO A DEPTH WHICH WILL LEAVE THE TOP OF THE ROD AT LEAST 12" BELOW GRADE. ALL RODS SHALL BE CONNECTED TO COUNTERPOISE OR TO POLE GROUNDS USING BOLTED CONNECTORS.

REHABILITATION–

1. SELECTIVE CLEARING PROCEDURES WERE USED IN THE DEVELOPMENT OF THE RIGHT–OF–WAY, AND GROWTH OF SELECTED SPECIES HAS BEEN SAVED. THE CONTRACTOR SHALL NOT VIOLATE THE OWNER'S INTENT TO SAVE SELECTIVE SPECIES AND IMPOSE THE MINIMUM ENVIRONMENTAL IMPACT ON THE RIGHT OF WAY DURING THE EXECUTION OF THE WORK. THE CONTRACTOR SHALL REVIEW THE ROUTING OF EACH SECTION OF COUNTERPOISE WITH THE OWNER'S REPRESENTATIVE PRIOR TO ITS FIELD SPECIFIED LOCATION. THE CONTRACTOR IS RESPONSIBLE TO THE OWNER FOR DAMAGES TO THE RIGHT–OF–WAY IN OTHER THAN THE FIELD SPECIFIED LOCATIONS.
2. ANY BRUSH ALONG THE FIELD SPECIFIED COUNTERPOISE ROUTES WHICH IS LEFT IN AN UNSIGHTLY CONDITION BY THE INSTALLATION WORK WILL BE CUT TO THE GROUND BY THE CONTRACTOR AND LEFT IN SMALL, NEAT PILES IN PLACE WHERE CUT.
3. IN LOCATIONS WHERE EXCAVATION FOR THE INSTALLATION OF COUNTERPOISE BRINGS TO THE SURFACE ANY SMALL BOULDERS, THEY WILL BE BACKFILLED BELOW GRADE OR DIPERSED ON THE RIGHT–OF–WAY AS THE OWNER'S REPRESENTATIVE MAY DIRECT. INSTALLATION OF THE COUNTERPOISE SHALL NOT RESULT IN A PATH OF SMALL BOULDERS ON THE FINISHED SURFACE.
4. THE OWNER ANTICIPATES THAT SEASONAL CONDITIONS MAY NOT ALLOW PERMANENT REHABILITATION OF WORK SITES AND THE RIGHT–OF–WAY UPON COMPLETION OF THE INSTALLATION OF THE COUNTERPOISE. WHERE TEMPORARY REHABILITATION HAS BEEN COMPLETED IN ADVERSE SEASON, THE CONTRACTOR SHALL TAKE THE FOLLOWING STEPS:
   - A. WATERBARS WILL BE CONSTRUCTED ON ACCESS ROADS AND TRENCH LINES TO SHUNT WATER OFF THIS LINE OF DISTURBED SURFACES AND CONTROL EROSION ALONG THE DISTURBED SURFACE.
   - B. ALL DISTURBED SURFACES OF FOUNDATION SITES OR ALONG TRENCH LINES OR ACCESS ROADS WILL BE GRADED AND COVERED WITH HAY MULCH. SUCH DISTURBED SY=URFACES ON SLOPES GREATER THAN ONE (VERTICAL) ON FOUR (HORIZONTAL) SHALL BE COVERED WITH WOOD CHIPS.
5. AS DRYING CONDITIONS PERMIT IN THE SPRING, FOLLOWING COMPLETION OF THE INSTALLATION OF COUNTERPOISE, PERMANENT REHABILITATION OF ALL DISTURBED OR ERODED SURFACES SHALL BE ACCOMPLISHED AS FOLLOWS:
   - A. LAWNS, GOLF COURSES, CEMETARIES AND OTHER SIMILAR OCCUPANCIES SHALL BE LOAMED, GRADED, FERTILIZED, SEEDED AND WHERE APPROPRIATE, MULCHED, TO ESTABLISH A REHABILITATION CONSISTANT WITH THE USE ESTABLISHED BY THE OCCUPANT.
   - B. GARDENS, OTHER CULTIVATED AREAS AND PASTURES, SHALL BE GRADED AND TOPSOILED TO RESTORE THE DEPTH OF FERTILE SOIL COMMON TO THE ADJACENT GROUND. WHERE APPROPRIATE, SEEDING SHALL BE DONE IN ACCORDANCE WITH STEP C BELOW.
   - C. THE CONTRACTOR SHALL SEED ALL DISTURBED AREAS ALONG THE NEW COUNTERPOISE ROUTES. SEED SHALL BE SPREAD AT THE RATE OF 100 LBS. PER ACRE AND SHALL BE AS FOLLOWS OR APPROVED EQUAL:

	% BY WEIGHT	% BY GERMINATION	% BY PURITY
CREEPING RED FESCUE	30	85	98
DOMESTIC RYE	20	90	98
KENTUCKY TALL FESCUE	50	--	--
	100		

   - D. ALL OTHER DISTURBED AREAS INCLUDING REMAINING FOUNDATION SITES, ACCESS ROADS, AND REPAIR OF EROSION OF SITUATION SHALL BE SEEDED WITH MIXED SPECIFICATION ABOVE. IN REMOTE AREAS, A CONSERVATION MIX, AS USED BY THE CONNECTICUT STATE PARKS AND FOREST COMMISION MAY BE SUBSTITUTED. ALL AREAS WHICH EXPERIENCED EROSION DAMAGE AND ALL SLOPES OVER ONE (VERTICAL) AND FOUR (HORIZONTAL) WHERE TEMPORARY REHABILITAION WORK HAS BEEN DONE SHALL BE REMULCHED.
6. IT IS IMPERATIVE THAT PERMANENT REHABILITATION BE ACCOMPLISHED IN GOOD TIME, WHICH WILL ALLOW THE OCCUPANT FULL AND UNDISTURBED USE OF THE SITE IN THE SUCCEEDING SEASON, AND TO PREVENT UNNECESSARY AND UNREASONABLE SPREADING OF CONTINUATION OF DISTURBED SURFACES.
7. ANY BRUSH ALONG THE ACCESS ROADS WHICH IS LEFT IN AN UNSIGHTLY CONDITION BY THE WORK CONDUCTED, SHALL BE CUT TO THE GROUND BY THE CONTRACTOR AND LEFT IN SMALL NEAT PILES IN PLACE WHERE CUT.

REV.	DATE	DRAWN BY	CHK'D BY	DESCRIPTION
8	08/06/18	ASC	CAG	CONSTRUCTION – REVISED PER EVERSOURCE COMMENTS
7	06/25/18	TJB	TGK	CONSTRUCTION – REVISED EQUIPMENT SHELTER
5	05/16/18	TJB	TGK	CONSTRUCTION – REVISED EQUIPMENT SHELTER
4	08/03/17	JTD	CAG	CONSTRUCTION – REVISED CRITERIA PER CLIENT
3	07/12/17	JTD	CAG	CONSTRUCTION – REVISED CRITERIA PER CLIENT
2	06/27/17	DMD	TGK	CONSTRUCTION – REVISED CRITERIA PER CLIENT
1	11/20/14	TJB	CKD	CONSTRUCTION
0	11/10/14	TJB	CKD	CONSTRUCTION – ISSUED FOR CLIENT REVIEW

PROFESSIONAL ENGINEER SEAL

STATE OF CONNECTICUT ★ STEVEN A. GRIFFIN ★ 27037 ★ PROFESSIONAL ENGINEER

at&t

SAI communications

CENTEK engineering
Centered on Solutions™
(203) 488-0580
(203) 488-8587 Fax
63-2 North Branford Road
Branford, CT 06405
www.CentekEng.com

AT&T MOBILITY

WIRELESS COMMUNICATIONS FACILITY

MERIDEN

SITE NUMBER: CT2117

200 EDGEMARK ACRES
MERIDEN, CT 06451

DATE: 11/03/14
SCALE: AS NOTED
JOB NO.: 13305.000
AMENDED JOB NO.: 17010.08

N.U. GROUNDING PLAN, DETAILS AND NOTES

E-5

Sheet No. 13 of 17

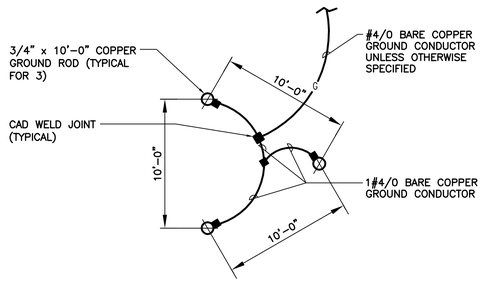

1 E-6 **GROUND TRIAD DETAIL**
NOT TO SCALE

EACH RRH CABINET SHALL BE GROUNDED IN THE FOLLOWING MANNER:
1. AT TOP OF THE CABINET
2. AT RIGHT SIDE OF THE CABINET.

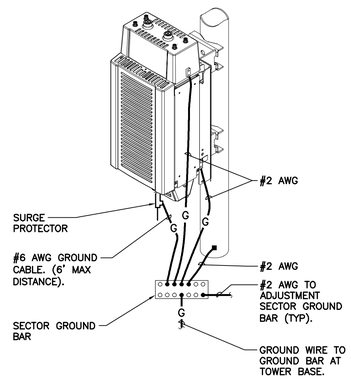

2 E-6 **RRH POLE MOUNT GROUNDING**
NOT TO SCALE

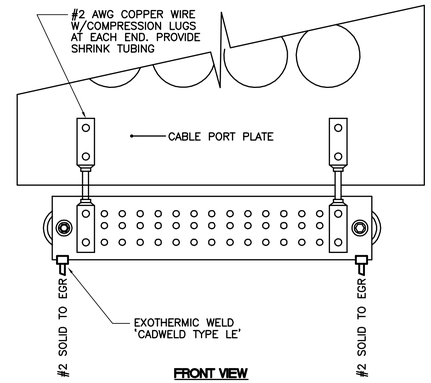

3 E-6 **CABLEPORT GROUND BAR LUG CONNECTION**
NOT TO SCALE

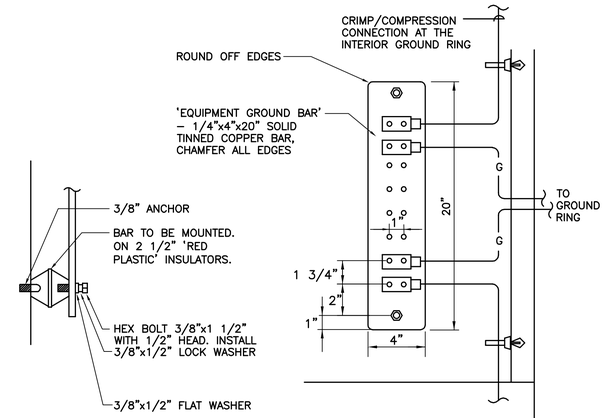

4 E-6 **EQUIPMENT GROUND BAR DETAIL**
NOT TO SCALE

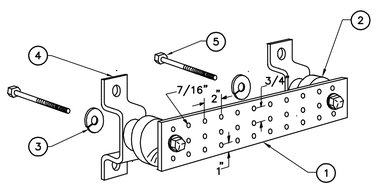

NOTES

1. TINNED COPPER GROUND BAR, 1/4" x 4" x 20", NEWTON INSTRUMENT CO. HOLE CENTERS TO MATCH NEMA DOUBLE LUG CONFIGURATION.
2. INSULATORS, NEWTON INSTRUMENT CAT. NO. 3061-4.
3. 5/8" LOCK WASHERS, NEWTON INSTRUMENT CO. CAT. NO. 3015-8.
4. WALL MOUNTING BRACKET, NEWTON INSTRUMENT CO. CAT NO. A-6056.
5. 5/8-11 x 1" STAINLESS STEEL TRUSS SPANNER MACHINE SCREWS.

5 E-6 **GROUND BAR DETAIL**
NOT TO SCALE

WARNING

ARC FLASH & SHOCK HAZARD
APPROPRIATE PPE REQUIRED

MAXIMUM AVAILABLE FAULT CURRENT:

XX,XXX AMPS

DATE: MM/DD/YYYY

NOTES:
1. REFER TO SPECIFICATIONS FOR FOR ADDITIONAL NAMEPLATE REQUIREMENTS.
2. PROVIDE WARNING LABEL ON ALL SERVICE EQUIPMENT IN ACCORDANCE WITH 2011 NEC 110.24.

6 E-6 **DETAIL OF TYPICAL FAULT CURRENT SIGN**
NOT TO SCALE

DANGER

ARC FLASH AND SHOCK HAZARD.

APPROPRIATE PPE REQUIRED.

NOTES:
1. REFER TO SPECIFICATIONS FOR FOR ADDITIONAL NAMEPLATE REQUIREMENTS.
2. PROVIDE WARNING LABEL ON ALL SWITCHBOARDS, DISTRIBUTION PANELS, PANELBOARDS IN ACCORDANCE WITH 2005 NEC 110.16.

7 E-6 **DETAIL OF TYPICAL FLASH PROTECTION WARNING SIGN**
NOT TO SCALE

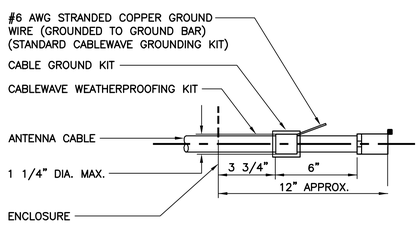

NOTE:
1. DO NOT INSTALL CABLE GROUND KIT AT A BEND AND ALWAYS DIRECT GROUND WIRE DOWN TO GROUND BAR.

8 E-6 **ANTENNA CABLE GROUNDING DETAIL**
NOT TO SCALE

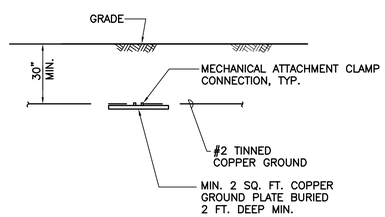

NOTE:
1. GROUND PLATE DETAIL TO BE USED ONLY IF 10 FT. GROUND ROD DEPTH CANNOT BE ACHIEVED DUE TO LEDGE CONDITION OR IF EXISTING TOWER FOUNDATION IS ENCOUNTERED.

8A E-6 **GROUND PLATE DETAIL**
NOT TO SCALE

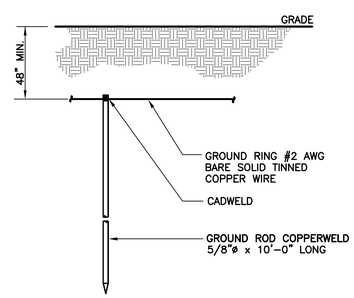

NOTE:
1. USE GROUND PLATE DETAIL IF 10 FT. GROUND ROD DEPTH CANNOT BE ACHIEVED DUE TO LEDGE CONDITION OR IF EXISTING TOWER FOUNDATION IS ENCOUNTERED.

9 E-6 **GROUND ROD DETAIL**
NOT TO SCALE

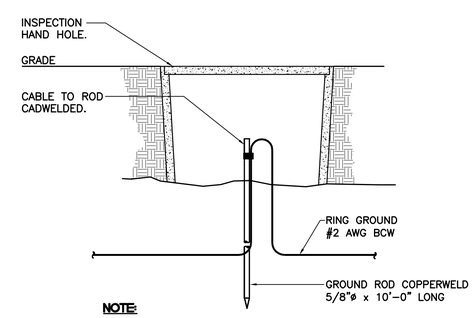

NOTE:
1. INSPECTION HAND HOLE MAY BE CONCRETE OR PVC AND SHALL BE A MINIMUM OF 12" DIA x 18" DEEP.

10 E-6 **GROUND ROD WITH ACCESS DETAIL**
NOT TO SCALE

REV.	DATE	DRAWN BY	CHK'D BY	DESCRIPTION
8	08/06/18	ASC	CAG	CONSTRUCTION – REVISED PER EVERSOURCE COMMENTS
7	06/25/18	TJB	TGK	CONSTRUCTION – REVISED EQUIPMENT SHELTER
5	05/16/18	TJB	TGK	CONSTRUCTION – REVISED EQUIPMENT SHELTER
4	08/03/17	JTD	CAG	CONSTRUCTION – REVISED CRITERIA PER CLIENT
3	07/12/17	JTD	CAG	CONSTRUCTION – REVISED CRITERIA PER CLIENT
2	06/27/17	DMD	TGK	CONSTRUCTION – REVISED CRITERIA PER CLIENT
1	11/20/14	TJB	CKD	CONSTRUCTION
0	11/10/14	TJB	CKD	CONSTRUCTION – ISSUED FOR CLIENT REVIEW

PROFESSIONAL ENGINEER SEAL

at&t

SAI communications

CENTEK engineering
Centered on Solutions™
(203) 488-0580
(203) 488-8587 Fax
63-2 North Branford Road
Branford, CT 06405
www.CentekEng.com

AT&T MOBILITY
WIRELESS COMMUNICATIONS FACILITY
MERIDEN
SITE NUMBER: CT2117
200 EDGEMARK ACRES
MERIDEN, CT 06451

DATE: 11/03/14
SCALE: AS NOTED
JOB NO.: 13305.000
AMENDED JOB NO.: 17010.08

ELECTRICAL DETAILS

E-6

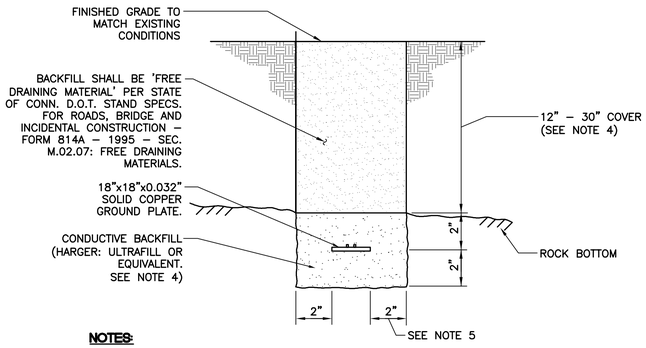

NOTES:

1. ENGINEER SHALL INSPECT PLACEMENT OF EGR CONDUCTOR PRIOR TO BACKFILLING.
2. MAINTAIN MIN. 2'–0" LINEAR CLEARANCE BETWEEN BACKFILL AND THE FOLLOWING: FOUNDATION, UNDERGROUND PIPING/CONDUIT, UNDERGROUND SERVICES. IN THE CLEARANCE AREAS, USE EARTH BACKFILL INSTEAD.
3. EXERCISE HANDLING AND USE PRECAUTION OF BACKFILL MATERIAL PER MFR'S REQUIREMENTS.
4. FOR LOCATIONS WHERE ROCK BOTTOM DEPTH IS LESS THAN 12" CONDUCTIVE CONCRETE SHALL BE USED INSTEAD OF CONDUCTIVE BACKFILL.
5. PROVIDE MIN 2" CLEARANCE ON ALL SIDES OF GROUND PLATE.

1 / E-7 GROUND PLATE TRENCH/BACKFILL DETAIL (SHALLOW TOPSOIL)

NOT TO SCALE

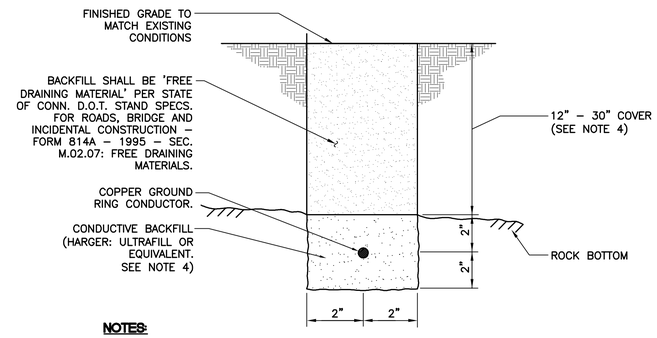

NOTES:

1. ENGINEER SHALL INSPECT PLACEMENT OF EGR CONDUCTOR PRIOR TO BACKFILLING.
2. MAINTAIN MIN. 2'–0" LINEAR CLEARANCE BETWEEN BACKFILL AND THE FOLLOWING: FOUNDATION, UNDERGROUND PIPING/CONDUIT, UNDERGROUND SERVICES. IN THE CLEARANCE AREAS, USE EARTH BACKFILL INSTEAD.
3. EXERCISE HANDLING AND USE PRECAUTION OF BACKFILL MATERIAL PER MFR'S REQUIREMENTS.
4. FOR LOCATIONS WHERE ROCK BOTTOM DEPTH IS LESS THAN 12" CONDUCTIVE CONCRETE SHALL BE USED INSTEAD OF CONDUCTIVE BACKFILL.

2 / E-7 EGR TRENCH/BACKFILL DETAIL (SHALLOW TOPSOIL)

NOT TO SCALE

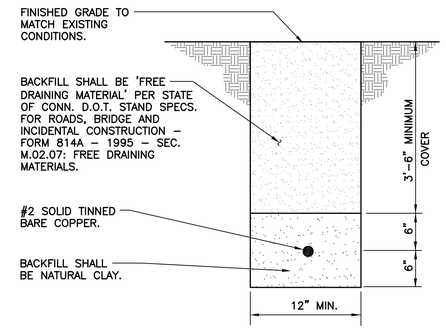

NOTES:

1. ENGINEER SHALL INSPECT PLACEMENT OF EGR CONDUCTOR PRIOR TO BACKFILLING.
2. MAINTAIN MIN. 2'–0" LINEAR CLEARANCE BETWEEN NATURAL CLAY BACKFILL AND THE FOLLOWING: FOUNDATION, UNDERGROUND PIPING/CONDUIT, UNDERGROUND SERVICES. IN THE CLEARANCE AREAS, USE EARTH BACKFILL INSTEAD.
3. EXERCISE HANDLING AND USE PRECAUTION OF BACKFILL MATERIAL PER MFR'S REQUIREMENTS.

3 / E-7 EGR TRENCH/BACKFILL DETAIL

NOT TO SCALE

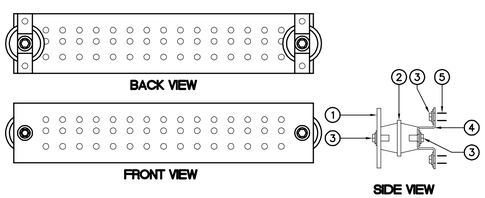

TYPICAL GROUND BAR ASSEMBLY

N.T.S.

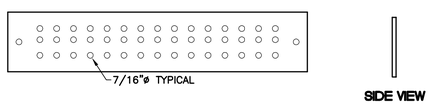

TYPICAL GROUND BAR - DIMENSIONS

N.T.S.

NOTES

1. HIGH CONDUCTIVITY TINNED COPPER BAR 1'–8"Lx4"Wx1/4"D.
2. RED COLORED STANDOFF INSULATOR PLASTIC #1872–1A.
3. STAINLESS STEEL TRUSS SPANNER MACHINE SCREWS, SPLIT LOCKWASHER AND FLAT WASHER.
4. 1"Wx1/8"T STAINLESS STEEL TYPE 304 BRACKET.
5. STAINLESS STEEL TYPE 304 HARDWARE – 3/8"ø EXPANSION BOLT FOR CONCRETE.

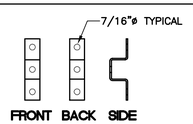

BRACKET FOR GROUND BAR-DIMENSIONS

N.T.S.

4 / E-7 MASTER/EQUIPMENT GROUND BAR DETAILS

N.T.S.

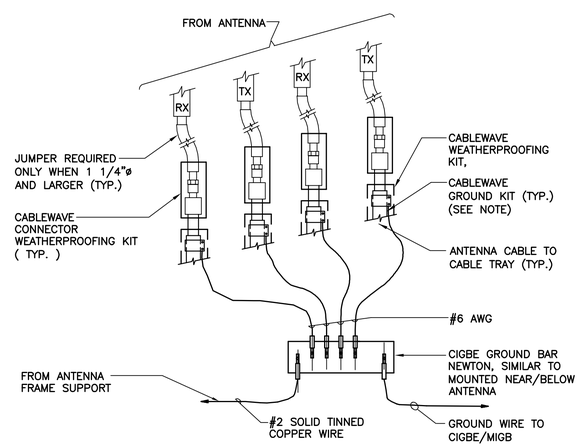

NOTE:

1. DO NOT INSTALL CABLE GROUND KIT AT A BEND AND ALWAYS DIRECT GROUND WIRE DOWN TO CIGBE

5 / E-7 CONNECTION OF GROUND WIRES TO GROUND BAR

NOT TO SCALE

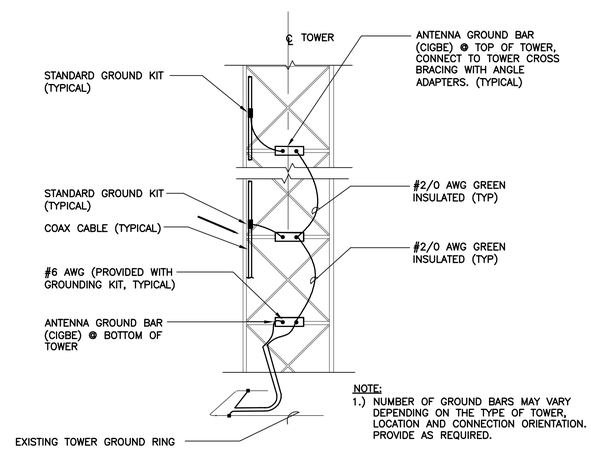

NOTE:
1.) NUMBER OF GROUND BARS MAY VARY DEPENDING ON THE TYPE OF TOWER, LOCATION AND CONNECTION ORIENTATION. PROVIDE AS REQUIRED.

6 / E-7 ANTENNA CABLE GROUNDING - LATTICE TOWER

NOT TO SCALE

REV.	DATE	DRAWN BY	CHK'D BY	DESCRIPTION
8	08/06/18	ASC	CAG	CONSTRUCTION – REVISED PER EVERSOURCE COMMENTS
7	06/25/18	TJB	TGK	CONSTRUCTION – REVISED EQUIPMENT SHELTER
5	05/16/18	TJB	TGK	CONSTRUCTION – REVISED EQUIPMENT SHELTER
4	08/03/17	JTD	CAG	CONSTRUCTION – REVISED CRITERIA PER CLIENT
3	07/12/17	JTD	CAG	CONSTRUCTION – REVISED CRITERIA PER CLIENT
2	06/27/17	DMD	TGK	CONSTRUCTION – REVISED CRITERIA PER CLIENT
1	11/20/14	TJB	CKD	CONSTRUCTION
0	11/10/14	TJB	CKD	CONSTRUCTION – ISSUED FOR CLIENT REVIEW

PROFESSIONAL ENGINEER SEAL

STATE OF CONNECTICUT ★ PROFESSIONAL ENGINEER ★ 27507

at&t

SAI communications

CENTEK engineering
Centered on Solutions™
(203) 488-0580
(203) 488-8587 Fax
63-2 North Branford Road
Branford, CT 06405
www.CentekEng.com

AT&T MOBILITY

WIRELESS COMMUNICATIONS FACILITY

MERIDEN

SITE NUMBER: CT2117

200 EDGEMARK ACRES
MERIDEN, CT 06451

DATE: 11/03/14
SCALE: AS NOTED
JOB NO.: 13305.000
AMENDED JOB NO.: 17010.08

ELECTRICAL DETAILS

E-7

Sheet No. 15 of 17

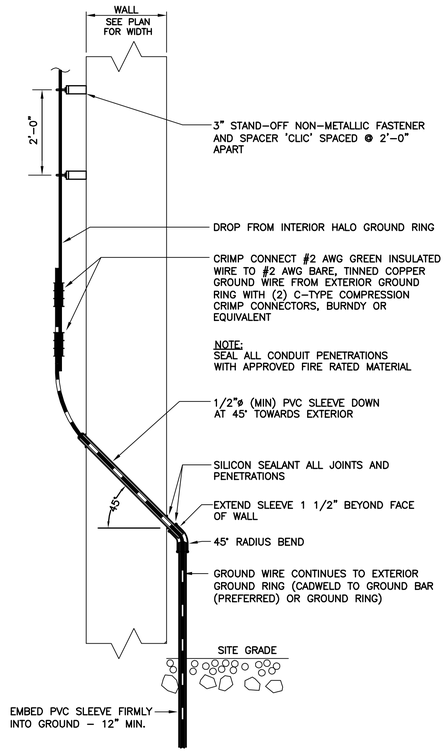

1 / E-8 CELLULAR GROUNDING CONDUCTOR SECURED ON WALL

N.T.S.

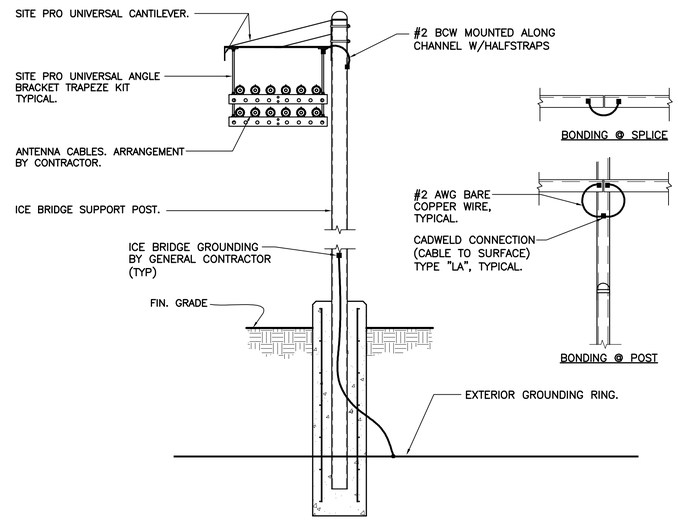

2 / E-8 ICE BRIDGE BONDING DETAIL

NOT TO SCALE

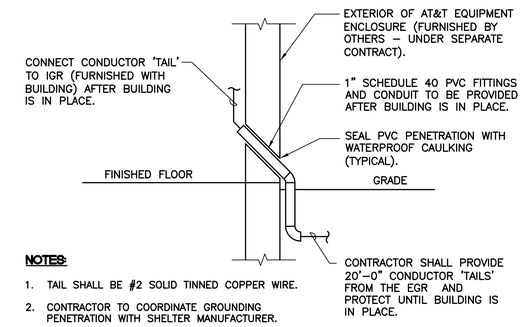

NOTES:

1. TAIL SHALL BE #2 SOLID TINNED COPPER WIRE.
2. CONTRACTOR TO COORDINATE GROUNDING PENETRATION WITH SHELTER MANUFACTURER.

3 / E-8 TYPICAL EXTERIOR/INTERIOR GROUNDING CONNECTION

NOT TO SCALE

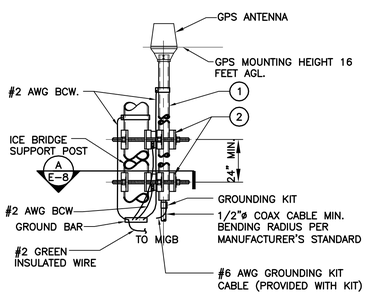

GPS ANTENNA MOUNTING BRACKET

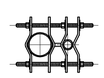

A / E-8 SECTION

NOT TO SCALE

BILL OF MATERIALS

ITEM	DESCRIPTION	QUANTITY
1	2-1/2"ø SCH. 40 x 8'-0" LG. MAX SS OR GALV. PIPE	1
2	UNIVERSAL CLAMP SET.	2

NOTES

1. THE ELEVATION AND LOCATION OF THE GPS ANTENNA SHALL BE IN ACCORDANCE WITH THE FINAL RF REPORT.
2. THE GPS ANTENNA MOUNT IS DESIGNED TO FASTEN TO A STANDARD 2-1/2" DIAMETER, SCHEDULE 40, GALVANIZED STEEL OR STAINLESS STEEL PIPE. THE PIPE MUST NOT BE THREADED AT THE ANTENNA MOUNT END. THE PIPE SHALL BE CUT TO THE REQUIRED LENGTH (MINIMUM OF 24 INCHES) USING A HAND OR ROTARY PIPE CUTTER TO ASSURE A SMOOTH AND PERPENDICULAR CUT. A HACK SAW SHALL NOT BE USED. THE CUT PIPE END SHALL BE DEBURRED AND SMOOTH IN ORDER TO SEAL AGAINST THE NEOPRENE GASKET ATTACHED TO THE ANTENNA MOUNT.

4 / E-8 GPS GROUNDING/MOUNTING BRACKET DETAIL

NOT TO SCALE

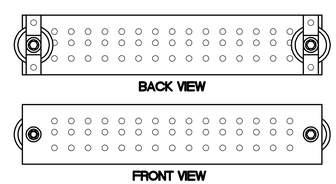

TYPICAL GROUND BAR ASSEMBLY

N.T.S.

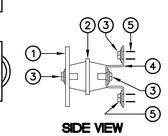

NOTES:

1. HIGH CONDUCTIVITY TINNED COPPER BAR 1'-8"Lx4"Wx1/4"D
2. RED COLORED STANDOFF INSULATOR PLASTIC #1872-1A
3. STAINLESS STEEL TRUSS SPANNER MACHINE SCREWS, SPLIT LOCKWASHER AND FLAT WASHER
4. 1"Wx1/8"T STAINLESS STEEL TYPE 304 BRACKET
5. STAINLESS STEEL TYPE 304 HARDWARE – 3/8"ø EXPANSION BOLT FOR CONCRETE

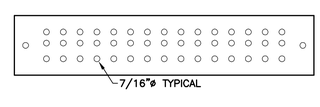

TYPICAL GROUND BAR - DIMENSIONS

N.T.S.

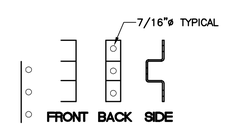

BRACKET FOR GROUND BAR-DIMENSIONS

N.T.S.

5 / E-8 MASTER/EQUIPMENT GROUND BAR DETAILS

N.T.S.

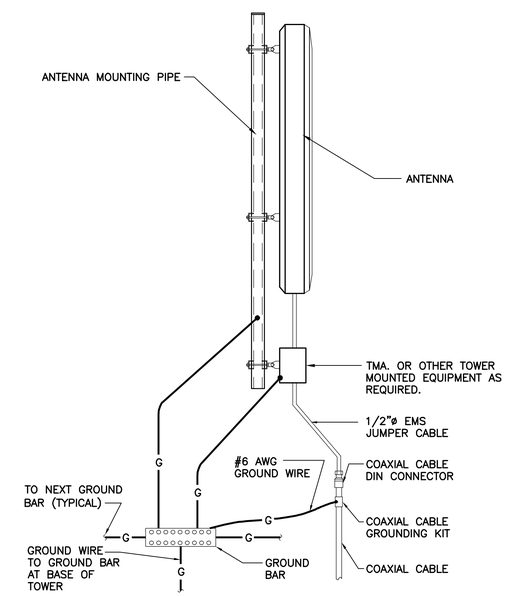

6 / E-8 TYPICAL ANTENNA GROUNDING DETAIL

NOT TO SCALE

REV.	DATE	DRAWN BY	CHK'D BY	DESCRIPTION
8	08/06/18	ASC	CAG	CONSTRUCTION – REVISED PER EVERSOURCE COMMENTS
7	06/25/18	TJB	TGK	CONSTRUCTION – REVISED EQUIPMENT SHELTER
5	05/16/18	TJB	TGK	CONSTRUCTION – REVISED EQUIPMENT SHELTER
4	08/03/17	JTD	CAG	CONSTRUCTION – REVISED CRITERIA PER CLIENT
3	07/12/17	JTD	CAG	CONSTRUCTION – REVISED CRITERIA PER CLIENT
2	06/27/17	DMD	TGK	CONSTRUCTION – REVISED CRITERIA PER CLIENT
1	11/20/14	TJB	CKD	CONSTRUCTION
0	11/10/14	TJB	CKD	CONSTRUCTION – ISSUED FOR CLIENT REVIEW

PROFESSIONAL ENGINEER SEAL

STATE OF CONNECTICUT ★ PROFESSIONAL ENGINEER ★ ALBERT A. MICHNICK JR. 27537

at&t

SAI communications

CENTEK engineering
Centered on Solutions™
(203) 488-0580
(203) 488-8587 Fax
63-2 North Branford Road
Branford, CT 06405
www.CentekEng.com

AT&T MOBILITY

WIRELESS COMMUNICATIONS FACILITY

MERIDEN

SITE NUMBER: CT2117

200 EDGEMARK ACRES
MERIDEN, CT 06451

DATE: 11/03/14
SCALE: AS NOTED
JOB NO.: 13305.000
AMENDED JOB NO.: 17010.08

ELECTRICAL DETAILS

E-8

Sheet No. 16 of 17

ELECTRICAL SPECIFICATIONS

SECTION 16010

1.01. SCOPE OF WORK

A. WORK SHALL INCLUDE ALL LABOR, EQUIPMENT AND SERVICES REQUIRED TO COMPLETE (MAKE READY FOR OPERATION) ALL THE ELECTRICAL WORK INCLUDING, BUT NOT LIMITED TO, THE FOLLOWING:

1. INSTALL NEW 6–GANG MULTI METER CENTER, 800A, 240/120V, 1P, 3 WIRE ELECTRIC SERVICE WITH REVENUE METER AND 200A MAIN CIRCUIT BREAKER FOR OWNER AND ASSOCIATED DISTRIBUTION EQUIPMENT. (AS REQUIRED BY UTILITY CO.)
2. NEW SITE TELEPHONE SERVICE AS SPECIFIED BY TELEPHONE COMPANY.
3. GENERATOR/TRANSFER SWITCH.
4. FEEDERS AND BRANCH CIRCUIT WIRING TO PANELS, RECEPTACLES, EQUIPMENT, LIGHTING FIXTURES, ETC. AS INDICATED OR NOTED ON PLANS.
5. POWER AND TEMPERATURE CONTROL WIRING FOR HVAC EQUIPMENT.
   a. FURNISH AND INSTALL ALL POWER WIRING FOR ALL HEATING, VENTILATING, AIR CONDITIONING, MOTORS AND DEVICES, AND FIRE PROTECTION EQUIPMENT INDICATED ON THE PLANS OR CALLED FOR IN THIS SPECIFICATION, EITHER ELECTRICAL OR MECHANICAL INCLUDING ALL CONTROL WIRING. ALL MAGNETIC STARTERS SHALL BE FURNISHED UNDER DIVISION 15 AND HAVE INSTALLED THEREIN A PROPER OVERLOAD HEATER FOR EACH MOTOR.
   b. ALL WIRING, BOTH POWER AND CONTROL, FOR SUCH ITEMS AS UNIT HEATERS, EXHAUST FANS, ETC., NOT SPECIFICALLY CALLED FOR IN THE TEMPERATURE CONTROL SPECIFICATIONS, SHALL BE WIRED UNDER DIVISION 16.
   c. ALL CONTROLS WHICH ARE TO BE WIRED BY THIS CONTRACTOR SHALL BE DELIVERED TO HIM BY THE CONTRACTOR/VENDOR FURNISHING THEM.
6. CELLULAR SITE ALARMS, ASSOCIATED WIRING AND DEVICES.
7. CELLULAR GROUNDING SYSTEMS, CONSISTING OF ANTENNA GROUNDING, INTERIOR GROUNDING RING, GROUND BARS, ETC.
8. FURNISH AND INSTALL 3/4" PLYWOOD BACKBOARD OF SIZE INDICATED ON DRAWINGS FOR MOUNTING OF POWER/SERVICE EQUIPMENT AND TELEPHONE/ALARM EQUIPMENT. BACKBOARDS SHALL BE PAINTED WITH TWO (2) COATS OF SEMI–GLOSS GRAY FIRE RETARDANT PAINT.
9. FIELD MEASURE EXISTING ELECTRICAL SERVICES TO CONFIRM AVAILABLE EXISTING POWER.
10. COORDINATE ALL WORK SHOWN, ON THESE PLANS WITH LOCAL UTILITY COMPANIES.

B. LOCAL UTILITY COMPANIES SHALL PROVIDE THE FOLLOWING:

1. TELEPHONE CABLES.
2. SHUTDOWN OF SERVICE (COORDINATE WITH OWNER).

C. CONTRACTOR SHALL CONFER WITH LOCAL UTILITY COMPANIES TO ASCERTAIN THE LIMITS OF THEIR WORK AND SHALL INCLUDE IN BID ANY CHARGES OR FEES MADE BY THE UTILITY COMPANIES FOR THEIR PORTION OF THE WORK AND SHALL PROVIDE AND INSTALL ALL ITEMS REQUIRED, BUT NOT PROVIDED BY UTILITY COMPANY.

D. ELECTRICAL CONTRACTOR SHALL COORDINATE ELECTRICAL INSTALLATION WITH ELECTRIC UTILITY CO. PRIOR TO INSTALLATION.

E. CONTRACTOR SHALL COORDINATE WITH TELEPHONE UTILITY COMPANY FOR LOCATION OF TELEPHONE SERVICE AND TO DETERMINE ANY REQUIRED EQUIPMENT TO BE INSTALLED BY CONTRACTOR.

1.02. GENERAL REQUIREMENTS

A. THE ENTIRE ELECTRICAL INSTALLATION SHALL BE MADE IN STRICT ACCORDANCE WITH ALL LOCAL, STATE AND NATIONAL CODES AND REGULATIONS WHICH MAY APPLY AND NOTHING IN THE DRAWINGS OR SPECIFICATIONS SHALL BE INTERPRETED AS AN INFRINGEMENT OF SUCH CODES OR REGULATIONS.

B. THE ELECTRICAL CONTRACTOR IS TO BE RESPONSIBLE FOR THE COMPLETE INSTALLATION AND COORDINATION OF THE ENTIRE ELECTRICAL SERVICE. ALL ACTIVITIES TO BE COORDINATED THROUGH OWNERS REPRESENTATIVE, DESIGN ENGINEER AND OTHER AUTHORITIES HAVING JURISDICTION OF TRADES.

C. THE CONTRACTOR SHALL BE RESPONSIBLE FOR OBTAINING ALL PERMITS AND PAY ALL FEES THAT MAY BE REQUIRED FOR THE ELECTRICAL WORK AND FOR SCHEDULING OF ALL INSPECTIONS THAT MAY BE REQUIRED BY THE LOCAL AUTHORITY.

D. THE CONTRACTOR SHALL BE RESPONSIBLE FOR COORDINATION WITH THE BUILDING OWNER FOR NEW AND/OR DEMOLITION WORK INVOLVED.

E. THE CONTRACTOR SHALL BE RESPONSIBLE FOR COORDINATION WITH LOCAL TELEPHONE COMPANY THAT MAY BE REQUIRED FOR THE INSTALLATION OF TELEPHONE SERVICE TO THE PROPOSED CELLULAR SITE.

F. NO MATERIAL OTHER THAN THAT CONTAINED IN THE "LATEST LIST OF ELECTRICAL FITTINGS" APPROVED BY THE UNDERWRITERS' LABORATORIES, SHALL BE USED IN ANY PART OF THE WORK. ALL MATERIAL FOR WHICH LABEL SERVICE HAS BEEN ESTABLISHED SHALL BEAR THE U.L. LABEL.

G. THE CONTRACTOR SHALL GUARANTEE ALL NEW WORK FOR A PERIOD OF ONE YEAR FROM THE ACCEPTANCE DATE BY THE OWNER. THE CONTRACTOR SHALL BE RESPONSIBLE FOR OBTAINING WARRANTIES FROM ALL EQUIPMENT MANUFACTURERS FOR SUBMISSION TO THE OWNER.

H. DRAWINGS INDICATE GENERAL ARRANGEMENT OF WORK INCLUDED IN CONTRACT. CONTRACTOR SHALL, WITHOUT EXTRA CHARGE, MAKE MODIFICATIONS TO THE LAYOUT OF THE WORK TO PREVENT CONFLICT WITH WORK OF OTHER TRADES AND FOR THE PROPER INSTALLATION OF WORK. CHECK ALL DRAWINGS AND VISIT JOB SITE TO VERIFY SPACE AND TYPE OF EXISTING CONDITIONS IN WHICH WORK WILL BE DONE, PRIOR TO SUBMITTAL OF BID.

I. THE ELECTRICAL CONTRACTOR SHALL SUPPLY THREE (3) COMPLETE SETS OF APPROVED DRAWINGS, ENGINEERING DATA SHEETS, MAINTENANCE AND OPERATING INSTRUCTION MANUALS FOR ALL SYSTEMS AND THEIR RESPECTIVE EQUIPMENT. THESE MANUALS SHALL BE INSERTED IN VINYL COVERED 3–RING BINDERS AND TURNED OVER TO OWNER'S REPRESENTATIVE ONE (1) WEEK PRIOR TO FINAL PUNCH LIST.

J. ALL WORK SHALL BE INSTALLED IN A NEAT AND WORKMAN LIKE MANNER AND WILL BE SUBJECT TO THE APPROVAL OF THE OWNER'S REPRESENTATIVE.

K. ALL EQUIPMENT AND MATERIALS TO BE INSTALLED SHALL BE NEW, UNLESS OTHERWISE NOTED.

L. BEFORE FINAL PAYMENT, THE CONTRACTOR SHALL PROVIDE A COMPLETE SET OF PRINTS (AS–BUILTS), LEGIBLY MARKED IN RED PENCIL TO SHOW ALL CHANGES FROM THE ORIGINAL PLANS.

M. PROVIDE TEMPORARY POWER AND LIGHTING IN WORK AREAS AS REQUIRED.

N. SHOP DRAWINGS:

1. CONTRACTOR SHALL SUBMIT SIX (6) COPIES OF SHOP DRAWINGS ON ALL EQUIPMENT AND MATERIALS PROPOSED FOR USE ON THIS PROJECT, GIVING ALL DETAILS, WHICH INCLUDE DIMENSIONS, CAPACITIES, ETC.
2. CONTRACTOR SHALL SUBMIT SIX (6) COPIES OF ALL TEST REPORTS CALLED FOR IN THE SPECIFICATIONS AND DRAWINGS.

O. ENTIRE ELECTRICAL INSTALLATION SHALL BE IN ACCORDANCE WITH OWNER'S SPECIFICATIONS, AND REQUIREMENTS OF ALL LOCAL AUTHORITIES HAVING JURISDICTION. IT IS THE CONTRACTOR'S RESPONSIBILITY TO COORDINATE WITH APPROPRIATE INDIVIDUALS TO OBTAIN ALL SUCH SPECIFICATIONS AND REQUIREMENTS. NOTHING CONTAINED IN, OR OMITTED FROM, THESE DOCUMENTS SHALL RELIEVE CONTRACTOR FROM THIS OBLIGATION.

SECTION 16111

1.01. CONDUIT

A. MINIMUM CONDUIT SIZE FOR BRANCH CIRCUITS, LOW VOLTAGE CONTROL AND ALARM CIRCUITS SHALL BE 3/4". ALL CONDUIT RUNS LOCATED WITHIN THE OWNER'S EQUIPMENT ROOM SHALL ORIGINATE FROM THE WIREWAY AND RUN VERTICALLY TO ITS DESTINATION. NO BENDS WILL BE ACCEPTED. CONDUITS SHALL BE PROPERLY FASTENED TO THE WALLS AND CEILINGS AS REQUIRED BY THE N.E.C.

CONDUIT MATERIAL SHALL BE AS FOLLOWS:

1. ELECTRIC METALLIC TUBING (EMT) – BRANCH CIRCUITS INSIDE WIRELESS ROOM
2. GALVANIZED RIGID CONDUIT (GRC) – FEEDERS AND CIRCUITS EXPOSED TO EXTERIOR & UNDERGROUND.
3. LIQUID TIGHT FLEXIBLE METAL CONDUIT – FOR SHORT LENGTHS (MAX. 3'–0") WIRING TO VIBRATING EQUIPMENT (HVAC UNITS, MOTORS, ETC.) IN WET LOCATIONS.
4. FLEXIBLE METAL CONDUIT – FOR SHORT LENGTHS (MAX. 3'–0") WIRING TO VIBRATING EQUIPMENT IN DRY LOCATIONS.
5. PVC CONDUIT – WHERE SHOWN ON GROUNDING DETAILS.

SECTION 16114

1.01. CABLE TRAY

A. CABLE TRAY SHALL BE SOLID SIDE BAR, 18" WIDE (NEWTON INSTRUMENT COMPANY, INC.). TRAY SHALL BE INSTALLED AS SHOWN ON CONTRACT DOCUMENTS.

B. CROSSWISE RUNS SHALL BE COORDINATED WITH THE SPECIFIC EQUIPMENT THE TRAY SHALL SERVE.

C. ALL PROTRUDING CABLE TRAY SUPPORT RODS SHALL BE FILED SMOOTH WITH NO SHARP EDGES. ALL SUPPORT RODS SHALL BE CAD–PLATED FOR RUST RESISTANCE AND A MINIMUM 1/2" DIAMETER.

SECTION 16123

1.01. CONDUCTORS

A. ALL CONDUCTORS SHALL BE TYPE THWN (INT. APPLICATION) AND XHHW (EXT. APPLICATION), 75 DEGREE C, 600 VOLT INSULATION, SOFT ANNEALED STRANDED COPPER. #10 AWG AND SMALLER SHALL BE SPLICED USING ACCEPTABLE SOLDERLESS PRESSURE CONNECTORS. #8 AWG AND LARGER SHALL BE SPLICED USING COMPRESSION SPLIT–BOLT TYPE CONNECTORS. #12 AWG SHALL BE THE MINIMUM SIZE CONDUCTOR FOR LINE VOLTAGE BRANCH CIRCUITS. REFER TO PANEL SCHEDULE FOR BRANCH CIRCUIT CONDUCTOR SIZE(S). CONDUCTORS SHALL BE COLOR CODED FOR CONSISTENT PHASE IDENTIFICATION:

	120/208/240V	277/480V
LINE	COLOR	COLOR
A	BLACK	BROWN
B	RED	ORANGE
C	BLUE	YELLOW
N	CONTINUOUS WHITE	GREY
G	CONTINUOUS GREEN	GREEN WITH YELLOW STRIPE

B. MINIMUM BENDING RADIUS FOR CONDUCTORS SHALL BE 12 TIMES THE LARGEST DIAMETER OF BRANCH CIRCUIT CONDUCTOR.

SECTION 16130

1.01. BOXES

A. FURNISH AND INSTALL OUTLET BOXES FOR ALL DEVICES, SWITCHES, RECEPTACLES, ETC.. BOXES TO BE ZINC COATED STEEL.

B. FURNISH AND INSTALL PULL BOXES IN MAIN FEEDERS RUNS WHERE REQUIRED. PULL BOXES SHALL BE GALVANIZED STEEL WITH SCREW REMOVABLE COVERS, SIZE AND QUANTITY AS REQUIRED. PROVIDE WEATHERPROOF CONSTRUCTION IN WET LOCATIONS.

SECTION 16140

1.01. WIRING DEVICES

A. THE FOLLOWING LIST IS PROVIDED TO CONVEY THE QUALITY AND RATING OF WIRING DEVICES WHICH ARE TO BE INSTALLED. A COMPLETE LIST OF ALL DEVICES MUST BE SUBMITTED BEFORE INSTALLATION FOR APPROVAL.

1. 15 MINUTE TIMER SWITCH – INTERMATIC #FF15M (INTERIOR LIGHTS)
2. DUPLEX RECEPTACLE – P&S #2095 (GFCI) SPECIFICATION GRADE
3. SINGLE POLE SWITCH – P&S #CSB20AC2 (20A–120V HARD USE) SPECIFICATION GRADE
4. DUPLEX RECEPTACLE – P&S #5362 (20A–120V HARD USE) SPECIFICATION GRADE

B. PLATES – ALL PLATES USED SHALL BE CORROSION RESISTANT TYPE 304 STAINLESS STEEL. PLATES SHALL BE FROM SAME MANUFACTURER AS SWITCHES AND RECEPTACLES. PROVIDE WEATHERPROOF HOUSING FOR DEVICES LOCATED IN WET LOCATIONS.

C. OTHER MANUFACTURERS OF THE SWITCHES, RECEPTACLES AND PLATES MAY BE SUBMITTED FOR APPROVAL BY THE ENGINEER.

SECTION 16170

1.01. DISCONNECT SWITCHES

A. FUSIBLE AND NON–FUSIBLE, 600V, HEAVY DUTY DISCONNECT SWITCHES SHALL BE AS MANUFACTURED BY SQUARE "D". PROVIDE FUSES AS CALLED FOR ON THE CONTRACT DRAWINGS. AMPERE RATING SHALL BE CONSISTENT WITH LOAD BEING SERVED. DISCONNECT SWITCH COVER SHALL BE MECHANICALLY INTERLOCKED TO PREVENT COVER FROM OPENING WHEN THE SWITCH IS IN THE "ON" POSITION. EXTERIOR APPLICATIONS SHALL BE NEMA 3R CONSTRUCTION WITH PADLOCK FEATURE.

SECTION 16190

1.01. SEISMIC RESTRAINT

A. ALL DEVICES SHALL BE INSTALLED IN ACCORDANCE WITH ZONE 2 SEISMIC REQUIREMENTS.

SECTION 16195

1.01. LABELING AND IDENTIFICATION NOMENCLATURE FOR ELECTRICAL EQUIPMENT

A. CONTRACTOR SHALL FURNISH AND INSTALL NON–METALLIC ENGRAVED BACK–LIT NAMEPLATES ON ALL PANELS AND MAJOR ITEMS OF ELECTRICAL EQUIPMENT.

B. LETTERS TO BE WHITE ON BLACK BACKGROUND WITH LETTERS 1–1/2 INCH HIGH WITH 1/4 INCH MARGIN.

C. IDENTIFICATION NOMENCLATURE SHALL BE IN ACCORDANCE WITH OWNER'S STANDARDS.

D. PROVIDE NAMEPLATE FOR PORTABLE ENGINE/GENERATOR CONNECTION SHOWING VOLTAGE KVA/KW RATING, # PHASE, AND # OF WIRES. PLATE TO BE PLASTIC ENGRAVED, RED WITH WHITE LETTERS.

E. ALL RECEPTACLES, SWITCHES, DISCONNECT SWITCHES, ETC. SHALL BE LABELED WITH THE CORRECT BRANCH CIRCUIT NUMBER SERVED BY MEANS OF PERMANENT PRESSED TYPE BLACK 1/4" TRANSFER LETTERING. (FOR EXAMPLE: "MDP–5", ETC.).

F. PROVIDE A NAMEPLATE AT THE SERVICE EQUIPMENT INDICATING THE TYPE AND LOCATION OF THE ON SITE GENERATOR.

SECTION 16450

1.01. GROUNDING

A. ALL NON–CURRENT CARRYING PARTS OF THE ELECTRICAL AND TELEPHONE CONDUIT SYSTEMS SHALL BE MECHANICALLY AND ELECTRICALLY CONNECTED TO PROVIDE AN INDEPENDENT RETURN PATH TO THE EQUIPMENT GROUNDING SOURCES.

B. GROUNDING SYSTEM WILL BE IN ACCORDANCE WITH THE LATEST ACCEPTABLE EDITION OF THE NATIONAL ELECTRICAL CODE AND REQUIREMENTS PER LOCAL INSPECTOR HAVING JURISDICTION.

C. GROUNDING OF PANELBOARDS:

1. PANELBOARD SHALL BE GROUNDED BY TERMINATING THE PANELBOARD FEEDER'S EQUIPMENT GROUND CONDUCTOR TO THE EQUIPMENT GROUND BAR KIT(S) LUGGED TO THE CABINET. ENSURE THAT THE SURFACE BETWEEN THE KIT AND CABINET ARE BARE METAL TO BARE METAL. PRIME AND PAINT OVER TO PREVENT CORROSION.
2. CONDUIT(S) TERMINATING INTO THE PANELBOARD SHALL HAVE GROUNDING TYPE BUSHINGS. THE BUSHINGS SHALL BE BONDED TOGETHER WITH BARE #10 AWG COPPER CONDUCTOR WHICH IN TURN IS TERMINATED INTO THE PANELBOARD'S EQUIPMENT GROUND BAR KIT(S).

D. EQUIPMENT GROUNDING CONDUCTOR:

1. EACH EQUIPMENT GROUND CONDUCTOR SHALL BE SIZED IN ACCORDANCE WITH THE N.E.C. ARTICLE 250–122.
2. THE MINIMUM SIZE OF EQUIPMENT GROUND CONDUCTOR SHALL BE #12 AWG COPPER.
3. REFER TO PANEL SCHEDULE "BRANCH CIRCUIT" DATA FOR EQUIPMENT GROUND CONDUCTOR SIZE FOR EACH BRANCH CIRCUIT.
4. EACH FEEDER OR BRANCH CIRCUIT SHALL HAVE EQUIPMENT GROUND CONDUCTOR(S) INSTALLED IN THE SAME RACEWAY(S).

E. CELLULAR GROUNDING SYSTEM:

CONTRACTOR SHALL PROVIDE A CELLULAR GROUNDING SYSTEM WITH THE MAXIMUM AC RESISTANCE TO GROUND OF 5 OHM BETWEEN ANY POINT ON THE GROUNDING SYSTEM AS MEASURED BY 3–POINT GROUNDING TEST. (REFER TO SECTION 16960).

PROVIDE THE CELLULAR GROUNDING SYSTEM AS SPECIFIED ON DRAWINGS, INCLUDING, BUT NOT LIMITED TO:

1. GROUND BARS
2. INTERIOR GROUND RING
3. EXTERIOR GROUNDING (WHERE REQUIRED DUE TO MEASURED AC RESISTANCE GREATER THAN SPECIFIED).
4. ANTENNA GROUND CONNECTIONS AND PLATES.

F. CONTRACTOR, AFTER COMPLETION OF THE COMPLETE GROUNDING SYSTEM BUT PRIOR TO CONCEALMENT/BURIAL OF SAME, SHALL NOTIFY OWNER'S WIRELESS PROJECT ENGINEER WHO WILL HAVE A DESIGN ENGINEER VISIT SITE AND MAKE A VISUAL INSPECTION OF THE GROUNDING GRID AND CONNECTIONS OF THE SYSTEM.

G. ALL EQUIPMENT SHALL BE BONDED TO GROUND AS REQUIRED BY N.E.C., MFG. SPECIFICATIONS, AND OWNER'S SPECIFICATIONS.

SECTION 16470

1.01. DISTRIBUTION EQUIPMENT

A. REFER TO CONTRACT DRAWINGS FOR DETAILS AND SCHEDULES.

SECTION 16477

1.01. FUSES

A. FUSES SHALL BE NONRENEWABLE TYPE AS MANUFACTURED BY "BUSSMAN" OR APPROVED EQUAL. FUSES RATED TO 1/10 AMPERE UP TO 600 AMPERES SHALL BE EQUIVALENT TO BUSSMAN TYPE LPN–RK (250V) UL CLASS RK1, LOW PEAK, DUAL ELEMENT, TIME–DELAY FUSES. FUSES SHALL HAVE SEPARATE SHORT CIRCUIT AND OVERLOAD ELEMENTS AND HAVE AN INTERRUPTING RATING OF 200 KAIC. UPON COMPLETION OF WORK, PROVIDE ONE SPARE SET OF FUSES FOR EACH TYPE INSTALLED.

SECTION 16700

1.01. BUILDING ALARMS (SIGNAL COMMUNICATIONS)

A. ALARM BOX SHALL BE 12" W x 12" H x 6" D NEMA 1 ENCLOSURE, MCKINSTRY #30–1216LP WITH ACCESSORIES:

- "T" HANDLE LATCH KIT
- 14 GAUGE STEEL PANEL, PAINTED WHITE ENAMEL
- (6) 1/2"–3/4" K.OS ON EACH SIDE/TOP/BOTTOM WALLS
- (2) 3/4" RUBBER GROMMETS AS SLEEVES
- PROVIDE WIRING SCHEMATIC IN REMOVABLE PLASTIC COVER, TAPED TO BACK SIDE OF HINGED DOOR.

B. ALARM SENSORS' RELAY SHALL BE NORMALLY CLOSED. UPON ALARM CONDITION, THE RELAY SHALL REVERSE STATE TO OPEN. CONFIRM INSTALLATION AND LOCATION REQUIREMENTS FOR BUILDING'S ALARM SENSORS.

ALARM SENSORS SHALL BE:

1. FIRE ALARM CONTROL PANEL: FROM C CONTACT RELAY.
2. DOOR CONTACT SENSOR (SENTROL #1085T): SPDT MAGNETIC FORM C CONTACT – OPEN/CLOSE LOOP, MAX 1" GAP.
3. LOW TEMPERATURE SENSOR (HONEYWELL #T631C1103); SPDT AIR SWITCH CONTROLLER – COILED COPPER TUBE IN NEMA 1 ENCLOSURE. SET AT 50 DEGREES F., MOUNT LAMINATED, BACK–LIT NAMEPLATE WITH LEGIBLE DESCRIPTION "LOW TEMP 50 DEGREE F" BELOW SENSOR.
4. HIGH TEMPERATURE SENSOR (HONEYWELL #T631C1103): SPDT AIR SWITCH CONTROLLER – COILED COPPER TUBE IN NEMA 1 ENCLOSURE. SET AT 80 DEGREES F., MOUNT LAMINATED, BACK–LIT NAMEPLATE WITH LEGIBLE DESCRIPTION "HI TEMP 80 DEGREES F" BELOW SENSOR.

C. CONFIRM REQUIREMENTS FOR ALL BUILDING ALARM SENSORS INSTALLATION, AND LOCATION OF EACH SENSOR. ALARM WIRING SHALL BE ROUTED TO ALARM BOX AND SPADE CONNECTED TO RESPECTIVE TERMINAL BLOCK. EACH PAIR OF ALARM WIRING SHALL BE PERMANENTLY AND UNIQUELY TAGGED AT EACH TERMINAL STRIP LOCATION AND AT SPLICE/JUNCTION/BOXES/WIRING TROUGH.

D. REFER TO "WIRING SCHEMATIC FOR ALARM SENSORS" ON DRAWINGS.

SECTION 16500

1.01. LIGHTING FIXTURES

A. REFER TO LIGHT FIXTURE SCHEDULE FOR REQUIREMENTS.

SECTION 16620
(SUPPLIED BY OWNER, INSTALLED BY CONTRACTOR)

1.01. GENERATOR SET

A. REFER TO CONTRACT DRAWINGS FOR DETAILS AND SCHEDULES.

SECTION 16960

1.01. TESTS BY INDEPENDENT ELECTRICAL TESTING FIRM

A. CONTRACTOR SHALL RETAIN THE SERVICES OF A LOCAL INDEPENDENT ELECTRICAL TESTING FIRM (WITH MINIMUM 5 YEARS COMMERCIAL EXPERIENCE IN THE ELECTRICAL TESTING INDUSTRY) AS SPECIFIED BY OWNER TO PERFORM:

TEST 1: THERMAL OVERLOAD AND MAGNETIC TRIP TEST, AND CABLE INSULATION TEST FOR ALL CIRCUIT BREAKERS RATED 100 AMPS OR GREATER.

TEST 2: RESISTANCE TO GROUND TEST ON THE CELLULAR GROUNDING SYSTEM.

THE TESTING FIRM SHALL INCLUDE THE FOLLOWING INFORMATION WITH THE REPORT:

1. TESTING PROCEDURE INCLUDING THE MAKE AND MODEL OF TEST EQUIPMENT.
2. CERTIFICATION OF TESTING EQUIPMENT CALIBRATION WITHIN SIX (6) MONTHS OF DATE OF TESTING. INCLUDE CERTIFICATION LAB ADDRESS AND TELEPHONE NUMBER.
3. GRAPHICAL DESCRIPTION OF TESTING METHOD ACTUALLY IMPLEMENTED.

B. THESE TESTS SHALL BE PERFORMED IN THE PRESENCE AND TO THE SATISFACTION OF OWNER'S CONSTRUCTION REPRESENTATIVE. TESTING DATA SHALL BE INITIALED AND DATED BY THE CONSTRUCTION REPRESENTATIVE AND INCLUDED WITH THE WRITTEN REPORT/ANALYSIS.

C. THE CONTRACTOR SHALL FORWARD SIX (6) COPIES OF THE INDEPENDENT ELECTRICAL TESTING FIRM'S REPORT/ANALYSIS TO ENGINEER A MINIMUM OF TEN (10) WORKING DAYS PRIOR TO THE JOB TURNOVER.

D. CONTRACTOR TO PROVIDE A MINIMUM OF ONE (1) WEEK NOTICE TO OWNER AND ENGINEER FOR ALL TESTS REQUIRING WITNESSING.

SECTION 16961

1.01. TESTS BY CONTRACTOR

A. ALL TESTS AS REQUIRED UPON COMPLETION OF WORK, SHALL BE MADE BY THIS CONTRACTOR. THESE SHALL BE CONTINUITY AND INSULATION TESTS; TEST TO DETERMINE THE QUALITY OF MATERIALS, ETC. AND SHALL BE MADE IN ACCORDANCE WITH N.E.C. RECOMMENDATIONS. ALL FEEDERS AND BRANCH CIRCUIT WIRING (EXCEPT CLASS 2 SIGNAL CIRCUITS) MUST BE TESTED FREE FROM SHORT CIRCUIT AND GROUND FAULT CONDITIONS AT 500V IN A REASONABLY DRY AMBIENT OF APPROXIMATELY 70 DEGREES F.

B. CONTRACTOR SHALL PERFORM LOAD PHASE BALANCING TESTS. CIRCUITS SHALL BE SO CONNECTED TO THE PANELBOARDS SUCH THAT THE NEW LOAD IS DISTRIBUTED AS EQUALLY AS POSSIBLE BETWEEN EACH LOAD AND NEUTRAL. 10% SHALL BE CONSIDERED AS A REASONABLE AND ACCEPTABLE ALLOWANCE. BRANCH CIRCUITS SHALL BE BALANCED ON THEIR OWN PANELBOARDS; FEEDER LOADS SHALL, IN TURN, BE BALANCED ON THE SERVICE EQUIPMENT. REASONABLE LOAD TEST SHALL BE ARRANGED TO VERIFY LOAD BALANCE IF REQUESTED BY THE ENGINEER.

C. ALL TESTS, UPON REQUEST, SHALL BE REPEATED IN THE PRESENCE OF OWNER'S REPRESENTATIVE. ALL TESTS SHALL BE DOCUMENTED AND TURNED OVER TO OWNER. OWNER SHALL HAVE THE AUTHORITY TO STOP ANY OF THE WORK NOT BEING PROPERLY INSTALLED. ALL SUCH DETECTED WORK SHALL BE REPAIRED OR REPLACED AT NO ADDITIONAL EXPENSE TO THE OWNER AND THE TESTS SHALL BE REPEATED.

REV.	DATE	DRAWN BY	CHK'D BY	DESCRIPTION
8	08/06/18	ASC	CAG	CONSTRUCTION – REVISED PER EVERSOURCE COMMENTS
7	06/25/18	TJB	TGK	CONSTRUCTION – REVISED EQUIPMENT SHELTER
5	05/16/18	TJB	TGK	CONSTRUCTION – REVISED EQUIPMENT SHELTER
4	08/03/17	JTD	CAG	CONSTRUCTION – REVISED CRITERIA PER CLIENT
3	07/12/17	JTD	CAG	CONSTRUCTION – REVISED CRITERIA PER CLIENT
2	06/27/17	DMD	TGK	CONSTRUCTION – REVISED CRITERIA PER CLIENT
1	11/20/14	TJB	CKD	CONSTRUCTION
0	11/10/14	TJB	CKD	CONSTRUCTION – ISSUED FOR CLIENT REVIEW

PROFESSIONAL ENGINEER SEAL

CENTEK engineering
Centered on Solutions™
(203) 488-0580
(203) 488-8587 Fax
63-2 North Branford Road
Branford, CT 06405
www.CentekEng.com

AT&T MOBILITY
WIRELESS COMMUNICATIONS FACILITY
MERIDEN
SITE NUMBER: CT2117
200 EDGEMARK ACRES
MERIDEN, CT 06451

DATE: 11/03/14
SCALE: AS NOTED
JOB NO.: 13305.000
AMENDED JOB NO.: 17010.08

ELECTRICAL SPECIFICATIONS

E-9

Sheet No. 17 of 17

CENTEK engineering

Centered on Solutions℠

Structural Design of Antenna Frame and Analysis of Eversource Tower

AT&T Mobility Site Ref: CT2117

Eversource Structure No. 783
78' Electric Transmission Lattice Tower

200 Edgemark Acres
Meriden, CT

CENTEK Project No. 17010.08

~~Date: June 29, 2017~~
Rev 6: August 16, 2018

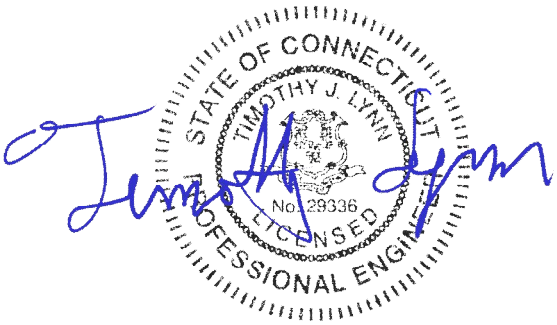

Prepared for:
AT&T Mobility
500 Enterprise Drive, Suite 3A
Rocky Hill, CT 06067

63-2 North Branford Road, Branford, CT 06405 203.488.0580 Fax 203.488.8587 www.CentekEng.com

Table of Contents

SECTION 1 - REPORT

- INTRODUCTION
- PRIMARY ASSUMPTIONS USED IN THE ANALYSIS
- ANALYSIS
- DESIGN BASIS
- RESULTS
- CONCLUSION

SECTION 2 - CONDITIONS & SOFTWARE

- STANDARD ENGINEERING CONDITIONS
- GENERAL DESCRIPTION OF STRUCTURAL ANALYSIS PROGRAMS
  - RISA 3-D
  - PLS TOWER

SECTION 3 - DESIGN CRITERIA

- CRITERIA FOR DESIGN OF PCS FACILITIES ON OR EXTENDING ABOVE METAL ELECTRIC TRANSMISSON TOWERS
- NU DESIGN CRITERIA TABLE
- PCS SHAPE FACTOR CRITERIA
- WIRE LOADS SHEET

SECTION 4 - DRAWINGS

- T-1 TITLE SHEET
- N-1 DESIGN BASIS AND GENERAL NOTES
- N-2 EARTHWORK AND FOUNDATION CONSTRUCTION NOTES
- N-3 CONCRETE CONSTRUCTION NOTES
- N-4 STRUCTURAL STEEL NOTES
- MI-1 MODIFICATION INSPECTION REQUIREMENTS
- S-1 TOWER ELEVATION AND FEEDLINE PLAN
- S-2 FOUNDATION REINFORCEMENT DETAILS
- S-3 TOWER REINFORCEMENT DETAILS
- S-4 ANTENNA FRAME ELEVATIONS
- S-5 ANTENNA FRAME PLAN AND DETAILS

SECTION 5 - TIA-222-G LOAD CALCULATIONS FOR ANTENNA FRAME

- ANTENNA FRAME WIND & ICE LOAD

SECTION 6 - ANTENNA FRAME DESIGN PER TIA-222G

- LOAD CASES AND COMBINATIONS (TIA/EIA LOADING)
- RISA 3-D ANALYSIS REPORT
- MAST CONNECTION ANALYSIS

SECTION 7 - NECS/NU LOAD CALCULATIONS

- ANTENNA FRAME WIND LOAD

SECTION 8 – ANTENNA FRAME ANALYSIS PER NESC/NU FOR OBTAINING REACTIONS APPLIED TO UTILITY STRUCTURE

- LOAD CASES AND COMBINATIONS (NESC/NU LOADING)
- RISA 3-D ANALYSIS REPORT

SECTION 9 - UTILITY TOWER ANALYSIS

- COAX CABLE LOAD ON CL&P TOWER CALCULATION
- PLS REPORT
- LOCAL STRESS CHECK – UNREINFORCED SECTION
- LOCAL STRESS CHECK – REINFORCED SECTION
- FOUNDATION ANALYSIS

SECTION 10 - REFERENCE MATERIAL

- RFDS SHEET
- EQUIPMENT CUT SHEETS

Introduction

The purpose of this report is to design a proposed antenna mast and analyze the existing 78' utility tower located at 200 Edgemark Acres in Meriden, CT for the proposed AT&T Mobility antenna installation.

The proposed loads consist of the following:

- **AT&T MOBILITY (Proposed):**

  Antennas: Six (6) Andrew CCI HPA-65R-BUU-H8 panel antennas, three (3) Andrew CCI OPA-65R-LCUU-H8 panel antennas and eighteen (18) CCI BPDB7823VG12A TMA's mounted on a SitePro Ultra-Low Profile Platform (P/N ULP12-496) with handrail kit (HRK12-U) with a RAD center elevation of 90-ft above grade [88'-0" above tower base].
  Coax Cables: Thirty-six (36) 1-5/8" ∅ coax cables running on two (2) legs of the existing tower as indicated in section 4 of this report.

Primary assumptions used in the analysis

- Design steel stresses are defined by AISC-LRFD 14th edition for design of the antenna Mast and antenna supporting elements.
- ASCE Manual No. 10-97, "Design of Latticed Steel Transmission Structures", defines allowable steel stresses for evaluation of the CL&P utility tower.
- All utility tower members are adequately protected to prevent corrosion of steel members.
- All proposed antenna mounts are modeled as listed above.
- All coaxial cable will be installed as indicated in Section 4 of this report.
- ANTENNA Mast will be properly installed and maintained.
- No residual stresses exist due to incorrect tower erection.
- All bolts are appropriately tightened providing the necessary connection continuity.
- All welds conform to the requirements of AWS D1.1.
- ANTENNA Mast and utility tower will be in plumb condition.
- Utility tower was properly installed and maintained and all members were properly designed, detailed, fabricated, and installed and have been properly maintained since erection.
- Any deviation from the analyzed loading will require a new analysis for verification of structural adequacy.

Analysis

Structural design of the antenna frame was independently completed using the current version of RISA-3D computer program licensed to CENTEK Engineering, Inc.

The antenna mast consisting of a 12" x-Strong pipe conforming to ASTM A53 Grade B (Fy = 35ksi) mounted on a 18'-6" antenna frame connected at eight points to the existing tower was analyzed for its ability to resist loads prescribed by the TIA-222-G standard. Section 5 of this report details these gravity and lateral wind loads. NESC prescribed loads were also applied to the antenna mast in order to obtain reactions needed for analyzing the tower structure. These loads are developed in Section 7 of this report. Load cases and combinations used in RISA-3D for TIA loading and for NESC/NU loading are listed in report Sections 6 and 8, respectively.

An envelope solution was first made to determine maximum and minimum forces, stresses, and deflections to confirm the selected section as adequate. Additional analyses were then made to determine the NESC forces to be applied to the tower structure.

The RISA-3D program contains a library of all AISC shapes and corresponding section properties are computed and applied directly within the program. The program's Steel Code Check option was also utilized. The forces calculated in RISA-3D using NESC guidelines were then applied to the tower using PLS-Tower. Maximum usage for the tower was calculated considering the additional forces from the mast and associated appurtenances.

Design Basis

Our analysis was performed in accordance with TIA-222-G, ASCE Manual No. 10-97, "Design of Latticed Steel Transmission Structures", NESC C2-2007 and Northeast Utilities Design Criteria.

- UTILITY TOWER ANALYSIS

  The purpose of this analysis is to determine the adequacy of the existing utility structure to support the proposed antenna loads. The loading and design requirements were analyzed in accordance with the NU Design Criteria Table, NESC C2-2007 ~ Construction Grade B, and ASCE Manual No. 10-97, "Design of Latticed Steel Transmission Structures".

  Load cases considered:

  Load Case 1: NESC Heavy
  Wind Pressure…….. 4.0 psf
  Radial Ice Thickness……. 0.5"
  Vertical Overload Capacity Factor……. 1.50
  Wind Overload Capacity Factor……. 2.50
  Wire Tension Overload Capacity Factor…… 1.65

  Load Case 2: NESC Extreme
  Wind Speed……. 110 mph (1)
  Radial Ice Thickness……. 0"

  Note 1: NESC C2-2007, Section25, Rule 250C: Extreme Wind Loading, 1.25 x Gust Response Factor (wind speed: 3-second gust)

- MAST ASSEMBLY ANALYSIS

Mast, appurtenances and connections to the utility tower were analyzed and designed in accordance with the NU Design Criteria Table, TIA-222-G and AISC standards.

Load cases considered:

Load Case 1:
Wind Speed……... 97 mph (2016 CSBC Appendix-N)
Radial Ice Thickness…….. 0”

Load Case 2:
Wind Pressure…….. 50 mph wind pressure
Radial Ice Thickness…….. 0.75”

R e s u l t s

- ANTENNA FRAME ASSEMBLY

The antenna frame was determined to be structurally **adequate**.

Member	Stress Ratio (% of capacity)	Result
HSS12.5”x0.625” Mast	57.4%	**PASS**
HSS 6x6x3/8 Brace	67.7%	**PASS**
Mast Connection to Tower	73.8%	**PASS**

- UTILITY TOWER

This analysis finds that the subject utility structure is adequate to support the existing ANTENNA mast and related appurtenances. The tower stresses meet the requirements set forth by the ASCE Manual No. 10-97, “Design of Latticed Steel Transmission Structures”, for the applied NESC Heavy and Hi-Wind load cases. The detailed analysis results are provided in Section 9 of this report. The analysis results are summarized as follows:

With the proposed tower reinforcements detailed in Section 4 of this report a maximum usage of **98.60%** occurs in the utility tower under the **NESC Extreme** loading condition.

TOWER SECTION:

The utility structure **with the proposed tower reinforcements detailed in Section 4 of this report** was found to be within allowable limits.

Tower Member	Stress Ratio (% of capacity)	Result
Angle Leg11XY	98.60%	**PASS**

- FOUNDATION AND ANCHORS

The existing foundation consists of four (4) 16-inx25-in tapering to 28-inx25-in x 6.25-ft long reinforced concrete piers on four (4) 4-ft-6-in square x 2-ft thick reinforced concrete pads. The base of the tower is connected to the foundation by one (1) anchor stub per leg. Foundation information was obtained from a foundation exploration conducted on May 5, 2014.

BASE REACTIONS:

From PLS-Tower analysis of CL&P tower based on NESC/NU prescribed loads.

Load Case	Shear	Uplift	Compression
NESC Heavy Wind	25.39 kips	25.27 kips	83.82 kips
NESC Extreme Wind	60.46 kips	108.86 kips	136.43 kips

Note 1 – 10% increase to be applied to the above tower base reactions for foundation verification per OTRM 051
Note 1 – Reactions are combined leg reactions.

FOUNDATION:

The foundation **with the proposed reinforcements detailed in Section 4 of this report** was found to be within allowable limits.

Foundation	Design Limit	Allowable Limit	Proposed Loading (2)	Result
Reinforced Conc. Pad and Pier	Overturning	1.0 FS (1)	1.73 FS (1)	**PASS**

Note 1: FS denotes Factor of Safety
Note 2: 10% increase to PLS base reactions used in foundation analysis per OTRM 051.

Conclusions and Recommendations

This analysis shows that the subject utility tower **with the proposed reinforcements outlined below and detailed in Section 4 of this report <u>is adequate</u>** to support the proposed AT&T equipment installation.

- Replacement of conductor arm hanger braces at mid conductor arm.
- Replacement of two (2) L2x2x3/16 horizontal members with L2x2x1/4.
- Installation of secondary horizontal brace members at 40'-9" and 47'-0" ATB.
- Replacement of thirty-two (32) 5/8" A394 bolts with 5/8" A325 bolts.
- Installation of one (1) 27'x27'x3.5' reinforced concrete mat.

The analysis is based, in part on the information provided to this office by Eversource and AT&T. If the existing conditions are different than the information in this report, CENTEK engineering, Inc. must be contacted for resolution of any potential issues.

Please feel free to call with any questions or comments.

Respectfully Submitted by:

Timothy J. Lynn, PE
Structural Engineer

STATE OF CONNECTICUT
TIMOTHY J. LYNN
No. 29336
LICENSED
PROFESSIONAL ENGINEER

STANDARD CONDITIONS FOR FURNISHING OF PROFESSIONAL ENGINEERING SERVICES ON EXISTING STRUCTURES

All engineering services are performed on the basis that the information used is current and correct. This information may consist of, but is not necessarily limited to:

- Information supplied by the client regarding the structure itself, its foundations, the soil conditions, the antenna and feed line loading on the structure and its components, or other relevant information.

- Information from the field and/or drawings in the possession of CENTEK engineering, Inc. or generated by field inspections or measurements of the structure.

- It is the responsibility of the client to ensure that the information provided to CENTEK engineering, Inc. and used in the performance of our engineering services is correct and complete. In the absence of information to the contrary, we assume that all structures were constructed in accordance with the drawings and specifications and are in an un-corroded condition and have not deteriorated. It is therefore assumed that its capacity has not significantly changed from the “as new” condition.

- All services will be performed to the codes specified by the client, and we do not imply to meet any other codes or requirements unless explicitly agreed in writing. If wind and ice loads or other relevant parameters are to be different from the minimum values recommended by the codes, the client shall specify the exact requirement. In the absence of information to the contrary, all work will be performed in accordance with the latest revision of ANSI/ASCE10 & ANSI/EIA-222.

- All services are performed, results obtained, and recommendations made in accordance with generally accepted engineering principles and practices. CENTEK engineering, Inc. is not responsible for the conclusions, opinions and recommendations made by others based on the information we supply.

GENERAL DESCRIPTION OF STRUCTURAL ANALYSIS PROGRAM~RISA-3D

RISA-3D Structural Analysis Program is an integrated structural analysis and design software package for buildings, bridges, tower structures, etc.

Modeling Features:

- Comprehensive CAD-like graphic drawing/editing capabilities that let you draw, modify and load elements as well as snap, move, rotate, copy, mirror, scale, split, merge, mesh, delete, apply, etc.
- Versatile drawing grids (orthogonal, radial, skewed)
- Universal snaps and object snaps allow drawing without grids
- Versatile general truss generator
- Powerful graphic select/unselect tools including box, line, polygon, invert, criteria, spreadsheet selection, with locking
- Saved selections to quickly recall desired selections
- Modification tools that modify single items or entire selections
- Real spreadsheets with cut, paste, fill, math, sort, find, etc.
- Dynamic synchronization between spreadsheets and views so you can edit or view any data in the plotted views or in the spreadsheets
- Simultaneous view of multiple spreadsheets
- Constant in-stream error checking and data validation
- Unlimited undo/redo capability
- Generation templates for grids, disks, cylinders, cones, arcs, trusses, tanks, hydrostatic loads, etc.
- Support for all units systems & conversions at any time
- Automatic interaction with RISASection libraries
- Import DXF, RISA-2D, STAAD and ProSteel 3D files
- Export DXF, SDNF and ProSteel 3D files

Analysis Features:

- Static analysis and P-Delta effects
- Multiple simultaneous dynamic and response spectra analysis using Gupta, CQC or SRSS mode combinations
- Automatic inclusion of mass offset (5% or user defined) for dynamic analysis
- Physical member modeling that does not require members to be broken up at intermediate joints
- State of the art 3 or 4 node plate/shell elements
- High-end automatic mesh generation — draw a polygon with any number of sides to create a mesh of well-formed quadrilateral (NOT triangular) elements.
- Accurate analysis of tapered wide flanges - web, top and bottom flanges may all taper independently
- Automatic rigid diaphragm modeling
- Area loads with one-way or two-way distributions
- Multiple simultaneous moving loads with standard AASHTO loads and custom moving loads for bridges, cranes, etc.
- Torsional warping calculations for stiffness, stress and design
- Automatic Top of Member offset modeling
- Member end releases & rigid end offsets
- Joint master-slave assignments
- Joints detachable from diaphragms
- Enforced joint displacements
- 1-Way members, for tension only bracing, slipping, etc.

- 1-Way springs, for modeling soils and other effects
- Euler members that take compression up to their buckling load, then turn off.
- Stress calculations on any arbitrary shape
- Inactive members, plates, and diaphragms allows you to quickly remove parts of structures from consideration
- Story drift calculations provide relative drift and ratio to height
- Automatic self-weight calculations for members and plates
- Automatic subgrade soil spring generator

Graphics Features:

- Unlimited simultaneous model view windows
- Extraordinary “true to scale” rendering, even when drawing
- High-speed redraw algorithm for instant refreshing
- Dynamic scrolling stops right where you want
- Plot & print virtually everything with color coding & labeling
- Rotate, zoom, pan, scroll and snap views
- Saved views to quickly restore frequent or desired views
- Full render or wire-frame animations of deflected model and dynamic mode shapes with frame and speed control
- Animation of moving loads with speed control
- High quality customizable graphics printing

Design Features:

- Designs concrete, hot rolled steel, cold formed steel and wood
- ACI 1999/2002, BS 8110-97, CSA A23.3-94, IS456:2000,EC 2-1992 with consistent bar sizes through adjacent spans
- Exact integration of concrete stress distributions using parabolic or rectangular stress blocks
- Concrete beam detailing (Rectangular, T and L)
- Concrete column interaction diagrams
- Steel Design Codes: AISC ASD 9th, LRFD 2nd & 3rd, HSS Specification, CAN/CSA-S16.1-1994 & 2004, BS 5950-1-2000, IS 800-1984, Euro 3-1993 including local shape databases
- AISI 1999 cold formed steel design
- NDS 1991/1997/2001 wood design, including Structural Composite Lumber, multi-ply, full sawn
- Automatic spectra generation for UBC 1997, IBC 2000/2003
- Generation of load combinations: ASCE, UBC, IBC, BOCA, SBC, ACI
- Unbraced lengths for physical members that recognize connecting elements and full lengths of members
- Automatic approximation of K factors
- Tapered wide flange design with either ASD or LRFD codes
- Optimization of member sizes for all materials and all design codes, controlled by standard or user-defined lists of available sizes and criteria such as maximum depths
- Automatic calculation of custom shape properties
- Steel Shapes: AISC, HSS, CAN, ARBED, British, Euro, Indian, Chilean
- Light Gage Shapes: AISI, SSMA, Dale / Incor, Dietrich, Marino\WARE
- Wood Shapes: Complete NDS species/grade database
- Full seamless integration with RISAFoot (Ver 2 or better) for advanced footing design and detailing
- Plate force summation tool

Results Features:

- Graphic presentation of color-coded results and plotted designs
- Color contours of plate stresses and forces with quadratic smoothing, the contours may also be animated
- Spreadsheet results with sorting and filtering of: reactions, member & joint deflections, beam & plate forces/stresses, optimized sizes, code designs, concrete reinforcing, material takeoffs, frequencies and mode shapes
- Standard and user-defined reports
- Graphic member detail reports with force/stress/deflection diagrams and detailed design calculations and expanded diagrams that display magnitudes at any dialed location
- Saved solutions quickly restore analysis and design results.

GENERAL DESCRIPTION OF STRUCTURAL ANALYSIS PROGRAM~PLS-TOWER

PLS-TOWER is a Microsoft Windows program for the analysis and design of steel latticed towers used in electric power lines or communication facilities. Both self-supporting and guyed towers can be modeled. The program performs design checks of structures under user specified loads. For electric power structures it can also calculate maximum allowable wind and weight spans and interaction diagrams between different ratios of allowable wind and weight spans.

Modeling Features:

- Powerful graphics module (stress usages shown in different colors)
- Graphical selection of joints and members allows graphical editing and checking
- Towers can be shown as lines, wire frames or can be rendered as 3-d polygon surfaces
- Can extract geometry and connectivity information from a DXF CAD drawing
- CAD design drawings, title blocks, drawing borders or photos can be tied to structure model
- XML based post processor interface
- Steel Detailing Neutral File (SDNF) export to link with detailing packages
- Can link directly to line design program PLS-CADD
- Automatic generation of structure files for PLS-CADD
- Databases of steel angles, rounds, bolts, guys, etc.
- Automatic generation of joints and members by symmetries and interpolations
- Automated mast generation (quickly builds model for towers that have regular repeating sections) via graphical copy/paste
- Steel angles and rounds modeled either as truss, beam or tension-only elements
- Guys are easily handled (can be modeled as exact cable elements)

Analysis Features:

- Automatic handling of tension-only members
- Automatic distribution of loads in 2-part suspension insulators (v-strings, horizontal vees, etc.)
- Automatic calculation of tower dead, ice, and wind loads as well as drag coefficients according to:
    - ASCE 74-1991
    - NESC 2002
    - NESC 2007
    - IEC 60826:2003
    - EN50341-1:2001 (CENELEC)
    - EN50341-3-9:2001 (UK NNA)
    - EN50341-3-17:2001 (Portugal NNA)
    - ESAA C(b)1-2003 (Australia)
    - TPNZ (New Zealand)
    - REE (Spain)
    - EIA/TIA 222-F
    - ANSI/TIA 222-G
    - CSA S37-01
- Automated microwave antenna loading as per EIA/TIA 222-F and ANSI/TIA 222-G
- Minimization of problems caused by unstable joints and mechanisms
- Automatic bandwidth minimization and ability to solve large problems
- Design checks according to (other standards can be added easily):
    - ASCE Standard 10-90

- AS 3995 (Australian Standard 3995)
- BS 8100 (British Standard 8100)
- EN50341-1 (CENELEC, both empirical and analytical methods are available)
- ECCS 1985
- NGT-ECCS
- PN-90/B-03200
- EIA/TIA 222-F
- ANSI/TIA 222-G
- CSA S37-01
- EDF/RTE Resal
- IS 802 (India Standard 802)

Results Features:

- Design summaries printed for each group of members
- Easy to interpret text, spreadsheet and graphics design summaries
- Automatic determination of allowable wind and weight spans
- Automatic determination of interaction diagrams between allowable wind and weight spans
- Capability to batch run multiple tower configurations and consolidate the results
- Automated optimum angle member size selection and bolt quantity determination

Tool for interactive angle member sizing and bolt quantity determination.

Criteria for Design of PCS Facilities On or Extending Above Metal Electric Transmission Towers & Analysis of Transmission Towers Supporting PCS Masts (1)

Introduction

This criteria is the result from an evaluation of the methods and loadings specified by the separate standards, which are used in designing telecommunications towers and electric transmission towers. That evaluation is detailed elsewhere, but in summary; the methods and loadings are significantly different. This criteria specifies the manner in which the appropriate standard is used to design PCS facilities including masts and brackets (hereafter referred to as "masts"), and to evaluate the electric transmission towers to support PCS masts. The intent is to achieve an equivalent level of safety and security under the extreme design conditions expected in Connecticut and Massachusetts.

ANSI Standard TIA-222 (Rev. G) covering the design of telecommunications structures specifies a working strength/allowable stress design approach. This approach applies the loads from extreme weather loading conditions, and designs the structure so that it does not exceed some defined percentage of failure strength (allowable stress).

ANSI Standard C2-2007 (National Electrical Safety Code) covering the design of electric transmission metal structures is based upon an ultimate strength/yield stress design approach. This approach applies a multiplier (overload capacity factor) to the loads possible from extreme weather loading conditions, and designs the structure so that it does not exceed its ultimate strength (yield stress).

Each standard defines the details of how loads are to be calculated differently. Most of the NU effort in "unifying" both codes was to establish what level of strength each approach would provide, and then increasing the appropriate elements of each to achieve a similar level of security under extreme weather loadings.

Two extreme weather conditions are considered. The first is an extreme wind condition (hurricane) based upon a 50-year recurrence (2% annual probability). The second is a winter condition combining wind and ice loadings.

The following sections describe the design criteria for any PCS mast extending above the top of an electric transmission tower, and the analysis criteria for evaluating the loads on the transmission tower from such a mast from the lower portions of such a mast, and loads on the pre-existing electric lower portions of such a mast, and loads on the pre-existing electric transmission tower and the conductors it supports.

Note 1: Prepared from documentation provide from Northeast Utilities.

P C S M a s t

The PCS facility (mast, external cable/trays, including the initial and any planned future support platforms, antennas, etc. extending the full height above the top level of the electric transmission structure) shall be designed in accordance with the provisions of TIA-222 (Rev. G):

E L E C T R I C T R A N S M I S S I O N T O W E R

The electric transmission tower shall be analyzed using yield stress theory in accordance with the attached table titled "NU Design Criteria". This specifies uniform loadings (different from the TIA loadings) on the each of the following components of the installed facility:

- PCS mast for its total height above ground level, including the initial and planned future support platforms, antennas, etc. above the top of an electric transmission structure.
- Conductors are related devices and hardware.
- Electric transmission structure. The loads from the PCS facility and from the electric conductors shall be applied to the structure at conductor and PCS mast attachment points, where those load transfer to the tower.

The uniform loadings and factors specified for the above components in the table are based upon the National Electrical Safety Code 2007 Edition Extreme Wind (Rule 250C) and Combined Ice and Wind (Rule 250B-Heavy) Loadings. These provide equivalent loadings compared to TIA and its loads and factors with the exceptions noted above. (Note that the NESC does not require the projected wind surfaces of structures and equipment to be increased by the ice covering.)

In the event that the electric transmission tower is not sufficient to support the additional loadings of the PCS mast, reinforcement will be necessary to upgrade the strength of the overstressed members.

Attachment A
Eversource Design Criteria

		Attachment A NU Design Criteria	Basic Wind Speed	Pressure	Height factor	Gust Factor	Load or Stress Factor	Force Coef. - Shape Factor
			V (MPH)	Q (PSF)	Kz	Gh		
Ice Condition	TIA/EIA	Antenna Mount	TIA	TIA (0.75Wi)	TIA	TIA	TIA, Section 3.1.1.1 disallowed for connection design	TIA
Ice Condition	NESC Heavy	Tower/Pole Analysis with antennas extending above top of Tower/Pole (Yield Stress)	____	4	1	1	2.50	1.6 Flat Surfaces 1.3 Round Surfaces
Ice Condition	NESC Heavy	Tower/Pole Analysis with antennas below top of Tower/Pole (on two faces)	____	4	1	1	2.50	1.6 Flat Surfaces 1.3 Round Surfaces
Ice Condition	NESC Heavy	Conductors:	Conductor Loads Provided by NU					
High Wind Condition	TIA/EIA	Antenna Mount	85	TIA	TIA	TIA	TIA, Section 3.1.1.1 disallowed for connection design	TIA
High Wind Condition	NESC Extreme Wind	Tower/Pole Analysis with antennas extending above top of Tower/Pole	For wind speed use OTRM 060 Map 1, Rule 250C: Extreme Wind Loading Apply a 1.25 X Gust Response Factor to all telecommunication equipment projected above top of tower/pole and apply a 1.0 x Gust Response Factor to the tower/pole structure					1.6 Flat Surfaces 1.3 Round Surfaces
High Wind Condition	NESC Extreme Wind	Tower/Pole Analysis with antennas below top of Tower/Pole	For wind speed use OTRM 060 Map 1, Rule 250C: Extreme Wind Loading Height above ground is based on overall height to top of tower/pole					1.6 Flat Surfaces 1.3 Round Surfaces
High Wind Condition	NESC Extreme Wind	Conductors:	Conductor Loads Provided by NU					
NESC Extreme Ice with Wind Condition *		Tower/Pole Analysis with antennas extending above top of Tower/Pole	For wind speed use OTRM 060 Map 1, Rule 250D: Extreme Ice with Wind Loading 4 PSF Wind Load 1.25 X Gust Response Factor Apply a 1.25 X Gust Response Factor to all telecommunication equipment projected above top of tower/pole and apply a 1.0 x Gust Response Factor to the tower/pole structure					1.6 Flat Surfaces 1.3 Round Surfaces
NESC Extreme Ice with Wind Condition *		Tower/Pole Analysis with antennas below top of Tower/Pole	For wind speed use OTRM 060 Map 1, Rule 250D: Extreme Ice with Wind Loading 4 PSF Wind Load Height above ground is based on overall height to top of tower/pole					1.6 Flat Surfaces 1.3 Round Surfaces
NESC Extreme Ice with Wind Condition *		Conductors:	Conductor Loads Provided by NU					
		* Only for structures installed after 2007						

mount as specified below, and shall include the wireless communication mast and antenna loads per NESC criteria)

The strength reduction factor obtained from the field investigation shall be applied to the members or connections that are showing signs of deterioration from their original condition

With the written approval of Eversource Transmission Line Engineering on a case by case the existing structures may be analyzed initially using the current NESC code, then it is permitted to use the original design code with the original conductor load should the existing tower fail the current NESC code.

The structure shall be analyzed using yield stress theory in accordance with Attachment A, "Eversource Design Criteria." This specifies uniform loadings (different from the TIA loadings) on each of the following components of the installed facility:

a) Wireless communication mast for its total height above ground level, including the initial and any planned future equipment (Support Platforms, Antennas, TMA's etc.) above the top of an electric transmission structure.

b) Conductors and related devices and hardware (wire loads will be provided by Eversource).

c) Electric Transmission Structure

   i) The loads from the wireless communication equipment components based on NESC and Eversource Criteria in Attachment A, and from the electric conductors shall be applied to the structure at conductor and wireless communication mast attachment points, where those loads transfer to the tower.

   ii) Shape Factor Multiplier:

NESC Structure Shape	Cd
Polyround (for polygonal steel poles)	1.3
Flat	1.6
Open Lattice	3.2
Pole with Coaxial Cable	1.6

   iii) When Coaxial Cables are mounted alongside the pole structure, the shape multiplier shall be:

Mount Type	Cable Cd	Pole Cd
Coaxial Cables on outside periphery (One layer)	1.45	1.45
Coaxial Cables mounted on stand offs	1.6	1.6

d) The uniform loadings and factors specified for the above components in Attachment A, "Eversource Design Criteria" are based upon the National Electric Safety Code 2007 Edition Extreme Wind (Rule 250C) and Combined Ice and Wind (Rule 250B-Heavy) Loadings. These provide equivalent loadings compared to the TIA and its loads and factors with the exceptions noted above.

   Note: The NESC does not require ice load be included in the supporting structure. (Ice on conductors and shield wire only, and Eversource will provide these loads).

e) Mast reaction loads shall be evaluated for local effects on the transmission structure members at the attachment points.

Project: 1690 Line, Structure 783
Date: 7/19/18
Engineer: JS
Purpose: Recalculate wire loads for AT&T site

Shield Wires:
7#9 Copperweld, sagged in PLS-CADD

Conductors:
Strain Converted Insulators: 4/0 Copper, sagged in PLS-CADD
Suspension Insulators: 4/0 Copper, sagged in PLS-CADD

NESC 250C

		Strain	Suspension	
Shield:	**V**	450	450	**V**
	T	550	550	**T**
	L	125	-100	**L**
Top Phase:	**V**	1250	1050	**V**
	T	1000	900	**T**
	L	650	0	**L**
Mid Phase:	**V**	1250	1050	**V**
	T	975	900	**T**
	L	125	0	**L**
Bot Phase:	**V**	1225	1050	**V**
	T	950	900	**T**
	L	550	0	**L**

Project: 1690 Line, Structure 783
Date: 7/19/18
Engineer: JS
Purpose: Recalculate wire loads for AT&T site

Shield Wires:
7#9 Copperweld, sagged in PLS-CADD

Conductors:
Strain Converted Insulators: 4/0 Copper, sagged in PLS-CADD
Suspension Insulators: 4/0 Copper, sagged in PLS-CADD

NESC 250B

		Strain	Suspension	
Shield:	**V**	1250	1250	**V**
	T	825	825	**T**
	L	300	-100	**L**
Top Phase:	**V**	2600	2325	**V**
	T	975	950	**T**
	L	1225	0	**L**
Mid Phase:	**V**	2600	2325	**V**
	T	975	950	**T**
	L	250	0	**L**
Bot Phase:	**V**	2600	2325	**V**
	T	975	950	**T**
	L	1050	0	**L**

ANTENNA FRAME DESIGN AND TOWER REINFORCEMENT DESIGN

STRUCT. NO. 783
200 EDGEMARK ACRES
MERIDEN, CT 06451

VICINITY MAP

NORTH

PROJECT SUMMARY

SITE ADDRESS:	200 EDGEMARK ACRES MERIDEN, CT 06451
PROJECT COORDINATES:	LAT: 41°–31'–51.70N LON: 72°–50'–33.58W ELEV:±348' AMSL
EVERSOURCE STRUCT NO:	783
EVERSOURCE CONTACT:	JOEL SZARKOWICZ 860.728.4503
AT&T SITE REF.:	CT2117
AT&T CONTACT:	CARL AQUILINA 603.560.6185
ANTENNA CL HEIGHT:	90'–0" (AGL) [88'–0" ATB]
ENGINEER OF RECORD:	CENTEK ENGINEERING, INC. 63–2 NORTH BRANFORD ROAD BRANFORD, CT 06405
CENTEK CONTACT:	CARLO F. CENTORE, PE 203.488.0580 ext. 122

SHEET INDEX

SHT. NO.	DESCRIPTION	REV.
T–1	TITLE SHEET	5
N–1	DESIGN BASIS & GENERAL NOTES	5
N–2	EARTHWORK & FOUNDATION CONSTRUCTION NOTES	5
N–3	CONCRETE CONSTRUCTION NOTES	5
N–4	STRUCTURAL STEEL NOTES	5
MI–1	MODIFICATION INSPECTION REQUIREMENTS	5
S–1	TOWER ELEVATION & FEEDLINE PLAN	5
S–2	FOUNDATION REINFORCEMENT DETAILS	5
S–3	TOWER REINFORCEMENT DETAILS	5
S–4	TOWER REINFORCEMENT DETAILS	5
S–5	ANTENNA FRAME ELEVATIONS	5
S–6	ANTENNA FRAME PLAN AND DETAILS	5

REV.	DATE	DRAWN BY	CHK'D BY	DESCRIPTION
6	8/16/18	TJL	CFC	ISSUED FOR CONSTRUCTION
5	8/6/18	TJL	CFC	ISSUED FOR CONSTRUCTION – REVISED ANTENNA MOUNT
4	7/6/18	TJL	CFC	ISSUED FOR CONSTRUCTION – REVISED ANTENNA MOUNT
3	12/15/17	TJL	CFC	ISSUED FOR CONSTRUCTION
2	9/13/17	TJL	CFC	ISSUED FOR CONSTRUCTION
1	8/11/17	TJL	CFC	ISSUED FOR CONSTRUCTION
0	6/29/17	TJL	CFC	ISSUED FOR CONSTRUCTION

PROFESSIONAL ENGINEER SEAL

CENTEK engineering
Centered on Solutions
(203) 488-0580
(203) 488-8587 Fax
63-2 North Branford Road
Branford, CT 06405
www.CentekEng.com

AT&T MOBILITY
ANTENNA FRAME AND TOWER REINFORCEMENT DESIGN
CT2117
CL&P STRUCTURE 783
200 EDGEMARK ACRES
MERIDEN, CT 06451

DATE:	6/29/17
SCALE:	AS SHOWN
JOB NO.	17010.08

TITLE SHEET

SHEET NO.
T–1
Sheet No. 1 of 12

DESIGN BASIS

1. GOVERNING CODE: 2012 INTERNATIONAL BUILDING CODE AS MODIFIED BY THE 2016 CT STATE SUPPLEMENT.

2. TIA-222-G, ASCE MANUAL NO. 72 – "DESIGN OF STEEL TRANSMISSION POLE STRUCTURES SECOND EDITION", NESC C2-2007 AND NORTHEAST UTILITIES DESIGN CRITERIA.

3. DESIGN CRITERIA

   WIND LOAD: (ANTENNA MAST)
   NOMINAL DESIGN WIND SPEED (V) = 97 MPH (2016 CSBC: APPENDIX 'N')

   WIND LOAD: (UTILITY POLE & FOUNDATION)
   BASIC WIND SPEED (V) =110 MPH (3-SECOND GUST) BASED ON NESC C2-2007, SECTION 25 RULE 250C.

GENERAL NOTES

1. REFER TO STRUCTURAL ANALYSIS AND REINFORCEMENT DESIGN PREPARED BY CENTEK ENGINEERING, INC., FOR AT&T DATED 12/15/17.

2. TOWER GEOMETRY AND STRUCTURE MEMBER SIZES WERE OBTAINED FROM THE ORIGINAL TOWER DESIGN DOCUMENTS PREPARED BY BLACK-KNOX DIVISION DRAWING NOS. P-51656, P-52562, P-51382, AND P-51925 THRU 51928 CIRCA 1948.

3. THE TEMPORARY DETACHMENT AND/OR REPLACEMENT OF TOWER MEMBERS SHALL BE DONE ONE AT A TIME AND SHALL BE CONDUCTED ON DAYS WITH LESS THAN 15 MPH WIND PRESENT. NO MEMBER SHALL BE LEFT DISCONNECTED FOR THE NEXT WORKING DAY.

4. ALL STEEL REINFORCEMENT SHOWN HEREIN APPLIES TO ALL SIDES OF THE TOWER.

5. ALL REPLACEMENT STEEL MEMBERS SHALL BE INSTALLED WITH A325-N BOLTS (SIZE TO MATCH EXISTING). UNLESS OTHERWISE NOTED BELOW.

6. THE TOWER STRUCTURE IS DESIGNED TO BE SELF-SUPPORTING AND STABLE AFTER REINFORCEMENTS ARE COMPLETE. IT IS THE CONTRACTOR'S SOLE RESPONSIBILITY TO DETERMINE ERECTION PROCEDURE & SEQUENCE AND TO INSURE THE SAFETY OF THE TOWER STRUCTURE AND ITS COMPONENT PARTS DURING ERECTION. THIS INCLUDES PROVIDING AND MAINTAINING ADEQUATE SHORING, BRACING, UNDERPINNING, TEMPORARY ANCHORS, GUYING, BARRICADES, ETC. AS MAY BE REQUIRED FOR THE PROTECTION OF EXISTING PROPERTY, CONSTRUCTION WORKERS, AND FOR PUBLIC SAFETY. MAINTAIN EXISTING SITE OPERATIONS AND COORDINATE WORK WITH TOWER OWNER.

7. ALL CONSTRUCTION SHALL BE IN ACCORDANCE WITH THE GOVERNING BUILDING CODE.

8. DRAWINGS INDICATE THE MINIMUM STANDARDS, BUT IF ANY WORK SHOULD BE INDICATED TO BE SUBSTANDARD TO ANY ORDINANCES, LAWS, CODES, RULES, OR REGULATIONS BEARING ON THE WORK, THE CONTRACTOR SHALL INCLUDE IN HIS SCOPE OF WORK AND SHALL EXECUTE THE WORK CORRECTLY IN ACCORDANCE WITH SUCH ORDINANCES, LAWS, CODES, RULES OR REGULATIONS WITH NO INCREASE IN COSTS.

9. BEFORE BEGINNING THE WORK, THE CONTRACTOR IS RESPONSIBLE FOR MAKING SUCH INVESTIGATIONS CONCERNING PHYSICAL CONDITIONS (SURFACE AND SUBSURFACE) AT OR CONTIGUOUS TO THE SITE WHICH MAY AFFECT PERFORMANCE AND COST OF THE WORK. THIS INCLUDES VERIFYING ALL DIMENSIONS, ELEVATIONS, ANGLES, AND EXISTING CONDITIONS AT THE SITE, PRIOR TO FABRICATION AND/OR INSTALLATION OF ANY WORK IN THE CONTRACT AREA. CONTRACTOR SHALL TAKE FIELD MEASUREMENTS NECESSARY TO ASSURE PROPER FIT OF ALL FINISHED WORK.

10. TOWER REINFORCEMENTS SHALL BE CONDUCTED BY FIELD CREWS EXPERIENCED IN THE ASSEMBLY AND ERECTION OF TRANSMISSION STRUCTURES. ALL SAFETY PROCEDURES, RIGGING AND ERECTION METHODS SHALL BE STANDARD TO THE INDUSTRY AND IN COMPLIANCE WITH OSHA.

11. EXISTING COAXIAL CABLES AND ALL ACCESSORIES SHALL BE RELOCATED AS NECESSARY AND REINSTALLED BY THE CONTRACTOR WITHOUT INTERRUPTION IN SERVICE WHERE THEY ARE IN CONFLICT WITH THE TOWER REINFORCEMENT WORK.

12. IF ANY FIELD CONDITIONS EXIST WHICH PRECLUDE COMPLIANCE WITH THE DRAWINGS, THE CONTRACTOR SHALL IMMEDIATELY NOTIFY THE ENGINEER AND SHALL PROCEED WITH AFFECTED WORK AFTER CONFLICT IS SATISFACTORILY RESOLVED.

13. ALL DAMAGE CAUSED TO ANY EXISTING STRUCTURE SHALL BE THE SOLE RESPONSIBILITY OF THE CONTRACTOR. THE CONTRACTOR WILL BE HELD LIABLE FOR ALL REPAIRS REQUIRED FOR EXISTING STRUCTURES IF DAMAGED DURING CONSTRUCTION ACTIVITIES.

REV.	DATE	DRAWN BY	CHK'D BY	DESCRIPTION
6	8/16/18	TJL	CFC	ISSUED FOR CONSTRUCTION
5	8/6/18	TJL	CFC	ISSUED FOR CONSTRUCTION – REVISED ANTENNA MOUNT
4	7/6/18	TJL	CFC	ISSUED FOR CONSTRUCTION – REVISED ANTENNA MOUNT
3	12/15/17	TJL	CFC	ISSUED FOR CONSTRUCTION
2	9/13/17	TJL	CFC	ISSUED FOR CONSTRUCTION
1	8/11/17	TJL	CFC	ISSUED FOR CONSTRUCTION
0	6/29/17	TJL	CFC	ISSUED FOR CONSTRUCTION

PROFESSIONAL ENGINEER SEAL

CENTEK engineering
Centered on Solutions
(203) 488-0580
(203) 488-8587 Fax
63-2 North Branford Road
Branford, CT 06405
www.CentekEng.com

AT&T MOBILITY
ANTENNA FRAME AND TOWER REINFORCEMENT DESIGN
CT2117
CL&P STRUCTURE 783
220 EDGEMARK ACRES
MERIDEN, CT 06451

DATE:	6/29/17
SCALE:	AS SHOWN
JOB NO.	17010.08

DESIGN BASIS AND GENERAL NOTES

SHEET NO.
N-1
Sheet No. 2 of 12

EARTHWORK NOTES

1. COMPACTED GRAVEL FILL SHALL BE FURNISHED AND PLACED AS A FOUNDATION FOR STRUCTURES, WHERE SHOWN ON THE CONTRACT DRAWINGS OR DIRECTED BY THE ENGINEER.

2. CRUSHED STONE FILL SHALL BE PLACED IN 12" MAX. LIFTS AND CONSOLIDATED USING A HAND OPERATED VIBRATORY PLATE COMPACTOR WITH A MINIMUM OF 2 PASSES OF COMPACTOR PER LIFT.

3. COMPACTED GRAVEL FILL TO BE WELL GRADED BANK RUN GRAVEL MEETING THE FOLLOWING GRADATION REQUIREMENTS:

SIEVE DESIGNATION	% PASSING
1 ½"	100
No. 4	40–70
No. 100	5–20
No. 200	4–8

4. CRUSHED STONE TO BE UNIFORMLY GRADED, CLEAN, HARD PROCESS AGGREGATE MEETING THE FOLLOWING GRADATION REQUIREMENTS:

SIEVE DESIGNATION	% PASSING
1"	100
¾"	90–100
½"	0–15
⅜"	0–5

5. SELECT BACKFILL FOR FOUNDATION WALLS SHALL BE FREE OF ORGANIC MATERIAL, TOPSOIL, DEBRIS AND BOULDERS LARGER THAN 6".

6. GRAVEL AND GRANULAR FILL SHALL BE INSTALLED IN 10" MAX. LIFTS. COMPACTED TO 95% MIN. AT MAX. DRY DENSITY.

7. NON WOVEN GEOTEXTILE FOR SEPARATION PURPOSES SHALL BE MIRAFI 140N, OR ENGINEER APPROVED EQUAL.

FOUNDATION CONSTRUCTION NOTES

1. ALL FOOTINGS SHALL BE PLACED ON SUITABLE, COMPACTED SOIL HAVING ADEQUATE BEARING CAPACITY AND FREE OF ORGANIC CONTENT, CLAY, OR OTHER UNSUITABLE MATERIAL. ADDITIONAL EXCAVATION MAY BE REQUIRED BELOW FOOTING ELEVATIONS INDICATED IF UNSUITABLE MATERIAL IS ENCOUNTERED.

2. SUBGRADE PREPARATION: IF UNSUITABLE SOIL IS ENCOUNTERED, REMOVE ALL UNSUITABLE MATERIALS FROM BELOW PROPOSED STRUCTURE FOUNDATIONS AND COMPACT EXPOSED SOIL SURFACES. PLACE AND COMPACT APPROVED GRAVEL FILL. PLACEMENT OF ALL COMPACTED FILL MUST BE UNDER SUPERVISION OF AN APPROVED TESTING LABORATORY. FILL SHALL BE COMPACTED IN LAYERS NOT TO EXCEED 10" BEFORE COMPACTION. DETERMINE MAXIMUM DRY DENSITY IN ACCORDANCE WITH ASTM D1557–70 AND MAKE ONE (1) FIELD DENSITY TEST IN ACCORDANCE WITH ASTM D2167–66 FOR EACH 50 CUBIC YARDS OF COMPACTED FILL. BUT NOT LESS THAN ONE (1) PER LAYER, TO INSURE COMPACTION TO 95% OF MAX. DRY DENSITY.

3. ALL SOIL SURROUNDING AND UNDER ALL FOOTINGS SHALL BE KEPT REASONABLY DRY AND PROTECTED FROM FREEZING AND FROST ACTION DURING THE COURSE OF CONSTRUCTION.

4. WHERE GROUNDWATER IS ENCOUNTERED, DEWATERING SHALL BE ACCOMPLISHED CONTINUOUSLY AND COMPLETELY DURING FOUNDATION CONSTRUCTION. PROVIDE CRUSHED STONE AS REQUIRED TO STABILIZE FOOTING SUBGRADE.

5. ALL FOOTINGS ARE TO REST ON FIRM SOIL, REGARDLESS OF ELEVATIONS SHOWN ON THE DRAWINGS, BUT IN NO CASE MAY FOOTING ELEVATIONS BE HIGHER THAN INDICATED ON THE FOUNDATION PLAN, UNLESS SPECIFICALLY DIRECTED BY THE ENGINEER.

6. FOUNDATION WATERPROOFING AND DAMPPROOFING SHALL COMPLY WITH BUILDING CODE REQUIREMENTS UNLESS A MORE SUBSTANTIAL SYSTEM IS INDICATED OR SPECIFIED.

REV.	DATE	DRAWN BY	CHK'D BY	DESCRIPTION
6	8/16/18	TJL	CFC	ISSUED FOR CONSTRUCTION
5	8/6/18	TJL	CFC	ISSUED FOR CONSTRUCTION
4	7/6/18	TJL	CFC	ISSUED FOR CONSTRUCTION – REVISED ANTENNA MOUNT
3	12/15/17	TJL	CFC	ISSUED FOR CONSTRUCTION – REVISED ANTENNA MOUNT
2	9/13/17	TJL	CFC	ISSUED FOR CONSTRUCTION
1	8/11/17	TJL	CFC	ISSUED FOR CONSTRUCTION
0	6/29/17	TJL	CFC	ISSUED FOR CONSTRUCTION

PROFESSIONAL ENGINEER SEAL

CENTEK engineering
Centered on Solutions
(203) 488-0580
(203) 488-8587 Fax
63-2 North Branford Road
Branford, CT 06405
www.CentekEng.com

AT&T MOBILITY
ANTENNA FRAME AND TOWER REINFORCEMENT DESIGN
CT2117
CL&P STRUCTURE 783
220 EDGEMARK ACRES
MERIDEN, CT 06451

DATE:	6/29/17
SCALE:	AS SHOWN
JOB NO.	17010.08

EARTHWORK AND FOUNDATION CONSTRUCTION NOTES

SHEET NO.
N–2
Sheet No. 3 of 12

CONCRETE CONSTRUCTION

1. CONCRETE CONSTRUCTION SHALL CONFORM TO THE FOLLOWING STANDARDS:

   ACI 211 – STANDARD PRACTICE FOR SELECTING PROPORTIONS FOR NORMAL AND HEAVYWEIGHT CONCRETE.

   ACI 301 – SPECIFICATIONS FOR STRUCTURAL CONCRETE FOR BUILDINGS.

   ACI 302 – GUIDE FOR CONCRETE FLOOR AND SLAB CONSTRUCTION

   ACI 304 – RECOMMENDED PRACTICE FOR MEASURING, MIXING, TRANSPORTING, AND PLACING CONCRETE.

   ACI 306.1 – STANDARD SPECIFICATION FOR COLD WEATHER CONCRETING

   ACI 318 – BUILDING CODE REQUIREMENTS FOR REINFORCED CONCRETE.

2. CONCRETE SHALL BE AIR ENTRAINED AND SHALL DEVELOP COMPRESSIVE STRENGTH IN 28 DAYS AS FOLLOWS:

   ALL CONCRETE 4,000 PSI

3. REINFORCING STEEL SHALL BE 60,000 PSI YIELD STRENGTH.

4. ALL DETAILING, FABRICATION, AND ERECTION OF REINFORCING BARS, UNLESS OTHERWISE NOTED, MUST FOLLOW THE LATEST ACI CODE AND LATEST ACI "MANUAL OF STANDARD PRACTICE FOR DETAILING REINFORCED CONCRETE STRUCTURES".

5. CONCRETE COVER OVER REINFORCING SHALL BE 3 INCHES.

6. NO STEEL WIRE, METAL FORM TIES, OR ANY OTHER METAL SHALL REMAIN WITHIN THE REQUIRED COVER OF ANY CONCRETE SURFACE.

7. ALL REINFORCEMENT SHALL BE CONTINUOUS. SPLICES WILL NOT BE ALLOWED.

8. NO TACK WELDING OF REINFORCING WILL BE PERMITTED.

9. NO CALCIUM CHLORIDE OR ADMIXTURES CONTAINING MORE THAN 1 % CHLORIDE BY WEIGHT OF ADMIXTURE SHALL BE USED IN THE CONCRETE.

10. TOP OF FOOTING SURFACES SHALL RECEIVE A UNIFORM FLOAT FINISH. CURE FOOTING SURFACE WITH SONNEBORN KURE–N–SEAL WB OR APPROVED EQUAL, APPLIED AS RECOMMENDED BY MANUFACTURER.

11. <u>PREPARATION OF SURFACES WHERE NEW CONCRETE WILL INTERFACE WITH EXISTING CAISSON:</u>
    THE PERIMETER OF THE EXISTING CAISSON SHALL BE THOROUGHLY CLEANED OF ALL DIRT AND DELETERIOUS MATERIALS PRIOR TO APPLICATION OF BONDING AGENT. CONTRACTOR SHALL NOTIFY NORTHEAST UTILITIES 24 HOURS IN ADVANCE OF CLEANING.

    SIKADUR 32, HI–MOD OR ENGINEER APPROVED EQUAL SHALL BE APPLIED, IN STRICT ACCORDANCE WITH MANUFACTURER'S INSTRUCTIONS, TO ALL INTERFACING SURFACES BEFORE CONCRETE IS PLACED.

    CAULK JOINT BETWEEN EXISTING CONCRETE PIER AND NEW CONCRETE WITH SIKAFLEX 1–A BY SIKA CORP. OR ENGINEER APRROVED EQUAL.

    SUBMIT MANUFACTURER'S PRODUCT SPECIFICATION DATA AND INSTALLATION INSTRUCTIONS FOR REVIEW AND APPROVAL BY OWNER.

12. NEW CONCRETE FOOTING SHALL BE ALLOWED TO CURE AT LEAST 14 DAYS BEFORE WIRELESS ANTENNA MOUNT, ANTENNAS, AND CABLES ARE INSTALLED.

13. INSPECTION AND TESTING OF CONCRETE WORK SHALL BE PERFORMED BY AN INDEPENDENT TESTING LABORATORY, APPROVED AND PAID BY THE OWNER. THE INSPECTOR SHALL OBSERVE THE CONDITION OF SOILS AND FORMWORK BEFORE FOOTINGS ARE PLACED, SIZE, SPACING AND LOCATION OF REINFORCEMENT, AND PLACEMENT OF CONCRETE.

14. THE TESTING COMPANY SHALL ALSO OBTAIN A MINIMUM OF THREE (3) COMPRESSIVE STRENGTH TEST SPECIMENS FOR EACH CONCRETE MIX DESIGN. ONE SPECIMEN TESTED AT 7 DAYS, ONE AT 28 DAYS, AND ONE HELD IN RESERVE FOR FUTURE TESTING, IF NEEDED.

15. FOUR COPIES OF ALL INSPECTION TEST REPORTS SHALL BE SUBMITTED TO THE OWNER WITHIN TEN (10) WORKING DAYS OF THE DATE OF INSPECTION.

REV.	DATE	DRAWN BY	CHK'D BY	DESCRIPTION
6	8/16/18	TJL	CFC	ISSUED FOR CONSTRUCTION
5	8/6/18	TJL	CFC	ISSUED FOR CONSTRUCTION
4	7/6/18	TJL	CFC	ISSUED FOR CONSTRUCTION – REVISED ANTENNA MOUNT
3	12/15/17	TJL	CFC	ISSUED FOR CONSTRUCTION – REVISED ANTENNA MOUNT
2	9/13/17	TJL	CFC	ISSUED FOR CONSTRUCTION
1	8/11/17	TJL	CFC	ISSUED FOR CONSTRUCTION
0	6/29/17	TJL	CFC	ISSUED FOR CONSTRUCTION

PROFESSIONAL ENGINEER SEAL

CENTEK engineering
Centered on Solutions
(203) 488-0580
(203) 488-8587 Fax
63-2 North Branford Road
Branford, CT 06405
www.CentekEng.com

AT&T MOBILITY
ANTENNA FRAME AND TOWER REINFORCEMENT DESIGN
CT2117
CL&P STRUCTURE 783
200 EDGEMARK ACRES
MERIDEN, CT 06451

DATE: 6/29/17
SCALE: AS SHOWN
JOB NO. 17010.08

CONCRETE CONSTRUCTION NOTES

SHEET NO.
N–3
Sheet No. 4 of 12

STRUCTURAL STEEL

1. ALL STRUCTURAL STEEL IS DESIGNED BY ALLOWABLE STRESS DESIGN (ASD).

2. MATERIAL SPECIFICATIONS

   A. STRUCTURAL STEEL (W SHAPES)---ASTM A992 (FY = 50 KSI)
   B. STRUCTURAL STEEL (OTHER SHAPES)---ASTM A36 (FY = 36 KSI).
   C. STRUCTURAL HSS (RECTANGULAR SHAPES)---ASTM A500 GRADE B, (FY = 46 KSI)
   D. STRUCTURAL HSS (ROUND SHAPES)---ASTM A500 GRADE B, (FY = 42 KSI)
   E. PIPE---ASTM A53 GRADE B (FY = 35 KSI)

3. FASTENER SPECIFICATIONS

   A. CONNECTION BOLTS---ASTM A325-N, UNLESS OTHERWISE SCHEDULED.
   B. U-BOLTS---ASTM A307
   C. ANCHOR RODS---ASTM F1554
   D. WELDING ELECTRODES---ASTM E70XX FOR A36 & A572_GR50 STEELS, ASTM E80XX FOR A572_GR65 STEEL.

4. CONTRACTOR TO REVIEW ALL SHOP DRAWINGS AND SUBMIT COPY TO ENGINEER FOR APPROVAL. DRAWINGS MUST BEAR THE CHECKER'S INITIALS BEFORE SUBMITTING TO THE ENGINEER FOR REVIEW. SHOP DRAWINGS SHALL INCLUDE THE FOLLOWING: SECTION PROFILES, SIZES, CONNECTION ATTACHMENTS, REINFORCING, ANCHORAGE, SIZE AND TYPE OF FASTENERS AND ACCESSORIES. INCLUDE ERECTION DRAWINGS, ELEVATIONS AND DETAILS.

5. STRUCTURAL STEEL SHALL BE DETAILED, FABRICATED AND ERECTED IN ACCORDANCE WITH THE LATEST PROVISIONS OF AISC MANUAL OF STEEL CONSTRUCTION.

6. PROVIDE ALL PLATES, CLIP ANGLES, CLOSURE PIECES, STRAP ANCHORS, MISCELLANEOUS PIECES AND HOLES REQUIRED TO COMPLETE THE STRUCTURE.

7. FIT AND SHOP ASSEMBLE FABRICATIONS IN THE LARGEST PRACTICAL SECTIONS FOR DELIVERY TO SITE.

8. INSTALL FABRICATIONS PLUMB AND LEVEL, ACCURATELY FITTED, AND FREE FROM DISTORTIONS OR DEFECTS.

9. AFTER ERECTION OF STRUCTURES, TOUCHUP ALL WELDS, ABRASIONS AND NON-GALVANIZED SURFACES WITH A 95% ORGANIC ZINC RICH PAINT IN ACCORDANCE WITH ASTM 780.

10. ALL STEEL MATERIAL (EXPOSED TO WEATHER) SHALL BE GALVANIZED AFTER FABRICATION IN ACCORDANCE WITH ASTM A123 "ZINC (HOT DIPPED GALVANIZED) COATINGS" ON IRONS AND STEEL PRODUCTS.

11. ALL BOLTS, ANCHORS AND MISCELLANEOUS HARDWARE SHALL BE GALVANIZED IN ACCORDANCE WITH ASTM A153 "ZINC COATING (HOT-DIP) ON IRON AND STEEL HARDWARE".

12. CONTRACTOR SHALL COMPLY WITH AWS CODE FOR PROCEDURES APPEARANCE AND QUALITY OF WELDS, AND WELDING PROCESSES SHALL BE QUALIFIED IN ACCORDANCE WITH AWS "STANDARD QUALIFICATION PROCEDURES". ALL WELDING SHALL BE DONE USING THE SCHEDULED ELECTRODES AND WELDING SHALL CONFORM TO AISC AND D1.1 WHERE FILLET WELD SIZES ARE NOT SHOWN, PROVIDE THE MINIMUM SIZE PER TABLET J2.4 IN THE AISC "MANUAL OF STEEL CONSTRUCTION" 9TH EDITION. AT THE COMPLETION OF WELDING, ALL DAMAGE TO GALVANIZED COATING SHALL BE REPAIRED.

13. THE ENGINEER SHALL BE NOTIFIED OF ANY INCORRECTLY FABRICATED, DAMAGED OR OTHERWISE MISFITTING OR NON CONFORMING MATERIALS OR CONDITIONS TO REMEDIAL OR CORRECTIVE ACTION. ANY SUCH ACTION SHALL REQUIRE ENGINEER REVIEW.

14. CONNECTION ANGLES SHALL HAVE A MINIMUM THICKNESS OF 1/4 INCHES.

15. STRUCTURAL CONNECTION BOLTS SHALL CONFORM TO ASTM A325. ALL BOLTS SHALL BE 3/4" DIAMETER MINIMUM AND SHALL HAVE A MINIMUM OF TWO BOLTS, UNLESS OTHERWISE ON THE DRAWINGS.

16. LOCK WASHER ARE NOT PERMITTED FOR A325 BOLTED STEEL ASSEMBLIES.

17. SHOP CONNECTIONS SHALL BE WELDED OR HIGH STRENGTH BOLTED.

18. MILL BEARING ENDS OF COLUMNS, STIFFENERS, AND OTHER BEARING SURFACES TO TRANSFER LOAD OVER ENTIRE CROSS SECTION.

19. FABRICATE BEAMS WITH MILL CAMBER UP.

20. LEVEL AND PLUMB INDIVIDUAL MEMBERS OF THE STRUCTURE TO AN ACCURACY OF 1:500, BUT NOT TO EXCEED 1/4" IN THE FULL HEIGHT OF THE COLUMN.

21. COMMENCEMENT OF STRUCTURAL STEEL WORK WITHOUT NOTIFYING THE ENGINEER OF ANY DISCREPANCIES WILL BE CONSIDERED ACCEPTANCE OF PRECEDING WORK.

REV.	DATE	DRAWN BY	CHK'D BY	DESCRIPTION
6	8/16/18	TJL	CFC	ISSUED FOR CONSTRUCTION
5	8/6/18	TJL	CFC	ISSUED FOR CONSTRUCTION
4	7/6/18	TJL	CFC	ISSUED FOR CONSTRUCTION – REVISED ANTENNA MOUNT
3	12/15/17	TJL	CFC	ISSUED FOR CONSTRUCTION – REVISED ANTENNA MOUNT
2	9/13/17	TJL	CFC	ISSUED FOR CONSTRUCTION
1	8/11/17	TJL	CFC	ISSUED FOR CONSTRUCTION
0	6/29/17	TJL	CFC	ISSUED FOR CONSTRUCTION

PROFESSIONAL ENGINEER SEAL

CENTEK engineering
Centered on Solutions
(203) 488-0580
(203) 488-8587 Fax
63-2 North Branford Road
Branford, CT 06405
www.CentekEng.com

AT&T MOBILITY
ANTENNA FRAME AND TOWER REINFORCEMENT DESIGN
CT2117
CL&P STRUCTURE 783
200 EDGEMARK ACRES
MERIDEN, CT 06481

DATE:	6/29/17
SCALE:	AS SHOWN
JOB NO.	17010.08

STRUCTURAL NOTES

SHEET NO.
N-4
Sheet No. 5 of 12

MODIFICATION INSPECTION REPORT REQUIREMENTS

PRE-CONSTUCTION		DURING CONSTRUCTION		POST-CONSTRUCTION	
SCHEDULED ITEM	REPORT ITEM	SCHEDULED ITEM	REPORT ITEM	SCHEDULED ITEM	REPORT ITEM
X	EOR MODIFICATION INSPECTION DRAWING	X	FOUNDATIONS	X	MODIFICATION INSPECTOR RECORD REDLINE DRAWING
X	EOR APPROVED SHOP DRAWINGS	X	EARTHWORK: BACKFILL MATERIAL & COMPACTION	–	POST–INSTALLED ANCHOR ROD PULL–OUT TEST
–	EOR APPROVED POST–INSTALLED ANCHOR MPII	X	REBAR & FORMWORK GEOMETRY VERIFICATION	X	PHOTOGRAPHS
–	FABRICATION INSPECTION	X	CONCRETE TESTING		
–	FABRICATOR CERTIFIED WELDER INSPECTION	X	STEEL INSPECTION		
X	MATERIAL CERTIFICATIONS	–	POST INSTALLED ANCHOR ROD VERIFICATION		
		–	BASE PLATE GROUT VERIFICATION		
		–	CONTRACTOR'S CERTIFIED WELD INSPECTION		
		X	ON–SITE COLD GALVANIZING VERIFICATION		
		X	CONTRACTOR AS–BUILT REDLINE DRAWINGS		

NOTES:

1. REFER TO MODIFICATION INSPECTION NOTES FOR ADDITIONAL REQUIREMENTS
2. "X" DENOTES DOCUMENT REQUIRED FOR INCLUSION IN MODIFICATION INSPECTION FINAL REPORT.
3. "–" DENOTES DOCUMENT NOT REQUIRED FOR INCLUSION IN MODIFICATION INSPECTION FINAL REPORT.
4. EOR – ENGINEER OF RECORD
4. MPII – "MANUFACTURER'S PRINTED INSTALLATION GUIDELINES"

GENERAL

1. THE MODIFICATION INSPECTION IS A VISUAL INSPECTION OF STRUCTURAL MODIFICATIONS, TO INCLUDE A REVIEW AND COMPILATION OF SPECIFIED SUBMITTALS AND CONSTRUCTION INSPECTIONS, AS AN ASSURANCE OF COMPLIANCE WITH THE CONSTRUCTION DOCUMENTS PREPARED UNDER THE DIRECTION OF THE ENGINEER OF RECORD (EOR).

2. THE MODIFICATION INSPECTION IS TO CONFIRM INSTALLATION CONFIGURATION AND GENERAL WORKMANSHIP AND IS NOT A REVIEW OF THE MODIFICATION DESIGN. OWNERSHIP OF THE MODIFICATION DESIGN EFFECTIVENESS AND INTENT RESIDES WITH THE ENGINEER OF RECORD.

3. TO ENSURE COMPLIANCE WITH THE MODIFICATION INSPECTION REQUIREMENTS THE GENERAL CONTRACTOR (GC) AND THE MODIFICATION INSPECTOR (MI) COMMENCE COMMUNICATION UPON AUTHORIZATION TO PROCEED BY THE CLIENT. EACH PARTY SHALL BE PROACTIVE IN CONTACTING THE OTHER. THE EOR SHALL BE CONTACTED IF SPECIFIC GC/MI CONTACT INFORMATION IS NOT MADE AVAILABLE.

4. THE GC SHALL PROVIDE THE MI WITH A MINIMUM OF 5 BUSINESS DAYS NOTICE OF IMPENDING INSPECTIONS.

5. WHEN POSSIBLE, THE GC AND MI SHALL BE ON SITE DURING THE MODIFICATION INSPECTION TO HAVE ANY NOTED DEFICIENCIES ADDRESSED DURING THE INITIAL MODIFICATION INSPECTION.

MODIFICATION INSPECTOR (MI)

1. THE MI SHALL CONTACT THE GC UPON AUTHORIZATION BY THE CLIENT TO:

   – REVIEW THE MODIFICATION INSPECTION REPORT REQUIREMENTS.
   – WORK WITH THE GC IN DEVELOPMENT OF A SCHEDULE FOR ON–SITE INSPECTIONS.
   – DISCUSS CRITICAL INSPECTIONS AND PROJECT CONCERNS.

2. THE MI IS RESPONSIBLE FOR COLLECTION OF ALL INSPECTION AND TEST REPORTS, REVIEWING REPORTS FOR ADHERENCE TO THE CONTRACT DOCUMENTS, CONDUCTING ON–SITE INSPECTIONS AND COMPILATION & SUBMISSION OF THE MODIFICATION INSPECTION REPORT TO THE CLIENT AND THE EOR.

GENERAL CONTRACTOR (GC)

1. THE GC IS REQUIRED TO CONTACT THE GC UPON AUTHORIZATION TO PROCEED WITH CONSTRUCTION BY THE CLIENT TO:

   – REVIEW THE MODIFICATION INSPECTION REPORT REQUIREMENTS.
   – WORK WITH THE MI IN DEVELOPMENT OF A SCHEDULE FOR ON–SITE INSPECTIONS.
   – DISCUSS CRITICAL INSPECTIONS AND PROJECT CONCERNS.

2. THE GC IS RESPONSIBLE FOR COORDINATING AND SCHEDULING IN ADVANCE ALL REQUIRED INSPECTIONS AND TESTS WITH THE MI.

CORRECTION OF FAILING MODIFICATION INSPECTION

1. SHOULD THE STRUCTURAL MODIFICATION NOT COMPLY WITH THE REQUIREMENTS OF THE CONSTRUCTION DOCUMENTS, THE GC SHALL WORK WITH THE MODIFICATION INSPECTOR IN A VIABLE REMEDIATION PLAN AS FOLLOWS:

   – CORRECT ALL DEFICIENCIES TO COMPLY WITH THE CONTRACT DOCUMENTS AND COORDINATE WITH THE MI FOR A FOLLOW UP INSPECTION.
   – WITH CLIENT AUTHORIZATION, THE GC MAY WORK WITH THE EOR TO REANALYZE THE MODIFICATION USING THE AS–BUILT CONDITION.

REQUIRED PHOTOGRAPHS

1. THE GC AND MI SHALL AT MINIMUM PHOTO DOCUMENT THE FOLLOWING FOR INCLUSION IN THE MODIFICATION INSPECTION REPORT:

   – PRE–CONSTRUCTION: GENERAL CONDITION OF THE SITE.
   – DURING CONSTRUCTION: RAW MATERIALS, CRITICAL DETAILS, WELD PREPARATION, BOLT INSTALLATION & TORQUE, FINAL INSTALLED CONDITION & SURFACE COATING REPAIRS.
   – POST–CONSTRUCTION: FINAL CONDITION OF THE SITE

REV.	DATE	DRAWN BY	CHK'D BY	DESCRIPTION
6	8/16/18	TJL	CFC	ISSUED FOR CONSTRUCTION
5	8/6/18	TJL	CFC	ISSUED FOR CONSTRUCTION
4	7/6/18	TJL	CFC	ISSUED FOR CONSTRUCTION – REVISED ANTENNA MOUNT
3	12/15/17	TJL	CFC	ISSUED FOR CONSTRUCTION – REVISED ANTENNA MOUNT
2	9/13/17	TJL	CFC	ISSUED FOR CONSTRUCTION
1	8/11/17	TJL	CFC	ISSUED FOR CONSTRUCTION
0	6/29/17	TJL	CFC	ISSUED FOR CONSTRUCTION

PROFESSIONAL ENGINEER SEAL

CENTEK engineering
Centered on Solutions
(203) 488-0580
(203) 488-8587 Fax
63-2 North Branford Road
Branford, CT 06405
www.CentekEng.com

AT&T MOBILITY
ANTENNA FRAME AND TOWER REINFORCEMENT DESIGN
CT2117
CL&P STRUCTURE 783
200 EDGEMARK ACRES
MERIDEN, CT 06451

DATE:	6/29/17
SCALE:	AS SHOWN
JOB NO.	17010.08

MODIFICATION INSPECTION REQUIREMENTS

SHEET NO.
MI-1
Sheet No. 6 of 12

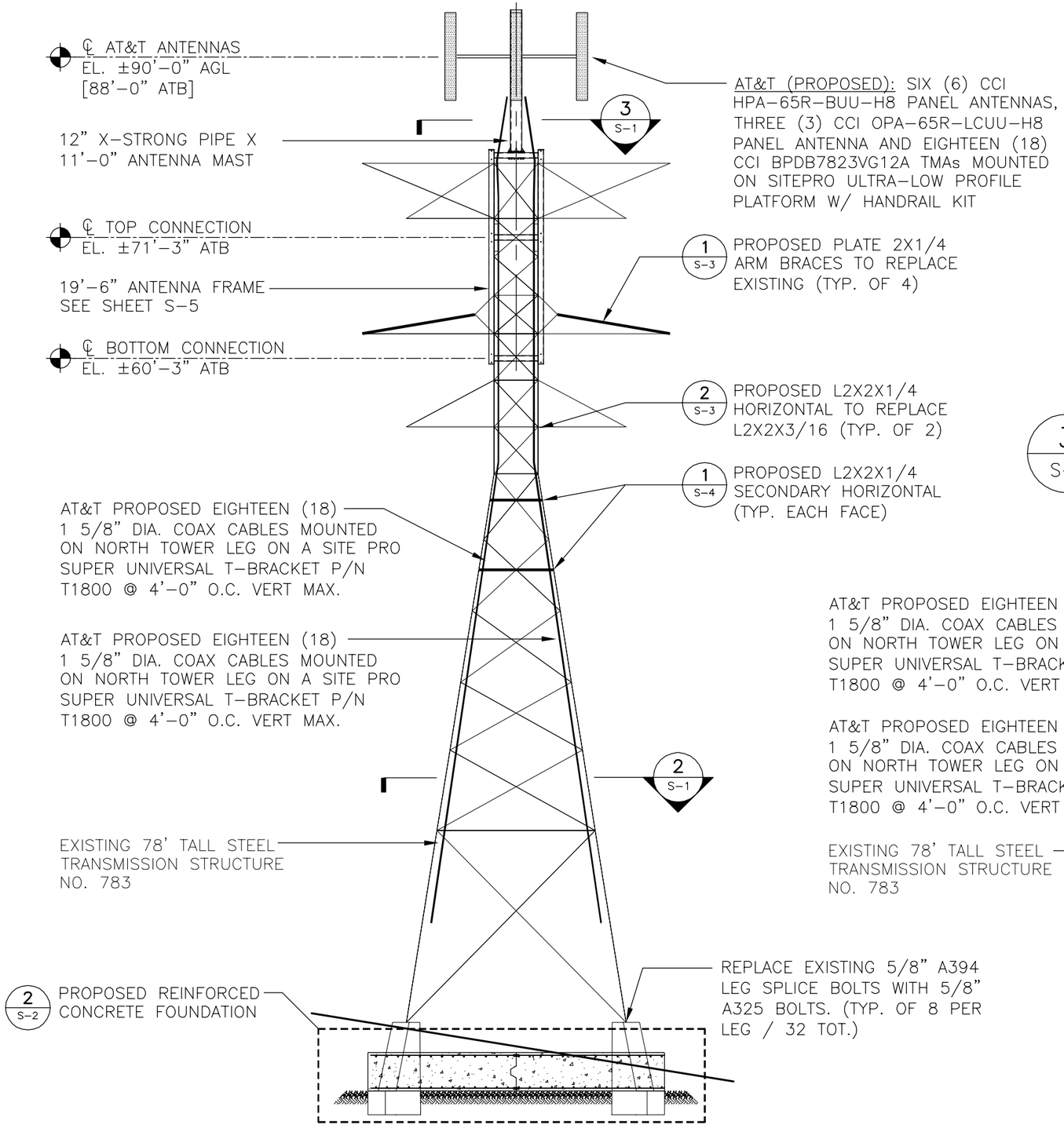

1 S-1 TOWER & MAST ELEVATION

SCALE: NOT TO SCALE

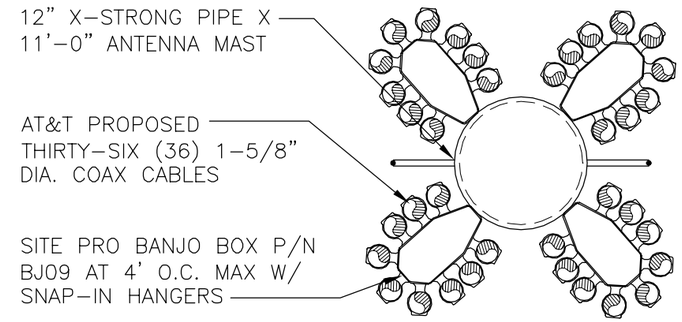

3 S-1 FEEDLINE PLAN - POWERMOUNT

SCALE: NOT TO SCALE

TRUE NORTH

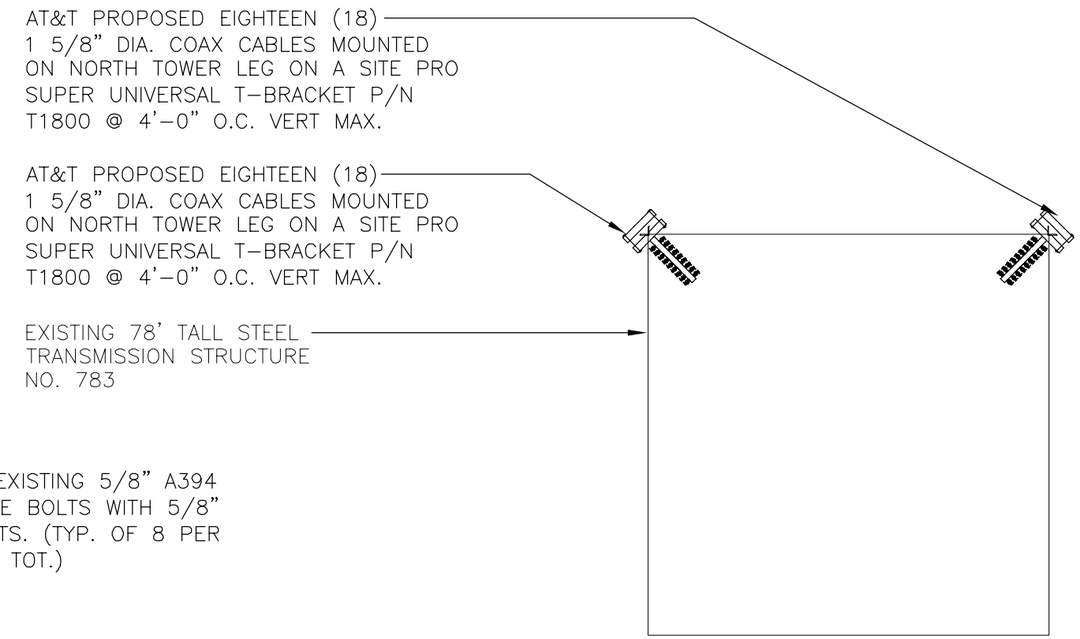

2 S-1 FEEDLINE PLAN - TOWER

SCALE: NOT TO SCALE

TRUE NORTH

REV.	DATE	DRAWN BY	CHK'D BY	DESCRIPTION
6	8/16/18	TJL	CFC	ISSUED FOR CONSTRUCTION
5	8/6/18	TJL	CFC	ISSUED FOR CONSTRUCTION
4	7/6/18	TJL	CFC	ISSUED FOR CONSTRUCTION – REVISED ANTENNA MOUNT
3	12/15/17	TJL	CFC	ISSUED FOR CONSTRUCTION – REVISED ANTENNA MOUNT
2	9/13/17	TJL	CFC	ISSUED FOR CONSTRUCTION
1	8/11/17	TJL	CFC	ISSUED FOR CONSTRUCTION
0	6/29/17	TJL	CFC	ISSUED FOR CONSTRUCTION

PROFESSIONAL ENGINEER SEAL

CENTEK engineering
Centered on Solutions
(203) 488-0580
(203) 488-8587 Fax
63-2 North Branford Road
Branford, CT 06405
www.CentekEng.com

AT&T MOBILITY
ANTENNA FRAME AND TOWER REINFORCEMENT DESIGN
CT2117
CL&P STRUCTURE 783
200 EDGEMARK ACRES
MERIDEN, CT 06451

DATE:	6/29/17
SCALE:	AS SHOWN
JOB NO.	17010.08

TOWER ELEVATION AND FEEDLINE PLAN

SHEET NO.
S-1
Sheet No. 7 of 12

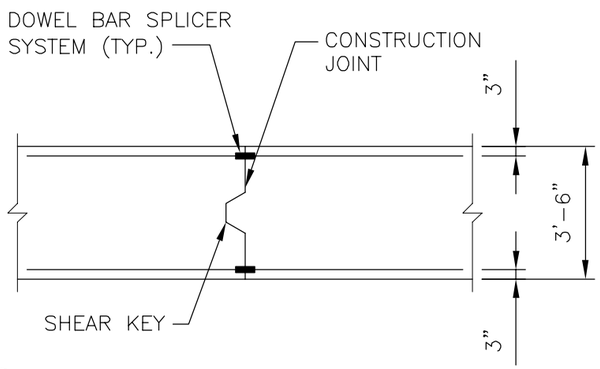

3 / S-2 CONSTRUCTION JOINT DETAIL

SCALE: 1/4" = 1'-0"

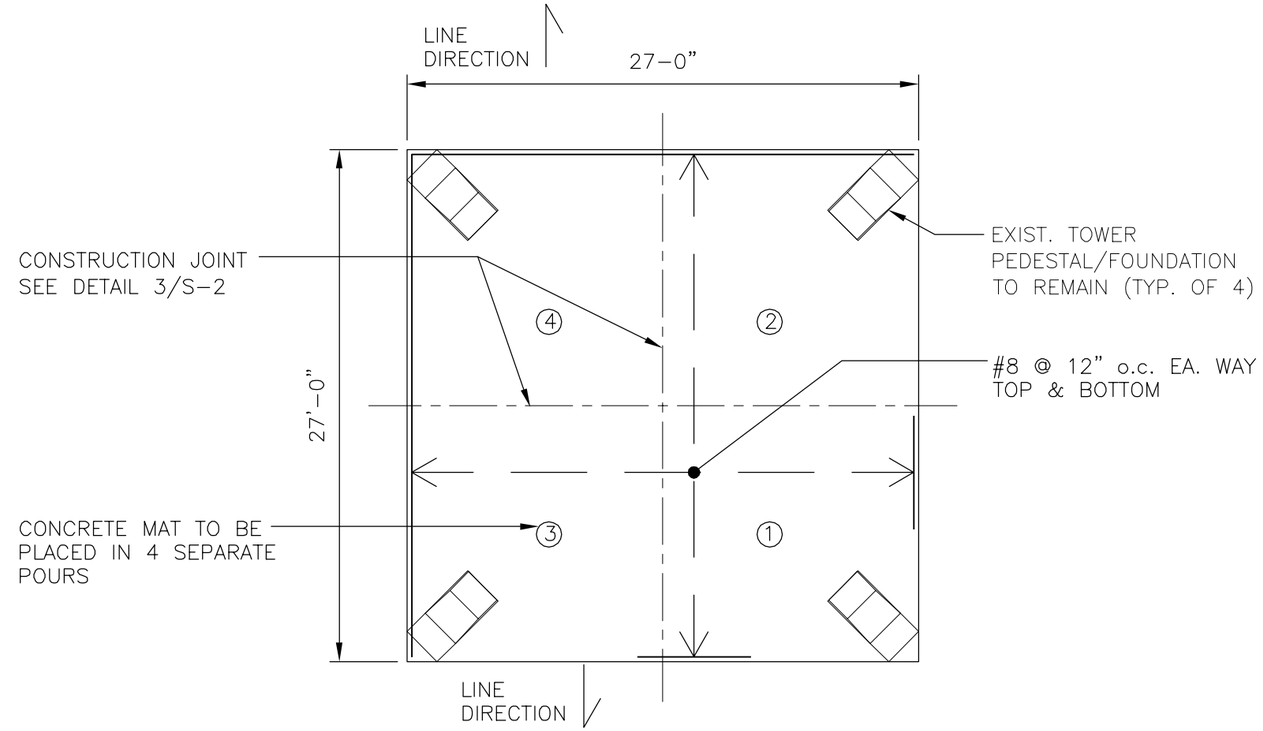

1 / S-2 FOUNDATION PLAN

SCALE: 1/10" = 1'-0"

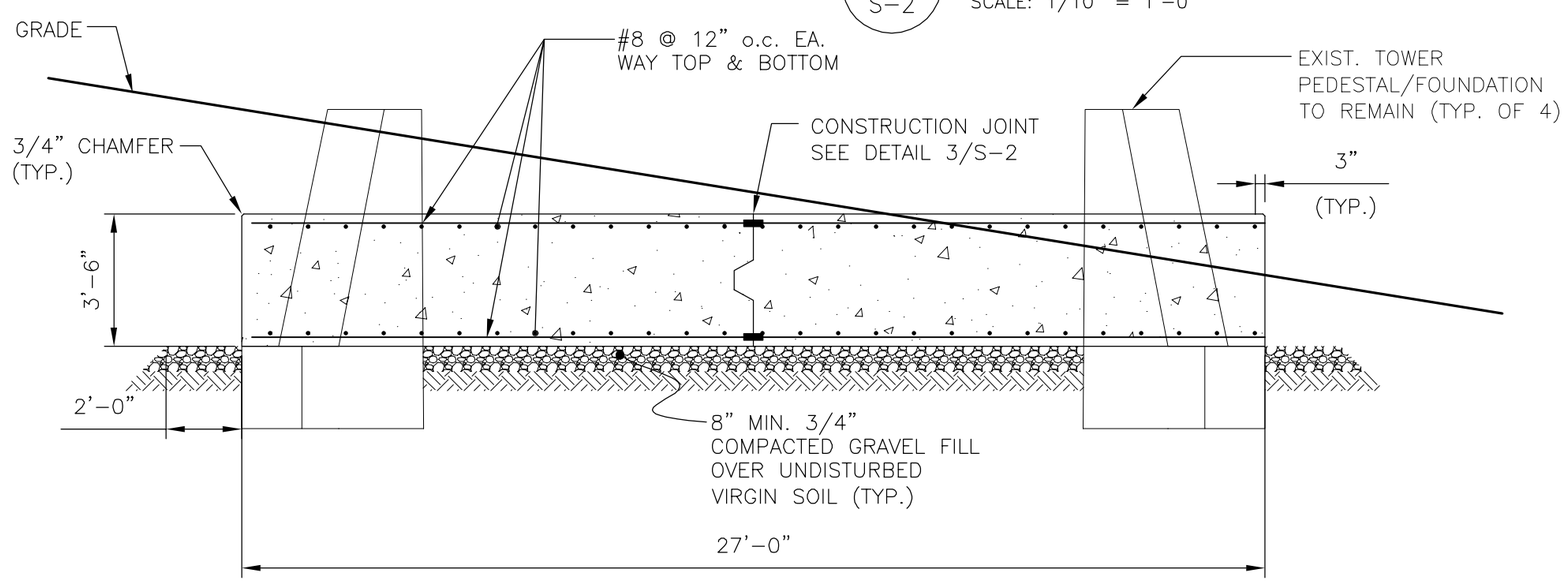

2 / S-2 FOUNDATION SECTION

SCALE: 1/4" = 1'-0"

REV.	DATE	DRAWN BY	CHK'D BY	DESCRIPTION
6	8/16/18	TJL	CFC	ISSUED FOR CONSTRUCTION
5	8/6/18	TJL	CFC	ISSUED FOR CONSTRUCTION
4	7/6/18	TJL	CFC	ISSUED FOR CONSTRUCTION – REVISED ANTENNA MOUNT
3	12/15/17	TJL	CFC	ISSUED FOR CONSTRUCTION – REVISED ANTENNA MOUNT
2	9/13/17	TJL	CFC	ISSUED FOR CONSTRUCTION
1	8/11/17	TJL	CFC	ISSUED FOR CONSTRUCTION
0	6/29/17	TJL	CFC	ISSUED FOR CONSTRUCTION

PROFESSIONAL ENGINEER SEAL

CENTEK engineering
Centered on Solutions
(203) 488-0580
(203) 488-8587 Fax
63-2 North Branford Road
Branford, CT 06405
www.CentekEng.com

AT&T MOBILITY
ANTENNA FRAME AND TOWER REINFORCEMENT DESIGN
CT2117
CL&P STRUCTURE 783
200 EDGEMARK ACRES
MERIDEN, CT 06451

DATE:	6/29/17
SCALE:	AS SHOWN
JOB NO.	17010.08

FOUNDATION REINFORCEMENT DETAILS

SHEET NO.
S-2
Sheet No. 8 of 12

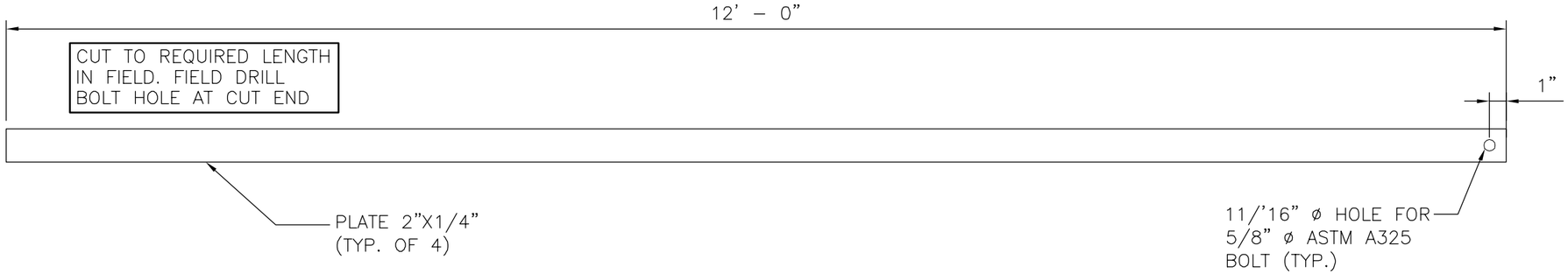

1 / S-3

ARM BRACE REPLACEMENT MEMBER DETAILS

SCALE: 1-1/2" = 1'-0"

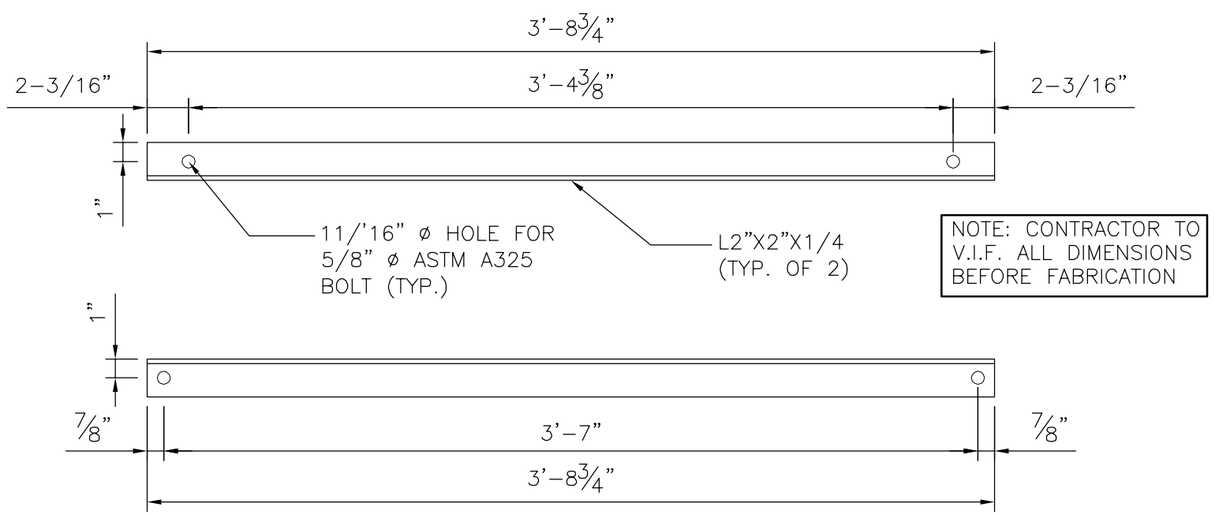

2 / S-3

HORIZONTAL REPLACEMENT MEMBER DETAILS

SCALE: 1-1/2" = 1'-0"

REV.	DATE	DRAWN BY	CHK'D BY	DESCRIPTION
6	8/16/18	TJL	CFC	ISSUED FOR CONSTRUCTION
5	8/6/18	TJL	CFC	ISSUED FOR CONSTRUCTION
4	7/6/18	TJL	CFC	ISSUED FOR CONSTRUCTION – REVISED ANTENNA MOUNT
3	12/15/17	TJL	CFC	ISSUED FOR CONSTRUCTION – REVISED ANTENNA MOUNT
2	9/13/17	TJL	CFC	ISSUED FOR CONSTRUCTION
1	8/11/17	TJL	CFC	ISSUED FOR CONSTRUCTION
0	6/29/17	TJL	CFC	ISSUED FOR CONSTRUCTION

PROFESSIONAL ENGINEER SEAL

CENTEK engineering
Centered on Solutions
(203) 488-0580
(203) 488-8587 Fax
63-2 North Branford Road
Branford, CT 06405
www.CentekEng.com

AT&T MOBILITY
ANTENNA FRAME AND TOWER REINFORCEMENT DESIGN
CT2117
CL&P STRUCTURE 783
220 EDGEMARK ACRES
MERIDEN, CT 06451

DATE:	6/29/17
SCALE:	AS SHOWN
JOB NO.	17010.08

TOWER REINFORCEMENT DETAILS

SHEET NO.
S-3
Sheet No. 9 of 12

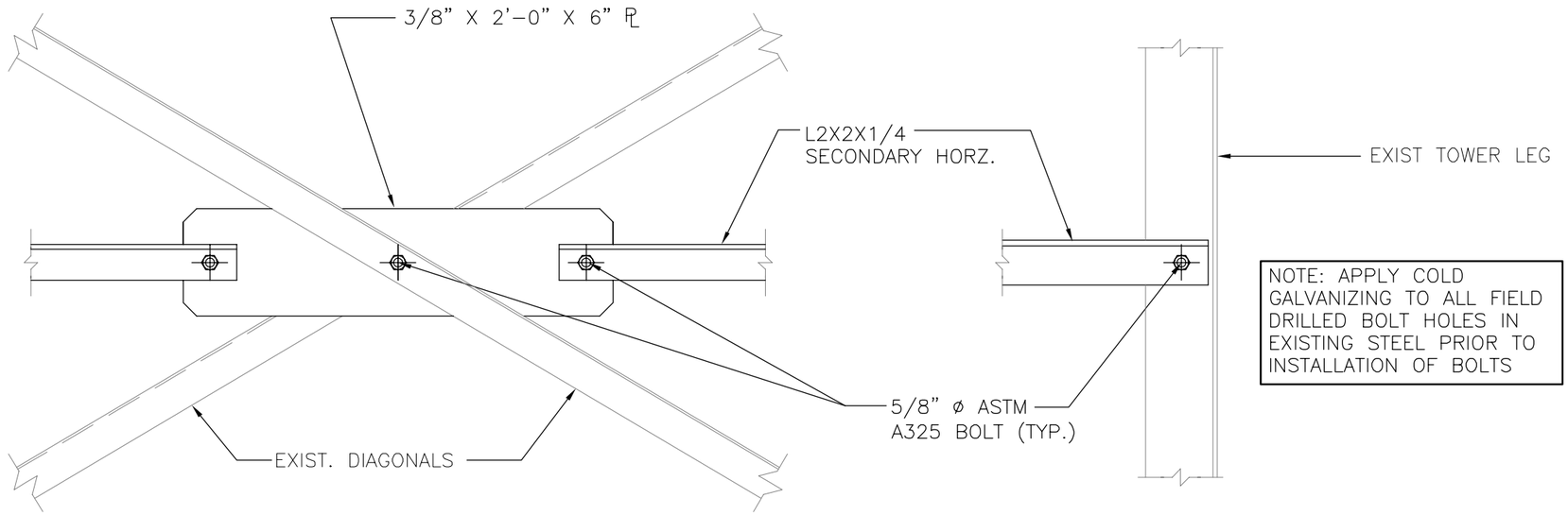

NOTE: APPLY COLD GALVANIZING TO ALL FIELD DRILLED BOLT HOLES IN EXISTING STEEL PRIOR TO INSTALLATION OF BOLTS

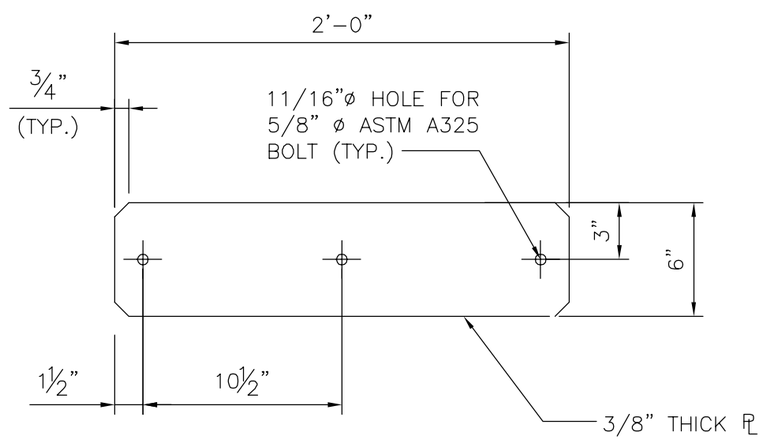

REV.	DATE	DRAWN BY	CHK'D BY	DESCRIPTION
6	8/16/18	TJL	CFC	ISSUED FOR CONSTRUCTION
5	8/6/18	TJL	CFC	ISSUED FOR CONSTRUCTION
4	7/6/18	TJL	CFC	ISSUED FOR CONSTRUCTION – REVISED ANTENNA MOUNT
3	12/15/17	TJL	CFC	ISSUED FOR CONSTRUCTION – REVISED ANTENNA MOUNT
2	9/13/17	TJL	CFC	ISSUED FOR CONSTRUCTION
1	8/11/17	TJL	CFC	ISSUED FOR CONSTRUCTION
0	6/29/17	TJL	CFC	ISSUED FOR CONSTRUCTION

PROFESSIONAL ENGINEER SEAL

CENTEK engineering
Centered on Solutions
(203) 488-0580
(203) 488-8587 Fax
63-2 North Branford Road
Branford, CT 06405
www.CentekEng.com

AT&T MOBILITY
ANTENNA FRAME AND TOWER REINFORCEMENT DESIGN
CT2117
CL&P STRUCTURE 783
200 EDGEMARK ACRES
MERIDEN, CT 06451

DATE:	6/29/17
SCALE:	AS SHOWN
JOB NO.	17010.08

TOWER REINFORCEMENT DETAILS

SHEET NO.
S-4
Sheet No. 10 of 12

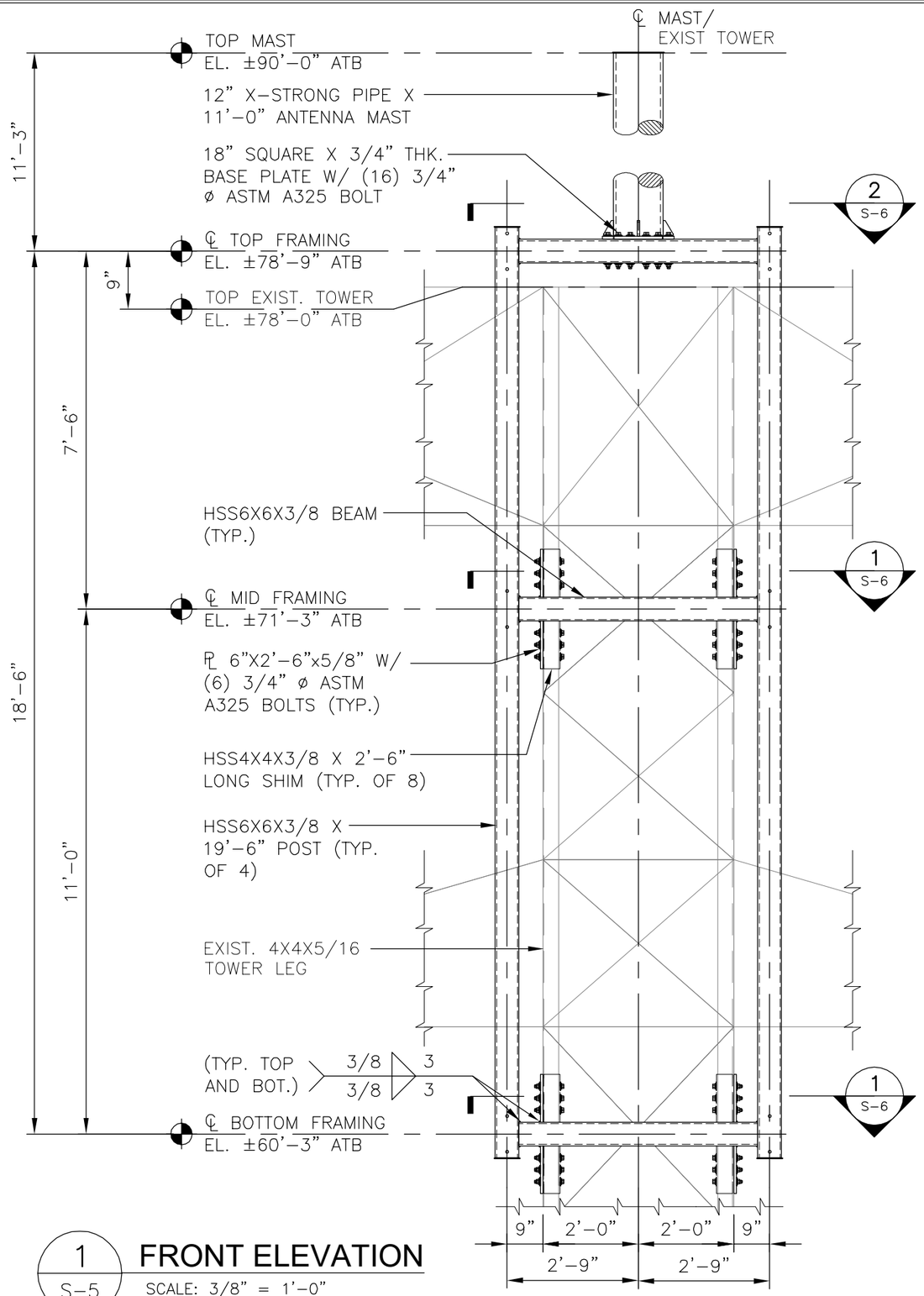

1 S-5 **FRONT ELEVATION**

SCALE: 3/8" = 1'-0"

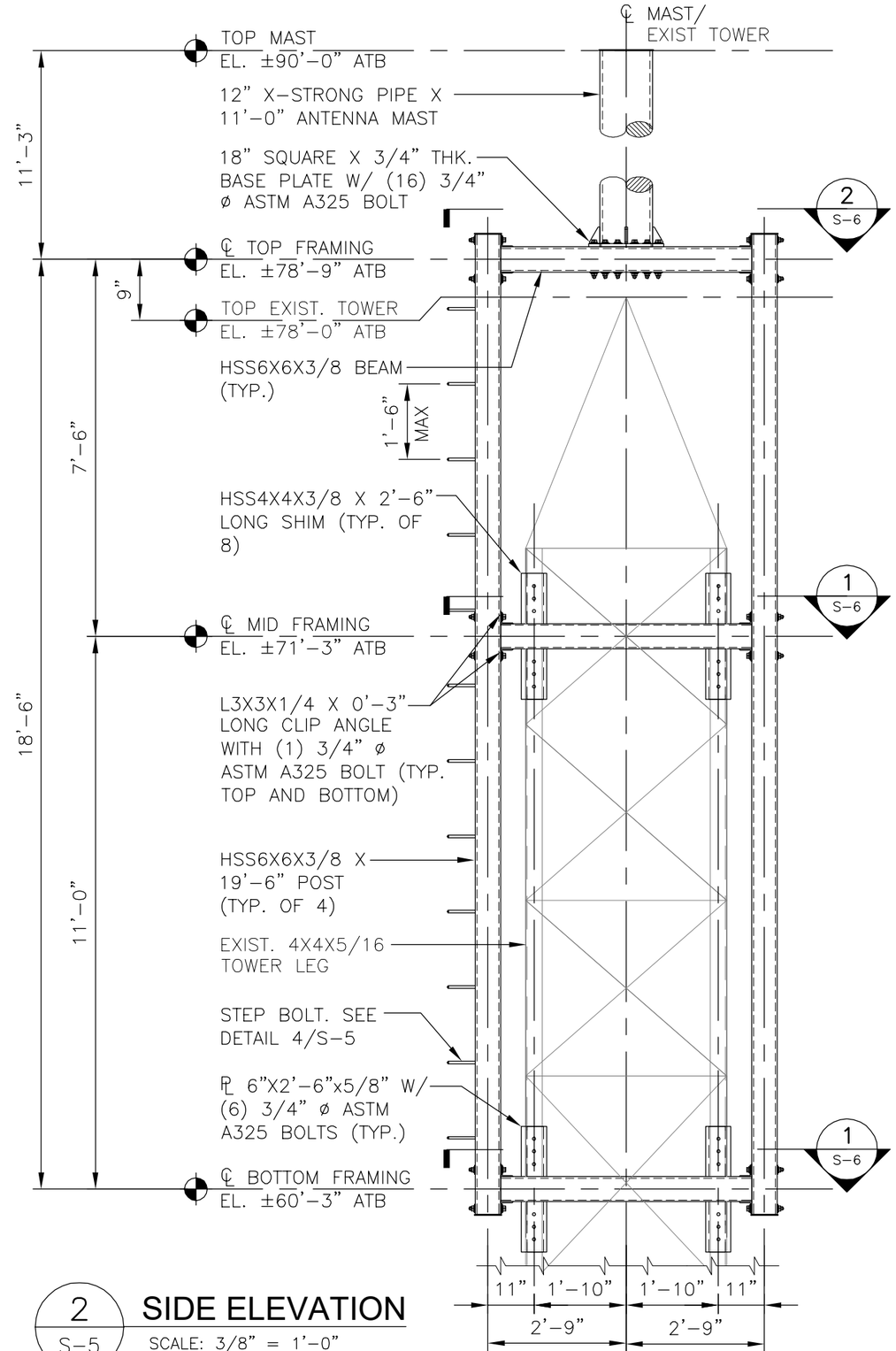

2 S-5 **SIDE ELEVATION**

SCALE: 3/8" = 1'-0"

REV.	DATE	DRAWN BY	CHK'D BY	DESCRIPTION
6	8/16/18	TJL	CFC	ISSUED FOR CONSTRUCTION
5	8/6/18	TJL	CFC	ISSUED FOR CONSTRUCTION
4	7/6/18	TJL	CFC	ISSUED FOR CONSTRUCTION – REVISED ANTENNA MOUNT
3	12/15/17	TJL	CFC	ISSUED FOR CONSTRUCTION – REVISED ANTENNA MOUNT
2	9/13/17	TJL	CFC	ISSUED FOR CONSTRUCTION
1	8/11/17	TJL	CFC	ISSUED FOR CONSTRUCTION
0	6/29/17	TJL	CFC	ISSUED FOR CONSTRUCTION

PROFESSIONAL ENGINEER SEAL

CENTEK engineering
Centered on Solutions
(203) 488-0580
(203) 488-8587 Fax
63-2 North Branford Road
Branford, CT 06405
www.CentekEng.com

AT&T MOBILITY
ANTENNA FRAME AND TOWER REINFORCEMENT DESIGN

CT2117
CL&P STRUCTURE 783

200 EDGEMARK ACRES
MERIDEN, CT 06451

DATE:	6/29/17
SCALE:	AS SHOWN
JOB NO.	17010.08

ANTENNA FRAME ELEVATIONS

SHEET NO.
S-5
Sheet No. 11 of 12

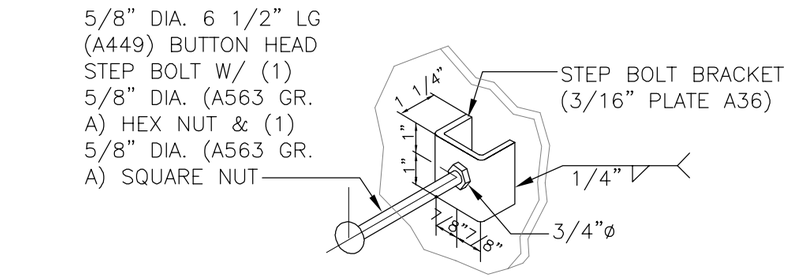

4 / S-6 **STEP BOLT DETAIL**

SCALE: 3/4" = 1'-0"

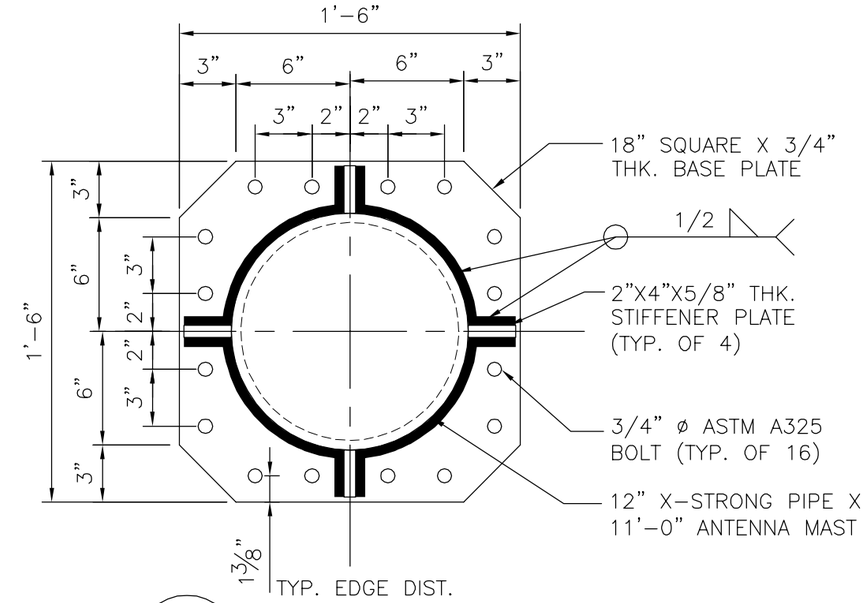

3 / S-6 **BASE PLATE DETAIL**

SCALE: 1-1/2" = 1'-0"

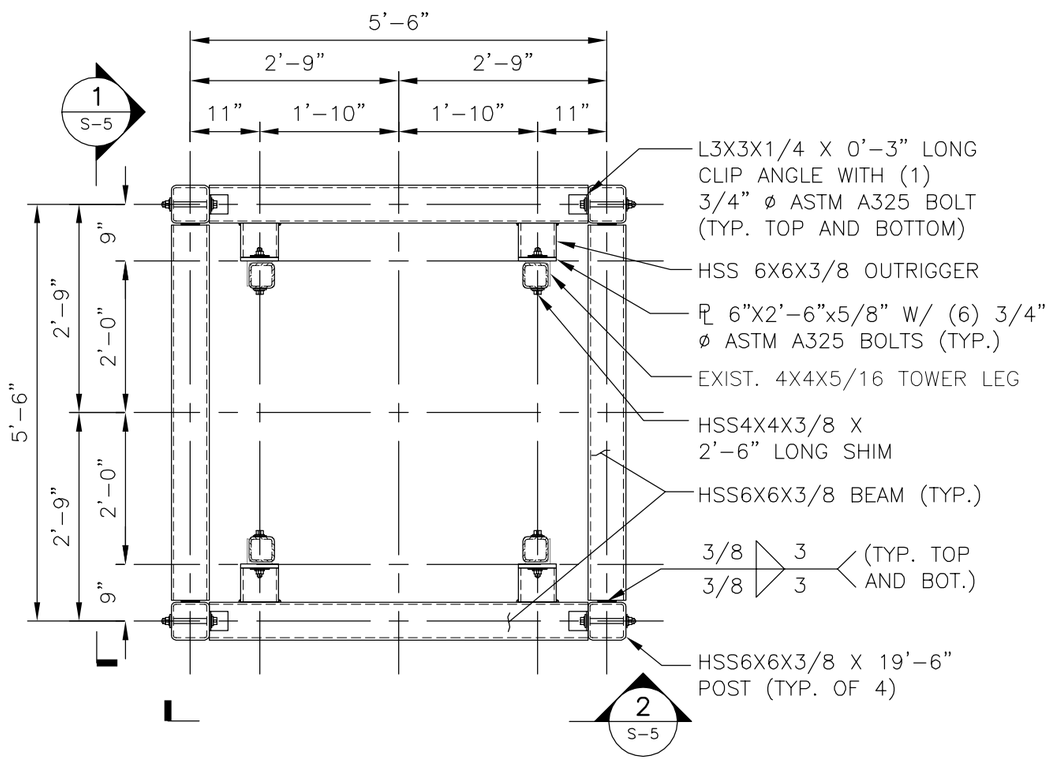

1 / S-6 **FRAMING PLAN BOTTOM & MIDDLE**

SCALE: 1/2" = 1'-0"

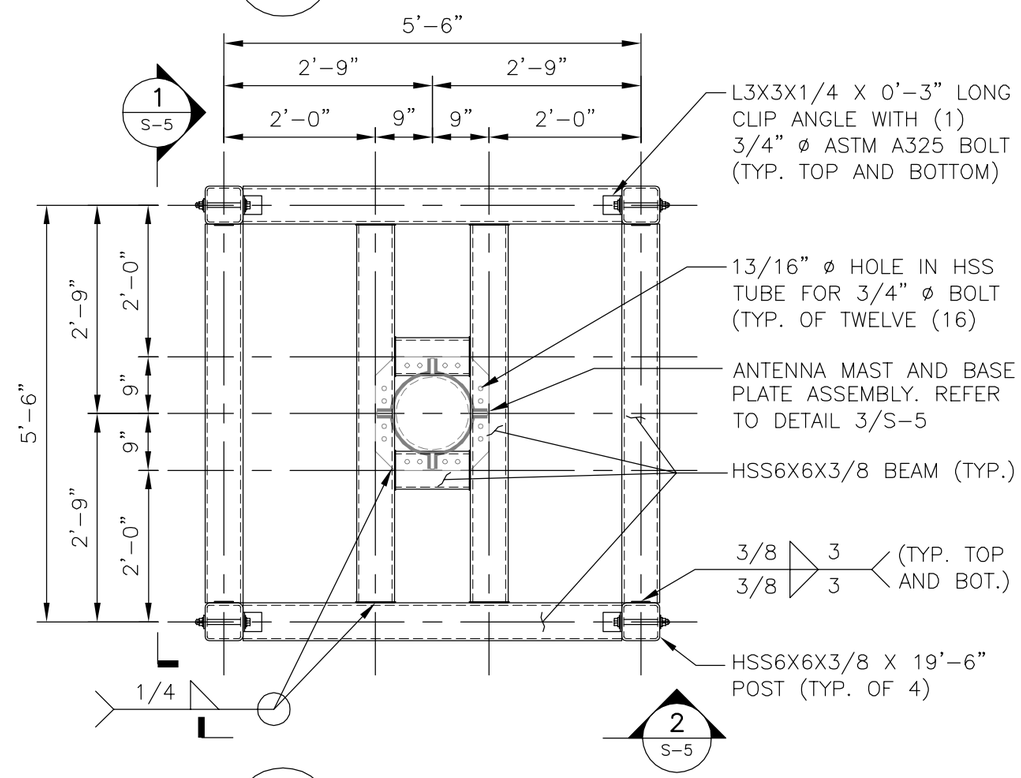

2 / S-6 **FRAMING PLAN TOP**

SCALE: 1/2" = 1'-0"

REV.	DATE	DRAWN BY	CHK'D BY	DESCRIPTION
6	8/16/18	TJL	CFC	ISSUED FOR CONSTRUCTION
5	9/6/18	TJL	CFC	ISSUED FOR CONSTRUCTION
4	7/6/18	TJL	CFC	ISSUED FOR CONSTRUCTION – REVISED ANTENNA MOUNT
3	12/15/17	TJL	CFC	ISSUED FOR CONSTRUCTION – REVISED ANTENNA MOUNT
2	9/13/17	TJL	CFC	ISSUED FOR CONSTRUCTION
1	8/11/17	TJL	CFC	ISSUED FOR CONSTRUCTION
0	6/29/17	TJL	CFC	ISSUED FOR CONSTRUCTION

PROFESSIONAL ENGINEER SEAL

CENTEK engineering
Centered on Solutions
(203) 488-0580
(203) 488-8587 Fax
63-2 North Branford Road
Branford, CT 06405
www.CentekEng.com

AT&T MOBILITY
ANTENNA FRAME AND TOWER REINFORCEMENT DESIGN
CT2117
CL&P STRUCTURE 783
200 EDGEMARK ACRES
MERIDEN, CT 06450

DATE:	6/29/17
SCALE:	AS SHOWN
JOB NO.	17010.08

ANTENNA FRAME PLAN & DETAILS

SHEET NO.
S-6
Sheet No. 12 of 12

Development of Design Heights, Exposure Coefficients, and Velocity Pressures Per TIA-222-G

Wind Speeds

Basic Wind Speed	$V := 97$	mph	(User Input - 2016 CSBC Appendix N)
Basic Wind Speed with Ice	$V_i := 50$	mph	(User Input per Annex B of TIA-222-G)

Input

Structure Type =	Structure_Type := Lattice		(User Input)
Structure Category =	SC := III		(User Input)
Exposure Category =	Exp := C		(User Input)
Structure Height =	$h := 78$	ft	(User Input)
Height to Center of Antennas =	$z_{ant} := 90$	ft	(User Input)
Height to Center of Mast =	$z_{Mast} := 87.5$	ft	(User Input)
Height to Center of Mast Frame =	$z_{MastFR} := 71.5$	ft	(User Input)
Radial Ice Thickness =	$t_i := 0.75$	in	(User Input per Annex B of TIA-222-G)
Radial Ice Density =	$Id := 56.00$	pcf	(User Input)
Topograpic Factor =	$K_{zt} := 1.0$		(User Input)
	$K_a := 1.0$		(User Input)
Gust Response Factor =	$G_H := 1.35$		(User Input)

Output

Wind Direction Probability Factor =

$$K_d := \begin{cases} 0.95 & \text{if } Structure\_Type = Pole \\ 0.85 & \text{if } Structure\_Type = Lattice \end{cases} = 0.85$$

(Per Table 2-2 of TIA-222-G)

Importance Factors =

$$I_{Wind} := \begin{cases} 0.87 & \text{if } SC = 1 \\ 1.00 & \text{if } SC = 2 \\ 1.15 & \text{if } SC = 3 \end{cases} = 1.15$$

(Per Table 2-3 of TIA-222-G)

$$I_{Wind\_w\_Ice} := \begin{cases} 0 & \text{if } SC = 1 \\ 1.00 & \text{if } SC = 2 \\ 1.00 & \text{if } SC = 3 \end{cases} = 1$$

$$I_{ice} := \begin{cases} 0 & \text{if } SC = 1 \\ 1.00 & \text{if } SC = 2 \\ 1.25 & \text{if } SC = 3 \end{cases} = 1.25$$

$K_{iz} := \left(\frac{z_{ant}}{33}\right)^{0.1} = 1.106$ $\quad t_{iz} := 2.0 \cdot t_i \cdot I_{ice} \cdot K_{iz} \cdot K_{zt}^{0.35} = 2.073$

Velocity Pressure Coefficient Antennas = $Kz_{ant} := 2.01\left(\left(\frac{z_{ant}}{zg}\right)\right)^{\frac{2}{\alpha}} = 1.238$

Velocity Pressure w/o Ice Antennas = $qz_{ant} := 0.00256 \cdot K_d \cdot Kz_{ant} \cdot V^2 \cdot I_{Wind} = 29.145$

Velocity Pressure with Ice Antennas = $qz_{ice.ant} := 0.00256 \cdot K_d \cdot Kz_{ant} \cdot V_i^2 \cdot I_{Wind\_w\_Ice} = 6.734$

$K_{izMast} := \left(\frac{z_{Mast}}{33}\right)^{0.1} = 1.102$ $\quad t_{izMast} := 2.0 \cdot t_i \cdot I_{ice} \cdot K_{izMast} \cdot K_{zt}^{0.35} = 2.067$

Velocity Pressure Coefficient Mast = $Kz_{Mast} := 2.01\left(\left(\frac{z_{Mast}}{zg}\right)\right)^{\frac{2}{\alpha}} = 1.231$

Velocity Pressure w/o Ice Mast= $qz_{Mast} := 0.00256 \cdot K_d \cdot Kz_{Mast} \cdot V^2 \cdot I_{Wind} = 28.973$

Velocity Pressure with Ice Mast = $qz_{ice.Mast} := 0.00256 \cdot K_d \cdot Kz_{Mast} \cdot V_i^2 \cdot I_{Wind\_w\_Ice} = 6.694$

$K_{izMastFR} := \left(\frac{z_{MastFR}}{33}\right)^{0.1} = 1.08$ $\quad t_{izMastFR} := 2.0 \cdot t_i \cdot I_{ice} \cdot K_{izMastFR} \cdot K_{zt}^{0.35} = 2.026$

Velocity Pressure Coefficient Mast Frame = $Kz_{MastFR} := 2.01\left(\left(\frac{z_{MastFR}}{zg}\right)\right)^{\frac{2}{\alpha}} = 1.179$

Velocity Pressure w/o Ice Mast Frame = $qz_{MastFR} := 0.00256 \cdot K_d \cdot Kz_{MastFR} \cdot V^2 \cdot I_{Wind} = 27.767$

Velocity Pressure with Ice Mast Frame = $qz_{ice.MastFR} := 0.00256 \cdot K_d \cdot Kz_{MastFR} \cdot V_i^2 \cdot I_{Wind\_w\_Ice} = 6.415$

Development of Wind & Ice Load on Mast

Mast Data:	(12" x-Strong Pipe)		(User Input)	
Mast Shape =	Round		(User Input)	
Mast Diameter =	$D_{mast} := 12.75$	in	(User Input)	
Mast Length =	$L_{mast} := 11$	ft	(User Input)	
Mast Thickness =	$t_{mast} := 0.5$	in	(User Input)	
Velocity Coefficient =	$C := \sqrt{I \cdot Kz_{Mast}} \cdot V \cdot \frac{D_{mast}}{12} = 114$			
Mast Force Coefficient =	$CF_{mast} = 0.6$			

Wind Load (without ice)

Mast Projected Surface Area =	$A_{mast} := \frac{D_{mast}}{12} = 1.063$	sf/ft	
Total Mast Wind Force =	$qz_{Mast} \cdot G_H \cdot CF_{mast} \cdot A_{mast} = 25$	plf	**BLC 5**

Wind Load (with ice)

Mast Projected Surface Area w/ Ice =	$AICE_{mast} := \frac{(D_{mast} + 2 \cdot t_{izMast})}{12} = 1.407$	sf/ft	
Total Mast Wind Force w/ Ice =	$qz_{ice.Mast} \cdot G_H \cdot CF_{mast} \cdot AICE_{mast} = 8$	plf	**BLC 4**

Gravity Loads (without ice)

Weight of the mast =	Self Weight	**(Computed internally by Risa-3D)**	plf	**BLC 1**

Gravity Loads (ice only)

Ice Area per Linear Foot =	$Ai_{mast} := \frac{\pi}{4}\left[(D_{mast} + t_{izMast} \cdot 2)^2 - D_{mast}^2\right] = 96.2$	sq in	
Weight of Ice on Mast =	$W_{ICEmast} := Id \cdot \frac{Ai_{mast}}{144} = 37$	plf	**BLC 3**

Development of Wind & Ice Load on Mast Frame

Mast Frame Data:	(HSS6x6x3/8)		(User Input)
Mast Frame Shape =	Square		(User Input)
Mast Frame Diameter =	$D_{MastFR} := 6$	in	(User Input)
Mast Frame Length =	$L_{MastFR} := 18.5$	ft	(User Input)
Mast Frame Thickness =	$t_{MastFR} := 0.375$	in	(User Input)
Mast Frame Force Coefficient =	$CF_{MastFR} := 2$		

Wind Load (without ice)

Mast Frame Projected Surface Area =	$A_{MastFR} := \frac{D_{MastFR}}{12} = 0.5$	sf/ft	
Total Mast Frame Wind Force =	$qz_{MastFR} \cdot G_H \cdot CF_{MastFR} \cdot A_{MastFR} = 37$	plf	**BLC 5**

Wind Load (with ice)

Mast Frame Projected Surface Area w/ Ice =	$AICE_{MastFR} := \frac{(D_{MastFR} + 2 \cdot t_{izMastFR})}{12} = 0.838$	sf/ft	
Total Mast Frame Wind Force w/ Ice =	$qz_{ice.MastFR} \cdot G_H \cdot CF_{MastFR} \cdot AICE_{MastFR} = 15$	plf	**BLC 4**

Gravity Loads (without ice)

Weight of the Mast Frame =	Self Weight	**(Computed internally by Risa-3D)**	plf	**BLC 1**

Gravity Loads (ice only)

Ice Area per Linear foot =	$Ai_{mem} := (D_{MastFR} + 2 \cdot t_{izMastFR})^2 - D_{MastFR}^2 = 65$	sq in	
Weight of Ice on Member =	$W_{ICE.mem} := Id \cdot \frac{Ai_{mem}}{144} = 25$	plf	**BLC 3**

Development of Wind & Ice Load on Antennas

Antenna Data:

Antenna Model =	CCI HPA-65R-BUU-H8		
Antenna Shape =	Flat		(User Input)
Antenna Height =	$L_{ant} := 92.4$	in	(User Input)
Antenna Width =	$W_{ant} := 14.8$	in	(User Input)
Antenna Thickness =	$T_{ant} := 7.4$	in	(User Input)
Antenna Weight =	$WT_{ant} := 68$	lbs	(User Input)
Number of Antennas =	$N_{ant} := 6$		(User Input)
Antenna Aspect Ratio =	$Ar_{ant} := \frac{L_{ant}}{W_{ant}} = 6.2$		
Antenna Force Coefficient =	$Ca_{ant} = 1.37$		

Wind Load (without ice)

Surface Area for One Antenna =	$SA_{ant} := \frac{L_{ant} \cdot W_{ant}}{144} = 9.5$	sf	
Antenna Projected Surface Area =	$A_{ant} := SA_{ant} \cdot N_{ant} = 57$	sf	
Total Antenna Wind Force =	$F_{ant} := qz_{ant} \cdot G_H \cdot Ca_{ant} \cdot K_a \cdot A_{ant} = 3063$	lbs	**BLC 5**

Wind Load (with ice)

Surface Area for One Antenna w/ Ice =	$SA_{ICEant} := \frac{(L_{ant} + 2 \cdot t_{iz}) \cdot (W_{ant} + 2 \cdot t_{iz})}{144} = 12.7$	sf	
Antenna Projected Surface Area w/ Ice =	$A_{ICEant} := SA_{ICEant} \cdot N_{ant} = 76.2$	sf	
Total Antenna Wind Force w/ Ice =	$Fi_{ant} := qz_{ice.ant} \cdot G_H \cdot Ca_{ant} \cdot K_a \cdot A_{ICEant} = 947$	lbs	**BLC 4**

Gravity Load (without ice)

Weight of All Antennas =	$WT_{ant} \cdot N_{ant} = 408$	lbs	**BLC 2**

Gravity Loads (ice only)

Volume of Each Antenna =	$V_{ant} := L_{ant} \cdot W_{ant} \cdot T_{ant} = 10120$	cu in	
Volume of Ice on Each Antenna =	$V_{ice} := (L_{ant} + 2 \cdot t_{iz})(W_{ant} + 2 \cdot t_{iz}) \cdot (T_{ant} + 2 \cdot t_{iz}) - V_{ant} = 10999$		cu in
Weight of Ice on Each Antenna =	$W_{ICEant} := \frac{V_{ice}}{1728} \cdot Id = 356$	lbs	
Weight of Ice on All Antennas =	$W_{ICEant} \cdot N_{ant} = 2139$	lbs	**BLC 3**

Development of Wind & Ice Load on Antennas

Antenna Data:

Antenna Model =	CCI OPA-65R-LCUU-H8		
Antenna Shape =	Flat		(User Input)
Antenna Height =	$L_{ant} := 92.7$	in	(User Input)
Antenna Width =	$W_{ant} := 14.4$	in	(User Input)
Antenna Thickness =	$T_{ant} := 7.0$	in	(User Input)
Antenna Weight =	$WT_{ant} := 88$	lbs	(User Input)
Number of Antennas =	$N_{ant} := 3$		(User Input)
Antenna Aspect Ratio =	$Ar_{ant} := \frac{L_{ant}}{W_{ant}} = 6.4$		
Antenna Force Coefficient =	$Ca_{ant} = 1.38$		

Wind Load (without ice)

Surface Area for One Antenna =	$SA_{ant} := \frac{L_{ant} \cdot W_{ant}}{144} = 9.3$	sf	
Antenna Projected Surface Area =	$A_{ant} := SA_{ant} \cdot N_{ant} = 27.8$	sf	
Total Antenna Wind Force =	$F_{ant} := qz_{ant} \cdot G_H \cdot Ca_{ant} \cdot K_a \cdot A_{ant} = 1505$	lbs	**BLC 5**

Wind Load (with ice)

Surface Area for One Antenna w/ Ice =	$SA_{ICEant} := \frac{(L_{ant} + 2 \cdot t_{iz}) \cdot (W_{ant} + 2 \cdot t_{iz})}{144} = 12.5$	sf	
Antenna Projected Surface Area w/ Ice =	$A_{ICEant} := SA_{ICEant} \cdot N_{ant} = 37.4$	sf	
Total Antenna Wind Force w/ Ice =	$Fi_{ant} := qz_{ice.ant} \cdot G_H \cdot Ca_{ant} \cdot K_a \cdot A_{ICEant} = 468$	lbs	**BLC 4**

Gravity Load (without ice)

Weight of All Antennas =	$WT_{ant} \cdot N_{ant} = 264$	lbs	**BLC 2**

Gravity Loads (ice only)

Volume of Each Antenna =	$V_{ant} := L_{ant} \cdot W_{ant} \cdot T_{ant} = 9344$	cu in	
Volume of Ice on Each Antenna =	$V_{ice} := (L_{ant} + 2 \cdot t_{iz})(W_{ant} + 2 \cdot t_{iz}) \cdot (T_{ant} + 2 \cdot t_{iz}) - V_{ant} = 1 \times 10^4$	cu in	
Weight of Ice on Each Antenna =	$W_{ICEant} := \frac{V_{ice}}{1728} \cdot Id = 346$	lbs	
Weight of Ice on All Antennas =	$W_{ICEant} \cdot N_{ant} = 1038$	lbs	**BLC 3**

Development of Wind & Ice Load on Antennas

Antenna Data:

Antenna Model =	CCI TMABPDB7823VG12A		
Antenna Shape =	Flat		(User Input)
Antenna Height =	$L_{ant} := 14.25$	in	(User Input)
Antenna Width =	$W_{ant} := 11.02$	in	(User Input)
Antenna Thickness =	$T_{ant} := 4.11$	in	(User Input)
Antenna Weight =	$WT_{ant} := 23.1$	lbs	(User Input)
Number of Antennas =	$N_{ant} := 18$		(User Input)
Antenna Aspect Ratio =	$Ar_{ant} := \frac{L_{ant}}{W_{ant}} = 1.3$		
Antenna Force Coefficient =	$Ca_{ant} = 1.2$		

Wind Load (without ice)

Surface Area for One Antenna =	$SA_{ant} := \frac{L_{ant} \cdot W_{ant}}{144} = 1.1$	sf	
Antenna Projected Surface Area =	$A_{ant} := SA_{ant} \cdot N_{ant} = 19.6$	sf	
Total Antenna Wind Force =	$F_{ant} := qz_{ant} \cdot G_H \cdot Ca_{ant} \cdot K_a \cdot A_{ant} = 927$	lbs	**BLC 5**

Wind Load (with ice)

Surface Area for One Antenna w/ Ice =	$SA_{ICEant} := \frac{(L_{ant} + 2 \cdot t_{iz}) \cdot (W_{ant} + 2 \cdot t_{iz})}{144} = 1.9$	sf	
Antenna Projected Surface Area w/ Ice =	$A_{ICEant} := SA_{ICEant} \cdot N_{ant} = 34.9$	sf	
Total Antenna Wind Force w/ Ice =	$Fi_{ant} := qz_{ice.ant} \cdot G_H \cdot Ca_{ant} \cdot K_a \cdot A_{ICEant} = 380$	lbs	**BLC 4**

Gravity Load (without ice)

Weight of All Antennas =	$WT_{ant} \cdot N_{ant} = 416$	lbs	**BLC 2**

Gravity Loads (ice only)

Volume of Each Antenna =	$V_{ant} := L_{ant} \cdot W_{ant} \cdot T_{ant} = 645$	cu in	
Volume of Ice on Each Antenna =	$V_{ice} := (L_{ant} + 2 \cdot t_{iz})(W_{ant} + 2 \cdot t_{iz}) \cdot (T_{ant} + 2 \cdot t_{iz}) - V_{ant} = 1658$		cu in
Weight of Ice on Each Antenna =	$W_{ICEant} := \frac{V_{ice}}{1728} \cdot Id = 54$	lbs	
Weight of Ice on All Antennas =	$W_{ICEant} \cdot N_{ant} = 967$	lbs	**BLC 3**

Development of Wind & Ice Load on Antenna Mounts

Mount Data:

Mount Type:	Site Pro Ultra Low Profile Monopole Mount ULP12 w/ Handrail		
Mount Shape =	Flat		(User Input)
Mount Projected Surface Area =	$CaAa := 33$	sf	(User Input)
Mount Projected Surface Area w/ Ice =	$CaAa_{ice} := 42$	sf	(User Input)
Mount Weight =	$WT_{mnt} := 1710$	lbs	(User Input)
Mount Weight w/ Ice =	$WT_{mnt.ice} := 2350$	lbs	

Wind Load (without ice)

Total Mount Wind Force =	$F_{mnt} := qz_{ant} \cdot G_H \cdot CaAa = 1298$	lbs	**BLC 5**

Wind Load (with ice)

Total Mount Wind Force =	$Fi_{mnt} := qz_{ice.ant} \cdot G_H \cdot CaAa_{ice} = 382$	lbs	**BLC 4**

Gravity Loads (without ice)

Weight of All Mounts =	$WT_{mnt} = 1710$	lbs	**BLC 2**

Gravity Loads (ice only)

Weight of Ice on All Mounts =	$WT_{mnt.ice} - WT_{mnt} = 640$	lbs	**BLC 3**

Development of Wind & Ice Load on Coax Cables

Coax Cable Data:

Coax Type =	HELIAX 1-5/8"		
Shape =	Round		(User Input)
Coax Outside Diameter =	$D_{coax} := 1.98$	in	(User Input)
Coax Cable Length =	$L_{coax} := 10$	ft	(User Input)
Weight of Coax per foot =	$Wt_{coax} := 1.04$	plf	(User Input)
Total Number of Coax =	$N_{coax} := 36$		(User Input)
Total Number of Exterior Coax =	$Ne_{coax} := 36$		(User Input)
No. of Coax Projecting Outside Face of Mast =	$NP_{coax} := 8$		(User Input)
Coax aspect ratio,	$Ar_{coax} := \frac{(L_{coax} \cdot 12)}{D_{coax}} = 60.6$		
Coax Cable Force Factor Coefficient =	$Ca_{coax} = 1.2$		

Wind Load (without ice)

Coax projected surface area =	$A_{coax} := \frac{(NP_{coax} D_{coax})}{12} = 1.3$	sf/ft	
Total Coax Wind Force =	$F_{coax} := Ca_{coax} \cdot qz_{Mast} \cdot G_H \cdot A_{coax} = 62$	plf	**BLC 5**

Wind Load (with ice)

Coax projected surface area w/ Ice =	$AICE_{coax} := \frac{(NP_{coax} \cdot D_{coax} + 2 \cdot t_{iz})}{12} = 1.7$	sf/ft	
Total Coax Wind Force w/ Ice =	$Fi_{coax} := Ca_{coax} \cdot qz_{ice.Mast} \cdot G_H \cdot AICE_{coax} = 18$	plf	**BLC 4**

Gravity Loads (without ice)

Weight of all cables w/o ice	$WT_{coax} := Wt_{coax} \cdot N_{coax} = 37$	plf	**BLC 2**

Gravity Loads (ice only)

Ice Area per Linear Foot =	$Ai_{coax} := \frac{\pi}{4}\left[(D_{coax} + 2 \cdot t_{iz})^2 - D_{coax}^2\right] = 26.4$	sq in	
Ice Weight All Coax per foot =	$WTi_{coax} := N_{coax} \cdot Id \cdot \frac{Ai_{coax}}{144} = 370$	plf	**BLC 3**

(Global) Model Settings

Display Sections for Member Calcs	5
Max Internal Sections for Member Calcs	97
Include Shear Deformation?	Yes
Increase Nailing Capacity for Wind?	Yes
Include Warping?	Yes
Trans Load Btwn Intersecting Wood Wall?	Yes
Area Load Mesh (in^2)	144
Merge Tolerance (in)	.12
P-Delta Analysis Tolerance	0.50%
Include P-Delta for Walls?	Yes
Automatically Iterate Stiffness for Walls?	No
Max Iterations for Wall Stiffness	3
Gravity Acceleration (ft/sec^2)	32.2
Wall Mesh Size (in)	12
Eigensolution Convergence Tol. (1.E-)	4
Vertical Axis	Y
Global Member Orientation Plane	XZ
Static Solver	Sparse Accelerated
Dynamic Solver	Accelerated Solver

Hot Rolled Steel Code	AISC 14th(360-10): LRFD
Adjust Stiffness?	Yes(Iterative)
RISAConnection Code	AISC 14th(360-10): ASD
Cold Formed Steel Code	AISI 1999: ASD
Wood Code	AF&PA NDS-91/97: ASD
Wood Temperature	< 100F
Concrete Code	ACI 318-02
Masonry Code	ACI 530-05: ASD
Aluminum Code	AA ADM1-05: ASD - Building
	AISC 14th(360-10): ASD

Number of Shear Regions	4
Region Spacing Increment (in)	4
Biaxial Column Method	PCA Load Contour
Parme Beta Factor (PCA)	.65
Concrete Stress Block	Rectangular
Use Cracked Sections?	Yes
Use Cracked Sections Slab?	Yes
Bad Framing Warnings?	No
Unused Force Warnings?	Yes
Min 1 Bar Diam. Spacing?	No
Concrete Rebar Set	REBAR_SET_ASTMA615
Min % Steel for Column	1
Max % Steel for Column	8

(Global) Model Settings, Continued

Seismic Code	UBC 1997
Seismic Base Elevation (ft)	Not Entered
Add Base Weight?	No
Ct X	.035
Ct Z	.035
T X (sec)	Not Entered
T Z (sec)	Not Entered
R X	8.5
R Z	8.5
Ca	.36
Cv	.54
Nv	1
Occupancy Category	4
Seismic Zone	3
Om Z	1
Om X	1
Rho Z	1
Rho X	1
Footing Overturning Safety Factor	1.5
Optimize for OTM/Sliding	No
Check Concrete Bearing	No
Footing Concrete Weight (k/ft^3)	0
Footing Concrete f'c (ksi)	3
Footing Concrete Ec (ksi)	4000
Lambda	1
Footing Steel fy (ksi)	60
Minimum Steel	0.0018
Maximum Steel	0.0075
Footing Top Bar	#3
Footing Top Bar Cover (in)	3.5
Footing Bottom Bar	#3
Footing Bottom Bar Cover (in)	3.5
Pedestal Bar	#3
Pedestal Bar Cover (in)	1.5
Pedestal Ties	#3

Hot Rolled Steel Properties

	Label	E [ksi]	G [ksi]	Nu	Therm (\1...	Density[k/ft^3]	Yield[ksi]	Ry	Fu[ksi]	Rt
1	A36 Gr.36	29000	11154	.3	.65	.49	36	1.5	58	1.2
2	A572 Gr.50	29000	11154	.3	.65	.49	50	1.1	58	1.2
3	A992	29000	11154	.3	.65	.49	50	1.1	58	1.2
4	A500 Gr.42	29000	11154	.3	.65	.49	42	1.3	58	1.1
5	A500 Gr.46	29000	11154	.3	.65	.49	46	1.2	58	1.1
6	A53 Gr. B	29000	11154	.3	.65	.49	35	1.5	58	1.2

Hot Rolled Steel Section Sets

	Label	Shape	Type	Design List	Material	Design ...	A [in2]	Iyy [in4]	Izz [in4]	J [in4]
1	Mast	PIPE 12.0X	Beam	Pipe	A53 Gr. B	Typical	17.5	339	339	678
2	Brace	HSS6x6x6	Beam	Tube	A500 Gr.46	Typical	7.58	39.5	39.5	64.6

Hot Rolled Steel Design Parameters

	Label	Shape	Length[ft]	Lbyy[ft]	Lbzz[ft]	Lcomp top[ft]	Lcomp bot[ft]	L-torqu...	Kyy	Kzz	Cb	Function
1	M1	Mast	11.25	Segment	Segment	Lbyy						Lateral
2	M2	Brace	18.5			Lbyy						Lateral
3	M3	Brace	18.5			Lbyy						Lateral
4	M4	Brace	18.5			Lbyy						Lateral
5	M5	Brace	18.5			Lbyy						Lateral
6	M6	Brace	5.5			Lbyy						Lateral
7	M7	Brace	5.5			Lbyy						Lateral
8	M8	Brace	5.5			Lbyy						Lateral
9	M9	Brace	5.5			Lbyy						Lateral
10	M10	Brace	5.5			Lbyy						Lateral
11	M11	Brace	5.5			Lbyy						Lateral
12	M12	Brace	5.5			Lbyy						Lateral
13	M13	Brace	5.5			Lbyy						Lateral
14	M14	Brace	5.5	Segment	Segment	Lbyy						Lateral
15	M15	Brace	5.5			Lbyy						Lateral
16	M16	Brace	5.5	Segment	Segment	Lbyy						Lateral
17	M17	Brace	5.5			Lbyy						Lateral
18	M18	Brace	5.5	Segment	Segment	Lbyy						Lateral
19	M19	Brace	5.5	Segment	Segment	Lbyy						Lateral
20	M20	Brace	1.5			Lbyy						Lateral
21	M21	Brace	1.5			Lbyy						Lateral
22	M24	Brace	.75			Lbyy						Lateral
23	M25	Brace	.75			Lbyy						Lateral
24	M26	Brace	.75			Lbyy						Lateral
25	M27	Brace	.75			Lbyy						Lateral
26	M28	Brace	.75			Lbyy						Lateral
27	M29	Brace	.75			Lbyy						Lateral
28	M30	Brace	.75			Lbyy						Lateral
29	M31	Brace	.75			Lbyy						Lateral

Member Primary Data

	Label	I Joint	J Joint	K Joint	Rotate(d...	Section/Shape	Type	Design List	Material	Design Rul...
1	M1	N1	N2			Mast	Beam	Pipe	A53 Gr. B	Typical
2	M2	N3	N11			Brace	Beam	Tube	A500 Gr....	Typical
3	M3	N4	N12			Brace	Beam	Tube	A500 Gr....	Typical
4	M4	N5	N13			Brace	Beam	Tube	A500 Gr....	Typical
5	M5	N6	N14			Brace	Beam	Tube	A500 Gr....	Typical
6	M6	N3	N4			Brace	Beam	Tube	A500 Gr....	Typical
7	M7	N4	N6			Brace	Beam	Tube	A500 Gr....	Typical
8	M8	N6	N5			Brace	Beam	Tube	A500 Gr....	Typical
9	M9	N5	N3			Brace	Beam	Tube	A500 Gr....	Typical
10	M10	N7	N8			Brace	Beam	Tube	A500 Gr....	Typical
11	M11	N8	N10			Brace	Beam	Tube	A500 Gr....	Typical
12	M12	N10	N9			Brace	Beam	Tube	A500 Gr....	Typical

Member Primary Data (Continued)

	Label	I Joint	J Joint	K Joint	Rotate(d...	Section/Shape	Type	Design List	Material	Design Rul...
13	M13	N9	N7			Brace	Beam	Tube	A500 Gr....	Typical
14	M14	N11	N12			Brace	Beam	Tube	A500 Gr....	Typical
15	M15	N12	N14			Brace	Beam	Tube	A500 Gr....	Typical
16	M16	N14	N13			Brace	Beam	Tube	A500 Gr....	Typical
17	M17	N13	N11			Brace	Beam	Tube	A500 Gr....	Typical
18	M18	N18	N16			Brace	Beam	Tube	A500 Gr....	Typical
19	M19	N15	N17			Brace	Beam	Tube	A500 Gr....	Typical
20	M20	N20	N22			Brace	Beam	Tube	A500 Gr....	Typical
21	M21	N19	N21			Brace	Beam	Tube	A500 Gr....	Typical
22	M22	N20	N21			RIGID	None	None	RIGID	Typical
23	M23	N19	N22			RIGID	None	None	RIGID	Typical
24	M24	N23	N27			Brace	Beam	Tube	A500 Gr....	Typical
25	M25	N24	N28			Brace	Beam	Tube	A500 Gr....	Typical
26	M26	N25	N29			Brace	Beam	Tube	A500 Gr....	Typical
27	M27	N26	N30			Brace	Beam	Tube	A500 Gr....	Typical
28	M28	N31	N35			Brace	Beam	Tube	A500 Gr....	Typical
29	M29	N32	N36			Brace	Beam	Tube	A500 Gr....	Typical
30	M30	N33	N37			Brace	Beam	Tube	A500 Gr....	Typical
31	M31	N34	N38			Brace	Beam	Tube	A500 Gr....	Typical

Joint Coordinates and Temperatures

	Label	X [ft]	Y [ft]	Z [ft]	Temp [F]	Detach From Dia...
1	N1	0	18.5	0	0	
2	N2	0	29.75	0	0	
3	N3	2.75	0	2.75	0	
4	N4	2.75	0	-2.75	0	
5	N5	-2.75	0	2.75	0	
6	N6	-2.75	0	-2.75	0	
7	N7	2.75	11	2.75	0	
8	N8	2.75	11	-2.75	0	
9	N9	-2.75	11	2.75	0	
10	N10	-2.75	11	-2.75	0	
11	N11	2.75	18.5	2.75	0	
12	N12	2.75	18.5	-2.75	0	
13	N13	-2.75	18.5	2.75	0	
14	N14	-2.75	18.5	-2.75	0	
15	N15	2.75	18.5	.75	0	
16	N16	2.75	18.5	-.75	0	
17	N17	-2.75	18.5	.75	0	
18	N18	-2.75	18.5	-.75	0	
19	N19	.75	18.5	.75	0	
20	N20	-.75	18.5	.75	0	
21	N21	.75	18.5	-.75	0	
22	N22	-.75	18.5	-.75	0	
23	N23	2.75	0	1.833	0	
24	N24	2.75	0	-1.833	0	
25	N25	-2.75	0	1.833	0	
26	N26	-2.75	0	-1.833	0	
27	N27	2	0	1.833	0	
28	N28	2	0	-1.833	0	

Joint Coordinates and Temperatures (Continued)

	Label	X [ft]	Y [ft]	Z [ft]	Temp [F]	Detach From Dia...
29	N29	-2	0	1.833	0	
30	N30	-2	0	-1.833	0	
31	N31	2.75	11	1.833	0	
32	N32	2.75	11	-1.833	0	
33	N33	-2.75	11	1.833	0	
34	N34	-2.75	11	-1.833	0	
35	N35	2	11	1.833	0	
36	N36	2	11	-1.833	0	
37	N37	-2	11	1.833	0	
38	N38	-2	11	-1.833	0	

Joint Boundary Conditions

	Joint Label	X [k/in]	Y [k/in]	Z [k/in]	X Rot.[k-ft/rad]	Y Rot.[k-ft/rad]	Z Rot.[k-ft/rad]
1	N3						
2	N4						
3	N5						
4	N6						
5	N7						
6	N8						
7	N9						
8	N10						
9	N31						
10	N32						
11	N33						
12	N34						
13	N35	Reaction	Reaction	Reaction			
14	N36	Reaction	Reaction	Reaction			
15	N37	Reaction	Reaction	Reaction			
16	N38	Reaction	Reaction	Reaction			
17	N23						
18	N24						
19	N25						
20	N26						
21	N27	Reaction	Reaction	Reaction			
22	N28	Reaction	Reaction	Reaction			
23	N29	Reaction	Reaction	Reaction			
24	N30	Reaction	Reaction	Reaction			

Member Point Loads (BLC 2 : Weight of Appurtenances)

	Member Label	Direction	Magnitude[k,k-ft]	Location[ft,%]
1	M1	Y	-.408	9.25
2	M1	Y	-.264	9.25
3	M1	Y	-.416	9.25
4	M1	Y	-1.71	9.25

Member Point Loads (BLC 3 : Weight of Ice Only)

	Member Label	Direction	Magnitude[k,k-ft]	Location[ft,%]
1	M1	Y	-2.139	9.25

Member Point Loads (BLC 3 : Weight of Ice Only) (Continued)

	Member Label	Direction	Magnitude[k,k-ft]	Location[ft,%]
2	M1	Y	-1.038	9.25
3	M1	Y	-.967	9.25
4	M1	Y	-.64	9.25

Member Point Loads (BLC 4 : (x) TIA Wind with Ice)

	Member Label	Direction	Magnitude[k,k-ft]	Location[ft,%]
1	M1	X	.947	9.25
2	M1	X	.468	9.25
3	M1	X	.38	9.25
4	M1	X	.382	9.25

Member Point Loads (BLC 5 : (x) TIA Wind)

	Member Label	Direction	Magnitude[k,k-ft]	Location[ft,%]
1	M1	X	3.063	9.25
2	M1	X	1.505	9.25
3	M1	X	.927	9.25
4	M1	X	1.298	9.25

Member Point Loads (BLC 6 : (z) TIA Wind with Ice)

	Member Label	Direction	Magnitude[k,k-ft]	Location[ft,%]
1	M1	Z	.947	9.25
2	M1	Z	.468	9.25
3	M1	Z	.38	9.25
4	M1	Z	.382	9.25

Member Point Loads (BLC 7 : (z) TIA Wind)

	Member Label	Direction	Magnitude[k,k-ft]	Location[ft,%]
1	M1	Z	3.063	9.25
2	M1	Z	1.505	9.25
3	M1	Z	.927	9.25
4	M1	Z	1.298	9.25

Member Distributed Loads (BLC 2 : Weight of Appurtenances)

	Member Label	Direction	Start Magnitude[k/ft,F,ksf]	End Magnitude[k/...	Start Location[ft,%]	End Location[ft,%]
1	M1	Y	-.037	-.037	0	6

Member Distributed Loads (BLC 3 : Weight of Ice Only)

	Member Label	Direction	Start Magnitude[k/ft,F,ksf]	End Magnitude[k/...	Start Location[ft,%]	End Location[ft,%]
1	M1	Y	-.037	-.037	0	0
2	M1	Y	-.37	-.37	0	6
3	M4	Y	-.025	-.025	0	0
4	M5	Y	-.025	-.025	0	0
5	M2	Y	-.025	-.025	0	0
6	M3	Y	-.025	-.025	0	0
7	M16	Y	-.025	-.025	0	0
8	M17	Y	-.025	-.025	0	0
9	M15	Y	-.025	-.025	0	0
10	M14	Y	-.025	-.025	0	0

Member Distributed Loads (BLC 3 : Weight of Ice Only) (Continued)

	Member Label	Direction	Start Magnitude[k/ft,F,ksf]	End Magnitude[k/...	Start Location[ft,%]	End Location[ft,%]
11	M18	Y	-.025	-.025	0	0
12	M19	Y	-.025	-.025	0	0
13	M12	Y	-.025	-.025	0	0
14	M11	Y	-.025	-.025	0	0
15	M10	Y	-.025	-.025	0	0
16	M13	Y	-.025	-.025	0	0
17	M8	Y	-.025	-.025	0	0
18	M7	Y	-.025	-.025	0	0
19	M6	Y	-.025	-.025	0	0
20	M9	Y	-.025	-.025	0	0

Member Distributed Loads (BLC 4 : (x) TIA Wind with Ice)

	Member Label	Direction	Start Magnitude[k/ft,F,ksf]	End Magnitude[k/...	Start Location[ft,%]	End Location[ft,%]
1	M1	X	.008	.008	0	0
2	M1	X	.018	.018	0	6
3	M5	X	.015	.015	0	0
4	M4	X	.015	.015	0	0
5	M16	X	.015	.015	0	0
6	M12	X	.015	.015	0	0
7	M8	X	.015	.015	0	0

Member Distributed Loads (BLC 5 : (x) TIA Wind)

	Member Label	Direction	Start Magnitude[k/ft,F,ksf]	End Magnitude[k/...	Start Location[ft,%]	End Location[ft,%]
1	M1	X	.025	.025	0	0
2	M1	X	.062	.062	0	6
3	M5	X	.037	.037	0	0
4	M4	X	.037	.037	0	0
5	M16	X	.037	.037	0	0
6	M12	X	.037	.037	0	0
7	M8	X	.037	.037	0	0

Member Distributed Loads (BLC 6 : (z) TIA Wind with Ice)

	Member Label	Direction	Start Magnitude[k/ft,F,ksf]	End Magnitude[k/...	Start Location[ft,%]	End Location[ft,%]
1	M1	Z	.008	.008	0	0
2	M1	Z	.018	.018	0	6
3	M5	Z	.015	.015	0	0
4	M3	Z	.015	.015	0	0
5	M15	Z	.015	.015	0	0
6	M11	Z	.015	.015	0	0
7	M7	Z	.015	.015	0	0

Member Distributed Loads (BLC 7 : (z) TIA Wind)

	Member Label	Direction	Start Magnitude[k/ft,F,ksf]	End Magnitude[k/...	Start Location[ft,%]	End Location[ft,%]
1	M1	Z	.025	.025	0	0
2	M1	Z	.062	.062	0	6
3	M5	Z	.037	.037	0	0
4	M3	Z	.037	.037	0	0
5	M15	Z	.037	.037	0	0
6	M11	Z	.037	.037	0	0
7	M7	Z	.037	.037	0	0

Basic Load Cases

	BLC Description	Category	X Gravity	Y Gravity	Z Gravity	Joint	Point	Distribut...	Area(Me...	Surface(...
1	Self Weight	DL								
2	Weight of Appurtenances	DL					4	1		
3	Weight of Ice Only	DL					4	20		
4	(x) TIA Wind with Ice	WLX					4	7		
5	(x) TIA Wind	WLX					4	7		
6	(z) TIA Wind with Ice	WLZ					4	7		
7	(z) TIA Wind	WLZ					4	7		

Load Combinations

	Description	So...	P...	S...	BLC	Fac...	BLC	Fac...	BLC	Fac...	BLC	Fac...	BLC	Fac...	BLC	Fac...	BLC	Fac...	BLC	Fac...	BLC	Fac...	BLC	Fac...
1	1.2D + 1.6W (X-d..	Yes	Y		1	1.2	2	1.2	5	1.6														
2	0.9D + 1.6W (X-d..	Yes	Y		1	.9	2	.9	5	1.6														
3	1.2D + 1.0Di + 1....	Yes	Y		1	1.2	2	1.2	3	1	4	1												
4	1.2D + 1.6W (Z-d..	Yes	Y		1	1.2	2	1.2	7	1.6														
5	0.9D + 1.6W (Z-d..	Yes	Y		1	.9	2	.9	7	1.6														
6	1.2D + 1.0Di + 1....	Yes	Y		1	1.2	2	1.2	3	1	6	1												

Envelope Joint Reactions

	Joint		X [k]	LC	Y [k]	LC	Z [k]	LC	MX [k-ft]	LC	MY [k-ft]	LC	MZ [k-ft]	LC
1	N35	max	-.299	6	8.186	4	-.965	3	0	1	0	1	0	1
2		min	-4.987	1	3.471	3	-5.634	4	0	1	0	1	0	1
3	N36	max	1.444	5	7.907	1	4.631	1	0	1	0	1	0	1
4		min	-4.987	1	-7.324	5	-5.771	4	0	1	0	1	0	1
5	N37	max	1.363	4	8.186	4	4.666	2	0	1	0	1	0	1
6		min	-5.231	2	-7.166	2	-5.634	4	0	1	0	1	0	1
7	N38	max	-.282	6	.449	3	-.942	3	0	1	0	1	0	1
8		min	-5.231	2	-7.324	5	-5.771	4	0	1	0	1	0	1
9	N27	max	1.442	1	9.349	1	1.959	4	0	1	0	1	0	1
10		min	.117	6	3.065	6	.277	3	0	1	0	1	0	1
11	N28	max	1.442	1	9.349	1	1.905	4	0	1	0	1	0	1
12		min	-.478	5	-6.327	5	-1.34	1	0	1	0	1	0	1
13	N29	max	1.234	2	7.061	4	1.959	4	0	1	0	1	0	1
14		min	-.514	4	-8.496	2	-1.34	2	0	1	0	1	0	1
15	N30	max	1.234	2	.394	6	1.905	4	0	1	0	1	0	1
16		min	.081	6	-8.496	2	.252	3	0	1	0	1	0	1
17	Totals:	max	0	4	14.819	3	0	1						
18		min	-15.081	1	2.718	5	-15.082	4						

Envelope Joint Displacements

	Joint		X [in]	LC	Y [in]	LC	Z [in]	LC	X Rotation [...	LC	Y Rotation [...	LC	Z Rotation [...	LC
1	N1	max	.587	1	-.012	2	2.086	4	8.173e-03	4	0	1	1.971e-08	4
2		min	0	4	-.055	6	0	1	0	3	-6.32e-08	4	-6.907e-03	1
3	N2	max	2.395	1	-.013	2	4.066	4	1.696e-02	4	0	1	1.975e-08	4
4		min	0	4	-.057	6	0	1	0	3	-6.32e-08	4	-1.569e-02	1
5	N3	max	0	5	-.016	6	0	1	-1.085e-06	3	0	6	-3.089e-04	6
6		min	-.002	1	-.067	1	-.002	4	-6.692e-03	4	-3.767e-06	1	-1.817e-03	1

Envelope Joint Displacements (Continued)

	Joint		X [in]	LC	Y [in]	LC	Z [in]	LC	X Rotation [...	LC	Y Rotation [...	LC	Z Rotation [...	LC
7	N4	max	0	6	.023	5	0	3	5.191e-06	1	6.449e-05	5	3.974e-04	5
8		min	-.002	1	-.067	1	-.002	4	-6.373e-03	4	7.367e-07	3	-1.817e-03	1
9	N5	max	0	6	.062	2	0	3	5.247e-06	2	0	6	4.946e-04	4
10		min	-.002	2	-.028	4	-.002	4	-6.692e-03	4	-3.767e-06	1	-1.837e-03	2
11	N6	max	0	4	.062	2	0	2	-1.015e-06	3	3.767e-06	1	1.324e-04	6
12		min	-.002	2	-.006	6	-.002	4	-6.373e-03	4	-6.449e-05	4	-1.837e-03	2
13	N7	max	.008	1	-.018	6	.005	4	1.37e-02	4	1.46e-05	1	-2.816e-04	6
14		min	0	5	-.074	1	0	1	3.536e-07	3	0	4	-3.491e-03	1
15	N8	max	.008	1	.026	5	.005	4	1.358e-02	4	6.448e-05	5	3.927e-04	5
16		min	0	6	-.074	1	0	3	-1.835e-06	1	-1.46e-05	1	-3.491e-03	1
17	N9	max	.008	2	.069	2	.005	4	1.37e-02	4	1.46e-05	1	4.844e-04	4
18		min	0	6	-.032	4	0	3	-1.848e-06	2	0	4	-3.363e-03	2
19	N10	max	.008	2	.069	2	.005	4	1.358e-02	4	-3.e-06	3	1.077e-04	6
20		min	0	4	-.006	6	0	2	3.518e-07	3	-6.449e-05	4	-3.363e-03	2
21	N11	max	.562	1	-.02	6	2.079	4	2.76e-02	4	-1.159e-08	6	5.894e-04	4
22		min	0	6	-.081	1	0	3	1.379e-06	3	-1.59e-06	2	-4.014e-03	2
23	N12	max	.562	1	.031	5	2.079	4	2.757e-02	4	6.443e-05	5	1.255e-04	6
24		min	0	4	-.081	1	0	1	-6.852e-06	1	3.117e-07	3	-4.014e-03	2
25	N13	max	.562	1	.076	2	2.079	4	2.76e-02	4	-1.159e-08	6	-3.349e-04	6
26		min	0	5	-.037	4	0	1	-6.911e-06	2	-1.59e-06	2	-4.103e-03	1
27	N14	max	.562	1	.076	2	2.079	4	2.757e-02	4	1.593e-06	2	4.688e-04	5
28		min	0	6	-.007	6	0	3	1.329e-06	3	-6.454e-05	4	-4.103e-03	1
29	N15	max	.587	1	-.036	5	2.079	4	2.422e-03	5	1.268e-04	5	1.612e-03	4
30		min	0	6	-.187	1	0	3	-1.921e-03	1	-3.382e-04	1	-3.818e-03	2
31	N16	max	.587	1	.017	5	2.079	4	2.712e-03	4	3.382e-04	1	3.1e-04	6
32		min	0	4	-.187	1	0	1	8.768e-04	3	2.532e-05	6	-3.818e-03	2
33	N17	max	.587	1	.165	2	2.079	4	2.422e-03	5	-2.529e-05	6	-8.825e-04	6
34		min	0	4	-.048	6	0	1	-1.703e-04	3	-3.376e-04	2	-4.132e-03	1
35	N18	max	.587	1	.165	2	2.079	4	2.712e-03	4	3.376e-04	2	1.281e-03	5
36		min	0	6	-.037	6	0	3	-1.631e-03	2	-1.271e-04	4	-4.132e-03	1
37	N19	max	.587	1	-.067	3	2.086	4	8.173e-03	4	0	1	2.021e-08	4
38		min	0	4	-.09	4	0	1	0	3	-6.312e-08	4	-6.907e-03	1
39	N20	max	.587	1	.05	2	2.086	4	8.173e-03	4	0	1	1.921e-08	4
40		min	0	4	-.09	4	0	1	0	3	-6.328e-08	4	-6.907e-03	1
41	N21	max	.587	1	.061	5	2.086	4	8.173e-03	4	0	1	1.929e-08	4
42		min	0	4	-.078	1	0	1	0	3	-6.312e-08	4	-6.907e-03	1
43	N22	max	.587	1	.061	5	2.086	4	8.173e-03	4	0	1	2.014e-08	4
44		min	0	4	-.042	3	0	1	0	3	-6.328e-08	4	-6.907e-03	1
45	N23	max	0	6	-.007	6	0	1	2.469e-03	1	7.262e-05	4	-6.396e-04	6
46		min	0	1	-.033	1	-.002	4	6.271e-04	6	-9.157e-05	1	-3.102e-03	1
47	N24	max	0	5	.01	5	0	3	8.787e-04	5	9.157e-05	1	8.164e-04	5
48		min	0	1	-.033	1	-.002	4	-2.469e-03	1	1.486e-05	6	-3.102e-03	1
49	N25	max	0	4	.031	2	0	3	1.073e-03	4	-1.372e-05	6	1.014e-03	4
50		min	0	2	-.013	4	-.002	4	-2.244e-03	2	-9.157e-05	2	-3.004e-03	2
51	N26	max	0	6	.031	2	0	2	2.244e-03	2	9.157e-05	2	2.771e-04	6
52		min	0	2	-.003	6	-.002	4	-2.401e-04	6	-7.044e-05	4	-3.004e-03	2
53	N27	max	0	6	0	6	0	3	2.469e-03	1	1.592e-04	4	-7.751e-04	6
54		min	0	1	0	1	0	4	6.271e-04	6	-3.236e-05	1	-3.516e-03	1
55	N28	max	0	5	0	5	0	1	8.787e-04	5	1.546e-04	4	1.096e-03	5
56		min	0	1	0	1	0	4	-2.469e-03	1	6.693e-06	3	-3.516e-03	1
57	N29	max	0	4	0	2	0	2	1.073e-03	4	-6.095e-06	3	1.326e-03	4
58		min	0	2	0	4	0	4	-2.244e-03	2	-1.592e-04	4	-3.38e-03	2

Envelope Joint Displacements (Continued)

	Joint		X [in]	LC	Y [in]	LC	Z [in]	LC	X Rotation [...	LC	Y Rotation [...	LC	Z Rotation [...	LC
59	N30	max	0	6	0	2	0	3	2.244e-03	2	3.236e-05	2	2.945e-04	6
60		min	0	2	0	6	0	4	-2.401e-04	6	-1.546e-04	4	-3.38e-03	2
61	N31	max	0	1	-.008	6	.005	4	2.089e-03	1	3.166e-04	1	-6.659e-04	6
62		min	0	6	-.045	1	0	1	7.184e-04	6	-2.11e-04	4	-4.575e-03	1
63	N32	max	0	1	.012	5	.005	4	9.984e-04	5	-4.639e-05	6	9.031e-04	5
64		min	0	5	-.045	1	0	3	-2.089e-03	1	-3.166e-04	1	-4.575e-03	1
65	N33	max	0	2	.043	2	.005	4	1.221e-03	4	3.189e-04	2	1.112e-03	4
66		min	0	4	-.014	4	0	3	-1.893e-03	2	4.279e-05	6	-4.351e-03	2
67	N34	max	0	2	.043	2	.005	4	1.893e-03	2	2.197e-04	4	2.664e-04	6
68		min	0	6	-.003	6	0	2	-2.785e-04	6	-3.19e-04	2	-4.351e-03	2
69	N35	max	0	1	0	3	0	4	2.089e-03	1	1.119e-04	1	-8.216e-04	6
70		min	0	6	0	4	0	3	7.184e-04	6	-4.599e-04	4	-4.923e-03	1
71	N36	max	0	1	0	5	0	4	9.984e-04	5	-2.334e-05	3	1.227e-03	5
72		min	0	5	0	1	0	1	-2.089e-03	1	-4.748e-04	4	-4.923e-03	1
73	N37	max	0	2	0	2	0	4	1.221e-03	4	4.599e-04	4	1.474e-03	4
74		min	0	4	0	4	0	2	-1.893e-03	2	2.276e-05	3	-4.669e-03	2
75	N38	max	0	2	0	5	0	4	1.893e-03	2	4.748e-04	4	2.853e-04	6
76		min	0	6	0	3	0	3	-2.785e-04	6	-1.128e-04	2	-4.669e-03	2

Envelope AISC 14th(360-10): LRFD Steel Code Checks

	Member	Shape	Code Check	Loc...	LC	Shea...	Loc.....		L...	phi*Pn...	phi*Pn...	phi*M...	phi*M...	...	Eqn
1	M1	PIPE_12.0X	.574	0	4	.072	0		4	525.335	551.25	184.275	184.275	1	H1-1b
2	M2	HSS6x6x6	.478	10....	4	.037	11....	y	1	166.103	313.812	54.51	54.51	1...	H1-1b
3	M3	HSS6x6x6	.476	10....	5	.040	11....	z	4	166.103	313.812	54.51	54.51	1...	H1-1b
4	M4	HSS6x6x6	.478	10....	4	.040	11....	y	2	166.103	313.812	54.51	54.51	1...	H1-1b
5	M5	HSS6x6x6	.476	10....	5	.040	11....	z	4	166.103	313.812	54.51	54.51	1...	H1-1b
6	M6	HSS6x6x6	.181	4.5...	1	.261	0	y	1	296.653	313.812	54.51	54.51	1	H1-1b
7	M7	HSS6x6x6	.022	2.75	5	.004	0	y	1	296.653	313.812	54.51	54.51	1	H1-1b
8	M8	HSS6x6x6	.166	4.5...	2	.237	4.5...	y	2	296.653	313.812	54.51	54.51	1	H1-1b
9	M9	HSS6x6x6	.022	5.5	4	.004	0	y	1	296.653	313.812	54.51	54.51	1	H1-1b
10	M10	HSS6x6x6	.217	4.5...	1	.220	4.5...	y	1	296.653	313.812	54.51	54.51	1	H1-1b
11	M11	HSS6x6x6	.155	0	1	.035	0	y	1	296.653	313.812	54.51	54.51	2...	H1-1b
12	M12	HSS6x6x6	.206	4.5...	2	.200	0	y	2	296.653	313.812	54.51	54.51	1	H1-1b
13	M13	HSS6x6x6	.155	5.5	1	.035	0	y	1	296.653	313.812	54.51	54.51	2...	H1-1b
14	M14	HSS6x6x6	.486	3.5...	1	.284	2.0...	y	4	311.487	313.812	54.51	54.51	1...	H1-1b
15	M15	HSS6x6x6	.204	5.5	1	.047	0	y	1	296.653	313.812	54.51	54.51	2...	H1-1b
16	M16	HSS6x6x6	.428	3.5...	2	.284	2.0...	y	4	311.487	313.812	54.51	54.51	1...	H1-1b
17	M17	HSS6x6x6	.204	0	1	.047	0	y	1	296.653	313.812	54.51	54.51	2...	H1-1b
18	M18	HSS6x6x6	.677	3.5...	5	.480	3.5...	y	5	311.487	313.812	54.51	54.51	2...	H3-6
19	M19	HSS6x6x6	.760	1.9...	4	.514	3.5...	y	4	311.487	313.812	54.51	54.51	2...	H3-6
20	M20	HSS6x6x6	.000	1.5	4	.000	0	y	4	312.502	313.812	54.51	54.51	1	H1-1b
21	M21	HSS6x6x6	.000	1.5	4	.000	0	y	4	312.502	313.812	54.51	54.51	1	H1-1b
22	M24	HSS6x6x6	.149	0	1	.109	0	y	1	313.484	313.812	54.51	54.51	1...	H1-1b
23	M25	HSS6x6x6	.149	0	1	.109	0	y	1	313.484	313.812	54.51	54.51	1...	H1-1b
24	M26	HSS6x6x6	.137	0	2	.099	0	y	2	313.484	313.812	54.51	54.51	1...	H1-1b
25	M27	HSS6x6x6	.137	0	2	.099	0	y	2	313.484	313.812	54.51	54.51	1...	H1-1b
26	M28	HSS6x6x6	.192	0	4	.095	0	y	4	313.484	313.812	54.51	54.51	1...	H1-1b
27	M29	HSS6x6x6	.182	0	5	.092	0	y	1	313.484	313.812	54.51	54.51	1...	H1-1b
28	M30	HSS6x6x6	.192	0	4	.095	0	y	4	313.484	313.812	54.51	54.51	1...	H1-1b
29	M31	HSS6x6x6	.182	0	5	.085	0	y	5	313.484	313.812	54.51	54.51	1...	H1-1b

Joint Reactions

	LC	Joint Label	X [k]	Y [k]	Z [k]	MX [k-ft]	MY [k-ft]	MZ [k-ft]
1	1	N35	-4.987	7.907	-4.631	0	0	0
2	1	N36	-4.987	7.907	4.631	0	0	0
3	1	N37	-5.231	-7.049	4.665	0	0	0
4	1	N38	-5.231	-7.049	-4.665	0	0	0
5	1	N27	1.442	9.349	1.34	0	0	0
6	1	N28	1.442	9.349	-1.34	0	0	0
7	1	N29	1.234	-8.396	-1.34	0	0	0
8	1	N30	1.234	-8.396	1.34	0	0	0
9	1	Totals:	-15.081	3.624	0			
10	1	COG (ft):	X: 0	Y: 27.291	Z: 0			

Joint Reactions

	LC	Joint Label	X [k]	Y [k]	Z [k]	MX [k-ft]	MY [k-ft]	MZ [k-ft]
1	2	N35	-4.985	7.782	-4.629	0	0	0
2	2	N36	-4.985	7.782	4.629	0	0	0
3	2	N37	-5.231	-7.166	4.666	0	0	0
4	2	N38	-5.231	-7.166	-4.666	0	0	0
5	2	N27	1.441	9.239	1.338	0	0	0
6	2	N28	1.441	9.239	-1.338	0	0	0
7	2	N29	1.234	-8.496	-1.34	0	0	0
8	2	N30	1.234	-8.496	1.34	0	0	0
9	2	Totals:	-15.081	2.718	0			
10	2	COG (ft):	X: 0	Y: 27.291	Z: 0			

Joint Reactions

	LC	Joint Label	X [k]	Y [k]	Z [k]	MX [k-ft]	MY [k-ft]	MZ [k-ft]
1	3	N35	-1.04	3.471	-.965	0	0	0
2	3	N36	-1.04	3.471	.965	0	0	0
3	3	N37	-1.067	.449	.942	0	0	0
4	3	N38	-1.067	.449	-.942	0	0	0
5	3	N27	.298	3.536	.277	0	0	0
6	3	N28	.298	3.536	-.277	0	0	0
7	3	N29	.219	-.047	-.252	0	0	0
8	3	N30	.219	-.047	.252	0	0	0
9	3	Totals:	-3.178	14.819	0			
10	3	COG (ft):	X: 0	Y: 22.124	Z: 0			

Joint Reactions

	LC	Joint Label	X [k]	Y [k]	Z [k]	MX [k-ft]	MY [k-ft]	MZ [k-ft]
1	4	N35	-1.363	8.186	-5.634	0	0	0
2	4	N36	1.444	-7.208	-5.771	0	0	0
3	4	N37	1.363	8.186	-5.634	0	0	0
4	4	N38	-1.443	-7.208	-5.771	0	0	0
5	4	N27	.514	7.061	1.959	0	0	0
6	4	N28	-.478	-6.227	1.905	0	0	0
7	4	N29	-.514	7.061	1.959	0	0	0
8	4	N30	.478	-6.227	1.905	0	0	0
9	4	Totals:	0	3.624	-15.082			
10	4	COG (ft):	X: 0	Y: 27.291	Z: 0			

Joint Reactions

	LC	Joint Label	X [k]	Y [k]	Z [k]	MX [k-ft]	MY [k-ft]	MZ [k-ft]
1	5	N35	-1.361	8.059	-5.63	0	0	0
2	5	N36	1.444	-7.324	-5.768	0	0	0
3	5	N37	1.361	8.059	-5.63	0	0	0
4	5	N38	-1.444	-7.324	-5.768	0	0	0
5	5	N27	.512	6.951	1.955	0	0	0
6	5	N28	-.478	-6.327	1.902	0	0	0
7	5	N29	-.513	6.952	1.955	0	0	0
8	5	N30	.478	-6.327	1.902	0	0	0
9	5	Totals:	0	2.718	-15.082			
10	5	COG (ft):	X: 0	Y: 27.291	Z: 0			

Joint Reactions

	LC	Joint Label	X [k]	Y [k]	Z [k]	MX [k-ft]	MY [k-ft]	MZ [k-ft]
1	6	N35	-.299	3.523	-1.183	0	0	0
2	6	N36	.282	.428	-1.178	0	0	0
3	6	N37	.299	3.523	-1.183	0	0	0
4	6	N38	-.282	.428	-1.178	0	0	0
5	6	N27	.117	3.065	.405	0	0	0
6	6	N28	-.081	.394	.367	0	0	0
7	6	N29	-.117	3.065	.405	0	0	0
8	6	N30	.081	.394	.367	0	0	0
9	6	Totals:	0	14.819	-3.178			
10	6	COG (ft):	X: 0	Y: 22.124	Z: 0			

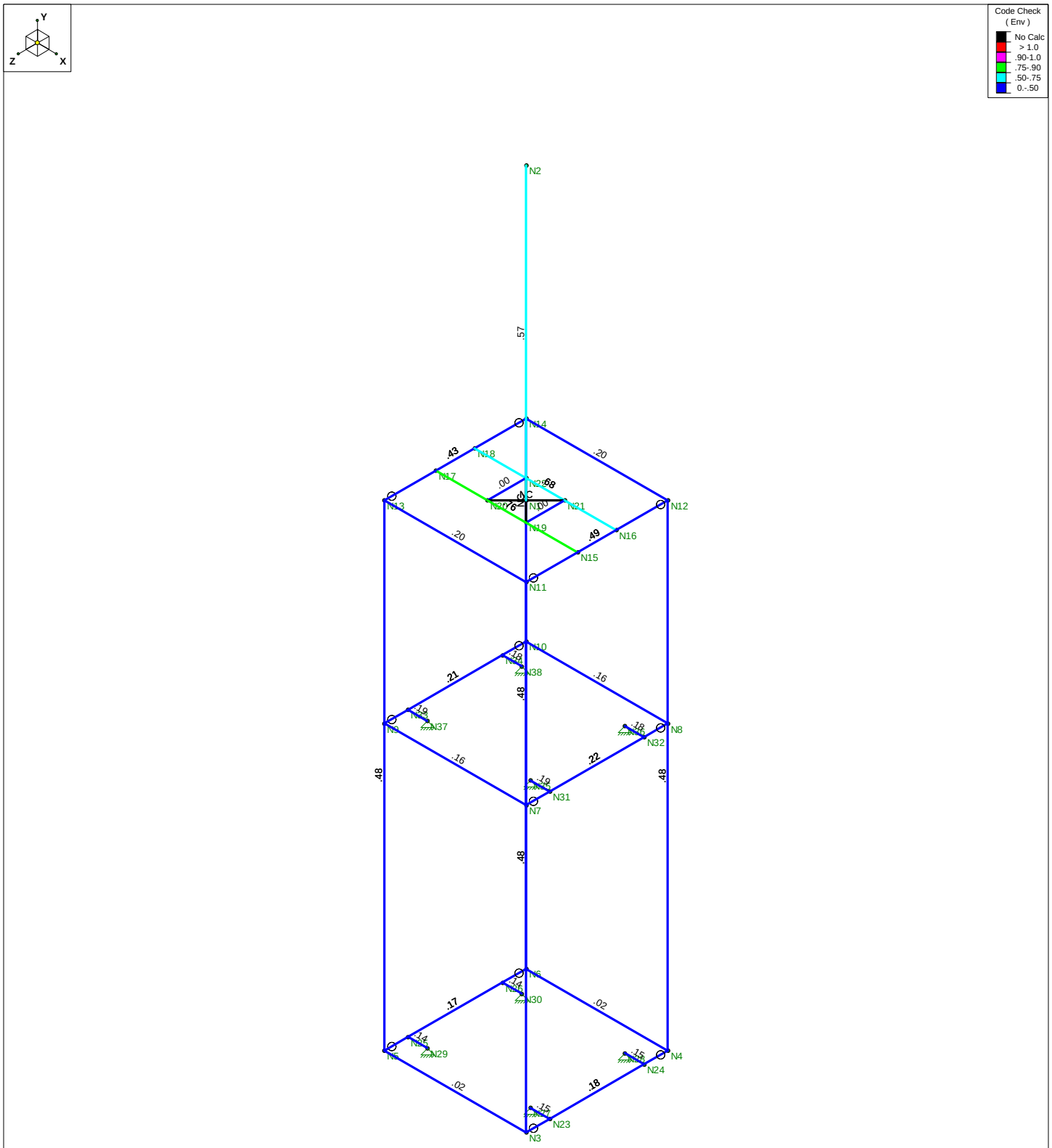

Member Code Checks Displayed (Enveloped)
Envelope Only Solution

CENTEK Engineering, INC.		
tjl, cfc	CL&P # 783 - Mast	July 6, 2018 at 10:46 AM
17010.08 / AT&T CT2117	Unity Check	TIA.r3d

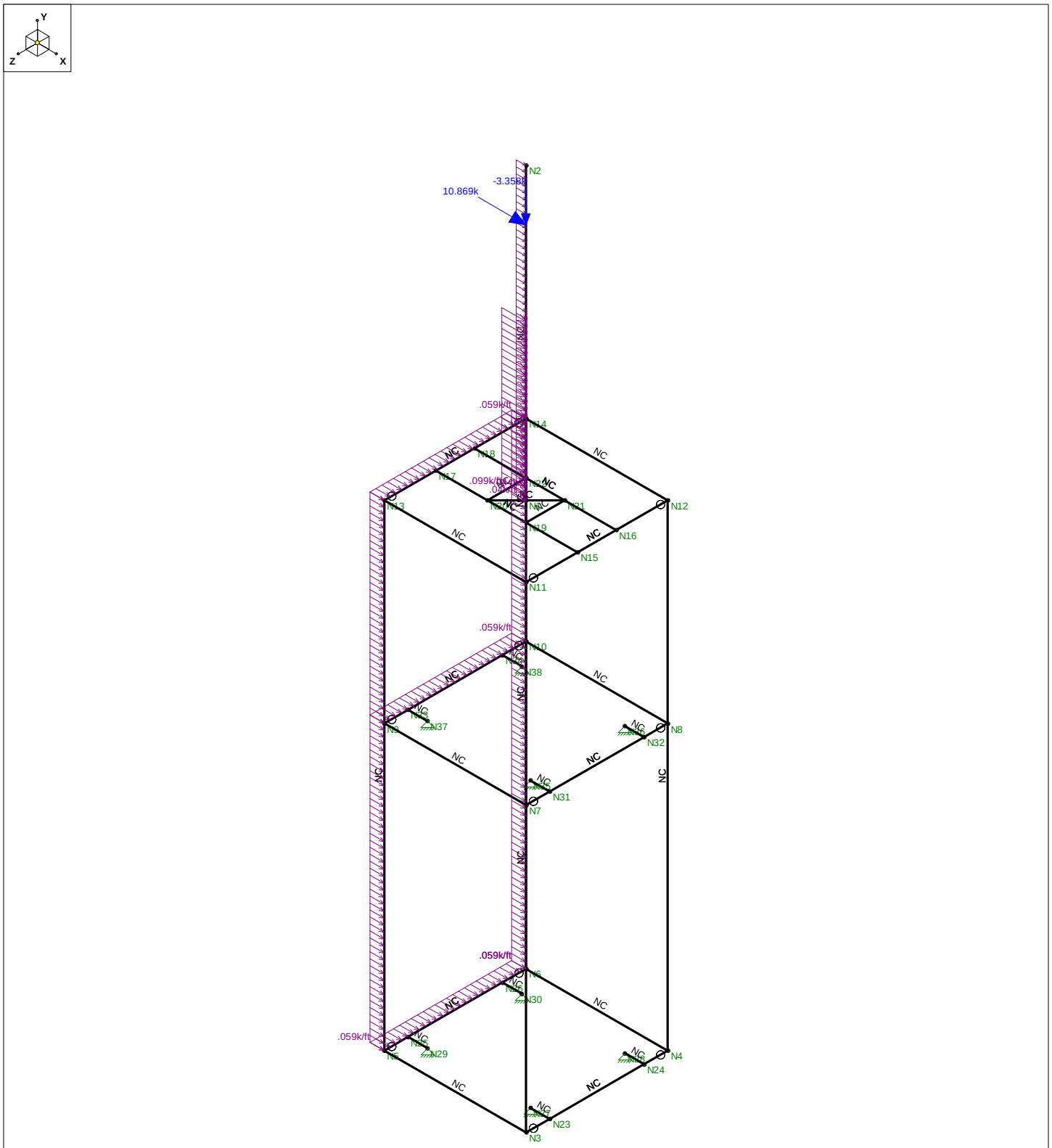

Member Code Checks Displayed
Loads: LC 1, 1.2D + 1.6W (X-direction)

CENTEK Engineering, INC.		
tjl, cfc	CL&P # 783 - Mast	July 6, 2018 at 10:46 AM
17010.08 / AT&T CT2117	LC #1 Loads	TIA.r3d

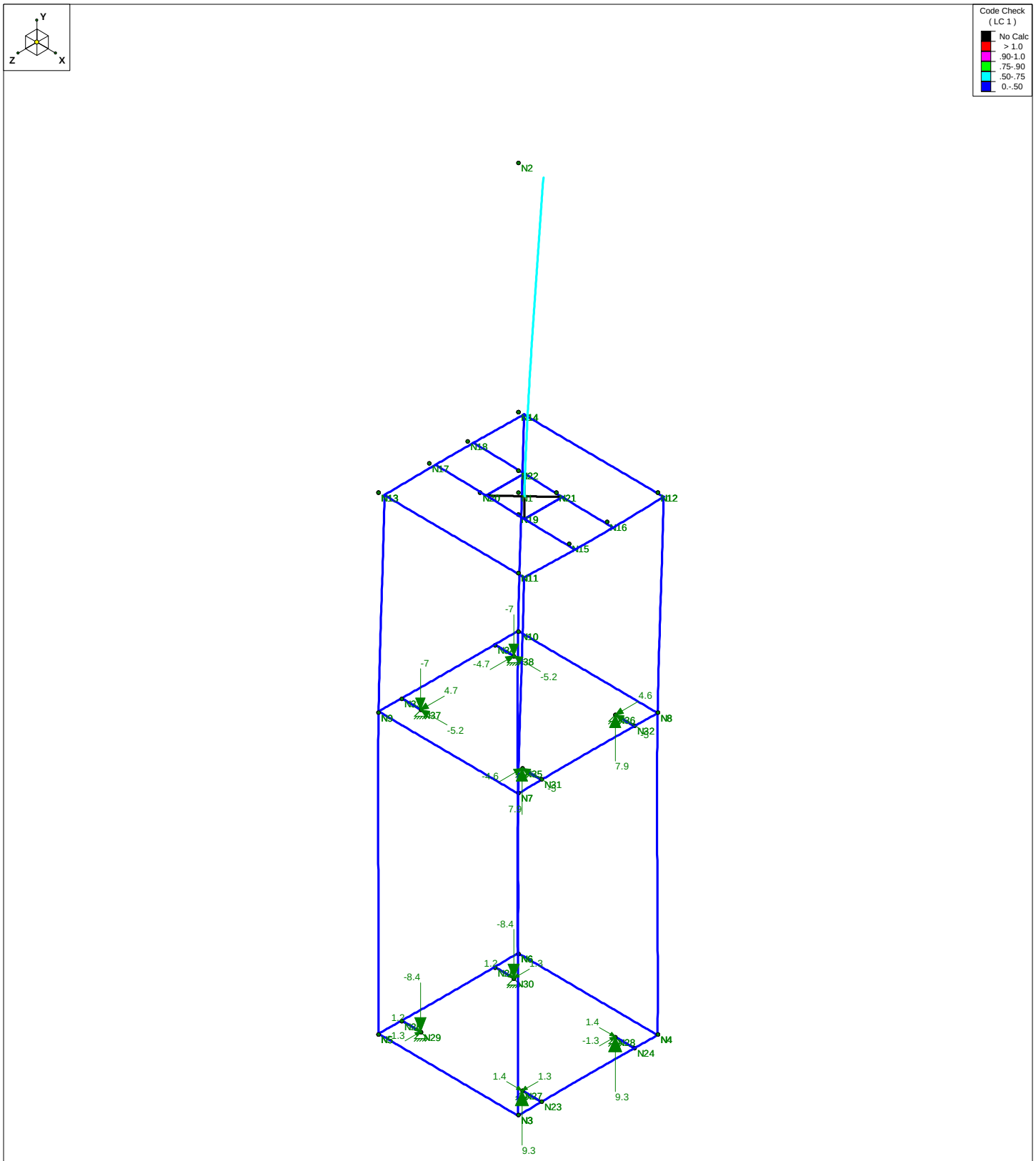

Member Code Checks Displayed
Results for LC 1, 1.2D + 1.6W (X-direction)
Reaction and Moment Units are k and k-ft

CENTEK Engineering, INC.		
tjl, cfc	CL&P # 783 - Mast	July 6, 2018 at 10:48 AM
17010.08 / AT&T CT2117	LC #1 Reactions and Deflected Shape	TIA.r3d

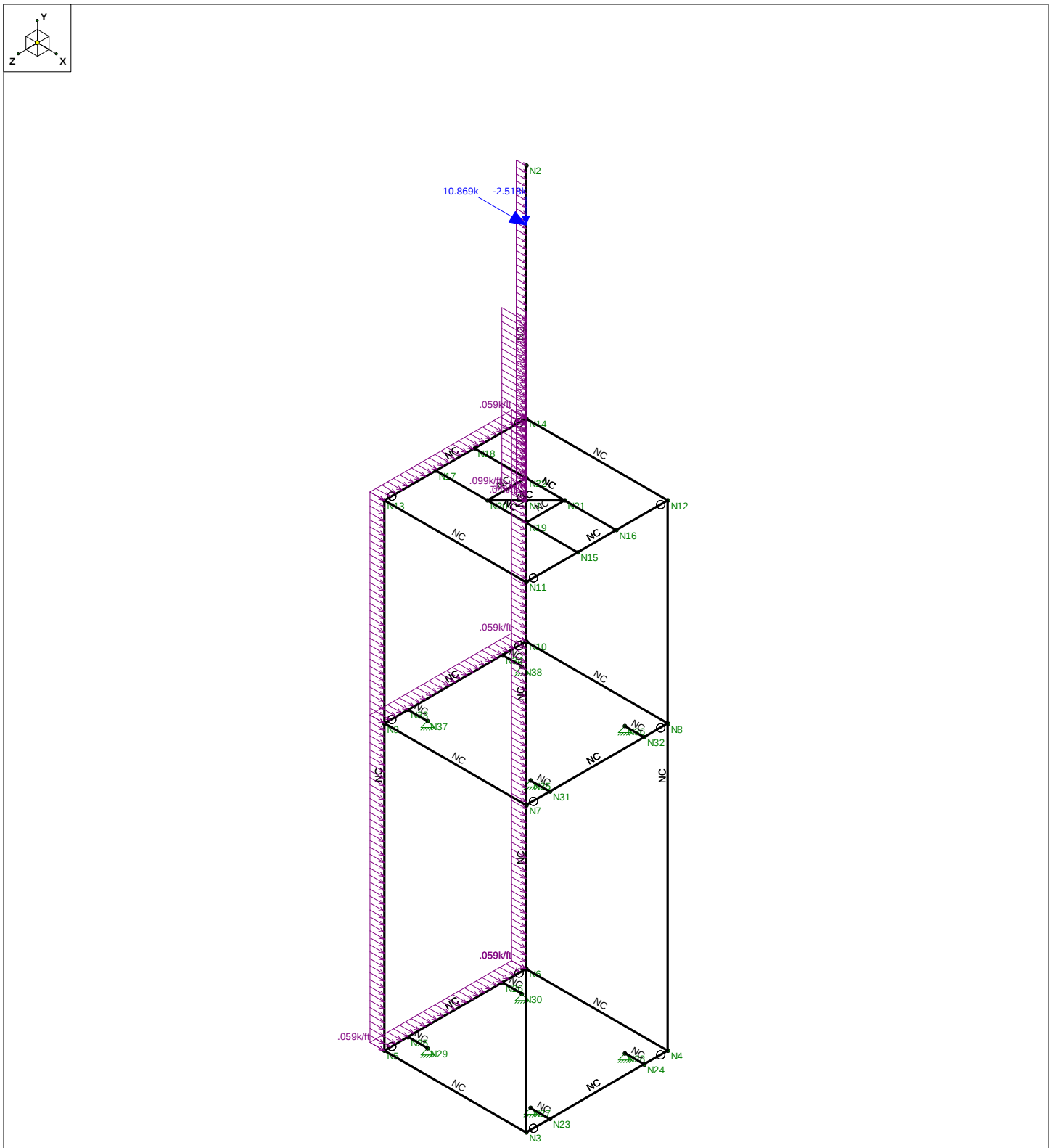

Member Code Checks Displayed
Loads: LC 2, 0.9D + 1.6W (X-direction)

CENTEK Engineering, INC.		
tjl, cfc	CL&P # 783 - Mast	July 6, 2018 at 10:47 AM
17010.08 / AT&T CT2117	LC #2 Loads	TIA.r3d

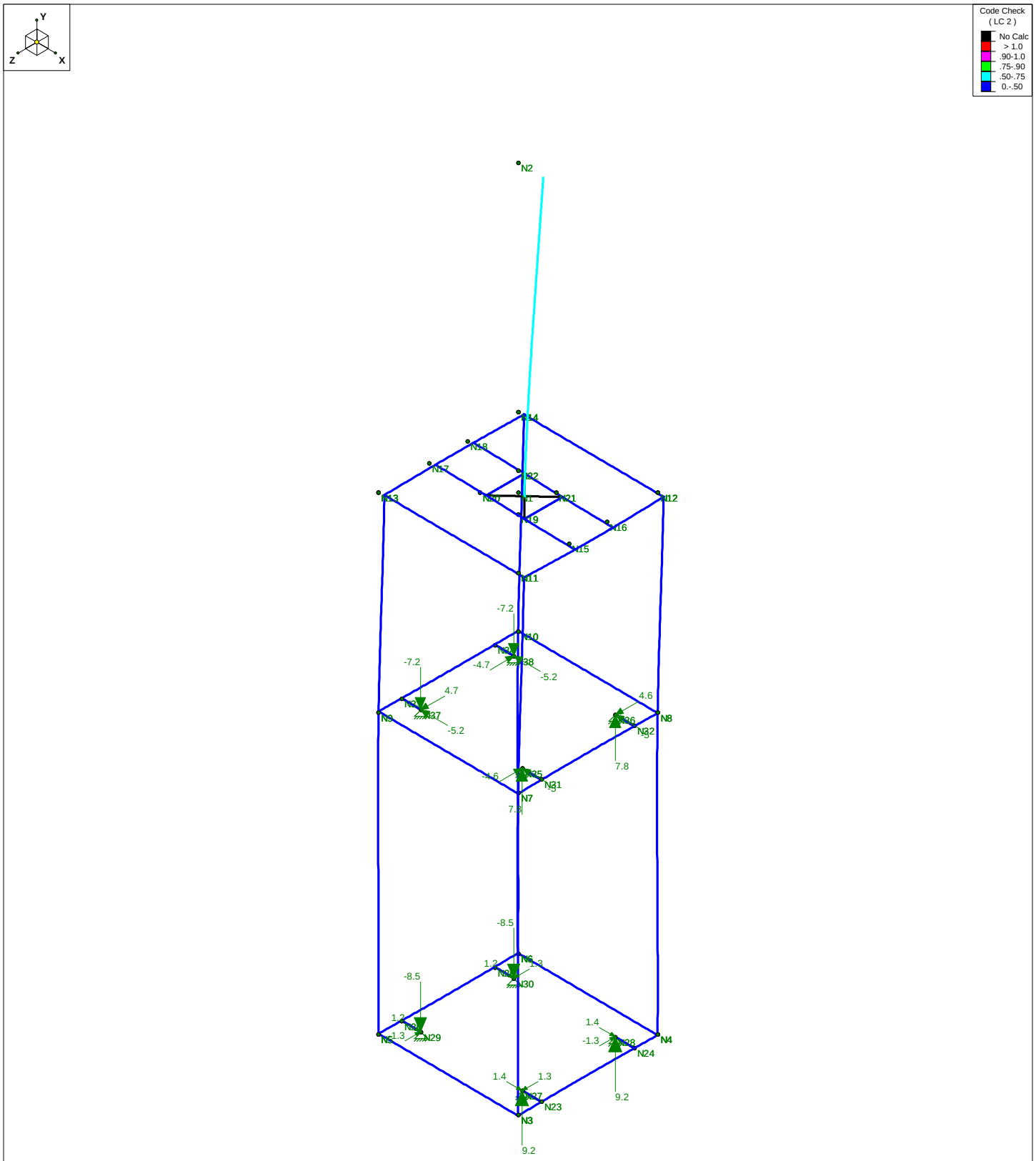

Member Code Checks Displayed
Results for LC 2, 0.9D + 1.6W (X-direction)
Reaction and Moment Units are k and k-ft

CENTEK Engineering, INC.		
tjl, cfc	CL&P # 783 - Mast	July 6, 2018 at 10:49 AM
17010.08 / AT&T CT2117	LC #2 Reactions and Deflected Shape	TIA.r3d

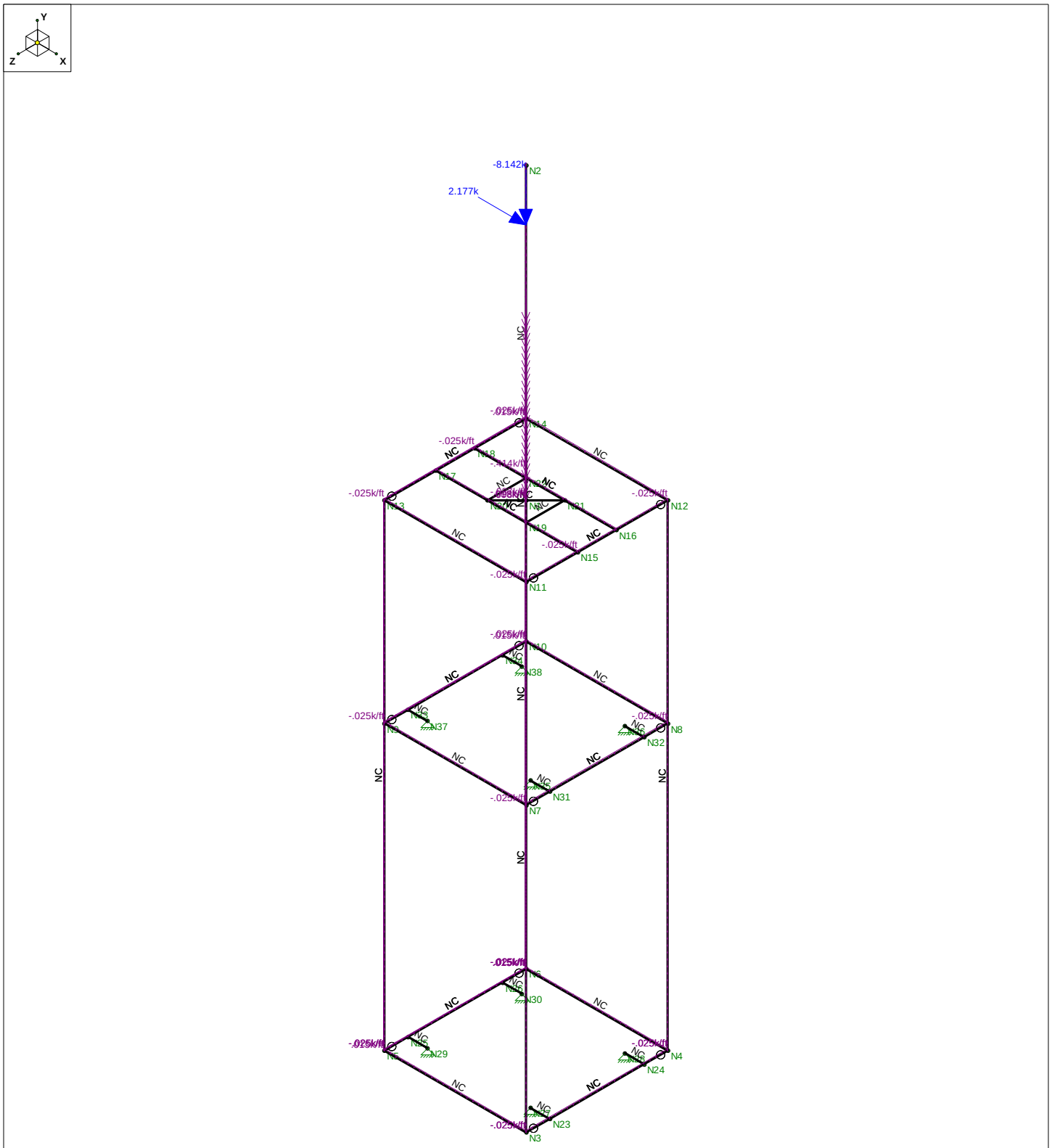

Member Code Checks Displayed
Loads: LC 3, 1.2D + 1.0Di + 1.0Wi (X-direction)

CENTEK Engineering, INC.		
tjl, cfc	CL&P # 783 - Mast	July 6, 2018 at 10:47 AM
17010.08 / AT&T CT2117	LC #3 Loads	TIA.r3d

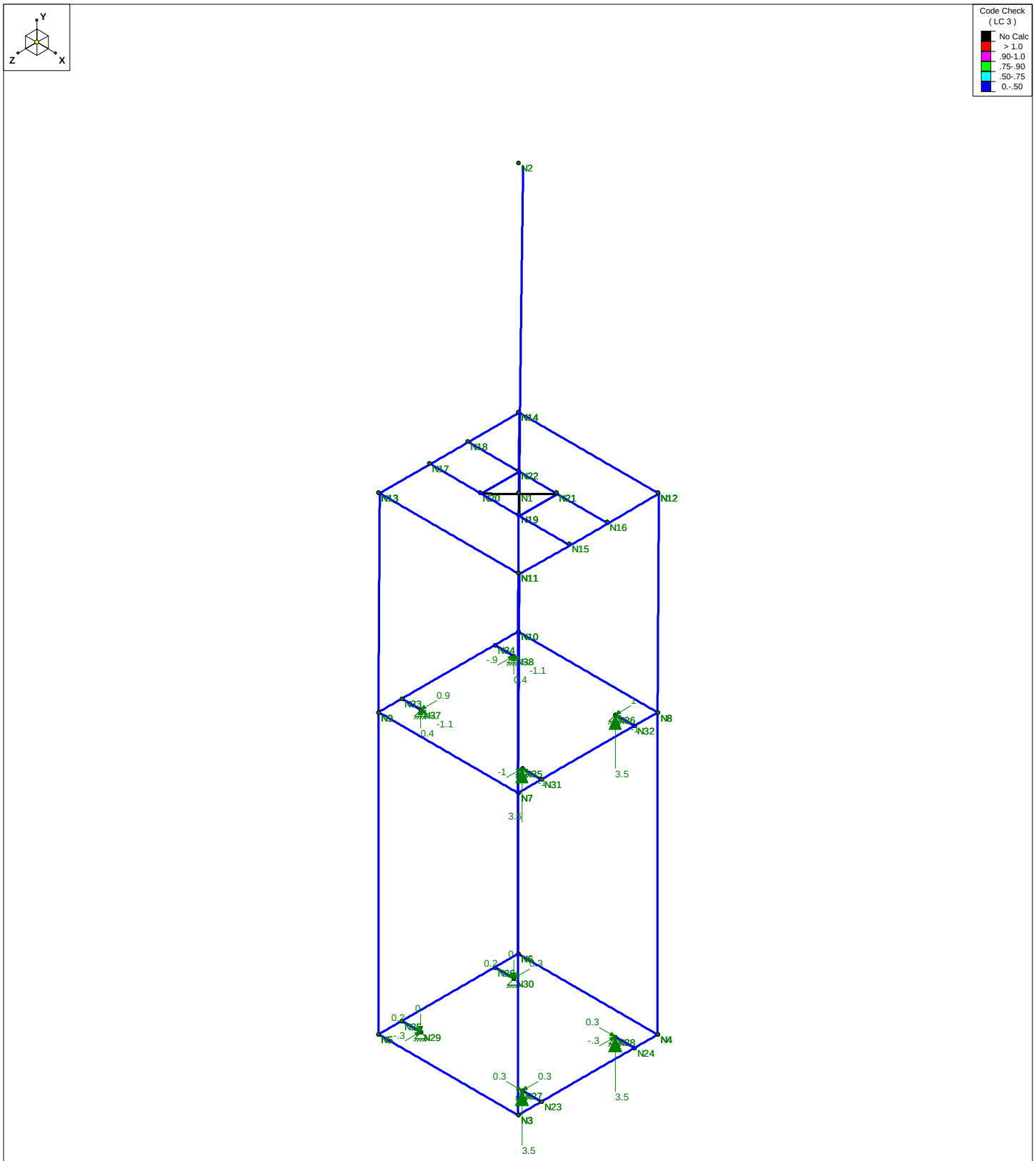

Member Code Checks Displayed
Results for LC 3, 1.2D + 1.0Di + 1.0Wi (X-direction)
Reaction and Moment Units are k and k-ft

CENTEK Engineering, INC.		
tjl, cfc	CL&P # 783 - Mast	July 6, 2018 at 10:49 AM
17010.08 / AT&T CT2117	LC #3 Reactions and Deflected Shape	TIA.r3d

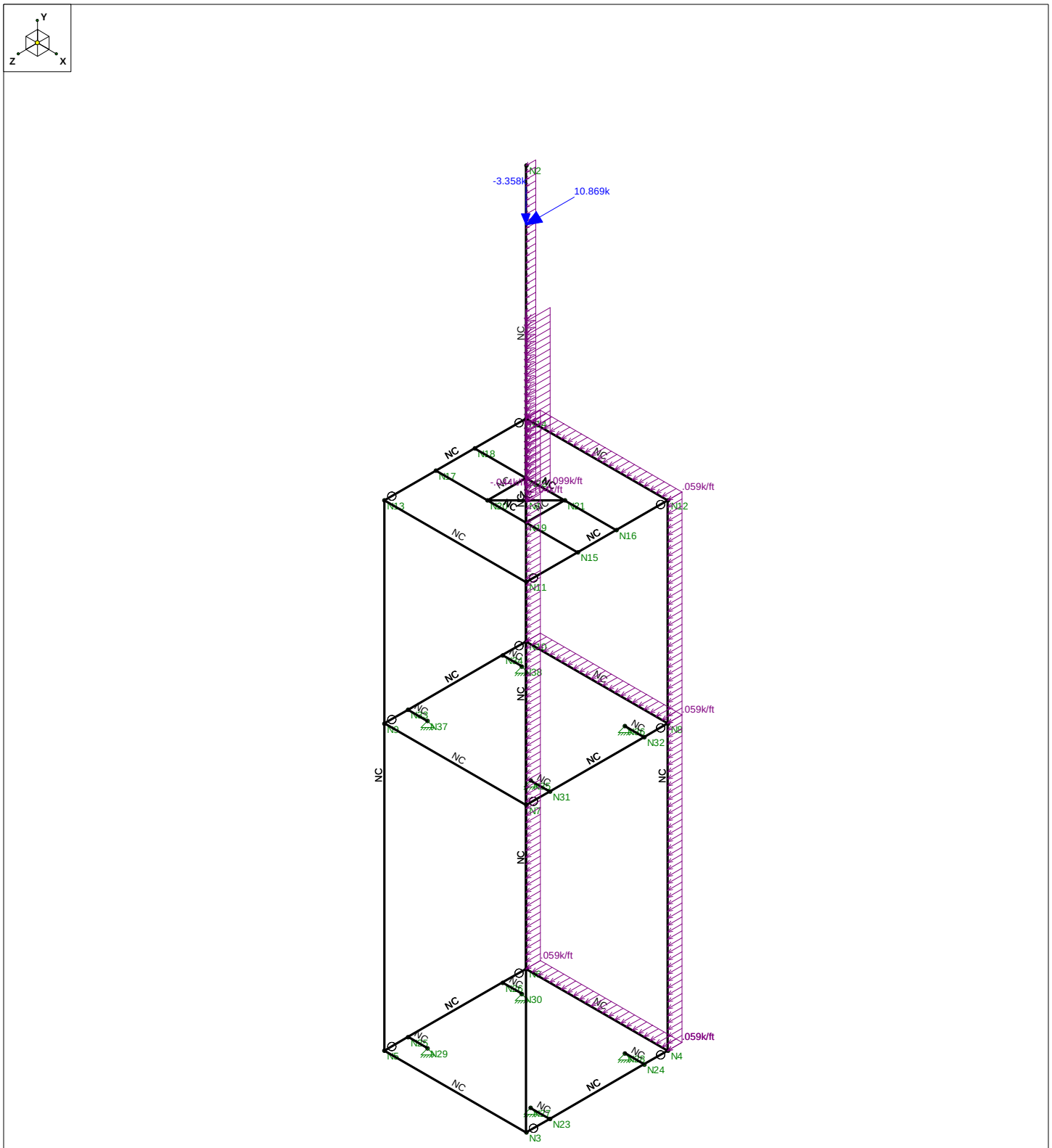

Member Code Checks Displayed
Loads: LC 4, 1.2D + 1.6W (Z-direction)

CENTEK Engineering, INC.		
tjl, cfc	CL&P # 783 - Mast	July 6, 2018 at 10:47 AM
17010.08 / AT&T CT2117	LC #4 Loads	TIA.r3d

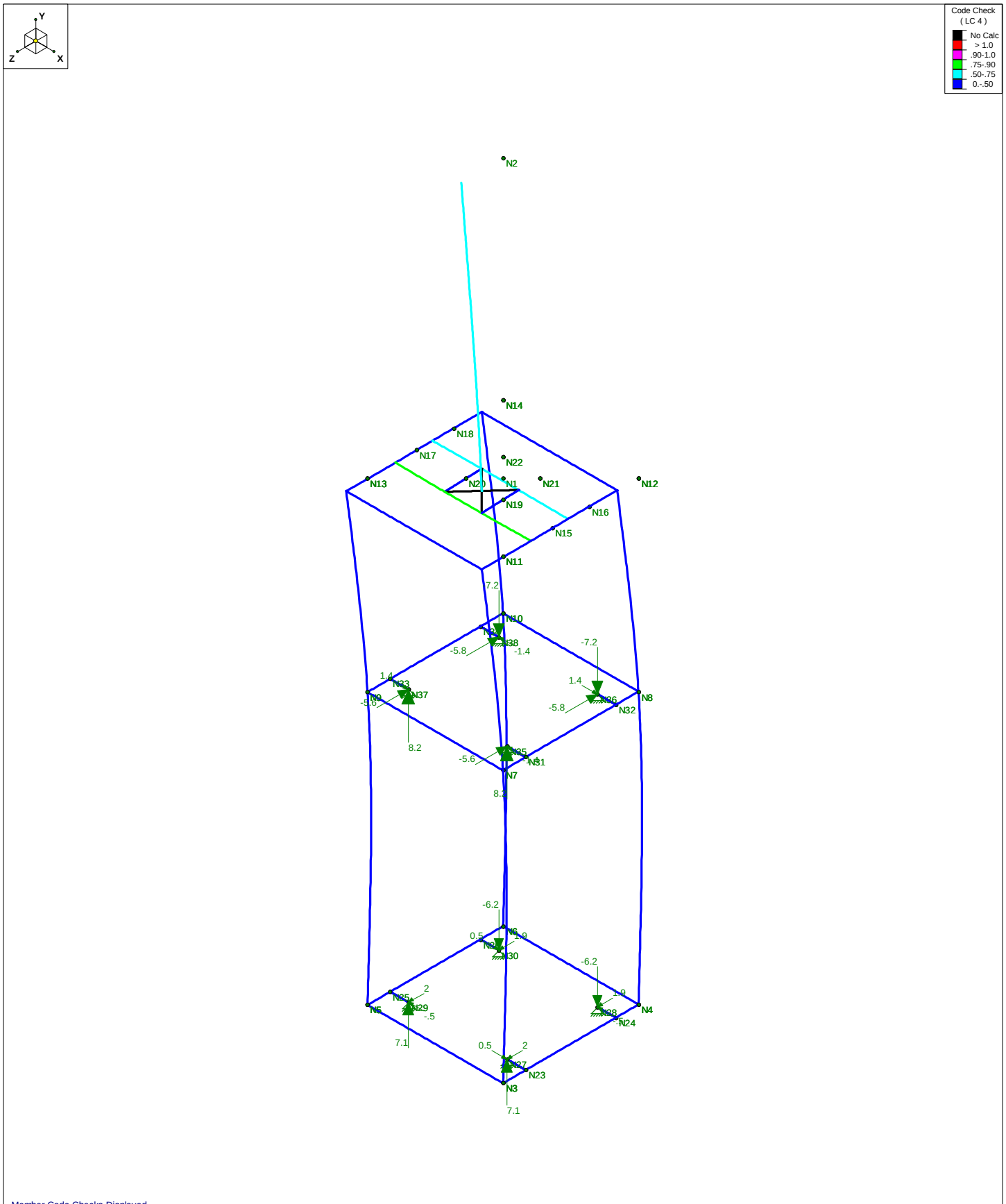

Member Code Checks Displayed
Results for LC 4, 1.2D + 1.6W (Z-direction)
Reaction and Moment Units are k and k-ft

CENTEK Engineering, INC.		
tjl, cfc	CL&P # 783 - Mast	July 6, 2018 at 10:49 AM
17010.08 / AT&T CT2117	LC #4 Reactions and Deflected Shape	TIA.r3d

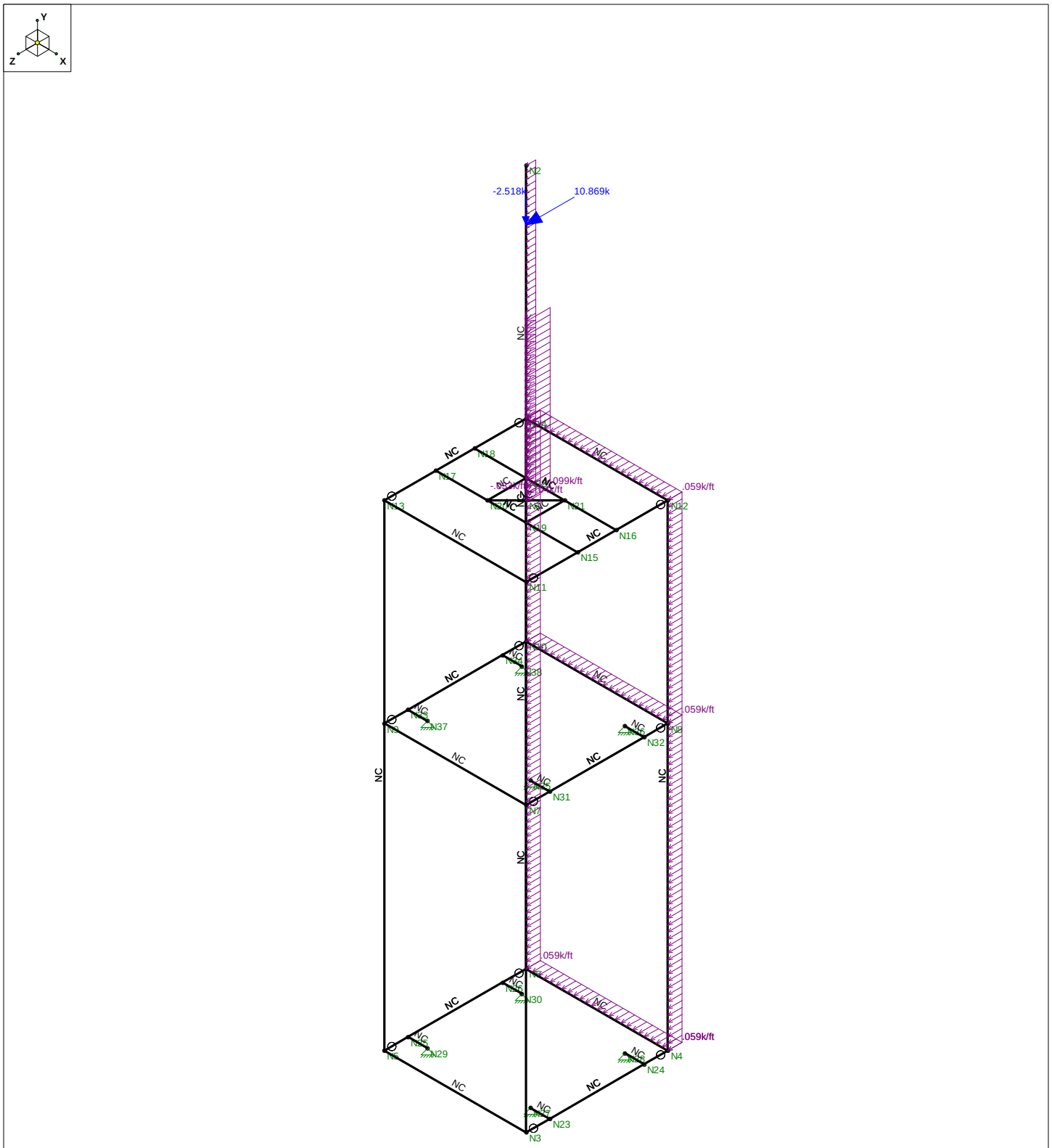

Member Code Checks Displayed
Loads: LC 5, 0.9D + 1.6W (Z-direction)

CENTEK Engineering, INC.		
tjl, cfc	CL&P # 783 - Mast	July 6, 2018 at 10:47 AM
17010.08 / AT&T CT2117	LC #5 Loads	TIA.r3d

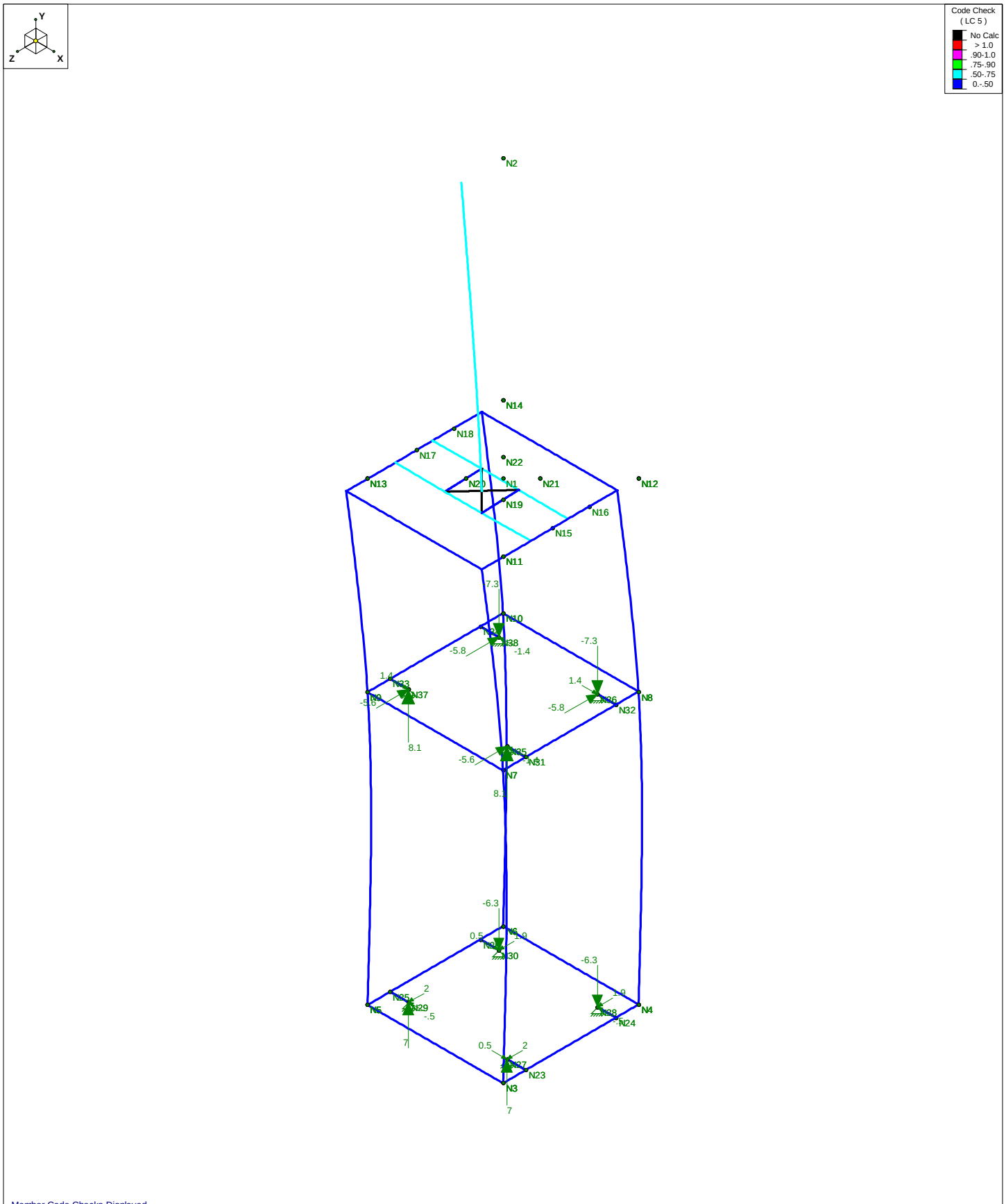

Member Code Checks Displayed
Results for LC 5, 0.9D + 1.6W (Z-direction)
Reaction and Moment Units are k and k-ft

CENTEK Engineering, INC.		
tjl, cfc	CL&P # 783 - Mast	July 6, 2018 at 10:50 AM
17010.08 / AT&T CT2117	LC #5 Reactions and Deflected Shape	TIA.r3d

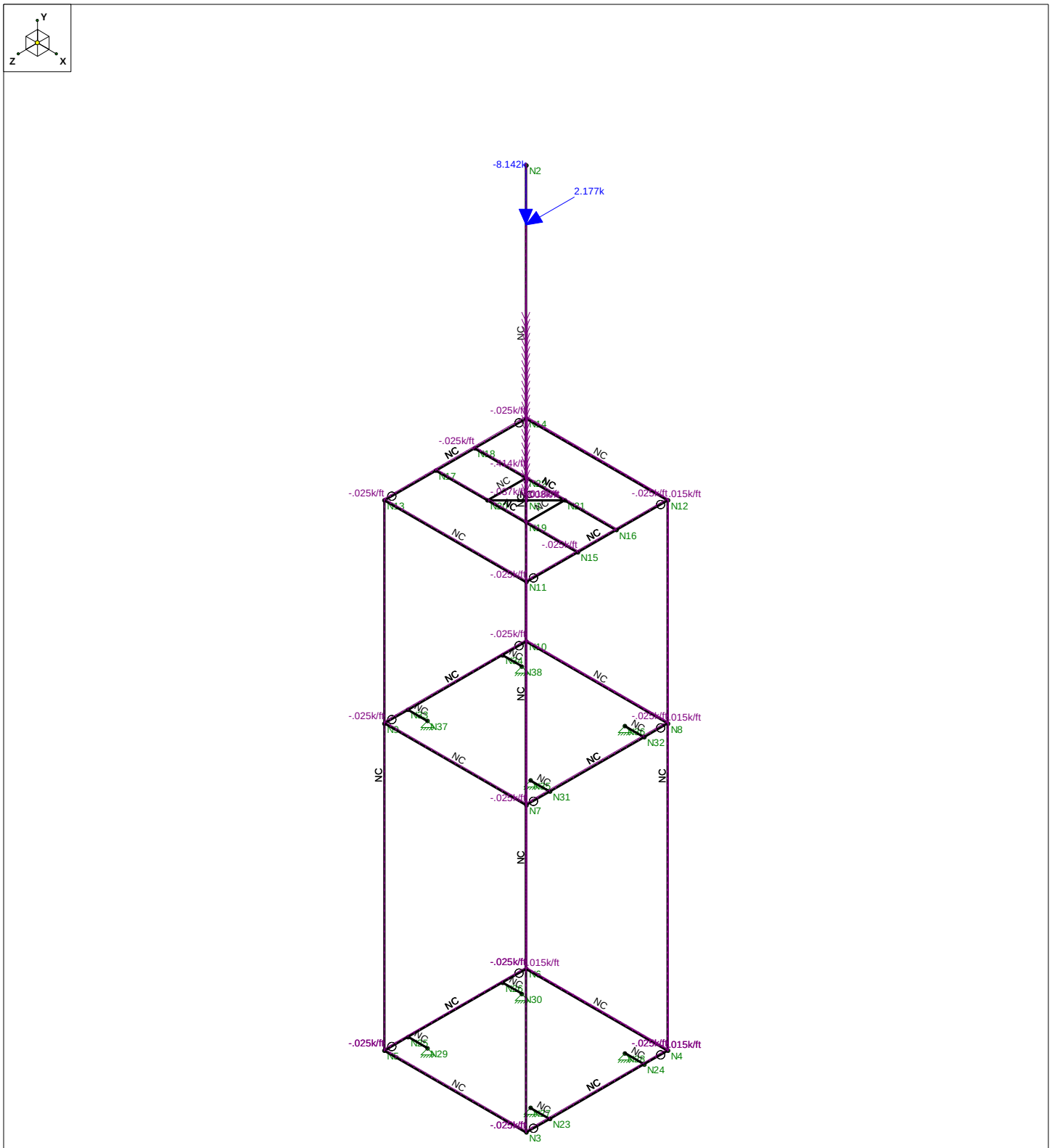

Member Code Checks Displayed
Loads: LC 6, 1.2D + 1.0Di + 1.0Wi (Z-direction)

CENTEK Engineering, INC.		
tjl, cfc	CL&P # 783 - Mast	July 6, 2018 at 10:47 AM
17010.08 / AT&T CT2117	LC #6 Loads	TIA.r3d

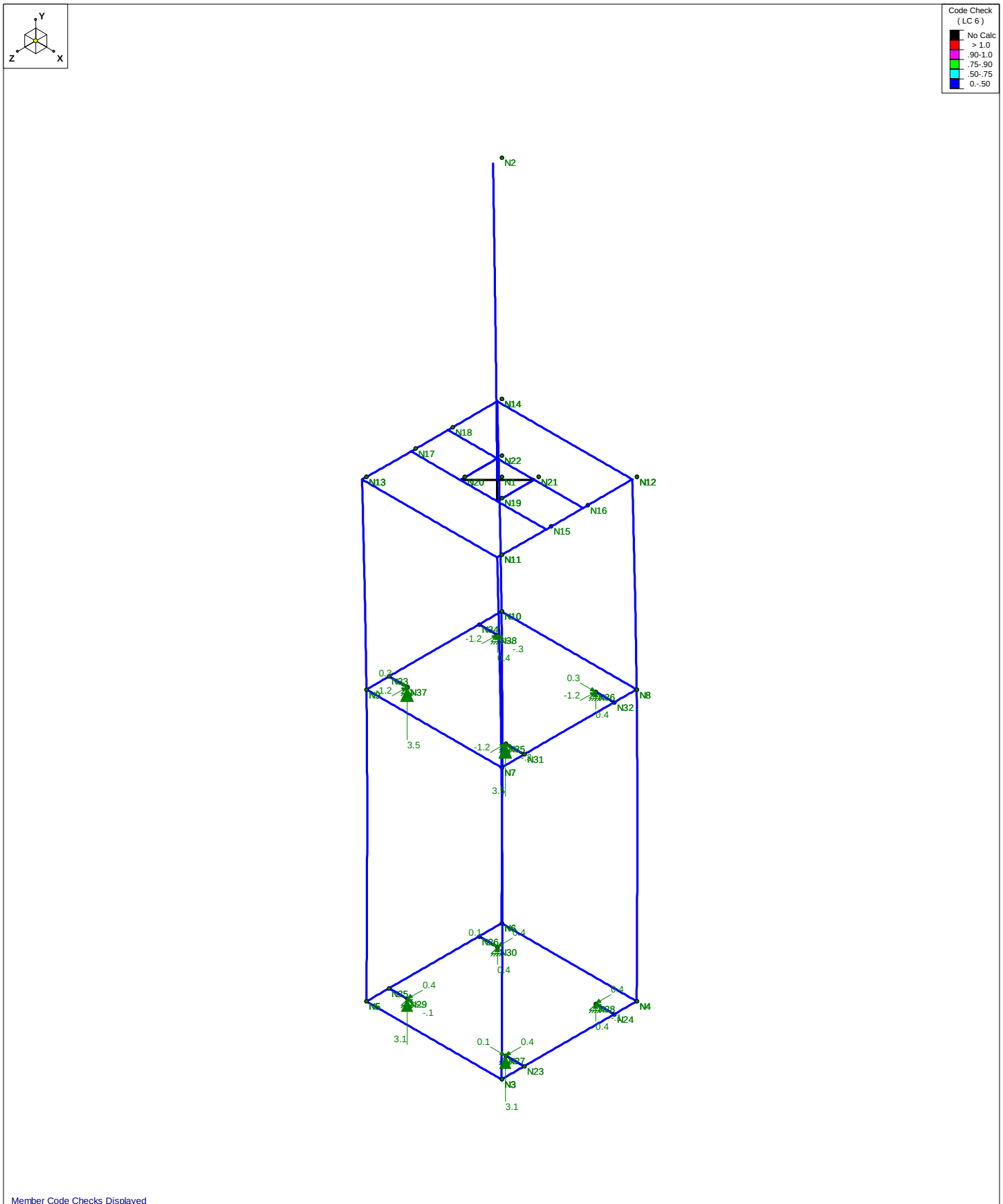

Member Code Checks Displayed
Results for LC 6, 1.2D + 1.0Di + 1.0Wi (Z-direction)
Reaction and Moment Units are k and k-ft

CENTEK Engineering, INC.		
tjl, cfc	CL&P # 783 - Mast	July 6, 2018 at 10:52 AM
17010.08 / AT&T CT2117	LC #6 Reactions and Deflected Shape	TIA.r3d

Beam: ***M1***

Shape: **PIPE_12.0X**
Material: **A53 Gr. B**
Length: **11.25 ft**
I Joint: **N1**
J Joint: **N2**
LC 1: 1.2D + 1.6W (X-direction)
Code Check: **0.574 (bending)**
Report Based On 97 Sections

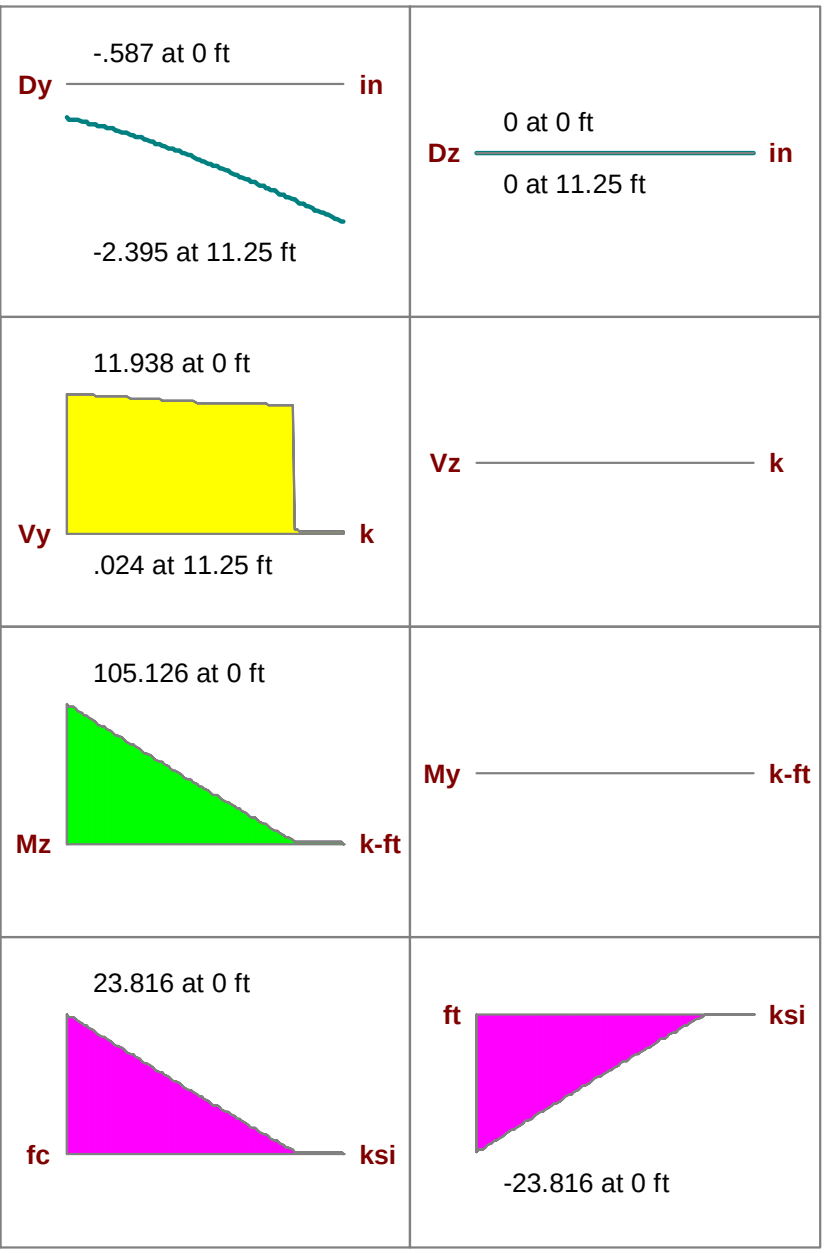

AISC 14th(360-10): LRFD Code Check

Direct Analysis Method

Max Bending Check	**0.574**	Max Shear Check	**0.072 (s)**	Max Defl Ratio	**L/898**
Location	**0 ft**	Location	**0 ft**	Location	**4.453 ft**
Equation	**H1-1b**			Span	**1**

Bending	**Compact**	Compression	**Non-Slender**

			y-y	z-z
Fy	**35 ksi**	Lb	**11.25 ft**	**11.25 ft**
phi*Pnc	**525.335 k**	KL/r	**30.673**	**30.673**
phi*Pnt	**551.25 k**			
phi*Mny	**184.275 k-ft**	L Comp Flange	**11.25 ft**	
phi*Mnz	**184.275 k-ft**	L-torque	**11.25 ft**	
phi*Vny	**165.375 k**	Tau_b	**1**	
phi*Vnz	**165.375 k**			
phi*Tn	**175.038 k-ft**			
Cb	**1.97**			

Anchor Bolt and Base Plate Analysis:

Input Data:

Tower Reactions:

Overturning Moment =	$OM := 105.2 \cdot ft \cdot kips$	(Input From Risa3D)
Shear Force =	$Shear := 12 \cdot kips$	(Input From Risa3D)
Axial Force =	$Axial := 3.6 \cdot kips$	(Input From Risa3D)

Anchor Bolt Data:

Use AST MA325

Number of Anchor Bolts =	$N := 16$	(User Input)
Diameter of Bolt Circle =	$D_{bc} := 15.25 \cdot in$	(User Input)
Bolt Ultimate Strength =	$F_u := 120 \cdot ksi$	(User Input)
Bolt Yield Strength =	$F_y := 92 \cdot ksi$	(User Input)
Bolt Modulus =	$E := 29000 \cdot ksi$	(User Input)
Diameter of Flange Bolts =	$D := 0.75 \cdot in$	(User Input)
Threads per Inch =	$n := 10$	(User Input)

Base Plate Data:

Use AST MA36

Plate Yield Strength =	$Fy_{bp} := 36 \cdot ksi$	(User Input)
Base Plate Thickness =	$t_{bp} := 0.75 \cdot in$	(User Input)
Base Plate Diameter =	$D_{bp} := 18 \cdot in$	(User Input)
Outer Pole Diameter =	$D_{pole} := 12.5 \cdot in$	(User Input)

Base Plate Data:

Weld Grade	E70XX	(User Input)
Weld Yield Stress =	$F_{yw} := 70 \cdot ksi$	(User Input)
Weld Size =	$sw := 0.5 \cdot in$	(User Input)

Geometric Layout Data:

Distance from Bolts to Centroid of Pole:

$d_1 := 7.625in$ (User Input)

$d_2 := 5in$ (User Input)

$d_3 := 2in$ (User Input)

Critical Distances For Bending in Plate:

$ma_1 := 1.375in$ (User Input)

Effective Width of Baseplate for Bending = $B_{eff} := 12.75in$ (User Input)

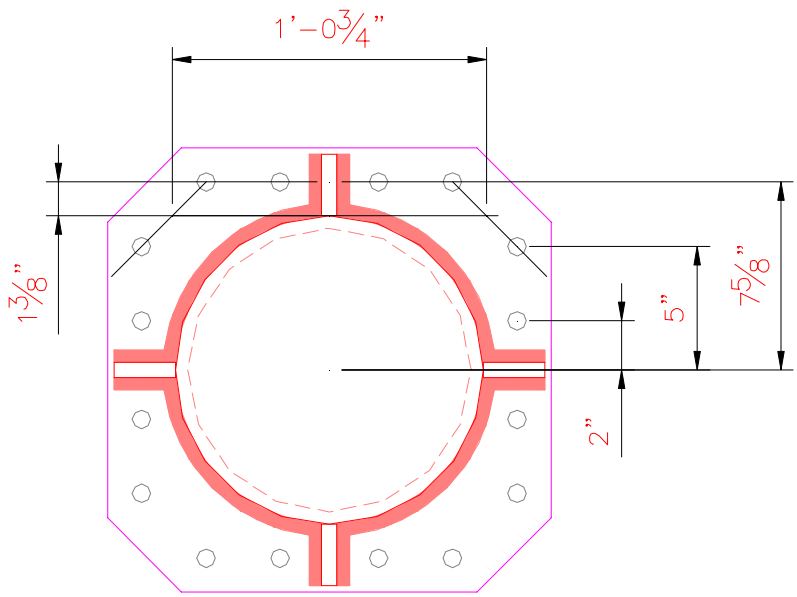

ANCHOR BOLT AND PLATE GEOMETRY

Anchor Bolt Analysis:

Calculated Anchor Bolt Properties:

Polar Moment of Inertia = $I_p := \left[(d_1)^2 \cdot 8 + (d_2)^2 \cdot 4 + (d_3)^2 \cdot 4\right] = 581.125 \cdot in^2$

Gross Area of Bolt = $A_g := \frac{\pi}{4} \cdot D^2 = 0.442 \cdot in^2$

Net Area of Bolt = $A_n := \frac{\pi}{4} \cdot \left(D - \frac{0.9743 \cdot in}{n}\right)^2 = 0.334 \cdot in^2$

Net Diameter = $D_n := \frac{2 \cdot \sqrt{A_n}}{\sqrt{\pi}} = 0.653 \cdot in$

Radius of Gyration of Bolt = $r := \frac{D_n}{4} = 0.163 \cdot in$

Section Modulus of Bolt = $S_x := \frac{\pi \cdot D_n^3}{32} = 0.027 \cdot in^3$

Check Anchor Bolt Tension Force:

Maximum Tensile Force = $T_{Max} := OM \cdot \frac{d_1}{I_p} - \frac{Axial}{N} = 16.3 \cdot kips$

Design Tensile Force = $T_{ALL} := 0.75\left(0.75 \cdot A_g \cdot F_u\right) = 29.8 \cdot kips$

Bolt Tension % of Capacity = $\frac{T_{Max}}{T_{ALL}} = 54.8 \cdot \%$

Condition1 = $Condition1 := if\left(\frac{T_{Max}}{T_{ALL}} \le 1.00, \text{"OK"}, \text{"Overstressed"}\right)$

Condition1 = "OK"

Base Plate Analysis:

Force from Bolts = $C_1 := OM \cdot \frac{d_1}{I_p} + \frac{Axial}{N} = 16.8 \cdot kips$

Maximum Bending Moment in Plate = $M_{bp} := 4 \cdot C_1 \cdot ma_1 = 92.3 \cdot in \cdot kip$

Plate Section Modulus = $S_{bp} := \frac{14.9605 \cdot in^4}{3.875 \cdot in} = 3.9 \cdot in^3$ (User Input)

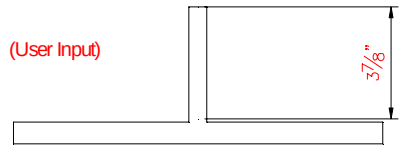

Maximum Bending Stress in Plate = $f_{bp} := \frac{M_{bp}}{S_{bp}} = 23.9 \cdot ksi$

Allowable Bending Stress in Plate = $F_{bp} := 0.9 \cdot Fy_{bp} = 32.4 \cdot ksi$

Area: 12.0625 sq in

Principal moments about centroid: I: 14.9605 in^4
J: 129.6234 in^4

Plate Bending Stress % of Capacity = $\frac{f_{bp}}{F_{bp}} = 73.8 \cdot \%$

Condition3 = $Condition2 := if\left(\frac{f_{bp}}{F_{bp}} < 1.00, "Ok", "Overstressed"\right)$

Condition2 = "Ok"

Antenna Mast to Base Plate Weld Check:

Allowable Weld Stress = $F_w := 0.45 \cdot F_{yw} = 31.5 \cdot ksi$

Weld Area = $A_w := 20.4 \cdot in^2$ (User Input)

Weld Moment of Inertia = $I_w := 477 \cdot in^4$ (User Input)

$c := 8.75 \cdot in$ (User Input)

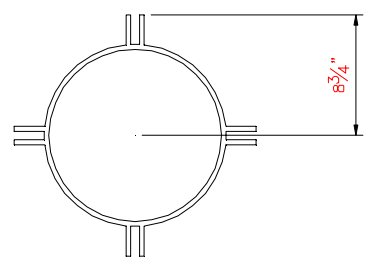

Section Modulus of Weld = $S_w := \frac{I_w}{c} = 54.51 \cdot in^3$

Area: 20.3984 sq in

Principal moments about centroid: I: 476.9779 in^4
J: 476.9779 in^4

Weld Stress = $f_w := \frac{OM}{S_w} + \frac{Shear}{A_w} = 23.75 \cdot ksi$

$Condition3 := if\left(f_w < F_w, "OK", "Overstressed"\right)$

Condition3 = "OK"

Mast Connection to CL&P Tower:

Check Angle to Tower Leg Conneciton:

Reactions:

Vertical y-dir = $Vertical := 7.1 \cdot kips$ (Input From Risa-3D LC #2)

Horizontal x-dir = $Horizontal_x := 5.2 \cdot kips$ (Input From Risa-3D LC #2)

Horizontal z-dir = $Horizontal_z := 4.7 \cdot kips$ (Input From Risa-3D LC #2)

Bolt Data:

Bolt Type = ASTMA325 (User Input)

Bolt Diameter = $D := 0.75 \cdot in$ (User Input)

Area of Bolt = $A_b := \frac{1}{4} \cdot \pi \cdot D^2 = 0.442 \cdot in^2$ (User Input)

Number of Bolts = $N_b := 6$ (User Input)

Nominal Tensile Stress = $F_{nt} := 90 \cdot ksi$ (User Input)

Nominal Shear Stress = $F_{nv} := 54 \cdot ksi$ (User Input)

Resistance Factor = $\Phi := 0.75$ (User Input)

Shear Stress = $f_{rv} := \frac{\sqrt{Horizontal_z^2 + Vertical^2}}{N_b \cdot A_b} = 3.2 \cdot ksi$

Design Shear Strength = $R_{nv} := \Phi \cdot F_{nv} = 40.5 \cdot ksi$

Bolt Shear % of Capacity = $\frac{f_{rv}}{R_{nv}} = 7.93 \cdot \%$

Check Bolt Shear = $Bolt\_Shear := if\left(\frac{f_{rv}}{R_{nv}} \le 1.00, "OK", "Overstressed"\right)$

$Bolt\_Shear = "OK"$

Modified Nominal Tensile Strength = $F'_{nt} := \begin{cases} \left(1.3 \cdot F_{nt} - \frac{F_{nt}}{\Phi \cdot F_{nv}} \cdot f_{rv}\right) & \text{if } \left(1.3 \cdot F_{nt} - \frac{F_{nt}}{\Phi \cdot F_{nv}} \cdot f_{rv}\right) \le F_{nt} \\ F_{nt} & \text{otherwise} \end{cases} = 90 \cdot ksi$

Design Tensile Strength = $R_{nt} := \Phi \cdot F'_{nt} = 67.5 \cdot ksi$

Tension Stress = $f_{rt} := \frac{Horizontal_x}{N_b \cdot A_b} = 2 \cdot ksi$

Bolt Tenison % of Capacity = $\frac{f_{rt}}{R_{nt}} = 2.91 \cdot \%$

Check Bolt Tension = $Bolt\_Tension := if\left(\frac{f_{rt}}{R_{nt}} \le 1.00, "OK", "Overstressed"\right)$

$Bolt\_Tension = "OK"$

Basic Components

Heavy Wind Pressure =	$p := 4.00$	psf	(User Input NESC 2007 Figure 250-1 & Table 250-1)
Basic Windspeed =	$V := 110$	mph	(User Input NESC 2007 Figure 250-2(e))
Radial Ice Thickness =	$Ir := 0.50$	in	(User Input)
Radial Ice Density =	$Id := 56.0$	pcf	(User Input)

Factors for Extreme Wind Calculation

Elevation of Top of PCS Mast Above Grade =	$TME := 90$	ft	(User Input)
Multiplier Gust Response Factor =	$m := 1.25$		(User Input - Only for NESC Extreme wind case)
NESC Factor =	$kv := 1.43$		(User Input from NESC 2007 Table 250-3 equation)
Importance Factor =	$I := 1.0$		(User Input from NESC 2007 Section 250.C.2)

Velocity Pressure Coefficient =

$$Kz := 2.01 \cdot \left(\frac{TME}{900}\right)^{\frac{2}{9.5}} = 1.238$$

(NESC 2007 Table 250-2)

Exposure Factor =

$$Es := 0.346 \left[\frac{33}{(0.67 \cdot TME)}\right]^{\frac{1}{7}} = 0.317$$

(NESC 2007 Table 250-3)

Response Term =

$$Bs := \frac{1}{\left(1 + 0.375 \cdot \frac{TME}{220}\right)} = 0.867$$

(NESC 2007 Table 250-3)

Gust Response Factor =

$$Grf := \frac{\left[1 + \left(2.7 \cdot Es \cdot Bs^{\frac{1}{2}}\right)\right]}{kv^2} = 0.879$$

(NESC 2007 Table 250-3)

Wind Pressure =

$$qz := 0.00256 \cdot Kz \cdot V^2 \cdot Grf \cdot I = 33.7$$

psf (NESC 2007 Section 250.C.2)

Shape Factors

NUS Design Criteria Issued April 12, 2007

Shape Factor for Round Members =	$Cd_R := 1.3$	(User Input)
Shape Factor for Flat Members =	$Cd_F := 1.6$	(User Input)
Shape Factor for Coax Cables Attached to Outside of Pole =	$Cd_{coax} := 1.45$	(User Input)

Overload Factors

NU Design Criteria Table

Overload Factors for Wind Loads:

NESC Heavy Loading =	**2.5**	(User Input)	Apply in Risa-3D Analysis
NESC Extreme Loading =	**1.0**	(User Input)	Apply in Risa-3D Analysis

Overload Factors for Vertical Loads:

NESC Heavy Loading =	**1.5**	(User Input)	Apply in Risa-3D Analysis
NESC Extreme Loading =	**1.0**	(User Input)	Apply in Risa-3D Analysis

Development of Wind & Ice Load on PCS Mast

PCS Mast Data: (12" x-Strong Pipe)

Mast Shape =	Round		(User Input)
Mast Diameter =	$D_{mast} := 12.75$	in	(User Input)
Mast Length =	$L_{mast} := 11$	ft	(User Input)
Mast Thickness =	$t_{mast} := 0.5$	in	(User Input)

Wind Load (NESC Extreme)

Mast Projected Surface Area = $A_{mast} := \frac{D_{mast}}{12} = 1.063$ sf/ft

Total Mast Wind Force (Below NU Structure) = $qz \cdot Cd_R \cdot A_{mast} = 47$ plf **BLC 5**

Wind Load (NESE Heavy)

Mast Projected Surface Area w/ Ice = $AICE_{mast} := \frac{(D_{mast} + 2 \cdot Ir)}{12} = 1.146$ sf/ft

Total Mast Wind Force w/ Ice = $p \cdot Cd_R \cdot AICE_{mast} = 6$ plf **BLC 4**

Gravity Loads (without ice)

Weight of the mast = Self Weight **(Computed internally by Risa-3D)** plf **BLC 1**

Gravity Loads (ice only)

Ice Area per Linear Foot = $Ai_{mast} := \frac{\pi}{4}\left[(D_{mast} + Ir \cdot 2)^2 - D_{mast}^2\right] = 20.8$ sq in

Weight of Ice on Mast = $W_{ICEmast} := Id \cdot \frac{Ai_{mast}}{144} = 8$ plf **BLC 3**

Development of Wind & Ice Load on Antennas

Antenna Data: (AT&T)

Antenna Model =	CCI HPA-65R-BUU-H8		
Antenna Shape =	Flat		(User Input)
Antenna Height =	$L_{ant} := 92.4$	in	(User Input)
Antenna Width =	$W_{ant} := 14.8$	in	(User Input)
Antenna Thickness =	$T_{ant} := 7.4$	in	(User Input)
Antenna Weight =	$WT_{ant} := 78$	lbs	(User Input)
Number of Antennas =	$N_{ant} := 6$		(User Input)

Gravity Load (without ice)

Weight of All Antennas = $Wt_{ant1} := WT_{ant} \cdot N_{ant} = 468$ lbs **BLC 2**

Gravity Load (ice only)

Volume of Each Antenna = $V_{ant} := L_{ant} \cdot W_{ant} \cdot T_{ant} = 10120$ cu in

Volume of Ice on Each Antenna = $V_{ice} := (L_{ant} + 2 \cdot Ir)(W_{ant} + 2 \cdot Ir)(T_{ant} + 2 \cdot Ir) - V_{ant} = 2276$ cu in

Weight of Ice on Each Antenna = $W_{ICEant} := \frac{V_{ice}}{1728} \cdot Id = 74$ lbs

Weight of Ice on All Antennas = $Wt_{ice.ant1} := W_{ICEant} \cdot N_{ant} = 443$ lbs **BLC 3**

Wind Load (NESC Heavy)

Assumes Maximum Possible Wind Pressure Applied to all Antennas Simultaneously

Surface Area for One Antenna w/ Ice = $SA_{ICEant} := \frac{(L_{ant} + 2 \cdot Ir) \cdot (W_{ant} + 2 \cdot Ir)}{144} = 10.2$ sf

Antenna Projected Surface Area w/ Ice = $A_{ICEant} := SA_{ICEant} \cdot N_{ant} = 61.5$ sf

Total Antenna Wind Force w/ Ice = $Fi_{ant1} := p \cdot Cd_F \cdot A_{ICEant} = 394$ lbs **BLC 4**

Wind Load (NESC Extreme)

Assumes Maximum Possible Wind Pressure Applied to all Antennas Simultaneously

Surface Area for One Antenna = $SA_{ant} := \frac{L_{ant} \cdot W_{ant}}{144} = 9.5$ sf

Antenna Projected Surface Area = $A_{ant} := SA_{ant} \cdot N_{ant} = 57$ sf

Total Antenna Wind Force = $F_{ant1} := qz \cdot Cd_F \cdot A_{ant} \cdot m = 3842$ lbs **BLC 5**

Development of Wind & Ice Load on Antennas

Antenna Data:	(AT&T)		
Antenna Model =	CCI OPA-65R-LCUU-H8		
Antenna Shape =	Flat		(User Input)
Antenna Height =	$L_{ant} := 92.7$	in	(User Input)
Antenna Width =	$W_{ant} := 14.4$	in	(User Input)
Antenna Thickness =	$T_{ant} := 7.0$	in	(User Input)
Antenna Weight =	$WT_{ant} := 100$	lbs	(User Input)
Number of Antennas =	$N_{ant} := 3$		(User Input)

Gravity Load (without ice)

Weight of All Antennas =	$Wt_{ant1} := WT_{ant} \cdot N_{ant} = 300$	lbs	**BLC 2**

Gravity Load (ice only)

Volume of Each Antenna =	$V_{ant} := L_{ant} \cdot W_{ant} \cdot T_{ant} = 9344$	cu in	
Volume of Ice on Each Antenna =	$V_{ice} := (L_{ant} + 2 \cdot Ir)(W_{ant} + 2 \cdot Ir)(T_{ant} + 2 \cdot Ir) - V_{ant} = 2200$	cu in	
Weight of Ice on Each Antenna =	$W_{ICEant} := \frac{V_{ice}}{1728} \cdot Id = 71$	lbs	
Weight of Ice on All Antennas =	$Wt_{ice.ant1} := W_{ICEant} \cdot N_{ant} = 214$	lbs	**BLC 3**

Wind Load (NESC Heavy)

Assumes Maximum Possible Wind Pressure Applied to all Antennas Simultaneously

Surface Area for One Antenna w/ Ice =	$SA_{ICEant} := \frac{(L_{ant} + 2 \cdot Ir) \cdot (W_{ant} + 2 \cdot Ir)}{144} = 10$	sf	
Antenna Projected Surface Area w/ Ice =	$A_{ICEant} := SA_{ICEant} \cdot N_{ant} = 30.1$	sf	
Total Antenna Wind Force w/ Ice =	$Fi_{ant1} := p \cdot Cd_F \cdot A_{ICEant} = 192$	lbs	**BLC 4**

Wind Load (NESC Extreme)

Assumes Maximum Possible Wind Pressure Applied to all Antennas Simultaneously

Surface Area for One Antenna =	$SA_{ant} := \frac{L_{ant} \cdot W_{ant}}{144} = 9.3$	sf	
Antenna Projected Surface Area =	$A_{ant} := SA_{ant} \cdot N_{ant} = 27.8$	sf	
Total Antenna Wind Force =	$F_{ant1} := qz \cdot Cd_F \cdot A_{ant} \cdot m = 1875$	lbs	**BLC 5**

Development of Wind & Ice Load on TMA's

TMA Data: (AT&T)

TMA Model =	CCI BPDB7823VG12A		
TMA Shape =	Flat		(User Input)
TMA Height =	$L_{TMA} := 14.25$	in	(User Input)
TMA Width =	$W_{TMA} := 11.03$	in	(User Input)
TMA Thickness =	$T_{TMA} := 4.11$	in	(User Input)
TMA Weight =	$WT_{TMA} := 30$	lbs	(User Input)
Number of TMA's =	$N_{TMA} := 18$		(User Input)

Gravity Load (without ice)

Weight of All TMA's = $Wt_{TMA1} := WT_{TMA} \cdot N_{TMA} = 540$ lbs **BLC 2**

Gravity Load (ice only)

Volume of Each TMA = $V_{TMA} := L_{TMA} \cdot W_{TMA} \cdot T_{TMA} = 646$ cu in

Volume of Ice on Each TMA = $V_{ice} := (L_{TMA} + 2 \cdot Ir)(W_{TMA} + 2 \cdot Ir)(T_{TMA} + 2 \cdot Ir) - V_{TMA} = 291$ cu in

Weight of Ice on Each TMA = $W_{ICETMA} := \frac{V_{ice}}{1728} \cdot Id = 9$ lbs

Weight of Ice on All TMA's = $Wt_{ice.TMA1} := W_{ICETMA} \cdot N_{TMA} = 170$ lbs **BLC 3**

Wind Load (NESC Heavy)

Assumes Maximum Possible Wind Pressure Applied to all TMA's Simultaneously

Surface Area for One TMA w/ Ice = $SA_{ICETMA} := \frac{(L_{TMA} + 2 \cdot Ir) \cdot (W_{TMA} + 2 \cdot Ir)}{144} = 1.3$ sf

TMA Projected Surface Area w/ Ice = $A_{ICETMA} := SA_{ICETMA} \cdot N_{TMA} = 22.9$ sf

Total TMA Wind Force w/ Ice = $Fi_{TMA1} := p \cdot Cd_F \cdot A_{ICETMA} = 147$ lbs **BLC 4**

Wind Load (NESC Extreme)

Assumes Maximum Possible Wind Pressure Applied to all TMA's Simultaneously

Surface Area for One TMA = $SA_{TMA} := \frac{L_{TMA} \cdot W_{TMA}}{144} = 1.1$ sf

TMA Projected Surface Area = $A_{TMA} := SA_{TMA} \cdot N_{TMA} = 19.6$ sf

Total TMA Wind Force = $F_{TMA1} := qz \cdot Cd_F \cdot A_{TMA} \cdot m = 1325$ lbs **BLC 5**

Development of Wind & Ice Load on Antenna Mounts

Mount Data: (AT&T)

Mount Type:	Site Pro Ultra Low Profile Monopole Mount ULP12 w/ Handrail		
Mount Shape =	Flat		
Mount Projected Surface Area =	$CdAa := 33$	sf	(User Input)
Mount Projected Surface Area w/ Ice =	$CdAa_{ice} := 42$	sf	(User Input)
Mount Weight =	$WT_{mnt} := 1710$	lbs	(User Input)
Mount Weight w/ Ice =	$WT_{mnt.ice} := 2350$	lbs	(User Input)

Gravity Loads (without ice)

Weight of All Mounts = $Wt_{mnt1} := WT_{mnt} = 1710$ lbs **BLC 2**

Gravity Load (ice only)

Weight of Ice on All Mounts = $Wt_{ice.mnt1} := \left(WT_{mnt.ice} - WT_{mnt}\right) = 640$ lbs **BLC 3**

Wind Load (NESC Heavy)

Total Mount Wind Force w/ Ice = $Fi_{mnt1} := p \cdot CdAa_{ice} = 168$ lbs **BLC 4**

Wind Load (NESC Extreme)

Total Mount Wind Force = $F_{mnt1} := qz \cdot CdAa \cdot m = 1391$ lbs **BLC 5**

Development of Wind & Ice Load on Coax Cables

Coax Cable Data:

Coax Type =	HELIAX 1-5/8"		
Shape =	Round		(User Input)
Coax Outside Diameter =	$D_{coax} := 1.98$	in	(User Input)
Coax Cable Length =	$L_{coax} := 10$	ft	(User Input)
Weight of Coax per foot =	$Wt_{coax} := 1.04$	plf	(User Input)
Total Number of Coax =	$N_{coax} := 36$		(User Input)
No. of Coax Projecting Outside Face of PCS Mast =	$NP_{coax} := 8$		(User Input)

Gravity Loads (without ice)

Weight of all cables w/o ice = $WT_{coax} := Wt_{coax} \cdot N_{coax} = 37$ plf **BLC 2**

Gravity Load (ice only)

Ice Area per Linear Foot = $Ai_{coax} := \frac{\pi}{4}\left[\left(D_{coax} + 2 \cdot Ir\right)^2 - D_{coax}^{\ 2}\right] = 3.9$ sq in

Ice Weight All Coax per foot = $WTi_{coax} := N_{coax} \cdot Id \cdot \frac{Ai_{coax}}{144} = 55$ plf **BLC 3**

Wind Load (NESC Heavy)

Coax projected surface area w/ Ice = $AICE_{coax} := \frac{NP_{coax} \cdot \left(D_{coax} + 2 \cdot Ir\right)}{12} = 2$ sf/ft

Total Coax Wind Force w/ Ice = $Fi_{coax} := p \cdot Cd_{coax} \cdot AICE_{coax} = 12$ plf **BLC 4**

Wind Load (NESC Extreme)

Coax projected surface area = $A_{coax} := \frac{\left(NP_{coax} D_{coax}\right)}{12} = 1.3$ sf/ft

Total Coax Wind Force (Above NU Structure) = $F_{coax} := qz \cdot Cd_{coax} \cdot A_{coax} \cdot m = 81$ plf **BLC 5**

Development of Wind & Ice Load on Brace Member

Member Data: HSS6x6x3/8

Shape =	Flat		(User Input)
Width =	$W_{mem} := 6$	in	(User Input)
Length =	$L_{mem} := 5.5$	ft	(User Input)
Height =	$H_{mem} := 6$	in	(User Input)

Wind Load (NESC Extreme)

Member Projected Surface Area = $A_{mem} := \frac{W_{mem}}{12} = 0.5$ sf/f

Total Member Wind Force = $qz \cdot Cd_F \cdot A_{mem} = 27$ plf **BLC 5**

Wind Load (NESE Heavy)

Member Projected Surface Area w/ Ice = $AICE_{mem} := \frac{(W_{mem} + 2 \cdot Ir)}{12} = 0.583$ sf/f

Total Member Wind Force w/ Ice = $p \cdot Cd_F \cdot AICE_{mem} = 4$ plf **BLC 4**

Gravity Loads (without ice)

Weight of the Member = Self Weight **(Computed internally by Risa-3D)** plf **BLC 1**

Gravity Loads (ice only)

Ice Area per Linear Foot = $Ai_{mem} := (W_{mem} + 2 \cdot Ir) \cdot (H_{mem} + 2 \cdot Ir) - W_{mem} \cdot H_{mem} = 13$ sq in

Weight of Ice on Member = $W_{ICEmem} := Id \cdot \frac{Ai_{mem}}{144} = 5$ plf **BLC 3**

(Global) Model Settings

Display Sections for Member Calcs	5
Max Internal Sections for Member Calcs	97
Include Shear Deformation?	Yes
Increase Nailing Capacity for Wind?	Yes
Include Warping?	Yes
Trans Load Btwn Intersecting Wood Wall?	Yes
Area Load Mesh (in^2)	144
Merge Tolerance (in)	.12
P-Delta Analysis Tolerance	0.50%
Include P-Delta for Walls?	Yes
Automatically Iterate Stiffness for Walls?	No
Max Iterations for Wall Stiffness	3
Gravity Acceleration (ft/sec^2)	32.2
Wall Mesh Size (in)	12
Eigensolution Convergence Tol. (1.E-)	4
Vertical Axis	Y
Global Member Orientation Plane	XZ
Static Solver	Sparse Accelerated
Dynamic Solver	Accelerated Solver

Hot Rolled Steel Code	AISC 9th: ASD
RISAConnection Code	AISC 14th(360-10): ASD
Cold Formed Steel Code	AISI 1999: ASD
Wood Code	AF&PA NDS-91/97: ASD
Wood Temperature	< 100F
Concrete Code	ACI 318-02
Masonry Code	ACI 530-05: ASD
Aluminum Code	AA ADM1-05: ASD - Building
	AISC 14th(360-10): ASD

Number of Shear Regions	4
Region Spacing Increment (in)	4
Biaxial Column Method	PCA Load Contour
Parme Beta Factor (PCA)	.65
Concrete Stress Block	Rectangular
Use Cracked Sections?	Yes
Use Cracked Sections Slab?	Yes
Bad Framing Warnings?	No
Unused Force Warnings?	Yes
Min 1 Bar Diam. Spacing?	No
Concrete Rebar Set	REBAR_SET_ASTMA615
Min % Steel for Column	1
Max % Steel for Column	8

(Global) Model Settings, Continued

Seismic Code	UBC 1997
Seismic Base Elevation (ft)	Not Entered
Add Base Weight?	No
Ct X	.035
Ct Z	.035
T X (sec)	Not Entered
T Z (sec)	Not Entered
R X	8.5
R Z	8.5
Ca	.36
Cv	.54
Nv	1
Occupancy Category	4
Seismic Zone	3
Om Z	1
Om X	1
Rho Z	1
Rho X	1
Footing Overturning Safety Factor	1.5
Optimize for OTM/Sliding	No
Check Concrete Bearing	No
Footing Concrete Weight (k/ft^3)	0
Footing Concrete f'c (ksi)	3
Footing Concrete Ec (ksi)	4000
Lambda	1
Footing Steel fy (ksi)	60
Minimum Steel	0.0018
Maximum Steel	0.0075
Footing Top Bar	#3
Footing Top Bar Cover (in)	3.5
Footing Bottom Bar	#3
Footing Bottom Bar Cover (in)	3.5
Pedestal Bar	#3
Pedestal Bar Cover (in)	1.5
Pedestal Ties	#3

Hot Rolled Steel Properties

	Label	E [ksi]	G [ksi]	Nu	Therm (\1...	Density[k/ft^3]	Yield[ksi]	Ry	Fu[ksi]	Rt
1	A36 Gr.36	29000	11154	.3	.65	.49	36	1.5	58	1.2
2	A572 Gr.50	29000	11154	.3	.65	.49	50	1.1	58	1.2
3	A992	29000	11154	.3	.65	.49	50	1.1	58	1.2
4	A500 Gr.42	29000	11154	.3	.65	.49	42	1.3	58	1.1
5	A500 Gr.46	29000	11154	.3	.65	.49	46	1.2	58	1.1
6	A53 Gr. B	29000	11154	.3	.65	.49	35	1.5	58	1.2

Hot Rolled Steel Section Sets

	Label	Shape	Type	Design List	Material	Design ...	A [in2]	Iyy [in4]	Izz [in4]	J [in4]
1	Mast	PIPE 12.0X	Beam	Pipe	A53 Gr. B	Typical	17.5	339	339	678
2	Brace	HSS6x6x6	Beam	Tube	A500 Gr.46	Typical	7.58	39.5	39.5	64.6

Hot Rolled Steel Design Parameters

	Label	Shape	Length...	Lbyy[ft]	Lbzz[ft]	Lcomp to...	Lcomp bo...	Kyy	Kzz	Cm-yy	Cm-zz	Cb	y sway	z sway	Function
1	M1	Mast	13.25			Lbyy									Lateral
2	M2	Brace	18.5			Lbyy									Lateral
3	M3	Brace	18.5			Lbyy									Lateral
4	M4	Brace	18.5			Lbyy									Lateral
5	M5	Brace	18.5			Lbyy									Lateral
6	M6	Brace	5.5			Lbyy									Lateral
7	M7	Brace	5.5			Lbyy									Lateral
8	M8	Brace	5.5			Lbyy									Lateral
9	M9	Brace	5.5			Lbyy									Lateral
10	M10	Brace	5.5			Lbyy									Lateral
11	M11	Brace	5.5			Lbyy									Lateral
12	M12	Brace	5.5			Lbyy									Lateral
13	M13	Brace	5.5			Lbyy									Lateral
14	M14	Brace	5.5	Segment	Segment	Lbyy									Lateral
15	M15	Brace	5.5			Lbyy									Lateral
16	M16	Brace	5.5	Segment	Segment	Lbyy									Lateral
17	M17	Brace	5.5			Lbyy									Lateral
18	M18	Brace	5.5			Lbyy									Lateral
19	M19	Brace	5.5			Lbyy									Lateral
20	M20	Brace	1.5			Lbyy									Lateral
21	M21	Brace	1.5			Lbyy									Lateral
22	M24	Brace	.75			Lbyy									Lateral
23	M25	Brace	.75			Lbyy									Lateral
24	M26	Brace	.75			Lbyy									Lateral
25	M27	Brace	.75			Lbyy									Lateral
26	M28	Brace	.75			Lbyy									Lateral
27	M29	Brace	.75			Lbyy									Lateral
28	M30	Brace	.75			Lbyy									Lateral
29	M31	Brace	.75			Lbyy									Lateral

Member Primary Data

	Label	I Joint	J Joint	K Joint	Rotate(d...	Section/Shape	Type	Design List	Material	Design Rul...
1	M1	N1	N2			Mast	Beam	Pipe	A53 Gr. B	Typical
2	M2	N3	N11			Brace	Beam	Tube	A500 Gr....	Typical
3	M3	N4	N12			Brace	Beam	Tube	A500 Gr....	Typical
4	M4	N5	N13			Brace	Beam	Tube	A500 Gr....	Typical
5	M5	N6	N14			Brace	Beam	Tube	A500 Gr....	Typical
6	M6	N3	N4			Brace	Beam	Tube	A500 Gr....	Typical
7	M7	N4	N6			Brace	Beam	Tube	A500 Gr....	Typical
8	M8	N6	N5			Brace	Beam	Tube	A500 Gr....	Typical
9	M9	N5	N3			Brace	Beam	Tube	A500 Gr....	Typical
10	M10	N7	N8			Brace	Beam	Tube	A500 Gr....	Typical
11	M11	N8	N10			Brace	Beam	Tube	A500 Gr....	Typical
12	M12	N10	N9			Brace	Beam	Tube	A500 Gr....	Typical

Member Primary Data (Continued)

	Label	I Joint	J Joint	K Joint	Rotate(d...	Section/Shape	Type	Design List	Material	Design Rul...
13	M13	N9	N7			Brace	Beam	Tube	A500 Gr....	Typical
14	M14	N11	N12			Brace	Beam	Tube	A500 Gr....	Typical
15	M15	N12	N14			Brace	Beam	Tube	A500 Gr....	Typical
16	M16	N14	N13			Brace	Beam	Tube	A500 Gr....	Typical
17	M17	N13	N11			Brace	Beam	Tube	A500 Gr....	Typical
18	M18	N18	N16			Brace	Beam	Tube	A500 Gr....	Typical
19	M19	N15	N17			Brace	Beam	Tube	A500 Gr....	Typical
20	M20	N20	N22			Brace	Beam	Tube	A500 Gr....	Typical
21	M21	N19	N21			Brace	Beam	Tube	A500 Gr....	Typical
22	M22	N20	N21			RIGID	None	None	RIGID	Typical
23	M23	N19	N22			RIGID	None	None	RIGID	Typical
24	M24	N23	N27			Brace	Beam	Tube	A500 Gr....	Typical
25	M25	N24	N28			Brace	Beam	Tube	A500 Gr....	Typical
26	M26	N25	N29			Brace	Beam	Tube	A500 Gr....	Typical
27	M27	N26	N30			Brace	Beam	Tube	A500 Gr....	Typical
28	M28	N31	N35			Brace	Beam	Tube	A500 Gr....	Typical
29	M29	N32	N36			Brace	Beam	Tube	A500 Gr....	Typical
30	M30	N33	N37			Brace	Beam	Tube	A500 Gr....	Typical
31	M31	N34	N38			Brace	Beam	Tube	A500 Gr....	Typical

Joint Coordinates and Temperatures

	Label	X [ft]	Y [ft]	Z [ft]	Temp [F]	Detach From Dia...
1	N1	0	18.5	0	0	
2	N2	0	31.75	0	0	
3	N3	2.75	0	2.75	0	
4	N4	2.75	0	-2.75	0	
5	N5	-2.75	0	2.75	0	
6	N6	-2.75	0	-2.75	0	
7	N7	2.75	11	2.75	0	
8	N8	2.75	11	-2.75	0	
9	N9	-2.75	11	2.75	0	
10	N10	-2.75	11	-2.75	0	
11	N11	2.75	18.5	2.75	0	
12	N12	2.75	18.5	-2.75	0	
13	N13	-2.75	18.5	2.75	0	
14	N14	-2.75	18.5	-2.75	0	
15	N15	2.75	18.5	.75	0	
16	N16	2.75	18.5	-.75	0	
17	N17	-2.75	18.5	.75	0	
18	N18	-2.75	18.5	-.75	0	
19	N19	.75	18.5	.75	0	
20	N20	-.75	18.5	.75	0	
21	N21	.75	18.5	-.75	0	
22	N22	-.75	18.5	-.75	0	
23	N23	2.75	0	1.833	0	
24	N24	2.75	0	-1.833	0	
25	N25	-2.75	0	1.833	0	
26	N26	-2.75	0	-1.833	0	
27	N27	2	0	1.833	0	
28	N28	2	0	-1.833	0	

Joint Coordinates and Temperatures (Continued)

	Label	X [ft]	Y [ft]	Z [ft]	Temp [F]	Detach From Dia...
29	N29	-2	0	1.833	0	
30	N30	-2	0	-1.833	0	
31	N31	2.75	11	1.833	0	
32	N32	2.75	11	-1.833	0	
33	N33	-2.75	11	1.833	0	
34	N34	-2.75	11	-1.833	0	
35	N35	2	11	1.833	0	
36	N36	2	11	-1.833	0	
37	N37	-2	11	1.833	0	
38	N38	-2	11	-1.833	0	

Joint Boundary Conditions

	Joint Label	X [k/in]	Y [k/in]	Z [k/in]	X Rot.[k-ft/rad]	Y Rot.[k-ft/rad]	Z Rot.[k-ft/rad]
1	N1						
2	N7						
3	N9						
4	N8						
5	N10						
6	N3						
7	N4						
8	N5						
9	N6						
10	N31						
11	N32						
12	N33						
13	N34						
14	N35	Reaction	Reaction	Reaction			
15	N36	Reaction	Reaction	Reaction			
16	N37	Reaction	Reaction	Reaction			
17	N38	Reaction	Reaction	Reaction			
18	N23						
19	N24						
20	N25						
21	N26						
22	N27	Reaction	Reaction	Reaction			
23	N28	Reaction	Reaction	Reaction			
24	N29	Reaction	Reaction	Reaction			
25	N30	Reaction	Reaction	Reaction			

Member Point Loads (BLC 2 : Weight of Appurtenances)

	Member Label	Direction	Magnitude[k,k-ft]	Location[ft,%]
1	M1	Y	-.468	9.25
2	M1	Y	-.3	9.25
3	M1	Y	-.54	9.25
4	M1	Y	-1.71	9.25

Member Point Loads (BLC 3 : Weight of Ice Only on Antenna Fr)

Member Label	Direction	Magnitude[k,k-ft]	Location[ft,%]

Member Point Loads (BLC 3 : Weight of Ice Only on Antenna Fr) (Continued)

	Member Label	Direction	Magnitude[k,k-ft]	Location[ft,%]
1	M1	Y	-.443	9.25
2	M1	Y	-.214	9.25
3	M1	Y	-.17	9.25
4	M1	Y	-.64	9.25

Member Point Loads (BLC 4 : x-dir NESC Heavy Wind on Antenna)

	Member Label	Direction	Magnitude[k,k-ft]	Location[ft,%]
1	M1	X	.394	9.25
2	M1	X	.192	9.25
3	M1	X	.147	9.25
4	M1	X	.168	9.25

Member Point Loads (BLC 5 : x-dir NESC Extreme Wind on Anten)

	Member Label	Direction	Magnitude[k,k-ft]	Location[ft,%]
1	M1	X	3.842	9.25
2	M1	X	1.875	9.25
3	M1	X	1.325	9.25
4	M1	X	1.391	9.25

Member Distributed Loads (BLC 2 : Weight of Appurtenances)

	Member Label	Direction	Start Magnitude[k/ft,F,ksf]	End Magnitude[k/...	Start Location[ft,%]	End Location[ft,%]
1	M1	Y	-.037	-.037	0	0
2	M4	Y	-.019	-.019	11	18
3	M2	Y	-.019	-.019	11	18

Member Distributed Loads (BLC 3 : Weight of Ice Only on Antenna Fr)

	Member Label	Direction	Start Magnitude[k/ft,F,ksf]	End Magnitude[k/...	Start Location[ft,%]	End Location[ft,%]
1	M1	Y	-.008	-.008	0	0
2	M1	Y	-.055	-.055	0	0
3	M4	Y	-.028	-.028	11	18
4	M2	Y	-.028	-.028	11	18
5	M9	Y	-.005	-.005	0	0
6	M8	Y	-.005	-.005	0	0
7	M7	Y	-.005	-.005	0	0
8	M6	Y	-.005	-.005	0	0
9	M2	Y	-.005	-.005	0	0
10	M3	Y	-.005	-.005	0	0
11	M4	Y	-.005	-.005	0	0
12	M5	Y	-.005	-.005	0	0
13	M13	Y	-.005	-.005	0	0
14	M12	Y	-.005	-.005	0	0
15	M11	Y	-.005	-.005	0	0
16	M10	Y	-.005	-.005	0	0
17	M15	Y	-.005	-.005	0	0
18	M16	Y	-.005	-.005	0	0
19	M17	Y	-.005	-.005	0	0
20	M14	Y	-.005	-.005	0	0
21	M18	Y	-.005	-.005	0	0
22	M19	Y	-.005	-.005	0	0

Member Distributed Loads (BLC 3 : Weight of Ice Only on Antenna Fr) (Continued)

	Member Label	Direction	Start Magnitude[k/ft,F,ksf]	End Magnitude[k/...	Start Location[ft,%]	End Location[ft,%]
23	M21	Y	-.005	-.005	0	0
24	M20	Y	-.005	-.005	0	0

Member Distributed Loads (BLC 4 : x-dir NESC Heavy Wind on Antenna)

	Member Label	Direction	Start Magnitude[k/ft,F,ksf]	End Magnitude[k/...	Start Location[ft,%]	End Location[ft,%]
1	M1	X	.006	.006	0	0
2	M1	X	.012	.012	0	0
3	M4	X	.006	.006	11	18
4	M2	X	.006	.006	11	18
5	M4	X	.004	.004	0	0
6	M5	X	.004	.004	0	0
7	M12	X	.004	.004	0	0
8	M16	X	.004	.004	0	0
9	M8	X	.004	.004	0	0

Member Distributed Loads (BLC 5 : x-dir NESC Extreme Wind on Anten)

	Member Label	Direction	Start Magnitude[k/ft,F,ksf]	End Magnitude[k/...	Start Location[ft,%]	End Location[ft,%]
1	M1	X	.047	.047	0	0
2	M1	X	.081	.081	0	0
3	M4	X	.04	.04	11	18
4	M2	X	.04	.04	11	18
5	M4	X	.027	.027	0	0
6	M5	X	.027	.027	0	0
7	M16	X	.027	.027	0	0
8	M12	X	.027	.027	0	0
9	M8	X	.027	.027	0	0

Basic Load Cases

	BLC Description	Category	X Gravity	Y Gravity	Z Gravity	Joint	Point	Distribut...	Area(Me...	Surface(...
1	Self Weight (Antenna Frame)	None		-1						
2	Weight of Appurtenances	None					4	3		
3	Weight of Ice Only on Antenna Fr	None					4	24		
4	x-dir NESC Heavy Wind on Antenna	None					4	9		
5	x-dir NESC Extreme Wind on Anten	None					4	9		

Load Combinations

	Description	So...	P...	S...	BLC	Fac...	BLC	Fac...	BLC	Fac...	BLC	Fac...	BLC	Fac...	BLC	Fac...	BLC	Fac...	BLC	Fac...	BLC	Fac...	BLC	Fac...
1	x-dir NESC Heav...	Yes			1	1.5	2	1.5	3	1.5	4	2.5												
2	x-dir NESC Extre...	Yes			1	1	2	1	5	1														
3	Self Weight				1	1																		

Envelope Joint Reactions

	Joint		X [k]	LC	Y [k]	LC	Z [k]	LC	MX [k-ft]	LC	MY [k-ft]	LC	MZ [k-ft]	LC
1	N35	max	-1.311	1	7.436	2	-1.114	1	0	1	0	1	0	1
2		min	-4.435	2	4.367	1	-3.825	2	0	1	0	1	0	1
3	N36	max	-1.171	1	7.315	2	3.898	2	0	1	0	1	0	1

Envelope Joint Reactions (Continued)

	Joint		X [k]	LC	Y [k]	LC	Z [k]	LC	MX [k-ft]	LC	MY [k-ft]	LC	MZ [k-ft]	LC
4		min	-4.063	2	3.962	1	1.142	1	0	1	0	1	0	1
5	N37	max	-1.319	1	.852	1	3.822	2	0	1	0	1	0	1
6		min	-4.526	2	-5.08	2	1.09	1	0	1	0	1	0	1
7	N38	max	-1.18	1	.457	1	-1.118	1	0	1	0	1	0	1
8		min	-4.155	2	-5.175	2	-3.895	2	0	1	0	1	0	1
9	N27	max	1.327	2	8.565	2	1.192	2	0	1	0	1	0	1
10		min	.385	1	4.428	1	.344	1	0	1	0	1	0	1
11	N28	max	1.301	2	8.377	2	-.346	1	0	1	0	1	0	1
12		min	.374	1	4.051	1	-1.197	2	0	1	0	1	0	1
13	N29	max	1.221	2	.209	1	-.317	1	0	1	0	1	0	1
14		min	.319	1	-6.377	2	-1.182	2	0	1	0	1	0	1
15	N30	max	1.196	2	-.095	1	1.187	2	0	1	0	1	0	1
16		min	.311	1	-6.372	2	.319	1	0	1	0	1	0	1
17	Totals:	max	-3.594	1	18.231	1	0	1						
18		min	-12.133	2	8.69	2	0	2						

Joint Reactions

	LC	Joint Label	X [k]	Y [k]	Z [k]	MX [k-ft]	MY [k-ft]	MZ [k-ft]
1	1	N35	-1.311	4.367	-1.114	0	0	0
2	1	N36	-1.171	3.962	1.142	0	0	0
3	1	N37	-1.319	.852	1.09	0	0	0
4	1	N38	-1.18	.457	-1.118	0	0	0
5	1	N27	.385	4.428	.344	0	0	0
6	1	N28	.374	4.051	-.346	0	0	0
7	1	N29	.319	.209	-.317	0	0	0
8	1	N30	.311	-.095	.319	0	0	0
9	1	Totals:	-3.594	18.231	0			
10	1	COG (ft):	X: 0	Y: 19.5	Z: .149			

Joint Reactions

	LC	Joint Label	X [k]	Y [k]	Z [k]	MX [k-ft]	MY [k-ft]	MZ [k-ft]
1	2	N35	-4.435	7.436	-3.825	0	0	0
2	2	N36	-4.063	7.315	3.898	0	0	0
3	2	N37	-4.526	-5.08	3.822	0	0	0
4	2	N38	-4.155	-5.175	-3.895	0	0	0
5	2	N27	1.327	8.565	1.192	0	0	0
6	2	N28	1.301	8.377	-1.197	0	0	0
7	2	N29	1.221	-6.377	-1.182	0	0	0
8	2	N30	1.196	-6.372	1.187	0	0	0
9	2	Totals:	-12.133	8.69	0			
10	2	COG (ft):	X: 0	Y: 18.604	Z: .084			

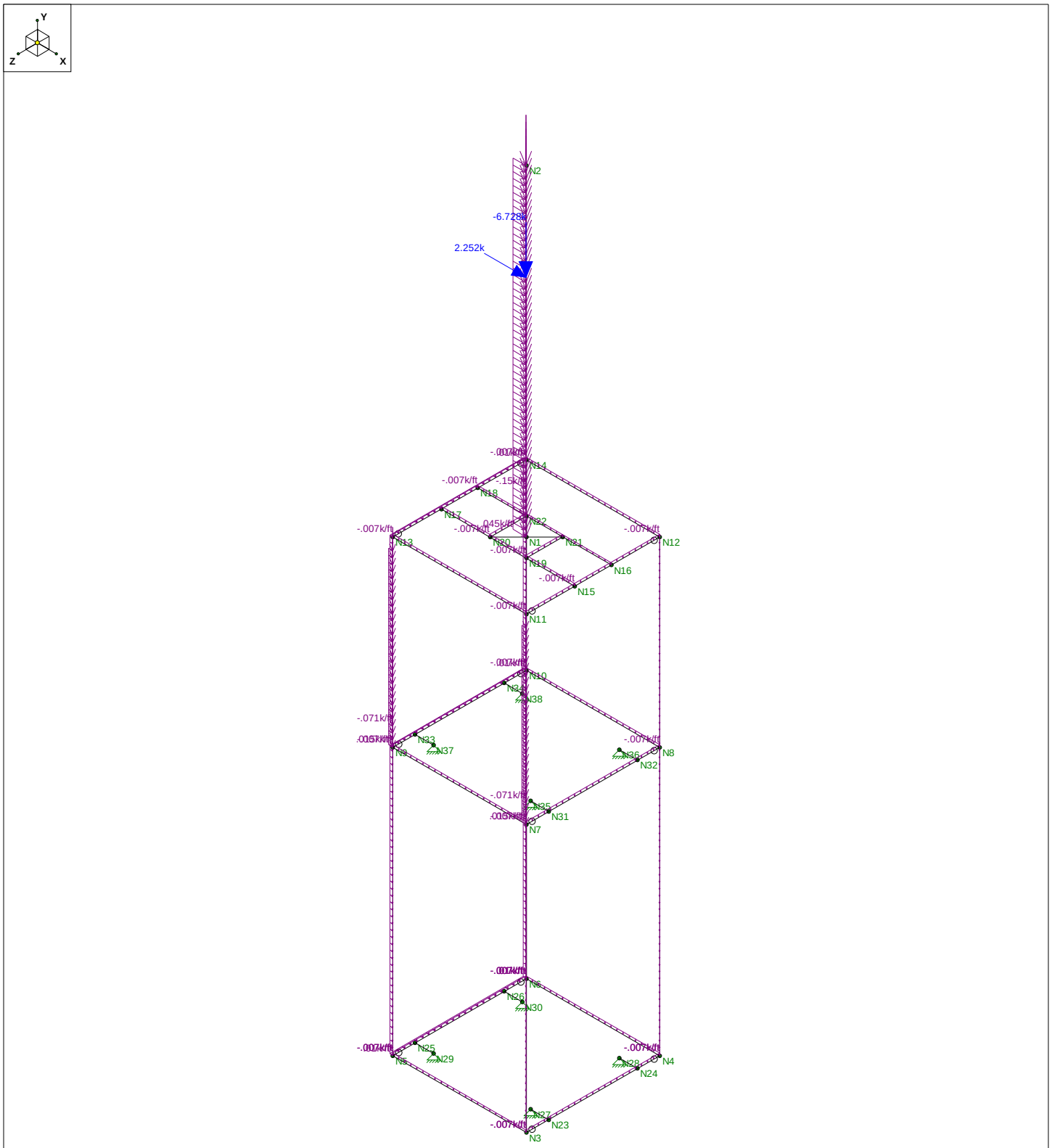

Loads: LC 1, x-dir NESC Heavy Wind on Antenna Frame
Envelope Only Solution

CENTEK Engineering, Inc.		
tjl, cfc	CL&P # 783 - Mast	July 6, 2018 at 9:49 AM
17010.08 / AT&T CT2117	LC #1 Loads	NESC.r3d

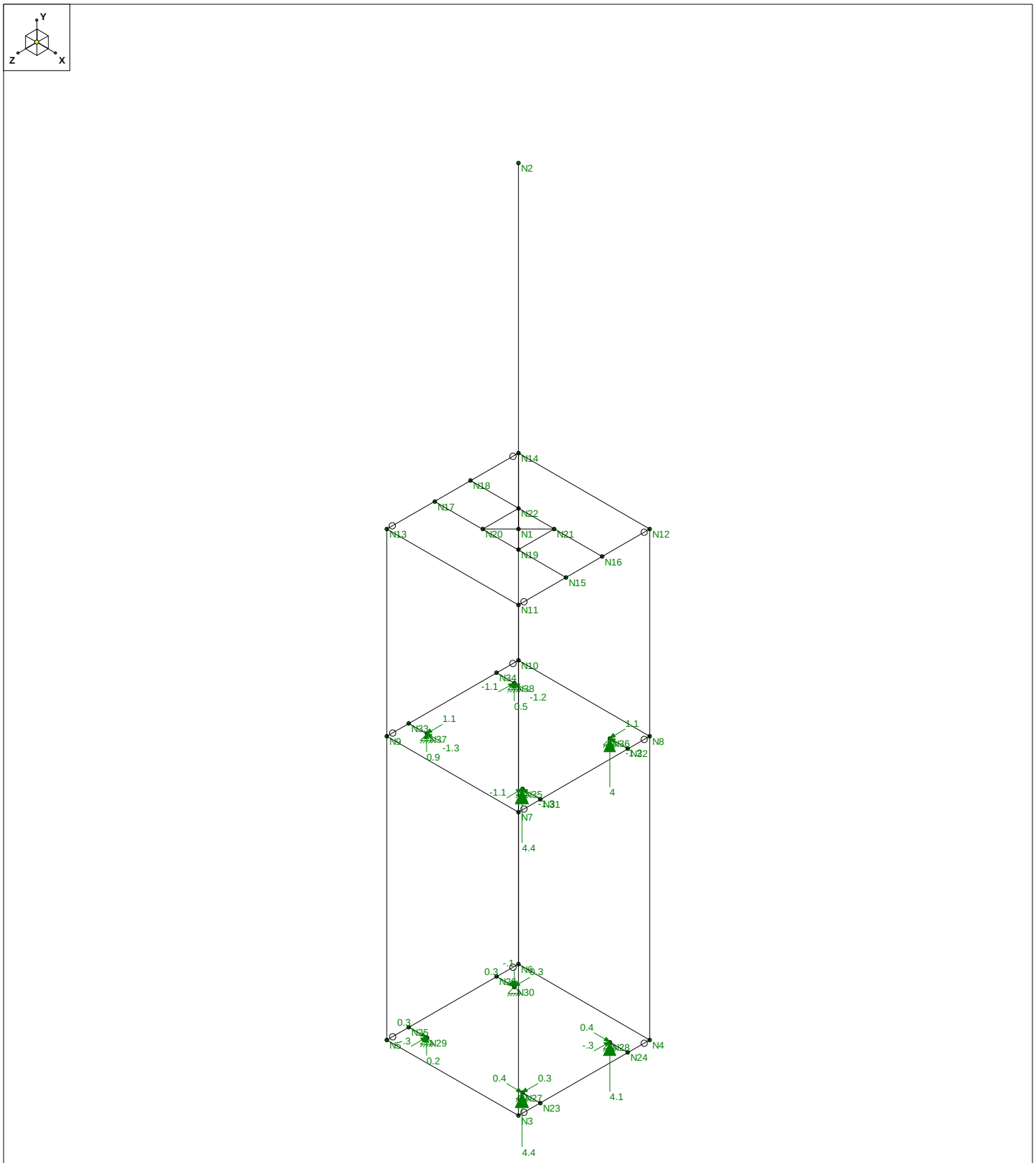

Results for LC 1, x-dir NESC Heavy Wind on Antenna Frame
Reaction and Moment Units are k and k-ft

CENTEK Engineering, Inc.		
tjl, cfc	CL&P # 783 - Mast	July 6, 2018 at 9:50 AM
17010.08 / AT&T CT2117	LC #1 Reactions	NESC.r3d

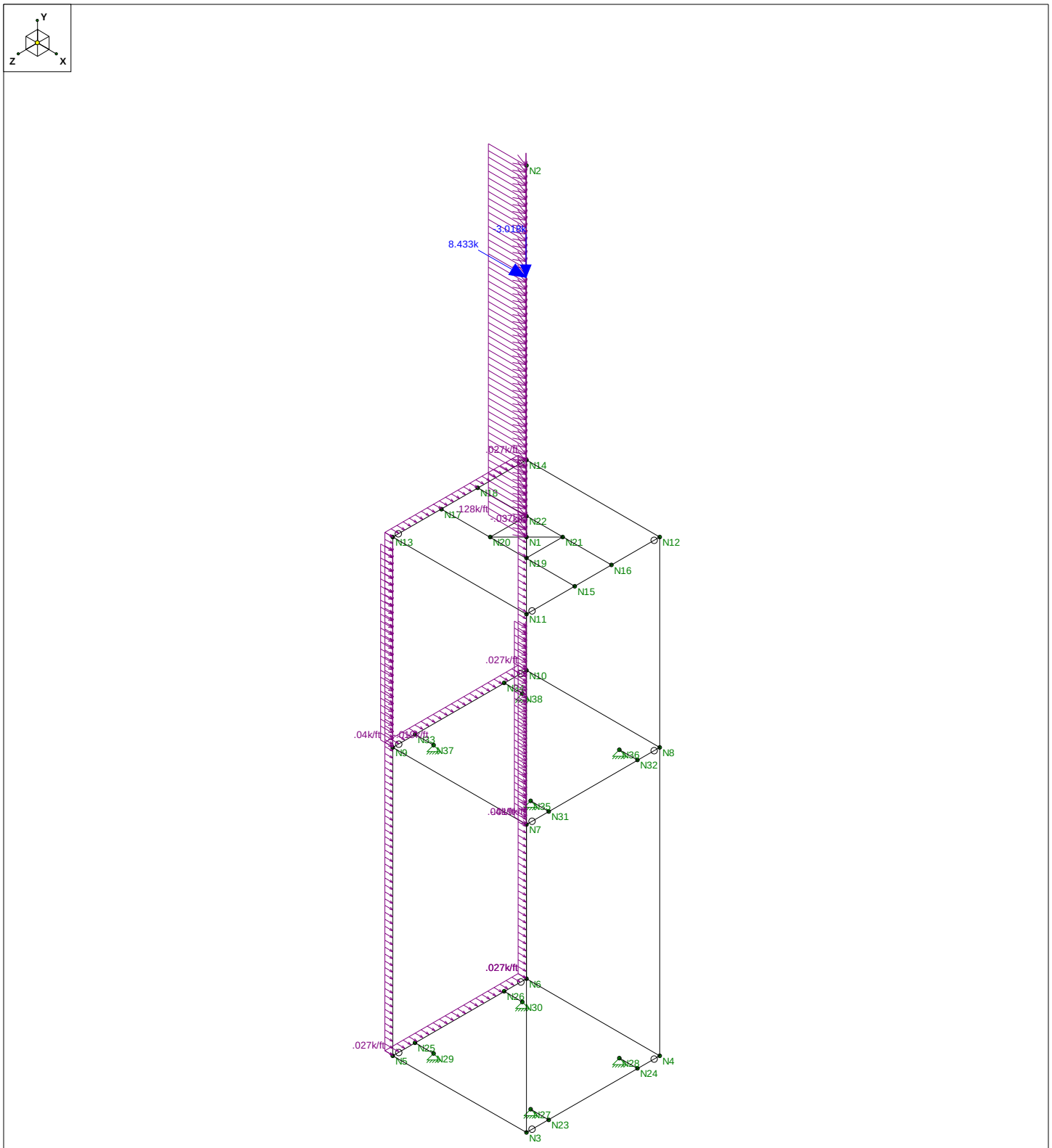

Loads: LC 2, x-dir NESC Extreme Wind on Antenna Frame
Envelope Only Solution

CENTEK Engineering, Inc.		
tjl, cfc	CL&P # 783 - Mast	July 6, 2018 at 9:49 AM
17010.08 / AT&T CT2117	LC #2 Loads	NESC.r3d

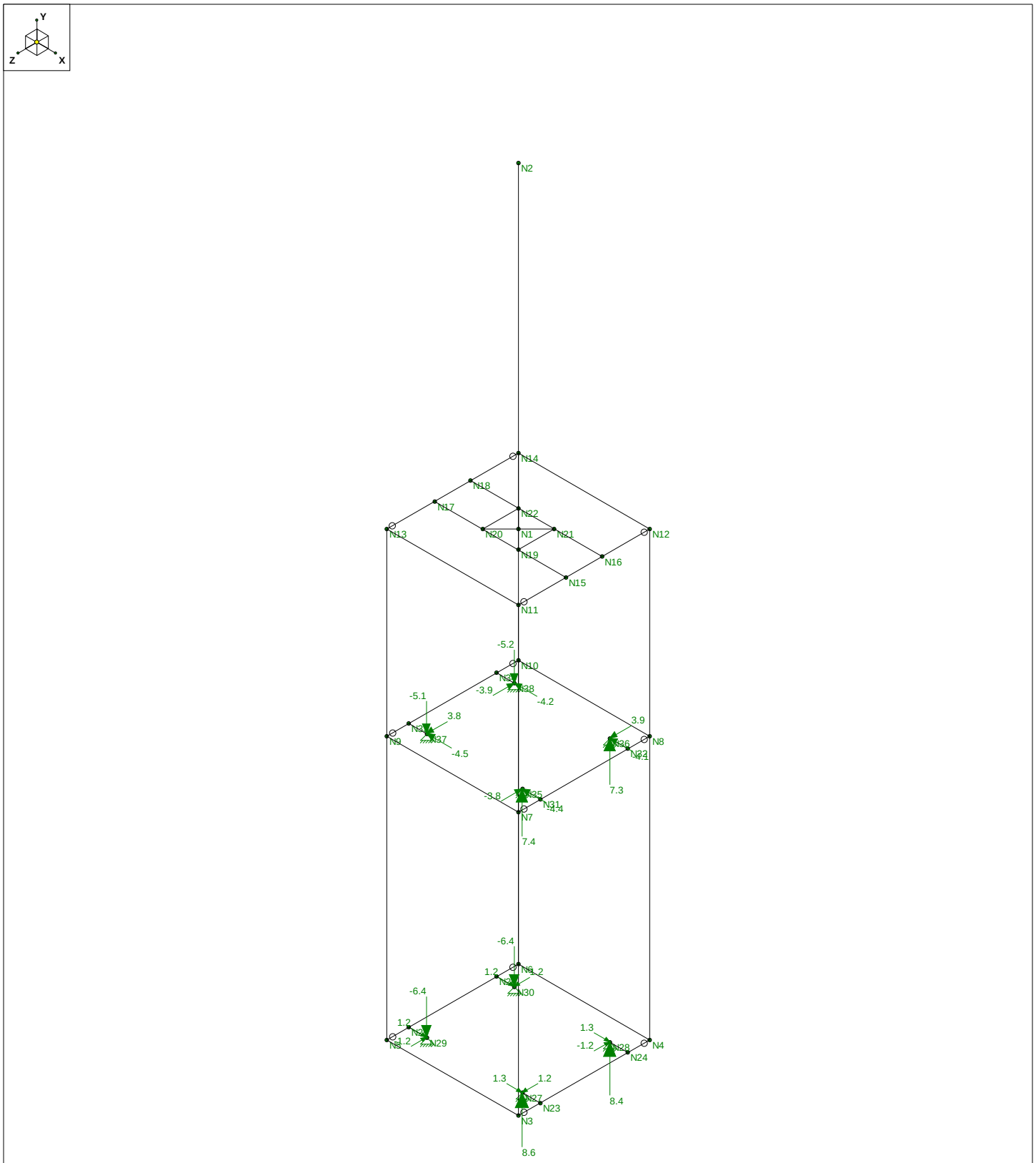

Results for LC 2, x-dir NESC Extreme Wind on Antenna Frame
Reaction and Moment Units are k and k-ft

CENTEK Engineering, Inc.		
tjl, cfc	CL&P # 783 - Mast	July 6, 2018 at 9:51 AM
17010.08 / AT&T CT2117	LC #2 Reactions	NESC.r3d

Coax Cable on CL&P Tower

Distance Between Coax Cable Attach Points =

Coax Cable Span = $Coax_{Span} := \begin{pmatrix} 8.25 \\ 7.375 \\ 8.125 \\ 7.25 \\ 9.5 \\ 13.25 \\ 24.25 \end{pmatrix} \cdot ft$ *(User Input)*

Diameter of Coax Cable = $D_{coax} := 1.98 \cdot in$ *(User Input)*

Weight of Coax Cable = $W_{coax} := 1.04 \cdot plf$ *(User Input)*

Number of Coax Cables = $N_{coax} := 18$ *(User Input)* (Typ. of Two Legs)

Number of Projected Coax Cables Transverse = $NP_{Tcoax} := 9$ *(User Input)*

Extreme Wind Pressure = $qz := 33.8 \cdot psf$ *(User Input)*

Heavy Wind Pressure = $p := 4 \cdot psf$ *(User Input)*

Radial Ice Thickness = $Ir := 0.5 \cdot in$ *(User Input)*

Radial Ice Density = $Id := 56 \cdot pcf$ *(User Input)*

Shape Factor = $Cd_{coax} := 1.6$ *(User Input)*

Overload Factor for NESC Heavy Wind Load = $OF_{HW} := 2.5$ *(User Input)*

Overload Factor for NESC Extreme Wind Load = $OF_{EW} := 1.0$ *(User Input)*

Overload Factor for NESC Heavy Vertical Load = $OF_{HV} := 1.5$ *(User Input)*

Overload Factor for NESC Extreme Vertical Load = $OF_{EV} := 1.0$ *(User Input)*

Wind Area with Ice Transverse = $A_{Tice} := \left(NP_{Tcoax} \cdot D_{coax} + 2 \cdot Ir\right) = 18.82 \cdot in$

Wind Area without Ice Transverse = $A_T := \left(NP_{Tcoax} \cdot D_{coax}\right) = 17.82 \cdot in$

Ice Area per Liner Ft = $Ai_{coax} := \frac{\pi}{4} \cdot \left[\left(D_{coax} + 2 \cdot Ir\right)^2 - D_{coax}^2\right] = 0.027\, ft^2$

Weight of Ice on All Coax Cables = $W_{ice} := Ai_{coax} \cdot Id \cdot N_{coax} = 27.269 \cdot plf$

Heavy Vertical Load =

$$Heavy_{Vert} := \overrightarrow{\left[\left(N_{coax} \cdot W_{coax} + W_{ice}\right) \cdot Coax_{Span} \cdot OF_{HV}\right]}$$

Heavy Transverse Load =

$$Heavy_{Trans} := \overrightarrow{\left(p \cdot A_{Tice} \cdot Cd_{coax} \cdot Coax_{Span} \cdot OF_{HW}\right)}$$

$$Heavy_{Vert} = \begin{pmatrix} 569 \\ 509 \\ 560 \\ 500 \\ 655 \\ 914 \\ 1673 \end{pmatrix} lb \qquad Heavy_{Trans} = \begin{pmatrix} 207 \\ 185 \\ 204 \\ 182 \\ 238 \\ 332 \\ 609 \end{pmatrix} lb$$

Extreme Vertical Load =

$$Extreme_{Vert} := \overrightarrow{\left[\left(N_{coax} \cdot W_{coax}\right) \cdot Coax_{Span} \cdot OF_{EV}\right]}$$

Extreme Transverse Load =

$$Extreme_{Trans} := \overrightarrow{\left[\left(qz \cdot A_T \cdot Cd_{coax}\right) \cdot Coax_{Span} \cdot OF_{EW}\right]}$$

$$Extreme_{Vert} = \begin{pmatrix} 154 \\ 138 \\ 152 \\ 136 \\ 178 \\ 248 \\ 454 \end{pmatrix} lb \qquad Extreme_{Trans} = \begin{pmatrix} 663 \\ 592 \\ 653 \\ 582 \\ 763 \\ 1064 \\ 1947 \end{pmatrix} lb$$

Centek Engineering Inc, Project: "pls tower - reinforced"
Tower Version 12.50, 2:48:23 PM Thursday, August 16, 2018
Undeformed geometry displayed

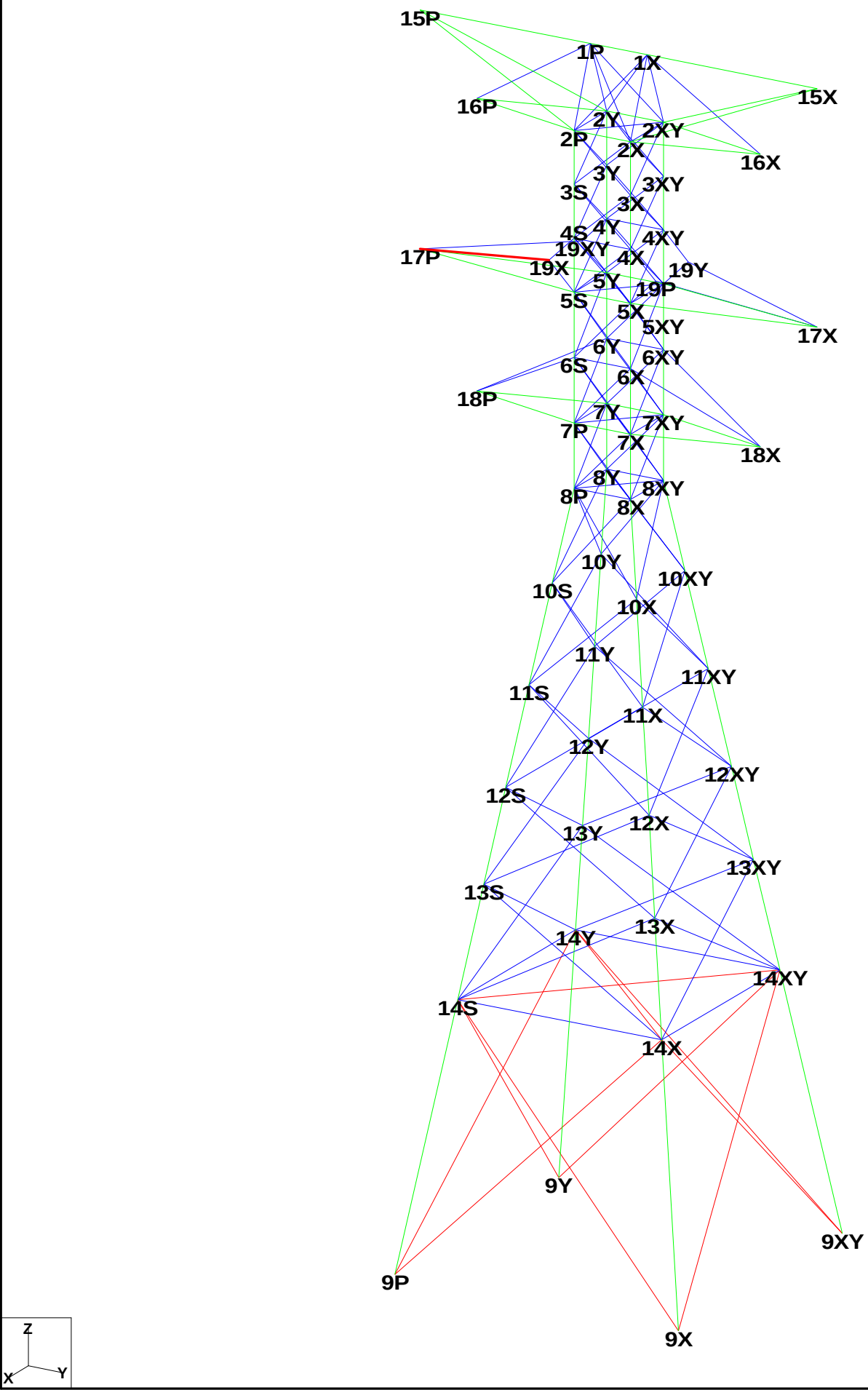

Project Name : 13305.000 - Meriden, CT
Project Notes: CL&P Structure # 783/ AT&T CT2117
Project File : J:\Jobs\1701000.WI\08_Meriden Cariati Blvd CT2117\04_Structural\Backup Documentation\Calcs\Rev (6)\PLS Tower\pls tower - reinforced.tow
Date run : 2:46:42 PM Thursday, August 16, 2018
by : Tower Version 12.50
Licensed to : Centek Engineering Inc

Successfully performed nonlinear analysis

Member "Leg6P" will not be checked for block shear since more than one gage line exists (long edge distance (g) greater than zero); however, end, edge and spacing distances will be checked. ??
Member "Leg6X" will not be checked for block shear since more than one gage line exists (long edge distance (g) greater than zero); however, end, edge and spacing distances will be checked. ??
Member "Leg6XY" will not be checked for block shear since more than one gage line exists (long edge distance (g) greater than zero); however, end, edge and spacing distances will be checked. ??
Member "Leg6Y" will not be checked for block shear since more than one gage line exists (long edge distance (g) greater than zero); however, end, edge and spacing distances will be checked. ??
Member "Leg11P" will not be checked for block shear since more than one gage line exists (long edge distance (g) greater than zero); however, end, edge and spacing distances will be checked. ??
Member "Leg11X" will not be checked for block shear since more than one gage line exists (long edge distance (g) greater than zero); however, end, edge and spacing distances will be checked. ??
Member "Leg11XY" will not be checked for block shear since more than one gage line exists (long edge distance (g) greater than zero); however, end, edge and spacing distances will be checked. ??
Member "Leg11Y" will not be checked for block shear since more than one gage line exists (long edge distance (g) greater than zero); however, end, edge and spacing distances will be checked. ??
Member "Leg13P" will not be checked for block shear since more than one gage line exists (long edge distance (g) greater than zero); however, end, edge and spacing distances will be checked. ??
Member "Leg13X" will not be checked for block shear since more than one gage line exists (long edge distance (g) greater than zero); however, end, edge and spacing distances will be checked. ??
Member "Leg13XY" will not be checked for block shear since more than one gage line exists (long edge distance (g) greater than zero); however, end, edge and spacing distances will be checked. ??
Member "Leg13Y" will not be checked for block shear since more than one gage line exists (long edge distance (g) greater than zero); however, end, edge and spacing distances will be checked. ??
Member "XBrace8P" will not be checked for block shear since more than one gage line exists (long edge distance (g) greater than zero); however, end, edge and spacing distances will be checked. ??
Member "XBrace8X" will not be checked for block shear since more than one gage line exists (long edge distance (g) greater than zero); however, end, edge and spacing distances will be checked. ??
Member "XBrace8XY" will not be checked for block shear since more than one gage line exists (long edge distance (g) greater than zero); however, end, edge and spacing distances will be checked. ??
Member "XBrace8Y" will not be checked for block shear since more than one gage line exists (long edge distance (g) greater than zero); however, end, edge and spacing distances will be checked. ??
Member "XBrace9P" will not be checked for block shear since more than one gage line exists (long edge distance (g) greater than zero); however, end, edge and spacing distances will be checked. ??
Member "XBrace9X" will not be checked for block shear since more than one gage line exists (long edge distance (g) greater than zero); however, end, edge and spacing distances will be checked. ??
Member "XBrace9XY" will not be checked for block shear since more than one gage line exists (long edge distance (g) greater than zero); however, end, edge and spacing distances will be checked. ??
Member "XBrace9Y" will not be checked for block shear since more than one gage line exists (long edge distance (g) greater than zero); however, end, edge and spacing distances will be checked. ??
Member "XBrace10P" will not be checked for block shear since more than one gage line exists (long edge distance (g) greater than zero); however, end, edge and spacing distances will be checked. ??
Member "XBrace10X" will not be checked for block shear since more than one gage line exists (long edge distance (g) greater than zero); however, end, edge and spacing distances will be checked. ??
Member "XBrace10XY" will not be checked for block shear since more than one gage line exists (long edge distance (g) greater than zero); however, end, edge and spacing distances will be checked. ??
Member "XBrace10Y" will not be checked for block shear since more than one gage line exists (long edge distance (g) greater than zero); however, end, edge and spacing distances will be checked. ??
Member "XBrace11P" will not be checked for block shear since more than one gage line exists (long edge distance (g) greater than zero); however, end,

edge and spacing distances will be checked. ??
Member "XBrace11X" will not be checked for block shear since more than one gage line exists (long edge distance (g) greater than zero); however, end, edge and spacing distances will be checked. ??
Member "XBrace11XY" will not be checked for block shear since more than one gage line exists (long edge distance (g) greater than zero); however, end, edge and spacing distances will be checked. ??
Member "XBrace11Y" will not be checked for block shear since more than one gage line exists (long edge distance (g) greater than zero); however, end, edge and spacing distances will be checked. ??
Member "XBrace12P" will not be checked for block shear since more than one gage line exists (long edge distance (g) greater than zero); however, end, edge and spacing distances will be checked. ??
Member "XBrace12X" will not be checked for block shear since more than one gage line exists (long edge distance (g) greater than zero); however, end, edge and spacing distances will be checked. ??
Member "XBrace12XY" will not be checked for block shear since more than one gage line exists (long edge distance (g) greater than zero); however, end, edge and spacing distances will be checked. ??
Member "XBrace12Y" will not be checked for block shear since more than one gage line exists (long edge distance (g) greater than zero); however, end, edge and spacing distances will be checked. ??
Member "XBrace13P" will not be checked for block shear since more than one gage line exists (long edge distance (g) greater than zero); however, end, edge and spacing distances will be checked. ??
Member "XBrace13X" will not be checked for block shear since more than one gage line exists (long edge distance (g) greater than zero); however, end, edge and spacing distances will be checked. ??
Member "XBrace13XY" will not be checked for block shear since more than one gage line exists (long edge distance (g) greater than zero); however, end, edge and spacing distances will be checked. ??
Member "XBrace13Y" will not be checked for block shear since more than one gage line exists (long edge distance (g) greater than zero); however, end, edge and spacing distances will be checked. ??
Member "Arm5P" will not be checked for block shear since more than one gage line exists (long edge distance (g) greater than zero); however, end, edge and spacing distances will be checked. ??
Member "Arm5X" will not be checked for block shear since more than one gage line exists (long edge distance (g) greater than zero); however, end, edge and spacing distances will be checked. ??
Member "Arm5XY" will not be checked for block shear since more than one gage line exists (long edge distance (g) greater than zero); however, end, edge and spacing distances will be checked. ??
Member "Arm5Y" will not be checked for block shear since more than one gage line exists (long edge distance (g) greater than zero); however, end, edge and spacing distances will be checked. ??
Member "Arm6P" will not be checked for block shear since more than one gage line exists (long edge distance (g) greater than zero); however, end, edge and spacing distances will be checked. ??
Member "Arm6Y" will not be checked for block shear since more than one gage line exists (long edge distance (g) greater than zero); however, end, edge and spacing distances will be checked. ??
Member "Diagonal 1P" will not be checked for block shear since more than one gage line exists (long edge distance (g) greater than zero); however, end, edge and spacing distances will be checked. ??
Member "Diagonal 1X" will not be checked for block shear since more than one gage line exists (long edge distance (g) greater than zero); however, end, edge and spacing distances will be checked. ??
Member "Diagonal 1XY" will not be checked for block shear since more than one gage line exists (long edge distance (g) greater than zero); however, end, edge and spacing distances will be checked. ??
Member "Diagonal 1Y" will not be checked for block shear since more than one gage line exists (long edge distance (g) greater than zero); however, end, edge and spacing distances will be checked. ??
The model has 46 warnings. ??

Member check option: ASCE 10
Connection rupture check: ASCE 10
Crossing diagonal check: ASCE 10 [Alternate Unsupported RLOUT = 1]
Included angle check: None
Climbing load check: None
Redundant members checked with: Actual Force

Loads from file: j:\jobs\1701000.wi\08_meriden cariati blvd ct2117\04_structural\backup documentation\calcs\rev (6)\pls tower\meriden.lca

*** Analysis Results:

Maximum element usage is 98.60% for Angle "Leg11X" in load case "NESC Extreme"
Maximum insulator usage is 20.03% for Clamp "Clamp16" in load case "NESC Extreme"

Summary of Joint Support Reactions For All Load Cases:

Load Case	Joint Label	Long. Force (kips)	Tran. Force (kips)	Vert. Force (kips)	Shear Force (kips)	Tran. Moment (ft-k)	Long. Moment (ft-k)	Bending Moment (ft-k)	Vert. Moment (ft-k)	Found. Usage %
NESC Heavy	9P	1.39	-3.02	7.16	3.33	0.32	-0.03	0.32	-0.00	0.00
NESC Heavy	9X	-6.00	-7.60	-47.87	9.69	0.22	0.40	0.46	0.05	0.00
NESC Heavy	9XY	5.72	-4.75	-35.95	7.43	-0.13	0.28	0.31	0.04	0.00
NESC Heavy	9Y	-3.83	-3.11	18.11	4.94	-0.09	-0.03	0.10	-0.01	0.00
NESC Extreme	9P	10.50	-12.42	53.45	16.26	0.48	-0.05	0.48	0.01	0.00
NESC Extreme	9X	-10.27	-11.75	-72.30	15.60	0.37	0.53	0.64	0.07	0.00
NESC Extreme	9XY	10.22	-9.08	-64.13	13.67	-0.13	0.35	0.37	0.06	0.00
NESC Extreme	9Y	-11.80	-9.15	55.41	14.93	-0.09	-0.03	0.10	0.00	0.00

Summary of Joint Support Reactions For All Load Cases in Direction of Leg:

Load Case	Support Joint	Origin Joint	Leg Member	Force In Leg Dir. (kips)	Residual Shear Perpendicular To Leg (kips)	Residual Shear Horizontal To Leg - Res. (kips)	Residual Shear Horizontal To Leg - Long. (kips)	Residual Shear Horizontal To Leg - Tran. (kips)	Total Long. Force (kips)	Total Tran. Force (kips)	Total Vert. Force (kips)
NESC Heavy	9P	14S	Leg13P	-7.674	1.862	1.891	-0.244	1.875	1.39	-3.02	7.16
NESC Heavy	9X	14X	Leg13X	48.808	1.636	1.658	-1.657	-0.056	-6.00	-7.60	-47.87
NESC Heavy	9XY	14XY	Leg13XY	36.698	0.992	1.005	0.032	-1.005	5.72	-4.75	-35.95
NESC Heavy	9Y	14Y	Leg13Y	-18.743	0.943	0.960	0.936	0.213	-3.83	-3.11	18.11
NESC Extreme	9P	14S	Leg13P	-55.707	4.231	4.328	-1.946	3.865	10.50	-12.42	53.45
NESC Extreme	9X	14X	Leg13X	73.956	1.303	1.315	-1.303	0.177	-10.27	-11.75	-72.30
NESC Extreme	9XY	14XY	Leg13XY	65.558	1.167	1.183	0.040	-1.182	10.22	-9.08	-64.13
NESC Extreme	9Y	14Y	Leg13Y	-57.313	2.908	2.951	2.938	0.284	-11.80	-9.15	55.41

Overturning Moment Summary For All Load Cases:

Load Case	Transverse Moment (ft-k)	Longitudinal Moment (ft-k)	Resultant Moment (ft-k)
NESC Heavy	1090.852	228.581	1114.544
NESC Extreme	2452.904	101.369	2454.997

Sections Information:

Section Label	Top Z (ft)	Bottom Z (ft)	Joint Count	Member Count	Tran. Face Top Width (ft)	Tran. Face Bot Width (ft)	Tran. Face Gross Area (ft^2)	Long. Face Top Width (ft)	Long. Face Bot Width (ft)	Long. Face Gross Area (ft^2)
1	78.250	50.000	42	145	0.00	4.00	103.000	28.00	4.00	274.125
2	50.000	0.000	28	78	4.00	20.00	600.000	4.00	20.00	600.000

*** Overall summary for all load cases - Usage = Maximum Stress / Allowable Stress
Printed capacities do not include the strength factor entered for each load case.
The Group Summary reports on the member and load case that resulted in maximum usage
which may not necessarily be the same as that which produces maximum force.

Group Summary (Compression Portion):

Group	Group	Angle	Angle	Steel	Max Usage	Max	Comp.	Comp.	Comp.	L/R	Comp.	Comp.	RLX	RLY	RLZ

Member Label	Comp. Desc.	Comp. Type	Size	Strength (ksi)	Usage %	Control	Cont-rol %	Use In Comp. %	Control Member	Force (kips)	Control Load Case	Capacity (kips)	Connect. Shear Capacity (kips)	Connect. Bearing Capacity (kips)	L/R	KL/R	Length (ft)	Curve	No. Of Bolts	No.
Leg1	Leg1	SAU	2.5X2X0.1875	33.0	17.16	Comp	17.16		Leg1XY	-1.737	NESC Hea	10.122	18.200	21.094	1.000	1.000	1.000	151.34	151.34	5.385
Leg2	Leg2	SAE	4X4X0.3125	33.0	98.29	Tens	97.87		Leg6X	-68.224	NESC Ext	69.710	109.200	105.469	1.000	1.000	1.000	64.48	64.48	4.250
Leg3	Leg3	SAE	4X4X0.4375	33.0	98.60	Comp	98.60		Leg11X	-71.782	NESC Ext	79.787	72.800	196.875	1.000	1.000	1.000	96.70	96.70	6.326
Leg4	Leg4	SAE	5X5X0.375	33.0	96.19	Comp	96.19		Leg13X	-75.538	NESC Ext	78.526	134.400	168.750	0.500	0.500	0.500	108.74	108.74	17.942
XBrace1	XBrace1	SAE	1.75X1.75X0.1875	33.0	77.47	Tens	62.96		XBrace6P	-9.189	NESC Ext	14.594	18.200	21.094	0.750	0.500	0.500	92.98	99.73	5.315
XBrace2	XBrace2	SAU	3X2X0.25	33.0	55.62	Tens	40.52		XBrace10P	-11.062	NESC Ext	28.258	27.300	42.187	0.500	0.750	0.500	91.51	98.63	5.836
XBrace3	XBrace3	SAE	2.5X2.5X0.25	33.0	73.59	Comp	73.59		XBrace13P	-13.394	NESC Ext	26.663	18.200	28.125	1.000	0.500	0.500	91.07	105.54	5.836
XBrace4	XBrace4	SAE	2X2X0.25	33.0	67.15	Comp	67.15		XBrace14Y	-9.861	NESC Ext	14.684	18.200	28.125	0.791	0.582	0.582	140.10	135.36	7.844
XBrace5	XBrace5	SAE	2X2X0.1875	33.0	75.10	Cross	75.10		XBrace19P	-3.226	NESC Ext	4.296	9.100	10.547	1.000	0.559	0.559	217.49	217.49	11.183
XBrace6	XBrace6	SAE	2.5X2.5X0.1875	33.0	30.56	Cross	26.82		XBrace21XY	-1.802	NESC Ext	6.718	9.100	10.547	1.000	0.544	0.544	196.03	196.03	12.709
XBrace7	XBrace7	SAE	3X3X0.25	33.0	23.06	Comp	23.06		XBrace23P	-2.099	NESC Ext	10.760	9.100	14.062	1.000	0.543	0.543	195.71	195.71	15.168
XBrace8	XBrace8	SAU	2X1.5X0.1875	33.0	41.80	Tens	0.00		XBrace25XY	0.000		0.945	18.200	21.094	0.577	0.788	0.577	531.06	433.27	24.697
Horz1	Horizontal 1	SAE	2X2X0.1875	33.0	62.90	Tens	37.52		Horz1X	-3.415	NESC Ext	13.406	9.100	10.547	1.000	1.000	1.000	121.83	121.83	4.000
Horz2	Horizontal 2	SAU	3X2.5X0.25	33.0	45.93	Comp	45.93		Horz7X	-4.180	NESC Ext	11.214	9.100	14.062	1.000	0.500	0.500	182.86	182.86	14.400
Diag1	Diagonal 1	SAU	3.5X2.5X0.25	33.0	14.40	Comp	14.40		Diagonal 1P	-2.820	NESC Hea	19.584	27.300	42.187	1.000	0.500	0.500	145.07	145.07	13.153
Diag2	Diagonal 2	Bar	2x3/16	33.0	88.90	Tens	0.00		Diagonal 8Y	0.000		11.400	9.100	10.547	1.000	1.000	1.000	29.70	52.27	2.475
Diag3	Diagonal 3	Bar	2x1/4	33.0	41.37	Tens	0.00		Diagonal 6Y	0.000		14.428	9.100	14.062	1.000	1.000	1.000	48.00	66.00	4.000
Arm1	Arm1	DAL	2.5X2X0.1875	33.0	84.23	Tens	0.00		Arm2P	0.000		40.905	9.100	21.094	1.000	1.000	1.000	60.53	90.26	4.000
Arm2	Arm2	SAE	2.5X2.5X0.25	33.0	57.43	Comp	57.43		Arm3P	-5.226	NESC Hea	21.113	9.100	14.062	1.000	0.500	0.500	128.68	126.65	8.246
Arm3	**Arm3**	**SAU**	**3.5X2.5X0.25**	**33.0**	**47.56**	**Comp**	**47.56**		**Arm5P**	**-8.656**	**NESC Hea**	**24.070**	**18.200**	**28.125**	**1.000**	**0.500**	**0.500**	**134.18**	**130.84**	**12.166**
Inner1	Inner1	SAE	1.75X1.75X0.1875	33.0	14.72	Tens	11.60		g60P	-1.056	NESC Hea	13.392	9.100	10.547	0.750	0.500	0.500	98.95	109.48	5.657
Inner2	Inner1	SAU	2X1.5X0.1875	33.0	56.46	Comp	56.46		g64P	-0.577	NESC Hea	1.023	9.100	10.547	0.500	0.750	0.500	416.55	416.55	20.365
XBrace1R	XBrace1R	SAE	2X2X0.3125	36.0	0.00		0.00			0.000		0.000	0.000	0.000	0.000	0.000	0.000	0.00	0.00	0.000
Horz3	Horizontal 3	SAE	2X2X0.25	33.0	95.27	Tens	79.40		Horz3X	-7.226	NESC Ext	17.545	9.100	14.062	1.000	1.000	1.000			

5 2 A potentially damaging moment exists in the following members (make sure your system is well triangulated to minimize moments): Arm5P Arm5X Arm5XY Arm5Y ??

122.76 122.76 4.000 4 1
XBrace9 XBrace 9 SAE 4X4X0.375 36.0 0.00 0.00 0.000 0.000 0.000 0.000 0.000 0.000 0.000
0.00 0.00 0.000 0 0
Horz2R Horizontal 2 Rein SAE 4X4X0.5 36.0 0.00 0.00 0.000 0.000 0.000 0.000 0.000 0.000 0.000
0.00 0.00 0.000 0 0
Inner2R Inner2 Rein SAE 4X4X0.375 36.0 0.00 0.00 0.000 0.000 0.000 0.000 0.000 0.000 0.000
0.00 0.00 0.000 0 0
Diag2R Diagonal 2 Rein Bar 2x1/4 36.0 82.31 Tens 0.00 Diagonal 5Y 0.000 8.863 9.100 13.594 1.000 1.000 1.000
127.07 127.07 10.589 4 1

Group Summary (Tension Portion):

Group No.	Group Label	Group Desc.	Angle Type	Angle Size	Steel Strength (ksi)	Max Usage %	Usage Control	Max Use In Tens. %	Tension Member	Tension Force (kips)	Tension Control Load Case	Net Section Capacity (kips)	Tension Connect. Shear Capacity (kips)	Tension Connect. Bearing Capacity (kips)	Tension Connect. Rupture Capacity (kips)	Length Tens. Member (ft)	Hole Of Diameter (in)	Bolts Of Holes Tens.
	Leg1	Leg1	SAU	2.5X2X0.1875	33.0	17.16	Comp	0.00	Leg1Y	0.000		17.096	18.200	21.094	16.406	5.385	1.000	2
	Leg2	Leg2	SAE	4X4X0.3125	33.0	98.29	Tens	98.29	Leg6Y	58.915	NESC Ext	59.941	109.200	105.469	93.750	4.250	2.490	6
	Leg3	Leg3	SAE	4X4X0.4375	33.0	98.60	Comp	88.67	Leg8Y	71.892	NESC Ext	81.077	0.000	0.000	0.000	6.152	2.600	0
	Leg4	Leg4	SAE	5X5X0.375	33.0	96.19	Comp	70.25	Leg12Y	57.937	NESC Ext	82.469	0.000	0.000	0.000	7.515	3.950	0
	XBrace1	XBrace1	SAE	1.75X1.75X0.1875	33.0	77.47	Tens	77.47	XBrace6X	8.987	NESC Ext	14.237	18.200	21.094	11.602	5.315	1.000	2
	XBrace2	XBrace2	SAU	3X2X0.25	33.0	55.62	Tens	55.62	XBrace8X	9.002	NESC Ext	16.186	27.300	42.187	32.812	5.836	3.440	3
	XBrace3	XBrace3	SAE	2.5X2.5X0.25	33.0	73.59	Comp	72.41	XBrace13X	13.179	NESC Ext	29.774	18.200	28.125	21.875	5.836	1.000	2
	XBrace4	XBrace4	SAE	2X2X0.25	33.0	67.15	Comp	51.49	XBrace14XY	9.372	NESC Ext	22.349	18.200	28.125	21.875	7.844	1.000	2
	XBrace5	XBrace5	SAE	2X2X0.1875	33.0	75.10	Cross	47.93	XBrace18Y	3.471	NESC Ext	16.910	9.100	10.547	7.242	11.183	1.000	1
	XBrace6	XBrace6	SAE	2.5X2.5X0.1875	33.0	30.56	Cross	30.56	XBrace20Y	2.507	NESC Ext	22.613	9.100	10.547	8.203	12.709	1.000	1
	XBrace7	XBrace7	SAE	3X3X0.25	33.0	23.06	Comp	18.47	XBrace22Y	1.681	NESC Ext	37.199	9.100	14.062	10.937	15.168	1.000	1
	XBrace8	XBrace8	SAU	2X1.5X0.1875	33.0	41.80	Tens	41.80	XBrace24P	5.951	NESC Ext	14.237	18.200	21.094	16.406	24.697	1.000	2
	Horz1	Horizontal 1	SAE	2X2X0.1875	33.0	62.90	Tens	62.90	Horz1P	4.555	NESC Ext	16.910	9.100	10.547	7.242	4.000	1.000	1
	Horz2	Horizontal 2	SAU	3X2.5X0.25	33.0	45.93	Comp	0.00	Horz7X	0.000		29.626	9.100	14.062	8.625	14.400	1.000	1
	Diag1	Diagonal 1	SAU	3.5X2.5X0.25	33.0	14.40	Comp	0.00	Diagonal 1Y	0.000		34.136	27.300	42.187	32.812	13.153	1.550	3
	Diag2	Diagonal 2	Bar	2x3/16	33.0	88.90	Tens	88.90	Diagonal 7P	6.188	NESC Hea	6.961	9.100	10.547	8.086	2.475	1.000	1
	Diag3	Diagonal 3	Bar	2x1/4	33.0	41.37	Tens	41.37	Diagonal 4P	3.765	NESC Hea	9.281	9.100	14.062	10.781	4.000	1.000	1

```
     Arm1              Arm1   DAL     2.5X2X0.1875     33.0 84.23  Tens 84.23       Arm2P   7.665NESC Hea   25.839    9.100   21.094   16.312  4.000
1 4.000     0.75
     Arm2              Arm2   SAE     2.5X2.5X0.25     33.0 57.43  Comp  0.00       Arm8Y   0.000           29.774   18.200   28.125   40.441  4.000
2 1.000     0.75
     Arm3              Arm3   SAU     3.5X2.5X0.25     33.0 47.56  Comp  0.00       Arm6Y   0.000           33.580   18.200   28.125   25.735  4.000
2 1.650     0.75 A potentially damaging moment exists in the following members (make sure your system is well triangulated to minimize moments): Arm5P
Arm5X Arm5XY Arm5Y  ??
   Inner1            Inner1   SAE 1.75X1.75X0.1875     33.0 14.72  Tens 14.72        g62X   0.838NESC Hea   14.237    9.100   10.547    5.695  5.657
1 1.000     0.75
   Inner2            Inner1   SAU     2X1.5X0.1875     33.0 56.46  Comp  6.86        g64X   0.497NESC Ext   14.237    9.100   10.547    7.242 20.365
1 1.000     0.75
 XBrace1R          XBrace1R   SAE       2X2X0.3125     36.0  0.00        0.00               0.000            0.000    0.000    0.000    0.000  0.000
0 0.000        0
    Horz3      Horizontal 3   SAE         2X2X0.25     33.0 95.27  Tens 95.27      Horz3P   8.669NESC Ext   22.349    9.100   14.062    9.656  4.000
1 1.000     0.75
  XBrace9          XBrace 9   SAE        4X4X0.375     36.0  0.00        0.00               0.000            0.000    0.000    0.000    0.000  0.000
0 0.000        0
   Horz2R Horizontal 2 Rein   SAE          4X4X0.5     36.0  0.00        0.00               0.000            0.000    0.000    0.000    0.000  0.000
0 0.000        0
  Inner2R       Inner2 Rein   SAE        4X4X0.375     36.0  0.00        0.00               0.000            0.000    0.000    0.000    0.000  0.000
0 0.000        0
   Diag2R   Diagonal 2 Rein   Bar            2x1/4     36.0 82.31  Tens 82.31 Diagonal 5P   7.490NESC Hea   10.125    9.100   13.594   11.062 10.589
1 1.000     0.75
```

*** Maximum Stress Summary for Each Load Case

Summary of Maximum Usages by Load Case:

Load Case	Maximum Usage %	Element Label	Element Type
NESC Heavy	88.90	Diagonal 7P	Angle
NESC Extreme	98.60	Leg11X	Angle

Summary of Insulator Usages:

Insulator Label	Insulator Type	Maximum Usage %	Load Case	Weight (lbs)
Clamp1	Clamp	3.35	NESC Heavy	0.0
Clamp2	Clamp	3.25	NESC Heavy	0.0
Clamp3	Clamp	6.19	NESC Heavy	0.0
Clamp4	Clamp	5.13	NESC Heavy	0.0
Clamp5	Clamp	5.82	NESC Heavy	0.0
Clamp6	Clamp	5.24	NESC Heavy	0.0
Clamp7	Clamp	6.08	NESC Heavy	0.0
Clamp8	Clamp	5.15	NESC Heavy	0.0
Clamp9	Clamp	16.24	NESC Extreme	0.0
Clamp10	Clamp	1.42	NESC Extreme	0.0
Clamp11	Clamp	1.55	NESC Extreme	0.0
Clamp12	Clamp	2.02	NESC Extreme	0.0
Clamp13	Clamp	2.17	NESC Extreme	0.0
Clamp14	Clamp	2.79	NESC Extreme	0.0
Clamp15	Clamp	4.91	NESC Heavy	0.0

Clamp16	Clamp	20.03	NESC Extreme	0.0
Clamp17	Clamp	1.42	NESC Extreme	0.0
Clamp18	Clamp	1.55	NESC Extreme	0.0
Clamp19	Clamp	2.02	NESC Extreme	0.0
Clamp20	Clamp	2.17	NESC Extreme	0.0
Clamp21	Clamp	2.79	NESC Extreme	0.0
Clamp22	Clamp	4.67	NESC Heavy	0.0
Clamp23	Clamp	13.02	NESC Extreme	0.0
Clamp24	Clamp	17.62	NESC Extreme	0.0
Clamp25	Clamp	15.38	NESC Extreme	0.0
Clamp26	Clamp	18.66	NESC Extreme	0.0
Clamp27	Clamp	13.00	NESC Extreme	0.0
Clamp28	Clamp	17.25	NESC Extreme	0.0
Clamp29	Clamp	0.23	NESC Extreme	0.0
Clamp30	Clamp	0.35	NESC Heavy	0.0
Clamp31	Clamp	0.87	NESC Extreme	0.0
Clamp32	Clamp	0.64	NESC Extreme	0.0
Clamp33	Clamp	0.64	NESC Extreme	0.0
Clamp34	Clamp	1.37	NESC Heavy	0.0
Clamp35	Clamp	0.23	NESC Extreme	0.0
Clamp36	Clamp	0.28	NESC Heavy	0.0
Clamp37	Clamp	0.87	NESC Extreme	0.0
Clamp38	Clamp	0.64	NESC Extreme	0.0
Clamp39	Clamp	0.64	NESC Extreme	0.0
Clamp40	Clamp	1.16	NESC Heavy	0.0
Clamp43	Clamp	0.23	NESC Extreme	0.0
Clamp44	Clamp	0.23	NESC Extreme	0.0

*** Weight of structure (lbs):

Weight of Angles*Section DLF:	8188.1
Total:	8188.1

*** End of Report

```
*******************************************************************************
*                                                                             *
* TOWER - Analysis and Design -  Copyright Power Line Systems, Inc. 1986-2011 *
*                                                                             *
*******************************************************************************
```

Project Name : 13305.000 - Meriden, CT
Project Notes: CL&P Structure # 783/ AT&T CT2117
Project File : J:\Jobs\1701000.WI\08_Meriden Cariati Blvd CT2117\04_Structural\Backup Documentation\Calcs\Rev (6)\PLS Tower\pls tower - reinforced.tow
Date run : 2:46:42 PM Thursday, August 16, 2018
by : Tower Version 12.50
Licensed to : Centek Engineering Inc

Successfully performed nonlinear analysis

Member "Leg6P" will not be checked for block shear since more than one gage line exists (long edge distance (g) greater than zero); however, end, edge and spacing distances will be checked. ??
Member "Leg6X" will not be checked for block shear since more than one gage line exists (long edge distance (g) greater than zero); however, end, edge and spacing distances will be checked. ??
Member "Leg6XY" will not be checked for block shear since more than one gage line exists (long edge distance (g) greater than zero); however, end, edge and spacing distances will be checked. ??
Member "Leg6Y" will not be checked for block shear since more than one gage line exists (long edge distance (g) greater than zero); however, end, edge and spacing distances will be checked. ??
Member "Leg11P" will not be checked for block shear since more than one gage line exists (long edge distance (g) greater than zero); however, end, edge and spacing distances will be checked. ??
Member "Leg11X" will not be checked for block shear since more than one gage line exists (long edge distance (g) greater than zero); however, end, edge and spacing distances will be checked. ??
Member "Leg11XY" will not be checked for block shear since more than one gage line exists (long edge distance (g) greater than zero); however, end, edge and spacing distances will be checked. ??
Member "Leg11Y" will not be checked for block shear since more than one gage line exists (long edge distance (g) greater than zero); however, end, edge and spacing distances will be checked. ??
Member "Leg13P" will not be checked for block shear since more than one gage line exists (long edge distance (g) greater than zero); however, end, edge and spacing distances will be checked. ??
Member "Leg13X" will not be checked for block shear since more than one gage line exists (long edge distance (g) greater than zero); however, end, edge and spacing distances will be checked. ??
Member "Leg13XY" will not be checked for block shear since more than one gage line exists (long edge distance (g) greater than zero); however, end, edge and spacing distances will be checked. ??
Member "Leg13Y" will not be checked for block shear since more than one gage line exists (long edge distance (g) greater than zero); however, end, edge and spacing distances will be checked. ??
Member "XBrace8P" will not be checked for block shear since more than one gage line exists (long edge distance (g) greater than zero); however, end, edge and spacing distances will be checked. ??
Member "XBrace8X" will not be checked for block shear since more than one gage line exists (long edge distance (g) greater than zero); however, end, edge and spacing distances will be checked. ??
Member "XBrace8XY" will not be checked for block shear since more than one gage line exists (long edge distance (g) greater than zero); however, end, edge and spacing distances will be checked. ??
Member "XBrace8Y" will not be checked for block shear since more than one gage line exists (long edge distance (g) greater than zero); however, end, edge and spacing distances will be checked. ??
Member "XBrace9P" will not be checked for block shear since more than one gage line exists (long edge distance (g) greater than zero); however, end, edge and spacing distances will be checked. ??
Member "XBrace9X" will not be checked for block shear since more than one gage line exists (long edge distance (g) greater than zero); however, end, edge and spacing distances will be checked. ??
Member "XBrace9XY" will not be checked for block shear since more than one gage line exists (long edge distance (g) greater than zero); however, end, edge and spacing distances will be checked. ??
Member "XBrace9Y" will not be checked for block shear since more than one gage line exists (long edge distance (g) greater than zero); however, end, edge and spacing distances will be checked. ??
Member "XBrace10P" will not be checked for block shear since more than one gage line exists (long edge distance (g) greater than zero); however, end, edge and spacing distances will be checked. ??
Member "XBrace10X" will not be checked for block shear since more than one gage line exists (long edge distance (g) greater than zero); however, end,

edge and spacing distances will be checked. ??
Member "XBrace10XY" will not be checked for block shear since more than one gage line exists (long edge distance (g) greater than zero); however, end, edge and spacing distances will be checked. ??
Member "XBrace10Y" will not be checked for block shear since more than one gage line exists (long edge distance (g) greater than zero); however, end, edge and spacing distances will be checked. ??
Member "XBrace11P" will not be checked for block shear since more than one gage line exists (long edge distance (g) greater than zero); however, end, edge and spacing distances will be checked. ??
Member "XBrace11X" will not be checked for block shear since more than one gage line exists (long edge distance (g) greater than zero); however, end, edge and spacing distances will be checked. ??
Member "XBrace11XY" will not be checked for block shear since more than one gage line exists (long edge distance (g) greater than zero); however, end, edge and spacing distances will be checked. ??
Member "XBrace11Y" will not be checked for block shear since more than one gage line exists (long edge distance (g) greater than zero); however, end, edge and spacing distances will be checked. ??
Member "XBrace12P" will not be checked for block shear since more than one gage line exists (long edge distance (g) greater than zero); however, end, edge and spacing distances will be checked. ??
Member "XBrace12X" will not be checked for block shear since more than one gage line exists (long edge distance (g) greater than zero); however, end, edge and spacing distances will be checked. ??
Member "XBrace12XY" will not be checked for block shear since more than one gage line exists (long edge distance (g) greater than zero); however, end, edge and spacing distances will be checked. ??
Member "XBrace12Y" will not be checked for block shear since more than one gage line exists (long edge distance (g) greater than zero); however, end, edge and spacing distances will be checked. ??
Member "XBrace13P" will not be checked for block shear since more than one gage line exists (long edge distance (g) greater than zero); however, end, edge and spacing distances will be checked. ??
Member "XBrace13X" will not be checked for block shear since more than one gage line exists (long edge distance (g) greater than zero); however, end, edge and spacing distances will be checked. ??
Member "XBrace13XY" will not be checked for block shear since more than one gage line exists (long edge distance (g) greater than zero); however, end, edge and spacing distances will be checked. ??
Member "XBrace13Y" will not be checked for block shear since more than one gage line exists (long edge distance (g) greater than zero); however, end, edge and spacing distances will be checked. ??
Member "Arm5P" will not be checked for block shear since more than one gage line exists (long edge distance (g) greater than zero); however, end, edge and spacing distances will be checked. ??
Member "Arm5X" will not be checked for block shear since more than one gage line exists (long edge distance (g) greater than zero); however, end, edge and spacing distances will be checked. ??
Member "Arm5XY" will not be checked for block shear since more than one gage line exists (long edge distance (g) greater than zero); however, end, edge and spacing distances will be checked. ??
Member "Arm5Y" will not be checked for block shear since more than one gage line exists (long edge distance (g) greater than zero); however, end, edge and spacing distances will be checked. ??
Member "Arm6P" will not be checked for block shear since more than one gage line exists (long edge distance (g) greater than zero); however, end, edge and spacing distances will be checked. ??
Member "Arm6Y" will not be checked for block shear since more than one gage line exists (long edge distance (g) greater than zero); however, end, edge and spacing distances will be checked. ??
Member "Diagonal 1P" will not be checked for block shear since more than one gage line exists (long edge distance (g) greater than zero); however, end, edge and spacing distances will be checked. ??
Member "Diagonal 1X" will not be checked for block shear since more than one gage line exists (long edge distance (g) greater than zero); however, end, edge and spacing distances will be checked. ??
Member "Diagonal 1XY" will not be checked for block shear since more than one gage line exists (long edge distance (g) greater than zero); however, end, edge and spacing distances will be checked. ??
Member "Diagonal 1Y" will not be checked for block shear since more than one gage line exists (long edge distance (g) greater than zero); however, end, edge and spacing distances will be checked. ??
The model has 46 warnings. ??

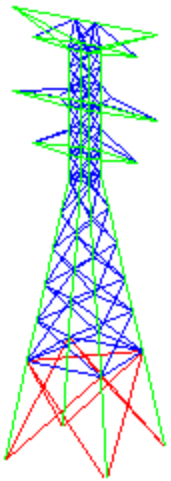

Nonlinear convergence parameters: Use Standard Parameters
Tension only member maximum compression load as a percent of compression capacity: 100%
Member check option: ASCE 10
Connection rupture check: ASCE 10
Crossing diagonal check: ASCE 10 [Alternate Unsupported RLOUT = 1]
Included angle check: None
Climbing load check: None
Redundant members checked with: Actual Force

Joints Geometry:

Joint Label	Symmetry Code	X Coord. (ft)	Y Coord. (ft)	Z Coord. (ft)	X Disp. Rest.	Y Disp. Rest.	Z Disp. Rest.	X Rot. Rest.	Y Rot. Rest.	Z Rot. Rest.
1P	X-Symmetry	0	-2	78.25	Free	Free	Free	Free	Free	Free
2P	XY-Symmetry	2	-2	73.25	Free	Free	Free	Free	Free	Free
7P	XY-Symmetry	2	-2	54.25	Free	Free	Free	Free	Free	Free
8P	XY-Symmetry	2	-2	50	Free	Free	Free	Free	Free	Free
9P	XY-Symmetry	10	-10	0	Fixed	Fixed	Fixed	Fixed	Fixed	Fixed
15P	X-Symmetry	0	-14	78.25	Free	Free	Free	Free	Free	Free
16P	X-Symmetry	0	-10	73.25	Free	Free	Free	Free	Free	Free
17P	X-Symmetry	0	-14	62.75	Free	Free	Free	Free	Free	Free
18P	X-Symmetry	0	-10	54.25	Free	Free	Free	Free	Free	Free
19P	XY-Symmetry	2	3.75	64.5	Free	Free	Free	Free	Free	Free
1X	X-Gen	0	2	78.25	Free	Free	Free	Free	Free	Free
2X	X-GenXY	2	2	73.25	Free	Free	Free	Free	Free	Free
2XY	XY-GenXY	-2	2	73.25	Free	Free	Free	Free	Free	Free
2Y	Y-GenXY	-2	-2	73.25	Free	Free	Free	Free	Free	Free
7X	X-GenXY	2	2	54.25	Free	Free	Free	Free	Free	Free
7XY	XY-GenXY	-2	2	54.25	Free	Free	Free	Free	Free	Free
7Y	Y-GenXY	-2	-2	54.25	Free	Free	Free	Free	Free	Free
8X	X-GenXY	2	2	50	Free	Free	Free	Free	Free	Free
8XY	XY-GenXY	-2	2	50	Free	Free	Free	Free	Free	Free
8Y	Y-GenXY	-2	-2	50	Free	Free	Free	Free	Free	Free
9X	X-GenXY	10	10	0	Fixed	Fixed	Fixed	Fixed	Fixed	Fixed
9XY	XY-GenXY	-10	10	0	Fixed	Fixed	Fixed	Fixed	Fixed	Fixed

9Y	Y-GenXY	-10	-10	0	Fixed	Fixed	Fixed	Fixed	Fixed	Fixed
15X	X-Gen	0	14	78.25	Free	Free	Free	Free	Free	Free
16X	X-Gen	0	10	73.25	Free	Free	Free	Free	Free	Free
17X	X-Gen	0	14	62.75	Free	Free	Free	Free	Free	Free
18X	X-Gen	0	10	54.25	Free	Free	Free	Free	Free	Free
19X	X-GenXY	2	-3.75	64.5	Free	Free	Free	Free	Free	Free
19XY	XY-GenXY	-2	-3.75	64.5	Free	Free	Free	Free	Free	Free
19Y	Y-GenXY	-2	3.75	64.5	Free	Free	Free	Free	Free	Free

Secondary Joints:

Joint Label	Symmetry Code	Origin Joint	End Joint	Fraction	Elevation X (ft)	Disp. Y Rest.	Disp. Z Rest.	Disp. Rest.	X Rot. Rest.	Y Rot. Rest.	Z Rot. Rest.
3S	XY-Symmetry	2P	7P	0	69.75	Free	Free	Free	Free	Free	Free
4S	XY-Symmetry	2P	7P	0	66.25	Free	Free	Free	Free	Free	Free
5S	XY-Symmetry	2P	7P	0	62.75	Free	Free	Free	Free	Free	Free
6S	XY-Symmetry	2P	7P	0	58.5	Free	Free	Free	Free	Free	Free
10S	XY-Symmetry	8P	9P	0	44	Free	Free	Free	Free	Free	Free
11S	XY-Symmetry	8P	9P	0	37.5	Free	Free	Free	Free	Free	Free
12S	XY-Symmetry	8P	9P	0	31	Free	Free	Free	Free	Free	Free
13S	XY-Symmetry	8P	9P	0	24.83	Free	Free	Free	Free	Free	Free
14S	XY-Symmetry	8P	9P	0	17.5	Free	Free	Free	Free	Free	Free
3X	X-GenXY	2P	7P	0	69.75	Free	Free	Free	Free	Free	Free
3XY	XY-GenXY	2P	7P	0	69.75	Free	Free	Free	Free	Free	Free
3Y	Y-GenXY	2P	7P	0	69.75	Free	Free	Free	Free	Free	Free
4X	X-GenXY	2P	7P	0	66.25	Free	Free	Free	Free	Free	Free
4XY	XY-GenXY	2P	7P	0	66.25	Free	Free	Free	Free	Free	Free
4Y	Y-GenXY	2P	7P	0	66.25	Free	Free	Free	Free	Free	Free
5X	X-GenXY	2P	7P	0	62.75	Free	Free	Free	Free	Free	Free
5XY	XY-GenXY	2P	7P	0	62.75	Free	Free	Free	Free	Free	Free
5Y	Y-GenXY	2P	7P	0	62.75	Free	Free	Free	Free	Free	Free
6X	X-GenXY	2P	7P	0	58.5	Free	Free	Free	Free	Free	Free
6XY	XY-GenXY	2P	7P	0	58.5	Free	Free	Free	Free	Free	Free
6Y	Y-GenXY	2P	7P	0	58.5	Free	Free	Free	Free	Free	Free
10X	X-GenXY	8P	9P	0	44	Free	Free	Free	Free	Free	Free
10XY	XY-GenXY	8P	9P	0	44	Free	Free	Free	Free	Free	Free
10Y	Y-GenXY	8P	9P	0	44	Free	Free	Free	Free	Free	Free
11X	X-GenXY	8P	9P	0	37.5	Free	Free	Free	Free	Free	Free
11XY	XY-GenXY	8P	9P	0	37.5	Free	Free	Free	Free	Free	Free
11Y	Y-GenXY	8P	9P	0	37.5	Free	Free	Free	Free	Free	Free
12X	X-GenXY	8P	9P	0	31	Free	Free	Free	Free	Free	Free
12XY	XY-GenXY	8P	9P	0	31	Free	Free	Free	Free	Free	Free
12Y	Y-GenXY	8P	9P	0	31	Free	Free	Free	Free	Free	Free
13X	X-GenXY	8P	9P	0	24.83	Free	Free	Free	Free	Free	Free
13XY	XY-GenXY	8P	9P	0	24.83	Free	Free	Free	Free	Free	Free
13Y	Y-GenXY	8P	9P	0	24.83	Free	Free	Free	Free	Free	Free
14X	X-GenXY	8P	9P	0	17.5	Free	Free	Free	Free	Free	Free
14XY	XY-GenXY	8P	9P	0	17.5	Free	Free	Free	Free	Free	Free
14Y	Y-GenXY	8P	9P	0	17.5	Free	Free	Free	Free	Free	Free

The model contains 30 primary and 36 secondary joints for a total of 66 joints.

Steel Material Properties:

Steel Material Label	Modulus of Elasticity	Yield Stress Fy	Ultimate Stress All. Fu	Member Stress All. Hyp. 1	Member Stress Hyp. 2	Member Rupture Hyp. 1	Member Rupture Hyp. 2	Member Bearing Hyp. 1	Member Bearing Hyp. 2

	(ksi)	(ksi)	(ksi)	(ksi)	(ksi)	(ksi)	(ksi)	(ksi)	(ksi)
A 36	2.9e+004	36	58	0	0	0	0	0	0
A7	2.9e+004	33	60	0	0	0	0	0	0

Bolt Properties:

Bolt Label	Bolt Diameter (in)	Hole Diameter (in)	Ultimate Shear Capacity (kips)	Default End Distance (in)	Default Bolt Spacing (in)	Shear Capacity Hyp. 1 (kips)	Shear Capacity Hyp. 2 (kips)
5/8 A394	0.625	0.75	9.1	1.125	1.5	0	0
5/8 A325	0.625	0.6875	16.8	1.25	1.5	0	0

Number Bolts Used By Type:

Bolt Type	Number Bolts
5/8 A394	343
5/8 A325	32

Angle Properties:

Angle Type	Angle Size	Long Leg (in)	Short Leg (in)	Thick. (in)	Unit Weight (lbs/ft)	Gross Area (in^2)	w/t Ratio	Radius of Gyration Rx (in)	Radius of Gyration Ry (in)	Radius of Gyration Rz (in)	Number of Angles	Wind Width (in)	Short Edge Dist. (in)	Long Edge Dist. (in)	Optimize Cost Factor	Section Modulus (in^3)
SAE	5X5X0.375	5	5	0.375	12.3	3.61	11	1.56	1.56	0.99	1	5	2.5	0	1.0000	0
SAE	4X4X0.5	4	4	0.5	12.8	3.75	6.25	1.22	1.22	0.782	1	4	2	0	1.0000	0
SAE	4X4X0.4375	4	4	0.4375	11.3	3.31	7.29	1.23	1.23	0.785	1	4	2	0	1.0000	0
SAE	4X4X0.375	4	4	0.375	9.8	2.86	8.67	1.23	1.23	0.788	1	4	2	0	1.0000	0
SAE	4X4X0.3125	4	4	0.3125	8.2	2.4	10.6	1.24	1.24	0.791	1	4	2	0	1.0000	0
SAE	3X3X0.25	3	3	0.25	4.9	1.44	9.75	0.93	0.93	0.592	1	3	1.5	0	1.0000	0
SAE	2.5X2.5X0.25	2.5	2.5	0.25	4.1	1.19	7.75	0.769	0.769	0.491	1	2.5	1.25	0	1.0000	0
SAE	2.5X2.5X0.1875	2.5	2.5	0.1875	3.07	0.902	10.67	0.778	0.778	0.495	1	2.5	1.25	0	1.0000	0
SAE	2X2X0.3125	2	2	0.3125	3.92	1.15	3.8	0.601	0.601	0.39	1	2	1	0	1.0000	0
SAE	2X2X0.25	2	2	0.25	3.19	0.94	5	0.609	0.609	0.391	1	2	1	0	1.0000	0
SAE	2X2X0.1875	2	2	0.1875	2.44	0.71	8	0.617	0.617	0.394	1	2	1	0	1.0000	0
SAE	1.75X1.75X0.1875	1.75	1.75	0.1875	2.12	0.62	6	0.537	0.537	0.343	1	1.75	0.875	0	1.0000	0
SAU	3.5X2.5X0.25	3.5	2.5	0.25	4.9	1.44	11.25	1.12	0.735	0.544	1	3.5	1.25	0	1.0000	0
SAU	3X2.5X0.25	3	2.5	0.25	4.5	1.31	9.5	0.945	0.753	0.528	1	3	1.25	0	1.0000	0
SAU	3X2X0.25	3	2	0.25	4.1	1.19	9.75	0.957	0.574	0.435	1	3	1	0	1.0000	0
SAU	2.5X2X0.1875	2.5	2	0.1875	2.75	0.81	10.67	0.793	0.6	0.427	1	2.5	1	0	1.0000	0
SAU	2X1.5X0.1875	2	1.5	0.1875	2.12	0.62	8.33	0.632	0.44	0.322	1	2	0.75	0	1.0000	0
DAL	2.5X2X0.1875	2.5	2	0.1875	5.5	1.62	10.67	0.793	0.923	0.793	2	2.5	1	0	1.0000	0
Bar	2x3/16	2	0	0.1875	1.28	0.375	10.67	1	1	1	1	2	0	0	0.0000	0
Bar	2x1/4	2	0	0.25	1.7	0.5	8	1	1	1	1	2	0	0	0.0000	0

Angle Groups:

Group Label	Group Description	Angle Type	Angle Size	Material Type	Element Type	Group Type	Optimize Group	Allow. Add. Angle Width For Optimize (in)
Leg1	Leg1	SAU	2.5X2X0.1875	A7	Truss	Other	None	0.000

Leg2	Leg2	SAE	4X4X0.3125	A7	Beam	Leg	None	0.000
Leg3	Leg3	SAE	4X4X0.4375	A7	Beam	Leg	None	0.000
Leg4	Leg4	SAE	5X5X0.375	A7	Beam	Leg	None	0.000
XBrace1	XBrace1	SAE	1.75X1.75X0.1875	A7	Truss	Crossing Diagonal	None	0.000
XBrace2	XBrace2	SAU	3X2X0.25	A7	Truss	Crossing Diagonal	None	0.000
XBrace3	XBrace3	SAE	2.5X2.5X0.25	A7	Truss	Crossing Diagonal	None	0.000
XBrace4	XBrace4	SAE	2X2X0.25	A7	Truss	Crossing Diagonal	None	0.000
XBrace5	XBrace5	SAE	2X2X0.1875	A7	Truss	Crossing Diagonal	None	0.000
XBrace6	XBrace6	SAE	2.5X2.5X0.1875	A7	Truss	Crossing Diagonal	None	0.000
XBrace7	XBrace7	SAE	3X3X0.25	A7	Truss	Crossing Diagonal	None	0.000
XBrace8	XBrace8	SAU	2X1.5X0.1875	A7	T-Only	Other	None	0.000
Horz1	Horizontal 1	SAE	2X2X0.1875	A7	Truss	Other	None	0.000
Horz2	Horizontal 2	SAU	3X2.5X0.25	A7	Truss	Other	None	0.000
Diag1	Diagonal 1	SAU	3.5X2.5X0.25	A7	Beam	Other	None	0.000
Diag2	Diagonal 2	Bar	2x3/16	A7	Truss	Other	None	0.000
Diag3	Diagonal 3	Bar	2x1/4	A7	Truss	Other	None	0.000
Arm1	Arm1	DAL	2.5X2X0.1875	A7	Beam	Other	None	0.000
Arm2	Arm2	SAE	2.5X2.5X0.25	A7	Beam	Other	None	0.000
Arm3	Arm3	SAU	3.5X2.5X0.25	A7	Beam	Other	None	0.000
Inner1	Inner1	SAE	1.75X1.75X0.1875	A7	Truss	Other	None	0.000
Inner2	Inner1	SAU	2X1.5X0.1875	A7	T-Only	Other	None	0.000
XBrace1R	XBrace1R	SAE	2X2X0.3125	A 36	Truss	Crossing Diagonal	None	0.000
Horz3	Horizontal 3	SAE	2X2X0.25	A7	Truss	Other	None	0.000
XBrace9	XBrace 9	SAE	4X4X0.375	A 36	Truss	Crossing Diagonal	None	0.000
Horz2R	Horizontal 2 Rein	SAE	4X4X0.5	A 36	Truss	Other	None	0.000
Inner2R	Inner2 Rein	SAE	4X4X0.375	A 36	Truss	Other	None	0.000
Diag2R	Diagonal 2 Rein	Bar	2x1/4	A 36	Truss	Other	None	0.000

Aggregate Angle Information:

Note: Estimate of surface area reported for painting purposes, not wind loading.

Angle Type	Angle Size	Material Type	Total Length (ft)	Total Surface Area (ft^2)	Total Weight (lbs)
SAU	2.5X2X0.1875	A7	21.54	16.16	59.24
SAE	4X4X0.3125	A7	76.00	101.33	623.20
SAE	4X4X0.4375	A7	120.23	160.30	1358.55
SAE	5X5X0.375	A7	101.83	169.72	1252.52
SAE	1.75X1.75X0.1875	A7	199.65	116.46	423.26
SAU	3X2X0.25	A7	93.38	77.82	382.86
SAE	2.5X2.5X0.25	A7	128.66	107.22	527.51
SAE	2X2X0.25	A7	147.39	98.26	470.17
SAE	2X2X0.1875	A7	121.46	80.97	296.37
SAE	2.5X2.5X0.1875	A7	101.67	84.73	312.14
SAE	3X3X0.25	A7	121.34	121.34	594.58
SAU	2X1.5X0.1875	A7	238.30	139.01	505.20
SAU	3X2.5X0.25	A7	57.60	52.80	259.20
DAL	2.5X2X0.1875	A7	28.00	21.00	154.00
SAU	3.5X2.5X0.25	A7	109.27	109.27	535.44
Bar	2x3/16	A7	75.77	25.26	96.99
Bar	2x1/4	A7	16.00	5.33	27.20
Bar	2x1/4	A 36	42.36	14.12	72.00

Sections:
The adjustment factors below only apply to dead load and wind areas that are calculated for members in the model.
They do not apply to equipment or to manually input dead load and drag areas.

Section Label	Joint Defining Section Bottom	Dead Load Adjust. Factor	Transverse Drag x Area Factor For Face	Longitudinal Drag x Area Factor For Face	Transverse Area Factor (CD From Code)	Longitudinal Area Factor (CD From Code)	Af Flat Factor For Face EIA Only	Ar Round Factor For Face EIA Only	Transverse Drag x Area Factor For All	Longitudinal Drag x Area Factor For All	SAPS Angle Drag x Area Factor	SAPS Round Drag x Area Factor	Force Solid Face
1	8P	1.000	3.250	3.250	1.000	1.000	0.000	0.000	1.000	1.000	0.000	0.000	None
2	9P	1.050	3.250	3.250	1.050	1.050	0.000	0.000	1.000	1.000	0.000	0.000	None

Angle Member Connectivity:

Member Label	Group Label	Section Label	Symmetry Code	Origin Joint	End Joint	Ecc. Code	Rest. Code	Ratio RLX	Ratio RLY	Ratio RLZ	Bolt Type	# Bolts	# Bolt Holes	# Shear Planes	Connect Leg	Short Edge Dist. (in)	Long Edge Dist. (in)	End Dist. (in)	Bolt Spacing (in)	Shear Path Length (in)	Tension Path Length (in)	Rest. Coef.
Leg1P	Leg1		XY-Symmetry	1P	2P	3	4	1	1	1	5/8 A394	2	1	1	Short only	0.875	0	0.875	3.5	0	0	0
Leg1X	Leg1		X-GenXY	1X	2X	3	4	1	1	1	5/8 A394	2	1	1	Short only	0.875	0	0.875	3.5	0	0	0
Leg1XY	Leg1		XY-GenXY	1X	2XY	3	4	1	1	1	5/8 A394	2	1	1	Short only	0.875	0	0.875	3.5	0	0	0
Leg1Y	Leg1		Y-GenXY	1P	2Y	3	4	1	1	1	5/8 A394	2	1	1	Short only	0.875	0	0.875	3.5	0	0	0
Leg2P	Leg2		XY-Symmetry	2P	3S	1	4	1	1	1	5/8 A394	0	2.5	0		0	0	0	0	0	0	0
Leg2X	Leg2		X-GenXY	2X	3X	1	4	1	1	1	5/8 A394	0	2.5	0		0	0	0	0	0	0	0
Leg2XY	Leg2		XY-GenXY	2XY	3XY	1	4	1	1	1	5/8 A394	0	2.5	0		0	0	0	0	0	0	0
Leg2Y	Leg2		Y-GenXY	2Y	3Y	1	4	1	1	1	5/8 A394	0	2.5	0		0	0	0	0	0	0	0
Leg3P	Leg2		XY-Symmetry	3S	4S	1	4	1	1	1	5/8 A394	0	2.5	0		0	0	0	0	0	0	0
Leg3X	Leg2		X-GenXY	3X	4X	1	4	1	1	1	5/8 A394	0	2.5	0		0	0	0	0	0	0	0
Leg3XY	Leg2		XY-GenXY	3XY	4XY	1	4	1	1	1	5/8 A394	0	2.5	0		0	0	0	0	0	0	0
Leg3Y	Leg2		Y-GenXY	3Y	4Y	1	4	1	1	1	5/8 A394	0	2.5	0		0	0	0	0	0	0	0
Leg4P	Leg2		XY-Symmetry	4S	5S	1	4	1	1	1	5/8 A394	0	2.5	0		0	0	0	0	0	0	0
Leg4X	Leg2		X-GenXY	4X	5X	1	4	1	1	1	5/8 A394	0	2.5	0		0	0	0	0	0	0	0
Leg4XY	Leg2		XY-GenXY	4XY	5XY	1	4	1	1	1	5/8 A394	0	2.5	0		0	0	0	0	0	0	0
Leg4Y	Leg2		Y-GenXY	4Y	5Y	1	4	1	1	1	5/8 A394	0	2.5	0		0	0	0	0	0	0	0
Leg5P	Leg2		XY-Symmetry	5S	6S	1	4	1	1	1	5/8 A394	0	2.5	0		0	0	0	0	0	0	0
Leg5X	Leg2		X-GenXY	5X	6X	1	4	1	1	1	5/8 A394	0	2.5	0		0	0	0	0	0	0	0
Leg5XY	Leg2		XY-GenXY	5XY	6XY	1	4	1	1	1	5/8 A394	0	2.5	0		0	0	0	0	0	0	0

Leg5Y	Leg2	Y-GenXY	5Y	6Y	1	4	1	1	1	5/8	A394	0	2.5	0		0	0	0	0	0	0	0
Leg6P	Leg2	XY-Symmetry	6S	7P	1	4	1	1	1	5/8	A394	6	2.49	2	Both	1.5	2.75	1	2.5	0	0	0
Leg6X	Leg2	X-GenXY	6X	7X	1	4	1	1	1	5/8	A394	6	2.49	2	Both	1.5	2.75	1	2.5	0	0	0
Leg6XY	Leg2	XY-GenXY	6XY	7XY	1	4	1	1	1	5/8	A394	6	2.49	2	Both	1.5	2.75	1	2.5	0	0	0
Leg6Y	Leg2	Y-GenXY	6Y	7Y	1	4	1	1	1	5/8	A394	6	2.49	2	Both	1.5	2.75	1	2.5	0	0	0
Leg7P	Leg3	XY-Symmetry	7P	8P	1	4	1	1	1	5/8	A394	0	2.6	0		0	0	0	0	0	0	0
Leg7X	Leg3	X-GenXY	7X	8X	1	4	1	1	1	5/8	A394	0	2.6	0		0	0	0	0	0	0	0
Leg7XY	Leg3	XY-GenXY	7XY	8XY	1	4	1	1	1	5/8	A394	0	2.6	0		0	0	0	0	0	0	0
Leg7Y	Leg3	Y-GenXY	7Y	8Y	1	4	1	1	1	5/8	A394	0	2.6	0		0	0	0	0	0	0	0
Leg8P	Leg3	XY-Symmetry	8P	10S	1	4	0.5	0.5	0.5	5/8	A394	0	2.6	0		0	0	0	0	0	0	0
Leg8X	Leg3	X-GenXY	8X	10X	1	4	0.5	0.5	0.5	5/8	A394	0	2.6	0		0	0	0	0	0	0	0
Leg8XY	Leg3	XY-GenXY	8XY	10XY	1	4	0.5	0.5	0.5	5/8	A394	0	2.6	0		0	0	0	0	0	0	0
Leg8Y	Leg3	Y-GenXY	8Y	10Y	1	4	0.5	0.5	0.5	5/8	A394	0	2.6	0		0	0	0	0	0	0	0
Leg9P	Leg3	XY-Symmetry	10S	11S	1	4	0.5	0.5	0.5	5/8	A394	0	2.6	0		0	0	0	0	0	0	0
Leg9X	Leg3	X-GenXY	10X	11X	1	4	0.5	0.5	0.5	5/8	A394	0	2.6	0		0	0	0	0	0	0	0
Leg9XY	Leg3	XY-GenXY	10XY	11XY	1	4	0.5	0.5	0.5	5/8	A394	0	2.6	0		0	0	0	0	0	0	0
Leg9Y	Leg3	Y-GenXY	10Y	11Y	1	4	0.5	0.5	0.5	5/8	A394	0	2.6	0		0	0	0	0	0	0	0
Leg10P	Leg3	XY-Symmetry	11S	12S	1	4	1	1	1	5/8	A394	0	2.6	0		0	0	0	0	0	0	0
Leg10X	Leg3	X-GenXY	11X	12X	1	4	1	1	1	5/8	A394	0	2.6	0		0	0	0	0	0	0	0
Leg10XY	Leg3	XY-GenXY	11XY	12XY	1	4	1	1	1	5/8	A394	0	2.6	0		0	0	0	0	0	0	0
Leg10Y	Leg3	Y-GenXY	11Y	12Y	1	4	1	1	1	5/8	A394	0	2.6	0		0	0	0	0	0	0	0
Leg11P	Leg3	XY-Symmetry	12S	13S	1	4	1	1	1	5/8	A394	8	3.45	1	Both	0.875	2.125	1.3125	2.75	0	0	0
Leg11X	Leg3	X-GenXY	12X	13X	1	4	1	1	1	5/8	A394	8	3.45	1	Both	0.875	2.125	1.3125	2.75	0	0	0
Leg11XY	Leg3	XY-GenXY	12XY	13XY	1	4	1	1	1	5/8	A394	8	3.45	1	Both	0.875	2.125	1.3125	2.75	0	0	0
Leg11Y	Leg3	Y-GenXY	12Y	13Y	1	4	1	1	1	5/8	A394	8	3.45	1	Both	0.875	2.125	1.3125	2.75	0	0	0
Leg12P	Leg4	XY-Symmetry	13S	14S	1	4	1	1	1	5/8	A394	0	3.95	0		0	0	0	0	0	0	0
Leg12X	Leg4	X-GenXY	13X	14X	1	4	1	1	1	5/8	A394	0	3.95	0		0	0	0	0	0	0	0
Leg12XY	Leg4	XY-GenXY	13XY	14XY	1	4	1	1	1	5/8	A394	0	3.95	0		0	0	0	0	0	0	0
Leg12Y	Leg4	Y-GenXY	13Y	14Y	1	4	1	1	1	5/8	A394	0	3.95	0		0	0	0	0	0	0	0
Leg13P	Leg4	XY-Symmetry	14S	9P	1	4	0.5	0.5	0.5	5/8	A325	8	2.48	1	Both	1.25	2.75	1.25				

```
5      0       0     0
       Leg13X    Leg4              X-GenXY    14X    9X    1     4   0.5   0.5   0.5 5/8 A325     8   2.48       1       Both  1.25  2.75   1.25
5      0       0     0
      Leg13XY    Leg4             XY-GenXY   14XY   9XY    1     4   0.5   0.5   0.5 5/8 A325     8   2.48       1       Both  1.25  2.75   1.25
5      0       0     0
       Leg13Y    Leg4              Y-GenXY    14Y    9Y    1     4   0.5   0.5   0.5 5/8 A325     8   2.48       1       Both  1.25  2.75   1.25
5      0       0     0
     XBrace1P XBrace1          XY-Symmetry     1P    2X    2     4  0.75   0.5   0.5 5/8 A394     1      1       1 Short only  0.75     0  0.875
0      0       0     0
     XBrace1X XBrace1              X-GenXY     1X    2P    2     4  0.75   0.5   0.5 5/8 A394     1      1       1 Short only  0.75     0  0.875
0      0       0     0
    XBrace1XY XBrace1             XY-GenXY     1X    2Y    2     4  0.75   0.5   0.5 5/8 A394     1      1       1 Short only  0.75     0  0.875
0      0       0     0
     XBrace1Y XBrace1              Y-GenXY     1P   2XY    2     4  0.75   0.5   0.5 5/8 A394     1      1       1 Short only  0.75     0  0.875
0      0       0     0
     XBrace2P XBrace1          XY-Symmetry     2P    3X    2     5  0.75   0.5   0.5 5/8 A394     2      1       1 Short only  0.75     0  0.875
1.6875      0       0     0
     XBrace2X XBrace1              X-GenXY     2X    3S    2     5  0.75   0.5   0.5 5/8 A394     2      1       1 Short only  0.75     0  0.875
1.6875      0       0     0
    XBrace2XY XBrace1             XY-GenXY    2XY    3Y    2     5  0.75   0.5   0.5 5/8 A394     2      1       1 Short only  0.75     0  0.875
1.6875      0       0     0
     XBrace2Y XBrace1              Y-GenXY     2Y   3XY    2     5  0.75   0.5   0.5 5/8 A394     2      1       1 Short only  0.75     0  0.875
1.6875      0       0     0
     XBrace3P XBrace1          XY-Symmetry     2X   3XY    2     5  0.75   0.5   0.5 5/8 A394     2      1       1 Short only  0.75     0  0.875
1.6875      0       0     0
     XBrace3X XBrace1              X-GenXY     2P    3Y    2     5  0.75   0.5   0.5 5/8 A394     2      1       1 Short only  0.75     0  0.875
1.6875      0       0     0
    XBrace3XY XBrace1             XY-GenXY     2Y    3S    2     5  0.75   0.5   0.5 5/8 A394     2      1       1 Short only  0.75     0  0.875
1.6875      0       0     0
     XBrace3Y XBrace1              Y-GenXY    2XY    3X    2     5  0.75   0.5   0.5 5/8 A394     2      1       1 Short only  0.75     0  0.875
1.6875      0       0     0
     XBrace4P XBrace1          XY-Symmetry     3S    4X    2     5  0.75   0.5   0.5 5/8 A394     2      1       1 Short only  0.75     0  0.875
1.6875      0       0     0
     XBrace4X XBrace1              X-GenXY     3X    4S    2     5  0.75   0.5   0.5 5/8 A394     2      1       1 Short only  0.75     0  0.875
1.6875      0       0     0
    XBrace4XY XBrace1             XY-GenXY    3XY    4Y    2     5  0.75   0.5   0.5 5/8 A394     2      1       1 Short only  0.75     0  0.875
1.6875      0       0     0
     XBrace4Y XBrace1              Y-GenXY     3Y   4XY    2     5  0.75   0.5   0.5 5/8 A394     2      1       1 Short only  0.75     0  0.875
1.6875      0       0     0
     XBrace5P XBrace1          XY-Symmetry     3X   4XY    2     5  0.75   0.5   0.5 5/8 A394     2      1       1 Short only  0.75     0  0.875
1.6875      0       0     0
     XBrace5X XBrace1              X-GenXY     3S    4Y    2     5  0.75   0.5   0.5 5/8 A394     2      1       1 Short only  0.75     0  0.875
1.6875      0       0     0
    XBrace5XY XBrace1             XY-GenXY     3Y    4S    2     5  0.75   0.5   0.5 5/8 A394     2      1       1 Short only  0.75     0  0.875
1.6875      0       0     0
     XBrace5Y XBrace1              Y-GenXY    3XY    4X    2     5  0.75   0.5   0.5 5/8 A394     2      1       1 Short only  0.75     0  0.875
1.6875      0       0     0
     XBrace6P XBrace1          XY-Symmetry     4S    5X    2     5  0.75   0.5   0.5 5/8 A394     2      1       1 Short only  0.75     0  0.875
1.625      0       0     0
     XBrace6X XBrace1              X-GenXY     4X    5S    2     5  0.75   0.5   0.5 5/8 A394     2      1       1 Short only  0.75     0  0.875
1.625      0       0     0
    XBrace6XY XBrace1             XY-GenXY    4XY    5Y    2     5  0.75   0.5   0.5 5/8 A394     2      1       1 Short only  0.75     0  0.875
1.625      0       0     0
     XBrace6Y XBrace1              Y-GenXY     4Y   5XY    2     5  0.75   0.5   0.5 5/8 A394     2      1       1 Short only  0.75     0  0.875
1.625      0       0     0
     XBrace7P XBrace1          XY-Symmetry     4X   5XY    2     5  0.75   0.5   0.5 5/8 A394     2      1       1 Short only  0.75     0  0.875
1.625      0       0     0
     XBrace7X XBrace1              X-GenXY     4S    5Y    2     5  0.75   0.5   0.5 5/8 A394     2      1       1 Short only  0.75     0  0.875
1.625      0       0     0
```

XBrace7XY	XBrace1	XY-GenXY	4Y	5S	2	5	0.75	0.5	0.5	5/8	A394	2	1	1	Short only	0.75	0	0.875	1.625	0	0	0
XBrace7Y	XBrace1	Y-GenXY	4XY	5X	2	5	0.75	0.5	0.5	5/8	A394	2	1	1	Short only	0.75	0	0.875	1.625	0	0	0
XBrace8P	XBrace2	XY-Symmetry	5S	6X	2	5	0.5	0.75	0.5	5/8	A394	3	3.44	1	Long only	0.875	2	0.875	2.625	0	0	0
XBrace8X	XBrace2	X-GenXY	5X	6S	2	5	0.5	0.75	0.5	5/8	A394	3	3.44	1	Long only	0.875	2	0.875	2.625	0	0	0
XBrace8XY	XBrace2	XY-GenXY	5XY	6Y	2	5	0.5	0.75	0.5	5/8	A394	3	3.44	1	Long only	0.875	2	0.875	2.625	0	0	0
XBrace8Y	XBrace2	Y-GenXY	5Y	6XY	2	5	0.5	0.75	0.5	5/8	A394	3	3.44	1	Long only	0.875	2	0.875	2.625	0	0	0
XBrace9P	XBrace2	XY-Symmetry	5X	6XY	2	5	0.5	0.75	0.5	5/8	A394	3	3.44	1	Long only	0.875	2	0.875	2.625	0	0	0
XBrace9X	XBrace2	X-GenXY	5S	6Y	2	5	0.5	0.75	0.5	5/8	A394	3	3.44	1	Long only	0.875	2	0.875	2.625	0	0	0
XBrace9XY	XBrace2	XY-GenXY	5Y	6S	2	5	0.5	0.75	0.5	5/8	A394	3	3.44	1	Long only	0.875	2	0.875	2.625	0	0	0
XBrace9Y	XBrace2	Y-GenXY	5XY	6X	2	5	0.5	0.75	0.5	5/8	A394	3	3.44	1	Long only	0.875	2	0.875	2.625	0	0	0
XBrace10P	XBrace2	XY-Symmetry	6S	7X	2	5	0.5	0.75	0.5	5/8	A394	3	2.71	1	Long only	0.875	2	0.875	4	0	0	0
XBrace10X	XBrace2	X-GenXY	6X	7P	2	5	0.5	0.75	0.5	5/8	A394	3	2.71	1	Long only	0.875	2	0.875	4	0	0	0
XBrace10XY	XBrace2	XY-GenXY	6XY	7Y	2	5	0.5	0.75	0.5	5/8	A394	3	2.71	1	Long only	0.875	2	0.875	4	0	0	0
XBrace10Y	XBrace2	Y-GenXY	6Y	7XY	2	5	0.5	0.75	0.5	5/8	A394	3	2.71	1	Long only	0.875	2	0.875	4	0	0	0
XBrace11P	XBrace2	XY-Symmetry	6X	7XY	2	5	0.5	0.75	0.5	5/8	A394	3	2.71	1	Long only	0.875	2	0.875	4	0	0	0
XBrace11X	XBrace2	X-GenXY	6S	7Y	2	5	0.5	0.75	0.5	5/8	A394	3	2.71	1	Long only	0.875	2	0.875	4	0	0	0
XBrace11XY	XBrace2	XY-GenXY	6Y	7P	2	5	0.5	0.75	0.5	5/8	A394	3	2.71	1	Long only	0.875	2	0.875	4	0	0	0
XBrace11Y	XBrace2	Y-GenXY	6XY	7X	2	5	0.5	0.75	0.5	5/8	A394	3	2.71	1	Long only	0.875	2	0.875	4	0	0	0
XBrace12P	XBrace3	XY-Symmetry	7P	8X	2	5	0.75	0.5	0.5	5/8	A394	2	1	1	Short only	1	1.25	0.875	3.5	0	0	0
XBrace12X	XBrace3	X-GenXY	7X	8P	2	5	0.75	0.5	0.5	5/8	A394	2	1	1	Short only	1	1.25	0.875	3.5	0	0	0
XBrace12XY	XBrace3	XY-GenXY	7XY	8Y	2	5	0.75	0.5	0.5	5/8	A394	2	1	1	Short only	1	1.25	0.875	3.5	0	0	0
XBrace12Y	XBrace3	Y-GenXY	7Y	8XY	2	5	0.75	0.5	0.5	5/8	A394	2	1	1	Short only	1	1.25	0.875	3.5	0	0	0
XBrace13P	XBrace3	XY-Symmetry	7X	8XY	2	5	0.75	0.5	0.5	5/8	A394	2	1	1	Short only	1	1.25	0.875	3.5	0	0	0
XBrace13X	XBrace3	X-GenXY	7P	8Y	2	5	0.75	0.5	0.5	5/8	A394	2	1	1	Short only	1	1.25	0.875	3.5	0	0	0
XBrace13XY	XBrace3	XY-GenXY	7Y	8P	2	5	0.75	0.5	0.5	5/8	A394	2	1	1	Short only	1	1.25	0.875	3.5	0	0	0
XBrace13Y	XBrace3	Y-GenXY	7XY	8X	2	5	0.75	0.5	0.5	5/8	A394	2	1	1	Short only	1	1.25	0.875	3.5	0	0	0
XBrace14P	XBrace4	XY-Symmetry	8X	10S	2	5	0.791	0.582	0.582	5/8	A394	2	1	1	Short only	0.875	0	0.875	2.5	0	0	0
XBrace14X	XBrace4	X-GenXY	8P	10X	2	5	0.791	0.582	0.582	5/8	A394	2	1	1	Short only	0.875	0	0.875	2.5	0	0	0
XBrace14XY	XBrace4	XY-GenXY	8Y	10XY	2	5	0.791	0.582	0.582	5/8	A394	2	1	1	Short only	0.875	0	0.875	2.5	0	0	0
XBrace14Y	XBrace4	Y-GenXY	8XY	10Y	2	5	0.791	0.582	0.582	5/8	A394	2	1	1	Short only	0.875	0	0.875				

```
2.5      0       0     0
    XBrace15P XBrace4          XY-Symmetry     8X  10XY    2     5 0.791 0.582 0.582 5/8 A394     2      1       1 Short only 0.875     0  0.875
2.5      0       0     0
    XBrace15X XBrace4              X-GenXY     8P   10Y    2     5 0.791 0.582 0.582 5/8 A394     2      1       1 Short only 0.875     0  0.875
2.5      0       0     0
   XBrace15XY XBrace4             XY-GenXY     8Y   10S    2     5 0.791 0.582 0.582 5/8 A394     2      1       1 Short only 0.875     0  0.875
2.5      0       0     0
    XBrace15Y XBrace4              Y-GenXY    8XY   10X    2     5 0.791 0.582 0.582 5/8 A394     2      1       1 Short only 0.875     0  0.875
2.5      0       0     0
    XBrace16P XBrace4          XY-Symmetry   10XY   11X    2     5 0.789 0.578 0.578 5/8 A394     2      1       1 Short only     1     0  0.875
2.125      0       0     0
    XBrace16X XBrace4              X-GenXY    10Y   11S    2     5 0.789 0.578 0.578 5/8 A394     2      1       1 Short only     1     0  0.875
2.125      0       0     0
   XBrace16XY XBrace4             XY-GenXY    10S   11Y    2     5 0.789 0.578 0.578 5/8 A394     2      1       1 Short only     1     0  0.875
2.125      0       0     0
    XBrace16Y XBrace4              Y-GenXY    10X  11XY    2     5 0.789 0.578 0.578 5/8 A394     2      1       1 Short only     1     0  0.875
2.125      0       0     0
    XBrace17P XBrace4          XY-Symmetry    10S   11X    2     5 0.789 0.578 0.578 5/8 A394     2      1       1 Short only     1     0  0.875
2.125      0       0     0
    XBrace17X XBrace4              X-GenXY    10X   11S    2     5 0.789 0.578 0.578 5/8 A394     2      1       1 Short only     1     0  0.875
2.125      0       0     0
   XBrace17XY XBrace4             XY-GenXY   10XY   11Y    2     5 0.789 0.578 0.578 5/8 A394     2      1       1 Short only     1     0  0.875
2.125      0       0     0
    XBrace17Y XBrace4              Y-GenXY    10Y  11XY    2     5 0.789 0.578 0.578 5/8 A394     2      1       1 Short only     1     0  0.875
2.125      0       0     0
    XBrace18P XBrace5          XY-Symmetry    11S   12X    2     4 0.779 0.559 0.559 5/8 A394     1      1       1 Short only     1     0  0.875
0      0       0     0
    XBrace18X XBrace5              X-GenXY    11X   12S    2     4 0.779 0.559 0.559 5/8 A394     1      1       1 Short only     1     0  0.875
0      0       0     0
   XBrace18XY XBrace5             XY-GenXY   11XY   12Y    2     4 0.779 0.559 0.559 5/8 A394     1      1       1 Short only     1     0  0.875
0      0       0     0
    XBrace18Y XBrace5              Y-GenXY    11Y  12XY    2     4 0.779 0.559 0.559 5/8 A394     1      1       1 Short only     1     0  0.875
0      0       0     0
    XBrace19P XBrace5          XY-Symmetry    11X  12XY    2     4 0.779 0.559 0.559 5/8 A394     1      1       1 Short only     1     0  0.875
0      0       0     0
    XBrace19X XBrace5              X-GenXY    11S   12Y    2     4 0.779 0.559 0.559 5/8 A394     1      1       1 Short only     1     0  0.875
0      0       0     0
   XBrace19XY XBrace5             XY-GenXY    11Y   12S    2     4 0.779 0.559 0.559 5/8 A394     1      1       1 Short only     1     0  0.875
0      0       0     0
    XBrace19Y XBrace5              Y-GenXY   11XY   12X    2     4 0.779 0.559 0.559 5/8 A394     1      1       1 Short only     1     0  0.875
0      0       0     0
    XBrace20P XBrace6          XY-Symmetry    12S   13X    2     4 0.772 0.544 0.544 5/8 A394     1      1       1 Short only 1.375     0  0.875
0      0       0     0
    XBrace20X XBrace6              X-GenXY    12X   13S    2     4 0.772 0.544 0.544 5/8 A394     1      1       1 Short only 1.375     0  0.875
0      0       0     0
   XBrace20XY XBrace6             XY-GenXY   12XY   13Y    2     4 0.772 0.544 0.544 5/8 A394     1      1       1 Short only 1.375     0  0.875
0      0       0     0
    XBrace20Y XBrace6              Y-GenXY    12Y  13XY    2     4 0.772 0.544 0.544 5/8 A394     1      1       1 Short only 1.375     0  0.875
0      0       0     0
    XBrace21P XBrace6          XY-Symmetry    12X  13XY    2     4 0.772 0.544 0.544 5/8 A394     1      1       1 Short only 1.375     0  0.875
0      0       0     0
    XBrace21X XBrace6              X-GenXY    12S   13Y    2     4 0.772 0.544 0.544 5/8 A394     1      1       1 Short only 1.375     0  0.875
0      0       0     0
   XBrace21XY XBrace6             XY-GenXY    12Y   13S    2     4 0.772 0.544 0.544 5/8 A394     1      1       1 Short only 1.375     0  0.875
0      0       0     0
    XBrace21Y XBrace6              Y-GenXY   12XY   13X    2     4 0.772 0.544 0.544 5/8 A394     1      1       1 Short only 1.375     0  0.875
0      0       0     0
    XBrace22P XBrace7          XY-Symmetry    13S   14X    2     4 0.771 0.543 0.543 5/8 A394     1      1       1 Short only 1.625     0  0.875
0      0       0     0
```

```
    XBrace22X XBrace7              X-GenXY    13X   14S    2     4 0.771 0.543 0.543 5/8 A394     1      1       1 Short only 1.625     0  0.875
0      0       0     0
   XBrace22XY XBrace7             XY-GenXY   13XY   14Y    2     4 0.771 0.543 0.543 5/8 A394     1      1       1 Short only 1.625     0  0.875
0      0       0     0
    XBrace22Y XBrace7              Y-GenXY    13Y  14XY    2     4 0.771 0.543 0.543 5/8 A394     1      1       1 Short only 1.625     0  0.875
0      0       0     0
    XBrace23P XBrace7          XY-Symmetry    13X  14XY    2     4 0.771 0.543 0.543 5/8 A394     1      1       1 Short only 1.625     0  0.875
0      0       0     0
    XBrace23X XBrace7              X-GenXY    13S   14Y    2     4 0.771 0.543 0.543 5/8 A394     1      1       1 Short only 1.625     0  0.875
0      0       0     0
   XBrace23XY XBrace7             XY-GenXY    13Y   14S    2     4 0.771 0.543 0.543 5/8 A394     1      1       1 Short only 1.625     0  0.875
0      0       0     0
    XBrace23Y XBrace7              Y-GenXY   13XY   14X    2     4 0.771 0.543 0.543 5/8 A394     1      1       1 Short only 1.625     0  0.875
0      0       0     0
    XBrace24P XBrace8          XY-Symmetry    14X    9P    2     5 0.577 0.788 0.577 5/8 A394     2      1       1  Long only 0.875     0  0.875
2.4375      0       0     0
    XBrace24X XBrace8              X-GenXY    14S    9X    2     5 0.577 0.788 0.577 5/8 A394     2      1       1  Long only 0.875     0  0.875
2.4375      0       0     0
   XBrace24XY XBrace8             XY-GenXY    14Y   9XY    2     5 0.577 0.788 0.577 5/8 A394     2      1       1  Long only 0.875     0  0.875
2.4375      0       0     0
    XBrace24Y XBrace8              Y-GenXY   14XY    9Y    2     5 0.577 0.788 0.577 5/8 A394     2      1       1  Long only 0.875     0  0.875
2.4375      0       0     0
    XBrace25P XBrace8          XY-Symmetry   14XY    9X    2     5 0.577 0.788 0.577 5/8 A394     2      1       1  Long only 0.875     0  0.875
2.4375      0       0     0
    XBrace25X XBrace8              X-GenXY    14Y    9P    2     5 0.577 0.788 0.577 5/8 A394     2      1       1  Long only 0.875     0  0.875
2.4375      0       0     0
   XBrace25XY XBrace8             XY-GenXY    14S    9Y    2     5 0.577 0.788 0.577 5/8 A394     2      1       1  Long only 0.875     0  0.875
2.4375      0       0     0
    XBrace25Y XBrace8              Y-GenXY    14X   9XY    2     5 0.577 0.788 0.577 5/8 A394     2      1       1  Long only 0.875     0  0.875
2.4375      0       0     0
       Horz1P   Horz1           X-Symmetry     2X   2XY    3     4     1     1     1 5/8 A394     1      1       1 Short only     1     0  0.875
0      0       0     0
       Horz1X   Horz1                X-Gen     2P    2Y    3     4     1     1     1 5/8 A394     1      1       1 Short only     1     0  0.875
0      0       0     0
       Horz2P   Horz1           X-Symmetry     5X   5XY    3     4     1     1     1 5/8 A394     1      1       1 Short only     1     0  0.875
0      0       0     0
       Horz2X   Horz1                X-Gen     5S    5Y    3     4     1     1     1 5/8 A394     1      1       1 Short only     1     0  0.875
0      0       0     0
       Horz3P   Horz3           X-Symmetry     7X   7XY    3     4     1     1     1 5/8 A394     1      1       1 Short only     1     0  0.875
0      0       0     0
       Horz3X   Horz3                X-Gen     7P    7Y    3     4     1     1     1 5/8 A394     1      1       1 Short only     1     0  0.875
0      0       0     0
       Horz4P   Horz1           X-Symmetry     8X   8XY    3     4     1     1     1 5/8 A394     1      1       1 Short only  0.75     0 2.1875
0      0       0     0
       Horz4X   Horz1                X-Gen     8P    8Y    3     4     1     1     1 5/8 A394     1      1       1 Short only  0.75     0 2.1875
0      0       0     0
       Horz5P   Horz1           Y-Symmetry     8P    8X    3     4     1     1     1 5/8 A394     1      1       1 Short only 0.875     0  0.875
0      0       0     0
       Horz5Y   Horz1                Y-Gen     8Y   8XY    3     4     1     1     1 5/8 A394     1      1       1 Short only 0.875     0  0.875
0      0       0     0
       Horz6P   Horz2           Y-Symmetry    14S   14X    3     4     1   0.5   0.5 5/8 A394     1      1       1 Short only 0.875     0  0.875
0      0       0     0
       Horz6Y   Horz2                Y-Gen    14Y  14XY    3     4     1   0.5   0.5 5/8 A394     1      1       1 Short only 0.875     0  0.875
0      0       0     0
       Horz7P   Horz2           X-Symmetry    14X  14XY    3     4     1   0.5   0.5 5/8 A394     1      1       1 Short only 0.875     0  0.875
0      0       0     0
       Horz7X   Horz2                X-Gen    14S   14Y    3     4     1   0.5   0.5 5/8 A394     1      1       1 Short only 0.875     0  0.875
0      0       0     0
        Arm1P    Arm1           X-Symmetry    15P    1P    3     4     1     1     1 5/8 A394     1      4       1 Short only 0.875     0      0
```

0	0	0	0																						
	Arm1X	Arm1		X-Gen	15X	1X	3	4	1	1	1	5/8	A394	1	4	1	Short	only	0.875	0	0				
0	0	0	0																						
	Arm2P	Arm1		None	1P	1X	3	4	1	1	1	5/8	A394	1	4	1	Short	only	0.875	0	0				
0	0	0	0																						
	Arm3P	Arm2		XY-Symmetry	16P	2P	3	5	1	0.5	0.5	5/8	A394	1	1	1	Short	only	1.25	0	2.375				
0	0	0	0																						
	Arm3X	Arm2		X-GenXY	16X	2X	3	5	1	0.5	0.5	5/8	A394	1	1	1	Short	only	1.25	0	2.375				
0	0	0	0																						
	Arm3XY	Arm2		XY-GenXY	16X	2XY	3	5	1	0.5	0.5	5/8	A394	1	1	1	Short	only	1.25	0	2.375				
0	0	0	0																						
	Arm3Y	Arm2		Y-GenXY	16P	2Y	3	5	1	0.5	0.5	5/8	A394	1	1	1	Short	only	1.25	0	2.375				
0	0	0	0																						
	Arm4P	Arm2		Y-Symmetry	2P	2X	3	5	1	1	1	5/8	A394	1	1	1	Short	only	1.25	0	2.375				
0	0	0	0																						
	Arm4Y	Arm2		Y-Gen	2Y	2XY	3	5	1	1	1	5/8	A394	1	1	1	Short	only	1.25	0	2.375				
0	0	0	0																						
	Arm5P	Arm3		XY-Symmetry	17P	5S	3	5	1	0.5	0.5	5/8	A394	2	1.65	1	Long	only	0.875	2.5	2.375				
2.5	0	0	0																						
	Arm5X	Arm3		X-GenXY	17X	5X	3	5	1	0.5	0.5	5/8	A394	2	1.65	1	Long	only	0.875	2.5	2.375				
2.5	0	0	0																						
	Arm5XY	Arm3		XY-GenXY	17X	5XY	3	5	1	0.5	0.5	5/8	A394	2	1.65	1	Long	only	0.875	2.5	2.375				
2.5	0	0	0																						
	Arm5Y	Arm3		Y-GenXY	17P	5Y	3	5	1	0.5	0.5	5/8	A394	2	1.65	1	Long	only	0.875	2.5	2.375				
2.5	0	0	0																						
	Arm6P	Arm3		Y-Symmetry	5S	5X	3	5	1	1	1	5/8	A394	2	1.65	1	Long	only	0.875	2.5	2.375				
2.5	0	0	0																						
	Arm6Y	Arm3		Y-Gen	5Y	5XY	3	5	1	1	1	5/8	A394	2	1.65	1	Long	only	0.875	2.5	2.375				
2.5	0	0	0																						
	Arm7P	Arm2		XY-Symmetry	18P	7P	3	5	1	0.5	0.5	5/8	A394	2	1	1	Short	only	1.375	0	2.1875				
6	0	0	0																						
	Arm7X	Arm2		X-GenXY	18X	7X	3	5	1	0.5	0.5	5/8	A394	2	1	1	Short	only	1.375	0	2.1875				
6	0	0	0																						
	Arm7XY	Arm2		XY-GenXY	18X	7XY	3	5	1	0.5	0.5	5/8	A394	2	1	1	Short	only	1.375	0	2.1875				
6	0	0	0																						
	Arm7Y	Arm2		Y-GenXY	18P	7Y	3	5	1	0.5	0.5	5/8	A394	2	1	1	Short	only	1.375	0	2.1875				
6	0	0	0																						
	Arm8P	Arm2		Y-Symmetry	7P	7X	3	5	1	1	1	5/8	A394	2	1	1	Short	only	1.375	0	2.1875				
6	0	0	0																						
	Arm8Y	Arm2		Y-Gen	7Y	7XY	3	5	1	1	1	5/8	A394	2	1	1	Short	only	1.375	0	2.1875				
6	0	0	0																						
	Diagonal 1P	Diag1		XY-Symmetry	15P	2P	2	4	1	0.5	0.5	5/8	A394	3	1.55	1	Long	only	1	2.25	0.875				
2.75	0	0	0																						
	Diagonal 1X	Diag1		X-GenXY	15X	2X	2	4	1	0.5	0.5	5/8	A394	3	1.55	1	Long	only	1	2.25	0.875				
2.75	0	0	0																						
	Diagonal 1XY	Diag1		XY-GenXY	15X	2XY	2	4	1	0.5	0.5	5/8	A394	3	1.55	1	Long	only	1	2.25	0.875				
2.75	0	0	0																						
	Diagonal 1Y	Diag1		Y-GenXY	15P	2Y	2	4	1	0.5	0.5	5/8	A394	3	1.55	1	Long	only	1	2.25	0.875				
2.75	0	0	0																						
	Diagonal 2P	Diag2		X-Symmetry	16P	1P	2	4	1	1	1	5/8	A394	1	1	1	Long	only	1	0	1				
0	0	0	0																						
	Diagonal 2X	Diag2		X-Gen	16X	1X	2	4	1	1	1	5/8	A394	1	1	1	Long	only	1	0	1				
0	0	0	0																						
	Diagonal 3P	Diag2		XY-Symmetry	18P	6S	2	4	1	1	1	5/8	A394	1	1	1	Long	only	1	0	1				
0	0	0	0																						
	Diagonal 3X	Diag2		X-GenXY	18X	6X	2	4	1	1	1	5/8	A394	1	1	1	Long	only	1	0	1				
0	0	0	0																						
	Diagonal 3XY	Diag2		XY-GenXY	18X	6XY	2	4	1	1	1	5/8	A394	1	1	1	Long	only	1	0	1				
0	0	0	0																						

Diagonal 3Y	Diag2	Y-GenXY	18P	6Y	2	4	1	1	1 5/8	A394	1	1	1	Long only	1	0	1	0	0	0	0	
Diagonal 4P	Diag3	Y-Symmetry	6S	6X	2	4	1	1	1 5/8	A394	1	1	1	Long only	1	0	1	0	0	0	0	
Diagonal 4Y	Diag3	Y-Gen	6Y	6XY	2	4	1	1	1 5/8	A394	1	1	1	Long only	1	0	1	0	0	0	0	
Diagonal 6P	Diag3	Y-Symmetry	4S	4X	2	4	1	1	1 5/8	A394	1	1	1	Long only	1	0	1	0	0	0	0	
Diagonal 6Y	Diag3	Y-Gen	4Y	4XY	2	4	1	1	1 5/8	A394	1	1	1	Long only	1	0	1	0	0	0	0	
g60P	Inner1	X-Symmetry	2P	2XY	3	4	0.75	0.5	0.5 5/8	A394	1	1	1	Short only	0.75	0	0.875	0	0	0	0	
g60X	Inner1	X-Gen	2X	2Y	3	4	0.75	0.5	0.5 5/8	A394	1	1	1	Short only	0.75	0	0.875	0	0	0	0	
g61P	Inner1	X-Symmetry	5S	5XY	3	4	0.75	0.5	0.5 5/8	A394	1	1	1	Short only	0.75	0	0.875	0	0	0	0	
g61X	Inner1	X-Gen	5X	5Y	3	4	0.75	0.5	0.5 5/8	A394	1	1	1	Short only	0.75	0	0.875	0	0	0	0	
g62P	Inner1	X-Symmetry	7P	7XY	3	4	0.75	0.5	0.5 5/8	A394	1	1	1	Short only	0.75	0	0.875	0	0	0	0	
g62X	Inner1	X-Gen	7X	7Y	3	4	0.75	0.5	0.5 5/8	A394	1	1	1	Short only	0.75	0	0.875	0	0	0	0	
g63P	Inner1	X-Symmetry	8P	8XY	3	4	0.75	0.5	0.5 5/8	A394	1	1	1	Short only	0.75	0	0.875	0	0	0	0	
g63X	Inner1	X-Gen	8X	8Y	3	4	0.75	0.5	0.5 5/8	A394	1	1	1	Short only	0.75	0	0.875	0	0	0	0	
g64P	Inner2	X-Symmetry	14S	14XY	3	4	0.5	0.75	0.5 5/8	A394	1	1	1	Long only	1	0	0.875	0	0	0	0	
g64X	Inner2	X-Gen	14X	14Y	3	4	0.5	0.75	0.5 5/8	A394	1	1	1	Long only	1	0	0.875	0	0	0	0	
Diagonal 5P	Diag2R	XY-Symmetry	17P	19X	2	4	1	1	1 5/8	A394	1	1	1	Long only	1	0	1	0	0	0	0	
Diagonal 5X	Diag2R	X-GenXY	17X	19P	2	4	1	1	1 5/8	A394	1	1	1	Long only	1	0	1	0	0	0	0	
Diagonal 5XY	Diag2R	XY-GenXY	17X	19Y	2	4	1	1	1 5/8	A394	1	1	1	Long only	1	0	1	0	0	0	0	
Diagonal 5Y	Diag2R	Y-GenXY	17P	19XY	2	4	1	1	1 5/8	A394	1	1	1	Long only	1	0	1	0	0	0	0	
Diagonal 7P	Diag2	XY-Symmetry	19X	4S	2	4	1	1	1 5/8	A394	1	1	1	Long only	1	0	1	0	0	0	0	
Diagonal 7X	Diag2	X-GenXY	19P	4X	2	4	1	1	1 5/8	A394	1	1	1	Long only	1	0	1	0	0	0	0	
Diagonal 7XY	Diag2	XY-GenXY	19Y	4XY	2	4	1	1	1 5/8	A394	1	1	1	Long only	1	0	1	0	0	0	0	
Diagonal 7Y	Diag2	Y-GenXY	19XY	4Y	2	4	1	1	1 5/8	A394	1	1	1	Long only	1	0	1	0	0	0	0	
Diagonal 8P	Diag2	XY-Symmetry	19X	5S	2	4	1	1	1 5/8	A394	1	1	1	Long only	1	0	1	0	0	0	0	
Diagonal 8X	Diag2	X-GenXY	19P	5X	2	4	1	1	1 5/8	A394	1	1	1	Long only	1	0	1	0	0	0	0	
Diagonal 8XY	Diag2	XY-GenXY	19Y	5XY	2	4	1	1	1 5/8	A394	1	1	1	Long only	1	0	1	0	0	0	0	
Diagonal 8Y	Diag2	Y-GenXY	19XY	5Y	2	4	1	1	1 5/8	A394	1	1	1	Long only	1	0	1	0	0	0	0	

Member Capacities and Overrides:

Member	Group	Design	Comp.	Design	Tension	L/r	Length	L/r	Connection	Connection	Net	Rupture	RTE End	RTE Edge	Override	Override	Override	Override	Override

Warnings or Errors	Label	Label	Comp. Capacity (kips)	Control Criterion	Tension Capacity (kips)	Control Criterion	Comp. Capacity (kips)	Comp. Control Criterion	Tension Capacity (kips)	Tension Control Criterion	Face Member Capacity (kips)	(ft)	Comp. Capacity (kips)	Shear Capacity (kips)	Bearing Capacity (kips)	Section Tension Capacity (kips)	Tension Capacity (kips)	Dist. Tension Capacity (kips)	Dist. Tension Capacity (kips)	Comp. Capacity (kips)
	Leg1P	Leg1	10.122	L/r	16.406	Rupture	151	5.39	10.122	18.200	21.094	17.096	16.406	0.000	0.000	0.000	0.000	0.000	0.000	0.000
	Leg1X	Leg1	10.122	L/r	16.406	Rupture	151	5.39	10.122	18.200	21.094	17.096	16.406	0.000	0.000	0.000	0.000	0.000	0.000	0.000
	Leg1XY	Leg1	10.122	L/r	16.406	Rupture	151	5.39	10.122	18.200	21.094	17.096	16.406	0.000	0.000	0.000	0.000	0.000	0.000	0.000
	Leg1Y	Leg1	10.122	L/r	16.406	Rupture	151	5.39	10.122	18.200	21.094	17.096	16.406	0.000	0.000	0.000	0.000	0.000	0.000	0.000
	Leg2P	Leg2	72.764	L/r	59.864	Net Sect	53	3.50	72.764	0.000	0.000	59.864	0.000	0.000	0.000	0.000	0.000	0.000	0.000	0.000
	Leg2X	Leg2	72.764	L/r	59.864	Net Sect	53	3.50	72.764	0.000	0.000	59.864	0.000	0.000	0.000	0.000	0.000	0.000	0.000	0.000
	Leg2XY	Leg2	72.764	L/r	59.864	Net Sect	53	3.50	72.764	0.000	0.000	59.864	0.000	0.000	0.000	0.000	0.000	0.000	0.000	0.000
	Leg2Y	Leg2	72.764	L/r	59.864	Net Sect	53	3.50	72.764	0.000	0.000	59.864	0.000	0.000	0.000	0.000	0.000	0.000	0.000	0.000
	Leg3P	Leg2	72.764	L/r	59.864	Net Sect	53	3.50	72.764	0.000	0.000	59.864	0.000	0.000	0.000	0.000	0.000	0.000	0.000	0.000
	Leg3X	Leg2	72.764	L/r	59.864	Net Sect	53	3.50	72.764	0.000	0.000	59.864	0.000	0.000	0.000	0.000	0.000	0.000	0.000	0.000
	Leg3XY	Leg2	72.764	L/r	59.864	Net Sect	53	3.50	72.764	0.000	0.000	59.864	0.000	0.000	0.000	0.000	0.000	0.000	0.000	0.000
	Leg3Y	Leg2	72.764	L/r	59.864	Net Sect	53	3.50	72.764	0.000	0.000	59.864	0.000	0.000	0.000	0.000	0.000	0.000	0.000	0.000
	Leg4P	Leg2	72.764	L/r	59.864	Net Sect	53	3.50	72.764	0.000	0.000	59.864	0.000	0.000	0.000	0.000	0.000	0.000	0.000	0.000
	Leg4X	Leg2	72.764	L/r	59.864	Net Sect	53	3.50	72.764	0.000	0.000	59.864	0.000	0.000	0.000	0.000	0.000	0.000	0.000	0.000
	Leg4XY	Leg2	72.764	L/r	59.864	Net Sect	53	3.50	72.764	0.000	0.000	59.864	0.000	0.000	0.000	0.000	0.000	0.000	0.000	0.000
	Leg4Y	Leg2	72.764	L/r	59.864	Net Sect	53	3.50	72.764	0.000	0.000	59.864	0.000	0.000	0.000	0.000	0.000	0.000	0.000	0.000
	Leg5P	Leg2	69.710	L/r	59.864	Net Sect	64	4.25	69.710	0.000	0.000	59.864	0.000	0.000	0.000	0.000	0.000	0.000	0.000	0.000
	Leg5X	Leg2	69.710	L/r	59.864	Net Sect	64	4.25	69.710	0.000	0.000	59.864	0.000	0.000	0.000	0.000	0.000	0.000	0.000	0.000
	Leg5XY	Leg2	69.710	L/r	59.864	Net Sect	64	4.25	69.710	0.000	0.000	59.864	0.000	0.000	0.000	0.000	0.000	0.000	0.000	0.000
	Leg5Y	Leg2	69.710	L/r	59.864	Net Sect	64	4.25	69.710	0.000	0.000	59.864	0.000	0.000	0.000	0.000	0.000	0.000	0.000	0.000
	Leg6P	**Leg2**	**69.710**	**L/r**	**59.941**	**Net Sect**	**64**	**4.25**	**69.710**	**109.200**	**105.469**	**59.941**	**93.750**	**0.000**	**0.000**	**0.000**	**0.000**	**0.000**	**0.000**	**0.000**
	Leg6X	**Leg2**	**69.710**	**L/r**	**59.941**	**Net Sect**	**64**	**4.25**	**69.710**	**109.200**	**105.469**	**59.941**	**93.750**	**0.000**	**0.000**	**0.000**	**0.000**	**0.000**	**0.000**	**0.000**

Automatic Member "Leg6P" will not be checked for block shear since more than one gage line exists (long edge distance (g) greater than zero); however, end, edge and spacing distances will be checked. ??

Automatic Member "Leg6X" will not be checked for block shear since more than one gage line exists (long edge distance (g) greater than zero); however, end, edge and spacing distances will be checked. ??

```
      Leg6XY    Leg2   69.710       L/r   59.941  Net Sect   64   4.25   69.710    109.200    105.469   59.941   93.750    0.000    0.000    0.000
0.000              0.000           Automatic       Member "Leg6XY" will not be checked for block shear since more than one gage line exists (long edge
distance (g) greater than zero); however, end, edge and spacing distances will be checked.  ??
       Leg6Y    Leg2   69.710       L/r   59.941  Net Sect   64   4.25   69.710    109.200    105.469   59.941   93.750    0.000    0.000    0.000
0.000              0.000           Automatic        Member "Leg6Y" will not be checked for block shear since more than one gage line exists (long edge
distance (g) greater than zero); however, end, edge and spacing distances will be checked.  ??
       Leg7P    Leg3   95.941       L/r   81.077  Net Sect   65   4.25   95.941      0.000      0.000   81.077    0.000    0.000    0.000    0.000
0.000              0.000           Automatic
       Leg7X    Leg3   95.941       L/r   81.077  Net Sect   65   4.25   95.941      0.000      0.000   81.077    0.000    0.000    0.000    0.000
0.000              0.000           Automatic
      Leg7XY    Leg3   95.941       L/r   81.077  Net Sect   65   4.25   95.941      0.000      0.000   81.077    0.000    0.000    0.000    0.000
0.000              0.000           Automatic
       Leg7Y    Leg3   95.941       L/r   81.077  Net Sect   65   4.25   95.941      0.000      0.000   81.077    0.000    0.000    0.000    0.000
0.000              0.000           Automatic
       Leg8P    Leg3  102.269       L/r   81.077  Net Sect   47   6.15  102.269      0.000      0.000   81.077    0.000    0.000    0.000    0.000
0.000              0.000           Automatic
       Leg8X    Leg3  102.269       L/r   81.077  Net Sect   47   6.15  102.269      0.000      0.000   81.077    0.000    0.000    0.000    0.000
0.000              0.000           Automatic
      Leg8XY    Leg3  102.269       L/r   81.077  Net Sect   47   6.15  102.269      0.000      0.000   81.077    0.000    0.000    0.000    0.000
0.000              0.000           Automatic
       Leg8Y    Leg3  102.269       L/r   81.077  Net Sect   47   6.15  102.269      0.000      0.000   81.077    0.000    0.000    0.000    0.000
0.000              0.000           Automatic
       Leg9P    Leg3  101.061       L/r   81.077  Net Sect   51   6.66  101.061      0.000      0.000   81.077    0.000    0.000    0.000    0.000
0.000              0.000           Automatic
       Leg9X    Leg3  101.061       L/r   81.077  Net Sect   51   6.66  101.061      0.000      0.000   81.077    0.000    0.000    0.000    0.000
0.000              0.000           Automatic
      Leg9XY    Leg3  101.061       L/r   81.077  Net Sect   51   6.66  101.061      0.000      0.000   81.077    0.000    0.000    0.000    0.000
0.000              0.000           Automatic
       Leg9Y    Leg3  101.061       L/r   81.077  Net Sect   51   6.66  101.061      0.000      0.000   81.077    0.000    0.000    0.000    0.000
0.000              0.000           Automatic
      Leg10P    Leg3   76.554       L/r   81.077  Net Sect  102   6.66   76.554      0.000      0.000   81.077    0.000    0.000    0.000    0.000
0.000              0.000           Automatic
      Leg10X    Leg3   76.554       L/r   81.077  Net Sect  102   6.66   76.554      0.000      0.000   81.077    0.000    0.000    0.000    0.000
0.000              0.000           Automatic
     Leg10XY    Leg3   76.554       L/r   81.077  Net Sect  102   6.66   76.554      0.000      0.000   81.077    0.000    0.000    0.000    0.000
0.000              0.000           Automatic
      Leg10Y    Leg3   76.554       L/r   81.077  Net Sect  102   6.66   76.554      0.000      0.000   81.077    0.000    0.000    0.000    0.000
0.000              0.000           Automatic
      Leg11P    Leg3   72.800      Shear   71.873  Net Sect   97   6.33   79.787     72.800    196.875   71.873  180.147    0.000    0.000    0.000
0.000              0.000           Automatic       Member "Leg11P" will not be checked for block shear since more than one gage line exists (long edge
distance (g) greater than zero); however, end, edge and spacing distances will be checked.  ??
      Leg11X    Leg3   72.800      Shear   71.873  Net Sect   97   6.33   79.787     72.800    196.875   71.873  180.147    0.000    0.000    0.000
0.000              0.000           Automatic       Member "Leg11X" will not be checked for block shear since more than one gage line exists (long edge
distance (g) greater than zero); however, end, edge and spacing distances will be checked.  ??
     Leg11XY    Leg3   72.800      Shear   71.873  Net Sect   97   6.33   79.787     72.800    196.875   71.873  180.147    0.000    0.000    0.000
0.000              0.000           Automatic      Member "Leg11XY" will not be checked for block shear since more than one gage line exists (long edge
distance (g) greater than zero); however, end, edge and spacing distances will be checked.  ??
      Leg11Y    Leg3   72.800      Shear   71.873  Net Sect   97   6.33   79.787     72.800    196.875   71.873  180.147    0.000    0.000    0.000
0.000              0.000           Automatic       Member "Leg11Y" will not be checked for block shear since more than one gage line exists (long edge
distance (g) greater than zero); however, end, edge and spacing distances will be checked.  ??
      Leg12P    Leg4   90.635       L/r   82.469  Net Sect   91   7.52   90.635      0.000      0.000   82.469    0.000    0.000    0.000    0.000
0.000              0.000           Automatic
      Leg12X    Leg4   90.635       L/r   82.469  Net Sect   91   7.52   90.635      0.000      0.000   82.469    0.000    0.000    0.000    0.000
0.000              0.000           Automatic
     Leg12XY    Leg4   90.635       L/r   82.469  Net Sect   91   7.52   90.635      0.000      0.000   82.469    0.000    0.000    0.000    0.000
0.000              0.000           Automatic
      Leg12Y    Leg4   90.635       L/r   82.469  Net Sect   91   7.52   90.635      0.000      0.000   82.469    0.000    0.000    0.000    0.000
0.000              0.000           Automatic
      Leg13P    Leg4   78.526       L/r   98.030  Net Sect  109  17.94   78.526    134.400    168.750   98.030  187.500    0.000    0.000    0.000
```

0.000 0.000 Automatic Member "Leg13P" will not be checked for block shear since more than one gage line exists (long edge distance (g) greater than zero); however, end, edge and spacing distances will be checked. ??
Leg13X Leg4 78.526 L/r 98.030 Net Sect 109 17.94 78.526 134.400 168.750 98.030 187.500 0.000 0.000 0.000
0.000 0.000 Automatic Member "Leg13X" will not be checked for block shear since more than one gage line exists (long edge distance (g) greater than zero); however, end, edge and spacing distances will be checked. ??
Leg13XY Leg4 78.526 L/r 98.030 Net Sect 109 17.94 78.526 134.400 168.750 98.030 187.500 0.000 0.000 0.000
0.000 0.000 Automatic Member "Leg13XY" will not be checked for block shear since more than one gage line exists (long edge distance (g) greater than zero); however, end, edge and spacing distances will be checked. ??
Leg13Y Leg4 78.526 L/r 98.030 Net Sect 109 17.94 78.526 134.400 168.750 98.030 187.500 0.000 0.000 0.000
0.000 0.000 Automatic Member "Leg13Y" will not be checked for block shear since more than one gage line exists (long edge distance (g) greater than zero); however, end, edge and spacing distances will be checked. ??
XBrace1P XBrace1 9.100 Shear 5.695 Rupture 117 6.71 12.247 9.100 10.547 14.237 5.695 0.000 0.000 0.000
0.000 0.000 Automatic
XBrace1X XBrace1 9.100 Shear 5.695 Rupture 117 6.71 12.247 9.100 10.547 14.237 5.695 0.000 0.000 0.000
0.000 0.000 Automatic
XBrace1XY XBrace1 9.100 Shear 5.695 Rupture 117 6.71 12.247 9.100 10.547 14.237 5.695 0.000 0.000 0.000
0.000 0.000 Automatic
XBrace1Y XBrace1 9.100 Shear 5.695 Rupture 117 6.71 12.247 9.100 10.547 14.237 5.695 0.000 0.000 0.000
0.000 0.000 Automatic
XBrace2P XBrace1 14.594 L/r 12.023 Rupture 93 5.32 14.594 18.200 21.094 14.237 12.023 0.000 0.000 0.000
0.000 0.000 Automatic
XBrace2X XBrace1 14.594 L/r 12.023 Rupture 93 5.32 14.594 18.200 21.094 14.237 12.023 0.000 0.000 0.000
0.000 0.000 Automatic
XBrace2XY XBrace1 14.594 L/r 12.023 Rupture 93 5.32 14.594 18.200 21.094 14.237 12.023 0.000 0.000 0.000
0.000 0.000 Automatic
XBrace2Y XBrace1 14.594 L/r 12.023 Rupture 93 5.32 14.594 18.200 21.094 14.237 12.023 0.000 0.000 0.000
0.000 0.000 Automatic
XBrace3P XBrace1 14.594 L/r 12.023 Rupture 93 5.32 14.594 18.200 21.094 14.237 12.023 0.000 0.000 0.000
0.000 0.000 Automatic
XBrace3X XBrace1 14.594 L/r 12.023 Rupture 93 5.32 14.594 18.200 21.094 14.237 12.023 0.000 0.000 0.000
0.000 0.000 Automatic
XBrace3XY XBrace1 14.594 L/r 12.023 Rupture 93 5.32 14.594 18.200 21.094 14.237 12.023 0.000 0.000 0.000
0.000 0.000 Automatic
XBrace3Y XBrace1 14.594 L/r 12.023 Rupture 93 5.32 14.594 18.200 21.094 14.237 12.023 0.000 0.000 0.000
0.000 0.000 Automatic
XBrace4P XBrace1 14.594 L/r 12.023 Rupture 93 5.32 14.594 18.200 21.094 14.237 12.023 0.000 0.000 0.000
0.000 0.000 Automatic
XBrace4X XBrace1 14.594 L/r 12.023 Rupture 93 5.32 14.594 18.200 21.094 14.237 12.023 0.000 0.000 0.000
0.000 0.000 Automatic
XBrace4XY XBrace1 14.594 L/r 12.023 Rupture 93 5.32 14.594 18.200 21.094 14.237 12.023 0.000 0.000 0.000
0.000 0.000 Automatic
XBrace4Y XBrace1 14.594 L/r 12.023 Rupture 93 5.32 14.594 18.200 21.094 14.237 12.023 0.000 0.000 0.000
0.000 0.000 Automatic
XBrace5P XBrace1 14.594 L/r 12.023 Rupture 93 5.32 14.594 18.200 21.094 14.237 12.023 0.000 0.000 0.000
0.000 0.000 Automatic
XBrace5X XBrace1 14.594 L/r 12.023 Rupture 93 5.32 14.594 18.200 21.094 14.237 12.023 0.000 0.000 0.000
0.000 0.000 Automatic
XBrace5XY XBrace1 14.594 L/r 12.023 Rupture 93 5.32 14.594 18.200 21.094 14.237 12.023 0.000 0.000 0.000
0.000 0.000 Automatic
XBrace5Y XBrace1 14.594 L/r 12.023 Rupture 93 5.32 14.594 18.200 21.094 14.237 12.023 0.000 0.000 0.000
0.000 0.000 Automatic
XBrace6P XBrace1 14.594 L/r 11.602 Rupture 93 5.32 14.594 18.200 21.094 14.237 11.602 0.000 0.000 0.000
0.000 0.000 Automatic
XBrace6X XBrace1 14.594 L/r 11.602 Rupture 93 5.32 14.594 18.200 21.094 14.237 11.602 0.000 0.000 0.000
0.000 0.000 Automatic
XBrace6XY XBrace1 14.594 L/r 11.602 Rupture 93 5.32 14.594 18.200 21.094 14.237 11.602 0.000 0.000 0.000
0.000 0.000 Automatic
XBrace6Y XBrace1 14.594 L/r 11.602 Rupture 93 5.32 14.594 18.200 21.094 14.237 11.602 0.000 0.000 0.000
0.000 0.000 Automatic

```
     XBrace7P XBrace1   14.594       L/r   11.602   Rupture   93   5.32   14.594     18.200     21.094   14.237   11.602    0.000    0.000    0.000
0.000              0.000           Automatic
     XBrace7X XBrace1   14.594       L/r   11.602   Rupture   93   5.32   14.594     18.200     21.094   14.237   11.602    0.000    0.000    0.000
0.000              0.000           Automatic
    XBrace7XY XBrace1   14.594       L/r   11.602   Rupture   93   5.32   14.594     18.200     21.094   14.237   11.602    0.000    0.000    0.000
0.000              0.000           Automatic
     XBrace7Y XBrace1   14.594       L/r   11.602   Rupture   93   5.32   14.594     18.200     21.094   14.237   11.602    0.000    0.000    0.000
0.000              0.000           Automatic
     XBrace8P XBrace2   27.300     Shear   16.186  Net Sect   92   5.84   28.258     27.300     42.187   16.186   32.812    0.000    0.000    0.000
0.000              0.000           Automatic     Member "XBrace8P" will not be checked for block shear since more than one gage line exists (long edge
distance (g) greater than zero); however, end, edge and spacing distances will be checked.  ??
     XBrace8X XBrace2   27.300     Shear   16.186  Net Sect   92   5.84   28.258     27.300     42.187   16.186   32.812    0.000    0.000    0.000
0.000              0.000           Automatic     Member "XBrace8X" will not be checked for block shear since more than one gage line exists (long edge
distance (g) greater than zero); however, end, edge and spacing distances will be checked.  ??
    XBrace8XY XBrace2   27.300     Shear   16.186  Net Sect   92   5.84   28.258     27.300     42.187   16.186   32.812    0.000    0.000    0.000
0.000              0.000           Automatic    Member "XBrace8XY" will not be checked for block shear since more than one gage line exists (long edge
distance (g) greater than zero); however, end, edge and spacing distances will be checked.  ??
     XBrace8Y XBrace2   27.300     Shear   16.186  Net Sect   92   5.84   28.258     27.300     42.187   16.186   32.812    0.000    0.000    0.000
0.000              0.000           Automatic     Member "XBrace8Y" will not be checked for block shear since more than one gage line exists (long edge
distance (g) greater than zero); however, end, edge and spacing distances will be checked.  ??
     XBrace9P XBrace2   27.300     Shear   16.186  Net Sect   92   5.84   28.258     27.300     42.187   16.186   32.812    0.000    0.000    0.000
0.000              0.000           Automatic     Member "XBrace9P" will not be checked for block shear since more than one gage line exists (long edge
distance (g) greater than zero); however, end, edge and spacing distances will be checked.  ??
     XBrace9X XBrace2   27.300     Shear   16.186  Net Sect   92   5.84   28.258     27.300     42.187   16.186   32.812    0.000    0.000    0.000
0.000              0.000           Automatic     Member "XBrace9X" will not be checked for block shear since more than one gage line exists (long edge
distance (g) greater than zero); however, end, edge and spacing distances will be checked.  ??
    XBrace9XY XBrace2   27.300     Shear   16.186  Net Sect   92   5.84   28.258     27.300     42.187   16.186   32.812    0.000    0.000    0.000
0.000              0.000           Automatic    Member "XBrace9XY" will not be checked for block shear since more than one gage line exists (long edge
distance (g) greater than zero); however, end, edge and spacing distances will be checked.  ??
     XBrace9Y XBrace2   27.300     Shear   16.186  Net Sect   92   5.84   28.258     27.300     42.187   16.186   32.812    0.000    0.000    0.000
0.000              0.000           Automatic     Member "XBrace9Y" will not be checked for block shear since more than one gage line exists (long edge
distance (g) greater than zero); however, end, edge and spacing distances will be checked.  ??
    XBrace10P XBrace2   27.300     Shear   20.252  Net Sect   92   5.84   28.258     27.300     42.187   20.252   32.812    0.000    0.000    0.000
0.000              0.000           Automatic    Member "XBrace10P" will not be checked for block shear since more than one gage line exists (long edge
distance (g) greater than zero); however, end, edge and spacing distances will be checked.  ??
    XBrace10X XBrace2   27.300     Shear   20.252  Net Sect   92   5.84   28.258     27.300     42.187   20.252   32.812    0.000    0.000    0.000
0.000              0.000           Automatic    Member "XBrace10X" will not be checked for block shear since more than one gage line exists (long edge
distance (g) greater than zero); however, end, edge and spacing distances will be checked.  ??
   XBrace10XY XBrace2   27.300     Shear   20.252  Net Sect   92   5.84   28.258     27.300     42.187   20.252   32.812    0.000    0.000    0.000
0.000              0.000           Automatic   Member "XBrace10XY" will not be checked for block shear since more than one gage line exists (long edge
distance (g) greater than zero); however, end, edge and spacing distances will be checked.  ??
    XBrace10Y XBrace2   27.300     Shear   20.252  Net Sect   92   5.84   28.258     27.300     42.187   20.252   32.812    0.000    0.000    0.000
0.000              0.000           Automatic    Member "XBrace10Y" will not be checked for block shear since more than one gage line exists (long edge
distance (g) greater than zero); however, end, edge and spacing distances will be checked.  ??
    XBrace11P XBrace2   27.300     Shear   20.252  Net Sect   92   5.84   28.258     27.300     42.187   20.252   32.812    0.000    0.000    0.000
0.000              0.000           Automatic    Member "XBrace11P" will not be checked for block shear since more than one gage line exists (long edge
distance (g) greater than zero); however, end, edge and spacing distances will be checked.  ??
    XBrace11X XBrace2   27.300     Shear   20.252  Net Sect   92   5.84   28.258     27.300     42.187   20.252   32.812    0.000    0.000    0.000
0.000              0.000           Automatic    Member "XBrace11X" will not be checked for block shear since more than one gage line exists (long edge
distance (g) greater than zero); however, end, edge and spacing distances will be checked.  ??
   XBrace11XY XBrace2   27.300     Shear   20.252  Net Sect   92   5.84   28.258     27.300     42.187   20.252   32.812    0.000    0.000    0.000
0.000              0.000           Automatic   Member "XBrace11XY" will not be checked for block shear since more than one gage line exists (long edge
distance (g) greater than zero); however, end, edge and spacing distances will be checked.  ??
    XBrace11Y XBrace2   27.300     Shear   20.252  Net Sect   92   5.84   28.258     27.300     42.187   20.252   32.812    0.000    0.000    0.000
0.000              0.000           Automatic    Member "XBrace11Y" will not be checked for block shear since more than one gage line exists (long edge
distance (g) greater than zero); however, end, edge and spacing distances will be checked.  ??
    XBrace12P XBrace3   18.200     Shear   18.200     Shear   71   5.84   31.380     18.200     28.125   29.774   21.875    0.000    0.000    0.000
0.000              0.000           Automatic    Member "XBrace12P" will not be checked for block shear since more than one gage line exists (long edge
```

distance (g) greater than zero); however, end, edge and spacing distances will be checked. ??
XBrace12X XBrace3 18.200 Shear 18.200 Shear 71 5.84 31.380 18.200 28.125 29.774 21.875 0.000 0.000 0.000
0.000 0.000 Automatic Member "XBrace12X" will not be checked for block shear since more than one gage line exists (long edge
distance (g) greater than zero); however, end, edge and spacing distances will be checked. ??
XBrace12XY XBrace3 18.200 Shear 18.200 Shear 71 5.84 31.380 18.200 28.125 29.774 21.875 0.000 0.000 0.000
0.000 0.000 Automatic Member "XBrace12XY" will not be checked for block shear since more than one gage line exists (long edge
distance (g) greater than zero); however, end, edge and spacing distances will be checked. ??
XBrace12Y XBrace3 18.200 Shear 18.200 Shear 71 5.84 31.380 18.200 28.125 29.774 21.875 0.000 0.000 0.000
0.000 0.000 Automatic Member "XBrace12Y" will not be checked for block shear since more than one gage line exists (long edge
distance (g) greater than zero); however, end, edge and spacing distances will be checked. ??
XBrace13P XBrace3 18.200 Shear 18.200 Shear 71 5.84 31.380 18.200 28.125 29.774 21.875 0.000 0.000 0.000
0.000 0.000 Automatic Member "XBrace13P" will not be checked for block shear since more than one gage line exists (long edge
distance (g) greater than zero); however, end, edge and spacing distances will be checked. ??
XBrace13X XBrace3 18.200 Shear 18.200 Shear 71 5.84 31.380 18.200 28.125 29.774 21.875 0.000 0.000 0.000
0.000 0.000 Automatic Member "XBrace13X" will not be checked for block shear since more than one gage line exists (long edge
distance (g) greater than zero); however, end, edge and spacing distances will be checked. ??
XBrace13XY XBrace3 18.200 Shear 18.200 Shear 71 5.84 31.380 18.200 28.125 29.774 21.875 0.000 0.000 0.000
0.000 0.000 Automatic Member "XBrace13XY" will not be checked for block shear since more than one gage line exists (long edge
distance (g) greater than zero); however, end, edge and spacing distances will be checked. ??
XBrace13Y XBrace3 18.200 Shear 18.200 Shear 71 5.84 31.380 18.200 28.125 29.774 21.875 0.000 0.000 0.000
0.000 0.000 Automatic Member "XBrace13Y" will not be checked for block shear since more than one gage line exists (long edge
distance (g) greater than zero); however, end, edge and spacing distances will be checked. ??
XBrace14P XBrace4 14.684 L/r 18.200 Shear 140 7.84 14.684 18.200 28.125 22.349 21.875 0.000 0.000 0.000
0.000 0.000 Automatic
XBrace14X XBrace4 14.684 L/r 18.200 Shear 140 7.84 14.684 18.200 28.125 22.349 21.875 0.000 0.000 0.000
0.000 0.000 Automatic
XBrace14XY XBrace4 14.684 L/r 18.200 Shear 140 7.84 14.684 18.200 28.125 22.349 21.875 0.000 0.000 0.000
0.000 0.000 Automatic
XBrace14Y XBrace4 14.684 L/r 18.200 Shear 140 7.84 14.684 18.200 28.125 22.349 21.875 0.000 0.000 0.000
0.000 0.000 Automatic
XBrace15P XBrace4 14.684 L/r 18.200 Shear 140 7.84 14.684 18.200 28.125 22.349 21.875 0.000 0.000 0.000
0.000 0.000 Automatic
XBrace15X XBrace4 14.684 L/r 18.200 Shear 140 7.84 14.684 18.200 28.125 22.349 21.875 0.000 0.000 0.000
0.000 0.000 Automatic
XBrace15XY XBrace4 14.684 L/r 18.200 Shear 140 7.84 14.684 18.200 28.125 22.349 21.875 0.000 0.000 0.000
0.000 0.000 Automatic
XBrace15Y XBrace4 14.684 L/r 18.200 Shear 140 7.84 14.684 18.200 28.125 22.349 21.875 0.000 0.000 0.000
0.000 0.000 Automatic
XBrace16P XBrace4 10.765 L/r 18.200 Shear 170 9.58 10.765 18.200 28.125 22.349 21.875 0.000 0.000 0.000
0.000 0.000 Automatic
XBrace16X XBrace4 10.765 L/r 18.200 Shear 170 9.58 10.765 18.200 28.125 22.349 21.875 0.000 0.000 0.000
0.000 0.000 Automatic
XBrace16XY XBrace4 10.765 L/r 18.200 Shear 170 9.58 10.765 18.200 28.125 22.349 21.875 0.000 0.000 0.000
0.000 0.000 Automatic
XBrace16Y XBrace4 10.765 L/r 18.200 Shear 170 9.58 10.765 18.200 28.125 22.349 21.875 0.000 0.000 0.000
0.000 0.000 Automatic
XBrace17P XBrace4 10.765 L/r 18.200 Shear 170 9.58 10.765 18.200 28.125 22.349 21.875 0.000 0.000 0.000
0.000 0.000 Automatic
XBrace17X XBrace4 10.765 L/r 18.200 Shear 170 9.58 10.765 18.200 28.125 22.349 21.875 0.000 0.000 0.000
0.000 0.000 Automatic
XBrace17XY XBrace4 10.765 L/r 18.200 Shear 170 9.58 10.765 18.200 28.125 22.349 21.875 0.000 0.000 0.000
0.000 0.000 Automatic
XBrace17Y XBrace4 10.765 L/r 18.200 Shear 170 9.58 10.765 18.200 28.125 22.349 21.875 0.000 0.000 0.000
0.000 0.000 Automatic
XBrace18P XBrace5 5.606 L/r 7.242 Rupture 190 11.18 5.606 9.100 10.547 16.910 7.242 0.000 0.000 0.000
0.000 0.000 Automatic
XBrace18X XBrace5 5.606 L/r 7.242 Rupture 190 11.18 5.606 9.100 10.547 16.910 7.242 0.000 0.000 0.000
0.000 0.000 Automatic
XBrace18XY XBrace5 5.606 L/r 7.242 Rupture 190 11.18 5.606 9.100 10.547 16.910 7.242 0.000 0.000 0.000

XBrace18Y	XBrace5	5.606	L/r	7.242	Rupture	190	11.18	5.606	9.100	10.547	16.910	7.242	0.000	0.000	0.000	0.000	0.000
XBrace19P	XBrace5	5.606	L/r	7.242	Rupture	190	11.18	5.606	9.100	10.547	16.910	7.242	0.000	0.000	0.000	0.000	0.000
XBrace19X	XBrace5	5.606	L/r	7.242	Rupture	190	11.18	5.606	9.100	10.547	16.910	7.242	0.000	0.000	0.000	0.000	0.000
XBrace19XY	XBrace5	5.606	L/r	7.242	Rupture	190	11.18	5.606	9.100	10.547	16.910	7.242	0.000	0.000	0.000	0.000	0.000
XBrace19Y	XBrace5	5.606	L/r	7.242	Rupture	190	11.18	5.606	9.100	10.547	16.910	7.242	0.000	0.000	0.000	0.000	0.000
XBrace20P	XBrace6	9.100	Shear	8.203	Rupture	168	12.71	9.190	9.100	10.547	22.613	8.203	0.000	0.000	0.000	0.000	0.000
XBrace20X	XBrace6	9.100	Shear	8.203	Rupture	168	12.71	9.190	9.100	10.547	22.613	8.203	0.000	0.000	0.000	0.000	0.000
XBrace20XY	XBrace6	9.100	Shear	8.203	Rupture	168	12.71	9.190	9.100	10.547	22.613	8.203	0.000	0.000	0.000	0.000	0.000
XBrace20Y	XBrace6	9.100	Shear	8.203	Rupture	168	12.71	9.190	9.100	10.547	22.613	8.203	0.000	0.000	0.000	0.000	0.000
XBrace21P	XBrace6	9.100	Shear	8.203	Rupture	168	12.71	9.190	9.100	10.547	22.613	8.203	0.000	0.000	0.000	0.000	0.000
XBrace21X	XBrace6	9.100	Shear	8.203	Rupture	168	12.71	9.190	9.100	10.547	22.613	8.203	0.000	0.000	0.000	0.000	0.000
XBrace21XY	XBrace6	9.100	Shear	8.203	Rupture	168	12.71	9.190	9.100	10.547	22.613	8.203	0.000	0.000	0.000	0.000	0.000
XBrace21Y	XBrace6	9.100	Shear	8.203	Rupture	168	12.71	9.190	9.100	10.547	22.613	8.203	0.000	0.000	0.000	0.000	0.000
XBrace22P	XBrace7	9.100	Shear	9.100	Shear	167	15.17	14.787	9.100	14.062	37.199	10.937	0.000	0.000	0.000	0.000	0.000
XBrace22X	XBrace7	9.100	Shear	9.100	Shear	167	15.17	14.787	9.100	14.062	37.199	10.937	0.000	0.000	0.000	0.000	0.000
XBrace22XY	XBrace7	9.100	Shear	9.100	Shear	167	15.17	14.787	9.100	14.062	37.199	10.937	0.000	0.000	0.000	0.000	0.000
XBrace22Y	XBrace7	9.100	Shear	9.100	Shear	167	15.17	14.787	9.100	14.062	37.199	10.937	0.000	0.000	0.000	0.000	0.000
XBrace23P	XBrace7	9.100	Shear	9.100	Shear	167	15.17	14.787	9.100	14.062	37.199	10.937	0.000	0.000	0.000	0.000	0.000
XBrace23X	XBrace7	9.100	Shear	9.100	Shear	167	15.17	14.787	9.100	14.062	37.199	10.937	0.000	0.000	0.000	0.000	0.000
XBrace23XY	XBrace7	9.100	Shear	9.100	Shear	167	15.17	14.787	9.100	14.062	37.199	10.937	0.000	0.000	0.000	0.000	0.000
XBrace23Y	XBrace7	9.100	Shear	9.100	Shear	167	15.17	14.787	9.100	14.062	37.199	10.937	0.000	0.000	0.000	0.000	0.000
XBrace24P	XBrace8	0.945	L/r	14.237	Net Sect	531	24.70	0.945	18.200	21.094	14.237	16.406	0.000	0.000	0.000	0.000	0.000
XBrace24X	XBrace8	0.945	L/r	14.237	Net Sect	531	24.70	0.945	18.200	21.094	14.237	16.406	0.000	0.000	0.000	0.000	0.000
XBrace24XY	XBrace8	0.945	L/r	14.237	Net Sect	531	24.70	0.945	18.200	21.094	14.237	16.406	0.000	0.000	0.000	0.000	0.000
XBrace24Y	XBrace8	0.945	L/r	14.237	Net Sect	531	24.70	0.945	18.200	21.094	14.237	16.406	0.000	0.000	0.000	0.000	0.000
XBrace25P	XBrace8	0.945	L/r	14.237	Net Sect	531	24.70	0.945	18.200	21.094	14.237	16.406	0.000	0.000	0.000	0.000	0.000
XBrace25X	XBrace8	0.945	L/r	14.237	Net Sect	531	24.70	0.945	18.200	21.094	14.237	16.406	0.000	0.000	0.000	0.000	0.000
XBrace25XY	XBrace8	0.945	L/r	14.237	Net Sect	531	24.70	0.945	18.200	21.094	14.237	16.406	0.000	0.000	0.000	0.000	0.000
XBrace25Y	XBrace8	0.945	L/r	14.237	Net Sect	531	24.70	0.945	18.200	21.094	14.237	16.406	0.000	0.000	0.000	0.000	0.000

```
       Horz1P   Horz1    9.100     Shear    7.242   Rupture  122   4.00   13.406      9.100     10.547   16.910    7.242    0.000    0.000    0.000
0.000              0.000           Automatic
       Horz1X   Horz1    9.100     Shear    7.242   Rupture  122   4.00   13.406      9.100     10.547   16.910    7.242    0.000    0.000    0.000
0.000              0.000           Automatic
       Horz2P   Horz1    9.100     Shear    7.242   Rupture  122   4.00   13.406      9.100     10.547   16.910    7.242    0.000    0.000    0.000
0.000              0.000           Automatic
       Horz2X   Horz1    9.100     Shear    7.242   Rupture  122   4.00   13.406      9.100     10.547   16.910    7.242    0.000    0.000    0.000
0.000              0.000           Automatic
       Horz3P   Horz3    9.100     Shear    9.100     Shear  123   4.00   17.545      9.100     14.062   22.349    9.656    0.000    0.000    0.000
0.000              0.000           Automatic
       Horz3X   Horz3    9.100     Shear    9.100     Shear  123   4.00   17.545      9.100     14.062   22.349    9.656    0.000    0.000    0.000
0.000              0.000           Automatic
       Horz4P   Horz1    9.100     Shear    8.272   Rupture  122   4.00   13.406      9.100     10.547   16.910    8.272    0.000    0.000    0.000
0.000              0.000           Automatic
       Horz4X   Horz1    9.100     Shear    8.272   Rupture  122   4.00   13.406      9.100     10.547   16.910    8.272    0.000    0.000    0.000
0.000              0.000           Automatic
       Horz5P   Horz1    9.100     Shear    6.469   Rupture  122   4.00   13.406      9.100     10.547   16.910    6.469    0.000    0.000    0.000
0.000              0.000           Automatic
       Horz5Y   Horz1    9.100     Shear    6.469   Rupture  122   4.00   13.406      9.100     10.547   16.910    6.469    0.000    0.000    0.000
0.000              0.000           Automatic
       Horz6P   Horz2    9.100     Shear    8.625   Rupture  183  14.40   11.214      9.100     14.062   29.626    8.625    0.000    0.000    0.000
0.000              0.000           Automatic
       Horz6Y   Horz2    9.100     Shear    8.625   Rupture  183  14.40   11.214      9.100     14.062   29.626    8.625    0.000    0.000    0.000
0.000              0.000           Automatic
       Horz7P   Horz2    9.100     Shear    8.625   Rupture  183  14.40   11.214      9.100     14.062   29.626    8.625    0.000    0.000    0.000
0.000              0.000           Automatic
       Horz7X   Horz2    9.100     Shear    8.625   Rupture  183  14.40   11.214      9.100     14.062   29.626    8.625    0.000    0.000    0.000
0.000              0.000           Automatic
        Arm1P    Arm1    9.100     Shear    9.100     Shear  182  12.00   14.062      9.100     21.094   25.839   16.312    0.000    0.000    0.000
0.000              0.000           Automatic
        Arm1X    Arm1    9.100     Shear    9.100     Shear  182  12.00   14.062      9.100     21.094   25.839   16.312    0.000    0.000    0.000
0.000              0.000           Automatic
        Arm2P    Arm1    9.100     Shear    9.100     Shear   61   4.00   40.905      9.100     21.094   25.839   16.312    0.000    0.000    0.000
0.000              0.000           Automatic
        Arm3P    Arm2    9.100     Shear    9.100     Shear  129   8.25   21.113      9.100     14.062   29.774   18.382    0.000    0.000    0.000
0.000              0.000           Automatic
        Arm3X    Arm2    9.100     Shear    9.100     Shear  129   8.25   21.113      9.100     14.062   29.774   18.382    0.000    0.000    0.000
0.000              0.000           Automatic
       Arm3XY    Arm2    9.100     Shear    9.100     Shear  129   8.25   21.113      9.100     14.062   29.774   18.382    0.000    0.000    0.000
0.000              0.000           Automatic
        Arm3Y    Arm2    9.100     Shear    9.100     Shear  129   8.25   21.113      9.100     14.062   29.774   18.382    0.000    0.000    0.000
0.000              0.000           Automatic
        Arm4P    Arm2    9.100     Shear    9.100     Shear   98   4.00   25.851      9.100     14.062   29.774   18.382    0.000    0.000    0.000
0.000              0.000           Automatic
        Arm4Y    Arm2    9.100     Shear    9.100     Shear   98   4.00   25.851      9.100     14.062   29.774   18.382    0.000    0.000    0.000
0.000              0.000           Automatic
        Arm5P    Arm3   18.200     Shear   18.200     Shear  134  12.17   24.070     18.200     28.125   33.580   25.735    0.000    0.000    0.000
0.000              0.000           Automatic        Member "Arm5P" will not be checked for block shear since more than one gage line exists (long edge
distance (g) greater than zero); however, end, edge and spacing distances will be checked.  ??
        Arm5X    Arm3   18.200     Shear   18.200     Shear  134  12.17   24.070     18.200     28.125   33.580   25.735    0.000    0.000    0.000
0.000              0.000           Automatic        Member "Arm5X" will not be checked for block shear since more than one gage line exists (long edge
distance (g) greater than zero); however, end, edge and spacing distances will be checked.  ??
       Arm5XY    Arm3   18.200     Shear   18.200     Shear  134  12.17   24.070     18.200     28.125   33.580   25.735    0.000    0.000    0.000
0.000              0.000           Automatic       Member "Arm5XY" will not be checked for block shear since more than one gage line exists (long edge
distance (g) greater than zero); however, end, edge and spacing distances will be checked.  ??
        Arm5Y    Arm3   18.200     Shear   18.200     Shear  134  12.17   24.070     18.200     28.125   33.580   25.735    0.000    0.000    0.000
0.000              0.000           Automatic        Member "Arm5Y" will not be checked for block shear since more than one gage line exists (long edge
distance (g) greater than zero); however, end, edge and spacing distances will be checked.  ??
        Arm6P    Arm3   18.200     Shear   18.200     Shear   88   4.00   32.671     18.200     28.125   33.580   25.735    0.000    0.000    0.000
```

0.000 0.000 Automatic Member "Arm6P" will not be checked for block shear since more than one gage line exists (long edge distance (g) greater than zero); however, end, edge and spacing distances will be checked. ??
Arm6Y Arm3 18.200 Shear 18.200 Shear 88 4.00 32.671 18.200 28.125 33.580 25.735 0.000 0.000 0.000 0.000 0.000 Automatic Member "Arm6Y" will not be checked for block shear since more than one gage line exists (long edge distance (g) greater than zero); however, end, edge and spacing distances will be checked. ??
Arm7P Arm2 18.200 Shear 18.200 Shear 129 8.25 21.113 18.200 28.125 29.774 40.441 0.000 0.000 0.000 0.000 0.000 Automatic
Arm7X Arm2 18.200 Shear 18.200 Shear 129 8.25 21.113 18.200 28.125 29.774 40.441 0.000 0.000 0.000 0.000 0.000 Automatic
Arm7XY Arm2 18.200 Shear 18.200 Shear 129 8.25 21.113 18.200 28.125 29.774 40.441 0.000 0.000 0.000 0.000 0.000 Automatic
Arm7Y Arm2 18.200 Shear 18.200 Shear 129 8.25 21.113 18.200 28.125 29.774 40.441 0.000 0.000 0.000 0.000 0.000 Automatic
Arm8P Arm2 18.200 Shear 18.200 Shear 98 4.00 25.851 18.200 28.125 29.774 40.441 0.000 0.000 0.000 0.000 0.000 Automatic
Arm8Y Arm2 18.200 Shear 18.200 Shear 98 4.00 25.851 18.200 28.125 29.774 40.441 0.000 0.000 0.000 0.000 0.000 Automatic
Diagonal 1P Diag1 19.584 L/r 27.300 Shear 145 13.15 19.584 27.300 42.187 34.136 32.812 0.000 0.000 0.000 0.000 0.000 Automatic Member "Diagonal 1P" will not be checked for block shear since more than one gage line exists (long edge distance (g) greater than zero); however, end, edge and spacing distances will be checked. ??
Diagonal 1X Diag1 19.584 L/r 27.300 Shear 145 13.15 19.584 27.300 42.187 34.136 32.812 0.000 0.000 0.000 0.000 0.000 Automatic Member "Diagonal 1X" will not be checked for block shear since more than one gage line exists (long edge distance (g) greater than zero); however, end, edge and spacing distances will be checked. ??
Diagonal 1XY Diag1 19.584 L/r 27.300 Shear 145 13.15 19.584 27.300 42.187 34.136 32.812 0.000 0.000 0.000 0.000 0.000 Automatic Member "Diagonal 1XY" will not be checked for block shear since more than one gage line exists (long edge distance (g) greater than zero); however, end, edge and spacing distances will be checked. ??
Diagonal 1Y Diag1 19.584 L/r 27.300 Shear 145 13.15 19.584 27.300 42.187 34.136 32.812 0.000 0.000 0.000 0.000 0.000 Automatic Member "Diagonal 1Y" will not be checked for block shear since more than one gage line exists (long edge distance (g) greater than zero); however, end, edge and spacing distances will be checked. ??
Diagonal 2P Diag2 7.665 L/r 6.961 Net Sect 113 9.43 7.665 9.100 10.547 6.961 8.086 0.000 0.000 0.000 0.000 0.000 Automatic
Diagonal 2X Diag2 7.665 L/r 6.961 Net Sect 113 9.43 7.665 9.100 10.547 6.961 8.086 0.000 0.000 0.000 0.000 0.000 Automatic
Diagonal 3P Diag2 7.780 L/r 6.961 Net Sect 111 9.28 7.780 9.100 10.547 6.961 8.086 0.000 0.000 0.000 0.000 0.000 Automatic
Diagonal 3X Diag2 7.780 L/r 6.961 Net Sect 111 9.28 7.780 9.100 10.547 6.961 8.086 0.000 0.000 0.000 0.000 0.000 Automatic
Diagonal 3XY Diag2 7.780 L/r 6.961 Net Sect 111 9.28 7.780 9.100 10.547 6.961 8.086 0.000 0.000 0.000 0.000 0.000 Automatic
Diagonal 3Y Diag2 7.780 L/r 6.961 Net Sect 111 9.28 7.780 9.100 10.547 6.961 8.086 0.000 0.000 0.000 0.000 0.000 Automatic
Diagonal 4P Diag3 9.100 Shear 9.100 Shear 48 4.00 14.428 9.100 14.062 9.281 10.781 0.000 0.000 0.000 0.000 0.000 Automatic
Diagonal 4Y Diag3 9.100 Shear 9.100 Shear 48 4.00 14.428 9.100 14.062 9.281 10.781 0.000 0.000 0.000 0.000 0.000 Automatic
Diagonal 6P Diag3 9.100 Shear 9.100 Shear 48 4.00 14.428 9.100 14.062 9.281 10.781 0.000 0.000 0.000 0.000 0.000 Automatic
Diagonal 6Y Diag3 9.100 Shear 9.100 Shear 48 4.00 14.428 9.100 14.062 9.281 10.781 0.000 0.000 0.000 0.000 0.000 Automatic
g60P Inner1 9.100 Shear 5.695 Rupture 99 5.66 13.392 9.100 10.547 14.237 5.695 0.000 0.000 0.000 0.000 0.000 Automatic
g60X Inner1 9.100 Shear 5.695 Rupture 99 5.66 13.392 9.100 10.547 14.237 5.695 0.000 0.000 0.000 0.000 0.000 Automatic
g61P Inner1 9.100 Shear 5.695 Rupture 99 5.66 13.392 9.100 10.547 14.237 5.695 0.000 0.000 0.000 0.000 0.000 Automatic
g61X Inner1 9.100 Shear 5.695 Rupture 99 5.66 13.392 9.100 10.547 14.237 5.695 0.000 0.000 0.000 0.000 0.000 Automatic
g62P Inner1 9.100 Shear 5.695 Rupture 99 5.66 13.392 9.100 10.547 14.237 5.695 0.000 0.000 0.000 0.000 0.000 Automatic

g62X	Inner1	9.100	Shear	5.695	Rupture	99	5.66	13.392	9.100	10.547	14.237	5.695	0.000	0.000	0.000	0.000
																0.000
g63P	Inner1	9.100	Shear	5.695	Rupture	99	5.66	13.392	9.100	10.547	14.237	5.695	0.000	0.000	0.000	0.000
																0.000
g63X	Inner1	9.100	Shear	5.695	Rupture	99	5.66	13.392	9.100	10.547	14.237	5.695	0.000	0.000	0.000	0.000
																0.000
g64P	Inner2	1.023	L/r	7.242	Rupture	417	20.36	1.023	9.100	10.547	14.237	7.242	0.000	0.000	0.000	0.000
																0.000
g64X	Inner2	1.023	L/r	7.242	Rupture	417	20.36	1.023	9.100	10.547	14.237	7.242	0.000	0.000	0.000	0.000
																0.000
Diagonal 5P	Diag2R	8.863	L/r	9.100	Shear	127	10.59	8.863	9.100	13.594	10.125	11.062	0.000	0.000	0.000	0.000
																0.000
Diagonal 5X	Diag2R	8.863	L/r	9.100	Shear	127	10.59	8.863	9.100	13.594	10.125	11.062	0.000	0.000	0.000	0.000
																0.000
Diagonal 5XY	Diag2R	8.863	L/r	9.100	Shear	127	10.59	8.863	9.100	13.594	10.125	11.062	0.000	0.000	0.000	0.000
																0.000
Diagonal 5Y	Diag2R	8.863	L/r	9.100	Shear	127	10.59	8.863	9.100	13.594	10.125	11.062	0.000	0.000	0.000	0.000
																0.000
Diagonal 7P	Diag2	9.100	Shear	6.961	Net Sect	30	2.47	11.400	9.100	10.547	6.961	8.086	0.000	0.000	0.000	0.000
																0.000
Diagonal 7X	Diag2	9.100	Shear	6.961	Net Sect	30	2.47	11.400	9.100	10.547	6.961	8.086	0.000	0.000	0.000	0.000
																0.000
Diagonal 7XY	Diag2	9.100	Shear	6.961	Net Sect	30	2.47	11.400	9.100	10.547	6.961	8.086	0.000	0.000	0.000	0.000
																0.000
Diagonal 7Y	Diag2	9.100	Shear	6.961	Net Sect	30	2.47	11.400	9.100	10.547	6.961	8.086	0.000	0.000	0.000	0.000
																0.000
Diagonal 8P	Diag2	9.100	Shear	6.961	Net Sect	30	2.47	11.400	9.100	10.547	6.961	8.086	0.000	0.000	0.000	0.000
																0.000
Diagonal 8X	Diag2	9.100	Shear	6.961	Net Sect	30	2.47	11.400	9.100	10.547	6.961	8.086	0.000	0.000	0.000	0.000
																0.000
Diagonal 8XY	Diag2	9.100	Shear	6.961	Net Sect	30	2.47	11.400	9.100	10.547	6.961	8.086	0.000	0.000	0.000	0.000
																0.000
Diagonal 8Y	Diag2	9.100	Shear	6.961	Net Sect	30	2.47	11.400	9.100	10.547	6.961	8.086	0.000	0.000	0.000	0.000
																0.000

The model contains 223 angle members.

Sum of Unfactored Dead Load and Drag Areas From Equipment, Input and Calculated:

Joint Label	Dead Load (kips)	X-Drag Area (ft^2)	Y-Drag Area (ft^2)
1P	0.0791	4.428	2.324
2P	0.108	5.651	3.798
7P	0.127	5.270	4.561
8P	0.123	4.552	4.552
9P	0.163	7.214	7.214
15P	0.0974	5.042	1.571
16P	0.0398	2.453	0.833
17P	0.0776	5.233	1.026
18P	0.0457	3.176	1.200
19P	0.0122	1.279	0.513
1X	0.0791	4.428	2.324
2X	0.108	5.651	3.798
2XY	0.108	5.651	3.798
2Y	0.108	5.651	3.798
7X	0.127	5.270	4.561
7XY	0.127	5.270	4.561

7Y	0.127	5.270	4.561
8X	0.123	4.552	4.552
8XY	0.123	4.552	4.552
8Y	0.123	4.552	4.552
9X	0.163	7.214	7.214
9XY	0.163	7.214	7.214
9Y	0.163	7.214	7.214
15X	0.0974	5.042	1.571
16X	0.0398	2.453	0.833
17X	0.0776	5.233	1.026
18X	0.0457	3.176	1.200
19X	0.0122	1.279	0.513
19XY	0.0122	1.279	0.513
19Y	0.0122	1.279	0.513
3S	0.0512	2.452	2.452
4S	0.0562	2.992	2.598
5S	0.119	6.026	4.258
6S	0.092	5.026	4.330
10S	0.128	4.607	4.607
11S	0.133	5.013	5.013
12S	0.14	5.586	5.586
13S	0.195	7.377	7.377
14S	0.37	14.579	14.579
3X	0.0512	2.452	2.452
3XY	0.0512	2.452	2.452
3Y	0.0512	2.452	2.452
4X	0.0562	2.992	2.598
4XY	0.0562	2.992	2.598
4Y	0.0562	2.992	2.598
5X	0.119	6.026	4.258
5XY	0.119	6.026	4.258
5Y	0.119	6.026	4.258
6X	0.092	5.026	4.330
6XY	0.092	5.026	4.330
6Y	0.092	5.026	4.330
10X	0.128	4.607	4.607
10XY	0.128	4.607	4.607
10Y	0.128	4.607	4.607
11X	0.133	5.013	5.013
11XY	0.133	5.013	5.013
11Y	0.133	5.013	5.013
12X	0.14	5.586	5.586
12XY	0.14	5.586	5.586
12Y	0.14	5.586	5.586
13X	0.195	7.377	7.377
13XY	0.195	7.377	7.377
13Y	0.195	7.377	7.377
14X	0.37	14.579	14.579
14XY	0.37	14.579	14.579
14Y	0.37	14.579	14.579
Total	7.95	351.160	299.657

Unadjusted Dead Load and Drag Areas by Section:

Section Label	Unfactored Dead Load (kips)	X-Drag Area All (ft^2)	Y-Drag Area All (ft^2)	X-Drag Area Face (ft^2)	Y-Drag Area Face (ft^2)
1	3.197	164.989	113.486	75.567	37.178

2	4.753	186.171	186.171	72.049	72.049
Total	7.950	351.160	299.657	147.616	109.227

Angle Member Weights and Surface Areas by Section:

Section Label	Unfactored Weight (kips)	Factored Weight (kips)	Unfactored Surface Area (ft^2)	Factored Surface Area (ft^2)
1	3.197	3.197	643.303	643.303
2	4.753	4.991	857.800	900.690
Total	7.950	8.188	1501.103	1543.993

Section Joint Information:

Section Label	Joint Label	Joint Elevation (ft)
1	1P	78.250
1	2P	73.250
1	1X	78.250
1	2X	73.250
1	2XY	73.250
1	2Y	73.250
1	3S	69.750
1	3X	69.750
1	3XY	69.750
1	3Y	69.750
1	4S	66.250
1	4X	66.250
1	4XY	66.250
1	4Y	66.250
1	5S	62.750
1	5X	62.750
1	5XY	62.750
1	5Y	62.750
1	6S	58.500
1	6X	58.500
1	6XY	58.500
1	6Y	58.500
1	7P	54.250
1	7X	54.250
1	7XY	54.250
1	7Y	54.250
1	8P	50.000
1	8X	50.000
1	8XY	50.000
1	8Y	50.000
1	15P	78.250
1	15X	78.250
1	16P	73.250
1	16X	73.250
1	17P	62.750
1	17X	62.750
1	18P	54.250
1	18X	54.250
1	19X	64.500
1	19P	64.500

1	19Y	64.500
1	19XY	64.500
2	8P	50.000
2	10S	44.000
2	8X	50.000
2	10X	44.000
2	8XY	50.000
2	10XY	44.000
2	8Y	50.000
2	10Y	44.000
2	11S	37.500
2	11X	37.500
2	11XY	37.500
2	11Y	37.500
2	12S	31.000
2	12X	31.000
2	12XY	31.000
2	12Y	31.000
2	13S	24.830
2	13X	24.830
2	13XY	24.830
2	13Y	24.830
2	14S	17.500
2	14X	17.500
2	14XY	17.500
2	14Y	17.500
2	9P	0.000
2	9X	0.000
2	9XY	0.000
2	9Y	0.000

Sections Information:

Section Label	Top Z (ft)	Bottom Z (ft)	Joint Count	Member Count	Tran. Face Top Width (ft)	Tran. Face Bot Width (ft)	Tran. Face Gross Area (ft^2)	Long. Face Top Width (ft)	Long. Face Bot Width (ft)	Long. Face Gross Area (ft^2)
1	78.250	50.000	42	145	0.00	4.00	103.000	28.00	4.00	274.125
2	50.000	0.000	28	78	4.00	20.00	600.000	4.00	20.00	600.000

*** Insulator Data

Clamp Properties:

Label	Stock Number	Holding Capacity (lbs)
C-EX1		5e+004

Clamp Insulator Connectivity:

Clamp Label	Structure And Tip Attach	Property Set	Min. Required Vertical Load (uplift) (lbs)
Clamp1	15P	C-EX1	No Limit
Clamp2	15X	C-EX1	No Limit

Clamp3	16P	C-EX1	No Limit
Clamp4	16X	C-EX1	No Limit
Clamp5	17P	C-EX1	No Limit
Clamp6	17X	C-EX1	No Limit
Clamp7	18P	C-EX1	No Limit
Clamp8	18X	C-EX1	No Limit
Clamp9	2P	C-EX1	No Limit
Clamp10	4S	C-EX1	No Limit
Clamp11	6S	C-EX1	No Limit
Clamp12	8P	C-EX1	No Limit
Clamp13	10S	C-EX1	No Limit
Clamp14	12S	C-EX1	No Limit
Clamp15	14S	C-EX1	No Limit
Clamp16	2X	C-EX1	No Limit
Clamp17	4X	C-EX1	No Limit
Clamp18	6X	C-EX1	No Limit
Clamp19	8X	C-EX1	No Limit
Clamp20	10X	C-EX1	No Limit
Clamp21	12X	C-EX1	No Limit
Clamp22	14X	C-EX1	No Limit
Clamp23	5S	C-EX1	No Limit
Clamp24	5X	C-EX1	No Limit
Clamp25	2Y	C-EX1	No Limit
Clamp26	2XY	C-EX1	No Limit
Clamp27	5Y	C-EX1	No Limit
Clamp28	5XY	C-EX1	No Limit
Clamp29	4Y	C-EX1	No Limit
Clamp30	6Y	C-EX1	No Limit
Clamp31	8Y	C-EX1	No Limit
Clamp32	10Y	C-EX1	No Limit
Clamp33	12Y	C-EX1	No Limit
Clamp34	14Y	C-EX1	No Limit
Clamp35	4XY	C-EX1	No Limit
Clamp36	6XY	C-EX1	No Limit
Clamp37	8XY	C-EX1	No Limit
Clamp38	10XY	C-EX1	No Limit
Clamp39	12XY	C-EX1	No Limit
Clamp40	14XY	C-EX1	No Limit
Clamp43	3XY	C-EX1	No Limit
Clamp44	3Y	C-EX1	No Limit

*** Loads Data

Loads from file: j:\jobs\1701000.wi\08_meriden cariati blvd ct2117\04_structural\backup documentation\calcs\rev (6)\pls tower\meriden.lca

Insulator dead and wind loads are already included in the point loads printed below.

Loading Method Parameters:

Structure Height Summary (used for calculating wind/ice adjust with height):

Z of ground for wind height adjust	0.00 (ft)	and structure Z coordinate that will be put on the centerline ground profile in PLS-CADD.
Ground elevation shift	0.00 (ft)	
Z of ground with shift	0.00 (ft)	
Z of structure top (highest joint)	78.25 (ft)	
Structure height	78.25 (ft)	
Structure height above ground	78.25 (ft)	
Tower Shape	Rectangular	

Load distributed evenly among joints in section for section based load cases

Vector Load Cases:

Load Case Description	Dead Load Factor	Wind Area Factor	SF for Steel Poles Tubular Arms and Towers	SF for Guys and Cables	SF for Insuls.	SF For Found.	Point Loads	Wind/Ice Model	Trans. Wind Pressure (psf)	Longit. Wind Pressure (psf)	Ice Thick. (in)	Ice Density (lbs/ft^3)	Temperature (deg F)	Joint Displ.
NESC Heavy	1.5000	2.5000	1.00000	1.0000	1.0000	1.0000	30 loads	Wind on Face	4	0	0.000	56.000	60.0	
NESC Extreme	1.0000	1.0000	1.00000	1.0000	1.0000	1.0000	30 loads	NESC 2012	31	0	0.000	56.000	60.0	

Point Loads for Load Case "NESC Heavy":

Joint Label	Vertical Load (lbs)	Transverse Load (lbs)	Longitudinal Load (lbs)	Load Comment
15X	1250	825	-100	Shield Wire
16X	2325	950	0	Conductor
17X	2325	950	0	Conductor
18X	2325	950	0	Conductor
15P	1250	825	300	Shield Wire
16P	2600	975	1225	Conductor
17P	2600	975	250	Conductor
18P	2600	975	1050	Conductor
2P	569	207	0	Coax Cables
4S	509	185	0	Coax Cables
6S	560	204	0	Coax Cables
8P	500	182	0	Coax Cables
10S	655	238	0	Coax Cables
12S	914	332	0	Coax Cables
14S	1673	609	0	Coax Cables
2X	569	207	0	Coax Cables
4X	509	185	0	Coax Cables
6X	560	204	0	Coax Cables
8X	500	182	0	Coax Cables
10X	655	238	0	Coax Cables

12X	914	332	0	Coax Cables
14X	1673	609	0	Coax Cables
2X	4367	1311	1114	
2XY	3962	1171	-1142	
2P	852	1319	-1090	
2Y	457	1180	1118	
5X	4428	-385	-344	
5XY	4051	-374	346	
5S	209	-319	317	
5Y	-95	-311	-319	

Section Load Case Information (Standard) for "NESC Heavy":

Section Label	Z of Top (ft)	Z of Bottom (ft)	Ave. Elev. Above Ground (ft)	Res. Adj. Wind Pres. (psf)	Tran Adj. Wind Pres. (psf)	Tran Drag Coef	Tran Wind Load (lbs)	Long Adj. Wind Pres. (psf)	Long Drag Coef	Long Wind Load (lbs)	Ice Weight (lbs)	Total Weight (lbs)
1	78.25	50.00	64.13	10.00	10.00	3.250	1208.3	0.00	3.250	0.0	0	4796
2	50.00	0.00	25.00	10.00	10.00	3.250	2341.6	0.00	3.250	0.0	0	7486

Point Loads for Load Case "NESC Extreme":

Joint Label	Vertical Load (lbs)	Transverse Load (lbs)	Longitudinal Load (lbs)	Load Comment
15X	450	550	-100	Shield Wire
16X	1050	900	0	Conductor
17X	1050	900	0	Conductor
18X	1050	900	0	Conductor
15P	450	550	125	Shield Wire
16P	1250	1000	650	Conductor
17P	1250	975	125	Conductor
18P	1225	950	550	Conductor
2P	154	663	0	Coax Cables
4S	138	592	0	Coax Cables
6S	152	653	0	Coax Cables
8P	136	582	0	Coax Cables
10S	178	763	0	Coax Cables
12S	248	1064	0	Coax Cables
14S	454	1947	0	Coax Cables
2X	154	663	0	Coax Cables
4X	138	592	0	Coax Cables
6X	152	653	0	Coax Cables
8X	136	582	0	Coax Cables
10X	178	763	0	Coax Cables
12X	248	1064	0	Coax Cables
14X	454	1947	0	Coax Cables
2X	7436	4435	3825	
2XY	7315	4063	-3898	
2P	-5080	4526	-3822	
2Y	-5175	4155	3895	
5X	8565	-1327	-1192	
5XY	8377	-1301	1197	
5S	-6377	-1221	1182	
5Y	-6372	-1196	-1187	

Section Load Case Information (Code) for "NESC Extreme":

Section Label	Z of Top (ft)	Z of Bottom (ft)	Ave. Elev. Above Ground (ft)	Res. Adj. Wind Pres. (psf)	Tran Adj. Wind Pres. (psf)	Tran Angle Face Area (ft^2)	Tran Gross Area (ft^2)	Tran Soli-dity Ratio	Tran Angle Drag Coef	Tran Wind Load (lbs)	Long Adj. Wind Pres. (psf)	Long Angle Face Area (ft^2)	Long Gross Area (ft^2)	Long Soli-dity Ratio	Long Angle Drag Coef	Long Wind Load (lbs)	Ice Weight (lbs)	Total Weight (lbs)
1	78.25	50.00	64.13	30.48	30.48	37.18	103.00	0.361	3.200	3625.7	0.00	75.57	274.13	0.276	3.200	0.0	0	3197
2	50.00	0.00	25.00	30.48	30.48	75.65	600.00	0.126	3.200	7377.6	0.00	75.65	600.00	0.126	3.200	0.0	0	4991

*** Analysis Results:

Maximum element usage is 98.60% for Angle "Leg11X" in load case "NESC Extreme"
Maximum insulator usage is 20.03% for Clamp "Clamp16" in load case "NESC Extreme"

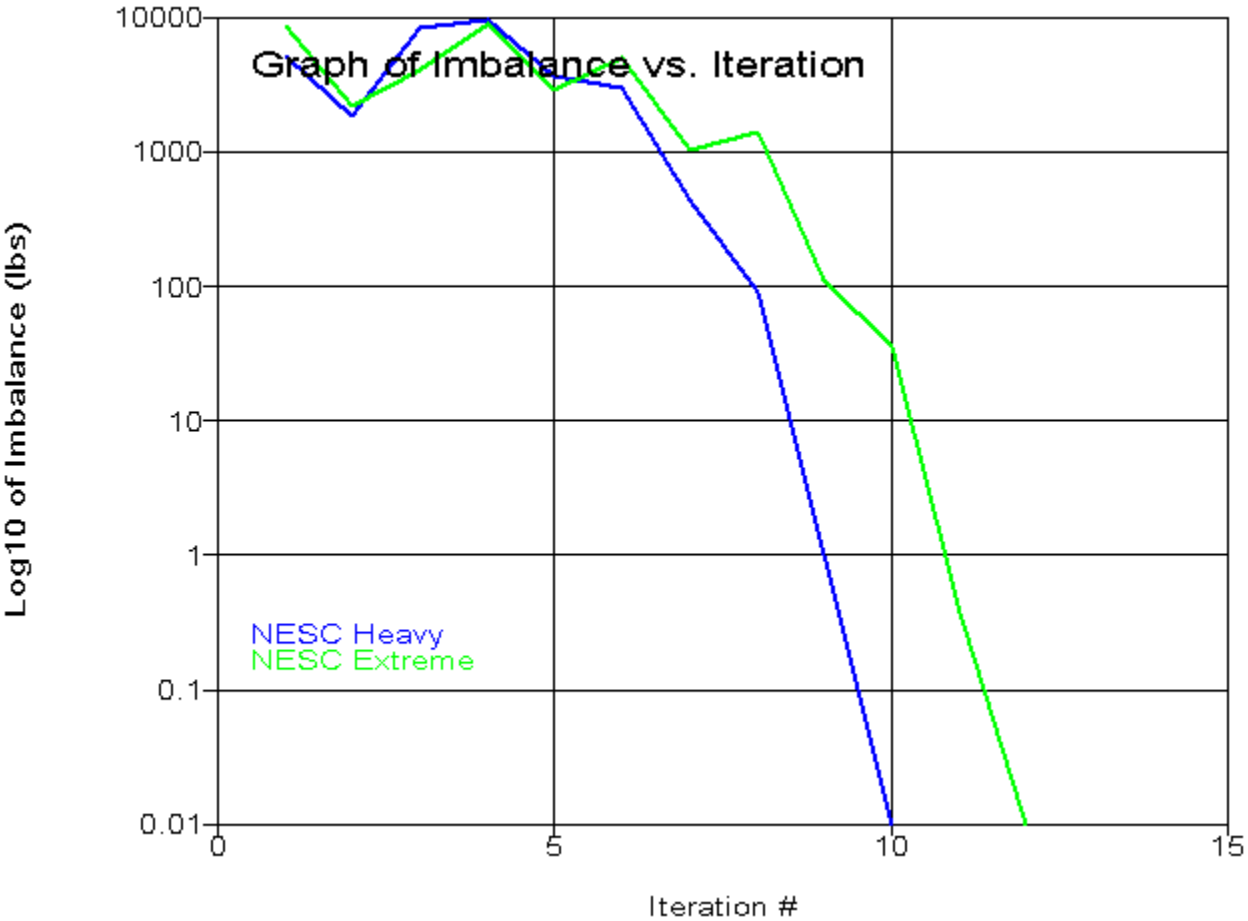

Angle Forces For All Load Cases:
Positive for tension - negative for compression

Group Label	Angle Label	Max. Usage For All LC %	Max. Tens. For All LC (kips)	Max. Comp. For All LC (kips)	LC 1 (kips)	LC 2 (kips)
Leg1	Leg1P	8.46	0.000	-0.856	-0.856	-0.285
Leg1	Leg1X	13.14	0.000	-1.330	-1.330	-0.777
Leg1	Leg1XY	17.16	0.000	-1.737	-1.737	-1.048
Leg1	Leg1Y	7.35	0.000	-0.744	-0.744	-0.150

Leg2	Leg2P	15.52	9.293	-1.205	-1.205	9.293
Leg2	Leg2X	18.81	0.000	-13.686	-9.446	-13.686
Leg2	Leg2XY	18.82	0.000	-13.693	-8.422	-13.693
Leg2	Leg2Y	17.41	10.425	0.000	1.284	10.425
Leg2	Leg3P	31.34	18.759	0.000	1.673	18.759
Leg2	Leg3X	33.99	0.000	-24.730	-15.479	-24.730
Leg2	Leg3XY	32.79	0.000	-23.859	-12.532	-23.859
Leg2	Leg3Y	34.22	20.485	0.000	5.205	20.485
Leg2	Leg4P	43.57	26.082	0.000	0.921	26.082
Leg2	Leg4X	49.10	0.000	-35.729	-23.072	-35.729
Leg2	Leg4XY	46.89	0.000	-34.116	-18.708	-34.116
Leg2	Leg4Y	47.11	28.203	0.000	5.661	28.203
Leg2	Leg5P	75.86	45.410	0.000	8.448	45.410
Leg2	Leg5X	79.70	0.000	-55.558	-30.755	-55.558
Leg2	Leg5XY	75.31	0.000	-52.501	-24.309	-52.501
Leg2	Leg5Y	79.45	47.561	0.000	14.314	47.561
Leg2	Leg6P	93.31	55.933	0.000	11.193	55.933
Leg2	Leg6X	97.87	0.000	-68.224	-38.308	-68.224
Leg2	Leg6XY	92.24	0.000	-64.303	-30.282	-64.303
Leg2	Leg6Y	98.29	58.915	0.000	19.402	58.915
Leg3	Leg7P	76.11	61.709	0.000	14.439	61.709
Leg3	Leg7X	77.23	0.000	-74.099	-41.816	-74.099
Leg3	Leg7XY	71.23	0.000	-68.342	-31.376	-68.342
Leg3	Leg7Y	80.19	65.019	0.000	24.536	65.019
Leg3	Leg8P	82.18	66.626	0.000	15.555	66.626
Leg3	Leg8X	80.09	0.000	-81.905	-48.538	-81.905
Leg3	Leg8XY	74.44	0.000	-76.130	-36.033	-76.130
Leg3	Leg8Y	88.67	71.892	0.000	27.744	71.892
Leg3	Leg9P	75.85	61.500	0.000	12.371	61.500
Leg3	Leg9X	78.44	0.000	-79.272	-50.074	-79.272
Leg3	Leg9XY	74.12	0.000	-74.907	-37.622	-74.907
Leg3	Leg9Y	84.67	68.647	0.000	25.396	68.647
Leg3	Leg10P	67.39	54.638	0.000	10.647	54.638
Leg3	Leg10X	92.99	0.000	-71.185	-45.900	-71.185
Leg3	Leg10XY	88.39	0.000	-67.668	-34.849	-67.668
Leg3	Leg10Y	75.90	61.537	0.000	22.405	61.537
Leg3	Leg11P	74.49	53.538	0.000	9.204	53.538
Leg3	Leg11X	98.60	0.000	-71.782	-47.279	-71.782
Leg3	Leg11XY	92.96	0.000	-67.676	-35.552	-67.676
Leg3	Leg11Y	83.88	60.290	0.000	21.399	60.290
Leg4	Leg12P	63.46	52.337	0.000	8.725	52.337
Leg4	Leg12X	77.22	0.000	-69.989	-46.239	-69.989
Leg4	Leg12XY	72.04	0.000	-65.291	-34.847	-65.291
Leg4	Leg12Y	70.25	57.937	0.000	20.046	57.937
Leg4	Leg13P	49.25	48.283	0.000	5.350	48.283
Leg4	Leg13X	96.19	0.000	-75.538	-50.805	-75.538
Leg4	Leg13XY	85.68	0.000	-67.282	-37.776	-67.282
Leg4	Leg13Y	54.45	53.375	0.000	17.714	53.375
XBrace1	XBrace1P	10.10	0.000	-0.797	-0.797	-0.571
XBrace1	XBrace1X	3.03	0.173	-0.010	-0.010	0.173
XBrace1	XBrace1XY	8.85	0.504	0.000	0.484	0.504
XBrace1	XBrace1Y	10.01	0.000	-0.911	-0.911	-0.727
XBrace1	XBrace2P	61.33	0.000	-8.951	-5.635	-8.951
XBrace1	XBrace2X	67.32	8.095	0.000	3.776	8.095
XBrace1	XBrace2XY	48.54	5.836	0.000	0.639	5.836
XBrace1	XBrace2Y	44.80	0.000	-6.538	-2.140	-6.538
XBrace1	XBrace3P	6.05	0.000	-0.883	-0.869	-0.883
XBrace1	XBrace3X	18.87	2.269	0.000	2.269	1.564
XBrace1	XBrace3XY	11.70	0.000	-1.708	-1.708	-1.179

XBrace1	XBrace3Y	9.64	1.160	0.000	1.160	0.873
XBrace1	XBrace4P	58.01	0.000	-8.466	-4.018	-8.466
XBrace1	XBrace4X	76.27	9.171	0.000	5.640	9.171
XBrace1	XBrace4XY	55.91	6.722	0.000	2.140	6.722
XBrace1	XBrace4Y	41.92	0.000	-6.118	-0.753	-6.118
XBrace1	XBrace5P	7.34	0.000	-1.071	-1.071	-0.594
XBrace1	XBrace5X	13.29	1.598	0.000	1.598	0.886
XBrace1	XBrace5XY	16.52	0.000	-2.411	-2.411	-1.875
XBrace1	XBrace5Y	9.80	1.178	0.000	0.975	1.178
XBrace1	XBrace6P	62.96	0.000	-9.189	-4.796	-9.189
XBrace1	XBrace6X	77.47	8.987	0.000	4.175	8.987
XBrace1	XBrace6XY	55.41	6.428	0.000	1.422	6.428
XBrace1	XBrace6Y	42.97	0.000	-6.271	-1.191	-6.271
XBrace1	XBrace7P	16.93	0.000	-2.040	-1.980	-2.040
XBrace1	XBrace7X	16.66	1.932	0.000	1.623	1.932
XBrace1	XBrace7XY	15.86	0.000	-2.314	-2.314	-0.756
XBrace1	XBrace7Y	2.93	0.000	-0.353	-0.045	-0.353
XBrace2	XBrace8P	38.01	0.000	-10.376	-7.444	-10.376
XBrace2	XBrace8X	55.62	9.002	0.000	4.596	9.002
XBrace2	XBrace8XY	37.98	6.148	0.000	1.268	6.148
XBrace2	XBrace8Y	24.49	0.000	-6.687	-2.221	-6.687
XBrace2	XBrace9P	5.82	0.000	-1.590	-1.590	-1.364
XBrace2	XBrace9X	15.21	2.462	0.000	2.462	1.879
XBrace2	XBrace9XY	11.22	0.000	-3.063	-3.063	-2.010
XBrace2	XBrace9Y	8.67	1.403	0.000	1.403	1.280
XBrace2	XBrace10P	40.52	0.000	-11.062	-7.468	-11.062
XBrace2	XBrace10X	47.04	9.526	0.000	4.338	9.526
XBrace2	XBrace10XY	32.93	6.668	0.000	1.821	6.668
XBrace2	XBrace10Y	25.54	0.000	-6.971	-2.187	-6.971
XBrace2	XBrace11P	9.92	0.000	-2.246	-2.246	-2.023
XBrace2	XBrace11X	12.07	2.445	0.000	2.445	2.290
XBrace2	XBrace11XY	11.34	0.000	-3.095	-3.095	-1.503
XBrace2	XBrace11Y	1.94	0.392	0.000	0.392	0.345
XBrace3	XBrace12P	72.00	0.000	-13.103	-10.837	-13.103
XBrace3	XBrace12X	57.69	10.500	0.000	5.350	10.500
XBrace3	XBrace12XY	34.62	6.301	0.000	0.628	6.301
XBrace3	XBrace12Y	39.66	0.000	-7.217	-2.384	-7.217
XBrace3	XBrace13P	73.59	0.000	-13.394	-7.939	-13.394
XBrace3	XBrace13X	72.41	13.179	0.000	7.415	13.179
XBrace3	XBrace13XY	42.67	7.766	-0.636	-0.636	7.766
XBrace3	XBrace13Y	54.71	0.000	-9.958	-3.854	-9.958
XBrace4	XBrace14P	44.73	0.000	-6.568	-1.150	-6.568
XBrace4	XBrace14X	28.46	5.179	-1.357	-1.357	5.179
XBrace4	XBrace14XY	51.49	9.372	0.000	5.205	9.372
XBrace4	XBrace14Y	67.15	0.000	-9.861	-5.774	-9.861
XBrace4	XBrace15P	61.69	0.000	-8.319	-6.501	-8.319
XBrace4	XBrace15X	40.25	7.325	0.000	3.961	7.325
XBrace4	XBrace15XY	11.47	2.087	-1.122	-1.122	2.087
XBrace4	XBrace15Y	17.35	0.648	-2.340	0.648	-2.340
XBrace4	XBrace16P	26.66	4.852	0.000	3.824	4.852
XBrace4	XBrace16X	40.02	0.000	-4.088	-2.346	-4.088
XBrace4	XBrace16XY	8.66	0.648	-0.884	0.648	-0.884
XBrace4	XBrace16Y	6.76	1.129	-0.727	-0.727	1.129
XBrace4	XBrace17P	15.35	2.793	0.000	0.134	2.793
XBrace4	XBrace17X	21.64	0.817	-2.330	0.817	-2.330
XBrace4	XBrace17XY	53.50	0.000	-5.759	-3.332	-5.759
XBrace4	XBrace17Y	31.57	5.745	0.000	3.419	5.745
XBrace5	XBrace18P	17.83	1.113	-0.766	-0.766	1.113
XBrace5	XBrace18X	30.46	0.000	-1.708	-0.139	-1.708

XBrace5	XBrace18XY	66.59	0.000	-3.733	-2.385	-3.733
XBrace5	XBrace18Y	47.93	3.471	0.000	2.059	3.471
XBrace5	XBrace19P	75.10	0.000	-3.226	-2.594	-3.226
XBrace5	XBrace19X	34.53	2.501	0.000	1.486	2.501
XBrace5	XBrace19XY	10.05	0.304	-0.563	-0.563	0.304
XBrace5	XBrace19Y	15.61	0.529	-0.671	0.529	-0.671
XBrace6	XBrace20P	5.77	0.000	-0.525	-0.525	-0.105
XBrace6	XBrace20X	8.87	0.727	0.000	0.727	0.416
XBrace6	XBrace20XY	26.67	0.000	-2.427	-1.594	-2.427
XBrace6	XBrace20Y	30.56	2.507	0.000	1.629	2.507
XBrace6	XBrace21P	6.34	0.414	-0.577	-0.577	0.414
XBrace6	XBrace21X	3.43	0.281	-0.175	0.281	-0.175
XBrace6	XBrace21XY	26.82	0.000	-1.802	-1.118	-1.802
XBrace6	XBrace21Y	28.59	2.345	0.000	1.912	2.345
XBrace7	XBrace22P	10.62	0.000	-0.966	-0.966	-0.849
XBrace7	XBrace22X	4.16	0.379	0.000	0.379	0.323
XBrace7	XBrace22XY	21.34	0.000	-1.942	-1.467	-1.942
XBrace7	XBrace22Y	18.47	1.681	0.000	1.080	1.681
XBrace7	XBrace23P	23.06	0.000	-2.099	-1.757	-2.099
XBrace7	XBrace23X	15.83	1.441	0.000	0.866	1.441
XBrace7	XBrace23XY	3.41	0.063	-0.311	-0.311	0.063
XBrace7	XBrace23Y	5.06	0.460	-0.312	0.460	-0.312
XBrace8	XBrace24P	41.80	5.951	0.000	2.767	5.951
XBrace8	XBrace24X	0.00	0.000	0.000	0.000	0.000
XBrace8	XBrace24XY	16.66	2.371	0.000	1.625	2.371
XBrace8	XBrace24Y	0.00	0.000	0.000	0.000	0.000
XBrace8	XBrace25P	19.31	2.749	0.000	2.749	2.199
XBrace8	XBrace25X	23.15	3.296	0.000	0.348	3.296
XBrace8	XBrace25XY	34.97	4.979	0.000	1.529	4.979
XBrace8	XBrace25Y	0.00	0.000	0.000	0.000	0.000
Horz1	Horz1P	62.90	4.555	0.000	2.562	4.555
Horz1	Horz1X	37.52	0.000	-3.415	-0.016	-3.415
Horz1	Horz2P	17.79	1.289	0.000	1.289	0.419
Horz1	Horz2X	19.96	1.445	0.000	1.445	0.697
Horz3	Horz3P	95.27	8.669	0.000	4.879	8.669
Horz3	Horz3X	79.40	0.000	-7.226	-1.636	-7.226
Horz1	Horz4P	18.94	0.000	-1.723	-0.942	-1.723
Horz1	Horz4X	16.54	1.368	0.000	0.410	1.368
Horz1	Horz5P	1.30	0.000	-0.118	-0.074	-0.118
Horz1	Horz5Y	0.97	0.048	-0.088	0.048	-0.088
Horz2	Horz6P	26.97	0.000	-2.455	-1.134	-2.455
Horz2	Horz6Y	12.42	0.000	-1.130	-0.524	-1.130
Horz2	Horz7P	5.96	0.000	-0.543	-0.543	-0.155
Horz2	Horz7X	45.93	0.000	-4.180	-0.941	-4.180
Arm1	Arm1P	26.83	2.441	0.000	2.441	0.583
Arm1	Arm1X	45.73	4.161	0.000	4.161	1.890
Arm1	Arm2P	84.23	7.665	0.000	7.665	3.348
Arm2	Arm3P	57.43	0.000	-5.226	-5.226	-2.983
Arm2	Arm3X	16.18	0.000	-1.472	-1.472	-0.410
Arm2	Arm3XY	15.76	0.000	-1.434	-1.434	-0.384
Arm2	Arm3Y	3.26	0.000	-0.297	-0.167	-0.297
Arm2	Arm4P	45.79	0.000	-4.167	-4.167	-1.780
Arm2	Arm4Y	14.63	0.000	-1.331	-1.331	-0.471
Arm3	Arm5P	47.56	0.000	-8.656	-8.656	-4.404
Arm3	Arm5X	30.18	0.000	-5.492	-5.492	-1.756
Arm3	Arm5XY	33.98	0.000	-6.184	-6.184	-2.309
Arm3	Arm5Y	37.66	0.000	-6.855	-6.855	-3.268
Arm3	Arm6P	16.74	0.000	-3.047	-3.047	-1.354
Arm3	Arm6Y	18.53	0.000	-3.372	-3.372	-1.447

Arm2	Arm7P	28.94	0.000	-5.267	-5.267	-3.074
Arm2	Arm7X	7.24	0.000	-1.318	-1.318	-0.165
Arm2	Arm7XY	12.62	0.000	-2.297	-2.297	-0.934
Arm2	Arm7Y	5.19	0.000	-0.945	-0.945	-0.528
Arm2	Arm8P	2.42	0.000	-0.441	-0.441	-0.289
Arm2	Arm8Y	5.68	0.000	-1.034	-1.034	-0.425
Diag1	Diagonal 1P	14.40	0.000	-2.820	-2.820	-1.090
Diag1	Diagonal 1X	7.74	0.000	-1.516	-1.516	-0.366
Diag1	Diagonal 1XY	10.88	0.000	-2.132	-2.132	-0.997
Diag1	Diagonal 1Y	4.22	0.000	-0.826	-0.826	-0.257
Diag2	Diagonal 2P	71.51	4.978	0.000	4.978	2.452
Diag2	Diagonal 2X	64.15	4.466	0.000	4.466	2.093
Diag2	Diagonal 3P	41.54	2.892	0.000	2.892	1.571
Diag2	Diagonal 3X	29.10	2.026	0.000	2.026	0.754
Diag2	Diagonal 3XY	45.38	3.159	0.000	3.159	1.641
Diag2	Diagonal 3Y	41.84	2.913	0.000	2.913	1.264
Diag3	Diagonal 4P	41.37	3.765	0.000	3.765	1.663
Diag3	Diagonal 4Y	29.36	2.672	0.000	2.672	1.206
Diag3	Diagonal 6P	40.76	3.709	0.000	3.709	1.731
Diag3	Diagonal 6Y	39.38	3.584	0.000	3.584	1.679
Inner1	g60P	11.60	0.000	-1.056	-1.056	-0.798
Inner1	g60X	12.90	0.735	0.000	0.735	0.709
Inner1	g61P	5.03	0.000	-0.458	-0.458	-0.396
Inner1	g61X	4.92	0.280	0.000	0.270	0.280
Inner1	g62P	2.35	0.000	-0.214	-0.153	-0.214
Inner1	g62X	14.72	0.838	0.000	0.838	0.504
Inner1	g63P	8.66	0.000	-0.788	-0.384	-0.788
Inner1	g63X	9.53	0.543	0.000	0.140	0.543
Inner2	g64P	56.46	0.000	-0.577	-0.577	0.000
Inner2	g64X	16.21	0.497	-0.166	-0.166	0.497
Diag2R	Diagonal 5P	82.31	7.490	0.000	7.490	3.526
Diag2R	Diagonal 5X	66.69	6.069	0.000	6.069	2.292
Diag2R	Diagonal 5XY	74.84	6.811	0.000	6.811	2.880
Diag2R	Diagonal 5Y	79.59	7.242	0.000	7.242	3.167
Diag2	Diagonal 7P	88.90	6.188	0.000	6.188	2.899
Diag2	Diagonal 7X	72.15	5.022	0.000	5.022	2.003
Diag2	Diagonal 7XY	80.97	5.636	0.000	5.636	2.488
Diag2	Diagonal 7Y	85.94	5.982	0.000	5.982	2.603
Diag2	Diagonal 8P	60.22	4.192	0.000	4.192	1.882
Diag2	Diagonal 8X	48.94	3.407	0.000	3.407	1.304
Diag2	Diagonal 8XY	54.91	3.822	0.000	3.822	1.635
Diag2	Diagonal 8Y	58.26	4.055	0.000	4.055	1.680

*** Analysis Results for Load Case No. 1 "NESC Heavy" - Number of iterations in SAPS 10

Equilibrium Joint Positions and Rotations for Load Case "NESC Heavy":

Joint Label	X-Displ (ft)	Y-Displ (ft)	Z-Displ (ft)	X-Rot (deg)	Y-Rot (deg)	Z-Rot (deg)	X-Pos (ft)	Y-Pos (ft)	Z-Pos (ft)
1P	0.05027	0.2052	0.001687	-0.3395	0.0752	0.2272	0.05027	-1.795	78.25
2P	0.04385	0.1833	-0.0006188	-0.3591	0.0796	0.2167	2.044	-1.817	73.25
7P	0.0184	0.075	-0.001557	-0.2395	0.0520	0.1413	2.018	-1.925	54.25
8P	0.01385	0.05745	-0.002157	-0.2153	0.0728	0.1335	2.014	-1.943	50
9P	0	0	0	0.0000	0.0000	0.0000	10	-10	0
15P	0.1001	0.2049	0.0705	-0.3199	0.0818	0.2413	0.1001	-13.8	78.32
16P	0.07821	0.1762	0.04031	-0.2394	0.0761	0.2573	0.07821	-9.824	73.29
17P	0.06588	0.1153	-0.1503	1.2110	0.0757	0.1807	0.06588	-13.88	62.6
18P	0.04044	0.07088	0.02968	-0.2012	0.0574	0.1632	0.04044	-9.929	54.28
19P	-0.2743	0.1055	-0.03293	0.0000	0.0000	0.0000	1.726	3.855	64.47
1X	0.03461	0.2058	-0.0224	-0.3528	0.0730	0.2227	0.03461	2.206	78.23
2X	0.02873	0.1827	-0.02436	-0.3616	0.0696	0.2099	2.029	2.183	73.23
2XY	0.02827	0.1672	-0.01928	-0.3547	0.0657	0.2123	-1.972	2.167	73.23
2Y	0.04389	0.1674	0.004573	-0.3411	0.0925	0.2214	-1.956	-1.833	73.25
7X	0.009168	0.07491	-0.01741	-0.2634	0.0707	0.1337	2.009	2.075	54.23
7XY	0.008466	0.06496	-0.01366	-0.2468	0.0298	0.1375	-1.992	2.065	54.24
7Y	0.01865	0.06512	0.0022	-0.2286	0.0785	0.1414	-1.981	-1.935	54.25
8X	0.005525	0.0574	-0.01552	-0.1966	0.0176	0.1211	2.006	2.057	49.98
8XY	0.005718	0.04911	-0.01224	-0.1738	0.0509	0.1170	-1.994	2.049	49.99
8Y	0.01378	0.04913	0.001146	-0.1833	0.0500	0.1189	-1.986	-1.951	50
9X	0	0	0	0.0000	0.0000	0.0000	10	10	0
9XY	0	0	0	0.0000	0.0000	0.0000	-10	10	0
9Y	0	0	0	0.0000	0.0000	0.0000	-10	-10	0
15X	-0.01271	0.2065	-0.1	-0.3796	0.0665	0.2280	-0.01271	14.21	78.15
16X	-0.002694	0.1743	-0.07958	-0.4411	0.0712	0.2289	-0.002694	10.17	73.17
17X	-0.01976	0.1063	-0.3058	-1.8551	0.0619	0.1766	-0.01976	14.11	62.44
18X	-0.0116	0.06925	-0.06019	-0.3547	0.0567	0.1508	-0.0116	10.07	54.19
19X	-0.2522	0.1494	0.00955	0.0000	0.0000	0.0000	1.748	-3.601	64.51
19XY	0.3254	0.1389	0.01288	0.0000	0.0000	0.0000	-1.675	-3.611	64.51
19Y	0.3015	0.0947	-0.0282	0.0000	0.0000	0.0000	-1.699	3.845	64.47
3S	0.03878	0.1605	-0.0004802	-0.3732	0.0930	0.2019	2.039	-1.84	69.75
4S	0.0332	0.1381	-0.0004884	-0.3635	0.0829	0.1873	2.033	-1.862	66.25
5S	0.02889	0.1179	-0.0004734	-0.2618	0.0712	0.1726	2.029	-1.882	62.75
6S	0.02246	0.09438	-0.0009195	-0.3075	0.0769	0.1569	2.022	-1.906	58.5
10S	0.008665	0.04154	-0.001442	-0.1375	0.0536	0.1215	2.969	-2.918	44
11S	0.007046	0.03039	-0.0007868	-0.0940	0.0334	0.1021	4.007	-3.97	37.5
12S	0.00425	0.02254	-0.0007319	-0.0786	0.0348	0.0746	5.044	-5.017	31
13S	0.00289	0.0162	-0.0005524	-0.0428	0.0182	0.0549	6.03	-6.011	24.83
14S	0.001771	0.01294	-0.0008519	-0.0386	0.0155	0.0369	7.202	-7.187	17.5
3X	0.02474	0.1606	-0.02382	-0.3591	0.0620	0.1957	2.025	2.161	69.73
3XY	0.02437	0.146	-0.01879	-0.3380	0.0695	0.1980	-1.976	2.146	69.73
3Y	0.03859	0.1462	0.004577	-0.3491	0.0794	0.2053	-1.961	-1.854	69.75
4X	0.02108	0.1391	-0.02297	-0.3442	0.0698	0.1813	2.021	2.139	66.23
4XY	0.02031	0.1259	-0.0181	-0.3186	0.0575	0.1838	-1.98	2.126	66.23
4Y	0.03406	0.125	0.004382	-0.3432	0.0840	0.1891	-1.966	-1.875	66.25
5X	0.0171	0.1175	-0.02174	-0.3810	0.0443	0.1672	2.017	2.118	62.73
5XY	0.01687	0.1056	-0.0171	-0.3704	0.0792	0.1695	-1.983	2.106	62.73
5Y	0.02863	0.106	0.004154	-0.2483	0.0835	0.1728	-1.971	-1.894	62.75
6X	0.01432	0.09536	-0.01981	-0.2699	0.0532	0.1504	2.014	2.095	58.48
6XY	0.01106	0.08434	-0.01555	-0.2565	0.0593	0.1533	-1.989	2.084	58.48

6Y	0.02438	0.08367	0.00334	-0.2931	0.0621	0.1572	-1.976	-1.916	58.5
10X	0.004016	0.04339	-0.0148	-0.1234	0.0039	0.1078	2.964	3.003	43.99
10XY	-0.001278	0.03357	-0.01122	-0.1042	0.0335	0.0907	-2.961	2.994	43.99
10Y	0.01146	0.03311	0.002281	-0.1061	0.0410	0.0932	-2.949	-2.927	44
11X	-0.00177	0.03134	-0.01408	-0.1046	0.0304	0.0902	3.998	4.031	37.49
11XY	-0.003209	0.02083	-0.01025	-0.0831	0.0053	0.0694	-4.003	4.021	37.49
11Y	0.00721	0.0205	0.003184	-0.0796	0.0397	0.0730	-3.993	-3.98	37.5
12X	-0.004809	0.02267	-0.01268	-0.0644	-0.0037	0.0665	5.035	5.063	30.99
12XY	-0.006082	0.01174	-0.008762	-0.0522	0.0267	0.0545	-5.046	5.052	30.99
12Y	0.00527	0.01172	0.00331	-0.0564	0.0215	0.0560	-5.035	-5.028	31
13X	-0.006549	0.01773	-0.01055	-0.0424	0.0224	0.0506	6.021	6.045	24.82
13XY	-0.009255	0.005674	-0.006819	-0.0443	0.0206	0.0395	-6.036	6.033	24.82
13Y	0.003463	0.005112	0.003214	-0.0442	0.0183	0.0393	-6.024	-6.022	24.83
14X	-0.01068	0.0125	-0.008644	-0.0478	-0.0031	0.0298	7.189	7.213	17.49
14XY	-0.01047	-0.0002381	-0.005003	-0.0225	-0.0135	0.0220	-7.21	7.2	17.49
14Y	0.002134	-3.198e-005	0.002776	-0.0180	0.0115	0.0258	-7.198	-7.2	17.5

Joint Support Reactions for Load Case "NESC Heavy":

Joint Label	X Force (kips)	X Usage %	Y Force (kips)	Y Usage %	H-Shear Usage %	Z Force (kips)	Comp. Usage %	Uplift Usage %	Result. Force (kips)	Result. Usage %	X Moment (ft-k)	X-M. Usage %	Y Moment (ft-k)	Y-M. Usage %	H-Bend-M Usage %	Z Moment (ft-k)	Z-M. Usage %	Max. Usage %
9P	1.39	0.0	-3.02	0.0	0.0	7.16	0.0	0.0	7.90	0.0	0.32	0.0	-0.0	0.0	0.0	-0.00	0.0	0.0
9X	-6.00	0.0	-7.60	0.0	0.0	-47.87	0.0	0.0	48.84	0.0	0.22	0.0	0.4	0.0	0.0	0.05	0.0	0.0
9XY	5.72	0.0	-4.75	0.0	0.0	-35.95	0.0	0.0	36.71	0.0	-0.13	0.0	0.3	0.0	0.0	0.04	0.0	0.0
9Y	-3.83	0.0	-3.11	0.0	0.0	18.11	0.0	0.0	18.77	0.0	-0.09	0.0	-0.0	0.0	0.0	-0.01	0.0	0.0

Joint Displacements, Loads and Member Forces on Joints for Load Case "NESC Heavy":

Joint Label	X External Load (kips)	Y External Load (kips)	Z External Load (kips)	X Member Force (kips)	Y Member Force (kips)	Z Member Force (kips)	X Disp. (ft)	Y Disp. (ft)	Z Disp. (ft)
1P	0.0000	0.0135	-0.1186	0.0000	-0.0135	0.1186	0.0503	0.2052	0.0017
2P	-1.0900	1.5898	-1.5835	1.0900	-1.5898	1.5835	0.0438	0.1833	-0.0006
7P	0.0000	0.0963	-0.1902	0.0000	-0.0963	0.1902	0.0184	0.0750	-0.0016
8P	0.0000	0.2896	-0.6897	-0.0000	-0.2896	0.6897	0.0139	0.0574	-0.0022
9P	0.0000	0.1865	-0.2563	-1.3896	2.8349	7.4189	0.0000	0.0000	0.0000
15P	0.3000	0.8760	-1.3962	-0.3000	-0.8760	1.3962	0.1001	0.2049	0.0705
16P	1.2250	1.0021	-2.6598	-1.2250	-1.0021	2.6598	0.0782	0.1762	0.0403
17P	0.2500	1.0084	-2.7164	-0.2500	-1.0084	2.7164	0.0659	0.1153	-0.1503
18P	1.0500	1.0140	-2.6685	-1.0500	-1.0140	2.6685	0.0404	0.0709	0.0297
19P	0.0000	0.0000	-0.0183	-0.0000	-0.0000	0.0183	-0.2743	0.1055	-0.0329
1X	0.0000	0.0000	-0.1186	-0.0000	0.0000	0.1186	0.0346	0.2058	-0.0224
2X	1.1140	1.5180	-5.0985	-1.1140	-1.5180	5.0985	0.0287	0.1827	-0.0244
2XY	-1.1420	1.1710	-4.1245	1.1420	-1.1710	4.1245	0.0283	0.1672	-0.0193
2Y	1.1180	1.2438	-0.6195	-1.1180	-1.2438	0.6195	0.0439	0.1674	0.0046
7X	0.0000	0.0000	-0.1902	0.0000	-0.0000	0.1902	0.0092	0.0749	-0.0174
7XY	0.0000	0.0000	-0.1902	0.0000	0.0000	0.1902	0.0085	0.0650	-0.0137
7Y	0.0000	0.0963	-0.1902	0.0000	-0.0963	0.1902	0.0187	0.0651	0.0022
8X	0.0000	0.1820	-0.6897	-0.0000	-0.1820	0.6897	0.0055	0.0574	-0.0155
8XY	0.0000	0.0000	-0.1897	-0.0000	0.0000	0.1897	0.0057	0.0491	-0.0122
8Y	0.0000	0.1076	-0.1897	-0.0000	-0.1076	0.1897	0.0138	0.0491	0.0011
9X	0.0000	0.0000	-0.2563	6.0018	7.6020	-47.6095	0.0000	0.0000	0.0000
9XY	0.0000	0.0000	-0.2563	-5.7201	4.7473	-35.6947	0.0000	0.0000	0.0000
9Y	0.0000	0.1865	-0.2563	3.8329	2.9237	18.3622	0.0000	0.0000	0.0000
15X	-0.1000	0.8250	-1.3962	0.1000	-0.8250	1.3962	-0.0127	0.2065	-0.1000

16X	0.0000	0.9500	-2.3848	-0.0000	-0.9500	2.3848	-0.0027	0.1743	-0.0796
17X	0.0000	0.9500	-2.4414	-0.0000	-0.9500	2.4414	-0.0198	0.1063	-0.3058
18X	0.0000	0.9500	-2.3935	-0.0000	-0.9500	2.3935	-0.0116	0.0692	-0.0602
19X	0.0000	0.0167	-0.0183	-0.0000	-0.0167	0.0183	-0.2522	0.1494	0.0096
19XY	0.0000	0.0167	-0.0183	0.0000	-0.0167	0.0183	0.3254	0.1389	0.0129
19Y	0.0000	0.0000	-0.0183	0.0000	-0.0000	0.0183	0.3015	0.0947	-0.0282
3S	0.0000	0.0631	-0.0769	-0.0000	-0.0631	0.0769	0.0388	0.1605	-0.0005
4S	0.0000	0.2339	-0.5933	-0.0000	-0.2339	0.5933	0.0332	0.1381	-0.0005
5S	0.3170	-0.2455	-0.3876	-0.3170	0.2455	0.3876	0.0289	0.1179	-0.0005
6S	0.0000	0.3102	-0.6981	-0.0000	-0.3102	0.6981	0.0225	0.0944	-0.0009
10S	0.0000	0.3534	-0.8566	-0.0000	-0.3534	0.8566	0.0087	0.0415	-0.0014
11S	0.0000	0.1273	-0.2097	-0.0000	-0.1273	0.2097	0.0070	0.0304	-0.0008
12S	0.0000	0.4746	-1.1340	-0.0000	-0.4746	1.1340	0.0043	0.0225	-0.0007
13S	0.0000	0.1884	-0.3076	0.0000	-0.1884	0.3076	0.0029	0.0162	-0.0006
14S	0.0000	0.9656	-2.2552	0.0000	-0.9656	2.2552	0.0018	0.0129	-0.0009
3X	0.0000	0.0000	-0.0769	-0.0000	0.0000	0.0769	0.0247	0.1606	-0.0238
3XY	0.0000	0.0000	-0.0769	-0.0000	0.0000	0.0769	0.0244	0.1460	-0.0188
3Y	0.0000	0.0631	-0.0769	-0.0000	-0.0631	0.0769	0.0386	0.1462	0.0046
4X	0.0000	0.1850	-0.5933	-0.0000	-0.1850	0.5933	0.0211	0.1391	-0.0230
4XY	0.0000	0.0000	-0.0843	-0.0000	0.0000	0.0843	0.0203	0.1259	-0.0181
4Y	0.0000	0.0489	-0.0843	-0.0000	-0.0489	0.0843	0.0341	0.1250	0.0044
5X	-0.3440	-0.3850	-4.6066	0.3440	0.3850	4.6066	0.0171	0.1175	-0.0217
5XY	0.3460	-0.3740	-4.2296	-0.3460	0.3740	4.2296	0.0169	0.1056	-0.0171
5Y	-0.3190	-0.2375	-0.0836	0.3190	0.2375	0.0836	0.0286	0.1060	0.0042
6X	0.0000	0.2040	-0.6981	-0.0000	-0.2040	0.6981	0.0143	0.0954	-0.0198
6XY	0.0000	0.0000	-0.1381	-0.0000	0.0000	0.1381	0.0111	0.0843	-0.0156
6Y	0.0000	0.1062	-0.1381	-0.0000	-0.1062	0.1381	0.0244	0.0837	0.0033
10X	0.0000	0.2380	-0.8566	-0.0000	-0.2380	0.8566	0.0040	0.0434	-0.0148
10XY	0.0000	0.0000	-0.2016	-0.0000	0.0000	0.2016	-0.0013	0.0336	-0.0112
10Y	0.0000	0.1154	-0.2016	-0.0000	-0.1154	0.2016	0.0115	0.0331	0.0023
11X	0.0000	0.0000	-0.2097	-0.0000	0.0000	0.2097	-0.0018	0.0313	-0.0141
11XY	0.0000	0.0000	-0.2097	-0.0000	0.0000	0.2097	-0.0032	0.0208	-0.0103
11Y	0.0000	0.1273	-0.2097	-0.0000	-0.1273	0.2097	0.0072	0.0205	0.0032
12X	0.0000	0.3320	-1.1340	-0.0000	-0.3320	1.1340	-0.0048	0.0227	-0.0127
12XY	0.0000	0.0000	-0.2200	-0.0000	-0.0000	0.2200	-0.0061	0.0117	-0.0088
12Y	0.0000	0.1426	-0.2200	0.0000	-0.1426	0.2200	0.0053	0.0117	0.0033
13X	0.0000	0.0000	-0.3076	-0.0000	0.0000	0.3076	-0.0065	0.0177	-0.0106
13XY	0.0000	0.0000	-0.3076	-0.0000	-0.0000	0.3076	-0.0093	0.0057	-0.0068
13Y	0.0000	0.1884	-0.3076	0.0000	-0.1884	0.3076	0.0035	0.0051	0.0032
14X	0.0000	0.6090	-2.2552	0.0000	-0.6090	2.2552	-0.0107	0.0125	-0.0086
14XY	0.0000	0.0000	-0.5822	-0.0000	0.0000	0.5822	-0.0105	-0.0002	-0.0050
14Y	0.0000	0.3566	-0.5822	0.0000	-0.3566	0.5822	0.0021	-0.0000	0.0028

Crossing Diagonal Check for Load Case "NESC Heavy" (RLOUT controls):

Comp. Member Label	Tens. Member Label	Connect Leg for Comp. Member	Force In Comp. Member (kips)	Force In Tens. Member (kips)	Original Supported L/R Cap. (kips)	RLX	RLY	RLZ	L/R	KL/R	Curve No.	Alternate Unsupported L/R Cap. (kips)	RLOUT	L/R	KL/R	Curve No.
XBrace1P	XBrace1X	Short only	-0.80	-0.01	12.25	0.750	0.500	0.500	117.34	118.01	2	7.90	1.000	149.90	149.90	4
XBrace1X	XBrace1P	Short only	-0.01	-0.80	12.25	0.750	0.500	0.500	117.34	118.01	2	7.90	1.000	149.90	149.90	4
XBrace7P	XBrace7Y	Short only	-1.98	-0.04	14.59	0.750	0.500	0.500	92.98	99.73	2	12.05	1.000	118.77	119.39	3
XBrace7Y	XBrace7P	Short only	-0.04	-1.98	14.59	0.750	0.500	0.500	92.98	99.73	2	12.05	1.000	118.77	119.39	3
XBrace11P	XBrace11Y	Long only	-2.25	0.39	28.26	0.500	0.750	0.500	91.51	98.63	2	22.63	1.000	122.01	121.24	6
XBrace13P	XBrace13Y	Short only	-7.94	-3.85	31.38	0.750	0.500	0.500	71.32	83.49	2	26.66	1.000	91.07	105.54	3
XBrace13Y	XBrace13P	Short only	-3.85	-7.94	31.38	0.750	0.500	0.500	71.32	83.49	2	26.66	1.000	91.07	105.54	3
XBrace14P	XBrace14X	Short only	-1.15	-1.36	14.68	0.791	0.582	0.582	140.10	135.36	5	13.48	1.000	154.56	141.25	6

XBrace14X	XBrace14P	Short only	-1.36	-1.15	14.68	0.791	0.582	0.582	140.10	135.36	5	13.48	1.000	154.56	141.25	6
XBrace15P	XBrace15Y	Short only	-6.50	0.65	14.68	0.791	0.582	0.582	140.10	135.36	5	13.48	1.000	154.56	141.25	6
XBrace18P	XBrace18X	Short only	-0.77	-0.14	5.61	0.779	0.559	0.559	190.39	190.39	4	4.30	1.000	217.49	217.49	4
XBrace18X	XBrace18P	Short only	-0.14	-0.77	5.61	0.779	0.559	0.559	190.39	190.39	4	4.30	1.000	217.49	217.49	4

Summary of Clamp Capacities and Usages for Load Case "NESC Heavy":

Clamp Label	Force (kips)	Input Holding Capacity (kips)	Factored Holding Capacity (kips)	Usage %
Clamp1	1.675	50.00	50.00	3.35
Clamp2	1.625	50.00	50.00	3.25
Clamp3	3.095	50.00	50.00	6.19
Clamp4	2.567	50.00	50.00	5.13
Clamp5	2.908	50.00	50.00	5.82
Clamp6	2.620	50.00	50.00	5.24
Clamp7	3.042	50.00	50.00	6.08
Clamp8	2.575	50.00	50.00	5.15
Clamp9	2.495	50.00	50.00	4.99
Clamp10	0.638	50.00	50.00	1.28
Clamp11	0.764	50.00	50.00	1.53
Clamp12	0.748	50.00	50.00	1.50
Clamp13	0.927	50.00	50.00	1.85
Clamp14	1.229	50.00	50.00	2.46
Clamp15	2.453	50.00	50.00	4.91
Clamp16	5.435	50.00	50.00	10.87
Clamp17	0.622	50.00	50.00	1.24
Clamp18	0.727	50.00	50.00	1.45
Clamp19	0.713	50.00	50.00	1.43
Clamp20	0.889	50.00	50.00	1.78
Clamp21	1.182	50.00	50.00	2.36
Clamp22	2.336	50.00	50.00	4.67
Clamp23	0.558	50.00	50.00	1.12
Clamp24	4.635	50.00	50.00	9.27
Clamp25	1.784	50.00	50.00	3.57
Clamp26	4.437	50.00	50.00	8.87
Clamp27	0.406	50.00	50.00	0.81
Clamp28	4.260	50.00	50.00	8.52
Clamp29	0.097	50.00	50.00	0.19
Clamp30	0.174	50.00	50.00	0.35
Clamp31	0.218	50.00	50.00	0.44
Clamp32	0.232	50.00	50.00	0.46
Clamp33	0.262	50.00	50.00	0.52
Clamp34	0.683	50.00	50.00	1.37
Clamp35	0.084	50.00	50.00	0.17
Clamp36	0.138	50.00	50.00	0.28
Clamp37	0.190	50.00	50.00	0.38
Clamp38	0.202	50.00	50.00	0.40
Clamp39	0.220	50.00	50.00	0.44
Clamp40	0.582	50.00	50.00	1.16
Clamp43	0.077	50.00	50.00	0.15
Clamp44	0.099	50.00	50.00	0.20

*** Analysis Results for Load Case No. 2 "NESC Extreme" - Number of iterations in SAPS 12

Equilibrium Joint Positions and Rotations for Load Case "NESC Extreme":

Joint Label	X-Displ (ft)	Y-Displ (ft)	Z-Displ (ft)	X-Rot (deg)	Y-Rot (deg)	Z-Rot (deg)	X-Pos (ft)	Y-Pos (ft)	Z-Pos (ft)
1P	0.02768	0.4749	0.02095	-0.8183	0.0399	0.2090	0.02768	-1.525	78.27
2P	0.02408	0.4107	0.01999	-0.8473	0.0352	0.1977	2.024	-1.589	73.27
7P	0.01018	0.1603	0.01276	-0.5598	-0.0017	0.1410	2.01	-1.84	54.26
8P	0.008054	0.1218	0.01021	-0.4440	0.0719	0.1401	2.008	-1.878	50.01
9P	0	0	0	0.0000	0.0000	0.0000	10	-10	0
15P	0.07261	0.4761	0.1917	-0.8066	0.0450	0.2158	0.07261	-13.52	78.44
16P	0.05515	0.4045	0.1313	-0.7632	0.0414	0.2274	0.05515	-9.595	73.38
17P	0.05248	0.2536	-0.001505	0.4960	0.0420	0.1748	0.05248	-13.75	62.75
18P	0.03221	0.156	0.09683	-0.6201	0.0319	0.1588	0.03221	-9.844	54.35
19P	-0.2776	0.2605	-0.0571	0.0000	0.0000	0.0000	1.722	4.01	64.44
1X	0.01314	0.4748	-0.03626	-0.8232	0.0382	0.2077	0.01314	2.475	78.21
2X	0.01056	0.4101	-0.03668	-0.8484	0.0460	0.1928	2.011	2.41	73.21
2XY	0.009703	0.3956	-0.034	-0.8419	0.0229	0.2043	-1.99	2.396	73.22
2Y	0.02477	0.3961	0.02277	-0.8366	0.0620	0.2066	-1.975	-1.604	73.27
7X	0.001372	0.1601	-0.02372	-0.5732	0.0697	0.1350	2.001	2.16	54.23
7XY	0.0001129	0.1499	-0.02165	-0.5613	-0.0165	0.1424	-2	2.15	54.23
7Y	0.01125	0.1502	0.01492	-0.5503	0.0785	0.1426	-1.989	-1.85	54.26
8X	-0.000977	0.1216	-0.02027	-0.4354	-0.0186	0.1328	1.999	2.122	49.98
8XY	-0.0006316	0.1126	-0.01846	-0.4213	0.0510	0.1137	-2.001	2.113	49.98
8Y	0.007799	0.1127	0.0122	-0.4258	0.0080	0.1138	-1.992	-1.887	50.01
9X	0	0	0	0.0000	0.0000	0.0000	10	10	0
9XY	0	0	0	0.0000	0.0000	0.0000	-10	10	0
9Y	0	0	0	0.0000	0.0000	0.0000	-10	-10	0
15X	-0.03109	0.4739	-0.2104	-0.8298	0.0332	0.2130	-0.03109	14.47	78.04
16X	-0.01896	0.4017	-0.1546	-0.8605	0.0371	0.2125	-0.01896	10.4	73.1
17X	-0.0311	0.246	-0.3855	-2.1338	0.0317	0.1725	-0.0311	14.25	62.36
18X	-0.01992	0.1542	-0.1129	-0.6915	0.0310	0.1519	-0.01992	10.15	54.14
19X	-0.2715	0.3066	0.04279	0.0000	0.0000	0.0000	1.728	-3.443	64.54
19XY	0.3183	0.2964	0.04434	0.0000	0.0000	0.0000	-1.682	-3.454	64.54
19Y	0.2808	0.2496	-0.05432	0.0000	0.0000	0.0000	-1.719	4	64.45
3S	0.02163	0.3581	0.01992	-0.8541	0.0620	0.1872	2.022	-1.642	69.77
4S	0.01793	0.3068	0.01935	-0.8367	0.0413	0.1774	2.018	-1.693	66.27
5S	0.01642	0.2582	0.01838	-0.7021	0.0497	0.1673	2.016	-1.742	62.77
6S	0.01035	0.2054	0.01594	-0.6738	0.0546	0.1537	2.01	-1.795	58.52
10S	0.001576	0.08842	0.01022	-0.2706	0.0552	0.1363	2.962	-2.872	44.01
11S	0.003829	0.06274	0.01036	-0.2004	0.0134	0.1176	4.004	-3.937	37.51
12S	0.001599	0.04509	0.008963	-0.1506	0.0395	0.0845	5.042	-4.995	31.01
13S	0.00122	0.03156	0.007464	-0.0924	0.0133	0.0632	6.028	-5.996	24.84
14S	0.001021	0.02265	0.005009	-0.0774	0.0155	0.0416	7.201	-7.177	17.51
3X	0.008464	0.3578	-0.03561	-0.8509	0.0207	0.1830	2.008	2.358	69.71
3XY	0.008173	0.344	-0.03293	-0.8365	0.0460	0.1921	-1.992	2.344	69.72
3Y	0.02171	0.3445	0.02263	-0.8381	0.0359	0.1942	-1.978	-1.656	69.77
4X	0.007538	0.3069	-0.03399	-0.8152	0.0426	0.1726	2.008	2.307	66.22
4XY	0.005508	0.2941	-0.03138	-0.7956	0.0224	0.1806	-1.994	2.294	66.22
4Y	0.02001	0.294	0.02196	-0.8194	0.0533	0.1811	-1.98	-1.706	66.27
5X	0.004791	0.2578	-0.03185	-0.8034	0.0088	0.1629	2.005	2.258	62.72
5XY	0.004728	0.246	-0.02933	-0.7937	0.0555	0.1683	-1.995	2.246	62.72
5Y	0.0163	0.2465	0.02087	-0.6913	0.0378	0.1683	-1.984	-1.753	62.77
6X	0.006109	0.2056	-0.02814	-0.6447	0.0187	0.1494	2.006	2.206	58.47
6XY	-0.0007811	0.1946	-0.02581	-0.6338	0.0404	0.1549	-2.001	2.195	58.47

6Y	0.01656	0.1946	0.01828	-0.6625	0.0256	0.1559	-1.983	-1.805	58.52
10X	0.001388	0.08913	-0.01962	-0.2622	-0.0167	0.1298	2.961	3.049	43.98
10XY	-0.008653	0.07741	-0.0177	-0.2528	0.0331	0.0777	-2.969	3.037	43.98
10Y	0.01033	0.07734	0.01284	-0.2549	0.0135	0.0787	-2.95	-2.883	44.01
11X	-0.00559	0.06328	-0.01917	-0.2082	0.0325	0.1119	3.994	4.063	37.48
11XY	-0.007437	0.04948	-0.01697	-0.1969	-0.0095	0.0559	-4.007	4.049	37.48
11Y	0.005037	0.0493	0.01335	-0.1939	0.0386	0.0569	-3.995	-3.951	37.51
12X	-0.007635	0.0448	-0.01737	-0.1397	-0.0192	0.0808	5.032	5.085	30.98
12XY	-0.01035	0.0295	-0.01485	-0.1308	0.0364	0.0462	-5.05	5.07	30.99
12Y	0.004696	0.0297	0.01219	-0.1351	0.0012	0.0458	-5.035	-5.01	31.01
13X	-0.009241	0.03277	-0.01469	-0.0950	0.0257	0.0627	6.018	6.06	24.82
13XY	-0.01342	0.01598	-0.01194	-0.1015	0.0215	0.0332	-6.041	6.043	24.82
13Y	0.003462	0.01548	0.01061	-0.1007	0.0107	0.0313	-6.024	-6.012	24.84
14X	-0.01414	0.02171	-0.01208	-0.0895	-0.0078	0.0364	7.186	7.222	17.49
14XY	-0.01407	0.003738	-0.008978	-0.0578	-0.0184	0.0158	-7.214	7.204	17.49
14Y	0.002617	0.004186	0.00829	-0.0515	0.0045	0.0195	-7.197	-7.196	17.51

Joint Support Reactions for Load Case "NESC Extreme":

Joint Label	X Force (kips)	X Usage %	Y Force (kips)	Y Usage %	H-Shear Usage %	Z Force (kips)	Comp. Usage %	Uplift Usage %	Result. Force (kips)	Result. Usage %	X Moment (ft-k)	X-M. Usage %	Y Moment (ft-k)	Y-M. Usage %	H-Bend-M Usage %	Z Moment (ft-k)	Z-M. Usage %	Max. Usage %
9P	10.50	0.0	-12.42	0.0	0.0	53.45	0.0	0.0	55.87	0.0	0.48	0.0	-0.0	0.0	0.0	0.01	0.0	0.0
9X	-10.27	0.0	-11.75	0.0	0.0	-72.30	0.0	0.0	73.97	0.0	0.37	0.0	0.5	0.0	0.0	0.07	0.0	0.0
9XY	10.22	0.0	-9.08	0.0	0.0	-64.13	0.0	0.0	65.57	0.0	-0.13	0.0	0.3	0.0	0.0	0.06	0.0	0.0
9Y	-11.80	0.0	-9.15	0.0	0.0	55.41	0.0	0.0	57.39	0.0	-0.09	0.0	-0.0	0.0	0.0	0.00	0.0	0.0

Joint Displacements, Loads and Member Forces on Joints for Load Case "NESC Extreme":

Joint Label	X External Load (kips)	Y External Load (kips)	Z External Load (kips)	X Member Force (kips)	Y Member Force (kips)	Z Member Force (kips)	X Disp. (ft)	Y Disp. (ft)	Z Disp. (ft)
1P	0.0000	0.0863	-0.0761	-0.0000	-0.0863	0.0761	0.0277	0.4749	0.0209
2P	-3.8220	5.2753	4.8499	3.8220	-5.2753	-4.8499	0.0241	0.4107	0.0200
7P	0.0000	0.0863	-0.0761	0.0000	-0.0863	0.0761	0.0102	0.1603	0.0128
8P	0.0000	0.9318	-0.3904	0.0000	-0.9318	0.3904	0.0081	0.1218	0.0102
9P	0.0000	0.2635	-0.1782	-10.4979	12.1537	53.6275	0.0000	0.0000	0.0000
15P	0.1250	0.6363	-0.5261	-0.1250	-0.6363	0.5261	0.0726	0.4761	0.1917
16P	0.6500	1.0863	-1.3261	-0.6500	-1.0863	1.3261	0.0552	0.4045	0.1313
17P	0.1250	1.0613	-1.3261	-0.1250	-1.0613	1.3261	0.0525	0.2536	-0.0015
18P	0.5500	1.0363	-1.3011	-0.5500	-1.0363	1.3011	0.0322	0.1560	0.0968
19P	0.0000	0.0863	-0.0761	-0.0000	-0.0863	0.0761	-0.2776	0.2605	-0.0571
1X	0.0000	0.0863	-0.0761	-0.0000	-0.0863	0.0761	0.0131	0.4748	-0.0363
2X	3.8250	5.1843	-7.6661	-3.8250	-5.1843	7.6661	0.0106	0.4101	-0.0367
2XY	-3.8980	4.1493	-7.3911	3.8980	-4.1493	7.3911	0.0097	0.3956	-0.0340
2Y	3.8950	4.2413	5.0989	-3.8950	-4.2413	-5.0989	0.0248	0.3961	0.0228
7X	0.0000	0.0863	-0.0761	0.0000	-0.0863	0.0761	0.0014	0.1601	-0.0237
7XY	0.0000	0.0863	-0.0761	-0.0000	-0.0863	0.0761	0.0001	0.1499	-0.0216
7Y	0.0000	0.0863	-0.0761	0.0000	-0.0863	0.0761	0.0112	0.1502	0.0149
8X	0.0000	0.9318	-0.3904	0.0000	-0.9318	0.3904	-0.0010	0.1216	-0.0203
8XY	0.0000	0.3498	-0.2544	-0.0000	-0.3498	0.2544	-0.0006	0.1126	-0.0185
8Y	0.0000	0.3498	-0.2544	0.0000	-0.3498	0.2544	0.0078	0.1127	0.0122
9X	0.0000	0.2635	-0.1782	10.2654	11.4816	-72.1255	0.0000	0.0000	0.0000
9XY	0.0000	0.2635	-0.1782	-10.2208	8.8148	-63.9492	0.0000	0.0000	0.0000
9Y	0.0000	0.2635	-0.1782	11.8033	8.8861	55.5881	0.0000	0.0000	0.0000
15X	-0.1000	0.6363	-0.5261	0.1000	-0.6363	0.5261	-0.0311	0.4739	-0.2104

16X	0.0000	0.9863	-1.1261	-0.0000	-0.9863	1.1261	-0.0190	0.4017	-0.1546
17X	0.0000	0.9863	-1.1261	-0.0000	-0.9863	1.1261	-0.0311	0.2460	-0.3855
18X	0.0000	0.9863	-1.1261	-0.0000	-0.9863	1.1261	-0.0199	0.1542	-0.1129
19X	0.0000	0.0863	-0.0761	-0.0000	-0.0863	0.0761	-0.2715	0.3066	0.0428
19XY	0.0000	0.0863	-0.0761	0.0000	-0.0863	0.0761	0.3183	0.2964	0.0443
19Y	0.0000	0.0863	-0.0761	0.0000	-0.0863	0.0761	0.2808	0.2496	-0.0543
3S	0.0000	0.0863	-0.0761	-0.0000	-0.0863	0.0761	0.0216	0.3581	0.0199
4S	0.0000	0.6783	-0.2141	-0.0000	-0.6783	0.2141	0.0179	0.3068	0.0194
5S	1.1820	-1.1347	6.3009	-1.1820	1.1347	-6.3009	0.0164	0.2582	0.0184
6S	0.0000	0.7393	-0.2281	-0.0000	-0.7393	0.2281	0.0103	0.2054	0.0159
10S	0.0000	1.0265	-0.3562	-0.0000	-1.0265	0.3562	0.0016	0.0884	0.0102
11S	0.0000	0.2635	-0.1782	-0.0000	-0.2635	0.1782	0.0038	0.0627	0.0104
12S	0.0000	1.3275	-0.4262	-0.0000	-1.3275	0.4262	0.0016	0.0451	0.0090
13S	0.0000	0.2635	-0.1782	0.0000	-0.2635	0.1782	0.0012	0.0316	0.0075
14S	0.0000	2.2105	-0.6322	0.0000	-2.2105	0.6322	0.0010	0.0227	0.0050
3X	0.0000	0.0863	-0.0761	-0.0000	-0.0863	0.0761	0.0085	0.3578	-0.0356
3XY	0.0000	0.0863	-0.0761	-0.0000	-0.0863	0.0761	0.0082	0.3440	-0.0329
3Y	0.0000	0.0863	-0.0761	-0.0000	-0.0863	0.0761	0.0217	0.3445	0.0226
4X	0.0000	0.6783	-0.2141	-0.0000	-0.6783	0.2141	0.0075	0.3069	-0.0340
4XY	0.0000	0.0863	-0.0761	-0.0000	-0.0863	0.0761	0.0055	0.2941	-0.0314
4Y	0.0000	0.0863	-0.0761	-0.0000	-0.0863	0.0761	0.0200	0.2940	0.0220
5X	-1.1920	-1.2407	-8.6411	1.1920	1.2407	8.6411	0.0048	0.2578	-0.0318
5XY	1.1970	-1.2147	-8.4531	-1.1970	1.2147	8.4531	0.0047	0.2460	-0.0293
5Y	-1.1870	-1.1097	6.2959	1.1870	1.1097	-6.2959	0.0163	0.2465	0.0209
6X	0.0000	0.7393	-0.2281	0.0000	-0.7393	0.2281	0.0061	0.2056	-0.0281
6XY	0.0000	0.0863	-0.0761	-0.0000	-0.0863	0.0761	-0.0008	0.1946	-0.0258
6Y	0.0000	0.0863	-0.0761	-0.0000	-0.0863	0.0761	0.0166	0.1946	0.0183
10X	0.0000	1.0265	-0.3562	-0.0000	-1.0265	0.3562	0.0014	0.0891	-0.0196
10XY	0.0000	0.2635	-0.1782	-0.0000	-0.2635	0.1782	-0.0087	0.0774	-0.0177
10Y	0.0000	0.2635	-0.1782	-0.0000	-0.2635	0.1782	0.0103	0.0773	0.0128
11X	0.0000	0.2635	-0.1782	-0.0000	-0.2635	0.1782	-0.0056	0.0633	-0.0192
11XY	0.0000	0.2635	-0.1782	-0.0000	-0.2635	0.1782	-0.0074	0.0495	-0.0170
11Y	0.0000	0.2635	-0.1782	-0.0000	-0.2635	0.1782	0.0050	0.0493	0.0134
12X	0.0000	1.3275	-0.4262	-0.0000	-1.3275	0.4262	-0.0076	0.0448	-0.0174
12XY	0.0000	0.2635	-0.1782	-0.0000	-0.2635	0.1782	-0.0104	0.0295	-0.0149
12Y	0.0000	0.2635	-0.1782	-0.0000	-0.2635	0.1782	0.0047	0.0297	0.0122
13X	0.0000	0.2635	-0.1782	0.0000	-0.2635	0.1782	-0.0092	0.0328	-0.0147
13XY	0.0000	0.2635	-0.1782	-0.0000	-0.2635	0.1782	-0.0134	0.0160	-0.0119
13Y	0.0000	0.2635	-0.1782	0.0000	-0.2635	0.1782	0.0035	0.0155	0.0106
14X	0.0000	2.2105	-0.6322	0.0000	-2.2105	0.6322	-0.0141	0.0217	-0.0121
14XY	0.0000	0.2635	-0.1782	-0.0000	-0.2635	0.1782	-0.0141	0.0037	-0.0090
14Y	0.0000	0.2635	-0.1782	0.0000	-0.2635	0.1782	0.0026	0.0042	0.0083

Crossing Diagonal Check for Load Case "NESC Extreme" (RLOUT controls):

Comp. Member Label	Tens. Member Label	Connect Leg for Comp. Member	Force In Comp. Member (kips)	Force In Tens. Member (kips)	Original Supported L/R Cap. (kips)	RLX	RLY	RLZ	L/R	KL/R	Curve No.	Alternate Unsupported L/R Cap. (kips)	RLOUT	L/R	KL/R	Curve No.
XBrace7P	XBrace7Y	Short only	-2.04	-0.35	14.59	0.750	0.500	0.500	92.98	99.73	2	12.05	1.000	118.77	119.39	3
XBrace7Y	XBrace7P	Short only	-0.35	-2.04	14.59	0.750	0.500	0.500	92.98	99.73	2	12.05	1.000	118.77	119.39	3
XBrace11P	XBrace11Y	Long only	-2.02	0.34	28.26	0.500	0.750	0.500	91.51	98.63	2	22.63	1.000	122.01	121.24	6
XBrace13P	XBrace13Y	Short only	-13.39	-9.96	31.38	0.750	0.500	0.500	71.32	83.49	2	26.66	1.000	91.07	105.54	3
XBrace13Y	XBrace13P	Short only	-9.96	-13.39	31.38	0.750	0.500	0.500	71.32	83.49	2	26.66	1.000	91.07	105.54	3
XBrace15P	XBrace15Y	Short only	-8.32	-2.34	14.68	0.791	0.582	0.582	140.10	135.36	5	13.48	1.000	154.56	141.25	6
XBrace15Y	XBrace15P	Short only	-2.34	-8.32	14.68	0.791	0.582	0.582	140.10	135.36	5	13.48	1.000	154.56	141.25	6
XBrace16X	XBrace16XY	Short only	-4.09	-0.88	10.76	0.789	0.578	0.578	169.94	158.09	5	10.21	1.000	188.77	162.29	6

XBrace16XY	XBrace16X	Short only	-0.88	-4.09	10.76	0.789	0.578	0.578	169.94	158.09	5	10.21	1.000	188.77	162.29	6
XBrace19P	XBrace19Y	Short only	-3.23	-0.67	5.61	0.779	0.559	0.559	190.39	190.39	4	4.30	1.000	217.49	217.49	4
XBrace19Y	XBrace19P	Short only	-0.67	-3.23	5.61	0.779	0.559	0.559	190.39	190.39	4	4.30	1.000	217.49	217.49	4
XBrace21X	XBrace21XY	Short only	-0.17	-1.80	9.19	0.772	0.544	0.544	167.61	167.61	4	6.72	1.000	196.03	196.03	4
XBrace21XY	XBrace21X	Short only	-1.80	-0.17	9.19	0.772	0.544	0.544	167.61	167.61	4	6.72	1.000	196.03	196.03	4
XBrace23P	XBrace23Y	Short only	-2.10	-0.31	14.79	0.771	0.543	0.543	166.95	166.95	4	10.76	1.000	195.71	195.71	4
XBrace23Y	XBrace23P	Short only	-0.31	-2.10	14.79	0.771	0.543	0.543	166.95	166.95	4	10.76	1.000	195.71	195.71	4

Summary of Clamp Capacities and Usages for Load Case "NESC Extreme":

Clamp Label	Force (kips)	Input Holding Capacity (kips)	Factored Holding Capacity (kips)	Usage %
Clamp1	0.835	50.00	50.00	1.67
Clamp2	0.832	50.00	50.00	1.66
Clamp3	1.833	50.00	50.00	3.67
Clamp4	1.497	50.00	50.00	2.99
Clamp5	1.703	50.00	50.00	3.41
Clamp6	1.497	50.00	50.00	2.99
Clamp7	1.752	50.00	50.00	3.50
Clamp8	1.497	50.00	50.00	2.99
Clamp9	8.121	50.00	50.00	16.24
Clamp10	0.711	50.00	50.00	1.42
Clamp11	0.774	50.00	50.00	1.55
Clamp12	1.010	50.00	50.00	2.02
Clamp13	1.087	50.00	50.00	2.17
Clamp14	1.394	50.00	50.00	2.79
Clamp15	2.299	50.00	50.00	4.60
Clamp16	10.014	50.00	50.00	20.03
Clamp17	0.711	50.00	50.00	1.42
Clamp18	0.774	50.00	50.00	1.55
Clamp19	1.010	50.00	50.00	2.02
Clamp20	1.087	50.00	50.00	2.17
Clamp21	1.394	50.00	50.00	2.79
Clamp22	2.299	50.00	50.00	4.60
Clamp23	6.510	50.00	50.00	13.02
Clamp24	8.811	50.00	50.00	17.62
Clamp25	7.691	50.00	50.00	15.38
Clamp26	9.330	50.00	50.00	18.66
Clamp27	6.502	50.00	50.00	13.00
Clamp28	8.623	50.00	50.00	17.25
Clamp29	0.115	50.00	50.00	0.23
Clamp30	0.115	50.00	50.00	0.23
Clamp31	0.433	50.00	50.00	0.87
Clamp32	0.318	50.00	50.00	0.64
Clamp33	0.318	50.00	50.00	0.64
Clamp34	0.318	50.00	50.00	0.64
Clamp35	0.115	50.00	50.00	0.23
Clamp36	0.115	50.00	50.00	0.23
Clamp37	0.433	50.00	50.00	0.87
Clamp38	0.318	50.00	50.00	0.64
Clamp39	0.318	50.00	50.00	0.64
Clamp40	0.318	50.00	50.00	0.64
Clamp43	0.115	50.00	50.00	0.23
Clamp44	0.115	50.00	50.00	0.23

*** Overall summary for all load cases - Usage = Maximum Stress / Allowable Stress
Printed capacities do not include the strength factor entered for each load case.
The Group Summary reports on the member and load case that resulted in maximum usage
which may not necessarily be the same as that which produces maximum force.

Group Summary (Compression Portion):

Group Label	Group Desc.	Angle Type	Angle Size	Steel Strength (ksi)	Max Usage %	Usage Control	Max Comp. Use %	Comp. Member	Comp. Force (kips)	Comp. Control Load Case	L/R Capacity (kips)	Comp. Connect. Shear Capacity (kips)	Comp. Connect. Bearing Capacity (kips)	RLX	RLY	RLZ	L/R Comp. (ft)	KL/R Member	Length Comp.	Curve No. Of Bolts
Leg1	Leg1	SAU	2.5X2X0.1875	33.0	17.16	Comp	17.16	Leg1XY	-1.737	NESC Hea	10.122	18.200	21.094	1.000	1.000	1.000	151.34	151.34	5.385	4 2
Leg2	Leg2	SAE	4X4X0.3125	33.0	98.29	Tens	97.87	Leg6X	-68.224	NESC Ext	69.710	109.200	105.469	1.000	1.000	1.000	64.48	64.48	4.250	1 6
Leg3	Leg3	SAE	4X4X0.4375	33.0	98.60	Comp	98.60	Leg11X	-71.782	NESC Ext	79.787	72.800	196.875	1.000	1.000	1.000	96.70	96.70	6.326	1 8
Leg4	Leg4	SAE	5X5X0.375	33.0	96.19	Comp	96.19	Leg13X	-75.538	NESC Ext	78.526	134.400	168.750	0.500	0.500	0.500	108.74	108.74	17.942	1 8
XBrace1	XBrace1	SAE	1.75X1.75X0.1875	33.0	77.47	Tens	62.96	XBrace6P	-9.189	NESC Ext	14.594	18.200	21.094	0.750	0.500	0.500	92.98	99.73	5.315	2 2
XBrace2	XBrace2	SAU	3X2X0.25	33.0	55.62	Tens	40.52	XBrace10P	-11.062	NESC Ext	28.258	27.300	42.187	0.500	0.750	0.500	91.51	98.63	5.836	2 3
XBrace3	XBrace3	SAE	2.5X2.5X0.25	33.0	73.59	Comp	73.59	XBrace13P	-13.394	NESC Ext	26.663	18.200	28.125	1.000	0.500	0.500	91.07	105.54	5.836	3 2
XBrace4	XBrace4	SAE	2X2X0.25	33.0	67.15	Comp	67.15	XBrace14Y	-9.861	NESC Ext	14.684	18.200	28.125	0.791	0.582	0.582	140.10	135.36	7.844	5 2
XBrace5	XBrace5	SAE	2X2X0.1875	33.0	75.10	Cross	75.10	XBrace19P	-3.226	NESC Ext	4.296	9.100	10.547	1.000	0.559	0.559	217.49	217.49	11.183	4 1
XBrace6	XBrace6	SAE	2.5X2.5X0.1875	33.0	30.56	Cross	26.82	XBrace21XY	-1.802	NESC Ext	6.718	9.100	10.547	1.000	0.544	0.544	196.03	196.03	12.709	4 1
XBrace7	XBrace7	SAE	3X3X0.25	33.0	23.06	Comp	23.06	XBrace23P	-2.099	NESC Ext	10.760	9.100	14.062	1.000	0.543	0.543	195.71	195.71	15.168	4 1
XBrace8	XBrace8	SAU	2X1.5X0.1875	33.0	41.80	Tens	0.00	XBrace25XY	0.000		0.945	18.200	21.094	0.577	0.788	0.577	531.06	433.27	24.697	5 2
Horz1	Horizontal 1	SAE	2X2X0.1875	33.0	62.90	Tens	37.52	Horz1X	-3.415	NESC Ext	13.406	9.100	10.547	1.000	1.000	1.000	121.83	121.83	4.000	4 1
Horz2	Horizontal 2	SAU	3X2.5X0.25	33.0	45.93	Comp	45.93	Horz7X	-4.180	NESC Ext	11.214	9.100	14.062	1.000	0.500	0.500	182.86	182.86	14.400	4 1
Diag1	Diagonal 1	SAU	3.5X2.5X0.25	33.0	14.40	Comp	14.40	Diagonal 1P	-2.820	NESC Hea	19.584	27.300	42.187	1.000	0.500	0.500	145.07	145.07	13.153	4 3
Diag2	Diagonal 2	Bar	2x3/16	33.0	88.90	Tens	0.00	Diagonal 8Y	0.000		11.400	9.100	10.547	1.000	1.000	1.000	29.70	52.27	2.475	2 1
Diag3	Diagonal 3	Bar	2x1/4	33.0	41.37	Tens	0.00	Diagonal 6Y	0.000		14.428	9.100	14.062	1.000	1.000	1.000	48.00	66.00	4.000	2 1
Arm1	Arm1	DAL	2.5X2X0.1875	33.0	84.23	Tens	0.00	Arm2P	0.000		40.905	9.100	21.094	1.000	1.000	1.000	60.53	90.26	4.000	3 1
Arm2	Arm2	SAE	2.5X2.5X0.25	33.0	57.43	Comp	57.43	Arm3P	-5.226	NESC Hea	21.113	9.100	14.062	1.000	0.500	0.500				

```
128.68 126.65  8.246     5     1
     Arm3              Arm3   SAU     3.5X2.5X0.25     33.0 47.56  Comp 47.56       Arm5P  -8.656NESC Hea   24.070   18.200   28.125 1.000 0.500 0.500
134.18 130.84 12.166     5     2 A potentially damaging moment exists in the following members (make sure your system is well triangulated to minimize
moments): Arm5P Arm5X Arm5XY Arm5Y  ??
   Inner1            Inner1   SAE 1.75X1.75X0.1875     33.0 14.72  Tens 11.60        g60P  -1.056NESC Hea   13.392    9.100   10.547 0.750 0.500 0.500
98.95 109.48  5.657     3     1
   Inner2            Inner1   SAU     2X1.5X0.1875     33.0 56.46  Comp 56.46        g64P  -0.577NESC Hea    1.023    9.100   10.547 0.500 0.750 0.500
416.55 416.55 20.365     4     1
 XBrace1R          XBrace1R   SAE       2X2X0.3125     36.0  0.00        0.00               0.000            0.000    0.000    0.000 0.000 0.000 0.000
0.00   0.00  0.000     0     0
    Horz3      Horizontal 3   SAE         2X2X0.25     33.0 95.27  Tens 79.40      Horz3X  -7.226NESC Ext   17.545    9.100   14.062 1.000 1.000 1.000
122.76 122.76  4.000     4     1
  XBrace9          XBrace 9   SAE        4X4X0.375     36.0  0.00        0.00               0.000            0.000    0.000    0.000 0.000 0.000 0.000
0.00   0.00  0.000     0     0
   Horz2R Horizontal 2 Rein   SAE          4X4X0.5     36.0  0.00        0.00               0.000            0.000    0.000    0.000 0.000 0.000 0.000
0.00   0.00  0.000     0     0
  Inner2R       Inner2 Rein   SAE        4X4X0.375     36.0  0.00        0.00               0.000            0.000    0.000    0.000 0.000 0.000 0.000
0.00   0.00  0.000     0     0
   Diag2R   Diagonal 2 Rein   Bar            2x1/4     36.0 82.31  Tens  0.00 Diagonal 5Y   0.000            8.863    9.100   13.594 1.000 1.000 1.000
127.07 127.07 10.589     4     1
```

Group Summary (Tension Portion):

Group No.	Group Label	Group Desc.	Angle Type	Angle Size	Steel Strength (ksi)	Max Usage %	Usage Control	Max Use In Tens. %	Tension Control Member	Tension Force (kips)	Tension Control Load Case	Net Section Capacity (kips)	Tension Connect. Shear Capacity (kips)	Tension Connect. Bearing Capacity (kips)	Tension Connect. Rupture Capacity (kips)	Length Tens. Member (ft)	Hole Of Bolts (in)	Diameter Of Holes
	Leg1	Leg1	SAU	2.5X2X0.1875	33.0	17.16	Comp	0.00	Leg1Y	0.000		17.096	18.200	21.094	16.406	5.385	2	1.000 0.75
	Leg2	Leg2	SAE	4X4X0.3125	33.0	98.29	Tens	98.29	Leg6Y	58.915	NESC Ext	59.941	109.200	105.469	93.750	4.250	6	2.490 0.75
	Leg3	Leg3	SAE	4X4X0.4375	33.0	98.60	Comp	88.67	Leg8Y	71.892	NESC Ext	81.077	0.000	0.000	0.000	6.152	0	2.600 0.75
	Leg4	Leg4	SAE	5X5X0.375	33.0	96.19	Comp	70.25	Leg12Y	57.937	NESC Ext	82.469	0.000	0.000	0.000	7.515	0	3.950 0.75
	XBrace1	XBrace1	SAE	1.75X1.75X0.1875	33.0	77.47	Tens	77.47	XBrace6X	8.987	NESC Ext	14.237	18.200	21.094	11.602	5.315	2	1.000 0.75
	XBrace2	XBrace2	SAU	3X2X0.25	33.0	55.62	Tens	55.62	XBrace8X	9.002	NESC Ext	16.186	27.300	42.187	32.812	5.836	3	3.440 0.75
	XBrace3	XBrace3	SAE	2.5X2.5X0.25	33.0	73.59	Comp	72.41	XBrace13X	13.179	NESC Ext	29.774	18.200	28.125	21.875	5.836	2	1.000 0.75
	XBrace4	XBrace4	SAE	2X2X0.25	33.0	67.15	Comp	51.49	XBrace14XY	9.372	NESC Ext	22.349	18.200	28.125	21.875	7.844	2	1.000 0.75
	XBrace5	XBrace5	SAE	2X2X0.1875	33.0	75.10	Cross	47.93	XBrace18Y	3.471	NESC Ext	16.910	9.100	10.547	7.242	11.183	1	1.000 0.75
	XBrace6	XBrace6	SAE	2.5X2.5X0.1875	33.0	30.56	Cross	30.56	XBrace20Y	2.507	NESC Ext	22.613	9.100	10.547	8.203	12.709	1	1.000 0.75
	XBrace7	XBrace7	SAE	3X3X0.25	33.0	23.06	Comp	18.47	XBrace22Y	1.681	NESC Ext	37.199	9.100	14.062	10.937	15.168	1	1.000 0.75
	XBrace8	XBrace8	SAU	2X1.5X0.1875	33.0	41.80	Tens	41.80	XBrace24P	5.951	NESC Ext	14.237	18.200	21.094	16.406	24.697		

```
2 1.000     0.75
    Horz1      Horizontal 1   SAE       2X2X0.1875     33.0 62.90  Tens 62.90      Horz1P   4.555NESC Ext   16.910    9.100   10.547    7.242  4.000
1 1.000     0.75
    Horz2      Horizontal 2   SAU       3X2.5X0.25     33.0 45.93  Comp  0.00      Horz7X   0.000           29.626    9.100   14.062    8.625 14.400
1 1.000     0.75
    Diag1        Diagonal 1   SAU     3.5X2.5X0.25     33.0 14.40  Comp  0.00 Diagonal 1Y   0.000           34.136   27.300   42.187   32.812 13.153
3 1.550     0.75
    Diag2        Diagonal 2   Bar           2x3/16     33.0 88.90  Tens 88.90 Diagonal 7P   6.188NESC Hea    6.961    9.100   10.547    8.086  2.475
1 1.000     0.75
    Diag3        Diagonal 3   Bar            2x1/4     33.0 41.37  Tens 41.37 Diagonal 4P   3.765NESC Hea    9.281    9.100   14.062   10.781  4.000
1 1.000     0.75
     Arm1              Arm1   DAL     2.5X2X0.1875     33.0 84.23  Tens 84.23       Arm2P   7.665NESC Hea   25.839    9.100   21.094   16.312  4.000
1 4.000     0.75
     Arm2              Arm2   SAE     2.5X2.5X0.25     33.0 57.43  Comp  0.00       Arm8Y   0.000           29.774   18.200   28.125   40.441  4.000
2 1.000     0.75
     Arm3              Arm3   SAU     3.5X2.5X0.25     33.0 47.56  Comp  0.00       Arm6Y   0.000           33.580   18.200   28.125   25.735  4.000
2 1.650     0.75 A potentially damaging moment exists in the following members (make sure your system is well triangulated to minimize moments): Arm5P
Arm5X Arm5XY Arm5Y  ??
   Inner1            Inner1   SAE 1.75X1.75X0.1875     33.0 14.72  Tens 14.72        g62X   0.838NESC Hea   14.237    9.100   10.547    5.695  5.657
1 1.000     0.75
   Inner2            Inner1   SAU     2X1.5X0.1875     33.0 56.46  Comp  6.86        g64X   0.497NESC Ext   14.237    9.100   10.547    7.242 20.365
1 1.000     0.75
 XBrace1R          XBrace1R   SAE       2X2X0.3125     36.0  0.00        0.00               0.000            0.000    0.000    0.000    0.000  0.000
0 0.000        0
    Horz3      Horizontal 3   SAE         2X2X0.25     33.0 95.27  Tens 95.27      Horz3P   8.669NESC Ext   22.349    9.100   14.062    9.656  4.000
1 1.000     0.75
  XBrace9          XBrace 9   SAE        4X4X0.375     36.0  0.00        0.00               0.000            0.000    0.000    0.000    0.000  0.000
0 0.000        0
   Horz2R Horizontal 2 Rein   SAE          4X4X0.5     36.0  0.00        0.00               0.000            0.000    0.000    0.000    0.000  0.000
0 0.000        0
  Inner2R       Inner2 Rein   SAE        4X4X0.375     36.0  0.00        0.00               0.000            0.000    0.000    0.000    0.000  0.000
0 0.000        0
   Diag2R   Diagonal 2 Rein   Bar            2x1/4     36.0 82.31  Tens 82.31 Diagonal 5P   7.490NESC Hea   10.125    9.100   13.594   11.062 10.589
1 1.000     0.75
```

*** Maximum Stress Summary for Each Load Case

Summary of Maximum Usages by Load Case:

Load Case	Maximum Usage %	Element Label	Element Type
NESC Heavy	88.90	Diagonal 7P	Angle
NESC Extreme	98.60	Leg11X	Angle

Summary of Insulator Usages:

Insulator Label	Insulator Type	Maximum Usage %	Load Case	Weight (lbs)
Clamp1	Clamp	3.35	NESC Heavy	0.0
Clamp2	Clamp	3.25	NESC Heavy	0.0
Clamp3	Clamp	6.19	NESC Heavy	0.0
Clamp4	Clamp	5.13	NESC Heavy	0.0

Clamp5	Clamp	5.82	NESC Heavy	0.0
Clamp6	Clamp	5.24	NESC Heavy	0.0
Clamp7	Clamp	6.08	NESC Heavy	0.0
Clamp8	Clamp	5.15	NESC Heavy	0.0
Clamp9	Clamp	16.24	NESC Extreme	0.0
Clamp10	Clamp	1.42	NESC Extreme	0.0
Clamp11	Clamp	1.55	NESC Extreme	0.0
Clamp12	Clamp	2.02	NESC Extreme	0.0
Clamp13	Clamp	2.17	NESC Extreme	0.0
Clamp14	Clamp	2.79	NESC Extreme	0.0
Clamp15	Clamp	4.91	NESC Heavy	0.0
Clamp16	Clamp	20.03	NESC Extreme	0.0
Clamp17	Clamp	1.42	NESC Extreme	0.0
Clamp18	Clamp	1.55	NESC Extreme	0.0
Clamp19	Clamp	2.02	NESC Extreme	0.0
Clamp20	Clamp	2.17	NESC Extreme	0.0
Clamp21	Clamp	2.79	NESC Extreme	0.0
Clamp22	Clamp	4.67	NESC Heavy	0.0
Clamp23	Clamp	13.02	NESC Extreme	0.0
Clamp24	Clamp	17.62	NESC Extreme	0.0
Clamp25	Clamp	15.38	NESC Extreme	0.0
Clamp26	Clamp	18.66	NESC Extreme	0.0
Clamp27	Clamp	13.00	NESC Extreme	0.0
Clamp28	Clamp	17.25	NESC Extreme	0.0
Clamp29	Clamp	0.23	NESC Extreme	0.0
Clamp30	Clamp	0.35	NESC Heavy	0.0
Clamp31	Clamp	0.87	NESC Extreme	0.0
Clamp32	Clamp	0.64	NESC Extreme	0.0
Clamp33	Clamp	0.64	NESC Extreme	0.0
Clamp34	Clamp	1.37	NESC Heavy	0.0
Clamp35	Clamp	0.23	NESC Extreme	0.0
Clamp36	Clamp	0.28	NESC Heavy	0.0
Clamp37	Clamp	0.87	NESC Extreme	0.0
Clamp38	Clamp	0.64	NESC Extreme	0.0
Clamp39	Clamp	0.64	NESC Extreme	0.0
Clamp40	Clamp	1.16	NESC Heavy	0.0
Clamp43	Clamp	0.23	NESC Extreme	0.0
Clamp44	Clamp	0.23	NESC Extreme	0.0

Loads At Insulator Attachments For All Load Cases:

Load Case	Insulator Label	Insulator Type	Structure Attach Label	Structure Attach Load X (kips)	Structure Attach Load Y (kips)	Structure Attach Load Z (kips)	Structure Attach Load Res. (kips)
NESC Heavy	Clamp1	Clamp	15P	0.300	0.876	1.396	1.675
NESC Heavy	Clamp2	Clamp	15X	-0.100	0.825	1.396	1.625
NESC Heavy	Clamp3	Clamp	16P	1.225	1.002	2.660	3.095
NESC Heavy	Clamp4	Clamp	16X	0.000	0.950	2.385	2.567
NESC Heavy	Clamp5	Clamp	17P	0.250	1.008	2.716	2.908
NESC Heavy	Clamp6	Clamp	17X	0.000	0.950	2.441	2.620
NESC Heavy	Clamp7	Clamp	18P	1.050	1.014	2.669	3.042
NESC Heavy	Clamp8	Clamp	18X	0.000	0.950	2.394	2.575
NESC Heavy	Clamp9	Clamp	2P	-1.090	1.590	1.584	2.495
NESC Heavy	Clamp10	Clamp	4S	0.000	0.234	0.593	0.638
NESC Heavy	Clamp11	Clamp	6S	0.000	0.310	0.698	0.764
NESC Heavy	Clamp12	Clamp	8P	0.000	0.290	0.690	0.748
NESC Heavy	Clamp13	Clamp	10S	0.000	0.353	0.857	0.927

NESC Heavy	Clamp14	Clamp	12S	0.000	0.475	1.134	1.229
NESC Heavy	Clamp15	Clamp	14S	0.000	0.966	2.255	2.453
NESC Heavy	Clamp16	Clamp	2X	1.114	1.518	5.099	5.435
NESC Heavy	Clamp17	Clamp	4X	0.000	0.185	0.593	0.622
NESC Heavy	Clamp18	Clamp	6X	0.000	0.204	0.698	0.727
NESC Heavy	Clamp19	Clamp	8X	0.000	0.182	0.690	0.713
NESC Heavy	Clamp20	Clamp	10X	0.000	0.238	0.857	0.889
NESC Heavy	Clamp21	Clamp	12X	0.000	0.332	1.134	1.182
NESC Heavy	Clamp22	Clamp	14X	0.000	0.609	2.255	2.336
NESC Heavy	Clamp23	Clamp	5S	0.317	-0.245	0.388	0.558
NESC Heavy	Clamp24	Clamp	5X	-0.344	-0.385	4.607	4.635
NESC Heavy	Clamp25	Clamp	2Y	1.118	1.244	0.620	1.784
NESC Heavy	Clamp26	Clamp	2XY	-1.142	1.171	4.125	4.437
NESC Heavy	Clamp27	Clamp	5Y	-0.319	-0.237	0.084	0.406
NESC Heavy	Clamp28	Clamp	5XY	0.346	-0.374	4.230	4.260
NESC Heavy	Clamp29	Clamp	4Y	0.000	0.049	0.084	0.097
NESC Heavy	Clamp30	Clamp	6Y	0.000	0.106	0.138	0.174
NESC Heavy	Clamp31	Clamp	8Y	0.000	0.108	0.190	0.218
NESC Heavy	Clamp32	Clamp	10Y	0.000	0.115	0.202	0.232
NESC Heavy	Clamp33	Clamp	12Y	0.000	0.143	0.220	0.262
NESC Heavy	Clamp34	Clamp	14Y	0.000	0.357	0.582	0.683
NESC Heavy	Clamp35	Clamp	4XY	0.000	0.000	0.084	0.084
NESC Heavy	Clamp36	Clamp	6XY	0.000	0.000	0.138	0.138
NESC Heavy	Clamp37	Clamp	8XY	0.000	0.000	0.190	0.190
NESC Heavy	Clamp38	Clamp	10XY	0.000	0.000	0.202	0.202
NESC Heavy	Clamp39	Clamp	12XY	0.000	0.000	0.220	0.220
NESC Heavy	Clamp40	Clamp	14XY	0.000	0.000	0.582	0.582
NESC Heavy	Clamp43	Clamp	3XY	0.000	0.000	0.077	0.077
NESC Heavy	Clamp44	Clamp	3Y	0.000	0.063	0.077	0.099
NESC Extreme	Clamp1	Clamp	15P	0.125	0.636	0.526	0.835
NESC Extreme	Clamp2	Clamp	15X	-0.100	0.636	0.526	0.832
NESC Extreme	Clamp3	Clamp	16P	0.650	1.086	1.326	1.833
NESC Extreme	Clamp4	Clamp	16X	0.000	0.986	1.126	1.497
NESC Extreme	Clamp5	Clamp	17P	0.125	1.061	1.326	1.703
NESC Extreme	Clamp6	Clamp	17X	0.000	0.986	1.126	1.497
NESC Extreme	Clamp7	Clamp	18P	0.550	1.036	1.301	1.752
NESC Extreme	Clamp8	Clamp	18X	0.000	0.986	1.126	1.497
NESC Extreme	Clamp9	Clamp	2P	-3.822	5.275	-4.850	8.121
NESC Extreme	Clamp10	Clamp	4S	0.000	0.678	0.214	0.711
NESC Extreme	Clamp11	Clamp	6S	0.000	0.739	0.228	0.774
NESC Extreme	Clamp12	Clamp	8P	0.000	0.932	0.390	1.010
NESC Extreme	Clamp13	Clamp	10S	0.000	1.026	0.356	1.087
NESC Extreme	Clamp14	Clamp	12S	0.000	1.327	0.426	1.394
NESC Extreme	Clamp15	Clamp	14S	0.000	2.210	0.632	2.299
NESC Extreme	Clamp16	Clamp	2X	3.825	5.184	7.666	10.014
NESC Extreme	Clamp17	Clamp	4X	0.000	0.678	0.214	0.711
NESC Extreme	Clamp18	Clamp	6X	0.000	0.739	0.228	0.774
NESC Extreme	Clamp19	Clamp	8X	0.000	0.932	0.390	1.010
NESC Extreme	Clamp20	Clamp	10X	0.000	1.026	0.356	1.087
NESC Extreme	Clamp21	Clamp	12X	0.000	1.327	0.426	1.394
NESC Extreme	Clamp22	Clamp	14X	0.000	2.210	0.632	2.299
NESC Extreme	Clamp23	Clamp	5S	1.182	-1.135	-6.301	6.510
NESC Extreme	Clamp24	Clamp	5X	-1.192	-1.241	8.641	8.811
NESC Extreme	Clamp25	Clamp	2Y	3.895	4.241	-5.099	7.691
NESC Extreme	Clamp26	Clamp	2XY	-3.898	4.149	7.391	9.330
NESC Extreme	Clamp27	Clamp	5Y	-1.187	-1.110	-6.296	6.502
NESC Extreme	Clamp28	Clamp	5XY	1.197	-1.215	8.453	8.623
NESC Extreme	Clamp29	Clamp	4Y	0.000	0.086	0.076	0.115
NESC Extreme	Clamp30	Clamp	6Y	0.000	0.086	0.076	0.115

NESC Extreme	Clamp31	Clamp	8Y	0.000	0.350	0.254	0.433
NESC Extreme	Clamp32	Clamp	10Y	0.000	0.263	0.178	0.318
NESC Extreme	Clamp33	Clamp	12Y	0.000	0.263	0.178	0.318
NESC Extreme	Clamp34	Clamp	14Y	0.000	0.263	0.178	0.318
NESC Extreme	Clamp35	Clamp	4XY	0.000	0.086	0.076	0.115
NESC Extreme	Clamp36	Clamp	6XY	0.000	0.086	0.076	0.115
NESC Extreme	Clamp37	Clamp	8XY	0.000	0.350	0.254	0.433
NESC Extreme	Clamp38	Clamp	10XY	0.000	0.263	0.178	0.318
NESC Extreme	Clamp39	Clamp	12XY	0.000	0.263	0.178	0.318
NESC Extreme	Clamp40	Clamp	14XY	0.000	0.263	0.178	0.318
NESC Extreme	Clamp43	Clamp	3XY	0.000	0.086	0.076	0.115
NESC Extreme	Clamp44	Clamp	3Y	0.000	0.086	0.076	0.115

Overturning Moments For User Input Concentrated Loads:

Moments are static equivalents based on central axis of 0,0 (i.e. a single pole).

Load Case	Total Tran. Load (kips)	Total Long. Load (kips)	Total Vert. Load (kips)	Transverse Overturning Moment (ft-k)	Longitudinal Overturning Moment (ft-k)	Torsional Moment (ft-k)
NESC Heavy	14.931	2.725	46.266	954.211	226.727	49.111
NESC Extreme	31.387	1.350	19.384	1999.328	100.459	71.795

*** Weight of structure (lbs):
Weight of Angles*Section DLF: 8188.1
Total: 8188.1

*** End of Report

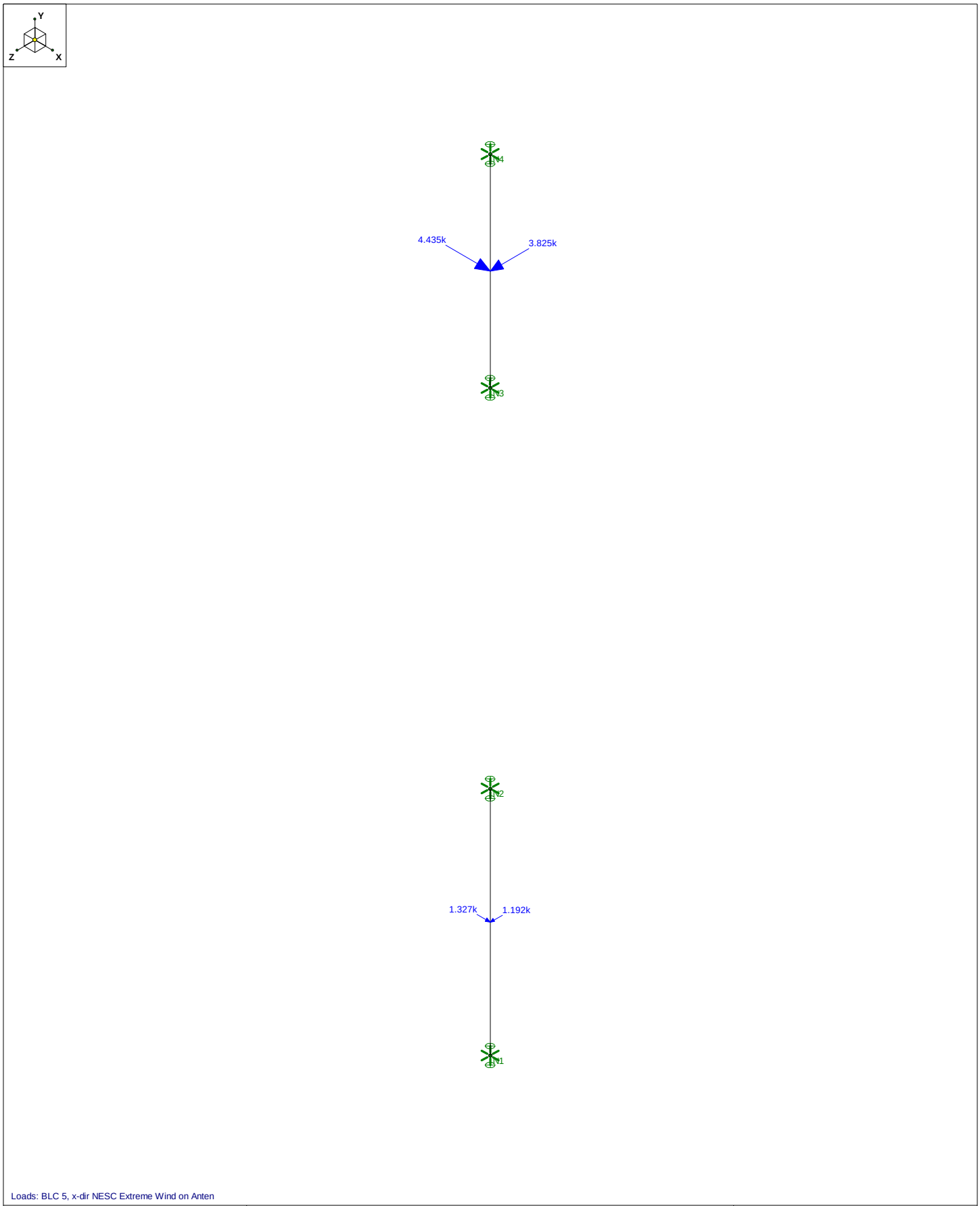

Loads: BLC 5, x-dir NESC Extreme Wind on Anten

CENTEK Engineering, Inc.	Structure # 783 - Mast	
tjl, cfc		July 6, 2018 at 10:25 AM
17010.08 / AT&T CT2117		Moment Diagram.r3d

Beam: ***M2***

Shape: **L4x4x5**
Material: **A36 Gr.36**
Length: **3.5 ft**
I Joint: **N3**
J Joint: **N4**
LC 2: x-dir NESC Extreme Wind on Antenna Frame
Code Check: **0.148 (shear)**
Report Based On 97 Sections

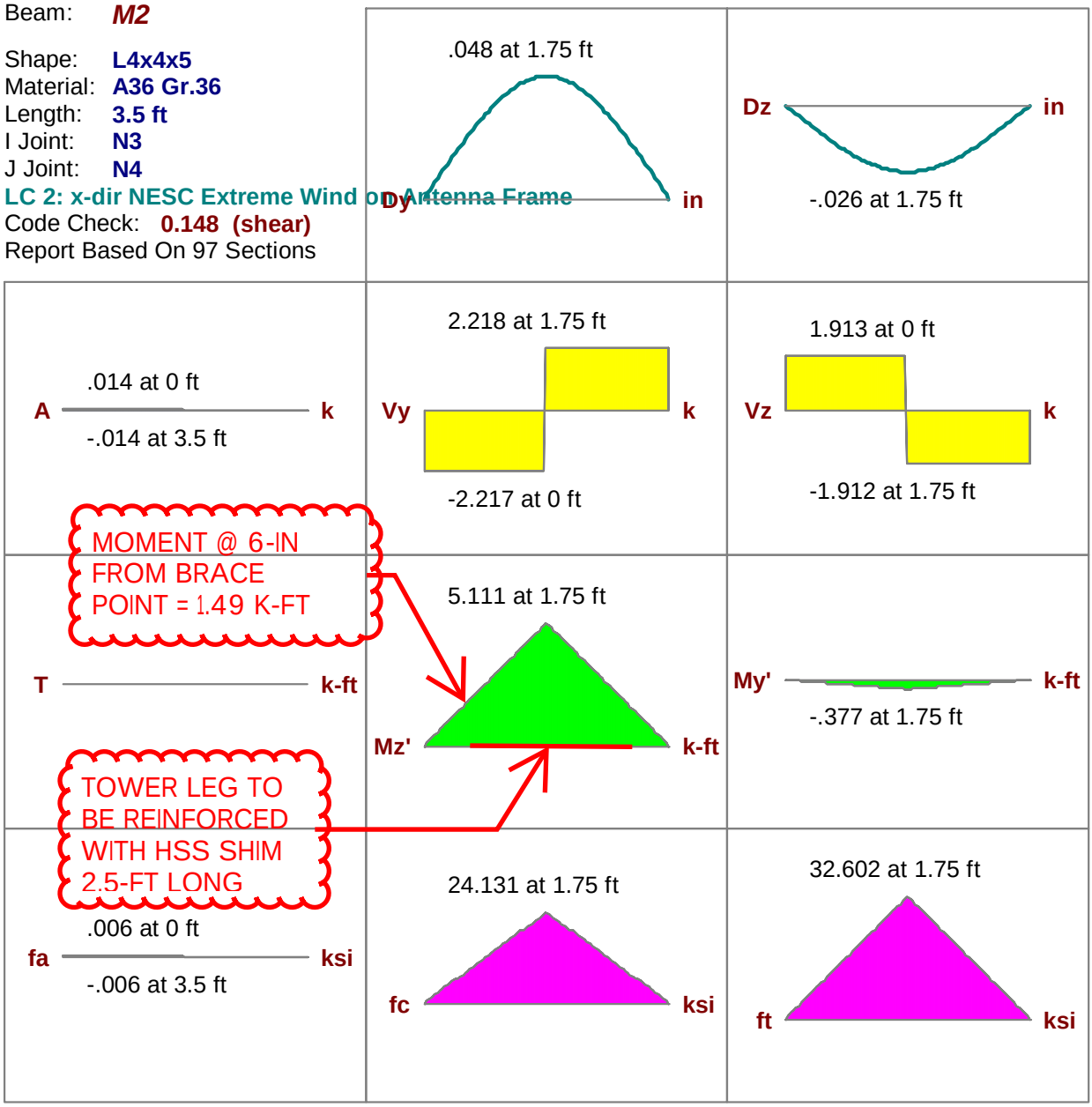

AISC 9th: ASD Code Check

-- Code Check based on Axial Only --

Max Bending Check	**0.000**	Max Shear Check	**0.148 (y)**	Max Defl Ratio	**L/866**
Location	**0 ft**	Location	**1.75 ft**	Location	**1.75 ft**
Equation	**H1-1**			Span	**1**

Slender (Qs= 0.996704 , Qa= 1)

			y-y'	z-z'
Fy	**36 ksi**	Cm	**.85**	**.85**
Fa	**17.961 ksi**	Lb	**3.5 ft**	**3.5 ft**
Ft	**21.6 ksi**	KL/r	**53.777**	**26.842**
Fby	**NA**	Sway	**No**	**No**
Fbz	**NA**	L Comp Flange	**3.5 ft**	
Fvy	**14.4 ksi**			
Fvz	**14.4 ksi**			
Cb	**1**			

Beam: ***M1***

Shape: **L4x4x5**
Material: **A36 Gr.36**
Length: **4 ft**
I Joint: **N1**
J Joint: **N2**
LC 2: x-dir NESC Extreme Wind on Antenna Frame
Code Check: **0.044 (shear)**
Report Based On 97 Sections

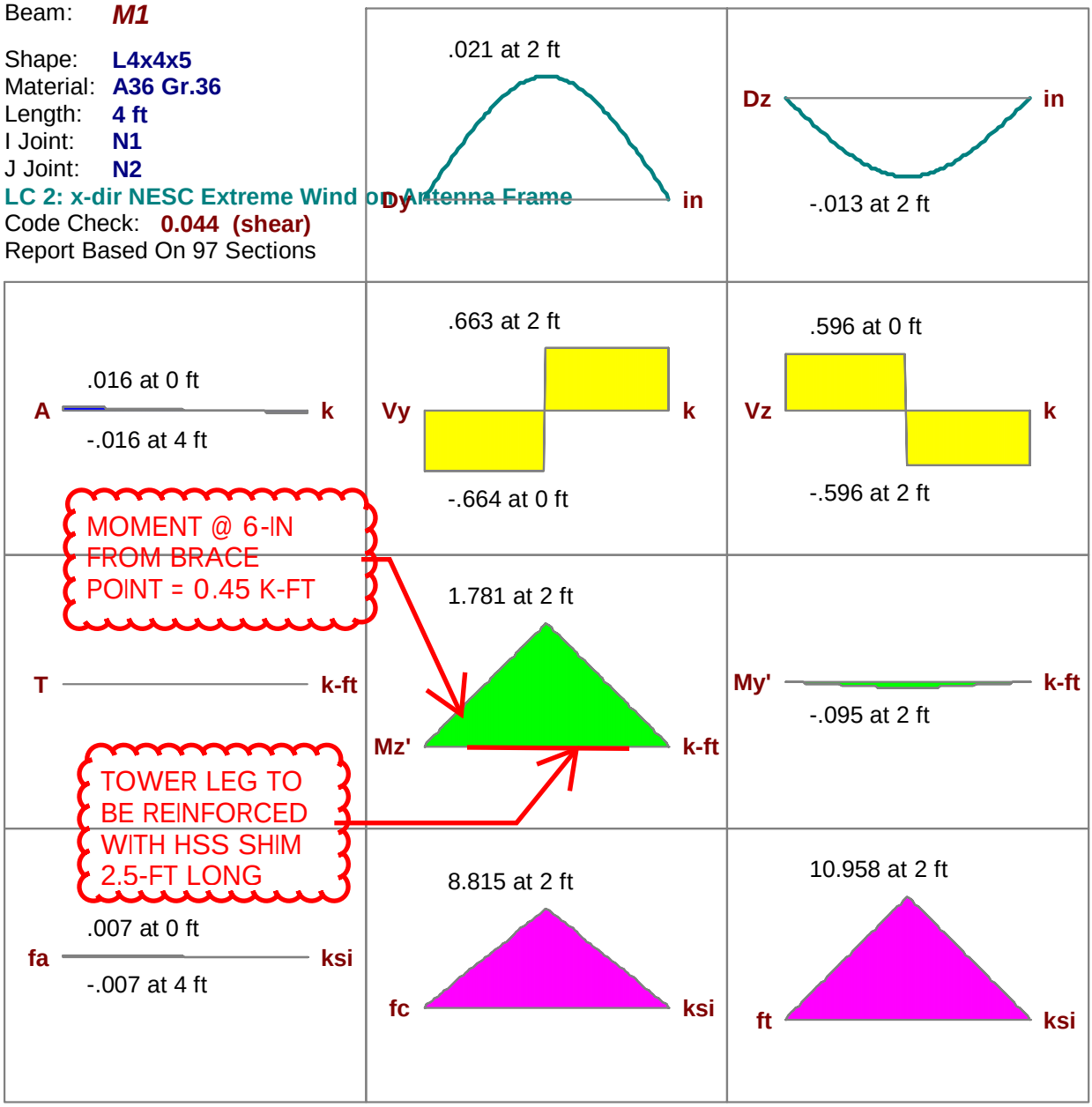

AISC 9th: ASD Code Check

-- Code Check based on Axial Only --

Max Bending Check	**0.000**	Max Shear Check	**0.044 (y)**	Max Defl Ratio	**L/2319**
Location	**0 ft**	Location	**0 ft**	Location	**2 ft**
Equation	**H1-1**			Span	**1**

Slender (Qs= 0.996704 , Qa= 1)

			y-y'	z-z'
Fy	**36 ksi**	Cm	**.85**	**.85**
Fa	**17.241 ksi**	Lb	**4 ft**	**4 ft**
Ft	**21.6 ksi**	KL/r	**61.46**	**30.676**
Fby	**NA**	Sway	**No**	**No**
Fbz	**NA**	L Comp Flange	**4 ft**	
Fvy	**14.4 ksi**			
Fvz	**14.4 ksi**			
Cb	**1**			

Antenna Mast Top Connection:

Maximum Design Reactions at Brace:

Compression Force =	$Compression := 13.7 \cdot kips$	(User Input from PLS-Tower)
Tension Force =	$Tension := 10.5 \cdot kips$	(User Input from PLS-Tower)
Moment =	$M_x := 1.49 \cdot ft \cdot kips$	(User Input - Moment @ 6-in from brace point)
Moment =	$M_y := 0.13 \cdot ft \cdot kips$	(User Input - Moment @ 6-in from brace point)

Member Properties:

Member Type =	L4x4x5/16	
Member Width =	$w := 4 \cdot in$	(User Input)
Member Thickness =	$t := 0.3125 \cdot in$	(User Input)
Member Area =	$A := 2.4 \cdot in^2$	(User Input)
Moment of Inertia =	$I_x := 3.67 \cdot in^4$	(User Input)
Moment of Inertia =	$I_y := 3.67 \cdot in^4$	(User Input)
Section Modulus x-dir =	$S_x := 1.27 \cdot in^3$	(User Input)
Section Modulus y-dir =	$S_y := 1.27 \cdot in^3$	(User Input)
Unbraced Length =	$L := 3.5 \cdot ft$	(User Input)
Effective Length Coefficient =	$K := 1$	(User Input)
Radius of Gyration =	$r_x := 1.24 \cdot in$	(User Input)
Radius of Gyration =	$r_y := 1.24 \cdot in$	(User Input)
Yield Stress =	$F_y := 33 \cdot ksi$	(User Input)
Modulus of Elasticity =	$E := 29000 \cdot ksi$	(User Input)

Calculate Design Compression Stress: (Per ASCE 10-97 Section 3.6 and 3.7)

Width Thickness Ratio = $w\_t := \frac{w - k_{des}}{t} = 10.8$

Yield Stress =

$$F_y := \begin{cases} F_y & \text{if } w\_t < \frac{80}{\sqrt{f_y}} \\ \left[1.677 - 0.677 \cdot \frac{w\_t}{\left(\frac{80}{\sqrt{f_y}}\right)}\right] \cdot F_y & \text{if } \frac{80}{\sqrt{f_y}} \le w\_t \le \frac{144}{\sqrt{f_y}} \\ \frac{0.0332 \cdot \pi^2 \cdot E}{(w\_t)^2} & \text{if } w\_t > \frac{144}{\sqrt{f_y}} \end{cases} = 33 \cdot ksi$$

(3.7-1)
(3.7-2)
(3.7-3)

Column Slenderness Ratio = $C_c := \pi \cdot \sqrt{\frac{2 \cdot E}{F_y}} = 131.706$ (3.6-3)

Design Axial Compressive Stress =

$$F_a := \begin{cases} \left[1 - 0.5\left(\frac{\frac{K \cdot L}{r_x}}{C_c}\right)^2\right] \cdot F_y & \text{if } \frac{K \cdot L}{r_x} \le C_c \\ \frac{\pi^2 \cdot E}{\left(\frac{K \cdot L}{r_x}\right)^2} & \text{if } \frac{K \cdot L}{r_x} > C_c \end{cases} = 31.9 \cdot ksi$$

(3.6-1)
(3.6-2)

Calculate Allowable Bending Moment: (Per ASCE 10-97 Section 3.14.8)

$b := w - \frac{t}{2} = 3.844 \cdot in$

Elastic Critical Moment = $M_e := \frac{\left(0.66 \cdot E \cdot b^4 \cdot t\right)}{(K \cdot L)^2} \cdot \left[\sqrt{1 + \frac{0.81 \cdot (K \cdot L)^2 \cdot t^2}{b^4}} + 1\right] = 1687.8 \cdot kips \cdot in$ (3.14-7)

Moment Causing Compressive Yield = $M_{xc} := F_y \cdot S_x = 41.91 \cdot in \cdot kips$ (3.14-9)

Moment Causing Compressive Yield = $M_{yc} := F_y \cdot S_y = 41.91 \cdot kips \cdot in$ (3.14-9)

Lateral Bukling Moment =

$$M_b := \begin{cases} M_e & \text{if } M_e \le 0.5 \cdot M_{yc} \\ M_{yc} \cdot \left(1 - \frac{M_{yc}}{4 \cdot M_e}\right) & \text{if } M_e > 0.5 \cdot M_{yc} \end{cases} = 41.6 \cdot kips \cdot in$$

(3.14-5)

Allowable Moment =

$$M_a := \begin{pmatrix} M_{yc} & \text{if } M_{yc} \le M_b \\ M_b & \end{pmatrix} = 41.6 \cdot kips \cdot in$$

(3.14-6)

Check Combined Axial Compression and Bending: (Per ASCE 10-97 Section 3.12)

Bending Coefficient = $C_m := 1$ (for restrained ends)

Applied Axial Compression = $P := Compression = 13.7 \cdot kips$

Design Axial Compression = $P_a := F_a \cdot A = 76.6 \cdot kips$

Axial Compression at Yield = $P_y := F_y \cdot A = 79.2 \cdot kips$

Euler Bukling Load = $P_{ex} := \frac{\pi^2 \cdot E \cdot I_x}{(K \cdot L)^2} = 595.5 \cdot kips$

Euler Bukling Load = $P_{ey} := \frac{\pi^2 \cdot E \cdot I_y}{(K \cdot L)^2} = 595.5 \cdot kips$

$$Condition1 := if\left[\frac{P}{P_a} + \frac{C_m \cdot M_x}{M_{xc}} \cdot \left[\frac{1}{\left(1 - \frac{P}{P_{ex}}\right)}\right] + \frac{C_m \cdot M_y}{M_{yc}} \cdot \left[\frac{1}{\left(1 - \frac{P}{P_{ey}}\right)}\right] \le 1.00, "OK", "Overstressed"\right] \quad (3.12\text{-}1)$$

Condition1 = "OK"

$$Condition2 := if\left(\frac{P}{P_y} + \frac{M_x}{M_{xc}} + \frac{M_y}{M_{yc}} \le 1.00, "OK", "Overstressed"\right) \quad (3.12\text{-}2)$$

Condition2 = "OK"

Antenna Mast Bottom Connection:

Maximum Design Reactions at Brace:

Compression Force =	Compression := 55.6·kips	(User Input from PLS-Tower)
Tension Force =	Tension := 47.6·kips	(User Input from PLS-Tower)
Moment =	$M_x := 0.45 \cdot ft \cdot kips$	(User Input - Max Moment)
Moment =	$M_y := 0.035 \cdot ft \cdot kips$	(User Input - Max Moment)

Member Properties:

Member Type =	L4x4x5/16	
Member Width =	w := 4·in	(User Input)
Member Thickness =	t := 0.3125·in	(User Input)
Member Area =	$A := 2.4 \cdot in^2$	(User Input)
Moment of Inertia =	$I_x := 3.67 \cdot in^4$	(User Input)
Moment of Inertia =	$I_y := 3.67 \cdot in^4$	(User Input)
Section Modulus x-dir =	$S_x := 1.27 \cdot in^3$	(User Input)
Section Modulus y-dir =	$S_y := 1.27 \cdot in^3$	(User Input)
Unbraced Length =	L := 4·ft	(User Input)
Effective Length Coefficient =	K := 1	(User Input)
Radius of Gyration =	$r_x := 1.24 \cdot in$	(User Input)
Radius of Gyration =	$r_y := 1.24 \cdot in$	(User Input)
Yield Stress =	$F_y := 33 \cdot ksi$	(User Input)
Modulus of Elasticity =	E := 29000·ksi	(User Input)

Calculate Design Compression Stress: (Per ASCE 10-97 Section 3.6 and 3.7)

Width Thickness Ratio = $w\_t := \frac{w - k_{des}}{t} = 6.976$

Yield Stress =

$$F_y := \begin{cases} F_y & \text{if } w\_t < \frac{80}{\sqrt{f_y}} \\ \left[1.677 - 0.677 \cdot \frac{w\_t}{\left(\frac{80}{\sqrt{f_y}}\right)}\right] \cdot F_y & \text{if } \frac{80}{\sqrt{f_y}} \le w\_t \le \frac{144}{\sqrt{f_y}} \\ \frac{0.0332 \cdot \pi^2 \cdot E}{(w\_t)^2} & \text{if } w\_t > \frac{144}{\sqrt{f_y}} \end{cases} = 33 \cdot ksi$$

(3.7-1)
(3.7-2)
(3.7-3)

Column Slenderness Ratio = $C_c := \pi \cdot \sqrt{\frac{2 \cdot E}{F_y}} = 131.706$ (3.6-3)

Design Axial Compressive Stress =

$$F_a := \begin{cases} \left[1 - 0.5\left(\frac{\frac{K \cdot L}{r_x}}{C_c}\right)^2\right] \cdot F_y & \text{if } \frac{K \cdot L}{r_x} \le C_c \\ \frac{\pi^2 \cdot E}{\left(\frac{K \cdot L}{r_x}\right)^2} & \text{if } \frac{K \cdot L}{r_x} > C_c \end{cases} = 31.6 \cdot ksi$$

(3.6-1)
(3.6-2)

Calculate Allowable Bending Moment: (Per ASCE 10-97 Section 3.14.8)

$b := w - \frac{t}{2} = 3.844 \cdot in$

Elastic Critical Moment = $M_e := \frac{\left(0.66 \cdot E \cdot b^4 \cdot t\right)}{(K \cdot L)^2} \cdot \left[\sqrt{1 + \frac{0.81 \cdot (K \cdot L)^2 \cdot t^2}{b^4}} + 1\right] = 1334.3 \cdot kips \cdot in$ (3.14-7)

Moment Causing Compressive Yield = $M_{xc} := F_y \cdot S_x = 41.91 \cdot in \cdot kips$ (3.14-9)

Moment Causing Compressive Yield = $M_{yc} := F_y \cdot S_y = 41.91 \cdot kips \cdot in$ (3.14-9)

Lateral Bukling Moment =

$$M_b := \begin{cases} M_e & \text{if } M_e \le 0.5 \cdot M_{yc} \\ M_{yc} \cdot \left(1 - \frac{M_{yc}}{4 \cdot M_e}\right) & \text{if } M_e > 0.5 \cdot M_{yc} \end{cases} = 41.6 \cdot kips \cdot in$$

(3.14-5)

Allowable Moment =

$$M_a := \begin{pmatrix} M_{yc} & \text{if } M_{yc} \le M_b \\ M_b & \end{pmatrix} = 41.6 \cdot kips \cdot in$$

(3.14-6)

Check Combined Axial Compression and Bending: (Per ASCE 10-97 Section 3.12)

Bending Coefficient = $C_m := 1$ (for restrained ends)

Applied Axial Compression = $P := Compression = 55.6 \cdot kips$

Design Axial Compression = $P_a := F_a \cdot A = 75.8 \cdot kips$

Axial Compression at Yield = $P_y := F_y \cdot A = 79.2 \cdot kips$

Euler Bukling Load = $P_{ex} := \frac{\pi^2 \cdot E \cdot I_x}{(K \cdot L)^2} = 455.9 \cdot kips$

Euler Bukling Load = $P_{ey} := \frac{\pi^2 \cdot E \cdot I_y}{(K \cdot L)^2} = 455.9 \cdot kips$

$$Condition1 := if\left[\frac{P}{P_a} + \frac{C_m \cdot M_x}{M_{xc}} \cdot \left[\frac{1}{\left(1 - \frac{P}{P_{ex}}\right)}\right] + \frac{C_m \cdot M_y}{M_{yc}} \cdot \left[\frac{1}{\left(1 - \frac{P}{P_{ey}}\right)}\right] \le 1.00, "OK", "Overstressed"\right] \quad (3.12\text{-}1)$$

Condition1 = "OK"

$$Condition2 := if\left(\frac{P}{P_y} + \frac{M_x}{M_{xc}} + \frac{M_y}{M_{yc}} \le 1.00, "OK", "Overstressed"\right) \quad (3.12\text{-}2)$$

Condition2 = "OK"

Section Properties: Section1

Section Information:

Material Type	=	General
Shape Type	=	Arbitrary
Number of Shapes	=	2

Basic Properties:

Total Width	=	4.313	in
Total Height	=	4.313	in
Centroid, Xo	=	-0.400	in
Centroid, Yo	=	-0.400	in
X-Bar (Right)	=	2.400	in
X-Bar (Left)	=	1.912	in
Y-Bar (Top)	=	2.400	in
Y-Bar (Bot)	=	1.912	in
Max Thick	=	0.349	in

Equivalent Properties:

Area, Ax	=	7.180	in^2
Inertia, Ixx	=	16.259	in^4
Inertia, Iyy	=	16.259	in^4
Inertia, Ixy	=	0.078	in^4
Sx (Top)	=	6.774	in^3
Sx (Bot)	=	8.502	in^3
Sy (Left)	=	8.502	in^3
Sy (Right)	=	6.774	in^3
rx	=	1.505	in
ry	=	1.505	in
Plastic Zx	=	10.127	in^3
Plastic Zy	=	10.453	in^3
Torsional J	=	17.583	in^4
As-xx Def	=	1.000	
As-yy Def	=	1.000	
As-xx Stress	=	1.000	
As-yy Stress	=	1.000	

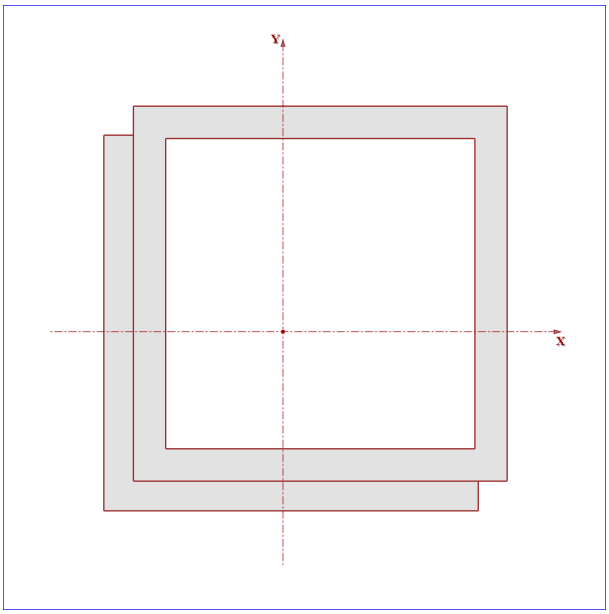

Section Diagram

Antenna Mast Top Connection:

Maximum Design Reactions at Brace:

Compression Force =	$Compression := 13.7 \cdot kips$	(User Input from PLS-Tower)
Tension Force =	$Tension := 10.5 \cdot kips$	(User Input from PLS-Tower)
Moment =	$M_x := 5.11 \cdot ft \cdot kips$	(User Input - Max Moment)
Moment =	$M_y := 0.38 \cdot ft \cdot kips$	(User Input - Max Moment)

Member Properties:

Member Type =	L4x4x5/16 w/ HSS4x4x3/8	
Member Width =	$w := 4.32 \cdot in$	(User Input)
Member Thickness =	$t := 0.35 \cdot in$	(User Input)
Member Area =	$A := 7.18 \cdot in^2$	(User Input)
Moment of Inertia =	$I_x := 16.26 \cdot in^4$	(User Input)
Moment of Inertia =	$I_y := 16.26 \cdot in^4$	(User Input)
Section Modulus x-dir =	$S_x := 6.78 \cdot in^3$	(User Input)
Section Modulus y-dir =	$S_y := 6.78 \cdot in^3$	(User Input)
Unbraced Length =	$L := 3.5 \cdot ft$	(User Input)
Effective Length Coefficient =	$K := 1$	(User Input)
Radius of Gyration =	$r_x := 1.51 \cdot in$	(User Input)
Radius of Gyration =	$r_y := 1.51 \cdot in$	(User Input)
Yield Stress =	$F_y := 33 \cdot ksi$	(User Input)
Modulus of Elasticity =	$E := 29000 \cdot ksi$	(User Input)

Calculate Design Compression Stress: (Per ASCE 10-97 Section 3.6 and 3.7)

Width Thickness Ratio = $w\_t := \frac{w - k_{des}}{t} = 10.557$

Yield Stress =

$$F_y := \begin{cases} F_y & \text{if } w\_t < \frac{80}{\sqrt{f_y}} \\ \left[1.677 - 0.677 \cdot \frac{w\_t}{\left(\frac{80}{\sqrt{f_y}}\right)}\right] \cdot F_y & \text{if } \frac{80}{\sqrt{f_y}} \le w\_t \le \frac{144}{\sqrt{f_y}} \\ \frac{0.0332 \cdot \pi^2 \cdot E}{(w\_t)^2} & \text{if } w\_t > \frac{144}{\sqrt{f_y}} \end{cases} = 33 \cdot ksi$$

(3.7-1)
(3.7-2)
(3.7-3)

Column Slenderness Ratio = $C_c := \pi \cdot \sqrt{\frac{2 \cdot E}{F_y}} = 131.706$ (3.6-3)

Design Axial Compressive Stress =

$$F_a := \begin{cases} \left[1 - 0.5\left(\frac{\frac{K \cdot L}{r_x}}{C_c}\right)^2\right] \cdot F_y & \text{if } \frac{K \cdot L}{r_x} \le C_c \\ \frac{\pi^2 \cdot E}{\left(\frac{K \cdot L}{r_x}\right)^2} & \text{if } \frac{K \cdot L}{r_x} > C_c \end{cases} = 32.3 \cdot ksi$$

(3.6-1)
(3.6-2)

Calculate Allowable Bending Moment: (Per ASCE 10-97 Section 3.14.8)

$b := w - \frac{t}{2} = 4.145 \cdot in$

Elastic Critical Moment =

$$M_e := \frac{\left(0.66 \cdot E \cdot b^4 \cdot t\right)}{(K \cdot L)^2} \cdot \left[\sqrt{1 + \frac{0.81 \cdot (K \cdot L)^2 \cdot t^2}{b^4}} + 1\right] = 2535.9 \cdot kips \cdot in$$

(3.14-7)

Moment Causing Compressive Yield = $M_{xc} := F_y \cdot S_x = 223.74 \cdot in \cdot kips$ (3.14-9)

Moment Causing Compressive Yield = $M_{yc} := F_y \cdot S_y = 223.74 \cdot kips \cdot in$ (3.14-9)

Lateral Bukling Moment =

$$M_b := \begin{cases} M_e & \text{if } M_e \le 0.5 \cdot M_{yc} \\ M_{yc} \cdot \left(1 - \frac{M_{yc}}{4 \cdot M_e}\right) & \text{if } M_e > 0.5 \cdot M_{yc} \end{cases} = 218.8 \cdot kips \cdot in$$

(3.14-5)

Allowable Moment =

$$M_a := \begin{pmatrix} M_{yc} & \text{if } M_{yc} \le M_b \\ M_b & \end{pmatrix} = 218.8 \cdot kips \cdot in$$

(3.14-6)

Check Combined Axial Compression and Bending: (Per ASCE 10-97 Section 3.12)

Bending Coefficient = $C_m := 1$ (for restrained ends)

Applied Axial Compression = $P := Compression = 13.7 \cdot kips$

Design Axial Compression = $P_a := F_a \cdot A = 231.7 \cdot kips$

Axial Compression at Yield = $P_y := F_y \cdot A = 236.94 \cdot kips$

Euler Bukling Load = $P_{ex} := \frac{\pi^2 \cdot E \cdot I_x}{(K \cdot L)^2} = 2638.3 \cdot kips$

Euler Bukling Load = $P_{ey} := \frac{\pi^2 \cdot E \cdot I_y}{(K \cdot L)^2} = 2638.3 \cdot kips$

$$Condition1 := if\left[\frac{P}{P_a} + \frac{C_m \cdot M_x}{M_{xc}} \cdot \left[\frac{1}{\left(1 - \frac{P}{P_{ex}}\right)}\right] + \frac{C_m \cdot M_y}{M_{yc}} \cdot \left[\frac{1}{\left(1 - \frac{P}{P_{ey}}\right)}\right] \le 1.00, "OK", "Overstressed"\right] \quad (3.12\text{-}1)$$

Condition1 = "OK"

$$Condition2 := if\left(\frac{P}{P_y} + \frac{M_x}{M_{xc}} + \frac{M_y}{M_{yc}} \le 1.00, "OK", "Overstressed"\right) \quad (3.12\text{-}2)$$

Condition2 = "OK"

Antenna Mast Bottom Connection:

Maximum Design Reactions at Brace:

Compression Force =	Compression := 55.6·kips	(User Input from PLS-Tower)
Tension Force =	Tension := 47.6·kips	(User Input from PLS-Tower)
Moment =	$M_x := 1.78 \cdot ft \cdot kips$	(User Input - Max Moment)
Moment =	$M_y := 0.095 \cdot ft \cdot kips$	(User Input - Max Moment)

Member Properties:

Member Type =	L4x4x5/16 w/ HSS4x4x3/8	
Member Width =	w := 4.32·in	(User Input)
Member Thickness =	t := 0.35·in	(User Input)
Member Area =	$A := 7.18 \cdot in^2$	(User Input)
Moment of Inertia =	$I_x := 16.26 \cdot in^4$	(User Input)
Moment of Inertia =	$I_y := 16.26 \cdot in^4$	(User Input)
Section Modulus x-dir =	$S_x := 6.78 \cdot in^3$	(User Input)
Section Modulus y-dir =	$S_y := 6.78 \cdot in^3$	(User Input)
Unbraced Length =	L := 4.0·ft	(User Input)
Effective Length Coefficient =	K := 1	(User Input)
Radius of Gyration =	$r_x := 1.51 \cdot in$	(User Input)
Radius of Gyration =	$r_y := 1.51 \cdot in$	(User Input)
Yield Stress =	$F_y := 33 \cdot ksi$	(User Input)
Modulus of Elasticity =	E := 29000·ksi	(User Input)

Calculate Design Compression Stress: (Per ASCE 10-97 Section 3.6 and 3.7)

Width Thickness Ratio = $w\_t := \frac{w - k_{des}}{t} = 10.557$

Yield Stress =

$$F_y := \begin{cases} F_y & \text{if } w\_t < \frac{80}{\sqrt{f_y}} \\ \left[1.677 - 0.677 \cdot \frac{w\_t}{\left(\frac{80}{\sqrt{f_y}}\right)}\right] \cdot F_y & \text{if } \frac{80}{\sqrt{f_y}} \le w\_t \le \frac{144}{\sqrt{f_y}} \\ \frac{0.0332 \cdot \pi^2 \cdot E}{(w\_t)^2} & \text{if } w\_t > \frac{144}{\sqrt{f_y}} \end{cases} = 33 \cdot ksi \quad (3.7\text{-}1)\ (3.7\text{-}2)\ (3.7\text{-}3)$$

Column Slenderness Ratio = $C_c := \pi \cdot \sqrt{\frac{2 \cdot E}{F_y}} = 131.706$ (3.6-3)

Design Axial Compressive Stress =

$$F_a := \begin{cases} \left[1 - 0.5\left(\frac{\frac{K \cdot L}{r_x}}{C_c}\right)^2\right] \cdot F_y & \text{if } \frac{K \cdot L}{r_x} \le C_c \\ \frac{\pi^2 \cdot E}{\left(\frac{K \cdot L}{r_x}\right)^2} & \text{if } \frac{K \cdot L}{r_x} > C_c \end{cases} = 32 \cdot ksi \quad (3.6\text{-}1)\ (3.6\text{-}2)$$

Calculate Allowable Bending Moment: (Per ASCE 10-97 Section 3.14.8)

$b := w - \frac{t}{2} = 4.145 \cdot in$

Elastic Critical Moment =

$$M_e := \frac{\left(0.66 \cdot E \cdot b^4 \cdot t\right)}{(K \cdot L)^2} \cdot \left[\sqrt{1 + \frac{0.81 \cdot (K \cdot L)^2 \cdot t^2}{b^4}} + 1\right] = 2001.6 \cdot kips \cdot in \quad (3.14\text{-}7)$$

Moment Causing Compressive Yield = $M_{xc} := F_y \cdot S_x = 223.74 \cdot in \cdot kips$ (3.14-9)

Moment Causing Compressive Yield = $M_{yc} := F_y \cdot S_y = 223.74 \cdot kips \cdot in$ (3.14-9)

Lateral Bukling Moment =

$$M_b := \begin{cases} M_e & \text{if } M_e \le 0.5 \cdot M_{yc} \\ M_{yc} \cdot \left(1 - \frac{M_{yc}}{4 \cdot M_e}\right) & \text{if } M_e > 0.5 \cdot M_{yc} \end{cases} = 217.5 \cdot kips \cdot in \quad (3.14\text{-}5)$$

Allowable Moment =

$$M_a := \begin{pmatrix} M_{yc} & \text{if } M_{yc} \le M_b \\ M_b & \end{pmatrix} = 217.5 \cdot kips \cdot in \quad (3.14\text{-}6)$$

Check Combined Axial Compression and Bending: (Per ASCE 10-97 Section 3.12)

Bending Coefficient = $C_m := 1$ (for restrained ends)

Applied Axial Compression = $P := Compression = 55.6 \cdot kips$

Design Axial Compression = $P_a := F_a \cdot A = 230 \cdot kips$

Axial Compression at Yield = $P_y := F_y \cdot A = 236.94 \cdot kips$

Euler Bukling Load = $P_{ex} := \frac{\pi^2 \cdot E \cdot I_x}{(K \cdot L)^2} = 2019.9 \cdot kips$

Euler Bukling Load = $P_{ey} := \frac{\pi^2 \cdot E \cdot I_y}{(K \cdot L)^2} = 2019.9 \cdot kips$

$$Condition1 := if\left[\frac{P}{P_a} + \frac{C_m \cdot M_x}{M_{xc}} \cdot \left[\frac{1}{\left(1 - \frac{P}{P_{ex}}\right)}\right] + \frac{C_m \cdot M_y}{M_{yc}} \cdot \left[\frac{1}{\left(1 - \frac{P}{P_{ey}}\right)}\right] \le 1.00, "OK", "Overstressed"\right] \quad (3.12\text{-}1)$$

Condition1 = "OK"

$$Condition2 := if\left(\frac{P}{P_y} + \frac{M_x}{M_{xc}} + \frac{M_y}{M_{yc}} \le 1.00, "OK", "Overstressed"\right) \quad (3.12\text{-}2)$$

Condition2 = "OK"

Foundation Analysis

Input Data:

Max. Reactions at Tower Leg:

Shear =	$Shear := 60.46 \cdot 1.1 \cdot kips = 66.5 \cdot kips$	(User Input - Tot. Base Shear)
Compression =	$Comp := 136.43 \cdot 1.1 \cdot kips = 150.1 \cdot kips$	(User Input - Tot. Compression)
Uplift =	$Uplift := 108.86 \cdot 1.1 \cdot kips = 119.7 \cdot kips$	(User Input - Tot. Uplift)

Tower Properties:

Tower Height =	$H_t := 78 \cdot ft$	(User Input)
Distance to Uplift Legs =	$d_{uplift} := 24.5 \cdot ft$	(User Input)
Distance to Compression Legs =	$d_{comp} := 2.5 \cdot ft$	(User Input)

Foundation Properties:

Pier Height =	$P_H := 2.75 \cdot ft$	(User Input)
Pier Width Top =	$P_{w1} := 1.333 \cdot ft$	(User Input)
Pier Width Botttom =	$P_{w2} := 2.15 \cdot ft$	(User Input)
Pier Length =	$P_l := 2.08 \cdot ft$	(User Input)
Pier Projection Above Grade =	$P_P := 2.75 \cdot ft$	(User Input)
Pad Width 1 =	$Pd_{w1} := 4.5 \cdot ft$	(User Input)
Pad Width 2 =	$Pd_{w2} := 2.17 \cdot ft$	(User Input)
Pad Thickness =	$Pd_t := 2.0 \cdot ft$	(User Input)
Mat Width =	$Mat_w := 27 \cdot ft$	(User Input)
Mat Thickness =	$Mat_t := 3.5 \cdot ft$	(User Input)

Subgrade Properties:

Concrete Unit Weight =	$\gamma c := 150 \cdot pcf$	(User Input)
Water Unit Weight =	$\gamma w := 62.4 \cdot pcf$	(User Input)
Soil Unit Weight =	$\gamma s := 100 \cdot pcf$	(User Input)
Uplift Angle =	$\psi := 30.0 \cdot deg$	(User Input)
Soil Bearing Capacity =	$BC_{soil} := 9000 \cdot psf$	(User Input)

Calculated Data:

Volume of the Concrete Pads = $V_{pad} := Pd_{w1} \cdot Pd_{w2} \cdot Pd_t \cdot 4 = 78.12 \cdot ft^3$

Volume of the Concrete Piers = $V_{pier} := \frac{(P_{w1} + P_{w2})}{2} \cdot P_H \cdot P_l \cdot 4 = 39.85 \cdot ft^3$

Volume of the Concrete Mat = $V_{mat} := \left(Mat_w^{\,2} \cdot Mat_t\right) = 2551 \cdot ft^3$

Total Vdlume of Concrete = $V_{Conc} := V_{pad} + V_{mat} + V_{pier} = 2669 \cdot ft^3$

Mass of Concrete = $Mass_{Conc} := V_{Conc} \cdot \gamma c = 400.4 \cdot kips$

Check Overturning:

Overturning Moment = $OM := Uplift \cdot d_{uplift} + Shear \cdot (P_H + Mat_t) = 3349.4 \cdot kip \cdot ft$

Resisting Moment = $RM := Comp \cdot d_{comp} + Mass_{Conc} \cdot \frac{Mat_w}{2} = 5780.9 \cdot kip \cdot ft$

Required Factor of Safety = $F_S := 1.0$

$ActualFS := \frac{RM}{OM} = 1.73$

$Uplift\_Check := if\left(\frac{RM}{OM} \geq F_S, \text{"OK"}, \text{"Overstressed"}\right)$

Uplift_Check = "OK"

Check Bearing:

Cross Sectional Area of Mat = $A_{mat} := Mat_w^{\,2} = 729 ft^2$

Section Modulus of Mat = $S_{mat} := \frac{(Mat_w)^3}{6} = 3280 \cdot ft^3$

$Bearing := \frac{Comp + Mass_{Conc}}{A_{mat}} + \frac{OM}{S_{mat}} = 1.78 \cdot ksf$

$Bearing\_Check := if\left(Bearing \leq BC_{soil}, \text{"OK"}, \text{"No Good"}\right)$

Bearing_Check = "OK"

Section 1 - RFDS GENERAL INFORMATION

RFDS NAME:	CT2117	DATE:	02/07/2017	RF DESIGN ENG:	Radu Alecsandru
ISSUE:	Bronze Standard	Approved? (Y/N):	Yes	RF DESIGN PHONE:	
REVISION:	FINAL	RF MANAGER:	John Benedetto	RF DESIGN EMAIL:	ra9161@att.com
INITIATIVE /PROJECT:	This is a carbon copy of the Excel Format RFDS. 2/7/2017 updated plumbing and carrier counts with the respective RRHs 4/11/2017 Updated RFDS for 2nd PCS carrier BWE (CSS section).				

RF PERF ENG:		RFDS PROGRAM TYPE:	2018 New Site		
RF PERF PHONE:		RFDS TECHNOLOGY:	New		
RF PERF EMAIL:		STATE/STATUS:	As Built/In Progress		
RFDS VERSION:	2.00	RFDS ID:	1598627		
GSM FREQUENCY:		Created By:	ra9161	Updated By:	ra9161
UMTS FREQUENCY:		Date Created:	1/11/2017 2:39:44 PM	Date Updated:	4/11/2017 9:04:07 AM
LTE FREQUENCY:	700, 1900, WCS				
I-PLAN JOB # 1:	NER-RCTB-12-00012	IPLAN PRD GRP || SUB GRP #1:	New Site || LTE Only 1C		
I-PLAN JOB # 2:		IPLAN PRD GRP || SUB GRP #2:			
I-PLAN JOB # 3:		IPLAN PRD GRP || SUB GRP #3:			
I-PLAN JOB # 4:		IPLAN PRD GRP || SUB GRP #4:			
I-PLAN JOB # 5:		IPLAN PRD GRP || SUB GRP #5:			
I-PLAN JOB # 6:		IPLAN PRD GRP || SUB GRP #6:			
I-PLAN JOB # 7:		IPLAN PRD GRP || SUB GRP #7:			
I-PLAN JOB # 8:		IPLAN PRD GRP || SUB GRP #8:			

Section 2 - LOCATION INFORMATION

USID:	97774	FA LOCATION CODE:	10126684	LOCATION NAME:	CHESHIRE CHESHIRE STREET
REGION:	NORTHEAST	MARKET CLUSTER:	NEW ENGLAND	MARKET:	CONNECTICUT
ADDRESS:	1325 CHESHIRE STREET	CITY:	CHESHIRE	STATE:	CT
ZIP CODE:	06410	COUNTY:	NEW HAVEN	LONG (DEC. DEG.):	-72.8700000
LATITUDE (D-M-S):	41d 31m54.99984s	LONGITUDE (D-M-S):	-72d -52m-12s	LAT (DEC. DEG.):	41.5319444
DIRECTIONS, ACCESS AND EQUIPMENT LOCATION:	1325 CHESHIRE STREET / EXISTING ACCESS				

ORACLE PTN # 1:	2051001078	PACE JOB # 1:	MRCTB005990		
ORACLE PTN # 2:		PACE JOB # 2:			
ORACLE PTN # 3:		PACE JOB # 3:			
ORACLE PTN # 4:		PACE JOB # 4:			
ORACLE PTN # 5:		PACE JOB # 5:			
ORACLE PTN # 6:		PACE JOB # 6:			
ORACLE PTN # 7:		PACE JOB # 7:			
ORACLE PTN # 8:		PACE JOB # 8:			
BORDER CELL WITH CONTOUR COORD:		SEARCH RING NAME:	MERIDEN CARIATI BOULEVARD		
AM STUDY REQ'D (Y/N):	No	SEARCH_RING_ID:	S2117		
FREQ COORD:		BTA:		MSA / RSA:	
OPS DISTRICT:		LAC(GSM):			
OPS ZONE:		LAC(UMTS):			
RF DISTRICT:		BSC(GSM):			
RF ZONE:		RNC(UMTS):			
PARENT NAME(GSM):		MME POOL ID(LTE):	FF01		
PARENT NAME(UMTS):					

Section 3 - LICENSE COVERAGE/FILING INFORMATION

CGSA - NO FILING TRIGGERED (Yes/No):	No	CGSA LOSS:		PCS REDUCED - UPS ZIP:	
CGSA - MINOR FILING NEEDED (Yes/No)::	No	CGSA EXT AGMT NEEDED:		PCS POPS REDUCED:	
CGSA - MAJOR FILING NEEDED (Yes/No):	Yes	CGSA SCORECARD UPDATED:			

CGSA CALL SIGNS:	

Section 4 - TOWER/REGULATORY INFORMATION

STRUCTURE AT&T OWNED?:	No	GROUND ELEVATION (ft):		STRUCTURE TYPE:	SELF SUPPORT
ADDITIONAL REGULATORY?:	No	HEIGHT OVERALL (ft):	0.00	FCC ASR NUMBER:	
SUB-LEASE RIGHTS?:	No	STRUCTURE HEIGHT (ft):	0.00		
LIGHTING TYPE:					

MARKET LOCATION 700 MHz Band:			
MARKET LOCATION 850 MHz Band:			
MARKET LOCATION 1900 MHz Band:			
MARKET LOCATION AWS Band:			
MARKET LOCATION WCS Band:			
MARKET LOCATION Future Band:			

Section 5 - E-911 INFORMATION - existing

	PSAP NAME:	PSAP ID:	E911 PHASE:	MPC SVC PROVIDER:	LMU REQUIRED:	ESRN:	DATE LIVE PH1:	DATE LIVE PH2:		
SECTOR A E-911						0				
SECTOR B						0				
SECTOR C						0				
SECTOR D										
SECTOR E										
SECTOR F										
OMNI										

Section 5 - E-911 INFORMATION - final

	PSAP NAME:	PSAP ID:	E911 PHASE:	MPC SVC PROVIDER:	LMU REQUIRED:	ESRN:	DATE LIVE PH1:	DATE LIVE PH2:		
SECTOR A E-911						0				
SECTOR B						0				
SECTOR C						0				
SECTOR D										
SECTOR E										
SECTOR F										
OMNI										

Section 6 - RBS GENERAL INFORMATION - existing

	LTE 1ST RBS											
RBS ID:	576040											
CTS COMMON ID:	CTL02117											
CELL ID / BCF:	CTL02117											
BTA/TID:	318L											
4-9 DIGIT SITE ID:	2117											
COW OR TOY?:	No											
CELL SITE TYPE:	SECTORIZED											
SITE TYPE:	MACRO-CONVENTIONAL											
BTS LOCATION ID:												
BASE STATION TYPE:	BASE											
EQUIPMENT NAME:	MERIDEN CARIATI BOULEVARD											
DISASTER PRIORITY:	0											

Section 6 - RBS GENERAL INFORMATION - final

	LTE 1ST RBS											
RBS ID:	576040											
CTS COMMON ID:	CTL02117											
CELL ID / BCF:	CTL02117											
BTA/TID:	318L											
4-9 DIGIT SITE ID:	2117											
COW OR TOY?:	No											
CELL SITE TYPE:	SECTORIZED											
SITE TYPE:	MACRO-CONVENTIONAL											
BTS LOCATION ID:												
BASE STATION TYPE:	BASE											
EQUIPMENT NAME:	MERIDEN CARIATI BOULEVARD											
DISASTER PRIORITY:	0											

Section 7 - RBS SPECIFIC INFORMATION - existing

	LTE 1ST RBS											
RAC:												
EQUIPMENT VENDOR:	ERICSSON											
EQUIPMENT TYPE:	6601 INDOOR MU											
BASEBAND CONFIGURATION:												
LOCATION:												
CABINET LOCATION:												
MARKET STATE CODE:	CT											
AGPS:	Yes											
NODE B NUMBER:	2117											

Section 7 - RBS SPECIFIC INFORMATION - final

	LTE 1ST RBS											
RAC:												
EQUIPMENT VENDOR:	ERICSSON											
EQUIPMENT TYPE:	6601 INDOOR MU											
BASEBAND CONFIGURATION:												
LOCATION:												
CABINET LOCATION:												
MARKET STATE CODE:	CT											
AGPS:	Yes											
NODE B NUMBER:	2117											

Section 8 - RBS/SECTOR ASSOCIATION - existing

	LTE 1ST RBS																						
CTS Common ID	CTL02117																						
Soft Sector IDs	CTL02117_3A_1																						
	CTL02117_3B_1																						
	CTL02117_3C_1																						
	CTL02117_7A_1																						
	CTL02117_7B_1																						
	CTL02117_7C_1																						
	CTL02117_9A_1																						
	CTL02117_9B_1																						
	CTL02117_9C_1																						

Section 8 - RBS/SECTOR ASSOCIATION - final

	LTE 1ST RBS																						
CTS Common ID	CTL02117																						
Soft Sector IDs	CTL02117_3A_1																						
	CTL02117_3B_1																						
	CTL02117_3C_1																						
	CTL02117_7A_1																						
	CTL02117_7B_1																						
	CTL02117_7C_1																						
	CTL02117_9A_1																						
	CTL02117_9A_2																						
	CTL02117_9B_1																						
	CTL02117_9B_2																						
	CTL02117_9C_1																						
	CTL02117_9C_2																						

Section 9 - SOFT SECTOR ID - existing

	LTE 1ST 700	LTE 1ST 1900	LTE 1ST WCS	LTE 2ND 1900																						
USEID (excluding Hard Sector)																										
SECTOR A SOFT SECTOR ID	CTL02117_7A_1	CTL02117_9A_1	CTL02117_3A_1																							
SECTOR B	CTL02117_7B_1	CTL02117_9B_1	CTL02117_3B_1																							
SECTOR C	CTL02117_7C_1	CTL02117_9C_1	CTL02117_3C_1																							
SECTOR D																										
SECTOR E																										
SECTOR F																										
OMNI																										

Section 9 - SOFT SECTOR ID - final

	LTE 1ST 700	LTE 1ST 1900	LTE 1ST WCS	LTE 2ND 1900																						
USEID (excluding Hard Sector)																										
SECTOR A SOFT SECTOR ID	CTL02117_7A_1	CTL02117_9A_1	CTL02117_3A_1	CTL02117_9A_2																						
SECTOR B	CTL02117_7B_1	CTL02117_9B_1	CTL02117_3B_1	CTL02117_9B_2																						
SECTOR C	CTL02117_7C_1	CTL02117_9C_1	CTL02117_3C_1	CTL02117_9C_2																						
SECTOR D																										
SECTOR E																										
SECTOR F																										
OMNI																										

Section 9 - Cell Number - existing

	LTE 1ST 700	LTE 1ST 1900	LTE 1ST WCS	LTE 2ND 1900																						
USEID (excluding Hard Sector)																										
SECTOR A CELL NUMBER	15	8	149																							
SECTOR B	16	9	150																							
SECTOR C	17	10	151																							
SECTOR D																										
SECTOR E																										
SECTOR F																										
OMNI																										

Section 9 - Cell Number - final

	LTE 1ST 700	LTE 1ST 1900	LTE 1ST WCS	LTE 2ND 1900																						
USEID (excluding Hard Sector)																										
SECTOR A CELL NUMBER	15	8	149	178																						
SECTOR B	16	9	150	179																						
SECTOR C	17	10	151	180																						
SECTOR D																										
SECTOR E																										
SECTOR F																										
OMNI																										

Section 10 - CID/SAC - existing

	LTE 1ST 700	LTE 1ST 1900	LTE 1ST WCS	LTE 2ND 1900																							
SECTOR A CID/SAC																											
SECTOR B																											
SECTOR C																											
SECTOR D																											
SECTOR E																											
SECTOR F																											
OMNI																											

Section 10 - CID/SAC - final

	LTE 1ST 700	LTE 1ST 1900	LTE 1ST WCS	LTE 2ND 1900																							
SECTOR A CID/SAC																											
SECTOR B																											
SECTOR C																											
SECTOR D																											
SECTOR E																											
SECTOR F																											
OMNI																											

Section 11 - CURRENT RADIO COUNTS existing

	UMTS 1ST 850	UMTS 2ND 850	LTE 1ST 700	LTE 1ST 1900	LTE 1ST WCS																						
SECTOR A RADIO COUNTS																											
SECTOR B																											
SECTOR C																											
SECTOR D																											
SECTOR E																											
SECTOR F																											
OMNI																											

Section 12 - CURRENT T1 COUNTS existing

	LTE 1ST Cabinet															
# T1s																
LINK PROFILE																
RF COMBINING																
FIBER or ETHERNET?																
Tx Board Model																
Tx Board QTY																
RAX/ECU Board Model																
RAX/ECU Board QTY																
BBU Board Model																
BBU Board QTY																
RRU - location																
FIBER JUMPER																
DC CABLE																
DC/Fiber Dem. Box																
Bundled Fiber Cable																
Bundled DC Cable																

Section 13 - NEW/PROPOSED RADIO COUNTS

	UMTS 1ST 850	UMTS 2ND 850	LTE 1ST 700	LTE 1ST 1900	LTE 1ST WCS																						
SECTOR A RADIO COUNTS			1	2	1																						
SECTOR B			1	2	1																						
SECTOR C			1	2	1																						
SECTOR D																											
SECTOR E																											
SECTOR F																											
OMNI																											

Section 14 - NEW/PROPOSED T1 COUNTS

	LTE 1ST Cabinet															
# T1s	1															
LINK PROFILE																
RF COMBINING																
FIBER or ETHERNET?	ETHERNET															
Tx Board Model																
Tx Board QTY																
RAX/ECU Board Model																
RAX/ECU Board QTY																
BBU Board Model																
BBU Board QTY																
RRU - location	Top															
FIBER JUMPER	FIBER															
DC CABLE	DC															
DC/Fiber Dem. Box	RAYCAP															
Bundled Fiber Cable	YES															
Bundled DC Cable	YES															

Section 16A - PLANNED/PROPOSED TOWER CONFIGURATION - SECTOR A (OR OMNI)

ANTENNA POSITION is LEFT to RIGHT from BACK OF ANTENNA (unless otherwise specified)	ANTENNA POSITION 1		ANTENNA POSITION 2		ANTENNA POSITION 3		ANTENNA POSITION 4		ANTENNA POSITION 5		ANTENNA POSITION 6		ANTENNA POSITION 7	
Existing Antenna?														
ANTENNA MAKE - MODEL	HPA-65R-BUU-H8		OPA-65R-LCUU-H8		HPA-65R-BUU-H8									
ANTENNA VENDOR	CCI Products		CCI Products		CCI Products									
ANTENNA SIZE (H x W x D)	92.4X14.8X7.4		92.7X14.4X7		92.4X14.8X7.4									
ANTENNA WEIGHT	68		88		68									
AZIMUTH	0		0		0									
MAGNETIC DECLINATION														
RADIATION CENTER (feet)	88		88		88									
ANTENNA TIP HEIGHT	92		92		92									
MECHANICAL DOWNTILT	0		0		0									
FEEDER AMOUNT	4		4		4									
VERTICAL SEPARATION from ANTENNA ABOVE (TIP to TIP)														
VERTICAL SEPARATION from ANTENNA BELOW (TIP to TIP)														
HORIZONTAL SEPARATION from CLOSEST ANTENNA to LEFT (CENTERLINE to CENTERLINE)														
HORIZONTAL SEPARATION from CLOSEST ANTENNA to RIGHT (CENTERLINE to CENTERLINE)														
HORIZONTAL SEPARATION from ANOTHER ANTENNA (which antenna # / # of inches)														
Antenna RET Motor (QTY/MODEL)														
SURGE ARRESTOR (QTY/MODEL)			4	Andrew APTDC-BDFDM-DBW	6	Andrew APTDC-BDFDM-DBW								
DIPLEXER (QTY/MODEL)			2	Kaelus DBC2055F1V1-2	2	Kaelus DBC2055F1V1-2								
DUPLEXER (QTY/MODEL)														
Antenna RET CONTROL UNIT (QTY/MODEL)			1	CCU - Kathrein 860 10006										
DC BLOCK (QTY/MODEL)														
TMA/LNA (QTY/MODEL)	2	CCI - TMABPDB7823VG12A (Twin-LBP)	2	CCI - TMABPDB7823VG12A (Twin-LBP)	2	CCI - TMABPDB7823VG12A (Twin-LBP)								
CURRENT INJECTORS FOR TMA (QTY/MODEL)														
PDU FOR TMAS (QTY/MODEL)														
FILTER (QTY/MODEL)														
SQUID (QTY/MODEL)														
FIBER TRUNK (QTY/MODEL)														
DC TRUNK (QTY/MODEL)														
RRH - 700 band (QTY/MODEL)					1	RRUS-11								
RRH - 850 band (QTY/MODEL)														
RRH - 1900 band (QTY/MODEL)					2	RRUS-12								
RRH - AWS band (QTY/MODEL)														
RRH - WCS band (QTY/MODEL)			1	RRUS-32										
Additional RRH #1 - any band (QTY/MODEL)														
Additional RRH #2 - any band (QTY/MODEL)														
Additional Component 1 (QTY/MODEL)														
Additional Component 2 (QTY/MODEL)														
Additional Component 3 (QTY/MODEL)														
Local Market Note 1	12 feeders 1 5/8" per sector													
Local Market Note 2														
Local Market Note 3														

PORT SPECIFIC FIELDS	PORT NUMBER	USEID (CSSng)	USEID (Atoll)	ATOLL TXID	ATOLL CELL ID	TX/RX ?	TECHNOLOGY/FREQUENCY	ANTENNA ATOLL	ANTENNA GAIN	ELECTRICAL AZIMUTH	ELECTRICAL TILT	RRH LOCATION (Top/Bottom/Integrated/None)	FEEDERS TYPE	FEEDER LENGTH (feet)	RXAIT KIT MODULE?	TRIPLEXER or LLC (QTY)	TRIPLEXER or LLC (MODEL)	SCPA/MCPA MODULE?	HATCHPLATE POWER (Watts)	ERP (Watts)	Antenna RET Name	CABLE NUMBER	CABLE ID (CSSNG)
ANTENNA POSITION 1	PORT 1					TxRx/TxRx	LTE future band	HPA-65R-LCUU-H8	15.4	0	2	BOTTOM	1-5/8" COAX	120	0			NO					
ANTENNA POSITION 2	PORT 5	97774.A.WCS.4G.1		CTL02117_3A_1	CTL02117_3A_1	TxRx/TxRx	LTE WCS	OPA-65R-LCUU-H8_2350MHz_03DT	17.2	0	3	BOTTOM	1-5/8" COAX	120	0			NO					
ANTENNA POSITION 3	PORT 1	97774.A.700.4G.1		CTL02117_7A_1	CTL02117_7A_1	TxRx/TxRx	LTE 700	HPA-65R-BUU-H8_719MHz_02DT	15.3	0	2	BOTTOM	1-5/8" COAX	120	0			NO					

	PORT 3	97774.A.1900.4G.1,97774.A.1900.4G.2		CTL02117_9A_1,CTL02117_9A_2	CTL02117_9A_1,CTL02117_9A_2	TxRx/TxRx	LTE 1900	HPA-65R-BUU-H8_1930MHz_02DT	17.4	0	2	BOTTOM	1-5/8" COAX	120	0			NO					

Section 16B - PLANNED/PROPOSED TOWER CONFIGURATION - SECTOR B

ANTENNA POSITION is LEFT to RIGHT from BACK OF ANTENNA (unless otherwise specified)	ANTENNA POSITION 1		ANTENNA POSITION 2		ANTENNA POSITION 3		ANTENNA POSITION 4		ANTENNA POSITION 5		ANTENNA POSITION 6		ANTENNA POSITION 7	
Existing Antenna?														
ANTENNA MAKE - MODEL	HPA-65R-BUU-H8		OPA-65R-LCUU-H8		HPA-65R-BUU-H8									
ANTENNA VENDOR	CCI Products		CCI Products		CCI Products									
ANTENNA SIZE (H x W x D)	92.4X14.8X7.4		92.7X14.4X7		92.4X14.8X7.4									
ANTENNA WEIGHT	68		88		68									
AZIMUTH	120		120		120									
MAGNETIC DECLINATION														
RADIATION CENTER (feet)	88		88		88									
ANTENNA TIP HEIGHT	92		92		92									
MECHANICAL DOWNTILT	0		0		0									
FEEDER AMOUNT	4		4		4									
VERTICAL SEPARATION from ANTENNA ABOVE (TIP to TIP)														
VERTICAL SEPARATION from ANTENNA BELOW (TIP to TIP)														
HORIZONTAL SEPARATION from CLOSEST ANTENNA to LEFT (CENTERLINE to CENTERLINE)														
HORIZONTAL SEPARATION from CLOSEST ANTENNA to RIGHT (CENTERLINE to CENTERLINE)														
HORIZONTAL SEPARATION from ANOTHER ANTENNA (which antenna # / # of inches)														
Antenna RET Motor (QTY/MODEL)														
SURGE ARRESTOR (QTY/MODEL)			4	Andrew APTDC-BDFDM-DBW	6	Andrew APTDC-BDFDM-DBW								
DIPLEXER (QTY/MODEL)			2	Kaelus DBC2055F1V1-2	2	Kaelus DBC2055F1V1-2								
DUPLEXER (QTY/MODEL)														
Antenna RET CONTROL UNIT (QTY/MODEL)														
DC BLOCK (QTY/MODEL)														
TMA/LNA (QTY/MODEL)	2	CCI - TMABPDB7823VG12A (Twin-LBP)	2	CCI - TMABPDB7823VG12A (Twin-LBP)	2	CCI - TMABPDB7823VG12A (Twin-LBP)								
CURRENT INJECTORS FOR TMA (QTY/MODEL)														
PDU FOR TMAS (QTY/MODEL)														
FILTER (QTY/MODEL)														
SQUID (QTY/MODEL)														
FIBER TRUNK (QTY/MODEL)														
DC TRUNK (QTY/MODEL)														
RRH - 700 band (QTY/MODEL)					1	RRUS-11								
RRH - 850 band (QTY/MODEL)														
RRH - 1900 band (QTY/MODEL)					2	RRUS-12								
RRH - AWS band (QTY/MODEL)														
RRH - WCS band (QTY/MODEL)			1	RRUS-32										
Additional RRH #1 - any band (QTY/MODEL)														
Additional RRH #2 - any band (QTY/MODEL)														
Additional Component 1 (QTY/MODEL)														
Additional Component 2 (QTY/MODEL)														
Additional Component 3 (QTY/MODEL)														
Local Market Note 1	12 feeders 1 5/8" per sector													
Local Market Note 2														
Local Market Note 3														

PORT SPECIFIC FIELDS	PORT NUMBER	USEID (CSSng)	USEID (Atoll)	ATOLL TXID	ATOLL CELL ID	TX/RX ?	TECHNOLOGY/FREQUENCY	ANTENNA ATOLL	ANTENNA GAIN	ELECTRICAL AZIMUTH	ELECTRICAL TILT	RRH LOCATION (Top/Bottom/Integrated/None)	FEEDERS TYPE	FEEDER LENGTH (feet)	RXAIT KIT MODULE?	TRIPLEXER or LLC (QTY)	TRIPLEXER or LLC (MODEL)	SCPA/MCPA MODULE?	HATCHPLATE POWER (Watts)	ERP (Watts)	Antenna RET Name	CABLE NUMBER	CABLE ID (CSSNG)
ANTENNA POSITION 1	PORT 1					TxRx/TxRx	LTE future band	HPA-65R-LCUU-H8	15.4	120	2	BOTTOM	1-5/8" COAX	120	0			NO					
ANTENNA POSITION 2	PORT 5	97774.B.WCS.4G.1		CTL02117_3B_1	CTL02117_3B_1	TxRx/TxRx	LTE WCS	OPA-65R-LCUU-H8_2350MHz_03DT	17.2	120	3	BOTTOM	1-5/8" COAX	120	0			NO					
ANTENNA POSITION 3	PORT 1	97774.B.700.4G.1		CTL02117_7B_1	CTL02117_7B_1	TxRx/TxRx	LTE 700	HPA-65R-BUU-H8_719MHz_02DT	15.3	120	2	BOTTOM	1-5/8" COAX	120	0			NO					

	PORT 3	97774.B.1900.4G.1,97774.B.1900.4G.2		CTL02117_9B_1,CTL02117_9B_2	CTL02117_9B_1,CTL02117_9B_2	TxRx/TxRx	LTE 1900	HPA-65R-BUU-H8_1930MHz_02DT	17.4	120	2	BOTTOM	1-5/8" COAX	120	0			NO					

Section 16C - PLANNED/PROPOSED TOWER CONFIGURATION - SECTOR C

ANTENNA POSITION is LEFT to RIGHT from BACK OF ANTENNA (unless otherwise specified)	ANTENNA POSITION 1		ANTENNA POSITION 2		ANTENNA POSITION 3		ANTENNA POSITION 4		ANTENNA POSITION 5		ANTENNA POSITION 6		ANTENNA POSITION 7	
Existing Antenna?														
ANTENNA MAKE - MODEL	HPA-65R-BUU-H8		OPA-65R-LCUU-H8		HPA-65R-BUU-H8									
ANTENNA VENDOR	CCI Products		CCI Products		CCI Products									
ANTENNA SIZE (H x W x D)	92.4X14.8X7.4		92.7X14.4X7		92.4X14.8X7.4									
ANTENNA WEIGHT	68		88		68									
AZIMUTH	240		240		240									
MAGNETIC DECLINATION														
RADIATION CENTER (feet)	88		88		88									
ANTENNA TIP HEIGHT	92		92		92									
MECHANICAL DOWNTILT	0		0		0									
FEEDER AMOUNT	4		4		4									
VERTICAL SEPARATION from ANTENNA ABOVE (TIP to TIP)														
VERTICAL SEPARATION from ANTENNA BELOW (TIP to TIP)														
HORIZONTAL SEPARATION from CLOSEST ANTENNA to LEFT (CENTERLINE to CENTERLINE)														
HORIZONTAL SEPARATION from CLOSEST ANTENNA to RIGHT (CENTERLINE to CENTERLINE)														
HORIZONTAL SEPARATION from ANOTHER ANTENNA (which antenna # / # of inches)														
Antenna RET Motor (QTY/MODEL)														
SURGE ARRESTOR (QTY/MODEL)			4	Andrew APTDC-BDFDM-DBW	6	Andrew APTDC-BDFDM-DBW								
DIPLEXER (QTY/MODEL)			2	Kaelus DBC2055F1V1-2	2	Kaelus DBC2055F1V1-2								
DUPLEXER (QTY/MODEL)														
Antenna RET CONTROL UNIT (QTY/MODEL)														
DC BLOCK (QTY/MODEL)														
TMA/LNA (QTY/MODEL)	2	CCI - TMABPDB7823VG12A (Twin-LBP)	2	CCI - TMABPDB7823VG12A (Twin-LBP)	2	CCI - TMABPDB7823VG12A (Twin-LBP)								
CURRENT INJECTORS FOR TMA (QTY/MODEL)														
PDU FOR TMAS (QTY/MODEL)														
FILTER (QTY/MODEL)														
SQUID (QTY/MODEL)														
FIBER TRUNK (QTY/MODEL)														
DC TRUNK (QTY/MODEL)														
RRH - 700 band (QTY/MODEL)					1	RRUS-11								
RRH - 850 band (QTY/MODEL)														
RRH - 1900 band (QTY/MODEL)					2	RRUS-12								
RRH - AWS band (QTY/MODEL)														
RRH - WCS band (QTY/MODEL)			1	RRUS-32										
Additional RRH #1 - any band (QTY/MODEL)														
Additional RRH #2 - any band (QTY/MODEL)														
Additional Component 1 (QTY/MODEL)														
Additional Component 2 (QTY/MODEL)														
Additional Component 3 (QTY/MODEL)														
Local Market Note 1	12 feeders 1 5/8" per sector													
Local Market Note 2														
Local Market Note 3														

PORT SPECIFIC FIELDS	PORT NUMBER	USEID (CSSng)	USEID (Atoll)	ATOLL TXID	ATOLL CELL ID	TX/RX ?	TECHNOLOGY/FREQUENCY	ANTENNA ATOLL	ANTENNA GAIN	ELECTRICAL AZIMUTH	ELECTRICAL TILT	RRH LOCATION (Top/Bottom/Integrated/None)	FEEDERS TYPE	FEEDER LENGTH (feet)	RXAIT KIT MODULE?	TRIPLEXER or LLC (QTY)	TRIPLEXER or LLC (MODEL)	SCPA/MCPA MODULE?	HATCHPLATE POWER (Watts)	ERP (Watts)	Antenna RET Name	CABLE NUMBER	CABLE ID (CSSNG)
ANTENNA POSITION 1	PORT 1					TxRx/TxRx	LTE future band	HPA-65R-LCUU-H8	15.4	240	2	BOTTOM	1-5/8" COAX	120	0			NO					
ANTENNA POSITION 2	PORT 5	97774.C.WCS.4G.1		CTL02117_3C_1	CTL02117_3C_1	TxRx/TxRx	LTE WCS	OPA-65R-LCUU-H8_2350MHz_03DT	17.2	240	3	BOTTOM	1-5/8" COAX	120	0			NO					
ANTENNA POSITION 3	PORT 1	97774.C.700.4G.1		CTL02117_7C_1	CTL02117_7C_1	TxRx/TxRx	LTE 700	HPA-65R-BUU-H8_719MHz_02DT	15.3	240	2	BOTTOM	1-5/8" COAX	120	0			NO					

	PORT 3	97774.C.1900.4G.1,97774.C.1900.4G.2		CTL02117_9C_1,CTL02117_9C_2	CTL02117_9C_1,CTL02117_9C_2	TxRx/TxRx	LTE 1900	HPA-65R-BUU-H8_1930MHz_02DT	17.4	240	2	BOTTOM	1-5/8" COAX	120	0			NO					

Section 17A - FINAL TOWER CONFIGURATION - SECTOR A (OR OMNI)

ANTENNA POSITION is LEFT to RIGHT from BACK OF ANTENNA (unless otherwise specified)	ANTENNA POSITION 1		ANTENNA POSITION 2		ANTENNA POSITION 3		ANTENNA POSITION 4		ANTENNA POSITION 5		ANTENNA POSITION 6		ANTENNA POSITION 7	
ANTENNA MAKE - MODEL	HPA-65R-BUU-H8		OPA-65R-LCUU-H8		HPA-65R-BUU-H8									
ANTENNA VENDOR	CCI Products		CCI Products		CCI Products									
ANTENNA SIZE (H x W x D)	92.4X14.8X7.4		92.7X14.4X7		92.4X14.8X7.4									
ANTENNA WEIGHT	68		88		68									
AZIMUTH	0		0		0									
MAGNETIC DECLINATION														
RADIATION CENTER (feet)	88		88		88									
ANTENNA TIP HEIGHT	92		92		92									
MECHANICAL DOWNTILT	0		0		0									
FEEDER AMOUNT	4		4		4									
VERTICAL SEPARATION from ANTENNA ABOVE (TIP to TIP)														
VERTICAL SEPARATION from ANTENNA BELOW (TIP to TIP)														
HORIZONTAL SEPARATION from CLOSEST ANTENNA to LEFT (CENTERLINE to CENTERLINE)														
HORIZONTAL SEPARATION from CLOSEST ANTENNA to RIGHT (CENTERLINE to CENTERLINE)														
HORIZONTAL SEPARATION from ANOTHER ANTENNA (which antenna # / # of inches)														
Antenna RET Motor (QTY/MODEL)														
SURGE ARRESTOR (QTY/MODEL)			4	Andrew APTDC-BDFDM-DBW	6	Andrew APTDC-BDFDM-DBW								
DIPLEXER (QTY/MODEL)			2	Kaelus DBC2055F1V1-2	2	Kaelus DBC2055F1V1-2								
DUPLEXER (QTY/MODEL)														
Antenna RET CONTROL UNIT (QTY/MODEL)			1	CCU - Kathrein 860 10006										
DC BLOCK (QTY/MODEL)														
TMA/LNA (QTY/MODEL)	2	CCI - TMABPDB7823VG12A (Twin-LBP)	2	CCI - TMABPDB7823VG12A (Twin-LBP)	2	CCI - TMABPDB7823VG12A (Twin-LBP)								
CURRENT INJECTORS FOR TMA (QTY/MODEL)														
PDU FOR TMAS (QTY/MODEL)														
FILTER (QTY/MODEL)														
SQUID (QTY/MODEL)														
FIBER TRUNK (QTY/MODEL)														
DC TRUNK (QTY/MODEL)														
RRH - 700 band (QTY/MODEL)					1	RRUS-11								
RRH - 850 band (QTY/MODEL)														
RRH - 1900 band (QTY/MODEL)					2	RRUS-12								
RRH - AWS band (QTY/MODEL)														
RRH - WCS band (QTY/MODEL)			1	RRUS-32										
Additional RRH #1 - any band (QTY/MODEL)														
Additional RRH #2 - any band (QTY/MODEL)														
Additional Component 1 (QTY/MODEL)														
Additional Component 2 (QTY/MODEL)														
Additional Component 3 (QTY/MODEL)														
Local Market Note 1	12 feeders 1 5/8" per sector													
Local Market Note 2														
Local Market Note 3														

PORT SPECIFIC FIELDS	PORT NUMBER	USEID (CSSng)	USEID (Atoll)	ATOLL TXID	ATOLL CELL ID	TX/RX ?	TECHNOLOGY/FREQUENCY	ANTENNA ATOLL	ANTENNA GAIN	ELECTRICAL AZIMUTH	ELECTRICAL TILT	RRH LOCATION (Top/Bottom/Integrated/None)	FEEDERS TYPE	FEEDER LENGTH (feet)	RXAIT KIT MODULE?	TRIPLEXER or LLC (QTY)	TRIPLEXER or LLC (MODEL)	SCPA/MCPA MODULE?	HATCHPLATE POWER (Watts)	ERP (Watts)	Antenna RET Name	CABLE NUMBER	CABLE ID (CSSNG)
ANTENNA POSITION 1	PORT 1					TxRx/TxRx	LTE future band	HPA-65R-LCUU-H8	15.4	0	2	BOTTOM	1-5/8" COAX	120	0			NO					
ANTENNA POSITION 2	PORT 5	97774.A.WCS.4G.1		CTL02117_3A_1	CTL02117_3A_1	TxRx/TxRx	LTE WCS	OPA-65R-LCUU-H8_2350MHz_03DT	17.2	0	3	BOTTOM	1-5/8" COAX	120	0			NO					
ANTENNA POSITION 3	PORT 1	97774.A.700.4G.1		CTL02117_7A_1	CTL02117_7A_1	TxRx/TxRx	LTE 700	HPA-65R-BUU-H8_719MHz_02DT	15.3	0	2	BOTTOM	1-5/8" COAX	120	0			NO					
	PORT 3	97774.A.1900.4G.1,97774.A.1900.4G.2		CTL02117_9A_1,CTL02117_9A_2	CTL02117_9A_1,CTL02117_9A_2	TxRx/TxRx	LTE 1900	HPA-65R-BUU-H8_1930MHz_02DT	17.4	0	2	BOTTOM	1-5/8" COAX	120	0			NO					

Section 17B - FINAL TOWER CONFIGURATION - SECTOR B

ANTENNA POSITION is LEFT to RIGHT from BACK OF ANTENNA (unless otherwise specified)	ANTENNA POSITION 1		ANTENNA POSITION 2		ANTENNA POSITION 3		ANTENNA POSITION 4		ANTENNA POSITION 5		ANTENNA POSITION 6		ANTENNA POSITION 7	
ANTENNA MAKE - MODEL	HPA-65R-BUU-H8		OPA-65R-LCUU-H8		HPA-65R-BUU-H8									
ANTENNA VENDOR	CCI Products		CCI Products		CCI Products									
ANTENNA SIZE (H x W x D)	92.4X14.8X7.4		92.7X14.4X7		92.4X14.8X7.4									
ANTENNA WEIGHT	68		88		68									
AZIMUTH	120		120		120									
MAGNETIC DECLINATION														
RADIATION CENTER (feet)	88		88		88									
ANTENNA TIP HEIGHT	92		92		92									
MECHANICAL DOWNTILT	0		0		0									
FEEDER AMOUNT	4		4		4									
VERTICAL SEPARATION from ANTENNA ABOVE (TIP to TIP)														
VERTICAL SEPARATION from ANTENNA BELOW (TIP to TIP)														
HORIZONTAL SEPARATION from CLOSEST ANTENNA to LEFT (CENTERLINE to CENTERLINE)														
HORIZONTAL SEPARATION from CLOSEST ANTENNA to RIGHT (CENTERLINE to CENTERLINE)														
HORIZONTAL SEPARATION from ANOTHER ANTENNA (which antenna # / # of inches)														
Antenna RET Motor (QTY/MODEL)														
SURGE ARRESTOR (QTY/MODEL)			4	Andrew APTDC-BDFDM-DBW	6	Andrew APTDC-BDFDM-DBW								
DIPLEXER (QTY/MODEL)			2	Kaelus DBC2055F1V1-2	2	Kaelus DBC2055F1V1-2								
DUPLEXER (QTY/MODEL)														
Antenna RET CONTROL UNIT (QTY/MODEL)														
DC BLOCK (QTY/MODEL)														
TMA/LNA (QTY/MODEL)	2	CCI - TMABPDB7823VG12A (Twin-LBP)	2	CCI - TMABPDB7823VG12A (Twin-LBP)	2	CCI - TMABPDB7823VG12A (Twin-LBP)								
CURRENT INJECTORS FOR TMA (QTY/MODEL)														
PDU FOR TMAS (QTY/MODEL)														
FILTER (QTY/MODEL)														
SQUID (QTY/MODEL)														
FIBER TRUNK (QTY/MODEL)														
DC TRUNK (QTY/MODEL)														
RRH - 700 band (QTY/MODEL)					1	RRUS-11								
RRH - 850 band (QTY/MODEL)														
RRH - 1900 band (QTY/MODEL)					2	RRUS-12								
RRH - AWS band (QTY/MODEL)														
RRH - WCS band (QTY/MODEL)			1	RRUS-32										
Additional RRH #1 - any band (QTY/MODEL)														
Additional RRH #2 - any band (QTY/MODEL)														
Additional Component 1 (QTY/MODEL)														
Additional Component 2 (QTY/MODEL)														
Additional Component 3 (QTY/MODEL)														
Local Market Note 1	12 feeders 1 5/8" per sector													
Local Market Note 2														
Local Market Note 3														

PORT SPECIFIC FIELDS	PORT NUMBER	USEID (CSSng)	USEID (Atoll)	ATOLL TXID	ATOLL CELL ID	TX/RX ?	TECHNOLOGY/FREQUENCY	ANTENNA ATOLL	ANTENNA GAIN	ELECTRICAL AZIMUTH	ELECTRICAL TILT	RRH LOCATION (Top/Bottom/Integrated/None)	FEEDERS TYPE	FEEDER LENGTH (feet)	RXAIT KIT MODULE?	TRIPLEXER or LLC (QTY)	TRIPLEXER or LLC (MODEL)	SCPA/MCPA MODULE?	HATCHPLATE POWER (Watts)	ERP (Watts)	Antenna RET Name	CABLE NUMBER	CABLE ID (CSSNG)
ANTENNA POSITION 1	PORT 1					TxRx/TxRx	LTE future band	HPA-65R-LCUU-H8	15.4	120	2	BOTTOM	1-5/8" COAX	120	0			NO					
ANTENNA POSITION 2	PORT 5	97774.B.WCS.4G.1		CTL02117_3B_1	CTL02117_3B_1	TxRx/TxRx	LTE WCS	OPA-65R-LCUU-H8_2350MHz_03DT	17.2	120	3	BOTTOM	1-5/8" COAX	120	0			NO					
ANTENNA POSITION 3	PORT 1	97774.B.700.4G.1		CTL02117_7B_1	CTL02117_7B_1	TxRx/TxRx	LTE 700	HPA-65R-BUU-H8_719MHz_02DT	15.3	120	2	BOTTOM	1-5/8" COAX	120	0			NO					
	PORT 3	97774.B.1900.4G.1,97774.B.1900.4G.2		CTL02117_9B_1,CTL02117_9B_2	CTL02117_9B_1,CTL02117_9B_2	TxRx/TxRx	LTE 1900	HPA-65R-BUU-H8_1930MHz_02DT	17.4	120	2	BOTTOM	1-5/8" COAX	120	0			NO					

Section 17C - FINAL TOWER CONFIGURATION - SECTOR C

ANTENNA POSITION is LEFT to RIGHT from BACK OF ANTENNA (unless otherwise specified)	ANTENNA POSITION 1		ANTENNA POSITION 2		ANTENNA POSITION 3		ANTENNA POSITION 4		ANTENNA POSITION 5		ANTENNA POSITION 6		ANTENNA POSITION 7	
ANTENNA MAKE - MODEL	HPA-65R-BUU-H8		OPA-65R-LCUU-H8		HPA-65R-BUU-H8									
ANTENNA VENDOR	CCI Products		CCI Products		CCI Products									
ANTENNA SIZE (H x W x D)	92.4X14.8X7.4		92.7X14.4X7		92.4X14.8X7.4									
ANTENNA WEIGHT	68		88		68									
AZIMUTH	240		240		240									
MAGNETIC DECLINATION														
RADIATION CENTER (feet)	88		88		88									
ANTENNA TIP HEIGHT	92		92		92									
MECHANICAL DOWNTILT	0		0		0									
FEEDER AMOUNT	4		4		4									
VERTICAL SEPARATION from ANTENNA ABOVE (TIP to TIP)														
VERTICAL SEPARATION from ANTENNA BELOW (TIP to TIP)														
HORIZONTAL SEPARATION from CLOSEST ANTENNA to LEFT (CENTERLINE to CENTERLINE)														
HORIZONTAL SEPARATION from CLOSEST ANTENNA to RIGHT (CENTERLINE to CENTERLINE)														
HORIZONTAL SEPARATION from ANOTHER ANTENNA (which antenna # / # of inches)														
Antenna RET Motor (QTY/MODEL)														
SURGE ARRESTOR (QTY/MODEL)			4	Andrew APTDC-BDFDM-DBW	6	Andrew APTDC-BDFDM-DBW								
DIPLEXER (QTY/MODEL)			2	Kaelus DBC2055F1V1-2	2	Kaelus DBC2055F1V1-2								
DUPLEXER (QTY/MODEL)														
Antenna RET CONTROL UNIT (QTY/MODEL)														
DC BLOCK (QTY/MODEL)														
TMA/LNA (QTY/MODEL)	2	CCI - TMABPDB7823VG12A (Twin-LBP)	2	CCI - TMABPDB7823VG12A (Twin-LBP)	2	CCI - TMABPDB7823VG12A (Twin-LBP)								
CURRENT INJECTORS FOR TMA (QTY/MODEL)														
PDU FOR TMAS (QTY/MODEL)														
FILTER (QTY/MODEL)														
SQUID (QTY/MODEL)														
FIBER TRUNK (QTY/MODEL)														
DC TRUNK (QTY/MODEL)														
RRH - 700 band (QTY/MODEL)					1	RRUS-11								
RRH - 850 band (QTY/MODEL)														
RRH - 1900 band (QTY/MODEL)					2	RRUS-12								
RRH - AWS band (QTY/MODEL)														
RRH - WCS band (QTY/MODEL)			1	RRUS-32										
Additional RRH #1 - any band (QTY/MODEL)														
Additional RRH #2 - any band (QTY/MODEL)														
Additional Component 1 (QTY/MODEL)														
Additional Component 2 (QTY/MODEL)														
Additional Component 3 (QTY/MODEL)														
Local Market Note 1	12 feeders 1 5/8" per sector													
Local Market Note 2														
Local Market Note 3														

PORT SPECIFIC FIELDS	PORT NUMBER	USEID (CSSng)	USEID (Atoll)	ATOLL TXID	ATOLL CELL ID	TX/RX ?	TECHNOLOGY/FREQUENCY	ANTENNA ATOLL	ANTENNA GAIN	ELECTRICAL AZIMUTH	ELECTRICAL TILT	RRH LOCATION (Top/Bottom/Integrated/None)	FEEDERS TYPE	FEEDER LENGTH (feet)	RXAIT KIT MODULE?	TRIPLEXER or LLC (QTY)	TRIPLEXER or LLC (MODEL)	SCPA/MCPA MODULE?	HATCHPLATE POWER (Watts)	ERP (Watts)	Antenna RET Name	CABLE NUMBER	CABLE ID (CSSNG)
ANTENNA POSITION 1	PORT 1					TxRx/TxRx	LTE future band	HPA-65R-LCUU-H8	15.4	240	2	BOTTOM	1-5/8" COAX	120	0			NO					
ANTENNA POSITION 2	PORT 5	97774.C.WCS.4G.1		CTL02117_3C_1	CTL02117_3C_1	TxRx/TxRx	LTE WCS	OPA-65R-LCUU-H8_2350MHz_03DT	17.2	240	3	BOTTOM	1-5/8" COAX	120	0			NO					
ANTENNA POSITION 3	PORT 1	97774.C.700.4G.1		CTL02117_7C_1	CTL02117_7C_1	TxRx/TxRx	LTE 700	HPA-65R-BUU-H8_719MHz_02DT	15.3	240	2	BOTTOM	1-5/8" COAX	120	0			NO					
	PORT 3	97774.C.1900.4G.1,97774.C.1900.4G.2		CTL02117_9C_1,CTL02117_9C_2	CTL02117_9C_1,CTL02117_9C_2	TxRx/TxRx	LTE 1900	HPA-65R-BUU-H8_1930MHz_02DT	17.4	240	2	BOTTOM	1-5/8" COAX	120	0			NO					

Diagram - Sector	A	Diagram File Name - S2117.vsd					
Atoll Site Name -	CT2117	Location Name -	CHESHIRE CHESHIRE STREET	Market -	CONNECTICUT	Market Cluster -	NEW ENGLAND
Comments:							

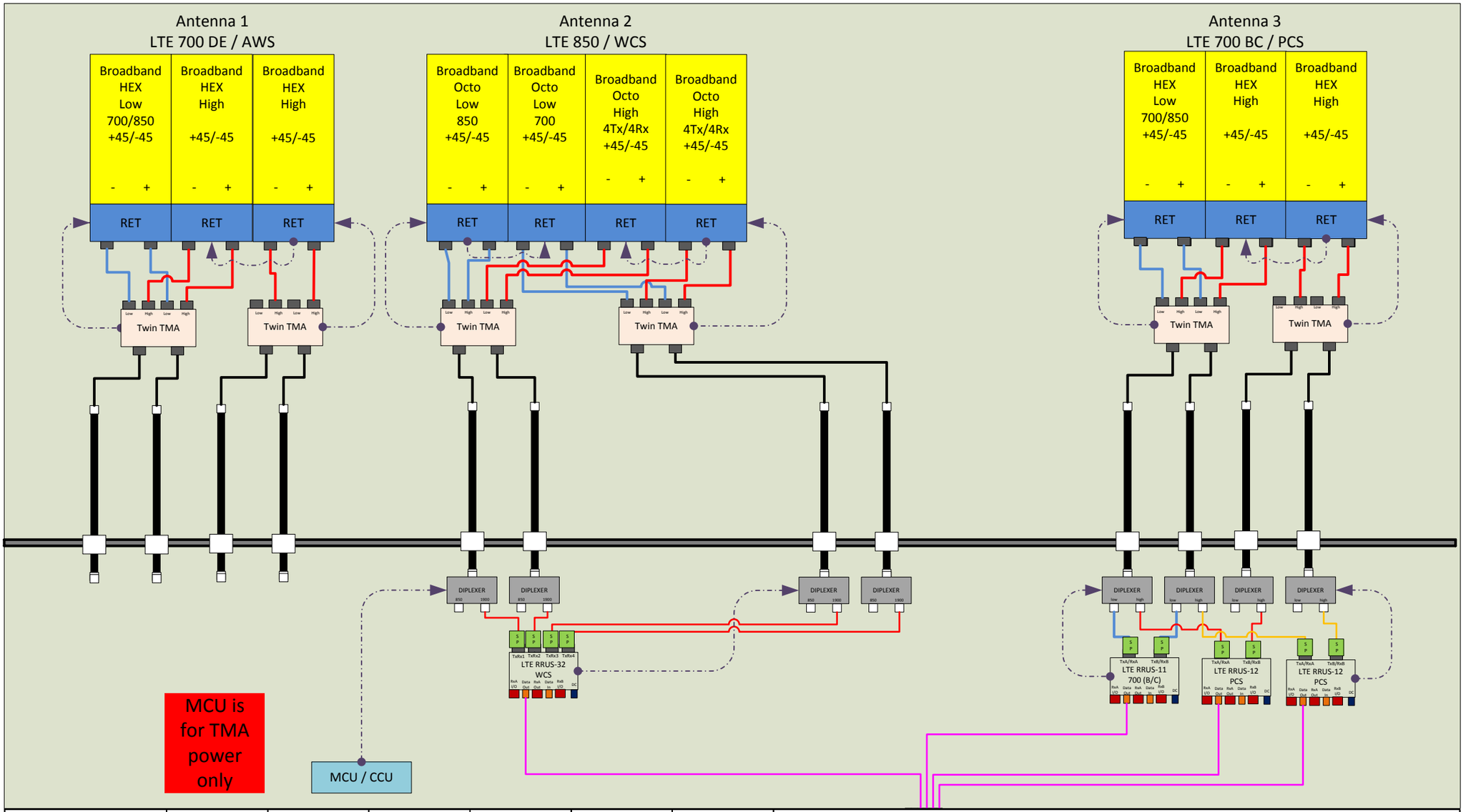

5216	A	B	C	D	E	F
	700 - A	700 - B	700 - C	XMU1-2	XMU1-1	XMU1-3

XMU 1	16	15	14	13	12	11	10	9	8	7	6	5	4	3	2	1
	PCS 1 - A	PCS 2 - A	PCS 1 - B	PCS 2 - B	PCS 1 - C	PCS 2 - C	WCS - A	WCS - B		WCS - C						

Diagram - Sector	B	Diagram File Name - S2117.vsd					
Atoll Site Name -	CT2117	Location Name -	CHESHIRE CHESHIRE STREET	Market -	CONNECTICUT	Market Cluster -	NEW ENGLAND
Comments:							

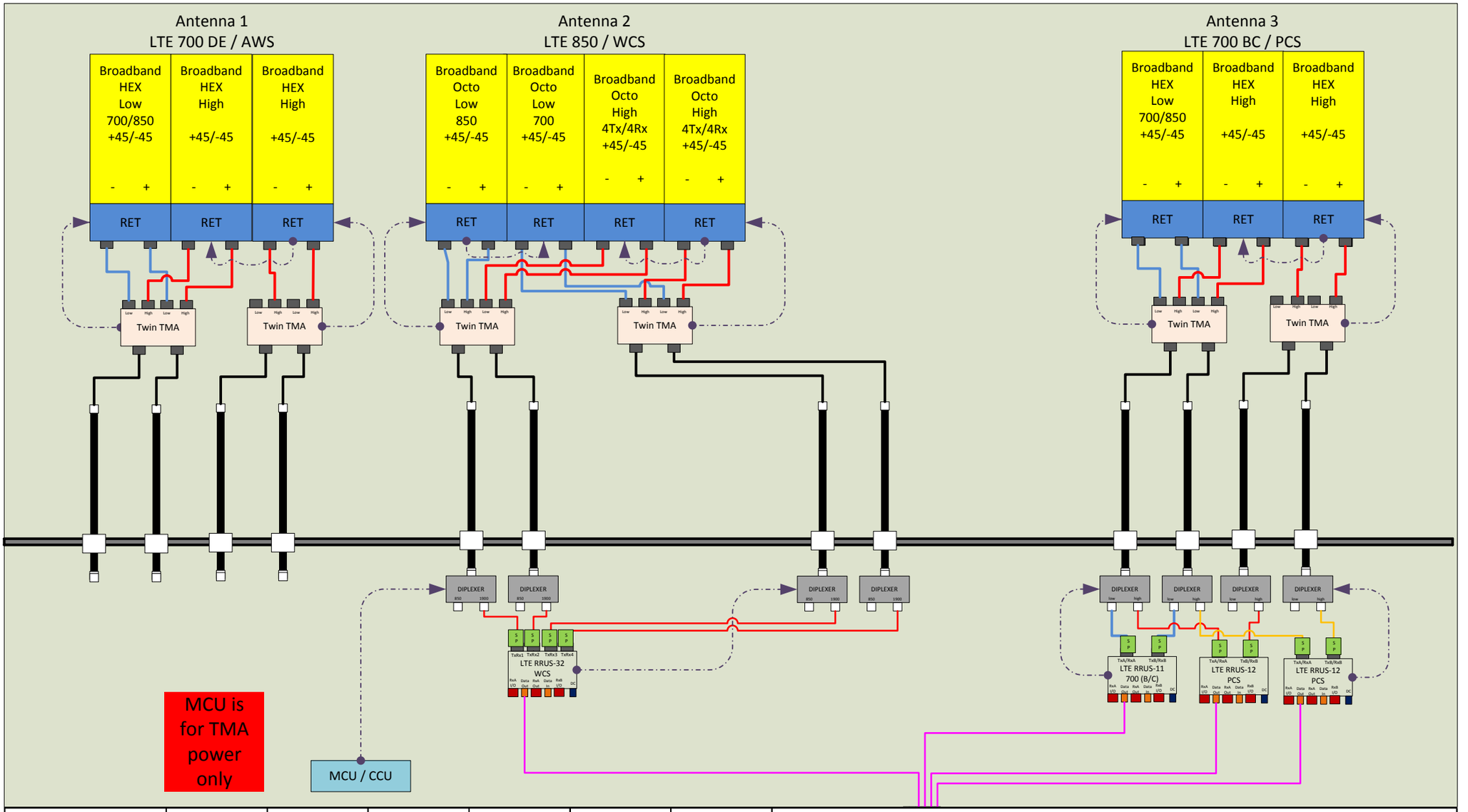

5216	A	B	C	D	E	F
	700 - A	700 - B	700 - C	XMU1-2	XMU1-1	XMU1-3

XMU 1	16	15	14	13	12	11	10	9	8	7	6	5	4	3	2	1
	PCS 1 - A	PCS 2 - A	PCS 1 - B	PCS 2 - B	PCS 1 - C	PCS 2 - C	WCS - A	WCS - B		WCS - C						

Diagram - Sector	C	Diagram File Name - S2117.vsd					
Atoll Site Name -	CT2117	Location Name -	CHESHIRE CHESHIRE STREET	Market -	CONNECTICUT	Market Cluster -	NEW ENGLAND
Comments:							

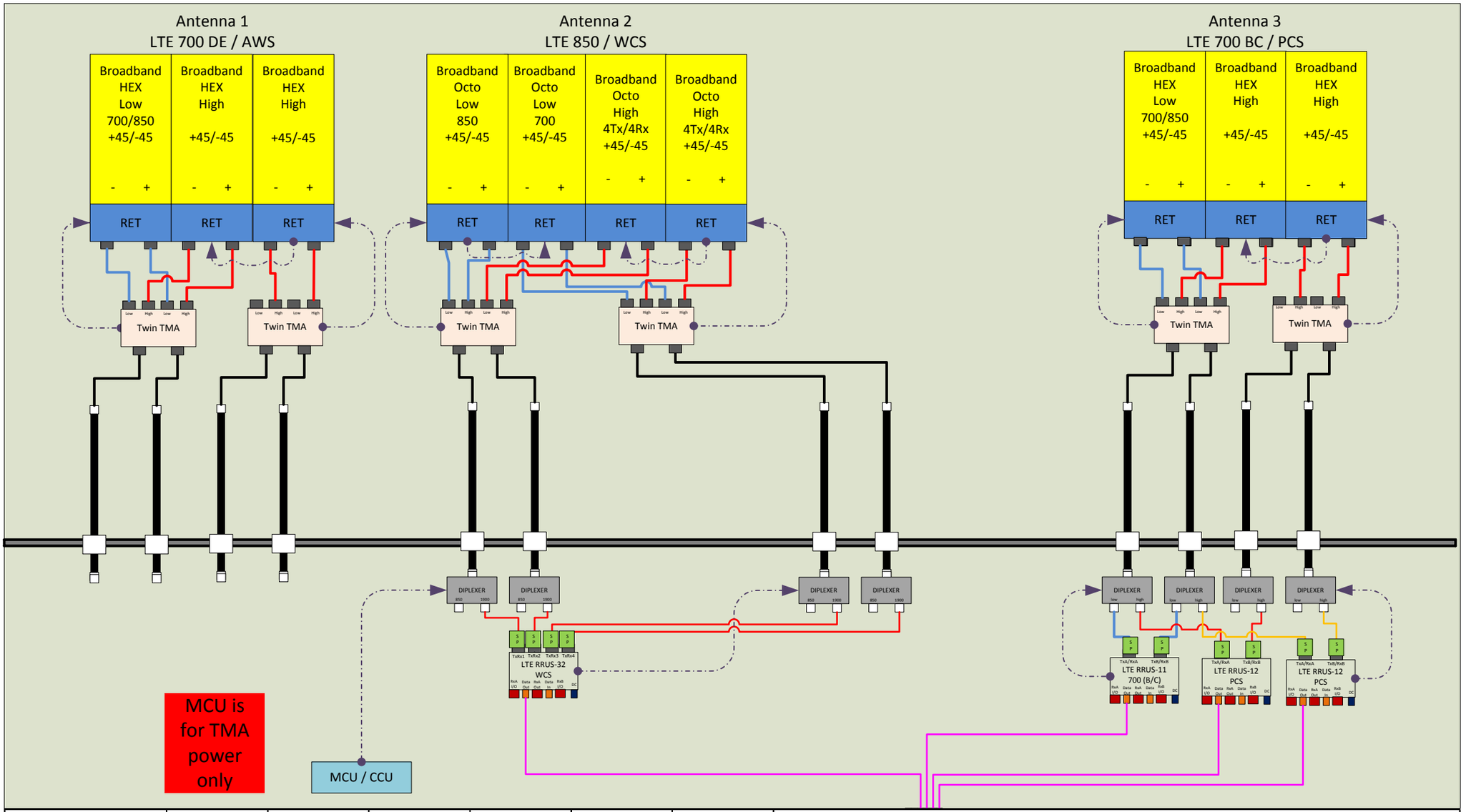

5216	A	B	C	D	E	F
	700 - A	700 - B	700 - C	XMU1-2	XMU1-1	XMU1-3

XMU 1	16	15	14	13	12	11	10	9	8	7	6	5	4	3	2	1
	PCS 1 - A	PCS 2 - A	PCS 1 - B	PCS 2 - B	PCS 1 - C	PCS 2 - C	WCS - A	WCS - B		WCS - C						

WORKFLOW SUMMARY							
Date	FROM State / Status	FROM ATTUID	TO State / Status	TO ATTUID	Operation	Comments	PACE Status
02/07/2017	Preliminary In Progress	ra9161	Preliminary Submitted for Approval	RC475S	Promote		NER-RCTB-12-00012 FAILURE 02/07/2017 12:20:22 PM
02/07/2017	Preliminary Submitted for Approval	RC475S	Preliminary Approved	MH569V	Promote		
02/07/2017	Preliminary Approved	MH569V	Final RF Approval	RA9161	Promote	Promote for final RFDS	
02/07/2017	Final RF Approval	RA9161	Final Approved	MH569V	Promote		NER-RCTB-12-00012 FAILURE 02/07/2017 4:59:07 PM
02/08/2017	Final Approved	MH569V	As Built In Progress	MH569V	Promote	Promote for final RFDS	NER-RCTB-12-00012 MRCTB005990 SUCCESS 02/08/2017 6:55:40 AM
04/05/2017	As Built In Progress	MH569V	Final Modification Recommended	RA9161	Demote	Other - Update RFDS for 2nd PCS carrier BWE (CSS section).	
04/11/2017	Final Modification Recommended	RA9161	Final Approved	MH569V	Promote		
04/11/2017	Final Approved	MH569V	As Built In Progress	MH569V	Promote	Promote for final RFDS	NER-RCTB-12-00012 FAILURE 04/11/2017 9:17:29 AM

HexPort Multi-Band Antenna

Model HPA-65R-BUU-H8

Hexport Multi-Band Antenna Array

The CCI Hexport Multi-Band Antenna Array is an industry first 6-port antenna with full WCS Band Coverage. With four high band ports and two low band ports, our hexport antenna is ready for 4X4 high band MIMO.

Modern networks demand high performance, consequently CCI has incorporated several new and innovative design techniques to provide an antenna with excellent side-lobe performance, sharp elevation beams, and high front to back ratio.

Multiple networks can now be connected to a single antenna, reducing tower loading and leasing expense, while decreasing deployment time and installation cost.

Full band capability for 700 MHz , Cellular 850 MHz, PCS 1900 MHz, AWS 1710/2170 MHz and WCS 2300 MHz coverage in a single enclosure.

Benefits

- **Includes WCS Band**
- **Reduces tower loading**
- **Frees up space for tower mounted E-nodes**
- **Single radome with six ports**
- **All Band design simplifies radio assignments**
- **Sharp elevation beam eases network planning**

Features

- High Band Ports include WCS Band
- Four High Band ports with two Low Band ports in one antenna
- Sharp elevation beam
- Excellent elevation side-lobe performance
- Excellent MIMO performance due to array spacing
- Excellent PIM Performance
- A multi-network solution in one radome

Applications

- 4x4 MIMO on High Band and 2x2 MIMO on Low Band
- Adding additional capacity without adding additional antennas
- Adding WCS Band without increasing antenna count

ISO 9001:2008
Quality Management Systems
Système de Qualité
www.ca.sgs.com

HexPort Multi-Band Antenna

Model HPA-65R-BUU-H8

HPA-65R Multi-Band Antenna

Electrical Specifications

Frequency Range	2 X Low Band Ports which cover the full range from 698-894 MHz		4 X High Band Ports which cover the full range from 1710-2360 MHz			
	698-806 MHz	824-894 MHz	1850-1990 MHz	1710-1755/2110-2170 MHz		2305-2360 MHz
Gain	15.3 dBi	16.2 dBi	17.1 dBi	16.3 dBi	17.4 dBi	17.7 dBi
Azimuth Beamwidth (-3dB)	65°	61°	62°	68°	64°	60°
Elevation Beamwidth (-3dB)	10.1°	8.4°	5.6°	6.2°	5.0°	4.5°
Electrical Downtilt	2° to 10°	2° to 10°	0° to 8°	0° to 8°	0° to 8°	0° to 8°
Elevation Sidelobes (1st Upper)	< -17 dB	< -17 dB	< -19 dB	< -18 dB	< -18 dB	< -17 dB
Front-to-Back Ratio @180°	> 29 dB	> 28 dB	> 35 dB	> 35 dB	> 35 dB	> 35 dB
Front-to-Back Ratio over ± 20°	> 28 dB	> 27 dB	> 28 dB	> 27 dB	> 28 dB	> 28 dB
Cross-Polar Discrimination (at Peak)	> 24 dB	> 20 dB	> 25 dB	> 25 dB	> 25 dB	> 25 dB
Cross-Polar Discrimination (at ± 60°)	> 16 dB	> 14 dB	> 18 dB	> 18 dB	> 18 dB	> 18 dB
Cross-Polar Port-to-Port Isolation	> 25 dB	> 25 dB	> 25 dB	> 25 dB	> 25 dB	> 25 dB
VSWR	< 1.5:1	< 1.5:1	< 1.5:1	< 1.5:1	< 1.5:1	< 1.5:1
Passive Intermodulation (2x20W)	≤ -150dBc	≤ -150dBc	≤ -150dBc	≤ -150dBc	≤ -150dBc	≤ -150dBc
Input Power	500 Watts CW	500 Watts CW	300 Watts CW	300 Watts CW	300 Watts CW	300 Watts CW
Polarization	Dual Pol 45°	Dual Pol 45°	Dual Pol 45°	Dual Pol 45°	Dual Pol 45°	Dual Pol 45°
Input Impedance	50 Ohms	50 Ohms	50 Ohms	50 Ohms	50 Ohms	50 Ohms
Lightning Protection	DC Ground	DC Ground	DC Ground	DC Ground	DC Ground	DC Ground

Mechanical Specifications

Dimensions (LxWxD)	92.4 x 14.8 x 7.4 inches (2348 x 376 x 189 mm)
Survival Wind Speed	> 150 mph
Front Wind Load	332 lbs (1479 N) @ 100 mph (161 kph)
Side Wind Load	193 lbs (860 N) @ 100 mph (161 kph)
Equivalent Flat Plate Area	13.0 ft^2 (1.2 m^2)
Weight (without Mounting)	68 lbs (31 kg)
RET System Weight	5.0 lbs (2.25 kg)
Connector	6; 7-16 DIN female long neck
Mounting Pole	2-5 inches (5-12 cm)

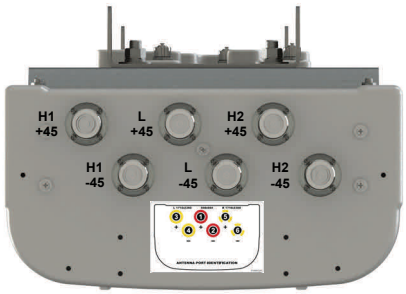

Bottom View

Rear View

Antenna Patterns*

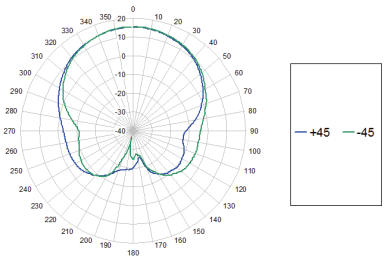

894 MHz Azimuth

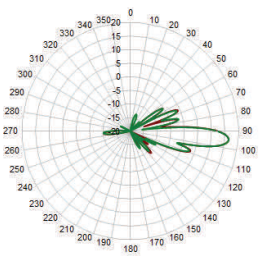

Elevation 5°

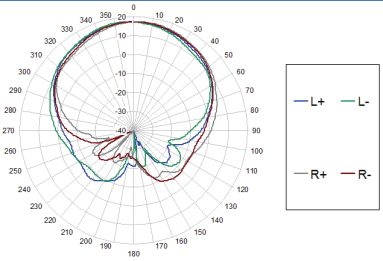

1920 MHz Azimuth

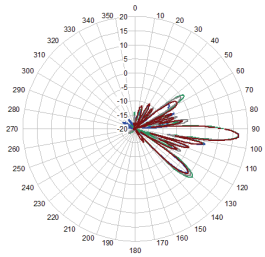

Elevation 4°

*Typical antenna patterns. For detail information on antenna pattern, please contact us at info@cciproducts.com. All specifications are subject to change without notice.

65° OctoPort Multi-Band Antenna

Model OPA-65R-LCUU-H8

Octoport Multi-Band Antenna Array

The CCI Octoport Multi-Band Antenna Array is an industry first 8-port antenna with full WCS Band Coverage. With four high band ports covering PCS, AWS and WCS bands, two 700 MHZ ports, and two 850 MHz ports our octoport antenna is ready for 4X4 high band MIMO.

Modern networks demand high performance, consequently CCI has incorporated several new and innovative design techniques to provide an antenna with excellent side-lobe performance, sharp elevation beams, and high front to back ratio.

Multiple networks can now be connected to a single antenna, reducing tower loading and leasing expense, while decreasing deployment time and installation cost.

Full band capability for 700 MHz , Cellular 850 MHz, PCS 1900 MHz, AWS 1710/2155 MHz and WCS 2300 MHz coverage in a single enclosure.

All CCI antennas are manufactured under ISO 9001.

Benefits

- **RET System allows Independent Tilt of each band specific paired port**
- **Reduces tower loading**
- **Frees up space for tower mounted Remote Radio Heads**
- **Single radome with eight ports**
- **All Band design simplifies radio assignments**
- **Sharp elevation beam eases network planning**

Features

- High Band Ports include WCS Band
- Four High Band ports with four Low Band ports in one antenna
- Sharp elevation beam
- Excellent elevation side-lobe performance
- Excellent MIMO performance due to array spacing
- Excellent PIM Performance
- A multi-network solution in one radome

Applications

- 4x4 MIMO on High Band and Dual 2x2 MIMO on 700 & 850 Low Bands
- Adding additional capacity without adding additional antennas
- Adding WCS Band without increasing antenna count

65° OctoPort Multi-Band Antenna

Model OPA-65R-LCUU-H8

OPA-65R Multi-Band Antenna

Electrical Specifications

Frequency Range	2 X Low Band Ports (L) which cover the range from 698-787 MHz	2 X Low Band Ports (C) which cover the range from 824-894 MHz	4 X High Band Ports (H1 & H2) which cover the full range from 1710-2360 MHz			
			1850-1990 MHz	1710-1755/2110-2170 MHz		2305-2360 MHz
Gain	14.7 dBi	15.5 dBi	17.0 dBi	16.5 dBi	17.2 dBi	17.1 dBi
Azimuth Beamwidth (-3dB)	65°	61°	62°	67°	64°	61°
Elevation Beamwidth (-3dB)	10.1°	8.5°	5.6°	6.2°	5.0°	4.5°
Electrical Downtilt	2° to 10°	2° to 10°	0° to 8°	0° to 8°	0° to 8°	0° to 8°
Elevation Sidelobes (1st Upper)	< -17 dB	< -17 dB	< -19 dB	< -18 dB	< -18 dB	< -17 dB
Front-to-Back Ratio @180°	> 28 dB	> 28 dB	> 35 dB	> 35 dB	> 35 dB	> 35 dB
Front-to-Back Ratio over ± 20°	> 28 dB	> 27 dB	> 28 dB	> 27 dB	> 27 dB	> 28 dB
Cross-Polar Discrimination (at Peak)	> 24 dB	> 20 dB	> 25 dB	> 25 dB	> 25 dB	> 25 dB
Cross-Polar Discrimination (at ± 60°)	> 16 dB	> 14 dB	> 18 dB	> 18 dB	> 18 dB	> 18 dB
Cross-Polar Port-to-Port Isolation	> 25 dB	> 25 dB	> 25 dB	> 25 dB	> 25 dB	> 25 dB
VSWR	< 1.5:1	< 1.5:1	< 1.5:1	< 1.5:1	< 1.5:1	< 1.5:1
Passive Intermodulation (2x20W)	≤ -150 dBc	≤ -150 dBc	≤ -150 dBc	≤ -150 dBc	≤ -150 dBc	≤ -150 dBc
Input Power	500 Watts CW	500 Watts CW	300 Watts CW	300 Watts CW	300 Watts CW	300 Watts CW
Polarization	Dual Pol 45°	Dual Pol 45°	Dual Pol 45°	Dual Pol 45°	Dual Pol 45°	Dual Pol 45°
Input Impedance	50 Ohms	50 Ohms	50 Ohms	50 Ohms	50 Ohms	50 Ohms
Lightning Protection	DC Ground	DC Ground	DC Ground	DC Ground	DC Ground	DC Ground

Mechanical Specifications

Dimensions (LxWxD)	92.7 x 14.4 x 7.0 inches (2355 x 366 x 179 mm)
Survival Wind Speed	> 150 mph
Front Wind Load	327 lbs (1453 N) @ 100 mph (161 kph)
Side Wind Load	186 lbs (829 N) @ 100 mph (161 kph)
Equivalent Flat Plate Area	12.9 ft^2 (1.2 m^2)
Weight (w/o RET/Mounting)	88 lbs (40 kg)
RET System Weight	7.0 lbs (3.0 kg)
Connector	8; 7-16 DIN female long neck
Mounting Pole	2-5 inches (5-12 cm)

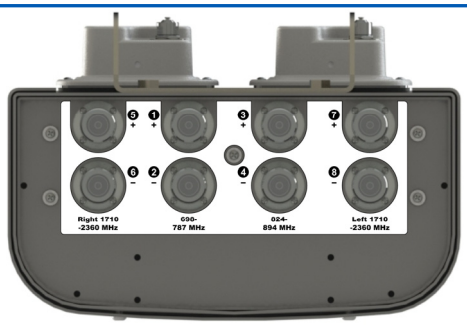

Bottom View

Rear View

Antenna Patterns*

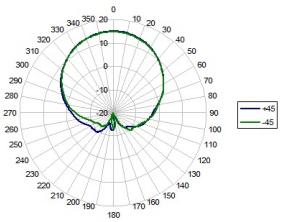

737 MHz Azimuth

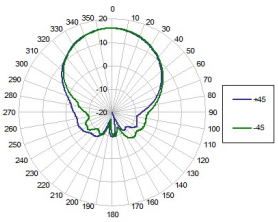

887 MHz Azimuth

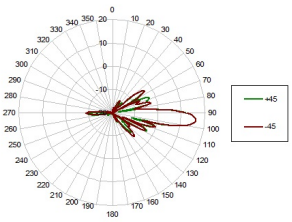

Elevation 5°

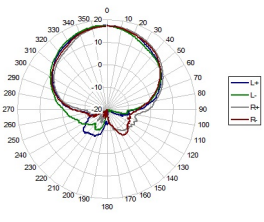

1920 MHz Azimuth

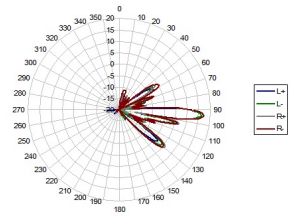

Elevation 4°

*Typical antenna patterns. For detail information on antenna pattern, please contact us at info@cciproducts.com. All specifications are subject to change without notice.

Triple Band (AWS/PCS/WCS) Twin TMA with 700/850 Bypass

Tel: 201-342-3338 Fax: 201-342-3339 www.cciproducts.com

General Information

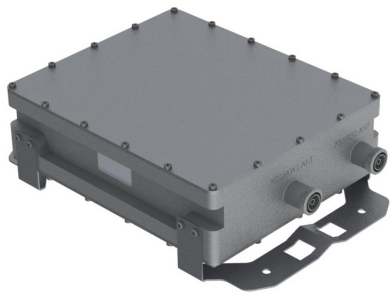

CCI's Triple Band TMA with 700/850 bypass contains two triple band TMA's in a single housing. The TMA's are fully duplexed and share a single LNA for all three bands. The bypass path provides excellent isolation to the TMA path. Separate antenna ports for the bypass path and TMA path are combined onto a single BTS port. Low noise high linearity amplifiers improve the uplink sensitivity and the receive performance of base stations. The TMA is fully compliant with the latest AISG 2.0 specification. The TMA supports CDMA, EDGE/GSM, UMTS and LTE BTS equipment. The TMA is ideally suited for sites upgraded to quad-band using the existing infrastructure. The TMA allows the sharing of feeder lines for both AWS and PCS bands thus reducing tower loading, leasing, and installation costs. The input and output connectors are located inline for ease of installation in space constrained areas such as uni-pole structures and stealth antennas.

ModelTMABPDB7823VG12A

Contents:

General Info and Technical Description	1
Elect & Mech. Specs	2
Block Diagram & Outline Drawing	3

Features:

- Small lightweight unit
- Triple Band (AWS/PCS/WCS) Twin TMA with 700/850 Bypass
- Independent Gain Control
- High linearity
- Lightning protected
- Fail-safe bypass mode
- High reliability

Technical Description

The TMA system is an outdoor quad band tower mount unit which provides low noise amplification of PCS, AWS, and WCS uplink signals combined with 700/850 bypassed signals from separate antenna ports to a common BTS port. The tower mount unit consists of 14 band-pass filters, two redundant low noise amplifiers (LNA) with bypass failure circuitry, two bias tees, AISG control circuitry, and lightning protection circuitry all housed in an IP68 enclosure suited to long life masthead mounting. The AWS, PCS and WCS paths are dual duplexed to separate the low power uplink signals from the high power down link signals at the BTS and antenna ports. The AWS, PCS, and WCS uplink signals are amplified with a dedicated ultra-low noise PHEMT LNA with adjustable gain control. The unit provides protection against lightning strikes via a multistage surge protection circuit. DC power and AISG 2.0 control is provided via the BTS feeder cable. The unit operates in current window alarm (CWA) mode until a valid AISG message is detected, at which point it automatically switches to AISG mode. Once in AISG mode, the unit can only switch back to CWA mode with the receipt of an AISG CCI vendor defined command. In CWA mode, the unit requires 12VDC at each BTS port and follows typical current window convention. In AISG mode, the unit will accept 10-30 VDC from either BTS port. In AISG mode, the unit does not require an AISG 2.0 compatible site control unit (SCU) and may also be powered by a standard power distribution unit (PDU).

An optional Site Control Unit (SCU) is available to power up to 32 AISG modules per sector and to provide the monitoring and alarm functions for the system. The SCU is housed in a single (1U) 1.75" x 19" rack and contains dual redundant power supplies capable of being "hot swapped" that provide a regulated DC supply voltage on the RF coax for the tower mount amplifiers.

Preliminary

CCI Triple Band (AWS/PCS/WCS) Twin TMA with 700/850 Bypass Typical Specifications

Description	Typical Specifications			
Electrical Specifications	**700/850**	**PCS**	**AWS**	**WCS**
Receive Frequency Range	-	1850 – 1910 MHz	1710 – 1755 MHz	2305 – 2320 MHz
Transmit Frequency Range	-	1930 – 1990 MHz	2110 – 2155 MHz	2345 – 2360 MHz
Bypass Frequency Range	698 - 894 MHz	-	-	-
Amplifier Gain	-	6 to 12 dB Adjustable in 0.25 dB steps via AISG	6 to 12 dB Adjustable in 0.25 dB steps via AISG	6 to 12 dB Adjustable in 0.25 dB steps via AISG
Gain Variation	-	±1.0 dB	±1.0 dB	±1.0 dB
System Noise Figure	-	1.4 dB Typ.	1.3 dB Typ.	1.3 dB Typ.
Input Third Order Intercept Point	-	+12 dBm Min at Max. Gain		
Input / Output Return Loss	18 dB Min all ports, 12 dB Min. Bypass Mode			
Insertion Loss	0.25 dB Typ.			
Transmit Passband	-	0.5 dB Typical	0.4 dB Typical	0.4 dB Typical
Bypass Mode, (PCS/AWS/WCS) Rx Passband	-	2.5 dB Typ.	2.5 dB Typ.	2.5 dB Typ.
Filter Characteristics				
Continuous Average Power	200 Watts max			
Peak Envelope Power	2 KW max			
Intermodulation Performance				
IMD at ANT port in Rx Band	< -112 dBm (-155 dBc) [2 tones at +43 dBm]			
Operating Voltage	+10V to +30V DC provided via coax or AISG			
Power Consumption	<2.0 Watts			
Mechanical Specifications				
Connectors	DIN 7-16 female x 2; AISG x 1			
Dimensions (Body Only)	10.63” (H) x 11.024” (W) x 3.72” (D); (290.60 (H) x 280.00 (W) x 95.0 (D) mm)			
Dimensions (with Conn. & Bracket)	14.25” (H) x 11.024” (W) x 4.11” (D); (362.00 (H) x 280.00 (W) x 104.40 (D) mm)			
Weight	23.1 Lbs. (10.5 Kg) - with Brackets; 22 Lbs. (10 Kg) - without brackets			
Mounting	Pole/Wall Mounting Bracket			
Environmental Specifications				
Operating Temperature	-40˚ C to +65˚C			
Lightning Protection	8/20us, ±2KA max, 10 strikes each, IEC61000-4-5			
Enclosure	IP68			
MTBF	>500,000 hours			

All specifications are subject to change. The latest specifications are available at www.cciproducts.com

Ultra-Low Profile Monopole Mounts

NEW

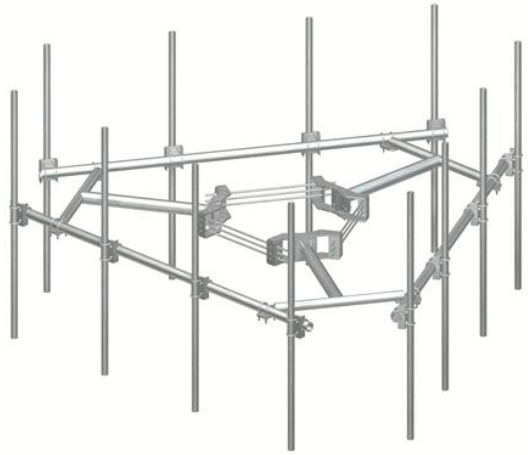

Kit includes everything shown.

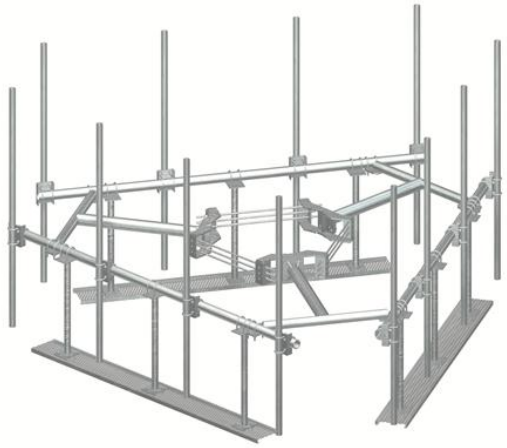

Shown with optional work support platforms (3).

Ultra-Low Profile Monopole Mounts

- Engineered specifically for 4G (RRU) build outs.
- Increased capacity without an inflated price.
- Low Profile design for reduced tower loading.
- Easily adaptable to include work platforms.
- All round members reduce the risk of migratory bird nesting.
- Complete kits include everything shown. Note: NP versions include antenna pipe mounting hardware.

Part #	Pole Diameter	Face Width	Mounting Pipes	Price
ULP12-NP	12″ - 45″	12′-6″	(12) 2-3/8″ x 63″	**$2,425.00**
ULP12-472	12″ - 45″	12′-6″	(12) 2-3/8″ x 72″	**$2,785.00**
ULP12-484	12″ - 45″	12′-6″	(12) 2-3/8″ x 84″	**$2,810.00**
ULP12-496	12″ - 45″	12′-6″	(12) 2-3/8″ x 96″	**$2,830.00**
ULP14-NP	12″ - 45″	14′-6″	No Antenna Pipes	**$2,465.00**
ULP14-472	12″ - 45″	14′-6″	(12) 2-3/8″ x 72″	**$2,825.00**
ULP14-484	12″ - 45″	14′-6″	(12) 2-3/8″ x 84″	**$2,845.00**
ULP14-496	12″ - 45″	14′-6″	(12) 2-3/8″ x 96″	**$2,870.00**
RM-ADK	Large-Pole Adapter Kit	Adapter Kit 45″ - 60″		**$380.00**
WP197-10	10′ Work Support Platform			**$315.00**