IN RE: NEW CINGULAR WIRELESS PCS, LLC (AT&T) PETITION FOR A DECLARATORY RULING, PURSUANT TO CONNECTICUT GENERAL STATUTES §4-176 AND §16-50K, FOR THE PROPOSED INSTALLATION OF A WIRELESS TELECOMMUNICATIONS FACILITY AT AN EXISTING EVERSOURCE-OWNED ELECTRIC TRANSMISSION LINE STRUCTURE (#917) WITHIN AN EXISTING EVERSOURCE ELECTRIC TRANSMISSION LINE RIGHT-OF-WAY LOCATED AT 5 TALL PINES DRIVE, WESTON, CONNECTICUT.

**PETITION NO. 1386**

January 17, 2020

RESPONSES TO SITING COUNCIL INTERROGATORIES
SET TWO

Q13. Was the access route chosen to utilize existing access and avoid and/or minimize tree clearing? Would any existing trees six inches diameter or greater be removed to construct the proposed project? If yes, please indicate the location(s) of such tree(s) slated for removal on Sheet C-3 or C-1A, as applicable.

**A13.** ***Yes, the location for the access route was chosen to utilize the existing accessway to avoid additional clearing. As demonstrated on Sheets C-1 and C-1A of the site drawings prepared by Centek Engineering, last revised January 16, 2020 (the "Site Drawings") included in Attachment 1, no existing trees that are 6" DBH or greater will be removed. The location for AT&T's access road was also selected to keep the proposed installation within the existing Eversource easement.***

Q14. The Petitioner's response to interrogatory number 3 states that, "Nevertheless, AT&T intends to install sound attenuation blankets to the fencing around the compound…" Would the sound blankets be installed on the inside or outside of the fence? If feasible, could it be installed on the inside of the fence for aesthetics?

**A14.** ***All sound attenuation blankets would be installed on the interior face of the proposed fencing.***

Q15. Could a smaller telecommunications facility consisting of a short antenna mast attached directly to the top of the transmission structure be installed? Would this be structurally feasible? What are the pros and cons of a short mast directly attached to the top of the structure versus a longer center mast (extending to the ground as proposed) structurally and in terms of visibility? Could smaller antennas and/or smaller platform/antenna mounts be installed to minimize the visual profile?

**A15.** ***AT&T has considered an alternative design configuration utilizing a short antenna mast attached directly to the top of the Eversource structure rather than the proposed mast that extends all the way to the ground. The shorter mast alternative was deemed not feasible***

***because it would not be capable of supporting the number of antennas and other equipment AT&T is currently proposing, which are needed to provide reliable service within the Town of Weston. Any such changes to the design would result in a decrease in number of antennas, reduction in height of the antennas, and changes to the antenna's configuration. These changes would compromise the coverage and capacity that would be provided by this facility which would lead to the need for additional sites and the potential proliferation of towers in the Town. Similarly, the proposed facility is a FirstNet site and the use of the alternative design would limit AT&T's ability to expand its FirstNet program which provides first responders with priority access to AT&T's network.***

***Eversource safety standards require a minimum of 6-feet clearance between the top of the transmission structure and the bottom of the carrier equipment and antennas. The top of the Eversource transmission structure is approximately 81' AGL and therefore, the mounting allowed for the bottom of AT&T's equipment is 87' AGL. However, Eversource considers the 6'-foot requirement a "minimum" and often requests additional clearance. In this instance, Eversource has indicated that it prefers the existing design with the 10' clearance for several reasons: additional safety, future modifications, and construction tolerance. Thus, AT&T proposes the current design with the 98' mast insert and centerline antenna height of 95' which provides an approximately 10' clearance between the bottom of the antennas and the top of the Eversource structure.***

Q16. Could the telecommunications facility be designed with no mast and with the antennas attached directly to the transmission structure?

**A16.** ***No, the proposed facility could not be designed without a mast and the antennas could not be attached directly to the transmission structure. As indicated in the response to Q15 above, Eversource safety standards require a minimum of 6-feet clearance between the top of the transmission structure and the bottom of the carrier equipment and antennas.***

Q17. The proposed generator is diesel. The fuel tank has double-wall construction. Does it have any containment measures for oil and coolant? Would the leakage of any generator engine fluids affect any known existing wells and/or groundwater?

**A17.** ***Please see Response No. 18 below regarding the change to a propane powered emergency backup generator to replace the proposed diesel generator.***

Q18. Would a propane generator be feasible at the site? Would a propane generator have containment measures for oil and coolant fluids? What are the pros and cons of a propane versus diesel generator?

**A18.** ***Eversource and AT&T would permit a propane fueled emergency back-up generator at the site. The enclosed Site Drawings reflect the***

***change to the propane emergency back-up generator. In order to accommodate the propane tank and required propane tank clearances, the proposed equipment compound was slightly enlarged to approximately 20'-6" x 29'-6". (The original compound size was approximately 18' x 24'). As shown in the Environmental Sound Assessment included in Attachment 2, the anticipated noise from the Proposed Facility and the propane emergency back-up generator is 47dBA at the nearest property line, which is well below the standard. As such, the proposed Facility will not have an adverse noise impact.***

Q19. Could the backup generator be eliminated? Has the Petitioner considered an alternative such as battery backup? What are the pros and cons of such an alternative?

**A19.** **W*ith respect to eliminating AT&T's proposed backup generator, we refer the Council to its Docket 432 Findings and Report and Docket 440 proceedings and Findings of Fact (Nos. 76- 77). As discussed in these dockets, in response to two significant storm events in 2011, the State formed a Two Storm Panel (the "Panel") that evaluated Connecticut's approach to planning and mitigation of impacts associated with emergencies and natural disasters. The Panel found that "wireless telecommunications service providers were not prepared to serve residential and business customers during a power outage" because certain companies had limited backup generator capacity. See Council Administrative Notice Item No. 39. The Panel also noted that "[t]he failure of a large portion of Connecticut's telecommunications system during the two storms is a life safety issue." The Panel recommended that State regulatory bodies review "telecommunications services currently in place to verify that the vendors have sufficient generator and backhaul capacity to meet the emergency needs of consumers and businesses" and that the "Connecticut Siting Council should require continuity of service plans for any cellular tower to be erected." See Council Administrative Notice Item No. 39.***

***AT&T has considered a battery backup and deemed such alternative not feasible due to the limited time that battery backups provide power. Generators can provide sustained power for several days to meet the emergency needs of the community while battery backup is typically limited to only several hours.***

**CERTIFICATION OF SERVICE**

I hereby certify that on this _____day of January 2020, an original and 15 copies of these Responses to Siting Council Interrogatories Set Two was sent via overnight mail to the Connecticut Siting Council.

Dated:_____ _____

Lucia Chiocchio, Esq.
Cuddy & Feder LLP
445 Hamilton Avenue, 14th Floor
White Plains, New York 10601
Attorneys for:
New Cingular Wireless PCS, LLC ("AT&T)

**CERTIFICATION OF SERVICE**

I hereby certify that on this 17th day of January 2020, an original and 15 copies of these Responses to Siting Council Interrogatories Set Two was sent via overnight mail to the Connecticut Siting Council.

Dated: 1/17/20

Lucia Chiocchio, Esq.
Cuddy & Feder LLP
445 Hamilton Avenue, 14th Floor
White Plains, New York 10601
Attorneys for:
New Cingular Wireless PCS, LLC ("AT&T)

# 1

# Environmental Sound Assessment

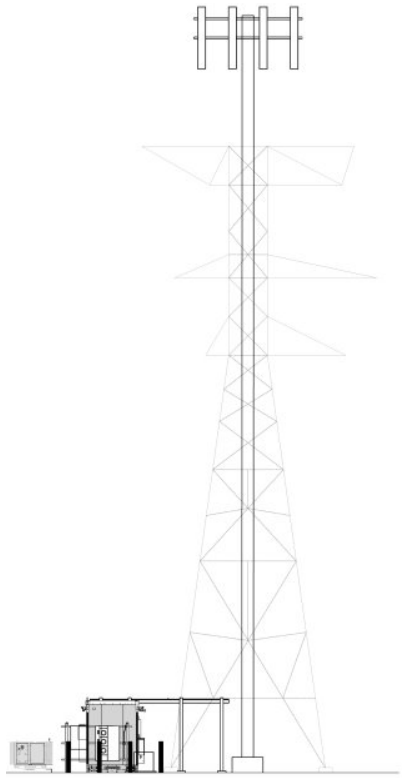

Wireless Communication Facility
CT1845 Weston
***EVERSOURCE Structure 917***
***5 Tall Pines Drive, Weston, CT  06883***

January 16, 2020

Prepared For:

**AT&T Wireless**
550 Cochituate Road
Suites 13 & 14
Framingham, MA 01701

Prepared By:

**Modeling Specialties**
30 Maple Road
Westford, MA  01886

# ENVIRONMENTAL NOISE EVALUATION

AT&T Mobility is developing a Wireless Communications Facility (the site) in Weston Connecticut to support personal wireless communication in the area. The proposed AT&T mast and wireless antennas will be mounted on an existing Eversource transmission structure. Environmentally sensitive electronic equipment will be enclosed in a walk-in cabinet at the foot of the structure. A small door-mounted cooler unit will be mounted on the cabinet, typically producing no sound, but will produce sound when it is actively supplementing the cooling. An emergency generator is also proposed within the fenced equipment compound at the foot of the structure. The propane fired generator will operate only during emergencies and for occasional daytime testing of about one-half hour.

This report addresses land uses in the area, measured ambient sound levels in the area, sources expected at this installation and resulting sound levels at area sensitive locations.

## Overview of Project and Site Vicinity

The project is located within the Right-of-Way at the foot of an Eversource Transmission Structure in Weston, CT. The area surrounding the site is zoned Residential and has a low-density residential character. The nearest residential lots are located in three directions from the equipment. Residential use in other directions are more distant and will receive less sound energy than those modeled here.

Ambient sound levels were established by field measurements. The sound levels resulting from the proposed equipment were estimated using vendor data and measurements made at similar installations. AT&T / CENTEK plans dated November 11, 2019 provided the necessary information to support the evaluation of project sounds. The corresponding sound levels expected at the nearby sensitive locations were estimated using noise modeling techniques prescribed in acoustical literature.

Figure 1 has a backdrop of Google aerial imagery and is annotated to show the proposed site, surrounding area and nearby receptor locations, showing the orientation and distance from the proposed equipment to the receptor location.


**Figure 1:** Project Area Showing the Site, Nearby Features and Modeled Sensitive Receptors

## Discussion of General Noise Analysis Methods

There are a number of ways in which sound (noise) levels are measured and quantified. All of them use the logarithmic decibel (dB) scale. Following is a brief introduction to the noise measurement terminology used in this assessment.

### *Noise Metrics*

The Sound Level Meter used to measure environmental sound is a standardized instrument.[1] It contains "weighting networks" to adjust the frequency response of the instrument to approximate that of the human ear under various circumstances. One of these is the *A-weighting* network. A-weighted sound levels emphasize the middle frequency sounds and de-emphasize lower and higher frequency sounds; they are reported in decibels designated as "dBA." All broadband levels represented in this study are weighted using the A-weighting scale.

The sounds in our environment usually vary with time so they cannot always be described with a single number. Two methods are used for describing variable sounds. These are *exceedance levels* and *equivalent level.* Both are derived from a large number of moment-to-moment A-weighted sound level measurements. Exceedance levels are designated $L_n$, where "n" can have any value from 0 to 100 percent. For example:

- $L_{10}$ is the sound level in dBA exceeded only 10 percent of the time. It is close to the maximum level observed during the measurement period. The $L_{10}$ is sometimes called the *intrusive* sound level because it is caused by occasional louder noises like those from passing motor vehicles.

- $L_{50}$ is the median sound level: the sound level in dBA exceeded 50 percent of the time during the measurement period.

- $L_{90}$ is the sound level in dBA exceeded 90 percent of the time during the measurement period. The $L_{90}$ is close to the lowest sound level observed. It is essentially the same as the *residual* sound level, which is the sound level observed when there are no loud, transient noises.

By using exceedance levels, it is possible to separate steady sounds ($L_{90}$) from occasional louder sounds ($L_{10}$) in the environment. The *equivalent level* is the level of a hypothetical steady sound that has the same energy as the actual fluctuating sound observed. The equivalent level is designated $L_{eq}$, and is also A-weighted. The equivalent level is strongly influenced by occasional loud, intrusive noises. When a steady sound is observed, all of the $L_n$ and $L_{eq}$ are equal.

---

1 *American National Standard Specification for Sound Level Meters*, ANSI S1.4-1983, published by the Standards Secretariat of the Acoustical Society of America, NY.

In the design of noise control treatments, it is essential to know something about the frequency spectrum of the sound of interest. Noise control treatments do not function like the human ear, so simple A-weighted levels are not useful for noise-control design or the identification of tones. The spectra of sounds are usually stated in terms of *octave band sound pressure levels*, in dB, with the octave frequency bands being those established by standard.[2] The sounds at the proposed site have been evaluated with respect to the octave band sound pressure levels, as well as the A-weighted equivalent sound level. Only the A-weighted values are presented here, since they represent the more easily recognized sound scale.

***Noise Regulations and Criteria***

Sound compliance is judged on two bases: the extent to which governmental regulations or guidelines are met, and the extent to which it is estimated that the community is protected from the excessive sound levels. The governmental regulations that may be applicable to sound produced by activities at the project site are summarized below.

***Federal***

- Occupational noise exposure standards: 29 CFR 1910.95. This regulation restricts the noise exposure of employees at the workplace as referred to in OSHA requirements. Workers will not routinely attend this facility. Furthermore, the facility will emit only occasional sounds of modest levels, as demonstrated by this study.

***State***

- The state of Connecticut (Connecticut Department of Energy & Environmental Protection or CDEEP) regulates noise at Regulation Title 22a, Sections 69-1 through 69-7.4, Control of Noise. The project is a Class B (Utility - Communications) emitter. The land use is Utility in a residential Zone 2A. The site is surrounded by residential land whose property lines were evaluated as Class A Noise Receptors. An excerpt from the Town of Weston Zoning Map is shown in Figure 2. The details of the CDEEP performance criteria are shown in Table 1 below and are based on the source and receiving land uses.

**Table 1: Overview of CDEEP Performance Criteria**

| | Receptor's Zone | | | |
|---|---|---|---|---|
| Emitter's Zone | Industrial | Commercial | Residential/Day | Residential/Night |
| Residential | 62 dBA | 55 dBA | 55 dBA | 45 dBA |
| Commercial | 62 dBA | 62 dBA | 55 dBA | 45 dBA |
| Industrial | 70 dBA | 66 dBA | 61 dBA | 51 dBA |

[2] *American National Standard Specification for Octave, Half-octave and Third-octave Band Filter Sets*, ANSI S1.11-1966(R1975).

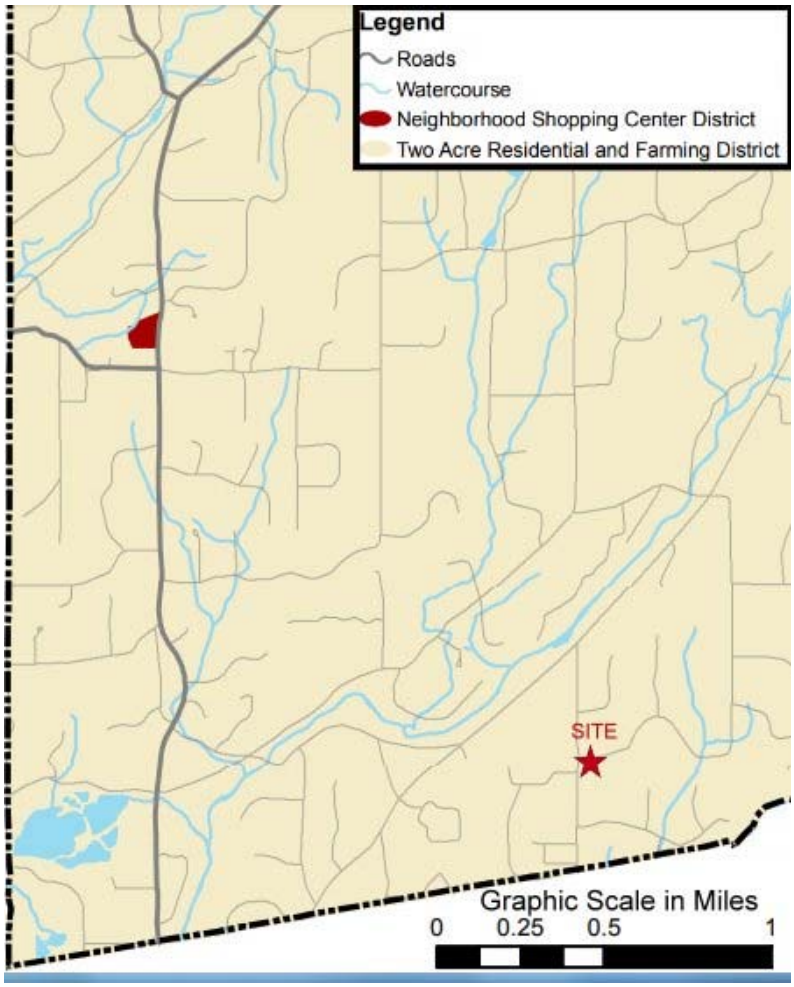


**Figure 2**: Excerpt of the Weston Online Zoning Map

***Local***

- The Weston Zoning Regulations were reviewed in the context of this project. No quantitative criteria were identified that relate to the project sources. For this reason, the facility is evaluated by only the CDEEP performance criteria.

**Existing Community Sound Levels**

The area has a suburban residential character. The nearest sensitive receptor (residence) is located southwest of the transmission ROW. Sound level measurements were made in the site access drive to establish the background sound levels for the area on December 24, 2019. The ambient sound fluctuates through the day and night so measurements were made during the daytime and in the quietest hours of the night (usually midnight to 5:00 am). A new source of sound tends to be noticed most during conditions that are otherwise quiet. The ambient sound survey was scheduled under conditions that represented quiet sound levels for the area.

Attended sound level measurements were made using a Rion NA-28 sound level meter. The measurements create a baseline community sound level and captured the frequency-specific character of the sound. The meter was mounted on a tripod approximately 5 feet above the ground. The microphone was fitted with factory recommended foam windscreen. The meter was programmed to take measurements for 20 minutes and then store processed statistical levels. The meter meets the requirements of ANSI S1.4 Type 1 – Precision specification for sound level meters. The meter was calibrated in the field using a Larsen Davis Cal-250 acoustical calibrator before and after the sessions. The field calibrations indicated that the meters did not drift during the study. The spectrum analyzer complies with the requirements of the ANSI S1-11 for octave band filters.

## Results of the Ambient Survey

The results of the ambient sound level measurements are summarized in Table 2. The Leq represents the "average" sound level while the $L_{90}$ represents the "background" sound level. Both are shown in this study to characterize the existing sound field. Comparing the Leq levels (including all sounds) to the L90 levels (quietest 10% of samples) illustrates the sound character of the area. Baseline levels are affected by community conditions, meteorology, seasons, insects and traffic patterns. Because the measured levels are dominated by distant traffic patterns, they can be expected to fluctuate. The measurements indicate that the existing nighttime sound levels are currently at the residential target levels of the CDEEP standards for nighttime sounds (45 dBA). The daytime sound levels are below the daytime sound standards (55 dBA). Because of the seasonal and weather conditions of the survey, the measured levels exclude precipitation, significant wind, insects and traffic peaks.

**Table 2: Ambient Sound Levels Measured on December 24, 2019**

| Location | Time | Period | $L_{eq}$ | $L_{90}$ |
|---|---|---|---|---|
| Site Drive | 10:41 AM | Day | 47 dBA | 40 dBA |
| Site Drive | 1:34 AM | Night | 45 dBA | 30 dBA |

Consistent with most residential communities, the daytime is affected by elevated traffic volumes on local and distant roadways along with local daytime activities. Nighttime levels tend to be lower because of lower traffic volumes in the area and the lack of neighborhood activities.

## Sounds from the Proposed Installation

The proposed installation has been designed to minimize the effect on the sound environment. Most of the equipment planned for the installation will produce no sound. Sounds that will be produced by the equipment will be significantly mitigated to manage any effects at sensitive locations. This analysis represents the most likely sound levels to be expected as a result of the normal operation of the equipment using data from potential equipment vendors and measurements of other similar equipment. Details of the modeling and assumptions are provided below. The proposed equipment will include antennas on the power mount and cable trays that support necessary cabling.

None of this equipment will produce environmental sound. As noted above, there are only two proposed sources of sound related to this project. The cabinet coolers and a standby generator to provide system power during periods when utility support is lost. The equipment is described and quantified below:

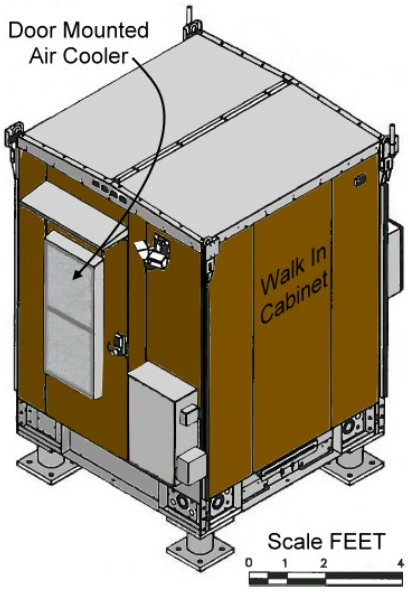


**Environmental Control Equipment**. A walk-in cabinet will be located in the fenced compound at the base of the utility structure. The cabinet will house AT&T equipment that is environmentally sensitive. The proposed Vertiv cabinets have two ways to provide cooling. Multiple fans move filtered ambient air through the front wall and out the back wall. Their speed and corresponding sound level vary based on how much cooling is needed. The ventilation system provides adequate cooling except when the ambient temperature is very high. The door-mounted cooler provides additional support in the periods when needed. The highest operational sound levels are expected in the hottest days of summer when the cooler is active. It is noted that the system has a heating mode with minimal interaction with the outdoors, so emits no community sound.

**Non-Routine Sound Emissions**

The installation will include a small gas generator installed inside a separate enclosure. It is a DC generator, which dramatically changes the way that it supports the facility. The generator will only operate to the level demanded by the load. Occasionally, the engine will be remotely tested to assure availability. But since it will have no load, the unit will operate at little more than an idle during the test. The sound level associated with the generator test is expected to be in the mid 50's dBA at 23 feet from the unit. While it might be noticeable if standing at the compound fence, it is expected to remain at or below the daytime ambient at all residences.

The equipment is monitored remotely, so attended service will be infrequent. Only during an emergency or during an attended performance test will the unit operate under load. The full load test requires a service technician to physically attach a load bank to assure that all design loads are available. However, this conservative study is based on the full load performance reported by the manufacturer of 62 dBA at 23 feet.

***Equipment Sound Level Modeling***

A computer model was developed for the project sounds based on conservative sound propagation principles prescribed in acoustics literature. Each of the expected sources

during operation of the facility were identified and quantified, then estimated at the nearest sensitive receptors. Sound levels decrease with distance, so the resulting sound level will be lower at more distant locations. The sound modeling accounts for specific source and propagation path assumptions for each modeled receiver location.

Sound level prediction modeling was performed using CADNA software under downwind weather conditions as assumed in the standard ISO 9613-2. Table 3 summarizes the modeling input parameters.

**Table 3: Modeling Input Parameters**

| Item | Modeling Input and Description |
|---|---|
| Terrain | Flat Terrain assumed |
| Temperature | 10ºC |
| Relative Humidity | 70% |
| Weather Condition | 6.5 mph, directly from facility to receptor* |
| Ground Attenuation | 0.2, hard surface (0.5 = soft ground, 0.0 = pure reflection) |
| Atmospheric Inversion | CONCAWE – Category F** |
| # of Sound Reflections | 2 |
| Receptor Height | 1.5 meter above ground level |

** Propagation calculations incorporate the adverse effects of certain atmospheric and meteorological conditions on sound propagation, such as gentle breeze of 1 to 5 m/s (ISO 1996-2: 1987) from source to receiver.*
***CONCAWE – Category F indicates an atmosphere that promotes sound propagation.*

The nearest receptor is in line-of-site to the equipment compound, so no terrain effects were included in the project modeling. An equipment layout plan is shown in Figure 3. An elevation drawing of the compound is shown in Figure 4. The modeling indicates that the facility is compliant with the CDEEP standard with a bare wood fence. Nevertheless, Figure 3 shows area where the 9-foot fence will be lined with sound barrier material that will provide supplemental shielding.

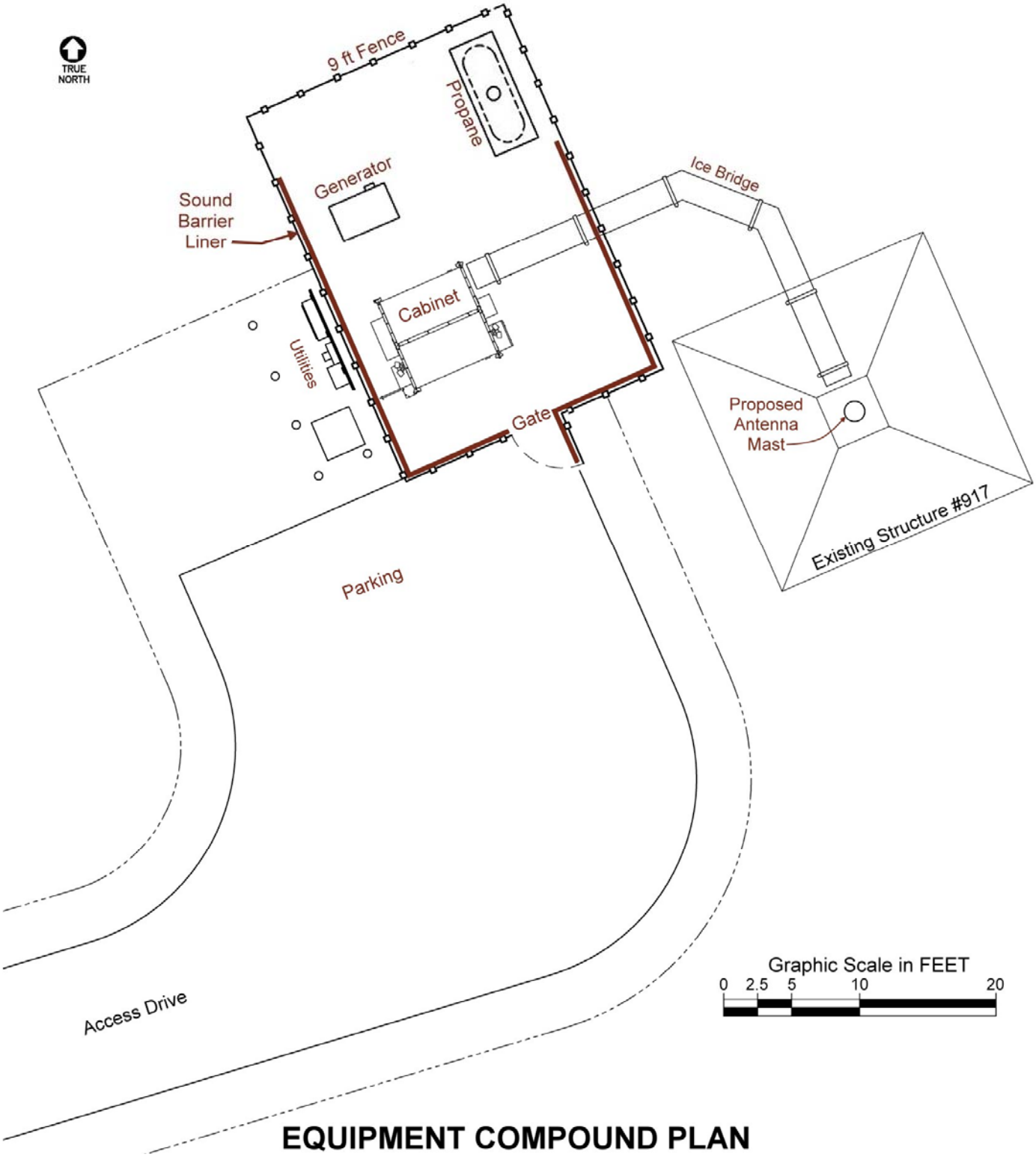


**Figure 3:** Plan Showing the Proposed Layout of the Equipment Compound

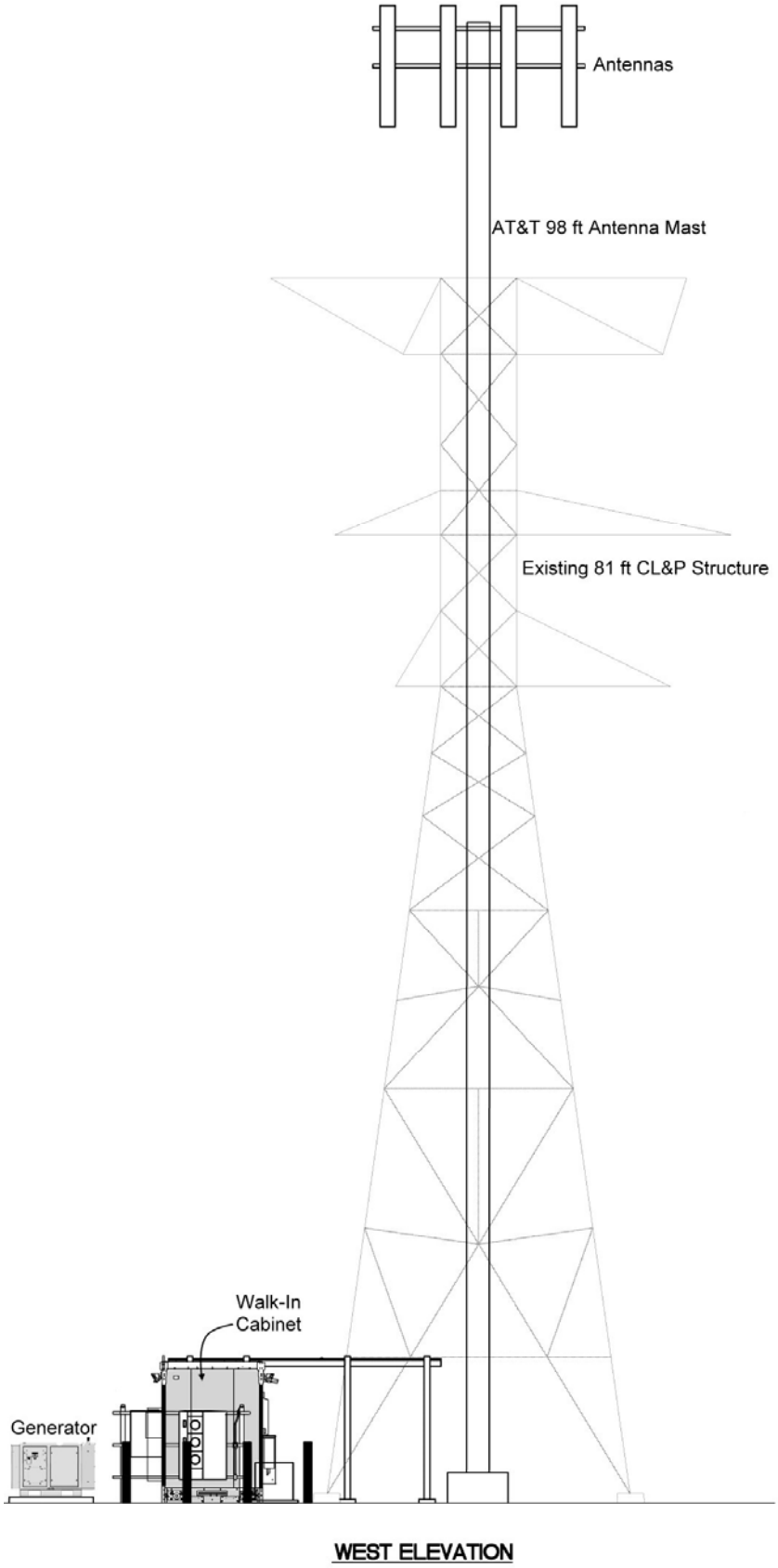


**Figure 4:** Plan Showing the Proposed Elevation Layout of the Site

### *Results of Sound Level Modeling*

The routine operation of the facility is not expected to include the cabinet cooler or generator, but emits only modest fan sounds when they are needed. To calculate the effect of the facility under the worst conditions, the sounds from the cabinet fans plus cooler plus generator is modeled together at receptor locations. The site location, receptors and their orientation to the proposed equipment are shown in Figures 1 and 5. The results of the worst-case modeling are shown in Table 4. Like air conditioning units in the surrounding community, the need for the supplemental cooler is expected to be limited to the warmest summer days under direct sunlight conditions. The cooler and generator test might never operate together as modeled in this worst-case scenario.

**Table 4: Predicted Worst-Case Sound Levels Expected at Receptors**

| Receptor Location | Distance (Ft) (from Cabinet) | Ambient Level Day/Night ($L_{eq}$) | Sound Level Standard (dBA) | Cooler+ Generator Level |
|---|---|---|---|---|
| P/L, Southwest | 60 | 47/45 | 55 | 45 dBA |
| P/L, Northeast | 185 | 47/45 | 55 | 47 dBA |
| P/L, Northwest | 128 | 47/45 | 55 | 41 dBA |
| Residence, Southwest | 170 | 47/45 | 55 | 38 dBA |
| Residence, Northeast | 350 | 47/45 | 55 | 41 dBA |
| Residence, Northwest | 450 | 47/45 | 55 | 30 dBA |

Note: It is customary to conduct all calculations using precise values, but to round the result to whole dBA. All results are rounded to units (dBA).

### *Sound Mitigation Assumptions*

There are several notable mitigation measures in place to achieve the low sound levels shown above. The selection of the walk-in cabinet reduces area and sound levels compared to full size shelters. The cabinet is also oriented so the cooler sound is minimized in the direction of the nearest property line and residence. The generator was optimized from units that are available to support this facility. The lowest sound level is a result of its inverter design, fully enclosed engine and its low profile. The physical size of the generator cabinet is important because its low height allows a sound barrier liner on the fence to effectively supplement the sound mitigation performance.

## Conclusions

The potential sounds from the proposed installation were evaluated using measured field baseline, vendor data and numerical modeling methods. Most of the time, the proposed wireless facility will produce no sound. The ambient sound level was established to be 47 dBA during the daytime and 45 dBA at night. The cabinet ventilation sound is expected to be well below the ambient levels at the nearest residential property lines. A supplementary cabinet cooler is expected to operate only during the daytime under summertime high ambient temperatures.

Infrequently, the proposed facility will include the emergency generator testing. This infrequent daytime testing was modeled to include the combined sound from cooler and generator operation. This represents a worst-case estimate which could only happen during the few hottest days of the summer. The graphical modeling summary in Figure

5 shows the results at the residential property lines. The figure also shows the lower sound levels expected at corresponding existing residences in those same directions.

The results of this expert analysis indicate the facility will comply with all federal, state and local requirements with respect to environmental sound at residential receptors.

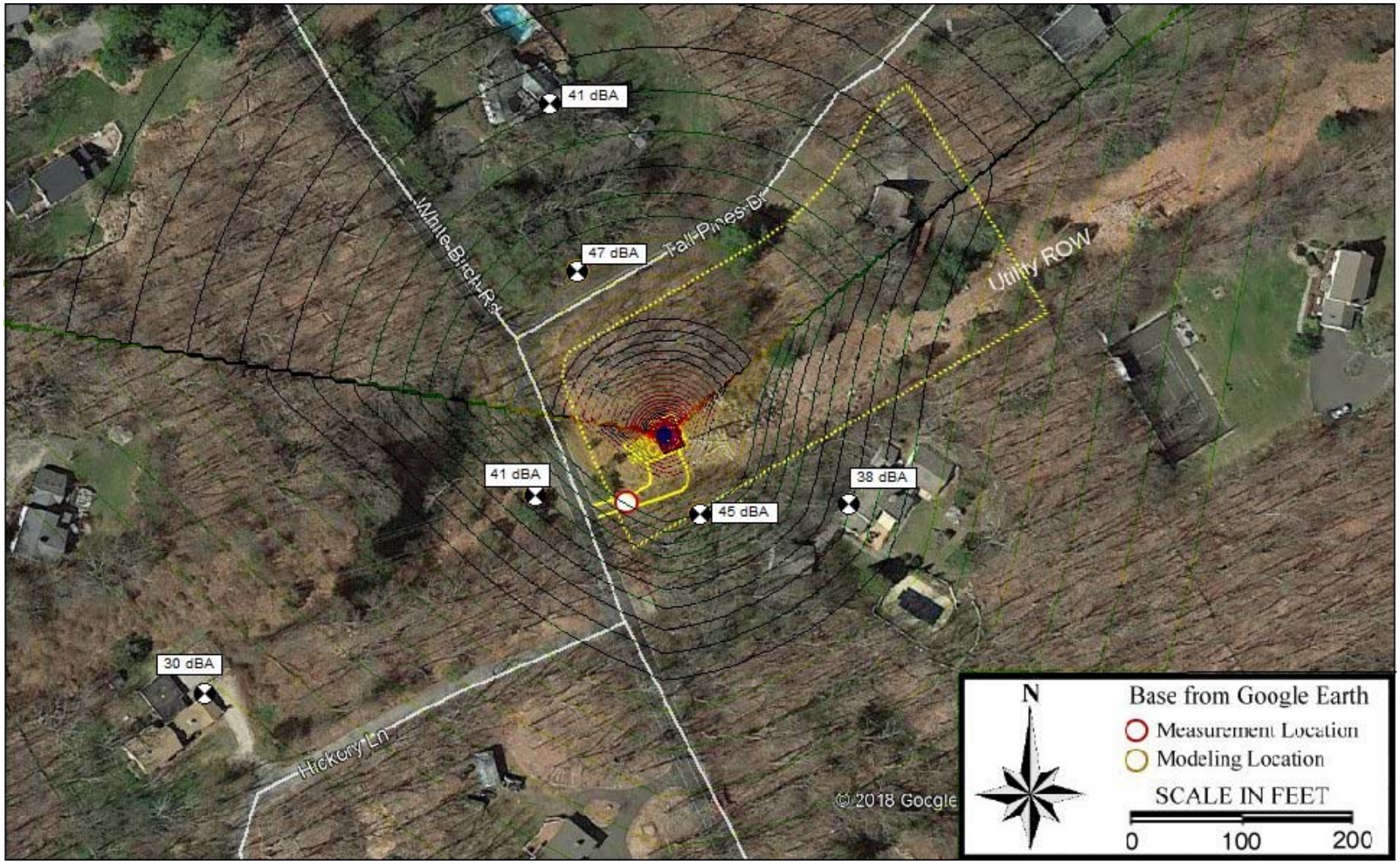


**Figure 5:** Graphical Summary of the Modeling Results Under Worst-Case Operating Conditions

2

# WIRELESS COMMUNICATIONS FACILITY

# CTSR1845
# EVERSOURCE STRUCT. NO. 917
# 5 TALL PINES DRIVE
# WESTON, CT 06883

## PROJECT SCOPE

1. THE PROPOSED SCOPE OF WORK GENERALLY INCLUDES THE INSTALLATION OF A ±8'–0" x 8'–0" CONCRETE WALK–IN CABINET EQUIPMENT SHELTER, A PROPANE FUELED BACKUP POWER GENERATOR ON CONCRETE PADS, AND A ABOVE GROUND 250–GAL. PROPANE STORAGE TANK WITHIN A PROPOSED WIRELESS COMMUNICATIONS COMPOUND ADJACENT TO THE UTILITY TRANSMISSION TOWER STRUCTURE.
2. A TOTAL OF TWELVE (12) DIRECTIONAL PANEL ANTENNAS ARE TO BE MOUNTED ON A PROPOSED PIPE MAST ATTACHED TO THE EXISTING ±82' TALL EVERSOURCE STRUCTURE #917 AT A CENTERLINE ELEVATION OF 95' ABOVE GRADE LEVEL.
3. UTILITIES WILL BE ROUTED UNDERGROUND FROM WHITE BIRCH ROAD. ALL UTILITY WORK AND ROUTING TO BE COORDINATED AND APPROVED BY THE LOCAL UTILITY COMPANIES AND LAND OWNER.

## GENERAL NOTES

1. THE PROPOSED ANTENNA LOCATIONS AND HEIGHT PROVIDED BY AT&T.

## SITE DIRECTIONS

**FROM:** 500 ENTERPRISE DRIVE
ROCKY HILL, CONNECTICUT

**TO:** 5 TALL PINES DRIVE
WESTON, CT 06883

| | | |
|---|---|---|
| 1. | HEAD SOUTHEAST TOWARD CAPITAL BLVD. | 0.50 MI. |
| 2. | TURN LEFT ONTO CAPITAL BLVD. | 0.20 MI. |
| 3. | USE THE LEFT TWO LANES TO TURN LEFT ONTO STATE HWY 411. | 0.30 MI. |
| 4. | TURN LEFT TO MERGE ONTO I–91 S. | 0.30 MI. |
| 5. | MERGE ONTO I–91 S. | 9.40 MI. |
| 6. | TAKE EXIT 17 TO MERGE ONTO CT–15 S/WILBUR CROSS PKWY. | 43.20 MI. |
| 7. | TAKE EXIT 42 FOR CT–57 TOWARD WESTPORT/WESTON. | 0.10 MI. |
| 8. | TURN LEFT ONTO CT–57 N/WESTON RD. | 0.70 MI. |
| 9. | TURN RIGHT ONTO LYONS PLAINS RD. | 0.70 MI. |
| 10. | CONTINUE ONTO LYONS PLAINS RD. | 1.20 MI. |
| 11. | TURN RIGHT ONTO WHITE BIRCH RD. | 0.30 MI. |
| 12. | TURN LEFT ONTO TALL PINES DR. | 200 FT |

## VICINITY MAP

SCALE: 1" = 1000'

NORTH

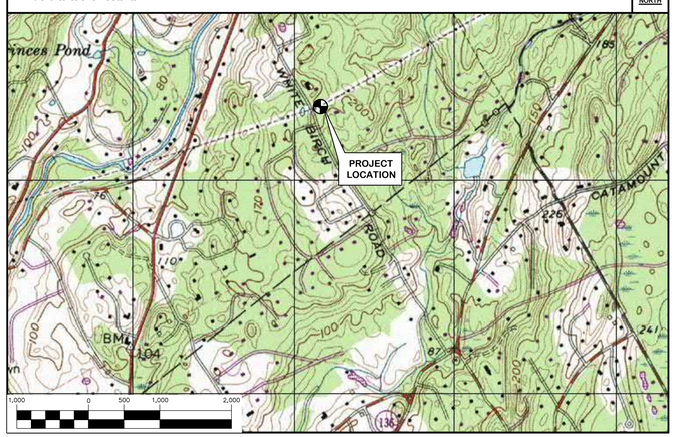


## PROJECT INFORMATION

| | |
|---|---|
| SITE NAME: | TALL PINES DRIVE |
| SITE ADDRESS: | EVERSOURCE STRUCT. NO. 917<br>5 TALL PINES DRIVE<br>WESTON, CT 06883 |
| PROPERTY OWNER: | DEAN & VICTORIA CARPENTER<br>5 TALL PINES DRIVE<br>WESTON, CT 06883 |
| LESSEE/TENANT: | AT&T MOBILITY<br>500 ENTERPRISE DRIVE, SUITE 3A<br>ROCKY HILL, CT 06067 |
| CONTACT PERSON: | MARK ROBERTS<br>AT&T MOBILITY<br>(860) 670–9068 |
| ENGINEER: | CENTEK ENGINEERING, INC.<br>63–2 NORTH BRANFORD ROAD,<br>BRANFORD, CT 06405<br>(203) 488–0580 |
| TOWER COORDINATES: | LATITUDE: 41°–11'–40.65" N<br>LONGITUDE: 73°–20'–52.92" W<br>EX. GROUND ELEVATION: 204.37'± A.M.S.L.<br>COORDINATES AND GROUND ELEVATION BASED ON FAA 1–A SURVEY CERTIFICATION PREPARED BY CENTEK ENGINEERING, INC. DATED 12/21/2018, |

## SHEET INDEX



| REV. | DATE | DRAWN BY | CHK'D BY | DESCRIPTION |
|---|---|---|---|---|
| 3 | 01/16/20 | CAG | TJR | CSC – REVISED PER INTERROGATORIES – 2ND ROUND |
| 2 | 11/11/19 | CAG | TJL | CSC – REVISED PER INTERROGATORIES |
| 1 | 09/20/19 | TJL | CAG | CSC – REVISED TO MATCH FINAL CDS |
| 0 | 03/14/19 | KAW | CAG | CSC – ISSUED FOR CLIENT REVIEW |

PROFESSIONAL ENGINEER SEAL


CENTEK engineering
Centered on Solutions™
(203) 488-0580
(203) 488-8587 Fax
63-2 North Branford Road
Branford, CT 06405
www.CentekEng.com


AT&T MOBILITY

WIRELESS COMMUNICATIONS FACILITY

TALL PINES DRIVE

SITE NUMBER: CTSR1845

5 TALL PINES DRIVE
WESTON, CT 06883

DATE: 03/14/19
SCALE: AS NOTED
JOB NO. 18123.00

TITLE SHEET

T–1

Sheet No. 1 of 7

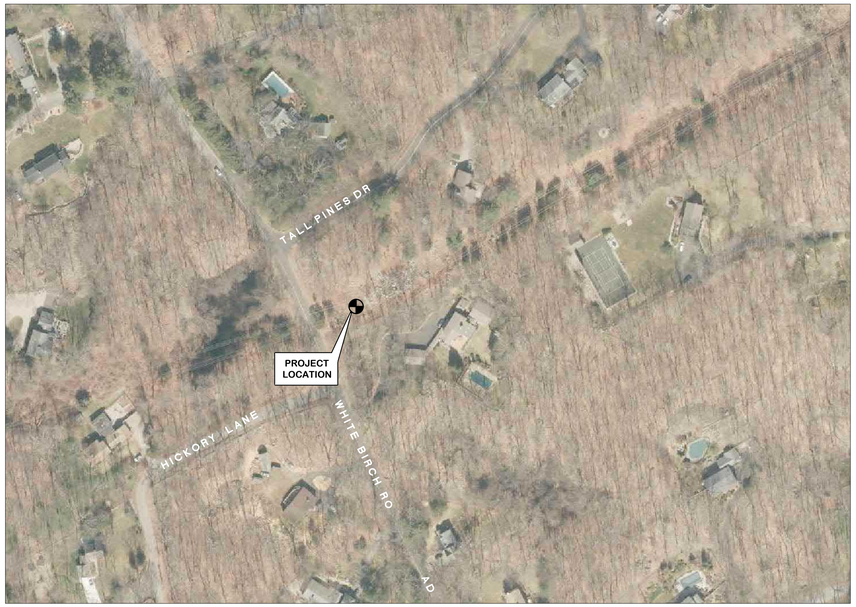


1 C-1 **AERIAL LOCATION MAP**
SCALE: 1" = 130'

GRAPHIC SCALE
130 0 65 130 260 520
( IN FEET )
1 inch = 130 ft.

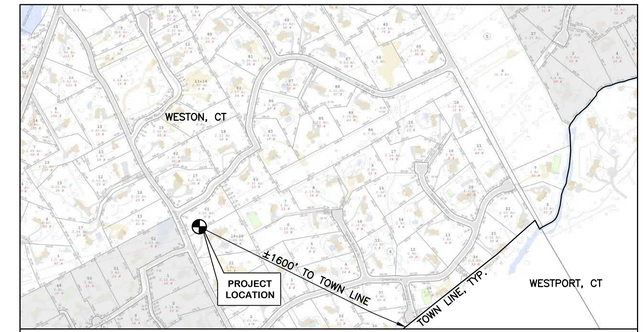


**MUNICIPALITY NOTIFICATION LIMIT MAP**


1 C-1 **ABUTTERS MAP**
SCALE: 1" = 50'

NORTH

GRAPHIC SCALE
50 0 25 50 100 200
( IN FEET )
1 inch = 50 ft.

## MISCELLANEOUS SITE INFORMATION

| | | |
|---|---|---|
| DISTANCE TO NEAREST OFF SITE RESIDENCE* | = | 104'± |
| DISTANCE TO NEAREST MUNICIPALITY (WESTPORT, CT)** | = | 1,600'± |
| ACCESS LENGTH OFF WHITE BIRCH ROAD | = | 108'± |
| NUMBER OF EXISTING RESIDENTIAL STRUCTURES WITHIN 1000' OF TOWER | = | 30± |
| TOTAL NUMBER OF TREES TO BE REMOVED | = | 0± |
| DISTANCE TO NEAREST PROPERTY LINE** | = | 42'± |

| SCHOOL/DAYCARE FACILITY PROXIMITY: | DISTANCE: |
|---|---|
| 1. WESTON HIGH SCHOOL | 1.90 mi. |
| 2. WESTON MIDDLE SCHOOL | 2.09 mi. |
| 3. WESTON INTERMEDIATE SCHOOL | 1.79 mi. |
| 4. COLEYTOWN MIDDLE SCHOOL | 1.17 mi. |
| 5. STEPPING STONES PRESCHOOL | 1.30 mi. |
| 6. COLEYTOWN ELEMENTARY SCHOOL | 1.31 mi. |
| 7. TEMPLE ISRAEL NURSERY SCHOOL | 1.32 mi. |
| 8. WESTPORT WESTON CO-OP NURSERY | 1.40 mi. |
| 9. NORFIELD CHILDRENS CENTER | 1.59 mi. |
| 10. ST. PAUL CHRISTIAN SCHOOL | 1.74 mi. |
| 11. HURBUTT ELEMENTARY SCHOOL | 1.76 mi. |
| 12. ST. FRANCIS OF ASSISI PRESCHOOL | 1.84 mi. |
| 13. EMMANUEL NURSERY SCHOOL | 1.86 mi. |
| 14. COMMUNITY NURSERY SCHOOL | 1.98 mi. |

** DISTANCES TAKEN FROM CENTER OF TOWER

| REV. | DATE | DRAWN BY | CHK'D BY | DESCRIPTION |
|---|---|---|---|---|
| 3 | 01/16/20 | CAG | TJR | CSC – REVISED PER INTERROGATORIES – 2ND ROUND |
| 2 | 11/11/19 | CAG | TJL | CSC – REVISED PER INTERROGATORIES |
| 1 | 09/20/19 | TJL | CAG | CSC – REVISED TO MATCH FINAL CDS |
| 0 | 03/14/19 | KAW | CAG | CSC – ISSUED FOR CLIENT REVIEW |

PROFESSIONAL ENGINEER SEAL

STATE OF CONNECTICUT
CRAIG A. GAUDREAU
27517
PROFESSIONAL ENGINEER

at&t

SAI communications

CENTEK engineering
Centered on Solutions™
(203) 488-0580
(203) 488-8587 Fax
63-2 North Branford Road
Branford, CT 06405
www.CentekEng.com

AT&T MOBILITY
WIRELESS COMMUNICATIONS FACILITY
**TALL PINES DRIVE**
**SITE NUMBER: CTSR1845**
**5 TALL PINES DRIVE**
**WESTON, CT 06883**

DATE: 03/14/19
SCALE: AS NOTED
JOB NO. 18123.00

ABUTTERS MAP

C-1

Sheet No. 3 of 7

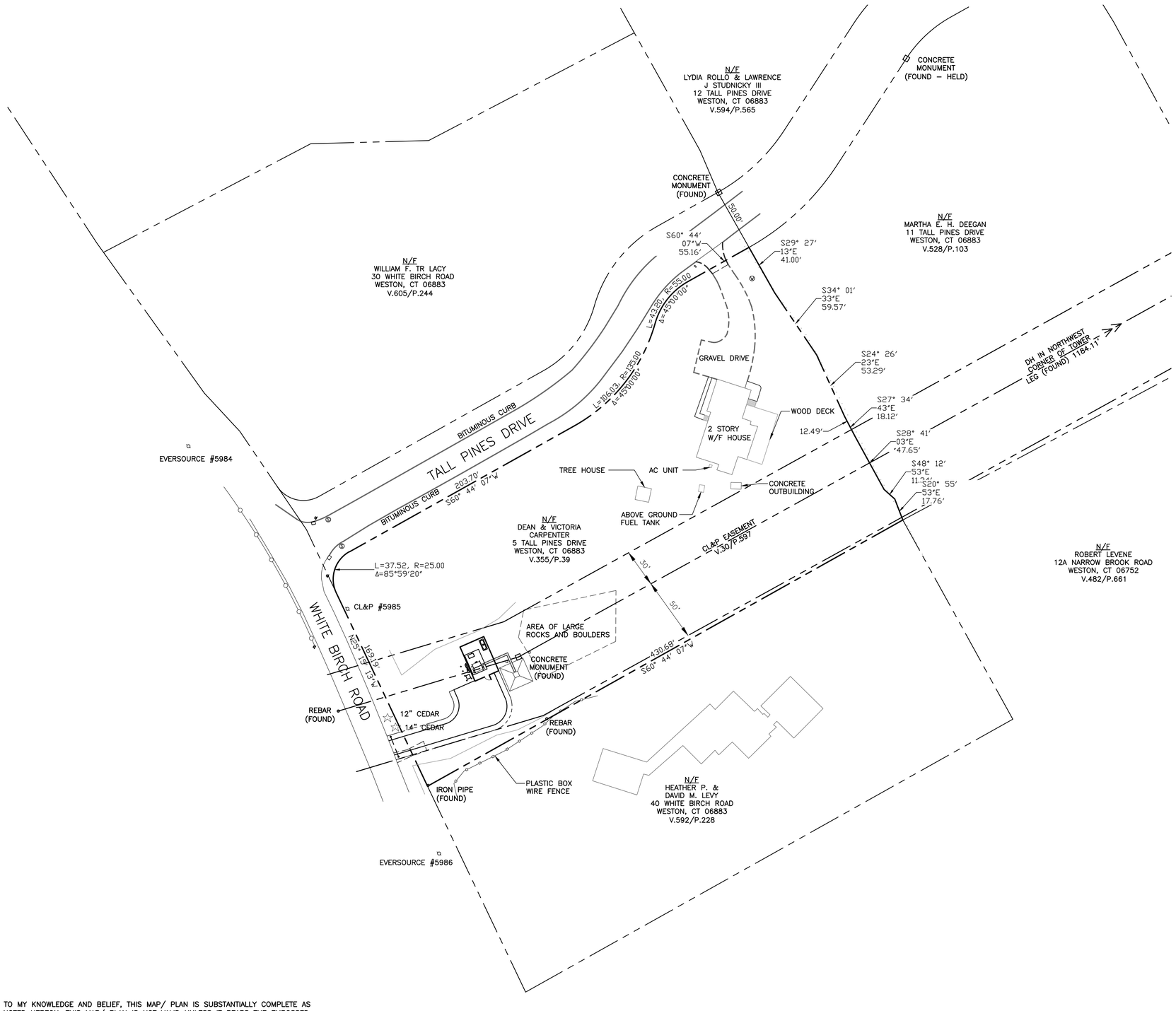


## SURVEY NOTES

THIS SURVEY AND MAP HAS BEEN PREPARED IN ACCORDANCE WITH SECTIONS 20–300B–1 THRU 20–300B–20 OF THE REGULATIONS OF CONNECTICUT STATE AGENCIES – "MINIMUM STANDARDS FOR SURVEYS AND MAPS IN THE STATE OF CONNECTICUT" AS ENDORSED BY THE CONNECTICUT ASSOCIATION OF LAND SURVEYORS, INC. ON SEPT. 26, 1996. IT IS AN SURVEY PLAN AND IS BASED UPON A DEPENDENT RESURVEY CONFORMING TO HORIZONTAL ACCURACY CLASS A–2 AND THE LIMITED TOPOGRAPHY SURVEY CONFORMS TO A VERTICAL ACCURACY OF CLASS NA AND IS INTENDED TO BE USED TO DEPICT THE LOCATION OF A PROPOSED TELECOMMUNICATIONS FACILITY.

COORDINATES REFER TO NAD 83.

VERTICAL DATUM IS BASED ON NGVD 88.

PARCEL OWNER OF RECORD: DEAN AND VICTORIA CARPENTER
5 TALL PINE DRIVE
WESTON, CT 06883
DEED REFERENCES: VOL. 355 P. 39&40

PARCEL AREA = 2.01 ACRES.

PARCEL IS IN "R" ZONING DISTRICT.

PARCEL ID: MAP 27 LOT 61 WESTON ASSESSOR'S OFFICE.

UTILITIES SHOWN AS MARKED IN FIELD, NO SUBSURFACE INVESTIGATION WAS PREFORMED.

SUBJECT PARCEL IS NOT IN A FLOOD ZONE AS SHOWN OF THE FLOOD INSURANCE RATE MAP, FAIRFIELD COUNTY, CONNECTICUT PANEL 403 OF 606, MAP 09001C0403F, EFFECTIVE DATE JUNE 18, 2010, BY THE FEDERAL EMERGENCY MANAGEMENT AGENCY.

NOT ALL IMPROVEMENTS SHOWN.

## MAP REFERENCES

1) MAP ENTITLED "SUBDIVISION MAP OF PROPERTY PREPARED FOR STEVEN KIMBALL–SMITH". SCALE: 1"= 40'. REVISED JUNE 28, 1978. MAP IS ON FILE IN THE WESTON TOWN CLERK'S OFFICE #2538

2) MAP ENTITLED "SUBDIVISION MAP OF PROPERTY PREPARED FOR JOHN D. PELLEGRINO & EDITH M. DORFMAN". BY SHAUGHNESSY AND PLAIN LAND SURVEYORS. SCALE: 1"= 40'. REVISED OCTOBER 2, 1981. MAP IS ON FILE IN THE WESTON TOWN CLERK'S OFFICE #2725

3) MAP ENTITLED "MAP OF PROPERTY TO BE ACQUIRED BY RICHARD L. SCHEIDKER, FROM SAMUEL W. ANDERSON". 1"= 40'. REVISED JUNE 28, 1978. MAP IS ON FILE IN THE WESTON TOWN CLERK'S OFFICE #594

4) MAP ENTITLED "LOCATION OF RIGHT OF WAY OF THE CONNECTICUT LIGHT AND POWER COMPANY ACROSS THE PROPERTY OS SALOME THORP, TOWN OF WESTON, COUNTY OF FAIRFIELD, STATE OF CONNECTICUT, SCALE 1"=200', DATED MAY 1923.

## SYMBOLS LEGEND

- SUBJECT PROPERTY LINE
- ABUTTER PROPERTY LINE
- UTILITY R.O.W EASEMENT
- WOOD/WIRE GUARD RAIL
- BOX WIRE FENCE
- TREE LINE
- ROAD/ DRIVE
- UTILITY POLE
- CONIFEROUS TREE
- "C" CATCH BASIN
- "CL" CATCH BASIN
- DRAINAGE MANHOLE
- WELL
- SIGN POST

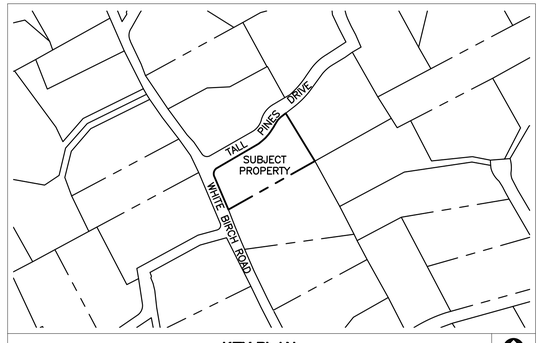


KEY PLAN
SCALE: 1" = 300'
NORTH

TO MY KNOWLEDGE AND BELIEF, THIS MAP/ PLAN IS SUBSTANTIALLY COMPLETE AS NOTED HEREON. THIS MAP/ PLAN IS NOT VALID UNLESS IT BEARS THE EMBOSSED TYPE SEAL OVER A LIVE SIGNATURE OF THE SURVEYOR WHOSE NAME AND LICENSE NUMBER APPEARS ON THIS MAP/ PLAN.

DERRICK R. SCHULL P.E., L.S. #15566 DATE

GRAPHIC SCALE
40 0 20 40 80 160
( IN FEET )
1 inch = 40 ft.

| REV. | DATE | DRAWN BY | CHK'D BY | DESCRIPTION |
|---|---|---|---|---|
| 3 | 01/16/20 | CAG | TJR | CSC – REVISED PER INTERROGATORIES – 2ND ROUND |
| 2 | 11/11/19 | CAG | TJL | CSC – REVISED PER INTERROGATORIES |
| 1 | 09/20/19 | TJL | CAG | CSC – REVISED TO MATCH FINAL CDS |
| 0 | 03/14/19 | KAW | CAG | CSC – ISSUED FOR CLIENT REVIEW |

PROFESSIONAL ENGINEER SEAL

STATE OF CONNECTICUT
CAMILLO A. GIORDANO
LICENSED
PROFESSIONAL ENGINEER
No. 22517
COMMONWEALTH OF PENNSYLVANIA

at&t

SAI communications

CENTEK engineering
Centered on Solutions
(203) 488-0580
(203) 488-8587 Fax
63-2 North Branford Road
Branford, CT 06405
www.CentekEng.com

AT&T MOBILITY
WIRELESS COMMUNICATIONS FACILITY
TALL PINES DRIVE
SITE NUMBER: CTSR1845
5 TALL PINES DRIVE
WESTON, CT 06883

DATE: 03/14/19
SCALE: AS NOTED
JOB NO. 18123.00

SITE SURVEY PLAN

C-1A

Sheet No. 4 of 7

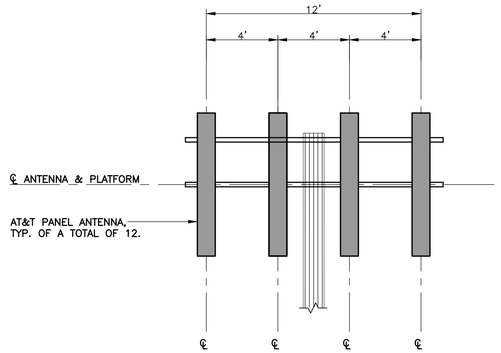


ELEVATION

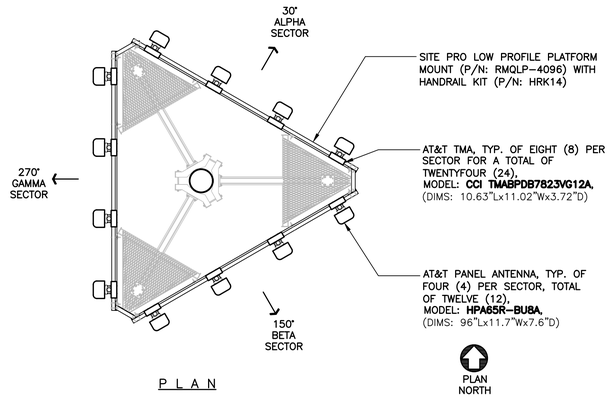


PLAN

## 2 / C-2 ANTENNA CONFIGURATION DETAILS

SCALE: 1/4" = 1' - 0"

## RF EQUIPMENT TABLE

| SECTOR | PANEL ANTENNAS | | | | | FILTER | FROM TMA | | | | TMA | | FROM SHELTER | |
|---|---|---|---|---|---|---|---|---|---|---|---|---|---|---|
| | AZIMUTH | QTY. | MAKE: MODEL | RAD CENTER (AGL) | DOWNTILT | QTY. | COAX QTY. | COAX SIZE | COAX LENGTH | RET QTY. | QTY. | MAKE & MODEL | COAX QTY. | FIBER & DC LENGTH |
| ALPHA | 30° | 4 | CCI: HPA65R-BU8A | 95.0' | 0°M/0°E | 0 | 16 | 1-5/8" Ø | 169' ± | 0 | 8 | CCI TMABPDB7823VG12A | 48 | 169' ± |
| BETA | 150° | 4 | CCI: HPA65R-BU8A | 95.0' | 0°M/0°E | 0 | 16 | 1-5/8" Ø | 169' ± | 0 | 8 | CCI TMABPDB7823VG12A | | 169' ± |
| GAMMA | 270° | 4 | CCI: HPA65R-BU8A | 95.0' | 0°M/0°E | 0 | 16 | 1-5/8" Ø | 169' ± | 0 | 8 | CCI TMABPDB7823VG12A | | 169' ± |

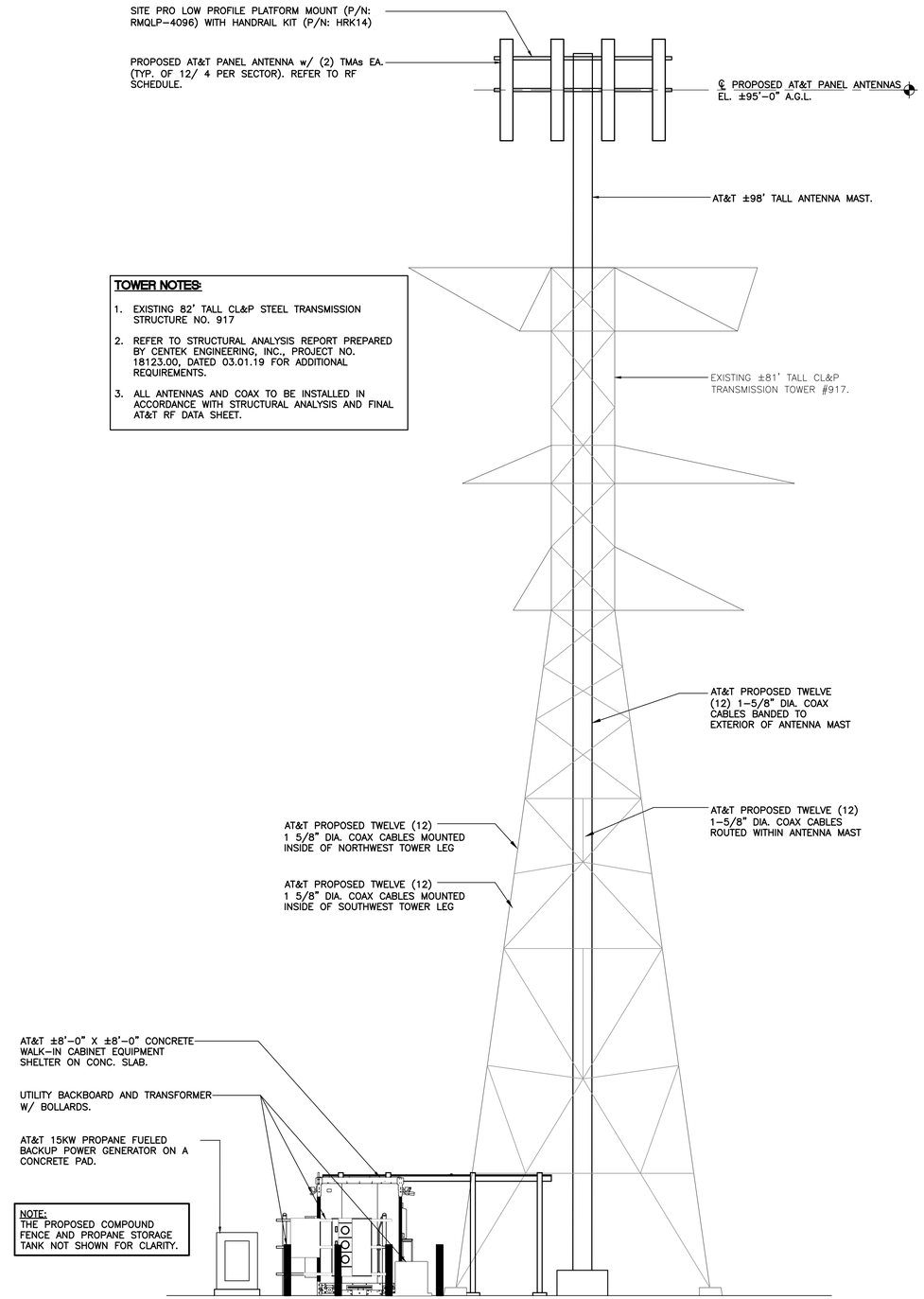


**TOWER NOTES:**

1. EXISTING 82' TALL CL&P STEEL TRANSMISSION STRUCTURE NO. 917
2. REFER TO STRUCTURAL ANALYSIS REPORT PREPARED BY CENTEK ENGINEERING, INC., PROJECT NO. 18123.00, DATED 03.01.19 FOR ADDITIONAL REQUIREMENTS.
3. ALL ANTENNAS AND COAX TO BE INSTALLED IN ACCORDANCE WITH STRUCTURAL ANALYSIS AND FINAL AT&T RF DATA SHEET.

NOTE:
THE PROPOSED COMPOUND FENCE AND PROPANE STORAGE TANK NOT SHOWN FOR CLARITY.

## 1 / C-2 WEST ELEVATION

SCALE: 3/16" = 1' - 0"

| REV. | DATE | DRAWN BY | CHK'D BY | DESCRIPTION |
|---|---|---|---|---|
| 3 | 01/16/20 | CAG | TJR | CSC - REVISED PER INTERROGATORIES - 2ND ROUND |
| 2 | 11/11/19 | CAG | TJL | CSC - REVISED PER INTERROGATORIES |
| 1 | 09/20/19 | TJL | CAG | CSC - REVISED TO MATCH FINAL CDS |
| 0 | 03/14/19 | KAW | CAG | CSC - ISSUED FOR CLIENT REVIEW |

PROFESSIONAL ENGINEER SEAL

STATE OF CONNECTICUT · STANDARD OF VIRGINIA · CHRISTOPHER A. GRAVELINE · No. 23517 · PROFESSIONAL ENGINEER

at&t

SAI communications


CENTEK engineering
Centered on Solutions™
(203) 488-0580
(203) 488-8587 Fax
63-2 North Branford Road
Branford, CT 06405
www.CentekEng.com


AT&T MOBILITY

WIRELESS COMMUNICATIONS FACILITY

TALL PINES DRIVE

SITE NUMBER: CTSR1845

5 TALL PINES DRIVE
WESTON, CT 06883

DATE: 03/14/19
SCALE: AS NOTED
JOB NO. 18123.00

ELEVATION AND ANTENNA CONFIGURATION

C-2

Sheet No. 5 of 7

## GRADING PLAN SYMBOLS LEGEND

- ACCESS/UTILITY EASEMENT LINE (PROPOSED)
- UTILITY EASEMENT LINE (EXISTING)
- ACCESS DRIVE (PROPOSED)
- 650 CONTOUR LINE
- 650 GRADING LINE
- COMPOUND FENCE LINE
- X 283 SPOT ELEVATION (PROPOSED)
- SILTATION FENCE

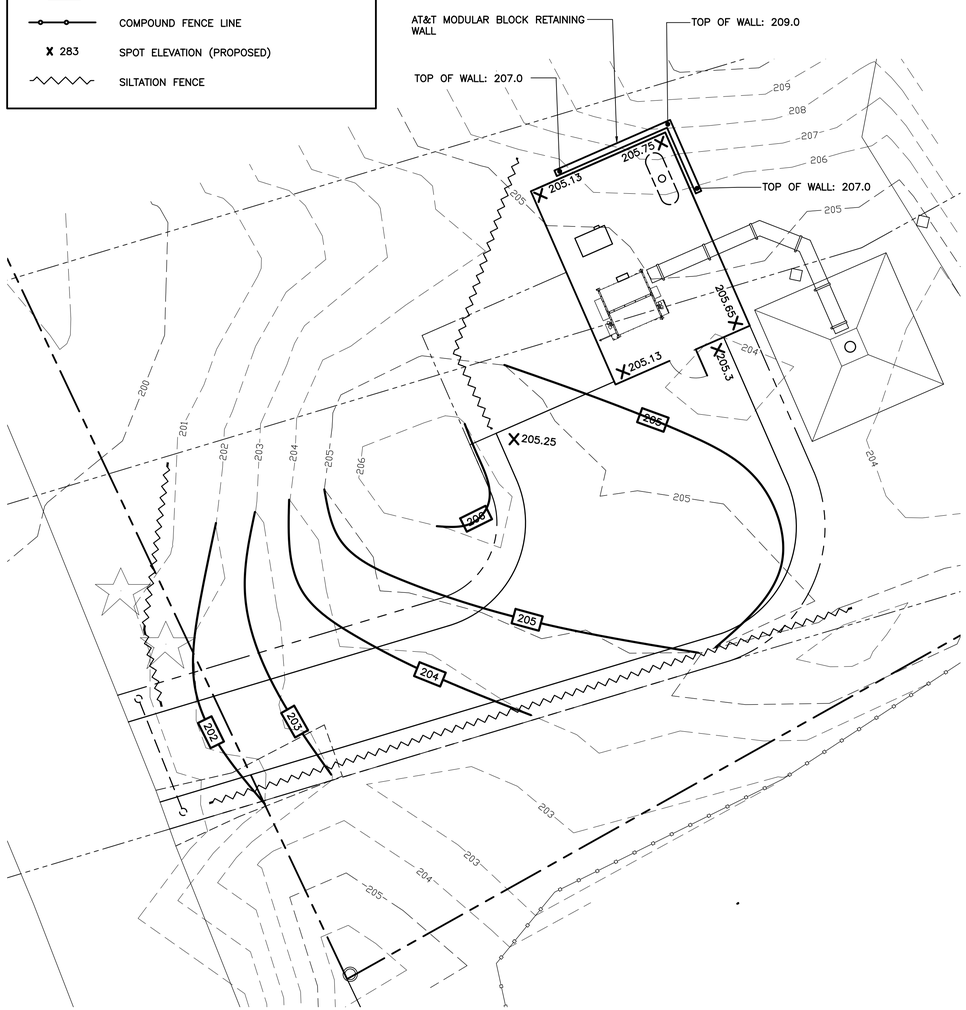


2 C-3 **PARTIAL SITE/ GRADING PLAN**
SCALE: 1" = 10'- 0"

TRUE NORTH

GRAPHIC SCALE
10 0 5 10 20 40
( IN FEET )
1 inch = 10 ft.

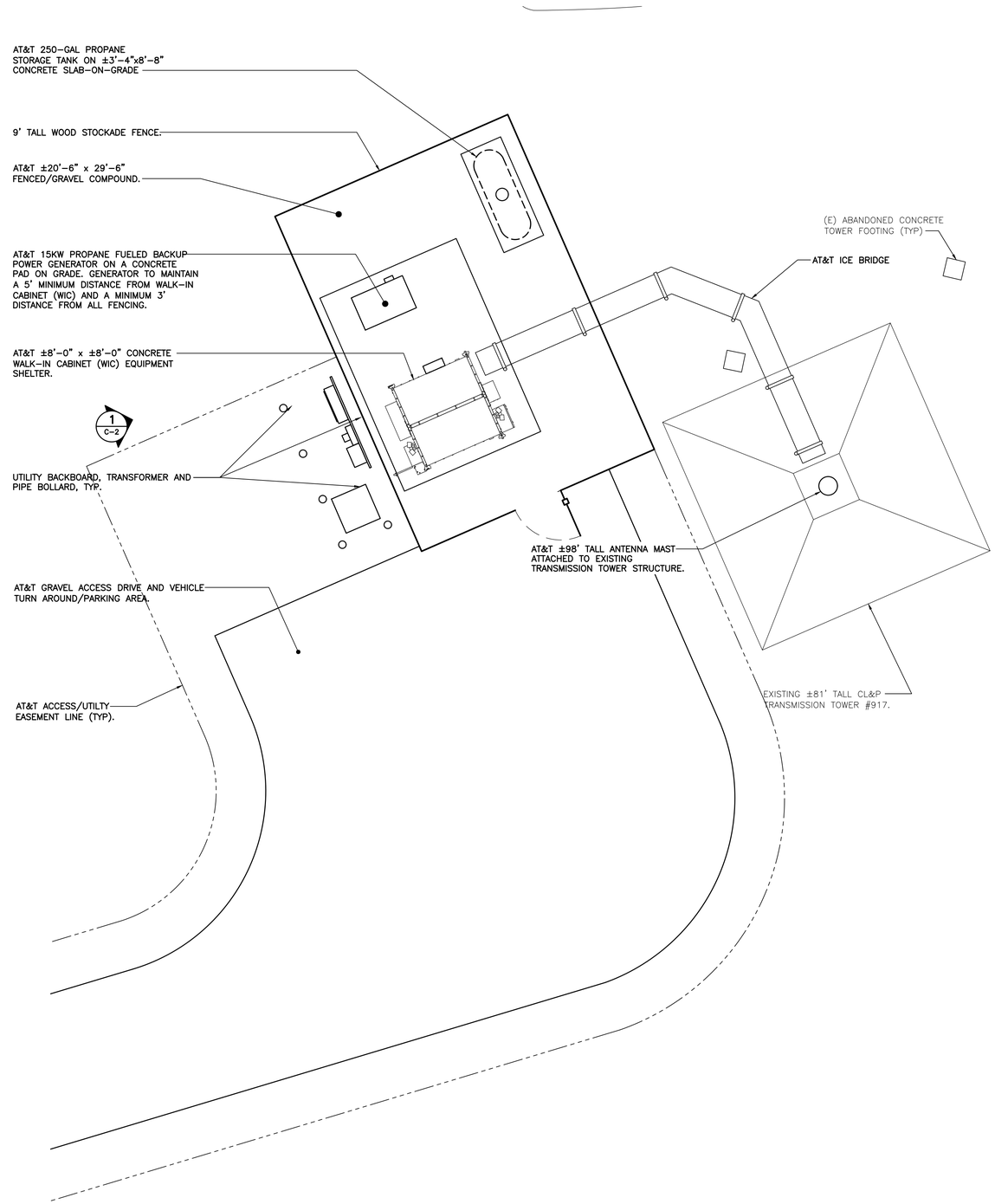


1 C-3 **EQUIPMENT COMPOUND PLAN**
SCALE: 1" = 5'

TRUE NORTH

GRAPHIC SCALE
5 0 2.5 5 10 20
( IN FEET )
1 inch = 5 ft.

| REV. | DATE | DRAWN BY | CHK'D BY | DESCRIPTION |
|---|---|---|---|---|
| 3 | 01/16/20 | CAG | TJR | CSC – REVISED PER INTERROGATORIES – 2ND ROUND |
| 2 | 11/11/19 | CAG | TJL | CSC – REVISED PER INTERROGATORIES |
| 1 | 09/20/19 | TJL | CAG | CSC – REVISED TO MATCH FINAL CDS |
| 0 | 03/14/19 | KAW | CAG | CSC – ISSUED FOR CLIENT REVIEW |

PROFESSIONAL ENGINEER SEAL

STATE OF CONNECTICUT · CHRISTOPHER A. GRAVES · No. 27517 · LICENSED PROFESSIONAL ENGINEER

at&t

SAI communications


CENTEK engineering
Centered on Solutions
(203) 488-0580
(203) 488-8587 Fax
63-2 North Branford Road
Branford, CT 06405
www.CentekEng.com


AT&T MOBILITY

WIRELESS COMMUNICATIONS FACILITY

# TALL PINES DRIVE

## SITE NUMBER: CTSR1845

5 TALL PINES DRIVE
WESTON, CT 06883

DATE: 03/14/19
SCALE: AS NOTED
JOB NO. 18123.00

**COMPOUND PLAN AND PARTIAL SITE / GRADING PLAN**

C-3

Sheet No. 6 of 7

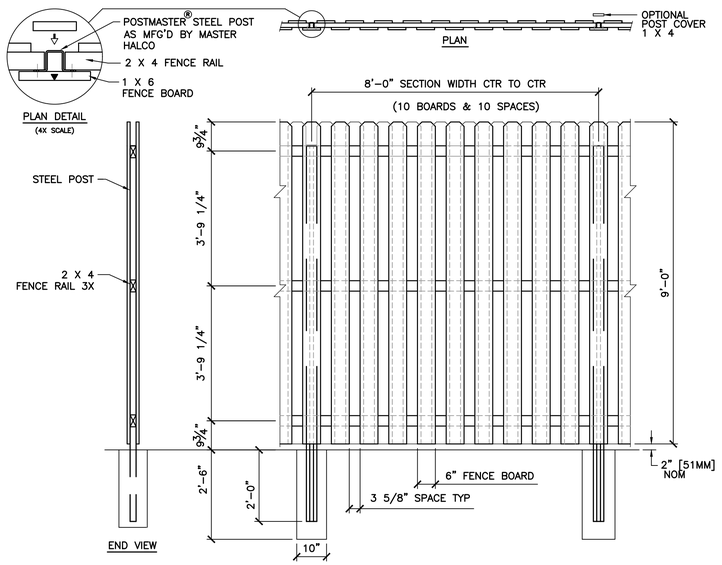


6 C-4 **FENCE DETAIL**
NOT TO SCALE

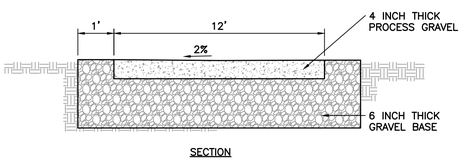


8 C-4 **GRAVEL SURFACE PARKING AREA AND ACCESS DRIVE**
NOT TO SCALE

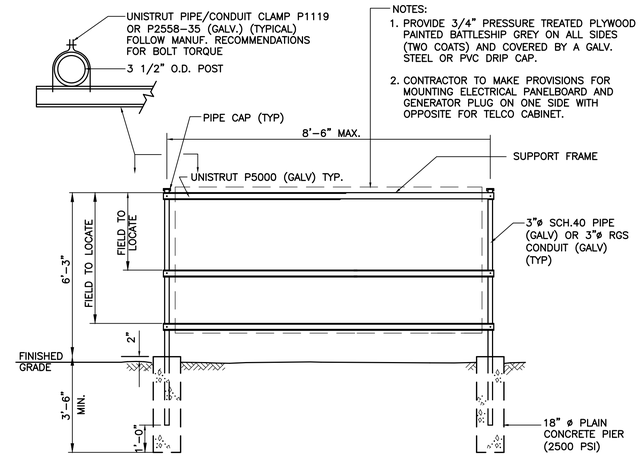


5 C-4 **UTILITY SUPPORT FRAME (TYP)**
NOT TO SCALE

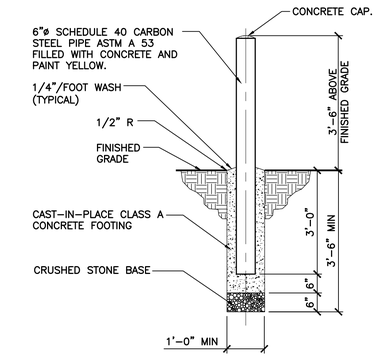


3 C-4 **BOLLARD DETAIL**
NOT TO SCALE

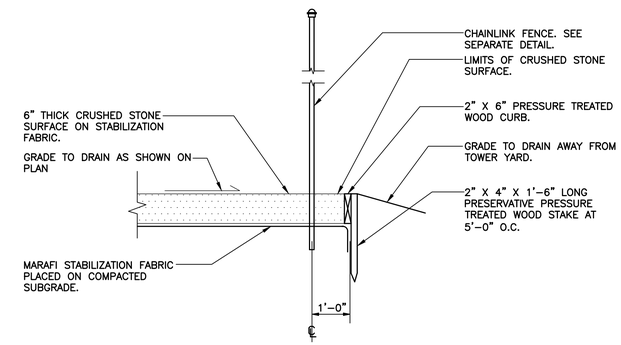


2 C-4 **COMPOUND SURFACING DETAIL**
NOT TO SCALE

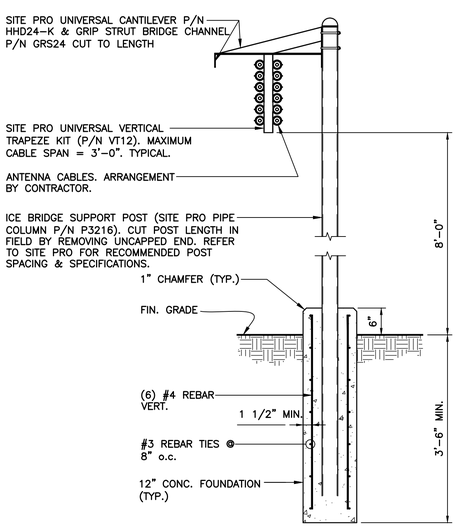


7 C-4 **ICE BRIDGE DETAIL**
NOT TO SCALE

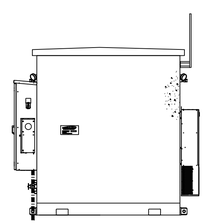

NORTHWEST ELEVATION

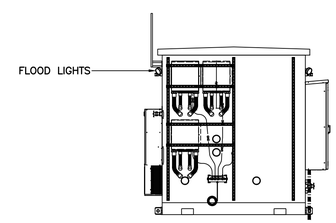


SOUTHWEST ELEVATION

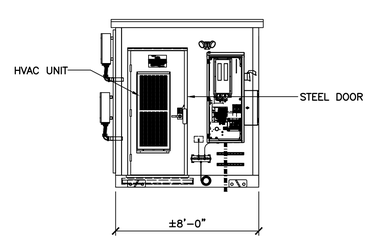


SOUTHEAST ELEVATION

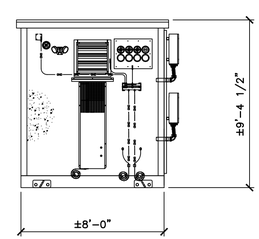


NORTHEAST ELEVATION

4 C-4 **EQUIPMENT SHELTER ELEVATIONS**
SCALE: 1/4" = 1'-0"

GRAPHIC SCALE
4 0 2 4 8 16
( IN FEET )
1 inch = 4 ft.

| BACKUP DC POWER GENERATOR | | | | |
|---|---|---|---|---|
| EQUIPMENT | FUEL | ENCLOSURE | DIMENSIONS | WEIGHT (LBS) |
| MAKE: POLAR<br>MODEL: 8340-100-LP-15-03 | PROPANE | TYPE: WETHER PROTECTIVE<br>MODEL: 88-25-0100 | 54"L x 38"W x 38"H | 680 |
| NOTES:<br>1. CONTRACTOR TO COORDINATE FINAL EQUIPMENT MODEL SELECTION AND ALL OPTIONAL FEATURES WITH AT&T CONSTRUCTION MANAGER PRIOR TO ORDERING. | | | | |

1 C-4 **BACK-UP GENERATOR DETAIL**
NOT TO SCALE

| REV. | DATE | DRAWN BY | CHK'D BY | DESCRIPTION |
|---|---|---|---|---|
| 3 | 01/16/20 | CAG | TJR | CSC - REVISED PER INTERROGATORIES - 2ND ROUND |
| 2 | 11/11/19 | CAG | TJL | CSC - REVISED PER INTERROGATORIES |
| 1 | 09/20/19 | TJL | CAG | CSC - REVISED TO MATCH FINAL CDS |
| 0 | 03/14/19 | KAW | CAG | CSC - ISSUED FOR CLIENT REVIEW |

PROFESSIONAL ENGINEER SEAL

at&t

SAI communications

CENTEK engineering
Centered on Solutions™
(203) 488-0580
(203) 488-8587 Fax
63-2 North Branford Road
Branford, CT 06405
www.CentekEng.com

AT&T MOBILITY
WIRELESS COMMUNICATIONS FACILITY

TALL PINES DRIVE
SITE NUMBER: CTSR1845
5 TALL PINES DRIVE
WESTON, CT 06883

DATE: 03/14/19
SCALE: AS NOTED
JOB NO. 18123.00

TYPICAL DETAILS

C-4

Sheet No. 7 of 7

## CONCRETE SLAB NOTES:

1. SLAB TOLERANCE IS 1/4"±.
2. REFER TO NOTES ON DWG. N-1 FOR ADDITIONAL REQUIREMENTS.
3. PER NEC REQUIREMENTS, THE REBAR IN FOUNDATION AND FOOTING SHALL BE BONDED TO GROUND RING WITH A #2 AWG SOLID CONDUCTOR USING LISTED AND APPROVED METHODS.
4. PROVIDE PVC SLEEVES FOR UTILITY CONDUIT PASSAGE THROUGH FOUNDATION OR CAST CONDUITS IN PLACE. REFER TO ELECTRICAL DRAWINGS FOR CONDUIT SIZES AND QUANTITIES.

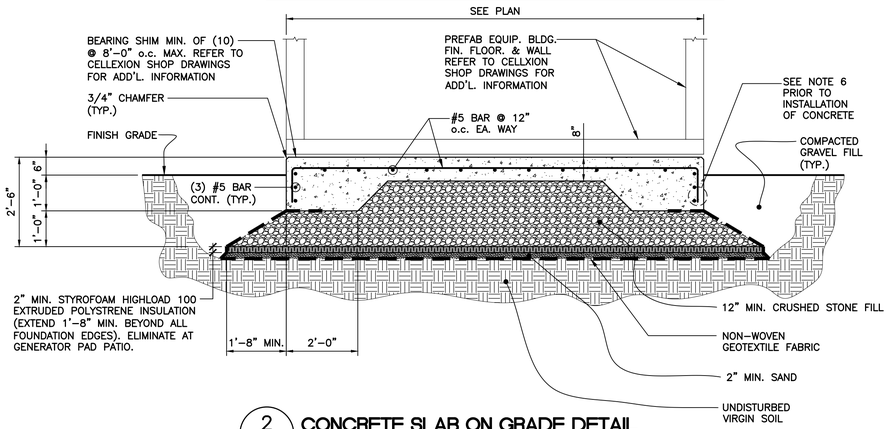


## 2 / C-5 CONCRETE SLAB ON GRADE DETAIL

SCALE: 1/2"=1'-0"

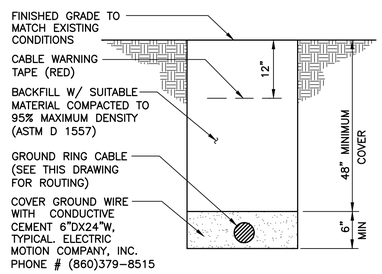


NOTES:

1. BACK FILL SHALL NOT CONTAIN ASHES, CINDERS, SHELLS, FROZEN MATERIAL, LOOSE DEBRIS OR STONES LARGER THAN 2" IN MAXIMUM DIMENSION.
2. WHERE EXISTING UTILITIES ARE LIKELY TO BE ENCOUNTERED, CONTRACTOR SHALL HAND DIG AND PROTECT EXISTING UTILITIES.

## 4 / C-5 TYPICAL BURIAL GROUND CABLE DETAIL

NOT TO SCALE

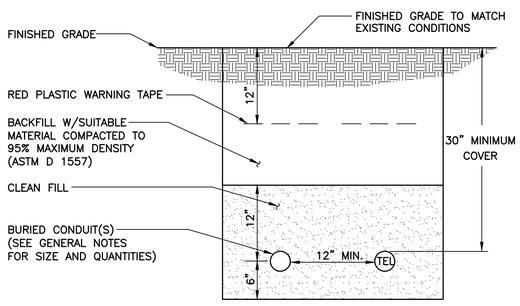


NOTES:

1. THE CLEAN FILL SHALL PASS THROUGH A 3/8" MESH SCREEN AND SHALL NOT CONTAIN SHARP STONES. OTHER BACKFILL SHALL NOT CONTAIN ASHES, CINDERS, SHELLS, FROZEN MATERIAL, LOOSE DEBRIS OR STONES LARGER THAN 2" IN MAXIMUM DIMENSION.
2. WHERE EXISTING UTILITIES ARE LIKELY TO BE ENCOUNTERED, CONTRACTOR SHALL HAND DIG AND PROTECT EXISTING UTILITIES.

## 5 / C-5 TYPICAL ELECTRICAL/TEL TRENCH DETAIL

NOT TO SCALE

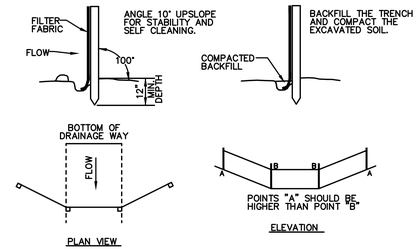


SOURCE: U.S. DEPARTMENT OF AGRICULTURE, SOIL CONSERVATION SERVICE, STORRS, CONNECTICUT

## 1 / C-5 SILTATION FENCE DETAIL

NOT TO SCALE

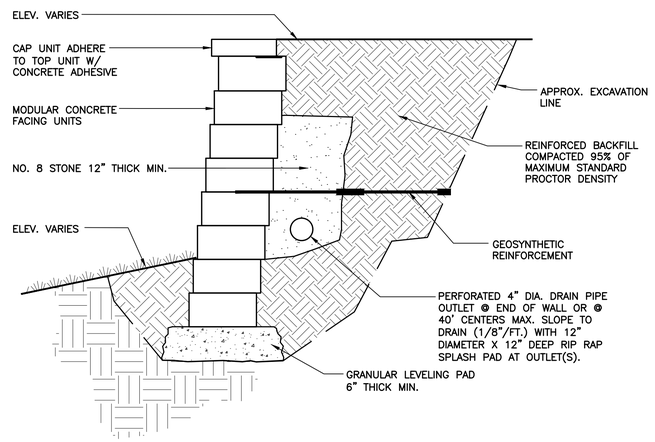


## SEGMENTAL RETAINING WALL NOTES:

1. STRIP VEGETATION AND ORGANIC SOIL FROM WALL AND GEOSYNTHETIC ALIGNMENT.
2. BENCH CUT ALL EXCAVATED SLOPES.
3. DO NOT OVER EXCAVATE UNLESS DIRECTED BY SITE SOIL ENGINEER TO REMOVE UNSUITABLE SOIL.
4. SITE SOIL ENGINEER SHALL VERIFY FOUNDATION SOILS AS BEING COMPETENT PER THE DESIGN STANDARDS AND PARAMETERS.
5. BASE SHALL CONSIST OF COMPACTED GRAVEL, 6" THICK MINIMUM.
6. CONTRACTOR MAY OPT FOR A LEAN CONCRETE PAD. CONCRETE PAD SHALL BE UNREINFORCED, 4" THICK.
7. MINIMUM EMBEDMENT OF WALL BELOW FINISHED GRADE SHALL BE (2) COURSES OF BLOCK.
8. FOLLOW APPLICABLE PROVISIONS OF THE WALL MANUFACTURER'S INSTALLATION INSTRUCTIONS AND WRITTEN SPECIFICATIONS.
9. NUMBER 8 CRUSHED STONE SHALL BE INSTALLED BEHIND THE WALL UP TO 18" FROM THE TOP OF THE WALL. CRUSHED STONE SHALL NOT EXTEND BELOW FINISHED GRADE IN FRONT OF THE WALL.
10. WHERE DRAIN PIPE IS USED, PROVIDE OUTLETS @ MAXIMUM 40 FT O.C.
11. FOR UNITS TO BE EMBEDED, COMPACT FIOLL IN FRONT OF UNITS AT THE SAME TIME BACKFILL BEHIND UNITS IS COMPACTED.
12. COMPACTION TESTS SHALL BE TAKEN AS THE WALL IS INSTALLED. THE MINIMUM NUMBER OF TESTS SHALL BE DETERMINED BY THE ENGINEER.
13. COMPACTION SHALL BE TO 95% OF MAXIMUM STAANDARD PROCTOR DENSITY. (ASTM D-698)
14. REFER TO MANUFACTURER SHOP DRAWINGS FOR GEOSYNTHETIC TYPE, LENGTH AND LOCATION REQUIRED. PULL GEOSYNTHETIC TIGHT PRIOR TO BACKFILLING. GEOSYNTHETIC SHALL BE PLACED WITH STRONGEST DIRECTION PERPENDICULAR TO WALL. FOLLOW GEOSYNTHETIC MANUFACTURER'S INSTALLATION INSTRUCTIONS AND WRITTEN SPECIFICATIONS.
15. THE CONTRACTOR SHALL SUBMIT SHOP DRAWINGS SHOWING THE COMPLETE WALL SYSTEM AND ALL DETAILS BASED ON THE ACTUAL SOILS IN THE FIELD. THE SHOP DRAWINGS SHALL BE SIGNED AND SEALED BY A PROFESSIONAL ENGINEER LICENSED IN THE STATE OF CONNECTICUT.
16. IF CONDITIONS ARE DIFFERENT THAN THOSE STATED IN THESE DRAWINGS AND SPECIFICATIONS, THE CONTRACTOR MUST CONTACT ENGINEER PRIOR TO PROCEEDING WITH THE CONSTRUCTION OF THE WALL.

## 3 / C-5 SEGMENTAL RETAINING WALL DETAIL

NOT TO SCALE

## GENERAL CONSTRUCTION / PRE-CONSTRUCTION NOTES

1. PRIOR TO COMMENCEMENT OF ANY CONSTRUCTION ACTIVITIES, A MANDITORY ON-SITE PRE-CONSTRUCTION MEETING SHALL BE CONDUCTED WITH THE SITE OWNER'S CONSTRUCTION MANAGER AND CONTRACTOR'S CONSTRUCTION MANAGER.

## GENERAL CONSTRUCTION SEQUENCE

THIS IS A GENERAL CONSTRUCTION SEQUENCE OUTLINE SOME ITEMS OF WHICH MAY NOT APPLY TO PARTICULAR SITES.

1. CUT AND STUMP AREAS OF PROPOSED CONSTRUCTION.
2. INSTALL TEMPORARY SEDIMENT AND EROSION CONTROL MEASURES AS REQUIRED.
3. REMOVE AND STOCKPILE TOPSOIL. STOCKPILE SHALL BE SEEDED TO PREVENT EROSION.
4. CONSTRUCT DRAINAGE CONTROL SYSTEM.
5. PERFORM SITE GRADING, PLACING SILITATION FENCES AS REQUIRED TO CONTROL SOIL EROSION.
6. INSTALL UNDERGROUND UTILITIES.
7. BEGIN TEMPORARY AND PERMANENT SEEDING AND MULCHING. ALL CUT AND FILL SLOPES SHALL BE SEEDED OR MULCHED IMMEDIATELY AFTER THEIR CONSTRUCTION. NO AREA SHALL BE LEFT UNSTABILIZED FOR A TIME PERIOD OF MORE THAN 30 DAYS.
8. DAILY, OR AS REQUIRED, CONSTRUCT, INSPECT, AND IF NECESSARY, RECONSTRUCT TEMPORARY BERMS, DRAINS, DITCHES, SILT FENCES AND SEDIMENT TRAPS INCLUDING MULCHING AND SEEDING.
9. BEGIN EXCAVATION FOR AND CONSTRUCTION OF TOWERS AND PLATFORMS.
10. FINISH PAVING ALL ROADWAYS, DRIVES, AND PARKING AREAS.
11. COMPLETE PERMANENT SEEDING AND LANDSCAPING.
12. NO FLOW SHALL BE DIVERTED TO ANY WETLANDS UNTIL A HEALTHY STAND OF GRASS HAS BEEN ESTABLISHED IN REGARDED AREAS.
13. AFTER GRASS HAS BEEN FULLY GERMINATED IN ALL SEEDED AREAS, REMOVE ALL TEMPORARY EROSION CONTROL MEASURES.

## SOIL EROSION AND SEDIMENT CONTROL SEQUENCE

1. ALL SOIL EROSION AND SEDIMENT CONTROL MEASURES, SUCH AS CONSTRUCTION ENTRANCE / ANTI TRACKING PAD, SILTATION FENCE, AND SILTATION FENCE / STRAW BALE SHALL BE IN PLACE PRIOR TO ANY GRADING ACTIVITY, INSTALLATION OF PROPOSED STRUCTURES OR UTILITIES. MEASURES SHALL BE LEFT IN PLACE AND MAINTAINED UNTIL CONSTRUCTION IS COMPLETED AND/OR AREA IS STABILIZED.
2. THE ENTRANCE TO THE PROJECT SITE IS TO BE PROTECTED BY STONE ANTI TRACKING PAD OF ASTM C-33, SIZE NO. 2 OR 3, OR D.O.T. 2" CRUSHED GRAVEL. THE STONE ANTI TRACKING PAD IS TO BE MAINTAINED AT ALL TIMES DURING THE CONSTRUCTION PERIOD.
3. LAND DISTURBANCE WILL BE KEPT TO A MINIMUM AND RESTABILIZATIONS WILL BE SCHEDULED AS SOON AS PRACTICAL.
4. ALL SOIL EROSION AND SEDIMENT CONTROL WORK SHALL BE DONE IN STRICT ACCORDANCE WITH THE CONNECTICUT GUIDELINES FOR EROSION AND SEDIMENT CONTROL INCLUDING THE LATEST DATE FROM THE COUNCIL ON SOIL AND WATER CONSERVATION.
5. ANY ADDITIONAL EROSION/SEDIMENTATION CONTROL DEEMED NECESSARY BY TOWN STAFF DURING CONSTRUCTION, SHALL BE INSTALLED BY THE DEVELOPER. IN ADDITION, THE DEVELOPER SHALL BE RESPONSIBLE FOR THE REPAIR/REPLACEMENT/MAINTENANCE OF ALL EROSION CONTROL MEASURES UNTIL ALL DISTURBED AREAS ARE STABILIZED TO THE SATISFACTION OF THE TOWN STAFF.
6. IN ALL AREAS, REMOVAL OF TREES, BUSHES AND OTHER VEGETATION AS WELL AS DISTURBANCE OF THE SOIL IS TO BE KEPT TO AN ABSOLUTE MINIMUM WHILE ALLOWING PROPER DEVELOPMENT OF THE SITE. DURING CONSTRUCTION, EXPOSE AS SMALL AN AREA OF SOIL AS POSSIBLE FOR AS SHORT A TIME AS POSSIBLE.
7. SILTATION FENCE SHALL BE PLACED AS INDICATED BEFORE A CUT SLOPE HAS BEEN CREATED. SEDIMENT DEPOSITS SHOULD BE PERIODICALLY REMOVED FROM THE UPSTREAM SIDES OF SILTATION FENCE. THIS MATERIAL IS TO BE SPREAD AND STABILIZED IN AREAS NOT SUBJECT TO EROSION, OR TO BE USED IN AREAS WHICH ARE NOT TO BE PAVED OR BUILT ON. SILTATION FENCE IS TO BE REPLACED AS NECESSARY TO PROVIDE PROPER FILTERING ACTION. THE FENCE IS TO REMAIN IN PLACE AND BE MAINTAINED TO INSURE EFFICIENT SILTATION CONTROL UNTIL ALL AREAS ABOVE THE EROSION CHECKS ARE STABILIZED AND VEGETATION HAS BEEN ESTABLISHED.
8. ALL FILL AREAS SHALL BE COMPACTED SUFFICIENTLY FOR THEIR INTENDED PURPOSE AND AS REQUIRED TO REDUCE SLIPPING, EROSION OR EXCESS SATURATION.
9. THE SOIL SHALL NOT BE PLACED WHILE IN A FROZEN OR MUDDY CONDITION, WHEN THE SUBGRADE IS EXCESSIVELY WET, OR IN A CONDITION THAT MAY OTHERWISE BE DETRIMENTAL TO PROPER GRADING OR PROPOSED SODDING OR SEEDING.
10. AFTER CONSTRUCTION IS COMPLETE AND GROUND IS STABLE, REMOVE EROSION AND SEDIMENT DEVICES.

## CONSTRUCTION SPECIFICATIONS - SILT FENCE

1. THE GEOTEXTILE FABRIC SHALL MEET THE DESIGN CRITERIA FOR SILT FENCES.
2. THE FABRIC SHALL BE EMBEDDED A MINIMUM OF 8 INCHES INTO THE GROUND AND THE SOIL COMPACTED OVER THE EMBEDDED FABRIC.
3. WOVEN WIRE FENCE SHALL BE FASTENED SECURELY TO THE FENCE POSTS WITH WIRE TIES OR STAPLES.
4. FILTER CLOTH SHALL BE FASTENED SECURELY TO THE WOVEN WIRE FENCE WITH TIES SPACED EVERY 24 INCHES AT THE TOP, MID-SECTION AND BOTTOM.
5. WHEN TWO SECTIONS OF FILTER CLOTH ADJOIN EACH OTHER, THEY SHALL BE OVERLAPPED BY 6 INCHES, FOLDED, AND STAPLED.
6. FENCE POSTS SHALL BE A MINIMUM OF 36 INCHES LONG AND DRIVEN A MINIMUM OF 16 INCHES INTO THE GROUND. WOOD POSTS SHALL BE OF SOUND QUALITY HARDWOOD AND SHALL HAVE A MINIMUM CROSS SECTIONAL AREA OF 3.0 SQUARE INCHES.
7. MAINTENANCE SHALL BE PERFORMED AS NEEDED TO PREVENT BUILD UP IN THE SILT FENCE DUE TO DEPOSITION OF SEDIMENT.

## MAINTENANCE - SILT FENCE

1. SILT FENCES SHALL BE INSPECTED IMMEDIATELY AFTER EACH RAINFALL AND AT LEAST DAILY DURING PROLONGED RAINFALL. ANY REPAIRS THAT ARE REQUIRED SHALL BE MADE IMMEDIATELY.
2. IF THE FABRIC ON A SILT FENCE SHOULD DECOMPOSE OR BECOME INEFFECTIVE DURING THE EXPECTED LIFE OF THE FENCE, THE FABRIC SHALL BE REPLACED PROMPTLY.
3. SEDIMENT SHOULD BE INSPECTED AFTER EVERY STORM EVENT. THE DEPOSITS SHOULD BE REMOVED WHEN THEY REACHED APPROXIMATELY ONE-HALF THE HEIGHT OF THE BARRIER.
4. SEDIMENT DEPOSITS THAT ARE REMOVED OR LEFT IN PLACE AFTER THE FABRIC HAS BEEN REMOVED SHALL BE GRADED TO CONFORM WITH THE EXISTING TOPOGRAPHY AND VEGETATED.

| REV. | DATE | DRAWN BY | CHK'D BY | DESCRIPTION |
|---|---|---|---|---|
| 3 | 01/16/20 | CAG | TJR | CSC - REVISED PER INTERROGATORIES - 2ND ROUND |
| 2 | 11/11/19 | CAG | TJL | CSC - REVISED PER INTERROGATORIES |
| 1 | 09/20/19 | TJL | CAG | CSC - REVISED TO MATCH FINAL CDS |
| 0 | 03/14/19 | KAW | CAG | CSC - ISSUED FOR CLIENT REVIEW |

PROFESSIONAL ENGINEER SEAL

STATE OF CONNECTICUT · TIMOTHY JOHN RAVARA · No. 27419 · LICENSED PROFESSIONAL ENGINEER

at&t

SAI communications


CENTEK engineering
Centered on Solutions
(203) 488-0580
(203) 488-8587 Fax
63-2 North Branford Road
Branford, CT 06405
www.CentekEng.com


AT&T MOBILITY

WIRELESS COMMUNICATIONS FACILITY

TALL PINES DRIVE

SITE NUMBER: CTSR1845

5 TALL PINES DRIVE
WESTON, CT 06883

| | |
|---|---|
| DATE: | 03/14/19 |
| SCALE: | AS NOTED |
| JOB NO. | 18123.00 |

TYPICAL DETAILS

C-5

Sheet No. 8 of 7