NEW

SUNGROW
www.sungrowpower.com

SG 60KU

Efficient and flexible

- String inverter up to maximum power 63.36kW and:
  - Max. efficiency up to 99% (CEC efficiency = 98.5%)
  - Maximal power density (63.36kVA / 55kg)
- Output power up to 63.36kVA / 63.36kW at power factor of 1
- Can be installed at any angle without lifting equipment

Grid-friendly

- Active power continuously adjustable (0~100%)
- Fulfill a variety of reactive power adjustment requirments with power factor 0.8 overexited ~ 0.8 underexited
- Integrated LVRT and HVRT function
- Includes RS-485 and Ethernet interface, compatible with all common monitoring systems

Intelligent design

- Integrated combiner box: 8 x H4 connector pairs with DC string fuses (both positive and negative), Type II overvoltage protection (both DC and AC), DC and AC switch, more safety and lower the system cost
- Integrated string detection function and arc fault detection

Reliable

- Product certification: UL 1741, IEEE 1547 IEEE 1547.1, CSA C22.2#107.1-01-2001,FCC Part 15 Sub-part B Class B Limits
- Manufacturer certification: ISO 9001, ISO 14001, OHSAS 18000

Efficiency Curve

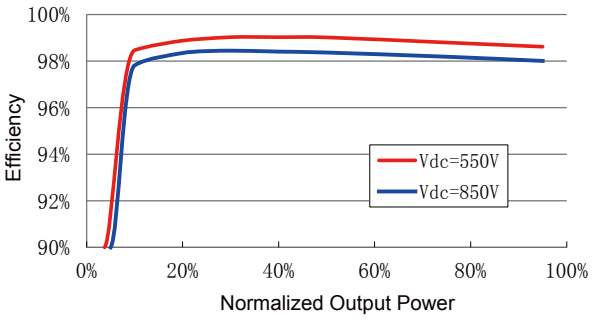

Specifications subject to change without notice.

Input Data	220/380Vac
Max. PV input voltage	1000V
Start-up voltage (Voc)	620V
Stop Voltage	540
MPP voltage range	550~950V
MPP voltage range for nominal power	550~850V
No. of MPPTs	1
Max. number of PV strings per MPPT	8
String Fuse	Positive and Negative
Max. PV operating current	120A
maximum DC short circuit current	200A
Max. current for input connector	25A
Arc Flash Detection	Standard
DC Disconnect	Standard
Insulation Detection	Yes
DC Surge Arrestor	Type II DIN rail surge arrester

Output Data	
Nominal AC output power	60000W
Max AC output power (PF=1)	63360W
Max. AC output apparent power	63360VA
Max. AC output current	96A
Nominal AC voltage	3Ǿ/3W, 220/380Vac
AC voltage range	295~456Vac
Nominal grid frequency	60Hz
Grid frequency range	55~ 65Hz
THD	<3% (Nominal power)
DC current injection	<0.5%In
Power Factor@FL	>0.99@default value at nominal power
Power Factor Range	0.8LG-0.8LD
AC Maximum Cable Size	95mm², Cu or Al
AC Surge Arrestor	Type II DIN rail surge arreste
AC Leakage Current Detection	Yes
AC Disconnect	Yes

Protection	
Anti-islanding protection	Yes
Low Voltage Ride Through	Standard
DC reverse connection protection	Yes
AC short circuit protection	Yes

Mechanical Data		
Dimensions (W*H*D)	634*959*267mm	25*37.8*10.5inch
Mounting method	Wall bracket	
Weight	55kg (121lbs)	

System Data		
Max. efficiency	99.00%	
CEC efficiency	98.50%	
Topology	Transformerless	
protection rating	NEMA4X	
Night power consumption	<1W	
Operating ambient temperature range	-25~60℃ (>50℃ derating)	-13…+140°F (>122°F derating)
Allowable relative humidity range	0~100%	
Cooling method	Smart forced air cooling	
Noise(dB)	<55dB	
Max. operating altitude	4000m (>3000m derating)	13,000ft (>9,800ft derating)
Display	Graphic LCD	
DC connection type	MC4	
AC connection type	Screw Clamp terminal	
Certification	cCSAus	
Safety and EMC Standard	UL 1741, IEEE 1547, IEEE1547.1, CSA C22.2#107.1-01-2001, FCC Part 15 Sub-part B, Class B Limits	

Communication	
RS485	Standard
Ethernet	Standard
I/O dry contact	Standard
Protocol	Modbus

Circuit Diagram

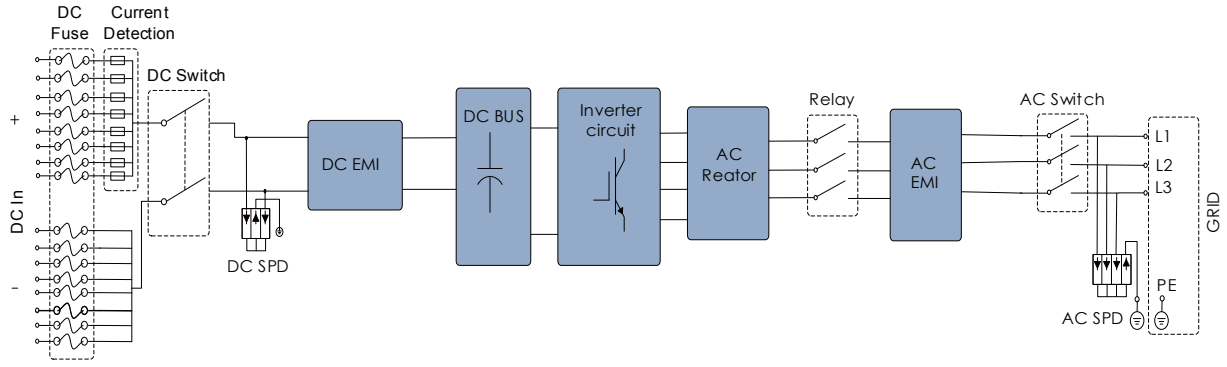

Printed in March 2014 E/S MJDK00414CA