AMERICAN TOWER®
CORPORATION

Structural Analysis Report

Structure	:	**149 ft Monopole**
ATC Site Name	:	**Woodstock Relo CT, CT**
ATC Site Number	:	**418609**
Engineering Number	:	**OAA683474_C3_01**
Proposed Carrier	:	**AT&T Mobility**
Carrier Site Name	:	**Woodstock Quassett Road**
Carrier Site Number	:	**CTL01218 / 10577814**
Site Location	:	**87 West Quasset Road** **Woodstock, CT 06281-3225** **41.929772,-71.989319**
County	:	**Windham**
Date	:	**August 22, 2016**
Max Usage	:	**55%**
Result	:	**Pass**

Reviewed by:
Scott Wirgau, PE
Structural Team Leader

STATE OF CONNECTICUT
SCOTT A. WIRGAU
30575
LICENSED
PROFESSIONAL ENGINEER

Prepared By:
Annika A. Venning, E.I.
Structural Engineer I

Aug 22 2016 5:55 PM

cosign

COA: PEC.0001553

Table of Contents

Introduction 1

Supporting Documents 1

Analysis 1

Conclusion 1

Existing and Reserved Equipment 2

Equipment to be Removed 2

Proposed Equipment 2

Structure Usages 3

Foundations 3

Deflection, Twist, and Sway 3

Standard Conditions 4

Calculations ..... Attached

Introduction

The purpose of this report is to summarize results of a structural analysis performed on the 149 ft monopole to reflect the change in loading by AT&T Mobility.

Supporting Documents

Tower Drawings	EEI Project #16757, dated November 30, 2011
Foundation Drawing	EEI Project #16757, dated December 4, 2011
Geotechnical Report	DET Project #2011.17, dated November 23, 2011

Analysis

The tower was analyzed using American Tower Corporation's tower analysis software. This program considers an elastic three-dimensional model and second-order effects per ANSI/TIA-222.

Basic Wind Speed:	100 mph (3-Second Gust)
Basic Wind Speed w/ Ice:	50 mph (3-Second Gust) w/ 1" radial ice concurrent
Code:	ANSI/TIA-222-G / 2003 IBC w/ 2005 CT Supplement & 2009 CT Amendment
Structure Class:	II
Exposure Category:	C
Topographic Category:	1
Crest Height:	0 ft
Spectral Response:	Ss = 0.17, S_1 = 0.06
Site Class:	D - Stiff Soil

Conclusion

Based on the analysis results, the structure meets the requirements per the applicable codes listed above. The tower and foundation can support the equipment as described in this report.

If you have any questions or require additional information, please contact American Tower via email at Engineering@americantower.com. Please include the American Tower site name, site number, and engineering number in the subject line for any questions.

Existing and Reserved Equipment

Elevation[1] (ft)		Qty	Antenna	Mount Type	Lines	Carrier
Mount	RAD					
148.0	148.0	1	VZW Unused Reserve: 12,545 sq in	Low Profile Platform	(15) 1 5/8" Coax (2) 1 5/8" Hybriflex	Verizon
	147.0	3	Alcatel-Lucent RRH2X60-1900A-4R			
		3	Alcatel-Lucent RRH2X60-AWS			
		3	Alcatel-Lucent RRH2x60 700			
		2	RFS DB-T1-6Z-8AB-0Z			
		3	Andrew LNX-6514DS-A1M			
		6	Commscope SBNHH-1D65B (72.9")			
		6	Antel LPA-80063/6CF ___ 2°			
138.0	138.0	3	Raycap DC6-48-60-18-8F	Low Profile Platform	(6) 0.78" 8 AWG 6 (1) 0.39" Fiber Trunk	AT&T Mobility
		15	Ericsson RRUS 11 (Band 12) (55 lb)			
		9	Andrew SBNH-1D6565C (60.8 lbs)			
		3	Ericsson KRC 118 054/1			

Equipment to be Removed

Elevation[1] (ft)		Qty	Antenna	Mount Type	Lines	Carrier
Mount	RAD					
No loading considered as to be removed						

Proposed Equipment

Elevation[1] (ft)		Qty	Antenna	Mount Type	Lines	Carrier
Mount	RAD					
138.0	138.0	3	Ericsson RRUS 12	Low Profile Platform	(3) 3/8" Coax (3) 2" Conduit	AT&T Mobility

[1]Mount elevation is defined as height above bottom of steel structure to the bottom of mount, RAD elevation is defined as center of antenna above ground level (AGL).

Install proposed coax inside the pole shaft.

Structure Usages

Structural Component	Controlling Usage	Pass/Fail
Anchor Bolts	52%	Pass
Shaft	55%	Pass
Base Plate	42%	Pass

Foundations

Reaction Component	Analysis Reactions	% of Usage
Moment (Kips-Ft)	4,501.1	48%
Axial (Kips)	54.6	19%
Shear (Kips)	39.1	24%

The structure base reactions resulting from this analysis were found to be acceptable through analysis based on geotechnical and foundation information, therefore no modification or reinforcement of the foundation will be required.

Deflection and Sway*

Antenna Elevation (ft)	Antenna	Carrier	Deflection (ft)	Sway (Rotation) (°)
138.0	Ericsson RRUS 12	AT&T Mobility	1.124	0.892

***Deflection and Sway was evaluated considering a design wind speed of 60 mph (3-Second Gust) per ANSI/TIA-222-G**

AMERICAN TOWER®
CORPORATION

Standard Conditions

All engineering services are performed on the basis that the information used is current and correct. This information may consist of, but is not necessary limited, to:

-- Information supplied by the client regarding the structure itself, antenna, mounts and feed line loading on the structure and its components, or other relevant information.

-- Information from drawings in the possession of American Tower Corporation, or generated by field inspections or measurements of the structure.

It is the responsibility of the client to ensure that the information provided to A.T. Engineering Service, PLLC and used in the performance of our engineering services is correct and complete. In the absence of information to the contrary, we assume that all structures were constructed in accordance with the drawings and specifications and that their capacity has not significantly changed from the "as new" condition.

Unless explicitly agreed by both the client and American Tower Corporation, all services will be performed in accordance with the current revision of ANSI/TIA -222. The design basic wind speed will be determined based on the minimum basic wind speed as prescribed in ANSI/TIA-222. Although every effort is taken to ensure that the loading considered is adequate to meet the requirements of all applicable regulatory entities, we can provide no assurance to meet any other local and state codes or requirements. If wind and ice loads or other relevant parameters are to be different from the minimum values recommended by the codes, the client shall specify the exact requirement.

All services are performed, results obtained, and recommendations made in accordance with generally accepted engineering principles and practices. A.T. Engineering Service, PLLC is not responsible for the conclusions, opinions and recommendations made by others based on the information we supply.

© 2007 - 2016 by ATC IP LLC. All rights reserved.

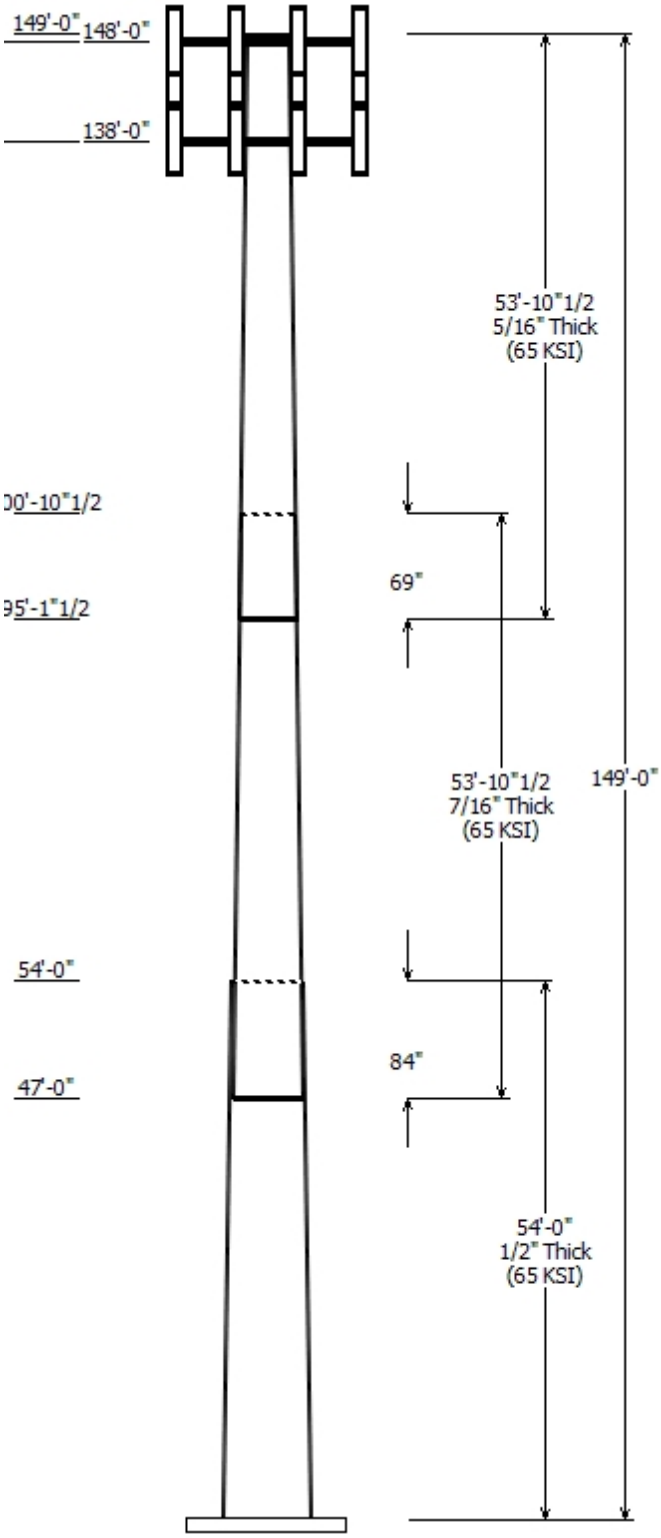

Job Information

Pole :	418609	Code:	ANSI/TIA-222-G
Description :	149 ft EEI Monopole		
Client :	AT&T Mobility	Struct Class :	II
Location :	Woodstock Relo CT, CT		
Shape :	18 Sides	Exposure :	C
Height :	149.00 (ft)	Topo :	1
Base Elev (ft):	0.00		
Taper:	0.21281 (in/ft)		

Sections Properties

Shaft Section	Length (ft)	Diameter (in) Accross Flats Top	Bottom	Thick (in)	Joint Type	Overlap Length (in)	Taper (in/ft)	Steel Grade (ksi)
1	54.000	49.00	60.50	0.500		0.000	0.212800	65
2	53.875	39.90	51.37	0.438	Slip Joint	84.000	0.212800	65
3	53.875	30.29	41.75	0.313	Slip Joint	69.000	0.212800	65

Discrete Appurtenance

Attach Elev (ft)	Force Elev (ft)	Qty	Description
148.000	147.000	6	Amphenol Antel LPA-
148.000	147.000	6	Commscope SBNHH-1D65B
148.000	147.000	3	Andrew LNX-6514DS-A1M
148.000	147.000	3	Alcatel-Lucent RRH2X60-1900A-
148.000	147.000	3	Alcatel-Lucent RRH2X60-AWS
148.000	148.000	1	VZW Unused Reserve: 12,545
148.000	147.000	2	RFS DB-T1-6Z-8AB-0Z
148.000	147.000	3	Alcatel-Lucent RRH2x60 700
148.000	148.000	1	Flat Low Profile Platform
138.000	138.000	3	Ericsson RRUS 12
138.000	138.000	1	Flat Low Profile Platform
138.000	138.000	3	Ericsson KRC 118 054/1
138.000	138.000	9	Andrew SBNH-1D6565C (60.8
138.000	138.000	15	Ericsson RRUS 11 (Band 12) (55
138.000	138.000	3	Raycap DC6-48-60-18-8F

Linear Appurtenance

Elev (ft) From	To	Description	Exposed To Wind
0.000	138.0	0.39" Fiber Trunk	No
0.000	138.0	0.78" 8 AWG 6	No
0.000	138.0	2" Conduit	No
0.000	138.0	3/8" Coax	No
0.000	148.0	1 5/8" Coax	No
0.000	148.0	1 5/8" Hybriflex	No

Load Cases

1.2D + 1.6W	100 mph with No Ice
0.9D + 1.6W	100 mph with No Ice (Reduced DL)
1.2D + 1.0Di + 1.0Wi	50 mph with 1.00 in Radial Ice
(1.2 + 0.2Sds) * DL + E	Seismic Equivalent Lateral Forces Method
(1.2 + 0.2Sds) * DL + E	Seismic Equivalent Modal Analysis Method
(0.9 - 0.2Sds) * DL + E	Seismic (Reduced DL) Equivalent Lateral
(0.9 - 0.2Sds) * DL + E	Seismic (Reduced DL) Equivalent Modal
1.0D + 1.0W	Serviceability 60 mph

Reactions

Load Case	Moment (kip-ft)	Shear (kip)	Axial (kip)

1.2D + 1.6W	4501.08	39.12	54.56
0.9D + 1.6W	4471.54	39.10	40.91
1.2D + 1.0Di + 1.0Wi	1215.71	10.69	89.98
(1.2 + 0.2Sds) * DL + E ELFM	265.32	2.28	54.11
(1.2 + 0.2Sds) * DL + E EMAM	375.42	3.11	54.11
(0.9 - 0.2Sds) * DL + E ELFM	263.22	2.28	37.78
(0.9 - 0.2Sds) * DL + E EMAM	372.44	3.10	37.78
1.0D + 1.0W	1009.05	8.80	45.51

Dish Deflections

Load Case	Attach Elev (ft)	Deflection (in)	Rotation (deg)
	0.00	0.000	0.000

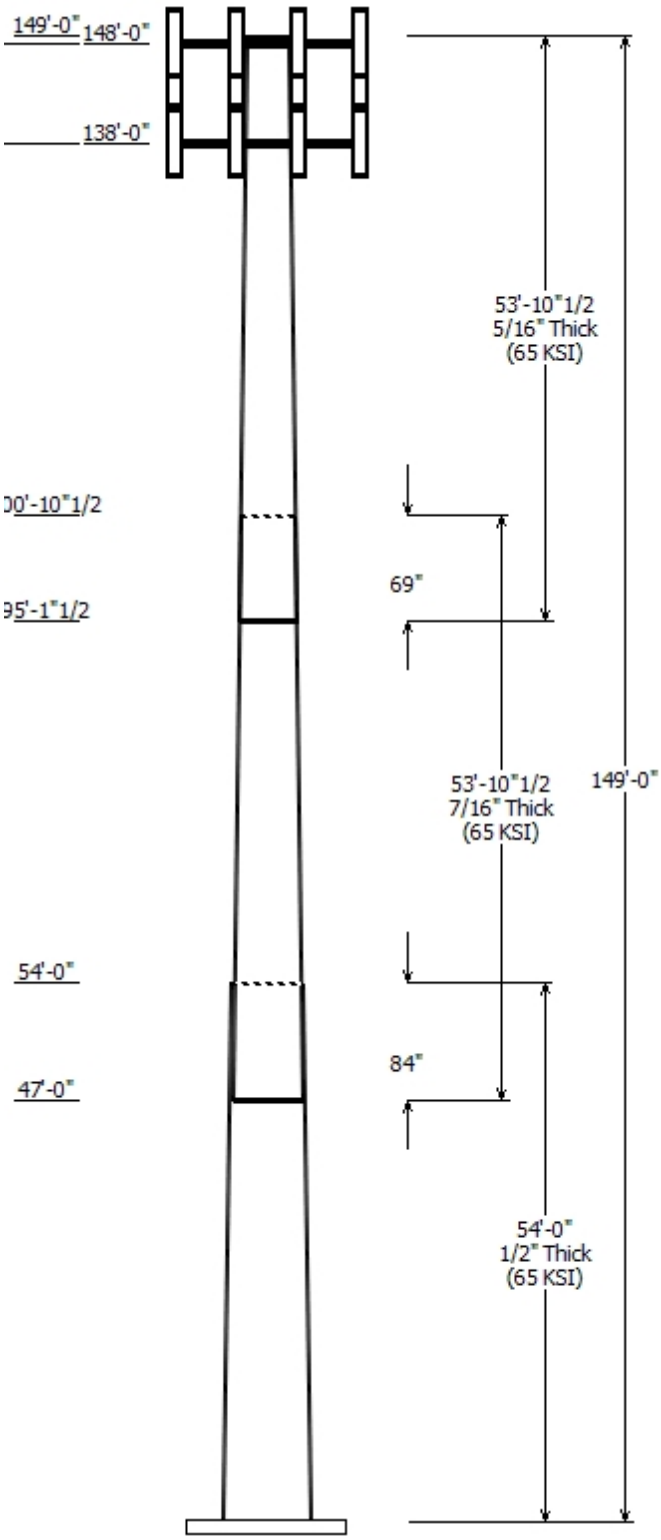

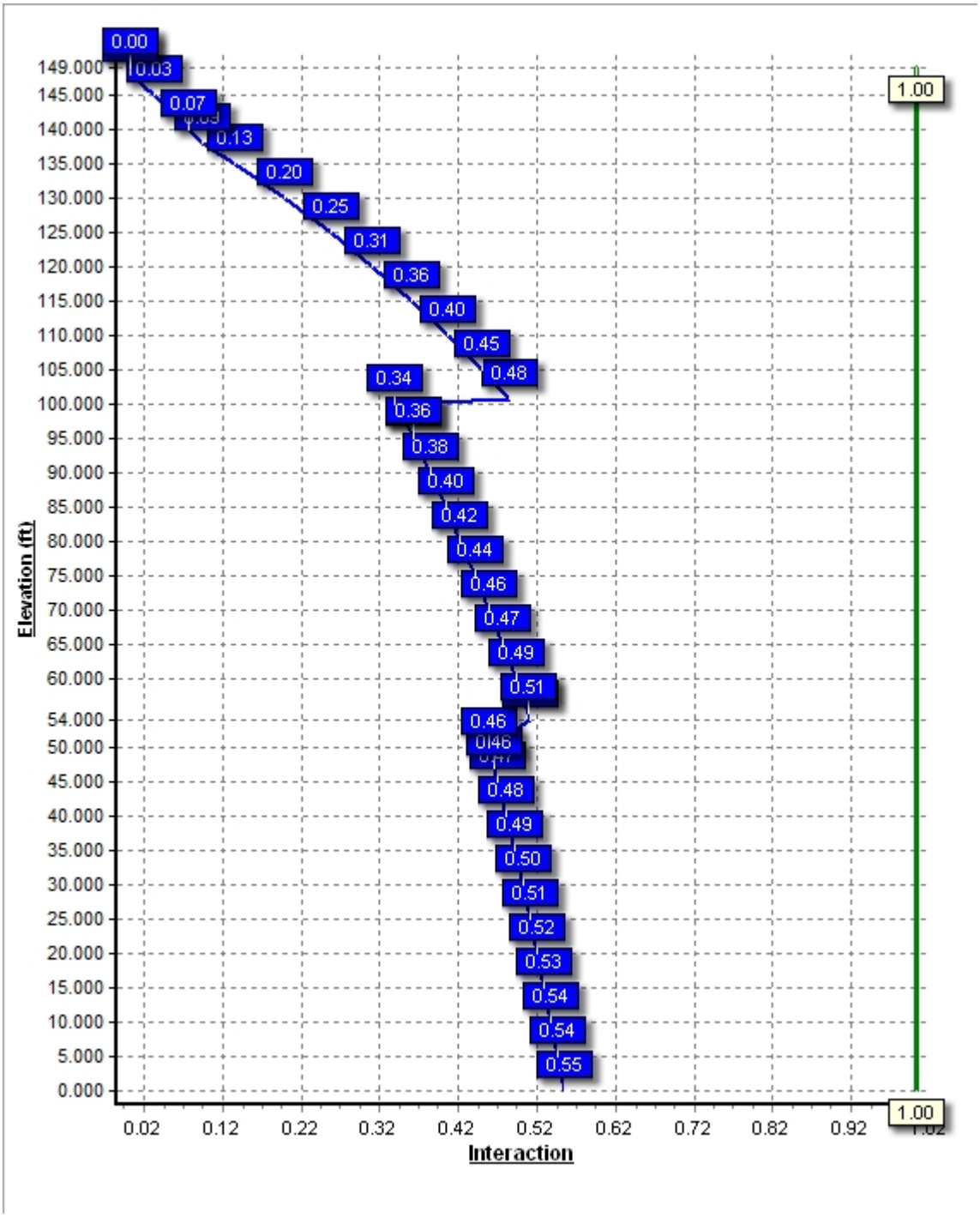
Elevation (ft)
149.000
145.000
140.000
135.000
130.000
125.000
120.000
115.000
110.000
105.000
100.000
95.000
90.000
85.000
80.000
75.000
70.000
65.000
60.000
54.000
50.000
45.000
40.000
35.000
30.000
25.000
20.000
15.000
10.000
5.000
0.000
0.02
0.12
0.22
0.32
0.42
0.52
0.62
0.72
0.82
0.92
Interaction
0.00
0.03
0.07
0.13
0.20
0.25
0.31
0.36
0.40
0.45
0.48
0.34
0.36
0.38
0.40
0.42
0.44
0.46
0.47
0.49
0.51
0.46
0.48
0.49
0.50
0.51
0.52
0.53
0.54
0.54
0.55
1.00
1.00

Site Number:	**418609**	**Code:**	**ANSI/TIA-222-G**	*© 2007 - 2016 by ATC IP LLC. All rights reserved.*
Site Name:	**Woodstock Relo CT, CT**	**Engineering Number:**	**OAA683474_C3_01**	**8/22/2016 1:21:14 PM**
Customer:	**AT&T Mobility**			

Analysis Parameters

Location:	**Windham County, CT**		
Code:	**ANSI/TIA-222-G**	**Height (ft):**	**149**
Shape:	**18 Sides**	**Base Diameter (in):**	**60.50**
Pole Type:	**Taper**	**Top Diameter (in):**	**30.29**
Pole Manfacturer:	**EEI**	**Taper (in/ft) :**	**0.213**

Ice & Wind Parameters

Structure Class:	**II**	**Design Wind Speed Without Ice:**	**100 mph**
Exposure Category:	**C**	**Design Wind Speed With Ice:**	**50 mph**
Topographic Category:	**1**	**Operational Wind Speed:**	**60 mph**
Crest Height:	**0.0 ft**	**Design Ice Thickness:**	**1.00 in**

Seismic Parameters

Analysis Method:	**Equivalent Modal Analysis & Equivalent Lateral Force Methods**				
Site Class:	**D - Stiff Soil**				
Period Based on Rayleigh Method (sec):	**1.75**				
T_L (sec):	**6**	**p:**	**1.3**	**C_s:**	**0.038**
S_s:	**0.172**	**S_1:**	**0.063**	**C_s Max:**	**0.038**
F_a:	**1.600**	**F_v:**	**2.400**	**C_s Min:**	**0.030**
S_{ds}:	**0.183**	**S_{d1}:**	**0.101**		

Load Cases

1.2D + 1.6W	**100 mph with No Ice**
0.9D + 1.6W	**100 mph with No Ice (Reduced DL)**
1.2D + 1.0Di + 1.0Wi	**50 mph with 1.00 in Radial Ice**
(1.2 + 0.2Sds) * DL + E ELFM	**Seismic Equivalent Lateral Forces Method**
(1.2 + 0.2Sds) * DL + E EMAM	**Seismic Equivalent Modal Analysis Method**
(0.9 - 0.2Sds) * DL + E ELFM	**Seismic (Reduced DL) Equivalent Lateral Forces Method**
(0.9 - 0.2Sds) * DL + E EMAM	**Seismic (Reduced DL) Equivalent Modal Analysis Method**
1.0D + 1.0W	**Serviceability 60 mph**

© 2007 - 2016 by ATC IP LLC. All rights reserved.

Shaft Section Properties

Sect Info	Length (ft)	Thick (in)	Fy (ksi)	Joint Type	Slip Joint Len (in)	Weight (lb)	Bottom Dia (in)	Bottom Elev (ft)	Bottom Area (in²)	Bottom Ix (in⁴)	Bottom W/t Ratio	Bottom D/t Ratio	Top Dia (in)	Top Elev (ft)	Top Area (in²)	Top Ix (in⁴)	Top W/t Ratio	Top D/t Ratio	Taper (in/ft)
1-18	54.000	0.5000	65		0.00	15,820	60.50	0.00	95.22	43308.0	19.57	121.00	49.00	54.00	76.98	22884.9	15.52	98.02	0.212819
2-18	53.875	0.4375	65	Slip	84.00	11,507	51.37	47.00	70.73	23183.1	18.94	117.42	39.90	100.88	54.81	10787.1	14.32	91.22	0.212819
3-18	53.875	0.3125	65	Slip	69.00	6,493	41.75	95.13	41.10	8919.7	21.80	133.62	30.29	149.00	29.73	3375.8	15.33	96.93	0.212819
				Shaft Weight		33,820													

Discrete Appurtenance Properties

Attach Elev (ft)	Description	Qty	No Ice Weight (lb)	No Ice EPAa (sf)	No Ice Orientation Factor	Ice Weight (lb)	Ice EPAa (sf)	Ice Orientation Factor	Distance From Face (ft)	Vert Ecc (ft)
148.00	Alcatel-Lucent RRH2x60 700	3	56.70	2.150	0.67	173.74	3.008	0.67	0.000	-1.000
148.00	Alcatel-Lucent RRH2X60-	3	46.00	1.870	0.50	145.87	2.680	0.50	0.000	-1.000
148.00	Alcatel-Lucent RRH2X60-	3	44.00	1.880	0.50	144.30	2.694	0.50	0.000	-1.000
148.00	Amphenol Antel LPA-	6	27.00	9.590	0.95	428.84	11.439	0.95	0.000	-1.000
148.00	Andrew LNX-6514DS-A1M	3	38.80	8.170	0.83	326.73	9.947	0.83	0.000	-1.000
148.00	Commscope SBNHH-1D65B	6	40.60	8.200	0.83	329.38	9.983	0.83	0.000	-1.000
148.00	Flat Low Profile Platform	1	1500.00	26.100	1.00	2,363.59	51.548	1.00	0.000	0.000
148.00	RFS DB-T1-6Z-8AB-0Z	2	44.00	4.800	0.67	246.65	5.988	0.67	0.000	-1.000
148.00	VZW Unused Reserve:	1	1449.90	87.190	1.00	2,796.26	168.154	1.00	0.000	0.000
138.00	Andrew SBNH-1D6565C (60.8	9	60.80	11.450	0.84	429.59	13.655	0.84	0.000	0.000
138.00	Ericsson KRC 118 054/1	3	121.00	11.540	0.89	451.35	15.817	0.89	0.000	0.000
138.00	Ericsson RRUS 11 (Band 12)	15	55.00	2.520	0.67	169.58	3.398	0.67	0.000	0.000
138.00	Ericsson RRUS 12	3	50.00	3.150	0.67	185.11	4.120	0.67	0.000	0.000
138.00	Flat Low Profile Platform	1	1500.00	26.100	1.00	2,357.50	51.369	1.00	0.000	0.000
138.00	Raycap DC6-48-60-18-8F	3	20.00	1.110	1.00	134.88	2.747	1.00	0.000	0.000
	Totals	62	7445.20			23,655.90			Number of Loadings :	15

Linear Appurtenance Properties

Elev From (ft)	Elev To (ft)	Qty	Description	Coax Diameter (in)	Coax Weight (lb/ft)	Flat	Projected Width (in)	Exposed To Wind	Carrier
0.00	148.00	15	1 5/8" Coax	1.98	0.82	N	0.00	N	Verizon
0.00	148.00	2	1 5/8" Hybriflex	1.98	1.30	N	0.00	N	Verizon
0.00	138.00	1	0.39" Fiber Trunk	0.39	0.06	N	0.00	N	AT&T Mobility
0.00	138.00	6	0.78" 8 AWG 6	0.78	0.59	N	0.00	N	AT&T Mobility
0.00	138.00	3	2" Conduit	2.38	3.65	N	0.00	N	AT&T Mobility
0.00	138.00	3	3/8" Coax	0.44	0.08	N	0.00	N	AT&T Mobility

© 2007 - 2016 by ATC IP LLC. All rights reserved.

Segment Properties (Max Len : 5. ft)

Seg Top Elev (ft)	Description	Thick (in)	Flat Dia (in)	Area (in^2)	Ix (in^4)	W/t Ratio	D/t Ratio	Fy (ksi)	S (in^3)	Z (in^3)	Weight (lb)
0.00		0.5000	60.500	95.217	43,308.0	19.57	121.00	78.4	1409.	0.0	0.0
5.00		0.5000	59.436	93.528	41,044.4	19.20	118.87	78.8	1360.	0.0	1,605.6
10.00		0.5000	58.372	91.839	38,861.1	18.82	116.74	79.3	1311.	0.0	1,576.9
15.00		0.5000	57.308	90.151	36,756.7	18.45	114.62	79.7	1263.	0.0	1,548.2
20.00		0.5000	56.244	88.462	34,729.6	18.07	112.49	80.1	1216.	0.0	1,519.4
25.00		0.5000	55.180	86.773	32,778.5	17.70	110.36	80.6	1170.	0.0	1,490.7
30.00		0.5000	54.115	85.085	30,901.8	17.32	108.23	81.0	1124.	0.0	1,462.0
35.00		0.5000	53.051	83.396	29,098.2	16.95	106.10	81.5	1080.	0.0	1,433.3
40.00		0.5000	51.987	81.707	27,366.1	16.57	103.97	81.9	1036.	0.0	1,404.5
45.00		0.5000	50.923	80.019	25,704.2	16.19	101.85	82.4	994.2	0.0	1,375.8
47.00	Bot - Section 2	0.5000	50.498	79.343	25,058.8	16.04	101.00	82.5	977.4	0.0	542.3
50.00		0.5000	49.859	78.330	24,111.0	15.82	99.72	82.6	952.5	0.0	1,522.3
54.00	Top - Section 1	0.4375	49.883	68.658	21,207.9	18.34	114.02	79.8	837.4	0.0	1,999.5
55.00		0.4375	49.670	68.363	20,935.2	18.26	113.53	79.9	830.2	0.0	233.1
60.00		0.4375	48.606	66.885	19,606.9	17.83	111.10	80.4	794.5	0.0	1,150.6
65.00		0.4375	47.542	65.408	18,335.9	17.40	108.67	80.9	759.6	0.0	1,125.4
70.00		0.4375	46.478	63.930	17,121.2	16.97	106.23	81.4	725.6	0.0	1,100.3
75.00		0.4375	45.414	62.453	15,961.3	16.54	103.80	81.9	692.3	0.0	1,075.1
80.00		0.4375	44.349	60.975	14,855.0	16.11	101.37	82.5	659.7	0.0	1,050.0
85.00		0.4375	43.285	59.498	13,801.0	15.68	98.94	82.6	628.0	0.0	1,024.9
90.00		0.4375	42.221	58.020	12,798.1	15.25	96.51	82.6	597.0	0.0	999.7
95.00		0.4375	41.157	56.542	11,845.0	14.82	94.07	82.6	566.9	0.0	974.6
95.13	Bot - Section 3	0.4375	41.131	56.505	11,821.8	14.81	94.01	82.6	566.1	0.0	24.0
100.0		0.4375	40.093	55.065	10,940.5	14.40	91.64	82.6	537.5	0.0	1,598.7
100.8	Top - Section 2	0.3125	40.532	39.891	8,152.7	21.11	129.70	76.6	396.2	0.0	282.6
105.0		0.3125	39.654	39.020	7,630.4	20.61	126.89	77.2	379.0	0.0	553.8
110.0		0.3125	38.590	37.965	7,027.9	20.01	123.49	77.9	358.7	0.0	654.9
115.0		0.3125	37.526	36.910	6,457.9	19.41	120.08	78.6	339.0	0.0	637.0
120.0		0.3125	36.462	35.854	5,919.6	18.81	116.68	79.3	319.8	0.0	619.0
125.0		0.3125	35.398	34.799	5,412.1	18.21	113.27	80.0	301.1	0.0	601.0
130.0		0.3125	34.334	33.743	4,934.4	17.61	109.87	80.7	283.1	0.0	583.1
135.0		0.3125	33.269	32.688	4,485.8	17.01	106.46	81.4	265.6	0.0	565.1
138.0		0.3125	32.631	32.055	4,230.1	16.65	104.42	81.8	255.3	0.0	330.5
140.0		0.3125	32.205	31.633	4,065.1	16.41	103.06	82.1	248.6	0.0	216.7
145.0		0.3125	31.141	30.577	3,671.7	15.81	99.65	82.6	232.2	0.0	529.2
148.0		0.3125	30.503	29.944	3,448.2	15.45	97.61	82.6	222.7	0.0	308.9
149.0		0.3125	30.290	29.733	3,375.8	15.33	96.93	82.6	219.5	0.0	101.5
											33,820.3

Site Number: 418609 | Code: ANSI/TIA-222-G | © 2007 - 2016 by ATC IP LLC. All rights reserved.

Site Name: Woodstock Relo CT, CT | Engineering Number: OAA683474_C3_01 | 8/22/2016 1:21:14 PM

Customer: AT&T Mobility

Load Case: 1.2D + 1.6W | 100 mph with No Ice | 21 Iterations

Gust Response Factor : 1.10
Dead Load Factor : 1.20
Wind Load Factor : 1.60

Wind Importance Factor : 1.00

Applied Segment Forces Summary

		Shaft Forces		Discrete Forces				Linear Forces		Sum of Forces			
Seg Elev (ft)	Description	Wind FX (lb)	Dead Load (lb)	Wind FX (lb)	Torsion MY (lb-ft)	Moment MZ (lb-ft)	Dead Load (lb)	Wind FX (lb)	Dead Load (lb)	Wind FX (lb)	Dead Load (lb)	Torsion MY (lb-ft)	Moment MZ (lb)
0.00		300.0	0.0					0.0	0.0	300.0	0.0	0.0	0.0
5.00		594.7	1,926.8					0.0	178.1	594.7	2,104.9	0.0	0.0
10.00		584.0	1,892.3					0.0	178.1	584.0	2,070.4	0.0	0.0
15.00		582.4	1,857.8					0.0	178.1	582.4	2,036.0	0.0	0.0
20.00		596.2	1,823.3					0.0	178.1	596.2	2,001.5	0.0	0.0
25.00		613.3	1,788.9					0.0	178.1	613.3	1,967.0	0.0	0.0
30.00		625.2	1,754.4					0.0	178.1	625.2	1,932.5	0.0	0.0
35.00		633.3	1,719.9					0.0	178.1	633.3	1,898.0	0.0	0.0
40.00		638.3	1,685.4					0.0	178.1	638.3	1,863.6	0.0	0.0
45.00		448.4	1,651.0					0.0	178.1	448.4	1,829.1	0.0	0.0
47.00	Bot - Section 2	324.2	650.7					0.0	71.3	324.2	722.0	0.0	0.0
50.00		457.2	1,826.7					0.0	106.9	457.2	1,933.6	0.0	0.0
54.00	Top - Section 1	326.5	2,399.4					0.0	142.5	326.5	2,541.9	0.0	0.0
55.00		391.0	279.8					0.0	35.6	391.0	315.4	0.0	0.0
60.00		650.1	1,380.7					0.0	178.1	650.1	1,558.8	0.0	0.0
65.00		646.7	1,350.5					0.0	178.1	646.7	1,528.6	0.0	0.0
70.00		642.2	1,320.3					0.0	178.1	642.2	1,498.5	0.0	0.0
75.00		636.7	1,290.2					0.0	178.1	636.7	1,468.3	0.0	0.0
80.00		630.3	1,260.0					0.0	178.1	630.3	1,438.1	0.0	0.0
85.00		623.1	1,229.8					0.0	178.1	623.1	1,408.0	0.0	0.0
90.00		615.1	1,199.7					0.0	178.1	615.1	1,377.8	0.0	0.0
95.00		313.1	1,169.5					0.0	178.1	313.1	1,347.6	0.0	0.0
95.13	Bot - Section 3	305.5	28.9					0.0	4.5	305.5	33.3	0.0	0.0
100.00		351.0	1,918.5					0.0	173.7	351.0	2,092.2	0.0	0.0
100.88	Top - Section 2	300.9	339.1					0.0	31.2	300.9	370.3	0.0	0.0
105.00		543.8	664.6					0.0	147.0	543.8	811.5	0.0	0.0
110.00		586.5	785.9					0.0	178.1	586.5	964.0	0.0	0.0
115.00		575.7	764.3					0.0	178.1	575.7	942.5	0.0	0.0
120.00		564.4	742.8					0.0	178.1	564.4	920.9	0.0	0.0
125.00		552.7	721.3					0.0	178.1	552.7	899.4	0.0	0.0
130.00		540.5	699.7					0.0	178.1	540.5	877.8	0.0	0.0
135.00		424.4	678.2					0.0	178.1	424.4	856.3	0.0	0.0
138.00	Appertunance(s)	260.8	396.5	8,579.4	0.0	0.0	4,134.2	0.0	106.9	8,840.2	4,637.7	0.0	0.0
140.00		357.7	260.1					0.0	35.8	357.7	295.8	0.0	0.0
145.00		403.5	635.1					0.0	89.4	403.5	724.5	0.0	0.0
148.00	Appertunance(s)	198.5	370.7	12,879.6	0.0	-6,214.3	4,800.0	0.0	53.6	13,078.1	5,224.3	0.0	0.0
149.00		49.2	121.8					0.0	0.0	49.2	121.8	0.0	0.0
									Totals:	39,346.2	54,614.0	0.00	0.00

© 2007 - 2016 by ATC IP LLC. All rights reserved.

Load Case: 1.2D + 1.6W 100 mph with No Ice 21 Iterations

Gust Response Factor : 1.10
Dead Load Factor : 1.20
Wind Load Factor : 1.60

Wind Importance Factor : 1.00

Calculated Forces

Seg Elev (ft)	Pu FY (-) (kips)	Vu FX (-) (kips)	Tu MY (ft-kips)	Mu MZ (ft-kips)	Mu MX (ft-kips)	Resultant Moment (ft-kips)	phi Pn (kips)	phi Vn (kips)	phi Tn (ft-kips)	phi Mn (ft-kips)	Total Deflect (in)	Rotation (deg)	Ratio
0.00	-54.56	-39.12	0.00	-4,501.08	0.00	4,501.08	6,716.77	3,358.39	16,551.8	8,288.22	0.00	0.00	0.551
5.00	-52.36	-38.65	0.00	-4,305.50	0.00	4,305.50	6,634.81	3,317.40	16,057.4	8,040.68	0.08	-0.14	0.543
10.00	-50.20	-38.19	0.00	-4,112.24	0.00	4,112.24	6,551.49	3,275.75	15,567.1	7,795.15	0.31	-0.29	0.535
15.00	-48.07	-37.72	0.00	-3,921.30	0.00	3,921.30	6,466.84	3,233.42	15,081.0	7,551.74	0.69	-0.44	0.527
20.00	-45.97	-37.22	0.00	-3,732.72	0.00	3,732.72	6,380.85	3,190.42	14,599.3	7,310.53	1.23	-0.59	0.518
25.00	-43.92	-36.70	0.00	-3,546.61	0.00	3,546.61	6,293.51	3,146.75	14,122.2	7,071.60	1.92	-0.73	0.509
30.00	-41.90	-36.16	0.00	-3,363.10	0.00	3,363.10	6,204.83	3,102.42	13,649.8	6,835.05	2.77	-0.88	0.499
35.00	-39.92	-35.60	0.00	-3,182.31	0.00	3,182.31	6,114.81	3,057.41	13,182.3	6,600.97	3.78	-1.04	0.489
40.00	-37.98	-35.03	0.00	-3,004.32	0.00	3,004.32	6,023.45	3,011.73	12,719.9	6,369.44	4.95	-1.19	0.478
45.00	-36.09	-34.60	0.00	-2,829.20	0.00	2,829.20	5,930.75	2,965.37	12,262.8	6,140.55	6.27	-1.34	0.467
47.00	-35.33	-34.31	0.00	-2,759.99	0.00	2,759.99	5,893.29	2,946.65	12,081.5	6,049.76	6.85	-1.40	0.462
50.00	-33.35	-33.87	0.00	-2,657.06	0.00	2,657.06	5,819.53	2,909.76	11,776.4	5,896.99	7.76	-1.49	0.456
54.00	-30.77	-33.51	0.00	-2,521.60	0.00	2,521.60	4,932.79	2,466.39	10,012.2	5,013.54	9.06	-1.61	0.509
55.00	-30.41	-33.16	0.00	-2,488.09	0.00	2,488.09	4,917.76	2,458.88	9,938.37	4,976.57	9.40	-1.65	0.506
60.00	-28.78	-32.55	0.00	-2,322.27	0.00	2,322.27	4,841.84	2,420.92	9,571.58	4,792.90	11.21	-1.81	0.491
65.00	-27.18	-31.93	0.00	-2,159.52	0.00	2,159.52	4,764.57	2,382.28	9,208.89	4,611.29	13.19	-1.97	0.474
70.00	-25.62	-31.31	0.00	-1,999.88	0.00	1,999.88	4,685.96	2,342.98	8,850.47	4,431.81	15.35	-2.13	0.457
75.00	-24.09	-30.68	0.00	-1,843.35	0.00	1,843.35	4,606.01	2,303.00	8,496.51	4,254.57	17.67	-2.29	0.439
80.00	-22.60	-30.05	0.00	-1,689.95	0.00	1,689.95	4,524.71	2,262.36	8,147.17	4,079.64	20.15	-2.45	0.419
85.00	-21.14	-29.42	0.00	-1,539.69	0.00	1,539.69	4,420.37	2,210.18	7,764.52	3,888.03	22.80	-2.60	0.401
90.00	-19.72	-28.80	0.00	-1,392.58	0.00	1,392.58	4,310.59	2,155.30	7,381.75	3,696.36	25.61	-2.76	0.381
95.00	-18.35	-28.44	0.00	-1,248.59	0.00	1,248.59	4,200.82	2,100.41	7,008.66	3,509.54	28.57	-2.90	0.360
95.13	-18.30	-28.16	0.00	-1,245.04	0.00	1,245.04	4,198.07	2,099.04	6,999.46	3,504.93	28.65	-2.91	0.360
100.00	-16.19	-27.72	0.00	-1,107.77	0.00	1,107.77	4,091.04	2,045.52	6,645.25	3,327.56	31.69	-3.04	0.337
100.88	-15.80	-27.42	0.00	-1,083.52	0.00	1,083.52	2,749.21	1,374.61	4,543.82	2,275.29	32.25	-3.07	0.482
105.00	-14.96	-26.87	0.00	-970.41	0.00	970.41	2,709.67	1,354.83	4,379.95	2,193.23	34.95	-3.18	0.448
110.00	-13.95	-26.27	0.00	-836.07	0.00	836.07	2,660.51	1,330.25	4,183.25	2,094.74	38.37	-3.35	0.405
115.00	-12.98	-25.67	0.00	-704.73	0.00	704.73	2,610.00	1,305.00	3,988.84	1,997.38	41.97	-3.51	0.358
120.00	-12.04	-25.08	0.00	-576.37	0.00	576.37	2,558.16	1,279.08	3,796.88	1,901.26	45.71	-3.65	0.308
125.00	-11.13	-24.49	0.00	-450.98	0.00	450.98	2,504.97	1,252.49	3,607.56	1,806.46	49.60	-3.77	0.254
130.00	-10.25	-23.91	0.00	-328.53	0.00	328.53	2,450.45	1,225.22	3,421.06	1,713.07	53.60	-3.87	0.196
135.00	-9.40	-23.44	0.00	-208.99	0.00	208.99	2,394.58	1,197.29	3,237.54	1,621.18	57.70	-3.95	0.133
138.00	-5.38	-14.30	0.00	-138.68	0.00	138.68	2,360.41	1,180.21	3,128.95	1,566.80	60.20	-3.98	0.091
140.00	-5.11	-13.92	0.00	-110.08	0.00	110.08	2,337.37	1,168.68	3,057.20	1,530.87	61.87	-4.00	0.074
145.00	-4.41	-13.47	0.00	-40.47	0.00	40.47	2,271.73	1,135.87	2,871.25	1,437.76	66.07	-4.03	0.030
148.00	-0.12	-0.06	0.00	-0.06	0.00	0.06	2,224.69	1,112.34	2,752.97	1,378.53	68.60	-4.03	0.000
149.00	0.00	-0.05	0.00	0.00	0.00	0.00	2,209.00	1,104.50	2,714.10	1,359.07	69.44	-4.03	0.000

© 2007 - 2016 by ATC IP LLC. All rights reserved.

Load Case: 0.9D + 1.6W 100 mph with No Ice (Reduced DL) 21 Iterations

Gust Response Factor : 1.10
Dead Load Factor : 0.90
Wind Load Factor : 1.60

Wind Importance Factor : 1.00

Applied Segment Forces Summary

		Shaft Forces		Discrete Forces				Linear Forces		Sum of Forces			
Seg Elev (ft)	Description	Wind FX (lb)	Dead Load (lb)	Wind FX (lb)	Torsion MY (lb-ft)	Moment MZ (lb-ft)	Dead Load (lb)	Wind FX (lb)	Dead Load (lb)	Wind FX (lb)	Dead Load (lb)	Torsion MY (lb-ft)	Moment MZ (lb)
0.00		300.0	0.0					0.0	0.0	300.0	0.0	0.0	0.0
5.00		594.7	1,445.1					0.0	133.6	594.7	1,578.7	0.0	0.0
10.00		584.0	1,419.2					0.0	133.6	584.0	1,552.8	0.0	0.0
15.00		582.4	1,393.4					0.0	133.6	582.4	1,527.0	0.0	0.0
20.00		596.2	1,367.5					0.0	133.6	596.2	1,501.1	0.0	0.0
25.00		613.3	1,341.6					0.0	133.6	613.3	1,475.2	0.0	0.0
30.00		625.2	1,315.8					0.0	133.6	625.2	1,449.4	0.0	0.0
35.00		633.3	1,289.9					0.0	133.6	633.3	1,423.5	0.0	0.0
40.00		638.3	1,264.1					0.0	133.6	638.3	1,397.7	0.0	0.0
45.00		448.4	1,238.2					0.0	133.6	448.4	1,371.8	0.0	0.0
47.00	Bot - Section 2	324.2	488.0					0.0	53.4	324.2	541.5	0.0	0.0
50.00		457.2	1,370.0					0.0	80.2	457.2	1,450.2	0.0	0.0
54.00	Top - Section 1	326.5	1,799.6					0.0	106.9	326.5	1,906.5	0.0	0.0
55.00		391.0	209.8					0.0	26.7	391.0	236.5	0.0	0.0
60.00		650.1	1,035.5					0.0	133.6	650.1	1,169.1	0.0	0.0
65.00		646.7	1,012.9					0.0	133.6	646.7	1,146.5	0.0	0.0
70.00		642.2	990.2					0.0	133.6	642.2	1,123.8	0.0	0.0
75.00		636.7	967.6					0.0	133.6	636.7	1,101.2	0.0	0.0
80.00		630.3	945.0					0.0	133.6	630.3	1,078.6	0.0	0.0
85.00		623.1	922.4					0.0	133.6	623.1	1,056.0	0.0	0.0
90.00		615.1	899.7					0.0	133.6	615.1	1,033.3	0.0	0.0
95.00		313.1	877.1					0.0	133.6	313.1	1,010.7	0.0	0.0
95.13	Bot - Section 3	305.5	21.6					0.0	3.3	305.5	25.0	0.0	0.0
100.00		351.0	1,438.9					0.0	130.3	351.0	1,569.1	0.0	0.0
100.88	Top - Section 2	300.9	254.4					0.0	23.4	300.9	277.7	0.0	0.0
105.00		543.8	498.4					0.0	110.2	543.8	608.7	0.0	0.0
110.00		586.5	589.4					0.0	133.6	586.5	723.0	0.0	0.0
115.00		575.7	573.3					0.0	133.6	575.7	706.9	0.0	0.0
120.00		564.4	557.1					0.0	133.6	564.4	690.7	0.0	0.0
125.00		552.7	540.9					0.0	133.6	552.7	674.5	0.0	0.0
130.00		540.5	524.8					0.0	133.6	540.5	658.4	0.0	0.0
135.00		424.4	508.6					0.0	133.6	424.4	642.2	0.0	0.0
138.00	Appertunance(s)	260.8	297.4	8,579.4	0.0	0.0	3,100.7	0.0	80.2	8,840.2	3,478.3	0.0	0.0
140.00		357.7	195.0					0.0	26.8	357.7	221.9	0.0	0.0
145.00		403.5	476.3					0.0	67.0	403.5	543.3	0.0	0.0
148.00	Appertunance(s)	198.5	278.0	12,879.6	0.0	-6,214.3	3,600.0	0.0	40.2	13,078.1	3,918.2	0.0	0.0
149.00		49.2	91.4					0.0	0.0	49.2	91.4	0.0	0.0
									Totals:	39,346.2	40,960.5	0.00	0.00

 © 2007 - 2016 by ATC IP LLC. All rights reserved.

Load Case: 0.9D + 1.6W 100 mph with No Ice (Reduced DL) 21 Iterations

Gust Response Factor : 1.10
Dead Load Factor : 0.90
Wind Load Factor : 1.60

Wind Importance Factor : 1.00

Calculated Forces

Seg Elev (ft)	Pu FY (-) (kips)	Vu FX (-) (kips)	Tu MY (ft-kips)	Mu MZ (ft-kips)	Mu MX (ft-kips)	Resultant Moment (ft-kips)	phi Pn (kips)	phi Vn (kips)	phi Tn (ft-kips)	phi Mn (ft-kips)	Total Deflect (in)	Rotation (deg)	Ratio
0.00	-40.91	-39.10	0.00	-4,471.54	0.00	4,471.54	6,716.77	3,358.39	16,551.8	8,288.22	0.00	0.00	0.546
5.00	-39.24	-38.60	0.00	-4,276.05	0.00	4,276.05	6,634.81	3,317.40	16,057.4	8,040.68	0.08	-0.14	0.538
10.00	-37.59	-38.11	0.00	-4,083.05	0.00	4,083.05	6,551.49	3,275.75	15,567.1	7,795.15	0.31	-0.29	0.530
15.00	-35.97	-37.61	0.00	-3,892.52	0.00	3,892.52	6,466.84	3,233.42	15,081.0	7,551.74	0.69	-0.43	0.521
20.00	-34.38	-37.09	0.00	-3,704.49	0.00	3,704.49	6,380.85	3,190.42	14,599.3	7,310.53	1.22	-0.58	0.512
25.00	-32.81	-36.54	0.00	-3,519.06	0.00	3,519.06	6,293.51	3,146.75	14,122.2	7,071.60	1.91	-0.73	0.503
30.00	-31.28	-35.98	0.00	-3,336.36	0.00	3,336.36	6,204.83	3,102.42	13,649.8	6,835.05	2.75	-0.88	0.493
35.00	-29.78	-35.40	0.00	-3,156.48	0.00	3,156.48	6,114.81	3,057.41	13,182.3	6,600.97	3.75	-1.03	0.483
40.00	-28.30	-34.81	0.00	-2,979.49	0.00	2,979.49	6,023.45	3,011.73	12,719.9	6,369.44	4.91	-1.18	0.473
45.00	-26.87	-34.38	0.00	-2,805.46	0.00	2,805.46	5,930.75	2,965.37	12,262.8	6,140.55	6.23	-1.33	0.462
47.00	-26.30	-34.08	0.00	-2,736.71	0.00	2,736.71	5,893.29	2,946.65	12,081.5	6,049.76	6.80	-1.39	0.457
50.00	-24.79	-33.63	0.00	-2,634.48	0.00	2,634.48	5,819.53	2,909.76	11,776.4	5,896.99	7.70	-1.48	0.451
54.00	-22.85	-33.28	0.00	-2,499.97	0.00	2,499.97	4,932.79	2,466.39	10,012.2	5,013.54	8.99	-1.60	0.503
55.00	-22.57	-32.92	0.00	-2,466.69	0.00	2,466.69	4,917.76	2,458.88	9,938.37	4,976.57	9.33	-1.63	0.500
60.00	-21.33	-32.30	0.00	-2,302.08	0.00	2,302.08	4,841.84	2,420.92	9,571.58	4,792.90	11.13	-1.79	0.485
65.00	-20.12	-31.67	0.00	-2,140.59	0.00	2,140.59	4,764.57	2,382.28	9,208.89	4,611.29	13.09	-1.96	0.469
70.00	-18.93	-31.04	0.00	-1,982.24	0.00	1,982.24	4,685.96	2,342.98	8,850.47	4,431.81	15.23	-2.12	0.451
75.00	-17.77	-30.41	0.00	-1,827.04	0.00	1,827.04	4,606.01	2,303.00	8,496.51	4,254.57	17.53	-2.27	0.433
80.00	-16.64	-29.78	0.00	-1,674.98	0.00	1,674.98	4,524.71	2,262.36	8,147.17	4,079.64	20.00	-2.43	0.414
85.00	-15.54	-29.15	0.00	-1,526.07	0.00	1,526.07	4,420.37	2,210.18	7,764.52	3,888.03	22.62	-2.58	0.396
90.00	-14.46	-28.53	0.00	-1,380.30	0.00	1,380.30	4,310.59	2,155.30	7,381.75	3,696.36	25.41	-2.73	0.377
95.00	-13.43	-28.18	0.00	-1,237.65	0.00	1,237.65	4,200.82	2,100.41	7,008.66	3,509.54	28.35	-2.88	0.356
95.13	-13.38	-27.90	0.00	-1,234.13	0.00	1,234.13	4,198.07	2,099.04	6,999.46	3,504.93	28.43	-2.88	0.355
100.00	-11.80	-27.48	0.00	-1,098.14	0.00	1,098.14	4,091.04	2,045.52	6,645.25	3,327.56	31.44	-3.02	0.333
100.88	-11.50	-27.18	0.00	-1,074.10	0.00	1,074.10	2,749.21	1,374.61	4,543.82	2,275.29	32.00	-3.04	0.477
105.00	-10.86	-26.63	0.00	-961.99	0.00	961.99	2,709.67	1,354.83	4,379.95	2,193.23	34.68	-3.15	0.443
110.00	-10.10	-26.03	0.00	-828.84	0.00	828.84	2,660.51	1,330.25	4,183.25	2,094.74	38.07	-3.32	0.400
115.00	-9.36	-25.44	0.00	-698.68	0.00	698.68	2,610.00	1,305.00	3,988.84	1,997.38	41.63	-3.48	0.354
120.00	-8.65	-24.85	0.00	-571.49	0.00	571.49	2,558.16	1,279.08	3,796.88	1,901.26	45.35	-3.62	0.304
125.00	-7.96	-24.27	0.00	-447.22	0.00	447.22	2,504.97	1,252.49	3,607.56	1,806.46	49.20	-3.74	0.251
130.00	-7.31	-23.70	0.00	-325.86	0.00	325.86	2,450.45	1,225.22	3,421.06	1,713.07	53.17	-3.84	0.194
135.00	-6.67	-23.24	0.00	-207.35	0.00	207.35	2,394.58	1,197.29	3,237.54	1,621.18	57.24	-3.92	0.131
138.00	-3.80	-14.19	0.00	-137.62	0.00	137.62	2,360.41	1,180.21	3,128.95	1,566.80	59.71	-3.95	0.090
140.00	-3.60	-13.81	0.00	-109.25	0.00	109.25	2,337.37	1,168.68	3,057.20	1,530.87	61.37	-3.97	0.073
145.00	-3.08	-13.37	0.00	-40.18	0.00	40.18	2,271.73	1,135.87	2,871.25	1,437.76	65.54	-3.99	0.029
148.00	-0.09	-0.06	0.00	-0.06	0.00	0.06	2,224.69	1,112.34	2,752.97	1,378.53	68.04	-4.00	0.000
149.00	0.00	-0.05	0.00	0.00	0.00	0.00	2,209.00	1,104.50	2,714.10	1,359.07	68.88	-4.00	0.000

© 2007 - 2016 by ATC IP LLC. All rights reserved.

Load Case: 1.2D + 1.0Di + 1.0Wi 50 mph with 1.00 in Radial Ice 20 Iterations

Gust Response Factor : 1.10
Dead Load Factor : 1.20
Wind Load Factor : 1.00

Ice Dead Load Factor : 1.00

Wind Importance Factor : 1.00
Ice Importance Factor : 1.00

Applied Segment Forces Summary

		Shaft Forces		Discrete Forces				Linear Forces		Sum of Forces			
Seg Elev (ft)	Description	Wind FX (lb)	Dead Load (lb)	Wind FX (lb)	Torsion MY (lb-ft)	Moment MZ (lb-ft)	Dead Load (lb)	Wind FX (lb)	Dead Load (lb)	Wind FX (lb)	Dead Load (lb)	Torsion MY (lb-ft)	Moment MZ (lb)
0.00		90.9	0.0					0.0	0.0	90.9	0.0	0.0	0.0
5.00		180.8	2,517.0					0.0	178.1	180.8	2,695.2	0.0	0.0
10.00		178.5	2,541.5					0.0	178.1	178.5	2,719.6	0.0	0.0
15.00		178.7	2,529.9					0.0	178.1	178.7	2,708.1	0.0	0.0
20.00		183.4	2,506.7					0.0	178.1	183.4	2,684.8	0.0	0.0
25.00		189.2	2,477.3					0.0	178.1	189.2	2,655.5	0.0	0.0
30.00		193.4	2,444.2					0.0	178.1	193.4	2,622.3	0.0	0.0
35.00		196.3	2,408.4					0.0	178.1	196.3	2,586.6	0.0	0.0
40.00		198.4	2,370.7					0.0	178.1	198.4	2,548.8	0.0	0.0
45.00		139.6	2,331.5					0.0	178.1	139.6	2,509.6	0.0	0.0
47.00	Bot - Section 2	101.0	923.0					0.0	71.3	101.0	994.2	0.0	0.0
50.00		142.6	2,239.2					0.0	106.9	142.6	2,346.1	0.0	0.0
54.00	Top - Section 1	101.9	2,944.5					0.0	142.5	101.9	3,087.0	0.0	0.0
55.00		122.3	416.1					0.0	35.6	122.3	451.7	0.0	0.0
60.00		203.7	2,052.2					0.0	178.1	203.7	2,230.4	0.0	0.0
65.00		203.1	2,013.7					0.0	178.1	203.1	2,191.8	0.0	0.0
70.00		202.2	1,974.5					0.0	178.1	202.2	2,152.7	0.0	0.0
75.00		201.0	1,934.8					0.0	178.1	201.0	2,113.0	0.0	0.0
80.00		199.5	1,894.7					0.0	178.1	199.5	2,072.8	0.0	0.0
85.00		197.7	1,854.0					0.0	178.1	197.7	2,032.2	0.0	0.0
90.00		195.7	1,813.0					0.0	178.1	195.7	1,991.2	0.0	0.0
95.00		99.8	1,771.7					0.0	178.1	99.8	1,949.8	0.0	0.0
95.13	Bot - Section 3	97.5	43.9					0.0	4.5	97.5	48.4	0.0	0.0
100.00		112.0	2,502.9					0.0	173.7	112.0	2,676.6	0.0	0.0
100.88	Top - Section 2	96.3	443.9					0.0	31.2	96.3	475.1	0.0	0.0
105.00		174.4	1,149.6					0.0	147.0	174.4	1,296.5	0.0	0.0
110.00		188.7	1,361.4					0.0	178.1	188.7	1,539.6	0.0	0.0
115.00		185.8	1,327.6					0.0	178.1	185.8	1,505.7	0.0	0.0
120.00		182.8	1,293.5					0.0	178.1	182.8	1,471.6	0.0	0.0
125.00		179.7	1,259.2					0.0	178.1	179.7	1,437.3	0.0	0.0
130.00		176.4	1,224.6					0.0	178.1	176.4	1,402.8	0.0	0.0
135.00		139.0	1,189.9					0.0	178.1	139.0	1,368.1	0.0	0.0
138.00	Appertunance(s)	85.7	699.0	1,886.7	0.0	0.0	11,354.8	0.0	106.9	1,972.3	12,160.8	0.0	0.0
140.00		117.9	459.6					0.0	35.8	117.9	495.4	0.0	0.0
145.00		133.3	1,119.9					0.0	89.4	133.3	1,209.3	0.0	0.0
148.00	Appertunance(s)	65.8	656.9	3,208.0	0.0	-1,188.3	14,624.3	0.0	53.6	3,273.8	15,334.8	0.0	0.0
149.00		16.3	216.8					0.0	0.0	16.3	216.8	0.0	0.0
									Totals:	10,746.1	89,982.2	0.00	0.00

 © 2007 - 2016 by ATC IP LLC. All rights reserved.

Load Case: 1.2D + 1.0Di + 1.0Wi 50 mph with 1.00 in Radial Ice 20 Iterations

Gust Response Factor : 1.10 Ice Dead Load Factor : 1.00 Wind Importance Factor : 1.00
Dead Load Factor : 1.20 Ice Importance Factor : 1.00
Wind Load Factor : 1.00

Calculated Forces

Seg Elev (ft)	Pu FY (-) (kips)	Vu FX (-) (kips)	Tu MY (ft-kips)	Mu MZ (ft-kips)	Mu MX (ft-kips)	Resultant Moment (ft-kips)	phi Pn (kips)	phi Vn (kips)	phi Tn (ft-kips)	phi Mn (ft-kips)	Total Deflect (in)	Rotation (deg)	Ratio
0.00	-89.98	-10.69	0.00	-1,215.71	0.00	1,215.71	6,716.77	3,358.39	16,551.8	8,288.22	0.00	0.00	0.160
5.00	-87.28	-10.56	0.00	-1,162.28	0.00	1,162.28	6,634.81	3,317.40	16,057.4	8,040.68	0.02	-0.04	0.158
10.00	-84.55	-10.44	0.00	-1,109.46	0.00	1,109.46	6,551.49	3,275.75	15,567.1	7,795.15	0.08	-0.08	0.155
15.00	-81.83	-10.31	0.00	-1,057.26	0.00	1,057.26	6,466.84	3,233.42	15,081.0	7,551.74	0.19	-0.12	0.153
20.00	-79.14	-10.18	0.00	-1,005.69	0.00	1,005.69	6,380.85	3,190.42	14,599.3	7,310.53	0.33	-0.16	0.150
25.00	-76.48	-10.04	0.00	-954.79	0.00	954.79	6,293.51	3,146.75	14,122.2	7,071.60	0.52	-0.20	0.147
30.00	-73.85	-9.89	0.00	-904.61	0.00	904.61	6,204.83	3,102.42	13,649.8	6,835.05	0.75	-0.24	0.144
35.00	-71.26	-9.73	0.00	-855.18	0.00	855.18	6,114.81	3,057.41	13,182.3	6,600.97	1.02	-0.28	0.141
40.00	-68.71	-9.56	0.00	-806.55	0.00	806.55	6,023.45	3,011.73	12,719.9	6,369.44	1.33	-0.32	0.138
45.00	-66.19	-9.44	0.00	-758.73	0.00	758.73	5,930.75	2,965.37	12,262.8	6,140.55	1.69	-0.36	0.135
47.00	-65.20	-9.36	0.00	-739.84	0.00	739.84	5,893.29	2,946.65	12,081.5	6,049.76	1.85	-0.38	0.133
50.00	-62.85	-9.23	0.00	-711.77	0.00	711.77	5,819.53	2,909.76	11,776.4	5,896.99	2.09	-0.40	0.132
54.00	-59.76	-9.13	0.00	-674.84	0.00	674.84	4,932.79	2,466.39	10,012.2	5,013.54	2.44	-0.43	0.147
55.00	-59.30	-9.03	0.00	-665.71	0.00	665.71	4,917.76	2,458.88	9,938.37	4,976.57	2.53	-0.44	0.146
60.00	-57.07	-8.85	0.00	-620.56	0.00	620.56	4,841.84	2,420.92	9,571.58	4,792.90	3.02	-0.49	0.141
65.00	-54.87	-8.67	0.00	-576.30	0.00	576.30	4,764.57	2,382.28	9,208.89	4,611.29	3.55	-0.53	0.137
70.00	-52.71	-8.49	0.00	-532.95	0.00	532.95	4,685.96	2,342.98	8,850.47	4,431.81	4.13	-0.57	0.132
75.00	-50.60	-8.30	0.00	-490.51	0.00	490.51	4,606.01	2,303.00	8,496.51	4,254.57	4.75	-0.62	0.126
80.00	-48.52	-8.11	0.00	-449.00	0.00	449.00	4,524.71	2,262.36	8,147.17	4,079.64	5.42	-0.66	0.121
85.00	-46.48	-7.93	0.00	-408.43	0.00	408.43	4,420.37	2,210.18	7,764.52	3,888.03	6.13	-0.70	0.116
90.00	-44.49	-7.74	0.00	-368.81	0.00	368.81	4,310.59	2,155.30	7,381.75	3,696.36	6.88	-0.74	0.110
95.00	-42.54	-7.62	0.00	-330.13	0.00	330.13	4,200.82	2,100.41	7,008.66	3,509.54	7.68	-0.78	0.104
95.13	-42.49	-7.54	0.00	-329.18	0.00	329.18	4,198.07	2,099.04	6,999.46	3,504.93	7.70	-0.78	0.104
100.00	-39.81	-7.41	0.00	-292.42	0.00	292.42	4,091.04	2,045.52	6,645.25	3,327.56	8.51	-0.81	0.098
100.88	-39.34	-7.32	0.00	-285.94	0.00	285.94	2,749.21	1,374.61	4,543.82	2,275.29	8.66	-0.82	0.140
105.00	-38.04	-7.15	0.00	-255.76	0.00	255.76	2,709.67	1,354.83	4,379.95	2,193.23	9.39	-0.85	0.131
110.00	-36.50	-6.96	0.00	-220.03	0.00	220.03	2,660.51	1,330.25	4,183.25	2,094.74	10.30	-0.89	0.119
115.00	-34.99	-6.78	0.00	-185.22	0.00	185.22	2,610.00	1,305.00	3,988.84	1,997.38	11.26	-0.94	0.106
120.00	-33.52	-6.59	0.00	-151.34	0.00	151.34	2,558.16	1,279.08	3,796.88	1,901.26	12.26	-0.97	0.093
125.00	-32.08	-6.40	0.00	-118.40	0.00	118.40	2,504.97	1,252.49	3,607.56	1,806.46	13.30	-1.01	0.078
130.00	-30.68	-6.21	0.00	-86.39	0.00	86.39	2,450.45	1,225.22	3,421.06	1,713.07	14.37	-1.03	0.063
135.00	-29.31	-6.06	0.00	-55.33	0.00	55.33	2,394.58	1,197.29	3,237.54	1,621.18	15.46	-1.05	0.046
138.00	-17.19	-3.86	0.00	-37.16	0.00	37.16	2,360.41	1,180.21	3,128.95	1,566.80	16.13	-1.06	0.031
140.00	-16.69	-3.74	0.00	-29.44	0.00	29.44	2,337.37	1,168.68	3,057.20	1,530.87	16.57	-1.07	0.026
145.00	-15.49	-3.58	0.00	-10.76	0.00	10.76	2,271.73	1,135.87	2,871.25	1,437.76	17.69	-1.07	0.014
148.00	-0.22	-0.02	0.00	-0.02	0.00	0.02	2,224.69	1,112.34	2,752.97	1,378.53	18.37	-1.07	0.000
149.00	0.00	-0.02	0.00	0.00	0.00	0.00	2,209.00	1,104.50	2,714.10	1,359.07	18.59	-1.07	0.000

© 2007 - 2016 by ATC IP LLC. All rights reserved.

Load Case: 1.0D + 1.0W Serviceability 60 mph 20 Iterations

Gust Response Factor : 1.10
Dead Load Factor : 1.00
Wind Load Factor : 1.00

Wind Importance Factor : 1.00

Applied Segment Forces Summary

		Shaft Forces		Discrete Forces				Linear Forces		Sum of Forces			
Seg Elev (ft)	Description	Wind FX (lb)	Dead Load (lb)	Wind FX (lb)	Torsion MY (lb-ft)	Moment MZ (lb-ft)	Dead Load (lb)	Wind FX (lb)	Dead Load (lb)	Wind FX (lb)	Dead Load (lb)	Torsion MY (lb-ft)	Moment MZ (lb)
0.00		67.5	0.0					0.0	0.0	67.5	0.0	0.0	0.0
5.00		133.8	1,605.6					0.0	148.4	133.8	1,754.1	0.0	0.0
10.00		131.4	1,576.9					0.0	148.4	131.4	1,725.4	0.0	0.0
15.00		131.0	1,548.2					0.0	148.4	131.0	1,696.6	0.0	0.0
20.00		134.1	1,519.4					0.0	148.4	134.1	1,667.9	0.0	0.0
25.00		138.0	1,490.7					0.0	148.4	138.0	1,639.2	0.0	0.0
30.00		140.7	1,462.0					0.0	148.4	140.7	1,610.4	0.0	0.0
35.00		142.5	1,433.3					0.0	148.4	142.5	1,581.7	0.0	0.0
40.00		143.6	1,404.5					0.0	148.4	143.6	1,553.0	0.0	0.0
45.00		100.9	1,375.8					0.0	148.4	100.9	1,524.2	0.0	0.0
47.00	Bot - Section 2	73.0	542.3					0.0	59.4	73.0	601.7	0.0	0.0
50.00		102.9	1,522.3					0.0	89.1	102.9	1,611.3	0.0	0.0
54.00	Top - Section 1	73.5	1,999.5					0.0	118.8	73.5	2,118.3	0.0	0.0
55.00		88.0	233.1					0.0	29.7	88.0	262.8	0.0	0.0
60.00		146.3	1,150.6					0.0	148.4	146.3	1,299.0	0.0	0.0
65.00		145.5	1,125.4					0.0	148.4	145.5	1,273.9	0.0	0.0
70.00		144.5	1,100.3					0.0	148.4	144.5	1,248.7	0.0	0.0
75.00		143.3	1,075.1					0.0	148.4	143.3	1,223.6	0.0	0.0
80.00		141.8	1,050.0					0.0	148.4	141.8	1,198.4	0.0	0.0
85.00		140.2	1,024.9					0.0	148.4	140.2	1,173.3	0.0	0.0
90.00		138.4	999.7					0.0	148.4	138.4	1,148.2	0.0	0.0
95.00		70.4	974.6					0.0	148.4	70.4	1,123.0	0.0	0.0
95.13	Bot - Section 3	68.7	24.0					0.0	3.7	68.7	27.8	0.0	0.0
100.00		79.0	1,598.7					0.0	144.7	79.0	1,743.5	0.0	0.0
100.88	Top - Section 2	67.7	282.6					0.0	26.0	67.7	308.6	0.0	0.0
105.00		122.4	553.8					0.0	122.5	122.4	676.3	0.0	0.0
110.00		132.0	654.9					0.0	148.4	132.0	803.4	0.0	0.0
115.00		129.5	637.0					0.0	148.4	129.5	785.4	0.0	0.0
120.00		127.0	619.0					0.0	148.4	127.0	767.4	0.0	0.0
125.00		124.4	601.0					0.0	148.4	124.4	749.5	0.0	0.0
130.00		121.6	583.1					0.0	148.4	121.6	731.5	0.0	0.0
135.00		95.5	565.1					0.0	148.4	95.5	713.6	0.0	0.0
138.00	Appertunance(s)	58.7	330.5	1,930.4	0.0	0.0	3,445.2	0.0	89.1	1,989.0	3,864.7	0.0	0.0
140.00		80.5	216.7					0.0	29.8	80.5	246.5	0.0	0.0
145.00		90.8	529.2					0.0	74.5	90.8	603.7	0.0	0.0
148.00	Appertunance(s)	44.7	308.9	2,897.9	0.0	-1,398.2	4,000.0	0.0	44.7	2,942.6	4,353.6	0.0	0.0
149.00		11.1	101.5					0.0	0.0	11.1	101.5	0.0	0.0
									Totals:	8,852.91	45,511.7	0.00	0.00

 © 2007 - 2016 by ATC IP LLC. All rights reserved.

Load Case: 1.0D + 1.0W Serviceability 60 mph 20 Iterations

Gust Response Factor : 1.10
Dead Load Factor : 1.00
Wind Load Factor : 1.00
Wind Importance Factor : 1.00

Calculated Forces

Seg Elev (ft)	Pu FY (-) (kips)	Vu FX (-) (kips)	Tu MY (ft-kips)	Mu MZ (ft-kips)	Mu MX (ft-kips)	Resultant Moment (ft-kips)	phi Pn (kips)	phi Vn (kips)	phi Tn (ft-kips)	phi Mn (ft-kips)	Total Deflect (in)	Rotation (deg)	Ratio
0.00	-45.51	-8.80	0.00	-1,009.05	0.00	1,009.05	6,716.77	3,358.39	16,551.8	8,288.22	0.00	0.00	0.129
5.00	-43.75	-8.69	0.00	-965.06	0.00	965.06	6,634.81	3,317.40	16,057.4	8,040.68	0.02	-0.03	0.127
10.00	-42.02	-8.58	0.00	-921.62	0.00	921.62	6,551.49	3,275.75	15,567.1	7,795.15	0.07	-0.07	0.125
15.00	-40.32	-8.47	0.00	-878.72	0.00	878.72	6,466.84	3,233.42	15,081.0	7,551.74	0.16	-0.10	0.123
20.00	-38.65	-8.35	0.00	-836.37	0.00	836.37	6,380.85	3,190.42	14,599.3	7,310.53	0.28	-0.13	0.120
25.00	-37.00	-8.23	0.00	-794.59	0.00	794.59	6,293.51	3,146.75	14,122.2	7,071.60	0.43	-0.16	0.118
30.00	-35.39	-8.11	0.00	-753.42	0.00	753.42	6,204.83	3,102.42	13,649.8	6,835.05	0.62	-0.20	0.116
35.00	-33.80	-7.98	0.00	-712.88	0.00	712.88	6,114.81	3,057.41	13,182.3	6,600.97	0.85	-0.23	0.114
40.00	-32.25	-7.85	0.00	-672.98	0.00	672.98	6,023.45	3,011.73	12,719.9	6,369.44	1.11	-0.27	0.111
45.00	-30.72	-7.75	0.00	-633.73	0.00	633.73	5,930.75	2,965.37	12,262.8	6,140.55	1.41	-0.30	0.108
47.00	-30.11	-7.69	0.00	-618.22	0.00	618.22	5,893.29	2,946.65	12,081.5	6,049.76	1.53	-0.31	0.107
50.00	-28.50	-7.59	0.00	-595.16	0.00	595.16	5,819.53	2,909.76	11,776.4	5,896.99	1.74	-0.33	0.106
54.00	-26.38	-7.51	0.00	-564.82	0.00	564.82	4,932.79	2,466.39	10,012.2	5,013.54	2.03	-0.36	0.118
55.00	-26.12	-7.43	0.00	-557.31	0.00	557.31	4,917.76	2,458.88	9,938.37	4,976.57	2.11	-0.37	0.117
60.00	-24.81	-7.29	0.00	-520.17	0.00	520.17	4,841.84	2,420.92	9,571.58	4,792.90	2.51	-0.41	0.114
65.00	-23.54	-7.15	0.00	-483.72	0.00	483.72	4,764.57	2,382.28	9,208.89	4,611.29	2.96	-0.44	0.110
70.00	-22.28	-7.01	0.00	-447.97	0.00	447.97	4,685.96	2,342.98	8,850.47	4,431.81	3.44	-0.48	0.106
75.00	-21.06	-6.87	0.00	-412.93	0.00	412.93	4,606.01	2,303.00	8,496.51	4,254.57	3.96	-0.51	0.102
80.00	-19.86	-6.73	0.00	-378.59	0.00	378.59	4,524.71	2,262.36	8,147.17	4,079.64	4.52	-0.55	0.097
85.00	-18.68	-6.59	0.00	-344.95	0.00	344.95	4,420.37	2,210.18	7,764.52	3,888.03	5.11	-0.58	0.093
90.00	-17.53	-6.45	0.00	-312.02	0.00	312.02	4,310.59	2,155.30	7,381.75	3,696.36	5.74	-0.62	0.088
95.00	-16.41	-6.37	0.00	-279.79	0.00	279.79	4,200.82	2,100.41	7,008.66	3,509.54	6.40	-0.65	0.084
95.13	-16.38	-6.30	0.00	-279.00	0.00	279.00	4,198.07	2,099.04	6,999.46	3,504.93	6.42	-0.65	0.084
100.00	-14.63	-6.21	0.00	-248.26	0.00	248.26	4,091.04	2,045.52	6,645.25	3,327.56	7.10	-0.68	0.078
100.88	-14.32	-6.14	0.00	-242.83	0.00	242.83	2,749.21	1,374.61	4,543.82	2,275.29	7.23	-0.69	0.112
105.00	-13.65	-6.02	0.00	-217.50	0.00	217.50	2,709.67	1,354.83	4,379.95	2,193.23	7.83	-0.71	0.104
110.00	-12.84	-5.88	0.00	-187.40	0.00	187.40	2,660.51	1,330.25	4,183.25	2,094.74	8.60	-0.75	0.094
115.00	-12.05	-5.75	0.00	-157.98	0.00	157.98	2,610.00	1,305.00	3,988.84	1,997.38	9.41	-0.79	0.084
120.00	-11.28	-5.62	0.00	-129.22	0.00	129.22	2,558.16	1,279.08	3,796.88	1,901.26	10.25	-0.82	0.072
125.00	-10.53	-5.49	0.00	-101.13	0.00	101.13	2,504.97	1,252.49	3,607.56	1,806.46	11.12	-0.84	0.060
130.00	-9.80	-5.36	0.00	-73.68	0.00	73.68	2,450.45	1,225.22	3,421.06	1,713.07	12.01	-0.87	0.047
135.00	-9.09	-5.26	0.00	-46.88	0.00	46.88	2,394.58	1,197.29	3,237.54	1,621.18	12.93	-0.89	0.033
138.00	-5.26	-3.21	0.00	-31.11	0.00	31.11	2,360.41	1,180.21	3,128.95	1,566.80	13.49	-0.89	0.022
140.00	-5.01	-3.12	0.00	-24.70	0.00	24.70	2,337.37	1,168.68	3,057.20	1,530.87	13.87	-0.90	0.018
145.00	-4.41	-3.02	0.00	-9.08	0.00	9.08	2,271.73	1,135.87	2,871.25	1,437.76	14.81	-0.90	0.008
148.00	-0.10	-0.01	0.00	-0.01	0.00	0.01	2,224.69	1,112.34	2,752.97	1,378.53	15.38	-0.90	0.000
149.00	0.00	-0.01	0.00	0.00	0.00	0.00	2,209.00	1,104.50	2,714.10	1,359.07	15.57	-0.90	0.000

© 2007 - 2016 by ATC IP LLC. All rights reserved.

Equivalent Lateral Forces Method Analysis

(Based on ASCE7-10 Chapters 11, 12, 15)

Spectral Response Acceleration for Short Period (S_s):	0.17	
Spectral Response Acceleration at 1.0 Second Period (S_1):	0.06	
Long-Period Transition Period (T_L):	6	
Importance Factor (I_E):	1.00	
Site Coefficient F_a:	1.60	
Site Coeffiecient F_v:	2.40	
Response Modification Coefficient (R):	1.50	
Design Spectral Response Acceleration at Short Period (S_{ds}):	0.18	
Design Spectral Response Acceleration at 1.0 Second Period (S_{d1}):	0.10	
Seismic Response Coefficient (C_s):	0.04	
Upper Limit C_s	0.04	
Lower Limit C_s	0.03	
Period based on Rayleigh Method (sec):	1.75	
Redundancy Factor (p):	1.30	
Seismic Force Distribution Exponent (k):	1.62	
Total Unfactored Dead Load:	45.51	k
Seismic Base Shear (E):	2.27	k

 © 2007 - 2016 by ATC IP LLC. All rights reserved.

Equivalent Modal Forces Analysis

(Based on ASCE7-10 Chapters 11, 12 & 15 and ANSI/TIA-G, section 2.7)

Spectral Response Acceleration for Short Period (S_s):	0.17
Spectral Response Acceleration at 1.0 Second Period (S_1):	0.06
Importance Factor (I_E):	1.00
Site Coefficient F_a:	1.60
Site Coefficient F_v	2.40
Response Modification Coefficient (R):	1.50
Design Spectral Response Acceleration at Short Period (S_{ds}):	0.18
Desing Spectral Response Acceleration at 1.0 Second Period (S_{d1}):	0.10
Period Based on Rayleigh Method (sec):	1.75
Redundancy Factor (p):	1.30

Load Case (1.2 + 0.2Sds) * DL + E ELFM **Seismic Equivalent Lateral Forces Method**

Segment	Height Above Base (ft)	Weight (lb)	a	b	c	Saz	Horizontal Force (lb)	Vertical Force (lb)
36	148.50	102	1.877	1.914	1.116	0.349	31	88
35	146.50	354	1.827	1.665	1.025	0.319	98	305
34	142.50	604	1.729	1.234	0.859	0.263	138	521
33	139.00	247	1.645	0.924	0.733	0.219	47	213
32	136.50	420	1.586	0.736	0.651	0.189	69	362
31	132.50	714	1.495	0.488	0.536	0.146	90	616
30	127.50	732	1.384	0.254	0.415	0.100	63	632
29	122.50	749	1.278	0.091	0.317	0.062	40	647
28	117.50	767	1.175	-0.017	0.237	0.031	21	663
27	112.50	785	1.077	-0.082	0.173	0.009	6	678
26	107.50	803	0.984	-0.114	0.123	-0.006	-4	694
25	102.94	676	0.902	-0.122	0.088	-0.014	-8	584
24	100.44	309	0.859	-0.120	0.072	-0.016	-4	266
23	97.56	1,743	0.810	-0.114	0.057	-0.016	-24	1,505
22	95.06	28	0.769	-0.106	0.045	-0.014	0	24
21	92.50	1,123	0.728	-0.095	0.036	-0.012	-11	970
20	87.50	1,148	0.652	-0.071	0.021	-0.004	-4	991
19	82.50	1,173	0.579	-0.045	0.012	0.007	7	1,013
18	77.50	1,198	0.511	-0.020	0.008	0.017	18	1,035
17	72.50	1,224	0.447	0.002	0.006	0.026	28	1,056
16	67.50	1,249	0.388	0.022	0.007	0.034	37	1,078
15	62.50	1,274	0.333	0.037	0.010	0.039	43	1,100
14	57.50	1,299	0.281	0.049	0.014	0.042	47	1,121
13	54.50	263	0.253	0.055	0.017	0.043	10	227
12	52.00	2,118	0.230	0.059	0.019	0.043	80	1,829
11	48.50	1,611	0.200	0.063	0.023	0.043	61	1,391
10	46.00	602	0.180	0.065	0.026	0.043	22	519
9	42.50	1,524	0.154	0.068	0.030	0.042	56	1,316
8	37.50	1,553	0.120	0.070	0.034	0.041	55	1,341
7	32.50	1,582	0.090	0.071	0.038	0.040	54	1,365
6	27.50	1,610	0.064	0.072	0.041	0.038	53	1,390
5	22.50	1,639	0.043	0.071	0.042	0.037	52	1,415
4	17.50	1,668	0.026	0.067	0.040	0.034	49	1,440
3	12.50	1,697	0.013	0.059	0.034	0.030	45	1,465

 © 2007 - 2016 by ATC IP LLC. All rights reserved.

2	7.50	1,725	0.005	0.044	0.025	0.023	35	1,490
1	2.50	1,754	0.001	0.018	0.010	0.010	16	1,514
Alcatel-Lucent RRH2X	148.00	138	1.865	1.849	1.093	0.342	41	119
Alcatel-Lucent RRH2X	148.00	132	1.865	1.849	1.093	0.342	39	114
Alcatel-Lucent RRH2x	148.00	170	1.865	1.849	1.093	0.342	50	147
RFS DB-T1-6Z-8AB-0Z	148.00	88	1.865	1.849	1.093	0.342	26	76
Andrew LNX-6514DS-A1	148.00	116	1.865	1.849	1.093	0.342	34	100
Commscope SBNHH-	148.00	244	1.865	1.849	1.093	0.342	72	210
Amphenol Antel LPA-8	148.00	162	1.865	1.849	1.093	0.342	48	140
Flat Low Profile Pla	148.00	1,500	1.865	1.849	1.093	0.342	444	1,295
VZW Unused Reserve:	148.00	1,450	1.865	1.849	1.093	0.342	429	1,252
Raycap DC6-48-60-18-	138.00	60	1.621	0.846	0.699	0.207	11	52
Ericsson RRUS 11 (Ba	138.00	825	1.621	0.846	0.699	0.207	148	712
Ericsson RRUS 12	138.00	150	1.621	0.846	0.699	0.207	27	129
Andrew SBNH-1D6565C	138.00	547	1.621	0.846	0.699	0.207	98	472
Ericsson KRC 118 054	138.00	363	1.621	0.846	0.699	0.207	65	313
Flat Low Profile Pla	138.00	1,500	1.621	0.846	0.699	0.207	269	1,295
		45,512	51.206	29.009	20.971	6.557	3,116	39,291

Load Case (1.2 + 0.2Sds) * DL + E EMAM **Seismic Equivalent Modal Analysis Method**

Segment	Height Above Base (ft)	Weight (lb)	a	b	c	Saz	Horizontal Force (lb)	Vertical Force (lb)
36	148.50	102	1.877	1.914	1.116	0.349	31	88
35	146.50	354	1.827	1.665	1.025	0.319	98	305
34	142.50	604	1.729	1.234	0.859	0.263	138	521
33	139.00	247	1.645	0.924	0.733	0.219	47	213
32	136.50	420	1.586	0.736	0.651	0.189	69	362
31	132.50	714	1.495	0.488	0.536	0.146	90	616
30	127.50	732	1.384	0.254	0.415	0.100	63	632
29	122.50	749	1.278	0.091	0.317	0.062	40	647
28	117.50	767	1.175	-0.017	0.237	0.031	21	663
27	112.50	785	1.077	-0.082	0.173	0.009	6	678
26	107.50	803	0.984	-0.114	0.123	-0.006	-4	694
25	102.94	676	0.902	-0.122	0.088	-0.014	-8	584
24	100.44	309	0.859	-0.120	0.072	-0.016	-4	266
23	97.56	1,743	0.810	-0.114	0.057	-0.016	-24	1,505
22	95.06	28	0.769	-0.106	0.045	-0.014	0	24
21	92.50	1,123	0.728	-0.095	0.036	-0.012	-11	970
20	87.50	1,148	0.652	-0.071	0.021	-0.004	-4	991
19	82.50	1,173	0.579	-0.045	0.012	0.007	7	1,013
18	77.50	1,198	0.511	-0.020	0.008	0.017	18	1,035
17	72.50	1,224	0.447	0.002	0.006	0.026	28	1,056
16	67.50	1,249	0.388	0.022	0.007	0.034	37	1,078
15	62.50	1,274	0.333	0.037	0.010	0.039	43	1,100
14	57.50	1,299	0.281	0.049	0.014	0.042	47	1,121
13	54.50	263	0.253	0.055	0.017	0.043	10	227
12	52.00	2,118	0.230	0.059	0.019	0.043	80	1,829
11	48.50	1,611	0.200	0.063	0.023	0.043	61	1,391
10	46.00	602	0.180	0.065	0.026	0.043	22	519
9	42.50	1,524	0.154	0.068	0.030	0.042	56	1,316
8	37.50	1,553	0.120	0.070	0.034	0.041	55	1,341
7	32.50	1,582	0.090	0.071	0.038	0.040	54	1,365
6	27.50	1,610	0.064	0.072	0.041	0.038	53	1,390
5	22.50	1,639	0.043	0.071	0.042	0.037	52	1,415
4	17.50	1,668	0.026	0.067	0.040	0.034	49	1,440
3	12.50	1,697	0.013	0.059	0.034	0.030	45	1,465
2	7.50	1,725	0.005	0.044	0.025	0.023	35	1,490
1	2.50	1,754	0.001	0.018	0.010	0.010	16	1,514
Alcatel-Lucent RRH2X	148.00	138	1.865	1.849	1.093	0.342	41	119

 © 2007 - 2016 by ATC IP LLC. All rights reserved.

Alcatel-Lucent RRH2X	148.00	132	1.865	1.849	1.093	0.342	39	114
Alcatel-Lucent RRH2x	148.00	170	1.865	1.849	1.093	0.342	50	147
RFS DB-T1-6Z-8AB-0Z	148.00	88	1.865	1.849	1.093	0.342	26	76
Andrew LNX-6514DS-A1	148.00	116	1.865	1.849	1.093	0.342	34	100
Commscope SBNHH-	148.00	244	1.865	1.849	1.093	0.342	72	210
Amphenol Antel LPA-8	148.00	162	1.865	1.849	1.093	0.342	48	140
Flat Low Profile Pla	148.00	1,500	1.865	1.849	1.093	0.342	444	1,295
VZW Unused Reserve:	148.00	1,450	1.865	1.849	1.093	0.342	429	1,252
Raycap DC6-48-60-18-	138.00	60	1.621	0.846	0.699	0.207	11	52
Ericsson RRUS 11 (Ba	138.00	825	1.621	0.846	0.699	0.207	148	712
Ericsson RRUS 12	138.00	150	1.621	0.846	0.699	0.207	27	129
Andrew SBNH-1D6565C	138.00	547	1.621	0.846	0.699	0.207	98	472
Ericsson KRC 118 054	138.00	363	1.621	0.846	0.699	0.207	65	313
Flat Low Profile Pla	138.00	1,500	1.621	0.846	0.699	0.207	269	1,295
		45,512	51.206	29.009	20.971	6.557	3,116	39,291

Load Case (0.9 - 0.2Sds) * DL + E ELFM **Seismic (Reduced DL) Equivalent Lateral Forces Method**

Segment	Height Above Base (ft)	Weight (lb)	a	b	c	Saz	Horizontal Force (lb)	Vertical Force (lb)
36	148.50	102	1.877	1.914	1.116	0.349	31	88
35	146.50	354	1.827	1.665	1.025	0.319	98	305
34	142.50	604	1.729	1.234	0.859	0.263	138	521
33	139.00	247	1.645	0.924	0.733	0.219	47	213
32	136.50	420	1.586	0.736	0.651	0.189	69	362
31	132.50	714	1.495	0.488	0.536	0.146	90	616
30	127.50	732	1.384	0.254	0.415	0.100	63	632
29	122.50	749	1.278	0.091	0.317	0.062	40	647
28	117.50	767	1.175	-0.017	0.237	0.031	21	663
27	112.50	785	1.077	-0.082	0.173	0.009	6	678
26	107.50	803	0.984	-0.114	0.123	-0.006	-4	694
25	102.94	676	0.902	-0.122	0.088	-0.014	-8	584
24	100.44	309	0.859	-0.120	0.072	-0.016	-4	266
23	97.56	1,743	0.810	-0.114	0.057	-0.016	-24	1,505
22	95.06	28	0.769	-0.106	0.045	-0.014	0	24
21	92.50	1,123	0.728	-0.095	0.036	-0.012	-11	970
20	87.50	1,148	0.652	-0.071	0.021	-0.004	-4	991
19	82.50	1,173	0.579	-0.045	0.012	0.007	7	1,013
18	77.50	1,198	0.511	-0.020	0.008	0.017	18	1,035
17	72.50	1,224	0.447	0.002	0.006	0.026	28	1,056
16	67.50	1,249	0.388	0.022	0.007	0.034	37	1,078
15	62.50	1,274	0.333	0.037	0.010	0.039	43	1,100
14	57.50	1,299	0.281	0.049	0.014	0.042	47	1,121
13	54.50	263	0.253	0.055	0.017	0.043	10	227
12	52.00	2,118	0.230	0.059	0.019	0.043	80	1,829
11	48.50	1,611	0.200	0.063	0.023	0.043	61	1,391
10	46.00	602	0.180	0.065	0.026	0.043	22	519
9	42.50	1,524	0.154	0.068	0.030	0.042	56	1,316
8	37.50	1,553	0.120	0.070	0.034	0.041	55	1,341
7	32.50	1,582	0.090	0.071	0.038	0.040	54	1,365
6	27.50	1,610	0.064	0.072	0.041	0.038	53	1,390
5	22.50	1,639	0.043	0.071	0.042	0.037	52	1,415
4	17.50	1,668	0.026	0.067	0.040	0.034	49	1,440
3	12.50	1,697	0.013	0.059	0.034	0.030	45	1,465
2	7.50	1,725	0.005	0.044	0.025	0.023	35	1,490
1	2.50	1,754	0.001	0.018	0.010	0.010	16	1,514
Alcatel-Lucent RRH2X	148.00	138	1.865	1.849	1.093	0.342	41	119
Alcatel-Lucent RRH2X	148.00	132	1.865	1.849	1.093	0.342	39	114
Alcatel-Lucent RRH2x	148.00	170	1.865	1.849	1.093	0.342	50	147
RFS DB-T1-6Z-8AB-0Z	148.00	88	1.865	1.849	1.093	0.342	26	76

 © 2007 - 2016 by ATC IP LLC. All rights reserved.

Andrew LNX-6514DS-A1	148.00	116	1.865	1.849	1.093	0.342	34	100
Commscope SBNHH-	148.00	244	1.865	1.849	1.093	0.342	72	210
Amphenol Antel LPA-8	148.00	162	1.865	1.849	1.093	0.342	48	140
Flat Low Profile Pla	148.00	1,500	1.865	1.849	1.093	0.342	444	1,295
VZW Unused Reserve:	148.00	1,450	1.865	1.849	1.093	0.342	429	1,252
Raycap DC6-48-60-18-	138.00	60	1.621	0.846	0.699	0.207	11	52
Ericsson RRUS 11 (Ba	138.00	825	1.621	0.846	0.699	0.207	148	712
Ericsson RRUS 12	138.00	150	1.621	0.846	0.699	0.207	27	129
Andrew SBNH-1D6565C	138.00	547	1.621	0.846	0.699	0.207	98	472
Ericsson KRC 118 054	138.00	363	1.621	0.846	0.699	0.207	65	313
Flat Low Profile Pla	138.00	1,500	1.621	0.846	0.699	0.207	269	1,295
		45,512	51.206	29.009	20.971	6.557	3,116	39,291

Load Case (0.9 - 0.2Sds) * DL + E EMAM **Seismic (Reduced DL) Equivalent Modal Analysis Method**

Segment	Height Above Base (ft)	Weight (lb)	a	b	c	Saz	Horizontal Force (lb)	Vertical Force (lb)
36	148.50	102	1.877	1.914	1.116	0.349	31	88
35	146.50	354	1.827	1.665	1.025	0.319	98	305
34	142.50	604	1.729	1.234	0.859	0.263	138	521
33	139.00	247	1.645	0.924	0.733	0.219	47	213
32	136.50	420	1.586	0.736	0.651	0.189	69	362
31	132.50	714	1.495	0.488	0.536	0.146	90	616
30	127.50	732	1.384	0.254	0.415	0.100	63	632
29	122.50	749	1.278	0.091	0.317	0.062	40	647
28	117.50	767	1.175	-0.017	0.237	0.031	21	663
27	112.50	785	1.077	-0.082	0.173	0.009	6	678
26	107.50	803	0.984	-0.114	0.123	-0.006	-4	694
25	102.94	676	0.902	-0.122	0.088	-0.014	-8	584
24	100.44	309	0.859	-0.120	0.072	-0.016	-4	266
23	97.56	1,743	0.810	-0.114	0.057	-0.016	-24	1,505
22	95.06	28	0.769	-0.106	0.045	-0.014	0	24
21	92.50	1,123	0.728	-0.095	0.036	-0.012	-11	970
20	87.50	1,148	0.652	-0.071	0.021	-0.004	-4	991
19	82.50	1,173	0.579	-0.045	0.012	0.007	7	1,013
18	77.50	1,198	0.511	-0.020	0.008	0.017	18	1,035
17	72.50	1,224	0.447	0.002	0.006	0.026	28	1,056
16	67.50	1,249	0.388	0.022	0.007	0.034	37	1,078
15	62.50	1,274	0.333	0.037	0.010	0.039	43	1,100
14	57.50	1,299	0.281	0.049	0.014	0.042	47	1,121
13	54.50	263	0.253	0.055	0.017	0.043	10	227
12	52.00	2,118	0.230	0.059	0.019	0.043	80	1,829
11	48.50	1,611	0.200	0.063	0.023	0.043	61	1,391
10	46.00	602	0.180	0.065	0.026	0.043	22	519
9	42.50	1,524	0.154	0.068	0.030	0.042	56	1,316
8	37.50	1,553	0.120	0.070	0.034	0.041	55	1,341
7	32.50	1,582	0.090	0.071	0.038	0.040	54	1,365
6	27.50	1,610	0.064	0.072	0.041	0.038	53	1,390
5	22.50	1,639	0.043	0.071	0.042	0.037	52	1,415
4	17.50	1,668	0.026	0.067	0.040	0.034	49	1,440
3	12.50	1,697	0.013	0.059	0.034	0.030	45	1,465
2	7.50	1,725	0.005	0.044	0.025	0.023	35	1,490
1	2.50	1,754	0.001	0.018	0.010	0.010	16	1,514
Alcatel-Lucent RRH2X	148.00	138	1.865	1.849	1.093	0.342	41	119
Alcatel-Lucent RRH2X	148.00	132	1.865	1.849	1.093	0.342	39	114
Alcatel-Lucent RRH2x	148.00	170	1.865	1.849	1.093	0.342	50	147
RFS DB-T1-6Z-8AB-0Z	148.00	88	1.865	1.849	1.093	0.342	26	76
Andrew LNX-6514DS-A1	148.00	116	1.865	1.849	1.093	0.342	34	100
Commscope SBNHH-	148.00	244	1.865	1.849	1.093	0.342	72	210
Amphenol Antel LPA-8	148.00	162	1.865	1.849	1.093	0.342	48	140

© 2007 - 2016 by ATC IP LLC. All rights reserved.

Flat Low Profile Pla	148.00	1,500	1.865	1.849	1.093	0.342	444	1,295
VZW Unused Reserve:	148.00	1,450	1.865	1.849	1.093	0.342	429	1,252
Raycap DC6-48-60-18-	138.00	60	1.621	0.846	0.699	0.207	11	52
Ericsson RRUS 11 (Ba	138.00	825	1.621	0.846	0.699	0.207	148	712
Ericsson RRUS 12	138.00	150	1.621	0.846	0.699	0.207	27	129
Andrew SBNH-1D6565C	138.00	547	1.621	0.846	0.699	0.207	98	472
Ericsson KRC 118 054	138.00	363	1.621	0.846	0.699	0.207	65	313
Flat Low Profile Pla	138.00	1,500	1.621	0.846	0.699	0.207	269	1,295
		45,512	51.206	29.009	20.971	6.557	3,116	39,291

© 2007 - 2016 by ATC IP LLC. All rights reserved.

Analysis Summary

	Reactions						Max Usage	
Load Case	Shear FX (kips)	Shear FZ (kips)	Axial FY (kips)	Moment MX (ft-kips)	Moment MY (ft-kips)	Moment MZ (ft-kips)	Elev (ft)	Interaction Ratio
1.2D + 1.6W	39.12	0.00	54.56	0.00	0.00	4501.08	0.00	0.55
0.9D + 1.6W	39.10	0.00	40.91	0.00	0.00	4471.54	0.00	0.55
1.2D + 1.0Di + 1.0Wi	10.69	0.00	89.98	0.00	0.00	1215.71	0.00	0.16
(1.2 + 0.2Sds) * DL + E ELFM	2.28	0.00	54.11	0.00	0.00	265.32	0.00	0.04
(1.2 + 0.2Sds) * DL + E EMAM	3.11	0.00	54.11	0.00	0.00	375.42	0.00	0.05
(0.9 - 0.2Sds) * DL + E ELFM	2.28	0.00	37.78	0.00	0.00	263.22	0.00	0.04
(0.9 - 0.2Sds) * DL + E EMAM	3.10	0.00	37.78	0.00	0.00	372.44	0.00	0.05
1.0D + 1.0W	8.80	0.00	45.51	0.00	0.00	1009.05	0.00	0.13

Base/Flange Plate	Plate Type	***Baseplate***	
	Pole Diameter	60.5	in
	Pole Thickness	0.5	in
	Plate Diameter	74	in
	Plate Thickness	2.75	in
	Plate Fy	50	ksi
	Weld Length	0.3125	in
	ϕ_s Resistance	673.77	k-in
	Applied	286.02	k-in
Stiffeners	#	***0***	

Bolts	#	***24***	
	Bolt Circle	68	in
	(R)adial / (S)quare	R	
	Diameter	2.25	in
	Hole Diameter	2.625	in
	Type	A615-75	
	Fy	75	ksi
	Fu	100	ksi
	ϕ_s Resistance	259.82	k
	Applied	134.60	k
Reinforcement ●	#	***0***	
Extra Bolts O	#	***0***	

Code Rev.	***G***
Moment	4501.1 k-ft
Axial	54.6 k

Date	8/22/2016
Engineer	AAV
Site #	418609
Carrier	Verizon

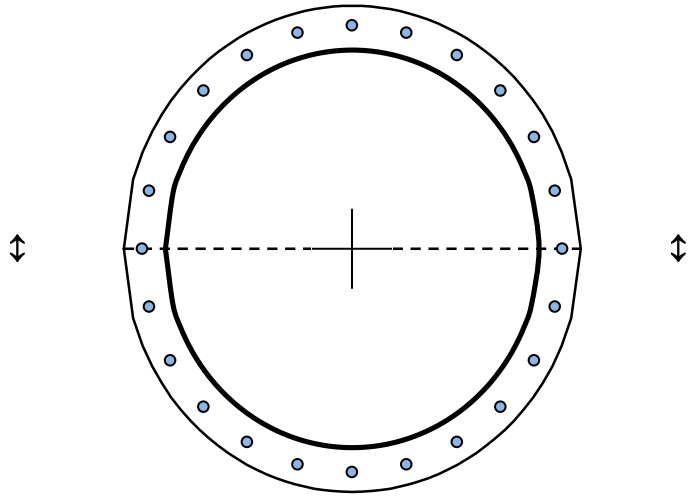

Plate Stress Ratio:
0.42 (Pass)

Bolt Stress Ratio:
0.52 (Pass)

Site Name:	Woodstock Relo CT, CT	*Program Last Updated:*	*5/13/2014*
Site Number:	418609		
Engineering Number:	OAA683474_C3_01		
Engineer:	A. Venning		
Date:	08/22/16		
Tower Type:	MP		

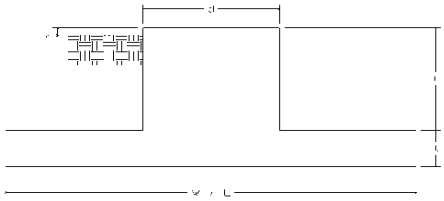

Design Loads (Factored) - Analysis per TIA-222-G Standards

Design / Analysis / Mapping:	Analysis				
Compression/Leg:	54.6	k	Concrete Strength (f'_c):	4000	psi
Uplift/Leg:	0.0	k	Pad Tension Steel Depth:	32.00	in
Total Shear:	39.1	k	ϕ_{Shear}:	0.75	
Moment:	4501.1	k-ft	$\phi_{Flexure\ /\ Tension}$:	0.90	
Tower + Appurtenance Weight:	54.6	k	$\phi_{Compression:}$	0.65	
Depth to Base of Foundation (l + t - h):	6.00	ft	β:	0.85	
Diameter of Pier (d):	7.50	ft	Bottom Pad Rebar Size #:	11	
Height of Pier above Ground (h):	1.00		# of Bottom Pad Rebar:	36	
Width of Pad (W):	30.00	ft	Pad Bottom Steel Area:	56.16	in^2
Length of Pad (L):	30.00	ft	Pad Steel F_y:	60000	psi
Thickness of Pad (t):	3.00	ft	Top Pad Rebar Size #:	11	
Tower Leg Center to Center:	0.00	ft	# of Top Pad Rebar:	24	
Number of Tower Legs:	1.0	(1 if MP or GT)	Pad Top Steel Area:	37.44	in^2
Tower Center from Mat Center:	0.00	ft	Pier Rebar Size #:	9	
Depth Below Ground Surface to Water Table:	4.00	ft	Pier Steel Area (Single Bar):	1.00	in^2
Unit Weight of Concrete:	150.0	pcf	# of Pier Rebar:	40	
Unit Weight of Soil Above Water Table:	125.0	pcf	Pier Steel F_y:	60000	psi
Unit Weight of Water:	62.4	pcf	Pier Cage Diameter:	82.0	in
Unit Weight of Soil Below Water Table:	50.0	pcf	Rebar Strain Limit:	0.008	
Friction Angle of Uplift:	15.00	Degrees	Steel Elastic Modulus:	29000	ksi
Ultimate Coefficient of Shear Friction:	0.45		Tie Rebar Size #:	4	
Ultimate Compressive Bearing Pressure:	12000.0	psf	Tie Steel Area (Single Bar):	0.20	in^2
Ultimate Passive Pressure on Pad Face:	2062.0	psf	Tie Spacing:	6	in
$\phi_{Soil\ and\ Concrete\ Weight}$:	0.9		Tie Steel F_y:	60000	psi
ϕ_{Soil}:	0.75				

Overturning Moment Usage

Design OTM:	4774.9	k-ft
OTM Resistance:	9950.4	k-ft
Design OTM / OTM Resistance:	0.48	Result: OK

Soil Bearing Pressure Usage

Net Bearing Pressure:	1734	psf
Factored Nominal Bearing Pressure:	9000	psf
Net Bearing Pressure/Factored Nominal Bearing Pressure:	0.19	Result: OK
Load Direction Controling Design Bearing Pressure:	Diagonal to Pad Edge	

Sliding Factor of Safety

Total Factored Sliding Resistance:	356.7	k
Sliding Design / Sliding Resistance:	0.11	Result: OK

One Way Shear, Flexual Capacity, and Punching Shear

Factored One Way Shear (V_u):	261.6	k
One Way Shear Capacity (ϕV_c):	1092.9	k - ACI11.3.1.1
V_u / ϕV_c:	0.24	Result: OK
Load Direction Controling Shear Capacity:	Parallel to Pad Edge	
Lower Steel Pad Factored Moment (M_u):	2001.1	k-ft
Lower Steel Pad Moment Capacity (ϕM_n):	7791.4	k-ft - ACI10.3
M_u / ϕM_n:	0.26	Result: OK
Load Direction Controling Flexural Capacity:	Parallel to Pad Edge	
Upper Steel Pad Factored Moment (M_u):	1322.8	k-ft
Upper Steel Pad Moment Capacity (ϕM_n):	5259.9	k-ft
M_u / ϕM_n:	0.25	Result: OK
Lower Pad Flexural Reinforcement Ratio:	0.0049	OK - Minimum Reinforcement Ratio Met - ACI10.5.1
Upper Pad Flexural Reinforcement Ratio:	0.0033	OK - Minimum Reinforcement Ratio Met - ACI10.5.1
Lower Pad Reinforcement Spacing:	10	in - Pad Reinforcing Spacing OK - ACI7.12.2.2 & 10.5.4
Upper Pad Reinforcement Spacing:	15	in - Pad Reinforcing Spacing OK - ACI7.12.2.2 & 10.5.4
Factored Punching Shear (V_u):	0.0	k
Nominal Punching Shear Capacity ($\phi_c V_n$):	2327.1	k - ACI11.12.2.1
V_u / ϕV_c:	0.00	Result: OK
Factored Moment in Pier (M_u):	4657.6	k-ft
Pier Moment Capacity (ϕM_n):	7218.9	k-ft
M_u / ϕM_n:	0.65	Result: OK
Factored Shear in Pier (V_u):	39.1	k
Pier Shear Capacity (ϕV_n):	606.1	k
V_u / ϕV_c:	0.06	Result: OK
Pier Shear Reinforcement Ratio:	0.0003	No Ties Necessary for Shear - ACI11.5.6.1
Factored Tension in Pier (T_u):	0.0	k
Pier Tension Capacity (ϕT_n):	2160.0	k
T_u / ϕT_n:	0.00	Result: OK
Factored Compression in Pier (P_u):	54.6	k
Pier Compression Capacity (ϕP_n):	11176.8	k - ACI10.3.6.2
P_u / ϕP_n:	0.00	Result: OK
Pier Compression Reinforcement Ratio:	0.006	OK - Reinforcement Ratio Met - ACI10.9.1 & 10.8.4
$M_u/\phi_B M_n + T_u/\phi_T T_n$:	0.65	Result: OK
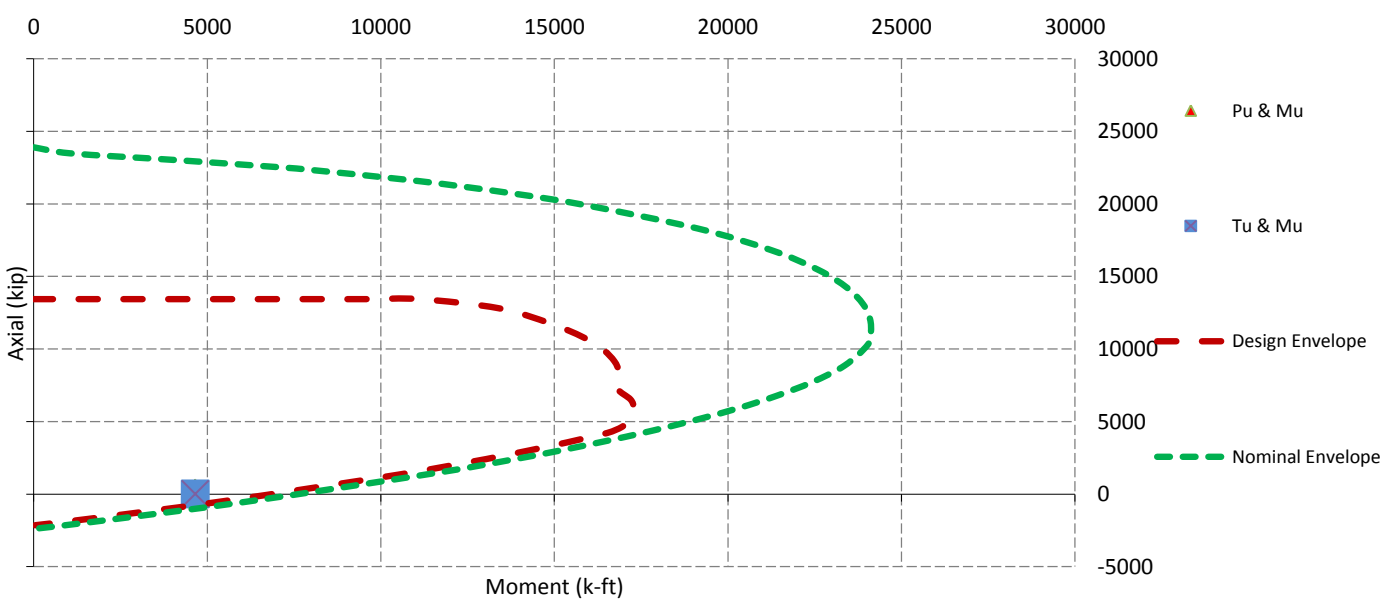
Nominal and Design Moment Capacity and Factored Design Loads