STATE OF CONNECTICUT

CONNECTICUT SITING COUNCIL

Ten Franklin Square, New Britain, CT 06051

Phone: (860) 827-2935 Fax: (860) 827-2950

E-Mail: siting.council@ct.gov

www.ct.gov/csc

VIA ELECTRONIC MAIL

December 16, 2019

Kristina Cottone
Smartlink, LLC
85 Rangeway Road, Building 3, Suite 102
North Billerica, MA 01862

RE: **EM-AT&T-163-191104** – AT&T Mobility, LLC notice of intent to modify an existing telecommunications facility located at 193 Windham Center Road, Windham, Connecticut.

Dear Ms. Cottone:

The Connecticut Siting Council (Council) is in receipt of your correspondence of November 20, 2019 and December 10, 2019, submitted in response to the Council's November 7, 2019 and November 21, 2019 notifications of an incomplete request for exempt modification with regard to the above-referenced matter.

The submission renders the request for exempt modification complete and the Council will process the request in accordance with the Federal Communications Commission 60-day timeframe.

Thank you for your attention and cooperation.

Sincerely,

Melanie A. Bachman
Executive Director

MAB/IN/emr

Robidoux, Evan

From:	Kristina Cottone <kristina.cottone@smartlinkllc.com>
Sent:	Tuesday, December 10, 2019 1:09 PM
To:	Robidoux, Evan
Cc:	CSC-DL Siting Council
Subject:	RE: Council Incomplete Letter for EM-AT&T-163-191104 (193 Windham Center Road, Windham)
Attachments:	10035442_AE201_191209_CTL01064_REV4.pdf; 10035442_DE125_191209_CTL01064 (1).pdf

Hello,

Please see attached, hard copes are in the mail as well.

Thank you,

smartlink

Kristina Cottone | Real Estate Specialist
Smartlink
85 Rangeway Road – Building 3 Suite 102
North Billerica MA, 01862
(m) 978.551.8627
Kristina.cottone@Smartlinkllc.com

contents (including any attachments) by persons other than the intended recipient(s) is strictly prohibited. If you have received this message in error, please notify us immediately by reply email that we may correct our internal records. Please then delete the original message (including any attachments) in its entirety. Thank you.

From: Robidoux, Evan <Evan.Robidoux@ct.gov>
Sent: Monday, November 25, 2019 3:40 PM
To: Kristina Cottone <kristina.cottone@smartlinkllc.com>
Cc: CSC-DL Siting Council <Siting.Council@ct.gov>
Subject: Council Incomplete Letter for EM-AT&T-163-191104 (193 Windham Center Road, Windham)

Warning:This message was sent from outside the company and could contain attachments. Please do not open unless you recognize the source of this email and know the content is safe.

Please see the attached correspondence.

Evan Robidoux
Clerk Typist
Connecticut Siting Council
10 Franklin Square
New Britain, CT 06051

SHEET INDEX

NO.	DESCRIPTION
T1	TITLE SHEET
C1	GENERAL NOTES
C2	OVERALL SITE PLAN
C2A	ENLARGED SITE PLAN
C3	ELEVATION VIEW
C4	ANTENNA ORIENTATION PLAN
C5	EQUIPMENT DETAILS
C6	PLUMBING DIAGRAM
C7	GROUNDING DETAILS

DRIVING DIRECTIONS

FROM 550 COCHITUATE RD.:

GET ON I-90 WEST/MASSACHUETTS TURNPIKE. HEAD NORTHEAST TOWARD LEGGATT MCCALL CONN. TURN LEFT ONTO LEGGATT MCCALL CONN. CONTINUE ONTO BURR STREET. TURN LEFT ONTO COCHITUATE ROAD. USE THE RIGHT LANE TO TAKE THE RAMP TO I-90 EAST/MASSPIKE WEST/SPRINGFIELD/BOSTON. KEEP LEFT AT THE FORK, FOLLOW SIGNS FOR I-90 WEST/MASSACHUETTS TURNPIKE/WORCESTER/SPRINGFIELD AND MERGE ONTO I-90 WEST/MASSACHUETTS TURNPIKE. FOLLOW I-90 WEST/MASSACHUETTS TURNPIKE AND I-395 SOUTH TO CT-14 WEST IN PLAINFIELD. TAKE EXIT 32 FROM I-395 SOUTH. MERGE ONTO I-90 WEST/MASSACHUSETTS TURNPIKE. TAKE EXIT 10 TOWARD MA-12 NORTH/AUBURN/WORCESTER. KEEP RIGHT AT THE FORK, FOLLOW SIGNS FOR I-395 SOUTH/US-20 EAST/NORWICH CT AND MERGE ONTO I-395 SOUTH. TAKE EXIT 32 FOR CT-14 TOWARD STERLING MOOSUP. FOLLOW CT-14 WEST TO YOUR DESTINATION IN WINDHAM. TURN RIGHT ONTO CT-14 WEST. TURN RIGHT ONTO CT-12 NORTH/CT-14 WEST. SLIGHT LEFT ONTO CT-14 WEST. TURN RIGHT TO STAY ON CT-14 WEST. TURN LEFT ONTO CT-203 SOUTH. TURN RIGHT. CONTINUE STRAIGHT. TURN RIGHT.

LOCATION MAP

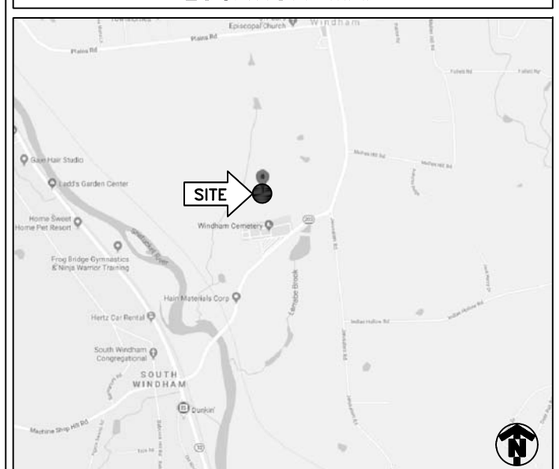

at&t

PROJECT

LTE 2C/3C/4C/5C/RETROFIT

SITE NAME

WINDHAM WINDHAM CTR

CELL SITE ID

CTL01064

FA SITE NUMBER

10035442

PACE ID

MRCTB040530/MRCTB040444/MRCTB040469
MRCTB040708/MRCTB040763

SITE ADDRESS

193 WINDHAM CENTER ROAD
WINDHAM, CT 06280

STRUCTURE TYPE

MONOPOLE

PROJECT TEAM

smartlink

PROJECT MANAGER

INFINIGY

1033 Watervliet Shaker Rd
Albany, NY 12205
Office # (518) 690-0790
Fax # (518) 690-0793

ENGINEER

SCOPE OF WORK (PER LTE RFDS, DATED 07/30/2019 V2.00):

- HANDICAP ACCESS REQUIREMENTS ARE NOT REQUIRED.
- FACILITY IS UNMANNED AND NOT FOR HUMAN HABITATION.
- FACILITY HAS NO PLUMBING OR REFRIGERANTS.
- THIS FACILITY SHALL MEET OR EXCEED ALL FAA AND FCC REGULATORY REQUIREMENTS.
- ALL NEW MATERIAL SHALL BE FURNISHED AND INSTALLED BY CONTRACTOR UNLESS NOTED OTHERWISE. EQUIPMENT, ANTENNAS/RRU AND CABLES FURNISHED BY OWNER AND INSTALLED BY CONTRACTOR.

TOWER

- REMOVE (6) PANEL ANTENNAS,(3) POWERWAVE 7770,(3) AM-X-CD-17-65-00T-RET
- INSTALL (6) PANEL ANTENNAS,(6) CCI DMP65R-BU8DA
- REMOVE (3) RRUS-11 B12
- INSTALL (3) B14 4478
- INSTALL (3) 4449 B5/B12
- INSTALL (3) 8843 B2/B66A
- INSTALL (2) DC6 SQUID W/ (1) FIBER AND (4) DC CABLES IN (3) 3" CONDUITS
- REPLACE EXISTING ANTENNA PLATFORM MOUNT

GROUND

- SWAP BB W/ 6630
- ADD XMU
- ADD 6630
- ADD IDLe CABLE

PROJECT SUMMARY

SITE NAME:	WINDHAM WINDHAM CTR	
CELL SITE ID:	CTL01064	
FA SITE #:	10035442	
SITE ADDRESS:	193 WINDHAM CENTER ROAD WINDHAM, CT 06280	
COUNTY:	WINDHAM	
SITE COORDINATES: LATITUDE:	41.6900481° N	(NAD 83)
LONGITUDE:	72.1625269° W	(NAD 83)
RAD CENTER	±147'	(AGL)
LANDLORD:	SBA COMMUNICATIONS	
APPLICANT:	AT&T MOBILITY 550 COCHITUATE RD. FRAMINGHAM, MA 01701	
CLIENT REPRESENTATIVE:	SMARTLINK, LLC 85 RANGEWAY RD., BUILDING 3, SUITE 102 NORTH BILLERICA, MA 01862	
CONTACT:	SHARON KEEFE (978) 930-3918	
ENGINEER:	INFINIGY 1033 WATERVLIET SHAKER ROAD ALBANY, NY 12205	
CONTACT:	ALEX WELLER (518) 690-0790	
BUILDING CODE:	2018 CT STATE BUILDING CODE 2015 INTERNATIONAL BUILDING CODE ANSI/TIA-222 G 2015 INTERNATIONAL PLUMBING CODE 2015 INTERNATIONAL MECHANICAL CODE 2015 INTERNATIONAL ENERGY CONSERVATION CODE 2017 NFPA 70	
ELECTRICAL CODE:	NATIONAL ELECTRICAL CODE (LATEST EDITION)	

811 Know what's below. Call before you dig.

TO OBTAIN LOCATION OF PARTICIPANTS UNDERGROUND FACILITIES BEFORE YOU DIG IN CONNECTICUT, CONTACT CALL BEFORE YOU DIG
TOLL FREE: 1-800-922-4455 OR www.cbyd.com
CONNECTICUT STATUTE REQUIRES MIN OF 2 WORKING DAYS NOTICE BEFORE YOU EXCAVATE

INFINIGY
INFINIGY ENGINEERING, PLLC
1033 Watervliet Shaker Rd
Albany, NY 12205
Office # (518) 690-0790
Fax # (518) 690-0793

at&t

STATE OF CONNECTICUT
JOHN S. STEVENS
24705
LICENSED PROFESSIONAL ENGINEER
12/09/2019

UNAUTHORIZED ALTERATION OR ADDITION TO THIS DOCUMENT IS A VIOLATION OF APPLICABLE STATE AND/OR LOCAL LAWS

No.	Submittal / Revision	App'd	Date
3	REVISED FOR PERMIT	ASW	11/20/19
2	REVISED FOR PERMIT	BMM	10/16/19
1	ISSUED FOR PERMIT	ASW	10/04/19
0	ISSUED FOR REVIEW	BMM	09/13/19

Drawn: BMM Date: 09/13/19
Designed: ASW Date: 09/13/19
Checked: AJD Date: 09/13/19

Project Number: 499-006

Project Title: WINDHAM WINDHAM CTR
CTL01064
FA# 10035442
193 WINDHAM CENTER ROAD
WINDHAM, CT 06280

Prepared For: smartlink

Drawing Scale: AS NOTED
Date: 11/20/19
CD

Drawing Title
TITLE PAGE

Drawing Number
T1

GENERAL NOTES

PART 1 – GENERAL REQUIREMENTS

1.1 THE WORK SHALL COMPLY WITH APPLICABLE NATIONAL CODES AND STANDARDS, LATEST EDITION, AND PORTIONS THEREOF, INCLUDED BUT NOT LIMITED TO THE FOLLOWING:
A. GR-63-CORE NEBS REQUIREMENTS: PHYSICAL PROTECTION
B. GR-78-CORE GENERIC REQUIREMENTS FOR THE PHYSICAL DESIGN AND MANUFACTURE OF TELECOMMUNICATIONS EQUIPMENT.
C. NATIONAL FIRE PROTECTION ASSOCIATION CODES AND STANDARDS (NFPA) INCLUDING NFPA 70 (NATIONAL ELECTRICAL CODE – "NEC").
D. AND NFPA 101 (LIFE SAFETY CODE).
E. AMERICAN SOCIETY FOR TESTING OF MATERIALS (ASTM).
F. INSTITUTE OF ELECTRONIC AND ELECTRICAL ENGINEERS (IEEE).

1.2 DEFINITIONS:
A: WORK: THE SUM OF TASKS AND RESPONSIBILITIES IDENTIFIED IN THE CONTRACT DOCUMENTS.
B: COMPANY: AT&T CORPORATION
C. ENGINEER: SYNONYMOUS WITH ARCHITECT & ENGINEER AND "A&E". THE DESIGN PROFESSIONAL HAVING PROFESSIONAL RESPONSIBILITY FOR DESIGN OF THE PROJECT.
D: CONTRACTOR: CONSTRUCTION CONTRACTOR; CONSTRUCTION VENDOR; INDIVIDUAL OR ENTITY WHO AFTER EXECUTION OF A CONTRACT IS BOUND TO ACCOMPLISH THE WORK.
E: THIRD PARTY VENDOR OR AGENCY: A VENDOR OR AGENCY ENGAGED SEPARATELY BY THE COMPANY, A&E, OR CONTRACTOR TO PROVIDE MATERIALS OR TO ACCOMPLISH SPECIFIC TASKS RELATED TO BUT NOT INCLUDED IN THE WORK.

1.3 POINT OF CONTACT: COMMUNICATION BETWEEN THE COMPANY AND THE CONTRACTOR SHALL FLOW THROUGH THE SINGLE COMPANY SITE DEVELOPMENT SPECIALIST OR OTHER PROJECT COORDINATOR APPOINTED TO MANAGE THE PROJECT FOR THE COMPANY.

1.4 ON-SITE SUPERVISION: THE CONTRACTOR SHALL SUPERVISE AND DIRECT THE WORK AND SHALL BE RESPONSIBLE FOR CONSTRUCTION MEANS, METHODS, TECHNIQUES, SEQUENCES, AND PROCEDURES IN ACCORDANCE WITH THE CONTRACT DOCUMENTS. THE CONTRACTOR SHALL EMPLOY A COMPETENT SUPERINTENDENT WHO SHALL BE IN ATTENDANCE AT THE SITE AT ALL TIMES DURING PERFORMANCE OF THE WORK.

1.5 DRAWINGS, SPECIFICATIONS AND DETAILS REQUIRED AT JOBSITE: THE CONSTRUCTION CONTRACTOR SHALL MAINTAIN A FULL SET OF THE CONSTRUCTION DRAWINGS, STANDARD CONSTRUCTION DETAILS FOR WIRELESS SITES, AND THE STANDARD CONSTRUCTION SPECIFICATIONS FOR WIRELESS SITES AT THE JOBSITE FROM MOBILIZATION THROUGH CONSTRUCTION COMPLETION.
A. THE JOBSITE DRAWINGS, SPECIFICATIONS AND DETAILS SHALL BE CLEARLY MARKED DAILY IN PENCIL WITH ANY CHANGES IN CONSTRUCTION OVER WHAT IS DEPICTED IN THE DOCUMENTS. AT CONSTRUCTION COMPLETION, THIS JOBSITE MARKUP SET SHALL BE DELIVERED TO THE COMPANY OR COMPANY'S DESIGNATED REPRESENTATIVE TO BE FORWARDED TO THE COMPANY'S A&E VENDOR FOR PRODUCTION OF "AS-BUILT" DRAWINGS.

1.6 USE OF JOB SITE: THE CONTRACTOR SHALL CONFINE ALL CONSTRUCTION AND RELATED OPERATIONS INCLUDING STAGING AND STORAGE OF MATERIALS AND EQUIPMENT, PARKING, TEMPORARY FACILITIES, AND WASTE STORAGE TO THE LEASE PARCEL UNLESS OTHERWISE PERMITTED BY THE CONTRACT DOCUMENTS.

1.7 NOTICE TO PROCEED:
A. NO WORK SHALL COMMENCE PRIOR TO COMPANY'S WRITTEN NOTICE TO PROCEED.
B. UPON RECEIVING NOTICE TO PROCEED, CONTRACTOR SHALL FULLY PERFORM ALL WORK NECESSARY TO PROVIDE AT&T WITH AN OPERATIONAL WIRELESS FACILITY.

PART 2 – EXECUTION

2.1 TEMPORARY UTILITIES AND FACILITIES: THE CONTRACTOR SHALL BE RESPONSIBLE FOR ALL TEMPORARY UTILITIES AND FACILITIES NECESSARY EXCEPT AS OTHERWISE INDICATED IN THE CONSTRUCTION DOCUMENTS. TEMPORARY UTILITIES AND FACILITIES INCLUDE, POTABLE WATER, HEAT, HVAC, ELECTRICITY, SANITARY FACILITIES, WASTE DISPOSAL FACILITIES, AND TELEPHONE/COMMUNICATION SERVICES. PROVIDE TEMPORARY UTILITIES AND FACILITIES IN ACCORDANCE WITH OSHA AND THE AUTHORITY HAVING JURISDICTION. CONTRACTOR MAY UTILIZE THE COMPANY ELECTRICAL SERVICE IN THE COMPLETION OF THE WORK WHEN IT BECOMES AVAILABLE. USE OF THE LESSORS OR SITE OWNER'S UTILITIES OR FACILITIES IS EXPRESSLY FORBIDDEN EXCEPT AS OTHERWISE ALLOWED IN THE CONTRACT DOCUMENTS.

2.2 ACCESS TO WORK: THE CONTRACTOR SHALL PROVIDE ACCESS TO THE JOB SITE FOR AUTHORIZED COMPANY PERSONNEL AND AUTHORIZED REPRESENTATIVES OF THE ARCHITECT/ENGINEER DURING ALL PHASES OF THE WORK.

2.3 TESTING: REQUIREMENTS FOR TESTING BY THIS CONTRACTOR SHALL BE AS INDICATED HEREWITH, ON THE CONSTRUCTION DRAWINGS, AND IN THE INDIVIDUAL SECTIONS OF THESE SPECIFICATIONS. SHOULD COMPANY CHOOSE TO ENGAGE ANY THIRD-PARTY TO CONDUCT ADDITIONAL TESTING, THE CONTRACTOR SHALL COOPERATE WITH AND PROVIDE A WORK AREA FOR COMPANY'S TEST AGENCY.

2.4 COMPANY FURNISHED MATERIAL AND EQUIPMENT: ALL HANDLING, STORAGE AND INSTALLATION OF COMPANY FURNISHED MATERIAL AND EQUIPMENT SHALL BE IN ACCORDANCE WITH THE REQUIREMENTS OF THE CONTRACT DOCUMENTS AND WITH THE MANUFACTURER'S INSTRUCTIONS AND RECOMMENDATIONS.
A. CONTRACTOR SHALL PROCURE ALL OTHER REQUIRED WORK RELATED MATERIALS NOT PROVIDED BY AT&T TO SUCCESSFULLY CONSTRUCT A WIRELESS FACILITY.

2.5 DIMENSIONS: VERIFY DIMENSIONS INDICATED ON DRAWINGS WITH FIELD DIMENSIONS BEFORE FABRICATION OR ORDERING OF MATERIALS. DO NOT SCALE DRAWINGS.

2.6 EXISTING CONDITIONS: NOTIFY THE COMPANY REPRESENTATIVE OF EXISTING CONDITIONS DIFFERING FROM THOSE INDICATED ON THE DRAWINGS. DO NOT REMOVE OR ALTER STRUCTURAL COMPONENTS WITHOUT PRIOR WRITTEN APPROVAL FROM THE ARCHITECT AND ENGINEER.

PART 3 – RECEIPT OF MATERIAL & EQUIPMENT

3.1 RECEIPT OF MATERIAL AND EQUIPMENT: CONTRACTOR IS RESPONSIBLE FOR AT&T PROVIDED MATERIAL AND EQUIPMENT AND UPON RECEIPT SHALL:
A. ACCEPT DELIVERIES AS SHIPPED AND TAKE RECEIPT.
B. VERIFY COMPLETENESS AND CONDITION OF ALL DELIVERIES.
C. TAKE RESPONSIBILITY FOR EQUIPMENT AND PROVIDE INSURANCE PROTECTION AS REQUIRED IN AGREEMENT.
D. RECORD ANY DEFECTS OR DAMAGES AND WITHIN TWENTY-FOUR HOURS AFTER RECEIPT, REPORT TO AT&T OR ITS DESIGNATED PROJECT REPRESENTATIVE OF SUCH.
E. PROVIDE SECURE AND NECESSARY WEATHER PROTECTED WAREHOUSING.
F. COORDINATE SAFE AND SECURE TRANSPORTATION OF MATERIAL AND EQUIPMENT, DELIVERING AND OFF-LOADING FROM CONTRACTOR'S WAREHOUSE TO SITE.

PART 4 – GENERAL REQUIREMENTS FOR CONSTRUCTION

4.1 CONTRACTOR SHALL KEEP THE SITE FREE FROM ACCUMULATING WASTE MATERIAL, DEBRIS, AND TRASH. AT THE COMPLETION OF THE WORK, CONTRACTOR SHALL REMOVE FROM THE SITE ALL REMAINING RUBBISH, IMPLEMENTS, TEMPORARY FACILITIES, AND SURPLUS MATERIALS.

4.2 EQUIPMENT ROOMS SHALL AT ALL TIMES BE MAINTAINED "BROOM CLEAN" AND CLEAR OF DEBRIS.

4.3 CONTRACTOR SHALL TAKE ALL REASONABLE PRECAUTIONS TO DISCOVER AND LOCATE ANY HAZARDOUS CONDITION.
A. IN THE EVENT CONTRACTOR ENCOUNTERS ANY HAZARDOUS CONDITION WHICH HAS NOT BEEN ABATED OR OTHERWISE MITIGATED, CONTRACTOR AND ALL OTHER PERSONS SHALL IMMEDIATELY STOP WORK IN THE AFFECTED AREA AND NOTIFY COMPANY IN WRITING. THE WORK IN THE AFFECTED AREA SHALL NOT BE RESUMED EXCEPT BY WRITTEN NOTIFICATION BY COMPANY.
B. CONTRACTOR AGREES TO USE CARE WHILE ON THE SITE AND SHALL NOT TAKE ANY ACTION THAT WILL OR MAY RESULT IN OR CAUSE THE HAZARDOUS CONDITION TO BE FURTHER RELEASED IN THE ENVIRONMENT, OR TO FURTHER EXPOSE INDIVIDUALS TO THE HAZARD.

4.4 CONTRACTOR'S ACTIVITIES SHALL BE RESTRICTED TO THE PROJECT LIMITS. SHOULD AREAS OUTSIDE THE PROJECT LIMITS BE AFFECTED BY CONTRACTOR'S ACTIVITIES, CONTRACTOR SHALL IMMEDIATELY RETURN THEM TO ORIGINAL CONDITION.

4.5 CONDUCT TESTING AS REQUIRED HEREIN.

PART 5 – TESTS AND INSPECTIONS

5.1 TESTS AND INSPECTIONS:
A. THE CONTRACTOR SHALL BE RESPONSIBLE FOR ALL CONSTRUCTION TESTS, INSPECTIONS AND PROJECT DOCUMENTATION.

B. CONTRACTOR SHALL COORDINATE TEST AND INSPECTION SCHEDULES WITH COMPANY'S REPRESENTATIVE WHO MUST BE ON SITE TO WITNESS SUCH TESTS AND INSPECTIONS.

C. WHEN THE USE OF A THIRD PARTY INDEPENDENT TESTING AGENCY IS REQUIRED, THE AGENCY THAT IS SELECTED MUST PERFORM SUCH WORK ON A REGULAR BASIS IN THE STATE WHERE THE PROJECT IS LOCATED AND HAVE A THOROUGH UNDERSTANDING OF LOCAL AVAILABLE MATERIALS, INCLUDING THE SOIL, ROCK, AND GROUNDWATER CONDITIONS.

D. THE THIRD PARTY TESTING AGENCY IS TO BE FAMILIAR WITH THE APPLICABLE REQUIREMENTS FOR THE TESTS TO BE DONE, EQUIPMENT TO BE USED, AND ASSOCIATED HEALTH AND SAFETY ISSUES.

E. SITE RESISTANCE TO EARTH TESTING PER EXHIBIT: CELL SITE GROUNDING SYSTEM DESIGN.

F. ANTENNA AND COAX SWEEP TESTS PER EXHIBIT: ANTENNA TRANSMISSION LINE ACCEPTANCE STANDARDS.

G. ALL OTHER TESTS REQUIRED BY COMPANY OR JURISDICTION.

PART 6 – TRENCHING AND BACKFILLING

6.1 TRENCHING AND BACKFILLING: THE CONTRACTOR SHALL PERFORM ALL EXCAVATION OF EVERY DESCRIPTION AND OF WHATEVER SUBSTANCES ENCOUNTERED, TO THE DEPTHS INDICATED ON THE CONSTRUCTION DRAWINGS OR AS OTHERWISE SPECIFIED.

A. PROTECTION OF EXISTING UTILITIES: THE CONTRACTOR SHALL CHECK WITH THE LOCAL UTILITIES AND THE RESPECTIVE UTILITY LOCATOR COMPANIES PRIOR TO STARTING EXCAVATION OPERATIONS IN EACH RESPECTIVE AREA TO ASCERTAIN THE LOCATIONS OF KNOWN UTILITY LINES. THE LOCATIONS, NUMBER AND TYPES OF EXISTING UTILITY LINES DETAILED ON THE CONSTRUCTION DRAWINGS ARE APPROXIMATE AND DO NOT REPRESENT EXACT INFORMATION. THE CONTRACTOR SHALL BE RESPONSIBLE FOR REPAIRING ALL LINES DAMAGED DURING EXCAVATION AND ALL ASSOCIATED OPERATIONS. ALL UTILITY LINES UNCOVERED DURING THE EXCAVATION OPERATIONS, SHALL BE PROTECTED FROM DAMAGE DURING EXCAVATION AND ASSOCIATED OPERATIONS. ALL REPAIRS SHALL BE APPROVED BY THE UTILITY COMPANY.

B. HAND DIGGING: UNLESS APPROVED IN WRITING OTHERWISE, ALL DIGGING WITHIN AN EXISTING CELL SITE COMPOUND IS TO BE DONE BY HAND.

C. DURING EXCAVATION, MATERIAL SUITABLE FOR BACKFILLING SHALL BE STOCKPILED IN AN ORDERLY MANNER A SUFFICIENT DISTANCE FROM THE BANKS OF THE TRENCH TO AVOID OVERLOADING AND TO PREVENT SLIDES OR CAVE-INS. ALL EXCAVATED MATERIALS NOT REQUIRED OR SUITABLE FOR BACKFILL SHALL BE REMOVED AND DISPOSED OF AT THE CONTRACTOR'S EXPENSE.

D. GRADING SHALL BE DONE AS MAY BE NECESSARY TO PREVENT SURFACE WATER FROM FLOWING INTO TRENCHES OR OTHER EXCAVATIONS, AND ANY WATER ACCUMULATING THEREIN SHALL BE REMOVED BY PUMPING OR BY OTHER APPROVED METHOD.

E. SHEETING AND SHORING SHALL BE DONE AS NECESSARY FOR THE PROTECTION OF THE WORK AND FOR THE SAFETY OF PERSONNEL. UNLESS OTHERWISE INDICATED, EXCAVATION SHALL BE BY OPEN CUT, EXCEPT THAT SHORT SECTIONS OF A TRENCH MAY BE TUNNELED IF, THE CONDUIT CAN BE SAFELY AND PROPERLY INSTALLED AND BACKFILL CAN BE PROPERLY TAMPED IN SUCH TUNNEL SECTIONS. EARTH EXCAVATION SHALL COMPRISE ALL MATERIALS AND SHALL INCLUDE CLAY, SILT, SAND, MUCK, GRAVEL, HARDPAN, LOOSE SHALE, AND LOOSE STONE.

F. TRENCHES SHALL BE OF NECESSARY WIDTH FOR THE PROPER LAYING OF THE CONDUIT OR CABLE, AND THE BANKS SHALL BE AS NEARLY VERTICAL AS PRACTICABLE. THE BOTTOM OF THE TRENCHES SHALL BE ACCURATELY GRADED TO PROVIDE UNIFORM BEARING AND SUPPORT FOR EACH SECTION OF THE CONDUIT OR CABLE ON UNDISTURBED SOIL AT EVERY POINT ALONG ITS ENTIRE LENGTH. EXCEPT WHERE ROCK IS ENCOUNTERED, CARE SHALL BE TAKEN NOT TO EXCAVATE BELOW THE DEPTHS INDICATED. WHERE ROCK EXCAVATIONS ARE NECESSARY, THE ROCK SHALL BE EXCAVATED TO A MINIMUM OVER DEPTH OF 6 INCHES BELOW THE TRENCH DEPTHS INDICATED ON THE CONSTRUCTION DRAWINGS OR SPECIFIED. OVER DEPTHS IN THE ROCK EXCAVATION AND UNAUTHORIZED OVER DEPTHS SHALL BE THOROUGHLY BACK FILLED AND TAMPED TO THE APPROPRIATE GRADE. WHENEVER WET OR OTHERWISE UNSTABLE SOIL THAT IS INCAPABLE OF PROPERLY SUPPORTING THE CONDUIT OR CABLE IS ENCOUNTERED IN THE BOTTOM OF THE TRENCH, SUCH SOLID SHALL BE REMOVED TO A MINIMUM OVER DEPTH OF 6 INCHES AND THE TRENCH BACKFILLED TO THE PROPER GRADE WITH EARTH OF OTHER SUITABLE MATERIAL, AS HEREINAFTER SPECIFIED.

G. BACKFILLING OF TRENCHES. TRENCHES SHALL NOT BE BACKFILLED UNTIL ALL SPECIFIED TESTS HAVE BEEN PERFORMED AND ACCEPTED. WHERE COMPACTED BACKFILL IS NOT INDICATED THE TRENCHES SHALL BE CAREFULLY BACKFILLED WITH SELECT MATERIAL SUCH AS EXCAVATED SOILS THAT ARE FREE OF ROOTS, SOD, RUBBISH OR STONES, DEPOSITED IN 6 INCH LAYERS AND THOROUGHLY AND CAREFULLY RAMMED UNTIL THE CONDUIT OR CABLE HAS A COVER OF NOT LESS THAN 1 FOOT. THE REMAINDER OF THE BACKFILL MATERIAL SHALL BE GRANULAR IN NATURE AND SHALL NOT CONTAIN ROOTS, SOD, RUBBING, OR STONES OF 2-1/2 INCH MAXIMUM DIMENSION. BACKFILL SHALL BE CAREFULLY PLACED IN THE TRENCH AND IN 1 FOOT LAYERS AND EACH LAYER TAMPED. SETTLING THE BACKFILL WITH WATER WILL BE PERMITTED. THE SURFACE SHALL BE GRADED TO A REASONABLE UNIFORMITY AND THE MOUNDING OVER THE TRENCHES LEFT IN A UNIFORM AND NEAT CONDITION.

SYMBOL	DESCRIPTION
	CIRCUIT BREAKER
	NON-FUSIBLE DISCONNECT SWITCH
F	FUSIBLE DISCONNECT SWITCH
	SURFACE MOUNTED PANEL BOARD
T	TRANSFORMER
M	KILOWATT HOUR METER
JB	JUNCTION BOX
PB	PULL BOX TO NEC/TELCO STANDARDS
	UNDERGROUND UTILITIES
	EXOTHERMIC WELD CONNECTION
	MECHANICAL CONNECTION
OR	GROUND ROD
OR	GROUND ROD WITH INSPECTION SLEEVE
	GROUND BAR
	120AC DUPLEX RECEPTACLE
G	GROUND CONDUCTOR
	DC POWER AND FIBER OPTIC TRUNK CABLES
	DC POWER CABLES
# / #	REPRESENTS DETAIL NUMBER / REF. DRAWING NUMBER

ABBREVIATIONS

CIGBE	COAX ISOLATED GROUND BAR EXTERNAL
MIGB	MASTER ISOLATED GROUND BAR
SST	SELF SUPPORTING TOWER
GPS	GLOBAL POSITIONING SYSTEM
TYP.	TYPICAL
DWG	DRAWING
BCW	BARE COPPER WIRE
BFG	BELOW FINISH GRADE
PVC	POLYVINYL CHLORIDE
CAB	CABINET
C	CONDUIT
SS	STAINLESS STEEL
G	GROUND
AWG	AMERICAN WIRE GAUGE
RGS	RIGID GALVANIZED STEEL
AHJ	AUTHORITY HAVING JURISDICTION
TTLNA	TOWER TOP LOW NOISE AMPLIFIER
UNO	UNLESS NOTED OTHERWISE
EMT	ELECTRICAL METALLIC TUBING
AGL	ABOVE GROUND LEVEL

INFINIGY
INFINIGY ENGINEERING, PLLC
1033 Watervliet Shaker Rd
Albany, NY 12205
Office # (518) 690-0790
Fax # (518) 690-0793

at&t

STATE OF CONNECTICUT
JOHN S. STEVENS
24705
LICENSED PROFESSIONAL ENGINEER
12/09/2019

UNAUTHORIZED ALTERATION OR ADDITION TO THIS DOCUMENT IS A VIOLATION OF APPLICABLE STATE AND/OR LOCAL LAWS

No.	Submittal / Revision	App'd	Date
3	REVISED FOR PERMIT	ASW	11/20/19
2	REVISED FOR PERMIT	BMM	10/16/19
1	ISSUED FOR PERMIT	ASW	10/04/19
0	ISSUED FOR REVIEW	BMM	09/13/19

Drawn: BMM Date: 09/13/19
Designed: ASW Date: 09/13/19
Checked: AJD Date: 09/13/19

Project Number: 499-006

Project Title:
WINDHAM
WINDHAM CTR

CTL01064
FA# 10035442
193 WINDHAM CENTER ROAD
WINDHAM, CT 06280

Prepared For: smartlink

Drawing Scale: AS NOTED
Date: 11/20/19
CD

Drawing Title
GENERAL NOTES

Drawing Number
C1

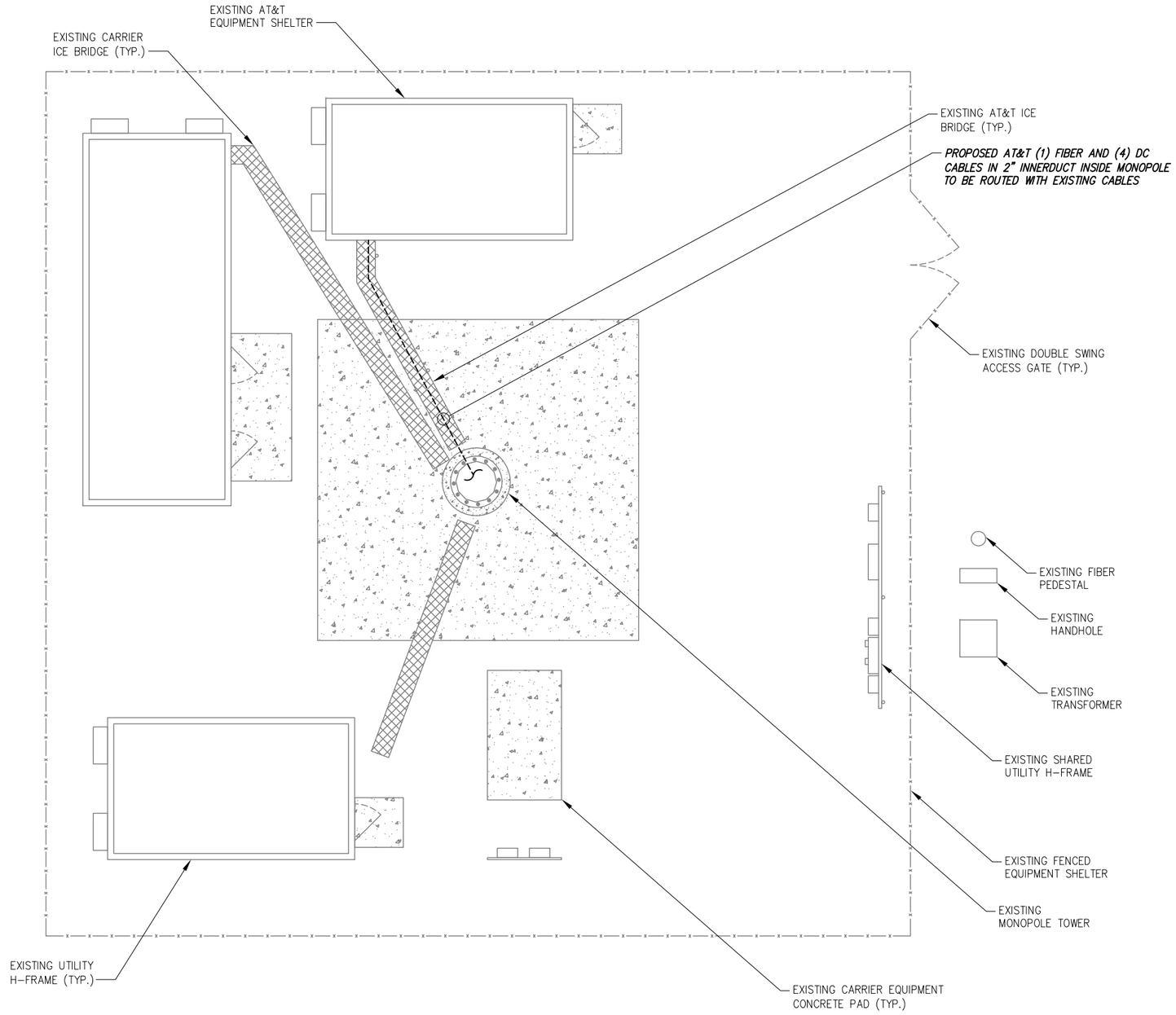

BASEMAPPING PREPARED FROM A SITE WALK PERFORMED BY INFINIGY ENGINEERING AND PROVIDED INFORMATION, AND DOES NOT REPRESENT AN ACTUAL FIELD SURVEY.

TRUE NORTH

1 SITE PLAN
SCALE: AS NOTED

GRAPHIC SCALE:
10' 5' 0 5' 10'
SCALE (11x17): 1" = 10'-0"
SCALE (22x34): 1" = 5'-0"

INFINIGY
INFINIGY ENGINEERING, PLLC
1033 Watervliet Shaker Rd
Albany, NY 12205
Office # (518) 690-0790
Fax # (518) 690-0793

at&t

STATE OF CONNECTICUT
JOHN S. STEVENS
24705
LICENSED PROFESSIONAL ENGINEER
12/09/2019

UNAUTHORIZED ALTERATION OR ADDITION TO THIS DOCUMENT IS A VIOLATION OF APPLICABLE STATE AND/OR LOCAL LAWS

No.	Submittal / Revision	App'd	Date
3	REVISED FOR PERMIT	ASW	11/20/19
2	REVISED FOR PERMIT	BMM	10/16/19
1	ISSUED FOR PERMIT	ASW	10/04/19
0	ISSUED FOR REVIEW	BMM	09/13/19

Drawn: BMM Date: 09/13/19
Designed: ASW Date: 09/13/19
Checked: AJD Date: 09/13/19

Project Number: 499-006

Project Title:
WINDHAM
WINDHAM CTR

CTL01064
FA# 10035442
193 WINDHAM CENTER ROAD
WINDHAM, CT 06280

Prepared For: smartlink

Drawing Scale: AS NOTED
Date: 11/20/19
CD

Drawing Title
OVERALL SITE PLAN

Drawing Number
C2

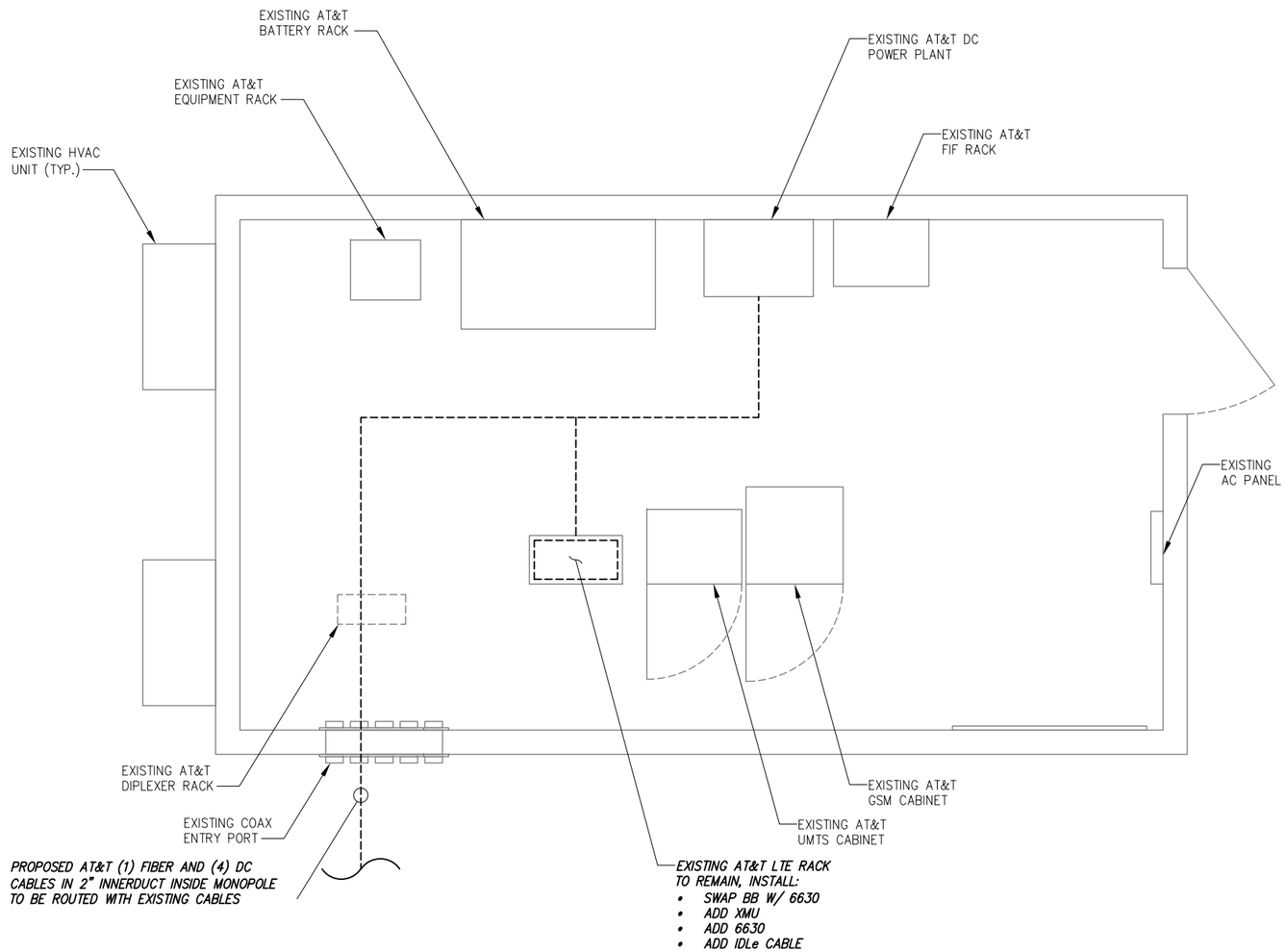

BASEMAPPING PREPARED FROM A SITE WALK PERFORMED BY INFINIGY ENGINEERING AND PROVIDED INFORMATION, AND DOES NOT REPRESENT AN ACTUAL FIELD SURVEY.

TRUE NORTH

2 / -- ENLARGED EQUIPMENT PLAN
SCALE: AS NOTED

GRAPHIC SCALE:
3' 1'-6" 0 1'-6" 3'
SCALE (11x17): 1" = 3'-0"
SCALE (22x34): 1" = 1'-6"

INFINIGY
INFINIGY ENGINEERING, PLLC
1033 Watervliet Shaker Rd
Albany, NY 12205
Office # (518) 690-0790
Fax # (518) 690-0793

at&t

STATE OF CONNECTICUT
JOHN S. STEVENS
24705
12/09/2019
PROFESSIONAL ENGINEER

UNAUTHORIZED ALTERATION OR ADDITION TO THIS DOCUMENT IS A VIOLATION OF APPLICABLE STATE AND/OR LOCAL LAWS

No.	Submittal / Revision	App'd	Date
3	REVISED FOR PERMIT	ASW	11/20/19
2	REVISED FOR PERMIT	BMM	10/16/19
1	ISSUED FOR PERMIT	ASW	10/04/19
0	ISSUED FOR REVIEW	BMM	09/13/19

Drawn: BMM Date: 09/13/19
Designed: ASW Date: 09/13/19
Checked: AJD Date: 09/13/19

Project Number: 499-006

Project Title:
WINDHAM
WINDHAM CTR

CTL01064
FA# 10035442
193 WINDHAM CENTER ROAD
WINDHAM, CT 06280

Prepared For: smartlink

Drawing Scale: AS NOTED
Date: 11/20/19
CD

Drawing Title
ENLARGED SITE PLAN

Drawing Number
C2A

NOTE:

- *INFINIGY ENGINEERING HAS NOT EVALUATED THE TOWER LOADING FOR THIS SITE, AND ASSUMES NO RESPONSIBILITY FOR ITS STRUCTURAL INTEGRITY REGARDING ITS EXISTING OR PROPOSED LOADING. FINAL INSTALLATION TO COMPLY STRUCTURAL ANALYSIS.*
- *FOR ADDITIONAL STRUCTURAL INFORMATION PERTAINING TO THE ANTENNA MOUNT, SEE 'MOUNT ANALYSIS REPORT' COMPLETED BY INFINIGY, DATED 12/09/19. MOUNT TO BE REPLACED PRIOR TO INSTALLATION OF PROPOSED EQUIPMENT.*

NOTE:

- 3' MINIMUM SEPARATION BETWEEN ALL LTE ANTENNAS
- 6' MINIMUM SEPARATION BETWEEN 700 BC/700 DE ANTENNAS

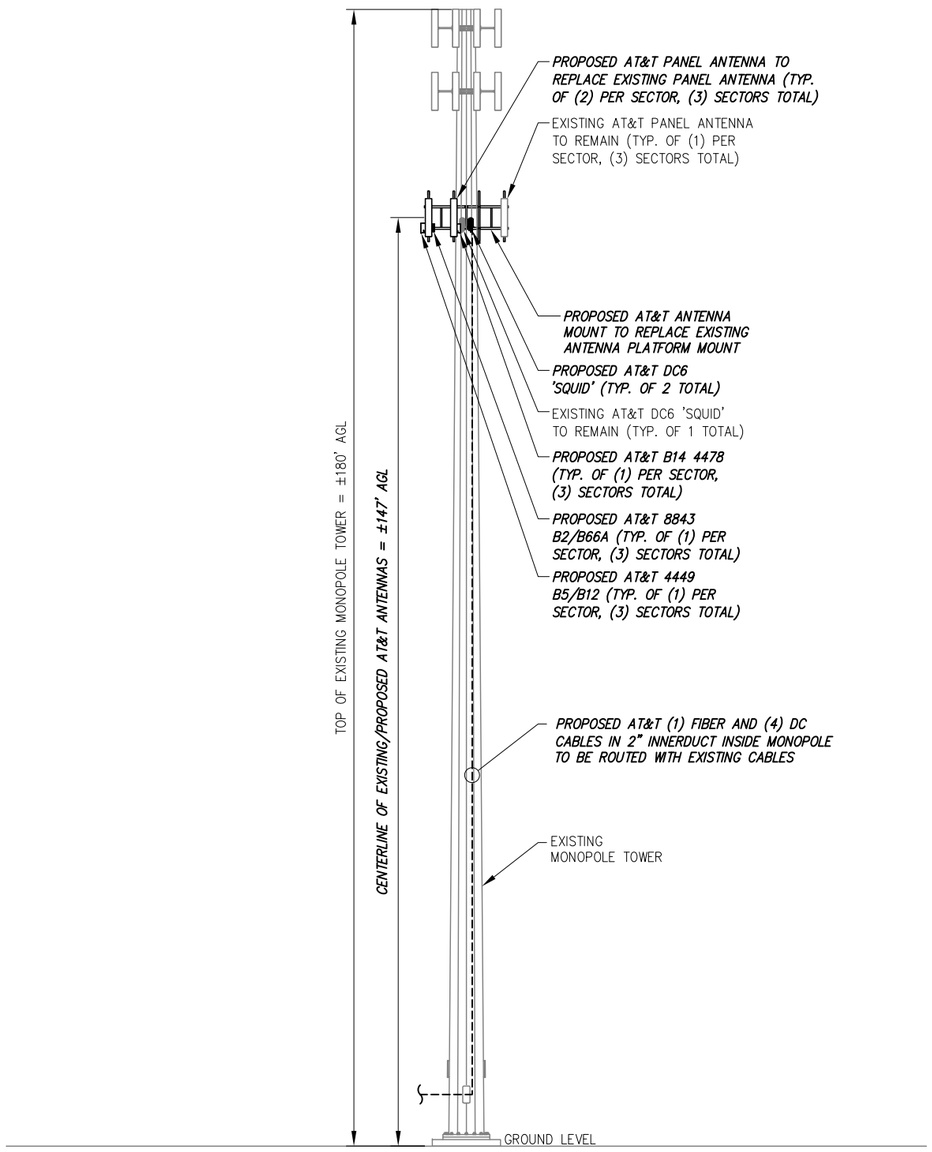

1 ELEVATION VIEW
-- NOT TO SCALE

FINAL ANTENNA CONFIGURATION & CABLE SCHEDULE BASED ON LTE RFDS DATED 07/30/19, V 2.00

SECTOR	ANTENNA POSITION	ANTENNA STATUS & TECHNOLOGY	ANTENNA MANF/MODEL	TMA/ DIPLEXER	RRUS	AZIMUTH	ANTENNA ℄ HEIGHT	CABLE FEEDER TYPE	CABLE FEEDER LENGTH	RAYCAP UNIT
ALPHA	A-1	(E) UMTS 850	POWERWAVE 7770	(2) (E) TT08-19DB111-001	--	143°	±147'	(2) (E) 1-5/8" COAX CABLES	±185'	(1) (E) DC6 'SQUID' (2) (P) DC6 'SQUID'
	A-2	--	--	--	--	--	--	(2) (E) 1-5/8" COAX CABLES	±185'	
	A-3	*(P) LTE 700/AWS*	*CCI DMP65R-BU8DA*	--	*(1) (P) B14 4478*	*30°*	*±147'*	(1) (E) FIBER CABLE (2) (E) DC CABLES	--	
	A-4	*(P) LTE 700/850/ 1900/5G 850*	*CCI DMP65R-BU8DA*	--	*(1) (P) 4449 B5/B12 (1) (P) 8843 B2/B66A*	*30°*	*±147'*	SEE A-3 FOR CABLE INFORMATION	--	
BETA	B-1	(E) UMTS 850	POWERWAVE 7770	(2) (E) TT08-19DB111-001	--	263°	±147'	(2) (E) 1-5/8" COAX CABLES	±185'	
	B-2	--	--	--	--	--	--	(2) (E) 1-5/8" COAX CABLES	±185'	
	B-3	*(P) LTE 700/AWS*	*CCI DMP65R-BU8DA*	--	*(1) (P) B14 4478*	*160°*	*±147'*	*(1) (P) FIBER CABLE (4) (P) DC CABLES*	--	
	B-4	*(P) LTE 700/850/ 1900/5G 850*	*CCI DMP65R-BU8DA*	--	*(1) (P) 4449 B5/B12 (1) (P) 8843 B2/B66A*	*160°*	*±147'*	SEE A-3 FOR CABLE INFORMATION	--	
GAMMA	G-1	(E) UMTS 850	POWERWAVE 7770	(2) (E) TT08-19DB111-001	--	23°	±147'	(2) (E) 1-5/8" COAX CABLES	±185'	
	G-2	--	--	--	--	--	--	(2) (E) 1-5/8" COAX CABLES	±185'	
	G-3	*(P) LTE 700/AWS*	*CCI DMP65R-BU8DA*	--	*(1) (P) B14 4478*	*270°*	*±147'*	SEE A-3 FOR CABLE INFORMATION	--	
	G-4	*(P) LTE 700/850/ 1900/5G 850*	*CCI DMP65R-BU8DA*	--	*(1) (P) 4449 B5/B12 (1) (P) 8843 B2/B66A*	*270°*	*±147'*	SEE A-3 FOR CABLE INFORMATION	--	

2 AT&T ANTENNA SCHEDULE
-- NOT TO SCALE

INFINIGY
INFINIGY ENGINEERING, PLLC
1033 Watervliet Shaker Rd
Albany, NY 12205
Office # (518) 690-0790
Fax # (518) 690-0793

at&t

STATE OF CONNECTICUT
JOHN S. STEVENS
24705
12/09/2019
PROFESSIONAL ENGINEER

UNAUTHORIZED ALTERATION OR ADDITION TO THIS DOCUMENT IS A VIOLATION OF APPLICABLE STATE AND/OR LOCAL LAWS

No.	Submittal / Revision	App'd	Date
3	REVISED FOR PERMIT	ASW	11/20/19
2	REVISED FOR PERMIT	BMM	10/16/19
1	ISSUED FOR PERMIT	ASW	10/04/19
0	ISSUED FOR REVIEW	BMM	09/13/19

Drawn: BMM Date: 09/13/19
Designed: ASW Date: 09/13/19
Checked: AJD Date: 09/13/19

Project Number: 499-006

Project Title:
WINDHAM
WINDHAM CTR

CTL01064
FA# 10035442
193 WINDHAM CENTER ROAD
WINDHAM, CT 06280

Prepared For: smartlink

Drawing Scale: AS NOTED
Date: 11/20/19
CD

Drawing Title
ELEVATION VIEW

Drawing Number
C3

NOTE:
- 3' MINIMUM SEPARATION BETWEEN ALL LTE ANTENNAS
- 6' MINIMUM SEPARATION BETWEEN 700 BC/700 DE ANTENNAS

NOTE:
- *INFINIGY ENGINEERING HAS NOT EVALUATED THE TOWER LOADING FOR THIS SITE, AND ASSUMES NO RESPONSIBILITY FOR ITS STRUCTURAL INTEGRITY REGARDING ITS EXISTING OR PROPOSED LOADING. FINAL INSTALLATION TO COMPLY STRUCTURAL ANALYSIS.*
- *FOR ADDITIONAL STRUCTURAL INFORMATION PERTAINING TO THE ANTENNA MOUNT, SEE 'MOUNT ANALYSIS REPORT' COMPLETED BY INFINIGY, DATED 12/09/19. MOUNT TO BE REPLACED PRIOR TO INSTALLATION OF PROPOSED EQUIPMENT.*

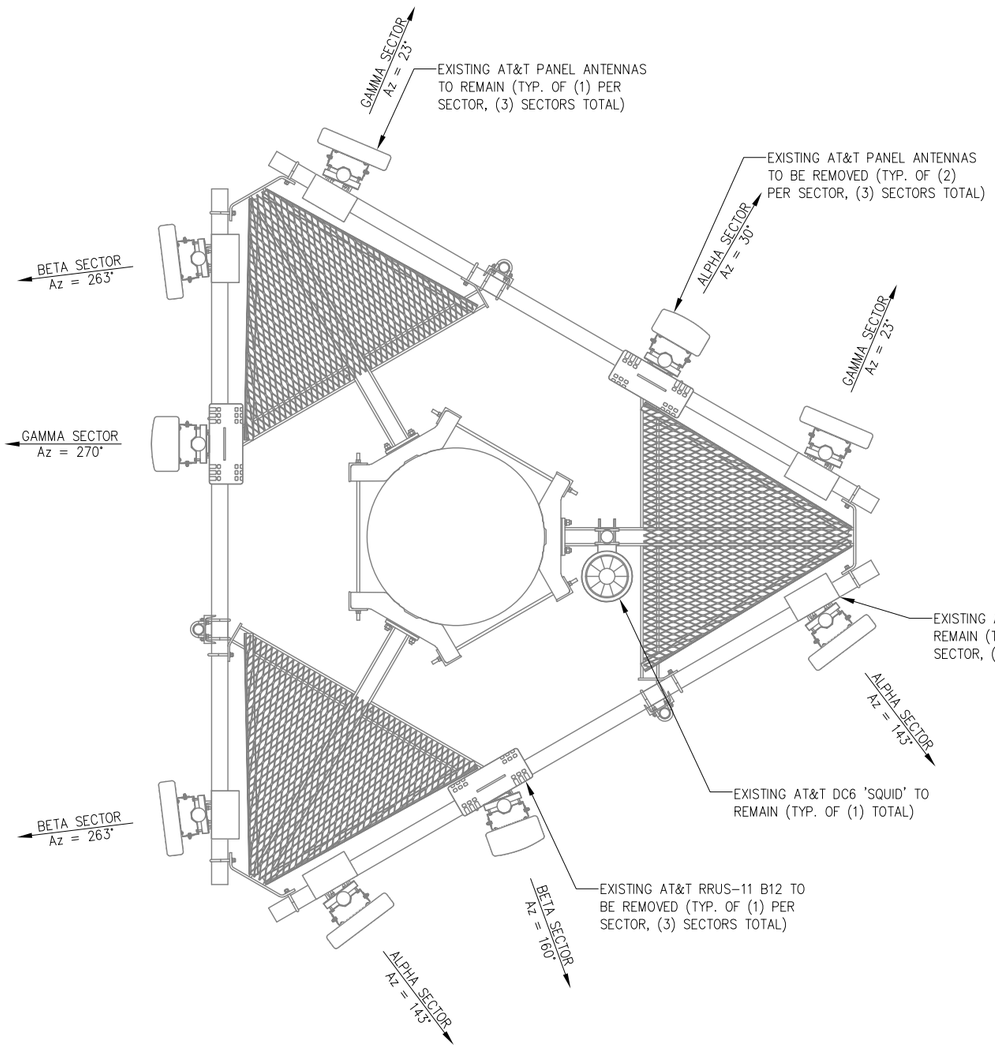

1 EXISTING ANTENNA ORIENTATION PLAN
NOT TO SCALE

TRUE NORTH

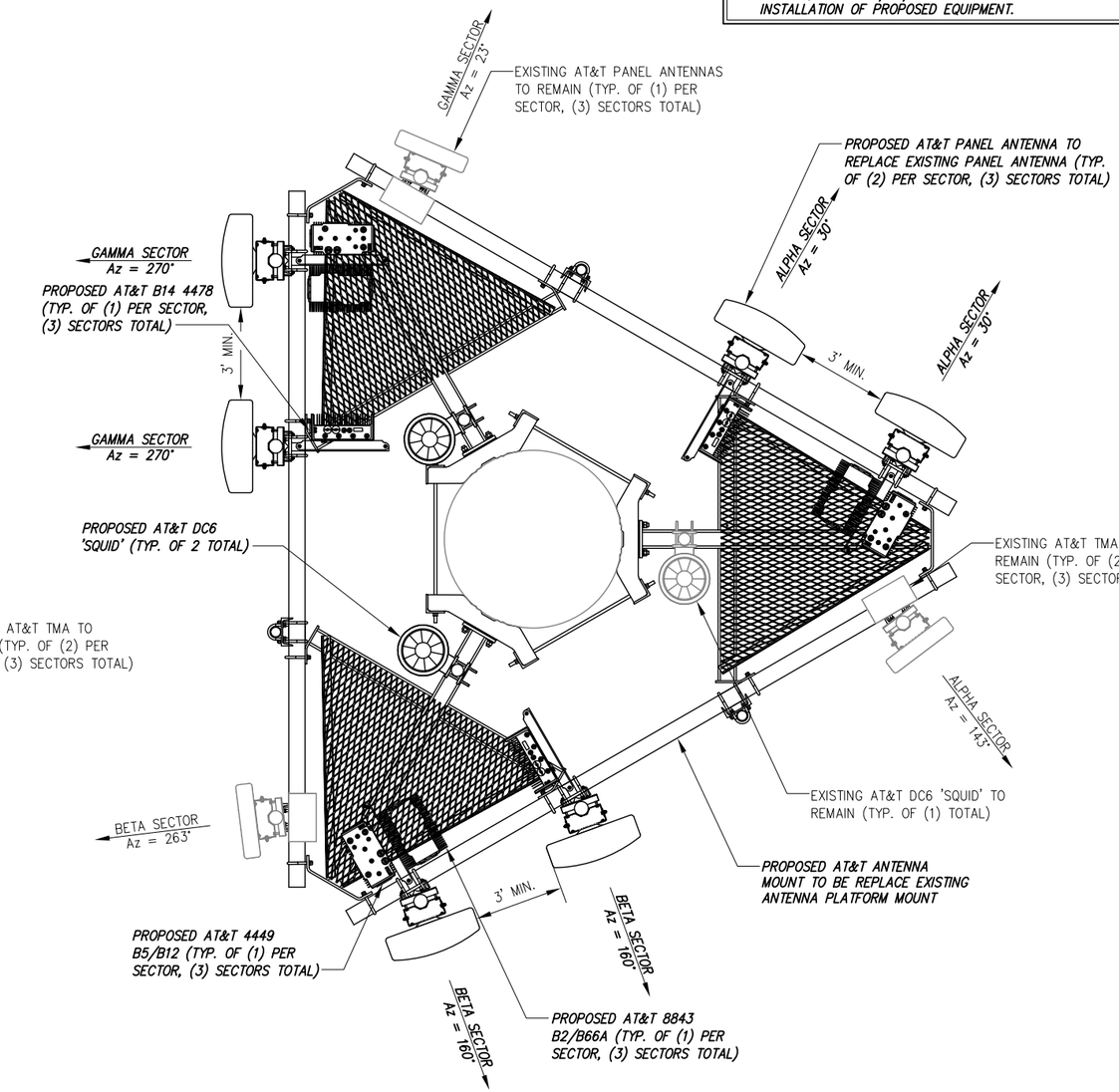

2 PROPOSED ANTENNA ORIENTATION PLAN
NOT TO SCALE

TRUE NORTH

INFINIGY
INFINIGY ENGINEERING, PLLC
1033 Watervliet Shaker Rd
Albany, NY 12205
Office # (518) 690-0790
Fax # (518) 690-0793

at&t

STATE OF CONNECTICUT
JOHN S. STEVENS
24705
12/09/2019
PROFESSIONAL ENGINEER

UNAUTHORIZED ALTERATION OR ADDITION TO THIS DOCUMENT IS A VIOLATION OF APPLICABLE STATE AND/OR LOCAL LAWS

No.	Submittal / Revision	App'd	Date
3	REVISED FOR PERMIT	ASW	11/20/19
2	REVISED FOR PERMIT	BMM	10/16/19
1	ISSUED FOR PERMIT	ASW	10/04/19
0	ISSUED FOR REVIEW	BMM	09/13/19

Drawn: BMM Date: 09/13/19
Designed: ASW Date: 09/13/19
Checked: AJD Date: 09/13/19

Project Number: 499-006

Project Title:
WINDHAM
WINDHAM CTR

CTL01064
FA# 10035442
193 WINDHAM CENTER ROAD
WINDHAM, CT 06280

Prepared For: smartlink

Drawing Scale: AS NOTED
Date: 11/20/19
CD

Drawing Title
ANTENNA ORIENTATION PLAN

Drawing Number
C4

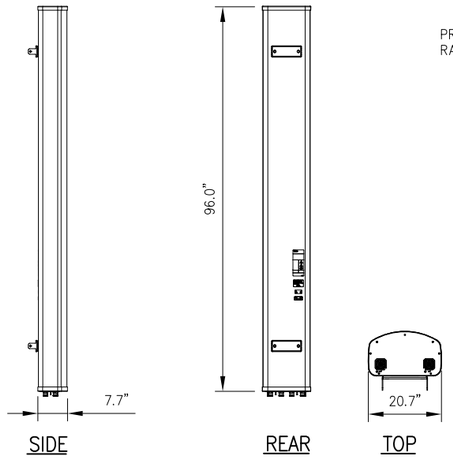

CCI MODEL NO.:	DMP65R-BU8DA
RADOME MATERIAL:	FIBERGLASS
RADOME COLOR:	LIGHT GRAY
DIMENSIONS, HxWxD:	(96.0"x20.7"x7.7")
WEIGHT, W/ PRE-MOUNTED BRACKETS:	95.7 LBS
CONNECTOR:	7-16 DIN FEMALE

1 ANTENNA DETAIL
-- NOT TO SCALE

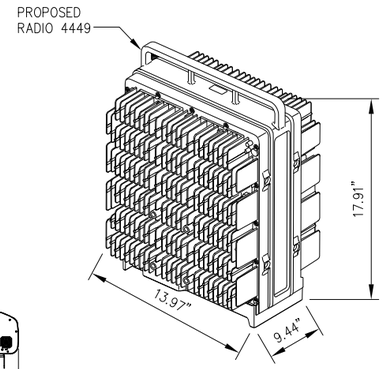

RADIO 4449 SPECIFICATIONS
- HxWxD, (INCHES) : 17.91"x13.97"x9.44"
- WEIGHT (LBS) : 70.54
- COLOR : GRAY

2 ERICSSON RADIO 4449 DETAIL
-- NOT TO SCALE

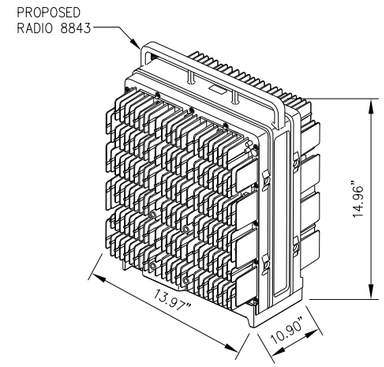

RADIO 8843 SPECIFICATIONS
- HxWxD, (INCHES) : 14.96"x13.97"x10.90"
- WEIGHT (LBS) : 71.87
- COLOR : GRAY

3 ERICSSON RADIO 8843 DETAIL
-- NOT TO SCALE

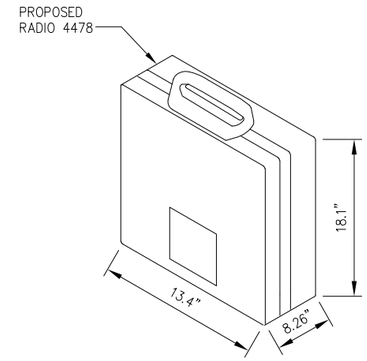

RADIO 4478-B14 SPECIFICATIONS
- HxWxD, (INCHES) : 18.1"x13.4"x8.26"
- WEIGHT (LBS) : 59.5
- COLOR : GRAY
- MOUNTING BRACKET: SXK1250244/1

4 ERICSSON RADIO 4478-B14 DETAIL
-- NOT TO SCALE

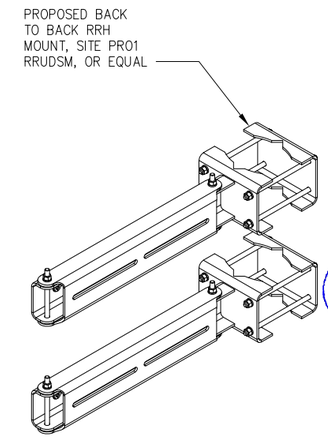

5 BACK TO BACK PIPE MOUNT DETAIL
-- NOT TO SCALE

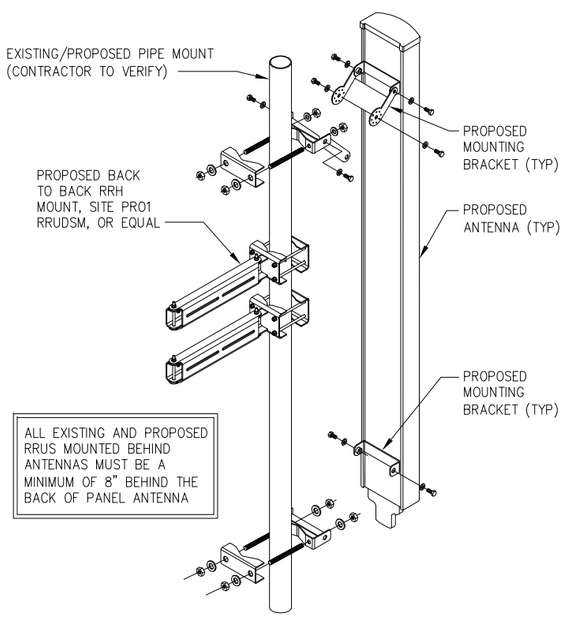

ALL EXISTING AND PROPOSED RRUS MOUNTED BEHIND ANTENNAS MUST BE A MINIMUM OF 8" BEHIND THE BACK OF PANEL ANTENNA

6 ANTENNA MOUNTING DETAIL
-- NOT TO SCALE

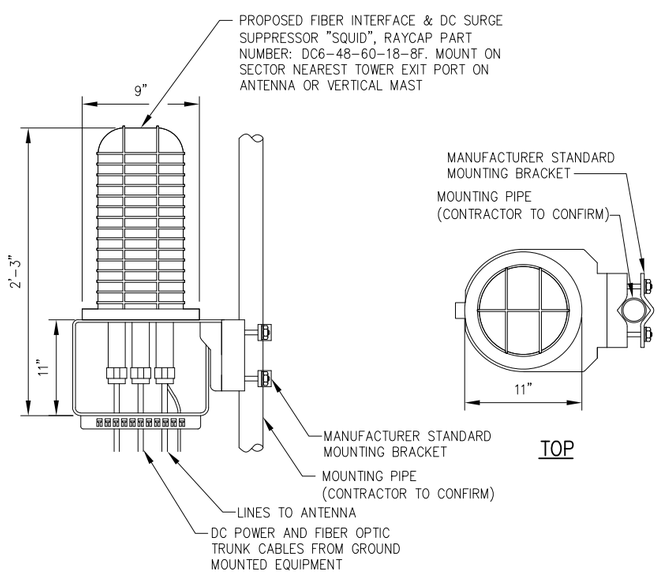

7 SQUID DETAIL
-- NOT TO SCALE

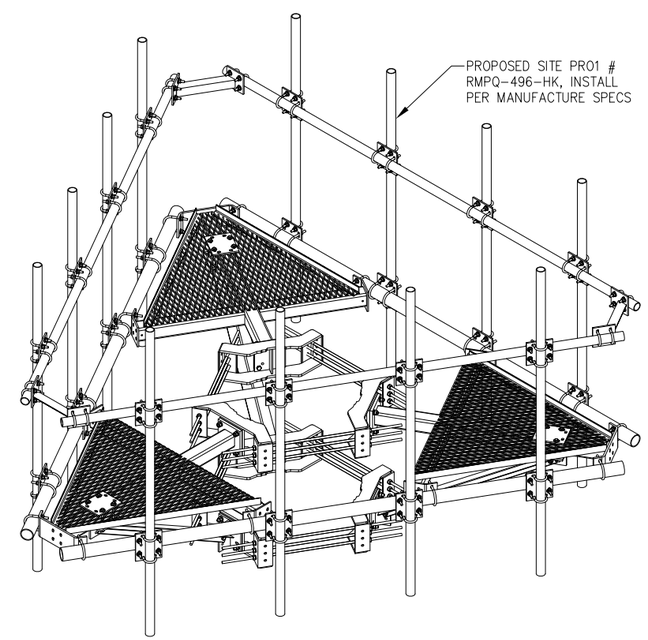

8 PLATFORM MOUNT DETAIL
-- NOT TO SCALE

INFINIGY
INFINIGY ENGINEERING, PLLC
1033 Watervliet Shaker Rd
Albany, NY 12205
Office # (518) 690-0790
Fax # (518) 690-0793

at&t

STATE OF CONNECTICUT
JOHN S. STEVENS
24705
12/09/2019
PROFESSIONAL ENGINEER
LICENSED

UNAUTHORIZED ALTERATION OR ADDITION TO THIS DOCUMENT IS A VIOLATION OF APPLICABLE STATE AND/OR LOCAL LAWS

No.	Submittal / Revision	App'd	Date
3	REVISED FOR PERMIT	ASW	11/20/19
2	REVISED FOR PERMIT	BMM	10/16/19
1	ISSUED FOR PERMIT	ASW	10/04/19
0	ISSUED FOR REVIEW	BMM	09/13/19

Drawn: BMM Date: 09/13/19
Designed: ASW Date: 09/13/19
Checked: AJD Date: 09/13/19

Project Number: 499-006

Project Title:
WINDHAM
WINDHAM CTR

CTL01064
FA# 10035442
193 WINDHAM CENTER ROAD
WINDHAM, CT 06280

Prepared For: smartlink

Drawing Scale: AS NOTED
Date: 11/20/19
CD

Drawing Title
EQUIPMENT DETAILS

Drawing Number
C5

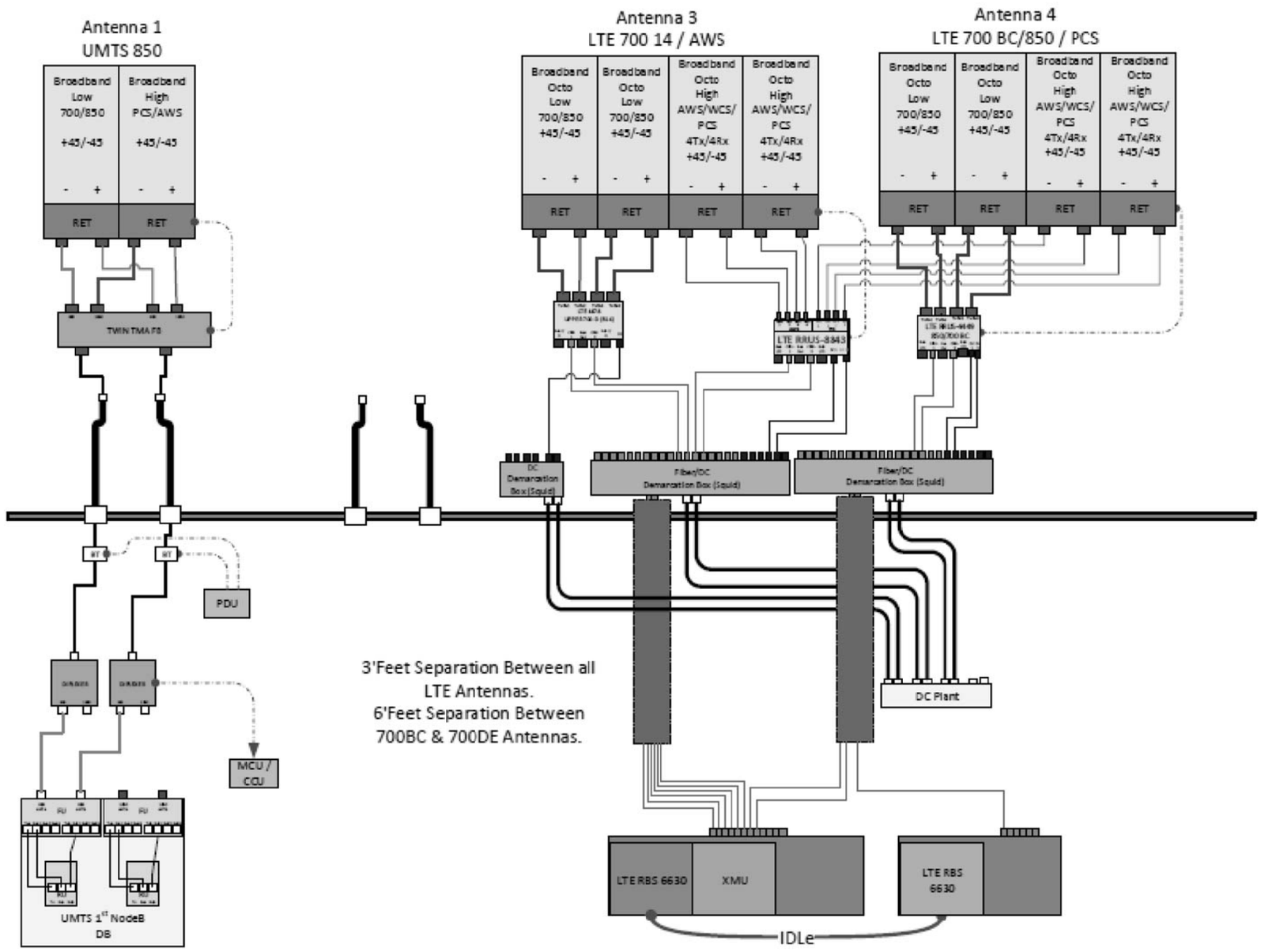

ALPHA/BETA/GAMMA

1 PLUMBING DIAGRAM (FINAL CONFIGURATION)
NOT TO SCALE

*BASED ON LTE RFDS, DATED 07/30/2019, V2.00

INFINIGY
INFINIGY ENGINEERING, PLLC
1033 Watervliet Shaker Rd
Albany, NY 12205
Office # (518) 690-0790
Fax # (518) 690-0793

at&t

STATE OF CONNECTICUT
JOHN S. STEVENS
24705
12/09/2019
LICENSED PROFESSIONAL ENGINEER

UNAUTHORIZED ALTERATION OR ADDITION TO THIS DOCUMENT IS A VIOLATION OF APPLICABLE STATE AND/OR LOCAL LAWS

No.	Submittal / Revision	App'd	Date
3	REVISED FOR PERMIT	ASW	11/20/19
2	REVISED FOR PERMIT	BMM	10/16/19
1	ISSUED FOR PERMIT	ASW	10/04/19
0	ISSUED FOR REVIEW	BMM	09/13/19

Drawn: BMM Date: 09/13/19
Designed: ASW Date: 09/13/19
Checked: AJD Date: 09/13/19

Project Number: 499-006

Project Title:
WINDHAM
WINDHAM CTR
CTL01064
FA# 10035442
193 WINDHAM CENTER ROAD
WINDHAM, CT 06280

Prepared For: smartlink

Drawing Scale: AS NOTED
Date: 11/20/19
CD

Drawing Title
PLUMBING DIAGRAM

Drawing Number
C6

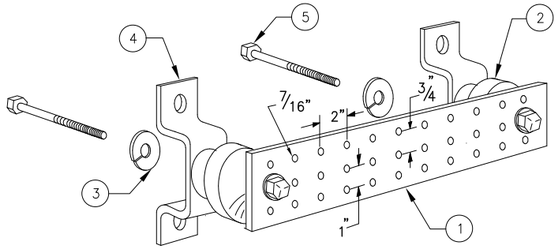

LEGEND

1 – SOLID TINNED COPPER GROUND BAR, 1/4"x 4"x 20" MIN., NEWTON INSTRUMENT CO. HOLE CENTERS TO MATCH NEMA DOUBLE LUG CONFIGURATION
2 – INSULATORS, NEWTON INSTRUMENT CAT. NO. 3061–4
3 – 5/8" LOCKWASHERS, NEWTON INSTRUMENT CO. CAT. NO. 3015–8
4 – WALL MOUNTING BRACKET, NEWTON INSTRUMENT CO. CAT NO. A–6056
5 – 5/8–11 X 1" H.H.C.S. BOLTS, NEWTON INSTRUMENT CO. CAT NO. 3012–1
6 – GROUND BAR SHALL BE SIZED TO ACCOMODATE ALL GROUNDING CONNECTIONS REQUIRED PLUS PROVIDE 50% SPARE CAPACITY
7 – GROUND BARS SHALL NEITHER BE FIELD FABRICATED NOR NEW HOLES DRILLED
8 – GROUND LUGS SHALL MATCH THE HOLE SPACING ON THE BAR
9 – HARDWARE DIAMETER SHALL BE MINIMUM 3/8"

1 GROUND BAR
NOT TO SCALE

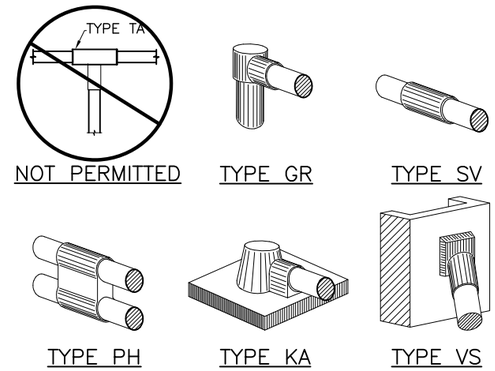

2 CADWELDS (TYPICAL)
NOT TO SCALE

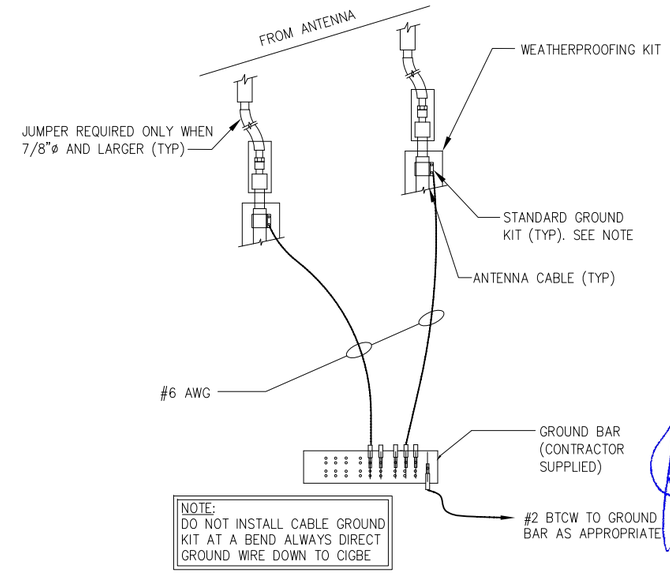

3 CONNECTION OF GROUND WIRES TO GROUNDING BARS @ ANTENNAS
NOT TO SCALE

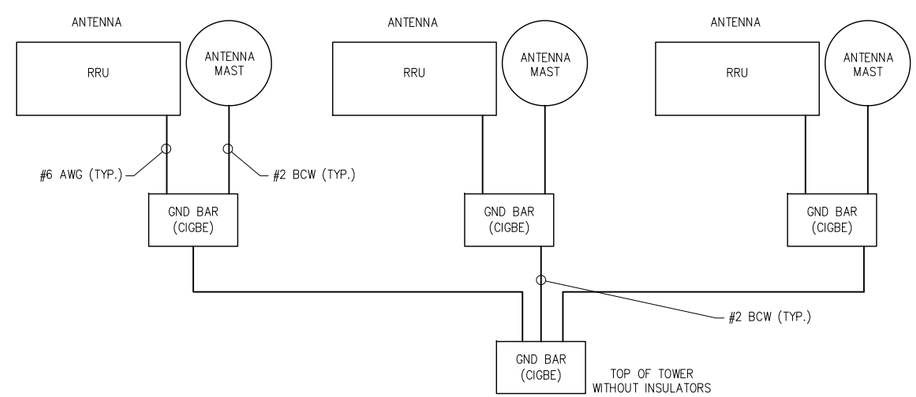

4 SCHEMATIC DIAGRAM GROUNDING SYSTEM
NOT TO SCALE

INFINIGY
INFINIGY ENGINEERING, PLLC
1033 Watervliet Shaker Rd
Albany, NY 12205
Office # (518) 690-0790
Fax # (518) 690-0793

at&t

STATE OF CONNECTICUT
JOHN S. STEVENS
24705
LICENSED PROFESSIONAL ENGINEER
12/09/2019

UNAUTHORIZED ALTERATION OR ADDITION TO THIS DOCUMENT IS A VIOLATION OF APPLICABLE STATE AND/OR LOCAL LAWS

No.	Submittal / Revision	App'd	Date
3	REVISED FOR PERMIT	ASW	11/20/19
2	REVISED FOR PERMIT	BMM	10/16/19
1	ISSUED FOR PERMIT	ASW	10/04/19
0	ISSUED FOR REVIEW	BMM	09/13/19

Drawn: BMM Date: 09/13/19
Designed: ASW Date: 09/13/19
Checked: AJD Date: 09/13/19

Project Number: 499-006

Project Title:
WINDHAM
WINDHAM CTR

CTL01064
FA# 10035442
193 WINDHAM CENTER ROAD
WINDHAM, CT 06280

Prepared For: smartlink

Drawing Scale: AS NOTED
Date: 11/20/19
CD

Drawing Title
GROUNDING DETAILS

Drawing Number
C7

INFINIGY
FROM ZERO TO INFINIGY
the solutions are endless

1033 WATERVLIET SHAKER RD, ALBANY, NY 12205

Mount Analysis Report

December 9, 2019

Site Name	Windham Windham CTR
Site Number	CTL01064
FA Number	10035442
PACE Number	MRCTB040530, MRCTB040444, MRCTB040469 MRCTB040708, MRCTB040763
PTN Number	2051A0PQEN, 2051A0PQWE, 2051A0PQF7 2051A0PQM8, 2051A0PQS4
Infinigy Job Number	1106-A0001-B
Client	Smartlink
Carrier	AT&T Mobility
Site Location	193 Windham Center Road Windham, CT 6280 41.6900481 N NAD83 144.3250538 W NAD83
Mount Centerline EL.	147.0 ft
Mount Type	Platform
Structural Usage Ratio	**69.4%**
Overall Result	**Pass**
Note	**SitePro1 RMQP-496-HK to be installed prior to installation of proposed appurtenances.**

Upon reviewing the results of this analysis, it is our opinion that the proposed mount meets the specified TIA code requirements. The mounts and connections for the proposed carrier are therefore deemed adequate to support the final loading configuration as listed in this report.

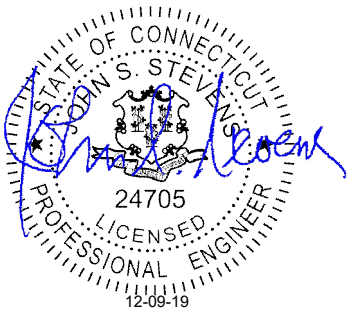

Mike Downing

Contents

Introduction…….. 3

Supporting Documentation…….. 3

Analysis Code Requirements……... 3

Conclusion…… 3

Final Configuration Loading…… 4

Mount Usages……..... 4

Mount Connection Usages…… 4

Assumptions and Limitations…… 5

Calculations…….. Appended

Introduction

Infinigy Engineering has been requested to perform a mount analysis on the proposed AT&T Mobility mounts. All referenced supporting documents have been obtained from the client and are assumed to be accurate and applicable to this site. The mount was analyzed using RISA-3D Version 17.0.4 analysis software.

Supporting Documentation

RFDS	AT&T RFDS ID #3167712, dated July 30, 2019
Construction Drawings	Infingy Engineering, PLLC, Job No. 499-006, dated November 20, 2019
Prior Mount Analysis	Infinigy Engineering, PLLC, Job No. 1106-A0001-B, dated September 11, 2019
Site Photos	Smartlink Provided, dated June 26, 2019
Assembly Drawings	Site Pro 1 Part No. RMQP-496-HK, dated July 14, 2014

Analysis Code Requirements

Wind Speed	121 mph (3-Second Gust)
Wind Speed w/ Ice	50 mph (3 Second Gust) w/ 1" Ice
TIA Revision	ANSI/TIA-222-H
Adopted IBC	2018 IBC/ 2018 Connecticut State Building Code
Structure Class	II
Exposure Category	C
Topographic Category	1
Spectral Response	S_s = 0.191 g, S_1 = 0.055 g
Site Class	D - Stiff Soil
HMSL	205 ft.

Conclusion

Upon reviewing the results of this analysis, it is our opinion that the proposed mount meets the specified TIA code requirements. The mount and connections are therefore deemed adequate to support the final loading configuration as listed in this report.

If you have any questions, require additional information, or actual conditions differ from those as detailed in this report please contact me via the information below:

Mike Downing | **INFINIGY**
1033 Watervilet Shaker Road, Albany, NY 12205
(O) (518) 690-0799
mdowning@infinigy.com | www.infinigy.com

Final Configuration Loading

Mount CL (ft)	Vert. O/S (ft)	Rad. HT (ft)	Horiz. O/S (ft)*	Qty	Appurtenance	Carrier
147.0	0.0	147.0	1.5	3	POWERWAVE 7770.00	AT&T Mobility
			8.0, 11.5	6	CCI DMP65R-BU8DA	
			8.0	3	ERICSSON B14 4478	
			11.5	3	ERICSSON 4449 B5/B12	
			11.5	3	ERICSSON 8843 B2/B66A	
			1.5	6	POWERWAVE TT08-19DB111-001	
			--	3	RAYCAP DC6-48-60-18-8F	

***Horizontal Offset is defined as the distance from the left most edge of the mount face horizontal when viewed facing the tower**

Mount Usages

Horizontals	16.6%	Pass
Standoffs	23.7%	Pass
Mount Pipes	69.4%	Pass
Handrails	56.4%	Pass
Max Usage	**69.4%**	**Pass**

Mount Connection Usages

Reaction Data	Design Capacity*	Analysis Reactions	Results
Max Tension (lbs.)	20340	4032	19.8%
Max Shear (lbs.)	12425	913	7.3%
Unity Check	-	-	4.5%

***Install (4) 5/8" A325 Bolts as per manufacture specifications.**

Assumptions and Limitations

Our structural calculations are completed assuming all information provided to Infinigy Engineering is accurate and applicable to this site. For the purposes of calculations, we assume an overall structure condition of "like new" and all members and connections to be free of corrosion and/or structural defects. The structure owner and/or contractor shall verify the structure's condition prior to installation of any proposed equipment. If actual conditions differ from those described in this report Infinigy Engineering should be notified immediately to complete a revised evaluation.

Our evaluation is completed using standard TIA, AISC, ACI, and ASCE methods and procedures. Our structural results are proprietary and should not be used by others as their own. Infinigy Engineering is not responsible for decisions made by others that are or are not based on our supplied assumptions and conclusions.

This report is an evaluation of the proposed carriers mount structure only and does not reflect adequacy of the existing tower, other mounts, or coax mounting attachments. These elements are assumed to be adequate for the purposes of this analysis and are assumed to have been installed per their manufacturer requirements.

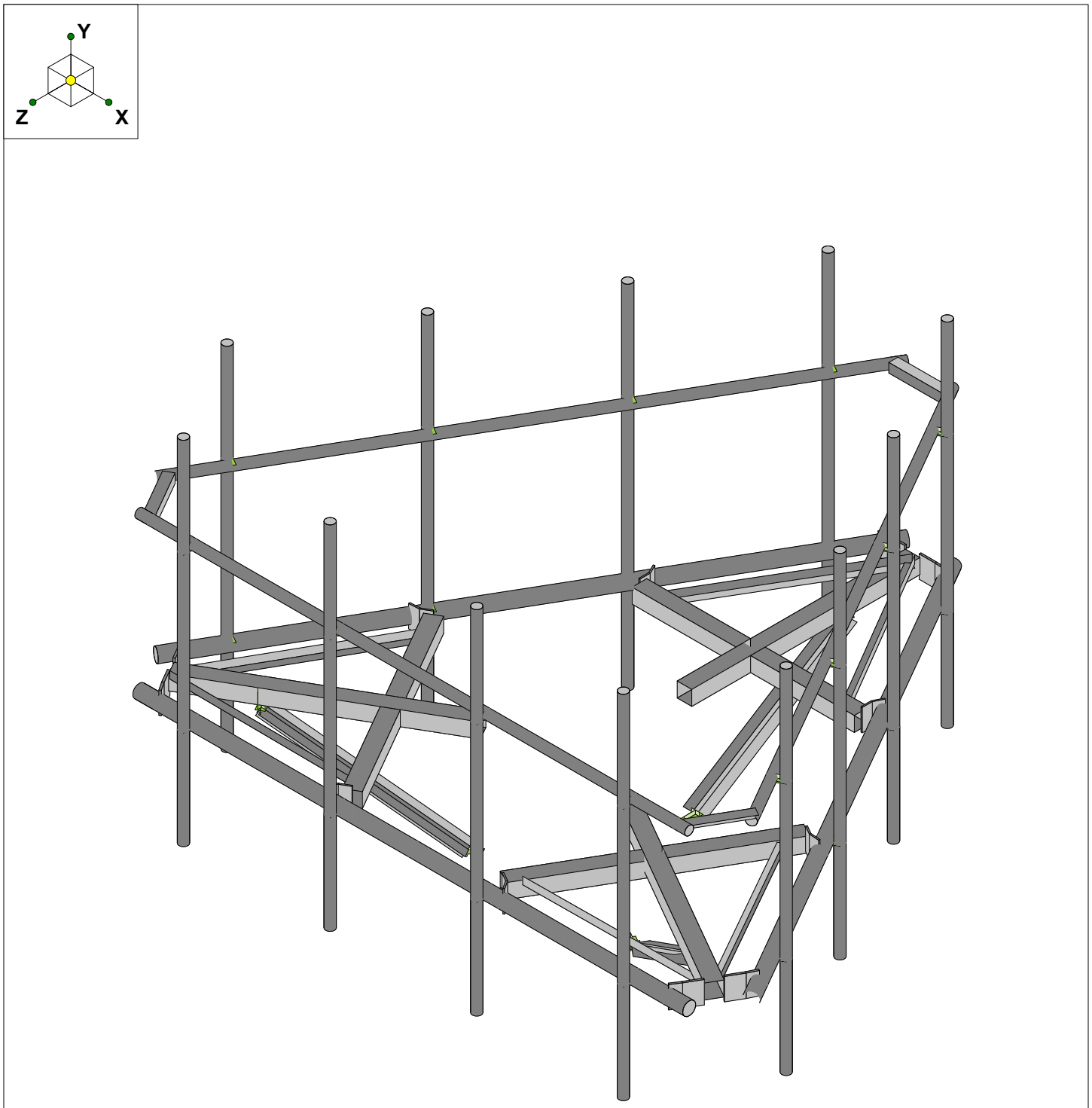

Envelope Only Solution

Infinigy Engineering, PLLC	CTL01064	Final Configuration
MD		Dec 9, 2019 at 11:24 AM
1106-A0001-B		CTL01064_loaded.r3d

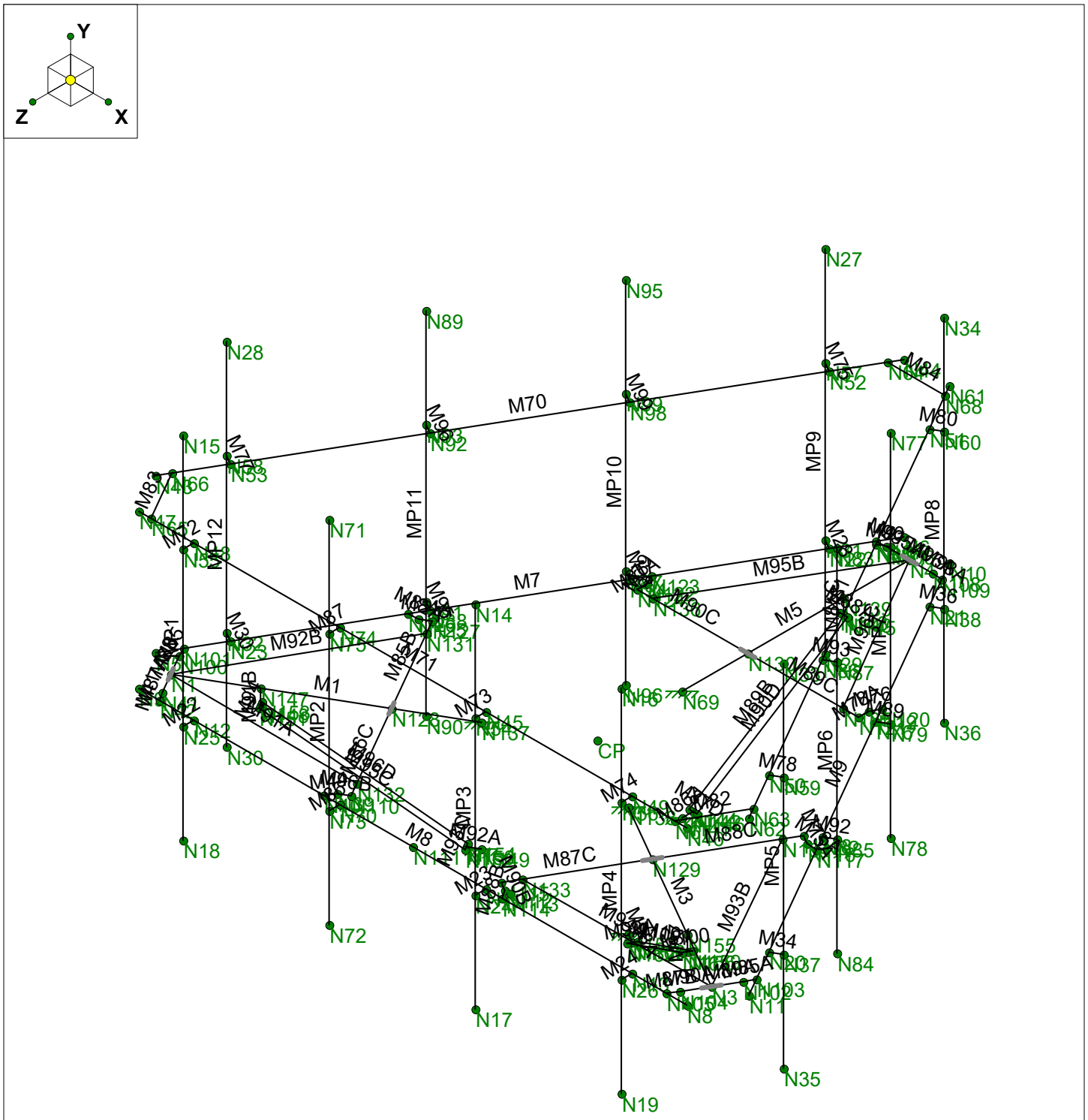

Envelope Only Solution

Infinigy Engineering, PLLC	CTL01064	Wire Frame
MD		Dec 9, 2019 at 11:23 AM
1106-A0001-B		CTL01064_loaded.r3d

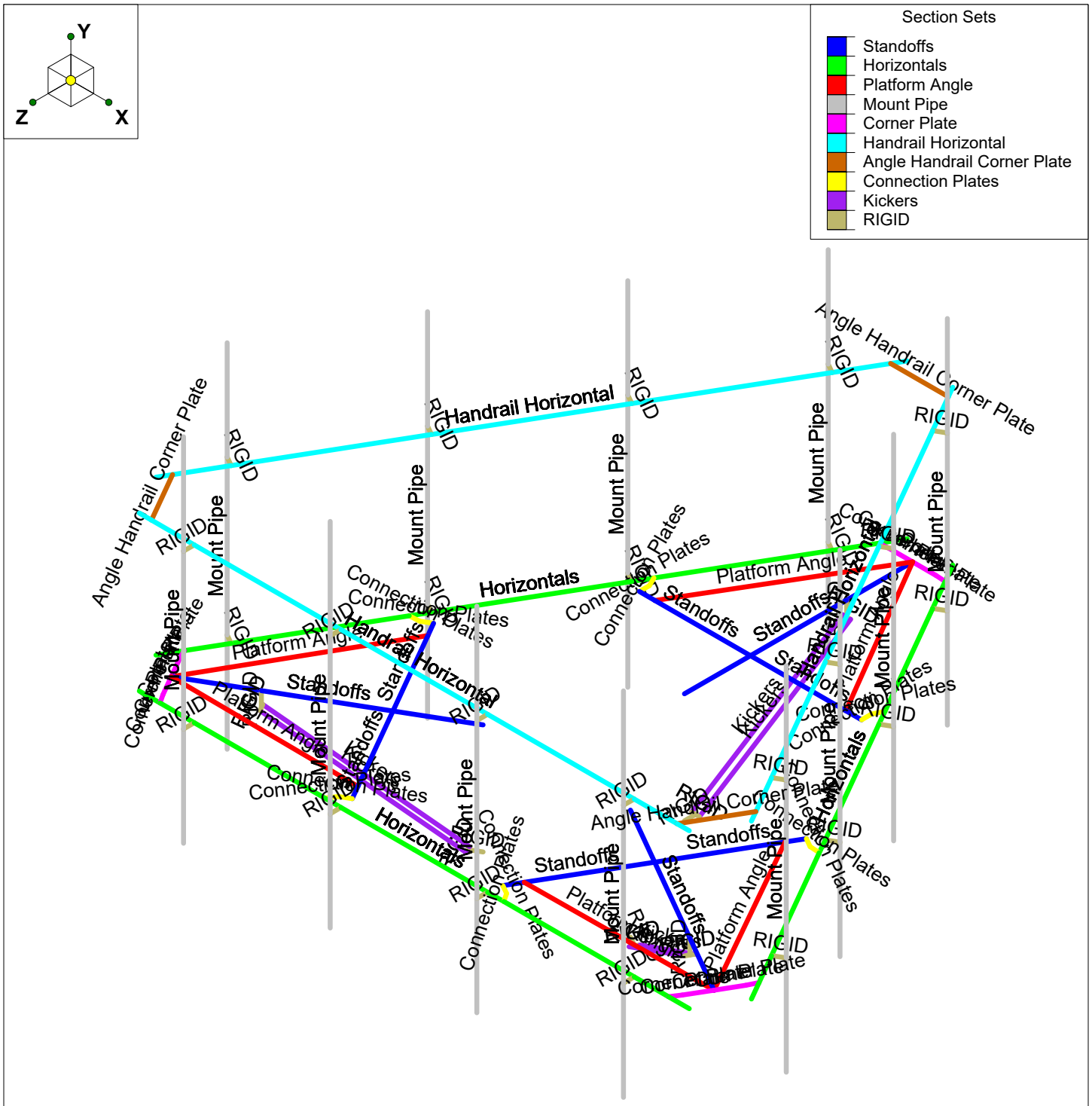

Envelope Only Solution

Infinigy Engineering, PLLC	CTL01064	Section Set
MD		Dec 9, 2019 at 11:26 AM
1106-A0001-B		CTL01064_loaded.r3d

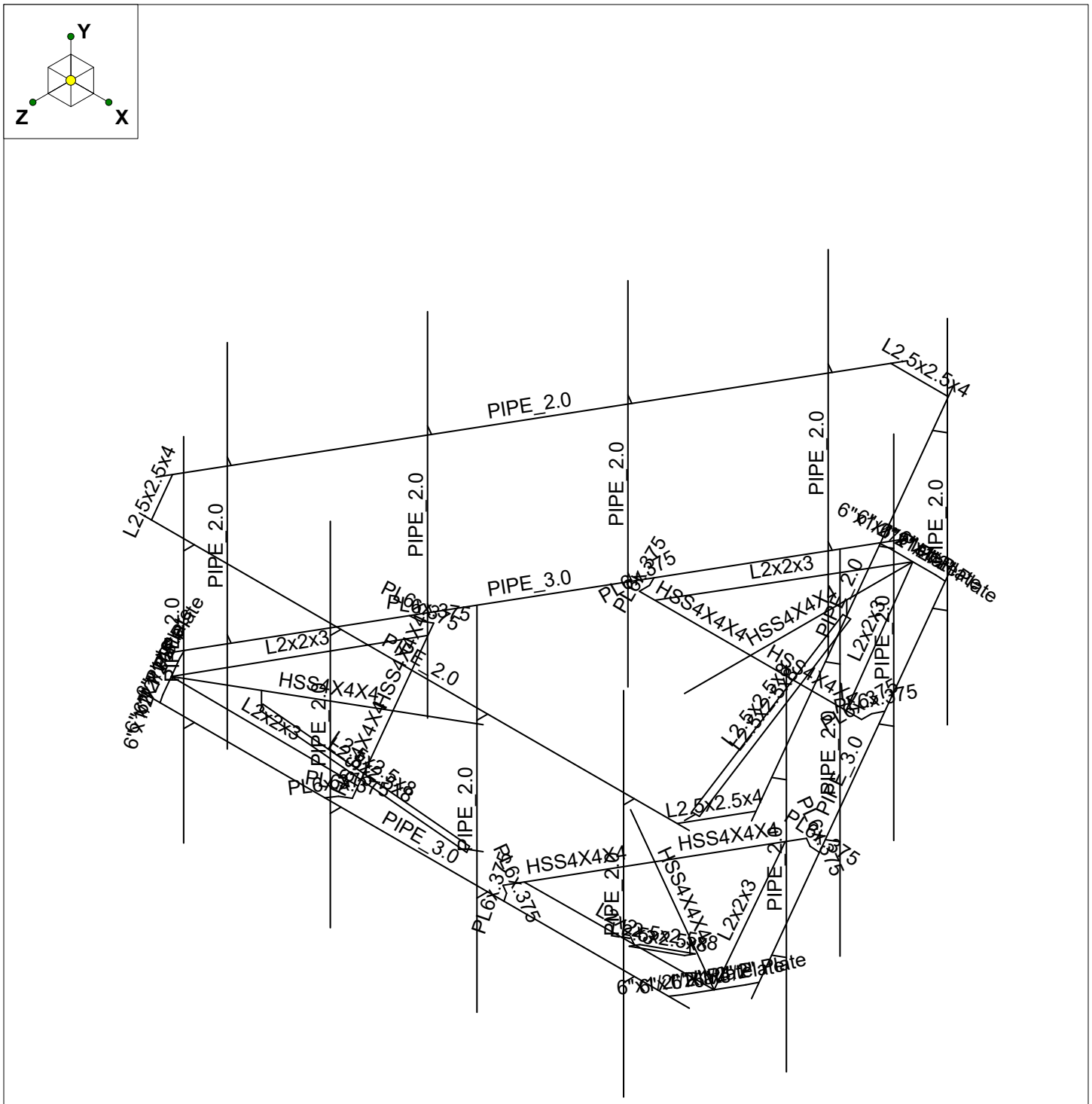

Envelope Only Solution

Infinigy Engineering, PLLC	CTL01064	Member Shape
MD		Dec 9, 2019 at 11:26 AM
1106-A0001-B		CTL01064_loaded.r3d

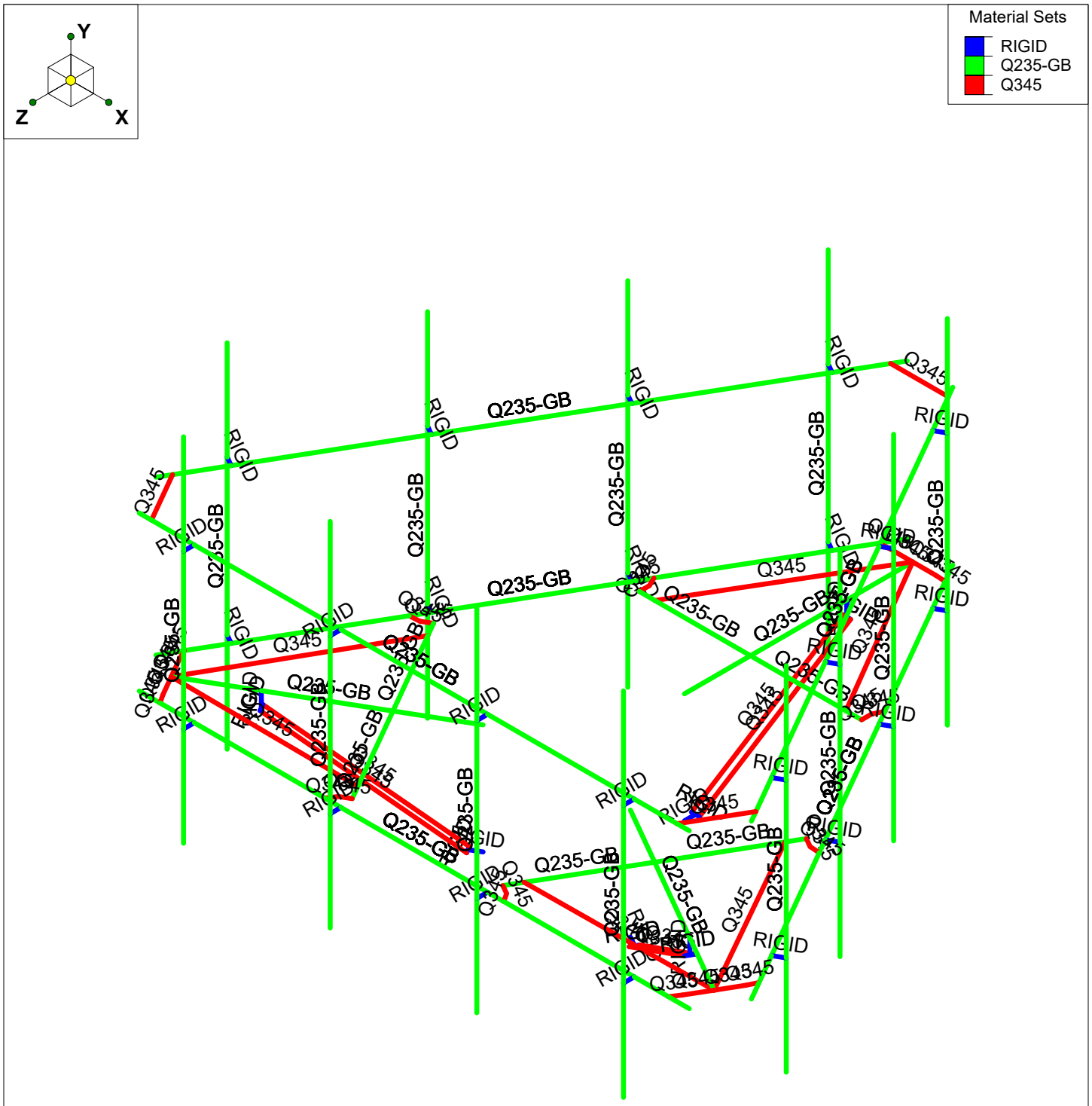

Envelope Only Solution

Infinigy Engineering, PLLC	CTL01064	Material Set
MD		Dec 9, 2019 at 11:27 AM
1106-A0001-B		CTL01064_loaded.r3d

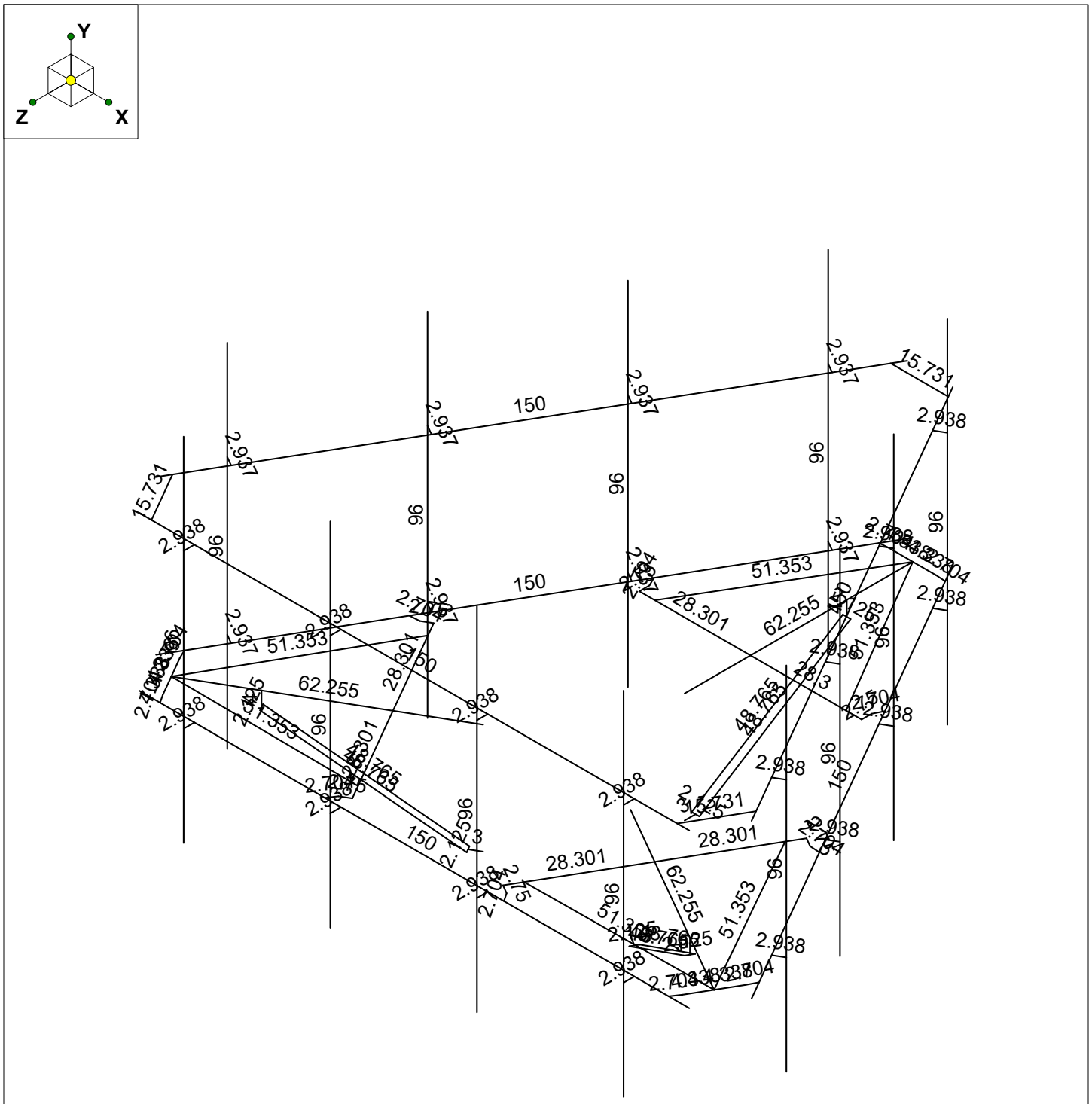

Member Length (in) Displayed
Envelope Only Solution

Infinigy Engineering, PLLC	CTL01064	Member Length
MD		Dec 9, 2019 at 11:28 AM
1106-A0001-B		CTL01064_loaded.r3d

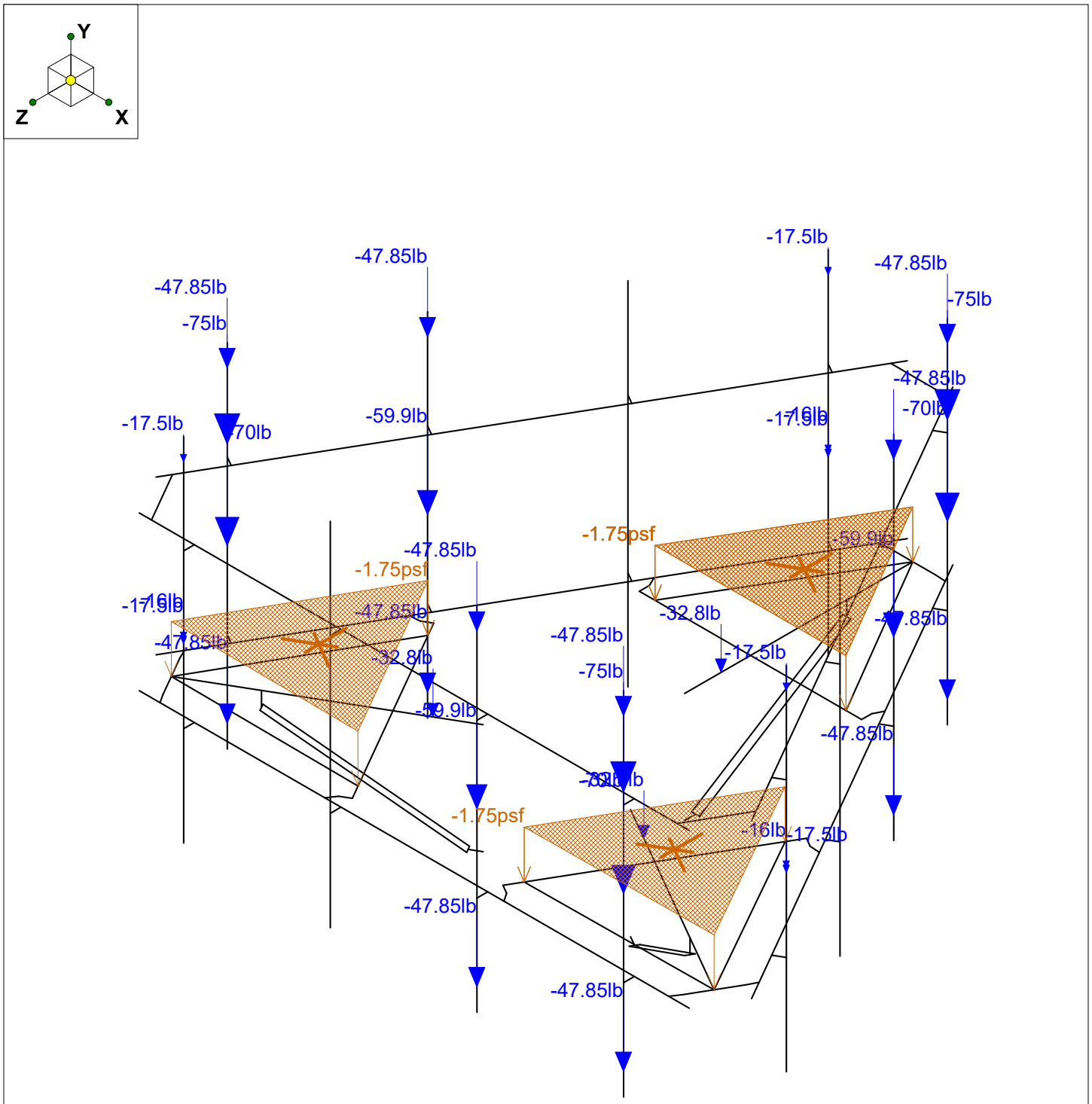

Loads: BLC 1, Self Weight
Envelope Only Solution

Infinigy Engineering, PLLC	CTL01064	Self Weight
MD		Dec 9, 2019 at 11:28 AM
1106-A0001-B		CTL01064_loaded.r3d

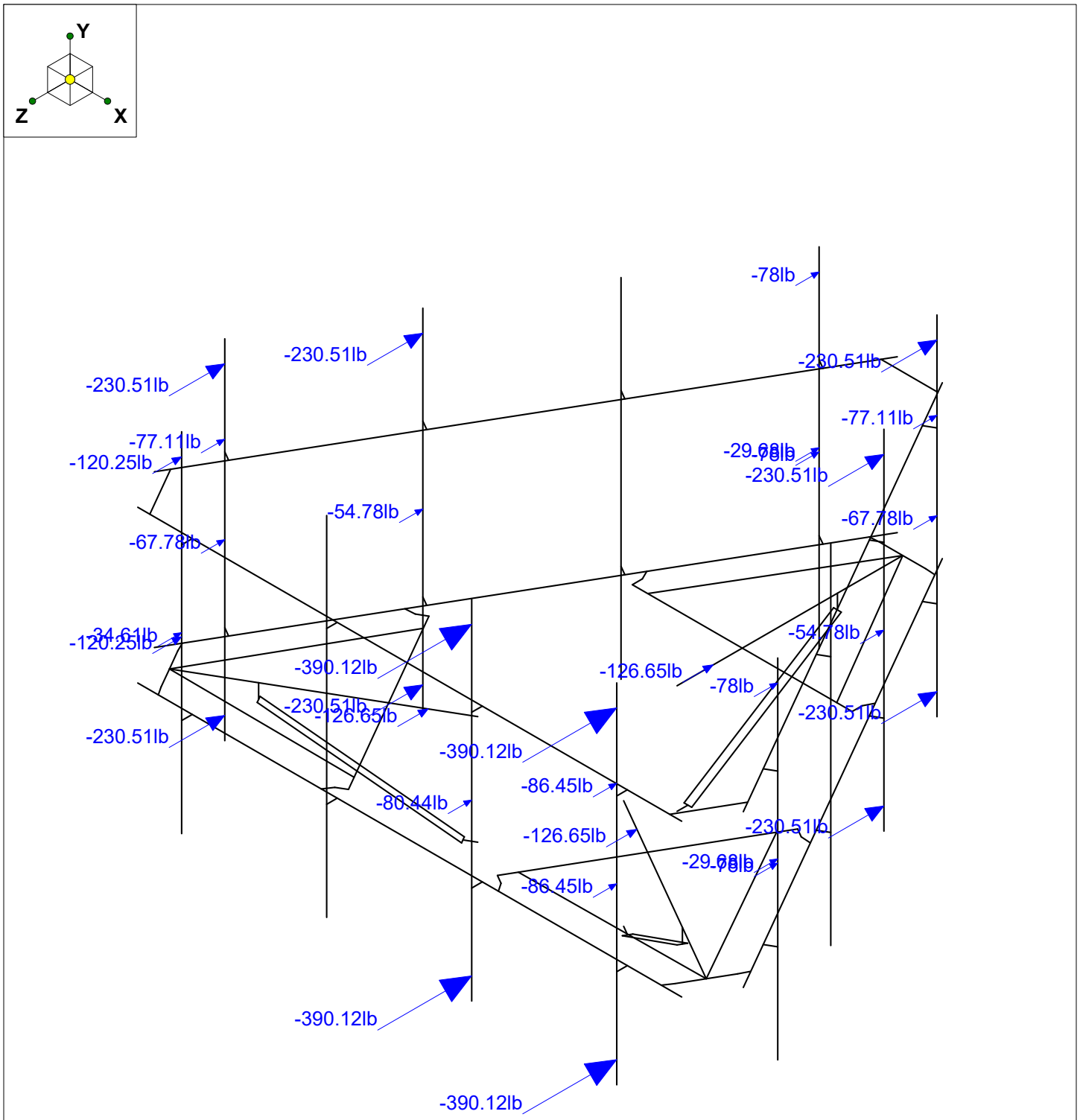

Loads: BLC 2, Wind Load AZI 0
Envelope Only Solution

Infinigy Engineering, PLLC	CTL01064	Wind Load 000
MD		Dec 9, 2019 at 11:29 AM
1106-A0001-B		CTL01064_loaded.r3d

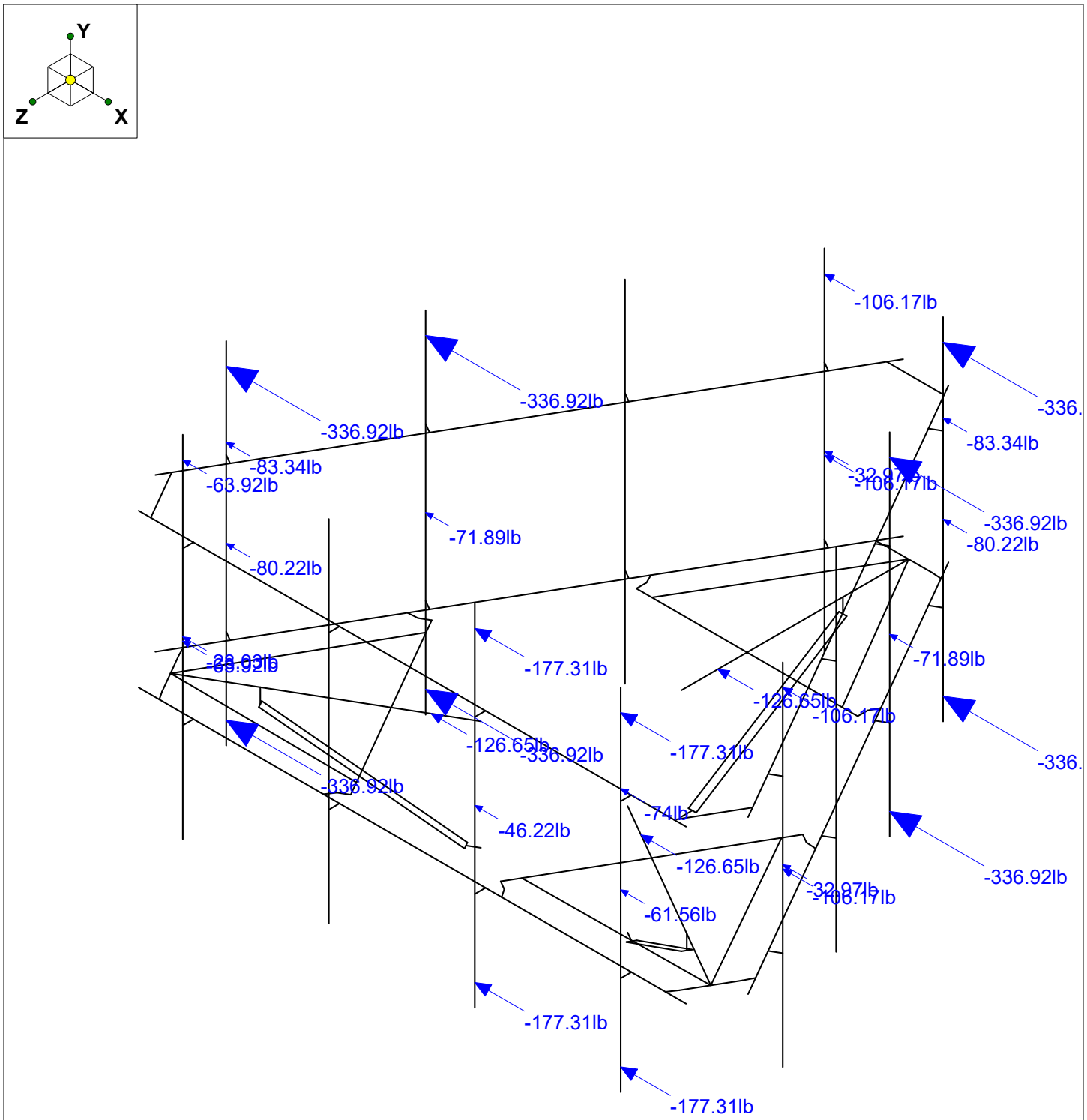

Loads: BLC 5, Wind Load AZI 90
Envelope Only Solution

Infinigy Engineering, PLLC	CTL01064	Wind Load 090
MD		Dec 9, 2019 at 11:29 AM
1106-A0001-B		CTL01064_loaded.r3d

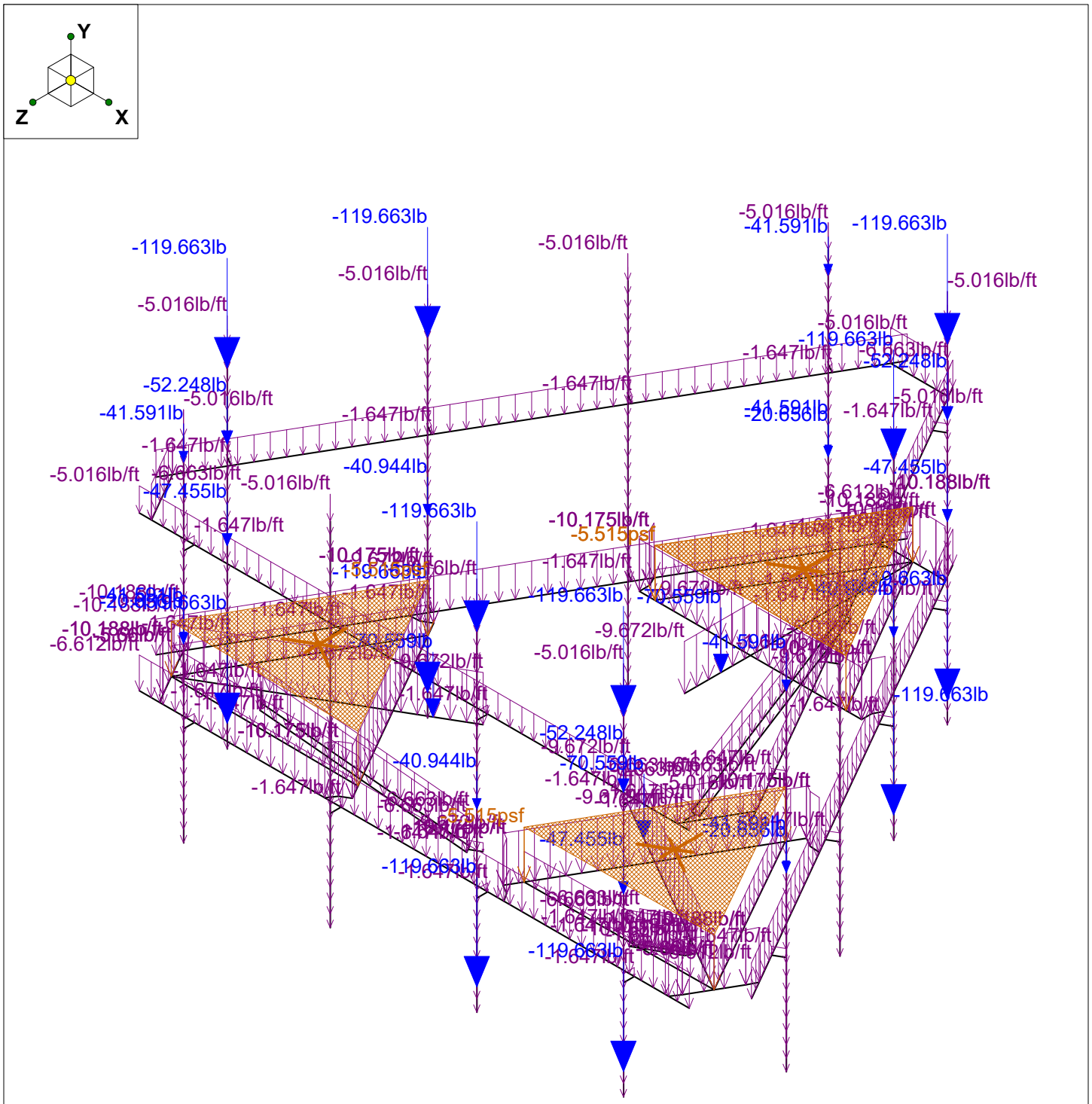

Loads: BLC 16, Ice Weight
Envelope Only Solution

Infinigy Engineering, PLLC	CTL01064	Ice Weight
MD		Dec 9, 2019 at 11:30 AM
1106-A0001-B		CTL01064_loaded.r3d

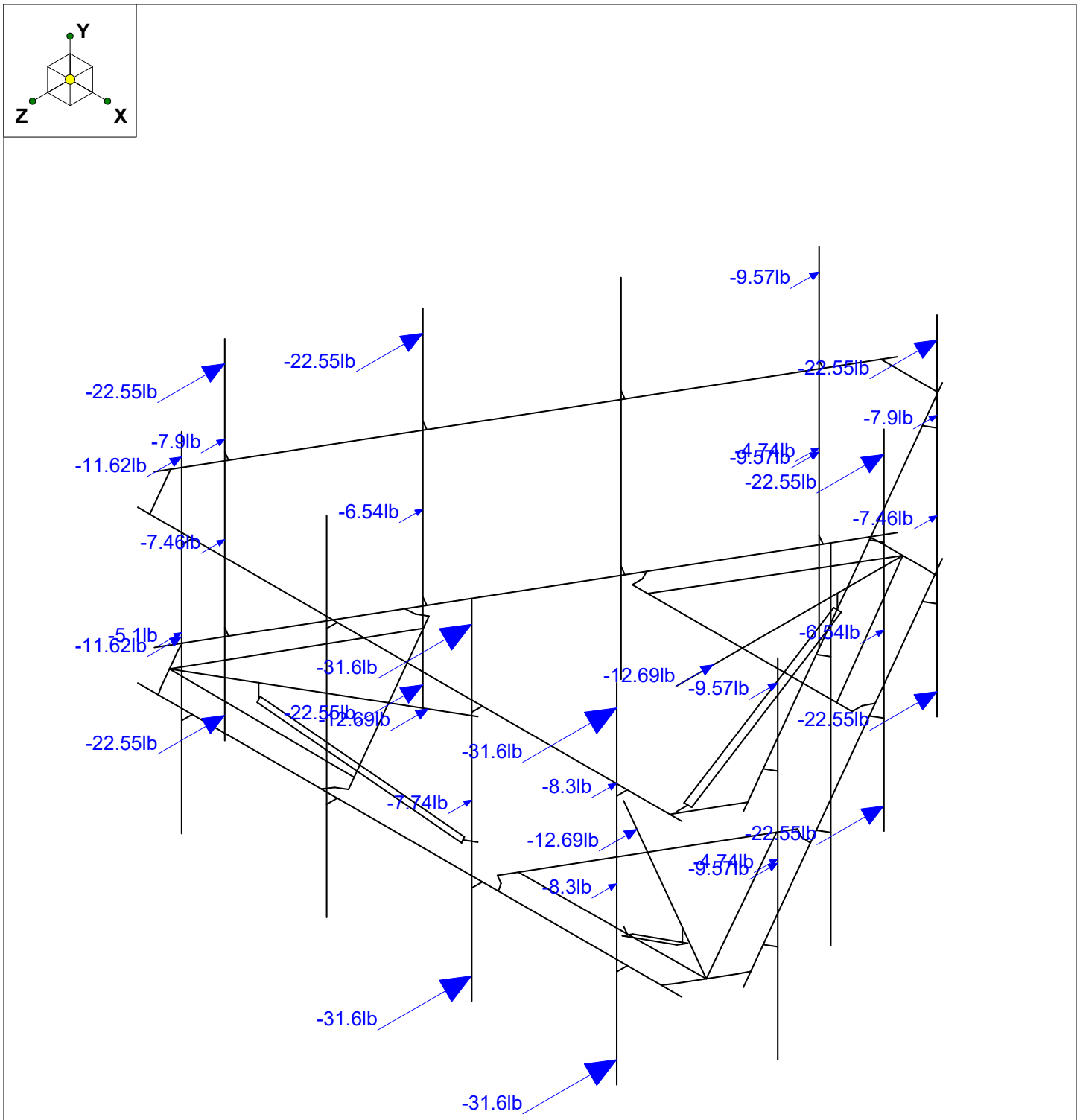

Loads: BLC 17, Ice Wind Load AZI 0
Envelope Only Solution

Infinigy Engineering, PLLC	CTL01064	Wind + Ice 000
MD		Dec 9, 2019 at 11:31 AM
1106-A0001-B		CTL01064_loaded.r3d

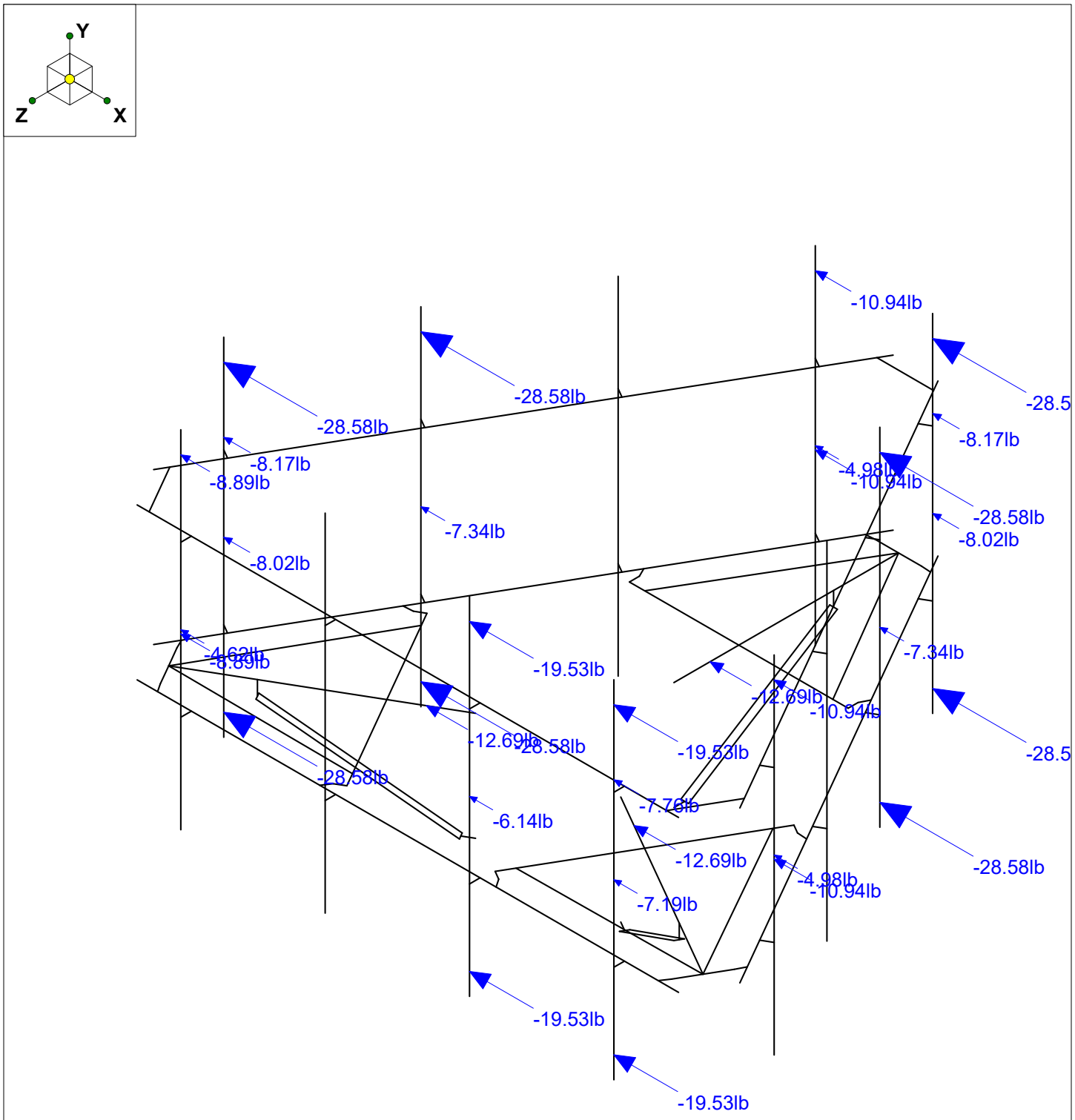

Loads: BLC 20, Ice Wind Load AZI 90
Envelope Only Solution

Infinigy Engineering, PLLC	CTL01064	Wind + Ice 090
MD		Dec 9, 2019 at 11:31 AM
1106-A0001-B		CTL01064_loaded.r3d

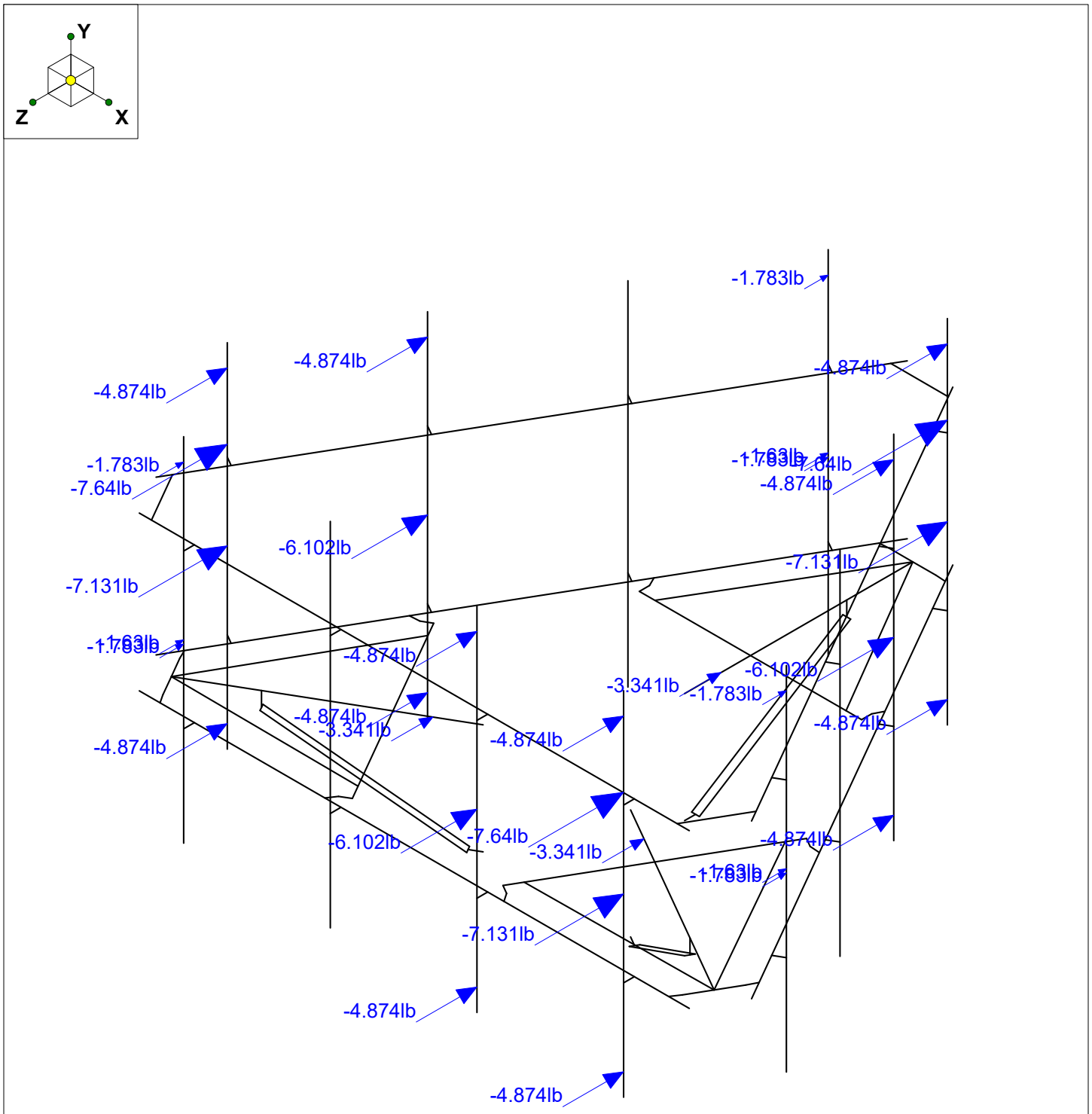

Loads: BLC 31, Seismic Load Z
Envelope Only Solution

Infinigy Engineering, PLLC	CTL01064	Seismic Load 000
MD		Dec 9, 2019 at 11:32 AM
1106-A0001-B		CTL01064_loaded.r3d

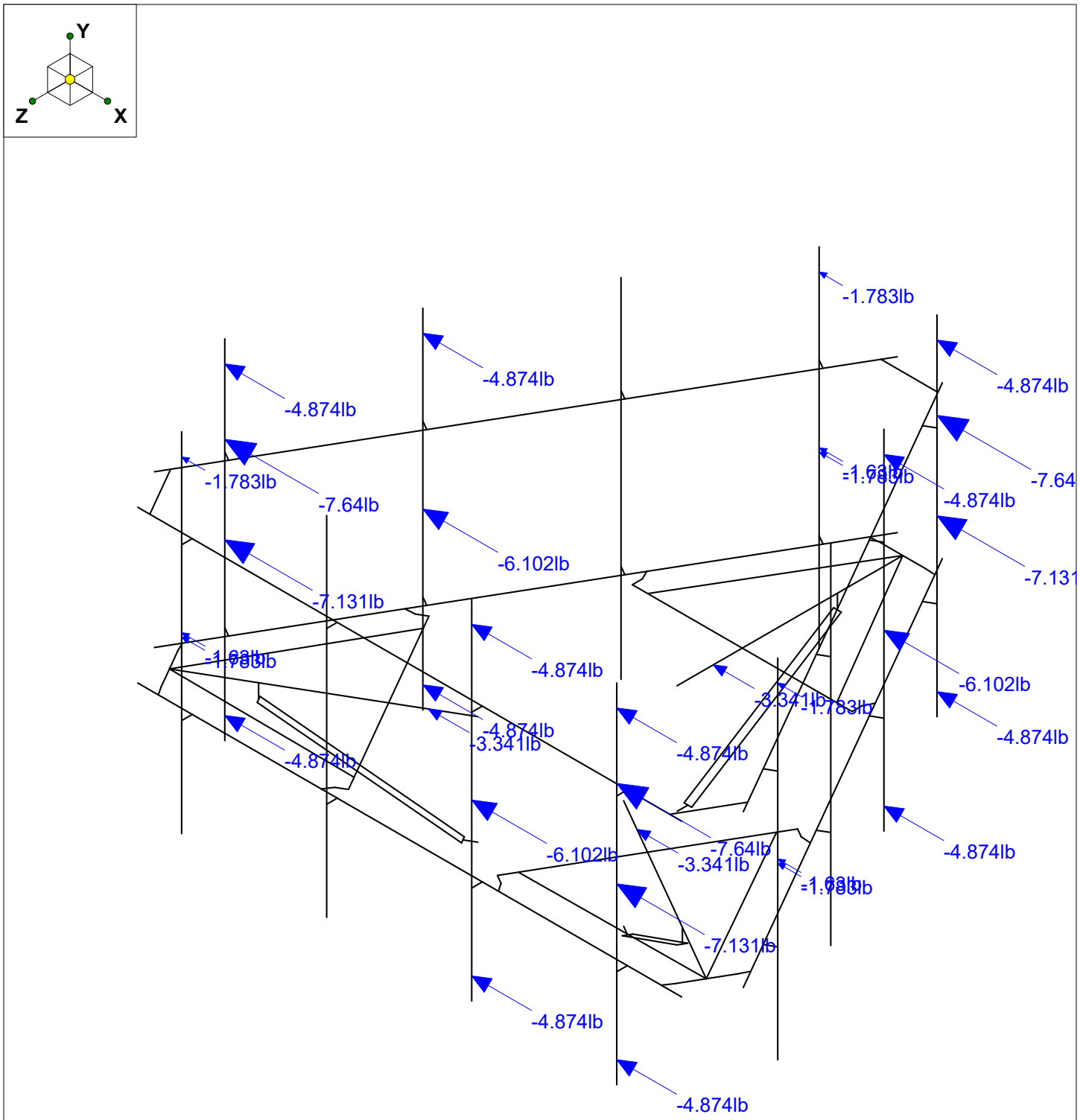

Loads: BLC 32, Seismic Load X
Envelope Only Solution

Infinigy Engineering, PLLC	CTL01064	Seismic Load 090
MD		Dec 9, 2019 at 11:33 AM
1106-A0001-B		CTL01064_loaded.r3d

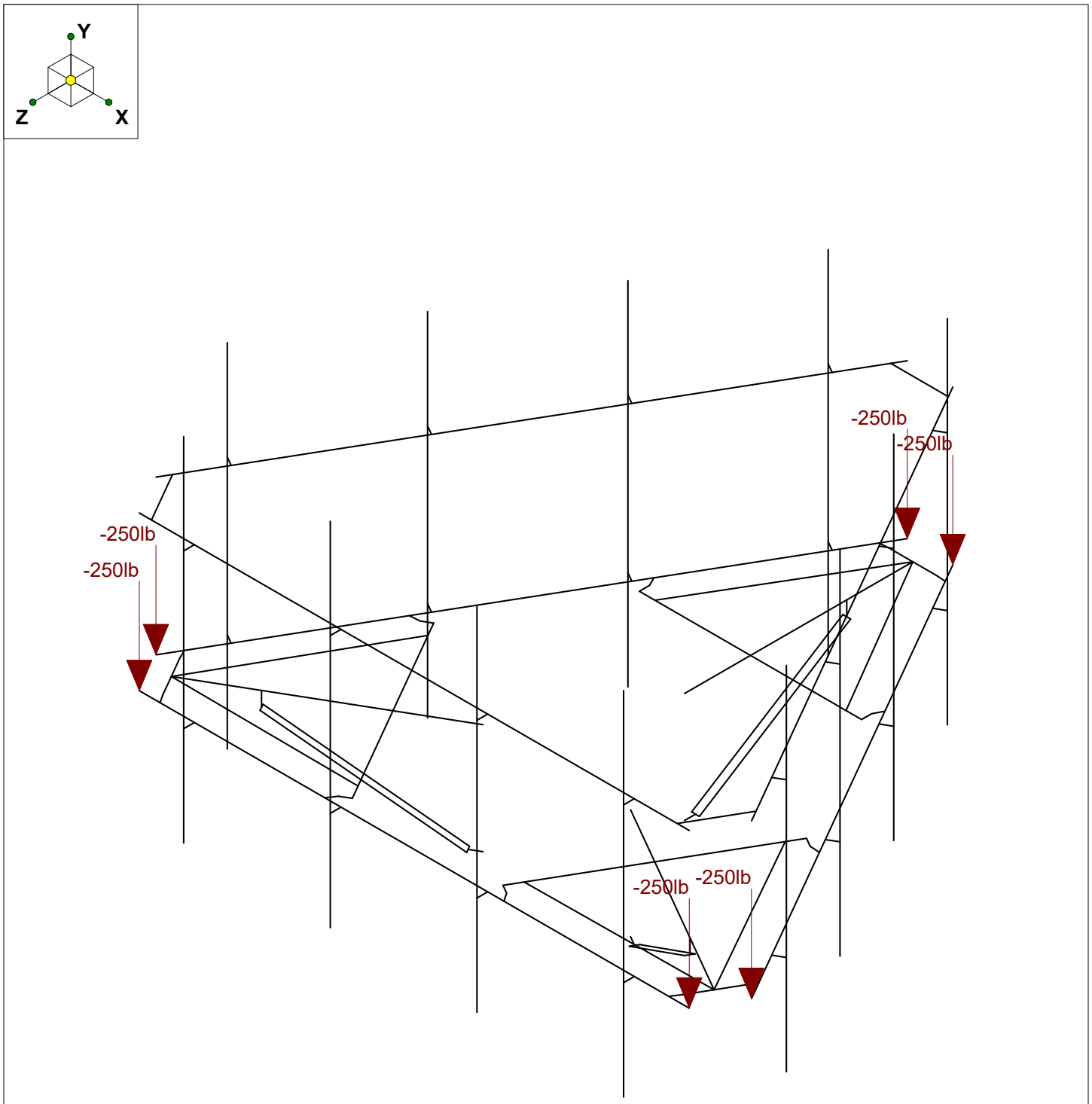

Loads: BLC 33, Service Live Loads
Envelope Only Solution

Infinigy Engineering, PLLC	CTL01064	Service Load
MD		Dec 9, 2019 at 11:35 AM
1106-A0001-B		CTL01064_loaded.r3d

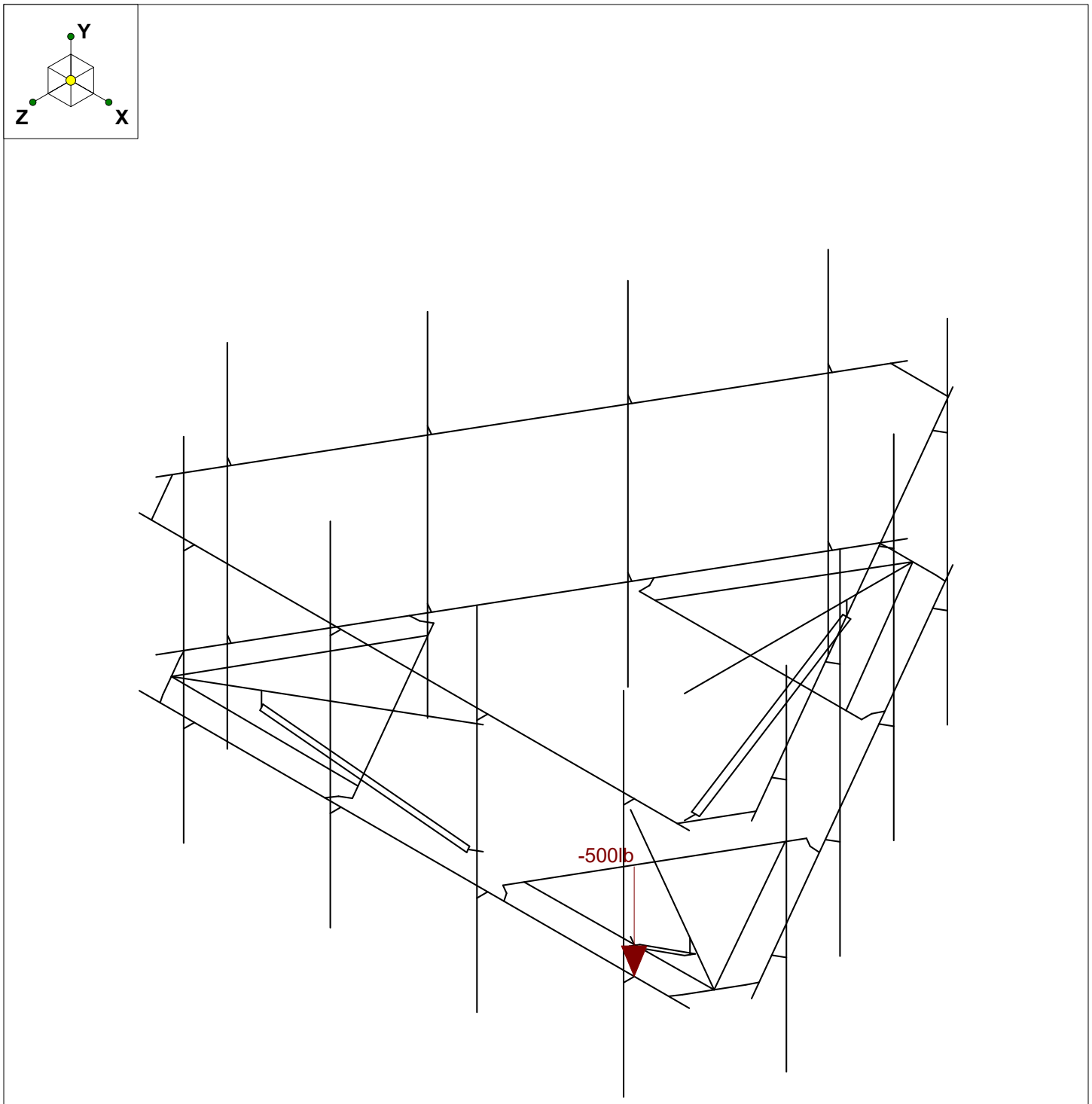

Loads: BLC 34, Maintenance Load 1
Envelope Only Solution

Infinigy Engineering, PLLC	CTL01064	Maintenance Load 1
MD		Dec 9, 2019 at 11:35 AM
1106-A0001-B		CTL01064_loaded.r3d

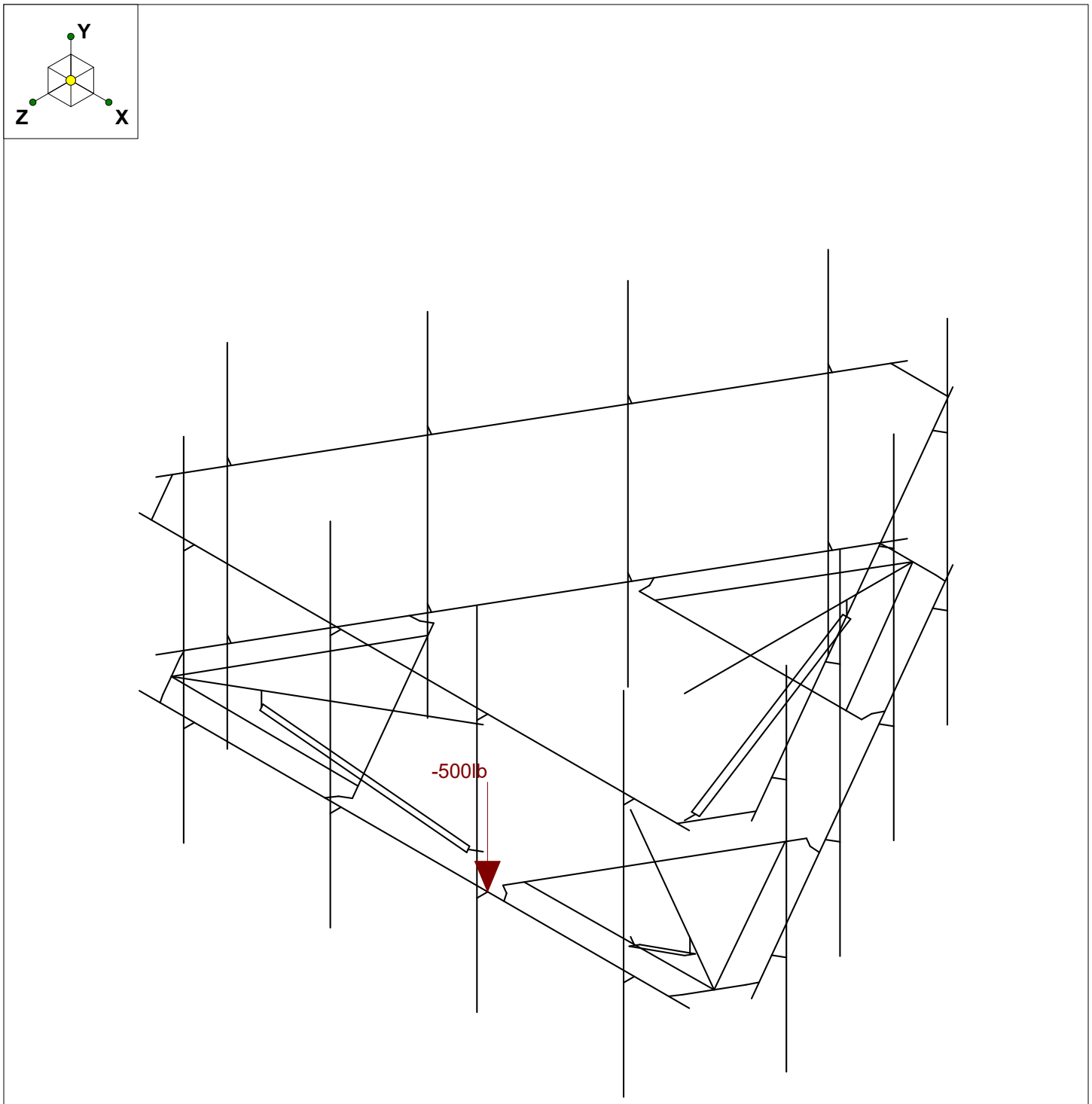

Loads: BLC 35, Maintenance Load 2
Envelope Only Solution

Infinigy Engineering, PLLC	CTL01064	Maintenance Load 2
MD		Dec 9, 2019 at 11:36 AM
1106-A0001-B		CTL01064_loaded.r3d

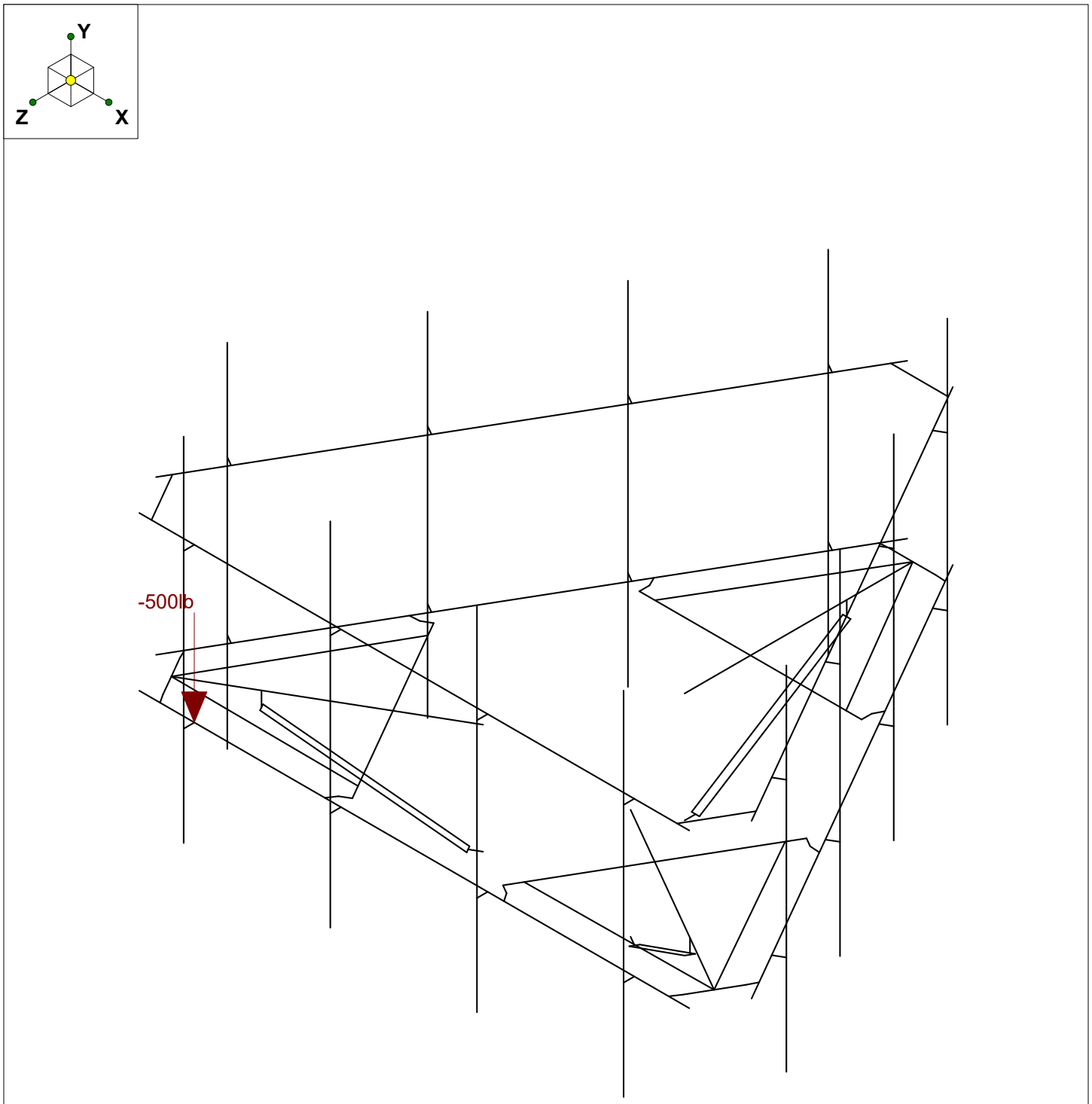

Loads: BLC 36, Maintenance Load 3
Envelope Only Solution

Infinigy Engineering, PLLC	CTL01064	Maintenance Load 3
MD		Dec 9, 2019 at 11:36 AM
1106-A0001-B		CTL01064_loaded.r3d

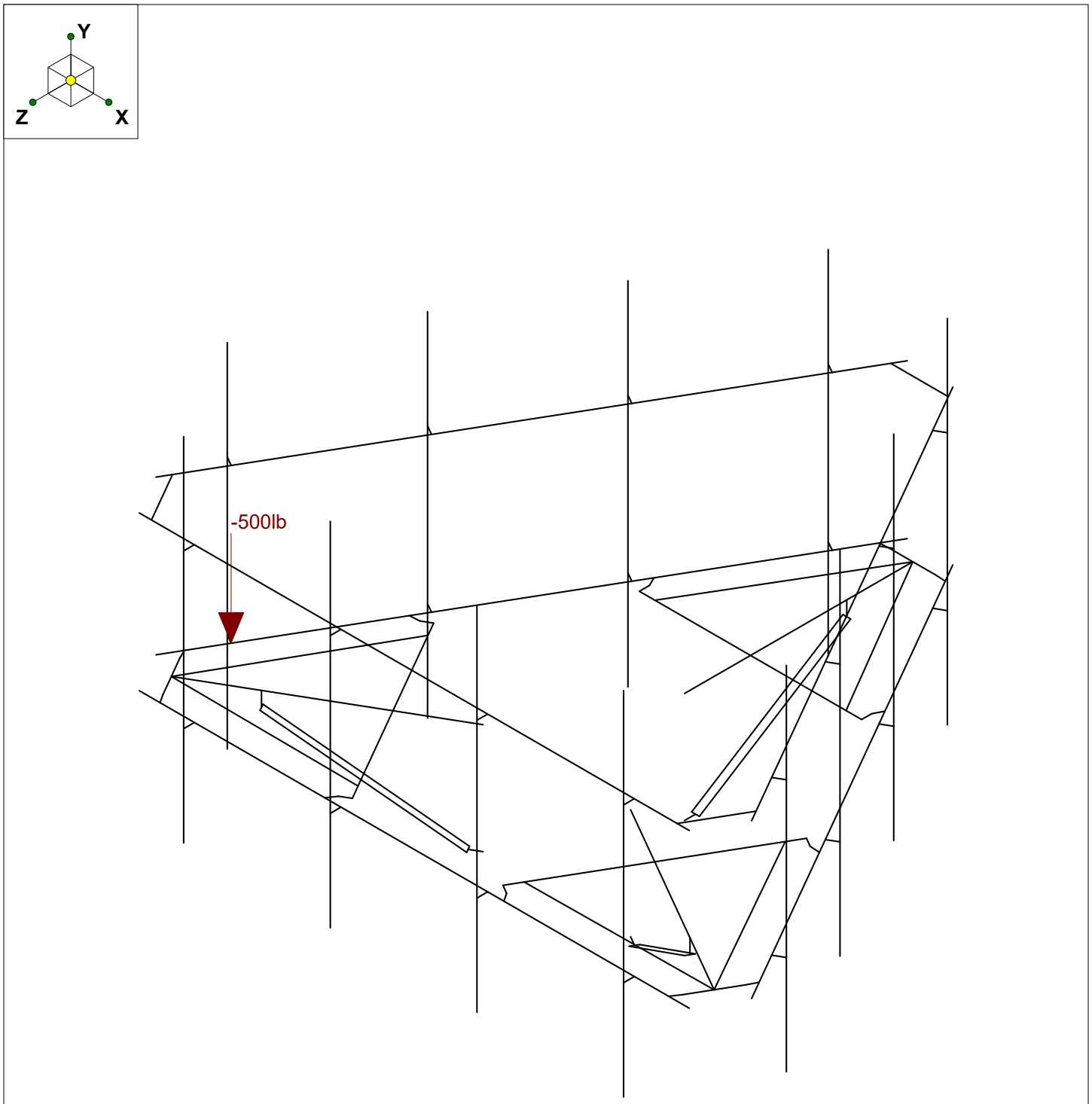

Loads: BLC 37, Maintenance Load 4
Envelope Only Solution

Infinigy Engineering, PLLC	CTL01064	Maintenance Load 4
MD		Dec 9, 2019 at 11:36 AM
1106-A0001-B		CTL01064_loaded.r3d

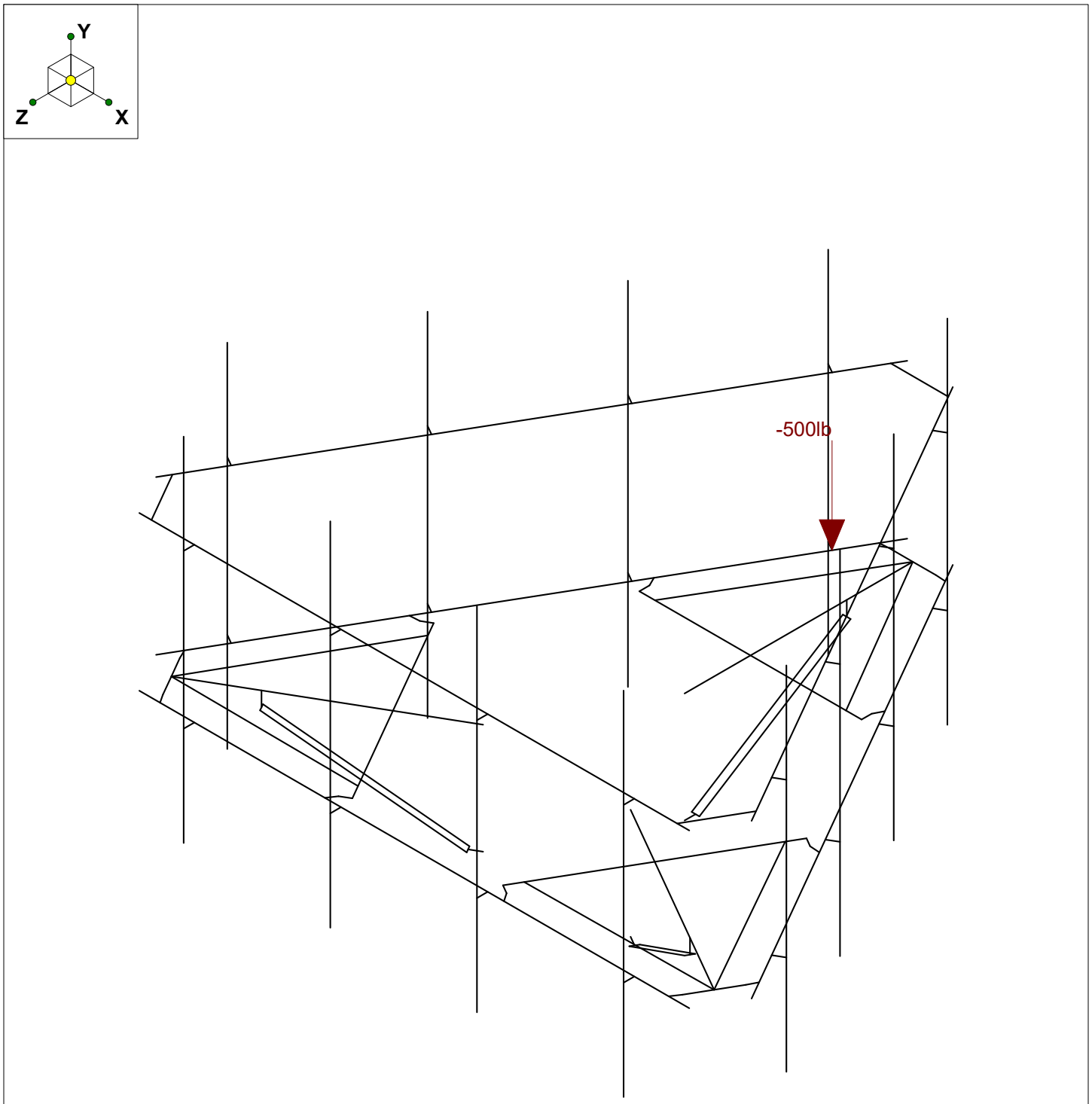

Loads: BLC 38, Maintenance Load 5
Envelope Only Solution

Infinigy Engineering, PLLC	CTL01064	Maintenance Load 5
MD		Dec 9, 2019 at 11:37 AM
1106-A0001-B		CTL01064_loaded.r3d

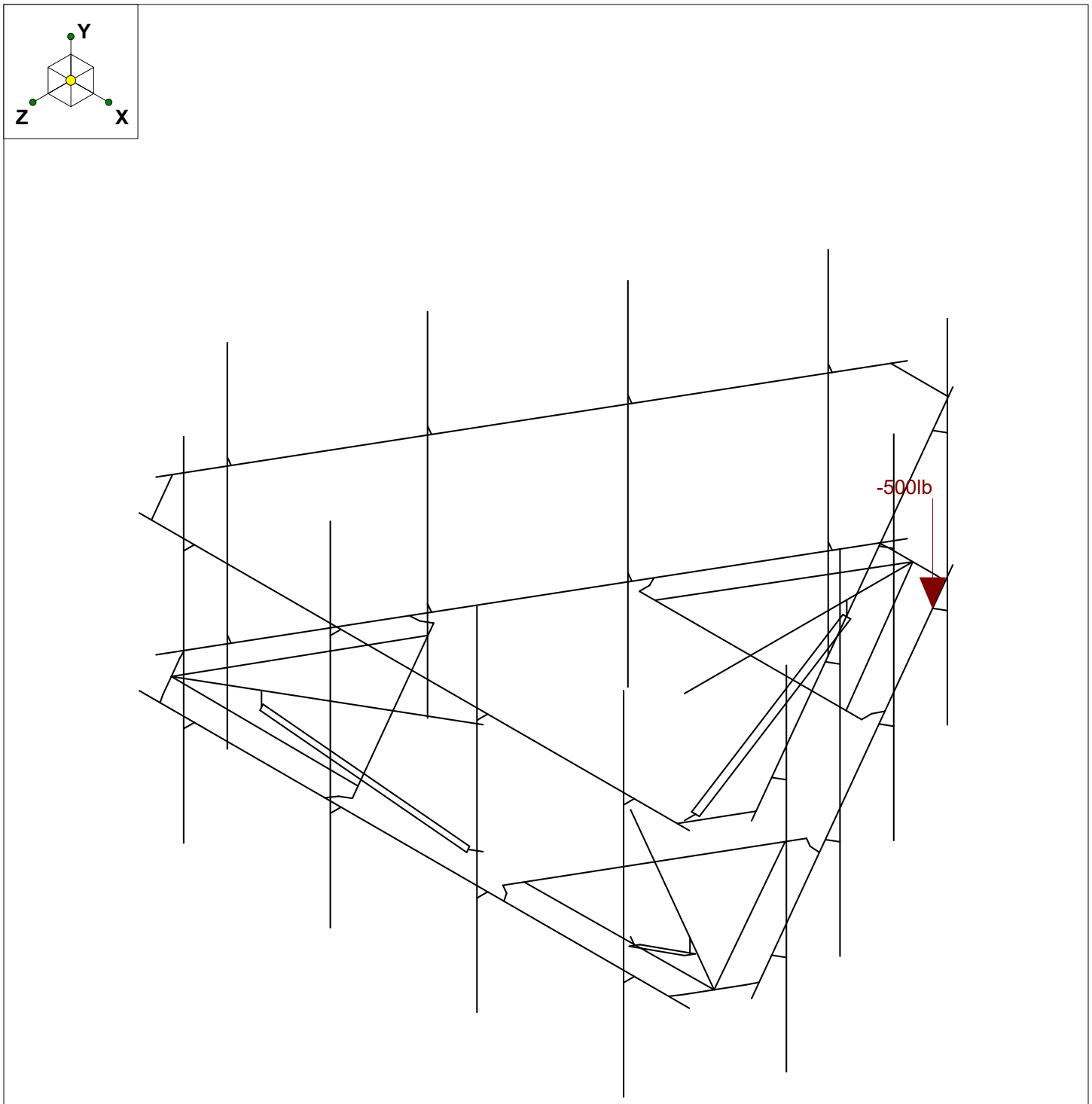

Loads: BLC 39, Maintenance Load 6
Envelope Only Solution

Infinigy Engineering, PLLC	CTL01064	Maintenance Load 6
MD		Dec 9, 2019 at 11:37 AM
1106-A0001-B		CTL01064_loaded.r3d

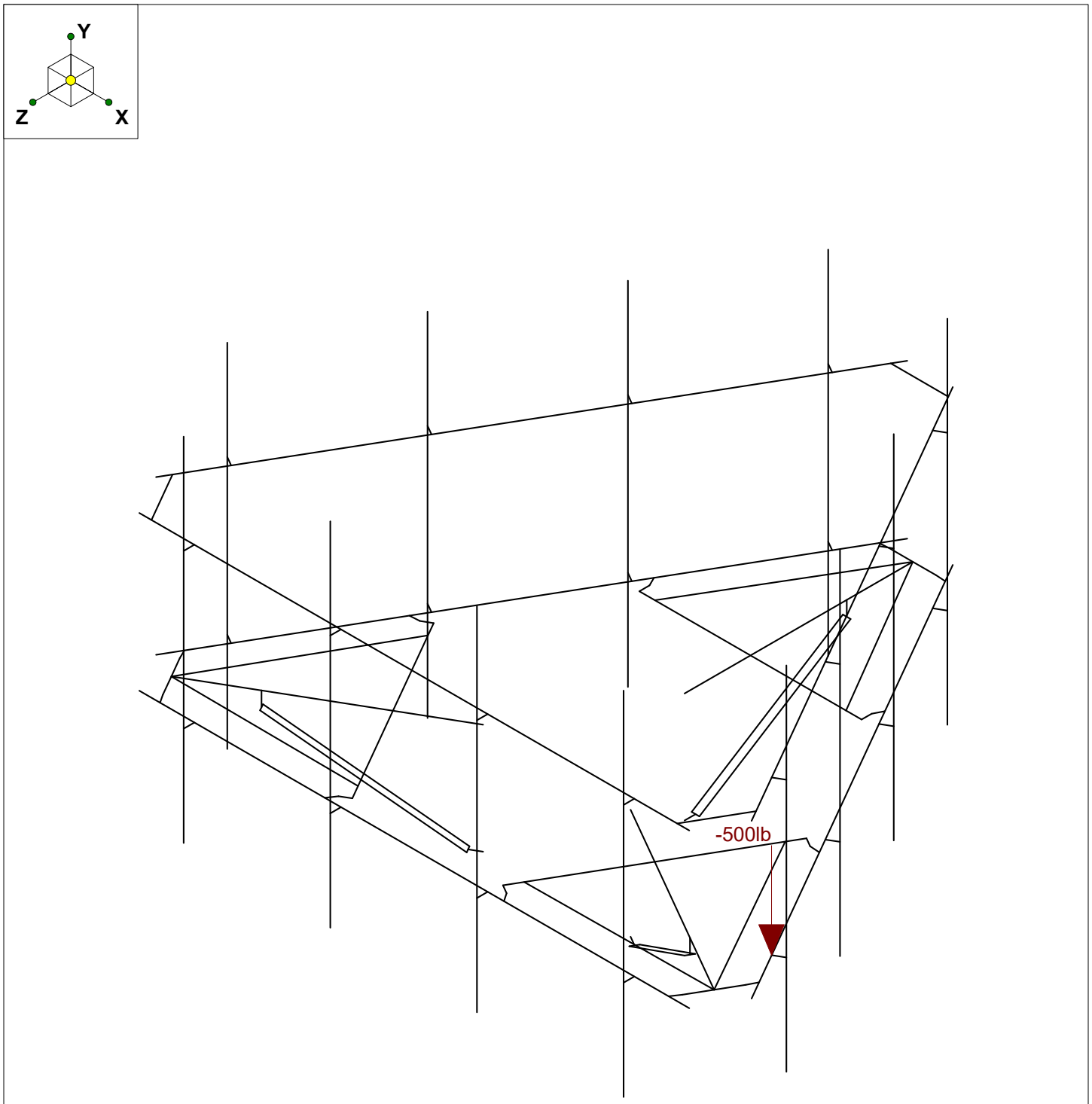

Loads: BLC 40, Maintenance Load 7
Envelope Only Solution

Infinigy Engineering, PLLC	CTL01064	Maintenance Load 7
MD		Dec 9, 2019 at 11:37 AM
1106-A0001-B		CTL01064_loaded.r3d

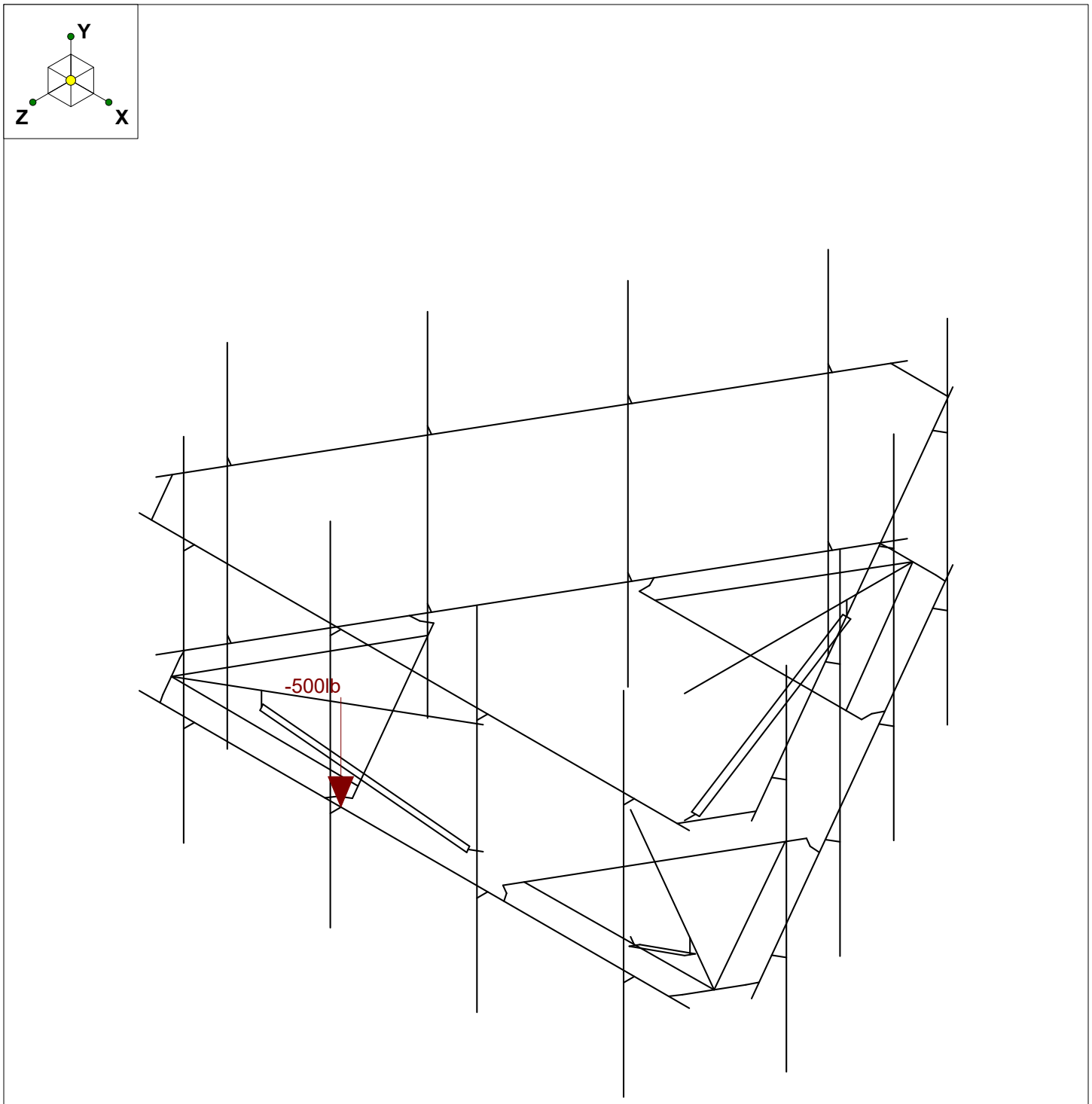

Loads: BLC 41, Maintenance Load 8
Envelope Only Solution

Infinigy Engineering, PLLC	CTL01064	Maintenance Load 8
MD		Dec 9, 2019 at 11:38 AM
1106-A0001-B		CTL01064_loaded.r3d

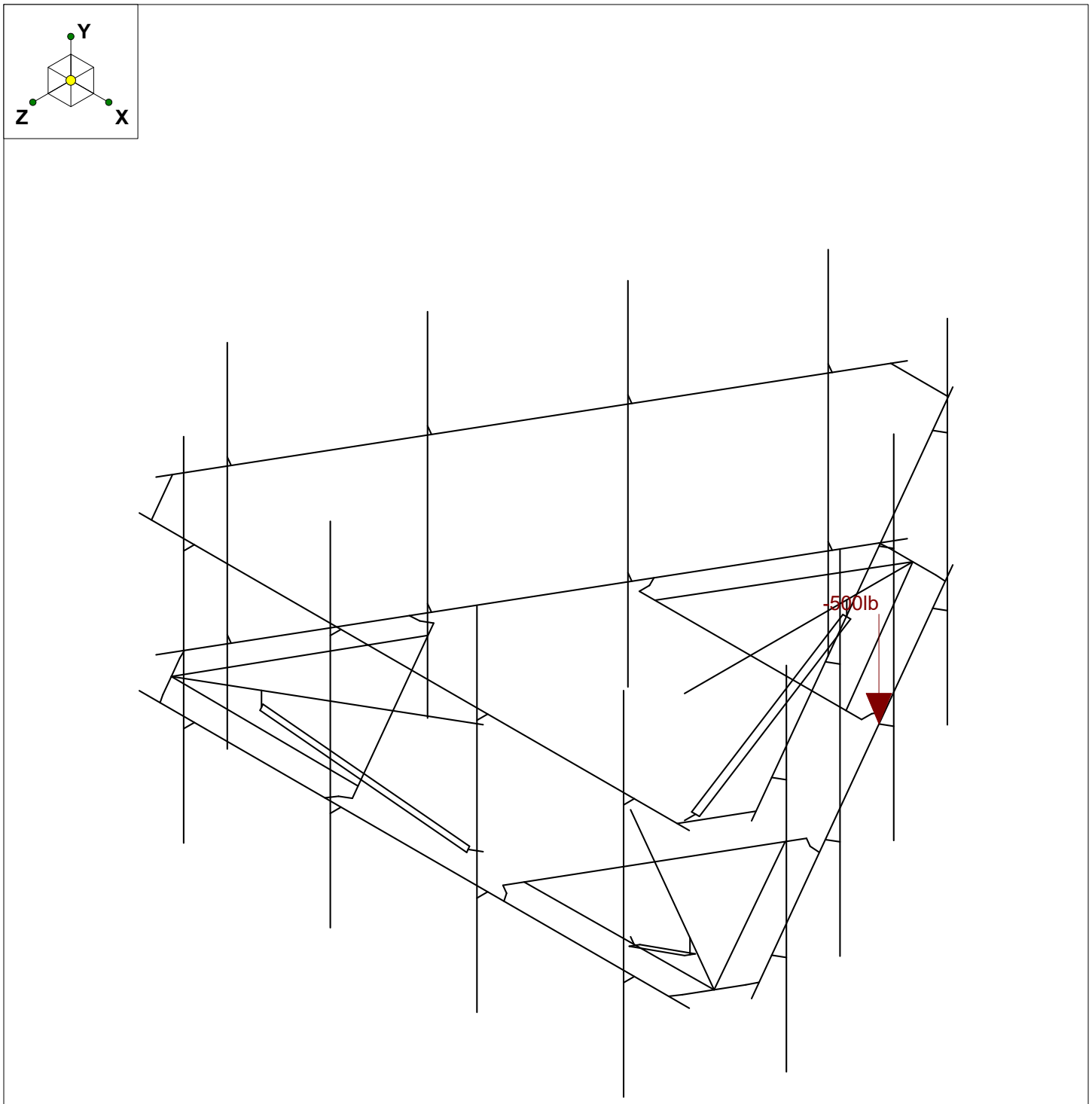

Loads: BLC 42, Maintenance Load 9
Envelope Only Solution

Infinigy Engineering, PLLC	CTL01064	Maintenance Load 9
MD		Dec 9, 2019 at 11:38 AM
1106-A0001-B		CTL01064_loaded.r3d

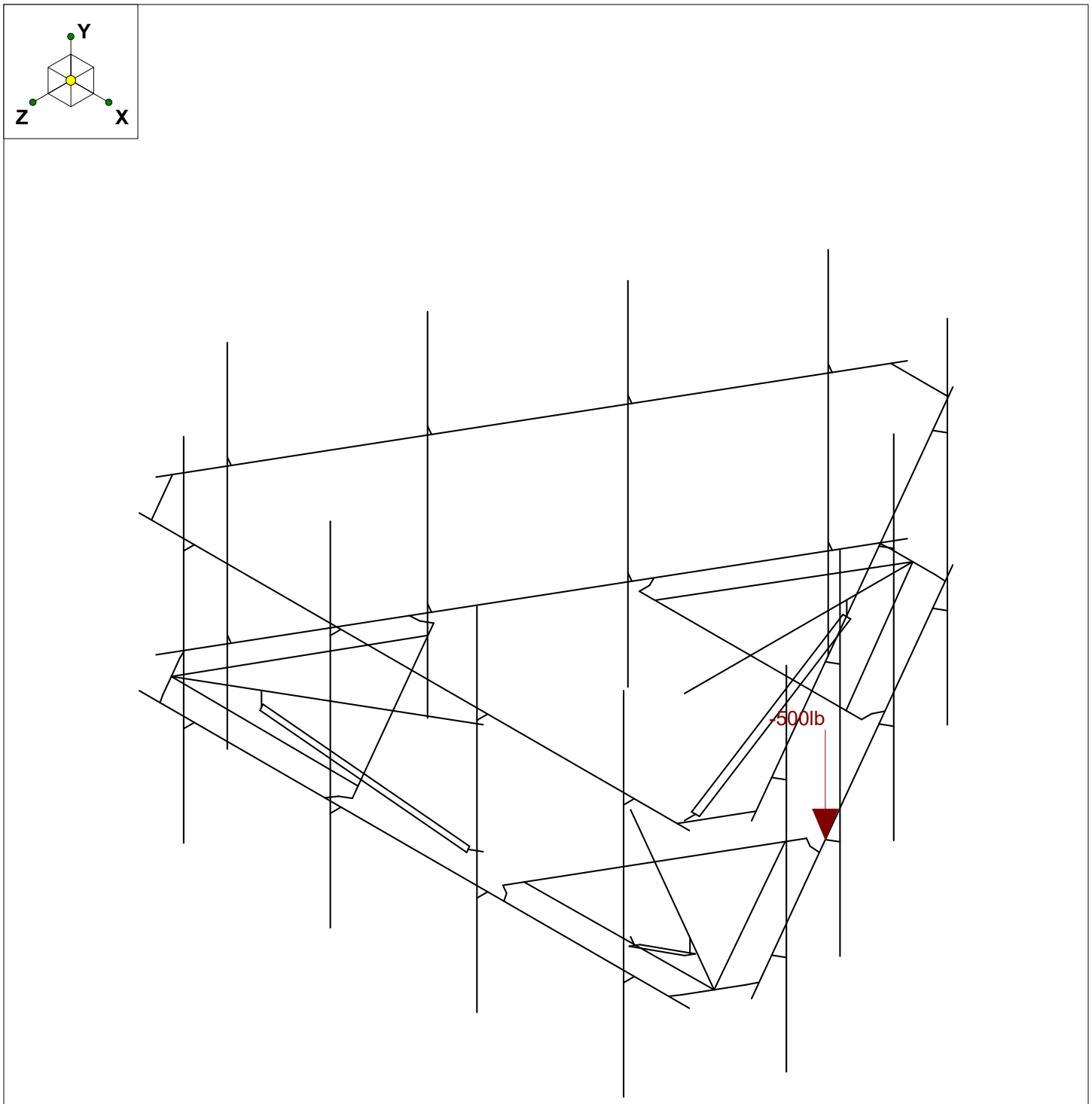

Loads: BLC 43, Maintenance Load 10
Envelope Only Solution

Infinigy Engineering, PLLC	CTL01064	Maintenance Load 10
MD		Dec 9, 2019 at 11:38 AM
1106-A0001-B		CTL01064_loaded.r3d

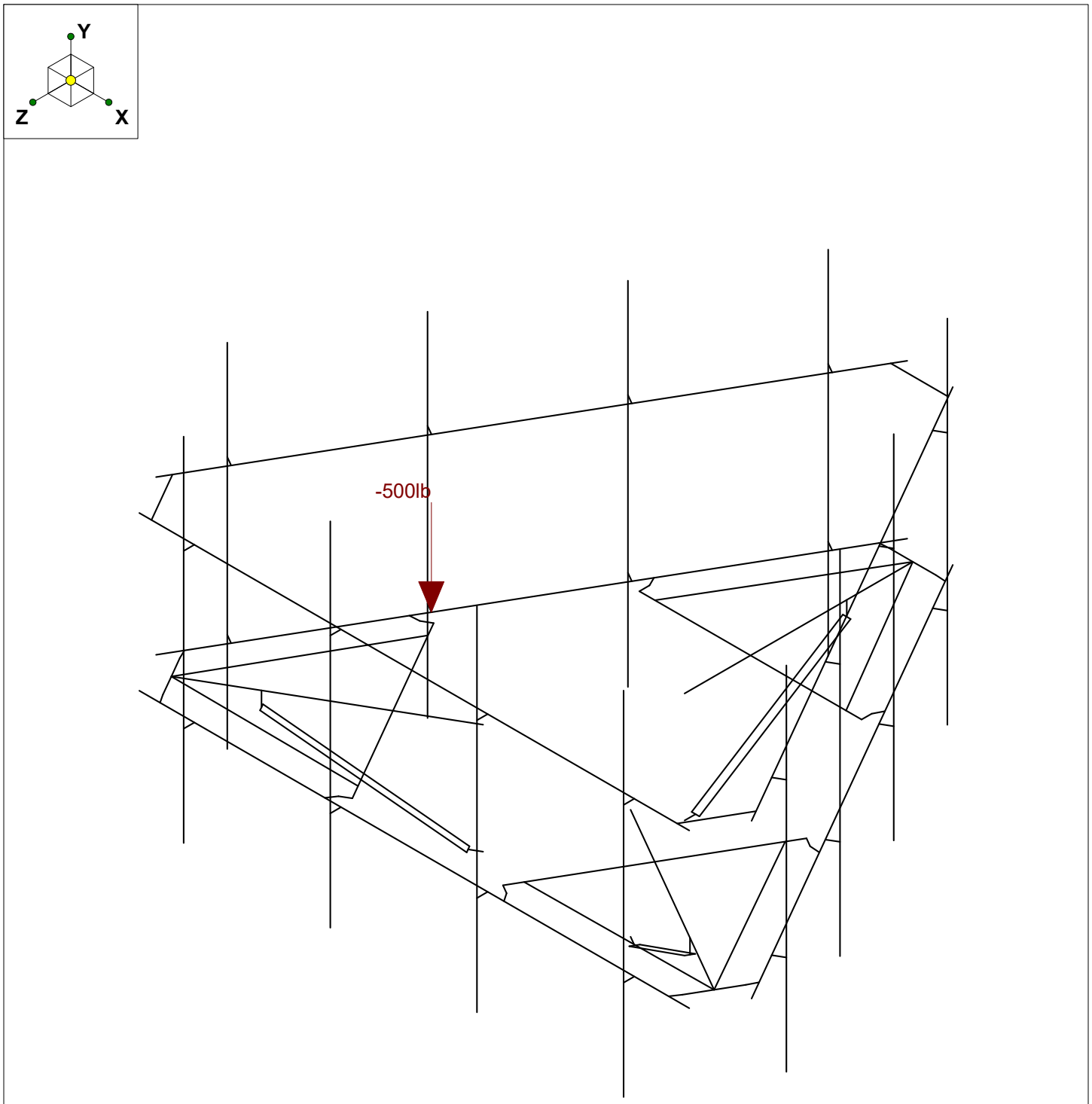

Loads: BLC 44, Maintenance Load 11
Envelope Only Solution

Infinigy Engineering, PLLC	CTL01064	Maintenance Load 11
MD		Dec 9, 2019 at 11:39 AM
1106-A0001-B		CTL01064_loaded.r3d

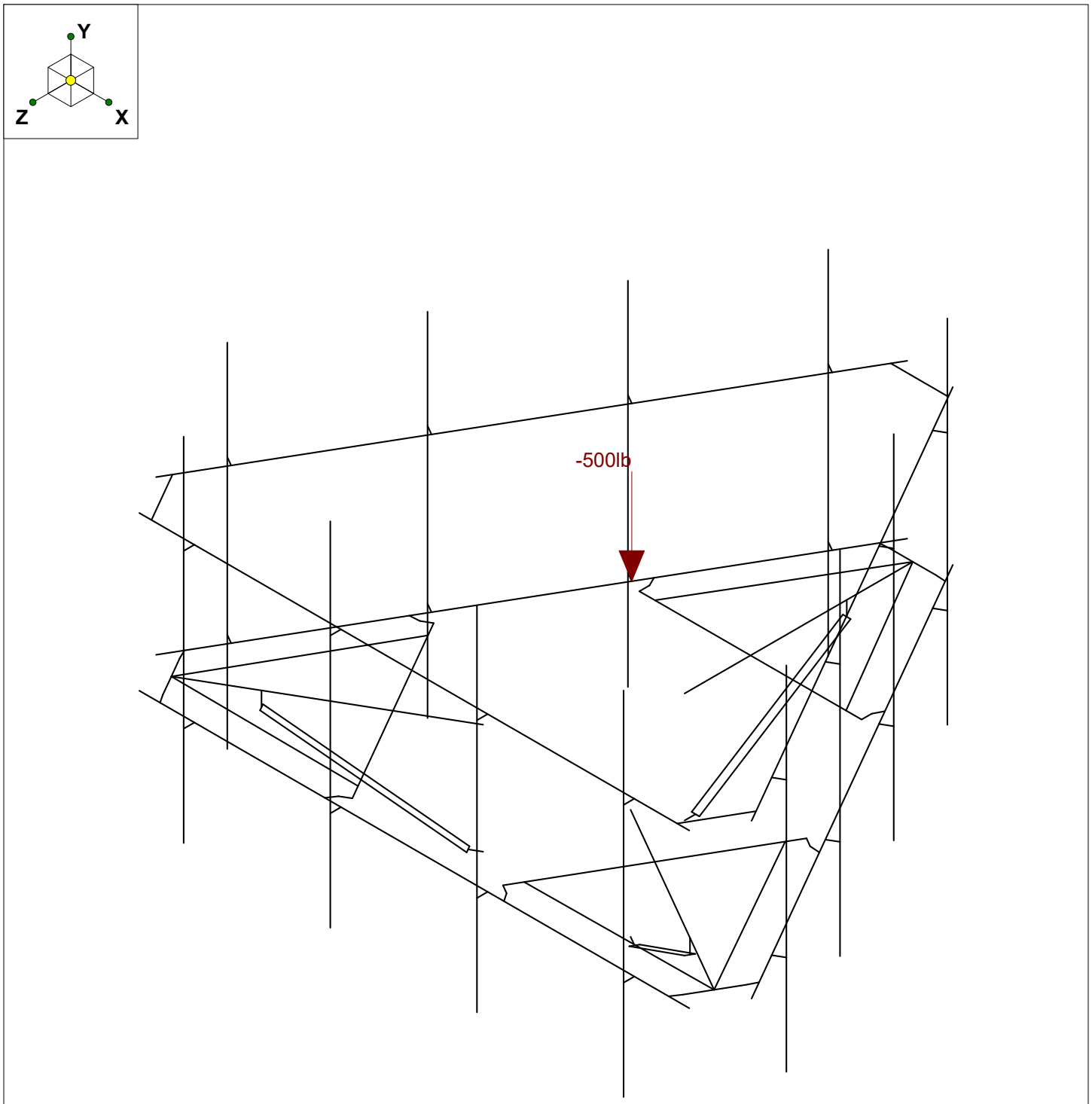

Loads: BLC 45, Maintenance Load 12
Envelope Only Solution

Infinigy Engineering, PLLC	CTL01064	Maintenance Load 12
MD		Dec 9, 2019 at 11:39 AM
1106-A0001-B		CTL01064_loaded.r3d

Program Inputs

PROJECT INFORMATION	
Client:	Smartlink
Carrier:	AT&T Mobility
Engineer:	Mike Downing

SITE INFORMATION		
Risk Category:	II	
Exposure Category:	C	
Topo Category:	1	
Site Class:	D - Stiff Soil	
Ground Elevation:	205	ft *Rev H

MOUNT INFORMATION		
Mount Type:	Platform	
Num Sectors:	3	
Centerline AGL:	147.0	ft
Tower Height AGL:	180.0	ft

TOPOGRAPHIC DATA		
Topo Feature:	N/A	
Crest Height:	N/A	ft
Slope Distance:	N/A	ft
Crest Distance:	N/A	ft

FACTORS		
Directionality Fact. (K_d):	0.95	
Ground Ele. Factor (K_e):	0.99	*Rev H Only
Rooftop Speed-Up (K_s):	1.00	*Rev H Only
Topographic Factor (K_{zt}):	1.00	
Gust Effect Factor (G_h):	1.0	

CODE STANDARDS		
Building Code:	2018 IBC	
TIA Standard:	TIA-222-H	
ASCE Standard:	ASCE 7-16	

WIND AND ICE DATA		
Ultimate Wind (V_{ult}):	121	mph
Design Wind (V):	N/A	mph
Ice Wind (V_{ice}):	50	mph
Base Ice Thickness (t_i):	1	in
Flat Pressure:	97.02	psf
Round Pressure:	58.21	psf
Ice Wind Pressure:	9.94	psf

SEISMIC DATA		
Short-Period Accel. (S_s):	0.19	g
1-Second Accel. (S_1):	0.06	g
Short-Period Design (S_{DS}):	0.20	
1-Second Design (S_{D1}):	0.09	
Short-Period Coeff. (F_a):	1.60	
1-Second Coeff. (F_v):	2.40	
Amplification Factor (a_p):	1.00	
Response Mod. (R_p):	2.50	
Overstrength (Ω_o):	1.00	

INFINIGY
FROM ZERO TO INFINIGY
the solutions are endless

Infinigy Wind Load Calculator V2.1.3

Program Inputs

ELEVATION VIEW

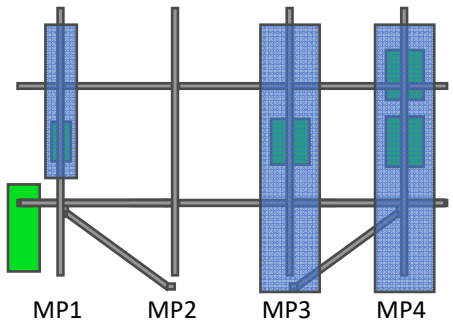

PLAN VIEW

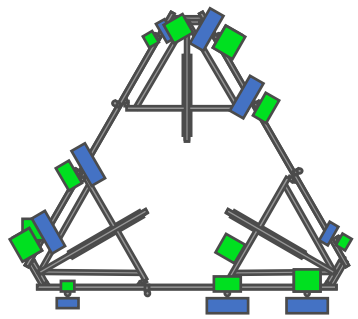

INFINIGY
FROM ZERO TO INFINIGY
the solutions are endless

Infinigy Wind Load Calculator V2.1.3

APPURTENANCE INFORMATION

Appurtenance Name	Elevation	Qty.	K_a	q_z (psf)	EPA_N (ft^2)	EPA_T (ft^2)	Wind F_z (lbs)	Wind F_x (lbs)	Weight (lbs)	Seismic F (lbs)	Member (α sector)
POWERWAVE 7770.00	147.0	3	0.90	48.51	5.51	2.93	240.50	127.85	35.00	3.57	MP1
CCI DMP65R-BU8DA	147.0	3	0.90	48.51	17.87	8.12	780.25	354.61	95.70	9.75	MP3
CCI DMP65R-BU8DA	147.0	3	0.90	48.51	17.87	8.12	780.25	354.61	95.70	9.75	MP4
ERICSSON B14 4478	147.0	3	0.90	48.51	1.84	1.06	80.44	46.22	59.90	6.10	MP3
ERICSSON 4449 B5/B12	147.0	3	0.90	48.51	1.98	1.41	86.45	61.56	70.00	7.13	MP4
ERICSSON 8843 B2/B66A	147.0	3	0.90	48.51	1.98	1.70	86.45	74.00	75.00	7.64	MP4
POWERWAVE TT08-19DB111-001	147.0	6	0.90	48.51	0.79	0.64	34.61	28.03	16.00	1.63	MP1
RAYCAP DC6-48-60-18-8F	147.0	3	0.90	48.51	2.90	2.90	126.65	126.65	32.80	3.34	M1

Member Primary Data

	Label	I Joint	J Joint	K Joint	Rotate(deg)	Section/Shape	Type	Design List	Material	Design Rules
1	M1	N137	N1			Standoffs	Beam	None	Q235-GB	Typical
2	M3	N138	N3			Standoffs	Beam	None	Q235-GB	Typical
3	M5	N69	N4			Standoffs	Beam	None	Q235-GB	Typical
4	M85B	N127	N128			Standoffs	Beam	None	Q235-GB	Typical
5	M86C	N128	N110			Standoffs	Beam	None	Q235-GB	Typical
6	M87C	N115	N129			Standoffs	Beam	None	Q235-GB	Typical
7	M88C	N129	N118			Standoffs	Beam	None	Q235-GB	Typical
8	M89C	N121	N130			Standoffs	Beam	None	Q235-GB	Typical
9	M90C	N130	N124			Standoffs	Beam	None	Q235-GB	Typical
10	M22	N12	N25			RIGID	None	None	RIGID	Typical
11	M23	N7	N24			RIGID	None	None	RIGID	Typical
12	M24	N13	N26			RIGID	None	None	RIGID	Typical
13	M28	N22	N31			RIGID	None	None	RIGID	Typical
14	M30	N23	N32			RIGID	None	None	RIGID	Typical
15	M34	N20	N37			RIGID	None	None	RIGID	Typical
16	M36	N21	N38			RIGID	None	None	RIGID	Typical
17	M72	N48	N55			RIGID	None	None	RIGID	Typical
18	M73	N45	N54			RIGID	None	None	RIGID	Typical
19	M74	N49	N56			RIGID	None	None	RIGID	Typical
20	M75	N52	N57			RIGID	None	None	RIGID	Typical
21	M77	N53	N58			RIGID	None	None	RIGID	Typical
22	M78	N50	N59			RIGID	None	None	RIGID	Typical
23	M80	N51	N60			RIGID	None	None	RIGID	Typical
24	M86	N70	N73			RIGID	None	None	RIGID	Typical
25	M87	N74	N75			RIGID	None	None	RIGID	Typical
26	M89	N76	N79			RIGID	None	None	RIGID	Typical
27	M90	N80	N81			RIGID	None	None	RIGID	Typical
28	M92	N82	N85			RIGID	None	None	RIGID	Typical
29	M93	N86	N87			RIGID	None	None	RIGID	Typical
30	M95	N88	N91			RIGID	None	None	RIGID	Typical
31	M96	N92	N93			RIGID	None	None	RIGID	Typical
32	M98	N94	N97			RIGID	None	None	RIGID	Typical
33	M99	N98	N99			RIGID	None	None	RIGID	Typical
34	M91A	N1	N132		270	Platform Angle	Beam	None	Q345	Typical
35	M92B	N1	N131			Platform Angle	Beam	None	Q345	Typical
36	M93B	N3	N134		270	Platform Angle	Beam	None	Q345	Typical
37	M94A	N3	N133			Platform Angle	Beam	None	Q345	Typical
38	M95B	N4	N136		270	Platform Angle	Beam	None	Q345	Typical
39	M96C	N4	N135			Platform Angle	Beam	None	Q345	Typical
40	MP4	N16	N19			Mount Pipe	Column	None	Q235-GB	Typical
41	MP3	N14	N17			Mount Pipe	Column	None	Q235-GB	Typical
42	MP1	N15	N18			Mount Pipe	Column	None	Q235-GB	Typical
43	MP12	N28	N30			Mount Pipe	Column	None	Q235-GB	Typical
44	MP9	N27	N29			Mount Pipe	Column	None	Q235-GB	Typical
45	MP8	N34	N36			Mount Pipe	Column	None	Q235-GB	Typical
46	MP5	N33	N35			Mount Pipe	Column	None	Q235-GB	Typical
47	MP2	N71	N72			Mount Pipe	Column	None	Q235-GB	Typical
48	MP7	N77	N78			Mount Pipe	Column	None	Q235-GB	Typical
49	MP6	N83	N84			Mount Pipe	Column	None	Q235-GB	Typical
50	MP11	N89	N90			Mount Pipe	Column	None	Q235-GB	Typical
51	MP10	N95	N96			Mount Pipe	Column	None	Q235-GB	Typical

Member Primary Data (Continued)

	Label	I Joint	J Joint	K Joint	Rotate(deg)	Section/Shape	Type	Design List	Material	Design Rules
52	M7	N6	N5			Horizontals	Beam	None	Q235-GB	Typical
53	M8	N9	N8			Horizontals	Beam	None	Q235-GB	Typical
54	M9	N11	N10			Horizontals	Beam	None	Q235-GB	Typical
55	M70	N44	N43			Handrail Horiz...	Beam	None	Q235-GB	Typical
56	M71	N47	N46			Handrail Horiz...	Beam	None	Q235-GB	Typical
57	M81	N62	N61			Handrail Horiz...	Beam	None	Q235-GB	Typical
58	M41	N41	N42			Corner Plate	Beam	None	Q345	Typical
59	M85	N100	N101			Corner Plate	Beam	None	Q345	Typical
60	M87A	N41	N1			Corner Plate	Beam	None	Q345	Typical
61	M88	N1	N100			Corner Plate	Beam	None	Q345	Typical
62	M85A	N102	N103			Corner Plate	Beam	None	Q345	Typical
63	M87B	N104	N105			Corner Plate	Beam	None	Q345	Typical
64	M89A	N102	N3			Corner Plate	Beam	None	Q345	Typical
65	M90A	N3	N104			Corner Plate	Beam	None	Q345	Typical
66	M91	N106	N107			Corner Plate	Beam	None	Q345	Typical
67	M93A	N108	N109			Corner Plate	Beam	None	Q345	Typical
68	M95A	N106	N4			Corner Plate	Beam	None	Q345	Typical
69	M96A	N4	N108			Corner Plate	Beam	None	Q345	Typical
70	M44	N39	N40			Connection Pla...	Beam	None	Q345	Typical
71	M96B	N39	N110			Connection Pla...	Beam	None	Q345	Typical
72	M88B	N112	N114			Connection Pla...	Beam	None	Q345	Typical
73	M90B	N112	N115			Connection Pla...	Beam	None	Q345	Typical
74	M73A	N116	N117			Connection Pla...	Beam	None	Q345	Typical
75	M75A	N116	N118			Connection Pla...	Beam	None	Q345	Typical
76	M76	N119	N120			Connection Pla...	Beam	None	Q345	Typical
77	M78A	N119	N121			Connection Pla...	Beam	None	Q345	Typical
78	M79	N122	N123			Connection Pla...	Beam	None	Q345	Typical
79	M81A	N122	N124			Connection Pla...	Beam	None	Q345	Typical
80	M82A	N125	N126			Connection Pla...	Beam	None	Q345	Typical
81	M84A	N125	N127			Connection Pla...	Beam	None	Q345	Typical
82	M82	N63	N67		180	Angle Handrail...	Beam	None	Q345	Typical
83	M83	N65	N66		180	Angle Handrail...	Beam	None	Q345	Typical
84	M84	N68	N64		90	Angle Handrail...	Beam	None	Q345	Typical
85	M85C	N139	N140			RIGID	None	None	RIGID	Typical
86	M86A	N141	N142			RIGID	None	None	RIGID	Typical
87	M87D	N144	N146			RIGID	None	None	RIGID	Typical
88	M88A	N143	N145			RIGID	None	None	RIGID	Typical
89	M89B	N144	N143		180	Kickers	Beam	None	Q345	Typical
90	M90D	N146	N145		90	Kickers	Beam	None	Q345	Typical
91	M91B	N147	N148			RIGID	None	None	RIGID	Typical
92	M92A	N149	N150			RIGID	None	None	RIGID	Typical
93	M93C	N152	N154			RIGID	None	None	RIGID	Typical
94	M94	N151	N153			RIGID	None	None	RIGID	Typical
95	M95C	N152	N151		180	Kickers	Beam	None	Q345	Typical
96	M96D	N154	N153		90	Kickers	Beam	None	Q345	Typical
97	M97	N155	N156			RIGID	None	None	RIGID	Typical
98	M98A	N157	N158			RIGID	None	None	RIGID	Typical
99	M99A	N160	N162			RIGID	None	None	RIGID	Typical
100	M100	N159	N161			RIGID	None	None	RIGID	Typical
101	M101	N160	N159		180	Kickers	Beam	None	Q345	Typical
102	M102	N162	N161		90	Kickers	Beam	None	Q345	Typical

Material Takeoff

	Material	Size	Pieces	Length[in]	Weight[K]
1	General				
2	RIGID		36	104.3	0
3	Total General		36	104.3	0
4					
5	Hot Rolled Steel				
6	Q235-GB	HSS4X4X4	9	356.6	.341
7	Q235-GB	PIPE 2.0	15	1602	.463
8	Q235-GB	PIPE 3.0	3	450	.264
9	Q345	6"x1/2" Plate	12	42.3	.036
10	Q345	L2.5x2.5x4	3	47.2	.016
11	Q345	L2.5x2.5x8	6	292.6	.188
12	Q345	L2x2x3	6	308.1	.063
13	Q345	PL6x.375	12	32.7	.021
14	Total HR Steel		66	3131.4	1.392

Basic Load Cases

	BLC Description	Category	X Gravity	Y Gravity	Z Gravity	Joint	Point	Distributed	Area(Me...	Surface(...
1	Self Weight	DL		-1			33		4	
2	Wind Load AZI 0	WLZ					66			
3	Wind Load AZI 30	None					66			
4	Wind Load AZI 60	None					66			
5	Wind Load AZI 90	WLX					66			
6	Wind Load AZI 120	None					66			
7	Wind Load AZI 150	None					66			
8	Wind Load AZI 180	None					66			
9	Wind Load AZI 210	None					66			
10	Wind Load AZI 240	None					66			
11	Wind Load AZI 270	None					66			
12	Wind Load AZI 300	None					66			
13	Wind Load AZI 330	None					66			
14	Distr. Wind Load Z	WLZ						102		
15	Distr. Wind Load X	WLX						102		
16	Ice Weight	OL1					33	102	4	
17	Ice Wind Load AZI 0	OL2					66			
18	Ice Wind Load AZI 30	None					66			
19	Ice Wind Load AZI 60	None					66			
20	Ice Wind Load AZI 90	OL3					66			
21	Ice Wind Load AZI 120	None					66			
22	Ice Wind Load AZI 150	None					66			
23	Ice Wind Load AZI 180	None					66			
24	Ice Wind Load AZI 210	None					66			
25	Ice Wind Load AZI 240	None					66			
26	Ice Wind Load AZI 270	None					66			
27	Ice Wind Load AZI 300	None					66			
28	Ice Wind Load AZI 330	None					66			
29	Distr. Ice Wind Load Z	OL2						102		
30	Distr. Ice Wind Load X	OL3						102		
31	Seismic Load Z	ELZ			-.102		33			
32	Seismic Load X	ELX	-.102				33			

Basic Load Cases (Continued)

	BLC Description	Category	X Gravity	Y Gravity	Z Gravity	Joint	Point	Distributed	Area(Me...	Surface(...
33	Service Live Loads	LL				6				
34	Maintenance Load 1	LL				1				
35	Maintenance Load 2	LL				1				
36	Maintenance Load 3	LL				1				
37	Maintenance Load 4	LL				1				
38	Maintenance Load 5	LL				1				
39	Maintenance Load 6	LL				1				
40	Maintenance Load 7	LL				1				
41	Maintenance Load 8	LL				1				
42	Maintenance Load 9	LL				1				
43	Maintenance Load 10	LL				1				
44	Maintenance Load 11	LL				1				
45	Maintenance Load 12	LL				1				
46	BLC 1 Transient Area Lo...	None						21		
47	BLC 16 Transient Area L...	None						21		

Load Combinations

	Description	Sol..	PD..	SR..	BLC	Fact..	BLC	Fact..	BLC	Fact..	BLC	Fact..	BLC	Fact..	BLC	Fact..	BLC	Fact..	BLC	Fact..	BLC	Fact..	BLC	Fact..
1	1.4DL	Yes	Y		1	1.4																		
2	1.2DL + 1WL ...	Yes	Y		1	1.2	2	1	14	1	15													
3	1.2DL + 1WL ...	Yes	Y		1	1.2	3	1	14	.866	15	.5												
4	1.2DL + 1WL ...	Yes	Y		1	1.2	4	1	14	.5	15	.866												
5	1.2DL + 1WL ...	Yes	Y		1	1.2	5	1	14		15	1												
6	1.2DL + 1WL ...	Yes	Y		1	1.2	6	1	14	-.5	15	.866												
7	1.2DL + 1WL ...	Yes	Y		1	1.2	7	1	14	-.866	15	.5												
8	1.2DL + 1WL ...	Yes	Y		1	1.2	8	1	14	-1	15													
9	1.2DL + 1WL ...	Yes	Y		1	1.2	9	1	14	-.866	15	-.5												
10	1.2DL + 1WL ...	Yes	Y		1	1.2	10	1	14	-.5	15	-.866												
11	1.2DL + 1WL ...	Yes	Y		1	1.2	11	1	14		15	-1												
12	1.2DL + 1WL ...	Yes	Y		1	1.2	12	1	14	.5	15	-.866												
13	1.2DL + 1WL ...	Yes	Y		1	1.2	13	1	14	.866	15	-.5												
14	0.9DL + 1WL ...	Yes	Y		1	.9	2	1	14	1	15													
15	0.9DL + 1WL ...	Yes	Y		1	.9	3	1	14	.866	15	.5												
16	0.9DL + 1WL ...	Yes	Y		1	.9	4	1	14	.5	15	.866												
17	0.9DL + 1WL ...	Yes	Y		1	.9	5	1	14		15	1												
18	0.9DL + 1WL ...	Yes	Y		1	.9	6	1	14	-.5	15	.866												
19	0.9DL + 1WL ...	Yes	Y		1	.9	7	1	14	-.866	15	.5												
20	0.9DL + 1WL ...	Yes	Y		1	.9	8	1	14	-1	15													
21	0.9DL + 1WL ...	Yes	Y		1	.9	9	1	14	-.866	15	-.5												
22	0.9DL + 1WL ...	Yes	Y		1	.9	10	1	14	-.5	15	-.866												
23	0.9DL + 1WL ...	Yes	Y		1	.9	11	1	14		15	-1												
24	0.9DL + 1WL ...	Yes	Y		1	.9	12	1	14	.5	15	-.866												
25	0.9DL + 1WL ...	Yes	Y		1	.9	13	1	14	.866	15	-.5												
26	1.2D + 1.0Di	Yes	Y		1	1.2	16	1																
27	1.2D + 1.0Di +..	Yes	Y		1	1.2	16	1	17	1	29	1	30											
28	1.2D + 1.0Di +..	Yes	Y		1	1.2	16	1	18	1	29	.866	30	.5										
29	1.2D + 1.0Di +..	Yes	Y		1	1.2	16	1	19	1	29	.5	30	.866										
30	1.2D + 1.0Di +..	Yes	Y		1	1.2	16	1	20	1	29		30	1										
31	1.2D + 1.0Di +..	Yes	Y		1	1.2	16	1	21	1	29	-.5	30	.866										
32	1.2D + 1.0Di +..	Yes	Y		1	1.2	16	1	22	1	29	-.866	30	.5										

Load Combinations (Continued)

	Description	Sol..	PD..	SR..	BLC	Fact..	BLC	Fact..	BLC	Fact..	BLC	Fact..	BLC	Fact..	BLC	Fact..	BLC	Fact..	BLC	Fact..	BLC	Fact..	BLC	Fact...
33	1.2D + 1.0Di +...	Yes	Y		1	1.2	16	1	23	1	29	-1	30											
34	1.2D + 1.0Di +...	Yes	Y		1	1.2	16	1	24	1	29	-.866	30	-.5										
35	1.2D + 1.0Di +...	Yes	Y		1	1.2	16	1	25	1	29	-.5	30	-.866										
36	1.2D + 1.0Di +...	Yes	Y		1	1.2	16	1	26	1	29		30	-1										
37	1.2D + 1.0Di +...	Yes	Y		1	1.2	16	1	27	1	29	.5	30	-.866										
38	1.2D + 1.0Di +...	Yes	Y		1	1.2	16	1	28	1	29	.866	30	-.5										
39	(1.2 + 0.2Sds)...	Yes	Y		1	1.241	31	1	32															
40	(1.2 + 0.2Sds)...	Yes	Y		1	1.241	31	.866	32	.5														
41	(1.2 + 0.2Sds)...	Yes	Y		1	1.241	31	.5	32	.866														
42	(1.2 + 0.2Sds)...	Yes	Y		1	1.241	31		32	1														
43	(1.2 + 0.2Sds)...	Yes	Y		1	1.241	31	-.5	32	.866														
44	(1.2 + 0.2Sds)...	Yes	Y		1	1.241	31	-.866	32	.5														
45	(1.2 + 0.2Sds)...	Yes	Y		1	1.241	31	-1	32															
46	(1.2 + 0.2Sds)...	Yes	Y		1	1.241	31	-.866	32	-.5														
47	(1.2 + 0.2Sds)...	Yes	Y		1	1.241	31	-.5	32	-.866														
48	(1.2 + 0.2Sds)...	Yes	Y		1	1.241	31		32	-1														
49	(1.2 + 0.2Sds)...	Yes	Y		1	1.241	31	.5	32	-.866														
50	(1.2 + 0.2Sds)...	Yes	Y		1	1.241	31	.866	32	-.5														
51	(0.9 - 0.2Sds)...	Yes	Y		1	.859	31	1	32															
52	(0.9 - 0.2Sds)...	Yes	Y		1	.859	31	.866	32	.5														
53	(0.9 - 0.2Sds)...	Yes	Y		1	.859	31	.5	32	.866														
54	(0.9 - 0.2Sds)...	Yes	Y		1	.859	31		32	1														
55	(0.9 - 0.2Sds)...	Yes	Y		1	.859	31	-.5	32	.866														
56	(0.9 - 0.2Sds)...	Yes	Y		1	.859	31	-.866	32	.5														
57	(0.9 - 0.2Sds)...	Yes	Y		1	.859	31	-1	32															
58	(0.9 - 0.2Sds)...	Yes	Y		1	.859	31	-.866	32	-.5														
59	(0.9 - 0.2Sds)...	Yes	Y		1	.859	31	-.5	32	-.866														
60	(0.9 - 0.2Sds)...	Yes	Y		1	.859	31		32	-1														
61	(0.9 - 0.2Sds)...	Yes	Y		1	.859	31	.5	32	-.866														
62	(0.9 - 0.2Sds)...	Yes	Y		1	.859	31	.866	32	-.5														
63	1.0DL + 1.5LL...	Yes	Y		1	1	2	.246	14	.246	15		33	1.5										
64	1.0DL + 1.5LL...	Yes	Y		1	1	3	.246	14	.213	15	.123	33	1.5										
65	1.0DL + 1.5LL...	Yes	Y		1	1	4	.246	14	.123	15	.213	33	1.5										
66	1.0DL + 1.5LL...	Yes	Y		1	1	5	.246	14		15	.246	33	1.5										
67	1.0DL + 1.5LL...	Yes	Y		1	1	6	.246	14	-.123	15	.213	33	1.5										
68	1.0DL + 1.5LL...	Yes	Y		1	1	7	.246	14	-.213	15	.123	33	1.5										
69	1.0DL + 1.5LL...	Yes	Y		1	1	8	.246	14	-.246	15		33	1.5										
70	1.0DL + 1.5LL...	Yes	Y		1	1	9	.246	14	-.213	15	-.123	33	1.5										
71	1.0DL + 1.5LL...	Yes	Y		1	1	10	.246	14	-.123	15	-.213	33	1.5										
72	1.0DL + 1.5LL...	Yes	Y		1	1	11	.246	14		15	-.246	33	1.5										
73	1.0DL + 1.5LL...	Yes	Y		1	1	12	.246	14	.123	15	-.213	33	1.5										
74	1.0DL + 1.5LL...	Yes	Y		1	1	13	.246	14	.213	15	-.123	33	1.5										
75	1.2DL + 1.5LL	Yes	Y		1	1.2	33	1.5																
76	1.2DL + 1.5L...	Yes	Y		1	1.2	34	1.5	2	.061	14	.061	15											
77	1.2DL + 1.5L...	Yes	Y		1	1.2	34	1.5	3	.061	14	.053	15	.031										
78	1.2DL + 1.5L...	Yes	Y		1	1.2	34	1.5	4	.061	14	.031	15	.053										
79	1.2DL + 1.5L...	Yes	Y		1	1.2	34	1.5	5	.061	14		15	.061										
80	1.2DL + 1.5L...	Yes	Y		1	1.2	34	1.5	6	.061	14	-.031	15	.053										
81	1.2DL + 1.5L...	Yes	Y		1	1.2	34	1.5	7	.061	14	-.053	15	.031										
82	1.2DL + 1.5L...	Yes	Y		1	1.2	34	1.5	8	.061	14	-.061	15											
83	1.2DL + 1.5L...	Yes	Y		1	1.2	34	1.5	9	.061	14	-.053	15	-.031										
84	1.2DL + 1.5L...	Yes	Y		1	1.2	34	1.5	10	.061	14	-.031	15	-.053										

Load Combinations (Continued)

	Description	Sol..	PD..	SR..	BLC	Fact..	BLC	Fact..	BLC	Fact..	BLC	Fact..	BLC	Fact..	BLC	Fact..	BLC	Fact..	BLC	Fact..	BLC	Fact..	BLC	Fact..
85	1.2DL + 1.5L...	Yes	Y		1	1.2	34	1.5	11	.061	14		15	-.061										
86	1.2DL + 1.5L...	Yes	Y		1	1.2	34	1.5	12	.061	14	.031	15	-.053										
87	1.2DL + 1.5L...	Yes	Y		1	1.2	34	1.5	13	.061	14	.053	15	-.031										
88	1.2DL + 1.5L...	Yes	Y		1	1.2	35	1.5	2	.061	14	.061	15											
89	1.2DL + 1.5L...	Yes	Y		1	1.2	35	1.5	3	.061	14	.053	15	.031										
90	1.2DL + 1.5L...	Yes	Y		1	1.2	35	1.5	4	.061	14	.031	15	.053										
91	1.2DL + 1.5L...	Yes	Y		1	1.2	35	1.5	5	.061	14		15	.061										
92	1.2DL + 1.5L...	Yes	Y		1	1.2	35	1.5	6	.061	14	-.031	15	.053										
93	1.2DL + 1.5L...	Yes	Y		1	1.2	35	1.5	7	.061	14	-.053	15	.031										
94	1.2DL + 1.5L...	Yes	Y		1	1.2	35	1.5	8	.061	14	-.061	15											
95	1.2DL + 1.5L...	Yes	Y		1	1.2	35	1.5	9	.061	14	-.053	15	-.031										
96	1.2DL + 1.5L...	Yes	Y		1	1.2	35	1.5	10	.061	14	-.031	15	-.053										
97	1.2DL + 1.5L...	Yes	Y		1	1.2	35	1.5	11	.061	14		15	-.061										
98	1.2DL + 1.5L...	Yes	Y		1	1.2	35	1.5	12	.061	14	.031	15	-.053										
99	1.2DL + 1.5L...	Yes	Y		1	1.2	35	1.5	13	.061	14	.053	15	-.031										
100	1.2DL + 1.5L...	Yes	Y		1	1.2	36	1.5	2	.061	14	.061	15											
101	1.2DL + 1.5L...	Yes	Y		1	1.2	36	1.5	3	.061	14	.053	15	.031										
102	1.2DL + 1.5L...	Yes	Y		1	1.2	36	1.5	4	.061	14	.031	15	.053										
103	1.2DL + 1.5L...	Yes	Y		1	1.2	36	1.5	5	.061	14		15	.061										
104	1.2DL + 1.5L...	Yes	Y		1	1.2	36	1.5	6	.061	14	-.031	15	.053										
105	1.2DL + 1.5L...	Yes	Y		1	1.2	36	1.5	7	.061	14	-.053	15	.031										
106	1.2DL + 1.5L...	Yes	Y		1	1.2	36	1.5	8	.061	14	-.061	15											
107	1.2DL + 1.5L...	Yes	Y		1	1.2	36	1.5	9	.061	14	-.053	15	-.031										
108	1.2DL + 1.5L...	Yes	Y		1	1.2	36	1.5	10	.061	14	-.031	15	-.053										
109	1.2DL + 1.5L...	Yes	Y		1	1.2	36	1.5	11	.061	14		15	-.061										
110	1.2DL + 1.5L...	Yes	Y		1	1.2	36	1.5	12	.061	14	.031	15	-.053										
111	1.2DL + 1.5L...	Yes	Y		1	1.2	36	1.5	13	.061	14	.053	15	-.031										
112	1.2DL + 1.5L...	Yes	Y		1	1.2	37	1.5	2	.061	14	.061	15											
113	1.2DL + 1.5L...	Yes	Y		1	1.2	37	1.5	3	.061	14	.053	15	.031										
114	1.2DL + 1.5L...	Yes	Y		1	1.2	37	1.5	4	.061	14	.031	15	.053										
115	1.2DL + 1.5L...	Yes	Y		1	1.2	37	1.5	5	.061	14		15	.061										
116	1.2DL + 1.5L...	Yes	Y		1	1.2	37	1.5	6	.061	14	-.031	15	.053										
117	1.2DL + 1.5L...	Yes	Y		1	1.2	37	1.5	7	.061	14	-.053	15	.031										
118	1.2DL + 1.5L...	Yes	Y		1	1.2	37	1.5	8	.061	14	-.061	15											
119	1.2DL + 1.5L...	Yes	Y		1	1.2	37	1.5	9	.061	14	-.053	15	-.031										
120	1.2DL + 1.5L...	Yes	Y		1	1.2	37	1.5	10	.061	14	-.031	15	-.053										
121	1.2DL + 1.5L...	Yes	Y		1	1.2	37	1.5	11	.061	14		15	-.061										
122	1.2DL + 1.5L...	Yes	Y		1	1.2	37	1.5	12	.061	14	.031	15	-.053										
123	1.2DL + 1.5L...	Yes	Y		1	1.2	37	1.5	13	.061	14	.053	15	-.031										
124	1.2DL + 1.5L...	Yes	Y		1	1.2	38	1.5	2	.061	14	.061	15											
125	1.2DL + 1.5L...	Yes	Y		1	1.2	38	1.5	3	.061	14	.053	15	.031										
126	1.2DL + 1.5L...	Yes	Y		1	1.2	38	1.5	4	.061	14	.031	15	.053										
127	1.2DL + 1.5L...	Yes	Y		1	1.2	38	1.5	5	.061	14		15	.061										
128	1.2DL + 1.5L...	Yes	Y		1	1.2	38	1.5	6	.061	14	-.031	15	.053										
129	1.2DL + 1.5L...	Yes	Y		1	1.2	38	1.5	7	.061	14	-.053	15	.031										
130	1.2DL + 1.5L...	Yes	Y		1	1.2	38	1.5	8	.061	14	-.061	15											
131	1.2DL + 1.5L...	Yes	Y		1	1.2	38	1.5	9	.061	14	-.053	15	-.031										
132	1.2DL + 1.5L...	Yes	Y		1	1.2	38	1.5	10	.061	14	-.031	15	-.053										
133	1.2DL + 1.5L...	Yes	Y		1	1.2	38	1.5	11	.061	14		15	-.061										
134	1.2DL + 1.5L...	Yes	Y		1	1.2	38	1.5	12	.061	14	.031	15	-.053										
135	1.2DL + 1.5L...	Yes	Y		1	1.2	38	1.5	13	.061	14	.053	15	-.031										
136	1.2DL + 1.5L...	Yes	Y		1	1.2	39	1.5	2	.061	14	.061	15											

Load Combinations (Continued)

	Description	Sol..	PD..	SR..	BLC	Fact..	BLC	Fact..	BLC	Fact..	BLC	Fact..	BLC	Fact..	BLC	Fact..	BLC	Fact..	BLC	Fact..	BLC	Fact..	BLC	Fact..
137	1.2DL + 1.5L...	Yes	Y		1	1.2	39	1.5	3	.061	14	.053	15	.031										
138	1.2DL + 1.5L...	Yes	Y		1	1.2	39	1.5	4	.061	14	.031	15	.053										
139	1.2DL + 1.5L...	Yes	Y		1	1.2	39	1.5	5	.061	14		15	.061										
140	1.2DL + 1.5L...	Yes	Y		1	1.2	39	1.5	6	.061	14	-.031	15	.053										
141	1.2DL + 1.5L...	Yes	Y		1	1.2	39	1.5	7	.061	14	-.053	15	.031										
142	1.2DL + 1.5L...	Yes	Y		1	1.2	39	1.5	8	.061	14	-.061	15											
143	1.2DL + 1.5L...	Yes	Y		1	1.2	39	1.5	9	.061	14	-.053	15	-.031										
144	1.2DL + 1.5L...	Yes	Y		1	1.2	39	1.5	10	.061	14	-.031	15	-.053										
145	1.2DL + 1.5L...	Yes	Y		1	1.2	39	1.5	11	.061	14		15	-.061										
146	1.2DL + 1.5L...	Yes	Y		1	1.2	39	1.5	12	.061	14	.031	15	-.053										
147	1.2DL + 1.5L...	Yes	Y		1	1.2	39	1.5	13	.061	14	.053	15	-.031										
148	1.2DL + 1.5L...	Yes	Y		1	1.2	40	1.5	2	.061	14	.061	15											
149	1.2DL + 1.5L...	Yes	Y		1	1.2	40	1.5	3	.061	14	.053	15	.031										
150	1.2DL + 1.5L...	Yes	Y		1	1.2	40	1.5	4	.061	14	.031	15	.053										
151	1.2DL + 1.5L...	Yes	Y		1	1.2	40	1.5	5	.061	14		15	.061										
152	1.2DL + 1.5L...	Yes	Y		1	1.2	40	1.5	6	.061	14	-.031	15	.053										
153	1.2DL + 1.5L...	Yes	Y		1	1.2	40	1.5	7	.061	14	-.053	15	.031										
154	1.2DL + 1.5L...	Yes	Y		1	1.2	40	1.5	8	.061	14	-.061	15											
155	1.2DL + 1.5L...	Yes	Y		1	1.2	40	1.5	9	.061	14	-.053	15	-.031										
156	1.2DL + 1.5L...	Yes	Y		1	1.2	40	1.5	10	.061	14	-.031	15	-.053										
157	1.2DL + 1.5L...	Yes	Y		1	1.2	40	1.5	11	.061	14		15	-.061										
158	1.2DL + 1.5L...	Yes	Y		1	1.2	40	1.5	12	.061	14	.031	15	-.053										
159	1.2DL + 1.5L...	Yes	Y		1	1.2	40	1.5	13	.061	14	.053	15	-.031										
160	1.2DL + 1.5L...	Yes	Y		1	1.2	41	1.5	2	.061	14	.061	15											
161	1.2DL + 1.5L...	Yes	Y		1	1.2	41	1.5	3	.061	14	.053	15	.031										
162	1.2DL + 1.5L...	Yes	Y		1	1.2	41	1.5	4	.061	14	.031	15	.053										
163	1.2DL + 1.5L...	Yes	Y		1	1.2	41	1.5	5	.061	14		15	.061										
164	1.2DL + 1.5L...	Yes	Y		1	1.2	41	1.5	6	.061	14	-.031	15	.053										
165	1.2DL + 1.5L...	Yes	Y		1	1.2	41	1.5	7	.061	14	-.053	15	.031										
166	1.2DL + 1.5L...	Yes	Y		1	1.2	41	1.5	8	.061	14	-.061	15											
167	1.2DL + 1.5L...	Yes	Y		1	1.2	41	1.5	9	.061	14	-.053	15	-.031										
168	1.2DL + 1.5L...	Yes	Y		1	1.2	41	1.5	10	.061	14	-.031	15	-.053										
169	1.2DL + 1.5L...	Yes	Y		1	1.2	41	1.5	11	.061	14		15	-.061										
170	1.2DL + 1.5L...	Yes	Y		1	1.2	41	1.5	12	.061	14	.031	15	-.053										
171	1.2DL + 1.5L...	Yes	Y		1	1.2	41	1.5	13	.061	14	.053	15	-.031										
172	1.2DL + 1.5L...	Yes	Y		1	1.2	42	1.5	2	.061	14	.061	15											
173	1.2DL + 1.5L...	Yes	Y		1	1.2	42	1.5	3	.061	14	.053	15	.031										
174	1.2DL + 1.5L...	Yes	Y		1	1.2	42	1.5	4	.061	14	.031	15	.053										
175	1.2DL + 1.5L...	Yes	Y		1	1.2	42	1.5	5	.061	14		15	.061										
176	1.2DL + 1.5L...	Yes	Y		1	1.2	42	1.5	6	.061	14	-.031	15	.053										
177	1.2DL + 1.5L...	Yes	Y		1	1.2	42	1.5	7	.061	14	-.053	15	.031										
178	1.2DL + 1.5L...	Yes	Y		1	1.2	42	1.5	8	.061	14	-.061	15											
179	1.2DL + 1.5L...	Yes	Y		1	1.2	42	1.5	9	.061	14	-.053	15	-.031										
180	1.2DL + 1.5L...	Yes	Y		1	1.2	42	1.5	10	.061	14	-.031	15	-.053										
181	1.2DL + 1.5L...	Yes	Y		1	1.2	42	1.5	11	.061	14		15	-.061										
182	1.2DL + 1.5L...	Yes	Y		1	1.2	42	1.5	12	.061	14	.031	15	-.053										
183	1.2DL + 1.5L...	Yes	Y		1	1.2	42	1.5	13	.061	14	.053	15	-.031										
184	1.2DL + 1.5L...	Yes	Y		1	1.2	43	1.5	2	.061	14	.061	15											
185	1.2DL + 1.5L...	Yes	Y		1	1.2	43	1.5	3	.061	14	.053	15	.031										
186	1.2DL + 1.5L...	Yes	Y		1	1.2	43	1.5	4	.061	14	.031	15	.053										
187	1.2DL + 1.5L...	Yes	Y		1	1.2	43	1.5	5	.061	14		15	.061										
188	1.2DL + 1.5L...	Yes	Y		1	1.2	43	1.5	6	.061	14	-.031	15	.053										

Load Combinations (Continued)

	Description	Sol..	PD..	SR..	BLC	Fact..	BLC	Fact..	BLC	Fact..	BLC	Fact..	BLC	Fact..	BLC	Fact..	BLC	Fact..	BLC	Fact..	BLC	Fact..	BLC	Fact...
189	1.2DL + 1.5L...	Yes	Y		1	1.2	43	1.5	7	.061	14	-.053	15	.031										
190	1.2DL + 1.5L...	Yes	Y		1	1.2	43	1.5	8	.061	14	-.061	15											
191	1.2DL + 1.5L...	Yes	Y		1	1.2	43	1.5	9	.061	14	-.053	15	-.031										
192	1.2DL + 1.5L...	Yes	Y		1	1.2	43	1.5	10	.061	14	-.031	15	-.053										
193	1.2DL + 1.5L...	Yes	Y		1	1.2	43	1.5	11	.061	14		15	-.061										
194	1.2DL + 1.5L...	Yes	Y		1	1.2	43	1.5	12	.061	14	.031	15	-.053										
195	1.2DL + 1.5L...	Yes	Y		1	1.2	43	1.5	13	.061	14	.053	15	-.031										
196	1.2DL + 1.5L...	Yes	Y		1	1.2	44	1.5	2	.061	14	.061	15											
197	1.2DL + 1.5L...	Yes	Y		1	1.2	44	1.5	3	.061	14	.053	15	.031										
198	1.2DL + 1.5L...	Yes	Y		1	1.2	44	1.5	4	.061	14	.031	15	.053										
199	1.2DL + 1.5L...	Yes	Y		1	1.2	44	1.5	5	.061	14		15	.061										
200	1.2DL + 1.5L...	Yes	Y		1	1.2	44	1.5	6	.061	14	-.031	15	.053										
201	1.2DL + 1.5L...	Yes	Y		1	1.2	44	1.5	7	.061	14	-.053	15	.031										
202	1.2DL + 1.5L...	Yes	Y		1	1.2	44	1.5	8	.061	14	-.061	15											
203	1.2DL + 1.5L...	Yes	Y		1	1.2	44	1.5	9	.061	14	-.053	15	-.031										
204	1.2DL + 1.5L...	Yes	Y		1	1.2	44	1.5	10	.061	14	-.031	15	-.053										
205	1.2DL + 1.5L...	Yes	Y		1	1.2	44	1.5	11	.061	14		15	-.061										
206	1.2DL + 1.5L...	Yes	Y		1	1.2	44	1.5	12	.061	14	.031	15	-.053										
207	1.2DL + 1.5L...	Yes	Y		1	1.2	44	1.5	13	.061	14	.053	15	-.031										
208	1.2DL + 1.5L...	Yes	Y		1	1.2	45	1.5	2	.061	14	.061	15											
209	1.2DL + 1.5L...	Yes	Y		1	1.2	45	1.5	3	.061	14	.053	15	.031										
210	1.2DL + 1.5L...	Yes	Y		1	1.2	45	1.5	4	.061	14	.031	15	.053										
211	1.2DL + 1.5L...	Yes	Y		1	1.2	45	1.5	5	.061	14		15	.061										
212	1.2DL + 1.5L...	Yes	Y		1	1.2	45	1.5	6	.061	14	-.031	15	.053										
213	1.2DL + 1.5L...	Yes	Y		1	1.2	45	1.5	7	.061	14	-.053	15	.031										
214	1.2DL + 1.5L...	Yes	Y		1	1.2	45	1.5	8	.061	14	-.061	15											
215	1.2DL + 1.5L...	Yes	Y		1	1.2	45	1.5	9	.061	14	-.053	15	-.031										
216	1.2DL + 1.5L...	Yes	Y		1	1.2	45	1.5	10	.061	14	-.031	15	-.053										
217	1.2DL + 1.5L...	Yes	Y		1	1.2	45	1.5	11	.061	14		15	-.061										
218	1.2DL + 1.5L...	Yes	Y		1	1.2	45	1.5	12	.061	14	.031	15	-.053										

Envelope Joint Reactions

	Joint		X [lb]	LC	Y [lb]	LC	Z [lb]	LC	MX [lb-ft]	LC	MY [lb-ft]	LC	MZ [lb-ft]	LC
1	N69	max	2224.247	17	792.991	33	6545.603	2	728.78	27	2499.305	11	923.489	11
2		min	-2259.617	11	72.942	74	-4579.124	20	70.744	70	-2455.262	17	-711.842	17
3	N137	max	6146.079	6	770.405	38	2790.604	25	558.347	15	1244.066	2	93.431	22
4		min	-4447.627	24	65.825	68	-3734.661	7	-766.461	167	-1196.59	20	-946.756	198
5	N138	max	4089.508	16	772.816	29	3572.697	15	508.229	14	1972.527	8	826.25	184
6		min	-5752.62	10	59.187	71	-4575.841	9	-982.385	94	-1935.171	14	-189.164	20
7	N141	max	88.762	173	1995.941	2	931.481	20	555.713	27	333.434	22	241.204	23
8		min	-43.536	211	-558.9	20	-3103.671	2	-120.994	20	-354.43	4	-242.955	5
9	N149	max	806.301	24	1985.001	6	1487.113	67	167.47	24	204.287	24	66.329	24
10		min	-2685.287	6	-564.278	24	-397.203	24	-373.038	6	-226.692	6	-463.953	31
11	N157	max	2715.917	10	2027.17	10	1536.913	35	196.19	16	234.533	22	467.253	35
12		min	-876.182	16	-606.135	16	-426.305	16	-397.456	10	-258.693	4	-53.97	16
13	Totals:	max	8357.157	17	7640.139	33	8483.208	14						
14		min	-8357.157	23	2481.453	51	-8483.209	8						

Envelope AISC 15th(360-16): LRFD Steel Code Checks

	Member	Shape	Code Check	Loc[...	LC	Shear Check	Loc[...	Dir	LC	phi*Pnc...	phi*Pnt...	phi*Mn ...	phi*Mn ...	Cb	Eqn
1	MP3	PIPE_2.0	.694	69	2	.083	69		5	14916....	32130	1871.625	1871.625	4...	H1-1b
2	MP11	PIPE_2.0	.652	69	11	.089	69		12	14916....	32130	1871.625	1871.625	1...	H1-1b
3	MP7	PIPE_2.0	.585	69	5	.091	69		9	14916....	32130	1871.625	1871.625	1...	H1-1b
4	M71	PIPE_2.0	.564	135....	2	.341	145....		2	25978....	32130	1871.625	1871.625	1	H3-6
5	MP10	PIPE_2.0	.563	69	12	.098	69		2	14916....	32130	1871.625	1871.625	3...	H1-1b
6	MP6	PIPE_2.0	.558	69	9	.127	69		11	14916....	32130	1871.625	1871.625	4...	H1-1b
7	M81	PIPE_2.0	.549	135....	5	.315	145....		5	25978....	32130	1871.625	1871.625	1	H3-6
8	M70	PIPE_2.0	.512	134....	6	.242	145....		10	25978....	32130	1871.625	1871.625	1	H1-1b
9	MP2	PIPE_2.0	.488	69	2	.125	69		8	14916....	32130	1871.625	1871.625	3...	H1-1b
10	MP8	PIPE_2.0	.481	69	3	.197	27		11	14916....	32130	1871.625	1871.625	2...	H1-1b
11	M82	L2.5x2.5x4	.475	0	8	.216	0	y	2	36453....	38556	1113.554	2537.388	2...	H2-1
12	MP9	PIPE_2.0	.470	69	6	.159	69		5	14916....	32130	1871.625	1871.625	3...	H1-1b
13	MP12	PIPE_2.0	.469	69	6	.221	27		5	14916....	32130	1871.625	1871.625	1...	H1-1b
14	M83	L2.5x2.5x4	.466	0	5	.161	0	y	9	36453....	38556	1113.554	2537.388	2...	H2-1
15	MP5	PIPE_2.0	.465	69	2	.125	69		2	14916....	32130	1871.625	1871.625	2...	H1-1b
16	MP4	PIPE_2.0	.444	27	8	.259	27		8	14916....	32130	1871.625	1871.625	2...	H1-1b
17	MP1	PIPE_2.0	.392	69	10	.155	69		8	14916....	32130	1871.625	1871.625	3...	H1-1b
18	M84	L2.5x2.5x4	.362	0	5	.214	15.7...	z	5	36453....	38556	1113.554	2537.388	2...	H2-1
19	M73A	PL6x.375	.297	2.704	4	.191	0	y	7	70544.2	72900	569.533	9112.5	1...	H1-1b
20	M89A	6"x1/2" Plate	.282	4.338	10	.100	4.338	y	8	92686....	97200	1012.5	12150	1...	H1-1b
21	M94A	L2x2x3	.279	51.3...	21	.011	51.3...	z	8	9346.209	23392.8	557.717	1239.29	2...	H2-1
22	M78A	PL6x.375	.271	2.75	11	.436	2.75	y	6	70464....	72900	569.533	9112.5	1...	H1-1b
23	M87A	6"x1/2" Plate	.268	4.338	7	.096	0	y	2	92686....	97200	1012.5	12150	1...	H1-1b
24	M88	6"x1/2" Plate	.264	0	6	.115	0	y	8	92686....	97200	1012.5	12150	1...	H1-1b
25	M92B	L2x2x3	.263	51.3...	17	.009	51.3...	z	4	9346.21	23392.8	557.717	1239.29	2...	H2-1
26	M95A	6"x1/2" Plate	.254	4.338	3	.108	0	y	11	92685....	97200	1012.5	12150	1...	H1-1b
27	M96A	6"x1/2" Plate	.254	0	2	.115	0	y	4	92687....	97200	1012.5	12150	1...	H1-1b
28	M82A	PL6x.375	.251	2.704	11	.192	0	y	4	70544.2	72900	569.533	9112.5	1...	H1-1b
29	M90A	6"x1/2" Plate	.250	0	10	.106	0	y	86	92686....	97200	1012.5	12150	1...	H1-1b
30	M85A	6"x1/2" Plate	.238	2.704	10	.136	2.704	y	7	95420....	97200	1012.5	12150	1...	H1-1b
31	M5	HSS4X4X4	.237	0	11	.166	0	z	11	101755...	106155	12311.25	12311.25	1	H1-1b
32	M76	PL6x.375	.236	2.704	10	.221	0	y	11	70544.2	72900	569.533	9112.5	1...	H1-1b
33	M90B	PL6x.375	.232	2.75	8	.481	2.75	y	2	70464....	72900	569.533	9112.5	1...	H1-1b
34	M44	PL6x.375	.231	2.704	13	.209	0	y	2	70544.2	72900	569.533	9112.5	1...	H1-1b
35	M91A	L2x2x3	.228	51.3...	7	.011	51.3...	y	2	9346.076	23392.8	557.717	1239.29	2...	H2-1
36	M41	6"x1/2" Plate	.226	2.704	7	.155	2.704	y	2	95420....	97200	1012.5	12150	1...	H1-1b
37	M79	PL6x.375	.226	2.704	12	.219	0	y	11	70544.2	72900	569.533	9112.5	1...	H1-1b
38	M96C	L2x2x3	.225	51.3...	24	.010	0	z	5	9346.27	23392.8	557.717	1200.595	2...	H2-1
39	M91	6"x1/2" Plate	.217	2.704	2	.159	2.704	y	11	95420....	97200	1012.5	12150	1...	H1-1b
40	M81A	PL6x.375	.213	2.75	6	.551	2.75	y	11	70465.57	72900	569.533	9112.5	1...	H1-1b
41	M93B	L2x2x3	.211	0	10	.009	51.3...	y	6	9346.076	23392.8	557.717	1197.807	2...	H2-1
42	M3	HSS4X4X4	.210	0	8	.158	0	z	8	101755...	106155	12311.25	12311.25	1	H1-1b
43	M85	6"x1/2" Plate	.201	2.704	12	.104	0	y	9	95420....	97200	1012.5	12150	1...	H1-1b
44	M93A	6"x1/2" Plate	.199	2.704	8	.107	0	y	5	95420....	97200	1012.5	12150	1...	H1-1b
45	M87B	6"x1/2" Plate	.198	2.704	4	.097	2.704	y	2	95420....	97200	1012.5	12150	1...	H1-1b
46	M95B	L2x2x3	.196	0	2	.010	0	y	11	9346.157	23392.8	557.717	1210.455	2...	H2-1
47	M90D	L2.5x2.5x8	.196	48.7...	11	.016	48.7...	y	11	42624....	73224	1864.761	4392.178	2...	H2-1
48	M102	L2.5x2.5x8	.187	48.7...	8	.017	48.7...	y	7	42624....	73224	1864.761	4392.178	2...	H2-1
49	M75A	PL6x.375	.186	2.75	3	.472	2.75	y	6	70464....	72900	569.533	9112.5	1...	H1-1b
50	M88B	PL6x.375	.168	2.704	3	.227	0	y	8	70544.2	72900	569.533	9112.5	1...	H1-1b
51	M1	HSS4X4X4	.166	44.7...	6	.130	44.7...	y	3	101755...	106155	12311.25	12311.25	1	H1-1b

Envelope AISC 15th(360-16): LRFD Steel Code Checks (Continued)

	Member	Shape	Code Check	Loc[...	LC	Shear Check	Loc[...	Dir	LC	phi*Pnc...	phi*Pnt...	phi*Mn ...	phi*Mn ...	Cb	Eqn
52	M89B	L2.5x2.5x8	.165	48.7...	5	.016	48.7...	z	11	42624....	73224	1864.761	4392.178	1...	H2-1
53	M96D	L2.5x2.5x8	.162	48.7...	3	.018	48.7...	y	3	42624....	73224	1864.761	4392.178	2...	H2-1
54	M85B	HSS4X4X4	.153	28.3...	5	.104	4.127	z	5	104291...	106155	12311.25	12311.25	1...	H1-1b
55	M84A	PL6x.375	.147	2.75	2	.419	2.75	y	4	70464....	72900	569.533	9112.5	1...	H1-1b
56	M95C	L2.5x2.5x8	.141	48.7...	8	.018	48.7...	z	3	42624....	73224	1864.761	4392.178	2...	H2-1
57	M87C	HSS4X4X4	.140	28.3...	8	.116	4.127	z	8	104291...	106155	12311.25	12311.25	1...	H1-1b
58	M101	L2.5x2.5x8	.135	48.7...	13	.017	48.7...	z	7	42624....	73224	1864.761	4392.178	2...	H2-1
59	M89C	HSS4X4X4	.128	28.3	183	.101	4.127	z	12	104291...	106155	12311.25	12311.25	1...	H1-1b
60	M9	PIPE_3.0	.125	56.25	9	.166	6.25		12	59302....	65205	5748.75	5748.75	1	H1-1b
61	M96B	PL6x.375	.119	0	2	.579	2.75	y	2	70464....	72900	569.533	9112.5	1...	H1-1b
62	M88C	HSS4X4X4	.119	0	193	.084	24.1...	z	11	104291...	106155	12311.25	12311.25	1...	H1-1b
63	M86C	HSS4X4X4	.119	0	166	.097	24.1...	z	8	104291...	106155	12311.25	12311.25	1...	H1-1b
64	M7	PIPE_3.0	.119	56.25	12	.188	6.25		4	59302....	65205	5748.75	5748.75	1	H1-1b
65	M90C	HSS4X4X4	.118	0	209	.090	24.1...	z	4	104291...	106155	12311.25	12311.25	1...	H1-1b
66	M8	PIPE_3.0	.117	134....	8	.186	6.25		8	59302....	65205	5748.75	5748.75	1	H1-1b

Hot Rolled Steel Section Sets

	Label	Shape	Type	Design List	Material	Design Ru...	A [in2]	Iyy [in4]	Izz [in4]	J [in4]
1	Standoffs	HSS4X4X4	Beam	None	Q235-GB	Typical	3.37	7.8	7.8	12.8
2	Horizontals	PIPE_3.0	Beam	None	Q235-GB	Typical	2.07	2.85	2.85	5.69
3	Platform A...	L2x2x3	Beam	None	Q345	Typical	.722	.271	.271	.009
4	Mount Pipe	PIPE_2.0	Column	None	Q235-GB	Typical	1.02	.627	.627	1.25
5	Corner Pla...	6"x1/2" Pl...	Beam	None	Q345	Typical	3	.063	9	.237
6	Handrail H...	PIPE_2.0	Beam	None	Q235-GB	Typical	1.02	.627	.627	1.25
7	Angle Han...	L2.5x2.5x4	Beam	None	Q345	Typical	1.19	.692	.692	.026
8	Platform B...	HSS4X4X4	Beam	None	Q235-GB	Typical	3.37	7.8	7.8	12.8
9	Connectio...	PL6x.375	Beam	None	Q345	Typical	2.25	.026	6.75	.101
10	Kickers	L2.5x2.5x8	Beam	None	Q345	Typical	2.26	1.22	1.22	.188

Member Advanced Data

	Label	I Release	J Release	I Offset[in]	J Offset[in]	T/C Only	Physical	Defl Rat...	Analysis ...	Inactive	Seismic...
1	M1						Yes				None
2	M3						Yes				None
3	M5						Yes				None
4	M85B				2		Yes	Default			None
5	M86C			2			Yes	Default			None
6	M87C				2		Yes	Default			None
7	M88C			2			Yes	Default			None
8	M89C				2		Yes	Default			None
9	M90C			2			Yes	Default			None
10	M22						Yes	** NA **			None
11	M23						Yes	** NA **			None
12	M24						Yes	** NA **			None
13	M28						Yes	** NA **			None
14	M30						Yes	** NA **			None
15	M34						Yes	** NA **			None
16	M36						Yes	** NA **			None
17	M72						Yes	** NA **			None
18	M73						Yes	** NA **			None

Member Advanced Data (Continued)

	Label	I Release	J Release	I Offset[in]	J Offset[in]	T/C Only	Physical	Defl Rat...	Analysis ...	Inactive	Seismic...
19	M74						Yes	** NA **			None
20	M75						Yes	** NA **			None
21	M77						Yes	** NA **			None
22	M78						Yes	** NA **			None
23	M80						Yes	** NA **			None
24	M86						Yes	** NA **			None
25	M87						Yes	** NA **			None
26	M89						Yes	** NA **			None
27	M90						Yes	** NA **			None
28	M92						Yes	** NA **			None
29	M93						Yes	** NA **			None
30	M95						Yes	** NA **			None
31	M96						Yes	** NA **			None
32	M98						Yes	** NA **			None
33	M99						Yes	** NA **			None
34	M91A						Yes				None
35	M92B						Yes				None
36	M93B						Yes				None
37	M94A						Yes				None
38	M95B						Yes				None
39	M96C						Yes				None
40	MP4						Yes	** NA **			None
41	MP3						Yes	** NA **			None
42	MP1						Yes	** NA **			None
43	MP12						Yes	** NA **			None
44	MP9						Yes	** NA **			None
45	MP8						Yes	** NA **			None
46	MP5						Yes	** NA **			None
47	MP2						Yes	** NA **			None
48	MP7						Yes	** NA **			None
49	MP6						Yes	** NA **			None
50	MP11						Yes	** NA **			None
51	MP10						Yes	** NA **			None
52	M7						Yes				None
53	M8						Yes				None
54	M9						Yes				None
55	M70						Yes				None
56	M71						Yes				None
57	M81						Yes				None
58	M41						Yes	Default			None
59	M85						Yes	Default			None
60	M87A				2		Yes				None
61	M88			2			Yes	Default			None
62	M85A						Yes	Default			None
63	M87B						Yes	Default			None
64	M89A				2		Yes				None
65	M90A			2			Yes	Default			None
66	M91						Yes	Default			None
67	M93A						Yes	Default			None
68	M95A				2		Yes				None
69	M96A			2			Yes	Default			None
70	M44						Yes	Default			None

Member Advanced Data (Continued)

	Label	I Release	J Release	I Offset[in]	J Offset[in]	T/C Only	Physical	Defl Rat...	Analysis ...	Inactive	Seismic...
71	M96B						Yes				None
72	M88B						Yes	Default			None
73	M90B						Yes				None
74	M73A						Yes	Default			None
75	M75A						Yes				None
76	M76						Yes	Default			None
77	M78A						Yes				None
78	M79						Yes	Default			None
79	M81A						Yes				None
80	M82A						Yes	Default			None
81	M84A						Yes	Default			None
82	M82						Yes				None
83	M83						Yes				None
84	M84						Yes				None
85	M85C						Yes	** NA **			None
86	M86A						Yes	** NA **			None
87	M87D						Yes	** NA **			None
88	M88A						Yes	** NA **			None
89	M89B						Yes				None
90	M90D						Yes				None
91	M91B						Yes	** NA **			None
92	M92A						Yes	** NA **			None
93	M93C						Yes	** NA **			None
94	M94						Yes	** NA **			None
95	M95C						Yes				None
96	M96D						Yes				None
97	M97						Yes	** NA **			None
98	M98A						Yes	** NA **			None
99	M99A						Yes	** NA **			None
100	M100						Yes	** NA **			None
101	M101						Yes				None
102	M102						Yes				None

Hot Rolled Steel Design Parameters

	Label	Shape	Length[in]	Lbyy[in]	Lbzz[in]	Lcomp top[in]	Lcomp bot[in]	L-torqu...	Kyy	Kzz	Cb	Function
1	M1	Standoffs	62.255	43.75	43.75	43.75	43.75	43.75				Lateral
2	M3	Standoffs	62.255	43.75	43.75	43.75	43.75	43.75				Lateral
3	M5	Standoffs	62.255	43.75	43.75	43.75	43.75	43.75				Lateral
4	M85B	Standoffs	30.301			Lbyy						Lateral
5	M86C	Standoffs	30.301			Lbyy						Lateral
6	M87C	Standoffs	30.301			Lbyy						Lateral
7	M88C	Standoffs	30.301			Lbyy						Lateral
8	M89C	Standoffs	30.3			Lbyy						Lateral
9	M90C	Standoffs	30.301			Lbyy						Lateral
10	M91A	Platform An...	51.353			Lbyy						Lateral
11	M92B	Platform An...	51.353			Lbyy						Lateral
12	M93B	Platform An...	51.353			Lbyy						Lateral
13	M94A	Platform An...	51.353			Lbyy						Lateral
14	M95B	Platform An...	51.353			Lbyy						Lateral
15	M96C	Platform An...	51.353			Lbyy						Lateral

Hot Rolled Steel Design Parameters (Continued)

	Label	Shape	Length[in]	Lbyy[in]	Lbzz[in]	Lcomp top[in]	Lcomp bot[in]	L-torqu...	Kyy	Kzz	Cb	Function
16	MP4	Mount Pipe	96			Lbyy						Lateral
17	MP3	Mount Pipe	96			Lbyy						Lateral
18	MP1	Mount Pipe	96			Lbyy						Lateral
19	MP12	Mount Pipe	96			Lbyy						Lateral
20	MP9	Mount Pipe	96			Lbyy						Lateral
21	MP8	Mount Pipe	96			Lbyy						Lateral
22	MP5	Mount Pipe	96			Lbyy						Lateral
23	MP2	Mount Pipe	96			Lbyy						Lateral
24	MP7	Mount Pipe	96			Lbyy						Lateral
25	MP6	Mount Pipe	96			Lbyy						Lateral
26	MP11	Mount Pipe	96			Lbyy						Lateral
27	MP10	Mount Pipe	96			Lbyy						Lateral
28	M7	Horizontals	150	50.52	50.52	50.52	50.52	50.52				Lateral
29	M8	Horizontals	150	50.52	50.52	50.52	50.52	50.52				Lateral
30	M9	Horizontals	150	50.52	50.52	50.52	50.52	50.52				Lateral
31	M70	Handrail Ho...	150	50.52	50.52	50.52	50.52	50.52				Lateral
32	M71	Handrail Ho...	150	50.52	50.52	50.52	50.52	50.52				Lateral
33	M81	Handrail Ho...	150	50.52	50.52	50.52	50.52	50.52				Lateral
34	M41	Corner Plate	2.704			Lbyy						Lateral
35	M85	Corner Plate	2.704			Lbyy						Lateral
36	M87A	Corner Plate	6.338			Lbyy						Lateral
37	M88	Corner Plate	6.338			Lbyy						Lateral
38	M85A	Corner Plate	2.704			Lbyy						Lateral
39	M87B	Corner Plate	2.704			Lbyy						Lateral
40	M89A	Corner Plate	6.338			Lbyy						Lateral
41	M90A	Corner Plate	6.338			Lbyy						Lateral
42	M91	Corner Plate	2.704			Lbyy						Lateral
43	M93A	Corner Plate	2.704			Lbyy						Lateral
44	M95A	Corner Plate	6.338			Lbyy						Lateral
45	M96A	Corner Plate	6.338			Lbyy						Lateral
46	M44	Connection ...	2.704									Lateral
47	M96B	Connection ...	2.75			Lbyy						Lateral
48	M88B	Connection ...	2.704									Lateral
49	M90B	Connection ...	2.75			Lbyy						Lateral
50	M73A	Connection ...	2.704									Lateral
51	M75A	Connection ...	2.75			Lbyy						Lateral
52	M76	Connection ...	2.704									Lateral
53	M78A	Connection ...	2.75			Lbyy						Lateral
54	M79	Connection ...	2.704									Lateral
55	M81A	Connection ...	2.75			Lbyy						Lateral
56	M82A	Connection ...	2.704									Lateral
57	M84A	Connection ...	2.75			Lbyy						Lateral
58	M82	Angle Hand...	15.731			Lbyy						Lateral
59	M83	Angle Hand...	15.731			Lbyy						Lateral
60	M84	Angle Hand...	15.731			Lbyy						Lateral
61	M89B	Kickers	48.765			Lbyy						Lateral
62	M90D	Kickers	48.765			Lbyy						Lateral
63	M95C	Kickers	48.765			Lbyy						Lateral
64	M96D	Kickers	48.765			Lbyy						Lateral
65	M101	Kickers	48.765			Lbyy						Lateral
66	M102	Kickers	48.765			Lbyy						Lateral

Joint Loads and Enforced Displacements (BLC 33 : Service Live Loads)

	Joint Label	L,D,M	Direction	Magnitude[(lb,lb-ft), (in,rad), (lb*s^2/in, lb*s^2*in)]
1	N9	L	Y	-250
2	N5	L	Y	-250
3	N6	L	Y	-250
4	N10	L	Y	-250
5	N11	L	Y	-250
6	N8	L	Y	-250

Joint Loads and Enforced Displacements (BLC 34 : Maintenance Load 1)

	Joint Label	L,D,M	Direction	Magnitude[(lb,lb-ft), (in,rad), (lb*s^2/in, lb*s^2*in)]
1	N13	L	Y	-500

Joint Loads and Enforced Displacements (BLC 35 : Maintenance Load 2)

	Joint Label	L,D,M	Direction	Magnitude[(lb,lb-ft), (in,rad), (lb*s^2/in, lb*s^2*in)]
1	N7	L	Y	-500

Joint Loads and Enforced Displacements (BLC 36 : Maintenance Load 3)

	Joint Label	L,D,M	Direction	Magnitude[(lb,lb-ft), (in,rad), (lb*s^2/in, lb*s^2*in)]
1	N12	L	Y	-500

Joint Loads and Enforced Displacements (BLC 37 : Maintenance Load 4)

	Joint Label	L,D,M	Direction	Magnitude[(lb,lb-ft), (in,rad), (lb*s^2/in, lb*s^2*in)]
1	N23	L	Y	-500

Joint Loads and Enforced Displacements (BLC 38 : Maintenance Load 5)

	Joint Label	L,D,M	Direction	Magnitude[(lb,lb-ft), (in,rad), (lb*s^2/in, lb*s^2*in)]
1	N22	L	Y	-500

Joint Loads and Enforced Displacements (BLC 39 : Maintenance Load 6)

	Joint Label	L,D,M	Direction	Magnitude[(lb,lb-ft), (in,rad), (lb*s^2/in, lb*s^2*in)]
1	N21	L	Y	-500

Joint Loads and Enforced Displacements (BLC 40 : Maintenance Load 7)

	Joint Label	L,D,M	Direction	Magnitude[(lb,lb-ft), (in,rad), (lb*s^2/in, lb*s^2*in)]
1	N20	L	Y	-500

Joint Loads and Enforced Displacements (BLC 41 : Maintenance Load 8)

	Joint Label	L,D,M	Direction	Magnitude[(lb,lb-ft), (in,rad), (lb*s^2/in, lb*s^2*in)]
1	N70	L	Y	-500

Joint Loads and Enforced Displacements (BLC 42 : Maintenance Load 9)

	Joint Label	L,D,M	Direction	Magnitude[(lb,lb-ft), (in,rad), (lb*s^2/in, lb*s^2*in)]
1	N76	L	Y	-500

Joint Loads and Enforced Displacements (BLC 43 : Maintenance Load 10)

	Joint Label	L,D,M	Direction	Magnitude[(lb,lb-ft), (in,rad), (lb*s^2/in, lb*s^2*in)]
1	N82	L	Y	-500

Joint Loads and Enforced Displacements (BLC 44 : Maintenance Load 11)

	Joint Label	L,D,M	Direction	Magnitude[(lb,lb-ft), (in,rad), (lb*s^2/in, lb*s^2*in)]
1	N88	L	Y	-500

Joint Loads and Enforced Displacements (BLC 45 : Maintenance Load 12)

	Joint Label	L,D,M	Direction	Magnitude[(lb,lb-ft), (in,rad), (lb*s^2/in, lb*s^2*in)]
1	N94	L	Y	-500

Member Point Loads (BLC 1 : Self Weight)

	Member Label	Direction	Magnitude[lb,lb-ft]	Location[in,%]
1	MP1	Y	-17.5	6
2	MP1	Y	-17.5	49
3	MP3	Y	-47.85	6
4	MP3	Y	-47.85	90
5	MP4	Y	-47.85	6
6	MP4	Y	-47.85	90
7	MP3	Y	-59.9	48
8	MP4	Y	-70	48
9	MP4	Y	-75	24
10	MP1	Y	-16	48
11	M1	Y	-32.8	10
12	MP5	Y	-17.5	6
13	MP5	Y	-17.5	49
14	MP7	Y	-47.85	6
15	MP7	Y	-47.85	90
16	MP8	Y	-47.85	6
17	MP8	Y	-47.85	90
18	MP7	Y	-59.9	48
19	MP8	Y	-70	48
20	MP8	Y	-75	24
21	MP5	Y	-16	48
22	M3	Y	-32.8	10
23	MP9	Y	-17.5	6
24	MP9	Y	-17.5	49
25	MP11	Y	-47.85	6
26	MP11	Y	-47.85	90
27	MP12	Y	-47.85	6
28	MP12	Y	-47.85	90
29	MP11	Y	-59.9	48
30	MP12	Y	-70	48
31	MP12	Y	-75	24
32	MP9	Y	-16	48
33	M5	Y	-32.8	10

Member Point Loads (BLC 2 : Wind Load AZI 0)

	Member Label	Direction	Magnitude[lb,lb-ft]	Location[in,%]
1	MP1	X	0	6
2	MP1	Z	-120.25	6
3	MP1	X	0	49
4	MP1	Z	-120.25	49
5	MP3	X	0	6

Member Point Loads (BLC 2 : Wind Load AZI 0) (Continued)

	Member Label	Direction	Magnitude[lb,lb-ft]	Location[in,%]
6	MP3	Z	-390.12	6
7	MP3	X	0	90
8	MP3	Z	-390.12	90
9	MP4	X	0	6
10	MP4	Z	-390.12	6
11	MP4	X	0	90
12	MP4	Z	-390.12	90
13	MP3	X	0	48
14	MP3	Z	-80.44	48
15	MP4	X	0	48
16	MP4	Z	-86.45	48
17	MP4	X	0	24
18	MP4	Z	-86.45	24
19	MP1	X	0	48
20	MP1	Z	-34.61	48
21	M1	X	0	10
22	M1	Z	-126.65	10
23	MP5	X	0	6
24	MP5	Z	-78	6
25	MP5	X	0	49
26	MP5	Z	-78	49
27	MP7	X	0	6
28	MP7	Z	-230.51	6
29	MP7	X	0	90
30	MP7	Z	-230.51	90
31	MP8	X	0	6
32	MP8	Z	-230.51	6
33	MP8	X	0	90
34	MP8	Z	-230.51	90
35	MP7	X	0	48
36	MP7	Z	-54.78	48
37	MP8	X	0	48
38	MP8	Z	-67.78	48
39	MP8	X	0	24
40	MP8	Z	-77.11	24
41	MP5	X	0	48
42	MP5	Z	-29.68	48
43	M3	X	0	10
44	M3	Z	-126.65	10
45	MP9	X	0	6
46	MP9	Z	-78	6
47	MP9	X	0	49
48	MP9	Z	-78	49
49	MP11	X	0	6
50	MP11	Z	-230.51	6
51	MP11	X	0	90
52	MP11	Z	-230.51	90
53	MP12	X	0	6
54	MP12	Z	-230.51	6
55	MP12	X	0	90
56	MP12	Z	-230.51	90
57	MP11	X	0	48

Member Point Loads (BLC 2 : Wind Load AZI 0) (Continued)

	Member Label	Direction	Magnitude[lb,lb-ft]	Location[in,%]
58	MP11	Z	-54.78	48
59	MP12	X	0	48
60	MP12	Z	-67.78	48
61	MP12	X	0	24
62	MP12	Z	-77.11	24
63	MP9	X	0	48
64	MP9	Z	-29.68	48
65	M5	X	0	10
66	M5	Z	-126.65	10

Member Point Loads (BLC 3 : Wind Load AZI 30)

	Member Label	Direction	Magnitude[lb,lb-ft]	Location[in,%]
1	MP1	X	-53.08	6
2	MP1	Z	-91.94	6
3	MP1	X	-53.08	49
4	MP1	Z	-91.94	49
5	MP3	X	-168.46	6
6	MP3	Z	-291.78	6
7	MP3	X	-168.46	90
8	MP3	Z	-291.78	90
9	MP4	X	-168.46	6
10	MP4	Z	-291.78	6
11	MP4	X	-168.46	90
12	MP4	Z	-291.78	90
13	MP3	X	-35.94	48
14	MP3	Z	-62.26	48
15	MP4	X	-40.11	48
16	MP4	Z	-69.48	48
17	MP4	X	-41.67	24
18	MP4	Z	-72.17	24
19	MP1	X	-16.48	48
20	MP1	Z	-28.55	48
21	M1	X	-63.32	10
22	M1	Z	-109.68	10
23	MP5	X	-53.08	6
24	MP5	Z	-91.94	6
25	MP5	X	-53.08	49
26	MP5	Z	-91.94	49
27	MP7	X	-168.46	6
28	MP7	Z	-291.78	6
29	MP7	X	-168.46	90
30	MP7	Z	-291.78	90
31	MP8	X	-168.46	6
32	MP8	Z	-291.78	6
33	MP8	X	-168.46	90
34	MP8	Z	-291.78	90
35	MP7	X	-35.94	48
36	MP7	Z	-62.26	48
37	MP8	X	-40.11	48
38	MP8	Z	-69.48	48
39	MP8	X	-41.67	24

Member Point Loads (BLC 3 : Wind Load AZI 30) (Continued)

	Member Label	Direction	Magnitude[lb,lb-ft]	Location[in,%]
40	MP8	Z	-72.17	24
41	MP5	X	-16.48	48
42	MP5	Z	-28.55	48
43	M3	X	-63.32	10
44	M3	Z	-109.68	10
45	MP9	X	-31.96	6
46	MP9	Z	-55.36	6
47	MP9	X	-31.96	49
48	MP9	Z	-55.36	49
49	MP11	X	-88.65	6
50	MP11	Z	-153.55	6
51	MP11	X	-88.65	90
52	MP11	Z	-153.55	90
53	MP12	X	-88.65	6
54	MP12	Z	-153.55	6
55	MP12	X	-88.65	90
56	MP12	Z	-153.55	90
57	MP11	X	-23.11	48
58	MP11	Z	-40.03	48
59	MP12	X	-30.78	48
60	MP12	Z	-53.31	48
61	MP12	X	-37	24
62	MP12	Z	-64.09	24
63	MP9	X	-14.02	48
64	MP9	Z	-24.28	48
65	M5	X	-63.32	10
66	M5	Z	-109.68	10

Member Point Loads (BLC 4 : Wind Load AZI 60)

	Member Label	Direction	Magnitude[lb,lb-ft]	Location[in,%]
1	MP1	X	-67.55	6
2	MP1	Z	-39	6
3	MP1	X	-67.55	49
4	MP1	Z	-39	49
5	MP3	X	-199.63	6
6	MP3	Z	-115.26	6
7	MP3	X	-199.63	90
8	MP3	Z	-115.26	90
9	MP4	X	-199.63	6
10	MP4	Z	-115.26	6
11	MP4	X	-199.63	90
12	MP4	Z	-115.26	90
13	MP3	X	-47.44	48
14	MP3	Z	-27.39	48
15	MP4	X	-58.7	48
16	MP4	Z	-33.89	48
17	MP4	X	-66.78	24
18	MP4	Z	-38.56	24
19	MP1	X	-25.7	48
20	MP1	Z	-14.84	48
21	M1	X	-109.68	10

Member Point Loads (BLC 4 : Wind Load AZI 60) (Continued)

	Member Label	Direction	Magnitude[lb,lb-ft]	Location[in,%]
22	M1	Z	-63.32	10
23	MP5	X	-104.14	6
24	MP5	Z	-60.12	6
25	MP5	X	-104.14	49
26	MP5	Z	-60.12	49
27	MP7	X	-337.86	6
28	MP7	Z	-195.06	6
29	MP7	X	-337.86	90
30	MP7	Z	-195.06	90
31	MP8	X	-337.86	6
32	MP8	Z	-195.06	6
33	MP8	X	-337.86	90
34	MP8	Z	-195.06	90
35	MP7	X	-69.67	48
36	MP7	Z	-40.22	48
37	MP8	X	-74.86	48
38	MP8	Z	-43.22	48
39	MP8	X	-74.86	24
40	MP8	Z	-43.22	24
41	MP5	X	-29.98	48
42	MP5	Z	-17.31	48
43	M3	X	-109.68	10
44	M3	Z	-63.32	10
45	MP9	X	-67.55	6
46	MP9	Z	-39	6
47	MP9	X	-67.55	49
48	MP9	Z	-39	49
49	MP11	X	-199.63	6
50	MP11	Z	-115.26	6
51	MP11	X	-199.63	90
52	MP11	Z	-115.26	90
53	MP12	X	-199.63	6
54	MP12	Z	-115.26	6
55	MP12	X	-199.63	90
56	MP12	Z	-115.26	90
57	MP11	X	-47.44	48
58	MP11	Z	-27.39	48
59	MP12	X	-58.7	48
60	MP12	Z	-33.89	48
61	MP12	X	-66.78	24
62	MP12	Z	-38.56	24
63	MP9	X	-25.7	48
64	MP9	Z	-14.84	48
65	M5	X	-109.68	10
66	M5	Z	-63.32	10

Member Point Loads (BLC 5 : Wind Load AZI 90)

	Member Label	Direction	Magnitude[lb,lb-ft]	Location[in,%]
1	MP1	X	-63.92	6
2	MP1	Z	0	6
3	MP1	X	-63.92	49

Member Point Loads (BLC 5 : Wind Load AZI 90) (Continued)

	Member Label	Direction	Magnitude[lb,lb-ft]	Location[in,%]
4	MP1	Z	0	49
5	MP3	X	-177.31	6
6	MP3	Z	0	6
7	MP3	X	-177.31	90
8	MP3	Z	0	90
9	MP4	X	-177.31	6
10	MP4	Z	0	6
11	MP4	X	-177.31	90
12	MP4	Z	0	90
13	MP3	X	-46.22	48
14	MP3	Z	0	48
15	MP4	X	-61.56	48
16	MP4	Z	0	48
17	MP4	X	-74	24
18	MP4	Z	0	24
19	MP1	X	-28.03	48
20	MP1	Z	0	48
21	M1	X	-126.65	10
22	M1	Z	0	10
23	MP5	X	-106.17	6
24	MP5	Z	0	6
25	MP5	X	-106.17	49
26	MP5	Z	0	49
27	MP7	X	-336.92	6
28	MP7	Z	0	6
29	MP7	X	-336.92	90
30	MP7	Z	0	90
31	MP8	X	-336.92	6
32	MP8	Z	0	6
33	MP8	X	-336.92	90
34	MP8	Z	0	90
35	MP7	X	-71.89	48
36	MP7	Z	0	48
37	MP8	X	-80.22	48
38	MP8	Z	0	48
39	MP8	X	-83.34	24
40	MP8	Z	0	24
41	MP5	X	-32.97	48
42	MP5	Z	0	48
43	M3	X	-126.65	10
44	M3	Z	0	10
45	MP9	X	-106.17	6
46	MP9	Z	0	6
47	MP9	X	-106.17	49
48	MP9	Z	0	49
49	MP11	X	-336.92	6
50	MP11	Z	0	6
51	MP11	X	-336.92	90
52	MP11	Z	0	90
53	MP12	X	-336.92	6
54	MP12	Z	0	6
55	MP12	X	-336.92	90

Member Point Loads (BLC 5 : Wind Load AZI 90) (Continued)

	Member Label	Direction	Magnitude[lb,lb-ft]	Location[in,%]
56	MP12	Z	0	90
57	MP11	X	-71.89	48
58	MP11	Z	0	48
59	MP12	X	-80.22	48
60	MP12	Z	0	48
61	MP12	X	-83.34	24
62	MP12	Z	0	24
63	MP9	X	-32.97	48
64	MP9	Z	0	48
65	M5	X	-126.65	10
66	M5	Z	0	10

Member Point Loads (BLC 6 : Wind Load AZI 120)

	Member Label	Direction	Magnitude[lb,lb-ft]	Location[in,%]
1	MP1	X	-67.55	6
2	MP1	Z	39	6
3	MP1	X	-67.55	49
4	MP1	Z	39	49
5	MP3	X	-199.63	6
6	MP3	Z	115.26	6
7	MP3	X	-199.63	90
8	MP3	Z	115.26	90
9	MP4	X	-199.63	6
10	MP4	Z	115.26	6
11	MP4	X	-199.63	90
12	MP4	Z	115.26	90
13	MP3	X	-47.44	48
14	MP3	Z	27.39	48
15	MP4	X	-58.7	48
16	MP4	Z	33.89	48
17	MP4	X	-66.78	24
18	MP4	Z	38.56	24
19	MP1	X	-25.7	48
20	MP1	Z	14.84	48
21	M1	X	-109.68	10
22	M1	Z	63.32	10
23	MP5	X	-67.55	6
24	MP5	Z	39	6
25	MP5	X	-67.55	49
26	MP5	Z	39	49
27	MP7	X	-199.63	6
28	MP7	Z	115.26	6
29	MP7	X	-199.63	90
30	MP7	Z	115.26	90
31	MP8	X	-199.63	6
32	MP8	Z	115.26	6
33	MP8	X	-199.63	90
34	MP8	Z	115.26	90
35	MP7	X	-47.44	48
36	MP7	Z	27.39	48
37	MP8	X	-58.7	48

Member Point Loads (BLC 6 : Wind Load AZI 120) (Continued)

	Member Label	Direction	Magnitude[lb,lb-ft]	Location[in,%]
38	MP8	Z	33.89	48
39	MP8	X	-66.78	24
40	MP8	Z	38.56	24
41	MP5	X	-25.7	48
42	MP5	Z	14.84	48
43	M3	X	-109.68	10
44	M3	Z	63.32	10
45	MP9	X	-104.14	6
46	MP9	Z	60.12	6
47	MP9	X	-104.14	49
48	MP9	Z	60.12	49
49	MP11	X	-337.86	6
50	MP11	Z	195.06	6
51	MP11	X	-337.86	90
52	MP11	Z	195.06	90
53	MP12	X	-337.86	6
54	MP12	Z	195.06	6
55	MP12	X	-337.86	90
56	MP12	Z	195.06	90
57	MP11	X	-69.67	48
58	MP11	Z	40.22	48
59	MP12	X	-74.86	48
60	MP12	Z	43.22	48
61	MP12	X	-74.86	24
62	MP12	Z	43.22	24
63	MP9	X	-29.98	48
64	MP9	Z	17.31	48
65	M5	X	-109.68	10
66	M5	Z	63.32	10

Member Point Loads (BLC 7 : Wind Load AZI 150)

	Member Label	Direction	Magnitude[lb,lb-ft]	Location[in,%]
1	MP1	X	-53.08	6
2	MP1	Z	91.94	6
3	MP1	X	-53.08	49
4	MP1	Z	91.94	49
5	MP3	X	-168.46	6
6	MP3	Z	291.78	6
7	MP3	X	-168.46	90
8	MP3	Z	291.78	90
9	MP4	X	-168.46	6
10	MP4	Z	291.78	6
11	MP4	X	-168.46	90
12	MP4	Z	291.78	90
13	MP3	X	-35.94	48
14	MP3	Z	62.26	48
15	MP4	X	-40.11	48
16	MP4	Z	69.48	48
17	MP4	X	-41.67	24
18	MP4	Z	72.17	24
19	MP1	X	-16.48	48

Member Point Loads (BLC 7 : Wind Load AZI 150) (Continued)

	Member Label	Direction	Magnitude[lb,lb-ft]	Location[in,%]
20	MP1	Z	28.55	48
21	M1	X	-63.32	10
22	M1	Z	109.68	10
23	MP5	X	-31.96	6
24	MP5	Z	55.36	6
25	MP5	X	-31.96	49
26	MP5	Z	55.36	49
27	MP7	X	-88.65	6
28	MP7	Z	153.55	6
29	MP7	X	-88.65	90
30	MP7	Z	153.55	90
31	MP8	X	-88.65	6
32	MP8	Z	153.55	6
33	MP8	X	-88.65	90
34	MP8	Z	153.55	90
35	MP7	X	-23.11	48
36	MP7	Z	40.03	48
37	MP8	X	-30.78	48
38	MP8	Z	53.31	48
39	MP8	X	-37	24
40	MP8	Z	64.09	24
41	MP5	X	-14.02	48
42	MP5	Z	24.28	48
43	M3	X	-63.32	10
44	M3	Z	109.68	10
45	MP9	X	-53.08	6
46	MP9	Z	91.94	6
47	MP9	X	-53.08	49
48	MP9	Z	91.94	49
49	MP11	X	-168.46	6
50	MP11	Z	291.78	6
51	MP11	X	-168.46	90
52	MP11	Z	291.78	90
53	MP12	X	-168.46	6
54	MP12	Z	291.78	6
55	MP12	X	-168.46	90
56	MP12	Z	291.78	90
57	MP11	X	-35.94	48
58	MP11	Z	62.26	48
59	MP12	X	-40.11	48
60	MP12	Z	69.48	48
61	MP12	X	-41.67	24
62	MP12	Z	72.17	24
63	MP9	X	-16.48	48
64	MP9	Z	28.55	48
65	M5	X	-63.32	10
66	M5	Z	109.68	10

Member Point Loads (BLC 8 : Wind Load AZI 180)

	Member Label	Direction	Magnitude[lb,lb-ft]	Location[in,%]
1	MP1	X	0	6

Member Point Loads (BLC 8 : Wind Load AZI 180) (Continued)

	Member Label	Direction	Magnitude[lb,lb-ft]	Location[in,%]
2	MP1	Z	120.25	6
3	MP1	X	0	49
4	MP1	Z	120.25	49
5	MP3	X	0	6
6	MP3	Z	390.12	6
7	MP3	X	0	90
8	MP3	Z	390.12	90
9	MP4	X	0	6
10	MP4	Z	390.12	6
11	MP4	X	0	90
12	MP4	Z	390.12	90
13	MP3	X	0	48
14	MP3	Z	80.44	48
15	MP4	X	0	48
16	MP4	Z	86.45	48
17	MP4	X	0	24
18	MP4	Z	86.45	24
19	MP1	X	0	48
20	MP1	Z	34.61	48
21	M1	X	0	10
22	M1	Z	126.65	10
23	MP5	X	0	6
24	MP5	Z	78	6
25	MP5	X	0	49
26	MP5	Z	78	49
27	MP7	X	0	6
28	MP7	Z	230.51	6
29	MP7	X	0	90
30	MP7	Z	230.51	90
31	MP8	X	0	6
32	MP8	Z	230.51	6
33	MP8	X	0	90
34	MP8	Z	230.51	90
35	MP7	X	0	48
36	MP7	Z	54.78	48
37	MP8	X	0	48
38	MP8	Z	67.78	48
39	MP8	X	0	24
40	MP8	Z	77.11	24
41	MP5	X	0	48
42	MP5	Z	29.68	48
43	M3	X	0	10
44	M3	Z	126.65	10
45	MP9	X	0	6
46	MP9	Z	78	6
47	MP9	X	0	49
48	MP9	Z	78	49
49	MP11	X	0	6
50	MP11	Z	230.51	6
51	MP11	X	0	90
52	MP11	Z	230.51	90
53	MP12	X	0	6

Member Point Loads (BLC 8 : Wind Load AZI 180) (Continued)

	Member Label	Direction	Magnitude[lb,lb-ft]	Location[in,%]
54	MP12	Z	230.51	6
55	MP12	X	0	90
56	MP12	Z	230.51	90
57	MP11	X	0	48
58	MP11	Z	54.78	48
59	MP12	X	0	48
60	MP12	Z	67.78	48
61	MP12	X	0	24
62	MP12	Z	77.11	24
63	MP9	X	0	48
64	MP9	Z	29.68	48
65	M5	X	0	10
66	M5	Z	126.65	10

Member Point Loads (BLC 9 : Wind Load AZI 210)

	Member Label	Direction	Magnitude[lb,lb-ft]	Location[in,%]
1	MP1	X	53.08	6
2	MP1	Z	91.94	6
3	MP1	X	53.08	49
4	MP1	Z	91.94	49
5	MP3	X	168.46	6
6	MP3	Z	291.78	6
7	MP3	X	168.46	90
8	MP3	Z	291.78	90
9	MP4	X	168.46	6
10	MP4	Z	291.78	6
11	MP4	X	168.46	90
12	MP4	Z	291.78	90
13	MP3	X	35.94	48
14	MP3	Z	62.26	48
15	MP4	X	40.11	48
16	MP4	Z	69.48	48
17	MP4	X	41.67	24
18	MP4	Z	72.17	24
19	MP1	X	16.48	48
20	MP1	Z	28.55	48
21	M1	X	63.32	10
22	M1	Z	109.68	10
23	MP5	X	53.08	6
24	MP5	Z	91.94	6
25	MP5	X	53.08	49
26	MP5	Z	91.94	49
27	MP7	X	168.46	6
28	MP7	Z	291.78	6
29	MP7	X	168.46	90
30	MP7	Z	291.78	90
31	MP8	X	168.46	6
32	MP8	Z	291.78	6
33	MP8	X	168.46	90
34	MP8	Z	291.78	90
35	MP7	X	35.94	48

Member Point Loads (BLC 9 : Wind Load AZI 210) (Continued)

	Member Label	Direction	Magnitude[lb,lb-ft]	Location[in,%]
36	MP7	Z	62.26	48
37	MP8	X	40.11	48
38	MP8	Z	69.48	48
39	MP8	X	41.67	24
40	MP8	Z	72.17	24
41	MP5	X	16.48	48
42	MP5	Z	28.55	48
43	M3	X	63.32	10
44	M3	Z	109.68	10
45	MP9	X	31.96	6
46	MP9	Z	55.36	6
47	MP9	X	31.96	49
48	MP9	Z	55.36	49
49	MP11	X	88.65	6
50	MP11	Z	153.55	6
51	MP11	X	88.65	90
52	MP11	Z	153.55	90
53	MP12	X	88.65	6
54	MP12	Z	153.55	6
55	MP12	X	88.65	90
56	MP12	Z	153.55	90
57	MP11	X	23.11	48
58	MP11	Z	40.03	48
59	MP12	X	30.78	48
60	MP12	Z	53.31	48
61	MP12	X	37	24
62	MP12	Z	64.09	24
63	MP9	X	14.02	48
64	MP9	Z	24.28	48
65	M5	X	63.32	10
66	M5	Z	109.68	10

Member Point Loads (BLC 10 : Wind Load AZI 240)

	Member Label	Direction	Magnitude[lb,lb-ft]	Location[in,%]
1	MP1	X	67.55	6
2	MP1	Z	39	6
3	MP1	X	67.55	49
4	MP1	Z	39	49
5	MP3	X	199.63	6
6	MP3	Z	115.26	6
7	MP3	X	199.63	90
8	MP3	Z	115.26	90
9	MP4	X	199.63	6
10	MP4	Z	115.26	6
11	MP4	X	199.63	90
12	MP4	Z	115.26	90
13	MP3	X	47.44	48
14	MP3	Z	27.39	48
15	MP4	X	58.7	48
16	MP4	Z	33.89	48
17	MP4	X	66.78	24

Member Point Loads (BLC 10 : Wind Load AZI 240) (Continued)

	Member Label	Direction	Magnitude[lb,lb-ft]	Location[in,%]
18	MP4	Z	38.56	24
19	MP1	X	25.7	48
20	MP1	Z	14.84	48
21	M1	X	109.68	10
22	M1	Z	63.32	10
23	MP5	X	104.14	6
24	MP5	Z	60.12	6
25	MP5	X	104.14	49
26	MP5	Z	60.12	49
27	MP7	X	337.86	6
28	MP7	Z	195.06	6
29	MP7	X	337.86	90
30	MP7	Z	195.06	90
31	MP8	X	337.86	6
32	MP8	Z	195.06	6
33	MP8	X	337.86	90
34	MP8	Z	195.06	90
35	MP7	X	69.67	48
36	MP7	Z	40.22	48
37	MP8	X	74.86	48
38	MP8	Z	43.22	48
39	MP8	X	74.86	24
40	MP8	Z	43.22	24
41	MP5	X	29.98	48
42	MP5	Z	17.31	48
43	M3	X	109.68	10
44	M3	Z	63.32	10
45	MP9	X	67.55	6
46	MP9	Z	39	6
47	MP9	X	67.55	49
48	MP9	Z	39	49
49	MP11	X	199.63	6
50	MP11	Z	115.26	6
51	MP11	X	199.63	90
52	MP11	Z	115.26	90
53	MP12	X	199.63	6
54	MP12	Z	115.26	6
55	MP12	X	199.63	90
56	MP12	Z	115.26	90
57	MP11	X	47.44	48
58	MP11	Z	27.39	48
59	MP12	X	58.7	48
60	MP12	Z	33.89	48
61	MP12	X	66.78	24
62	MP12	Z	38.56	24
63	MP9	X	25.7	48
64	MP9	Z	14.84	48
65	M5	X	109.68	10
66	M5	Z	63.32	10

Member Point Loads (BLC 11 : Wind Load AZI 270)

Member Label	Direction	Magnitude[lb,lb-ft]	Location[in,%]

Member Point Loads (BLC 11 : Wind Load AZI 270) (Continued)

	Member Label	Direction	Magnitude[lb,lb-ft]	Location[in,%]
1	MP1	X	63.92	6
2	MP1	Z	0	6
3	MP1	X	63.92	49
4	MP1	Z	0	49
5	MP3	X	177.31	6
6	MP3	Z	0	6
7	MP3	X	177.31	90
8	MP3	Z	0	90
9	MP4	X	177.31	6
10	MP4	Z	0	6
11	MP4	X	177.31	90
12	MP4	Z	0	90
13	MP3	X	46.22	48
14	MP3	Z	0	48
15	MP4	X	61.56	48
16	MP4	Z	0	48
17	MP4	X	74	24
18	MP4	Z	0	24
19	MP1	X	28.03	48
20	MP1	Z	0	48
21	M1	X	126.65	10
22	M1	Z	0	10
23	MP5	X	106.17	6
24	MP5	Z	0	6
25	MP5	X	106.17	49
26	MP5	Z	0	49
27	MP7	X	336.92	6
28	MP7	Z	0	6
29	MP7	X	336.92	90
30	MP7	Z	0	90
31	MP8	X	336.92	6
32	MP8	Z	0	6
33	MP8	X	336.92	90
34	MP8	Z	0	90
35	MP7	X	71.89	48
36	MP7	Z	0	48
37	MP8	X	80.22	48
38	MP8	Z	0	48
39	MP8	X	83.34	24
40	MP8	Z	0	24
41	MP5	X	32.97	48
42	MP5	Z	0	48
43	M3	X	126.65	10
44	M3	Z	0	10
45	MP9	X	106.17	6
46	MP9	Z	0	6
47	MP9	X	106.17	49
48	MP9	Z	0	49
49	MP11	X	336.92	6
50	MP11	Z	0	6
51	MP11	X	336.92	90
52	MP11	Z	0	90

Member Point Loads (BLC 11 : Wind Load AZI 270) (Continued)

	Member Label	Direction	Magnitude[lb,lb-ft]	Location[in,%]
53	MP12	X	336.92	6
54	MP12	Z	0	6
55	MP12	X	336.92	90
56	MP12	Z	0	90
57	MP11	X	71.89	48
58	MP11	Z	0	48
59	MP12	X	80.22	48
60	MP12	Z	0	48
61	MP12	X	83.34	24
62	MP12	Z	0	24
63	MP9	X	32.97	48
64	MP9	Z	0	48
65	M5	X	126.65	10
66	M5	Z	0	10

Member Point Loads (BLC 12 : Wind Load AZI 300)

	Member Label	Direction	Magnitude[lb,lb-ft]	Location[in,%]
1	MP1	X	67.55	6
2	MP1	Z	-39	6
3	MP1	X	67.55	49
4	MP1	Z	-39	49
5	MP3	X	199.63	6
6	MP3	Z	-115.26	6
7	MP3	X	199.63	90
8	MP3	Z	-115.26	90
9	MP4	X	199.63	6
10	MP4	Z	-115.26	6
11	MP4	X	199.63	90
12	MP4	Z	-115.26	90
13	MP3	X	47.44	48
14	MP3	Z	-27.39	48
15	MP4	X	58.7	48
16	MP4	Z	-33.89	48
17	MP4	X	66.78	24
18	MP4	Z	-38.56	24
19	MP1	X	25.7	48
20	MP1	Z	-14.84	48
21	M1	X	109.68	10
22	M1	Z	-63.32	10
23	MP5	X	67.55	6
24	MP5	Z	-39	6
25	MP5	X	67.55	49
26	MP5	Z	-39	49
27	MP7	X	199.63	6
28	MP7	Z	-115.26	6
29	MP7	X	199.63	90
30	MP7	Z	-115.26	90
31	MP8	X	199.63	6
32	MP8	Z	-115.26	6
33	MP8	X	199.63	90
34	MP8	Z	-115.26	90

Member Point Loads (BLC 12 : Wind Load AZI 300) (Continued)

	Member Label	Direction	Magnitude[lb,lb-ft]	Location[in,%]
35	MP7	X	47.44	48
36	MP7	Z	-27.39	48
37	MP8	X	58.7	48
38	MP8	Z	-33.89	48
39	MP8	X	66.78	24
40	MP8	Z	-38.56	24
41	MP5	X	25.7	48
42	MP5	Z	-14.84	48
43	M3	X	109.68	10
44	M3	Z	-63.32	10
45	MP9	X	104.14	6
46	MP9	Z	-60.12	6
47	MP9	X	104.14	49
48	MP9	Z	-60.12	49
49	MP11	X	337.86	6
50	MP11	Z	-195.06	6
51	MP11	X	337.86	90
52	MP11	Z	-195.06	90
53	MP12	X	337.86	6
54	MP12	Z	-195.06	6
55	MP12	X	337.86	90
56	MP12	Z	-195.06	90
57	MP11	X	69.67	48
58	MP11	Z	-40.22	48
59	MP12	X	74.86	48
60	MP12	Z	-43.22	48
61	MP12	X	74.86	24
62	MP12	Z	-43.22	24
63	MP9	X	29.98	48
64	MP9	Z	-17.31	48
65	M5	X	109.68	10
66	M5	Z	-63.32	10

Member Point Loads (BLC 13 : Wind Load AZI 330)

	Member Label	Direction	Magnitude[lb,lb-ft]	Location[in,%]
1	MP1	X	53.08	6
2	MP1	Z	-91.94	6
3	MP1	X	53.08	49
4	MP1	Z	-91.94	49
5	MP3	X	168.46	6
6	MP3	Z	-291.78	6
7	MP3	X	168.46	90
8	MP3	Z	-291.78	90
9	MP4	X	168.46	6
10	MP4	Z	-291.78	6
11	MP4	X	168.46	90
12	MP4	Z	-291.78	90
13	MP3	X	35.94	48
14	MP3	Z	-62.26	48
15	MP4	X	40.11	48
16	MP4	Z	-69.48	48

Member Point Loads (BLC 13 : Wind Load AZI 330) (Continued)

	Member Label	Direction	Magnitude[lb,lb-ft]	Location[in,%]
17	MP4	X	41.67	24
18	MP4	Z	-72.17	24
19	MP1	X	16.48	48
20	MP1	Z	-28.55	48
21	M1	X	63.32	10
22	M1	Z	-109.68	10
23	MP5	X	31.96	6
24	MP5	Z	-55.36	6
25	MP5	X	31.96	49
26	MP5	Z	-55.36	49
27	MP7	X	88.65	6
28	MP7	Z	-153.55	6
29	MP7	X	88.65	90
30	MP7	Z	-153.55	90
31	MP8	X	88.65	6
32	MP8	Z	-153.55	6
33	MP8	X	88.65	90
34	MP8	Z	-153.55	90
35	MP7	X	23.11	48
36	MP7	Z	-40.03	48
37	MP8	X	30.78	48
38	MP8	Z	-53.31	48
39	MP8	X	37	24
40	MP8	Z	-64.09	24
41	MP5	X	14.02	48
42	MP5	Z	-24.28	48
43	M3	X	63.32	10
44	M3	Z	-109.68	10
45	MP9	X	53.08	6
46	MP9	Z	-91.94	6
47	MP9	X	53.08	49
48	MP9	Z	-91.94	49
49	MP11	X	168.46	6
50	MP11	Z	-291.78	6
51	MP11	X	168.46	90
52	MP11	Z	-291.78	90
53	MP12	X	168.46	6
54	MP12	Z	-291.78	6
55	MP12	X	168.46	90
56	MP12	Z	-291.78	90
57	MP11	X	35.94	48
58	MP11	Z	-62.26	48
59	MP12	X	40.11	48
60	MP12	Z	-69.48	48
61	MP12	X	41.67	24
62	MP12	Z	-72.17	24
63	MP9	X	16.48	48
64	MP9	Z	-28.55	48
65	M5	X	63.32	10
66	M5	Z	-109.68	10

Member Point Loads (BLC 16 : Ice Weight)

	Member Label	Direction	Magnitude[lb,lb-ft]	Location[in,%]
1	MP1	Y	-41.591	6
2	MP1	Y	-41.591	49
3	MP3	Y	-119.663	6
4	MP3	Y	-119.663	90
5	MP4	Y	-119.663	6
6	MP4	Y	-119.663	90
7	MP3	Y	-40.944	48
8	MP4	Y	-47.455	48
9	MP4	Y	-52.248	24
10	MP1	Y	-20.656	48
11	M1	Y	-70.559	10
12	MP5	Y	-41.591	6
13	MP5	Y	-41.591	49
14	MP7	Y	-119.663	6
15	MP7	Y	-119.663	90
16	MP8	Y	-119.663	6
17	MP8	Y	-119.663	90
18	MP7	Y	-40.944	48
19	MP8	Y	-47.455	48
20	MP8	Y	-52.248	24
21	MP5	Y	-20.656	48
22	M3	Y	-70.559	10
23	MP9	Y	-41.591	6
24	MP9	Y	-41.591	49
25	MP11	Y	-119.663	6
26	MP11	Y	-119.663	90
27	MP12	Y	-119.663	6
28	MP12	Y	-119.663	90
29	MP11	Y	-40.944	48
30	MP12	Y	-47.455	48
31	MP12	Y	-52.248	24
32	MP9	Y	-20.656	48
33	M5	Y	-70.559	10

Member Point Loads (BLC 17 : Ice Wind Load AZI 0)

	Member Label	Direction	Magnitude[lb,lb-ft]	Location[in,%]
1	MP1	X	0	6
2	MP1	Z	-11.62	6
3	MP1	X	0	49
4	MP1	Z	-11.62	49
5	MP3	X	0	6
6	MP3	Z	-31.6	6
7	MP3	X	0	90
8	MP3	Z	-31.6	90
9	MP4	X	0	6
10	MP4	Z	-31.6	6
11	MP4	X	0	90
12	MP4	Z	-31.6	90
13	MP3	X	0	48
14	MP3	Z	-7.74	48
15	MP4	X	0	48

Member Point Loads (BLC 17 : Ice Wind Load AZI 0) (Continued)

	Member Label	Direction	Magnitude[lb,lb-ft]	Location[in,%]
16	MP4	Z	-8.3	48
17	MP4	X	0	24
18	MP4	Z	-8.3	24
19	MP1	X	0	48
20	MP1	Z	-5.1	48
21	M1	X	0	10
22	M1	Z	-12.69	10
23	MP5	X	0	6
24	MP5	Z	-9.57	6
25	MP5	X	0	49
26	MP5	Z	-9.57	49
27	MP7	X	0	6
28	MP7	Z	-22.55	6
29	MP7	X	0	90
30	MP7	Z	-22.55	90
31	MP8	X	0	6
32	MP8	Z	-22.55	6
33	MP8	X	0	90
34	MP8	Z	-22.55	90
35	MP7	X	0	48
36	MP7	Z	-6.54	48
37	MP8	X	0	48
38	MP8	Z	-7.46	48
39	MP8	X	0	24
40	MP8	Z	-7.9	24
41	MP5	X	0	48
42	MP5	Z	-4.74	48
43	M3	X	0	10
44	M3	Z	-12.69	10
45	MP9	X	0	6
46	MP9	Z	-9.57	6
47	MP9	X	0	49
48	MP9	Z	-9.57	49
49	MP11	X	0	6
50	MP11	Z	-22.55	6
51	MP11	X	0	90
52	MP11	Z	-22.55	90
53	MP12	X	0	6
54	MP12	Z	-22.55	6
55	MP12	X	0	90
56	MP12	Z	-22.55	90
57	MP11	X	0	48
58	MP11	Z	-6.54	48
59	MP12	X	0	48
60	MP12	Z	-7.46	48
61	MP12	X	0	24
62	MP12	Z	-7.9	24
63	MP9	X	0	48
64	MP9	Z	-4.74	48
65	M5	X	0	10
66	M5	Z	-12.69	10

Member Point Loads (BLC 18 : Ice Wind Load AZI 30)

	Member Label	Direction	Magnitude[lb,lb-ft]	Location[in,%]
1	MP1	X	-5.47	6
2	MP1	Z	-9.47	6
3	MP1	X	-5.47	49
4	MP1	Z	-9.47	49
5	MP3	X	-14.29	6
6	MP3	Z	-24.75	6
7	MP3	X	-14.29	90
8	MP3	Z	-24.75	90
9	MP4	X	-14.29	6
10	MP4	Z	-24.75	6
11	MP4	X	-14.29	90
12	MP4	Z	-24.75	90
13	MP3	X	-3.67	48
14	MP3	Z	-6.36	48
15	MP4	X	-4.01	48
16	MP4	Z	-6.95	48
17	MP4	X	-4.08	24
18	MP4	Z	-7.07	24
19	MP1	X	-2.49	48
20	MP1	Z	-4.32	48
21	M1	X	-6.34	10
22	M1	Z	-10.99	10
23	MP5	X	-5.47	6
24	MP5	Z	-9.47	6
25	MP5	X	-5.47	49
26	MP5	Z	-9.47	49
27	MP7	X	-14.29	6
28	MP7	Z	-24.75	6
29	MP7	X	-14.29	90
30	MP7	Z	-24.75	90
31	MP8	X	-14.29	6
32	MP8	Z	-24.75	6
33	MP8	X	-14.29	90
34	MP8	Z	-24.75	90
35	MP7	X	-3.67	48
36	MP7	Z	-6.36	48
37	MP8	X	-4.01	48
38	MP8	Z	-6.95	48
39	MP8	X	-4.08	24
40	MP8	Z	-7.07	24
41	MP5	X	-2.49	48
42	MP5	Z	-4.32	48
43	M3	X	-6.34	10
44	M3	Z	-10.99	10
45	MP9	X	-4.45	6
46	MP9	Z	-7.7	6
47	MP9	X	-4.45	49
48	MP9	Z	-7.7	49
49	MP11	X	-9.76	6
50	MP11	Z	-16.91	6
51	MP11	X	-9.76	90
52	MP11	Z	-16.91	90

Member Point Loads (BLC 18 : Ice Wind Load AZI 30) (Continued)

	Member Label	Direction	Magnitude[lb,lb-ft]	Location[in,%]
53	MP12	X	-9.76	6
54	MP12	Z	-16.91	6
55	MP12	X	-9.76	90
56	MP12	Z	-16.91	90
57	MP11	X	-3.07	48
58	MP11	Z	-5.32	48
59	MP12	X	-3.59	48
60	MP12	Z	-6.22	48
61	MP12	X	-3.88	24
62	MP12	Z	-6.72	24
63	MP9	X	-2.31	48
64	MP9	Z	-4	48
65	M5	X	-6.34	10
66	M5	Z	-10.99	10

Member Point Loads (BLC 19 : Ice Wind Load AZI 60)

	Member Label	Direction	Magnitude[lb,lb-ft]	Location[in,%]
1	MP1	X	-8.29	6
2	MP1	Z	-4.79	6
3	MP1	X	-8.29	49
4	MP1	Z	-4.79	49
5	MP3	X	-19.52	6
6	MP3	Z	-11.27	6
7	MP3	X	-19.52	90
8	MP3	Z	-11.27	90
9	MP4	X	-19.52	6
10	MP4	Z	-11.27	6
11	MP4	X	-19.52	90
12	MP4	Z	-11.27	90
13	MP3	X	-5.66	48
14	MP3	Z	-3.27	48
15	MP4	X	-6.46	48
16	MP4	Z	-3.73	48
17	MP4	X	-6.84	24
18	MP4	Z	-3.95	24
19	MP1	X	-4.11	48
20	MP1	Z	-2.37	48
21	M1	X	-10.99	10
22	M1	Z	-6.34	10
23	MP5	X	-10.06	6
24	MP5	Z	-5.81	6
25	MP5	X	-10.06	49
26	MP5	Z	-5.81	49
27	MP7	X	-27.37	6
28	MP7	Z	-15.8	6
29	MP7	X	-27.37	90
30	MP7	Z	-15.8	90
31	MP8	X	-27.37	6
32	MP8	Z	-15.8	6
33	MP8	X	-27.37	90
34	MP8	Z	-15.8	90

Member Point Loads (BLC 19 : Ice Wind Load AZI 60) (Continued)

	Member Label	Direction	Magnitude[lb,lb-ft]	Location[in,%]
35	MP7	X	-6.7	48
36	MP7	Z	-3.87	48
37	MP8	X	-7.19	48
38	MP8	Z	-4.15	48
39	MP8	X	-7.19	24
40	MP8	Z	-4.15	24
41	MP5	X	-4.42	48
42	MP5	Z	-2.55	48
43	M3	X	-10.99	10
44	M3	Z	-6.34	10
45	MP9	X	-8.29	6
46	MP9	Z	-4.79	6
47	MP9	X	-8.29	49
48	MP9	Z	-4.79	49
49	MP11	X	-19.52	6
50	MP11	Z	-11.27	6
51	MP11	X	-19.52	90
52	MP11	Z	-11.27	90
53	MP12	X	-19.52	6
54	MP12	Z	-11.27	6
55	MP12	X	-19.52	90
56	MP12	Z	-11.27	90
57	MP11	X	-5.66	48
58	MP11	Z	-3.27	48
59	MP12	X	-6.46	48
60	MP12	Z	-3.73	48
61	MP12	X	-6.84	24
62	MP12	Z	-3.95	24
63	MP9	X	-4.11	48
64	MP9	Z	-2.37	48
65	M5	X	-10.99	10
66	M5	Z	-6.34	10

Member Point Loads (BLC 20 : Ice Wind Load AZI 90)

	Member Label	Direction	Magnitude[lb,lb-ft]	Location[in,%]
1	MP1	X	-8.89	6
2	MP1	Z	0	6
3	MP1	X	-8.89	49
4	MP1	Z	0	49
5	MP3	X	-19.53	6
6	MP3	Z	0	6
7	MP3	X	-19.53	90
8	MP3	Z	0	90
9	MP4	X	-19.53	6
10	MP4	Z	0	6
11	MP4	X	-19.53	90
12	MP4	Z	0	90
13	MP3	X	-6.14	48
14	MP3	Z	0	48
15	MP4	X	-7.19	48
16	MP4	Z	0	48

Member Point Loads (BLC 20 : Ice Wind Load AZI 90) (Continued)

	Member Label	Direction	Magnitude[lb,lb-ft]	Location[in,%]
17	MP4	X	-7.76	24
18	MP4	Z	0	24
19	MP1	X	-4.62	48
20	MP1	Z	0	48
21	M1	X	-12.69	10
22	M1	Z	0	10
23	MP5	X	-10.94	6
24	MP5	Z	0	6
25	MP5	X	-10.94	49
26	MP5	Z	0	49
27	MP7	X	-28.58	6
28	MP7	Z	0	6
29	MP7	X	-28.58	90
30	MP7	Z	0	90
31	MP8	X	-28.58	6
32	MP8	Z	0	6
33	MP8	X	-28.58	90
34	MP8	Z	0	90
35	MP7	X	-7.34	48
36	MP7	Z	0	48
37	MP8	X	-8.02	48
38	MP8	Z	0	48
39	MP8	X	-8.17	24
40	MP8	Z	0	24
41	MP5	X	-4.98	48
42	MP5	Z	0	48
43	M3	X	-12.69	10
44	M3	Z	0	10
45	MP9	X	-10.94	6
46	MP9	Z	0	6
47	MP9	X	-10.94	49
48	MP9	Z	0	49
49	MP11	X	-28.58	6
50	MP11	Z	0	6
51	MP11	X	-28.58	90
52	MP11	Z	0	90
53	MP12	X	-28.58	6
54	MP12	Z	0	6
55	MP12	X	-28.58	90
56	MP12	Z	0	90
57	MP11	X	-7.34	48
58	MP11	Z	0	48
59	MP12	X	-8.02	48
60	MP12	Z	0	48
61	MP12	X	-8.17	24
62	MP12	Z	0	24
63	MP9	X	-4.98	48
64	MP9	Z	0	48
65	M5	X	-12.69	10
66	M5	Z	0	10

Member Point Loads (BLC 21 : Ice Wind Load AZI 120)

	Member Label	Direction	Magnitude[lb,lb-ft]	Location[in,%]
1	MP1	X	-8.29	6
2	MP1	Z	4.79	6
3	MP1	X	-8.29	49
4	MP1	Z	4.79	49
5	MP3	X	-19.52	6
6	MP3	Z	11.27	6
7	MP3	X	-19.52	90
8	MP3	Z	11.27	90
9	MP4	X	-19.52	6
10	MP4	Z	11.27	6
11	MP4	X	-19.52	90
12	MP4	Z	11.27	90
13	MP3	X	-5.66	48
14	MP3	Z	3.27	48
15	MP4	X	-6.46	48
16	MP4	Z	3.73	48
17	MP4	X	-6.84	24
18	MP4	Z	3.95	24
19	MP1	X	-4.11	48
20	MP1	Z	2.37	48
21	M1	X	-10.99	10
22	M1	Z	6.34	10
23	MP5	X	-8.29	6
24	MP5	Z	4.79	6
25	MP5	X	-8.29	49
26	MP5	Z	4.79	49
27	MP7	X	-19.52	6
28	MP7	Z	11.27	6
29	MP7	X	-19.52	90
30	MP7	Z	11.27	90
31	MP8	X	-19.52	6
32	MP8	Z	11.27	6
33	MP8	X	-19.52	90
34	MP8	Z	11.27	90
35	MP7	X	-5.66	48
36	MP7	Z	3.27	48
37	MP8	X	-6.46	48
38	MP8	Z	3.73	48
39	MP8	X	-6.84	24
40	MP8	Z	3.95	24
41	MP5	X	-4.11	48
42	MP5	Z	2.37	48
43	M3	X	-10.99	10
44	M3	Z	6.34	10
45	MP9	X	-10.06	6
46	MP9	Z	5.81	6
47	MP9	X	-10.06	49
48	MP9	Z	5.81	49
49	MP11	X	-27.37	6
50	MP11	Z	15.8	6
51	MP11	X	-27.37	90
52	MP11	Z	15.8	90

Member Point Loads (BLC 21 : Ice Wind Load AZI 120) (Continued)

	Member Label	Direction	Magnitude[lb,lb-ft]	Location[in,%]
53	MP12	X	-27.37	6
54	MP12	Z	15.8	6
55	MP12	X	-27.37	90
56	MP12	Z	15.8	90
57	MP11	X	-6.7	48
58	MP11	Z	3.87	48
59	MP12	X	-7.19	48
60	MP12	Z	4.15	48
61	MP12	X	-7.19	24
62	MP12	Z	4.15	24
63	MP9	X	-4.42	48
64	MP9	Z	2.55	48
65	M5	X	-10.99	10
66	M5	Z	6.34	10

Member Point Loads (BLC 22 : Ice Wind Load AZI 150)

	Member Label	Direction	Magnitude[lb,lb-ft]	Location[in,%]
1	MP1	X	-5.47	6
2	MP1	Z	9.47	6
3	MP1	X	-5.47	49
4	MP1	Z	9.47	49
5	MP3	X	-14.29	6
6	MP3	Z	24.75	6
7	MP3	X	-14.29	90
8	MP3	Z	24.75	90
9	MP4	X	-14.29	6
10	MP4	Z	24.75	6
11	MP4	X	-14.29	90
12	MP4	Z	24.75	90
13	MP3	X	-3.67	48
14	MP3	Z	6.36	48
15	MP4	X	-4.01	48
16	MP4	Z	6.95	48
17	MP4	X	-4.08	24
18	MP4	Z	7.07	24
19	MP1	X	-2.49	48
20	MP1	Z	4.32	48
21	M1	X	-6.34	10
22	M1	Z	10.99	10
23	MP5	X	-4.45	6
24	MP5	Z	7.7	6
25	MP5	X	-4.45	49
26	MP5	Z	7.7	49
27	MP7	X	-9.76	6
28	MP7	Z	16.91	6
29	MP7	X	-9.76	90
30	MP7	Z	16.91	90
31	MP8	X	-9.76	6
32	MP8	Z	16.91	6
33	MP8	X	-9.76	90
34	MP8	Z	16.91	90

Member Point Loads (BLC 22 : Ice Wind Load AZI 150) (Continued)

	Member Label	Direction	Magnitude[lb,lb-ft]	Location[in,%]
35	MP7	X	-3.07	48
36	MP7	Z	5.32	48
37	MP8	X	-3.59	48
38	MP8	Z	6.22	48
39	MP8	X	-3.88	24
40	MP8	Z	6.72	24
41	MP5	X	-2.31	48
42	MP5	Z	4	48
43	M3	X	-6.34	10
44	M3	Z	10.99	10
45	MP9	X	-5.47	6
46	MP9	Z	9.47	6
47	MP9	X	-5.47	49
48	MP9	Z	9.47	49
49	MP11	X	-14.29	6
50	MP11	Z	24.75	6
51	MP11	X	-14.29	90
52	MP11	Z	24.75	90
53	MP12	X	-14.29	6
54	MP12	Z	24.75	6
55	MP12	X	-14.29	90
56	MP12	Z	24.75	90
57	MP11	X	-3.67	48
58	MP11	Z	6.36	48
59	MP12	X	-4.01	48
60	MP12	Z	6.95	48
61	MP12	X	-4.08	24
62	MP12	Z	7.07	24
63	MP9	X	-2.49	48
64	MP9	Z	4.32	48
65	M5	X	-6.34	10
66	M5	Z	10.99	10

Member Point Loads (BLC 23 : Ice Wind Load AZI 180)

	Member Label	Direction	Magnitude[lb,lb-ft]	Location[in,%]
1	MP1	X	0	6
2	MP1	Z	11.62	6
3	MP1	X	0	49
4	MP1	Z	11.62	49
5	MP3	X	0	6
6	MP3	Z	31.6	6
7	MP3	X	0	90
8	MP3	Z	31.6	90
9	MP4	X	0	6
10	MP4	Z	31.6	6
11	MP4	X	0	90
12	MP4	Z	31.6	90
13	MP3	X	0	48
14	MP3	Z	7.74	48
15	MP4	X	0	48
16	MP4	Z	8.3	48

Member Point Loads (BLC 23 : Ice Wind Load AZI 180) (Continued)

	Member Label	Direction	Magnitude[lb,lb-ft]	Location[in,%]
17	MP4	X	0	24
18	MP4	Z	8.3	24
19	MP1	X	0	48
20	MP1	Z	5.1	48
21	M1	X	0	10
22	M1	Z	12.69	10
23	MP5	X	0	6
24	MP5	Z	9.57	6
25	MP5	X	0	49
26	MP5	Z	9.57	49
27	MP7	X	0	6
28	MP7	Z	22.55	6
29	MP7	X	0	90
30	MP7	Z	22.55	90
31	MP8	X	0	6
32	MP8	Z	22.55	6
33	MP8	X	0	90
34	MP8	Z	22.55	90
35	MP7	X	0	48
36	MP7	Z	6.54	48
37	MP8	X	0	48
38	MP8	Z	7.46	48
39	MP8	X	0	24
40	MP8	Z	7.9	24
41	MP5	X	0	48
42	MP5	Z	4.74	48
43	M3	X	0	10
44	M3	Z	12.69	10
45	MP9	X	0	6
46	MP9	Z	9.57	6
47	MP9	X	0	49
48	MP9	Z	9.57	49
49	MP11	X	0	6
50	MP11	Z	22.55	6
51	MP11	X	0	90
52	MP11	Z	22.55	90
53	MP12	X	0	6
54	MP12	Z	22.55	6
55	MP12	X	0	90
56	MP12	Z	22.55	90
57	MP11	X	0	48
58	MP11	Z	6.54	48
59	MP12	X	0	48
60	MP12	Z	7.46	48
61	MP12	X	0	24
62	MP12	Z	7.9	24
63	MP9	X	0	48
64	MP9	Z	4.74	48
65	M5	X	0	10
66	M5	Z	12.69	10

Member Point Loads (BLC 24 : Ice Wind Load AZI 210)

	Member Label	Direction	Magnitude[lb,lb-ft]	Location[in,%]
1	MP1	X	5.47	6
2	MP1	Z	9.47	6
3	MP1	X	5.47	49
4	MP1	Z	9.47	49
5	MP3	X	14.29	6
6	MP3	Z	24.75	6
7	MP3	X	14.29	90
8	MP3	Z	24.75	90
9	MP4	X	14.29	6
10	MP4	Z	24.75	6
11	MP4	X	14.29	90
12	MP4	Z	24.75	90
13	MP3	X	3.67	48
14	MP3	Z	6.36	48
15	MP4	X	4.01	48
16	MP4	Z	6.95	48
17	MP4	X	4.08	24
18	MP4	Z	7.07	24
19	MP1	X	2.49	48
20	MP1	Z	4.32	48
21	M1	X	6.34	10
22	M1	Z	10.99	10
23	MP5	X	5.47	6
24	MP5	Z	9.47	6
25	MP5	X	5.47	49
26	MP5	Z	9.47	49
27	MP7	X	14.29	6
28	MP7	Z	24.75	6
29	MP7	X	14.29	90
30	MP7	Z	24.75	90
31	MP8	X	14.29	6
32	MP8	Z	24.75	6
33	MP8	X	14.29	90
34	MP8	Z	24.75	90
35	MP7	X	3.67	48
36	MP7	Z	6.36	48
37	MP8	X	4.01	48
38	MP8	Z	6.95	48
39	MP8	X	4.08	24
40	MP8	Z	7.07	24
41	MP5	X	2.49	48
42	MP5	Z	4.32	48
43	M3	X	6.34	10
44	M3	Z	10.99	10
45	MP9	X	4.45	6
46	MP9	Z	7.7	6
47	MP9	X	4.45	49
48	MP9	Z	7.7	49
49	MP11	X	9.76	6
50	MP11	Z	16.91	6
51	MP11	X	9.76	90
52	MP11	Z	16.91	90

Member Point Loads (BLC 24 : Ice Wind Load AZI 210) (Continued)

	Member Label	Direction	Magnitude[lb,lb-ft]	Location[in,%]
53	MP12	X	9.76	6
54	MP12	Z	16.91	6
55	MP12	X	9.76	90
56	MP12	Z	16.91	90
57	MP11	X	3.07	48
58	MP11	Z	5.32	48
59	MP12	X	3.59	48
60	MP12	Z	6.22	48
61	MP12	X	3.88	24
62	MP12	Z	6.72	24
63	MP9	X	2.31	48
64	MP9	Z	4	48
65	M5	X	6.34	10
66	M5	Z	10.99	10

Member Point Loads (BLC 25 : Ice Wind Load AZI 240)

	Member Label	Direction	Magnitude[lb,lb-ft]	Location[in,%]
1	MP1	X	8.29	6
2	MP1	Z	4.79	6
3	MP1	X	8.29	49
4	MP1	Z	4.79	49
5	MP3	X	19.52	6
6	MP3	Z	11.27	6
7	MP3	X	19.52	90
8	MP3	Z	11.27	90
9	MP4	X	19.52	6
10	MP4	Z	11.27	6
11	MP4	X	19.52	90
12	MP4	Z	11.27	90
13	MP3	X	5.66	48
14	MP3	Z	3.27	48
15	MP4	X	6.46	48
16	MP4	Z	3.73	48
17	MP4	X	6.84	24
18	MP4	Z	3.95	24
19	MP1	X	4.11	48
20	MP1	Z	2.37	48
21	M1	X	10.99	10
22	M1	Z	6.34	10
23	MP5	X	10.06	6
24	MP5	Z	5.81	6
25	MP5	X	10.06	49
26	MP5	Z	5.81	49
27	MP7	X	27.37	6
28	MP7	Z	15.8	6
29	MP7	X	27.37	90
30	MP7	Z	15.8	90
31	MP8	X	27.37	6
32	MP8	Z	15.8	6
33	MP8	X	27.37	90
34	MP8	Z	15.8	90

Member Point Loads (BLC 25 : Ice Wind Load AZI 240) (Continued)

	Member Label	Direction	Magnitude[lb,lb-ft]	Location[in,%]
35	MP7	X	6.7	48
36	MP7	Z	3.87	48
37	MP8	X	7.19	48
38	MP8	Z	4.15	48
39	MP8	X	7.19	24
40	MP8	Z	4.15	24
41	MP5	X	4.42	48
42	MP5	Z	2.55	48
43	M3	X	10.99	10
44	M3	Z	6.34	10
45	MP9	X	8.29	6
46	MP9	Z	4.79	6
47	MP9	X	8.29	49
48	MP9	Z	4.79	49
49	MP11	X	19.52	6
50	MP11	Z	11.27	6
51	MP11	X	19.52	90
52	MP11	Z	11.27	90
53	MP12	X	19.52	6
54	MP12	Z	11.27	6
55	MP12	X	19.52	90
56	MP12	Z	11.27	90
57	MP11	X	5.66	48
58	MP11	Z	3.27	48
59	MP12	X	6.46	48
60	MP12	Z	3.73	48
61	MP12	X	6.84	24
62	MP12	Z	3.95	24
63	MP9	X	4.11	48
64	MP9	Z	2.37	48
65	M5	X	10.99	10
66	M5	Z	6.34	10

Member Point Loads (BLC 26 : Ice Wind Load AZI 270)

	Member Label	Direction	Magnitude[lb,lb-ft]	Location[in,%]
1	MP1	X	8.89	6
2	MP1	Z	0	6
3	MP1	X	8.89	49
4	MP1	Z	0	49
5	MP3	X	19.53	6
6	MP3	Z	0	6
7	MP3	X	19.53	90
8	MP3	Z	0	90
9	MP4	X	19.53	6
10	MP4	Z	0	6
11	MP4	X	19.53	90
12	MP4	Z	0	90
13	MP3	X	6.14	48
14	MP3	Z	0	48
15	MP4	X	7.19	48
16	MP4	Z	0	48

Member Point Loads (BLC 26 : Ice Wind Load AZI 270) (Continued)

	Member Label	Direction	Magnitude[lb,lb-ft]	Location[in,%]
17	MP4	X	7.76	24
18	MP4	Z	0	24
19	MP1	X	4.62	48
20	MP1	Z	0	48
21	M1	X	12.69	10
22	M1	Z	0	10
23	MP5	X	10.94	6
24	MP5	Z	0	6
25	MP5	X	10.94	49
26	MP5	Z	0	49
27	MP7	X	28.58	6
28	MP7	Z	0	6
29	MP7	X	28.58	90
30	MP7	Z	0	90
31	MP8	X	28.58	6
32	MP8	Z	0	6
33	MP8	X	28.58	90
34	MP8	Z	0	90
35	MP7	X	7.34	48
36	MP7	Z	0	48
37	MP8	X	8.02	48
38	MP8	Z	0	48
39	MP8	X	8.17	24
40	MP8	Z	0	24
41	MP5	X	4.98	48
42	MP5	Z	0	48
43	M3	X	12.69	10
44	M3	Z	0	10
45	MP9	X	10.94	6
46	MP9	Z	0	6
47	MP9	X	10.94	49
48	MP9	Z	0	49
49	MP11	X	28.58	6
50	MP11	Z	0	6
51	MP11	X	28.58	90
52	MP11	Z	0	90
53	MP12	X	28.58	6
54	MP12	Z	0	6
55	MP12	X	28.58	90
56	MP12	Z	0	90
57	MP11	X	7.34	48
58	MP11	Z	0	48
59	MP12	X	8.02	48
60	MP12	Z	0	48
61	MP12	X	8.17	24
62	MP12	Z	0	24
63	MP9	X	4.98	48
64	MP9	Z	0	48
65	M5	X	12.69	10
66	M5	Z	0	10

Member Point Loads (BLC 27 : Ice Wind Load AZI 300)

	Member Label	Direction	Magnitude[lb,lb-ft]	Location[in,%]
1	MP1	X	8.29	6
2	MP1	Z	-4.79	6
3	MP1	X	8.29	49
4	MP1	Z	-4.79	49
5	MP3	X	19.52	6
6	MP3	Z	-11.27	6
7	MP3	X	19.52	90
8	MP3	Z	-11.27	90
9	MP4	X	19.52	6
10	MP4	Z	-11.27	6
11	MP4	X	19.52	90
12	MP4	Z	-11.27	90
13	MP3	X	5.66	48
14	MP3	Z	-3.27	48
15	MP4	X	6.46	48
16	MP4	Z	-3.73	48
17	MP4	X	6.84	24
18	MP4	Z	-3.95	24
19	MP1	X	4.11	48
20	MP1	Z	-2.37	48
21	M1	X	10.99	10
22	M1	Z	-6.34	10
23	MP5	X	8.29	6
24	MP5	Z	-4.79	6
25	MP5	X	8.29	49
26	MP5	Z	-4.79	49
27	MP7	X	19.52	6
28	MP7	Z	-11.27	6
29	MP7	X	19.52	90
30	MP7	Z	-11.27	90
31	MP8	X	19.52	6
32	MP8	Z	-11.27	6
33	MP8	X	19.52	90
34	MP8	Z	-11.27	90
35	MP7	X	5.66	48
36	MP7	Z	-3.27	48
37	MP8	X	6.46	48
38	MP8	Z	-3.73	48
39	MP8	X	6.84	24
40	MP8	Z	-3.95	24
41	MP5	X	4.11	48
42	MP5	Z	-2.37	48
43	M3	X	10.99	10
44	M3	Z	-6.34	10
45	MP9	X	10.06	6
46	MP9	Z	-5.81	6
47	MP9	X	10.06	49
48	MP9	Z	-5.81	49
49	MP11	X	27.37	6
50	MP11	Z	-15.8	6
51	MP11	X	27.37	90
52	MP11	Z	-15.8	90

Member Point Loads (BLC 27 : Ice Wind Load AZI 300) (Continued)

	Member Label	Direction	Magnitude[lb,lb-ft]	Location[in,%]
53	MP12	X	27.37	6
54	MP12	Z	-15.8	6
55	MP12	X	27.37	90
56	MP12	Z	-15.8	90
57	MP11	X	6.7	48
58	MP11	Z	-3.87	48
59	MP12	X	7.19	48
60	MP12	Z	-4.15	48
61	MP12	X	7.19	24
62	MP12	Z	-4.15	24
63	MP9	X	4.42	48
64	MP9	Z	-2.55	48
65	M5	X	10.99	10
66	M5	Z	-6.34	10

Member Point Loads (BLC 28 : Ice Wind Load AZI 330)

	Member Label	Direction	Magnitude[lb,lb-ft]	Location[in,%]
1	MP1	X	5.47	6
2	MP1	Z	-9.47	6
3	MP1	X	5.47	49
4	MP1	Z	-9.47	49
5	MP3	X	14.29	6
6	MP3	Z	-24.75	6
7	MP3	X	14.29	90
8	MP3	Z	-24.75	90
9	MP4	X	14.29	6
10	MP4	Z	-24.75	6
11	MP4	X	14.29	90
12	MP4	Z	-24.75	90
13	MP3	X	3.67	48
14	MP3	Z	-6.36	48
15	MP4	X	4.01	48
16	MP4	Z	-6.95	48
17	MP4	X	4.08	24
18	MP4	Z	-7.07	24
19	MP1	X	2.49	48
20	MP1	Z	-4.32	48
21	M1	X	6.34	10
22	M1	Z	-10.99	10
23	MP5	X	4.45	6
24	MP5	Z	-7.7	6
25	MP5	X	4.45	49
26	MP5	Z	-7.7	49
27	MP7	X	9.76	6
28	MP7	Z	-16.91	6
29	MP7	X	9.76	90
30	MP7	Z	-16.91	90
31	MP8	X	9.76	6
32	MP8	Z	-16.91	6
33	MP8	X	9.76	90
34	MP8	Z	-16.91	90

Member Point Loads (BLC 28 : Ice Wind Load AZI 330) (Continued)

	Member Label	Direction	Magnitude[lb,lb-ft]	Location[in,%]
35	MP7	X	3.07	48
36	MP7	Z	-5.32	48
37	MP8	X	3.59	48
38	MP8	Z	-6.22	48
39	MP8	X	3.88	24
40	MP8	Z	-6.72	24
41	MP5	X	2.31	48
42	MP5	Z	-4	48
43	M3	X	6.34	10
44	M3	Z	-10.99	10
45	MP9	X	5.47	6
46	MP9	Z	-9.47	6
47	MP9	X	5.47	49
48	MP9	Z	-9.47	49
49	MP11	X	14.29	6
50	MP11	Z	-24.75	6
51	MP11	X	14.29	90
52	MP11	Z	-24.75	90
53	MP12	X	14.29	6
54	MP12	Z	-24.75	6
55	MP12	X	14.29	90
56	MP12	Z	-24.75	90
57	MP11	X	3.67	48
58	MP11	Z	-6.36	48
59	MP12	X	4.01	48
60	MP12	Z	-6.95	48
61	MP12	X	4.08	24
62	MP12	Z	-7.07	24
63	MP9	X	2.49	48
64	MP9	Z	-4.32	48
65	M5	X	6.34	10
66	M5	Z	-10.99	10

Member Point Loads (BLC 31 : Seismic Load Z)

	Member Label	Direction	Magnitude[lb,lb-ft]	Location[in,%]
1	MP1	Z	-1.783	6
2	MP1	Z	-1.783	49
3	MP3	Z	-4.874	6
4	MP3	Z	-4.874	90
5	MP4	Z	-4.874	6
6	MP4	Z	-4.874	90
7	MP3	Z	-6.102	48
8	MP4	Z	-7.131	48
9	MP4	Z	-7.64	24
10	MP1	Z	-1.63	48
11	M1	Z	-3.341	10
12	MP5	Z	-1.783	6
13	MP5	Z	-1.783	49
14	MP7	Z	-4.874	6
15	MP7	Z	-4.874	90
16	MP8	Z	-4.874	6

Member Point Loads (BLC 31 : Seismic Load Z) (Continued)

	Member Label	Direction	Magnitude[lb,lb-ft]	Location[in,%]
17	MP8	Z	-4.874	90
18	MP7	Z	-6.102	48
19	MP8	Z	-7.131	48
20	MP8	Z	-7.64	24
21	MP5	Z	-1.63	48
22	M3	Z	-3.341	10
23	MP9	Z	-1.783	6
24	MP9	Z	-1.783	49
25	MP11	Z	-4.874	6
26	MP11	Z	-4.874	90
27	MP12	Z	-4.874	6
28	MP12	Z	-4.874	90
29	MP11	Z	-6.102	48
30	MP12	Z	-7.131	48
31	MP12	Z	-7.64	24
32	MP9	Z	-1.63	48
33	M5	Z	-3.341	10

Member Point Loads (BLC 32 : Seismic Load X)

	Member Label	Direction	Magnitude[lb,lb-ft]	Location[in,%]
1	MP1	X	-1.783	6
2	MP1	X	-1.783	49
3	MP3	X	-4.874	6
4	MP3	X	-4.874	90
5	MP4	X	-4.874	6
6	MP4	X	-4.874	90
7	MP3	X	-6.102	48
8	MP4	X	-7.131	48
9	MP4	X	-7.64	24
10	MP1	X	-1.63	48
11	M1	X	-3.341	10
12	MP5	X	-1.783	6
13	MP5	X	-1.783	49
14	MP7	X	-4.874	6
15	MP7	X	-4.874	90
16	MP8	X	-4.874	6
17	MP8	X	-4.874	90
18	MP7	X	-6.102	48
19	MP8	X	-7.131	48
20	MP8	X	-7.64	24
21	MP5	X	-1.63	48
22	M3	X	-3.341	10
23	MP9	X	-1.783	6
24	MP9	X	-1.783	49
25	MP11	X	-4.874	6
26	MP11	X	-4.874	90
27	MP12	X	-4.874	6
28	MP12	X	-4.874	90
29	MP11	X	-6.102	48
30	MP12	X	-7.131	48
31	MP12	X	-7.64	24

Member Point Loads (BLC 32 : Seismic Load X) (Continued)

	Member Label	Direction	Magnitude[lb,lb-ft]	Location[in,%]
32	MP9	X	-1.63	48
33	M5	X	-3.341	10

Member Distributed Loads (BLC 14 : Distr. Wind Load Z)

	Member Label	Direction	Start Magnitude[lb/ft,...	End Magnitude[lb/ft,F...	Start Location[in,%]	End Location[in,%]
1	M1	SZ	-97.022	-97.022	0	%100
2	M3	SZ	-97.022	-97.022	0	%100
3	M5	SZ	-97.022	-97.022	0	%100
4	M85B	SZ	-97.022	-97.022	0	%100
5	M86C	SZ	-97.022	-97.022	0	%100
6	M87C	SZ	-97.022	-97.022	0	%100
7	M88C	SZ	-97.022	-97.022	0	%100
8	M89C	SZ	-97.022	-97.022	0	%100
9	M90C	SZ	-97.022	-97.022	0	%100
10	M22	SZ	0	0	0	%100
11	M23	SZ	0	0	0	%100
12	M24	SZ	0	0	0	%100
13	M28	SZ	0	0	0	%100
14	M30	SZ	0	0	0	%100
15	M34	SZ	0	0	0	%100
16	M36	SZ	0	0	0	%100
17	M72	SZ	0	0	0	%100
18	M73	SZ	0	0	0	%100
19	M74	SZ	0	0	0	%100
20	M75	SZ	0	0	0	%100
21	M77	SZ	0	0	0	%100
22	M78	SZ	0	0	0	%100
23	M80	SZ	0	0	0	%100
24	M86	SZ	0	0	0	%100
25	M87	SZ	0	0	0	%100
26	M89	SZ	0	0	0	%100
27	M90	SZ	0	0	0	%100
28	M92	SZ	0	0	0	%100
29	M93	SZ	0	0	0	%100
30	M95	SZ	0	0	0	%100
31	M96	SZ	0	0	0	%100
32	M98	SZ	0	0	0	%100
33	M99	SZ	0	0	0	%100
34	M91A	SZ	-97.022	-97.022	0	%100
35	M92B	SZ	-97.022	-97.022	0	%100
36	M93B	SZ	-97.022	-97.022	0	%100
37	M94A	SZ	-97.022	-97.022	0	%100
38	M95B	SZ	-97.022	-97.022	0	%100
39	M96C	SZ	-97.022	-97.022	0	%100
40	MP4	SZ	-58.213	-58.213	0	%100
41	MP3	SZ	-58.213	-58.213	0	%100
42	MP1	SZ	-58.213	-58.213	0	%100
43	MP12	SZ	-58.213	-58.213	0	%100
44	MP9	SZ	-58.213	-58.213	0	%100
45	MP8	SZ	-58.213	-58.213	0	%100

Member Distributed Loads (BLC 14 : Distr. Wind Load Z) (Continued)

	Member Label	Direction	Start Magnitude[lb/ft,...	End Magnitude[lb/ft,F...	Start Location[in,%]	End Location[in,%]
46	MP5	SZ	-58.213	-58.213	0	%100
47	MP2	SZ	-58.213	-58.213	0	%100
48	MP7	SZ	-58.213	-58.213	0	%100
49	MP6	SZ	-58.213	-58.213	0	%100
50	MP11	SZ	-58.213	-58.213	0	%100
51	MP10	SZ	-58.213	-58.213	0	%100
52	M7	SZ	-58.213	-58.213	0	%100
53	M8	SZ	-58.213	-58.213	0	%100
54	M9	SZ	-58.213	-58.213	0	%100
55	M70	SZ	-58.213	-58.213	0	%100
56	M71	SZ	-58.213	-58.213	0	%100
57	M81	SZ	-58.213	-58.213	0	%100
58	M41	SZ	-97.022	-97.022	0	%100
59	M85	SZ	-97.022	-97.022	0	%100
60	M87A	SZ	-97.022	-97.022	0	%100
61	M88	SZ	-97.022	-97.022	0	%100
62	M85A	SZ	-97.022	-97.022	0	%100
63	M87B	SZ	-97.022	-97.022	0	%100
64	M89A	SZ	-97.022	-97.022	0	%100
65	M90A	SZ	-97.022	-97.022	0	%100
66	M91	SZ	-97.022	-97.022	0	%100
67	M93A	SZ	-97.022	-97.022	0	%100
68	M95A	SZ	-97.022	-97.022	0	%100
69	M96A	SZ	-97.022	-97.022	0	%100
70	M44	SZ	-97.022	-97.022	0	%100
71	M96B	SZ	-97.022	-97.022	0	%100
72	M88B	SZ	-97.022	-97.022	0	%100
73	M90B	SZ	-97.022	-97.022	0	%100
74	M73A	SZ	-97.022	-97.022	0	%100
75	M75A	SZ	-97.022	-97.022	0	%100
76	M76	SZ	-97.022	-97.022	0	%100
77	M78A	SZ	-97.022	-97.022	0	%100
78	M79	SZ	-97.022	-97.022	0	%100
79	M81A	SZ	-97.022	-97.022	0	%100
80	M82A	SZ	-97.022	-97.022	0	%100
81	M84A	SZ	-97.022	-97.022	0	%100
82	M82	SZ	-97.022	-97.022	0	%100
83	M83	SZ	-97.022	-97.022	0	%100
84	M84	SZ	-97.022	-97.022	0	%100
85	M85C	SZ	0	0	0	%100
86	M86A	SZ	0	0	0	%100
87	M87D	SZ	0	0	0	%100
88	M88A	SZ	0	0	0	%100
89	M89B	SZ	-97.022	-97.022	0	%100
90	M90D	SZ	-97.022	-97.022	0	%100
91	M91B	SZ	0	0	0	%100
92	M92A	SZ	0	0	0	%100
93	M93C	SZ	0	0	0	%100
94	M94	SZ	0	0	0	%100
95	M95C	SZ	-97.022	-97.022	0	%100
96	M96D	SZ	-97.022	-97.022	0	%100
97	M97	SZ	0	0	0	%100

Member Distributed Loads (BLC 14 : Distr. Wind Load Z) (Continued)

	Member Label	Direction	Start Magnitude[lb/ft,...	End Magnitude[lb/ft,F...	Start Location[in,%]	End Location[in,%]
98	M98A	SZ	0	0	0	%100
99	M99A	SZ	0	0	0	%100
100	M100	SZ	0	0	0	%100
101	M101	SZ	-97.022	-97.022	0	%100
102	M102	SZ	-97.022	-97.022	0	%100

Member Distributed Loads (BLC 15 : Distr. Wind Load X)

	Member Label	Direction	Start Magnitude[lb/ft,...	End Magnitude[lb/ft,F...	Start Location[in,%]	End Location[in,%]
1	M1	SX	-97.022	-97.022	0	%100
2	M3	SX	-97.022	-97.022	0	%100
3	M5	SX	-97.022	-97.022	0	%100
4	M85B	SX	-97.022	-97.022	0	%100
5	M86C	SX	-97.022	-97.022	0	%100
6	M87C	SX	-97.022	-97.022	0	%100
7	M88C	SX	-97.022	-97.022	0	%100
8	M89C	SX	-97.022	-97.022	0	%100
9	M90C	SX	-97.022	-97.022	0	%100
10	M22	SX	0	0	0	%100
11	M23	SX	0	0	0	%100
12	M24	SX	0	0	0	%100
13	M28	SX	0	0	0	%100
14	M30	SX	0	0	0	%100
15	M34	SX	0	0	0	%100
16	M36	SX	0	0	0	%100
17	M72	SX	0	0	0	%100
18	M73	SX	0	0	0	%100
19	M74	SX	0	0	0	%100
20	M75	SX	0	0	0	%100
21	M77	SX	0	0	0	%100
22	M78	SX	0	0	0	%100
23	M80	SX	0	0	0	%100
24	M86	SX	0	0	0	%100
25	M87	SX	0	0	0	%100
26	M89	SX	0	0	0	%100
27	M90	SX	0	0	0	%100
28	M92	SX	0	0	0	%100
29	M93	SX	0	0	0	%100
30	M95	SX	0	0	0	%100
31	M96	SX	0	0	0	%100
32	M98	SX	0	0	0	%100
33	M99	SX	0	0	0	%100
34	M91A	SX	-97.022	-97.022	0	%100
35	M92B	SX	-97.022	-97.022	0	%100
36	M93B	SX	-97.022	-97.022	0	%100
37	M94A	SX	-97.022	-97.022	0	%100
38	M95B	SX	-97.022	-97.022	0	%100
39	M96C	SX	-97.022	-97.022	0	%100
40	MP4	SX	-58.213	-58.213	0	%100
41	MP3	SX	-58.213	-58.213	0	%100
42	MP1	SX	-58.213	-58.213	0	%100
43	MP12	SX	-58.213	-58.213	0	%100

Member Distributed Loads (BLC 15 : Distr. Wind Load X) (Continued)

	Member Label	Direction	Start Magnitude[lb/ft,...	End Magnitude[lb/ft,F...	Start Location[in,%]	End Location[in,%]
44	MP9	SX	-58.213	-58.213	0	%100
45	MP8	SX	-58.213	-58.213	0	%100
46	MP5	SX	-58.213	-58.213	0	%100
47	MP2	SX	-58.213	-58.213	0	%100
48	MP7	SX	-58.213	-58.213	0	%100
49	MP6	SX	-58.213	-58.213	0	%100
50	MP11	SX	-58.213	-58.213	0	%100
51	MP10	SX	-58.213	-58.213	0	%100
52	M7	SX	-58.213	-58.213	0	%100
53	M8	SX	-58.213	-58.213	0	%100
54	M9	SX	-58.213	-58.213	0	%100
55	M70	SX	-58.213	-58.213	0	%100
56	M71	SX	-58.213	-58.213	0	%100
57	M81	SX	-58.213	-58.213	0	%100
58	M41	SX	-97.022	-97.022	0	%100
59	M85	SX	-97.022	-97.022	0	%100
60	M87A	SX	-97.022	-97.022	0	%100
61	M88	SX	-97.022	-97.022	0	%100
62	M85A	SX	-97.022	-97.022	0	%100
63	M87B	SX	-97.022	-97.022	0	%100
64	M89A	SX	-97.022	-97.022	0	%100
65	M90A	SX	-97.022	-97.022	0	%100
66	M91	SX	-97.022	-97.022	0	%100
67	M93A	SX	-97.022	-97.022	0	%100
68	M95A	SX	-97.022	-97.022	0	%100
69	M96A	SX	-97.022	-97.022	0	%100
70	M44	SX	-97.022	-97.022	0	%100
71	M96B	SX	-97.022	-97.022	0	%100
72	M88B	SX	-97.022	-97.022	0	%100
73	M90B	SX	-97.022	-97.022	0	%100
74	M73A	SX	-97.022	-97.022	0	%100
75	M75A	SX	-97.022	-97.022	0	%100
76	M76	SX	-97.022	-97.022	0	%100
77	M78A	SX	-97.022	-97.022	0	%100
78	M79	SX	-97.022	-97.022	0	%100
79	M81A	SX	-97.022	-97.022	0	%100
80	M82A	SX	-97.022	-97.022	0	%100
81	M84A	SX	-97.022	-97.022	0	%100
82	M82	SX	-97.022	-97.022	0	%100
83	M83	SX	-97.022	-97.022	0	%100
84	M84	SX	-97.022	-97.022	0	%100
85	M85C	SX	0	0	0	%100
86	M86A	SX	0	0	0	%100
87	M87D	SX	0	0	0	%100
88	M88A	SX	0	0	0	%100
89	M89B	SX	-97.022	-97.022	0	%100
90	M90D	SX	-97.022	-97.022	0	%100
91	M91B	SX	0	0	0	%100
92	M92A	SX	0	0	0	%100
93	M93C	SX	0	0	0	%100
94	M94	SX	0	0	0	%100
95	M95C	SX	-97.022	-97.022	0	%100

Member Distributed Loads (BLC 15 : Distr. Wind Load X) (Continued)

	Member Label	Direction	Start Magnitude[lb/ft,...	End Magnitude[lb/ft,F...	Start Location[in,%]	End Location[in,%]
96	M96D	SX	-97.022	-97.022	0	%100
97	M97	SX	0	0	0	%100
98	M98A	SX	0	0	0	%100
99	M99A	SX	0	0	0	%100
100	M100	SX	0	0	0	%100
101	M101	SX	-97.022	-97.022	0	%100
102	M102	SX	-97.022	-97.022	0	%100

Member Distributed Loads (BLC 16 : Ice Weight)

	Member Label	Direction	Start Magnitude[lb/ft,...	End Magnitude[lb/ft,F...	Start Location[in,%]	End Location[in,%]
1	M1	Y	-9.672	-9.672	0	%100
2	M3	Y	-9.672	-9.672	0	%100
3	M5	Y	-9.672	-9.672	0	%100
4	M85B	Y	-9.672	-9.672	0	%100
5	M86C	Y	-9.672	-9.672	0	%100
6	M87C	Y	-9.672	-9.672	0	%100
7	M88C	Y	-9.672	-9.672	0	%100
8	M89C	Y	-9.672	-9.672	0	%100
9	M90C	Y	-9.672	-9.672	0	%100
10	M22	Y	-1.647	-1.647	0	%100
11	M23	Y	-1.647	-1.647	0	%100
12	M24	Y	-1.647	-1.647	0	%100
13	M28	Y	-1.647	-1.647	0	%100
14	M30	Y	-1.647	-1.647	0	%100
15	M34	Y	-1.647	-1.647	0	%100
16	M36	Y	-1.647	-1.647	0	%100
17	M72	Y	-1.647	-1.647	0	%100
18	M73	Y	-1.647	-1.647	0	%100
19	M74	Y	-1.647	-1.647	0	%100
20	M75	Y	-1.647	-1.647	0	%100
21	M77	Y	-1.647	-1.647	0	%100
22	M78	Y	-1.647	-1.647	0	%100
23	M80	Y	-1.647	-1.647	0	%100
24	M86	Y	-1.647	-1.647	0	%100
25	M87	Y	-1.647	-1.647	0	%100
26	M89	Y	-1.647	-1.647	0	%100
27	M90	Y	-1.647	-1.647	0	%100
28	M92	Y	-1.647	-1.647	0	%100
29	M93	Y	-1.647	-1.647	0	%100
30	M95	Y	-1.647	-1.647	0	%100
31	M96	Y	-1.647	-1.647	0	%100
32	M98	Y	-1.647	-1.647	0	%100
33	M99	Y	-1.647	-1.647	0	%100
34	M91A	Y	-5.66	-5.66	0	%100
35	M92B	Y	-5.66	-5.66	0	%100
36	M93B	Y	-5.66	-5.66	0	%100
37	M94A	Y	-5.66	-5.66	0	%100
38	M95B	Y	-5.66	-5.66	0	%100
39	M96C	Y	-5.66	-5.66	0	%100
40	MP4	Y	-5.016	-5.016	0	%100
41	MP3	Y	-5.016	-5.016	0	%100

Member Distributed Loads (BLC 16 : Ice Weight) (Continued)

	Member Label	Direction	Start Magnitude[lb/ft,...	End Magnitude[lb/ft,F...	Start Location[in,%]	End Location[in,%]
42	MP1	Y	-5.016	-5.016	0	%100
43	MP12	Y	-5.016	-5.016	0	%100
44	MP9	Y	-5.016	-5.016	0	%100
45	MP8	Y	-5.016	-5.016	0	%100
46	MP5	Y	-5.016	-5.016	0	%100
47	MP2	Y	-5.016	-5.016	0	%100
48	MP7	Y	-5.016	-5.016	0	%100
49	MP6	Y	-5.016	-5.016	0	%100
50	MP11	Y	-5.016	-5.016	0	%100
51	MP10	Y	-5.016	-5.016	0	%100
52	M7	Y	-6.612	-6.612	0	%100
53	M8	Y	-6.612	-6.612	0	%100
54	M9	Y	-6.612	-6.612	0	%100
55	M70	Y	-5.016	-5.016	0	%100
56	M71	Y	-5.016	-5.016	0	%100
57	M81	Y	-5.016	-5.016	0	%100
58	M41	Y	-10.188	-10.188	0	%100
59	M85	Y	-10.188	-10.188	0	%100
60	M87A	Y	-10.188	-10.188	0	%100
61	M88	Y	-10.188	-10.188	0	%100
62	M85A	Y	-10.188	-10.188	0	%100
63	M87B	Y	-10.188	-10.188	0	%100
64	M89A	Y	-10.188	-10.188	0	%100
65	M90A	Y	-10.188	-10.188	0	%100
66	M91	Y	-10.188	-10.188	0	%100
67	M93A	Y	-10.188	-10.188	0	%100
68	M95A	Y	-10.188	-10.188	0	%100
69	M96A	Y	-10.188	-10.188	0	%100
70	M44	Y	-10.175	-10.175	0	%100
71	M96B	Y	-10.175	-10.175	0	%100
72	M88B	Y	-10.175	-10.175	0	%100
73	M90B	Y	-10.175	-10.175	0	%100
74	M73A	Y	-10.175	-10.175	0	%100
75	M75A	Y	-10.175	-10.175	0	%100
76	M76	Y	-10.175	-10.175	0	%100
77	M78A	Y	-10.175	-10.175	0	%100
78	M79	Y	-10.175	-10.175	0	%100
79	M81A	Y	-10.175	-10.175	0	%100
80	M82A	Y	-10.175	-10.175	0	%100
81	M84A	Y	-10.175	-10.175	0	%100
82	M82	Y	-6.663	-6.663	0	%100
83	M83	Y	-6.663	-6.663	0	%100
84	M84	Y	-6.663	-6.663	0	%100
85	M85C	Y	-1.647	-1.647	0	%100
86	M86A	Y	-1.647	-1.647	0	%100
87	M87D	Y	-1.647	-1.647	0	%100
88	M88A	Y	-1.647	-1.647	0	%100
89	M89B	Y	-6.663	-6.663	0	%100
90	M90D	Y	-6.663	-6.663	0	%100
91	M91B	Y	-1.647	-1.647	0	%100
92	M92A	Y	-1.647	-1.647	0	%100
93	M93C	Y	-1.647	-1.647	0	%100

Member Distributed Loads (BLC 16 : Ice Weight) (Continued)

	Member Label	Direction	Start Magnitude[lb/ft,...	End Magnitude[lb/ft,F...	Start Location[in,%]	End Location[in,%]
94	M94	Y	-1.647	-1.647	0	%100
95	M95C	Y	-6.663	-6.663	0	%100
96	M96D	Y	-6.663	-6.663	0	%100
97	M97	Y	-1.647	-1.647	0	%100
98	M98A	Y	-1.647	-1.647	0	%100
99	M99A	Y	-1.647	-1.647	0	%100
100	M100	Y	-1.647	-1.647	0	%100
101	M101	Y	-6.663	-6.663	0	%100
102	M102	Y	-6.663	-6.663	0	%100

Member Distributed Loads (BLC 29 : Distr. Ice Wind Load Z)

	Member Label	Direction	Start Magnitude[lb/ft,...	End Magnitude[lb/ft,F...	Start Location[in,%]	End Location[in,%]
1	M1	SZ	-14.021	-14.021	0	%100
2	M3	SZ	-14.021	-14.021	0	%100
3	M5	SZ	-14.021	-14.021	0	%100
4	M85B	SZ	-14.021	-14.021	0	%100
5	M86C	SZ	-14.021	-14.021	0	%100
6	M87C	SZ	-14.021	-14.021	0	%100
7	M88C	SZ	-14.021	-14.021	0	%100
8	M89C	SZ	-14.021	-14.021	0	%100
9	M90C	SZ	-14.021	-14.021	0	%100
10	M22	SZ	0	0	0	%100
11	M23	SZ	0	0	0	%100
12	M24	SZ	0	0	0	%100
13	M28	SZ	0	0	0	%100
14	M30	SZ	0	0	0	%100
15	M34	SZ	0	0	0	%100
16	M36	SZ	0	0	0	%100
17	M72	SZ	0	0	0	%100
18	M73	SZ	0	0	0	%100
19	M74	SZ	0	0	0	%100
20	M75	SZ	0	0	0	%100
21	M77	SZ	0	0	0	%100
22	M78	SZ	0	0	0	%100
23	M80	SZ	0	0	0	%100
24	M86	SZ	0	0	0	%100
25	M87	SZ	0	0	0	%100
26	M89	SZ	0	0	0	%100
27	M90	SZ	0	0	0	%100
28	M92	SZ	0	0	0	%100
29	M93	SZ	0	0	0	%100
30	M95	SZ	0	0	0	%100
31	M96	SZ	0	0	0	%100
32	M98	SZ	0	0	0	%100
33	M99	SZ	0	0	0	%100
34	M91A	SZ	-18.101	-18.101	0	%100
35	M92B	SZ	-18.101	-18.101	0	%100
36	M93B	SZ	-18.101	-18.101	0	%100
37	M94A	SZ	-18.101	-18.101	0	%100
38	M95B	SZ	-18.101	-18.101	0	%100
39	M96C	SZ	-18.101	-18.101	0	%100

Member Distributed Loads (BLC 29 : Distr. Ice Wind Load Z) (Continued)

	Member Label	Direction	Start Magnitude[lb/ft,...	End Magnitude[lb/ft,F...	Start Location[in,%]	End Location[in,%]
40	MP4	SZ	-19.659	-19.659	0	%100
41	MP3	SZ	-19.659	-19.659	0	%100
42	MP1	SZ	-19.659	-19.659	0	%100
43	MP12	SZ	-19.659	-19.659	0	%100
44	MP9	SZ	-19.659	-19.659	0	%100
45	MP8	SZ	-19.659	-19.659	0	%100
46	MP5	SZ	-19.659	-19.659	0	%100
47	MP2	SZ	-19.659	-19.659	0	%100
48	MP7	SZ	-19.659	-19.659	0	%100
49	MP6	SZ	-19.659	-19.659	0	%100
50	MP11	SZ	-19.659	-19.659	0	%100
51	MP10	SZ	-19.659	-19.659	0	%100
52	M7	SZ	-16.535	-16.535	0	%100
53	M8	SZ	-16.535	-16.535	0	%100
54	M9	SZ	-16.535	-16.535	0	%100
55	M70	SZ	-19.659	-19.659	0	%100
56	M71	SZ	-19.659	-19.659	0	%100
57	M81	SZ	-19.659	-19.659	0	%100
58	M41	SZ	-13.774	-13.774	0	%100
59	M85	SZ	-13.774	-13.774	0	%100
60	M87A	SZ	-13.774	-13.774	0	%100
61	M88	SZ	-13.774	-13.774	0	%100
62	M85A	SZ	-13.774	-13.774	0	%100
63	M87B	SZ	-13.774	-13.774	0	%100
64	M89A	SZ	-13.774	-13.774	0	%100
65	M90A	SZ	-13.774	-13.774	0	%100
66	M91	SZ	-13.774	-13.774	0	%100
67	M93A	SZ	-13.774	-13.774	0	%100
68	M95A	SZ	-13.774	-13.774	0	%100
69	M96A	SZ	-13.774	-13.774	0	%100
70	M44	SZ	-13.78	-13.78	0	%100
71	M96B	SZ	-13.78	-13.78	0	%100
72	M88B	SZ	-13.78	-13.78	0	%100
73	M90B	SZ	-13.78	-13.78	0	%100
74	M73A	SZ	-13.78	-13.78	0	%100
75	M75A	SZ	-13.78	-13.78	0	%100
76	M76	SZ	-13.78	-13.78	0	%100
77	M78A	SZ	-13.78	-13.78	0	%100
78	M79	SZ	-13.78	-13.78	0	%100
79	M81A	SZ	-13.78	-13.78	0	%100
80	M82A	SZ	-13.78	-13.78	0	%100
81	M84A	SZ	-13.78	-13.78	0	%100
82	M82	SZ	-16.469	-16.469	0	%100
83	M83	SZ	-16.469	-16.469	0	%100
84	M84	SZ	-16.469	-16.469	0	%100
85	M85C	SZ	0	0	0	%100
86	M86A	SZ	0	0	0	%100
87	M87D	SZ	0	0	0	%100
88	M88A	SZ	0	0	0	%100
89	M89B	SZ	-16.469	-16.469	0	%100
90	M90D	SZ	-16.469	-16.469	0	%100
91	M91B	SZ	0	0	0	%100

Member Distributed Loads (BLC 29 : Distr. Ice Wind Load Z) (Continued)

	Member Label	Direction	Start Magnitude[lb/ft,...	End Magnitude[lb/ft,F...	Start Location[in,%]	End Location[in,%]
92	M92A	SZ	0	0	0	%100
93	M93C	SZ	0	0	0	%100
94	M94	SZ	0	0	0	%100
95	M95C	SZ	-16.469	-16.469	0	%100
96	M96D	SZ	-16.469	-16.469	0	%100
97	M97	SZ	0	0	0	%100
98	M98A	SZ	0	0	0	%100
99	M99A	SZ	0	0	0	%100
100	M100	SZ	0	0	0	%100
101	M101	SZ	-16.469	-16.469	0	%100
102	M102	SZ	-16.469	-16.469	0	%100

Member Distributed Loads (BLC 30 : Distr. Ice Wind Load X)

	Member Label	Direction	Start Magnitude[lb/ft,...	End Magnitude[lb/ft,F...	Start Location[in,%]	End Location[in,%]
1	M1	SX	-14.021	-14.021	0	%100
2	M3	SX	-14.021	-14.021	0	%100
3	M5	SX	-14.021	-14.021	0	%100
4	M85B	SX	-14.021	-14.021	0	%100
5	M86C	SX	-14.021	-14.021	0	%100
6	M87C	SX	-14.021	-14.021	0	%100
7	M88C	SX	-14.021	-14.021	0	%100
8	M89C	SX	-14.021	-14.021	0	%100
9	M90C	SX	-14.021	-14.021	0	%100
10	M22	SX	0	0	0	%100
11	M23	SX	0	0	0	%100
12	M24	SX	0	0	0	%100
13	M28	SX	0	0	0	%100
14	M30	SX	0	0	0	%100
15	M34	SX	0	0	0	%100
16	M36	SX	0	0	0	%100
17	M72	SX	0	0	0	%100
18	M73	SX	0	0	0	%100
19	M74	SX	0	0	0	%100
20	M75	SX	0	0	0	%100
21	M77	SX	0	0	0	%100
22	M78	SX	0	0	0	%100
23	M80	SX	0	0	0	%100
24	M86	SX	0	0	0	%100
25	M87	SX	0	0	0	%100
26	M89	SX	0	0	0	%100
27	M90	SX	0	0	0	%100
28	M92	SX	0	0	0	%100
29	M93	SX	0	0	0	%100
30	M95	SX	0	0	0	%100
31	M96	SX	0	0	0	%100
32	M98	SX	0	0	0	%100
33	M99	SX	0	0	0	%100
34	M91A	SX	-18.101	-18.101	0	%100
35	M92B	SX	-18.101	-18.101	0	%100
36	M93B	SX	-18.101	-18.101	0	%100
37	M94A	SX	-18.101	-18.101	0	%100

Member Distributed Loads (BLC 30 : Distr. Ice Wind Load X) (Continued)

	Member Label	Direction	Start Magnitude[lb/ft,...	End Magnitude[lb/ft,F...	Start Location[in,%]	End Location[in,%]
38	M95B	SX	-18.101	-18.101	0	%100
39	M96C	SX	-18.101	-18.101	0	%100
40	MP4	SX	-19.659	-19.659	0	%100
41	MP3	SX	-19.659	-19.659	0	%100
42	MP1	SX	-19.659	-19.659	0	%100
43	MP12	SX	-19.659	-19.659	0	%100
44	MP9	SX	-19.659	-19.659	0	%100
45	MP8	SX	-19.659	-19.659	0	%100
46	MP5	SX	-19.659	-19.659	0	%100
47	MP2	SX	-19.659	-19.659	0	%100
48	MP7	SX	-19.659	-19.659	0	%100
49	MP6	SX	-19.659	-19.659	0	%100
50	MP11	SX	-19.659	-19.659	0	%100
51	MP10	SX	-19.659	-19.659	0	%100
52	M7	SX	-16.535	-16.535	0	%100
53	M8	SX	-16.535	-16.535	0	%100
54	M9	SX	-16.535	-16.535	0	%100
55	M70	SX	-19.659	-19.659	0	%100
56	M71	SX	-19.659	-19.659	0	%100
57	M81	SX	-19.659	-19.659	0	%100
58	M41	SX	-13.774	-13.774	0	%100
59	M85	SX	-13.774	-13.774	0	%100
60	M87A	SX	-13.774	-13.774	0	%100
61	M88	SX	-13.774	-13.774	0	%100
62	M85A	SX	-13.774	-13.774	0	%100
63	M87B	SX	-13.774	-13.774	0	%100
64	M89A	SX	-13.774	-13.774	0	%100
65	M90A	SX	-13.774	-13.774	0	%100
66	M91	SX	-13.774	-13.774	0	%100
67	M93A	SX	-13.774	-13.774	0	%100
68	M95A	SX	-13.774	-13.774	0	%100
69	M96A	SX	-13.774	-13.774	0	%100
70	M44	SX	-13.78	-13.78	0	%100
71	M96B	SX	-13.78	-13.78	0	%100
72	M88B	SX	-13.78	-13.78	0	%100
73	M90B	SX	-13.78	-13.78	0	%100
74	M73A	SX	-13.78	-13.78	0	%100
75	M75A	SX	-13.78	-13.78	0	%100
76	M76	SX	-13.78	-13.78	0	%100
77	M78A	SX	-13.78	-13.78	0	%100
78	M79	SX	-13.78	-13.78	0	%100
79	M81A	SX	-13.78	-13.78	0	%100
80	M82A	SX	-13.78	-13.78	0	%100
81	M84A	SX	-13.78	-13.78	0	%100
82	M82	SX	-16.469	-16.469	0	%100
83	M83	SX	-16.469	-16.469	0	%100
84	M84	SX	-16.469	-16.469	0	%100
85	M85C	SX	0	0	0	%100
86	M86A	SX	0	0	0	%100
87	M87D	SX	0	0	0	%100
88	M88A	SX	0	0	0	%100
89	M89B	SX	-16.469	-16.469	0	%100

Member Distributed Loads (BLC 30 : Distr. Ice Wind Load X) (Continued)

	Member Label	Direction	Start Magnitude[lb/ft,...	End Magnitude[lb/ft,F...	Start Location[in,%]	End Location[in,%]
90	M90D	SX	-16.469	-16.469	0	%100
91	M91B	SX	0	0	0	%100
92	M92A	SX	0	0	0	%100
93	M93C	SX	0	0	0	%100
94	M94	SX	0	0	0	%100
95	M95C	SX	-16.469	-16.469	0	%100
96	M96D	SX	-16.469	-16.469	0	%100
97	M97	SX	0	0	0	%100
98	M98A	SX	0	0	0	%100
99	M99A	SX	0	0	0	%100
100	M100	SX	0	0	0	%100
101	M101	SX	-16.469	-16.469	0	%100
102	M102	SX	-16.469	-16.469	0	%100

Member Distributed Loads (BLC 46 : BLC 1 Transient Area Loads)

	Member Label	Direction	Start Magnitude[lb/ft,...	End Magnitude[lb/ft,F...	Start Location[in,%]	End Location[in,%]
1	M1	Y	-1.979	-1.979	29.433	49.703
2	M85B	Y	-1.893	-1.893	18.63	28.301
3	M86C	Y	-1.893	-1.893	2	11.671
4	M91A	Y	-.211	-.89	0	25.677
5	M91A	Y	-.89	-1.569	25.677	51.353
6	M92B	Y	-.211	-.89	0	25.677
7	M92B	Y	-.89	-1.569	25.677	51.353
8	M5	Y	-3.957	-3.957	29.433	49.703
9	M89C	Y	-3.786	-3.786	18.63	28.3
10	M90C	Y	-3.786	-3.786	2	11.671
11	M95B	Y	-.423	-1.78	0	25.677
12	M95B	Y	-1.78	-3.137	25.677	51.353
13	M96C	Y	-.423	-1.78	0	25.676
14	M96C	Y	-1.78	-3.137	25.676	51.353
15	M3	Y	-1.979	-1.979	29.433	49.703
16	M87C	Y	-1.893	-1.893	18.63	28.301
17	M88C	Y	-1.893	-1.893	2	11.671
18	M93B	Y	-.211	-.89	0	25.677
19	M93B	Y	-.89	-1.569	25.677	51.353
20	M94A	Y	-.211	-.89	0	25.677
21	M94A	Y	-.89	-1.569	25.677	51.353

Member Distributed Loads (BLC 47 : BLC 16 Transient Area Loads)

	Member Label	Direction	Start Magnitude[lb/ft,...	End Magnitude[lb/ft,F...	Start Location[in,%]	End Location[in,%]
1	M1	Y	-6.236	-6.236	29.433	49.703
2	M85B	Y	-5.967	-5.967	18.63	28.301
3	M86C	Y	-5.967	-5.967	2	11.671
4	M91A	Y	-.666	-2.805	0	25.677
5	M91A	Y	-2.805	-4.943	25.677	51.353
6	M92B	Y	-.666	-2.805	0	25.677
7	M92B	Y	-2.805	-4.943	25.677	51.353
8	M5	Y	-12.472	-12.472	29.433	49.703
9	M89C	Y	-11.933	-11.933	18.63	28.3
10	M90C	Y	-11.934	-11.934	2	11.671
11	M95B	Y	-1.332	-5.61	0	25.677

Member Distributed Loads (BLC 47 : BLC 16 Transient Area Loads) (Continued)

	Member Label	Direction	Start Magnitude[lb/ft,...	End Magnitude[lb/ft,F...	Start Location[in,%]	End Location[in,%]
12	M95B	Y	-5.61	-9.887	25.677	51.353
13	M96C	Y	-1.332	-5.609	0	25.676
14	M96C	Y	-5.609	-9.887	25.676	51.353
15	M3	Y	-6.236	-6.236	29.433	49.703
16	M87C	Y	-5.967	-5.967	18.63	28.301
17	M88C	Y	-5.967	-5.967	2	11.671
18	M93B	Y	-.666	-2.805	0	25.677
19	M93B	Y	-2.805	-4.943	25.677	51.353
20	M94A	Y	-.666	-2.805	0	25.677
21	M94A	Y	-2.805	-4.943	25.677	51.353

Member Area Loads (BLC 1 : Self Weight)

	Joint A	Joint B	Joint C	Joint D	Direction	Distribution	Magnitude[psf]
1	N131	N1	N132		Y	Two Way	-1.75
2	N136	N4	N135		Y	Two Way	-1.75
3	N136	N4	N135		Y	Two Way	-1.75
4	N133	N134	N3		Y	Two Way	-1.75

Member Area Loads (BLC 16 : Ice Weight)

	Joint A	Joint B	Joint C	Joint D	Direction	Distribution	Magnitude[psf]
1	N131	N1	N132		Y	Two Way	-5.515
2	N136	N4	N135		Y	Two Way	-5.515
3	N136	N4	N135		Y	Two Way	-5.515
4	N133	N134	N3		Y	Two Way	-5.515

INFINIGY
FROM ZERO TO INFINIGY
the solutions are endless

Input Forces

Bolt Calculation Tool, V1.0

PROJECT DATA	
Site Name:	Windham Windham CTR
Site Number:	CTL01064
Job Code:	1106-A0001-B

APPLIED LOADS		
Bolt Tension:	4031.57	lbs
Bolt Shear:	913.14	lbs

BOLT PROPERTIES		
Bolt Type:	Bolt	-
Bolt Diameter:	0.625	in
Bolt Grade:	A325	-
# of Bolts:	4	-
Threads Excluded?	No	-

BOLT CHECK	
Tensile Strength	20340.15
Shear Strength	12425.24
Tensile Usage	19.8%
Shear Usage	7.3%
Combined Shear and Tension	4.5%
Result	Pass

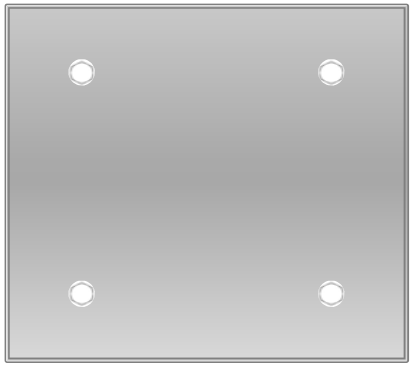

Mount Analysisand Mapping Checklist

Mount Detail	
Mount Type	Platform
Mount Model Number	RMQP-496-HK
If RT, then how is it attached	
If WT, then how is it attached	

Inspector
(Vendor name)
(Inspector name)
(Contact phone)
(Contact email)

Mount Mapping Detail	
Material condition (discoloration, cracks, pitting)	
Mfg. drawing, cutsheet, spec. available?	
Date of mount mapping	
Searched prior OOM for material?	
Photos of installation available?	
Original tower drawings show mounts?	
Searched for previous mapping?	
Is latest mod design (dwgs) available?	
Is the latest structural analysis available?	

Project Detail	
Market	Connecticut
	MRCTB040530, MRCTB040444v
	MRCTB040469, MRCTB040708
PACE Project ID	MRCTB040763
Site Name	Windham Windham CTR
City, State	Windham, CT
RFDS Version Number	2
Initiative (list mult., if applicable)	
Tower Owner	
SA Vendor	
A&E firm (for structural analysis)	
A&E firm (for mapping, if different)	
Last amendment date or last site visit	

Site Information	
Original Lease Date	
FA Code	10035442
Tower Type	Monopole
Tower Height (Ft)	180
AT&T Rad Center # 1	147
AT&T Rad Center # 2	

Measurements and Deliverables on sketches	
Pipe / Angle dimenions and lengths	
bolt diameters and lengths	
U-Bolt diameters and lengths	
Steel Grade if indicated	
welds :length and sizes	
appurtenance relative locations	
Grounding Condition	

Equipment Detail Alpha Sector	Model Number for Ant, MW, RRU, TMA, Squid / Size of Coax, DC-Fiber Trunks & Jumpers	Height / COAX-DC-Fiber Trunk & Jumper Lengths in feet	Approz Az	mount position location
Antennas	0	0	0	0
MW	0	0	0	0
RRU	0	0	0	0
TMA	0	0	0	0
Coax	0	0	0	0
RET (not imbedded in antenna)	0	0	0	0
DC Cable	0	0	0	0
Fiber Cable	0	0	0	0
Squid	0	0	0	0

Equipment Detail Beta Sector	Model Number for Ant, MW, RRU, TMA, Squid / Size of Coax, DC-Fiber Trunks & Jumpers	Height / COAX-DC-Fiber Trunk & Jumper Lengths in feet	Approz Az	mount position location
Antennas	0	0	0	0
MW	0	0	0	0
RRU	0	0	0	0
TMA	0	0	0	0
Coax	0	0	0	0
RET (not imbedded in antenna)	0	0	0	0
DC Cable	0	0	0	0
Fiber Cable	0	0	0	0
Squid	0	0	0	0

Equipment Detail Gamma Sector	Model Number for Ant, MW, RRU, TMA, Squid / Size of Coax, DC-Fiber Trunks & Jumpers	Height / COAX-DC-Fiber Trunk & Jumper Lengths in feet	Approz Az	mount position location
Antennas	0	0	0	0
MW	0	0	0	0
RRU	0	0	0	0
TMA	0	0	0	0
Coax	0	0	0	0
RET (not imbedded in antenna)	0	0	0	0
DC Cable	0	0	0	0
Fiber Cable	0	0	0	0
Squid	0	0	0	0

Comments

2017 TARP Mount Program Spec Sheet Sample								
INPUT FIELDS							OUTPUT FIELDS	
BASIC WINDFSPEED (mph)	**Radial Ice (in)**	**Height (ft)**	**Exposure Category**	**Class**	**TOPO Category**	**Number of Mount Pipes / Sector**	Allowable EPA / pipe (ft sq)	Allowable Weight / Pipe (lbf)
							NOTE : Specify how many pipes are being considered per face for each EPA/WT pair	
121	**1"**	**147**	**C**	**II**	**1**	**3**	***21***	***3,500***