## PROJECT INFORMATION

SCOPE OF WORK:

ITEMS TO BE MOUNTED ON THE EXISTING SHELTER:
(3) LTE ANTENNAS, (6) RRH'S, (3) SURGE ARRESTORS, (6) DC POWER CABLES, (3) FIBER LINES

ITEMS TO BE INSTALLED INSIDE THE EXISTING AT&T EQUIPMENT AREA:
(1) DUS, (1) XMU & (1) IDL2

ITEMS TO REMAIN ON TOWER:
(3) LTE ANTENNAS, (3) UMTS ANTENNAS, (3) GSM ANTENNAS, (6) RRH'S, (6) TMA'S, (1) SURGE ARRESTOR, (2) DC POWER CABLES, (1) FIBER LINE & (12) 1-5/8" COAX CABLES

PTN: 2051A03JN5

RFDS VERSION: PRELIMINARY DATE: 04/29/2016

| | |
|---|---|
| SITE ADDRESS: | 345 NORTH MAIN STREET<br>WEST HARTFORD, CT 06107 |
| LATITUDE: | 41.78458° N, 41° 47' 4.47" N |
| LONGITUDE: | 72.74864° W, 72° 44' 55.1" W |
| USID: | 59399 |
| LANDLORD: | EDENS AND AVANT INVESTMENTS LP |
| TYPE OF SITE: | ROOFTOP |
| SHELTER HEIGHT: | 15'-4"± |
| RAD CENTER: | PROPOSED: 56'-6"± & EXISTING: 68'-6"± |
| CURRENT USE: | TELECOMMUNICATIONS FACILITY |
| PROPOSED USE: | TELECOMMUNICATIONS FACILITY |

# FA NUMBER: 10035096
# SITE NUMBER: CTL01195

# SITE NAME:
# WEST HARTFORD - BISHOPS CORNER
# 345 NORTH MAIN STREET
# WEST HARTFORD, CT 06107
# PROJECT: LTE-3C

## PROJECT TEAM

**CLIENT REPRESENTATIVE**

| | |
|---|---|
| COMPANY: | SMARTLINK, LLC |
| ADDRESS: | 1997 ANNAPOLIS EXCHANGE PARKWAY, SUITE 200 |
| CITY, STATE, ZIP: | ANNAPOLIS, MD 21401 |
| CONTACT: | TIM BOYCE |
| PHONE: | (908) 333-3640 |
| E-MAIL: | tboyce@smartlinkllc.com |

**RF ENGINEER**

| | |
|---|---|
| COMPANY: | AT&T MOBILITY – NEW ENGLAND |
| ADDRESS: | 550 COCHITUATE ROAD SUITE 550 13 AND 14 |
| CITY, STATE, ZIP: | FRAMINGHAM, MA 01701 |
| CONTACT: | CAMERON SYME |
| PHONE: | (508) 596-7146 |
| E-MAIL: | cs6970@att.com |

**SITE ACQUISITION**

| | |
|---|---|
| COMPANY: | SMARTLINK, LLC |
| ADDRESS: | 85 RANGEWAY RD, SUITE 102 |
| CITY, STATE, ZIP: | BILLERICA, MA 01862 |
| CONTACT: | SHARON R. KEEFE |
| PHONE: | (978) 930-3918 |
| E-MAIL: | sharon.keefe@smartlinkllc.com |

**CONSTRUCTION MANAGER**

| | |
|---|---|
| COMPANY: | SMARTLINK, LLC. |
| ADDRESS: | 85 RANGEWAY RD, SUITE 102 |
| CITY, STATE, ZIP: | BILLERICA, MA 01862 |
| CONTACT: | MARK J. DONNELLY |
| PHONE: | (617) 515-2080 |
| E-MAIL: | mark.donnelly@smartlinkllc.com |

**ENGINEERING**

| | |
|---|---|
| COMPANY: | HUDSON DESIGN GROUP, LLC. |
| ADDRESS: | 1600 OSGOOD STREET BUILDING 20 NORTH, SUITE 3090 |
| CITY, STATE, ZIP: | NORTH ANDOVER, MA 01845 |
| CONTACT: | DANIEL P. HAMM, PE |
| PHONE: | (978) 557-5553 |
| E-MAIL: | info@hudsondesigngroupllc.com |

## DRAWING INDEX


| SHEET NO. | DESCRIPTION | REV. |
|---|---|---|
| T-1 | TITLE SHEET | 1 |
| GN-1 | GENERAL NOTES | 1 |
| A-1 | ROOF PLAN | 1 |
| A-2 | EQUIPMENT PLANS | 1 |
| A-3 | ELEVATIONS | 1 |
| A-4 | ANTENNA LAYOUTS | 1 |
| A-5 | DETAILS | 1 |
| S-1 | STRUCTURAL NOTES AND INSPECTION CHECKLIST | 1 |
| S-2 | STRUCTURAL MODIFICATION DETAILS | 1 |
| S-3 | STRUCTURAL MODIFICATION DETAILS | 1 |
| S-4 | STRUCTURAL MODIFICATION DETAILS | 1 |
| RF-1 | RF PLUMBING DIAGRAM | 1 |
| G-1 | GROUNDING DETAILS | 1 |


## APPROVALS

| DISCIPLINE: | SIGNATURE: | DATE: |
|---|---|---|
| THE FOLLOWING PARTIES HEREBY APPROVE AND ACCEPT THESE DOCUMENTS & AUTHORIZE THE SUBCONTRACTOR TO PROCEED WITH CONSTRUCTION DESCRIBED HEREIN. ALL DOCUMENTS ARE SUBJECT TO REVIEW BY THE LOCAL BUILDING DEPARTMENT & MAY IMPOSE CHANGES OR MODIFICATIONS. | | |
| SMARTLINK SITE ACQUISITION: | | |
| SMARTLINK CONSTRUCTION MANAGER: | | |
| AT&T PROJECT MANAGER: | | |

## VICINITY MAP

**DIRECTIONS TO SITE:**

DIRECTION TO SITE:
START OUT GOING NORTHEAST ON ENTERPRISE DR TOWARD CAPITOL BLVD. 0.4 MI TURN LEFT ONTO CAPITOL BLVD. 0.3 MI TURN LEFT ONTO WEST ST. 0.2 MI MERGE ONTO I-91 N VIA THE RAMP ON THE LEFT TOWARD HARTFORD. 9.2 MI TAKE THE I-84 W EXIT ON THE LEFT TOWARD WATERBURY. 0.2 MI TAKE THE I-91 N/TRUMBULL ST EXIT. 0.1 MI TAKE THE TRUMBULL STREET EXIT, EXIT 32B, ON THE LEFT. 0.2 MI TURN SLIGHT LEFT ONTO TRUMBULL ST. 0.2 MI TURN RIGHT ONTO US-44/MAIN ST. CONTINUE TO FOLLOW US-44. 4.1 MI TURN LEFT ONTO N MAIN ST. 0.2 MI END AT 345 N MAIN ST WEST HARTFORD, CT 06117.

## GENERAL NOTES

1. THIS DOCUMENT IS THE CREATION, DESIGN, PROPERTY AND COPYRIGHTED WORK OF AT&T. ANY DUPLICATION OR USE WITHOUT EXPRESS WRITTEN CONSENT IS STRICTLY PROHIBITED. DUPLICATION AND USE BY GOVERNMENT AGENCIES FOR THE PURPOSES OF CONDUCTING THEIR LAWFULLY AUTHORIZED REGULATORY AND ADMINISTRATIVE FUNCTIONS IS SPECIFICALLY ALLOWED.
2. THE FACILITY IS AN UNMANNED PRIVATE AND SECURED EQUIPMENT INSTALLATION. IT IS ONLY ACCESSED BY TRAINED TECHNICIANS FOR PERIODIC ROUTINE MAINTENANCE AND THEREFORE DOES NOT REQUIRE ANY WATER OR SANITARY SEWER SERVICE. THE FACILITY IS NOT GOVERNED BY REGULATIONS REQUIRING PUBLIC ACCESS PER ADA REQUIREMENTS.
3. CONTRACTOR SHALL VERIFY ALL PLANS AND EXISTING DIMENSIONS AND CONDITIONS ON THE JOB SITE AND SHALL IMMEDIATELY NOTIFY THE AT&T MOBILITY REPRESENTATIVE IN WRITING OF DISCREPANCIES BEFORE PROCEEDING WITH THE WORK OR BE RESPONSIBLE FOR SAME.

**72 HOURS**

CALL
BEFORE YOU DIG
CALL TOLL FREE 1-888-DIG-SAFE
OR CALL 811

**UNDERGROUND SERVICE ALERT**


Hudson Design Group LLC
1600 OSGOOD STREET
BUILDING 20 NORTH, SUITE 3090
N. ANDOVER, MA 01845
TEL: (978) 557-5553
FAX: (978) 336-5586

smartlink
1997 ANNAPOLIS EXCHANGE PKWY
SUITE 200
ANNAPOLIS, MD 21401


**SITE NUMBER: CTL01195**
**SITE NAME: WEST HARTFORD - BISHOPS CORNER**
345 NORTH MAIN STREET
WEST HARTFORD, CT 06107
HARTFORD COUNTY


at&t
500 ENTERPRISE DRIVE, SUITE 3A
ROCKY HILL, CT 06067


| NO. | DATE | REVISIONS | BY | CHK | APP'D |
|---|---|---|---|---|---|
| 1 | 08/10/16 | ISSUED FOR CONSTRUCTION | RP | HC | DPH |
| 0 | 05/05/16 | ISSUED FOR REVIEW | FM | HC | DPH |

SCALE: AS SHOWN | DESIGNED BY: HC | DRAWN BY: FM

STATE OF CONNECTICUT DEREK J. CREASER No. 28,258 LICENSED PROFESSIONAL ENGINEER

AT&T

TITLE SHEET
(LTE 3C)

| SITE NUMBER | DRAWING NUMBER | REV |
|---|---|---|
| CTL01195 | T-1 | 1 |

## GROUNDING NOTES

1. THE SUBCONTRACTOR SHALL REVIEW AND INSPECT THE EXISTING FACILITY GROUNDING SYSTEM AND LIGHTNING PROTECTION SYSTEM (AS DESIGNED AND INSTALLED) FOR STRICT COMPLIANCE WITH THE NEC (AS ADOPTED BY THE AHJ), THE SITE-SPECIFIC (UL, LPI, OR NFPA) LIGHTING PROTECTION CODE, AND GENERAL COMPLIANCE WITH TELCORDIA AND TIA GROUNDING STANDARDS. THE SUBCONTRACTOR SHALL REPORT ANY VIOLATIONS OR ADVERSE FINDINGS TO THE CONTRACTOR FOR RESOLUTION.

2. ALL GROUND ELECTRODE SYSTEMS (INCLUDING TELECOMMUNICATION, RADIO, LIGHTNING PROTECTION, AND AC POWER GES'S) SHALL BE BONDED TOGETHER, AT OR BELOW GRADE, BY TWO OR MORE COPPER BONDING CONDUCTORS IN ACCORDANCE WITH THE NEC.

3. THE SUBCONTRACTOR SHALL PERFORM IEEE FALL-OF-POTENTIAL RESISTANCE TO EARTH TESTING (PER IEEE 1100 AND 81) FOR NEW GROUND ELECTRODE SYSTEMS. THE SUBCONTRACTOR SHALL FURNISH AND INSTALL SUPPLEMENTAL GROUND ELECTRODES AS NEEDED TO ACHIEVE A TEST RESULT OF 5 OHMS OR LESS.

4. METAL RACEWAY SHALL NOT BE USED AS THE NEC REQUIRED EQUIPMENT GROUND CONDUCTOR. STRANDED COPPER CONDUCTORS WITH GREEN INSULATION, SIZED IN ACCORDANCE WITH THE NEC, SHALL BE FURNISHED AND INSTALLED WITH THE POWER CIRCUITS TO BTS EQUIPMENT.

5. EACH BTS CABINET FRAME SHALL BE DIRECTLY CONNECTED TO THE MASTER GROUND BAR WITH GREEN INSULATED SUPPLEMENTAL EQUIPMENT GROUND WIRES, 6 AWG STRANDED COPPER OR LARGER FOR INDOOR BTS 2 AWG STRANDED COPPER FOR OUTDOOR BTS.

6. EXOTHERMIC WELDS SHALL BE USED FOR ALL GROUNDING CONNECTIONS BELOW GRADE.

7. APPROVED ANTIOXIDANT COATINGS (I.E., CONDUCTIVE GEL OR PASTE) SHALL BE USED ON ALL COMPRESSION AND BOLTED GROUND CONNECTIONS.

8. ICE BRIDGE BONDING CONDUCTORS SHALL BE EXOTHERMICALLY BONDED OR BOLTED TO GROUND BAR.

9. ALUMINUM CONDUCTOR OR COPPER CLAD STEEL CONDUCTOR SHALL NOT BE USED FOR GROUNDING CONNECTIONS.

10. MISCELLANEOUS ELECTRICAL AND NON-ELECTRICAL METAL BOXES, FRAMES AND SUPPORTS SHALL BE BONDED TO THE GROUND RING, IN ACCORDANCE WITH THE NEC.

11. METAL CONDUIT SHALL BE MADE ELECTRICALLY CONTINUOUS WITH LISTED BONDING FITTINGS OR BY BONDING ACROSS THE DISCONTINUITY WITH 6 AWS COPPER WIRE UL APPROVED GROUNDING TYPE CONDUIT CLAMPS.

12. ALL NEW STRUCTURES WITH A FOUNDATION AND/OR FOOTING HAVING 20 FT. OR MORE OF 1/2 IN. OR GREATER ELECTRICALLY CONDUCTIVE REINFORCING STEEL MUST HAVE IT BONDED TO THE GROUND RING USING AN EXOTHERMIC WELD CONNECTION USING #2 AWG SOLID BARE TINNED COPPER GROUND WIRE, PER NEC 250.50

## GENERAL NOTES

1. FOR THE PURPOSE OF CONSTRUCTION DRAWING, THE FOLLOWING DEFINITIONS SHALL APPLY:

   CONTRACTOR – SMARTLINK
   SUBCONTRACTOR – GENERAL CONTRACTOR (CONSTRUCTION)
   OWNER – AT&T MOBILITY

2. PRIOR TO THE SUBMISSION OF BIDS, THE BIDDING SUBCONTRACTOR SHALL VISIT THE CELL SITE TO FAMILIARIZE WITH THE EXISTING CONDITIONS AND TO CONFIRM THAT THE WORK CAN BE ACCOMPLISHED AS SHOWN ON THE CONSTRUCTION DRAWINGS. ANY DISCREPANCY FOUND SHALL BE BROUGHT TO THE ATTENTION OF CONTRACTOR.

3. ALL MATERIALS FURNISHED AND INSTALLED SHALL BE IN STRICT ACCORDANCE WITH ALL APPLICABLE CODES, REGULATIONS, AND ORDINANCES. SUBCONTRACTOR SHALL ISSUE ALL APPROPRIATE NOTICES AND COMPLY WITH ALL LAWS, ORDINANCES, RULES, REGULATIONS, AND LAWFUL ORDERS OF ANY PUBLIC AUTHORITY REGARDING THE PERFORMANCE OF THE WORK. ALL WORK CARRIED OUT SHALL COMPLY WITH ALL APPLICABLE MUNICIPAL AND UTILITY COMPANY SPECIFICATIONS AND LOCAL JURISDICTIONAL CODES, ORDINANCES AND APPLICABLE REGULATIONS.

4. DRAWINGS PROVIDED HERE ARE NOT TO BE SCALED AND ARE INTENDED TO SHOW OUTLINE ONLY.

5. UNLESS NOTED OTHERWISE, THE WORK SHALL INCLUDE FURNISHING MATERIALS, EQUIPMENT, APPURTENANCES, AND LABOR NECESSARY TO COMPLETE ALL INSTALLATIONS AS INDICATED ON THE DRAWINGS.

6. "KITTING LIST" SUPPLIED WITH THE BID PACKAGE IDENTIFIES ITEMS THAT WILL BE SUPPLIED BY CONTRACTOR. ITEMS NOT INCLUDED IN THE BILL OF MATERIALS AND KITTING LIST SHALL BE SUPPLIED BY THE SUBCONTRACTOR.

7. THE SUBCONTRACTOR SHALL INSTALL ALL EQUIPMENT AND MATERIALS IN ACCORDANCE WITH MANUFACTURER'S RECOMMENDATIONS UNLESS SPECIFICALLY STATED OTHERWISE.

8. IF THE SPECIFIED EQUIPMENT CANNOT BE INSTALLED AS SHOWN ON THESE DRAWINGS, THE SUBCONTRACTOR SHALL PROPOSE AN ALTERNATIVE INSTALLATION SPACE FOR APPROVAL BY THE CONTRACTOR.

9. SUBCONTRACTOR SHALL DETERMINE ACTUAL ROUTING OF CONDUIT, POWER AND T1 CABLES, GROUNDING CABLES AS SHOWN ON THE POWER, GROUNDING AND TELCO PLAN DRAWING. SUBCONTRACTOR SHALL UTILIZE EXISTING TRAYS AND/OR SHALL ADD NEW TRAYS AS NECESSARY. SUBCONTRACTOR SHALL CONFIRM THE ACTUAL ROUTING WITH THE CONTRACTOR.

10. THE SUBCONTRACTOR SHALL PROTECT EXISTING IMPROVEMENTS, PAVEMENTS, CURBS, LANDSCAPING AND STRUCTURES. ANY DAMAGED PART SHALL BE REPAIRED AT SUBCONTRACTOR'S EXPENSE TO THE SATISFACTION OF OWNER.

11. SUBCONTRACTOR SHALL LEGALLY AND PROPERLY DISPOSE OF ALL SCRAP MATERIALS SUCH AS COAXIAL CABLES AND OTHER ITEMS REMOVED FROM THE EXISTING FACILITY. ANTENNAS REMOVED SHALL BE RETURNED TO THE OWNER'S DESIGNATED LOCATION.

12. SUBCONTRACTOR SHALL LEAVE PREMISES IN CLEAN CONDITION.

13. ALL CONCRETE REPAIR WORK SHALL BE DONE IN ACCORDANCE WITH AMERICAN CONCRETE INSTITUTE (ACI) 301.

14. ANY NEW CONCRETE NEEDED FOR THE CONSTRUCTION SHALL BE AIR-ENTRAINED AND SHALL HAVE 4000 PSI STRENGTH AT 28 DAYS. ALL CONCRETE WORK SHALL BE DONE IN ACCORDANCE WITH ACI 318 CODE REQUIREMENTS.

15. ALL STRUCTURAL STEEL WORK SHALL BE DETAILED, FABRICATED AND ERECTED IN ACCORDANCE WITH AISC SPECIFICATIONS. ALL STRUCTURAL STEEL SHALL BE ASTM A36 (Fy = 36 ksi) UNLESS OTHERWISE NOTED. PIPES SHALL BE ASTM A53 TYPE E (Fy = 36 ksi). ALL STEEL EXPOSED TO WEATHER SHALL BE HOT DIPPED GALVANIZED. TOUCHUP ALL SCRATCHES AND OTHER MARKS IN THE FIELD AFTER STEEL IS ERECTED USING A COMPATIBLE ZINC RICH PAINT.

16. CONSTRUCTION SHALL COMPLY WITH SPECIFICATIONS AND "GENERAL CONSTRUCTION SERVICES FOR CONSTRUCTION OF AT&T SITES."

17. SUBCONTRACTOR SHALL VERIFY ALL EXISTING DIMENSIONS AND CONDITIONS PRIOR TO COMMENCING ANY WORK. ALL DIMENSIONS OF EXISTING CONSTRUCTION SHOWN ON THE DRAWINGS MUST BE VERIFIED. SUBCONTRACTOR SHALL NOTIFY THE CONTRACTOR OF ANY DISCREPANCIES PRIOR TO ORDERING MATERIAL OR PROCEEDING WITH CONSTRUCTION.

18. THE EXISTING CELL SITE IS IN FULL COMMERCIAL OPERATION. ANY CONSTRUCTION WORK BY SUBCONTRACTOR SHALL NOT DISRUPT THE EXISTING NORMAL OPERATION. ANY WORK ON EXISTING EQUIPMENT MUST BE COORDINATED WITH CONTRACTOR. ALSO, WORK SHOULD BE SCHEDULED FOR AN APPROPRIATE MAINTENANCE WINDOW USUALLY IN LOW TRAFFIC PERIODS AFTER MIDNIGHT.

19. SINCE THE CELL SITE IS ACTIVE, ALL SAFETY PRECAUTIONS MUST BE TAKEN WHEN WORKING AROUND HIGH LEVELS OF ELECTROMAGNETIC RADIATION. EQUIPMENT SHOULD BE SHUTDOWN PRIOR TO PERFORMING ANY WORK THAT COULD EXPOSE THE WORKERS TO DANGER. PERSONAL RF EXPOSURE MONITORS ARE ADVISED TO BE WORN TO ALERT OF ANY DANGEROUS EXPOSURE LEVELS.

20. APPLICABLE BUILDING CODES:
    SUBCONTRACTOR'S WORK SHALL COMPLY WITH ALL APPLICABLE NATIONAL, STATE, AND LOCAL CODES AS ADOPTED BY THE LOCAL AUTHORITY HAVING JURISDICTION (AHJ) FOR THE LOCATION. THE EDITION OF THE AHJ ADOPTED CODES AND STANDARDS IN EFFECT ON THE DATE OF CONTRACT AWARD SHALL GOVERN THE DESIGN.
    BUILDING CODE: 2003 IBC WITH 2005 CT SUPPLEMENT, + 2009 & 2013 CT AMENDMENTS
    ELECTRICAL CODE: REFER TO ELECTRICAL DRAWINGS
    LIGHTENING CODE: REFER TO ELECTRICAL DRAWINGS

    SUBCONTRACTOR'S WORK SHALL COMPLY WITH THE LATEST EDITION OF THE FOLLOWING STANDARDS:

    AMERICAN CONCRETE INSTITUTE (ACI) 318; BUILDING CODE REQUIREMENTS FOR STRUCTURAL CONCRETE;

    AMERICAN INSTITUTE OF STEEL CONSTRUCTION (AISC)

    MANUAL OF STEEL CONSTRUCTION, ASD, FOURTEENTH EDITION;

    TELECOMMUNICATIONS INDUSTRY ASSOCIATION (TIA) 222-F, STRUCTURAL STANDARDS FOR STEEL

    EQUIPMENT AND ANTENNA SUPPORTING STRUCTURES; REFER TO ELECTRICAL DRAWINGS FOR SPECIFIC ELECTRICAL STANDARDS.

FOR ANY CONFLICTS BETWEEN SECTIONS OF LISTED CODES AND STANDARDS REGARDING MATERIAL, METHODS OF CONSTRUCTION, OR OTHER REQUIREMENTS, THE MOST RESTRICTIVE REQUIREMENT SHALL GOVERN. WHERE THERE IS CONFLICT BETWEEN A GENERAL REQUIREMENT AND A SPECIFIC REQUIREMENT, THE SPECIFIC REQUIREMENT SHALL GOVERN.

## ABBREVIATIONS

| | | | | | |
|---|---|---|---|---|---|
| AGL | ABOVE GRADE LEVEL | EQ | EQUAL | REQ | REQUIRED |
| AWG | AMERICAN WIRE GAUGE | GC | GENERAL CONTRACTOR | RF | RADIO FREQUENCY |
| BBU | BATTERY BACKUP UNIT | GRC | GALVANIZED RIGID CONDUIT | TBD | TO BE DETERMINED |
| BTCW | BARE TINNED SOLID COPPER WIRE | MGB | MASTER GROUND BAR | TBR | TO BE REMOVED |
| BGR | BURIED GROUND RING | MIN | MINIMUM | TBRR | TO BE REMOVED AND REPLACED |
| BTS | BASE TRANSCEIVER STATION | P | PROPOSED | TYP | TYPICAL |
| E | EXISTING | NTS | NOT TO SCALE | UG | UNDER GROUND |
| EGB | EQUIPMENT GROUND BAR | RAD | RADIATION CENTER LINE (ANTENNA) | VIF | VERIFY IN FIELD |
| EGR | EQUIPMENT GROUND RING | REF | REFERENCE | | |


Hudson Design Group LLC
1600 OSGOOD STREET
BUILDING 20 NORTH, SUITE 3090
N. ANDOVER, MA 01845
TEL: (978) 557-5553
FAX: (978) 336-5586



smartlink
1997 ANNAPOLIS EXCHANGE PKWY
SUITE 200
ANNAPOLIS, MD 21401


**SITE NUMBER: CTL01195**
**SITE NAME: WEST HARTFORD - BISHOPS CORNER**
345 NORTH MAIN STREET
WEST HARTFORD, CT 06107
HARTFORD COUNTY


at&t
500 ENTERPRISE DRIVE, SUITE 3A
ROCKY HILL, CT 06067


| NO. | DATE | REVISIONS | BY | CHK | APP'D |
|---|---|---|---|---|---|
| 1 | 08/10/16 | ISSUED FOR CONSTRUCTION | RP | HC | DPH |
| 0 | 05/05/16 | ISSUED FOR REVIEW | FM | HC | DPH |

SCALE: AS SHOWN | DESIGNED BY: HC | DRAWN BY: FM

STATE OF CONNECTICUT · DEREK J. CRESSER · No. 28584 · LICENSED PROFESSIONAL ENGINEER

AT&T

GENERAL NOTES
(LTE 3C)

| SITE NUMBER | DRAWING NUMBER | REV |
|---|---|---|
| CTL01195 | GN-1 | 1 |

**NOTE:**
REFER TO THE FINAL RF DATA SHEET FOR FINAL ANTENNA SETTINGS.

NOTE:

REFER TO STRUCTURAL ANALYSIS BY: HUDSON DESIGN GROUP, LLC, DATED: MAY 25, 2016 FOR THE CAPACITY OF THE EXISTING STRUCTURES TO SUPPORT THE PROPOSED EQUIPMENT.

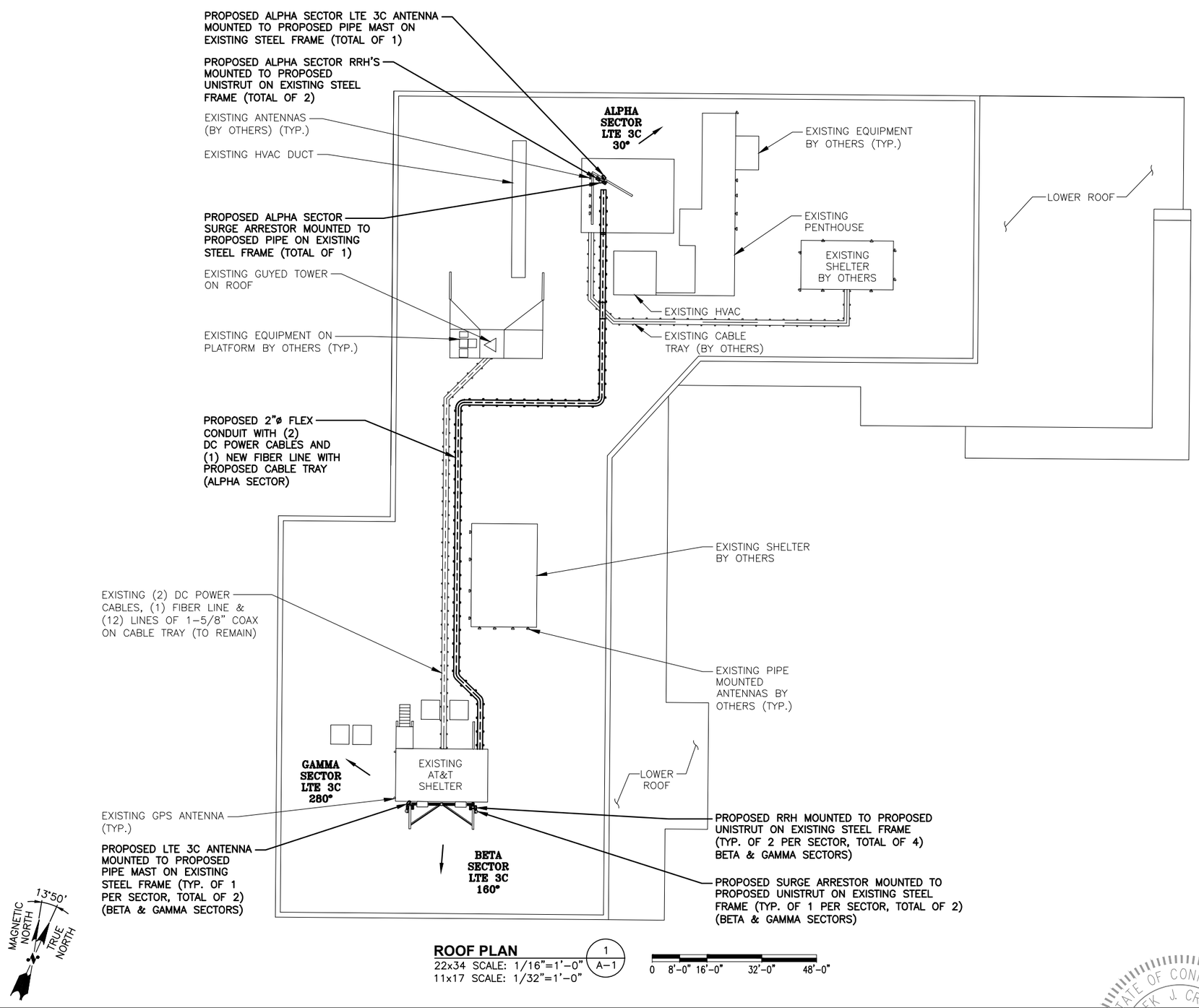


**ROOF PLAN** (1 / A-1)
22x34 SCALE: 1/16"=1'-0"
11x17 SCALE: 1/32"=1'-0"

0 8'-0" 16'-0" 32'-0" 48'-0"


Hudson Design Group LLC
1600 OSGOOD STREET
BUILDING 20 NORTH, SUITE 3090
N. ANDOVER, MA 01845
TEL: (978) 557-5553
FAX: (978) 336-5586

smartlink
1997 ANNAPOLIS EXCHANGE PKWY
SUITE 200
ANNAPOLIS, MD 21401


**SITE NUMBER: CTL01195**
**SITE NAME: WEST HARTFORD - BISHOPS CORNER**
345 NORTH MAIN STREET
WEST HARTFORD, CT 06107
HARTFORD COUNTY


at&t
500 ENTERPRISE DRIVE, SUITE 3A
ROCKY HILL, CT 06067


| NO. | DATE | REVISIONS | BY | CHK | APP'D |
|---|---|---|---|---|---|
| 1 | 08/10/16 | ISSUED FOR CONSTRUCTION | RP | HC | DPH |
| 0 | 05/05/16 | ISSUED FOR REVIEW | FM | HC | DPH |

SCALE: AS SHOWN | DESIGNED BY: HC | DRAWN BY: FM

STATE OF CONNECTICUT · DEREK J. CRESSER · 16,235 · LICENSED PROFESSIONAL ENGINEER

AT&T

ROOF PLAN
(LTE 3C)

| SITE NUMBER | DRAWING NUMBER | REV |
|---|---|---|
| CTL01195 | A-1 | 1 |

**NOTE:**
REFER TO THE FINAL RF DATA SHEET FOR FINAL ANTENNA SETTINGS.

NOTE:

REFER TO STRUCTURAL ANALYSIS BY: HUDSON DESIGN GROUP, LLC, DATED: MAY 25, 2016 FOR THE CAPACITY OF THE EXISTING STRUCTURES TO SUPPORT THE PROPOSED EQUIPMENT.

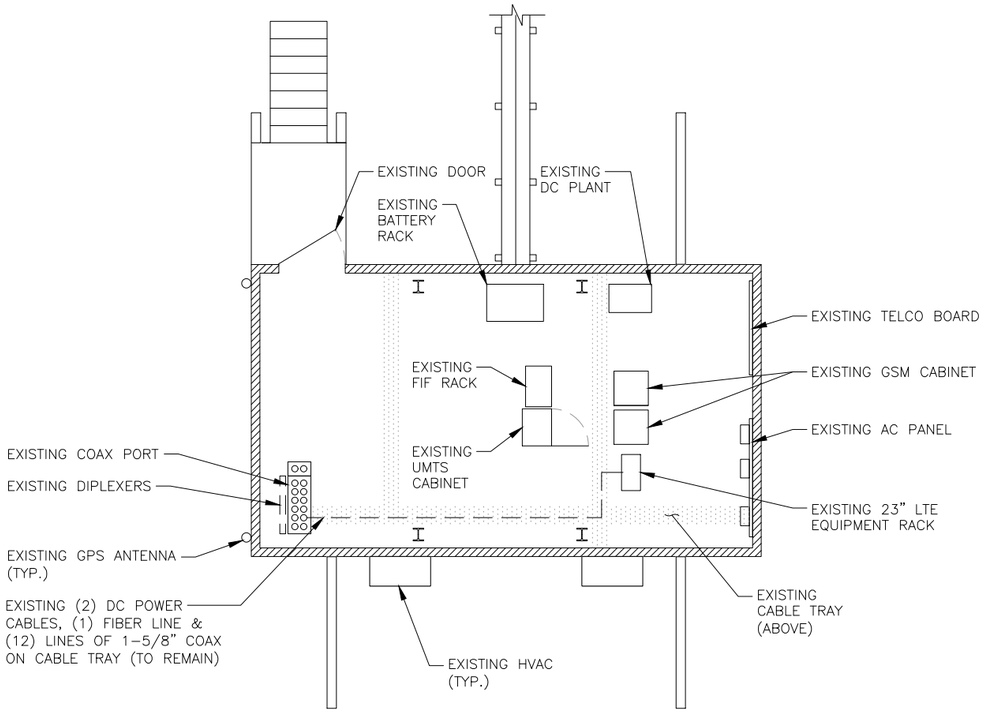

**EXISTING EQUIPMENT PLAN** (1 / A-2)
22x34 SCALE: 1/4"=1'-0"
11x17 SCALE: 1/8"=1'-0"

0 2'-0" 4'-0" 8'-0" 12'-0"

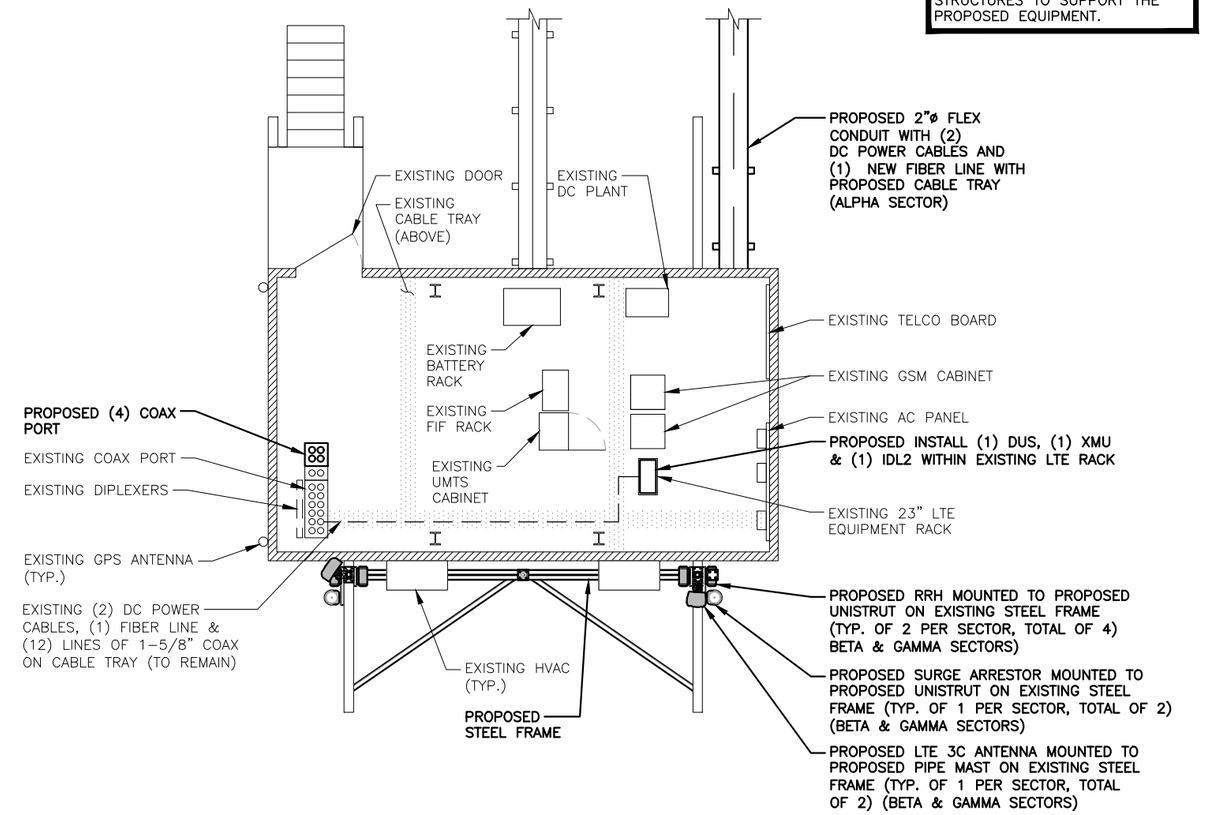


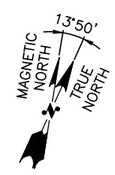


**PROPOSED EQUIPMENT PLAN** (2 / A-2)
22x34 SCALE: 1/4"=1'-0"
11x17 SCALE: 1/8"=1'-0"

0 2'-0" 4'-0" 8'-0" 12'-0"


Hudson Design Group LLC
1600 OSGOOD STREET
BUILDING 20 NORTH, SUITE 3090
N. ANDOVER, MA 01845
TEL: (978) 557-5553
FAX: (978) 336-5586



smartlink
1997 ANNAPOLIS EXCHANGE PKWY
SUITE 200
ANNAPOLIS, MD 21401


**SITE NUMBER: CTL01195**
**SITE NAME: WEST HARTFORD - BISHOPS CORNER**
345 NORTH MAIN STREET
WEST HARTFORD, CT 06107
HARTFORD COUNTY


at&t
500 ENTERPRISE DRIVE, SUITE 3A
ROCKY HILL, CT 06067


| NO. | DATE | REVISIONS | BY | CHK | APP'D |
|---|---|---|---|---|---|
| 1 | 08/10/16 | ISSUED FOR CONSTRUCTION | RP | HC | DPH |
| 0 | 05/05/16 | ISSUED FOR REVIEW | FM | HC | DPH |

SCALE: AS SHOWN | DESIGNED BY: HC | DRAWN BY: FM

STATE OF CONNECTICUT — DEREK J. CRESSER — LICENSED PROFESSIONAL ENGINEER

AT&T

EQUIPMENT PLANS (LTE 3C)

| SITE NUMBER | DRAWING NUMBER | REV |
|---|---|---|
| CTL01195 | A-2 | 1 |

**NOTE:**
REFER TO THE FINAL RF DATA SHEET FOR FINAL ANTENNA SETTINGS.

**NOTE:**

REFER TO STRUCTURAL ANALYSIS BY: HUDSON DESIGN GROUP, LLC, DATED: MAY 25, 2016 FOR THE CAPACITY OF THE EXISTING STRUCTURES TO SUPPORT THE PROPOSED EQUIPMENT.

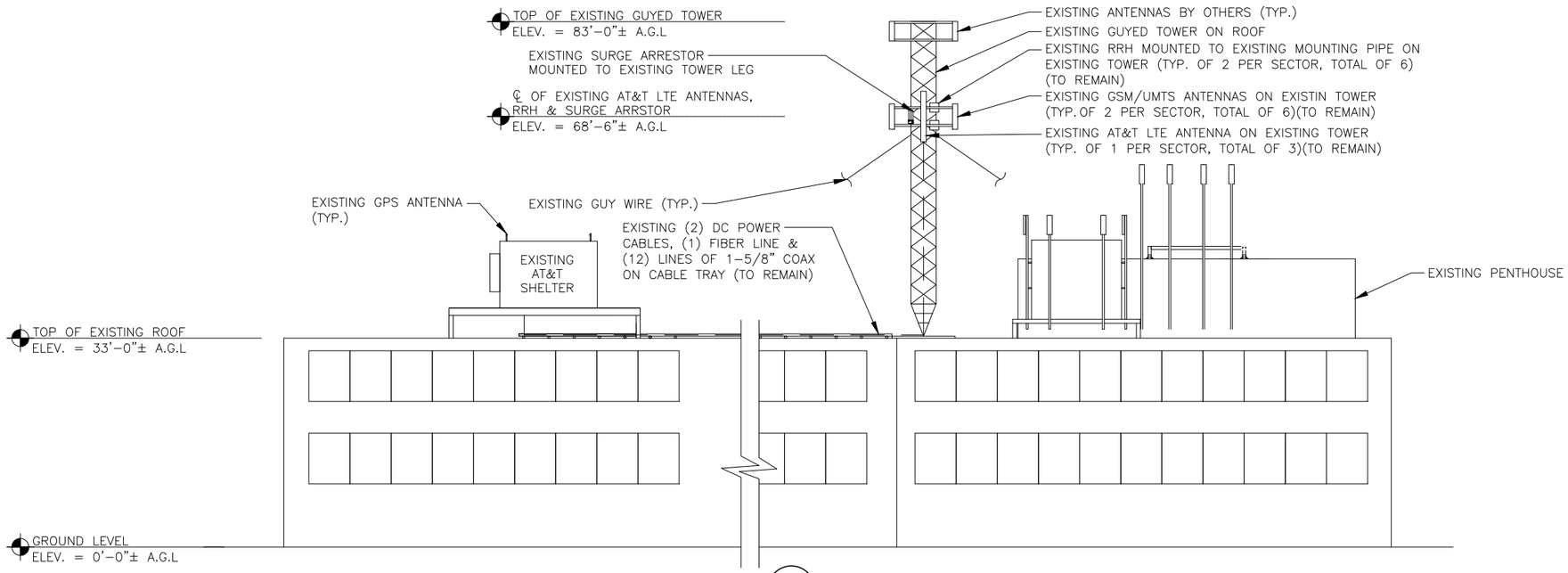


**EXISTING EAST ELEVATION** (1 / A-3)
22x34 SCALE: 3/32"=1'-0"
11x17 SCALE: 3/64"=1'-0"

0 5'-4" 10'-8" 21'-4" 32'-0"

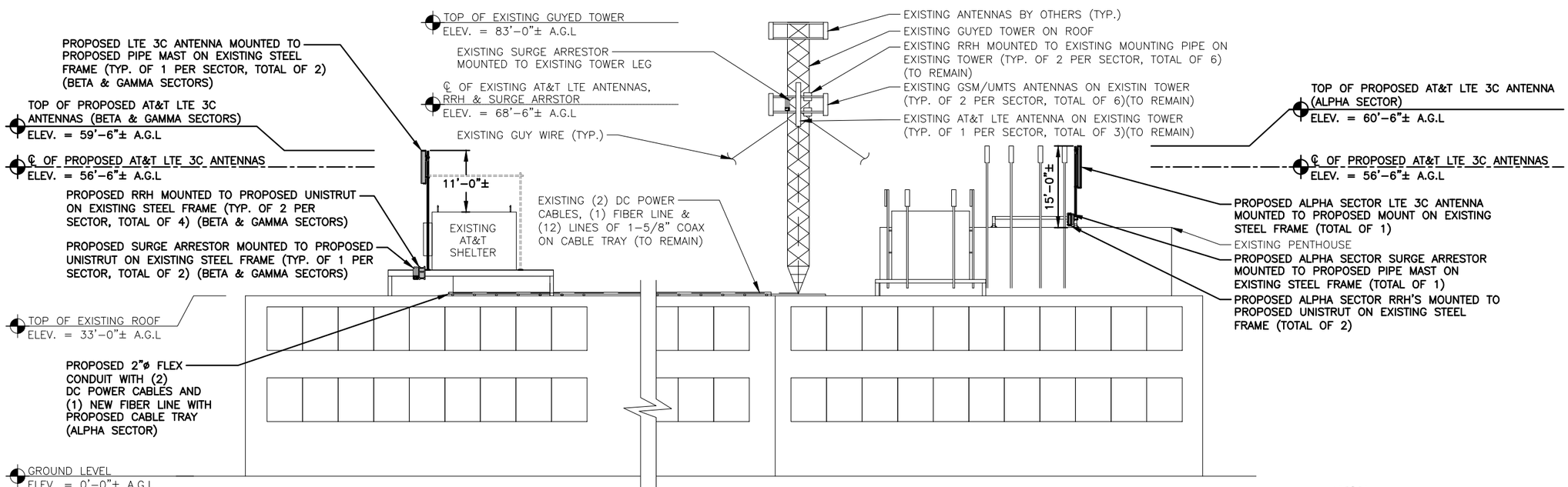


**PROPOSED EAST ELEVATION** (2 / A-3)
22x34 SCALE: 3/32"=1'-0"
11x17 SCALE: 3/64"=1'-0"

0 5'-4" 10'-8" 21'-4" 32'-0"


Hudson Design Group LLC
1600 OSGOOD STREET
BUILDING 20 NORTH, SUITE 3090
N. ANDOVER, MA 01845
TEL: (978) 557-5553
FAX: (978) 336-5586

smartlink
1997 ANNAPOLIS EXCHANGE PKWY
SUITE 200
ANNAPOLIS, MD 21401


**SITE NUMBER: CTL01195**
**SITE NAME: WEST HARTFORD - BISHOPS CORNER**
345 NORTH MAIN STREET
WEST HARTFORD, CT 06107
HARTFORD COUNTY


at&t
500 ENTERPRISE DRIVE, SUITE 3A
ROCKY HILL, CT 06067


| NO. | DATE | REVISIONS | BY | CHK | APP'D |
|---|---|---|---|---|---|
| 1 | 08/10/16 | ISSUED FOR CONSTRUCTION | RP | HC | DPH |
| 0 | 05/05/16 | ISSUED FOR REVIEW | FM | HC | DPH |

SCALE: AS SHOWN | DESIGNED BY: HC | DRAWN BY: FM

STATE OF CONNECTICUT · DEREK J. CREASER · 16-32-35 · LICENSED PROFESSIONAL ENGINEER

AT&T

ELEVATIONS
(LTE 3C)

| SITE NUMBER | DRAWING NUMBER | REV |
|---|---|---|
| CTL01195 | A-3 | 1 |

**NOTE:**
REFER TO THE FINAL RF DATA SHEET FOR FINAL ANTENNA SETTINGS.

NOTE:

REFER TO STRUCTURAL ANALYSIS BY: HUDSON DESIGN GROUP, LLC, DATED: MAY 25, 2016 FOR THE CAPACITY OF THE EXISTING STRUCTURES TO SUPPORT THE PROPOSED EQUIPMENT.

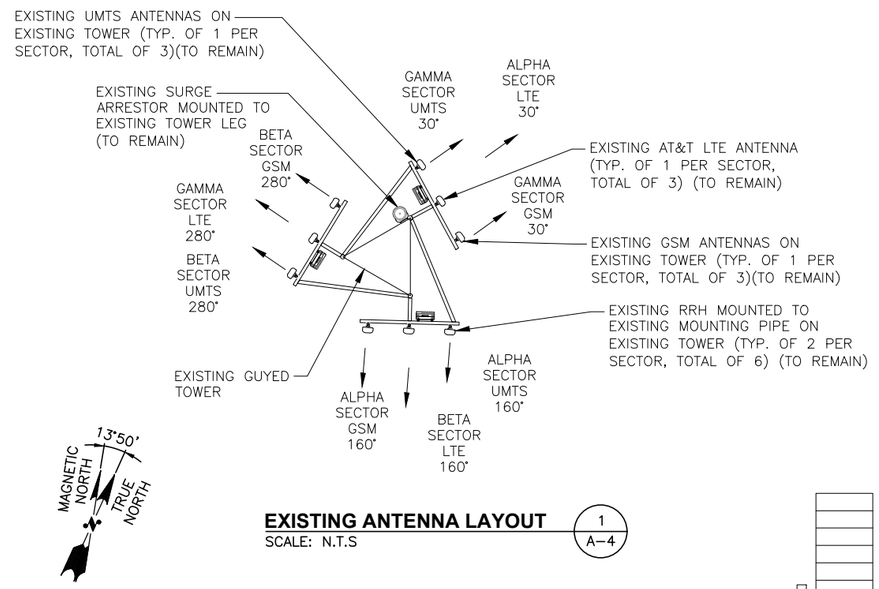


**EXISTING ANTENNA LAYOUT** (1 / A–4)
SCALE: N.T.S

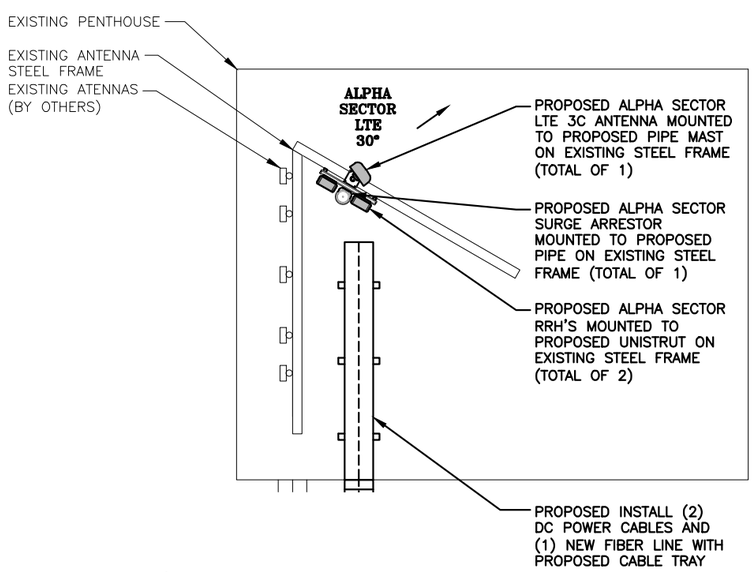


**PROPOSED ANTENNA LAYOUT (ALPHA SECTOR)** (2 / A–4)
SCALE: N.T.S

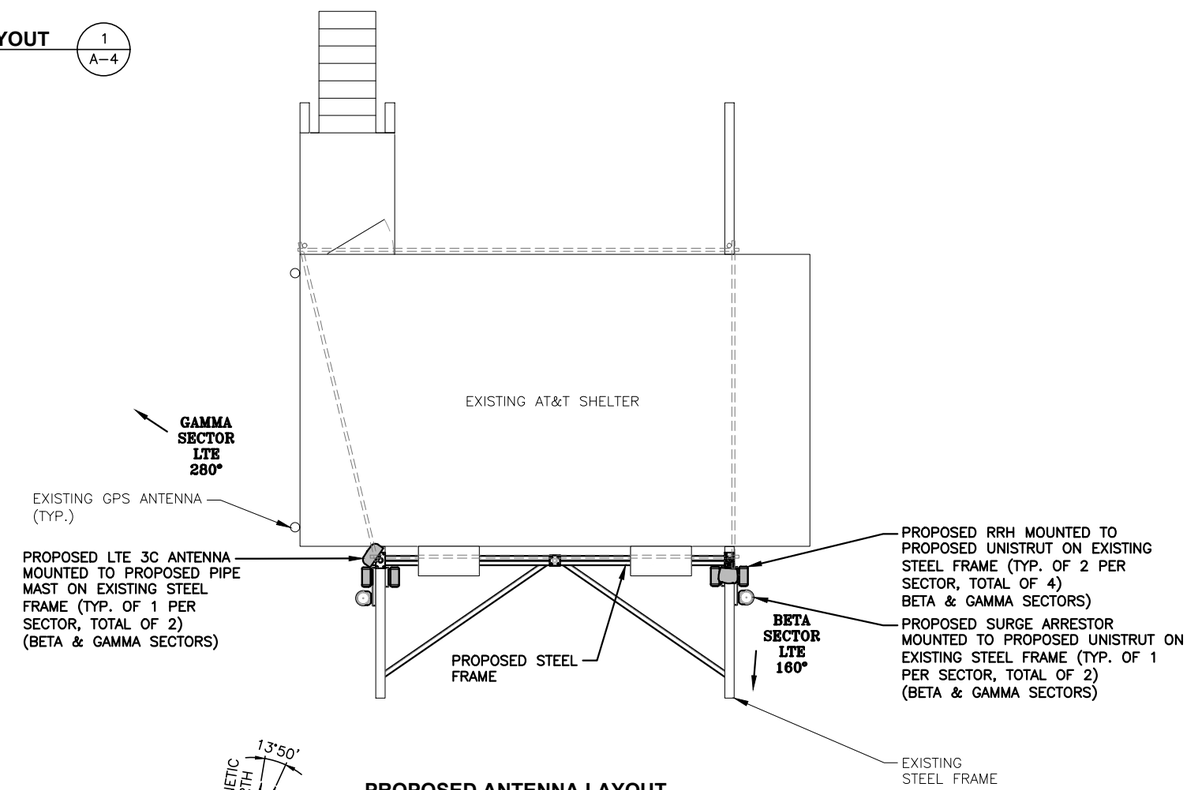


**PROPOSED ANTENNA LAYOUT (BETA & GAMMA SECTORS)** (3 / A–4)
SCALE: N.T.S

STATE OF CONNECTICUT · DEREK J. CREASER · 16,256 · LICENSED PROFESSIONAL ENGINEER


Hudson Design Group LLC
1600 OSGOOD STREET
BUILDING 20 NORTH, SUITE 3090
N. ANDOVER, MA 01845
TEL: (978) 557-5553
FAX: (978) 336-5586

smartlink
1997 ANNAPOLIS EXCHANGE PKWY
SUITE 200
ANNAPOLIS, MD 21401


**SITE NUMBER: CTL01195**
**SITE NAME: WEST HARTFORD - BISHOPS CORNER**
345 NORTH MAIN STREET
WEST HARTFORD, CT 06107
HARTFORD COUNTY


at&t
500 ENTERPRISE DRIVE, SUITE 3A
ROCKY HILL, CT 06067


| NO. | DATE | REVISIONS | BY | CHK | APP'D |
|---|---|---|---|---|---|
| 1 | 08/10/16 | ISSUED FOR CONSTRUCTION | RP | HC | DPH |
| 0 | 05/05/16 | ISSUED FOR REVIEW | FM | HC | DPH |

SCALE: AS SHOWN | DESIGNED BY: HC | DRAWN BY: FM

AT&T

ANTENNA LAYOUTS (LTE 3C)

| SITE NUMBER | DRAWING NUMBER | REV |
|---|---|---|
| CTL01195 | A–4 | 1 |

NOTE:

REFER TO STRUCTURAL ANALYSIS BY: HUDSON DESIGN GROUP, LLC, DATED: MAY 25, 2016 FOR THE CAPACITY OF THE EXISTING STRUCTURES TO SUPPORT THE PROPOSED EQUIPMENT.

**NOTE:**
REFER TO THE FINAL RF DATA SHEET FOR FINAL ANTENNA SETTINGS.

## EXISTING & PROPOSED ANTENNA SCHEDULE

| SECTOR | TECHNOLOGY | EXISTING/PROPOSED | RAD CENTER | AZIMUTH | MAKE | MODEL# | SIZE (INCHES) (L x W x D) |
|---|---|---|---|---|---|---|---|
| ALPHA | UMTS | EXISTING | | 160° | POWERWAVE | 7770 | 55.0x11.0x5.0 |
| | LTE 3C | PROPOSED | | 30° | CCI | TPA-65R-LCUUUU-H8 | 96.0x14.4x8.6 |
| | LTE 2C | EXISTING | | 30° | POWERWAVE | P65-17-XLH-RR | 96.0x12.0x6.0 |
| | GSM | EXISTING | | 160° | POWERWAVE | 7770 | 55.0x11.0x5.0 |
| BETA | UMTS | EXISTING | | 280° | POWERWAVE | 7770 | 55.0x11.0x5.0 |
| | LTE 3C | PROPOSED | | 160° | QUINTEL | QS66512-3 | 72.0x12.0x9.6 |
| | LTE 2C | EXISTING | | 160° | KMW | AM-X-CD-16-65-00Y-RET | 72.0x11.8x5.9 |
| | GSM | EXISTING | | 280° | POWERWAVE | 7770 | 55.0x11.0x5.0 |
| GAMMA | UMTS | EXISTING | | 30° | POWERWAVE | 7770 | 55.0x11.0x5.0 |
| | LTE 3C | PROPOSED | | 280° | CCI | TPA-65R-LCUUUU-H8 | 96.0x14.4x8.6 |
| | LTE 2C | EXISTING | | 280° | POWERWAVE | P65-17-XLH-RR | 96.0x12.0x6.0 |
| | GSM | EXISTING | | 30° | POWERWAVE | 7770 | 55.0x11.0x5.0 |

## EXISTING & PROPOSED RRU SCHEDULE

| SECTOR | EXISTING/PROPOSED | MAKE | MODEL# | SIZE (INCHES) (L x W x D) |
|---|---|---|---|---|
| ALPHA | | | | |
| | PROPOSED<br>PROPOSED | ERICSSON<br>ERICSSON | RRUS-32<br>RRUS-32 B2 | 26.7x12.1x6.7 |
| | EXISTING | ERICSSON | (2)RRUS-11 | 19.7x17.0x7.2 |
| | | | | |
| BETA | | | | |
| | PROPOSED<br>PROPOSED | ERICSSON<br>ERICSSON | RRUS-32<br>RRUS-32 B2 | 26.7x12.1x6.7 |
| | EXISTING | ERICSSON | (2)RRUS-11 | 19.7x17.0x7.2 |
| | | | | |
| GAMMA | | | | |
| | PROPOSED<br>PROPOSED | ERICSSON<br>ERICSSON | RRUS-32<br>RRUS-32 B2 | 26.7x12.1x6.7 |
| | EXISTING | ERICSSON | (2)RRUS-11 | 19.7x17.0x7.2 |
| | | | | |

**NOTES:**

1. REFER TO RF CONFIG & SECTOR SCHEMATICS FOR MODEL, TYPE & QUANTITY REQUIRED PER SECTOR

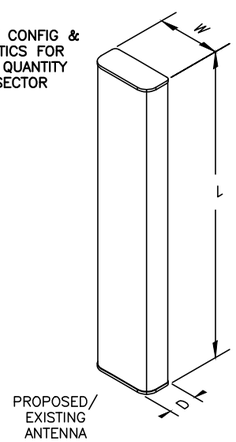


## RRU CHART

| QUANTITY | MODEL | L | W | D |
|---|---|---|---|---|
| 9(E) | RRUS-11 | 19.7" | 17.0" | 7.2" |
| – | RRUS-12 | 20.4" | 18.5" | 7.5" |
| 3(P) | RRUS-32 | 26.7" | 12.1" | 6.7" |
| – | RRUS-E2 | 20.4" | 18.5" | 7.5" |
| – | LTE-A2 | 16.4" | 15.2" | 3.4" |

**NOTE:**
MOUNT PER MANUFACTURER'S SPECIFICATIONS

SEE RFDS FOR RRH FREQUENCY AND MODEL NUMBER

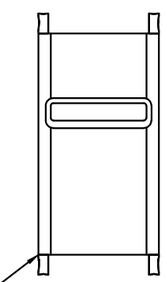

**PROPOSED RRH REFER TO THE FINAL RFDS AND CHART FOR QUANTITY, MODEL AND DIMENSIONS**

NOTE:
MOUNT PER MANUFACTURER'S SPECIFICATIONS.

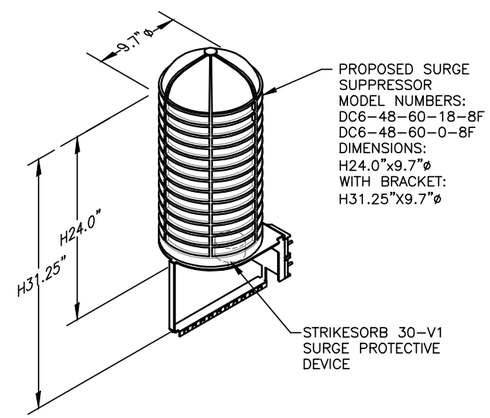


NOTE:
MOUNT PER MANUFACTURER'S SPECIFICATIONS.

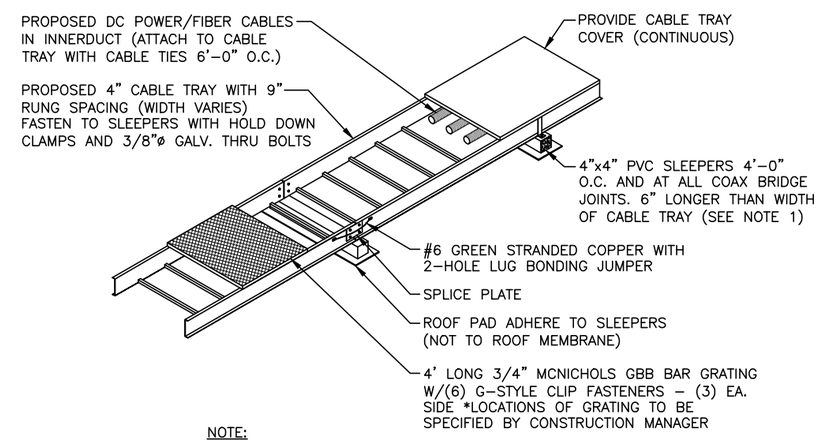


NOTE:

1. PVC SLEEPERS FILLED WITH CONCRETE EVERY 8'-0".

**PROPOSED ANTENNA DETAIL** (1 / A-5)
SCALE: N.T.S

**PROPOSED RRH DETAIL** (2 / A-5)
SCALE: N.T.S

**DC SURGE SUPPRESSOR DETAIL** (3 / A-5)
SCALE: N.T.S

**CABLE TRAY DETAILS** (4 / A-5)
SCALE: N.T.S


Hudson Design Group LLC
1600 OSGOOD STREET
BUILDING 20 NORTH, SUITE 3090
N. ANDOVER, MA 01845
TEL: (978) 557-5553
FAX: (978) 336-5586

smartlink
1997 ANNAPOLIS EXCHANGE PKWY
SUITE 200
ANNAPOLIS, MD 21401


**SITE NUMBER: CTL01195**
**SITE NAME: WEST HARTFORD - BISHOPS CORNER**
345 NORTH MAIN STREET
WEST HARTFORD, CT 06107
HARTFORD COUNTY


at&t
500 ENTERPRISE DRIVE, SUITE 3A
ROCKY HILL, CT 06067


| NO. | DATE | REVISIONS | BY | CHK | APP'D |
|---|---|---|---|---|---|
| 1 | 08/10/16 | ISSUED FOR CONSTRUCTION | RP | HC | DPH |
| 0 | 05/05/16 | ISSUED FOR REVIEW | FM | HC | DPH |

SCALE: AS SHOWN | DESIGNED BY: HC | DRAWN BY: FM

STATE OF CONNECTICUT · DEREK J. CREASER · LICENSED PROFESSIONAL ENGINEER

AT&T

DETAILS
(LTE 3C)

| SITE NUMBER | DRAWING NUMBER | REV |
|---|---|---|
| CTL01195 | A-5 | 1 |

## STRUCTURAL NOTES:

1. DESIGN REQUIREMENTS ARE PER STATE BUILDING CODE AND APPLICABLE SUPPLEMENTS, INTERNATIONAL BUILDING CODE (IBC 2012), ASCE 7-05, EIA/TIA-222-G STRUCTURAL STANDARDS FOR STEEL ANTENNA, TOWERS AND ANTENNA SUPPORTING STRUCTURES.
2. CONTRACTOR SHALL VERIFY ALL DIMENSIONS AND CONDITIONS IN THE FIELD PRIOR TO FABRICATION AND ERECTION OF ANY MATERIAL. ANY UNUSUAL CONDITIONS SHALL BE REPORTED TO THE ATTENTION OF THE CONSTRUCTION MANAGER AND ENGINEER OF RECORD.
3. DESIGN AND CONSTRUCTION OF STRUCTURAL STEEL SHALL CONFORM TO THE AMERICAN INSTITUTE OF STEEL CONSTRUCTION "SPECIFICATION FOR THE DESIGN, FABRICATION AND ERECTION OF STRUCTURAL STEEL FOR BUILDINGS".
4. STRUCTURAL STEEL SHALL CONFORM TO ASTM A992 (Fy=50 ksi), MISCELLANEOUS STEEL SHALL CONFORM TO ASTM A36 UNLESS OTHERWISE INDICATED.
5. STEEL PIPE SHALL CONFORM TO ASTM A500 "COLD-FORMED WELDED & SEAMLESS CARBON STEEL STRUCTURAL TUBING", GRADE B, OR ASTM A53 PIPE STEEL BLACK AND HOT-DIPPED ZINC-COATED WELDED AND SEAMLESS TYPE E OR S, GRADE B. PIPE SIZES INDICATED ARE NOMINAL. ACTUAL OUTSIDE DIAMETER IS LARGER.
6. STRUCTURAL CONNECTION BOLTS SHALL BE HIGH STRENGTH BOLTS (BEARING TYPE) AND CONFORM TO ASTM A325 TYPE-X "HIGH STRENGTH BOLTS FOR STRUCTURAL JOINTS, INCLUDING SUITABLE NUTS AND PLAIN HARDENED WASHERS". ALL BOLTS SHALL BE 3/4" DIA UON.
7. ALL STEEL MATERIALS SHALL BE GALVANIZED AFTER FABRICATION IN ACCORDANCE WITH ASTM A123 "ZINC (HOT-DIP GALVANIZED) COATINGS ON IRON AND STEEL PRODUCTS", UNLESS OTHERWISE NOTED.
8. ALL BOLTS, ANCHORS AND MISCELLANEOUS HARDWARE SHALL BE GALVANIZED IN ACCORDANCE WITH ASTM A153 "ZINC-COATING (HOT-DIP) ON IRON AND STEEL HARDWARE", UNLESS OTHERWISE NOTED.
9. FIELD WELDS, DRILL HOLES, SAW CUTS AND ALL DAMAGED GALVANIZED SURFACES SHALL BE REPAIRED WITH AN ORGANIC ZINC REPAIR PAINT COMPLYING WITH REQUIREMENTS OF ASTM A780. GALVANIZING REPAIR PAINT SHALL HAVE 65 PERCENT ZINC BY WEIGHT, ZIRP BY DUNCAN GALVANIZING, GALVA BRIGHT PREMIUM BY CROWN OR EQUAL. THICKNESS OF APPLIED GALVANIZING REPAIR PAINT SHALL BE NOT NOT LESS THAN 4 COATS (ALLOW TIME TO DRY BETWEEN COATS) WITH A RESULTING COATING THICKNESS REQUIRED BY ASTM A123 OR A153 AS APPLICABLE.
10. CONTRACTOR SHALL COMPLY WITH AWS CODE FOR PROCEDURES, APPEARANCE AND QUALITY OF WELDS, AND FOR METHODS USED IN CORRECTING WELDING. ALL WELDERS AND WELDING PROCESSES SHALL BE QUALIFIED IN ACCORDANCE WITH AWS "STANDARD QUALIFICATION PROCEDURES". ALL WELDING SHALL BE DONE USING E70XX ELECTRODES AND WELDING SHALL CONFORM TO AISC AND DI.I. WHERE FILLET WELD SIZES ARE NOT SHOWN, PROVIDE THE MINIMUM SIZE PER TABLE J2.4 IN THE AISC "MANUAL OF STEEL CONSTRUCTION". 14TH EDITION.
11. INCORRECTLY FABRICATED, DAMAGED OR OTHERWISE MISFITTING OR NON-CONFORMING MATERIALS OR CONDITIONS SHALL BE REPORTED TO THE CONSTRUCTION MANAGER PRIOR TO REMEDIAL OR CORRECTIVE ACTION. ANY SUCH ACTION SHALL REQUIRE CONSTRUCTION MANAGER APPROVAL.
12. UNISTRUT SHALL BE FORMED STEEL CHANNEL STRUT FRAMING AS MANUFACTURED BY UNISTRUT CORP., WAYNE, MI OR EQUAL. STRUT MEMBERS SHALL BE 1 5/8"x1 5/8"x12GA, UNLESS OTHERWISE NOTED, AND SHALL BE HOT-DIP GALVANIZED AFTER FABRICATION.
13. EPOXY ANCHOR ASSEMBLY SHALL CONSIST OF STAINLESS STEEL ANCHOR ROD WITH NUTS & WASHERS. AN INTERNALLY THREADED INSERT, A SCREEN TUBE AND A EPOXY ADHESIVE. THE ANCHORING SYSTEM SHALL BE THE HILTI-HIT HY-20 AND OR HY-150 SYSTEMS (AS SPECIFIED IN DWG.) OR ENGINEERS APPROVED EQUAL.
14. EXPANSION BOLTS SHALL CONFORM TO FEDERAL SPECIFICATION FF-S-325, GROUP II, TYPE 4, CLASS I, HILTI KWIK BOLT III OR APPROVED EQUAL. INSTALLATION SHALL BE IN ACCORDANCE WITH THE MANUFACTURER'S RECOMMENDATIONS.
15. LUMBER SHALL COMPLY WITH THE REQUIREMENTS OF THE AMERICAN INSTITUTE OF TIMBER CONSTRUCTION AND THE NATIONAL FOREST PRODUCTS ASSOCIATION'S NATIONAL DESIGN SPECIFICATION FOR WOOD CONSTRUCTION. ALL LUMBER SHALL BE PRESSURE TREATED AND SHALL BE STRUCTURAL GRADE NO. 2 OR BETTER.
16. WHERE ROOF PENETRATIONS ARE REQUIRED, THE CONTRACTOR SHALL CONTACT AND COORDINATE RELATED WORK WITH THE BUILDING OWNER AND THE EXISTING ROOF INSTALLER. WORK SHALL BE PERFORMED IN SUCH A MANNER AS TO NOT VOID THE EXISTING ROOF WARRANTY. ROOF SHALL BE WATERTIGHT.
17. ALL FIBERGLASS MEMBERS USED ARE AS MANUFACTURED BY STRONGWELL COMPANY OF BRISTOL, VA 24203. ALL DESIGN CRITERIA FOR THESE MEMBERS IS BASED ON INFORMATION PROVIDED IN THE DESIGN MANUAL. ALL REQUIREMENTS PUBLISHED IN SAID MANUAL MUST BE STRICTLY ADHERED TO.
18. NO MATERIALS TO BE ORDERED AND NO WORK TO BE COMPLETED UNTIL SHOP DRAWINGS HAVE BEEN REVIEWED AND APPROVED IN WRITING.
19. SUBCONTRACTOR SHALL FIREPROOF ALL STEEL TO PRE-EXISTING CONDITIONS.

## SPECIAL INSPECTION CHECKLIST

| BEFORE CONSTRUCTION | |
|---|---|
| CONSTRUCTION/INSTALLATION INSPECTIONS AND TESTING REQUIRED (COMPLETED BY ENGINEER OF RECORD) | REPORT ITEM |
| **REQUIRED** | ENGINEER OF RECORD APPROVED SHOP DRAWINGS[1] (FOR BOTH STEEL AND FRP) |
| **REQUIRED** | MATERIAL SPECIFICATIONS REPORT[2] |
| N/A | FABRICATOR NDE INSPECTION |
| N/A | NDE REPORT OF MONOPOLE BASE PLATE (AS REQUIRED) |
| **REQUIRED** | PACKING SLIPS[3] |
| ADDITIONAL TESTING AND INSPECTIONS: | N/A |
| **DURING CONSTRUCTION** | |
| CONSTRUCTION/INSTALLATION INSPECTIONS AND TESTING REQUIRED (COMPLETED BY ENGINEER OF RECORD) | REPORT ITEM |
| **REQUIRED** | STEEL INSPECTIONS |
| **REQUIRED** | HIGH STRENGTH BOLT INSPECTIONS |
| N/A | HIGH WIND ZONE INSPECTIONS |
| N/A | FOUNDATION INSPECTIONS |
| N/A | CONCRETE COMP. STRENGTH, SLUMP TESTS AND PLACEMENT |
| N/A | POST INSTALLED ANCHOR ROD VERIFICATION |
| N/A | BASE PLATE GROUT VERIFICATION |
| N/A | CERTIFIED WELD INSPECTION |
| N/A | EARTHWORK: LIFT AND DENSITY |
| **REQUIRED** | ON SITE COLD GALVANIZING VERIFICATION |
| N/A | GUY WIRE TENSION REPORT |
| | |
| **AFTER CONSTRUCTION** | |
| CONSTRUCTION/INSTALLATION INSPECTIONS AND TESTING REQUIRED (COMPLETED BY ENGINEER OF RECORD) | REPORT ITEM |
| **REQUIRED** | MODIFICATION INSPECTOR REDLINE OR RECORD DRAWINGS[5] |
| N/A | POST INSTALLED ANCHOR ROD PULL-OUT TESTING |
| **REQUIRED** | PHOTOGRAPHS |
| ADDITIONAL TESTING AND INSPECTIONS: | |

### NOTES:

1. REQUIRED FOR ANY NEW SHOP FABRICATED FRP OR STEEL.
2. PROVIDED BY MANUFACTURER, REQUIRED IF HIGH STRENGTH BOLTS OR STEEL.
3. PROVIDED BY GENERAL CONTRACTOR; PROOF OF MATERIALS.
4. HIGH WIND ZONE INSPECTION CATB 120MPH OR CAT C,D 110MPH INSPECT FRAMING OF WALLS, ANCHORING, FASTENING SCHEDULE.
5. AS REQUIRED; FOR ANY FIELD CHANGES TO THE ITEMS IN THIS TABLE.

## SPECIAL INSPECTIONS (REFERENCE IBC CHAPTER 17):

**GENERAL:** WHERE APPLICATION IS MADE FOR CONSTRUCTION, THE OWNER OR THE REGISTERED DESIGN PROFESSIONAL IN RESPONSIBLE CHARGE ACTING AS THE OWNER'S AGENT SHALL EMPLOY ONE OR MORE APPROVED AGENCIES TO PERFORM INSPECTIONS DURING CONSTRUCTION ON THE TYPES OF WORK LISTED IN THE INSPECTION CHECKLIST ABOVE.

THE REGISTERED DESIGN PROFESSIONAL IN RESPONSIBLE CHARGE AND ENGINEERS OF RECORD INVOLVED IN THE DESIGN OF THE PROJECT ARE PERMITTED TO ACT AS THE APPROVED AGENCY AND THEIR PERSONNEL ARE PERMITTED TO ACT AS THE SPECIAL INSPECTOR FOR THE WORK DESIGNED BY THEM, PROVIDED THOSE PERSONNEL MEET THE QUALIFICATION REQUIREMENTS.

STATEMENT OF SPECIAL INSPECTIONS: THE APPLICANT SHALL SUBMIT A STATEMENT OF SPECIAL INSPECTIONS PREPARED BY THE REGISTERED DESIGN PROFESSIONAL IN RESPONSIBLE CHARGE IN ACCORDANCE WITH SECTION 107.1 AS A CONDITION FOR ISSUANCE. THIS STATEMENT SHALL BE IN ACCORDANCE WITH SECTION 1705.

REPORT REQUIREMENT: SPECIAL INSPECTORS SHALL KEEP RECORDS OF INSPECTIONS. THE SPECIAL INSPECTOR SHALL FURNISH INSPECTION REPORTS TO THE BUILDING OFFICIAL, AND TO THE REGISTERED DESIGN PROFESSIONAL IN RESPONSIBLE CHARGE. REPORTS SHALL INDICATE THAT WORK INSPECTED WAS OR WAS NOT COMPLETED IN CONFORMANCE TO APPROVED CONSTRUCTION DOCUMENTS. DISCREPANCIES SHALL BE BROUGHT TO THE IMMEDIATE ATTENTION OF THE CONTRACTOR FOR CORRECTION. IF THEY ARE NOT CORRECTED, THE DISCREPANCIES SHALL BE BROUGHT TO THE ATTENTION OF THE BUILDING OFFICIAL AND TO THE REGISTERED DESIGN PROFESSIONAL IN RESPONSIBLE CHARGE. A FINAL REPORT DOCUMENTING REQUIRED SPECIAL INSPECTIONS SHALL BE SUBMITTED.

**NOTE:**
REFER TO THE FINAL RF DATA SHEET FOR FINAL ANTENNA SETTINGS.

NOTE:

REFER TO STRUCTURAL ANALYSIS BY: HUDSON DESIGN GROUP, LLC, DATED: MAY 25, 2016 FOR THE CAPACITY OF THE EXISTING STRUCTURES TO SUPPORT THE PROPOSED EQUIPMENT.

NOTES:
1. ALL CONNECTIONS TO BE SHOP WELDED & FIELD BOLTED USING 5/8"ø A325-X BOLTS, UNLESS OTHERWISE NOTIFIED.
2. SHOP DRAWING ENGINEER REVIEW & APPROVAL REQUIRED BEFORE ORDERING MATERIAL.
3. SHOP DRAWING ENGINEER REVIEW & APPROVAL REQUIRED PRIOR TO FABRICATION.


Hudson Design Group LLC
1600 OSGOOD STREET
BUILDING 20 NORTH, SUITE 3090
N. ANDOVER, MA 01845
TEL: (978) 557-5553
FAX: (978) 336-5586

smartlink
1997 ANNAPOLIS EXCHANGE PKWY
SUITE 200
ANNAPOLIS, MD 21401


**SITE NUMBER: CTL01195**
**SITE NAME: WEST HARTFORD - BISHOPS CORNER**
**345 NORTH MAIN STREET**
**WEST HARTFORD, CT 06107**
**HARTFORD COUNTY**


at&t
500 ENTERPRISE DRIVE, SUITE 3A
ROCKY HILL, CT 06067


| NO. | DATE | REVISIONS | BY | CHK | APP'D |
|---|---|---|---|---|---|
| 1 | 08/10/16 | ISSUED FOR CONSTRUCTION | RP | HC | DPH |
| 0 | 05/05/16 | ISSUED FOR REVIEW | FM | HC | DPH |

SCALE: AS SHOWN | DESIGNED BY: HC | DRAWN BY: FM

STATE OF CONNECTICUT · DEREK J. CRESSER · 18,2955 · LICENSED PROFESSIONAL ENGINEER

AT&T

STRUCTURAL NOTES AND INSPECTION CHECKLIST (LTE 3C)

| SITE NUMBER | DRAWING NUMBER | REV |
|---|---|---|
| CTL01195 | S-1 | 1 |

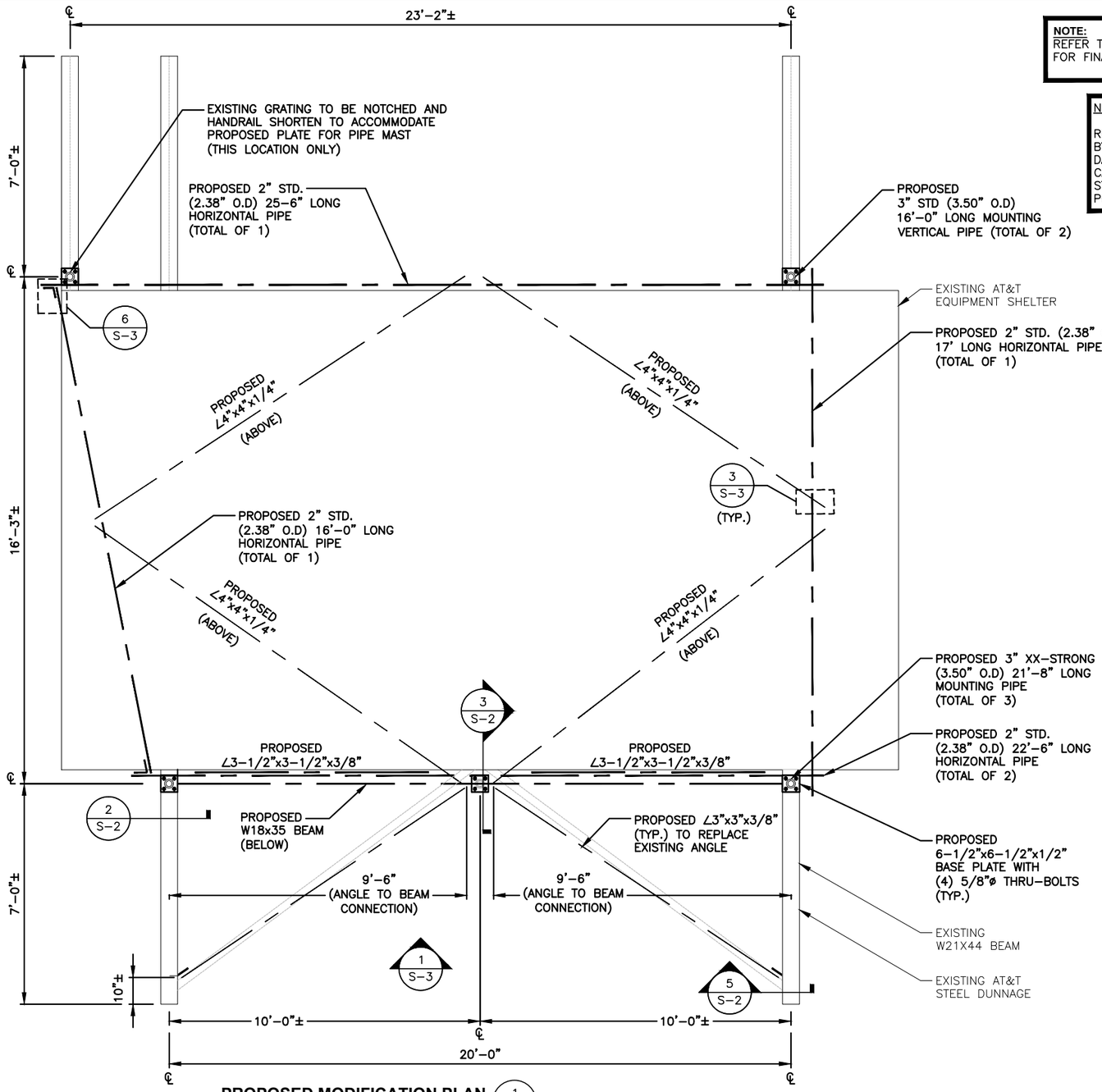


## PROPOSED MODIFICATION PLAN (1 / S-2)

22x34 SCALE: 1/2"=1'-0"
11x17 SCALE: 1/4"=1'-0"

0 1'-0" 2'-0" 4'-0" 6'-0"

**NOTE:**
REFER TO THE FINAL RF DATA SHEET FOR FINAL ANTENNA SETTINGS.

NOTE:

REFER TO STRUCTURAL ANALYSIS BY: HUDSON DESIGN GROUP, LLC, DATED: MAY 25, 2016 FOR THE CAPACITY OF THE EXISTING STRUCTURES TO SUPPORT THE PROPOSED EQUIPMENT.

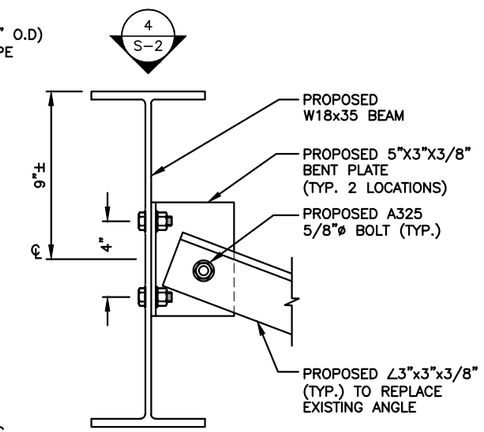


## CONNECTION DETAIL (3 / S-2)

22x34 SCALE: 3"=1'-0"
11x17 SCALE: 1-1/2"=1'-0"

0 0'-2" 0'-4" 0'-8" 1'-0"

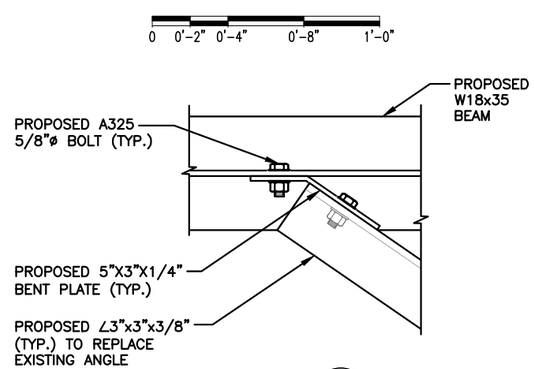


## CONNECTION DETAIL (4 / S-2)

22x34 SCALE: 3"=1'-0"
11x17 SCALE: 1-1/2"=1'-0"

0 0'-2" 0'-4" 0'-8" 1'-0"

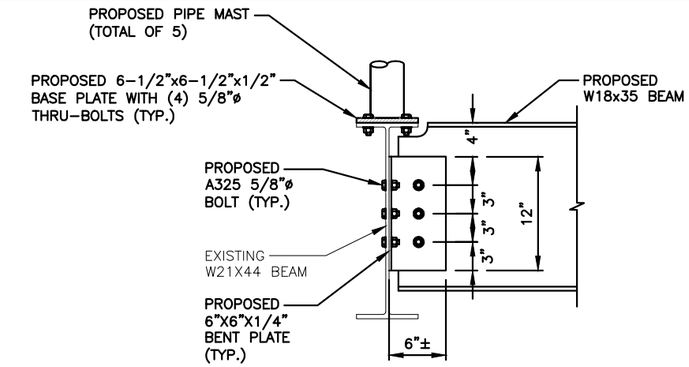


## CONNECTION DETAIL (2 / S-2)

22x34 SCALE: 1-1/2"=1'-0"
11x17 SCALE: 3/4"=1'-0"

0 0'-4" 0'-8" 1'-4" 2'-0"

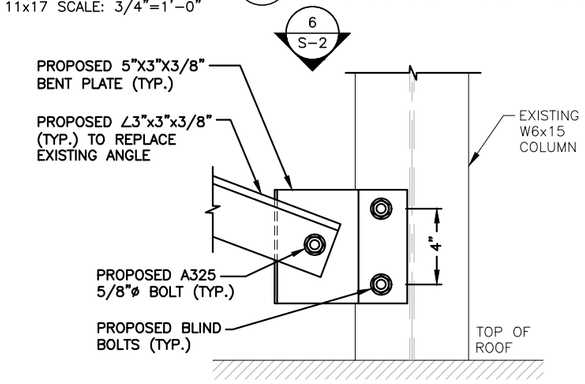


## CONNECTION DETAIL (5 / S-2)

22x34 SCALE: 3"=1'-0"
11x17 SCALE: 1-1/2"=1'-0"

0 0'-2" 0'-4" 0'-8" 1'-0"

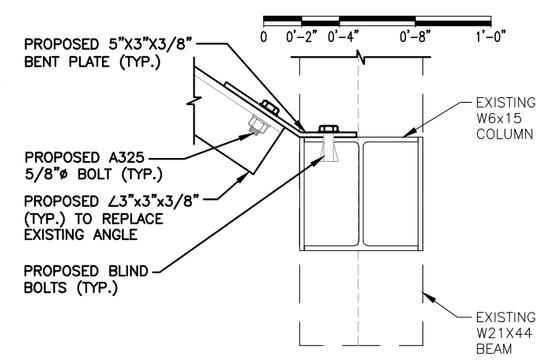


## CONNECTION DETAIL (6 / S-2)

22x34 SCALE: 3"=1'-0"
11x17 SCALE: 1-1/2"=1'-0"

0 0'-2" 0'-4" 0'-8" 1'-0"


Hudson Design Group LLC
1600 OSGOOD STREET
BUILDING 20 NORTH, SUITE 3090
N. ANDOVER, MA 01845
TEL: (978) 557-5553
FAX: (978) 336-5586

smartlink
1997 ANNAPOLIS EXCHANGE PKWY
SUITE 200
ANNAPOLIS, MD 21401


**SITE NUMBER: CTL01195**
**SITE NAME: WEST HARTFORD - BISHOPS CORNER**
345 NORTH MAIN STREET
WEST HARTFORD, CT 06107
HARTFORD COUNTY


at&t
500 ENTERPRISE DRIVE, SUITE 3A
ROCKY HILL, CT 06067


| NO. | DATE | REVISIONS | BY | CHK | APP'D |
|---|---|---|---|---|---|
| 1 | 08/10/16 | ISSUED FOR CONSTRUCTION | RP | HC | DPH |
| 0 | 05/05/16 | ISSUED FOR REVIEW | FM | HC | DPH |

SCALE: AS SHOWN | DESIGNED BY: HC | DRAWN BY: FM

STATE OF CONNECTICUT · DEREK J. CREASER · 28 2 55 · LICENSED PROFESSIONAL ENGINEER

AT&T

STRUCTURAL MODIFICATION DETAILS
(LTE 3C)

| SITE NUMBER | DRAWING NUMBER | REV |
|---|---|---|
| CTL01195 | S-2 | 1 |

**NOTE:**
REFER TO THE FINAL RF DATA SHEET FOR FINAL ANTENNA SETTINGS.

**NOTE:**

REFER TO STRUCTURAL ANALYSIS BY: HUDSON DESIGN GROUP, LLC, DATED: MAY 25, 2016 FOR THE CAPACITY OF THE EXISTING STRUCTURES TO SUPPORT THE PROPOSED EQUIPMENT.

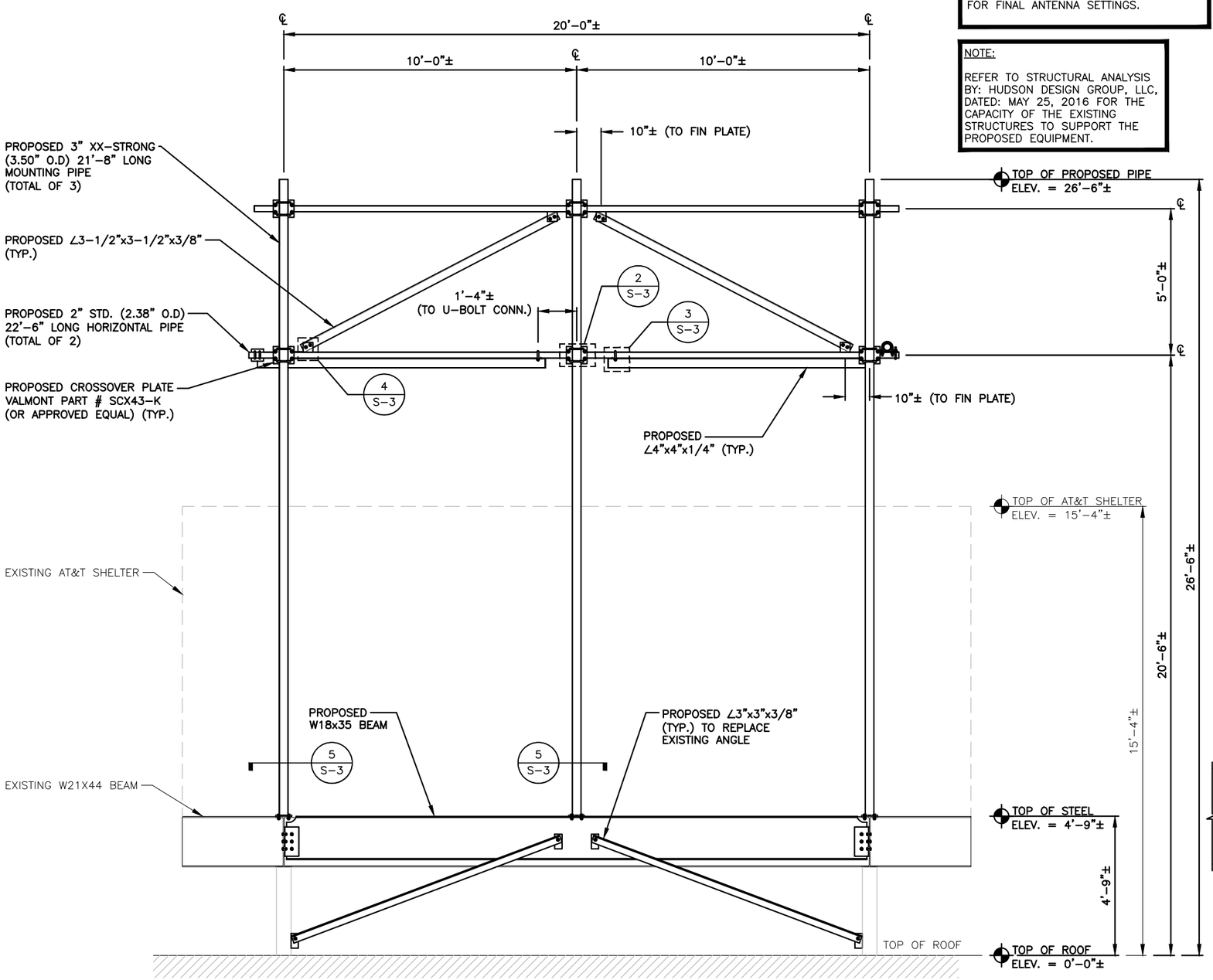


**PROPOSED MODIFICATION ELEVATION** (1 / S-3)
22x34 SCALE: 1/2"=1'-0"
11x17 SCALE: 1/4"=1'-0"

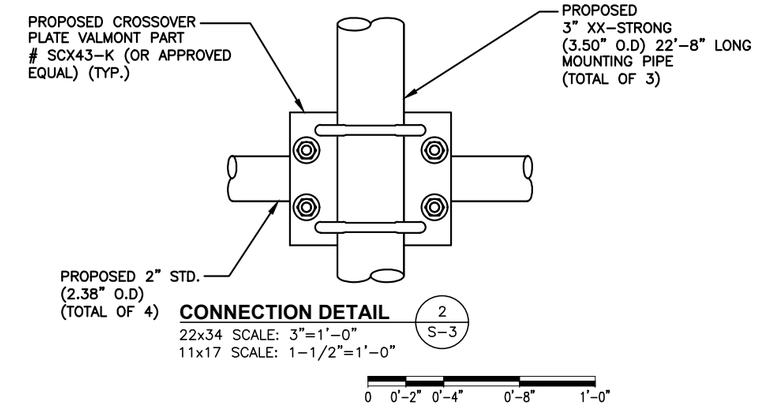


**CONNECTION DETAIL** (2 / S-3)
22x34 SCALE: 3"=1'-0"
11x17 SCALE: 1-1/2"=1'-0"

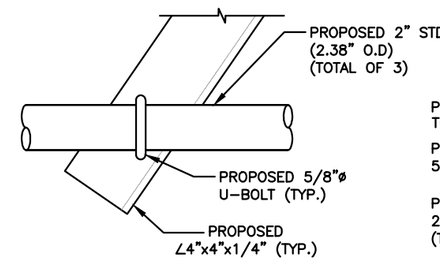


**CONNECTION DETAIL** (3 / S-3)
22x34 SCALE: 3"=1'-0"
11x17 SCALE: 1-1/2"=1'-0"

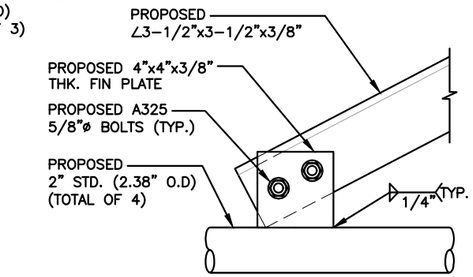


**CONNECTION DETAIL** (4 / S-3)
22x34 SCALE: 3"=1'-0"
11x17 SCALE: 1-1/2"=1'-0"

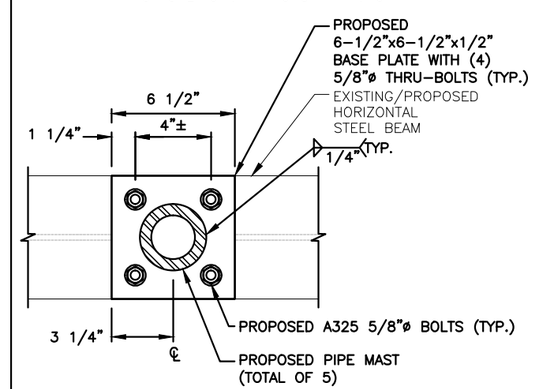


**CONNECTION DETAIL** (5 / S-3)
22x34 SCALE: 3"=1'-0"
11x17 SCALE: 1-1/2"=1'-0"

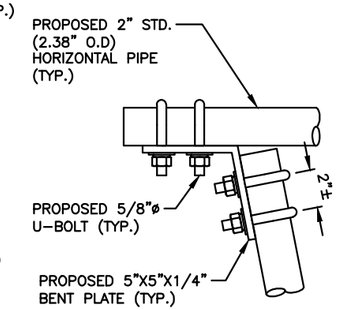


**CONNECTION DETAIL** (6 / S-3)
22x34 SCALE: 3"=1'-0"
11x17 SCALE: 1-1/2"=1'-0"


Hudson Design Group LLC
1600 OSGOOD STREET
BUILDING 20 NORTH, SUITE 3090
N. ANDOVER, MA 01845
TEL: (978) 557-5553
FAX: (978) 336-5586

smartlink
1997 ANNAPOLIS EXCHANGE PKWY
SUITE 200
ANNAPOLIS, MD 21401


**SITE NUMBER: CTL01195**
**SITE NAME: WEST HARTFORD - BISHOPS CORNER**
345 NORTH MAIN STREET
WEST HARTFORD, CT 06107
HARTFORD COUNTY


at&t
500 ENTERPRISE DRIVE, SUITE 3A
ROCKY HILL, CT 06067


| NO. | DATE | REVISIONS | BY | CHK | APP'D |
|---|---|---|---|---|---|
| 1 | 08/10/16 | ISSUED FOR CONSTRUCTION | RP | HC | DPH |
| 0 | 05/05/16 | ISSUED FOR REVIEW | FM | HC | DPH |

SCALE: AS SHOWN | DESIGNED BY: HC | DRAWN BY: FM

STATE OF CONNECTICUT · DEREK J. CRESSEY · 16,255 · LICENSED PROFESSIONAL ENGINEER

AT&T

STRUCTURAL MODIFICATION DETAILS (LTE 3C)

| SITE NUMBER | DRAWING NUMBER | REV |
|---|---|---|
| CTL01195 | S-3 | 1 |

**NOTE:**
REFER TO THE FINAL RF DATA SHEET FOR FINAL ANTENNA SETTINGS.

NOTE:

REFER TO STRUCTURAL ANALYSIS BY: HUDSON DESIGN GROUP, LLC, DATED: MAY 25, 2016 FOR THE CAPACITY OF THE EXISTING STRUCTURES TO SUPPORT THE PROPOSED EQUIPMENT.

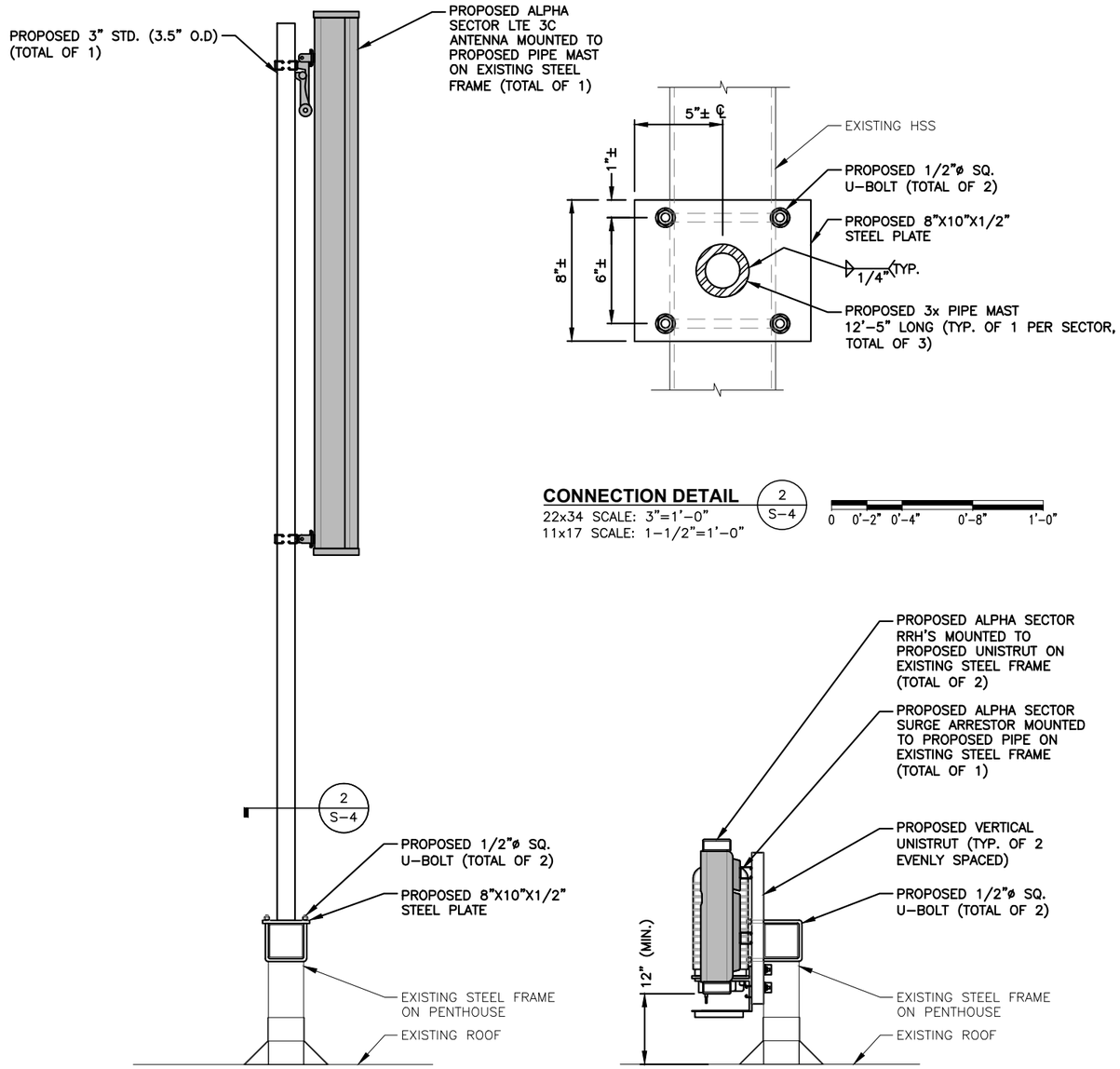


**CONNECTION DETAIL** (2 / S-4)
22x34 SCALE: 3"=1'-0"
11x17 SCALE: 1-1/2"=1'-0"

0 0'-2" 0'-4" 0'-8" 1'-0"

**PROPOSED LTE 3C ANTENNA, RRH & SURGE ARRESTOR MOUNTING DETAIL (ALPHA SECTOR)** (1 / S-4)
SCALE: N.T.S

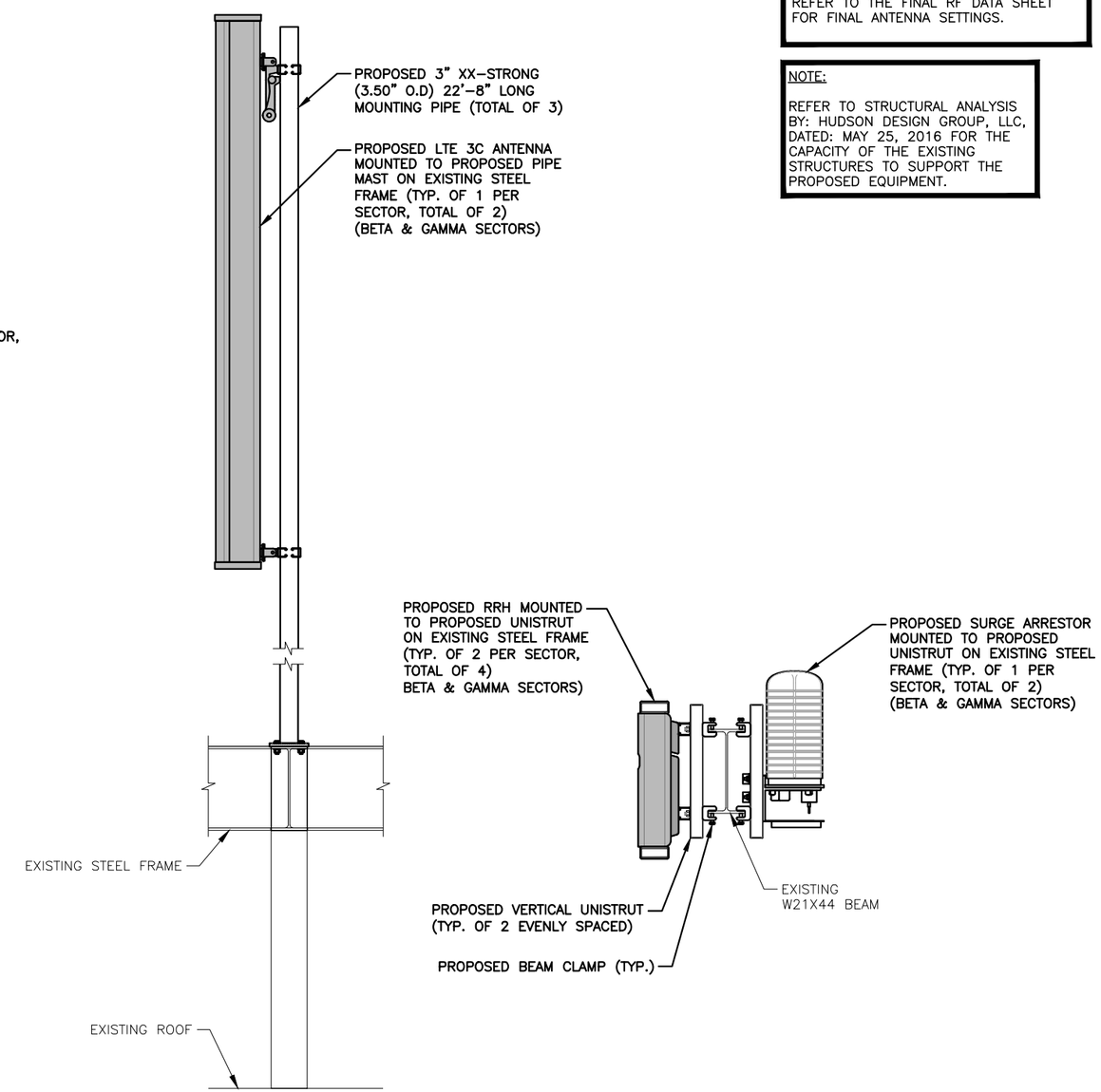


**PROPOSED LTE 3C ANTENNA, RRH & SURGE ARRESTOR MOUNTING DETAIL (BETA & GAMMA SECTOR)** (3 / S-4)
SCALE: N.T.S


Hudson Design Group LLC
1600 OSGOOD STREET
BUILDING 20 NORTH, SUITE 3090
N. ANDOVER, MA 01845
TEL: (978) 557-5553
FAX: (978) 336-5586

smartlink
1997 ANNAPOLIS EXCHANGE PKWY
SUITE 200
ANNAPOLIS, MD 21401


**SITE NUMBER: CTL01195**
**SITE NAME: WEST HARTFORD - BISHOPS CORNER**
345 NORTH MAIN STREET
WEST HARTFORD, CT 06107
HARTFORD COUNTY


at&t
500 ENTERPRISE DRIVE, SUITE 3A
ROCKY HILL, CT 06067


| NO. | DATE | REVISIONS | BY | CHK | APP'D |
|---|---|---|---|---|---|
| 1 | 08/10/16 | ISSUED FOR CONSTRUCTION | RP | HC | DPH |
| 0 | 05/05/16 | ISSUED FOR REVIEW | FM | HC | DPH |

SCALE: AS SHOWN | DESIGNED BY: HC | DRAWN BY: FM

STATE OF CONNECTICUT — DEREK J. CRESSER — No. 23561 — LICENSED PROFESSIONAL ENGINEER

AT&T

STRUCTURAL MODIFICATION DETAILS (LTE 3C)

| SITE NUMBER | DRAWING NUMBER | REV |
|---|---|---|
| CTL01195 | S-4 | 1 |

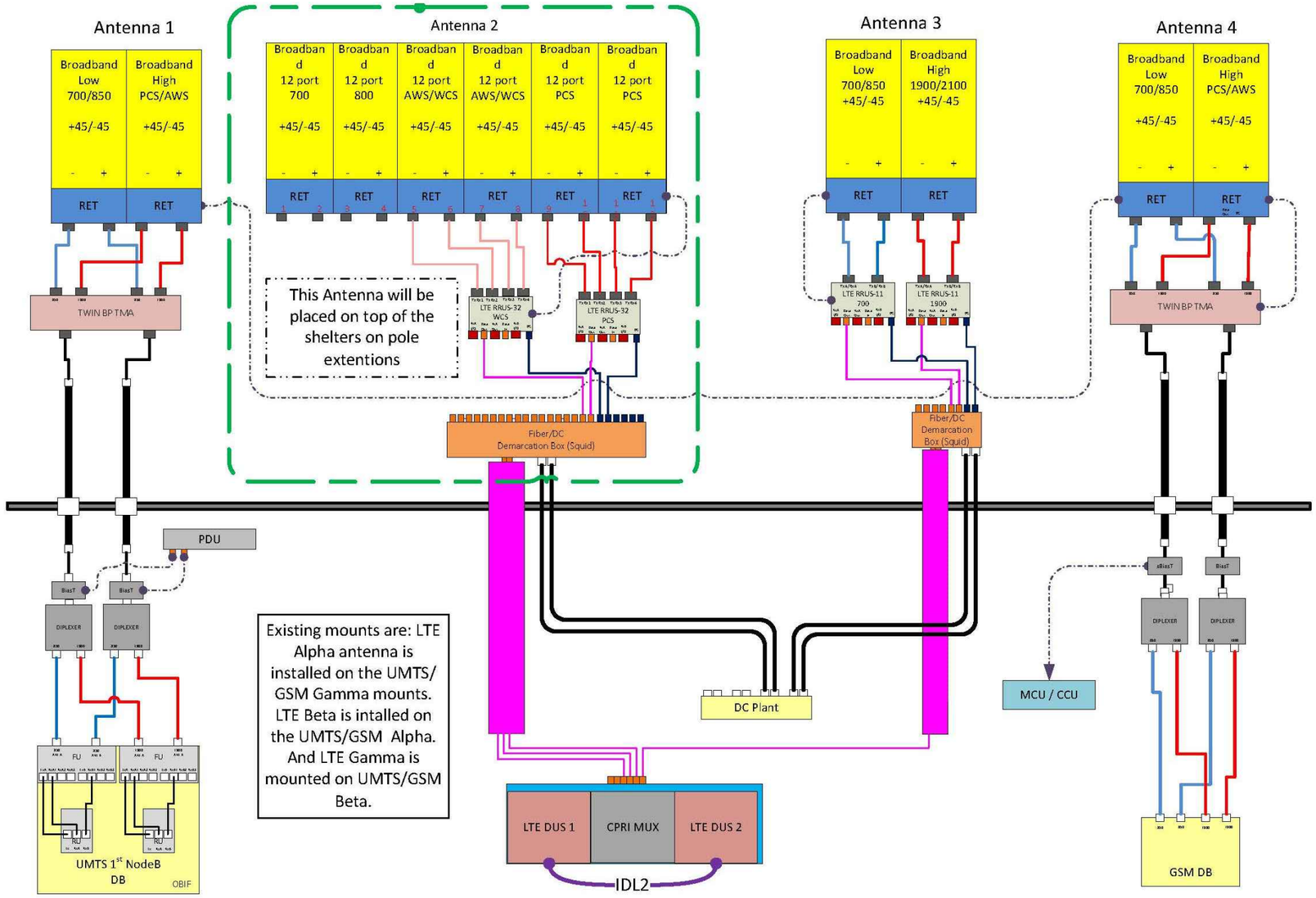


**RF PLUMBING DIAGRAM** (1 / RF-1)
SCALE: N.T.S

**NOTE:**
1. CONTRACTOR TO CONFIRM ALL PARTS.
2. INSTALL ALL EQUIPMENT TO MANUFACTURER'S RECOMMENDATIONS

**NOTE:**
REFER TO THE FINAL RF DATA SHEET FOR FINAL ANTENNA SETTINGS.


Hudson Design Group LLC
1600 OSGOOD STREET
BUILDING 20 NORTH, SUITE 3090
N. ANDOVER, MA 01845
TEL: (978) 557-5553
FAX: (978) 336-5586

smartlink
1997 ANNAPOLIS EXCHANGE PKWY
SUITE 200
ANNAPOLIS, MD 21401


**SITE NUMBER: CTL01195**
**SITE NAME: WEST HARTFORD - BISHOPS CORNER**
345 NORTH MAIN STREET
WEST HARTFORD, CT 06107
HARTFORD COUNTY


at&t
500 ENTERPRISE DRIVE, SUITE 3A
ROCKY HILL, CT 06067


| NO. | DATE | REVISIONS | BY | CHK | APP'D |
|---|---|---|---|---|---|
| 1 | 08/10/16 | ISSUED FOR CONSTRUCTION | RP | HC | DPH |
| 0 | 05/05/16 | ISSUED FOR REVIEW | FM | HC | DPH |

SCALE: AS SHOWN | DESIGNED BY: HC | DRAWN BY: FM

STATE OF CONNECTICUT — DEREK J. CREASER — LICENSED PROFESSIONAL ENGINEER

AT&T

RF PLUMBING DIAGRAM
(LTE 3C)

| SITE NUMBER | DRAWING NUMBER | REV |
|---|---|---|
| CTL01195 | RF-1 | 1 |

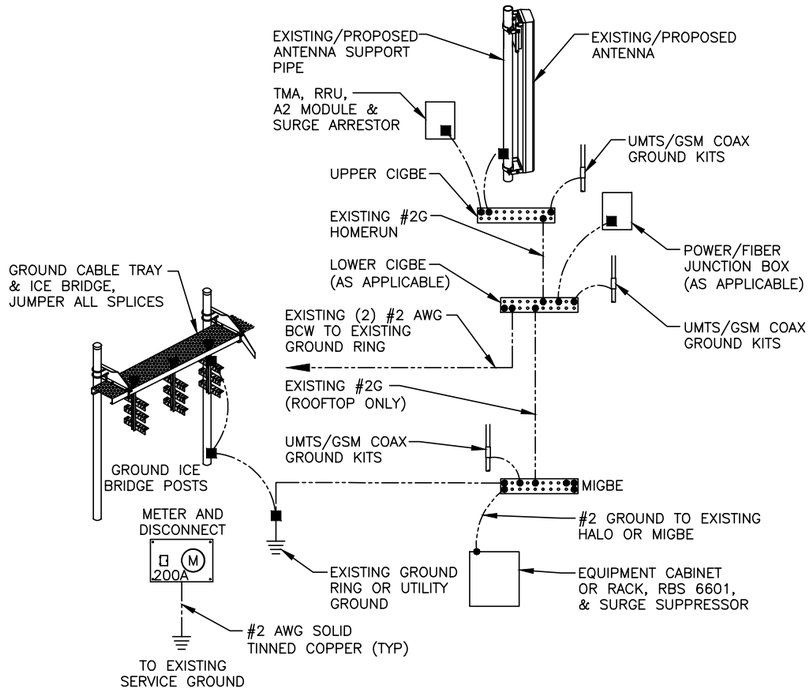


**GROUNDING RISER DIAGRAM** (1 / G–1)
SCALE: N.T.S

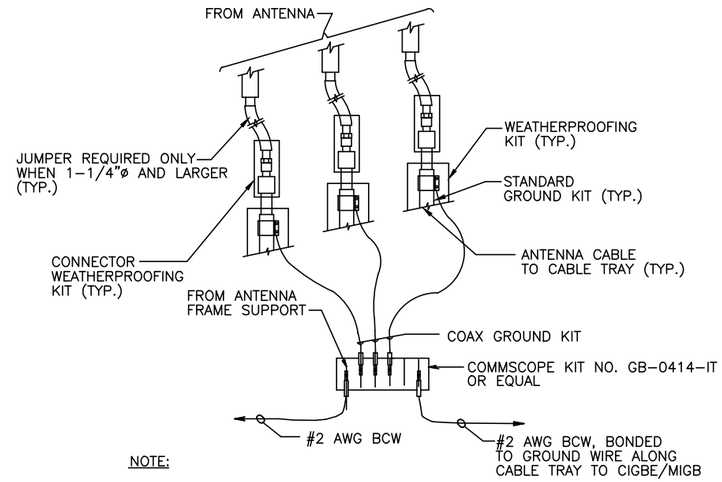


NOTE:

1. DO NOT INSTALL CABLE GROUND KIT AT A BEND AND ALWAYS DIRECT GROUND WIRE DOWN TO CIGBE.

**GROUND WIRE TO GROUND BAR CONNECTION DETAIL** (2 / G–1)
SCALE: N.T.S

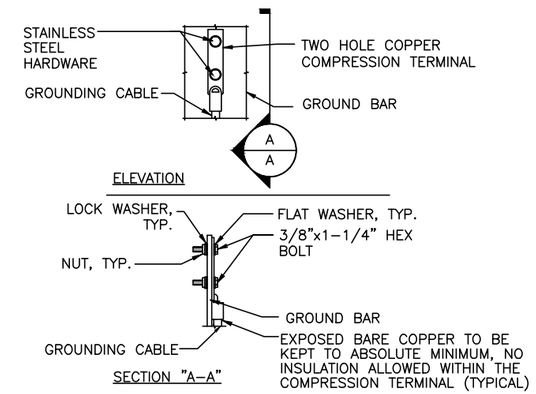


NOTE:

1. "DOUBLING UP" OR "STACKING" OF CONNECTION IS NOT PERMITTED.
2. OXIDE INHIBITING COMPOUND TO BE USED AT ALL LOCATION.
3. CADWELD DOWNLEADS FROM UPPER EGB, LOWER EGB, AND MGB

**TYPICAL GROUND BAR CONNECTION DETAIL** (3 / G–1)
SCALE: N.T.S

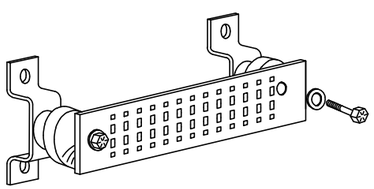

**GROUND BAR - DETAIL** (4 / G–1)
SCALE: N.T.S

EACH GROUND CONDUCTOR TERMINATING ON ANY GROUND BAR SHALL HAVE AN IDENTIFICATION TAG ATTACHED AT EACH END THAT WILL IDENTIFY ITS ORIGIN AND DESTINATION.

SECTION "P" – SURGE PRODUCERS

CABLE ENTRY PORTS (HATCH PLATES) (#2)
GENERATOR FRAMEWORK (IF AVAILABLE) (#2)
TELCO GROUND BAR
COMMERCIAL POWER COMMON NEUTRAL/GROUND BOND (#2)
+24V POWER SUPPLY RETURN BAR (#2)
–48V POWER SUPPLY RETURN BAR (#2)
RECTIFIER FRAMES.

SECTION "A" – SURGE ABSORBERS

INTERIOR GROUND RING (#2)
EXTERNAL EARTH GROUND FIELD (BURIED GROUND RING) (#2)
METALLIC COLD WATER PIPE (IF AVAILABLE) (#2)
BUILDING STEEL (IF AVAILABLE) (#2)


Hudson Design Group LLC
1600 OSGOOD STREET
BUILDING 20 NORTH, SUITE 3090
N. ANDOVER, MA 01845
TEL: (978) 557-5553
FAX: (978) 336-5586

smartlink
1997 ANNAPOLIS EXCHANGE PKWY
SUITE 200
ANNAPOLIS, MD 21401


**SITE NUMBER: CTL01195**
**SITE NAME: WEST HARTFORD - BISHOPS CORNER**
**345 NORTH MAIN STREET**
**WEST HARTFORD, CT 06107**
**HARTFORD COUNTY**


at&t
500 ENTERPRISE DRIVE, SUITE 3A
ROCKY HILL, CT 06067


| NO. | DATE | REVISIONS | BY | CHK | APP'D |
|---|---|---|---|---|---|
| 1 | 08/10/16 | ISSUED FOR CONSTRUCTION | RP | HC | DPH |
| 0 | 05/05/16 | ISSUED FOR REVIEW | FM | HC | DPH |

SCALE: AS SHOWN | DESIGNED BY: HC | DRAWN BY: FM

STATE OF CONNECTICUT · DEREK J. CREASER · 18,295 · LICENSED PROFESSIONAL ENGINEER

AT&T

GROUNDING DETAILS
(LTE 3C)

| SITE NUMBER | DRAWING NUMBER | REV |
|---|---|---|
| CTL01195 | G–1 | 1 |