AMERICAN TOWER®
CORPORATION

Structural Analysis Report

Structure	:	**178.5 ft Monopole**
ATC Site Name	:	**Bilkays Express, CT**
ATC Site Number	:	**302467**
Engineering Number	:	**64274421**
Proposed Carrier	:	**AT&T Mobility**
Carrier Site Name	:	**Yalesville**
Carrier Site Number	:	**CTL05173/FA#10071351**
Site Location	:	**90 North Plains Industrial Rd. Wallingford, CT 06492-2334 41.480761,-72.817700**
County	:	**New Haven**
Date	:	**December 8, 2015**
Max Usage	:	**63%**
Result	:	**Pass**

Reviewed by:
William Garrett, PE
Chief Engineer

STATE OF CONNECTICUT
WILLIAM GARRETT
No. 23235
LICENSED
PROFESSIONAL ENGINEER

Prepared By:
John D. Bigham, E.I.
Structural Engineer II

Dec 8 2015 1:09 PM

COA: PEC.0001553

Table of Contents

Introduction 1

Supporting Documents 1

Analysis 1

Conclusion 1

Existing and Reserved Equipment 2

Equipment to be Removed 2

Proposed Equipment 2

Structure Usages 3

Foundations 3

Deflection, Twist, and Sway 3

Standard Conditions 4

Calculations ..... Attached

Introduction

The purpose of this report is to summarize results of a structural analysis performed on the 178.5 ft monopole to reflect the change in loading by AT&T Mobility.

Supporting Documents

Tower Drawings	FWT Job #18357, dated March 19, 1999
Foundation Drawing	FWT Job #18357, dated March 19, 1999
Geotechnical Report	Tectonic Work Order #1170.C947C, dated March 11, 1999

Analysis

The tower was analyzed using American Tower Corporation's tower analysis software. This program considers an elastic three-dimensional model and second-order effects per ANSI/TIA-222.

Basic Wind Speed:	105 mph (3-Second Gust)
Basic Wind Speed w/ Ice:	50 mph (3-Second Gust) w/ 3/4" radial ice concurrent
Code:	ANSI/TIA-222-G / 2003 IBC w/ 2005 CT Supplement & 2009 CT Amendment
Structure Class:	II
Exposure Category:	B
Topographic Category:	1
Crest Height:	0 ft
Spectral Response:	Ss = 0.18, S_1 = 0.06
Site Class:	D - Stiff Soil

Conclusion

Based on the analysis results, the structure meets the requirements per the applicable codes listed above. The tower and foundation can support the equipment as described in this report.

If you have any questions or require additional information, please contact American Tower via email at Engineering@americantower.com. Please include the American Tower site name, site number, and engineering number in the subject line for any questions.

Existing and Reserved Equipment

Elevation[1] (ft)		Qty	Antenna	Mount Type	Lines	Carrier
Mount	RAD					
178.5	181.0	12	Decibel DB844H90E-XY	Low Profile Platform	(12) 1 5/8" Coax	Sprint Nextel
171.0	165.0	3	NextNet BTS-2500	Side Arms	(6) 5/16" Coax (2) 1/2" Coax	Clearwire
		3	Argus LLPX310R			
		1	DragonWave A-ANT-11G-2-C			
		1	DragonWave A-ANT-18G-2-C			
163.0		2	Generic TTA	Flush	(2) 2" Conduit	
160.0	160.0	6	Powerwave 7020	Low Profile Platform	(12) 1 5/8" Coax (4) 0.78" 8 AWG 6 (2) 3" Conduit (2) 0.39" Fiber Trunk	AT&T Mobility
		6	Powerwave LGP21401			
		2	Raycap DC6-48-60-18-8F (23.5" Height)			
		3	Ericsson RRUS 11 (Band 7)			
		3	Ericsson RRUS-12 B2			
		3	Powerwave 7770.00			
		3	KMW AM-X-CD-16-65-00T-RET			
148.0	150.0	6	Ericsson KRY 112 144/1	Low Profile Platform	(12) 1 5/8" Coax (1) 1 1/4" Hybriflex Cable	T-Mobile
		3	Ericsson AIR 21, 1.3 M, B2A B4P			
		3	Ericsson AIR 21, 1.3M, B4A B2P			
135.0	138.0	6	RFS FD9R6004/2C-3L	Low Profile Platform	(18) 1 5/8" Coax (1) 1 5/8" Hybriflex	Verizon
		3	Alcatel-Lucent RRH2x40 (700)			
		3	Alcatel-Lucent RRH2x40-AWS			
		3	Antel BXA-171063-8BF-EDIN-X			
		3	Antel BXA-171063-12BF-EDIN-X			
		1	RFS DB-T1-6Z-8AB-0Z			
		3	Antel BXA-80063-6BF-EDIN-X			
		3	Antel BXA-70063-6CF-EDIN-X			
128.0	130.0	3	RFS APXV18-206517S-C	Flush	(6) 1 5/8" Coax (1) 7/8" Coax	Metro PCS
	128.0	1	Nortel NTGB01MA			
116.0	122.0	3	RFS RFS APXV9TM14-ALU-I20	Low Profile Platform	(4) 1 1/4" Hybriflex	Sprint Nextel
		3	RFS APXVSPP18-C-A20			
	120.0	3	Alcatel-Lucent 800MHz RRH			
		3	Alcatel-Lucent 1900MHz 4X45 RRH			
		3	Alcatel-Lucent TD-RRH8x20-25 w/ Solar Shield			
20.0	20.0	1	PCTEL GPS-TMG-HR-26N	Standoff	(1) 1/2" Coax	

Equipment to be Removed

Elevation[1] (ft)		Qty	Antenna	Mount Type	Lines	Carrier
Mount	RAD					
160.0	160.0	3	Powerwave 7770.00	-	-	AT&T Mobility

Proposed Equipment

Elevation[1] (ft)		Qty	Antenna	Mount Type	Lines	Carrier
Mount	RAD					
160.0	160.0	3	Ericsson RRUS-11 800MHz	Low Profile Platform	-	AT&T Mobility
		3	Ericsson RRUS-32			
		3	CCI OPA-65R-LCUU-H6			

[1]Mount elevation is defined as height above bottom of steel structure to the bottom of mount, RAD elevation is defined as center of antenna above ground level (AGL).

Structure Usages

Structural Component	Controlling Usage	Pass/Fail
Anchor Bolts	59%	Pass
Shaft	55%	Pass
Base Plate	26%	Pass

Foundations

Reaction Component	Analysis Reactions	% of Usage
Moment (Kips-Ft)	4,871.1	63%
Axial (Kips)	114.9	56%
Shear (Kips)	40.2	53%

The structure base reactions resulting from this analysis were found to be acceptable through analysis based on geotechnical and foundation information, therefore no modification or reinforcement of the foundation will be required.

Deflection and Sway*

Antenna Elevation (ft)	Antenna	Carrier	Deflection (ft)	Sway (Rotation) (°)
171.0	DragonWave A-ANT-11G-2-C	Clearwire	1.177	0.715
	DragonWave A-ANT-18G-2-C			
160.0	Ericsson RRUS-11 800 MHz	AT&T Mobility	1.041	0.704
	Ericsson RRUS-32			
	CCI OPA-65R-LCUU-H6			

***Deflection and Sway was evaluated considering a design wind speed of 60 mph (3-Second Gust) per ANSI/TIA-222-G**

AMERICAN TOWER®
CORPORATION

Standard Conditions

All engineering services are performed on the basis that the information used is current and correct. This information may consist of, but is not necessary limited, to:

-- Information supplied by the client regarding the structure itself, antenna, mounts and feed line loading on the structure and its components, or other relevant information.

-- Information from drawings in the possession of American Tower Corporation, or generated by field inspections or measurements of the structure.

It is the responsibility of the client to ensure that the information provided to A.T. Engineering Service, PLLC and used in the performance of our engineering services is correct and complete. In the absence of information to the contrary, we assume that all structures were constructed in accordance with the drawings and specifications and that their capacity has not significantly changed from the "as new" condition.

Unless explicitly agreed by both the client and American Tower Corporation, all services will be performed in accordance with the current revision of ANSI/TIA -222. The design basic wind speed will be determined based on the minimum basic wind speed as prescribed in ANSI/TIA-222. Although every effort is taken to ensure that the loading considered is adequate to meet the requirements of all applicable regulatory entities, we can provide no assurance to meet any other local and state codes or requirements. If wind and ice loads or other relevant parameters are to be different from the minimum values recommended by the codes, the client shall specify the exact requirement.

All services are performed, results obtained, and recommendations made in accordance with generally accepted engineering principles and practices. A.T. Engineering Service, PLLC is not responsible for the conclusions, opinions and recommendations made by others based on the information we supply.

© 2007 - 2015 by ATC IP LLC. All rights reserved.

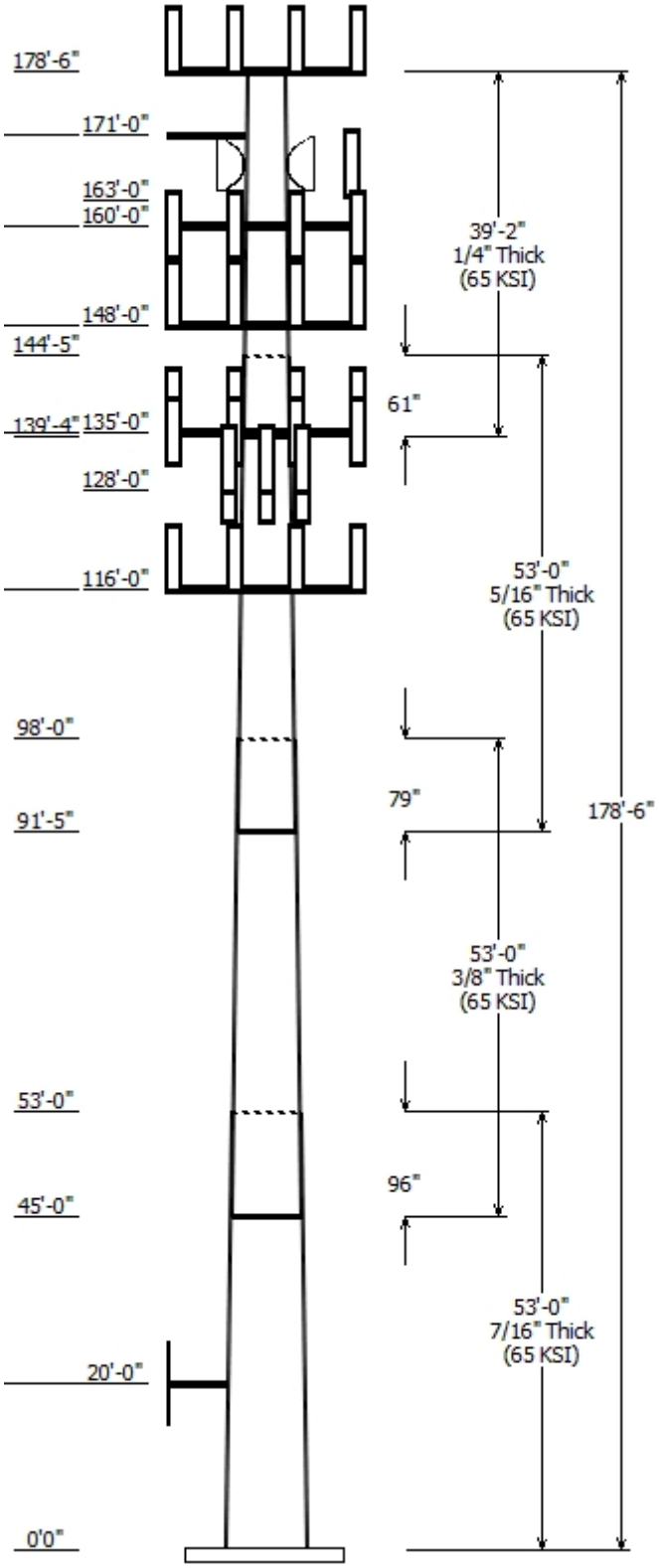

Job Information

Pole :	302467	Code:	ANSI/TIA-222-G
Description :	178.5' FWT Monopole		
Client :	AT&T MOBILITY	Struct Class :	II
Location :	Bilkays Express, CT		
Shape :	18 Sides	Exposure :	B
Height :	178.50 (ft)	Topo :	1
Base Elev (ft):	0.00		
Taper:	0.25140 (in/ft)		

Sections Properties

Shaft Section	Length (ft)	Diameter (in) Accross Flats Top	Bottom	Thick (in)	Joint Type	Overlap Length (in)	Taper (in/ft)	Steel Grade (ksi)
1	53.000	58.67	72.00	0.438		0.000	0.251400	65
2	53.000	48.11	61.43	0.375	Slip Joint	96.000	0.251400	65
3	53.000	37.06	50.39	0.313	Slip Joint	79.000	0.251400	65
4	39.167	29.00	38.84	0.250	Slip Joint	61.000	0.251400	65

Discrete Appurtenance

Attach Elev (ft)	Force Elev (ft)	Qty	Description
178.500	181.000	12	Decibel DB844H90E-XY
178.500	178.500	1	Flat Low Profile Platform
171.000	165.000	1	DragonWave A-ANT-11G-2-C
171.000	165.000	3	Argus LLPX310R
171.000	165.000	3	NextNet BTS-2500
171.000	165.000	1	DragonWave A-ANT-18G-2-C
171.000	171.000	1	Side Arms
163.000	165.000	2	Generic TTA
160.000	160.000	3	KMW AM-X-CD-16-65-00T-RET
160.000	160.000	3	Ericsson RRUS-12 B2
160.000	160.000	3	Ericsson RRUS-11 800 MHz
160.000	160.000	3	CCI OPA-65R-LCUU-H6
160.000	160.000	6	Powerwave Allgon LGP21401
160.000	160.000	1	Flat Low Profile Platform
160.000	160.000	3	Powerwave Allgon 7770.00
160.000	160.000	3	Ericsson RRUS-32
160.000	160.000	3	Ericsson RRUS 11 (Band 7)
160.000	160.000	2	Raycap DC6-48-60-18-8F (23.5"
160.000	160.000	6	Powerwave Allgon 7020
148.000	150.000	3	Ericsson AIR 21, 1.3M, B4A B2P
148.000	150.000	3	Ericsson AIR 21, 1.3 M, B2A B4
148.000	150.000	6	Ericsson KRY 112 144/1
148.000	148.000	1	Round Low Profile Platform
135.000	138.000	3	Alcatel-Lucent RRH2X60-1900
135.000	138.000	3	Alcatel-Lucent RRH2X60-AWS
135.000	138.000	3	Antel BXA-80063-6BF-EDIN-X
135.000	138.000	1	RFS DB-T1-6Z-8AB-0Z
135.000	138.000	1	RFS DB-T1-6Z-8AB-0Z
135.000	138.000	3	Alcatel-Lucent RRH2x60 700
135.000	135.000	9	Commscope SBNHH-1D65B
135.000	135.000	1	Round Low Profile Platform
128.000	128.000	1	Nortel NTGB01MA
128.000	130.000	3	RFS APXV18-206517S-C
116.000	122.000	3	RFS RFS APXV9TM14-ALU-I20
116.000	120.000	3	Alcatel-Lucent TD-RRH8x20-25
116.000	122.000	3	RFS APXVSPP18-C-A20
116.000	116.000	1	Round Low Profile Platform
116.000	120.000	3	Alcatel-Lucent 1900 MHz 4X45
116.000	120.000	3	Alcatel-Lucent 800 MHz RRH
20.000	20.000	1	Standoff
20.000	20.000	1	PCTEL GPS-TMG-HR-26N

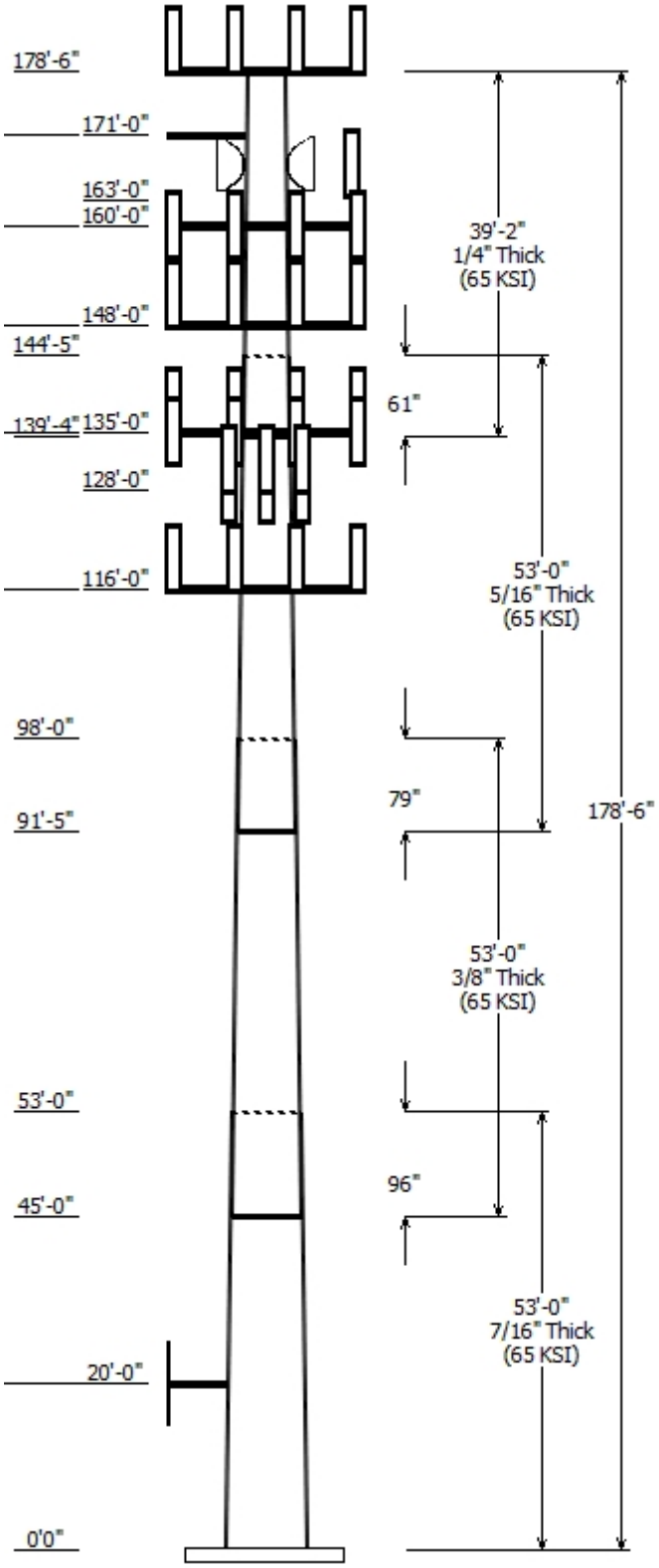

Linear Appurtenance

Elev (ft) From	To	Description	Exposed To Wind
0.000	20.000	1/2" Coax	Yes
0.000	116.0	1 1/4" Hybriflex	Yes
0.000	128.0	1 5/8" Coax	Yes
0.000	128.0	7/8" Coax	No
0.000	135.0	1 5/8" Coax	No
0.000	135.0	1 5/8" Hybriflex	No
0.000	135.0	1 5/8" Hybriflex	No
0.000	148.0	1 1/4" Hybriflex	Yes
0.000	148.0	1 5/8" Coax	No
0.000	160.0	0.39" Fiber Trunk	No
0.000	160.0	0.78" 8 AWG 6	No
0.000	160.0	1 5/8" Coax	No
0.000	160.0	3" Conduit	No
0.000	163.0	2" Conduit	Yes
0.000	171.0	1/2" Coax	Yes
0.000	171.0	5/16" Coax	No
0.000	178.5	1 5/8" Coax	No

Load Cases

Reactions

Load Case	Moment (kip-ft)	Shear (kip)	Axial (kip)
	0.00	0.00	0.00

Dish Deflections

Load Case	Attach Elev (ft)	Deflection (in)	Rotation (deg)
	0.00	0.000	0.000

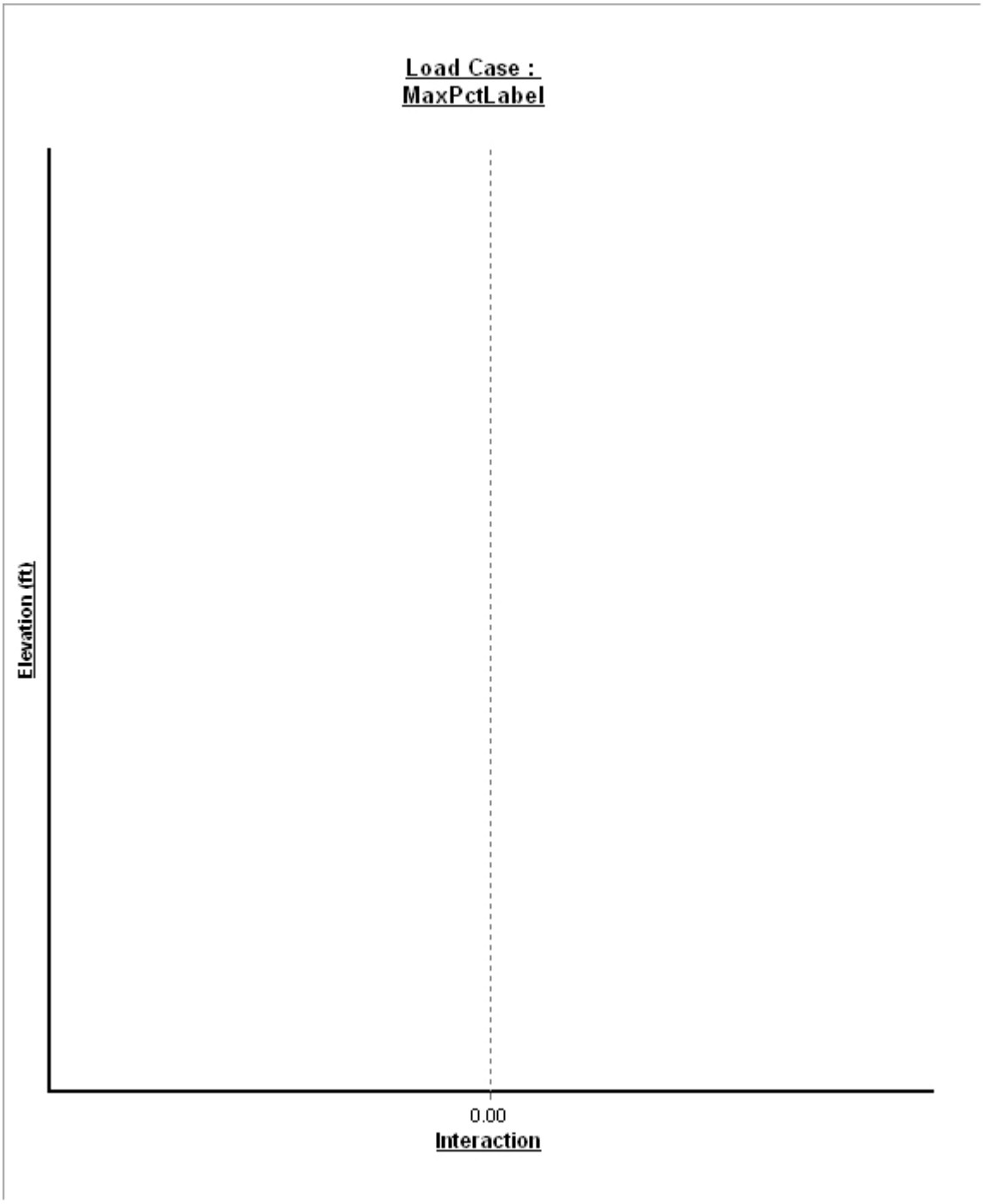
Load Case :
MaxPctLabel
Elevation (ft)
0.00
Interaction

Site Number:	**302467**	**Code:**	**ANSI/TIA-222-G**	*© 2007 - 2015 by ATC IP LLC. All rights reserved.*
Site Name:	**Bilkays Express, CT**	**Engineering Number:**	**64274421**	**12/8/2015 11:10:49 AM**
Customer:	**AT&T MOBILITY**			

Analysis Parameters

Location:	**New Haven County, CT**		
Code:	**ANSI/TIA-222-G**	**Height (ft):**	**178.**
Shape:	**18 Sides**	**Base Diameter (in):**	**72.00**
Pole Type:	**Taper**	**Top Diameter (in):**	**29.00**
Pole Manfacturer:	**FWT**	**Taper (in/ft) :**	**0.251**

Ice & Wind Parameters

Structure Class:	**II**	**Design Wind Speed Without Ice:**	**105 mph**
Exposure Category:	**B**	**Design Wind Speed With Ice:**	**50 mph**
Topographic Category:	**1**	**Operational Wind Speed:**	**60 mph**
Crest Height:	**0.0 ft**	**Design Ice Thickness:**	**0.75 in**

Load Cases

Site Number:	**302467**	**Code: ANSI/TIA-222-G**	*© 2007 - 2015 by ATC IP LLC. All rights reserved.*	
Site Name:	**Bilkays Express, CT**	**Engineering Number: 64274421**		**12/8/2015 11:10:49 AM**
Customer:	**AT&T MOBILITY**			

Shaft Section Properties

Sect Info	Length (ft)	Thick (in)	Fy (ksi)	Joint Type	Slip Joint Len (in)	Weight (lb)	Bottom Dia (in)	Bottom Elev (ft)	Bottom Area (in²)	Bottom Ix (in⁴)	Bottom W/t Ratio	Bottom D/t Ratio	Top Dia (in)	Top Elev (ft)	Top Area (in²)	Top Ix (in⁴)	Top W/t Ratio	Top D/t Ratio	Taper (in/ft)
1-18	53.000	0.4375	65		0.00	16,253	72.00	0.00	99.37	64295.3	27.61	164.57	58.67	53.00	80.87	34653.6	22.24	134.12	0.251401
2-18	53.000	0.3750	65	Slip	96.00	11,677	61.43	45.00	72.68	34236.4	27.48	163.83	48.11	98.00	56.82	16359.2	21.21	128.30	0.251401
3-18	53.000	0.3125	65	Slip	79.00	7,766	50.39	91.42	49.67	15739.6	27.02	161.26	37.06	144.42	36.46	6222.7	19.51	118.62	0.251401
4-18	39.167	0.2500	65	Slip	61.00	3,561	38.84	139.33	30.63	5764.1	25.99	155.39	29.00	178.50	22.81	2382.3	19.04	116.00	0.251401
				Shaft Weight		39,257													

Discrete Appurtenance Properties

Attach Elev (ft)	Description	Qty	No Ice Weight (lb)	No Ice EPAa (sf)	No Ice Orientation Factor	Ice Weight (lb)	Ice EPAa (sf)	Ice Orientation Factor	Distance From Face (ft)	Vert Ecc (ft)
178.50	Decibel DB844H90E-XY	12	14.00	3.610	0.92	126.96	3.938	0.92	0.000	2.500
178.50	Flat Low Profile Platform	1	1500.00	26.100	1.00	2,159.96	45.548	1.00	0.000	0.000
171.00	Argus LLPX310R	3	28.60	4.290	0.73	138.17	5.202	0.73	0.000	-6.000
171.00	DragonWave A-ANT-11G-2-C	1	27.00	4.690	1.00	125.91	5.983	1.00	0.000	-6.000
171.00	DragonWave A-ANT-18G-2-C	1	27.10	4.690	1.00	126.15	5.983	1.00	0.000	-6.000
171.00	NextNet BTS-2500	3	35.00	1.820	0.50	93.07	2.371	0.50	0.000	-6.000
171.00	Side Arms	1	560.00	8.500	1.00	1,035.16	15.712	1.00	0.000	0.000
163.00	Generic TTA	2	10.00	1.200	1.00	56.25	1.670	1.00	0.000	2.000
160.00	CCI OPA-65R-LCUU-H6	3	73.00	9.660	0.79	306.09	11.033	0.79	0.000	0.000
160.00	Ericsson RRUS 11 (Band 7)	3	50.70	2.790	0.67	137.64	3.473	0.67	0.000	0.000
160.00	Ericsson RRUS-11 800 MHz	3	54.00	2.520	0.67	143.87	3.181	0.67	0.000	0.000
160.00	Ericsson RRUS-12 B2	3	58.00	3.150	0.67	153.96	3.868	0.67	0.000	0.000
160.00	Ericsson RRUS-32	3	77.00	3.310	0.67	174.93	4.601	0.67	0.000	0.000
160.00	Flat Low Profile Platform	1	1500.00	26.100	1.00	2,152.40	45.325	1.00	0.000	0.000
160.00	KMW AM-X-CD-16-65-00T-	3	48.50	8.020	0.79	238.43	9.321	0.79	0.000	0.000
160.00	Powerwave Allgon 7020	6	2.20	0.400	0.50	18.04	0.623	0.50	0.000	0.000
160.00	Powerwave Allgon 7770.00	3	35.00	5.510	0.77	170.90	6.565	0.77	0.000	0.000
160.00	Powerwave Allgon LGP21401	6	14.10	1.100	0.50	68.23	2.657	0.50	0.000	0.000
160.00	Raycap DC6-48-60-18-8F	2	20.00	1.260	1.00	101.01	2.525	1.00	0.000	0.000
148.00	Ericsson AIR 21, 1.3 M, B2A	3	83.00	6.050	0.86	251.56	7.145	0.86	0.000	2.000
148.00	Ericsson AIR 21, 1.3M, B4A	3	81.50	6.090	0.85	250.02	7.190	0.85	0.000	2.000
148.00	Ericsson KRY 112 144/1	6	11.00	0.410	0.50	27.33	0.634	0.50	0.000	2.000
148.00	Round Low Profile Platform	1	1500.00	21.700	1.00	2,147.69	40.893	1.00	0.000	0.000
135.00	Alcatel-Lucent RRH2x60 700	3	56.70	2.150	0.67	129.02	3.133	0.67	0.000	3.000
135.00	Alcatel-Lucent RRH2X60-	3	39.60	1.880	0.67	107.79	2.465	0.67	0.000	3.000
135.00	Alcatel-Lucent RRH2X60-	3	44.00	1.880	0.67	112.19	2.465	0.67	0.000	3.000
135.00	Antel BXA-80063-6BF-EDIN-X	3	19.20	7.260	0.78	161.91	9.893	0.78	0.000	3.000
135.00	Commscope SBNHH-1D65B	9	50.70	8.170	0.83	251.16	9.460	0.83	0.000	0.000
135.00	RFS DB-T1-6Z-8AB-0Z	1	44.00	4.800	0.67	185.64	5.662	0.67	0.000	3.000
135.00	RFS DB-T1-6Z-8AB-0Z	1	44.00	4.800	0.67	185.64	5.662	0.67	0.000	3.000
135.00	Round Low Profile Platform	1	1500.00	21.700	1.00	2,141.22	40.701	1.00	0.000	0.000
128.00	Nortel NTGB01MA	1	1.00	0.090	0.50	12.18	0.322	0.50	0.000	0.000
128.00	RFS APXV18-206517S-C	3	26.40	5.160	0.80	141.49	6.386	0.80	0.000	2.000
116.00	Alcatel-Lucent 1900 MHz	3	60.00	2.320	0.67	152.18	2.974	0.67	0.000	4.000
116.00	Alcatel-Lucent 800 MHz RRH	3	53.00	2.130	0.67	137.65	2.728	0.67	0.000	4.000
116.00	Alcatel-Lucent TD-RRH8x20-	3	70.00	4.050	0.67	160.12	5.708	0.67	0.000	4.000
116.00	RFS APXVSPP18-C-A20	3	57.00	8.020	0.83	250.56	9.279	0.83	0.000	6.000
116.00	RFS RFS APXV9TM14-ALU-I20	3	55.10	6.340	0.78	195.10	8.466	0.78	0.000	6.000
116.00	Round Low Profile Platform	1	1500.00	21.700	1.00	2,132.47	40.442	1.00	0.000	0.000
20.00	PCTEL GPS-TMG-HR-26N	1	0.60	0.090	1.00	8.11	0.228	1.00	0.000	0.000
20.00	Standoff	1	75.00	2.500	1.00	146.50	3.906	1.00	0.000	0.000
	Totals	119	12442.70			28,158.97			Number of Loadings :	41

© 2007 - 2015 by ATC IP LLC. All rights reserved.

Linear Appurtenance Properties

Elev From (ft)	Elev To (ft)	Qty	Description	Coax Diameter (in)	Coax Weight (lb/ft)	Flat	Projected Width (in)	Exposed To Wind	Carrier
0.00	178.50	12	1 5/8" Coax	1.98	0.82	N	0.00	N	Sprint Nextel
0.00	171.00	2	1/2" Coax	0.63	0.15	N	0.00	Y	Clearwire
0.00	171.00	6	5/16" Coax	0.31	0.05	N	0.00	N	Clearwire
0.00	163.00	2	2" Conduit	2.38	3.65	N	2.38	Y	Clearwire
0.00	160.00	2	0.39" Fiber Trunk	0.39	0.07	N	0.00	N	AT&T Mobility
0.00	160.00	4	0.78" 8 AWG 6	0.78	0.59	N	0.00	N	AT&T Mobility
0.00	160.00	12	1 5/8" Coax	1.98	0.82	N	0.00	N	AT&T Mobility
0.00	160.00	2	3" Conduit	3.50	7.58	N	0.00	N	AT&T Mobility
0.00	148.00	1	1 1/4" Hybriflex Cab	1.54	1.00	N	1.54	Y	T-Mobile
0.00	148.00	12	1 5/8" Coax	1.98	0.82	N	0.00	N	T-Mobile
0.00	135.00	18	1 5/8" Coax	1.98	0.82	N	0.00	N	Verizon Wireless
0.00	135.00	1	1 5/8" Hybriflex	1.98	1.30	N	0.00	N	Verizon Wireless
0.00	135.00	1	1 5/8" Hybriflex	1.98	1.30	N	0.00	N	Verizon Wireless
0.00	128.00	6	1 5/8" Coax	1.98	0.82	N	0.00	Y	Metro PCS
0.00	128.00	1	7/8" Coax	1.09	0.33	N	0.00	N	
0.00	116.00	4	1 1/4" Hybriflex	1.54	1.00	N	0.00	Y	Sprint Nextel
0.00	20.00	1	1/2" Coax	0.63	0.15	N	0.00	Y	Sprint Nextel

© 2007 - 2015 by ATC IP LLC. All rights reserved.

Load Case:

0 Iterations

Gust Response Factor : 0.00
Dead Load Factor : 0.00
Wind Load Factor : 0.00

Wind Importance Factor : 0.00

Applied Segment Forces Summary

		Shaft Forces		Discrete Forces				Linear Forces		Sum of Forces			
Seg Elev (ft)	Description	Wind FX (lb)	Dead Load (lb)	Wind FX (lb)	Torsion MY (lb-ft)	Moment MZ (lb-ft)	Dead Load (lb)	Wind FX (lb)	Dead Load (lb)	Wind FX (lb)	Dead Load (lb)	Torsion MY (lb-ft)	Moment MZ (lb)
0.00		0.0	0.0					0.0	0.0	0.0	0.0	0.0	0.0
									Totals:	0.00	0.00	0.00	0.00

© 2007 - 2015 by ATC IP LLC. All rights reserved.

Load Case:

0 Iterations

Gust Response Factor : 0.00
Dead Load Factor : 0.00
Wind Load Factor : 0.00

Wind Importance Factor : 0.00

Calculated Forces

Seg Elev (ft)	Pu FY (-) (kips)	Vu FX (-) (kips)	Tu MY (ft-kips)	Mu MZ (ft-kips)	Mu MX (ft-kips)	Resultant Moment (ft-kips)	phi Pn (kips)	phi Vn (kips)	phi Tn (ft-kips)	phi Mn (ft-kips)	Total Deflect (in)	Rotation (deg)	Ratio
0.00	0.00	0.00	0.00	0.00	0.00	0.00	0.00	0.00	0.00	0.00	0.00	0.00	0.000

© 2007 - 2015 by ATC IP LLC. All rights reserved.

Analysis Summary

	Reactions						Max Usage	
Load Case	Shear FX (kips)	Shear FZ (kips)	Axial FY (kips)	Moment MX (ft-kips)	Moment MY (ft-kips)	Moment MZ (ft-kips)	Elev (ft)	Interaction Ratio
	0.00	0.00	0.00	0.00	0.00	0.00	0.00	0.00

© 2007 - 2015 by ATC IP LLC. All rights reserved.

Base Summary

Reactions

Original Design			Analysis			
Moment (kip-ft)	Axial (kip)	Shear (kip)	Moment (kip-ft)	Axial (kip)	Shear (kip)	Moment Design %
5,025.00	56.80	39.90				

Base Plate

Yield (ksi)	Thick (in)	Width (in)	Style	Poly Sides	Clip Len (in)	Effective Len (in)	Mu (kip-in)	Phi Mn (kip-in)	Ratio
60.0	2.750	85.000	Round	0	0.00	0.000	0.00	0.00	0.00

Anchor Bolts

Bolt Circle	Num Bolts	Bolt Type	Bolt Dia (in)	Yield (ksi)	Ultimate (ksi)	Arrange	Cluster Dist (in)	Start Angle (deg)	Compression Force (kip)	Compression Allow (kip)	Compression Ratio	Tension Force (kip)	Tension Allow (kip)	Tension Ratio
79.00	20	2.25" 18J	2.25	75.00	100.00	Radial	0.00	0.0	0.00	0.00	0.00	0.00	0.00	0.00

Base/Flange Plate	Plate Type	***Baseplate***	
	Pole Diameter	72	in
	Pole Thickness	0.4375	in
	Plate Diameter	85	in
	Plate Thickness	2.75	in
	Plate Fy	60	ksi
	Weld Length	0.25	in
	ϕ_s Resistance	1149.41	k-in
	Applied	297.75	k-in
Stiffeners	#	***0***	

Bolts	#	***20***	
	Bolt Circle	79	in
	(R)adial / (S)quare	R	
	Diameter	2.25	in
	Hole Diameter	2.625	in
	Type	18J	
	Fy	75	ksi
	Fu	100	ksi
	ϕ_s Resistance	259.82	k
	Applied	153.68	k
Reinforcement ●	#	***0***	
Extra Bolts O	#	***0***	

Code Rev.	***G***
Moment	4871.1 k-ft
Axial	114.9 k

Date	12/4/2015
Engineer	JDB
Site #	302467
Carrier	AT&T Mobility

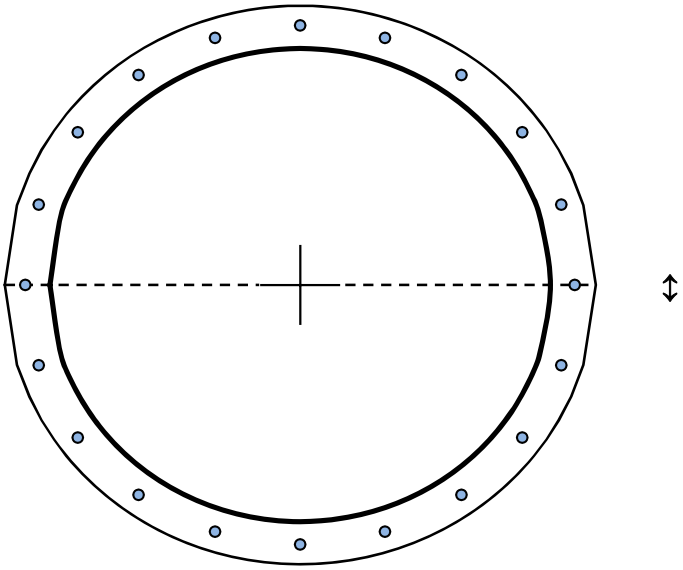

Plate Stress Ratio:
0.26 (Pass)

Bolt Stress Ratio:
0.59 (Pass)

Site Name:	Bilkay Express, CT, CT	*Program Last Updated:*	*5/13/2014*
Site Number:	302467	*American Tower Corporation*	
Engineer:	JDB		
Engineering Number:	64274421		
Date:	12/04/15		

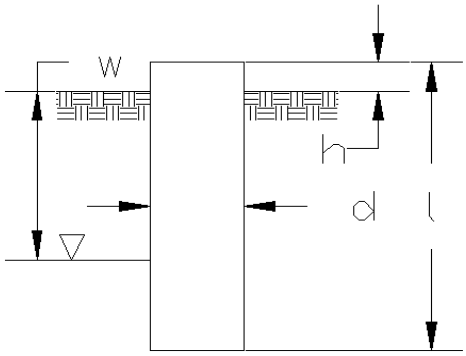

Design Base Loads (Factored) - Analysis per TIA-222-G Standards

Analyze or Design a Foundation?	Analyze	
Foundation Mapped:	N	
Moment (M):	4871.1	k-ft
Shear/Leg (V):	40.2	k
Axial Load (P):	114.9	k
Uplift/Leg (U):	0.0	k
Tower Type (GT / SST / MP):	MP	
Diameter of Caisson (d):	8.5	ft
Caisson Embedment (L-h):	29.5	ft
Caisson Height Above Ground (h):	0.5	ft
Depth Below Ground Surface to Water Table (w):	6.0	ft
Unit Weight of Concrete:	150.0	pcf
Unit Weight of Water:	62.4	pcf
Tension Skin Friction/Compression Skin Friction:	1.00	
Pullout Angle:	30.0	degrees

Engineer Notes

Soil Mechanical Properties

Depth (ft) Top	Depth (ft) Bottom	γ_{Soil} (pcf)	Cohesion (psf)	ϕ (degree)	Ultimate Skin Friction (psf)	Ultimate Bearing Pressure (psf)
0.0	5.0	125	0	34	0	0
5.0	15.0	60	0	34	480	0
15.0	20.0	60	0	34	480	5000
20.0	30.0	60	0	34	690	5000
30.0	42.0	60	0	34	820	5000
42.0	47.0	60	0	34	1020	5000

Required Embedment:	25.7	ft - OK, Caisson Embedment Satisfactory
Volume of Concrete:	1702.4	ft^3 = 63.1 yd^3
Weight of Concrete (Buoyancy Effect Considered):	172.1	k
Average Soil Unit Weight:	21.3	pcf
Skin Friction Resistance:	367.3	k
Compressive Bearing Resistance:	283.7	k
Pullout Weight (Minus Concrete Weight):	333.9	k
Nominal Uplift Capacity per Leg ($\phi_s T_n$):	250.4	k
Nominal Compressive Capacity per Leg ($\phi_s P_n$):	488.3	k
P_u:	273.6	k
$T_u/\phi_s T_n$:	0.00	Result: OK
$P_u/\phi_s P_n$:	0.56	Result: OK
Total Lateral Resistance:	1786.2	k
Inflection Point (Below Ground Surface):	16.4	ft
Design Overturning Moment At Inflection Point (M_D):	5549.9	k-ft
Nominal Moment Capacity ($\phi_s M_n$):	8819.8	k-ft
$M_D/\phi_s M_n$:	0.63	Result: OK
ϕ_s:	0.75	

Caisson Strength Capacity

Concrete Compressive Strength (f'_c):	3000	psi
Vertical Steel Rebar Size #:	11	
Vertical Steel Rebar Area:	1.56	in^2
# of Vertical Steel Rebars:	27	
Vertical Steel Rebar Yield Strength (F_y):	60	ksi
Horizontal Tie / Stirrup Size #:	5	
Horizontal Tie / Stirrup Area:	0.31	in^2
Design Horizontal Tie / Stirrup Spacing:	12.0	in
Horizontal Tie / Stirrup Steel Yield Strength (F_y):	60	ksi
Rebar Cage Diameter:	94.0	in
Strength Bending/Tension Reduction Factor (ϕ_B):	0.90	ACI318-05 - 9.3.2.1
Strength Shear Reduction Factor (ϕ_V):	0.75	ACI318-05 - 9.3.2.3
Strength Compression Reduction Factor (ϕ_V):	0.65	ACI318-05 - 9.3.2.2
Steel Elastic Modulus:	29000	ksi
Design Moment (M_u):	4891.2	k-ft
Nominal Moment Capacity ($\phi_B M_n$):	8066.2	k-ft - ACI318-005 - 10.2
$M_u/\phi_B M_n$:	0.61	Result: OK
Design Shear (V_u):	359.8	k
Nominal Shear Capacity ($\phi_V V_n$):	676.1	k - ACI318-05 - 11.3.1.1 or 11.5.7.2
$V_u/\phi_V V_n$:	0.53	Result: OK
Design Tension (T_u):	0.0	k
Nominal Tension Capacity ($\phi_T T_n$):	2274.5	k - ACI318-05 - 10.2
$T_u/\phi_T T_n$:	0.00	Result: OK
Design Compression (P_u):	273.6	k
Nominal Compression Capacity ($\phi_P P_n$):	10779.3	k - ACI318-05 - 10.3.6.2
$P_u/\phi_P P_n$:	0.03	Result: OK
Bending Reinforcement Ratio:	0.005	ACI318-05 - 10.8.4 & 10.9.1
$M_u/\phi_B M_n + T_u/\phi_T T_n$:	0.61	Result: OK

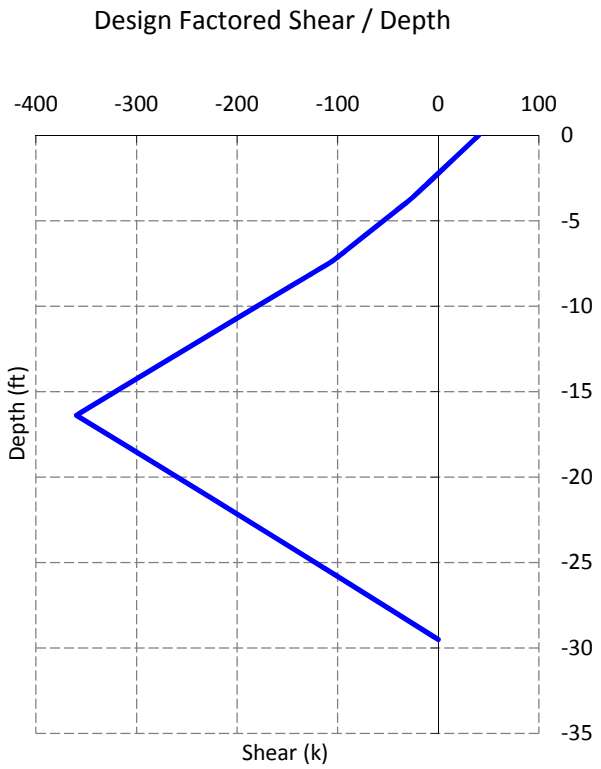
Design Factored Shear / Depth
-400
-300
-200
-100
0
100
0
-5
-10
-15
-20
-25
-30
-35
Depth (ft)
Shear (k)

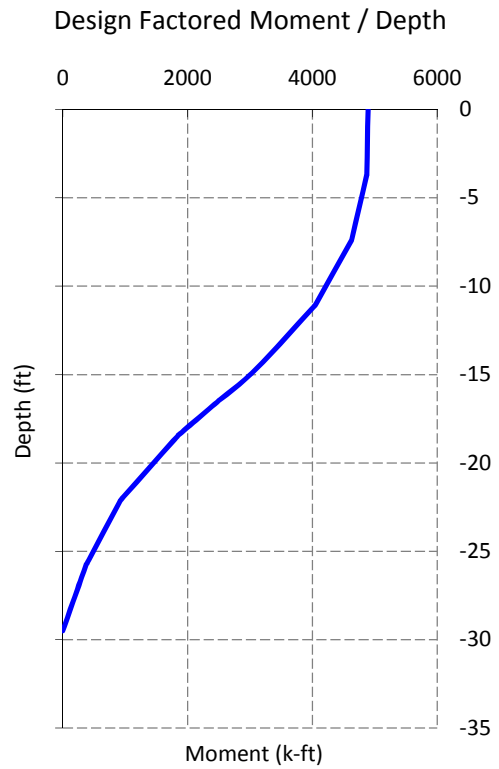
Design Factored Moment / Depth
0
2000
4000
6000
0
-5
-10
-15
-20
-25
-30
-35
Depth (ft)
Moment (k-ft)

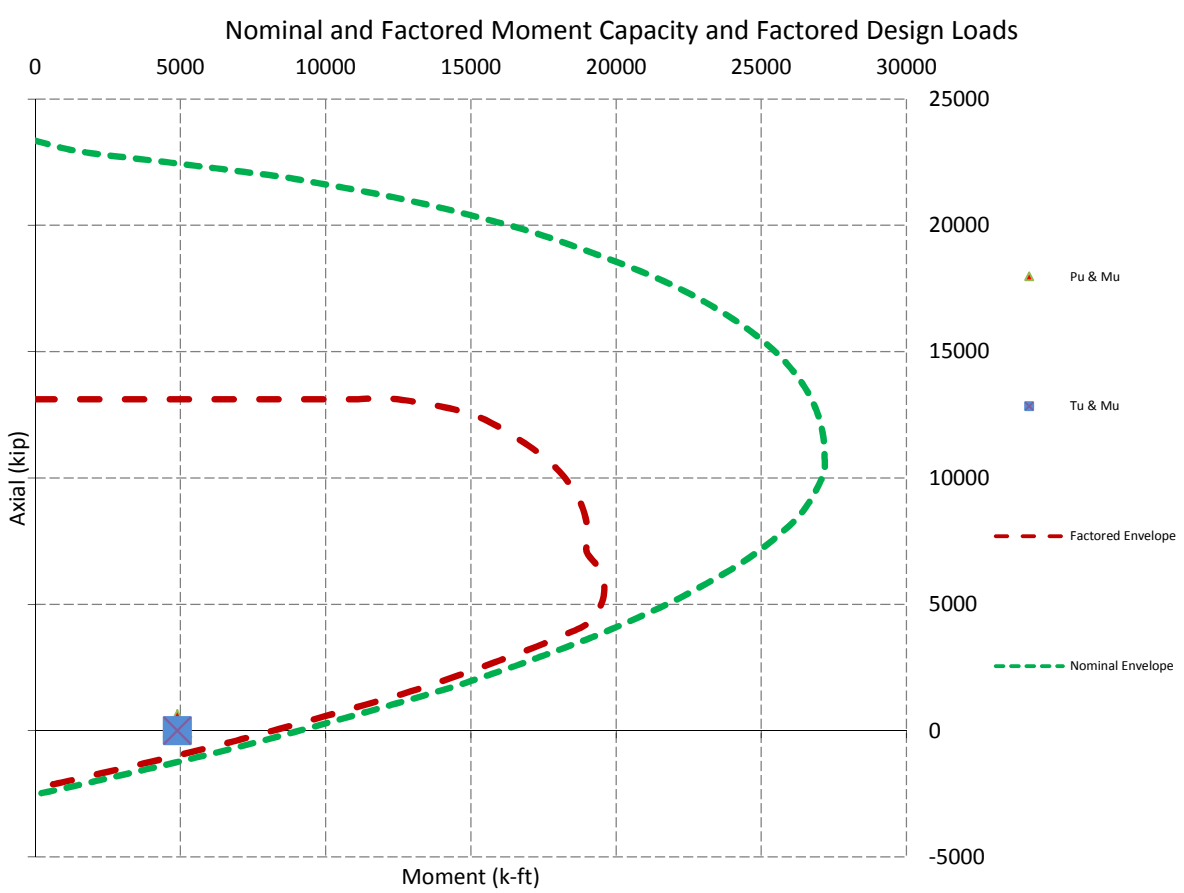
Nominal and Factored Moment Capacity and Factored Design Loads
0
5000
10000
15000
20000
25000
30000
25000
20000
15000
10000
5000
0
-5000
Axial (kip)
Moment (k-ft)
Pu & Mu
Tu & Mu
Factored Envelope
Nominal Envelope