Crown Castle
3 Corporate Park Drive, Suite 101
Clifton Park, NY 12065

January 2, 2020

Melanie A. Bachman
Executive Director
Connecticut Siting Council
10 Franklin Square
New Britain, CT 06051

RECEIVED
JAN 3 2020
Connecticut Siting Council

RE: **Notice of Exempt Modification for Crown Site BU: 841299**
AT&T Site ID: 10035240
Eversource Pole 1321
670 Chapel Street, Stratford, Fairfield County, CT 06614
Latitude: 41° 14′ 16.80″/ Longitude: -73° 7′ 20.60″

ORIGINAL

Dear Ms. Bachman:

AT&T currently maintains nine (9) antennas at the 124-foot mount level of the existing 124-foot electric transmission structure at 670 Chapel Street in Stratford, Connecticut. The tower is owned by Crown Castle. The property is owned by Connecticut Light and Power. AT&T intends to replace three (3) of the existing antennas with three (3) new antennas at the 124-foot mount level. Structural modifications pursuant to the enclosed Structural Analysis are also proposed.

The facility was approved by the Connecticut Siting Council on July 29, 1999. The Staff Report for Petition No. 411 is included in this submission.

Please accept this letter as notification pursuant to Regulations of Connecticut State Agencies § 16-50j-73, for construction that constitutes an exempt modification pursuant to R.C.S.A. § 16-50j-72(b)(2). In accordance with R.S.C.A. § 16-50j-73, a copy of this letter is being sent to the Honorable Laura Hoydick, Mayor for the Town of Stratford, Jay Habansky, AICP, Planning and Zoning Administrator for the Town of Stratford, and Connecticut Light & Power Company as the property owner. Crown Castle is the tower owner.

1. The proposed modifications will not result in an increase in the height of the existing tower.

2. The proposed modifications will not require the extension of the site boundary.

3. The proposed modification will not increase noise levels at the facility by six decibels or more, or to levels that exceed state and local criteria.

4. The operation of the replacement antennas will not increase radio frequency emissions at the facility to a level at or above the Federal Communication Commission safety standard.

5. The proposed modifications will not cause a change or alteration in the physical or environmental characteristics of the site.

6. The existing structure and its foundation can support the proposed loading.

For the foregoing reasons, AT&T respectfully submits that the proposed modifications to the above-reference telecommunications facility constitutes an exempt modification under R.C.S.A. § 16-50j-72(b)(2). Please send approval/rejection letter to Attn: Anne Marie Zsamba.

Sincerely,

Anne Marie Zsamba
Network Real Estate Specialist
3 Corporate Park Drive, Suite 101, Clifton Park, NY 12065
(201) 236-9224
annemarie.zsamba@crowncastle.com

Attachments:

Tab 1: Exhibit-A: Compound Plan and Elevation Depicting the Planned Changes
Tab 2: Exhibit-B: Structural Modification Report
Tab 3: Exhibit-C: General Power Density Table Report (RF Emissions Analysis Report)

cc: Laura R. Hoydick, Mayor
Stratford Town Hall
2725 Main Street
Stratford, CT 06615
203-382-4001

Jay Habansky, AICP, Planning and Zoning Administrator
Stratford Town Hall – Room 113
2725 Main Street
Stratford, CT 06615
203-385-4017

Connecticut Light & Power Company
PO Box 56006
Eversource Energy ES#1974000362003
Boston, MA 02205-6006

ORIGIN ID:ONHA (585) 445-5896
RICHARD ZAJAC
CROWN CASTLE
4545 EAST RIVER ROAD
SUITE 320
WEST HENRIETTA, NY 14568
UNITED STATES US

SHIP DATE: 02JAN20
ACTWGT: 2.00 LB
CAD: 104924194/INET4160

BILL SENDER

TO **LAURA HOYDICK, MAYOR**
TOWN OF STRATFORD
STRATFORD TOWN HALL
2725 MAIN STREET
STRATFORD CT 06615

(203) 382-4001 REF: 1734.7680
INV:
PO: DEPT:

567/J2/18DD/05A2

FedEx Express

J192119091901uv

FRI - 03 JAN 3:00P
STANDARD OVERNIGHT

TRK# 0201 **7773 7575 0732**

XE CIVA

06615
CT-US **BDL**

After printing this label:
1. Use the 'Print' button on this page to print your label to your laser or inkjet printer.
2. Fold the printed page along the horizontal line.
3. Place label in shipping pouch and affix it to your shipment so that the barcode portion of the label can be read and scanned.

Warning: **Use only the printed original label for shipping. Using a photocopy of this label for shipping purposes is fraudulent and could result in additional billing charges, along with the cancellation of your FedEx account number.**
Use of this system constitutes your agreement to the service conditions in the current FedEx Service Guide, available on fedex.com.FedEx will not be responsible for any claim in excess of $100 per package, whether the result of loss, damage, delay, non-delivery,misdelivery,or misinformation, unless you declare a higher value, pay an additional charge, document your actual loss and file a timely claim.Limitations found in the current FedEx Service Guide apply. Your right to recover from FedEx for any loss, including intrinsic value of the package, loss of sales, income interest, profit, attorney's fees, costs, and other forms of damage whether direct, incidental,consequential, or special is limited to the greater of $100 or the authorized declared value. Recovery cannot exceed actual documented loss.Maximum for items of extraordinary value is $1,000, e.g. jewelry, precious metals, negotiable instruments and other items listed in our ServiceGuide. Written claims must be filed within strict time limits, see current FedEx Service Guide.

ORIGIN ID:ONHA (585) 445-5896
RICHARD ZAJAC
CROWN CASTLE
4545 EAST RIVER ROAD
SUITE 320
WEST HENRIETTA, NY 14568
UNITED STATES US

SHIP DATE: 02JAN20
ACTWGT: 2.00 LB
CAD: 104924194/INET4160

BILL SENDER

TO **JAY HABANSKY, AICP, P/ZADMIN**
TOWN OF STRATFORD
TOWN HALL - RM 113
2725 MAIN STREET
STRATFORD CT 06615
(203) 385-4017 REF: 1734.7680
INV:
PO: DEPT:

567/2/18DD/05A2

FedEx Express

J192119091901uv

FRI - 03 JAN 3:00P
STANDARD OVERNIGHT

TRK# 0201 **7773 7577 0756**

XE CIVA

06615
CT-US **BDL**

After printing this label:
1. Use the 'Print' button on this page to print your label to your laser or inkjet printer.
2. Fold the printed page along the horizontal line.
3. Place label in shipping pouch and affix it to your shipment so that the barcode portion of the label can be read and scanned.

Warning: Use only the printed original label for shipping. Using a photocopy of this label for shipping purposes is fraudulent and could result in additional billing charges, along with the cancellation of your FedEx account number.
Use of this system constitutes your agreement to the service conditions in the current FedEx Service Guide, available on fedex.com.FedEx will not be responsible for any claim in excess of $100 per package, whether the result of loss, damage, delay, non-delivery,misdelivery,or misinformation, unless you declare a higher value, pay an additional charge, document your actual loss and file a timely claim.Limitations found in the current FedEx Service Guide apply. Your right to recover from FedEx for any loss, including intrinsic value of the package, loss of sales, income interest, profit, attorney's fees, costs, and other forms of damage whether direct, incidental,consequential, or special is limited to the greater of $100 or the authorized declared value. Recovery cannot exceed actual documented loss.Maximum for items of extraordinary value is $1,000, e.g. jewelry, precious metals, negotiable instruments and other items listed in our ServiceGuide. Written claims must be filed within strict time limits, see current FedEx Service Guide.

ORIGIN ID:ONHA (585) 445-5896
RICHARD ZAJAC
CROWN CASTLE
4545 EAST RIVER ROAD
SUITE 320
WEST HENRIETTA, NY 14568
UNITED STATES US

SHIP DATE: 02JAN20
ACTWGT: 2.00 LB
CAD: 104924194/INET4160

BILL SENDER

TO **CL&P**

EVERSOURCE ENERGY
PO BOX 56006
BOSTON MA 02205

(201) 236-9224
INV:
PO:
REF: 1734.7680
DEPT:

567J2/18DD/05A2

J192119091901uv

FedEx Express

FRI - 03 JAN 3:00P
STANDARD OVERNIGHT

TRK# 0201 7773 7578 7122

XE BVYA

02205
BOS
MA-US

After printing this label:
1. Use the 'Print' button on this page to print your label to your laser or inkjet printer.
2. Fold the printed page along the horizontal line.
3. Place label in shipping pouch and affix it to your shipment so that the barcode portion of the label can be read and scanned.

Warning: Use only the printed original label for shipping. Using a photocopy of this label for shipping purposes is fraudulent and could result in additional billing charges, along with the cancellation of your FedEx account number.

Use of this system constitutes your agreement to the service conditions in the current FedEx Service Guide, available on fedex.com.FedEx will not be responsible for any claim in excess of $100 per package, whether the result of loss, damage, delay, non-delivery,misdelivery,or misinformation, unless you declare a higher value, pay an additional charge, document your actual loss and file a timely claim.Limitations found in the current FedEx Service Guide apply. Your right to recover from FedEx for any loss, including intrinsic value of the package, loss of sales, income interest, profit, attorney's fees, costs, and other forms of damage whether direct, incidental,consequential, or special is limited to the greater of $100 or the authorized declared value. Recovery cannot exceed actual documented loss.Maximum for items of extraordinary value is $1,000, e.g. jewelry, precious metals, negotiable instruments and other items listed in our ServiceGuide. Written claims must be filed within strict time limits, see current FedEx Service Guide.

ORIGIN ID:ONHA (585) 445-5896
RICHARD ZAJAC
CROWN CASTLE
4545 EAST RIVER ROAD
SUITE 320
WEST HENRIETTA, NY 14568
UNITED STATES US

SHIP DATE: 02JAN20
ACTWGT: 4.00 LB
CAD: 104924194/INET4160

BILL SENDER

TO **MELANIE BACHMAN**
CONNECTICUT SITING COUNCIL
10 FRANKLIN SQUARE

NEW BRITAIN CT 06051
(860) 827-2951 REF: 1765.6680
INV:
PO: DEPT:

567J2/18DD05A2

FedEx Express

J192119091901uv

FRI - 03 JAN 3:00P
STANDARD OVERNIGHT

TRK# 0201 **7773 7580 0410**

XE BDLA

06051
CT-US **BDL**

After printing this label:
1. Use the 'Print' button on this page to print your label to your laser or inkjet printer.
2. Fold the printed page along the horizontal line.
3. Place label in shipping pouch and affix it to your shipment so that the barcode portion of the label can be read and scanned.

Warning: Use only the printed original label for shipping. Using a photocopy of this label for shipping purposes is fraudulent and could result in additional billing charges, along with the cancellation of your FedEx account number.
Use of this system constitutes your agreement to the service conditions in the current FedEx Service Guide, available on fedex.com.FedEx will not be responsible for any claim in excess of $100 per package, whether the result of loss, damage, delay, non-delivery,misdelivery,or misinformation, unless you declare a higher value, pay an additional charge, document your actual loss and file a timely claim.Limitations found in the current FedEx Service Guide apply. Your right to recover from FedEx for any loss, including intrinsic value of the package, loss of sales, income interest, profit, attorney's fees, costs, and other forms of damage whether direct, incidental,consequential, or special is limited to the greater of $100 or the authorized declared value. Recovery cannot exceed actual documented loss.Maximum for items of extraordinary value is $1,000, e.g. jewelry, precious metals, negotiable instruments and other items listed in our ServiceGuide. Written claims must be filed within strict time limits, see current FedEx Service Guide.

Exhibit A

Original Facility Approval

Petition No. 411
Springwich Cellular Limited Partnership
Stratford, Connecticut
Staff Report
March 24, 1999

On March 22, 1999, Daniel P. Lynch, Jr., of the Connecticut Siting Council (Council) and Robert K. Erling of the Council staff met Marshall West of Springwich Cellular Limited Partnership (Springwich) for a field review of this petition in Stratford, Connecticut. Springwich is petitioning the Council for a determination that no Certificate of Environmental Compatibility and Public Need (Certificate) would be required for modifications to existing Connecticut Light and Power (CL&P) electric transmission line # 1570 and structure # 1322 off of Harvest Ridge Road in Stratford.

Springwich submits no Certificate would be required because the installation of its antennas and associated equipment at this tower would not have a substantial adverse environmental effect.

Springwich proposes to attach its panel antennas to the top of the existing 82-foot CL&P electric transmission line lattice tower. The top of the antenna would be approximately 99.4 feet above ground level. At CL&P's request the antenna platform would be designed to support Springwich's antennas only. Other nearby transmission towers range from 90 to 95 feet in height.

Springwich would install a 12-foot by 26 foot equipment shelter within the transmission line right-of-way near the base of the tower. An eight-foot security fence would be placed around the equipment shelter.

Access to the transmission line tower would be from Harvest Ridge Road onto land currently owned or covered by the right-of-way agreement held by CL&P. This approximately 150-foot permanent driveway would be constructed to access the tower both during antenna installation and during maintenance.

The area surrounding the transmission line structure includes residential lots. This site is bordered by an unoccupied CL&P-owned residential lot to the south. The nearest home is approximately180 feet to the north; two other homes across Harvest Ridge Road would also have an unobstructed view of the antenna post used to hold the Springwich antennas.

There are no wetlands in the vicinity of the tower site. All erosion and sediment control measures would be installed as required in accordance with the Connecticut Guidelines for Soil Erosion and Sediment Control.

The total calculated radio frequency power density at the base of the tower would be 0.0835 mW/cm^2, 14.24 percent of the maximum permissible exposure for uncontrolled environments based on Federal Communications Commission Bulletin 65, August 1997.

Exhibit B

Property Card

TOWN OF STRATFORD

Recent Sales in Neighborhood	Previous Parcel	Next Parcel	Field Definitions	Return to Main Search	Stratford Home

Owner and Parcel Information

Owner Name	CONNECTICUT LIGHT & POWER CO	**Today's Date**	January 11, 2019
Mailing Address	PO BOX 270	**Account #**	0332100
	HARTFORD, CT 06141-0270		
Location Address	CHAPEL ST	**Census Tract**	0812
Map / Block / Lot	50 /17 / 1 / 32/ Dev Lot: 14.97 ACRES N/S	**Acreage**	15.27
Use Class / Description	423R Elec Trsmn	**Parcel Map**	Show Parcel Map / Owner List By Radius

Current Appraised Value Information

Building Value	OB Value	Land Value	Special Land Value	Total Appraised Value	Net Appraised Value	Current Assessment
No Apprasial Information available for this parcel						

Assessment History

Year	Building	OB/Misc	Land	Total Assessment
2017	0	0	$ 476,280	$ 476,280
2016	0	0	$ 476,280	$ 476,280

Land Information

Use	Class	Zoning	Area	Value
Elec Trsmn	R		15.27 AC	$ 680,400

Building Information

No Building Information available for this parcel.

Out Buildings / Extra Features

Description	Sub Description	Area	Year Built	Value
No Out Building/Misc Information available for this parcel.				

Sale Information

Sale Date	Sale Price	Deed Book/Page	Sale Qualification	Reason	Vacant or Improved	Owner
10/24/1922		0106/0281	Unqualified		Vacant	CONNECTICUT LIGHT & POWER CO

Permit Information

Permit ID	Issue Date	Type	Description	Amount	Inspection Date	% Complete	Date Complete	Comments
19262	03/01/2012	EL	Electrical Per	$ 21,000		100		ELECTRICAL
19655	12/09/2011	BP	Building Permi	$ 140,000		100		WIRELESS FACILITY
19415	08/10/2011	BP	Building Permi	$ 20,000		100		ADD ANTENNAS

Recent Sales in Neighborhood | Previous Parcel | Next Parcel | Field Definitions | Return to Main Search Page | Stratford Home

The Town of Stratford Assessor's Office makes every effort to produce the most accurate information possible. No warranties, expressed or implied, are provided for the data herein, its use or interpretation. Website Updated: September 9, 2018

© 2012 by the Town of Stratford, CT | Website design by qpublic.net

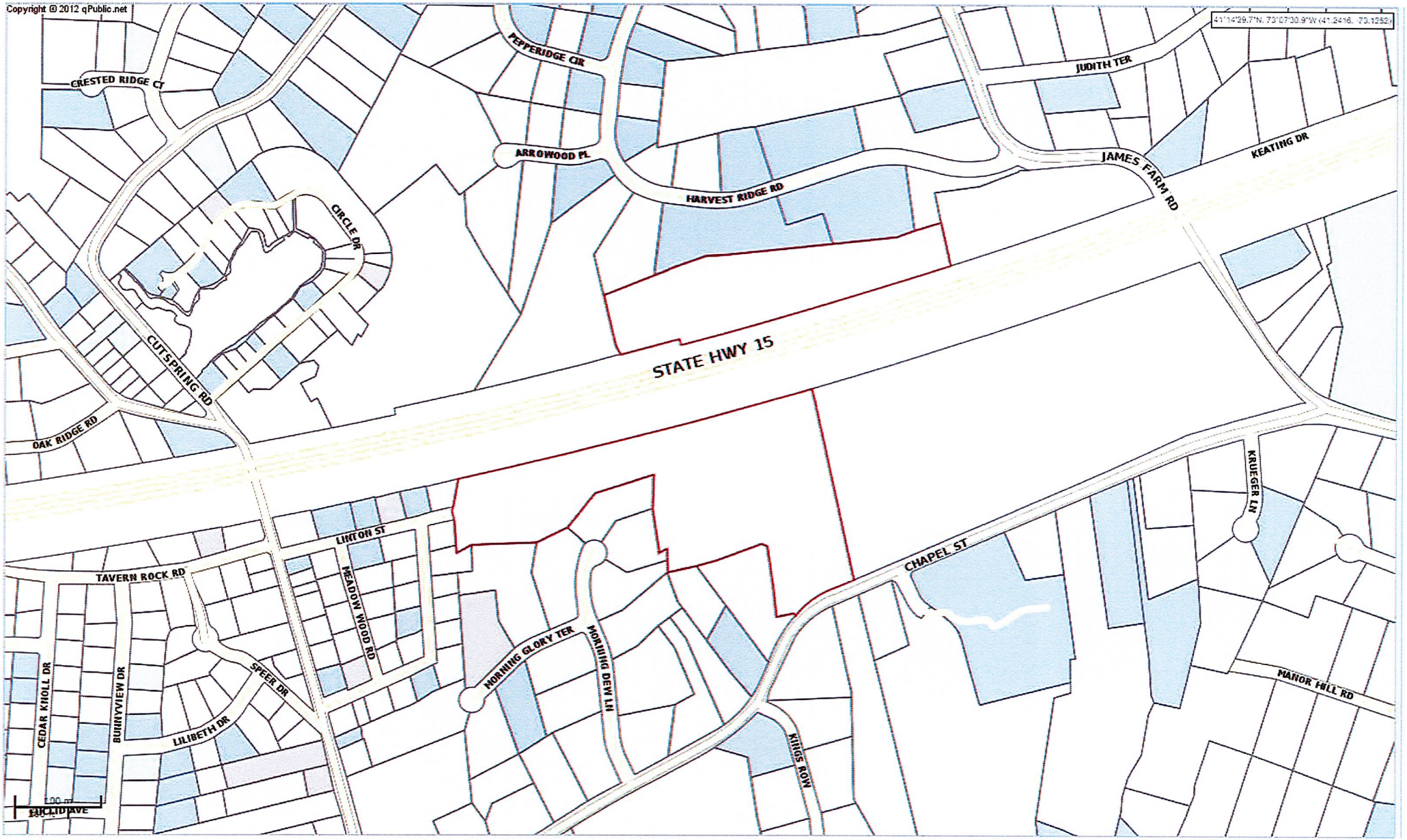
Copyright © 2012 qPublic.net
41°14'29.7"N, 73°07'30.9"W (41.2416, -73.1252)
CRESTED RIDGE CT
PEPPERIDGE CIR
JUDITH TER
ARROWOOD PL
HARVEST RIDGE RD
JAMES FARM RD
KEATING DR
CIRCLE DR
CUTSPRING RD
STATE HWY 15
OAK RIDGE RD
KRUEGER LN
LINTON ST
TAVERN ROCK RD
MEADOW WOOD RD
CHAPEL ST
MORNING GLORY TER
MORNING DEW LN
SPEER DR
CEDAR KNOLL DR
BUNNYVIEW DR
LILIBETH DR
KINGS ROW
MANOR HILL RD
100 m
EUCLID AVE

Exhibit C

Construction Drawings

PROJECT INFORMATION

SCOPE OF WORK:

ITEMS TO BE MOUNTED ON THE EXISTING TOWER:

- INSTALL AT&T ANTENNA (800-10965) (TYP. OF 1 PER SECTOR, TOTAL OF 3).
- INSTALL TMABPD7823VG12A TMA's (TOTAL OF 6).
- INSTALL (2) 1-5/8" COAX PER SECTOR (TOTAL OF 6).

ITEMS TO BE MOUNTED INSIDE EXISTING SHELTER:

- REMOVE XMU & DUS.
- INSTALL KAELUS DBC2055F1V1-2 DIPLEXERS (TOTAL OF 6).
- INSTALL B14 4449 B5/B12 (700) (TOTAL OF 3).
- INSTALL RRUS-32 (WCS) (TOTAL OF 3).
- INSTALL (2) 6630's.

ITEMS TO REMAIN:

- (6) ANTENNAS, (3) RRU'S, (12) TMAS, & (1) SURGE SUPPRESSOR.

SITE ADDRESS:	570 CHAPEL STREET STRATFORD, CT 06614
LATITUDE (NAD 83):	N 41° 14' 16.77"
LONGITUDE (NAD 83):	W 73° 07' 20.60"
LANDLORD:	CROWN CASTLE INTERNATIONAL 500 W. CUMMINGS PARK, STE 3600 WOBURN, MA 01801
TYPE OF SITE:	UTILITY MONOPOLE/INDOOR
TOWER HEIGHT:	124'
RAD CENTER:	124'
CURRENT USE:	TELECOMMUNICATIONS FACILITY
PROPOSED USE:	TELECOMMUNICATIONS FACILITY

at&t

SITE NUMBER: CTL02043

FA#:10035240

SITE NAME: STRATFORD NU

CROWN SITE NAME: STRATFORD NU

PROJECT: LTE3C/4C/4TX4RX

PACE ID: MRCTB035098, MRCTB035156, MRCTB035329

BU#: 841299

NOTE:

ALL CONSTRUCTION ACTIVITIES ARE TO BE COMPLETED DIRECTLY THROUGH CROWN. CONTRACTOR MUST HAVE CONSTRUCTION PO AND NTP FROM CROWN DIRECT IN ORDER TO BEGIN. PRE-APPROVAL TO ENTER THE PROPERTY MUST BE OBTAINED, FOR ACCESS AUTHORIZATION, PLEASE CONTACT CROWN.

DRAWING INDEX

SHEET NO:	SHEET TITLE
T-1	TITLE SHEET
GN-1	GENERAL NOTES I
GN-2	GENERAL NOTES II
C-1	SITE PLAN
C-2	EQUIPMENT LAYOUT & PROPOSED TOWER ELEVATION
C-3	EXISTING & PROPOSED ANTENNA LAYOUT
C-4	EQUIPMENT DETAILS
RF-1	ANTENNA CHART & RF EQUIPMENT SCHEMATIC
G-1	GROUNDING DETAILS
T-1	MODIFIED 101'-0" TRANSMISSION TOWER DRAWING - TITLE SHEET (BY OTHERS)
N-1	MODIFIED 101'-0" TRANSMISSION TOWER DRAWING - GENERAL NOTES (BY OTHERS)
MI-1	MODIFIED 101'-0" TRANSMISSION TOWER DRAWING - INSPECTION NOTES (BY OTHERS)
MI-2	MODIFIED 101'-0" TRANSMISSION TOWER DRAWING - FIELD MEASUREMENTS AND NOTES (BY OTHERS)
S-1	MODIFIED 101'-0" TRANSMISSION TOWER DRAWING - TOWER ELEVATIONS AND DETAILS (BY OTHERS)
S-2	MODIFIED 101'-0" TRANSMISSION TOWER DRAWING - DETAILS AND MATERIAL LIST (BY OTHERS)

CROWN CASTLE SITE ID #: 841299
CROWN CASTLE SITE NAME: STRATFORD NU

ENGINEERING

2018 CONNECTICUT STATE BUILDING CODE
2018 AMENDMENT WITH 2015 INTERNATIONAL BUILDING CODE
2009 ICC/ANSI A117.1 ACCESSIBLE AND USABLE BUILDINGS AND FACILITIES
2015 INTERNATIONAL MECHANICAL CODE
2015 INTERNATIONAL ENERGY CONSERVATION CODE
2017 NATIONAL ELECTRICAL CODE (NFPA 70 2017)
ANSI/TIA-222-G

VICINITY MAP

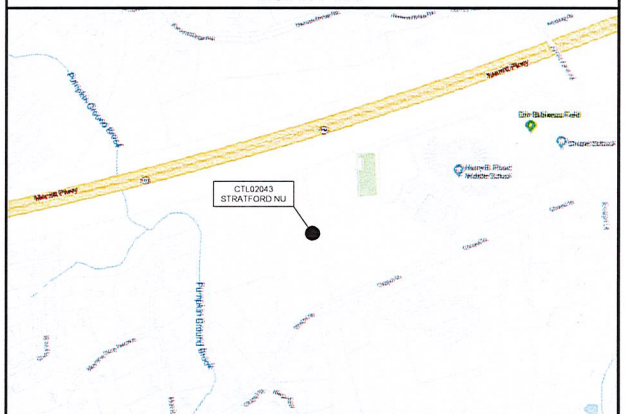

STRATFORD UN 2043 MERRITT PARKWAY NORTH TO EXIT 53 TURN RIGHT ONTO MAIN STREET PUTNEY. TURN RIGHT ON CHAPEL STREET, AFTER PASSING THE SCHOOL YOU WILL SEE ON YOUR RIGHT A GATE GOING INTO THE POWER LINES SITE IS IN HERE ON THE LEFT POWER TOWER. DEMARC IS IN TELCO BOX IN COMPOUND FROM SOUTH TAKE MERRITT PARKWAY GOING NORTH TO EXIT 53 MAKE RIGHT ON 110 AT MAIN STREET PUTNEY MAKE RIGHT AND TURN RIGHT ON CHAPEL STREET , AFTER PASSING THE SCHOOL YOU WILL SEE ON YOUR RIGHT A GATE GOING INTO THE POWER LINES SITE IS IN HERE ON THE LEFT POWER TOWER.

GENERAL NOTES

1. THE FACILITY IS AN UNMANNED PRIVATE AND SECURED EQUIPMENT INSTALLATION. IT IS ONLY ACCESSED BY TRAINED TECHNICIANS FOR PERIODIC ROUTINE MAINTENANCE AND THEREFORE DOES NOT REQUIRE ANY WATER OR SANITARY SEWER SERVICE. THE FACILITY IS NOT GOVERNED BY REGULATIONS REQUIRING PUBLIC ACCESS PER ADA REQUIREMENTS.
2. CONTRACTOR SHALL VERIFY ALL PLANS AND EXISTING DIMENSIONS AND CONDITIONS ON THE JOB SITE AND SHALL IMMEDIATELY NOTIFY THE AT&T REPRESENTATIVE IN WRITING OF DISCREPANCIES BEFORE PROCEEDING WITH THE WORK OR BE RESPONSIBLE FOR SAME.

CONNECTICUT ONE CALL SYSTEM, INC.
1-800-922-4455
STOP-CALL BEFORE YOU DIG!

UNDERGROUND SERVICE ALERT

CONNECTICUT LAW REQUIRES TWO WORKING DAYS NOTICE PRIOR TO ANY EARTH MOVING ACTIVITIES BY CALLING 800-922-4455 OR DIAL 811

at&t
5841 BRIDGE STREET
EAST SYRACUSE, NY 13057

CROWN CASTLE
3 CORPORATE PARK DRIVE
SUITE 101
CLIFTON PARK, NY 12065

JACOBS
JACOBS ENGINEERING GROUP, INC.
120 ST. JAMES AVENUE, 5TH FLOOR
BOSTON, MA 02116

STATE OF CONNECTICUT
DANIEL J. CORNING
PROFESSIONAL ENGINEER

PROJECT NO:	ERCC0004
DRAWN BY:	DAP
CHECKED BY:	DJC

SUBMITTALS

3	12/02/19	REVISED PER COMMENTS
2	09/25/19	FOR CONSTRUCTION
1	12/26/18	REVISED PER COMMENTS
0	12/20/18	ISSUED FOR PERMITTING

THIS DOCUMENT IS THE CREATION, DESIGN, PROPERTY AND COPYRIGHTED WORK OF AT&T WIRELESS. ANY DUPLICATION OR USE WITHOUT EXPRESS WRITTEN CONSENT IS STRICTLY PROHIBITED. DUPLICATION AND USE BY GOVERNMENT AGENCIES FOR THE PURPOSES OF CONDUCTING THEIR LAWFULLY AUTHORIZED REGULATORY AND ADMINISTRATIVE FUNCTIONS IS SPECIFICALLY ALLOWED.

FA# 10035240
SITE# CTL02043
STRATFORD NU

570 CHAPEL STREET
STRATFORD, CT 06614

TITLE SHEET

T-1

PART 1 - GENERAL

1.1 GENERAL CONDITIONS

A. CONTRACTOR SHALL INSPECT THE EXISTING SITE CONDITIONS PRIOR TO SUBMITTING BID. ANY QUESTIONS ARISING DURING THE BID PERIOD IN REGARDS TO THE CONTRACTORS FUNCTIONS, THE SCOPE OF WORK, OR ANY OTHER ISSUE RELATED TO THIS PROJECT SHALL BE BROUGHT UP DURING THE BID PERIOD WITH THE PROJECT MANAGER FOR CLARIFICATION, NOT AFTER THE CONTRACT HAS BEEN AWARDED.

B. THE CONTRACTOR SHALL OBTAIN PERMITS, LICENSES, MAKE ALL DEPOSITS, AND PAY ALL FEES REQUIRED FOR THE CONSTRUCTION PERFORMANCE FOR THE WORK UNDER THIS SECTION.

C. DRAWINGS SHOW THE GENERAL ARRANGEMENT OF ALL SYSTEMS AND COMPONENTS COVERED UNDER THIS SECTION. THE CONTRACTOR SHALL VERIFY ALL DIMENSIONS. DRAWING SHALL NOT BE SCALED TO DETERMINE DIMENSIONS.

1.2 LAWS, REGULATIONS, ORDINANCES, STATUTES AND CODES.

A. ALL WORK SHALL BE INSTALLED IN ACCORDANCE WITH THE LATEST EDITION OF THE NATIONAL ELECTRICAL CODE, AND ALL APPLICABLE LOCAL LAWS, REGULATIONS, ORDINANCES, STATUTES AND CODES. CONDUIT BENDS SHALL BE THE RADIUS BEND FOR THE TRADE SIZE OF CONDUIT IN COMPLIANCE WITH THE LATEST EDITIONS OF NEC.

1.3 REFERENCES

A. THE PUBLICATIONS LISTED BELOW ARE PART OF THIS SPECIFICATION. EACH PUBLICATION SHALL BE THE LATEST REVISION AND ADDENDUM IN EFFECT ON THE DATE. THIS SPECIFICATION IS ISSUED FOR CONSTRUCTION UNLESS OTHERWISE NOTED. EXCEPT AS MODIFIED BY THE REQUIREMENT SPECIFIED HEREIN OR THE DETAILS OF THE DRAWINGS, WORK INCLUDED IN THIS SPECIFICATION SHALL CONFORM TO THE APPLICABLE PROVISION OF THESE PUBLICATIONS.

1. ANSI/IEEE (AMERICAN NATIONAL STANDARDS INSTITUTE)
2. ASTM (AMERICAN SOCIETY FOR TESTING AND MATERIALS)
3. ICEA (INSULATED CABLE ENGINEERS ASSOCIATION)
4. NEMA (NATIONAL ELECTRICAL MANUFACTURER'S ASSOCIATION)
5. NFPA (NATIONAL FIRE PROTECTION ASSOCIATION)
6. OSHA (OCCUPATIONAL SAFETY AND HEALTH ADMINISTRATION)
7. UL (UNDERWRITERS LABORATORIES INC.)
8. AT&T GROUNDING AND BONDING STANDARDS TP-76416

1.4 SCOPE OF WORK

A. WORK UNDER THIS SECTION SHALL CONSIST OF FURNISHING ALL LABOR, MATERIAL, AND ASSOCIATED SERVICES REQUIRED TO COMPLETE REQUIRED CONSTRUCTION AND BE OPERATIONAL.

B. ALL ELECTRICAL EQUIPMENT UNDER THIS CONTRACT SHALL BE PROPERLY TESTED, ADJUSTED, AND ALIGNED BY THE CONTRACTOR.

C. THE CONTRACTOR SHALL BE RESPONSIBLE FOR ALL EXCAVATING, DRAINING, TRENCHES, BACKFILLING, AND REMOVAL OF EXCESS DIRT.

D. THE CONTRACTOR SHALL FURNISH TO THE OWNER WITH CERTIFICATES OF A FINAL INSPECTION AND APPROVAL FROM THE INSPECTION AUTHORITIES HAVING JURISDICTION.

E. THE CONTRACTOR SHALL PREPARE A COMPLETE SET OF AS-BUILT DRAWINGS, DOCUMENT ALL WIRING EQUIPMENT CONDITIONS, AND CHANGES WHILE COMPLETING THIS CONTRACT. THE AS-BUILT DRAWINGS SHALL BE SUBMITTED AT COMPLETION OF THE PROJECT.

PART 2 - PRODUCTS

2.1 GENERAL

A. ALL MATERIALS AND EQUIPMENT SHALL BE UL LISTED, NEW, AND FREE FROM DEFECTS.

B. ALL ITEMS OF MATERIALS AND EQUIPMENT SHALL BE ACCEPTABLE TO THE AUTHORITY HAVING JURISDICTION AS SUITABLE FOR THE USE INTENDED.

C. ALL EQUIPMENT SHALL BEAR THE UNDERWRITERS LABORATORIES LABEL OF APPROVAL, AND SHALL CONFORM TO REQUIREMENT OF THE NATIONAL ELECTRICAL CODE.

D. ALL OVERCURRENT DEVICES SHALL HAVE AN INTERRUPTING CURRENT RATING THAT SHALL BE GREATER THAN THE SHORT CIRCUIT CURRENT TO WHICH THEY ARE SUBJECTED, 10,000 AIC MINIMUM. VERIFY AVAILABLE SHORT CIRCUIT CURRENT DOES NOT EXCEED THE RATING OF ELECTRICAL EQUIPMENT IN ACCORDANCE WITH ARTICLE 110.24 NEC OR THE MOST CURRENT ADOPTED CODE PER THE GOVERNING JURISDICTION.

2.2 MATERIALS AND EQUIPMENT

A. CONDUIT

1. RIGID METAL CONDUIT (RMC) SHALL BE HOT-DIPPED GALVANIZED INSIDE AND OUTSIDE INCLUDING ENDS AND THREADS AND ENAMELED OR LACQUERED INSIDE IN ADDITION TO GALVANIZING.

2. LIQUIDTIGHT FLEXIBLE METAL CONDUIT SHALL BE UL LISTED.

3. CONDUIT CLAMPS, STRAPS AND SUPPORTS SHALL BE STEEL OR MALLEABLE IRON. ALL FITTINGS SHALL BE COMPRESSION AND CONCRETE TIGHT TYPE. GROUNDING BUSHINGS WITH INSULATED THROATS SHALL BE INSTALLED ON ALL CONDUIT TERMINATIONS.

4. NONMETALLIC CONDUIT AND FITTINGS SHALL BE SCHEDULE 40 PVC, INSTALL USING SOLVENT-CEMENT-TYPE JOINTS AS RECOMMENDED BY THE MANUFACTURER.

B. CONDUCTORS AND CABLE

1. CONDUCTORS AND CABLE SHALL BE FLAME-RETARDANT, MOISTURE AND HEAT RESISTANT THERMOPLASTIC, SINGLE CONDUCTOR, COPPER, TYPE THHN/THWN-2, 600 VOLT, SIZE AS INDICATED, #12 AWG SHALL BE THE MINIMUM SIZE CONDUCTOR USED.

2. #10 AWG AND SMALLER CONDUCTOR SHALL BE SOLID OR STRANDED AND #8 AWG AND LARGER CONDUCTORS SHALL BE STRANDED.

3. SOLDERLESS, COMPRESSION-TYPE CONNECTORS SHALL BE USED FOR TERMINATION OF ALL STRANDED CONDUCTORS.

4. STRAIN-RELIEF SUPPORTS GRIPS SHALL BE HUBBELL KELLEMS OR APPROVED EQUAL. CABLES SHALL BE SUPPORTED IN ACCORDANCE WITH THE NEC AND CABLE MANUFACTURER'S RECOMMENDATIONS.

5. ALL CONDUCTORS SHALL BE TAGGED AT BOTH ENDS OF THE CONDUCTOR, AT ALL PULL BOXES, J-BOXES, EQUIPMENT AND CABINETS AND SHALL BE IDENTIFIED WITH APPROVED PLASTIC TAGS (ACTION CRAFT, BRADY, OR APPROVED EQUAL).

C. DISCONNECT SWITCHES

1. DISCONNECT SWITCHES SHALL BE HEAVY DUTY, DEAD-FRONT, QUICK-MAKE, QUICK-BREAK, EXTERNALLY OPERABLE, HANDLE LOCKABLE AND INTERLOCK WITH COVER IN CLOSED POSITION, RATING AS INDICATED, UL LABELED FURNISHED IN NEMA 3R ENCLOSURE, SQUARE-D OR ENGINEER APPROVED EQUAL.

D. CHEMICAL ELECTROLYTIC GROUNDING SYSTEM

1. INSTALL CHEMICAL GROUNDING AS REQUIRED. THE SYSTEM SHALL BE ELECTROLYTIC MAINTENANCE FREE ELECTRODE CONSISTING OF RODS WITH A MINIMUM #2 AWG CU EXOTHERMically WELDED PIGTAIL, PROTECTIVE BOXES, AND BACKFILL MATERIAL. MANUFACTURER SHALL BE LYNCOLE XIT GROUNDING ROD TYPES K2-(*)CS OR K2L-(*)CS (*) LENGTH AS REQUIRED.

2. GROUND ACCESS BOX SHALL BE A POLYPLASTIC BOX FOR NON-TRAFFIC APPLICATIONS, INCLUDING BOLT DOWN FLUSH COVER WITH "BREATHER" HOLES, XIT MODEL #X8-22. ALL DISCONNECT SWITCHES AND CONTROLLING DEVICES SHALL BE PROVIDED WITH ENGRAVED LAMICOID NAMEPLATES INDICATING EQUIPMENT CONTROLLED, BRANCH CIRCUITS ID NUMBERING, AND THE ELECTRICAL POWER SOURCE.

3. BACKFILL MATERIAL SHALL BE LYNCONITE AND LYNCOLE GROUNDING GRAVEL.

E. SYSTEM GROUNDING

1. ALL GROUNDING COMPONENTS SHALL BE TINNED AND GROUNDING CONDUCTOR SHALL BE #2 AWG BARE, SOLID, TINNED, COPPER. ABOVE GRADE GROUNDING CONDUCTORS SHALL BE INSULATED WHERE NOTED.

2. GROUNDING BUSES SHALL BE BARE, TINNED, ANNEALED COPPER BARS OF RECTANGULAR CROSS SECTION. STANDARD BUS BARS MGB, SHALL BE FURNISHED AND INSTALLED BY THE CONTRACTOR. THEY SHALL NOT BE FABRICATED OR MODIFIED IN THE FIELD. ALL GROUNDING BUSES SHALL BE IDENTIFIED WITH MINIMUM 3/4" LETTERS BY WAY OF STENCILING OR DESIGNATION PLATE.

3. CONNECTORS SHALL BE HIGH-CONDUCTIVITY, HEAVY DUTY, LISTED AND LABELED AS GROUNDING CONNECTORS FOR THE MATERIALS USED. USE TWO-HOLE COMPRESSION LUGS WITH HEAT SHRINK FOR MECHANICAL CONNECTIONS. INTERIOR CONNECTIONS USE TWO-HOLE COMPRESSION LUGS WITH INSPECTION WINDOW AND CLEAR HEAT SHRINK.

4. EXOTHERMIC WELDED CONNECTIONS SHALL BE PROVIDED IN KIT FORM AND SELECTED FOR THE SPECIFIC TYPES, SIZES, AND COMBINATIONS OF CONDUCTORS AND OTHER ITEMS TO BE CONNECTED.

5. GROUND RODS SHALL BE COPPER-CLAD STEEL WITH HIGH-STRENGTH STEEL CORE AND ELECTROLYTIC-GRADE COPPER OUTER SHEATH, MOLTEN WELDED TO CORE, 5/8"x10'-0". ALL GROUNDING RODS SHALL BE INSTALLED WITH INSPECTION SLEEVES.

6. INSTALL AN EQUIPMENT GROUNDING CONDUCTOR IN ALL CONDUITS IN COMPLIANCE WITH THE AT&T SPECIFICATIONS AND NEC. THE EQUIPMENT GROUNDING CONDUCTORS SHALL BE BONDED AT ALL JUNCTION BOXES, PULLBOXES, DISCONNECT SWITCHES, STARTERS, AND EQUIPMENT CABINETS.

F. OTHER MATERIALS

6. THE CONTRACTOR SHALL PROVIDE OTHER MATERIALS, THOUGH NOT SPECIFICALLY DESCRIBED, WHICH ARE REQUIRED FOR A COMPLETELY OPERATIONAL SYSTEM AND PROPER INSTALLATION OF THE WORK.

7. PROVIDE PULL BOXES AND JUNCTION BOXES WHERE SHOWN OR REQUIRED BY NEC.

G. PANELS AND LOAD CENTERS

1. ALL PANEL DIRECTORIES SHALL BE TYPEWRITTEN.

PART 3 - EXECUTION

3.1 GENERAL

A. ALL MATERIAL AND EQUIPMENT SHALL BE INSTALLED IN STRICT ACCORDANCE WITH THE MANUFACTURER'S RECOMMENDATIONS.

B. EQUIPMENT SHALL BE TIGHTLY COVERED AND PROTECTED AGAINST DIRT OR WATER, AND AGAINST CHEMICAL OR MECHANICAL INJURY DURING INSTALLATION AND CONSTRUCTION PERIODS.

3.2 LABOR AND WORKMANSHIP

A. ALL LABOR FOR THE INSTALLATION OF MATERIALS AND EQUIPMENT FURNISHED FOR THE ELECTRICAL SYSTEM SHALL BE INSTALLED BY EXPERIENCED WIREMEN, IN A NEAT AND WORKMAN-LIKE MANNER.

B. ALL ELECTRICAL EQUIPMENT SHALL BE ADJUSTED, ALIGNED AND TESTED BY THE CONTRACTOR AS REQUIRED TO PRODUCE THE INTENDED PERFORMANCE.

C. UPON COMPLETION OF WORK, THE CONTRACTOR SHALL THOROUGHLY CLEAN ALL EXPOSED EQUIPMENT, REMOVE ALL LABELS AND ANY DEBRIS, CRATING OR CARTONS AND LEAVE THE INSTALLATION FINISHED AND READY FOR OPERATION.

3.3 COORDINATION

A. THE CONTRACTOR SHALL COORDINATE THE INSTALLATION OF ELECTRICAL ITEMS WITH THE OWNER-FURNISHED EQUIPMENT DELIVERY SCHEDULE TO PREVENT UNNECESSARY DELAYS IN THE TOTAL WORK.

3.4 INSTALLATION

A. CONDUIT

1. ALL ELECTRICAL WIRING SHALL BE INSTALLED IN CONDUIT AS SPECIFIED. NO CONDUIT OR TUBING OF LESS THAN 3/4 INCH TRADE SIZE.

2. PROVIDE RIGID PVC SCHEDULE 80 CONDUITS FOR ALL RISERS, RMC OTHERWISE NOTED. EMT MAY BE INSTALLED FOR EXTERIOR CONDUITS WHERE NOT SUBJECT TO PHYSICAL DAMAGE.

3. INSTALL SCHEDULE 40 PVC CONDUIT WITH A MINIMUM COVER OF 24" UNDER ROADWAYS, PARKING LOTS, STREETS, AND ALLEYS. CONDUIT SHALL HAVE A MINIMUM COVER OF 18" IN ALL OTHER NON-TRAFFIC APPLICATIONS (REFER TO 2017 NEC, TABLE 300.5).

4. USE GALVANIZED FLEXIBLE STEEL CONDUIT WHERE DIRECT CONNECTION TO EQUIPMENT WITH MOVEMENT, VIBRATION, OR FOR EASE OF MAINTENANCE. USE LIQUID TIGHT, FLEXIBLE METAL CONDUIT FOR OUTDOOR APPLICATIONS. INSTALL GALVANIZED FLEXIBLE STEEL CONDUIT AT ALL POINTS OF CONNECTION TO EQUIPMENT MOUNTED ON SUPPORT TO ALLOW FOR EXPANSION AND CONTRACTION.

5. A RUN OF CONDUIT BETWEEN BOXES OR EQUIPMENT SHALL NOT CONTAIN MORE THAN THE EQUIVALENT OF THREE QUARTER-BENDS. CONDUIT BEND SHALL BE MADE WITH THE UL LISTED BENDER OR FACTORY 90 DEGREE ELBOWS MAY BE USED.

6. FIELD FABRICATED CONDUITS SHALL BE CUT SQUARE WITH A CONDUIT CUTTING TOOL AND REAMED TO PROVIDE A SMOOTH INSIDE SURFACE.

7. PROVIDE INSULATED GROUNDING BUSHING FOR ALL CONDUITS.

8. CONTRACTOR IS RESPONSIBLE FOR PROTECTING ALL CONDUITS DURING CONSTRUCTION. TEMPORARY OPENINGS IN THE CONDUIT SYSTEM SHALL BE PLUGGED OR CAPPED TO PREVENT ENTRANCE OF MOISTURE OR FOREIGN MATTER. CONTRACTOR SHALL REPLACE ANY CONDUITS CONTAINING FOREIGN MATERIALS THAT CANNOT BE REMOVED.

9. ALL CONDUITS SHALL BE SWABBED CLEAN BY PULLING AN APPROPRIATE SIZE MANDREL THROUGH THE CONDUIT BEFORE INSTALLATION OF CONDUCTORS OR CABLES. CONDUIT SHALL BE FREE OF DIRT AND DEBRIS.

10. INSTALL PULL STRINGS IN ALL CLEAN EMPTY CONDUITS. IDENTIFY PULL STRINGS AT EACH END.

11. INSTALL 2" HIGHLY VISIBLE AND DETECTABLE TAPE 12" ABOVE ALL UNDERGROUND CONDUITS AND CONDUCTORS.

12. CONDUITS SHALL BE INSTALLED IN SUCH A MANNER AS TO INSURE AGAINST COLLECTION OF TRAPPED CONDENSATION.

13. PROVIDE CORE DRILLING AS NECESSARY FOR PENETRATIONS TO ALLOW FOR RACEWAYS AND CABLES TO BE ROUTED THROUGH THE BUILDING. DO NOT PENETRATE STRUCTURAL MEMBERS. SLEEVES AND/OR PENETRATIONS IN FIRE RATED CONSTRUCTION SHALL BE EFFECTIVELY SEALED WITH FIRE RATED MATERIAL WHICH SHALL MAINTAIN THE FIRE RATING OF THE WALL OR STRUCTURE. FIRE STOPS AT FLOOR PENETRATIONS SHALL PREVENT PASSAGE OF WATER, SMOKE, FIRE, AND FUMES. ALL MATERIAL SHALL BE UL APPROVED FOR THIS PURPOSE.

B. CONDUCTORS AND CABLE

1. ALL POWER WIRING SHALL BE COLOR CODED AS FOLLOWS

DESCRIPTION	208/240/120 VOLT SYSTEMS
PHASE A	BLACK
PHASE B	RED
PHASE C	BLUE
NEUTRAL	WHITE
GROUNDING	GREEN

2. SPLICES SHALL BE MADE ONLY AT OUTLETS, JUNCTION BOXES, OR ACCESSIBLE RACEWAY CONDUITS APPROVED FOR THIS PURPOSE.

3. PULLING LUBRICANTS SHALL BE UL APPROVED. CONTRACTOR SHALL USE NYLON OR HEMP ROPE FOR PULLING CONDUCTOR OR CABLES INTO THE CONDUIT.

4. CABLES SHALL BE NEATLY TRAINED, WITHOUT INTERLACING, AND BE OF SUFFICIENT LENGTH IN ALL BOXES & EQUIPMENT TO PERMIT MAKING A NEAT ARRANGEMENT. CABLES SHALL BE SECURED IN A MANNER TO AVOID TENSION ON CONDUCTORS OR TERMINALS. CONDUCTORS SHALL BE PROTECTED FROM MECHANICAL INJURY AND MOISTURE. SHARP BENDS OVER CONDUIT BUSHINGS IS PROHIBITED. DAMAGED CABLES SHALL BE REMOVED AND REPLACED AT THE CONTRACTOR'S EXPENSE.

C. DISCONNECT SWITCHES

1. INSTALL DISCONNECT SWITCHES LEVEL AND PLUMB. CONNECT TO WIRING SYSTEM AND GROUNDING SYSTEM AS INDICATED.

D. GROUNDING

1. ALL METALLIC PARTS OF ELECTRICAL EQUIPMENT WHICH DO NOT CARRY CURRENT SHALL BE GROUNDED IN ACCORDANCE WITH THE REQUIREMENTS OF THE BUILDING MANUFACTURER, AT&T GROUNDING AND BONDING STANDARDS TP-76416, ND-00135, AND THE NATIONAL ELECTRICAL CODE.

2. PROVIDE ELECTRICAL GROUNDING AND BONDING SYSTEM INDICATED WITH ASSEMBLY OF MATERIALS, INCLUDING GROUNDING ELECTRODES, BONDING JUMPERS AND ADDITIONAL ACCESSORIES AS REQUIRED FOR A COMPLETE INSTALLATION.

3. ALL GROUNDING CONDUCTORS SHALL PROVIDE A STRAIGHT DOWNWARD PATH TO GROUND WITH GRADUAL BEND AS REQUIRED. GROUNDING CONDUCTORS SHALL NOT BE LOOPED OR SHARPLY BENT. ROUTE GROUNDING CONNECTIONS AND CONDUCTORS TO GROUND IN THE SHORTEST AND STRAIGHTEST PATHS POSSIBLE TO MINIMIZE TRANSIENT VOLTAGE RISES.

4. BUILDINGS AND/OR NEW TOWERS GREATER THAN 75 FEET IN HEIGHT AND WHERE THE MAIN GROUNDING CONDUCTORS ARE REQUIRED TO BE ROUTED TO GRADE, THE CONTRACTOR SHALL ROUTE TWO GROUNDING CONDUCTORS FROM THE ROOFTOP, TOWERS, AND WATER TOWERS GROUNDING RING, TO THE EXISTING GROUNDING SYSTEM. THE GROUNDING CONDUCTORS SHALL NOT BE SMALLER THAN 2/0 AWG COPPER. ROOFTOP GROUNDING RING SHALL BE BONDED TO THE EXISTING GROUNDING SYSTEM, THE BUILDING STEEL COLUMNS, LIGHTNING PROTECTION SYSTEM, AND BUILDING MAIN WATER LINE (FERROUS OR NONFERROUS METAL PIPING ONLY). SEE STANDARD 6.3.2.2.

5. TIGHTEN GROUNDING AND BONDING CONNECTORS, INCLUDING SCREWS AND BOLTS, IN ACCORDANCE WITH MANUFACTURER'S PUBLISHED TORQUE TIGHTENING VALUES FOR CONNECTORS AND BOLTS. WHERE MANUFACTURER'S TORQUING REQUIREMENTS ARE NOT AVAILABLE, TIGHTEN CONNECTIONS TO COMPLY WITH TIGHTENING TORQUE VALUES SPECIFIED IN UL TO ASSURE PERMANENT AND EFFECTIVE GROUNDING.

6. CONTRACTOR SHALL VERIFY THE LOCATIONS OF GROUNDING TIE-IN-POINTS TO THE EXISTING GROUNDING SYSTEM. ALL UNDERGROUND GROUNDING CONNECTIONS SHALL BE MADE BY THE EXOTHERMIC WELD PROCESS AND INSTALLED IN ACCORDANCE WITH THE MANUFACTURER'S INSTRUCTIONS.

7. ALL GROUNDING CONNECTIONS SHALL BE INSPECTED FOR TIGHTNESS. EXOTHERMIC WELDED CONNECTIONS SHALL BE APPROVED BY THE INSPECTOR HAVING JURISDICTION BEFORE BEING PERMANENTLY CONCEALED.

8. APPLY CORROSION-RESISTANT FINISH TO FIELD CONNECTIONS AND PLACES WHERE FACTORY APPLIED PROTECTIVE COATINGS HAVE BEEN DESTROYED. USE KOPR-SHIELD ANTI-OXIDATION COMPOUND ON ALL COMPRESSION GROUNDING CONNECTIONS.

9. A SEPARATE, CONTINUOUS, INSULATED EQUIPMENT GROUNDING CONDUCTOR SHALL BE INSTALLED IN ALL FEEDER AND BRANCH CIRCUITS.

10. BOND ALL INSULATED GROUNDING BUSHINGS WITH A BARE #6 AWG GROUNDING CONDUCTOR TO A GROUND BUS.

11. DIRECT BURIED GROUNDING CONDUCTORS SHALL BE INSTALLED AT A NOMINAL DEPTH OF 36" MINIMUM BELOW GRADE, OR 6" BELOW THE FROST LINE, USE THE GREATER OF THE TWO DISTANCES.

12. ALL GROUNDING CONDUCTORS EMBEDDED IN OR PENETRATING CONCRETE SHALL BE INSTALLED IN SCHEDULE 40 PVC CONDUIT.

13. THE INSTALLATION OF CHEMICAL ELECTROLYTIC GROUNDING SYSTEM IN STRICT ACCORDANCE WITH MANUFACTURER'S INSTRUCTIONS. REMOVE SEALING TAPE FROM LEACHING AND BREATHER HOLES. INSTALL PROTECTIVE BOX FLUSH WITH GRADE.

14. DRIVE GROUND RODS UNTIL TOPS ARE A MINIMUM DISTANCE OF 36" DEPTH OR 6" BELOW FROST LINE, USING THE GREATER OF THE TWO DISTANCES.

15. IF COAX ON THE ICE BRIDGE IS MORE THAN 6 FT. FROM THE GROUNDING BAR AT THE BASE OF THE TOWER, A SECOND GROUNDING BAR WILL BE NEEDED AT THE END OF THE ICE BRIDGE, TO GROUND THE COAX CABLE GROUNDING KITS AND IN-LINE ARRESTORS.

16. CONTRACTOR SHALL REPAIR, AND/OR REPLACE, EXISTING GROUNDING SYSTEM COMPONENTS DAMAGED DURING CONSTRUCTION AT THE CONTRACTORS EXPENSE.

3.5 ACCEPTANCE TESTING

A. CERTIFIED PERSONNEL USING CERTIFIED EQUIPMENT SHALL PERFORM REQUIRED TESTS AND SUBMIT WRITTEN TEST REPORTS UPON COMPLETION.

B. WHEN MATERIAL AND/OR WORKMANSHIP IS FOUND NOT TO COMPLY WITH THE SPECIFIED REQUIREMENTS, THE NON-COMPLYING ITEMS SHALL BE REMOVED FROM THE PROJECT SITE AND REPLACED WITH ITEMS COMPLYING WITH THE SPECIFIED REQUIREMENTS PROMPTLY AFTER RECEIPT OF NOTICE FOR NON-COMPLIANCE.

C. TEST PROCEDURES

1. ALL FEEDERS SHALL HAVE INSULATION TESTED AFTER INSTALLATION, BEFORE CONNECTION TO DEVICES. THE CONDUCTORS SHALL TEST FREE FROM SHORT CIRCUITS AND GROUNDS. TESTING SHALL BE FOR ONE MINUTE USING 1000V DC. PROVIDE WRITTEN DOCUMENTATION FOR ALL TEST RESULTS.

2. PRIOR TO ENERGIZING CIRCUITRY, TEST WIRING DEVICES FOR ELECTRICAL CONTINUITY AND PROPER POLARITY CONNECTIONS.

3. MEASURE AND RECORD VOLTAGES BETWEEN PHASES AND BETWEEN PHASE CONDUCTORS AND NEUTRALS. SUBMIT A REPORT OF MAXIMUM AND MINIMUM VOLTAGES.

4. PERFORM GROUNDING TEST TO MEASURE GROUNDING RESISTANCE OF GROUNDING SYSTEM USING THE IEEE STANDARD 3-POINT "FALL-OF-POTENTIAL" METHOD. PROVIDE PLOTTED TEST VALUES AND LOCATION SKETCH. NOTIFY THE ENGINEER IMMEDIATELY IF MEASURED VALUE IS OVER 5 OHMS.

at&t
5841 BRIDGE STREET
EAST SYRACUSE, NY 13057

CROWN CASTLE
3 CORPORATE PARK DRIVE
SUITE 101
CLIFTON PARK, NY 12065

JACOBS
JACOBS ENGINEERING GROUP, INC.
120 ST. JAMES AVENUE, 5TH FLOOR
BOSTON, MA 02116

STATE OF CONNECTICUT
DANIEL J. CORNING

PROJECT NO:	ERCC0004
DRAWN BY:	DAP
CHECKED BY:	DJC

SUBMITTALS

3	12/02/19	REVISED PER COMMENTS
2	09/25/19	FOR CONSTRUCTION
1	12/26/18	REVISED PER COMMENTS
0	12/20/18	ISSUED FOR PERMITTING

THIS DOCUMENT IS THE CREATION, DESIGN, PROPERTY AND COPYRIGHTED WORK OF AT&T WIRELESS. ANY DUPLICATION OR USE WITHOUT EXPRESS WRITTEN CONSENT IS STRICTLY PROHIBITED. DUPLICATION AND USE BY GOVERNMENT AGENCIES FOR THE PURPOSES OF CONDUCTING THEIR LAWFULLY AUTHORIZED REGULATORY AND ADMINISTRATIVE FUNCTIONS IS SPECIFICALLY ALLOWED.

FA# 10035240
SITE# CTL02043
STRATFORD NU

670 CHAPEL STREET
STRATFORD, CT 06614

GENERAL NOTES I

GN-1

ANTENNA MOUNTING

1. DESIGN AND CONSTRUCTION OF ANTENNA SUPPORTS SHALL CONFORM TO CURRENT ANSI/TIA-222 OR APPLICABLE LOCAL CODES.
2. ALL STEEL MATERIALS SHALL BE GALVANIZED AFTER FABRICATION IN ACCORDANCE WITH ASTM A123 "ZINC (HOT-DIP GALVANIZED) COATINGS ON IRON AND STEEL PRODUCTS", UNLESS NOTED OTHERWISE.
3. ALL BOLTS, ANCHORS AND MISCELLANEOUS HARDWARE SHALL BE GALVANIZED IN ACCORDANCE WITH ASTM A153 "ZINC-COATING (HOT-DIP) ON IRON AND STEEL HARDWARE", UNLESS NOTED OTHERWISE.
4. DAMAGED GALVANIZED SURFACES SHALL BE REPAIRED BY COLD GALVANIZING IN ACCORDANCE WITH ASTM A780.
5. ALL ANTENNA MOUNTS SHALL BE INSTALLED WITH LOCK NUTS, DOUBLE NUTS AND SHALL BE TORQUED TO MANUFACTURER'S RECOMMENDATIONS.
6. CONTRACTOR SHALL INSTALL ANTENNA PER MANUFACTURER'S RECOMMENDATION FOR INSTALLATION AND GROUNDING.
7. ALL UNUSED PORTS ON ANY ANTENNAS SHALL BE TERMINATED WITH A 50-OHM LOAD TO ENSURE ANTENNAS PERFORM AS DESIGNED.
8. PRIOR TO SETTING ANTENNA AZIMUTHS AND DOWNTILTS, ANTENNA CONTRACTOR SHALL CHECK THE ANTENNA MOUNT FOR TIGHTNESS AND ENSURE THAT THEY ARE PLUMB. ANTENNA AZIMUTHS SHALL BE SET FROM TRUE NORTH AND BE ORIENTED WITHIN +/- 5% AS DEFINED BY THE RFDS. ANTENNA DOWNTILTS SHALL BE WITHIN +/- 0.5% AS DEFINED BY THE RFDS. REFER TO ND-00246.
9. JUMPERS FROM THE TMA'S MUST TERMINATE TO OPPOSITE POLARIZATION'S IN EACH SECTOR.
10. CONTRACTOR SHALL RECORD THE SERIAL # SECTOR, AND POSITION OF EACH ACTUATOR INSTALLED AT THE ANTENNAS AND PROVIDE THE INFORMATION TO AT&T.
11. TMA'S SHALL BE MOUNTED ON PIPE DIRECTLY BEHIND ANTENNAS AS CLOSE TO ANTENNA AS FEASIBLE IN A VERTICAL POSITION.

TORQUE REQUIREMENTS

12. ALL RF CONNECTIONS SHALL BE TIGHTENED BY A TORQUE WRENCH.
13. ALL RF CONNECTIONS, GROUNDING HARDWARE AND ANTENNA HARDWARE SHALL HAVE A TORQUE MARK INSTALLED IN A CONTINUOUS STRAIGHT LINE FROM BOTH SIDES OF THE CONNECTION.
    A. RF CONNECTION BOTH SIDES OF THE CONNECTOR.
    B. GROUNDING AND ANTENNA HARDWARE ON THE NUT SIDE STARTING FROM THE THREADS TO THE SOLID SURFACE, EXAMPLE OF SOLID SURFACE: GROUND BAR, ANTENNA BRACKET METAL.
    C. ALL 8M ANTENNA HARDWARE SHALL BE TIGHTENED TO 5 LB-FT (12 NM).
14. ALL 12M ANTENNA HARDWARE SHALL BE TIGHTENED TO 43 LB-FT (58 NM).
15. ALL GROUNDING HARDWARE SHALL BE TIGHTENED UNTIL THE LOCK WASHER COLLAPSES AND THE GROUNDING HARDWARE IS NO LONGER LOOSE.
16. ALL DIN TYPE CONNECTIONS SHALL BE TIGHTENED TO 18-22 LB-FT (24.4 - 29.8 NM).
17. ALL N TYPE CONNECTIONS SHALL BE TIGHTENED TO 15-20 LB-IN (1.7 - 2.3 NM).

FIBER & POWER CABLE MOUNTING

18. THE FIBER OPTIC TRUNK CABLES SHALL BE INSTALLED INTO CONDUITS, CHANNEL CABLE TRAYS, OR CABLE TRAY. WHEN INSTALLING FIBER OPTIC TRUNK CABLES INTO A CABLE TRAY SYSTEM, THEY SHALL BE INSTALLED INTO AN INTER DUCT AND A PARTITION BARRIER SHALL BE INSTALLED BETWEEN THE 600 VOLT CABLES AND THE INTER DUCT IN ORDER TO SEGREGATE CABLE TYPES. OPTIC FIBER TRUNK CABLES SHALL HAVE APPROVED CABLE RESTRAINTS EVERY (60) SIXTY FEET AND SECURELY FASTENED TO THE CABLE TRAY SYSTEM. NFPA 70 (NEC) ARTICLE 770 RULES SHALL APPLY.
19. THE TYPE TC-ER CABLES SHALL BE INSTALLED INTO CONDUITS, CHANNEL CABLE TRAYS, OR CABLE TRAY AND SHALL BE SECURED AT INTERVALS NOT EXCEEDING (6) SIX FEET. AN EXCEPTION: WHERE TYPE TC-ER CABLES ARE NOT SUBJECT TO PHYSICAL DAMAGE, CABLES SHALL BE PERMITTED TO MAKE A TRANSITION BETWEEN CONDUITS, CHANNEL CABLE TRAYS, OR CABLE TRAY WHICH ARE SERVING UTILIZATION EQUIPMENT OR DEVICES, A DISTANCE (6) SIX FEET SHALL NOT BE EXCEEDED WITHOUT CONTINUOUS SUPPORTING. NFPA 70 (NEC) ARTICLES 336 AND 392 RULES SHALL APPLY.
20. WHEN INSTALLING OPTIC FIBER TRUNK CABLES OR TYPE TC-ER CABLES INTO CONDUITS, NFPA 70 (NEC) ARTICLE 300 RULES SHALL APPLY.

COAXIAL CABLE NOTES

21. TYPES AND SIZES OF THE ANTENNA CABLE ARE BASED ON ESTIMATED LENGTHS. PRIOR TO ORDERING CABLE, CONTRACTOR SHALL VERIFY ACTUAL LENGTH BASED ON CONSTRUCTION LAYOUT AND NOTIFY THE PROJECT MANAGER IF ACTUAL LENGTHS EXCEED ESTIMATED LENGTHS.
22. CONTRACTOR SHALL VERIFY THE DOWN-TILT OF EACH ANTENNA WITH A DIGITAL LEVEL.
23. CONTRACTOR SHALL CONFIRM COAX COLOR CODING PRIOR TO CONSTRUCTION. REFER TO "ANTENNA SYSTEM LABELING STANDARD" ND-00027 LATEST VERSION.
24. ALL JUMPERS TO THE ANTENNAS FROM THE MAIN TRANSMISSION LINE SHALL BE 1/2" DIA. LDF AND SHALL NOT EXCEED 6-0".
25. ALL COAXIAL CABLE SHALL BE SECURED TO THE DESIGNED SUPPORT STRUCTURE, IN AN APPROVED MANNER, AT DISTANCES NOT TO EXCEED 4'-0" O.C.
26. CONTRACTOR SHALL FOLLOW ALL MANUFACTURER'S RECOMMENDATIONS REGARDING BOTH THE INSTALLATION AND GROUNDING OF ALL COAXIAL CABLES, CONNECTORS, ANTENNAS, AND ALL OTHER EQUIPMENT.
27. CONTRACTOR SHALL WEATHERPROOF ALL ANTENNA CONNECTORS WITH SELF AMALGAMATING TAPE. WEATHERPROOFING SHALL BE COMPLETED IN STRICT ACCORDANCE WITH AT&T STANDARDS.
28. CONTRACTOR SHALL GROUND ALL EQUIPMENT, INCLUDING ANTENNAS, RET MOTORS, TMA'S, COAX CABLES, AND RET CONTROL CABLES AS A COMPLETE SYSTEM. GROUNDING SHALL BE EXECUTED BY QUALIFIED WIREMEN IN COMPLIANCE WITH MANUFACTURER'S SPECIFICATION AND RECOMMENDATION.
29. CONTRACTOR SHALL PROVIDE STRAIN-RELIEF AND CABLE SUPPORTS FOR ALL CABLE ASSEMBLIES, COAX CABLES, AND RET CONTROL CABLES. CABLE STRAIN-RELIEFS AND CABLE SUPPORTS SHALL BE APPROVED FOR THE PURPOSE. INSTALLATION SHALL BE IN ACCORDANCE WITH MANUFACTURER'S SPECIFICATIONS AND RECOMMENDATIONS.
30. CONTRACTOR TO VERIFY THAT EXISTING COAX HANGERS ARE STACKABLE SNAP IN HANGERS. IF EXISTING HANGERS ARE NOT STACKABLE SNAP IN HANGERS THE CONTRACTOR SHALL REPLACE EXISTING HANGERS WITH NEW SNAP IN HANGERS IF APPLICABLE.

GENERAL CABLE AND EQUIPMENT NOTES

31. CONTRACTOR SHALL BE RESPONSIBLE TO VERIFY ANTENNA, TMAS, DIPLEXERS, AND COAX CONFIGURATION, MAKE AND MODELS PRIOR TO INSTALLATION.
32. ALL CONNECTIONS FOR HANGERS, SUPPORTS, BRACING, ETC, SHALL BE INSTALLED PER TOWER MANUFACTURER'S RECOMMENDATIONS.
33. CONTRACTOR SHALL REFERENCE THE TOWER STRUCTURAL ANALYSIS/DESIGN DRAWINGS FOR DIRECTIONS ON CABLE DISTRIBUTION/ROUTING.
34. ALL OUTDOOR RF CONNECTORS/CONNECTIONS SHALL BE WEATHERPROOFED, EXCEPT THE RET CONNECTORS, USING BUTYL TAPE AFTER INSTALLATION AND FINAL CONNECTIONS ARE MADE. BUTYL TAPE SHALL HAVE A MINIMUM OF ONE-HALF TAPE WIDTH OVERLAP ON EACH TURN AND EACH LAYER SHALL BE WRAPPED THREE TIMES. WEATHERPROOFING SHALL BE SMOOTH WITHOUT BUCKLING. BUTYL BLEEDING IS NOT ALLOWED.
35. IF REQUIRED TO PAINT ANTENNAS AND/OR COAX
    A. TEMPERATURE SHALL BE ABOVE 50° F.
    B. PAINT COLOR MUST BE APPROVED BY BUILDING OWNER/LANDLORD.
    C. FOR REGULATED TOWERS, FAA/FCC APPROVED PAINT IS REQUIRED.
    D. DO NOT PAINT OVER COLOR CODING OR ON EQUIPMENT MODEL NUMBERS.
36. ALL CABLES SHALL BE GROUNDED WITH COAXIAL CABLE GROUND KITS. FOLLOW THE MANUFACTURER'S RECOMMENDATIONS.
    A. GROUNDING AT THE ANTENNA LEVEL.
    B. GROUNDING AT MID LEVEL, TOWERS WHICH ARE OVER 200'-0", ADDITIONAL CABLE GROUNDING REQUIRED.
    C. GROUNDING AT BASE OF TOWER PRIOR TO TURNING HORIZONTAL.
    D. GROUNDING OUTSIDE THE EQUIPMENT SHELTER AT ENTRY PORT.
    E. GROUNDING INSIDE THE EQUIPMENT SHELTER AT THE ENTRY PORT.
37. ALL PROPOSED GROUND BAR DOWNLEADS ARE TO BE TERMINATED TO THE EXISTING ADJACENT GROUND
38. BAR DOWNLEADS A MINIMUM DISTANCE OF 4'-0" BELOW GROUND BAR. TERMINATIONS MAY BE EXOTHERMIC OR COMPRESSION.
39. THE CONTRACTOR SHALL BE RESPONSIBLE FOR VERIFYING THE ANTENNA AND THE COAX CONFIGURATION IS THE CORRECT MAKE AND MODELS, PRIOR TO INSTALLATION.
40. ALL CONNECTIONS FOR HANGERS, SUPPORTS, BRACING, ETC, SHALL BE INSTALLED PER TOWER MANUFACTURER'S SPECIFICATION & RECOMMENDATIONS.
41. ANTENNA CONTRACTOR SHALL FURNISH AND INSTALL A 12'-0" T-BOOM SECTOR ANTENNA MOUNT, IF APPLICABLE, INCLUDING ALL HARDWARE.

GROUNDING NOTES

42. GROUNDING IS SHOWN DIAGRAMMATICALLY ONLY.
43. CONTRACTOR SHALL GROUND ALL EQUIPMENT AS A COMPLETE SYSTEM. GROUNDING SHALL BE IN COMPLIANCE WITH NEC SECTION 250 AND AT&T GROUNDING AND BONDING REQUIREMENTS (ATT-TP-76416) AND MANUFACTURER'S SPECIFICATIONS.
44. ALL GROUND CONDUCTORS SHALL BE COPPER; NO ALUMINUM CONDUCTORS SHALL BE USED.
45. ALL CABLES SHALL BE GROUNDED WITH COAXIAL CABLE GROUNDING KITS. FOLLOW THE MANUFACTURER'S RECOMMENDATIONS.
    A. GROUNDING AT THE ANTENNA LEVEL.
    B. GROUNDING AT MID LEVEL, TOWERS WHICH ARE OVER 200'. ADDITIONAL CABLE GROUNDING REQUIRED.
    C. GROUNDING AT BASE OF TOWER PRIOR TO TURNING HORIZONTAL.
    D. GROUNDING OUTSIDE THE EQUIPMENT SHELTER AT ENTRY PORT.
    E. GROUNDING INSIDE THE EQUIPMENT SHELTER AT THE ENTRY PORT.
46. ALL PROPOSED GROUNDING BAR DOWNLEADS ARE TO BE TERMINATED TO THE EXISTING ADJACENT GROUNDING BAR DOWNLEADS A MINIMUM DISTANCE OF 4'-0" BELOW GROUNDING BAR. TERMINATIONS MAY BE EXOTHERMIC OR COMPRESSION.

EXOTHERMIC CONNECTION
MECHANICAL CONNECTION
CHEMICAL ELECTROLYTIC GROUNDING SYSTEM
TEST CHEMICAL ELECTROLYTIC GROUNDING SYSTEM
EXOTHERMIC WITH INSPECTION SLEEVE
GROUNDING BAR
SHELTER GROUNDING BAR
GROUND ROD
TEST GROUND ROD WITH INSPECTION SLEEVE
SINGLE POLE SWITCH
DUPLEX RECEPTACLE
DUPLEX GFCI RECEPTACLE
FLUORESCENT LIGHTING FIXTURE (2) TWO LAMPS 48-T8
EXISTING SMOKE DETECTION (DC)
EXISTING EMERGENCY LIGHTING (DC)
SECURITY LIGHT W/PHOTOCELL LITHONIA ALXW LED-1-25A400/51K-SR4-120-PE-DDBTXD
EXISTING UTILITY POLE
EXISTING CHAIN LINK FENCE
EXISTING WOOD/WROUGHT IRON FENCE
EXISTING WALL STRUCTURE
LEASE AREA
PROPERTY LINE (PL)
SETBACKS
PROPOSED/EXISTING ICE BRIDGE
PROPOSED/EXISTING CABLE TRAY
EXISTING WATER LINE
PROPOSED UNDERGROUND POWER
PROPOSED UNDERGROUND TELCO
PROPOSED OVERHEAD POWER
PROPOSED OVERHEAD TELCO
PROPOSED OVERHEAD UTILITIES
PROPOSED ABOVE GROUND POWER
PROPOSED ABOVE GROUND TELCO

CALLOUT REFERENCE
REVISION REFERENCE
WORKPOINT
SECTION REFERENCE
DETAIL REFERENCE
ELEVATION REFERENCE

THESE DOCUMENTS ARE IN COMPLIANCE WITH AND CONSTRUCTION SHALL BE IN ACCORDANCE WITH THE FOLLOW CODES AND STANDARDS AS APPLICABLE: 2018 CONNECTICUT STATE BUILDING CODE, 2017 NATIONAL ELECTRIC CODE OR LATEST EDITION.

AB	ANCHOR BOLT	COL	COLUMN	FIN	FINISH(ED)	MAS	MASONRY	QTY	QUANTITY
ABV	ABOVE	COMM	COMMON	FLR	FLOOR	MAX	MAXIMUM	RAD	RADIUS
AC	ALTERNATING CURRENT	CONC	CONCRETE	FDN	FOUNDATION	MB	MACHINE BOLT	RECT	RECTIFIER
ADDL	ADDITIONAL	CONSTR	CONSTRUCTION	FOC	FACE OF CONCRETE	MECH	MECHANICAL	REF	REFERENCE
AFF	ABOVE FINISHED FLOOR	DBL	DOUBLE	FOM	FACE OF MASONRY	MFR	MANUFACTURER	REINF	REINFORCEMENT
AFG	ABOVE FINISHED GRADE	DC	DIRECT CURRENT	FOS	FACE OF STUD	MGB	MASTER GROUND BAR	REQ'D	REQUIRED
AIC	AMPERAGE INTERRUPTION CAPACITY	DEPT	DEPARTMENT	FOW	FACE OF WALL	MIN	MINIMUM	RET	REMOTE ELECTRIC TILT
ALUM	ALUMINUM	DF	DOUGLAS FIR	FS	FINISH SURFACE	MISC	MISCELLANEOUS	RMC	RIGID METALLIC CONDUIT
ALT	ALTERNATE	DIA	DIAMETER	FT	FOOT	MTL	METAL	RRH	REMOTE RADIO HEAD
ANT	ANTENNA	DIAG	DIAGONAL	FTG	FOOTING	MTS	MANUAL TRANSFER SWITCH	RRU	REMOTE RADIO UNIT
APPROX	APPROXIMATE	DIM	DIMENSION	GA	GAUGE	MW	MICROWAVE	RWY	RACEWAY
ARCH	ARCHITECTURAL	DWG	DRAWING	GEN	GENERATOR	(N)	NEW	SCH	SCHEDULE
ATS	AUTOMATIC TRANSFER SWITCH	DWL	DOWEL	GFCI	GROUND FAULT CIRCUIT INTERRUPTER	NEC	NATIONAL ELECTRIC CODE	SHT	SHEET
AWG	AMERICAN WIRE GAUGE	(E)	EXISTING	GLB	GLUE LAMINATED BEAM	NO.(#)	NUMBER	SIAD	SMART INTEGRATED DEVICE
BATT	BATTERY	EA	EACH	GLV	GALVANIZED	NTS	NOT TO SCALE	SIM	SIMILAR
BLDG	BUILDING	EC	ELECTRICAL CONDUCTOR	GPS	GLOBAL POSITIONING SYSTEM	OC	ON CENTER	SPEC	SPECIFICATION
BLK	BLOCK	EL	ELEVATION	GND	GROUND	OPNG	OPENING	SQ	SQUARE
BLKG	BLOCKING	ELEC	ELECTRICAL	GSM	GLOBAL SYSTEM FOR MOBILE	(P)	PROPOSED	SS	STAINLESS STEEL
BM	BEAM	EMT	ELECTRICAL METALLIC TUBING	HDR	HEADER	P/C	PRECAST CONCRETE	STD	STANDARD
BTC	BARE TINNED COPPER CONDUCTOR	ENG	ENGINEER	HGR	HANGER	PCS	PERSONAL COMMUNICATION SERVICES	STL	STEEL
BOF	BOTTOM OF FOOTING	EQ	EQUAL	HVAC	HEAT/VENTILATION/AIR CONDITIONING	PCU	PRIMARY CONTROL UNIT	STRUCT	STRUCTURAL
CAB	CABINET	EXP	EXPANSION	HT	HEIGHT	PRC	PRIMARY RADIO CABINET	TEMP	TEMPORARY
CANT	CANTILEVERED	EXT	EXTERIOR	IGR	INTERIOR GROUND RING	PP	POLARIZING PRESERVING	THK	THICKNESS
CEC	CALIFORNIA ELECTRIC CODE	FAB	FABRICATION	IN	INCH	PSF	POUNDS PER SQUARE FOOT	TMA	TOWER MOUNTED AMPLIFIER
CHG	CHARGING	FF	FINISH FLOOR	INT	INTERIOR	PSI	POUNDS PER SQUARE INCH	TN	TOE NAIL
CLG	CEILING	FG	FINISH GRADE	LB(S)	POUND(S)	PT	PRESSURE TREATED	TOA	TOP OF ANTENNA
CLR	CLEAR	FIF	FACILITY INTERFACE FRAME	LF	LINEAR FEET	PWR	POWER CABINET	TOC	TOP OF CURB

TOF	TOP OF FOUNDATION		
TOP	TOP OF PLATE (PARAPET)		
TOS	TOP OF STEEL		
TOW	TOP OF WALL		
TVSS	TRANSIENT VOLTAGE SUPPRESSION SYSTEM		
TYP	TYPICAL		
UG	UNDERGROUND		
UL	UNDERWRITERS LABORATORY		
UNO	UNLESS NOTED OTHERWISE		
UMTS	UNIVERSAL MOBILE TELECOMMUNICATIONS SYSTEM		
UPS	UNINTERRUPTIBLE POWER SYSTEM (DC POWER PLANT)		
VIF	VERIFIED IN FIELD		
W	WIDE		
W/	WITH		
WD	WOOD		
W.P.	WORK POINT		
WP	WEATHERPROOF		
WT	WEIGHT		

at&t
5841 BRIDGE STREET
EAST SYRACUSE, NY 13057

CROWN CASTLE
3 CORPORATE PARK DRIVE
SUITE 101
CLIFTON PARK, NY 12065

JACOBS
JACOBS ENGINEERING GROUP, INC.
120 ST. JAMES AVENUE, 5TH FLOOR
BOSTON, MA 02116

STATE OF CONNECTICUT
DANIEL J. CORNING

PROJECT NO:	ERCC0004
DRAWN BY:	DAP
CHECKED BY:	DJC

SUBMITTALS

3	12/02/19	REVISED PER COMMENTS
2	09/25/19	FOR CONSTRUCTION
1	12/26/18	REVISED PER COMMENTS
0	12/20/18	ISSUED FOR PERMITTING

THIS DOCUMENT IS THE CREATION, DESIGN, PROPERTY AND COPYRIGHTED WORK OF AT&T WIRELESS. ANY DUPLICATION OR USE WITHOUT EXPRESS WRITTEN CONSENT IS STRICTLY PROHIBITED. DUPLICATION AND USE BY GOVERNMENT AGENCIES FOR THE PURPOSES OF CONDUCTING THEIR LAWFULLY AUTHORIZED REGULATORY AND ADMINISTRATIVE FUNCTIONS IS SPECIFICALLY ALLOWED.

FA# 10035240
SITE# CTL02043
STRATFORD NU

670 CHAPEL STREET
STRATFORD, CT 06614

GENERAL NOTES II

GN-2

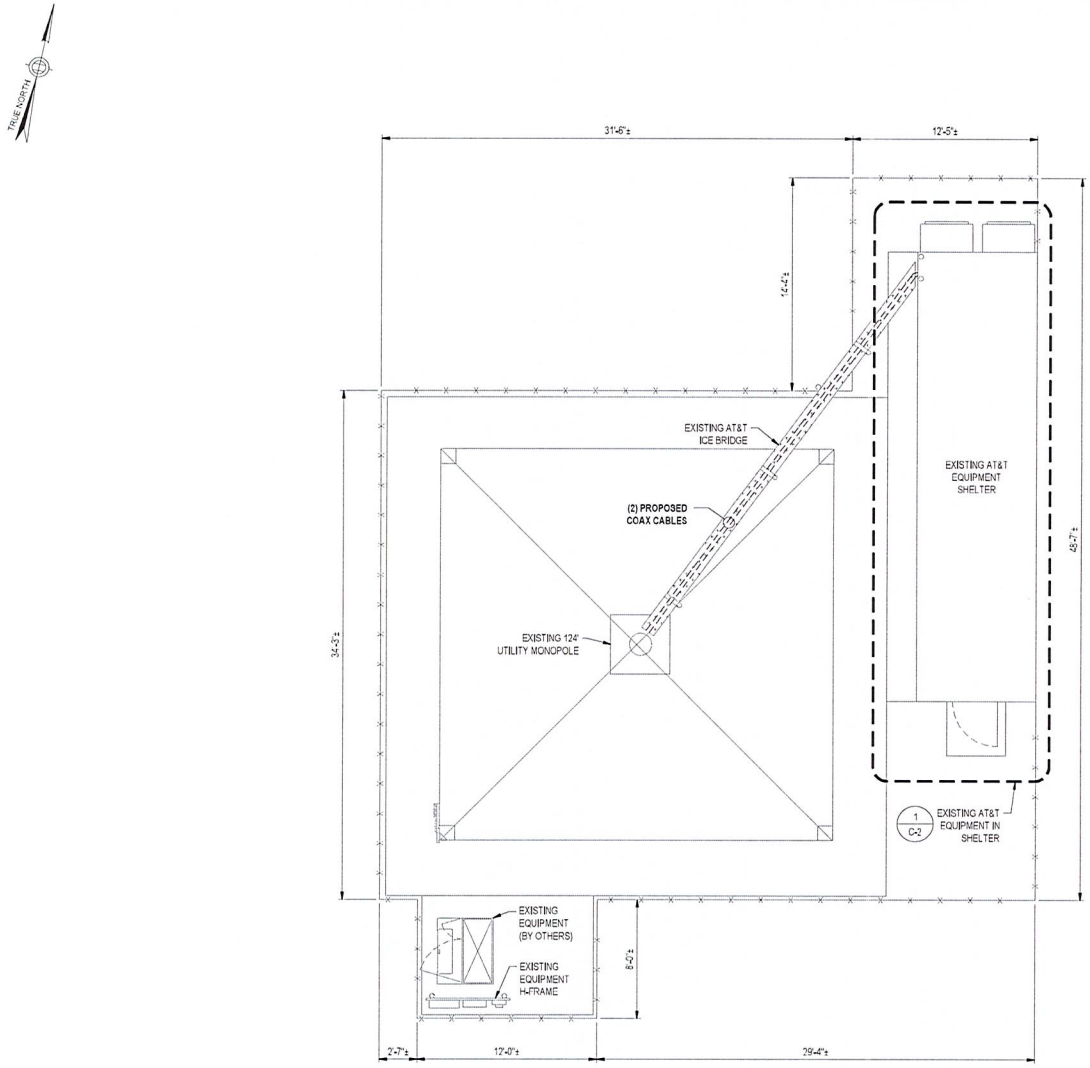

NOTES:

1. PLAN BASED ON AS-BUILT DRAWINGS ISSUED BY McPHEE ON 05/27/18. CONTRACTOR TO FIELD VERIFY ALL DIMENSIONS AND LOCATION/ORIENTATION OF EXISTING EQUIPMENT.

1 SITE PLAN

SCALE: 1/8"=1'-0"

at&t
5841 BRIDGE STREET
EAST SYRACUSE, NY 13057

CROWN CASTLE
3 CORPORATE PARK DRIVE
SUITE 101
CLIFTON PARK, NY 12065

JACOBS
JACOBS ENGINEERING GROUP, INC.
120 ST. JAMES AVENUE, 5TH FLOOR
BOSTON, MA 02116

STATE OF CONNECTICUT
DANIEL J. CORNING
PROFESSIONAL ENGINEER

PROJECT NO: ERCC0004

DRAWN BY: DAP

CHECKED BY: DJC

SUBMITTALS

3	12/02/19	REVISED PER COMMENTS
2	09/25/19	FOR CONSTRUCTION
1	12/26/18	REVISED PER COMMENTS
0	12/20/18	ISSUED FOR PERMITTING

THIS DOCUMENT IS THE CREATION, DESIGN, PROPERTY AND COPYRIGHTED WORK OF AT&T WIRELESS. ANY DUPLICATION OR USE WITHOUT EXPRESS WRITTEN CONSENT IS STRICTLY PROHIBITED. DUPLICATION AND USE BY GOVERNMENT AGENCIES FOR THE PURPOSES OF CONDUCTING THEIR LAWFULLY AUTHORIZED REGULATORY AND ADMINISTRATIVE FUNCTIONS IS SPECIFICALLY ALLOWED.

FA# 10035240
SITE# CTL02043
STRATFORD NU

670 CHAPEL STREET
STRATFORD, CT 06614

SITE PLAN

C-1

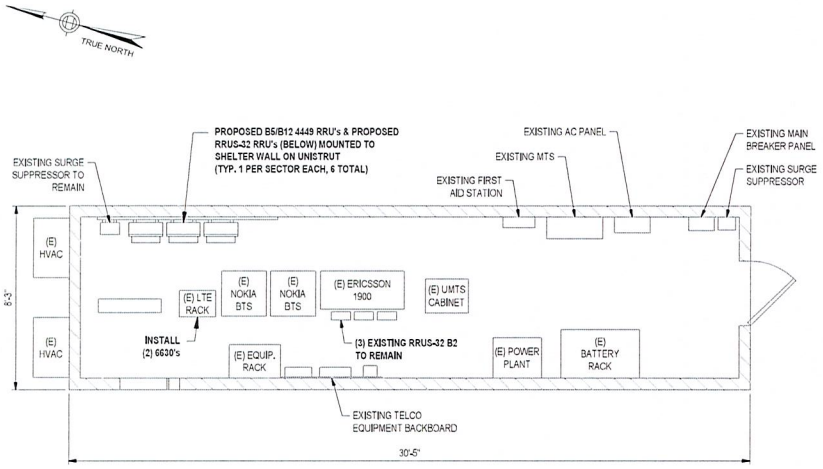

1 EQUIPMENT LAYOUT SCALE: 3/16"=1'-0"

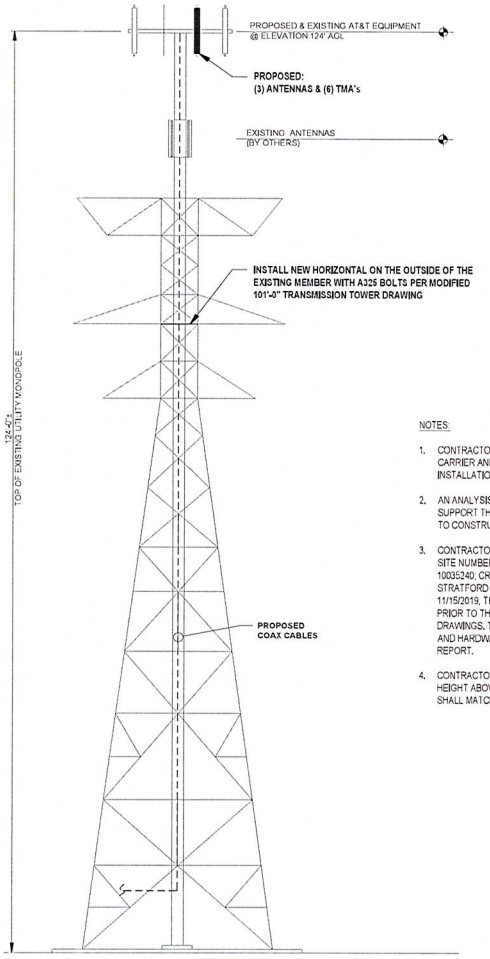

NOTES:

1. CONTRACTOR TO VERIFY FINAL RF CONFIGURATION AND NOTIFY CARRIER AND ENGINEER W/ ANY DISCREPANCIES PRIOR TO THE INSTALLATION.
2. AN ANALYSIS FOR THE CAPACITY OF THE EXISTING STRUCTURES TO SUPPORT THE PROPOSED EQUIPMENT SHALL BE DETERMINED PRIOR TO CONSTRUCTION.
3. CONTRACTOR SHALL REFER TO THE STRUCTURAL ANALYSIS REPORT, SITE NUMBER: CTL02043, SITE NAME: STRATFORD NU, FA LOCATION: 10035240, CROWN BU NUMBER: 841299, CROWN SITE NAME: STRATFORD NU, ISSUED BY PAUL J. FORD & COMPANY, DATED ON 11/15/2019, THE STRUCTURAL MODIFICATIONS MUST BE PERFORMED PRIOR TO THE INSTALLATION OF THE EQUIPMENT SHOWN ON THE DRAWINGS. THE CONTRACTOR SHALL VERIFY ALL EXISTING MEMBERS AND HARDWARE ARE INSTALLED PROPERLY AS DESCRIBED IN THIS REPORT.
4. CONTRACTOR SHALL VERIFY THE EXISTING ANTENNA CENTERLINE HEIGHT ABOVE GROUND LEVEL. PROPOSED ANTENNA CENTERLINE SHALL MATCH EXISTING.

2 PROPOSED TOWER ELEVATION SCALE: 1/16"=1'-0"

at&t
5841 BRIDGE STREET
EAST SYRACUSE, NY 13057

CROWN CASTLE
3 CORPORATE PARK DRIVE
SUITE 101
CLIFTON PARK, NY 12065

JACOBS
JACOBS ENGINEERING GROUP, INC.
120 ST. JAMES AVENUE, 5TH FLOOR
BOSTON, MA 02116

STATE OF CONNECTICUT
DANIEL J. CORNING
LICENSED PROFESSIONAL ENGINEER

PROJECT NO:	ERCC0004
DRAWN BY:	DAP
CHECKED BY:	DJC

SUBMITTALS

3	12/02/19	REVISED PER COMMENTS
2	09/25/19	FOR CONSTRUCTION
1	12/26/18	REVISED PER COMMENTS
0	12/20/18	ISSUED FOR PERMITTING

THIS DOCUMENT IS THE CREATION, DESIGN, PROPERTY AND COPYRIGHTED WORK OF AT&T WIRELESS. ANY DUPLICATION OR USE WITHOUT EXPRESS WRITTEN CONSENT IS STRICTLY PROHIBITED. DUPLICATION AND USE BY GOVERNMENT AGENCIES FOR THE PURPOSES OF CONDUCTING THEIR LAWFULLY AUTHORIZED REGULATORY AND ADMINISTRATIVE FUNCTIONS IS SPECIFICALLY ALLOWED.

FA# 10035240
SITE# CTL02043
STRATFORD NU

670 CHAPEL STREET
STRATFORD, CT 06614

EQUIPMENT LAYOUT & PROPOSED TOWER ELEVATION

C-2

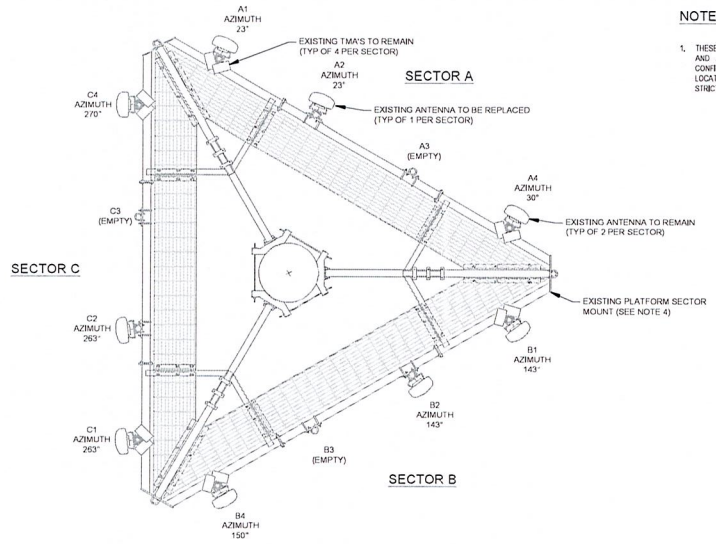

ELEVATION 124'

NOTES:

1. THESE DRAWINGS ARE NOT INTENDED TO REFLECT THE STRUCTURAL INTEGRITY OF THE TOWER. THE PROPOSED ANTENNAS AND ASSOCIATED EQUIPMENT SHOWN ARE REPRESENTATIVE IN NATURE AND DO NOT REFLECT THE ACTUAL CONFIGURATIONS REQUIRED. THE CONTRACTOR SHALL REFER TO THE MOUNT ANALYSIS OF THIS SITE FOR THE APPROVED LOCATION AND CONFIGURATION OF ALL ANTENNAS AND EQUIPMENT. ALL ANTENNAS AND EQUIPMENT MUST BE MOUNTED IN STRICT ACCORDANCE WITH THE MOUNT ANALYSIS.

1 EXISTING ANTENNA LAYOUT

SCALE: N.T.S.

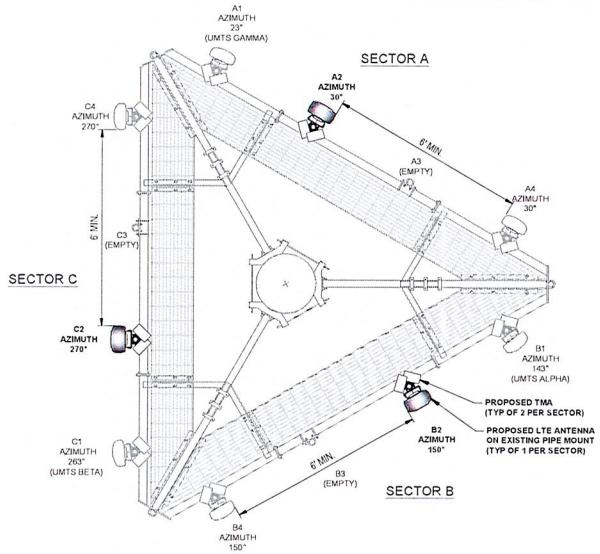

ELEVATION 124'

2 PROPOSED ANTENNA LAYOUT

SCALE: N.T.S.

at&t
5841 BRIDGE STREET
EAST SYRACUSE, NY 13057

CROWN CASTLE
3 CORPORATE PARK DRIVE
SUITE 101
CLIFTON PARK, NY 12065

JACOBS
JACOBS ENGINEERING GROUP, INC.
120 ST. JAMES AVENUE, 5TH FLOOR
BOSTON, MA 02116

STATE OF CONNECTICUT
DANIEL J. CORNING
34
LICENSED
PROFESSIONAL ENGINEER

PROJECT NO:	ERCC0004
DRAWN BY:	DAP
CHECKED BY:	DJC

SUBMITTALS

3	12/02/19	REVISED PER COMMENTS
2	09/25/19	FOR CONSTRUCTION
1	12/26/18	REVISED PER COMMENTS
0	12/20/18	ISSUED FOR PERMITTING

THIS DOCUMENT IS THE CREATION, DESIGN, PROPERTY AND COPYRIGHTED WORK OF AT&T WIRELESS. ANY DUPLICATION OR USE WITHOUT EXPRESS WRITTEN CONSENT IS STRICTLY PROHIBITED. DUPLICATION AND USE BY GOVERNMENT AGENCIES FOR THE PURPOSES OF CONDUCTING THEIR LAWFULLY AUTHORIZED REGULATORY AND ADMINISTRATIVE FUNCTIONS IS SPECIFICALLY ALLOWED.

FA# 10035240
SITE# CTL02043
STRATFORD NU

670 CHAPEL STREET
STRATFORD, CT 06614

EXISTING & PROPOSED
ANTENNA LAYOUT

C-3

MANUFACTURER:	KATHREIN
MODEL NO.:	800-10965
RADOME MATERIAL:	FIBERGLASS, UV RESISTANT
COLOR:	LIGHT GRAY
DIMENSIONS (LxWxD):	78.7" x 20.0" x 6.9" 1999mm x 508mm x 175mm
WEIGHT (lbs):	97.6
CONNECTOR:	16 x 4.3-10 FEMALE
FRONT WIND LOAD:	254 LBF @ 93 MPH 1130 N @ 150 KM/H
SIDE WIND LOAD:	256 LBF @ 93 MPH 1140 N @ 150 KM/H
WIND SPEED MAX.:	>150 MPH (>241 KM/H)

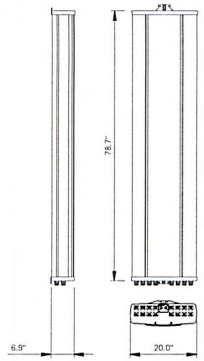

1 ANTENNA SPECIFICATIONS — SCALE: N.T.S.

MANUFACTURER:	ERICSSON
MODEL NO.:	RRUS-4449 B5 & B12
TECHNOLOGY:	DUAL BAND
DIMENSIONS (HxWxD):	14.96" x 13.19" x 10.43"
WEIGHT (lbs):	73.0
POWER SUPPLY:	-48V
TEMPERATURE:	-40°C TO 55°C

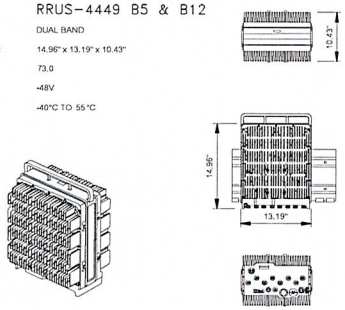

2 RRUS SPECIFICATIONS — SCALE: N.T.S.

MANUFACTURER:	CCI
MODEL:	TMABPD7823VG12A
DIMENSIONS (HxWxD):	10.63" x 11.04" x 3.75" 270.0MM x 280.3MM x 95.2MM
TOTAL WEIGHT (lbs):	25.0 LBS 26.0 LBS (WITH BRACKETS)
TEMPERATURE:	-40°C to +65°C
POWER CONSUMPTION:	<2.0 W

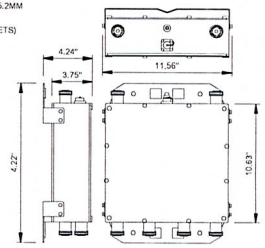

3 TMA SPECIFICATIONS — SCALE: N.T.S.

MANUFACTURER:	ERICSSON
MODEL NO.:	RRUS-32
TECHNOLOGY:	WCS
DIMENSIONS (HxWxD):	27.2" x 12.1" x 7.0"
WEIGHT (lbs):	53
POWER SUPPLY:	-48V
TEMPERATURE:	-40 °C TO 55 °C

NOTE:
PENDING FINAL PRODUCT SPECIFICATION

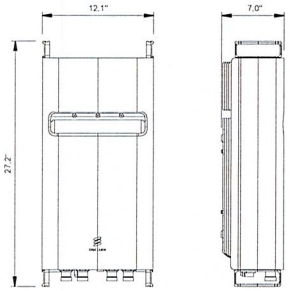

4 RRUS SPECIFICATIONS — SCALE: N.T.S.

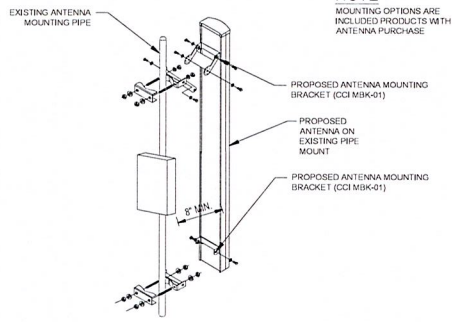

NOTE
MOUNTING OPTIONS ARE INCLUDED PRODUCTS WITH ANTENNA PURCHASE

5 ANTENNA MOUNTING DETAIL — SCALE: N.T.S.

6 DETAIL NOT USED

7 DETAIL NOT USED

8 DETAIL NOT USED

9 DETAIL NOT USED

at&t
5841 BRIDGE STREET
EAST SYRACUSE, NY 13057

CROWN CASTLE
3 CORPORATE PARK DRIVE
SUITE 101
CLIFTON PARK, NY 12065

JACOBS
JACOBS ENGINEERING GROUP, INC.
120 ST. JAMES AVENUE, 5TH FLOOR
BOSTON, MA 02116

STATE OF CONNECTICUT
DANIEL J. CORNING
34
LICENSED PROFESSIONAL ENGINEER

PROJECT NO:	ERCC0004
DRAWN BY:	DAP
CHECKED BY:	DJC

SUBMITTALS

3	12/02/19	REVISED PER COMMENTS
2	09/25/19	FOR CONSTRUCTION
1	12/26/18	REVISED PER COMMENTS
0	12/20/18	ISSUED FOR PERMITTING

THIS DOCUMENT IS THE CREATION, DESIGN, PROPERTY AND COPYRIGHTED WORK OF AT&T WIRELESS. ANY DUPLICATION OR USE WITHOUT EXPRESS WRITTEN CONSENT IS STRICTLY PROHIBITED. DUPLICATION AND USE BY GOVERNMENT AGENCIES FOR THE PURPOSES OF CONDUCTING THEIR LAWFULLY AUTHORIZED REGULATORY AND ADMINISTRATIVE FUNCTIONS IS SPECIFICALLY ALLOWED.

FA# 10035240
SITE# CTL02043
STRATFORD NU

670 CHAPEL STREET
STRATFORD, CT 06614

EXISTING AND PROPOSED ANTENNA LAYOUT

C-4

ANTENNA NUMBER	ANTENNA MODEL	ANTENNA BAND	AZIMUTH	ANTENNA CENTERLINE FROM GROUND	TMA's & DIPLEXERS	RRH's	FEEDER	RAYCAP
A1	7770 (55"x11"x5")	UMTS	143°	124'	(2) LGP-21401	-	-	
A2	**800-10965 (78.7"x20"x6.9")**	**LTE**	**30°**	**124'**	**(2) TMABPD7823VG12A**	**(1) B5/B12 4449 (700) (1) RRUS-32 (WCS)**	**(2) 1-1/4" COAX** (6) 1-5/8" COAX EXISTING (LENGTH @ 177')	
A3	-	-	-	-	-	-	-	
A4	HPA-65R-BUU-H6 (72"x14.8"x9")	LTE	30°	124'	(2) CCI DTMABP7819VG12A	(1) RRUS-32 B2	-	
B1	7770 (55"x11"x5")	UMTS	263°	124'	(2) LGP-21401	-	-	
B2	**800-10965 (78.7"x20"x6.9")**	**LTE**	**160°**	**124'**	**(2) TMABPD7823VG12A**	**(1) B5/B12 4449 (700) (1) RRUS-32 (WCS)**	**(2) 1-1/4" COAX** (6) 1-5/8" COAX EXISTING (LENGTH @ 177')	
B3	-	-	-	-	-	-	-	
B4	HPA-65R-BUU-H6 (72"x14.8"x9")	LTE	150°	124'	(2) CCI DTMABP7819VG12A	(1) RRUS-32 B2	-	
G1	7770 (55"x11"x5")	UMTS	23°	124'	(2) LGP-21401	-	-	
G2	**800-10965 (78.7"x20"x6.9")**	**LTE**	**270°**	**124'**	**(2) TMABPD7823VG12A**	**(1) B5/B12 4449 (700) (1) RRUS-32 (WCS)**	**(2) 1-1/4" COAX** (6) 1-5/8" COAX EXISTING (LENGTH @ 177')	
G3	-	-	-	-	-	-	-	
G4	HPA-65R-BUU-H6 (72"x14.8"x9")	LTE	270°	124'	(2) CCI DTMABP7819VG12A	(1) RRUS-32 B2	-	

*EQUIPMENT LISTED IN **BOLD**, DELINEATES THAT THE EQUIPMENT IS PROPOSED
ANTENNA DESIGN PER RFDS DATED 09/21/2018 UPDATED 10/19/2018

1 ANTENNA INFORMATION CHART — SCALE: N.T.S.

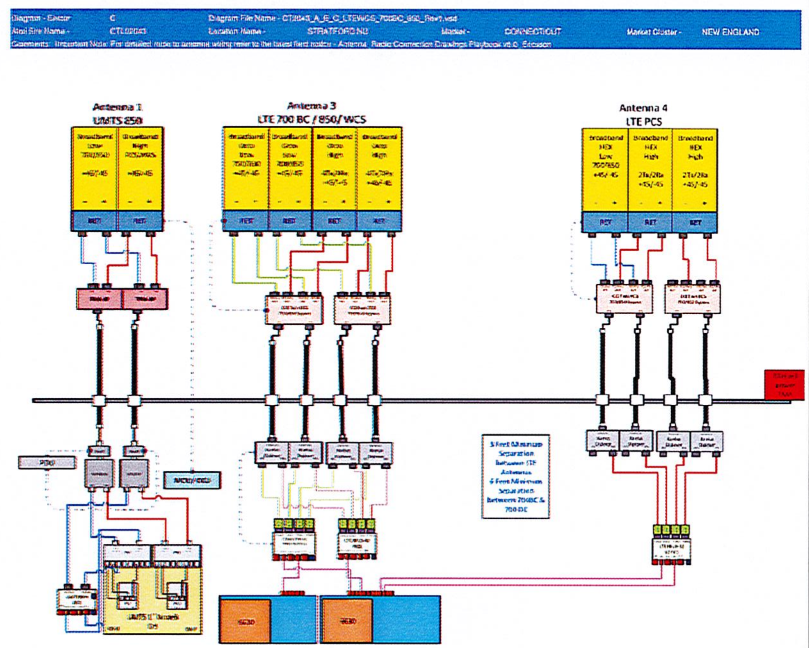

2 RF EQUIPMENT SCHEMATIC — SCALE: N.T.S.

at&t
5841 BRIDGE STREET
EAST SYRACUSE, NY 13057

CROWN CASTLE
3 CORPORATE PARK DRIVE
SUITE 101
CLIFTON PARK, NY 12065

JACOBS
JACOBS ENGINEERING GROUP, INC.
120 ST. JAMES AVENUE, 5TH FLOOR
BOSTON, MA 02116

STATE OF CONNECTICUT
DANIEL J. CORNING
PROFESSIONAL ENGINEER

PROJECT NO: ERCC0004

DRAWN BY: DAP

CHECKED BY: DJC

SUBMITTALS

3	12/02/19	REVISED PER COMMENTS
2	09/25/19	FOR CONSTRUCTION
1	12/26/18	REVISED PER COMMENTS
0	12/20/18	ISSUED FOR PERMITTING

THIS DOCUMENT IS THE CREATION, DESIGN, PROPERTY AND COPYRIGHTED WORK OF AT&T WIRELESS. ANY DUPLICATION OR USE WITHOUT EXPRESS WRITTEN CONSENT IS STRICTLY PROHIBITED. DUPLICATION AND USE BY GOVERNMENT AGENCIES FOR THE PURPOSES OF CONDUCTING THEIR LAWFULLY AUTHORIZED REGULATORY AND ADMINISTRATIVE FUNCTIONS IS SPECIFICALLY ALLOWED.

FA# 10035240
SITE# CTL02043
STRATFORD NU

670 CHAPEL STREET
STRATFORD, CT 06614

ANTENNA CHART & RF EQUIPMENT SCHEMATIC

RF-1

NOTES:

1. EXOTHERMIC WELD (2) TWO, #2 AWG BARE TINNED SOLID COPPER CONDUCTORS TO GROUNDING BAR. ROUTE CONDUCTORS TO BURIED GROUNDING RING AND PROVIDE PARALLEL EXOTHERMIC WELD.
2. ALL GROUNDING BARS SHALL BE STAMPED IN TO THE METAL "IF STOLEN DO NOT RECYCLE." THE CONTRACTOR SHALL USE PERMANENT MARKER TO DRAW THE LINES BETWEEN EACH SECTION AND LABEL EACH SECTION ("P", "A", "N", "T") WITH 1" HIGH LETTERS.
3. ALL HARDWARE SHALL BE STAINLESS STEEL 3/8" DIAMETER OR LARGER. ALL HARDWARE 18-8 STAINLESS STEEL INCLUDING LOCK WASHERS, COAT ALL SURFACES WITH AN ANTI-OXIDANT COMPOUND BEFORE MATING.
4. FOR GROUND BOND TO STEEL ONLY INSERT A CADMIUM FLAT WASHER BETWEEN LUG AND STEEL, COAT ALL SURFACES WITH AN ANTI-OXIDANT COMPOUND BEFORE MATING.
5. DO NOT INSTALL CABLE GROUNDING KIT AT A BEND AND ALWAYS DIRECT GROUNDING CONDUCTOR DOWN TO GROUNDING BUS.
6. NUT & WASHER SHALL BE PLACED ON THE FRONT SIDE OF THE GROUNDING BAR AND BOLTED ON THE BACK SIDE. INSTALL BLACK HEAT-SHRINKING TUBE, 600 VOLT INSULATION, ON ALL GROUNDING TERMINATIONS. THE INTENT IS TO WEATHERPROOF THE COMPRESSION CONNECTION.
7. SUPPLIED AND INSTALLED BY CONTRACTOR.
8. THE CONTRACTOR SHALL BE RESPONSIBLE FOR INSTALLING ADDITIONAL GROUNDING BAR AS REQUIRED, PROVIDING 50% SPARE CONNECTION POINTS.
9. ENSURE THE WIRE INSULATION TERMINATION IS WITHIN 1/8" OF THE BARREL (NO SHINERS).

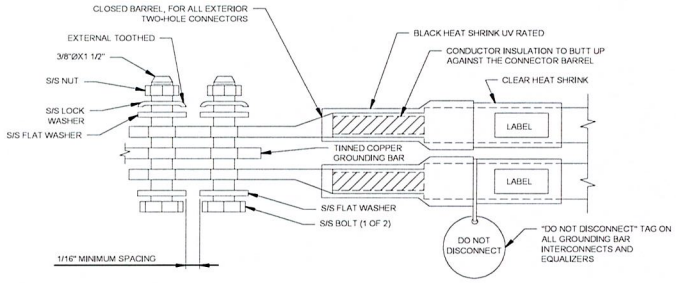

1 EXTERIOR TWO HOLE LUG DETAIL

SCALE: N.T.S.

GENERAL NOTES:

1. CONTRACTOR SHALL HAVE A COMPLETE UNDERSTANDING OF THE CONTENTS OF AT&T STANDARD TP-76416.
2. ALL INSTALLATIONS SHALL BE FIELD VERIFIED.
3. ALL GROUND CONNECTIONS FOR ALL RELOCATED EQUIPMENT SHALL BE RE-ESTABLISHED BY THE CONTRACTOR. CONTRACTOR SHALL FURNISH ALL MATERIALS AS REQUIRED.

GROUNDING NOTES:

1. TOWER GROUNDING BAR: EXTEND (2) #2 AWG TINNED CU WIRE FROM BURIED GROUND RING UP TO THE TOWER GROUND BAR AND MAKE A MECHANICAL CONNECTION. SECURE GROUND BAR DIRECTLY TO TOWER WITH STAINLESS STEEL MOUNTING MATERIAL.
2. ANTENNA GROUNDING BAR: ANDREW CORPORATION PART #UGBKIT-0424-T MOUNT GROUND BAR DIRECTLY TO TOWER. SECURE TO TOWER WITH STAINLESS STEEL MOUNTING MATERIAL.
3. GROUNDING BAR: LOCATED CLOSE TO GRADE LOCK BOX TESSCO PART #351546. INSTALL PER MANUFACTURER GUIDELINES.
4. EXOTHERMIC OR COMPRESSION CONNECTION FOR PIPE MOUNT TO ANTENNA ROUTE CONDUCTOR TO NEAREST GROUNDING BAR SO THE GROUNDING CONDUCTORS PROVIDE A STRAIGHT DOWNWARD PATH TO GROUND. USE #2 AWG SOLID TINNED COPPER CONDUCTOR. GROUNDING CONNECTION SHALL BE LOCATED AT THE TOP 2" OF PIPE.
5. ALL GROUNDING CONDUCTORS SHALL BE #2 AWG COPPER TINNED UNLESS NOTED OTHERWISE.
6. ALL GROUNDING CONDUCTORS SHALL PROVIDE A STRAIGHT DOWNWARD PATH TO GROUND WITH GRADUAL BEND AS REQUIRED. GROUND WIRES SHALL NOT BE LOOPED OR SHARPLY BENT.
7. KOPR-SHIELD ANTI-OXIDATION COMPOUND SHALL BE USED ON ALL COMPRESSION GROUNDING CONNECTIONS.
8. ALL EXOTHERMIC CONNECTIONS SHALL BE INSTALLED UTILIZING THE PROPER CONNECTION/MOLD AND MATERIALS FOR THE PARTICULAR APPLICATION.
9. ALL BOLTED GROUNDING CONNECTIONS SHALL BE INSTALLED WITH AN EXTERNAL TOOTHED LOCK WASHER. GROUNDING BUS BARS MAY HAVE PRE-PUNCHED HOLES OR TAPPED HOLES. ALL HARDWARE SHALL BE SECURITY TORQUE HARDWARE 3/8" STAINLESS STEEL.
10. EXTERNAL GROUNDING CONDUCTOR SHALL NOT BE INSTALLED OR ROUTED THROUGH HOLES IN ANY METAL OBJECTS, CONDUITS, OR SUPPORTS TO PRECLUDE ESTABLISHING A MAGNETIC CHOKE POINT.
11. PLASTIC CLIPS SHALL BE USED TO FASTEN AND SUPPORT GROUNDING CONDUCTORS. FERROUS METAL CLIPS WHICH COMPLETELY SURROUND THE GROUNDING CONDUCTOR SHALL NOT BE USED.
12. IF COAX ON ICE BRIDGE IS MORE THAT 6' FROM THE GROUND BAR AT THE BASE OF THE TOWER, A SECOND GROUND BAR WILL BE NEEDED AT THE END OF THE ICE BRIDGE RUN TO GROUND THE COAX GROUND KIT AND THE IN-LINE SURGE ARRESTORS (SURGE ARRESTORS INSTALLED BY LUCENT ONLY HAVE 6' GROUND TAILS).
13. CONTRACTOR SHALL REPAIR/PLACE EXISTING GROUNDING SYSTEM COMPONENTS DAMAGED DURING CONSTRUCTION AT THE CONTRACTORS EXPENSE.
14. DO NOT ALLOW THE COPPER CONDUCTOR TO TOUCH THE GALVANIZED GUY WIRE AT THE CONNECTION POINT OR AT ANY OTHER POINT. NO EXOTHERMICALLY WELDED CONNECTION SHALL BE MADE TO THE GUY WIRE.
15. CONTRACTOR SHALL VERIFY EXISTING SECTOR GROUNDING CONDITION AND GROUND THE PROPOSED EQUIPMENT IN THE SAME MANNER. A PROPOSED SECTOR GROUND BAR SHALL BE INSTALLED IF REQUIRED.

2 GROUNDING BAR DETAIL

SCALE: N.T.S.

NOTES:

1. CONTRACTOR TO VERIFY EXISTENCE AND LOCATIONS OF SECTOR GROUND BARS AND PROVIDE PROPOSED SECTOR GROUND BARS AS REQUIRED.
2. CONTRACTOR TO PROVIDE #2 AWG BARE COPPER DOWN-LEADS FROM PROPOSED SECTOR GROUND BARS TO EXISTING TOWER GROUND BAR.
3. CONTRACTOR SHALL VERIFY ALL PROPOSED/USED/OCCUPIED PIPE MOUNTS ARE GROUNDED BACK TO THE SECTOR GROUND BAR. IF GROUNDING DOES NOT EXIST FROM THE PIPE MOUNT TO THE SECTOR GROUND BAR, CONTRACTOR SHALL FURNISH ALL MATERIALS AS REQUIRED.
4. ALL CABLE CONNECTIONS TO BE WEATHERPROOFED PER MANUFACTURER INSTRUCTION.

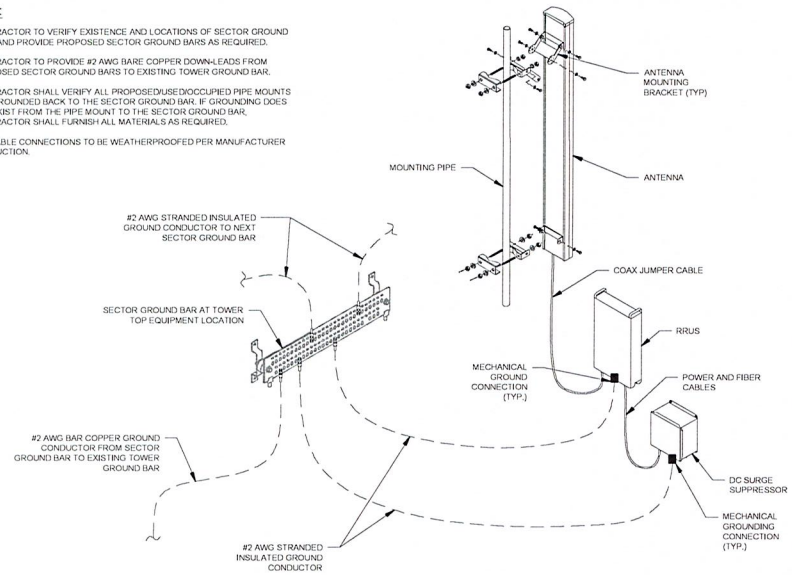

3 TYPICAL ANTENNA GROUNDING SCHEMATIC

SCALE: N.T.S.

4 DETAIL NOT USED

SCALE: N.T.S.

at&t
5841 BRIDGE STREET
EAST SYRACUSE, NY 13057

CROWN CASTLE
3 CORPORATE PARK DRIVE
SUITE 101
CLIFTON PARK, NY 12065

JACOBS
JACOBS ENGINEERING GROUP, INC.
120 ST. JAMES AVENUE, 5TH FLOOR
BOSTON, MA 02116

STATE OF CONNECTICUT
DANIEL J. CORNING

PROJECT NO:	ERCC0004
DRAWN BY:	DAP
CHECKED BY:	DJC

SUBMITTALS

3	12/02/19	REVISED PER COMMENTS
2	09/25/19	FOR CONSTRUCTION
1	12/26/18	REVISED PER COMMENTS
0	12/20/18	ISSUED FOR PERMITTING

THIS DOCUMENT IS THE CREATION, DESIGN, PROPERTY AND COPYRIGHTED WORK OF AT&T WIRELESS. ANY DUPLICATION OR USE WITHOUT EXPRESS WRITTEN CONSENT IS STRICTLY PROHIBITED. DUPLICATION AND USE BY GOVERNMENT AGENCIES FOR THE PURPOSES OF CONDUCTING THEIR LAWFULLY AUTHORIZED REGULATORY AND ADMINISTRATIVE FUNCTIONS IS SPECIFICALLY ALLOWED.

FA# 10035240
SITE# CTL02043
STRATFORD NU

670 CHAPEL STREET
STRATFORD, CT 06614

GROUNDING DETAILS

G-1

MODIFIED 101'-0" TRANSMISSION TOWER
EVERSOURCE STRUCTURE #1321
CIRCUIT #1483/1545

BU #841299 / AT&T SITE #CTL02043, FA #10035240

670 CHAPEL STREET
STRATFORD, FAIRFIELD COUNTY, CONNECTICUT
LAT: 41° 14' 16.80"; LONG: -73° 7' 20.60"

PROJECT CONTACTS

STRUCTURE OWNER:
EVERSOURCE ENERGY
CONTACT: JOEL SZARKOWICZ AT
JOEL.SZARKOWICZ@EVERSOURCE.COM
PH: (860) 728-4503

CARRIER INFO:
CROWN CASTLE
CONTACT: CHARLES TRASK AT CHARLES.TRASK@CROWNCASTLE.COM
PH: (980) 209-8228

ENGINEER OF RECORD:
PJFMOD@PAULJFORD.COM

THIS PROJECT INCLUDES THE FOLLOWING ITEMS
TOWER & PIPE RISER REINFORCING

SHEET INDEX

SHEET NUMBER	DESCRIPTION
T-1	TITLE SHEET
N-1	GENERAL NOTES
MI-1	INSPECTION NOTES
MI-2	FIELD MEASUREMENTS AND NOTES
S-1	TOWER ELEVATION AND SECTIONS
1 S-2	DETAILS AND MATERIAL LIST

DESIGN DATA - ANTENNA MOUNT

REFERENCE STANDARD	TIA/EIA-222-G (W/ ALL ADDENDUMS)	
STRUCTURE CLASS	III	
EXPOSURE CATEGORY	C	
TOPOGRAPHIC CATEGORY	1	
LOAD CASE DESCRIPTION	WIND WITHOUT ICE	WIND WITH ICE
BASIC WIND SPEED (MPH)	97	50
ICE THICKNESS (IN)	0	0.75

DESIGN DATA - TOWER

REFERENCE STANDARD(S)	NESC C2-2017			
STRUCTURE OWNER STANDARD	EVERSOURCE OTRM 059			
NESC SECTION	250B			250C
LOAD CASE DESCRIPTION	HEAVY	MEDIUM	LIGHT	EXTREME WIND
LOAD CASE USED	X			X
RADIAL ICE (IN)	0.5	0.25	0	0
WIND SPEED (3-SEC GUST) MPH	40	40	60	110
TEMPERATURE (DEG F)	0	15	30	60

STATE OF CONNECTICUT
JAMES R. ANTOSZEWSKI
31499
LICENSED
PROFESSIONAL ENGINEER

11/18/2019

REV	DATE	DESCRIPTION
1	11-15-2019	ADDED SHEET S-2

© Copyright 2019, by Paul J. Ford and Company. All Rights Reserved. This document and the data contained herein, is proprietary to Paul J. Ford and Company, issued in strict confidence and shall not, without the prior written permission of Paul J. Ford and Company, be reproduced, copied or used for any purpose other than the intended use for this specific project.

PJF PAUL J. FORD & COMPANY
250 E Broad St, Ste 600 · Columbus, OH 43215
Phone 614.221.6679 www.pauljford.com

AT&T MOBILITY
1025 LENOX PARK BLVD, 3RD FLOOR TOWER ASSET GROUP
ATLANTA, GEORGIA 30319

EVERSOURCE STRUCTURE #1321
CIRCUIT #1483/1545
670 CHAPEL STREET
STRATFORD, FAIRFIELD COUNTY, CONNECTICUT
BU #841299 / AT&T SITE #CTL02043, FA #10035240

PROJECT No:	37519-3029,001,6125 R1
DRAWN BY:	FE
DESIGNED BY:	CEC
CHECKED BY:	CTH
DATE:	8-15-2019

TITLE SHEET

T-1
SHEET #1 OF 5

37519-3029,001,6125 R1.DWG

EVERSOURCE PROJECT: 670 CHAPEL STREET, STRATFORD, FAIRFIELD COUNTY, CONNECTICUT
UTILITY PROJECT MASTER NOTES DOCUMENT (REV. 1, 6/21/2018)

1. **GENERAL NOTES**
   - 1.1. THE STRUCTURAL ANALYSIS ASSUMES THAT ALL TOWER COMPONENTS ARE IN BRAND-NEW CONDITION. NO ALLOWANCE WAS MADE FOR ANY DAMAGED, MISSING OR RUSTED MEMBERS. IF ANY OF THESE CONDITIONS ARE DISCOVERED, THE CONTRACTOR SHALL BRING THEM TO THE ATTENTION OF THE OWNERS REPRESENTATIVE.
   - 1.2. THESE DRAWINGS WERE PREPARED FROM INFORMATION AND DOCUMENTS PROVIDED BY OWNER. THE INFORMATION PROVIDED HAS NOT BEEN FIELD VERIFIED BY THE ENGINEER OF RECORD (EOR) FOR ACCURACY AND THEREFORE DISCREPANCIES BETWEEN THESE DRAWINGS AND ACTUAL SITE CONDITIONS SHOULD BE ANTICIPATED. IT IS THE CONTRACTOR'S RESPONSIBILITY TO FIELD VERIFY ALL EXISTING CONDITIONS AND DIMENSIONS AND COORDINATE WITH THE AVAILABLE SOURCES OF INFORMATION ABOVE AND WITH THE PROJECT DRAWINGS BEFORE PROCEEDING WITH THE WORK. CONTRACTOR SHALL IMMEDIATELY REPORT ANY AND ALL DISCREPANCIES TO THE EOR AND OWNER FIELD PERSONNEL BEFORE PROCEEDING WITH THE WORK.
   - 1.3. IF MATERIALS, QUANTITIES, STRENGTHS OR SIZES INDICATED BY THE DRAWINGS OR SPECIFICATIONS ARE NOT IN AGREEMENT WITH THESE NOTES, THE BETTER QUALITY AND/OR GREATER QUANTITY, STRENGTH OR SIZE INDICATED, SPECIFIED OR NOTED SHALL BE PROVIDED.
   - 1.4. THIS STRUCTURE IS DESIGNED TO BE SELF-SUPPORTING AND STABLE AFTER THE INSTALLATION OF THE MODIFICATIONS DESCRIBED HEREIN. IT IS THE CONTRACTOR'S SOLE RESPONSIBILITY TO ENSURE THE SAFETY AND STABILITY OF THE STRUCTURE AND ITS COMPONENT PARTS DURING FIELD MODIFICATIONS. THIS INCLUDES, BUT IS NOT LIMITED TO, THE ADDITION OF WHATEVER TEMPORARY BRACING, GUYS OR TIE DOWNS THAT MAY BE NECESSARY. SUCH MATERIAL SHALL BE REMOVED AND SHALL REMAIN THE PROPERTY OF THE CONTRACTOR AFTER THE COMPLETION OF THE PROJECT.
   - 1.5. ALL CONSTRUCTION MEANS AND METHODS, INCLUDING BUT NOT LIMITED TO, ERECTION PLANS, RIGGING PLANS, CLIMBING PLANS AND RESCUE PLANS SHALL BE THE RESPONSIBILITY OF THE GENERAL CONTRACTOR RESPONSIBLE FOR THE EXECUTION OF THE WORK CONTAINED HEREIN AND SHALL MEET OSHA AND GENERAL INDUSTRY STANDARDS.
   - 1.6. OBSERVATION VISITS TO THE SITE BY OWNER AND/OR THE EOR SHALL NOT INCLUDE INSPECTIONS OF THE PROTECTIVE MEASURES OR THE CONSTRUCTION PROCEDURES.
   - 1.7. ANY SUPPORT SERVICES PERFORMED BY THE EOR DURING CONSTRUCTION ARE SOLELY FOR THE PURPOSE OF ASSISTING IN QUALITY CONTROL AND IN ACHIEVING GENERAL CONFORMANCE WITH CONTRACT DOCUMENTS. THEY DO NOT GUARANTEE CONTRACTOR'S PERFORMANCE AND SHALL NOT BE CONSTRUED AS SUPERVISION OF CONSTRUCTION.
   - 1.8. ALL MATERIALS AND EQUIPMENT FURNISHED SHALL BE NEW AND OF GOOD QUALITY, FREE FROM FAULTS AND DEFECTS AND IN CONFORMANCE WITH THE CONTRACT DOCUMENTS. ANY AND ALL SUBSTITUTIONS MUST BE PROPERLY APPROVED AND AUTHORIZED IN WRITING BY OWNER AND EOR PRIOR TO INSTALLATION. THE CONTRACTOR SHALL FURNISH SATISFACTORY EVIDENCE AS TO THE KIND AND QUALITY OF MATERIALS AND EQUIPMENT BEING SUBSTITUTED.
   - 1.9. THE CONTRACTOR SHALL BE RESPONSIBLE FOR INITIATING, MAINTAINING, AND SUPERVISING ALL SAFETY PRECAUTIONS AND PROGRAMS IN CONNECTION WITH THE WORK. THE CONTRACTOR IS RESPONSIBLE TO ENSURE THAT THIS PROJECT AND RELATED WORK COMPLIES WITH ALL APPLICABLE LOCAL, STATE, AND FEDERAL SAFETY CODES AND REGULATIONS GOVERNING THIS WORK AS WELL AS OWNER SAFETY GUIDELINES.
   - 1.10. THE CONTRACTOR SHALL BE RESPONSIBLE FOR PROTECTING ALL EXISTING AND NEW EQUIPMENT DURING CONSTRUCTION.
   - 1.11. ANY EXISTING ATTACHMENTS AND/OR PROJECTIONS ON THE STRUCTURE THAT MAY INTERFERE WITH THE INSTALLATION OF THE MODIFICATION SYSTEM WILL HAVE TO BE REMOVED AND RELOCATED, REPLACED, OR RE-INSTALLED AS REQUIRED AFTER THE MODIFICATION IS SUCCESSFULLY COMPLETED. THE CONTRACTOR SHALL IDENTIFY AND COORDINATE THESE ITEMS PRIOR TO CONSTRUCTION WITH OWNER, TESTING AGENCY, AND EOR.
   - 1.12. THE CLIMBING FACILITIES, SAFETY CLIMB AND ALL PARTS THEREOF SHALL NOT BE IMPEDED, MODIFIED OR ALTERED WITHOUT THE EXPRESS APPROVAL OF THE EOR.

2. **STRUCTURAL STEEL**
   - 2.1. SHOP DRAWINGS SHALL BE SUBMITTED TO ENGINEER FOR APPROVAL. DRAWINGS MUST BEAR THE CHECKERS INITIALS BEFORE SUBMITTING TO ENGINEER. CONTRACTOR SHALL REVIEW THE SHOP DRAWINGS FOR GENERAL CONFORMANCE TO THE PLANS PRIOR TO SUBMITTING TO ENGINEER. SHOP DRAWINGS SHALL INCLUDE ERECTION DRAWINGS, ELEVATIONS AND SECTIONS. SHOP DRAWINGS SHALL ALSO INCLUDE SECTION PROFILES, SIZES, CONNECTIONS, ATTACHMENTS, REINFORCING, ANCHORAGE SIZE AND TYPE OF FASTENERS AND ASSEMBLIES.
   - 2.2. STRUCTURAL STEEL MATERIALS, FABRICATION, DETAILING, AND WORKMANSHIP SHALL CONFORM TO THE LATEST EDITION OF THE FOLLOWING REFERENCE STANDARDS:
     - 2.2.1. BY THE AMERICAN INSTITUTE OF STEEL CONSTRUCTION (AISC):
       - 2.2.1.1. "SPECIFICATION FOR STRUCTURAL STEEL BUILDINGS,"
       - 2.2.1.2. SPECIFICATION FOR STRUCTURAL JOINTS USING ASTM HIGH STRENGTH BOLTS," AS APPROVED BY THE RESEARCH COUNCIL ON STRUCTURAL CONNECTIONS.
       - 2.2.1.3. "CODE OF STANDARD PRACTICE FOR STEEL BUILDINGS AND BRIDGES"
     - 2.2.2. BY THE AMERICAN WELDING SOCIETY (AWS):
       - 2.2.2.1. "STRUCTURAL WELDING CODE – STEEL D1.1."
       - 2.2.2.2. "STANDARD SYMBOLS FOR WELDING, BRAZING, AND NONDESTRUCTIVE EXAMINATION"
     - 2.2.3. BY THE AMERICAN SOCIETY OF CIVIL ENGINEERS:
       - 2.2.3.1. DESIGN OF LATTICED STEEL TRANSMISSION STRUCTURES (ASCE 10-XX)
       - 2.2.3.2. DESIGN OF STEEL TRANSMISSION POLE STRUCTURES (ASCE 48-XX)
   - 2.3. NEW STEEL (UNLESS NOTED OTHERWISE) SHALL CONFORM TO THE REQUIREMENTS OF THE ASTM STANDARD SPECIFICATION FOR STRUCTURAL STEEL AS NOTED BELOW:
     - M, S, C, MC, L, PLATES & BARS - ASTM A36 (36 KSI YIELD POINT MATERIAL)
     - W - ASTM A992 (50 KSI YIELD POINT MATERIAL)
     - HSS RECTANGULAR - ASTM A500, GRADE B (46 KSI YIELD POINT MATERIAL)
     - HSS ROUND - ASTM A500, GRADE B (42 KSI YIELD POINT MATERIAL)
     - PIPE - ASTM A53, GRADE B (35 KSI YIELD POINT MATERIAL)
   - 2.4. NEW BOLTS SHALL CONFORM TO THE REQUIREMENTS OF ASTM A325, TYPE "X" UNLESS NOTED OTHERWISE. ALL HOLES FOR BOLTS SHALL BE 1/16" LARGER THAN THE BOLT DIAMETER WITH AN EDGE DISTANCE OF AT LEAST 1 3/4 TIMES THE BOLT DIAMETER AND A SPACING OF AT LEAST 3 TIMES THE BOLT DIAMETER UNLESS NOTED OTHERWISE. ALL BOLTS SHALL BE PROVIDED WITH LOCK WASHERS, PALNUTS, OR LOCK NUTS.
   - 2.5. ALL STRUCTURAL BOLTS SHALL BE INSTALLED AND TIGHTENED TO A SNUG TIGHT CONDITION ACCORDING TO THE REQUIREMENTS OF THE AISC 'SPECIFICATION FOR STRUCTURAL JOINTS USING HIGH-STRENGTH BOLTS', UNLESS NOTED OTHERWISE ON DRAWINGS.
   - 2.6. ALL U-BOLTS SHALL BE A307 UNLESS NOTED OTHERWISE.
   - 2.7. ANY MATERIAL OR WORKMANSHIP WHICH IS OBSERVED TO BE DEFECTIVE OR INCONSISTENT WITH THE CONTRACT DOCUMENTS SHALL BE CORRECTED, MODIFIED, OR REPLACED AT THE CONTRACTOR'S EXPENSE.
   - 2.8. WELDED CONNECTIONS SHALL CONFORM TO THE LATEST REVISED CODE OF THE AMERICAN WELDING SOCIETY, AWS D1.1. ALL WELD ELECTRODES SHALL BE E70XX UNLESS NOTED OTHERWISE ON THE DRAWINGS.
   - 2.9. ALL WELDED CONNECTIONS SHALL BE MADE BY WELDERS CERTIFIED BY AWS. CONTRACTOR SHALL SUBMIT WELDERS' CERTIFICATION AND QUALIFICATION DOCUMENTATION TO OWNER'S TESTING AGENCY FOR REVIEW AND APPROVAL PRIOR TO CONSTRUCTION.
   - 2.10. ALL SURFACES MUST BE CLEAN AND FREE OF WELD SPATTER. ALL EDGES SHALL BE DEBURRED.
   - 2.11. ALL PARTS ARE TO BE MARKED WITH ITEM NUMBERS USING 3/4" HIGH STEEL STENCILS.
   - 2.12. SHOP SHALL ASSEMBLE AND VERIFY FIT AND GAPS BEFORE BREAKDOWN FOR GALVANIZING.
   - 2.13. NO FIELD WELDING SHALL BE DONE TO THE EXISTING STRUCTURE WITHOUT THE PRIOR APPROVAL OF THE OWNER AND SUPERVISION BY THE INSPECTION/TESTING AGENCY.
   - 2.14. FIELD CUTTING OF STEEL:
     - 2.14.1. IMPORTANT CUTTING AND WELDING SAFETY GUIDELINES: THE CONTRACTOR SHALL FOLLOW ALL OWNER CUTTING, WELDING, FIRE PREVENTION AND SAFETY GUIDELINES. PRIOR TO CONSTRUCTION, THE CONTRACTOR SHALL OBTAIN A COPY OF THE CURRENT OWNER GUIDELINES. ANY DAMAGE TO THE COAX CABLES, AND/OR OTHER EQUIPMENT AND/OR THE STRUCTURE, RESULTING FROM THE CONTRACTOR'S ACTIVITIES SHALL BE REPAIRED AT THE CONTRACTOR'S EXPENSE. THE INSPECTION/TESTING AGENCY SHALL CLOSELY AND CONTINUOUSLY MONITOR THIS ACTIVITY.
     - 2.14.2. ALL REQUIRED CUTS SHALL BE CUT WITHIN THE DIMENSIONS SHOWN ON THE DRAWINGS. NO CUTS SHALL EXTEND BEYOND THE OUTLINE OF THE DIMENSIONS SHOWN ON THE DRAWINGS. ALL CUT EDGES SHALL BE GROUND SMOOTH AND DE-BURRED. CONTRACTOR TO AVOID 90 DEGREE CORNERS. IT MAY BE NECESSARY TO DRILL STARTER HOLES AS REQUIRED TO MAKE THE CUTS.
     - 2.14.3. FIELD HOLES SHALL BE PUNCHED OR DRILLED. BURNING OF MEMBERS SHALL NOT BE PERMITTED.

3. **BASE PLATE GROUT - (NOT REQUIRED)**

4. **FOUNDATION WORK - (NOT REQUIRED)**

5. **CAST-IN-PLACE CONCRETE - NOT REQUIRED)**

6. **EPOXY GROUTED REINFORCING ANCHOR RODS - (NOT REQUIRED)**

7. **TOUCH UP OF GALVANIZING**
   - 7.1. THE CONTRACTOR SHALL TOUCH UP ANY AND ALL AREAS OF GALVANIZING ON THE EXISTING STRUCTURE OR NEW COMPONENTS THAT ARE DAMAGED OR ABRADED DURING CONSTRUCTION. GALVANIZED SURFACES DAMAGED DURING TRANSPORTATION OR ERECTION AND ASSEMBLY AS WELL AS ANY AND ALL ABRASIONS, CUTS AND FIELD DRILLING SHALL BE TOUCHED UP WITH TWO (2) COATS OF ZRC COLD GALVANIZING COMPOUND. FILM THICKNESS PER COAT SHALL BE: WET 3.0 MILS; DRY 1.5 MILS. APPLY PER ZRC (MANUFACTURER) RECOMMENDED PROCEDURES. CONTACT ZRC AT 1-800-831-3275 FOR PRODUCT INFORMATION.
   - 7.2. CONTRACTOR SHALL CLEAN AND PREPARE ALL FIELD WELDS ON GALVANIZED AND PRIME PAINTED SURFACES FOR TOUCH-UP COATING IN ACCORDANCE WITH AWS D1.1. OWNER'S TESTING AGENCY SHALL VERIFY THE PREPARED SURFACE PRIOR TO APPLICATION OF THE TOUCH-UP COATING.
   - 7.3. OWNER'S TESTING AGENCY SHALL TEST AND VERIFY THE COATING THICKNESS AFTER THE CONTRACTOR HAS APPLIED THE ZRC COLD GALVANIZING COMPOUND AND IT HAS SUFFICIENTLY DRIED. AREAS FOUND TO BE INADEQUATELY COATED, SHALL BE RE-COATED BY THE CONTRACTOR AND RE-TESTED BY THE TESTING AGENCY.

8. **HOT-DIP GALVANIZING**
   - 8.1. HOT-DIP GALVANIZE ALL STRUCTURAL STEEL MEMBERS AND ALL STEEL ACCESSORIES, BOLTS, WASHERS, ETC. PER ASTM A123, ASTM A386 OR PER ASTM A153, AS APPROPRIATE.
   - 8.2. PROPERLY PREPARE STEEL ITEMS FOR GALVANIZING.
   - 8.3. DRILL OR PUNCH WEEP AND/OR DRAINAGE HOLES WITH EOR APPROVAL OF LOCATIONS.
   - 8.4. ALL GALVANIZING SHALL BE DONE AFTER FABRICATION IS COMPLETED AND PRIOR TO FIELD INSTALLATION.

9. **PERPETUAL INSPECTION AND MAINTENANCE BY THE OWNER**
   - 9.1. AFTER THE CONTRACTOR HAS SUCCESSFULLY COMPLETED THE INSTALLATION OF THE MODIFICATION SYSTEM AND THE WORK HAS BEEN ACCEPTED BY OWNER, OWNER WILL BE RESPONSIBLE FOR THE LONG TERM AND PERPETUAL INSPECTION AND MAINTENANCE OF THE STRUCTURE AND MODIFICATION SYSTEM.

STATE OF CONNECTICUT
JAMES R. ANTOSZEWSKI
31499
LICENSED
PROFESSIONAL ENGINEER

11/18/2019

REV	DATE	DESCRIPTION
1	11-15-2019	NO CHANGE

© Copyright 2019, by Paul J. Ford and Company. All Rights Reserved. This document and the data contained herein, is proprietary to Paul J. Ford and Company, issued in strict confidence and shall not, without the prior written permission of Paul J. Ford and Company, be reproduced, copied or used for any purpose other than the intended use for this specific project.

PJF PAUL J. FORD & COMPANY
250 E Broad St, Ste 600 · Columbus, OH 43215
Phone 614.221.6679 www.pauljford.com

AT&T MOBILITY
1025 LENOX PARK BLVD. 3RD FLOOR TOWER ASSET GROUP
ATLANTA, GEORGIA 30319

EVERSOURCE STRUCTURE #1321
CIRCUIT #1483/1545
670 CHAPEL STREET
STRATFORD, FAIRFIELD COUNTY, CONNECTICUT
BU #841299 / AT&T SITE #CTL02043, FA #10035240

PROJECT No:	37519-3029.001.6125 R1
DRAWN BY:	FE
DESIGNED BY:	CEC
CHECKED BY:	CEC
DATE:	8-15-2019

GENERAL NOTES

N-1

SHEET #2 OF 5

37519-3029.001.6125 R1.DWG

MODIFICATION INSPECTION NOTES:

1. **INSPECTION AND TESTING**
   - 1.1. INSPECTION SERVICES WHICH ARE FURNISHED BY OTHERS ARE STILL REQUIRED WHEN THE EOR PERFORMS SUPPORT SERVICES DURING CONSTRUCTION.
   - 1.2. OBSERVED DISCREPANCIES BETWEEN THE WORK AND THE CONTRACT DOCUMENTS SHALL BE CORRECTED BY THE CONTRACTOR AT NO ADDITIONAL COST.
   - 1.3. AN INDEPENDENT QUALIFIED INSPECTION/TESTING AGENCY SHALL BE SELECTED, RETAINED AND PAID FOR BY OWNER FOR THE SOLE PURPOSE OF INSPECTING, TESTING, DOCUMENTING, AND APPROVING ALL WELDING AND FIELD WORK PERFORMED BY THE CONTRACTOR.
     - 1.3.1. ACCESS TO ANY PLACE WHERE WORK IS BEING DONE SHALL BE PERMITTED AT ALL TIMES.
     - 1.3.2. THE INSPECTION AGENCY SHALL SO SCHEDULE THIS WORK AS TO CAUSE A MINIMUM OF INTERRUPTION TO, AND COORDINATE WITH, THE WORK IN PROGRESS. IT IS THE CONTRACTOR'S RESPONSIBILITY TO COORDINATE THE WORK SCHEDULE WITH THE TESTING AGENCY. THE CONTRACTOR SHALL ALLOW FOR ADEQUATE TIME AND ACCESS FOR THE TESTING AGENCY TO PERFORM THEIR DUTIES.

1.4. **GENERAL**
   - 1.4.1. PERFORM PERIODIC ON-SITE OBSERVATION, INSPECTION, VERIFICATION, AND TESTING DURING THE TIME THE CONTRACTOR IS WORKING ON-SITE. AGENCY SHALL NOTIFY OWNER AND THE EOR IMMEDIATELY WHEN FIELD PROBLEMS OR DISCREPANCIES OCCUR.

1.5. **FOUNDATIONS AND SOIL PREPARATION**
   - 1.5.1. VERIFY MATERIALS AT BOTTOM OF EXCAVATION ARE ADEQUATE TO ACHIEVE THE DESIGN BEARING CAPACITY.
   - 1.5.2. VERIFY THAT EXCAVATIONS HAVE EXTENDED TO PROPER DEPTH AND ARE FOUNDED ON PROPER MATERIAL.
   - 1.5.3. PERFORM CLASSIFICATION AND TESTING OF COMPACTED FILL MATERIALS AS SPECIFIED.
   - 1.5.4. VERIFY USE OF PROPER MATERIALS, DENSITIES AND LIFT THICKNESS DURING PLACEMENT AND COMPACTION OF COMPACTED FILL.
   - 1.5.5. PRIOR TO PLACEMENT OF COMPACTED FILL, OBSERVE SUBGRADE AND VERIFY SITE HAS BEEN PREPARED PROPERLY.

1.6. **CONCRETE TESTING PER ACI**
   - 1.6.1. INSPECT PLACEMENT OF REINFORCING STEEL.
   - 1.6.2. INSPECT BOLTS TO BE INSTALLED IN CONCRETE PRIOR TO AND DURING PLACEMENT OF CONCRETE.
   - 1.6.3. VERIFY USE OF REQUIRED MIX DESIGN.
   - 1.6.4. AT THE TIME FRESH CONCRETE IS SAMPLED FABRICATE SPECIMENS FOR STRENGTH TEST, PERFORM SLUMP AND AIR CONTENT TEST AND DETERMINE TEMPERATURE OF THE CONCRETE.
   - 1.6.5. INSPECT CONCRETE PLACEMENT FOR PROPER APPLICATION TECHNIQUE.
   - 1.6.6. INSPECT SPECIFIED CURING AND TEMPERATURE TECHNIQUES.

1.7. **STRUCTURAL STEEL**
   - 1.7.1. CHECK STEEL ON THE JOB WITH THE PLANS.
   - 1.7.2. CHECK MILL CERTIFICATIONS. CALL FOR LABORATORY TEST REPORTS WHEN MILL CERTIFICATION IS IN QUESTION.
   - 1.7.3. CHECK GRADE OF STEEL MEMBERS, AND BOLTS FOR CONFORMANCE WITH DRAWINGS.
   - 1.7.4. INSPECT STEEL MEMBERS FOR DISTORTION, EXCESSIVE RUST, FLAWS AND BURNED HOLES.
   - 1.7.5. CHECK STEEL MEMBERS FOR SIZES, SWEEP AND DIMENSIONAL TOLERANCES.
   - 1.7.6. CHECK FOR SURFACE FINISH SPECIFIED, GALVANIZED.
   - 1.7.7. CHECK THAT BOLTS HAVE BEEN TIGHTENED PROPERLY.
   - 1.7.8. PRIOR TO ANY FIELD CUTTING THE CONTRACTOR SHALL MARK THE CUTOUT LINES ON THE STEEL AND THE INSPECTION/TESTING AGENCY SHALL VERIFY PROPOSED LAYOUT, LOCATION, AND DIMENSIONS. THE INSPECTION/TESTING AGENCY SHALL CLOSELY AND CONTINUOUSLY MONITOR THIS ACTIVITY.

1.8. **WELDING:**
   - 1.8.1. VERIFY FIELD WELDING PROCEDURES, WELDERS, AND WELDING OPERATORS, NOT DEEMED PREQUALIFIED, IN ACCORDANCE WITH AWS D1.1.
   - 1.8.2. INSPECT FIELD WELDED CONNECTIONS IN ACCORDANCE WITH THE REQUIREMENTS SPECIFIED AND WITH AWS D1.1.
   - 1.8.3. APPROVE FIELD WELDING SEQUENCE.
   - 1.8.4. INSPECT WELDED CONNECTIONS AS FOLLOWS AND IN ACCORDANCE WITH AWS D1.1:
     - 1.8.4.1. INSPECT WELDING EQUIPMENT FOR CAPACITY, MAINTENANCE, AND WORKING CONDITIONS.
     - 1.8.4.2. VERIFY SPECIFIED ELECTRODES AND HANDLING AND STORAGE OF ELECTRODES FOR CONFORMANCE TO SPECIFICATIONS.
     - 1.8.4.3. INSPECT PREHEATING AND INTERPASS TEMPERATURES FOR CONFORMANCE WITH AWS D1.1.
     - 1.8.4.4. VISUALLY INSPECT ALL WELDS AND VERIFY THAT QUALITY OF WELDS MEETS THE REQUIREMENTS OF AWS D1.1. OTHER TESTS MAY ALSO BE PERFORMED ON THE WELDS BY THE TESTING AGENCY IN ORDER FOR THEM TO PERFORM THEIR DUTIES FOR THIS PROJECT.
     - 1.8.4.5. SPOT TEST AT LEAST ONE FILLET WELD OF EACH MEMBER USING MAGNETIC PARTICLE.
     - 1.8.4.6. INSPECT FOR SIZE, SPACING, TYPE AND LOCATION AS PER APPROVED DRAWINGS.
     - 1.8.4.7. VERIFY THAT THE BASE METAL CONFORMS TO THE DRAWINGS.
     - 1.8.4.8. REVIEW THE REPORTS BY TESTING LABS.
     - 1.8.4.9. CHECK TO SEE THAT WELDS ARE CLEAN AND FREE FROM SLAG.
     - 1.8.4.10. INSPECT RUST PROTECTION OF WELDS AS PER SPECIFICATIONS.
     - 1.8.4.11. CHECK THAT DEFECTIVE WELDS ARE CLEARLY MARKED AND HAVE BEEN ADEQUATELY REPAIRED.
     - 1.8.4.12. FULL PENETRATION WELDS IN THE VICINITY OF THE BASE OF THE TOWER ARE REQUIRED TO BE 100% NDE INSPECTED BY UT IN ACCORDANCE WITH AWS D1.1.
     - 1.8.4.13. PARTIAL PENETRATION AND FILLET WELDS IN THE VICINITY OF THE BASE OF THE TOWER ARE REQUIRED TO BE 50% NDE INSPECTED BY MP IN ACCORDANCE WITH AWS D1.1.

1.9. **REPORTS:**
   - 1.9.1. COMPILE AND PERIODICALLY SUBMIT DAILY INSPECTION REPORTS TO OWNER.
   - 1.9.2. THE INSPECTION PLAN OUTLINED HEREIN IS INTENDED AS A DESCRIPTION OF GENERAL AND SPECIFIC ITEMS OF CONCERN. IT IS NOT INTENDED TO BE ALL-INCLUSIVE. IT DOES NOT LIMIT THE TESTING AND INSPECTION AGENCY TO THE ITEMS LISTED. ADDITIONAL TESTING, INSPECTION, AND CHECKING MAY BE REQUIRED AND SHOULD BE ANTICIPATED. THE TESTING AGENCY SHALL USE THEIR PROFESSIONAL JUDGMENT AND KNOWLEDGE OF THE JOB SITE CONDITIONS AND THE CONTRACTOR'S PERFORMANCE TO DECIDE WHAT OTHER ITEMS REQUIRE ADDITIONAL ATTENTION. THE TESTING AGENCY'S JUDGMENT MUST PREVAIL ON ITEMS NOT SPECIFICALLY COVERED. ANY DISCREPANCIES OR PROBLEMS SHALL BE BROUGHT IMMEDIATELY TO OWNER'S ATTENTION. RESOLUTIONS ARE NOT TO BE MADE WITHOUT OWNER'S REVIEW AND SPECIFIC WRITTEN CONSENT. OWNER RESERVES THE RIGHT TO DETERMINE WHETHER OR NOT A RESOLUTION IS ACCEPTABLE.
   - 1.9.3. AFTER EACH INSPECTION, THE TESTING AGENCY WILL PREPARE A WRITTEN ACCEPTANCE OR REJECTION WHICH WILL BE GIVEN TO THE CONTRACTOR AND FILED AS DAILY REPORTS TO OWNER. THIS WRITTEN ACTION WILL GIVE THE CONTRACTOR A LIST OF ITEMS TO BE CORRECTED, PRIOR TO CONTINUING CONSTRUCTION, AND/OR LOADING OF STRUCTURAL ITEMS.
   - 1.9.4. THE TESTING AGENCY DOES NOT RELIEVE THE CONTRACTOR'S CONTRACTUAL OR STATUTORY OBLIGATIONS. THE CONTRACTOR HAS THE SOLE RESPONSIBILITY FOR ANY DEVIATIONS FROM THE OFFICIAL CONTRACT DOCUMENTS. THE TESTING AGENCY WILL NOT REPLACE THE CONTRACTOR'S QUALITY CONTROL PERSONNEL.

1.10. CORRECTION OF FAILING MI'S
   - 1.10.1. IF THE MODIFICATION INSTALLATION WOULD FAIL THE MI ("FAILED MI"), THE GC SHALL WORK WITH THE OWNER TO COORDINATE A REMEDIATION PLAN IN ONE OF TWO WAYS:
     - 1.10.1.1. CORRECT FAILING ISSUES TO COMPLY WITH THE SPECIFICATIONS CONTAINED IN THE ORIGINAL CONTRACT DOCUMENTS AND COORDINATE A SUPPLEMENT MI.
     - 1.10.1.2. OR, WITH THE OWNERS APPROVAL, THE GC MAY WORK WITH THE EOR TO RE-ANALYZE THE MODIFICATION/REINFORCEMENT USING THE AS-BUILT CONDITION

1.11. PHOTOGRAPHS
   - 1.11.1. BETWEEN THE GC AND THE MI INSPECTOR THE FOLLOWING PHOTOGRAPHS, AT A MINIMUM, ARE TO BE TAKEN AND INCLUDED IN THE MI REPORT:
     - 1.11.1.1. PRE-CONSTRUCTION GENERAL SITE CONDITION
     - 1.11.1.2. PHOTOGRAPHS DURING THE REINFORCEMENT MODIFICATION CONSTRUCTION/ERECTION AND INSPECTION
       - 1.11.1.2.1. RAW MATERIALS
       - 1.11.1.2.2. PHOTOS OF ALL CRITICAL DETAILS
       - 1.11.1.2.3. FOUNDATION MODIFICATIONS
       - 1.11.1.2.4. WELD PREPARATION
       - 1.11.1.2.5. BOLT INSTALLATION AND TORQUE
       - 1.11.1.2.6. FINAL INSTALLED CONDITION
       - 1.11.1.2.7. SURFACE COATING REPAIR
     - 1.11.1.3. POST CONSTRUCTION PHOTOGRAPHS
       - 1.11.1.3.1. FINAL INFIELD CONDITION
   - 1.11.2. PHOTOS OF ELEVATED MODIFICATIONS TAKEN FROM THE GROUND SHALL BE CONSIDERED INADEQUATE.

STATE OF CONNECTICUT
JAMES R. ANTOSZEWSKI
31499
LICENSED
PROFESSIONAL ENGINEER

11/18/2019

POST-MODIFICATION CHECKLIST

REQUIRED	REPORT ITEM	BRIEF DESCRIPTION
		PRE-CONSTRUCTION
X	MI CHECKLIST DRAWING	THIS CHECKLIST SHALL BE INCLUDED IN THE MI REPORT
X	EOR APPROVED SHOP DRAWINGS	FABRICATION DRAWINGS SHALL BE SUBMITTED TO THE ENGINEER OF RECORD FOR REVIEW. THE CONTRACTOR SHALL PROVIDE THE APPROVED SHOP DRAWINGS TO THE MI INSPECTOR FOR INCLUSION IN THE MI REPORT.
NA	FABRICATION INSPECTION	A LETTER FROM THE FABRICATOR, STATING THAT THE WORK WAS PERFORMED IN ACCORDANCE WITH INDUSTRY STANDARDS AND THE CONTRACT DOCUMENTS SHALL BE PROVIDED TO THE MI INSPECTOR FOR INCLUSION IN THE MI REPORT.
NA	FABRICATOR CERTIFIED WELD INSPECTION	CRITICAL SHOP WELDS THAT REQUIRE TESTING ARE NOTED ON THESE CONTRACT DRAWINGS. A CERTIFIED WELD INSPECTOR SHALL PERFORM NON-DESTRUCTIVE TESTING AND A REPORT SHALL BE PROVIDED TO THE MI INSPECTOR FOR INCLUSION IN THE MI REPORT.
NA	MATERIAL TEST REPORT (MTR)	MILL CERTIFICATION SHALL BE PROVIDED FOR ALL STEEL WITH A YIELD STRENGTH GREATER THAN 36 KSI AND THIS DOCUMENTATION SHALL BE PROVIDED TO THE MI INSPECTOR FOR INCLUSION IN THE MI REPORT.
NA	FABRICATOR NDE INSPECTION	A VISUAL OBSERVATION OF A PORTION OF THE EXISTING STRUCTURE (AS NOTED ON THESE DRAWINGS) IS REQUIRED AND A WRITTEN REPORT SHALL BE PROVIDED TO THE MI INSPECTOR FOR INCLUSION IN THE MI REPORT.
NA	NDE REPORT OF MONOPOLE BASE PLATE (AS REQUIRED)	A VISUAL OBSERVATION OF THE POLE TO BASE PLATE CONNECTION IS REQUIRED AND A WRITTEN REPORT SHALL BE PROVIDED TO THE MI INSPECTOR FOR INCLUSION IN THE MI REPORT.
X	PACKING SLIPS	THE MATERIAL SHIPPING LIST SHALL BE PROVIDED TO THE MI INSPECTOR FOR INCLUSION IN THE MI REPORT.
		CONSTRUCTION
X	CONSTRUCTION INSPECTIONS	A LETTER FROM THE GENERAL CONTRACTOR STATING THAT THE WORKMANSHIP WAS PERFORMED IN ACCORDANCE WITH INDUSTRY STANDARDS AND THESE CONTRACT DRAWINGS SHALL BE PROVIDED TO THE MI INSPECTOR FOR INCLUSION IN THE MI REPORT.
NA	FOUNDATION INSPECTIONS	A VISUAL OBSERVATION OF THE EXCAVATION AND REBAR SHALL BE PERFORMED BEFORE PLACING THE CONCRETE. A WRITTEN REPORT SHALL BE PROVIDED TO THE MI INSPECTOR FOR INCLUSION IN THE MI REPORT.
NA	CONCRETE COMP. STRENGTH AND SLUMP TESTS	THE CONCRETE MIX DESIGN, SLUMP TEST, AND COMPRESSIVE STRENGTH TESTS SHALL BE PROVIDED TO THE MI INSPECTOR FOR INCLUSION IN THE MI REPORT.
NA	POST INSTALLED ANCHOR ROD VERIFICATION	ANCHOR ROD INSTALLATION SHALL INCLUDE VERIFICATION BY LETTER AND PHOTOGRAPHIC DOCUMENTATION.
NA	BASE PLATE GROUT VERIFICATION	A LETTER FROM THE GENERAL CONTRACTOR SHALL BE PROVIDED TO THE MI INSPECTOR THAT CERTIFIES THAT THE GROUT WAS INSTALLED IN ACCORDANCE WITH SPECIFICATIONS FOR INCLUSION IN THE MI REPORT.
NA	CONTRACTOR'S CERTIFIED WELD INSPECTION	A CERTIFIED WELD INSPECTOR SHALL INSPECT AND TEST AS NECESSARY ALL FIELD WELDS AND A REPORT SHALL BE PROVIDED TO THE MI INSPECTOR FOR INCLUSION IN THE MI REPORT. PRE, DURING AND POST WELD INSPECTION IS REQUIRED.
NA	EARTHWORK: LIFT AND DENSITY	FOUNDATION SUB-GRADES SHALL BE INSPECTED AND APPROVED BY A GEOTECHNICAL ENGINEER AND A REPORT SHALL BE PROVIDED TO THE MI INSPECTOR FOR INCLUSION IN THE MI REPORT.
X	ON SITE COLD GALVANIZING VERIFICATION	THE GENERAL CONTRACTOR SHALL PROVIDE DOCUMENTATION TO THE MI INSPECTOR VERIFYING THAT ANY ON-SITE COLD GALVANIZING WAS APPLIED IN ACCORDANCE WITH SPECIFICATIONS.
NA	GUY WIRE TENSION REPORT	THE GENERAL CONTRACTOR SHALL PROVIDE A REPORT TO THE MI INSPECTOR INDICATING THE TEMPERATURE AND TENSION IN EVERY GUY CABLE FOR INCLUSION IN THE MI REPORT.
X	GC AS-BUILT DOCUMENTS	THE GENERAL CONTRACTOR SHALL SUBMIT A COPY OF THE CONTRACT DRAWINGS EITHER STATING "INSTALLED AS DESIGNED" OR NOTING ANY CHANGES THAT WERE REQUIRED AND APPROVED BY THE ENGINEER OF RECORD DUE TO FIELD CONDITIONS.
NA	MICROPILE / ROCK ANCHOR	THE GENERAL CONTRACTOR SHALL PROVIDE INSTALLER'S DRILLING AND INSTALLATION LOGS AND QA/QC DOCUMENTATION TO THE MI INSPECTOR FOR INCLUSION IN THE MI REPORT.
X	EQUIPMENT CLEARANCE VERIFICATION	THE GENERAL CONTRACTOR SHALL PROVIDE MEASUREMENTS INDICATED ON DRAWING MI-2 FOR INCLUSION IN THE MI-REPORT.
		POST-CONSTRUCTION
X	MI INSPECTOR REDLINE OR RECORD DRAWING(S)	THE MI INSPECTOR SHALL OBSERVE AND REPORT ANY DISCREPANCIES BETWEEN THE CONTRACTORS REDLINE DRAWING AND THE ACTUAL COMPLETED INSTALLATION.
NA	POST INSTALLED ANCHOR ROD PULL TESTING	POST INSTALLED ANCHOR RODS SHALL BE TESTED IN ACCORDANCE WITH SPECIFICATIONS AND A REPORT SHALL BE PROVIDED TO THE MI INSPECTOR FOR INCLUSION IN THE MI REPORT.
X	PHOTOGRAPHS	PHOTOGRAPHS SHALL BE SUBMITTED TO THE MI WHICH DOCUMENT ALL PHASES OF THE CONSTRUCTION. THE PHOTOS SHALL BE ORGANIZED IN A MANNER THAT EASILY IDENTIFIES THE EXACT LOCATION OF THE PHOTO.
NA	POST INSTALLED MICROPILE / ROCK ANCHOR TESTING	POST INSTALLED ANCHORS SHALL BE TESTED AND INSPECTED IN ACCORDANCE WITH SPECIFICATION STATED ON MICROPILE/ROCK ANCHOR NOTES.

NOTE: X DENOTES A DOCUMENT NEEDED FROM THE CONTRACTOR FOR THE MI REPORT
NA DENOTES A DOCUMENT THAT IS NOT REQUIRED FOR THE MI REPORT

REV	DATE	DESCRIPTION
1	11-15-2019	NO CHANGE

© Copyright 2019, by Paul J. Ford and Company. All Rights Reserved. This document and the data contained herein, is proprietary to Paul J. Ford and Company, issued in strict confidence and shall not, without the prior written permission of Paul J. Ford and Company, be reproduced, copied or used for any purpose other than the intended use for this specific project.

PJF PAUL J. FORD & COMPANY
250 E Broad St, Ste 600 · Columbus, OH 43215
Phone 614.221.6579 www.pauljford.com

AT&T MOBILITY
1025 LENOX PARK BLVD, 3RD FLOOR TOWER ASSET GROUP
ATLANTA, GEORGIA 30319

EVERSOURCE STRUCTURE #1321
CIRCUIT #1-83/1545
670 CHAPEL STREET
STRATFORD, FAIRFIELD COUNTY, CONNECTICUT
BU #841299 / AT&T SITE #CTL02043, FA #10035240

PROJECT No:	37519-3029.001.6125 R1
DRAWN BY:	FE
DESIGNED BY:	CEC
CHECKED BY:	CEC
DATE:	8-15-2019

INSPECTION NOTES

MI-1

SHEET #3 OF 5

37519-3029.001.6125 R1.DWG

NOTE:
TOWER SHOWN IS GENERIC AND
MAY NOT REFLECT ACTUAL TOWER

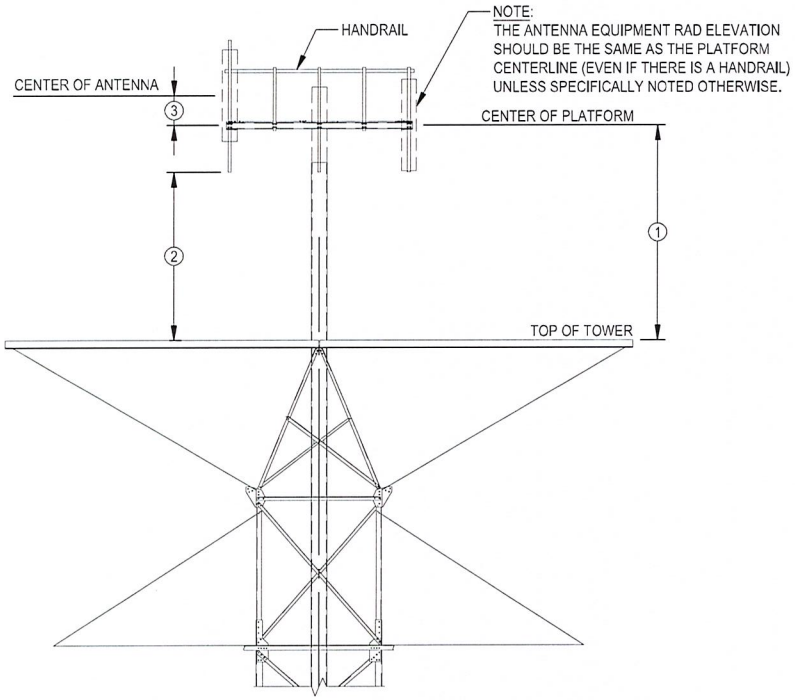

EQUIPMENT CLEARANCE VERIFICATION

FIELD MEASUREMENTS

MARK	MEASURMENT	DESCRIPTION
1		DISTANCE FROM CENTER OF PLATFORM TO HIGHEST POINT ON THE SUPPORTING STRUCTURE
2		DISTANCE BETWEEN LOWEST PIECE OF ANTENNA EQUIPMENT (OR MOUNTING PIPE) AND THE HIGHEST POINT ON SUPPORTING STRUCTURE
3		IF ANTENNA EQUIPMENT RAD ELEVATION IS NOT THE SAME AS THE CENTERLINE OF PLATFORM, THEN PROVIDE VERTICAL OFFSET DIMENSION AS SHOWN

STATE OF CONNECTICUT
JAMES R. ANTOSZEWSKI
31499
LICENSED
PROFESSIONAL ENGINEER

11/18/2019

REV	DATE	DESCRIPTION
1	11-15-2019	NO CHANGE

© Copyright 2019, by Paul J. Ford and Company. All Rights Reserved. This document and the data contained herein, is proprietary to Paul J. Ford and Company, issued in strict confidence and shall not, without the prior written permission of Paul J. Ford and Company, be reproduced, copied or used for any purpose other than the intended use for this specific project.

PJF PAUL J. FORD & COMPANY
250 E Broad St. Ste 600 · Columbus, OH 43215
Phone 614.221.6679 www.pauljford.com

AT&T MOBILITY
1025 LENOX PARK BLVD, 3RD FLOOR TOWER ASSET GROUP
ATLANTA, GEORGIA 30319

EVERSOURCE STRUCTURE #1321
CIRCUIT #1-83/1545
670 CHAPEL STREET
STRATFORD, FAIRFIELD COUNTY, CONNECTICUT
BU #841299 / AT&T SITE #CTL02043, FA #10035240

PROJECT No:	37519-3029.001.6125.R1
DRAWN BY:	FE
DESIGNED BY:	CEC
CHECKED BY:	CFH
DATE:	8-15-2019

FIELD MEASUREMENTS AND NOTES

MI-2

SHEET #4 OF 5

37519-3029.001.6125.R1.DWG

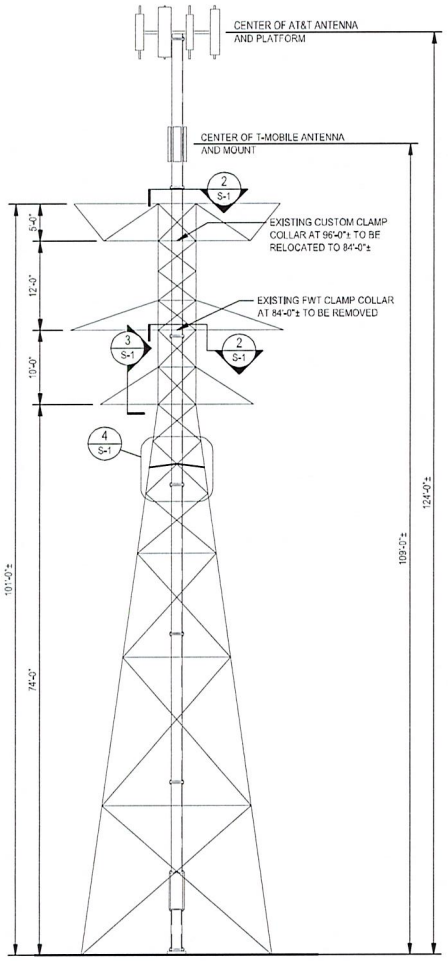

TOWER ELEVATION 1 / S-1
TRANSVERSE FACE

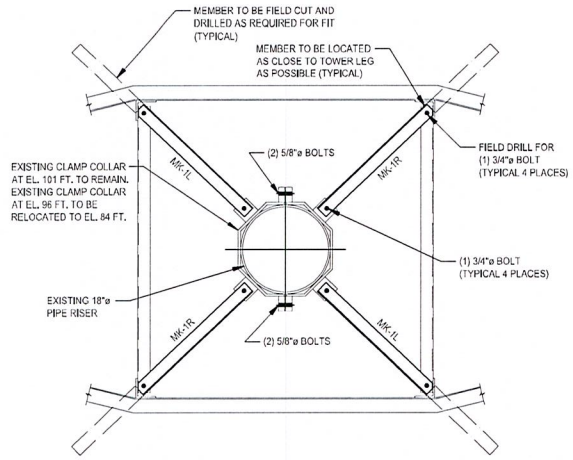

SECTION 2 / S-1
TYPICAL TWO ELEVATIONS

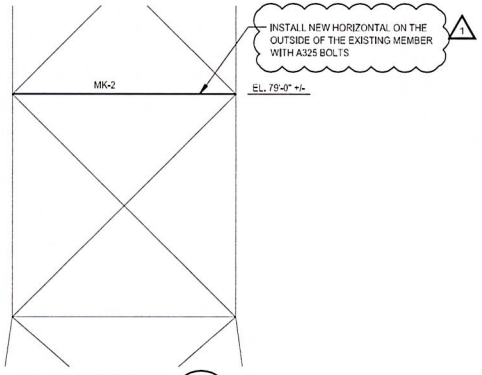

ELEVATION 3 / S-1
LONGITUDINAL FACE (TYPICAL TWO FACES)

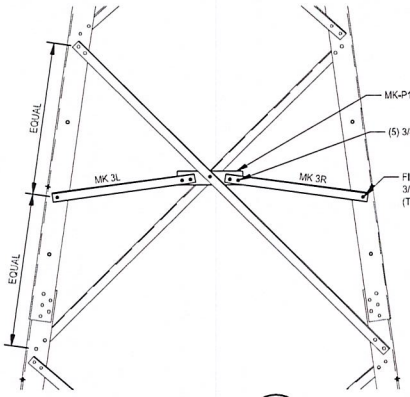

ELEVATION 4 / S-1
(TYPICAL FOUR FACES)

1

NOTICE TO ERECTOR
BACKCHARGES FOR CORRECTIVE WORK OR REPLACED MATERIALS WILL NOT BE ACCEPTED UNLESS EXPRESSLY AUTHORIZED BY PAUL J. FORD & COMPANY BEFORE ANY SUCH COST ARE INCURRED

DO NOT SCALE THIS DRAWING

REV	DATE	DESCRIPTION
1	11-15-2019	MOVED DETAILS, **MATERIAL LIST & ADDED** ELEVATION 4 & NOTE

STATE OF CONNECTICUT
JAMES R. ANTOSZEWSKI
31499
LICENSED
PROFESSIONAL ENGINEER
11/18/2019

© Copyright 2019, by Paul J. Ford and Company. All Rights Reserved. This document and the data contained herein, is proprietary to Paul J. Ford and Company, issued in strict confidence and shall not, without the prior written permission of Paul J. Ford and Company, be reproduced, copied or used for any purpose other than the intended use for this specific project.

PJF PAUL J. FORD & COMPANY
250 E Broad St, Ste 600 · Columbus, OH 43215
Phone 614.221.6679 · www.pauljford.com

AT&T MOBILITY
1025 LENOX PARK BLVD, 3RD FLOOR TOWER ASSET GROUP
ATLANTA, GEORGIA 30319

EVERSOURCE STRUCTURE #1321
CIRCUIT #1483/1545
670 CHAPEL STREET
STRATFORD, FAIRFIELD COUNTY, CONNECTICUT
BU #841299 / AT&T SITE #CTL02043, FA #10035240

PROJECT No:	37519-3029.001.6125 R1
DRAWN BY:	FE
DESIGNED BY:	CEC
CHECKED BY:	CEC
DATE:	8-15-2019

TOWER ELEVATIONS AND DETAILS

S-1
SHEET #5 OF 5

37519-3029.001.6125 R1.DWG

MATERIAL LIST

FOR "ONE" TOWER MODIFICATION

MARK NO.	DETAILED ON SHT.	NO. REQ'D.	TOTAL REQ'D.	DESCRIPTION	LENGTH	TOTAL WT. (lb)
MK-1L/1R	S-2	4L/4R	8	L2 1/2 x 2 1/2 x 1/4	4'-0"	131
MK-2	S-2	2	2	L2 1/2 x 2 1/2 x 1/4	4'-0 1/2"	33
MK-3L/3R	S-2	4L/4R	8	L2 1/2 x 2 1/2 x 1/4	3'-2 1/2"	104
MK-P1	S-2	4	4	PLATE 3/8" x 2 3/4"	1'-5 1/2"	28
TOTAL GALVANIZED WEIGHT (+3.5%) = 306 LB					TOTAL MEMBER WEIGHT	296

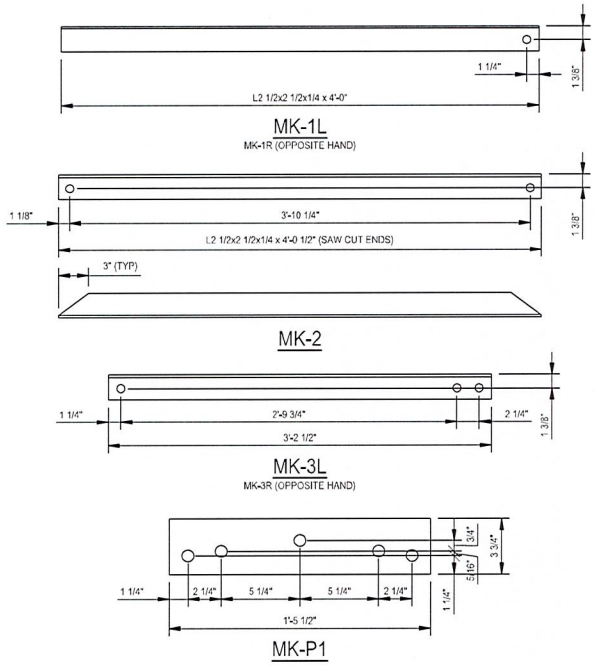

NOTATION:
FOR OPPOSITE HAND NOTES SEE ERECTION VIEW FOR CLARIFICATIONS.

NOTE:
ALL HOLES TO BE 13/16"ø UNLESS OTHERWISE NOTED.

DO NOT SCALE THIS DRAWING

REV	DATE	DESCRIPTION
1	11-15-2019	ADDED SHEET

STATE OF CONNECTICUT
JAMES R. ANTOSZEWSKI
31499
LICENSED
PROFESSIONAL ENGINEER

11/18/2019

© Copyright 2019, by Paul J. Ford and Company. All Rights Reserved. This document and the data contained herein, is proprietary to Paul J. Ford and Company, issued in strict confidence and shall not, without the prior written permission of Paul J. Ford and Company, be reproduced, copied or used for any purpose other than the intended use for this specific project.

PJF PAUL J. FORD & COMPANY
250 E Broad St, Ste 600 · Columbus, OH 43215
Phone 614.221.6679 www.pauljford.com

AT&T MOBILITY
1025 LENOX PARK BLVD, 3RD FLOOR TOWER ASSET GROUP
ATLANTA, GEORGIA 30319

EVERSOURCE STRUCTURE #1321
CIRCUIT #1-83/1545
670 CHAPEL STREET
STRATFORD, FAIRFIELD COUNTY, CONNECTICUT
BU #841299 / AT&T SITE #CTL02043, FA #10035240

PROJECT No:	37519-3029.001.6125 R1
DRAWN BY:	FE
DESIGNED BY:	CEC
CHECKED BY:	CEC
DATE:	8-15-2019

DETAILS AND MATERIAL LIST

S-2

SHEET #5 OF 5

37519-3029.001.6125 R1.DWG

Exhibit D

Structural Analysis Report

PAUL J. FORD & COMPANY

EVERSOURCE

Structural Analysis Report

Transmission Tower #1321

STRATFORD NU Site #BU# 841299 ATT# CT2043

Prepared on behalf of:

at&t

1025 Lenox Park Blvd, 3rd Floor AT&T Tower Asset Group
Atlanta, GA 30319

PJF Project #A37519-3029.001.6125 R1

REVISION	DATE	DESCRIPTION	ENGINEER	PJF TRACKING
0	07/19/2019	ORIGINAL ISSUE DATE	CEC	.001.6000
1	08/15/2019	MODIFICATION DESIGN	CEC	.001.6125
2	11/15/2019	Client Comments	CEC	.001.6125 R1

Columbus
250 E Broad St, Suite 600
Columbus, OH 43215
Phone 614.221.6679

Founded in 1965

50 Years 1965 - 2015

www.PaulJFord.com

Orlando
1801 Lee Rd, Suite 230
Winter Park, FL 32789
Phone 407.898.9039

100% Employee Owned

PAUL J. FORD & COMPANY

EVERSOURCE

Report Date:	November 15, 2019
Client:	Crown Castle 3530 Toringdon Way Charlotte, NC 29730 Attn: Heather Simeone 980-209-8236 Heather.Simeone@crowncastle.com
Utility Name:	Eversource Energy
Structure:	Existing 101-ft Transmission Tower #1321
Line Reference:	1483/1545 - 115kV Line
Site Name:	AT&T - STRATFORD NU
Site Reference #:	BU# 841299 ATT# CT2043
Site Address:	670 Chapel Street
City, County, State:	Stratford, Fairfield County, CT
Latitude, Longitude:	41.238, -73.122389
PJF Project:	A37519-3029.001.6125 R1

Paul J. Ford and Company is pleased to submit this "**Structural Modification Analysis Report**". The purpose of this analysis is to determine if the structure has sufficient capacity to support the existing and proposed equipment described herein.

Analysis Criteria:

Reference Standard:	IEEE Standards Association, "National Electrical Safety Code" (NESC) C2-2017 ANSI/TIA-222-G-2-2009 Standard, "Structural Standard for Antenna Supporting Structures and Antennas – Addendum 2" ASCE Standard 10-15, "Design of Latticed Steel Transmission Structures"
Utility Specification:	Eversource OTRM 059 Rev. 1 (11/19/2018)

Proposed Appurtenance Loads:

The structure was analyzed with the addition of the proposed appurtenances loads shown in Table 1 combined with the existing and reserved loads shown in Table 2 and 3 of this report.

Summary of Analysis Results:

Existing Structure:	**Pass***
Existing Foundation:	**Pass**

*Sufficient upon completion of proposed modifications specified herein.

We at Paul J. Ford and Company appreciate the opportunity of providing our continuing professional services to you and Crown Castle. If you have any questions or need further assistance on this or any other projects please give us a call.

Respectfully Submitted by:
Paul J. Ford and Company

Charles E. Carrillo, P.E.
Project Engineer
ccarrillo@pauljford.com

STATE OF CONNECTICUT
JAMES R. ANTOSZEWSKI
31499
LICENSED
PROFESSIONAL ENGINEER
11/18/2019

TABLE OF CONTENTS

1) INTRODUCTION

2) ANALYSIS CRITERIA

Reference Standard
Utility Specification
Table 1 – Proposed Antenna and Cable Information
Table 2 – Existing and Reserved Antenna and Cable Information
Table 3 – Existing Electrical Utility Wire Information
Table 4a – Utility Tower Analysis - Load Case Information
Table 4b – Antenna Mount Analysis – Load Case Information

3) ANALYSIS PROCEDURE

Table 5 – Documents Provided
3.1) Analysis Method
3.2) Assumptions

4) ANALYSIS RESULTS

Table 6 – Maximum Structure Element Usage
Table 7 – Maximum Foundation Usages
Table 8 – Maximum Antenna Mount Usages
4.1) Recommendations

5) CONCLUSION

STANDARD CONDITIONS

APPENDIX A – STRUCTURE PHOTOS / PROFILE SHEET

APPENDIX B – LOAD CALCULATIONS

Wire Load Sheets (Provided by NU)
TIA-222-G - Load Calculations for Pipe Riser
NESC - Load Calculations for Pipe Riser

APPENDIX C – COMPUTER OUTPUT

C1 - TIA-222-G – Risa 3D Pipe Riser Analysis – Output
C2 - NESC - Risa 3-D Pipe Riser Analysis – Output (for reactions only)
C3 - PLS Software
PLS Software – Structure Model Node Diagram
PLS Software – Structure Usage Diagram (Color Coded by Usage)
PLS Software – Output

APPENDIX D – SUPPLEMENTAL CALCULATIONS

Pipe Riser Flange and Bolt Calculations
Anchor Rod Check
Foundation Analysis

APPENDIX E – SUPPLEMENTAL INFORMATION

1) INTRODUCTION

The purpose of this analysis is to determine if the existing structure and existing foundations have sufficient capacity to support the existing and proposed equipment along with the existing wire loads described herein. The existing structure is a 101′ tall double circuit steel transmission tower designated as a 115kV type "A - Tangent Tower". The existing tower consists of an 81′ tall "Standard Tower" body and (4) 20′ Leg Extensions.

The existing antenna mounting system consists of a 10' low profile platform installed on an existing 18"ø FWT pipe riser. Refer to Tables 1 and 2 below and drawing SK-1 located in Appendix A for further antenna equipment and mount information.

The existing and/or proposed modifications, as shown on the drawings referenced in Table 5 of this report have been taken into account as part of this analysis.

2) ANALYSIS CRITERIA

Reference Standard: IEEE Standards Association, "National Electrical Safety Code" (NESC) C2-2017
ANSI/TIA-222-G-2-2009 Standard, "Structural Standard for Antenna Supporting Structures and Antennas – Addendum 2"
ASCE Standard 10-15, "Design of Latticed Steel Transmission Structures"

Utility Specification: Eversource OTRM 059 Rev. 1 (11/19/2018)

Table 1 – Proposed Antenna and Cable Information[1]

Mounting Level (feet)	Center Line Elevation (feet)	Quantity	Manufacturer	Model	Number of Feed Lines[2]	Feed Line Size (inches)	Note
124	124	3	Kathrein	80010965	-	-	-
		6	CCI Antennas	TMABPD7823VG12A			

Notes:
1. See drawing SK-1 in "Appendix A – Structure Profile Sheet" for further details.

Table 2 – Existing and Reserved Antenna and Cable Information[1]

Mounting Level (feet)	Center Line Elevation (feet)	Quantity	Manufacturer	Model	Number of Feed Lines[2]	Feed Line Size (inches)	Note
124	124	3	CCI Antennas	HPA-65R-BUU-H6	18 (I)	1-1/4	3
		3	Powerwave	7770.00			
		6	CCI Antennas	DTMABP7819VG12A			
		6	Powerwave	LGP21401			
		1	-	LP 303-1			
109	109	3	RFS/Celwave	APX16DWV-16DWV-S-E-A20	3 (E)	3/8	
		1	-	Collar Mount	12 (E)	1-1/4	

Notes:
1. See drawing SK-1 in "Appendix A – Structure Profile Sheet" for further details.
2. (E) – Coax mounted externally and exposed to the wind. (I) – Coax mounted internally and shielded from the wind.
3. Existing equipment to remain.

Table 3 – Existing Electrical Utility Wire Information[1]

Wire Designation	Wire Type	Tension Angle (degrees)	Wind Span		Weight Span	
			Back (feet)	Ahead (feet)	Back (feet)	Ahead (feet)
Shield Wire	(2) - 7#8 Alumoweld	0	-	-	-	-
Conductor	(6) - 795 Tern ACSR					

Notes:
1. Wire loads provided by the utility. See "Appendix B – Load Calculations" for further details.

Table 4a – Utility Tower Analysis - Load Case Information[1]

Load Case Name	Radial Ice (inches)	Wind Speed (mph)	Overload Capacity Factors				Note
			Vertical	Wind	Wire Tension		
					Long.	Trans.	
NESC 250B (Heavy)	0.5	39.5	1.5	2.5	1.1	1.65	-
NESC 250C (Extreme Wind)	0	110	1.0	1.0	1.0	1.0	2

Notes:
1. As per the requirements of NU Design Criteria Table, NESC C2-2007 – Construction Grade B, and ASCE 10-15, "Design of Latticed Steel Transmission Structures".
2. Apply a 1.25 X Gust Response Factor to all telecommunication equipment projected above top of tower and a 1.0 X Gust Response Factor to the tower structure as per NU Design Criteria Table.

Table 4b – Antenna Mount Analysis - Load Case Information[1]

Load Case Name	Radial Ice (inches)	Wind Speed (mph)	Note
TIA/EIA – High Wind	0	97	-
TIA/EIA – Wind and Ice	0.75	50	-

Notes:
1. As per the requirements of the CT State Building Code, V. ultimate = 125mph (Risk Cat. II) converted to V. nominal = 97mph for use with TIA/EIA-222-G, Structure Class III, Exposure C and Topographic Category 1.

3) ANALYSIS PROCEDURE

Table 5 – Documents Provided

Document	Remarks	Reference	Source
Structure Erection Drawings	R.D. Coombs & Co., 04/11/1957	01021-50007 Sht. E1	Eversource
Structure Detail Drawings	R.D. Coombs & Co., 05/13/1957	01021-50007 Sht. 1 & 2	
Structure Foundation Drawings	R.D. Coombs & Co., Varies	01021-60006, 01021-50007 Sht. F1, F2 & EF1	
Erection Book	FWT, 08/24/1999	Job No. 18942003	
Order ID	CCI, Inc., 12/04/2018	ID: 471412 Rev. 0	CCISites
Previous SA Report	Centek, 01/26/2016	16002.001 Rev. 0	
Previous Structure Mod Drawings	Centek, 02/25/2014	13317.000 Rev. 2	
Previous SA Report	PJF, 07/22/2019	A37518-3875.001.6000	PJF
Proposed Modification Drawings	PJF, 11/15/2019	A37519-3029.001.6125 R1	

3.1) Analysis Method

Tower™ is a commercially available analysis software package made by Powerline Systems, Inc. Tower™ was used to create a three-dimensional model of the tower and calculate member stresses for various load cases. Equipment and wire load calculations were completed using Microsoft Excel or MathCAD and applied to the structure model as point loads. Load Calculations are included in Appendix B. Selected output from the analysis is included in Appendix C.

Risa-3D is a commercially available analysis software package made by Risa Technologies, LLC. For this analysis, Risa-3D was used to create a three-dimensional model of the 18"ø FWT pipe riser and calculate member stresses and reactions for various load cases. Those reactions were then applied to the tower model as point loads. Equipment and wire load calculations were completed using Microsoft Excel or MathCAD and applied to the 18"ø FWT pipe riser and tower models as point loads. Load Calculations are included in Appendix B. Select output from the Risa-3D and Tower™ analyses are included in Appendix C.

Foundation calculations were completed using MathCAD. Load Calculations and selected output from the analysis is included in Appendix D.

3.2) Assumptions

1) *The structure was built in accordance with the manufacturer's specifications.*
2) *The structure has been maintained in accordance with the manufacturer's specifications.*
3) *The analysis assumes that no physical deterioration has occurred in any of the structural components and that all members have the same load carrying capacity as the day the structure was erected. No allowance was made for any damaged, missing, or rusted members.*
4) *All bolts have been torqued to the snug-tight condition as defined by AISC.*
5) *No residual stresses exist due to incorrect tower erection.*
6) *All welds conform to the requirements of AWS D1.1.*
7) *The configuration of antennas, cables, mounts and other appurtenances are as specified in Tables 1 and 2 of this report and as per the referenced documents in Table 5.*
8) *The wind loads applied to the structure, due to the antenna installations, are based on the full projected area of all antenna equipment in all directions (i.e. no shielding used).*
9) *Pipe riser and utility tower are in plumb condition.*
10) *Tower steel material assumed to be A7 with minimum yield stress of 33ksi.*
11) *Tower bolts assumed to be 3/4" with a minimum shear capacity of 12.44kips.*
12) *FWT clamping collar capacity based on the slip critical value of the 5/8"ø A325 bolts used in the connection between the bracing members and the clamping collar itself at elevations 20', 40', 74' and 84'. A slip critical value of 4.51 kips per bolt was assumed, as per Table 7-3 AISC 14th Edition.*
13) *The structure modifications, as shown in the referenced Centek documents, have been installed.*
14) *No further modifications to the structure have been made other than those referenced herein.*
15) *This analysis does not imply to meet any serviceability criteria such as deflections, twist, sway, etc. unless expressly agreed to in writing.*

This analysis may be affected if any assumptions are not valid or have been made in error. Paul J Ford and Company should be notified to determine the effect on the structural integrity of the tower.

4) ANALYSIS RESULTS

The following table provides the maximum usages for each structure element type and the loading condition in which they occur:

Table 6 – Maximum Structure Element Usages

Tower – Analysis			
Element Type	**Member Designation**	**Load Case**	**Usage (%)**
Leg Members	6X	250C: Extreme Wind (Trans.)	93
Vertical "X" Bracing / Diagonal Members	37Y	250C: Extreme Wind (Trans.)	64
Horizontal Members & Hangers	40X	250C: Extreme Wind (Trans.)	81
FWT Pipe Riser – Supplemental Analysis			
Element Type		**Load Case**	**Usage (%)**
Pipe Riser		TIA/EIA – High Wind	40
Flange Plate		TIA/EIA – High Wind	64
Flange Bolts		TIA/EIA – High Wind	78
Support Collars		TIA/EIA – High Wind	26
		Maximum Structure Element Usage =	**93**
		Existing Structure Result =	**Pass**

Notes:
1. See "Appendix C – Computer Output" for further detailed information.
2. See "Appendix D – Supplemental Calculations" for calculations supporting the % capacity used.

Table 7 – Maximum Structure Foundation Usages

Foundation Analysis		
	Load Case	**Usage (%)**
Uplift Check	250C: Extreme Wind (Trans.)	58
Bearing Check	250C: Extreme Wind (Trans.)	62
Sliding Check	250C: Extreme Wind (Trans.)	22
Overturning Check	250C: Extreme Wind (Trans.)	26
	Maximum Foundation Usage =	**62**
	Existing Foundation Result =	**Pass**

Notes:
1. See "Appendix D – Supplemental Calculations" for calculations supporting the % capacity used.

4.1) Recommendations

Verify all previous modifications were installed as per drawings referenced in Table 5 of this report.

Install proposed modifications as per drawings referenced in Table 5 of this report.

5) CONCLUSION

The structure, existing transmission tower #1321, modified as per the proposed modifications drawings referenced in Table 5 of this report, has **sufficient** capacity to support the existing and proposed equipment along with the existing wire loads described herein.

The existing foundation(s) for structure, modified transmission tower #1321 have **sufficient** capacity to support the existing and proposed equipment along with the existing wire loads described herein.

This analysis is presented based upon the assumptions listed herein and information provided by the utility and the wireless carrier. If the existing conditions are different than those presented here, Paul J. Ford and Company should be contacted to verify the validity of the conclusions presented here.

STANDARD CONDITIONS FOR FURNISHING OF PROFESSIONAL ENGINEERING SERVICES ON EXISTING STRUCTURES BY PAUL J. FORD AND COMPANY

1) It is the responsibility of the client to ensure that the information provided to Paul J. Ford and Company is accurate and complete. Paul J. Ford and Company will rely on the accuracy and completeness of such information in performing or furnishing services under this project.

2) If the existing conditions are not as represented on the referenced drawings and/or documents, Paul J. Ford and Company should be contacted immediately to evaluate the significance of the deviation.

3) The structure has been analyzed according to the minimum design loads recommended by the Reference Standard. If additional design loads are required, Paul J. Ford and Company should be made aware of this prior to the start of the project.

4) The standard of care for all Professional Engineering Services performed or furnished by Paul J. Ford and Company under this project will be the skill and care used by members of the Consultant's profession practicing under similar circumstances at the same time and in the same locality.

5) All Services are performed, results obtained, and recommendations made in accordance with generally accepted engineering principles and practices. Paul J. Ford and Company is not responsible for the conclusions, opinions and/or recommendations made by others based on the information supplied herein.

****

APPENDIX A

STRUCTURE PHOTOS / PROFILE SHEET

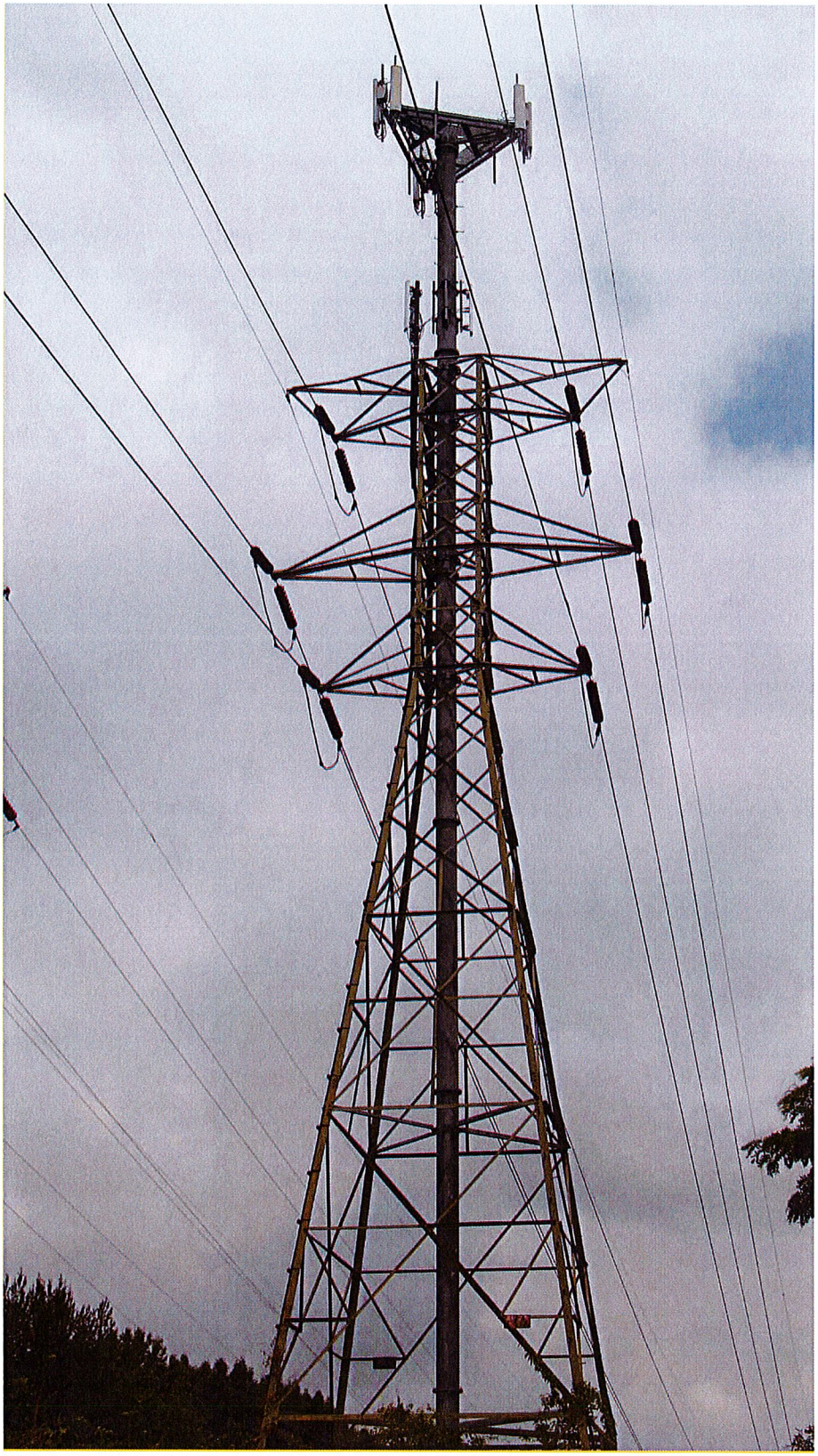

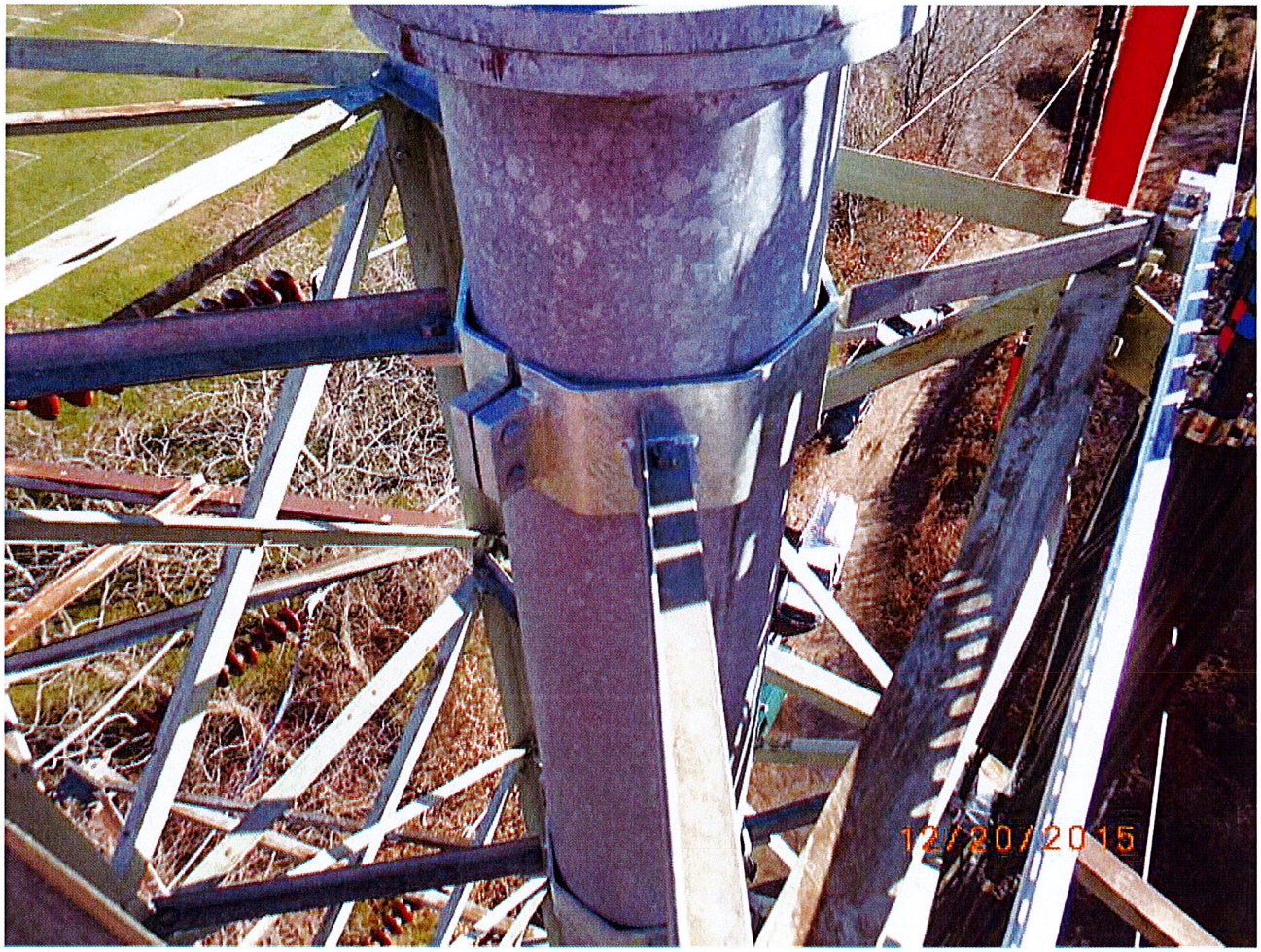
12/20/2015

FINAL EQUIPMENT INFORMATION				
RAD ℄	STATUS	QUANTITY	MANUFACTURER	MODEL
124'-0"±	PROPOSED	3	KATHREIN	80010965 (ANTENNA)
		6	CCI	TMABPD7823VG12A (TMA)
	EXISTING	3	CCI	HPA-65R-BUU-H6 (ANTENNA)
		3	POWERWAVE	7770.00 (ANTENNA)
		6	CCI	DTMABP7819VG12A (TMA)
		6	POWERWAVE	LGP21401 (TMA)
		1	-	LP 303-1
109'-0"±	EXISTING	3	RFS	APX16DWV-16DWV-S-E-A20 (ANTENNA)
		1	-	COLLAR MOUNT

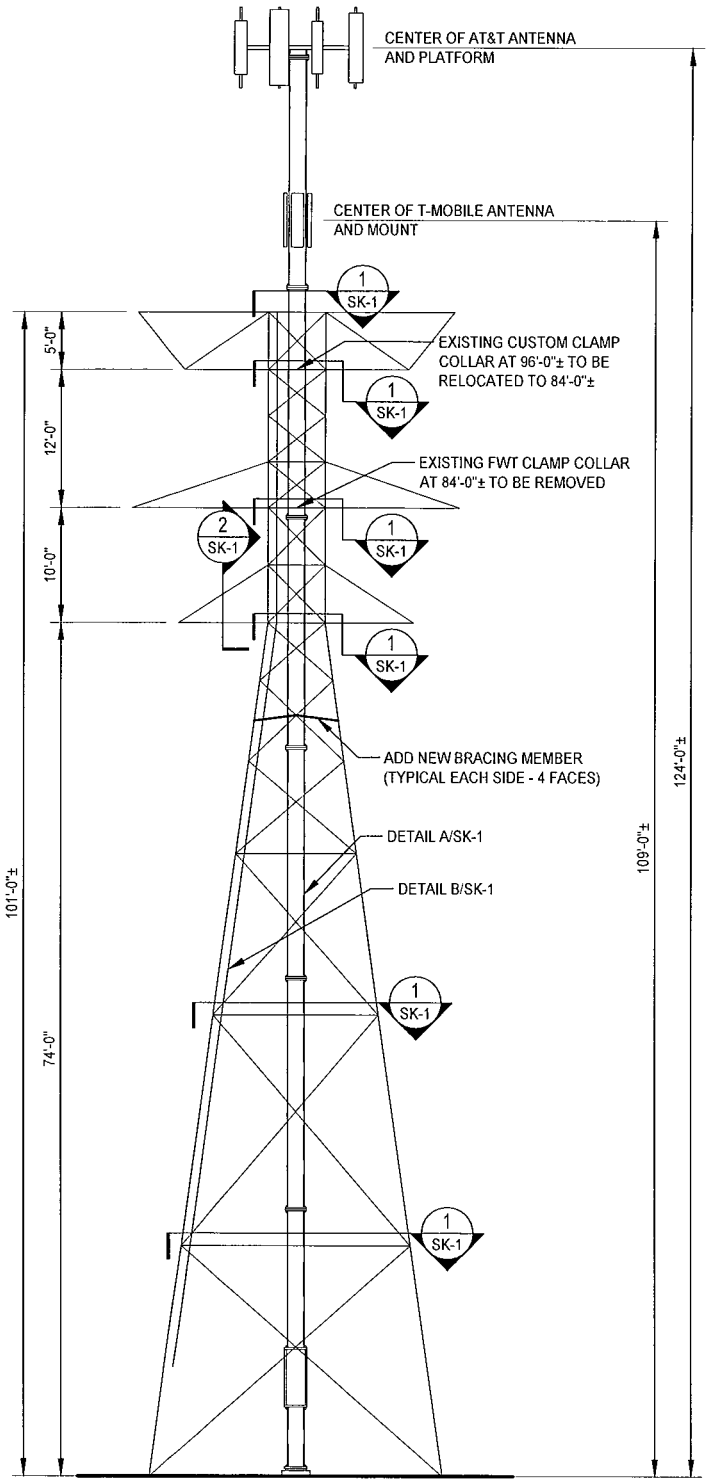

ELEVATION
TRANSVERSE FACE
LOOKING AHEAD

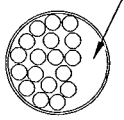

DETAIL A SK-1
COAX DETAIL

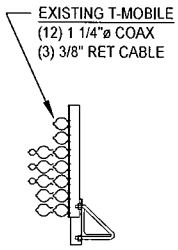

DETAIL B SK-1
COAX DETAIL

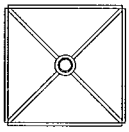

SECTION 1 SK-1
INTERNAL BRACING DETAIL

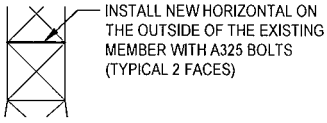

ELEVATION 2 SK-1
LONGITUDINAL FACE

NOTE:
INFORMATION PROVIDED ON THIS DRAWING IS INTENDED SOLELY FOR THE PURPOSES OF THIS STRUCTURAL ANALYSIS REPORT. PJF WILL NOT BE RESPONSIBLE FOR ITEMS FABRICATED, PURCHASED OR INSTALLED BASED ON THIS DRAWING.

REFERENCE DRAWINGS:

PIPE RISER DESIGN	FWT	18942003	8-24-1999

PAUL J. FORD & COMPANY
250 E Broad St, Ste 600 · Columbus, OH 43215
Phone 614.221.6679 www.pauljford.com

AT&T MOBILITY
1025 LENOX PARK BLVD, 3RD FLOOR TOWER ASSET GROUP
ATLANTA, GEORGIA 30319

Description:	TRANSMISSION TOWER WITH POWERMOUNT - ELEVATIONS AND SECTIONS
Utility:	EVERSOUCE
Structure Info:	TOWER #1321; CIRCUIT #1483/1545
Site Info:	670 CHAPEL STREET, STRATFORD, FAIRFIELD COUNTY, CONNECTICUT BU #841299 / AT&T SITE #CTL02043, FA #10035240

Job No.	37519-3029.001.6125 R1
Drawn by:	FE
Designed by:	CEC
Checked by:	CBH
Date	11-15-2019

SK-1

37519-3029.001.6125 R1 profile.dwg

APPENDIX B

LOAD CALCULATIONS

Project: 1483/1545 Lines, Structure 1321
Date: 6/20/19
Engineer: JS
Purpose: Recalculate wire loads for AT&T site.

Shield Wires:
1545: 7#8 Alumoweld, sagged in PLS-CADD
1483: 7#8 Alumoweld, sagged in PLS-CADD

Conductors:
795 Tern ACSR, sagged in PLS-CADD

NESC 250B

1545 Line			1483 Line	
AlWld	V	1359	1359	V AlWld
	T	-1264	-1264	T
	L	0	0	L
Phase:	V	3394	3683	V
	T	-1824	-1891	T
	L	804	-120	L
Phase:	V	3401	3495	V
	T	-1833	-1872	T
	L	1687	-470	L
t Phase:	V	3417	3474	V
	T	-1845	-1873	T
	L	2222	1893	L

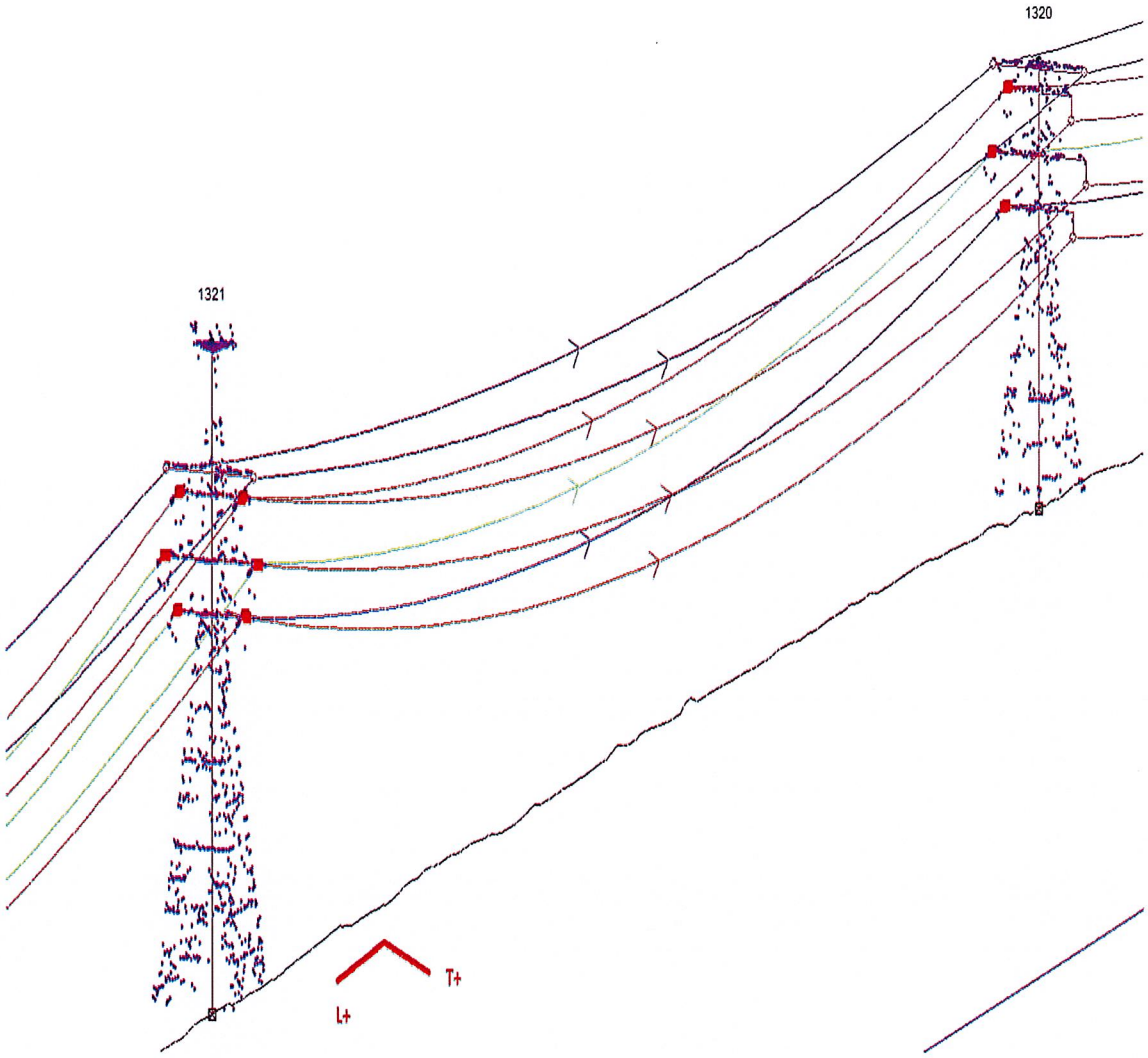
1320
1321
T+
L+

Project: 1483/1545 Lines, Structure 1321
Date: 6/20/19
Engineer: JS
Purpose: Recalculate wire loads for AT&T site.

Shield Wires:
1545: 7#8 Alumoweld, sagged in PLS-CADD
1483: 7#8 Alumoweld, sagged in PLS-CADD

Conductors:
795 Tern ACSR, sagged in PLS-CADD

NESC 250C

1545 Line			1483 Line	
AlWld	V	415	415	V AlWld
	T	-860	-860	T
	L	0	0	L
Phase:	V	1494	1646	V
	T	-2367	-2401	T
	L	590	270	L
Phase:	V	1493	1552	V
	T	-2313	-2329	T
	L	1046	72	L
t Phase:	V	1497	1533	V
	T	-2267	-2280	T
	L	1302	1237	L

Tower Input Data

The tower is a monopole.
This tower is designed using the TIA-222-G standard.
The following design criteria apply:

Basic wind speed of 97 mph.
Structure Class III.
Exposure Category C.
Topographic Category 1.
Crest Height 0.00 ft.
Nominal ice thickness of 0.7500 in.
Ice thickness is considered to increase with height.
Ice density of 56 pcf.
A wind speed of 50 mph is used in combination with ice.
Temperature drop of 50 °F.
Deflections calculated using a wind speed of 60 mph.
Weld together tower sections have flange connections..
Connections use galvanized A325 bolts, nuts and locking devices. Installation per TIA/EIA-222 and AISC Specifications..
Tower members are "hot dipped" galvanized in accordance with ASTM A123 and ASTM A153 Standards..
Welds are fabricated with ER-70S-6 electrodes..
A non-linear (P-delta) analysis was used.
Pressures are calculated at each section.
Stress ratio used in pole design is 1.
Local bending stresses due to climbing loads, feed line supports, and appurtenance mounts are not considered.

Options

Consider Moments - Legs
Consider Moments - Horizontals
Consider Moments - Diagonals
Use Moment Magnification
√ Use Code Stress Ratios
√ Use Code Safety Factors - Guys
Escalate Ice
Always Use Max Kz
Use Special Wind Profile
Include Bolts In Member Capacity
Leg Bolts Are At Top Of Section
Secondary Horizontal Braces Leg
Use Diamond Inner Bracing (4 Sided)
SR Members Have Cut Ends
SR Members Are Concentric

Distribute Leg Loads As Uniform
Assume Legs Pinned
Assume Rigid Index Plate
Use Clear Spans For Wind Area
Use Clear Spans For KL/r
Retension Guys To Initial Tension
Bypass Mast Stability Checks
Use Azimuth Dish Coefficients
√ Project Wind Area of Appurt.
Autocalc Torque Arm Areas
Add IBC .6D+W Combination
Sort Capacity Reports By Component
Triangulate Diamond Inner Bracing
Treat Feed Line Bundles As Cylinder
Ignore KL/ry For 60 Deg. Angle Legs

Use ASCE 10 X-Brace Ly Rules
Calculate Redundant Bracing Forces
Ignore Redundant Members in FEA
SR Leg Bolts Resist Compression
All Leg Panels Have Same Allowable
Offset Girt At Foundation
Consider Feed Line Torque
Include Angle Block Shear Check
Use TIA-222-G Bracing Resist. Exemption
Use TIA-222-G Tension Splice Exemption
Poles
Include Shear-Torsion Interaction
Always Use Sub-Critical Flow
Use Top Mounted Sockets
Pole Without Linear Attachments
Pole With Shroud Or No Appurtenances
Outside and Inside Corner Radii Are Known

Pole Section Geometry

Section	Elevation ft	Section Length ft	Pole Size	Pole Grade	Socket Length ft
L1	124.00-102.67	21.33	HSS18x0.375	A53-B-42 (42 ksi)	
L2	102.67-82.67	20.00	HSS18x0.375	A53-B-42 (42 ksi)	
L3	82.67-62.67	20.00	HSS18x0.375	A53-B-42 (42 ksi)	
L4	62.67-42.67	20.00	HSS18x0.375	A53-B-42 (42 ksi)	
L5	42.67-22.67	20.00	HSS18x0.375	A53-B-42 (42 ksi)	
L6	22.67-0.00	22.67	HSS18x0.375	A53-B-42 (42 ksi)	

Tower Elevation ft	Gusset Area (per face) ft^2	Gusset Thickness in	Gusset Grade	Adjust. Factor A_f	Adjust. Factor A_r	Weight Mult.	Double Angle Stitch Bolt Spacing Diagonals in	Double Angle Stitch Bolt Spacing Horizontals in	Double Angle Stitch Bolt Spacing Redundants in
L1 124.00-102.67				1	1	1			
L2 102.67-82.67				1	1	1			
L3 82.67-62.67				1	1	1			
L4 62.67-42.67				1	1	1			
L5 42.67-22.67				1	1	1			
L6 22.67-0.00				1	1	1			

Discrete Tower Loads

Description	Face or Leg	Offset Type	Offsets: Horz Lateral Vert ft ft ft	Azimuth Adjustment °	Placement ft		C_AA_A Front ft^2	C_AA_A Side ft^2	Weight lb
HPA-65R-BUU-H6	A	From Face	3.00	0.0000	124.00	No Ice	9.22	4.65	47.90
			0.00			1/2" Ice	10.00	5.36	105.23
			0.00			1" Ice	10.79	6.09	168.85
HPA-65R-BUU-H6	B	From Face	3.00	0.0000	124.00	No Ice	9.22	4.65	47.90
			0.00			1/2" Ice	10.00	5.36	105.23
			0.00			1" Ice	10.79	6.09	168.85
HPA-65R-BUU-H6	C	From Face	3.00	0.0000	124.00	No Ice	9.22	4.65	47.90
			0.00			1/2" Ice	10.00	5.36	105.23
			0.00			1" Ice	10.79	6.09	168.85
Powerwave Technologies 7770 w/ Mount Pipe	A	From Face	3.00	0.0000	124.00	No Ice	5.62	4.32	72.90
			0.00			1/2" Ice	6.02	5.08	124.54
			0.00			1" Ice	6.41	5.74	183.77
Powerwave Technologies 7770 w/ Mount Pipe	B	From Face	3.00	0.0000	124.00	No Ice	5.62	4.32	72.90
			0.00			1/2" Ice	6.02	5.08	124.54
			0.00			1" Ice	6.41	5.74	183.77
Powerwave Technologies 7770 w/ Mount Pipe	C	From Face	3.00	0.0000	124.00	No Ice	5.62	4.32	72.90
			0.00			1/2" Ice	6.02	5.08	124.54
			0.00			1" Ice	6.41	5.74	183.77

Description	Face or Leg	Offset Type	Offsets: Horz Lateral Vert ft ft ft	Azimuth Adjustment °	Placement ft		C_AA_A Front ft^2	C_AA_A Side ft^2	Weight lb
(2) DTMABP7819VG12A	A	From Face	3.00	0.0000	124.00	No Ice	0.98	0.34	19.18
			0.00			1/2" Ice	1.10	0.42	26.48
			0.00			1" Ice	1.23	0.51	35.63
(2) DTMABP7819VG12A	B	From Face	3.00	0.0000	124.00	No Ice	0.98	0.34	19.18
			0.00			1/2" Ice	1.10	0.42	26.48
			0.00			1" Ice	1.23	0.51	35.63
(2) DTMABP7819VG12A	C	From Face	3.00	0.0000	124.00	No Ice	0.98	0.34	19.18
			0.00			1/2" Ice	1.10	0.42	26.48
			0.00			1" Ice	1.23	0.51	35.63
(2) LGP214nn	A	From Face	3.00	0.0000	124.00	No Ice	1.05	0.23	0.90
			0.00			1/2" Ice	1.18	0.30	8.09
			0.00			1" Ice	1.32	0.37	17.17
(2) LGP214nn	B	From Face	3.00	0.0000	124.00	No Ice	1.05	0.23	0.90
			0.00			1/2" Ice	1.18	0.30	8.09
			0.00			1" Ice	1.32	0.37	17.17
(2) LGP214nn	C	From Face	3.00	0.0000	124.00	No Ice	1.05	0.23	0.90
			0.00			1/2" Ice	1.18	0.30	8.09
			0.00			1" Ice	1.32	0.37	17.17
80010965 w/ Mount Pipe	A	From Face	3.00	0.0000	124.00	No Ice	12.26	5.79	136.24
			0.00			1/2" Ice	13.03	6.47	226.19
			0.00			1" Ice	13.80	7.17	328.20
80010965 w/ Mount Pipe	B	From Face	3.00	0.0000	124.00	No Ice	12.26	5.79	136.24
			0.00			1/2" Ice	13.03	6.47	226.19
			0.00			1" Ice	13.80	7.17	328.20
80010965 w/ Mount Pipe	C	From Face	3.00	0.0000	124.00	No Ice	12.26	5.79	136.24
			0.00			1/2" Ice	13.03	6.47	226.19
			0.00			1" Ice	13.80	7.17	328.20
(2) TMABPD7823VG12A	A	From Face	3.00	0.0000	124.00	No Ice	1.37	0.52	26.00
			0.00			1/2" Ice	1.52	0.62	35.87
			0.00			1" Ice	1.67	0.73	47.89
(2) TMABPD7823VG12A	B	From Face	3.00	0.0000	124.00	No Ice	1.37	0.52	26.00
			0.00			1/2" Ice	1.52	0.62	35.87
			0.00			1" Ice	1.67	0.73	47.89
(2) TMABPD7823VG12A	C	From Face	3.00	0.0000	124.00	No Ice	1.37	0.52	26.00
			0.00			1/2" Ice	1.52	0.62	35.87
			0.00			1" Ice	1.67	0.73	47.89
Platform Mount [LP 303-1]	C	None		0.0000	124.00	No Ice	14.69	14.69	1250.00
						1/2" Ice	18.01	18.01	1568.94
						1" Ice	21.34	21.34	1942.01
APX16DWV-16DWV-S-E-A 20 w/ Mount Pipe	A	From Face	1.00	0.0000	109.00	No Ice	6.29	2.76	61.39
			0.00			1/2" Ice	6.86	3.27	105.01
			0.00			1" Ice	7.45	3.79	157.36
APX16DWV-16DWV-S-E-A 20 w/ Mount Pipe	B	From Face	1.00	0.0000	109.00	No Ice	6.29	2.76	61.39
			0.00			1/2" Ice	6.86	3.27	105.01
			0.00			1" Ice	7.45	3.79	157.36
APX16DWV-16DWV-S-E-A 20 w/ Mount Pipe	C	From Face	1.00	0.0000	109.00	No Ice	6.29	2.76	61.39
			0.00			1/2" Ice	6.86	3.27	105.01
			0.00			1" Ice	7.45	3.79	157.36
Collar Mount [SO 102-3]	C	None		0.0000	109.00	No Ice	3.00	3.00	81.00
						1/2" Ice	3.48	3.48	111.00
						1" Ice	3.96	3.96	141.00

Tower Pressures - No Ice

$G_H = 1.100$

Section Elevation ft	z ft	K_Z	q_z psf	A_G ft²	Face	A_F ft²	A_R ft²	A_{leg} ft²	Leg %	C_AA_A In Face ft²	C_AA_A Out Face ft²
L1	113.33	1.299	34	32.000	A	0.000	32.000	32.000	100.00	0.000	0.000
124.00-102.67					B	0.000	32.000		100.00	0.000	0.000
					C	0.000	32.000		100.00	0.000	0.000
L2	92.67	1.245	33	30.000	A	0.000	30.000	30.000	100.00	0.000	0.000
102.67-82.67					B	0.000	30.000		100.00	0.000	0.000
					C	0.000	30.000		100.00	0.000	0.000
L3 82.67-62.67	72.67	1.183	31	30.000	A	0.000	30.000	30.000	100.00	0.000	0.000
					B	0.000	30.000		100.00	0.000	0.000
					C	0.000	30.000		100.00	0.000	0.000
L4 62.67-42.67	52.67	1.106	29	30.000	A	0.000	30.000	30.000	100.00	0.000	0.000
					B	0.000	30.000		100.00	0.000	0.000
					C	0.000	30.000		100.00	0.000	0.000
L5 42.67-22.67	32.67	1	26	30.000	A	0.000	30.000	30.000	100.00	0.000	0.000
					B	0.000	30.000		100.00	0.000	0.000
					C	0.000	30.000		100.00	0.000	0.000
L6 22.67-0.00	11.33	0.85	22	34.000	A	0.000	34.000	34.000	100.00	0.000	0.000
					B	0.000	34.000		100.00	0.000	0.000
					C	0.000	34.000		100.00	0.000	0.000

Tower Pressure - With Ice

$G_H = 1.100$

Section Elevation ft	z ft	K_Z	q_z psf	t_Z in	A_G ft²	Face	A_F ft²	A_R ft²	A_{leg} ft²	Leg %	C_AA_A In Face ft²	C_AA_A Out Face ft²
L1	113.33	1.299	8	2.1212	39.542	A	0.000	39.542	39.542	100.00	0.000	0.000
124.00-102.67						B	0.000	39.542		100.00	0.000	0.000
						C	0.000	39.542		100.00	0.000	0.000
L2 102.67-82.67	92.67	1.245	8	2.0789	36.930	A	0.000	36.930	36.930	100.00	0.000	0.000
						B	0.000	36.930		100.00	0.000	0.000
						C	0.000	36.930		100.00	0.000	0.000
L3 82.67-62.67	72.67	1.183	7	2.0290	36.763	A	0.000	36.763	36.763	100.00	0.000	0.000
						B	0.000	36.763		100.00	0.000	0.000
						C	0.000	36.763		100.00	0.000	0.000
L4 62.67-42.67	52.67	1.106	7	1.9647	36.549	A	0.000	36.549	36.549	100.00	0.000	0.000
						B	0.000	36.549		100.00	0.000	0.000
						C	0.000	36.549		100.00	0.000	0.000
L5 42.67-22.67	32.67	1	6	1.8731	36.244	A	0.000	36.244	36.244	100.00	0.000	0.000
						B	0.000	36.244		100.00	0.000	0.000
						C	0.000	36.244		100.00	0.000	0.000
L6 22.67-0.00	11.33	0.85	5	1.6849	40.365	A	0.000	40.365	40.365	100.00	0.000	0.000
						B	0.000	40.365		100.00	0.000	0.000
						C	0.000	40.365		100.00	0.000	0.000

Tower Pressure - Service

$G_H = 1.100$

Section Elevation ft	z ft	K_Z	q_z psf	A_G ft²	Face	A_F ft²	A_R ft²	A_{leg} ft²	Leg %	C_AA_A In Face ft²	C_AA_A Out Face ft²
L1	113.33	1.299	10	32.000	A	0.000	32.000	32.000	100.00	0.000	0.000
124.00-102.67					B	0.000	32.000		100.00	0.000	0.000
					C	0.000	32.000		100.00	0.000	0.000
L2	92.67	1.245	10	30.000	A	0.000	30.000	30.000	100.00	0.000	0.000
102.67-82.67					B	0.000	30.000		100.00	0.000	0.000
					C	0.000	30.000		100.00	0.000	0.000
L3 82.67-62.67	72.67	1.183	9	30.000	A	0.000	30.000	30.000	100.00	0.000	0.000
					B	0.000	30.000		100.00	0.000	0.000
					C	0.000	30.000		100.00	0.000	0.000
L4 62.67-42.67	52.67	1.106	9	30.000	A	0.000	30.000	30.000	100.00	0.000	0.000
					B	0.000	30.000		100.00	0.000	0.000
					C	0.000	30.000		100.00	0.000	0.000
L5 42.67-22.67	32.67	1	8	30.000	A	0.000	30.000	30.000	100.00	0.000	0.000
					B	0.000	30.000		100.00	0.000	0.000
					C	0.000	30.000		100.00	0.000	0.000
L6 22.67-0.00	11.33	0.85	7	34.000	A	0.000	34.000	34.000	100.00	0.000	0.000
					B	0.000	34.000		100.00	0.000	0.000
					C	0.000	34.000		100.00	0.000	0.000

Tower Forces - No Ice - Wind Normal To Face

Section Elevation ft	Add Weight lb	Self Weight lb	Face	e	C_F	q_z psf	D_F	D_R	A_E ft²	F lb	w plf	Ctrl. Face
L1	0.00	1404.88	A	1	0.6	34	1	1	32.000	722.18	33.85	C
124.00-102.67			B	1	0.6		1	1	32.000			
			C	1	0.6		1	1	32.000			
L2	0.00	1317.07	A	1	0.6	33	1	1	30.000	648.95	32.45	C
102.67-82.67			B	1	0.6		1	1	30.000			
			C	1	0.6		1	1	30.000			
L3	0.00	1317.07	A	1	0.6	31	1	1	30.000	616.57	30.83	C
82.67-62.67			B	1	0.6		1	1	30.000			
			C	1	0.6		1	1	30.000			
L4	0.00	1317.07	A	1	0.6	29	1	1	30.000	576.17	28.81	C
62.67-42.67			B	1	0.6		1	1	30.000			
			C	1	0.6		1	1	30.000			
L5	0.00	1317.07	A	1	0.6	26	1	1	30.000	521.05	26.05	C
42.67-22.67			B	1	0.6		1	1	30.000			
			C	1	0.6		1	1	30.000			
L6 22.67-0.00	0.00	1492.68	A	1	0.6	22	1	1	34.000	501.93	22.14	C
			B	1	0.6		1	1	34.000			
			C	1	0.6		1	1	34.000			
Sum Weight:	0.00	8165.86						OTM	239841.11 lb-ft	3586.85		

Tower Forces - No Ice - Wind 60 To Face

Section Elevation ft	Add Weight lb	Self Weight lb	Face	e	C_F	q_z psf	D_F	D_R	A_E ft²	F lb	w plf	Ctrl. Face
L1	0.00	1404.88	A	1	0.6	34	1	1	32.000	722.18	33.85	C
124.00-102.67			B	1	0.6		1	1	32.000			
			C	1	0.6		1	1	32.000			
L2	0.00	1317.07	A	1	0.6	33	1	1	30.000	648.95	32.45	C
102.67-82.67			B	1	0.6		1	1	30.000			
			C	1	0.6		1	1	30.000			
L3	0.00	1317.07	A	1	0.6	31	1	1	30.000	616.57	30.83	C
82.67-62.67			B	1	0.6		1	1	30.000			
			C	1	0.6		1	1	30.000			
L4	0.00	1317.07	A	1	0.6	29	1	1	30.000	576.17	28.81	C
62.67-42.67			B	1	0.6		1	1	30.000			
			C	1	0.6		1	1	30.000			
L5	0.00	1317.07	A	1	0.6	26	1	1	30.000	521.05	26.05	C
42.67-22.67			B	1	0.6		1	1	30.000			
			C	1	0.6		1	1	30.000			
L6 22.67-0.00	0.00	1492.68	A	1	0.6	22	1	1	34.000	501.93	22.14	C
			B	1	0.6		1	1	34.000			
			C	1	0.6		1	1	34.000			
Sum Weight:	0.00	8165.86						OTM	239841.11 lb-ft	3586.85		

Tower Forces - No Ice - Wind 90 To Face

Section Elevation ft	Add Weight lb	Self Weight lb	Face	e	C_F	q_z psf	D_F	D_R	A_E ft²	F lb	w plf	Ctrl. Face
L1	0.00	1404.88	A	1	0.6	34	1	1	32.000	722.18	33.85	C
124.00-102.67			B	1	0.6		1	1	32.000			
			C	1	0.6		1	1	32.000			
L2	0.00	1317.07	A	1	0.6	33	1	1	30.000	648.95	32.45	C
102.67-82.67			B	1	0.6		1	1	30.000			
			C	1	0.6		1	1	30.000			
L3	0.00	1317.07	A	1	0.6	31	1	1	30.000	616.57	30.83	C
82.67-62.67			B	1	0.6		1	1	30.000			
			C	1	0.6		1	1	30.000			
L4	0.00	1317.07	A	1	0.6	29	1	1	30.000	576.17	28.81	C
62.67-42.67			B	1	0.6		1	1	30.000			
			C	1	0.6		1	1	30.000			
L5	0.00	1317.07	A	1	0.6	26	1	1	30.000	521.05	26.05	C
42.67-22.67			B	1	0.6		1	1	30.000			
			C	1	0.6		1	1	30.000			
L6 22.67-0.00	0.00	1492.68	A	1	0.6	22	1	1	34.000	501.93	22.14	C
			B	1	0.6		1	1	34.000			
			C	1	0.6		1	1	34.000			
Sum Weight:	0.00	8165.86						OTM	239841.11 lb-ft	3586.85		

Tower Forces - With Ice - Wind Normal To Face

Section Elevation ft	Add Weight lb	Self Weight lb	Face	e	C_F	q_z psf	D_F	D_R	A_E ft²	F lb	w plf	Ctrl. Face
L1	0.00	2517.31	A	1	1.2	8	1	1	39.542	412.37	19.33	C
124.00-102.67			B	1	1.2		1	1	39.542			
			C	1	1.2		1	1	39.542			
L2	0.00	2337.05	A	1	1.2	8	1	1	36.930	369.14	18.46	C
102.67-82.67			B	1	1.2		1	1	36.930			
			C	1	1.2		1	1	36.930			
L3	0.00	2310.07	A	1	1.2	7	1	1	36.763	349.14	17.46	C
82.67-62.67			B	1	1.2		1	1	36.763			
			C	1	1.2		1	1	36.763			
L4	0.00	2275.53	A	1	1.2	7	1	1	36.549	324.36	16.22	C
62.67-42.67			B	1	1.2		1	1	36.549			
			C	1	1.2		1	1	36.549			
L5	0.00	2226.63	A	1	1.2	6	1	1	36.244	290.88	14.54	C
42.67-22.67			B	1	1.2		1	1	36.244			
			C	1	1.2		1	1	36.244			
L6 22.67-0.00	0.00	2411.19	A	1	1.2	5	1	1	40.365	275.36	12.15	C
			B	1	1.2		1	1	40.365			
			C	1	1.2		1	1	40.365			
Sum Weight:	0.00	14077.78						OTM	136019.33 lb-ft	2021.26		

Tower Forces - With Ice - Wind 60 To Face

Section Elevation ft	Add Weight lb	Self Weight lb	Face	e	C_F	q_z psf	D_F	D_R	A_E ft²	F lb	w plf	Ctrl. Face
L1	0.00	2517.31	A	1	1.2	8	1	1	39.542	412.37	19.33	C
124.00-102.67			B	1	1.2		1	1	39.542			
			C	1	1.2		1	1	39.542			
L2	0.00	2337.05	A	1	1.2	8	1	1	36.930	369.14	18.46	C
102.67-82.67			B	1	1.2		1	1	36.930			
			C	1	1.2		1	1	36.930			
L3	0.00	2310.07	A	1	1.2	7	1	1	36.763	349.14	17.46	C
82.67-62.67			B	1	1.2		1	1	36.763			
			C	1	1.2		1	1	36.763			
L4	0.00	2275.53	A	1	1.2	7	1	1	36.549	324.36	16.22	C
62.67-42.67			B	1	1.2		1	1	36.549			
			C	1	1.2		1	1	36.549			
L5	0.00	2226.63	A	1	1.2	6	1	1	36.244	290.88	14.54	C
42.67-22.67			B	1	1.2		1	1	36.244			
			C	1	1.2		1	1	36.244			
L6 22.67-0.00	0.00	2411.19	A	1	1.2	5	1	1	40.365	275.36	12.15	C
			B	1	1.2		1	1	40.365			
			C	1	1.2		1	1	40.365			
Sum Weight:	0.00	14077.78						OTM	136019.33 lb-ft	2021.26		

Tower Forces - With Ice - Wind 90 To Face

Section Elevation ft	Add Weight lb	Self Weight lb	Face	e	C_F	q_z psf	D_F	D_R	A_E ft²	F lb	w plf	Ctrl. Face
L1	0.00	2517.31	A	1	1.2	8	1	1	39.542	412.37	19.33	C
124.00-102.67			B	1	1.2		1	1	39.542			
			C	1	1.2		1	1	39.542			
L2	0.00	2337.05	A	1	1.2	8	1	1	36.930	369.14	18.46	C
102.67-82.67			B	1	1.2		1	1	36.930			
			C	1	1.2		1	1	36.930			
L3	0.00	2310.07	A	1	1.2	7	1	1	36.763	349.14	17.46	C
82.67-62.67			B	1	1.2		1	1	36.763			
			C	1	1.2		1	1	36.763			
L4	0.00	2275.53	A	1	1.2	7	1	1	36.549	324.36	16.22	C
62.67-42.67			B	1	1.2		1	1	36.549			
			C	1	1.2		1	1	36.549			
L5	0.00	2226.63	A	1	1.2	6	1	1	36.244	290.88	14.54	C
42.67-22.67			B	1	1.2		1	1	36.244			
			C	1	1.2		1	1	36.244			
L6 22.67-0.00	0.00	2411.19	A	1	1.2	5	1	1	40.365	275.36	12.15	C
			B	1	1.2		1	1	40.365			
			C	1	1.2		1	1	40.365			
Sum Weight:	0.00	14077.78						OTM	136019.33 lb-ft	2021.26		

Tower Forces - Service - Wind Normal To Face

Section Elevation ft	Add Weight lb	Self Weight lb	Face	e	C_F	q_z psf	D_F	D_R	A_E ft²	F lb	w plf	Ctrl. Face
L1	0.00	1404.88	A	1	0.6	10	1	1	32.000	214.98	10.08	C
124.00-102.67			B	1	0.6		1	1	32.000			
			C	1	0.6		1	1	32.000			
L2	0.00	1317.07	A	1	0.6	10	1	1	30.000	193.18	9.66	C
102.67-82.67			B	1	0.6		1	1	30.000			
			C	1	0.6		1	1	30.000			
L3	0.00	1317.07	A	1	0.6	9	1	1	30.000	183.54	9.18	C
82.67-62.67			B	1	0.6		1	1	30.000			
			C	1	0.6		1	1	30.000			
L4	0.00	1317.07	A	1	0.6	9	1	1	30.000	171.52	8.58	C
62.67-42.67			B	1	0.6		1	1	30.000			
			C	1	0.6		1	1	30.000			
L5	0.00	1317.07	A	1	0.6	8	1	1	30.000	155.11	7.76	C
42.67-22.67			B	1	0.6		1	1	30.000			
			C	1	0.6		1	1	30.000			
L6 22.67-0.00	0.00	1492.68	A	1	0.6	7	1	1	34.000	149.42	6.59	C
			B	1	0.6		1	1	34.000			
			C	1	0.6		1	1	34.000			
Sum Weight:	0.00	8165.86						OTM	71397.03 lb-ft	1067.75		

Tower Forces - Service - Wind 60 To Face

Section Elevation ft	Add Weight lb	Self Weight lb	Face	e	C_F	q_z psf	D_F	D_R	A_E ft²	F lb	w plf	Ctrl. Face
L1	0.00	1404.88	A	1	0.6	10	1	1	32.000	214.98	10.08	C
124.00-102.67			B	1	0.6		1	1	32.000			
			C	1	0.6		1	1	32.000			
L2	0.00	1317.07	A	1	0.6	10	1	1	30.000	193.18	9.66	C
102.67-82.67			B	1	0.6		1	1	30.000			
			C	1	0.6		1	1	30.000			
L3	0.00	1317.07	A	1	0.6	9	1	1	30.000	183.54	9.18	C
82.67-62.67			B	1	0.6		1	1	30.000			
			C	1	0.6		1	1	30.000			
L4	0.00	1317.07	A	1	0.6	9	1	1	30.000	171.52	8.58	C
62.67-42.67			B	1	0.6		1	1	30.000			
			C	1	0.6		1	1	30.000			
L5	0.00	1317.07	A	1	0.6	8	1	1	30.000	155.11	7.76	C
42.67-22.67			B	1	0.6		1	1	30.000			
			C	1	0.6		1	1	30.000			
L6 22.67-0.00	0.00	1492.68	A	1	0.6	7	1	1	34.000	149.42	6.59	C
			B	1	0.6		1	1	34.000			
			C	1	0.6		1	1	34.000			
Sum Weight:	0.00	8165.86						OTM	71397.03 lb-ft	1067.75		

Tower Forces - Service - Wind 90 To Face

Section Elevation ft	Add Weight lb	Self Weight lb	Face	e	C_F	q_z psf	D_F	D_R	A_E ft²	F lb	w plf	Ctrl. Face
L1	0.00	1404.88	A	1	0.6	10	1	1	32.000	214.98	10.08	C
124.00-102.67			B	1	0.6		1	1	32.000			
			C	1	0.6		1	1	32.000			
L2	0.00	1317.07	A	1	0.6	10	1	1	30.000	193.18	9.66	C
102.67-82.67			B	1	0.6		1	1	30.000			
			C	1	0.6		1	1	30.000			
L3	0.00	1317.07	A	1	0.6	9	1	1	30.000	183.54	9.18	C
82.67-62.67			B	1	0.6		1	1	30.000			
			C	1	0.6		1	1	30.000			
L4	0.00	1317.07	A	1	0.6	9	1	1	30.000	171.52	8.58	C
62.67-42.67			B	1	0.6		1	1	30.000			
			C	1	0.6		1	1	30.000			
L5	0.00	1317.07	A	1	0.6	8	1	1	30.000	155.11	7.76	C
42.67-22.67			B	1	0.6		1	1	30.000			
			C	1	0.6		1	1	30.000			
L6 22.67-0.00	0.00	1492.68	A	1	0.6	7	1	1	34.000	149.42	6.59	C
			B	1	0.6		1	1	34.000			
			C	1	0.6		1	1	34.000			
Sum Weight:	0.00	8165.86						OTM	71397.03 lb-ft	1067.75		

Discrete Appurtenance Pressures - No Ice $G_H = 1.100$

Description	Aiming Azimuth °	Weight lb	$Offset_x$ ft	$Offset_z$ ft	z ft	K_z	q_z psf	C_AA_C Front ft^2	C_AA_C Side ft^2
HPA-65R-BUU-H6	300.0000	47.90	-3.25	-1.88	124.00	1.324	35	9.22	4.65
HPA-65R-BUU-H6	60.0000	47.90	3.25	-1.88	124.00	1.324	35	9.22	4.65
HPA-65R-BUU-H6	180.0000	47.90	0.00	3.75	124.00	1.324	35	9.22	4.65
Powerwave Technologies 7770 w/ Mount Pipe	300.0000	72.90	-3.25	-1.88	124.00	1.324	35	5.62	4.32
Powerwave Technologies 7770 w/ Mount Pipe	60.0000	72.90	3.25	-1.88	124.00	1.324	35	5.62	4.32
Powerwave Technologies 7770 w/ Mount Pipe	180.0000	72.90	0.00	3.75	124.00	1.324	35	5.62	4.32
DTMABP7819VG12A	300.0000	38.36	-3.25	-1.88	124.00	1.324	35	1.95	0.68
DTMABP7819VG12A	60.0000	38.36	3.25	-1.88	124.00	1.324	35	1.95	0.68
DTMABP7819VG12A	180.0000	38.36	0.00	3.75	124.00	1.324	35	1.95	0.68
LGP214nn	300.0000	1.80	-3.25	-1.88	124.00	1.324	35	2.10	0.46
LGP214nn	60.0000	1.80	3.25	-1.88	124.00	1.324	35	2.10	0.46
LGP214nn	180.0000	1.80	0.00	3.75	124.00	1.324	35	2.10	0.46
80010965 w/ Mount Pipe	300.0000	136.24	-3.25	-1.88	124.00	1.324	35	12.26	5.79
80010965 w/ Mount Pipe	60.0000	136.24	3.25	-1.88	124.00	1.324	35	12.26	5.79
80010965 w/ Mount Pipe	180.0000	136.24	0.00	3.75	124.00	1.324	35	12.26	5.79
TMABPD7823VG12A	300.0000	52.00	-3.25	-1.88	124.00	1.324	35	2.74	1.04
TMABPD7823VG12A	60.0000	52.00	3.25	-1.88	124.00	1.324	35	2.74	1.04
TMABPD7823VG12A	180.0000	52.00	0.00	3.75	124.00	1.324	35	2.74	1.04
Platform Mount [LP 303-1]	0.0000	1250.00	0.00	0.00	124.00	1.324	35	14.69	14.69
APX16DWV-16DWV-S-E-A20 w/ Mount Pipe	300.0000	61.39	-1.52	-0.88	109.00	1.289	34	6.29	2.76
APX16DWV-16DWV-S-E-A20 w/ Mount Pipe	60.0000	61.39	1.52	-0.88	109.00	1.289	34	6.29	2.76
APX16DWV-16DWV-S-E-A20 w/ Mount Pipe	180.0000	61.39	0.00	1.75	109.00	1.289	34	6.29	2.76
Collar Mount [SO 102-3]	0.0000	81.00	0.00	0.00	109.00	1.289	34	3.00	3.00
	Sum Weight:	2562.77							

Discrete Appurtenance Pressures - With Ice $G_H = 1.100$

Description	Aiming Azimuth °	Weight lb	$Offset_x$ ft	$Offset_z$ ft	z ft	K_z	q_z psf	C_AA_C Front ft^2	C_AA_C Side ft^2	t_z in
HPA-65R-BUU-H6	300.0000	342.23	-3.25	-1.88	124.00	1.324	8	12.67	7.83	2.1404
HPA-65R-BUU-H6	60.0000	342.23	3.25	-1.88	124.00	1.324	8	12.67	7.83	2.1404
HPA-65R-BUU-H6	180.0000	342.23	0.00	3.75	124.00	1.324	8	12.67	7.83	2.1404
Powerwave Technologies 7770 w/ Mount Pipe	300.0000	347.20	-3.25	-1.88	124.00	1.324	8	7.34	7.34	2.1404
Powerwave Technologies 7770 w/ Mount Pipe	60.0000	347.20	3.25	-1.88	124.00	1.324	8	7.34	7.34	2.1404
Powerwave Technologies 7770 w/ Mount Pipe	180.0000	347.20	0.00	3.75	124.00	1.324	8	7.34	7.34	2.1404
DTMABP7819VG12A	300.0000	131.68	-3.25	-1.88	124.00	1.324	8	3.13	1.50	2.1404
DTMABP7819VG12A	60.0000	131.68	3.25	-1.88	124.00	1.324	8	3.13	1.50	2.1404
DTMABP7819VG12A	180.0000	131.68	0.00	3.75	124.00	1.324	8	3.13	1.50	2.1404
LGP214nn	300.0000	94.73	-3.25	-1.88	124.00	1.324	8	3.34	1.16	2.1404
LGP214nn	60.0000	94.73	3.25	-1.88	124.00	1.324	8	3.34	1.16	2.1404

Description	Aiming Azimuth °	Weight lb	$Offset_x$ ft	$Offset_z$ ft	z ft	K_z	q_z psf	C_AA_C Front ft^2	C_AA_C Side ft^2	t_z in
LGP214nn	180.0000	94.73	0.00	3.75	124.00	1.324	8	3.34	1.16	2.1404
80010965 w/ Mount Pipe	300.0000	614.88	-3.25	-1.88	124.00	1.324	8	15.65	8.81	2.1404
80010965 w/ Mount Pipe	60.0000	614.88	3.25	-1.88	124.00	1.324	8	15.65	8.81	2.1404
80010965 w/ Mount Pipe	180.0000	614.88	0.00	3.75	124.00	1.324	8	15.65	8.81	2.1404
TMABPD7823VG12A	300.0000	171.81	-3.25	-1.88	124.00	1.324	8	4.11	2.03	2.1404
TMABPD7823VG12A	60.0000	171.81	3.25	-1.88	124.00	1.324	8	4.11	2.03	2.1404
TMABPD7823VG12A	180.0000	171.81	0.00	3.75	124.00	1.324	8	4.11	2.03	2.1404
Platform Mount [LP 303-1]	0.0000	3026.79	0.00	0.00	124.00	1.324	8	29.05	29.05	2.1404
APX16DWV-16DWV-S-E-A20 w/ Mount Pipe	300.0000	311.39	-1.52	-0.88	109.00	1.289	8	8.83	5.04	2.1130
APX16DWV-16DWV-S-E-A20 w/ Mount Pipe	60.0000	311.39	1.52	-0.88	109.00	1.289	8	8.83	5.04	2.1130
APX16DWV-16DWV-S-E-A20 w/ Mount Pipe	180.0000	311.39	0.00	1.75	109.00	1.289	8	8.83	5.04	2.1130
Collar Mount [SO 102-3]	0.0000	207.78	0.00	0.00	109.00	1.289	8	5.03	5.03	2.1130
	Sum Weight:	9276.37								

Discrete Appurtenance Pressures - Service $G_H = 1.100$

Description	Aiming Azimuth °	Weight lb	$Offset_x$ ft	$Offset_z$ ft	z ft	K_z	q_z psf	C_AA_C Front ft^2	C_AA_C Side ft^2
HPA-65R-BUU-H6	300.0000	47.90	-3.25	-1.88	124.00	1.324	10	9.22	4.65
HPA-65R-BUU-H6	60.0000	47.90	3.25	-1.88	124.00	1.324	10	9.22	4.65
HPA-65R-BUU-H6	180.0000	47.90	0.00	3.75	124.00	1.324	10	9.22	4.65
Powerwave Technologies 7770 w/ Mount Pipe	300.0000	72.90	-3.25	-1.88	124.00	1.324	10	5.62	4.32
Powerwave Technologies 7770 w/ Mount Pipe	60.0000	72.90	3.25	-1.88	124.00	1.324	10	5.62	4.32
Powerwave Technologies 7770 w/ Mount Pipe	180.0000	72.90	0.00	3.75	124.00	1.324	10	5.62	4.32
DTMABP7819VG12A	300.0000	38.36	-3.25	-1.88	124.00	1.324	10	1.95	0.68
DTMABP7819VG12A	60.0000	38.36	3.25	-1.88	124.00	1.324	10	1.95	0.68
DTMABP7819VG12A	180.0000	38.36	0.00	3.75	124.00	1.324	10	1.95	0.68
LGP214nn	300.0000	1.80	-3.25	-1.88	124.00	1.324	10	2.10	0.46
LGP214nn	60.0000	1.80	3.25	-1.88	124.00	1.324	10	2.10	0.46
LGP214nn	180.0000	1.80	0.00	3.75	124.00	1.324	10	2.10	0.46
80010965 w/ Mount Pipe	300.0000	136.24	-3.25	-1.88	124.00	1.324	10	12.26	5.79
80010965 w/ Mount Pipe	60.0000	136.24	3.25	-1.88	124.00	1.324	10	12.26	5.79
80010965 w/ Mount Pipe	180.0000	136.24	0.00	3.75	124.00	1.324	10	12.26	5.79
TMABPD7823VG12A	300.0000	52.00	-3.25	-1.88	124.00	1.324	10	2.74	1.04
TMABPD7823VG12A	60.0000	52.00	3.25	-1.88	124.00	1.324	10	2.74	1.04
TMABPD7823VG12A	180.0000	52.00	0.00	3.75	124.00	1.324	10	2.74	1.04
Platform Mount [LP 303-1]	0.0000	1250.00	0.00	0.00	124.00	1.324	10	14.69	14.69
APX16DWV-16DWV-S-E-A20 w/ Mount Pipe	300.0000	61.39	-1.52	-0.88	109.00	1.289	10	6.29	2.76
APX16DWV-16DWV-S-E-A20 w/ Mount Pipe	60.0000	61.39	1.52	-0.88	109.00	1.289	10	6.29	2.76
APX16DWV-16DWV-S-E-A20 w/ Mount Pipe	180.0000	61.39	0.00	1.75	109.00	1.289	10	6.29	2.76
Collar Mount [SO 102-3]	0.0000	81.00	0.00	0.00	109.00	1.289	10	3.00	3.00
	Sum Weight:	2562.77							

Force Totals

Load Case	Vertical Forces lb	Sum of Forces X lb	Sum of Forces Z lb	Sum of Overturning Moments, M_x lb-ft	Sum of Overturning Moments, M_z lb-ft	Sum of Torques lb-ft
Leg Weight	8165.86					
Bracing Weight	0.00					
Total Member Self-Weight	8165.86			0.00	0.00	
Total Weight	10728.63			0.00	0.00	
Wind 0 deg - No Ice		0.00	-7005.26	-655968.27	0.00	0.00
Wind 30 deg - No Ice		3502.63	-6066.73	-568085.19	-327984.14	0.00
Wind 60 deg - No Ice		6066.73	-3502.63	-327984.14	-568085.19	0.00
Wind 90 deg - No Ice		7005.26	0.00	0.00	-655968.27	0.00
Wind 120 deg - No Ice		6066.73	3502.63	327984.14	-568085.19	0.00
Wind 150 deg - No Ice		3502.63	6066.73	568085.19	-327984.14	0.00
Wind 180 deg - No Ice		0.00	7005.26	655968.27	0.00	0.00
Wind 210 deg - No Ice		-3502.63	6066.73	568085.19	327984.14	0.00
Wind 240 deg - No Ice		-6066.73	3502.63	327984.14	568085.19	0.00
Wind 270 deg - No Ice		-7005.26	0.00	0.00	655968.27	0.00
Wind 300 deg - No Ice		-6066.73	-3502.63	-327984.14	568085.19	0.00
Wind 330 deg - No Ice		-3502.63	-6066.73	-568085.19	327984.14	0.00
Member Ice	5911.93					
Total Weight Ice	23354.15			0.00	0.00	
Wind 0 deg - Ice		0.00	-3261.29	-286981.92	0.00	0.00
Wind 30 deg - Ice		1630.65	-2824.36	-248533.64	-143490.96	0.00
Wind 60 deg - Ice		2824.36	-1630.65	-143490.96	-248533.64	0.00
Wind 90 deg - Ice		3261.29	0.00	0.00	-286981.92	0.00
Wind 120 deg - Ice		2824.36	1630.65	143490.96	-248533.64	0.00
Wind 150 deg - Ice		1630.65	2824.36	248533.64	-143490.96	0.00
Wind 180 deg - Ice		0.00	3261.29	286981.92	0.00	0.00
Wind 210 deg - Ice		-1630.65	2824.36	248533.64	143490.96	0.00
Wind 240 deg - Ice		-2824.36	1630.65	143490.96	248533.64	0.00
Wind 270 deg - Ice		-3261.29	0.00	0.00	286981.92	0.00
Wind 300 deg - Ice		-2824.36	-1630.65	-143490.96	248533.64	0.00
Wind 330 deg - Ice		-1630.65	-2824.36	-248533.64	143490.96	0.00
Total Weight	10728.63			0.00	0.00	
Wind 0 deg - Service		0.00	-2085.36	-195271.72	0.00	0.00
Wind 30 deg - Service		1042.68	-1805.97	-169110.27	-97635.86	0.00
Wind 60 deg - Service		1805.97	-1042.68	-97635.86	-169110.27	0.00
Wind 90 deg - Service		2085.36	0.00	0.00	-195271.72	0.00
Wind 120 deg - Service		1805.97	1042.68	97635.86	-169110.27	0.00
Wind 150 deg - Service		1042.68	1805.97	169110.27	-97635.86	0.00
Wind 180 deg - Service		0.00	2085.36	195271.72	0.00	0.00
Wind 210 deg - Service		-1042.68	1805.97	169110.27	97635.86	0.00
Wind 240 deg - Service		-1805.97	1042.68	97635.86	169110.27	0.00
Wind 270 deg - Service		-2085.36	0.00	0.00	195271.72	0.00
Wind 300 deg - Service		-1805.97	-1042.68	-97635.86	169110.27	0.00
Wind 330 deg - Service		-1042.68	-1805.97	-169110.27	97635.86	0.00

Equipment Loads - NESC Calculations

Eversource OTRM059 Required Factors

Gust Response Factor Multiplier:	$m_{grf} := 1.25$	Specified multiplier for NESC 250C (OTRM 059.1, Attachment A)
Shape Factor For Round:	$Cd_R := 1.3$	OTRM 059.4.E.2.c.ii
Shape Factor For Flat:	$Cd_F := 1.6$	OTRM 059.4.E.2.c.ii
Shape Factor For Coax (1) layer exterior of pole):	$Cd_{coax} := 1.6$	OTRM 059.4.E.2.c.iii

Basic Load Conditions

	Wind Speed		Radial Ice Thickness	
NESC 250B	$V_{250B} := 39.5$	mph	$r_{ice250B} := 0.5 \cdot in$	NESC Section 250B
NESC 250C	$V_{250C} := 110$	mph	$r_{ice250C} := 0\ in$	User Input - NESC Section 250C
			$I_d := 57 \cdot pcf$	User Input - Ice Density

NESC 250C - Extreme Wind Calculation

Top Elevation of Mast:	$h_{mast} := 124 \cdot ft$	User Input
NESC Importance Factor:	$I := 1.0$	NESC Importance Factor - Section 250C
NESC Factor kv:	$k_v := 1.43$	NESC Constant, Table 250-3
Velocity Pressure Coefficient:	$k_z := 2.01 \cdot \left(\frac{h_{mast}}{900 \cdot ft}\right)^{\left(\frac{2}{9.5}\right)} = 1.324$	Calculated kz per NESC Table 250-2
Exposure Factor:	$E_s := 0.346 \cdot \left(\frac{33}{\left(0.67 \cdot \frac{h_{mast}}{ft}\right)}\right)^{\frac{1}{7}} = 0.303$	NESC Table 250-3
Response Term:	$B_s := \frac{1}{\left(1 + \frac{0.56 \cdot \left(0.67 \cdot \frac{h_{mast}}{ft}\right)}{220}\right)} = 0.825$	NESC Table 250-3
Gust Response Factor:	$G_{RF} := \frac{\left(1 + \left(2.7 \cdot E_s \cdot B_s^{0.5}\right)\right)}{k_v^{\ 2}} = 0.853$	Calculated GRF, Table 250-3

Wind Pressure Calculations

NESC 250B Wind Pressure: $qz_{250B} := 0.00256 \cdot V_{250B}^{2} \cdot I \cdot psf = 4.0\ psf$

NESC 250C Wind Pressure: $qz_{250C} := 0.00256 \cdot k_z \cdot V_{250C}^{2} \cdot G_{RF} \cdot I \cdot psf = 35.0\ psf$

Overload Factors

NESC 250B (Vertical):	$OLF250B_V := 1.5$	NESC Table 253-1 (Grade B)
NESC 250B (Wind):	$OLF250B_T := 2.5$	NESC Table 253-1 (Grade B)
NESC 250C (Vertical):	$OLF250C_V := 1.0$	NESC Table 253-1 (Grade B)
NESC 250C (Wind):	$OLF250C_T := 1.0$	NESC Table 253-1 (Grade B)

Columbus
250 E Broad St, Suite 600
Columbus, OH 43215
Phone 614.221.6679
Founded in 1965

www.PaulJFord.com

Orlando
1801 Lee Rd, Suite 230
Winter Park, FL 32789
Phone 407.898.9039
100% Employee Owned

Standard Equipment Calculations - Pipe Riser

Equipment Properties

Existing Antenna Carrier:	HSS18x0.375 Pipe Riser	User Defined
Equipment Model:	FWT - Job No. 18942003/Des. No. P99-0006R1	User Defined
Pipe Height:	$L_{pipe\_riser} := 1488 \cdot in$	User Defined
Pipe Diameter:	$W_{pipe\_riser} := 18 \cdot in$	User Defined
Pipe Weight:	$WT_{pipe\_riser} := 8761.8 \cdot lbf$	User Defined
Pipe Volume:	$V_{pipe\_riser} := \frac{\left(\left(W_{pipe\_riser}\right)^2 \cdot \pi\right)}{4} = 1.8\, ft^2$	

NESC 250B Vertical Load

Volume of Pipe w/ Ice: $V_{pipe\_riser\_250B\_w\_ice} := \frac{\left(\left(W_{pipe\_riser} + 2 \cdot r_{ice250B}\right)^2 \cdot \pi\right)}{4} = 2\, ft^2$

Volume of Ice: $V_{pipe\_riser\_250B\_ice} := V_{pipe\_riser\_250B\_w\_ice} - V_{pipe\_riser} = 0.2\, ft^2$

Weight of Ice: $WT_{pipe\_riser\_250B\_ice} := V_{pipe\_riser\_250B\_ice} \cdot I_d = 11.5\, \frac{lbf}{ft}$

Factored Vertical Load of Pipe Riser w/ 250B Ice: $WTall_{pipe\_riser\_250B} := \left(WT_{pipe\_riser\_250B\_ice}\right) \cdot OLF250B_V = 17\, \frac{lbf}{ft}$

NESC 250C Vertical Load

Factored Vertical Load of Pipe Riser: calculated in Risa-3D

NESC 250B Wind Load

Area of PIpe w/ Ice: $SA_{pipe\_riser\_250B\_w\_ice} := \left(W_{pipe\_riser} + 2 \cdot r_{ice250B}\right) = 1.6\, \frac{1}{ft} \cdot ft^2$

Factored Wind Load on Pipe Riser w/ 250B Ice: $WLall_{pipe\_riser\_250B} := qz_{250B} \cdot Cd_R \cdot SA_{pipe\_riser\_250B\_w\_ice} \cdot OLF250B_T = 21\, \frac{lbf}{ft}$

NESC 250C Wind Load

Area of Pipe Riser w/ Ice: $SA_{pipe\_riser\_250C} := W_{pipe\_riser} = 1.5\, ft$

Factored Wind Load on Pipe Riser: $WLall_{pipe\_riser\_250C} := qz_{250C} \cdot Cd_R \cdot SA_{pipe\_riser\_250C} \cdot OLF250C_T \cdot m_{grf} = 85\, \frac{lbf}{ft}$

Standard Equipment Calculations - Equipment 1

Equipment Properties

Existing Antenna Carrier:	AT&T	User Defined
Equipment Model:	Existing - CCI Antennas - HPA-65R-BUU-H6	User Defined
Equipment Height:	$L_{eq\_1} := 72 \cdot in$	User Defined
Equipment Width:	$W_{eq\_1} := 14.8 \cdot in$	User Defined
Equipment Depth:	$D_{eq\_1} := 9 \cdot in$	User Defined
Equipment Weight:	$WT_{eq\_1} := 51 \cdot lbf$	User Defined
Equipment Volume:	$V_{eq\_1} := L_{eq\_1} \cdot W_{eq\_1} \cdot D_{eq\_1} = 5.6\ ft^3$	
Equipment Quantity:	$N_{eq\_1} := 3$	User Defined

NESC 250B Vertical Load

Volume of Equipment w/ Ice: $V_{eq\_1\_250B\_w\_ice} := (L_{eq\_1} + 2 \cdot r_{ice250B}) \cdot (W_{eq\_1} + 2 \cdot r_{ice250B}) \cdot (D_{eq\_1} + 2 \cdot r_{ice250B}) = 6.7\ ft^3$

Volume of Ice: $V_{eq\_1\_250B\_ice} := V_{eq\_1\_250B\_w\_ice} - V_{eq\_1} = 1.1\ ft^3$

Weight of Ice: $WT_{eq\_1\_250B\_ice} := V_{eq\_1\_250B\_ice} \cdot I_d = 64.1\ lbf$

Factored Vertical Load of All Equipment w/ 250B Ice: $WTall_{eq\_1\_250B} := (WT_{eq\_1} + WT_{eq\_1\_250B\_ice}) \cdot N_{eq\_1} \cdot OLF250B_V = 518\ lbf$

NESC 250C Vertical Load

Factored Vertical Load of All Equipment: $WTall_{eq\_1\_250C} := WT_{eq\_1} \cdot N_{eq\_1} \cdot OLF250C_V = 153\ lbf$

NESC 250B Wind Load

Area of Equipment w/ Ice: $SA_{eq\_1\_250B\_w\_ice} := (L_{eq\_1} + 2 \cdot r_{ice250B}) \cdot (W_{eq\_1} + 2 \cdot r_{ice250B}) = 8\ ft^2$

Factored Wind Load on All Equipment w/ 250B Ice: $WLall_{eq\_1\_250B} := qz_{250B} \cdot Cd_F \cdot SA_{eq\_1\_250B\_w\_ice} \cdot N_{eq\_1} \cdot OLF250B_T = 384\ lbf$

NESC 250C Wind Load

Area of Equipment w/ Ice: $SA_{eq\_1\_250C} := (L_{eq\_1}) \cdot (W_{eq\_1}) = 7.4\ ft^2$

Factored Wind Load on All Equipment: $WLall_{eq\_1\_250C} := qz_{250C} \cdot Cd_F \cdot SA_{eq\_1\_250C} \cdot N_{eq\_1} \cdot OLF250C_T \cdot m_{grf} = 1553\ lbf$

Standard Equipment Calculations - Equipment 2

Equipment Properties

Existing Antenna Carrier:	AT&T	User Defined
Equipment Model:	Existing - Powerwave - 7770.00	User Defined
Equipment Height:	$L_{eq\_2} := 55 \cdot in$	User Defined
Equipment Width:	$W_{eq\_2} := 11 \cdot in$	User Defined
Equipment Depth:	$D_{eq\_2} := 5 \cdot in$	User Defined
Equipment Weight:	$WT_{eq\_2} := 35 \cdot lbf$	User Defined
Equipment Volume:	$V_{eq\_2} := L_{eq\_2} \cdot W_{eq\_2} \cdot D_{eq\_2} = 1.8\ ft^3$	
Equipment Quantity:	$N_{eq\_2} := 3$	User Defined

NESC 250B Vertical Load

Volume of Equipment w/ Ice: $V_{eq\_2\_250B\_w\_ice} := (L_{eq\_2} + 2 \cdot r_{ice250B}) \cdot (W_{eq\_2} + 2 \cdot r_{ice250B}) \cdot (D_{eq\_2} + 2 \cdot r_{ice250B}) = 2.3\ ft^3$

Volume of Ice: $V_{eq\_2\_250B\_ice} := V_{eq\_2\_250B\_w\_ice} - V_{eq\_2} = 0.6\ ft^3$

Weight of Ice: $WT_{eq\_2\_250B\_ice} := V_{eq\_2\_250B\_ice} \cdot I_d = 33.2\ lbf$

Factored Vertical Load of All Equipment w/ 250B Ice: $WTall_{eq\_2\_250B} := (WT_{eq\_2} + WT_{eq\_2\_250B\_ice}) \cdot N_{eq\_2} \cdot OLF250B_V = 307\ lbf$

NESC 250C Vertical Load

Factored Vertical Load of All Equipment: $WTall_{eq\_2\_250C} := WT_{eq\_2} \cdot N_{eq\_2} \cdot OLF250C_V = 105\ lbf$

NESC 250B Wind Load

Area of Equipment w/ Ice: $SA_{eq\_2\_250B\_w\_ice} := (L_{eq\_2} + 2 \cdot r_{ice250B}) \cdot (W_{eq\_2} + 2 \cdot r_{ice250B}) = 4.7\ ft^2$

Factored Wind Load on All Equipment w/ 250B Ice: $WLall_{eq\_2\_250B} := qz_{250B} \cdot Cd_F \cdot SA_{eq\_2\_250B\_w\_ice} \cdot N_{eq\_2} \cdot OLF250B_T = 224\ lbf$

NESC 250C Wind Load

Area of Equipment w/ Ice: $SA_{eq\_2\_250C} := (L_{eq\_2}) \cdot (W_{eq\_2}) = 4.2\ ft^2$

Factored Wind Load on All Equipment: $WLall_{eq\_2\_250C} := qz_{250C} \cdot Cd_F \cdot SA_{eq\_2\_250C} \cdot N_{eq\_2} \cdot OLF250C_T \cdot m_{grf} = 882\ lbf$

Standard Equipment Calculations - Equipment 3

Equipment Properties

Existing Antenna Carrier:	AT&T	User Defined
Equipment Model:	Existing - CCI - DTMABP7819VG12A (TMA)	User Defined
Equipment Height:	$L_{eq\_3} := 10.63\ in$	User Defined
Equipment Width:	$W_{eq\_3} := 11.02 \cdot in$	User Defined
Equipment Depth:	$D_{eq\_3} := 3.78 \cdot in$	User Defined
Equipment Weight:	$WT_{eq\_3} := 19.18 \cdot lbf$	User Defined
Equipment Volume:	$V_{eq\_3} := L_{eq\_3} \cdot W_{eq\_3} \cdot D_{eq\_3} = 0.3\ ft^3$	
Equipment Quantity:	$N_{eq\_3} := 6$	User Defined

NESC 250B Vertical Load

Volume of Equipment w/ Ice:	$V_{eq\_3\_250B\_w\_ice} := (L_{eq\_3} + 2 \cdot r_{ice250B}) \cdot (W_{eq\_3} + 2 \cdot r_{ice250B}) \cdot (D_{eq\_3} + 2 \cdot r_{ice250B}) = 0.4\ ft^3$
Volume of Ice:	$V_{eq\_3\_250B\_ice} := V_{eq\_3\_250B\_w\_ice} - V_{eq\_3} = 0.1\ ft^3$
Weight of Ice:	$WT_{eq\_3\_250B\_ice} := V_{eq\_3\_250B\_ice} \cdot I_d = 7.4\ lbf$
Factored Vertical Load of All Equipment w/ 250B Ice:	$WTall_{eq\_3\_250B} := (WT_{eq\_3} + WT_{eq\_3\_250B\_ice}) \cdot N_{eq\_3} \cdot OLF250B_V = 240\ lbf$

NESC 250C Vertical Load

Factored Vertical Load of All Equipment:	$WTall_{eq\_3\_250C} := WT_{eq\_3} \cdot N_{eq\_3} \cdot OLF250C_V = 115\ lbf$

NESC 250B Wind Load

Area of Equipment w/ Ice:	$SA_{eq\_3\_250B\_w\_ice} := (L_{eq\_3} + 2 \cdot r_{ice250B}) \cdot (W_{eq\_3} + 2 \cdot r_{ice250B}) = 1\ ft^2$
Factored Wind Load on All Equipment w/ 250B Ice:	$WLall_{eq\_3\_250B} := qz_{250B} \cdot Cd_F \cdot SA_{eq\_3\_250B\_w\_ice} \cdot N_{eq\_3} \cdot OLF250B_T = 93\ lbf$

NESC 250C Wind Load

Area of Equipment w/ Ice:	$SA_{eq\_3\_250C} := (L_{eq\_3}) \cdot (W_{eq\_3}) = 0.8\ ft^2$
Factored Wind Load on All Equipment:	$WLall_{eq\_3\_250C} := qz_{250C} \cdot Cd_F \cdot SA_{eq\_3\_250C} \cdot N_{eq\_3} \cdot OLF250C_T \cdot m_{grf} = 341\ lbf$

Standard Equipment Calculations - Equipment 4

Equipment Properties

Existing Antenna Carrier:	AT&T	User Defined
Equipment Model:	Existing - Powerwave - LGP21401	User Defined
Equipment Height:	$L_{eq\_4} := 10.62 \cdot in$	User Defined
Equipment Width:	$W_{eq\_4} := 7.87 \cdot in$	User Defined
Equipment Depth:	$D_{eq\_4} := 4.64 \cdot in$	User Defined
Equipment Weight:	$WT_{eq\_4} := 19.8 \cdot lbf$	User Defined
Equipment Volume:	$V_{eq\_4} := L_{eq\_4} \cdot W_{eq\_4} \cdot D_{eq\_4} = 0.2\ ft^3$	
Equipment Quantity:	$N_{eq\_4} := 6$	User Defined

NESC 250B Vertical Load

Volume of Equipment w/ Ice:	$V_{eq\_4\_250B\_w\_ice} := (L_{eq\_4} + 2 \cdot r_{ice250B}) \cdot (W_{eq\_4} + 2 \cdot r_{ice250B}) \cdot (D_{eq\_4} + 2 \cdot r_{ice250B}) = 0.3\ ft^3$
Volume of Ice:	$V_{eq\_4\_250B\_ice} := V_{eq\_4\_250B\_w\_ice} - V_{eq\_4} = 0.1\ ft^3$
Weight of Ice:	$WT_{eq\_4\_250B\_ice} := V_{eq\_4\_250B\_ice} \cdot I_d = 6.4\ lbf$
Factored Vertical Load of All Equipment w/ 250B Ice:	$WTall_{eq\_4\_250B} := (WT_{eq\_4} + WT_{eq\_4\_250B\_ice}) \cdot N_{eq\_4} \cdot OLF250B_V = 236\ lbf$

NESC 250C Vertical Load

Factored Vertical Load of All Equipment:	$WTall_{eq\_4\_250C} := WT_{eq\_4} \cdot N_{eq\_4} \cdot OLF250C_V = 119\ lbf$

NESC 250B Wind Load

Area of Equipment w/ Ice:	$SA_{eq\_4\_250B\_w\_ice} := (L_{eq\_4} + 2 \cdot r_{ice250B}) \cdot (W_{eq\_4} + 2 \cdot r_{ice250B}) = 0.7\ ft^2$
Factored Wind Load on All Equipment w/ 250B Ice:	$WLall_{eq\_4\_250B} := qz_{250B} \cdot Cd_F \cdot SA_{eq\_4\_250B\_w\_ice} \cdot N_{eq\_4} \cdot OLF250B_T = 69\ lbf$

NESC 250C Wind Load

Area of Equipment w/ Ice:	$SA_{eq\_4\_250C} := (L_{eq\_4}) \cdot (W_{eq\_4}) = 0.6\ ft^2$
Factored Wind Load on All Equipment:	$WLall_{eq\_4\_250C} := qz_{250C} \cdot Cd_F \cdot SA_{eq\_4\_250C} \cdot N_{eq\_4} \cdot OLF250C_T \cdot m_{grf} = 244\ lbf$

Standard Equipment Calculations - Equipment 5

Equipment Properties

Existing Antenna Carrier:	AT&T	User Defined
Equipment Model:	Proposed - Kathrein - 80010965	User Defined
Equipment Height:	$L_{eq\_5} := 78.7 \cdot in$	User Defined
Equipment Width:	$W_{eq\_5} := 20 \cdot in$	User Defined
Equipment Depth:	$D_{eq\_5} := 6.9 \cdot in$	User Defined
Equipment Weight:	$WT_{eq\_5} := 97.6 \cdot lbf$	User Defined
Equipment Volume:	$V_{eq\_5} := L_{eq\_5} \cdot W_{eq\_5} \cdot D_{eq\_5} = 6.3\ ft^3$	
Equipment Quantity:	$N_{eq\_5} := 3$	User Defined

NESC 250B Vertical Load

Volume of Equipment w/ Ice:	$V_{eq\_5\_250B\_w\_ice} := (L_{eq\_5} + 2 \cdot r_{ice250B}) \cdot (W_{eq\_5} + 2 \cdot r_{ice250B}) \cdot (D_{eq\_5} + 2 \cdot r_{ice250B}) = 7.7\ ft^3$
Volume of Ice:	$V_{eq\_5\_250B\_ice} := V_{eq\_5\_250B\_w\_ice} - V_{eq\_5} = 1.4\ ft^3$
Weight of Ice:	$WT_{eq\_5\_250B\_ice} := V_{eq\_5\_250B\_ice} \cdot I_d = 77.9\ lbf$
Factored Vertical Load of All Equipment w/ 250B Ice:	$WTall_{eq\_5\_250B} := (WT_{eq\_5} + WT_{eq\_5\_250B\_ice}) \cdot N_{eq\_5} \cdot OLF250B_V = 790\ lbf$

NESC 250C Vertical Load

Factored Vertical Load of All Equipment:	$WTall_{eq\_5\_250C} := WT_{eq\_5} \cdot N_{eq\_5} \cdot OLF250C_V = 293\ lbf$

NESC 250B Wind Load

Area of Equipment w/ Ice:	$SA_{eq\_5\_250B\_w\_ice} := (L_{eq\_5} + 2 \cdot r_{ice250B}) \cdot (W_{eq\_5} + 2 \cdot r_{ice250B}) = 11.6\ ft^2$
Factored Wind Load on All Equipment w/ 250B Ice:	$WLall_{eq\_5\_250B} := qz_{250B} \cdot Cd_F \cdot SA_{eq\_5\_250B\_w\_ice} \cdot N_{eq\_5} \cdot OLF250B_T = 557\ lbf$

NESC 250C Wind Load

Area of Equipment w/ Ice:	$SA_{eq\_5\_250C} := (L_{eq\_5}) \cdot (W_{eq\_5}) = 10.9\ ft^2$
Factored Wind Load on All Equipment:	$WLall_{eq\_5\_250C} := qz_{250C} \cdot Cd_F \cdot SA_{eq\_5\_250C} \cdot N_{eq\_5} \cdot OLF250C_T \cdot m_{grf} = 2294\ lbf$

Standard Equipment Calculations - Equipment 6

Equipment Properties

Existing Antenna Carrier:	AT&T	User Defined
Equipment Model:	Proposed - CCI Antennas - TMABPD7823VG12A	User Defined
Equipment Height:	$L_{eq\_6} := 14.22 \cdot in$	User Defined
Equipment Width:	$W_{eq\_6} := 11.56 \cdot in$	User Defined
Equipment Depth:	$D_{eq\_6} := 4.24 \cdot in$	User Defined
Equipment Weight:	$WT_{eq\_6} := 26 \cdot lbf$	User Defined
Equipment Volume:	$V_{eq\_6} := L_{eq\_6} \cdot W_{eq\_6} \cdot D_{eq\_6} = 0.4\ ft^3$	
Equipment Quantity:	$N_{eq\_6} := 6$	User Defined

NESC 250B Vertical Load

Volume of Equipment w/ Ice: $V_{eq\_6\_250B\_w\_ice} := (L_{eq\_6} + 2 \cdot r_{ice250B}) \cdot (W_{eq\_6} + 2 \cdot r_{ice250B}) \cdot (D_{eq\_6} + 2 \cdot r_{ice250B}) = 0.6\ ft^3$

Volume of Ice: $V_{eq\_6\_250B\_ice} := V_{eq\_6\_250B\_w\_ice} - V_{eq\_6} = 0.2\ ft^3$

Weight of Ice: $WT_{eq\_6\_250B\_ice} := V_{eq\_6\_250B\_ice} \cdot I_d = 10.1\ lbf$

Factored Vertical Load of All Equipment w/ 250B Ice: $WTall_{eq\_6\_250B} := (WT_{eq\_6} + WT_{eq\_6\_250B\_ice}) \cdot N_{eq\_6} \cdot OLF250B_V = 324\ lbf$

NESC 250C Vertical Load

Factored Vertical Load of All Equipment: $WTall_{eq\_6\_250C} := WT_{eq\_6} \cdot N_{eq\_6} \cdot OLF250C_V = 156\ lbf$

NESC 250B Wind Load

Area of Equipment w/ Ice: $SA_{eq\_6\_250B\_w\_ice} := (L_{eq\_6} + 2 \cdot r_{ice250B}) \cdot (W_{eq\_6} + 2 \cdot r_{ice250B}) = 1.3\ ft^2$

Factored Wind Load on All Equipment w/ 250B Ice: $WLall_{eq\_6\_250B} := qz_{250B} \cdot Cd_F \cdot SA_{eq\_6\_250B\_w\_ice} \cdot N_{eq\_6} \cdot OLF250B_T = 127\ lbf$

NESC 250C Wind Load

Area of Equipment w/ Ice: $SA_{eq\_6\_250C} := (L_{eq\_6}) \cdot (W_{eq\_6}) = 1.1\ ft^2$

Factored Wind Load on All Equipment: $WLall_{eq\_6\_250C} := qz_{250C} \cdot Cd_F \cdot SA_{eq\_6\_250C} \cdot N_{eq\_6} \cdot OLF250C_T \cdot m_{grf} = 479\ lbf$

Standard Equipment Calculations - Equipment 7

Equipment Properties

Existing Antenna Carrier:	T-Mobile	User Defined
Equipment Model:	Existing - RFS/Celwave - APX16DWV-16DWV-S-E-A20	User Defined
Equipment Height:	$L_{eq\_7} := 55.9 \cdot in$	User Defined
Equipment Width:	$W_{eq\_7} := 13.3 \cdot in$	User Defined
Equipment Depth:	$D_{eq\_7} := 3.2 \cdot in$	User Defined
Equipment Weight:	$WT_{eq\_7} := 40.7 \cdot lbf$	User Defined
Equipment Volume:	$V_{eq\_7} := L_{eq\_7} \cdot W_{eq\_7} \cdot D_{eq\_7} = 1.4\ ft^3$	
Equipment Quantity:	$N_{eq\_7} := 3$	User Defined

NESC 250B Vertical Load

Volume of Equipment w/ Ice:	$V_{eq\_7\_250B\_w\_ice} := (L_{eq\_7} + 2 \cdot r_{ice250B}) \cdot (W_{eq\_7} + 2 \cdot r_{ice250B}) \cdot (D_{eq\_7} + 2 \cdot r_{ice250B}) = 2\ ft^3$
Volume of Ice:	$V_{eq\_7\_250B\_ice} := V_{eq\_7\_250B\_w\_ice} - V_{eq\_7} = 0.6\ ft^3$
Weight of Ice:	$WT_{eq\_7\_250B\_ice} := V_{eq\_7\_250B\_ice} \cdot I_d = 34.2\ lbf$
Factored Vertical Load of All Equipment w/ 250B Ice:	$WTall_{eq\_7\_250B} := (WT_{eq\_7} + WT_{eq\_7\_250B\_ice}) \cdot N_{eq\_7} \cdot OLF250B_V = 337\ lbf$

NESC 250C Vertical Load

Factored Vertical Load of All Equipment:	$WTall_{eq\_7\_250C} := WT_{eq\_7} \cdot N_{eq\_7} \cdot OLF250C_V = 122\ lbf$

NESC 250B Wind Load

Area of Equipment w/ Ice:	$SA_{eq\_7\_250B\_w\_ice} := (L_{eq\_7} + 2 \cdot r_{ice250B}) \cdot (W_{eq\_7} + 2 \cdot r_{ice250B}) = 5.7\ ft^2$
Factored Wind Load on All Equipment w/ 250B Ice:	$WLall_{eq\_7\_250B} := qz_{250B} \cdot Cd_F \cdot SA_{eq\_7\_250B\_w\_ice} \cdot N_{eq\_7} \cdot OLF250B_T = 271\ lbf$

NESC 250C Wind Load

Area of Equipment w/ Ice:	$SA_{eq\_7\_250C} := (L_{eq\_7}) \cdot (W_{eq\_7}) = 5.2\ ft^2$
Factored Wind Load on All Equipment:	$WLall_{eq\_7\_250C} := qz_{250C} \cdot Cd_F \cdot SA_{eq\_7\_250C} \cdot N_{eq\_7} \cdot OLF250C_T \cdot m_{grf} = 1084\ lbf$

Standard Equipment Calculations - Mount Pipes 1

Equipment Properties

Existing Antenna Carrier:	AT&T Platform	User Defined
Equipment Model:	Mounting Pipes	User Defined
Pipe Height:	$L_{pipe\_1} := 72 \cdot in$	User Defined
Pipe Diameter:	$W_{pipe\_1} := 2.375 \cdot in$	User Defined
Pipe Weight:	$WT_{pipe\_1} := 21.9 \cdot lbf$	User Defined
Pipe Volume:	$V_{pipe\_1} := L_{pipe\_1} \cdot \frac{\left(\left(W_{pipe\_1}\right)^2 \cdot \pi\right)}{4} = 0.2\ ft^3$	
Pipe Quantity:	$N_{pipe\_1} := 9$	User Defined

NESC 250B Vertical Load

Volume of Pipe w/ Ice: $V_{pipe\_1\_250B\_w\_ice} := \left(L_{pipe\_1} + 2 \cdot r_{ice250B}\right) \cdot \frac{\left(\left(W_{pipe\_1} + 2 \cdot r_{ice250B}\right)^2 \cdot \pi\right)}{4} = 0.4\ ft^3$

Volume of Ice: $V_{pipe\_1\_250B\_ice} := V_{pipe\_1\_250B\_w\_ice} - V_{pipe\_1} = 0.2\ ft^3$

Weight of Ice: $WT_{pipe\_1\_250B\_ice} := V_{pipe\_1\_250B\_ice} \cdot I_d = 11\ lbf$

Factored Vertical Load of All Pipes w/ 250B Ice: $WTall_{pipe\_1\_250B} := \left(WT_{pipe\_1} + WT_{pipe\_1\_250B\_ice}\right) \cdot N_{pipe\_1} \cdot OLF250B_V = 444\ lbf$

NESC 250C Vertical Load

Factored Vertical Load of All Pipes: $WTall_{pipe\_1\_250C} := WT_{pipe\_1} \cdot N_{pipe\_1} \cdot OLF250C_V = 197\ lbf$

NESC 250B Wind Load

Area of PIpes w/ Ice: $SA_{pipe\_1\_250B\_w\_ice} := \left(L_{pipe\_1} + 2 \cdot r_{ice250B}\right) \cdot \left(W_{pipe\_1} + 2 \cdot r_{ice250B}\right) = 1.7\ ft^2$

Factored Wind Load on all Pipes w/ 250B Ice: $WLall_{pipe\_1\_250B} := qz_{250B} \cdot Cd_R \cdot SA_{pipe\_1\_250B\_w\_ice} \cdot N_{pipe\_1} \cdot OLF250B_T = 200\ lbf$

NESC 250C Wind Load

Area of Pipes w/ Ice: $SA_{pipe\_1\_250C} := \left(L_{pipe\_1}\right) \cdot \left(W_{pipe\_1}\right) = 1.2\ ft^2$

Factored Wind Load on All Pipes: $WLall_{pipe\_1\_250C} := qz_{250C} \cdot Cd_R \cdot SA_{pipe\_1\_250C} \cdot N_{pipe\_1} \cdot OLF250C_T \cdot m_{grf} = 608\ lbf$

Standard Equipment Calculations - Mount Pipes 2

Equipment Properties

Existing Antenna Carrier:	T-Mobile Collar Mount	User Defined
Equipment Model:	Mounting Pipes	User Defined
Pipe Height:	$L_{pipe\_2} := 72 \cdot in$	User Defined
Pipe Diameter:	$W_{pipe\_2} := 2.375 \cdot in$	User Defined
Pipe Weight:	$WT_{pipe\_2} := 21.9 \cdot lbf$	User Defined
Pipe Volume:	$V_{pipe\_2} := L_{pipe\_2} \cdot \frac{\left(\left(W_{pipe\_2}\right)^2 \cdot \pi\right)}{4} = 0.2\ ft^3$	
Pipe Quantity:	$N_{pipe\_2} := 3$	User Defined

NESC 250B Vertical Load

Volume of Pipes w/ Ice: $V_{pipe\_2\_250B\_w\_ice} := \left(L_{pipe\_2} + 2 \cdot r_{ice250B}\right) \cdot \frac{\left(\left(W_{pipe\_2} + 2 \cdot r_{ice250B}\right)^2 \cdot \pi\right)}{4} = 0.4\ ft^3$

Volume of Ice: $V_{pipe\_2\_250B\_ice} := V_{pipe\_2\_250B\_w\_ice} - V_{pipe\_2} = 0.2\ ft^3$

Weight of Ice: $WT_{pipe\_2\_250B\_ice} := V_{pipe\_2\_250B\_ice} \cdot I_d = 11\ lbf$

Factored Vertical Load of All Pipes w/ 250B Ice: $WTall_{pipe\_2\_250B} := \left(WT_{pipe\_2} + WT_{pipe\_2\_250B\_ice}\right) \cdot N_{pipe\_2} \cdot OLF250B_V = 148\ lbf$

NESC 250C Vertical Load

Factored Vertical Load of All Pipes: $WTall_{pipe\_2\_250C} := WT_{pipe\_2} \cdot N_{pipe\_2} \cdot OLF250C_V = 66\ lbf$

NESC 250B Wind Load

Area of all Pipes w/ Ice: $SA_{pipe\_2\_250B\_w\_ice} := \left(L_{pipe\_2} + 2 \cdot r_{ice250B}\right) \cdot \left(W_{pipe\_2} + 2 \cdot r_{ice250B}\right) = 1.7\ ft^2$

Factored Wind Load on all Pipes w/ 250B Ice: $WLall_{pipe\_2\_250B} := qz_{250B} \cdot Cd_R \cdot SA_{pipe\_2\_250B\_w\_ice} \cdot N_{pipe\_2} \cdot OLF250B_T = 67\ lbf$

NESC 250C Wind Load

Area of Pipes w/ Ice: $SA_{pipe\_2\_250C} := \left(L_{pipe\_2}\right) \cdot \left(W_{pipe\_2}\right) = 1.2\ ft^2$

Factored Wind Load on All Pipes: $WLall_{pipe\_2\_250C} := qz_{250C} \cdot Cd_R \cdot SA_{pipe\_2\_250C} \cdot N_{pipe\_2} \cdot OLF250C_T \cdot m_{grf} = 203\ lbf$

Standard Platform Calculations - Platform 1

Mount Properties

Existing Antenna Carrier:	AT&T	User Defined
Platform Model:	LP 303-1	User Defined
Platform Area w/o Ice:	$C_A A_{A\_plt\_1} := 14.66\ ft^2 = 14.66\ ft^2$	User Defined (Includes TIA shape factor)
Platform Area w/ 1/2" Ice:	$C_A A_{A\_plt\_1\_250B} := 18.87\ ft^2 = 18.87\ ft^2$	User Defined (Includes TIA shape factor)
Platform Area w/ 1" Ice:	$C_A A_{A\_plt\_1\_250D} := 23.08\ ft^2 = 23.08\ ft^2$	User Defined (Includes TIA shape factor)
Platform Weight w/o Ice:	$WT_{plt\_1} := 1250\ lbf = 1250\ lbf$	User Defined
Platform Weight w/ 1/2" Ice:	$WT_{plt\_1\_250B} := 1481.33\ lbf = 1481.33\ lbf$	User Defined
Platform Weight w/ 1" Ice:	$WT_{plt\_1\_250D} := 1712.66\ lbf = 1712.66\ lbf$	User Defined

NESC 250B Vertical Load

Factored Vertical Load of Platform w/ 250B Ice: $WTall_{plt\_1\_250B} := WT_{plt\_1\_250B} \cdot OLF250B_V = 2222\ lbf$

NESC 250C Vertical Load

Factored Vertical Load of Platform: $WTall_{plt\_1\_250C} := WT_{plt\_1} \cdot OLF250C_V = 1250\ lbf$

NESC 250B Wind Load

Factored Wind Load on Platform w/ 250B Ice: $WLall_{plt\_1\_250B} := qz_{250B} \cdot C_A A_{A\_plt\_1\_250B} \cdot OLF250B_T = 188\ lbf$

NESC 250C Wind Load

Factored Wind Load on Platform: $WLall_{plt\_1\_250C} := qz_{250C} \cdot C_A A_{A\_plt\_1} \cdot OLF250C_T \cdot m_{grf} = 641\ lbf$

Standard Platform Calculations - Platform 2

Mount Properties

Existing Antenna Carrier:	T-Mobile	User Defined
Platform Model:	Collar Mount	User Defined
Platform Area w/o Ice:	$C_AA_{A\_plt\_2} := 3 \cdot ft^2$	User Defined (Includes TIA shape factor)
Platform Area w/ 1/2" Ice:	$C_AA_{A\_plt\_2\_250B} := 3.48\ ft^2$	User Defined (Includes TIA shape factor)
Platform Area w/ 1" Ice:	$C_AA_{A\_plt\_2\_250D} := 3.96\ ft^2$	User Defined (Includes TIA shape factor)
Platform Weight w/o Ice:	$WT_{plt\_2} := 81 \cdot lbf$	User Defined
Platform Weight w/ 1/2" Ice:	$WT_{plt\_2\_250B} := 111 \cdot lbf$	User Defined
Platform Weight w/ 1" Ice:	$WT_{plt\_2\_250D} := 141 \cdot lbf$	User Defined

NESC 250B Vertical Load

Factored Vertical Load of Platform w/ 250B Ice: $WTall_{plt\_2\_250B} := WT_{plt\_2\_250B} \cdot OLF250B_V = 167\ lbf$

NESC 250C Vertical Load

Factored Vertical Load of Platform: $WTall_{plt\_2\_250C} := WT_{plt\_2} \cdot OLF250C_V = 81\ lbf$

NESC 250B Wind Load

Factored Wind Load on Platform w/ 250B Ice: $WLall_{plt\_2\_250B} := qz_{250B} \cdot C_AA_{A\_plt\_2\_250B} \cdot OLF250B_T = 35\ lbf$

NESC 250C Wind Load

Factored Wind Load on Platform: $WLall_{plt\_2\_250C} := qz_{250C} \cdot C_AA_{A\_plt\_2} \cdot OLF250C_T \cdot m_{grf} = 131\ lbf$

Standard Coax Calculations - Coax 1

Mount Properties

Existing Antenna Carrier:	AT&T	User Defined
Coax Outer Diameter:	$D_{coax\_1} := 1.09\ in$	User Defined
Coax Weight / Ft:	$WT_{coax\_1} := 0.33\ lbf$	User Defined
Coax Volume / Ft:	$V_{coax\_1} := 1\ ft \cdot \frac{\left(\left(D_{coax\_1}\right)^2 \cdot \pi\right)}{4} = 0.01\ ft^3$	
Coax Quantity:	$N_{coax\_1} := 18$	User Defined
Coax Projected Quantity:	$NP_{coax\_1} := 0$	User Defined
Coax Length:	$L_{coax\_1} := 124$ (Feet)	User Defined

NESC 250B Vertical Load

Volume of Coax w/ Ice / Ft: $V_{coax\_1\_250B\_w\_ice} := 1\ ft \cdot \frac{\left(\left(D_{coax\_1} + 2 \cdot r_{ice250B}\right)^2 \cdot \pi\right)}{4} = 0.02\ ft^3$

Volume of Ice / Ft: $V_{coax\_1\_250B\_ice} := V_{coax\_1\_250B\_w\_ice} - V_{coax\_1} = 0.02\ ft^3$

Weight of Ice / Ft: $WT_{coax\_1\_250B\_ice} := V_{coax\_1\_250B\_ice} \cdot I_d = 1\ lbf$

Factored Vertical Load of Coax w/ 250B Ice: $WTall_{coax\_1\_250B} := \left(WT_{coax\_1} + WT_{coax\_1\_250B\_ice}\right) \cdot N_{coax\_1} \cdot L_{coax\_1} \cdot OLF250B_V = 4415\ lbf$

NESC 250C Vertical Load

Factored Vertical Load of Coax: $WTall_{coax\_1\_250C} := WT_{coax\_1} \cdot N_{coax\_1} \cdot L_{coax\_1} \cdot OLF250C_V = 737\ lbf$

NESC 250B Wind Load

Area of Coax w/ Ice / Ft: $SA_{coax\_1\_250B\_w\_ice} := 1\ ft \cdot \left(D_{coax\_1} + 2 \cdot r_{ice250B}\right) = 0.17\ ft^2$

Factored Wind Load on Coax w/ 250B Ice: $WLall_{coax\_1\_250B} := qz_{250B} \cdot Cd_{coax} \cdot SA_{coax\_1\_250B\_w\_ice} \cdot NP_{coax\_1} \cdot L_{coax\_1} \cdot OLF250B_T = 0\ lbf$

NESC 250C Wind Load

Area of Coax w/ Ice / Ft: $SA_{coax\_1\_250C} := 1\ ft \cdot \left(D_{coax\_1}\right) = 0.09\ ft^2$

Factored Wind Load on Coax: $WLall_{coax\_1\_250C} := qz_{250C} \cdot Cd_{coax} \cdot SA_{coax\_1\_250C} \cdot NP_{coax\_1} \cdot L_{coax\_1} \cdot OLF250C_T \cdot m_{grf} = 0\ lbf$

Standard Coax Calculations - Coax 2

Mount Properties

Existing Antenna Carrier:	T-Mobile	User Defined
Coax Outer Diameter:	$D_{coax\_2} := 1.09\ in$	User Defined
Coax Weight / Ft:	$WT_{coax\_2} := 0.33\ lbf$	User Defined
Coax Volume / Ft:	$V_{coax\_2} := 1\ ft \cdot \frac{\left(\left(D_{coax\_2}\right)^2 \cdot \pi\right)}{4} = 0.01\ ft^3$	
Coax Quantity:	$N_{coax\_2} := 12$	User Defined
Coax Projected Quantity:	$NP_{coax\_2} := 7$	User Defined
Coax Length (above top of tower, applied to Risa model):	$L_{coax\_2} := 8$ (Feet)	User Defined

NESC 250B Vertical Load

Volume of Coax w/ Ice / Ft:	$V_{coax\_2\_250B\_w\_ice} := 1\ ft \cdot \frac{\left(\left(D_{coax\_2} + 2 \cdot r_{ice250B}\right)^2 \cdot \pi\right)}{4} = 0.02\ ft^3$
Volume of Ice / Ft:	$V_{coax\_2\_250B\_ice} := V_{coax\_2\_250B\_w\_ice} - V_{coax\_2} = 0.02\ ft^3$
Weight of Ice / Ft:	$WT_{coax\_2\_250B\_ice} := V_{coax\_2\_250B\_ice} \cdot I_d = 1\ lbf$
Total Factored Vertical Load of Coax w/ 250B Ice:	$WTall_{coax\_2\_250B} := \left(WT_{coax\_2} + WT_{coax\_2\_250B\_ice}\right) \cdot N_{coax\_2} \cdot L_{coax\_2} \cdot OLF250B_V = 190\ lbf$

NESC 250C Vertical Load

Total Factored Vertical Load of Coax:	$WTall_{coax\_2\_250C} := WT_{coax\_2} \cdot N_{coax\_2} \cdot L_{coax\_2} \cdot OLF250C_V = 32\ lbf$

NESC 250B Wind Load

Area of Coax w/ Ice / Ft:	$SA_{coax\_2\_250B\_w\_ice} := 1\ ft \cdot \left(D_{coax\_2} + 2 \cdot r_{ice250B}\right) = 0.17\ ft^2$
Total Factored Wind Load on Coax w/ 250B Ice:	$WLall_{coax\_2\_250B} := qz_{250B} \cdot Cd_{coax} \cdot SA_{coax\_2\_250B\_w\_ice} \cdot NP_{coax\_2} \cdot L_{coax\_2} \cdot OLF250B_T = 156\ lbf$

NESC 250C Wind Load

Area of Coax w/ Ice / Ft:	$SA_{coax\_2\_250C} := 1\ ft \cdot \left(D_{coax\_2}\right) = 0.09\ ft^2$
Total Factored Wind Load on Coax:	$WLall_{coax\_2\_250C} := qz_{250C} \cdot Cd_{coax} \cdot SA_{coax\_2\_250C} \cdot NP_{coax\_2} \cdot L_{coax\_2} \cdot OLF250C_T = 285\ lbf$

Coax 2 Below top of Tower (applied in Tower):

$$CoaxSpanLengths := \begin{bmatrix} 30.57 \\ 17.33 \\ 11.21 \\ 7.64 \\ 6.12 \\ 5.05 \\ 5 \\ 4.5 \\ 4 \\ 4 \\ 4.5 \\ 2.5 \end{bmatrix} \begin{bmatrix} CX1 \\ CX2 \\ CX3 \\ CX4 \\ CX5 \\ CX6 \\ CX7 \\ CX8 \\ CX9 \\ CX10 \\ CX11 \\ CX12 \end{bmatrix}$$

$$Vertical_{coax\_2\_250B} := \left(WT_{coax\_2} + WT_{coax\_2\_250B\_ice}\right) \cdot N_{coax\_2} \cdot CoaxSpanLengths \cdot OLF250B_V = \begin{bmatrix} 726 \\ 411 \\ 266 \\ 181 \\ 145 \\ 120 \\ 119 \\ 107 \\ 95 \\ 95 \\ 107 \\ 59 \end{bmatrix} lbf \begin{bmatrix} CX1 \\ CX2 \\ CX3 \\ CX4 \\ CX5 \\ CX6 \\ CX7 \\ CX8 \\ CX9 \\ CX10 \\ CX11 \\ CX12 \end{bmatrix}$$

$$Vertical_{coax\_2\_250C} := WT_{coax\_2} \cdot N_{coax\_2} \cdot CoaxSpanLengths \cdot OLF250C_V = \begin{bmatrix} 121 \\ 69 \\ 44 \\ 30 \\ 24 \\ 20 \\ 20 \\ 18 \\ 16 \\ 16 \\ 18 \\ 10 \end{bmatrix} lbf \begin{bmatrix} CX1 \\ CX2 \\ CX3 \\ CX4 \\ CX5 \\ CX6 \\ CX7 \\ CX8 \\ CX9 \\ CX10 \\ CX11 \\ CX12 \end{bmatrix}$$

$$Wind_{coax\_2\_250B} := qz_{250B} \cdot Cd_{coax} \cdot SA_{coax\_2\_250B\_w\_ice} \cdot NP_{coax\_2} \cdot CoaxSpanLengths \cdot OLF250B_T = \begin{bmatrix} 595 \\ 338 \\ 218 \\ 149 \\ 119 \\ 98 \\ 97 \\ 88 \\ 78 \\ 78 \\ 88 \\ 49 \end{bmatrix} lbf \begin{bmatrix} CX1 \\ CX2 \\ CX3 \\ CX4 \\ CX5 \\ CX6 \\ CX7 \\ CX8 \\ CX9 \\ CX10 \\ CX11 \\ CX12 \end{bmatrix}$$

$$Wind_{coax\_2\_250C} := qz_{250C} \cdot Cd_{coax} \cdot SA_{coax\_2\_250C} \cdot NP_{coax\_2} \cdot CoaxSpanLengths \cdot OLF250C_T = \begin{bmatrix} 1088 \\ 617 \\ 399 \\ 272 \\ 218 \\ 180 \\ 178 \\ 160 \\ 142 \\ 142 \\ 160 \\ 89 \end{bmatrix} lbf \begin{bmatrix} CX1 \\ CX2 \\ CX3 \\ CX4 \\ CX5 \\ CX6 \\ CX7 \\ CX8 \\ CX9 \\ CX10 \\ CX11 \\ CX12 \end{bmatrix}$$

Standard Coax Calculations - Coax 3

Mount Properties

Existing Antenna Carrier:	T-Mobile	User Defined
Coax Outer Diameter:	$D_{coax\_3} := 0.44\ in$	User Defined
Coax Weight / Ft:	$WT_{coax\_3} := 0.08\ lbf$	User Defined
Coax Volume / Ft:	$V_{coax\_3} := 1\ ft \cdot \frac{\left(\left(D_{coax\_3}\right)^2 \cdot \pi\right)}{4} = 0\ ft^3$	
Coax Quantity:	$N_{coax\_3} := 3$	User Defined
Coax Projected Quantity:	$NP_{coax\_3} := 3$	User Defined
Coax Length (above top of tower, applied to Risa):	$L_{coax\_3} := 8$ (Feet)	User Defined

NESC 250B Vertical Load

Volume of Coax w/ Ice / Ft: $V_{coax\_3\_250B\_w\_ice} := 1\ ft \cdot \frac{\left(\left(D_{coax\_3} + 2 \cdot r_{ice250B}\right)^2 \cdot \pi\right)}{4} = 0.01\ ft^3$

Volume of Ice / Ft: $V_{coax\_3\_250B\_ice} := V_{coax\_3\_250B\_w\_ice} - V_{coax\_3} = 0.01\ ft^3$

Weight of Ice / Ft: $WT_{coax\_3\_250B\_ice} := V_{coax\_3\_250B\_ice} \cdot I_d = 0.6\ lbf$

Factored Vertical Load of Coax w/ 250B Ice: $WTall_{coax\_3\_250B} := \left(WT_{coax\_3} + WT_{coax\_3\_250B\_ice}\right) \cdot N_{coax\_3} \cdot L_{coax\_3} \cdot OLF250B_V = 24\ lbf$

NESC 250C Vertical Load

Factored Vertical Load of Coax: $WTall_{coax\_3\_250C} := WT_{coax\_3} \cdot N_{coax\_3} \cdot L_{coax\_3} \cdot OLF250C_V = 2\ lbf$

NESC 250B Wind Load

Area of Coax w/ Ice / Ft: $SA_{coax\_3\_250B\_w\_ice} := 1\ ft \cdot \left(D_{coax\_3} + 2 \cdot r_{ice250B}\right) = 0.12\ ft^2$

Factored Wind Load on Coax w/ 250B Ice: $WLall_{coax\_3\_250B} := qz_{250B} \cdot Cd_{coax} \cdot SA_{coax\_3\_250B\_w\_ice} \cdot NP_{coax\_3} \cdot L_{coax\_3} \cdot OLF250B_T = 46\ lbf$

NESC 250C Wind Load

Area of Coax w/ Ice / Ft: $SA_{coax\_3\_250C} := 1\ ft \cdot \left(D_{coax\_3}\right) = 0.04\ ft^2$

Factored Wind Load on Coax: $WLall_{coax\_3\_250C} := qz_{250C} \cdot Cd_{coax} \cdot SA_{coax\_3\_250C} \cdot NP_{coax\_3} \cdot L_{coax\_3} \cdot OLF250C_T = 49\ lbf$

Coax 3 Below top of Tower (applied in Tower):

$$Vertical_{coax\_3\_250B} := \left(WT_{coax\_3} + WT_{coax\_3\_250B\_ice}\right) \cdot N_{coax\_3} \cdot CoaxSpanLengths \cdot OLF250B_V = \begin{bmatrix} 91 \\ 52 \\ 34 \\ 23 \\ 18 \\ 15 \\ 15 \\ 13 \\ 12 \\ 12 \\ 13 \\ 7 \end{bmatrix} lbf \quad \begin{bmatrix} CX1 \\ CX2 \\ CX3 \\ CX4 \\ CX5 \\ CX6 \\ CX7 \\ CX8 \\ CX9 \\ CX10 \\ CX11 \\ CX12 \end{bmatrix}$$

$$Vertical_{coax\_3\_250C} := WT_{coax\_3} \cdot N_{coax\_3} \cdot CoaxSpanLengths \cdot OLF250C_V = \begin{bmatrix} 7 \\ 4 \\ 3 \\ 2 \\ 1 \\ 1 \\ 1 \\ 1 \\ 1 \\ 1 \\ 1 \\ 1 \end{bmatrix} lbf \quad \begin{bmatrix} CX1 \\ CX2 \\ CX3 \\ CX4 \\ CX5 \\ CX6 \\ CX7 \\ CX8 \\ CX9 \\ CX10 \\ CX11 \\ CX12 \end{bmatrix}$$

$$Wind_{coax\_3\_250B} := qz_{250B} \cdot Cd_{coax} \cdot SA_{coax\_3\_250B\_w\_ice} \cdot NP_{coax\_3} \cdot CoaxSpanLengths \cdot OLF250B_T = \begin{bmatrix} 176 \\ 100 \\ 64 \\ 44 \\ 35 \\ 29 \\ 29 \\ 26 \\ 23 \\ 23 \\ 26 \\ 14 \end{bmatrix} lbf \quad \begin{bmatrix} CX1 \\ CX2 \\ CX3 \\ CX4 \\ CX5 \\ CX6 \\ CX7 \\ CX8 \\ CX9 \\ CX10 \\ CX11 \\ CX12 \end{bmatrix}$$

$$Wind_{coax\_3\_250C} := qz_{250C} \cdot Cd_{coax} \cdot SA_{coax\_3\_250C} \cdot NP_{coax\_3} \cdot CoaxSpanLengths \cdot OLF250C_T = \begin{bmatrix} 188 \\ 107 \\ 69 \\ 47 \\ 38 \\ 31 \\ 31 \\ 28 \\ 25 \\ 25 \\ 28 \\ 15 \end{bmatrix} lbf \quad \begin{bmatrix} CX1 \\ CX2 \\ CX3 \\ CX4 \\ CX5 \\ CX6 \\ CX7 \\ CX8 \\ CX9 \\ CX10 \\ CX11 \\ CX12 \end{bmatrix}$$

Total T-Mobile Coax Loading (applied in Tower):

$$TotalVertical_{coax\_250B} := Vertical_{coax\_2\_250B} + Vertical_{coax\_3\_250B} = \begin{bmatrix} 817 \\ 463 \\ 300 \\ 204 \\ 164 \\ 135 \\ 134 \\ 120 \\ 107 \\ 107 \\ 120 \\ 67 \end{bmatrix} lbf \quad \begin{bmatrix} CX1 \\ CX2 \\ CX3 \\ CX4 \\ CX5 \\ CX6 \\ CX7 \\ CX8 \\ CX9 \\ CX10 \\ CX11 \\ CX12 \end{bmatrix}$$

$$TotalVertical_{coax\_250C} := Vertical_{coax\_2\_250C} + Vertical_{coax\_3\_250C} = \begin{bmatrix} 128 \\ 73 \\ 47 \\ 32 \\ 26 \\ 21 \\ 21 \\ 19 \\ 17 \\ 17 \\ 19 \\ 11 \end{bmatrix} lbf \quad \begin{bmatrix} CX1 \\ CX2 \\ CX3 \\ CX4 \\ CX5 \\ CX6 \\ CX7 \\ CX8 \\ CX9 \\ CX10 \\ CX11 \\ CX12 \end{bmatrix}$$

$$TotalWind_{coax\_250B} := Wind_{coax\_2\_250B} + Wind_{coax\_3\_250B} = \begin{bmatrix} 771 \\ 437 \\ 283 \\ 193 \\ 154 \\ 127 \\ 126 \\ 114 \\ 101 \\ 101 \\ 114 \\ 63 \end{bmatrix} lbf \quad \begin{bmatrix} CX1 \\ CX2 \\ CX3 \\ CX4 \\ CX5 \\ CX6 \\ CX7 \\ CX8 \\ CX9 \\ CX10 \\ CX11 \\ CX12 \end{bmatrix}$$

$$TotalWind_{coax\_250C} := Wind_{coax\_2\_250C} + Wind_{coax\_3\_250C} = \begin{bmatrix} 1276 \\ 723 \\ 468 \\ 319 \\ 255 \\ 211 \\ 209 \\ 188 \\ 167 \\ 167 \\ 188 \\ 104 \end{bmatrix} lbf \quad \begin{bmatrix} CX1 \\ CX2 \\ CX3 \\ CX4 \\ CX5 \\ CX6 \\ CX7 \\ CX8 \\ CX9 \\ CX10 \\ CX11 \\ CX12 \end{bmatrix}$$

AT&T Loads @ 124'

NESC 250B Loads Applied In Risa-3D

$NESC\_250B_V := WTall_{eq\_1\_250B} + WTall_{eq\_2\_250B} + WTall_{eq\_3\_250B} + WTall_{eq\_4\_250B} + WTall_{eq\_5\_250B} + WTall_{eq\_6\_250B} + WTall_{plt\_1\_250B} + WTall_{pipe\_1\_250B} = 5081\ lbf$

$NESC\_250B_T := WLall_{eq\_1\_250B} + WLall_{eq\_2\_250B} + WLall_{eq\_3\_250B} + WLall_{eq\_4\_250B} + WLall_{eq\_5\_250B} + WLall_{eq\_6\_250B} + WLall_{plt\_1\_250B} + WLall_{pipe\_1\_250B} = 1842\ lbf$

$Coax\_NESC\_250B_V := WTall_{coax\_1\_250B} = 4415\ lbf$ Applied as a linear load: 4415lb/124ft = 35.6plf

$Coax\_NESC\_250B_T := WLall_{coax\_1\_250B} = 0\ lbf$

NESC 250C Loads Applied In Risa-3D

$NESC\_250C_V := WTall_{eq\_1\_250C} + WTall_{eq\_2\_250C} + WTall_{eq\_3\_250C} + WTall_{eq\_4\_250C} + WTall_{eq\_5\_250C} + WTall_{eq\_6\_250C} + WTall_{plt\_1\_250C} + WTall_{pipe\_1\_250C} = 2388\ lbf$

$NESC\_250C_T := WLall_{eq\_1\_250C} + WLall_{eq\_2\_250C} + WLall_{eq\_3\_250C} + WLall_{eq\_4\_250C} + WLall_{eq\_5\_250C} + WLall_{eq\_6\_250C} + WLall_{plt\_1\_250C} + WLall_{pipe\_1\_250C} = 7042\ lbf$

$Coax\_NESC\_250C_V := WTall_{coax\_1\_250C} = 737\ lbf$ Applied as a linear load: 737lb/124ft = 5.94plf

$Coax\_NESC\_250C_T := WLall_{coax\_1\_250C} = 0\ lbf$

T-Mobile Loads @ 100'

T-Mobile Loads @ 109'

NESC 250B Loads Applied In Risa-3D

$NESC\_250B_V := WTall_{eq\_7\_250B} + WTall_{pipe\_2\_250B} + WTall_{plt\_2\_250B} = 652\ lbf$

$NESC\_250B_T := WLall_{eq\_7\_250B} + WLall_{pipe\_2\_250B} + WLall_{plt\_2\_250B} = 372\ lbf$

$Coax\_NESC\_250B_V := WTall_{coax\_2\_250B} + WTall_{coax\_3\_250B} = 214\ lbf$

$Coax\_NESC\_250B_T := WLall_{coax\_2\_250B} + WLall_{coax\_3\_250B} = 202\ lbf$

NESC 250C Loads Applied In Risa-3D

$NESC\_250C_V := WTall_{eq\_7\_250C} + WTall_{pipe\_2\_250C} + WTall_{plt\_2\_250C} = 269\ lbf$

$NESC\_250C_T := WLall_{eq\_7\_250C} + WLall_{pipe\_2\_250C} + WLall_{plt\_2\_250C} = 1417\ lbf$

$Coax\_NESC\_250C_V := WTall_{coax\_2\_250C} + WTall_{coax\_3\_250C} = 34\ lbf$

$Coax\_NESC\_250C_T := WLall_{coax\_2\_250C} + WLall_{coax\_3\_250C} = 334\ lbf$

APPENDIX C

COMPUTER OUTPUT

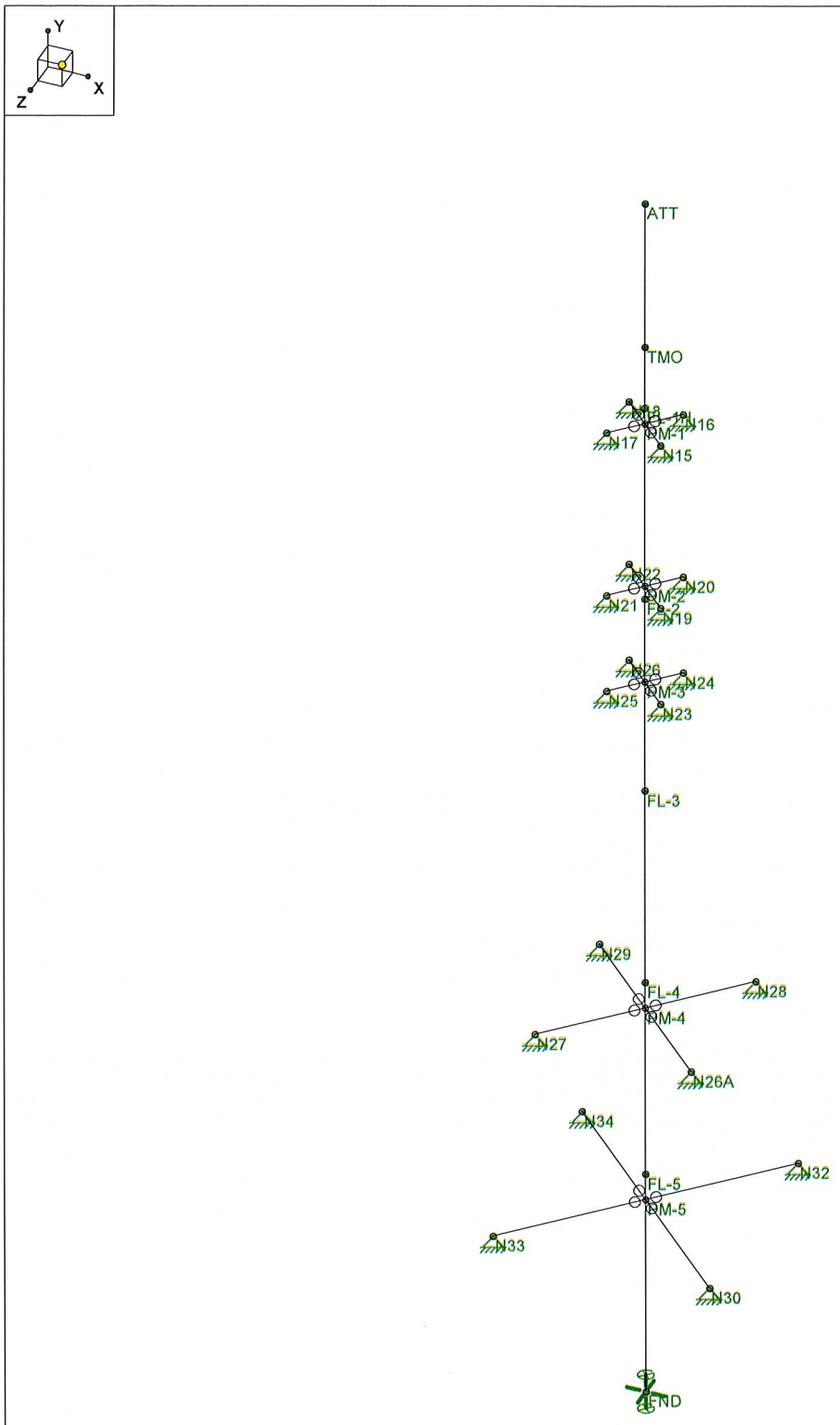

Paul J. Ford and Company	Pipe Riser - TIA	SK - 1
CEC		Aug 12, 2019 at 6:41 PM
A37519-3029.001.6125		37519-3029.001.6125 Pipe Riser.rt3

(Global) Model Settings

Display Sections for Member Calcs	5
Max Internal Sections for Member Calcs	97
Include Shear Deformation?	Yes
Increase Nailing Capacity for Wind?	Yes
Include Warping?	Yes
Trans Load Btwn Intersecting Wood Wall?	Yes
Area Load Mesh (in^2)	144
Merge Tolerance (in)	.12
P-Delta Analysis Tolerance	0.50%
Include P-Delta for Walls?	Yes
Automatically Iterate Stiffness for Walls?	No
Max Iterations for Wall Stiffness	3
Gravity Acceleration (ft/sec^2)	32.2
Wall Mesh Size (in)	24
Eigensolution Convergence Tol. (1.E-)	4
Vertical Axis	Y
Global Member Orientation Plane	XZ
Static Solver	Sparse Accelerated
Dynamic Solver	Standard Solver

Hot Rolled Steel Code	AISC 14th(360-10): LRFD
Adjust Stiffness?	Yes(Iterative)
RISAConnection Code	None
Cold Formed Steel Code	None
Wood Code	None
Wood Temperature	< 100F
Concrete Code	None
Masonry Code	None
Aluminum Code	None - Building
Stainless Steel Code	None

Number of Shear Regions	4
Region Spacing Increment (in)	4
Biaxial Column Method	Exact Integration
Parme Beta Factor (PCA)	.65
Concrete Stress Block	Rectangular
Use Cracked Sections?	Yes
Use Cracked Sections Slab?	No
Bad Framing Warnings?	No
Unused Force Warnings?	Yes
Min 1 Bar Diam. Spacing?	No
Concrete Rebar Set	REBAR_SET_ASTMA615
Min % Steel for Column	1
Max % Steel for Column	8

(Global) Model Settings, Continued

Seismic Code	ASCE 7-10
Seismic Base Elevation (ft)	Not Entered
Add Base Weight?	Yes
Ct X	.02
Ct Z	.02
T X (sec)	Not Entered
T Z (sec)	Not Entered
R X	3
R Z	3
Ct Exp. X	.75
Ct Exp. Z	.75
SD1	1
SDS	1
S1	1
TL (sec)	5
Risk Cat	I or II
Drift Cat	Other
Om Z	1
Om X	1
Cd Z	4
Cd X	4
Rho Z	1
Rho X	1

Joint Coordinates and Temperatures

	Label	X [ft]	Y [ft]	Z [ft]	Temp [F]	Detach From Diaphragm
1	FL-1H	0	102.666667	0	0	
2	ATT	0	124	0	0	
3	FL-2	0	82.666667	0	0	
4	FL-3	0	62.666667	0	0	
5	FL-4	0	42.666667	0	0	
6	FL-5	0	22.666667	0	0	
7	FND	0	0	0	0	
8	TMO	0	109	0	0	
9	PM-5	0	20	0	0	
10	PM-4	0	40	0	0	
11	PM-3	0	74	0	0	
12	PM-2	0	84	0	0	
13	PM-1	0	101	0	0	
14	N15	2.5	101	2.5	0	
15	N16	2.5	101	-2.5	0	
16	N17	-2.5	101	2.5	0	
17	N18	-2.5	101	-2.5	0	
18	N19	2.5	84	2.5	0	
19	N20	2.5	84	-2.5	0	
20	N21	-2.5	84	2.5	0	
21	N22	-2.5	84	-2.5	0	
22	N23	2.5	74	2.5	0	
23	N24	2.5	74	-2.5	0	
24	N25	-2.5	74	2.5	0	
25	N26	-2.5	74	-2.5	0	
26	N26A	7.21	40	7.21	0	
27	N27	-7.21	40	7.21	0	
28	N28	7.21	40	-7.21	0	
29	N29	-7.21	40	-7.21	0	
30	N30	9.98	20	9.98	0	

Joint Coordinates and Temperatures (Continued)

	Label	X [ft]	Y [ft]	Z [ft]	Temp [F]	Detach From Diaphragm
31	N32	9.98	20	-9.98	0	
32	N33	-9.98	20	9.98	0	
33	N34	-9.98	20	-9.98	0	

Joint Boundary Conditions

	Joint Label	X [k/in]	Y [k/in]	Z [k/in]	X Rot.[k-ft/rad]	Y Rot.[k-ft/rad]	Z Rot.[k-ft/rad]
1	FND	Reaction	Reaction	Reaction		Reaction	
2	PM-5						
3	PM-4						
4	PM-3						
5	PM-2						
6	PM-1						
7	N15	Reaction	Reaction	Reaction			
8	N16	Reaction	Reaction	Reaction			
9	N17	Reaction	Reaction	Reaction			
10	N18	Reaction	Reaction	Reaction			
11	N19	Reaction	Reaction	Reaction			
12	N20	Reaction	Reaction	Reaction			
13	N21	Reaction	Reaction	Reaction			
14	N22	Reaction	Reaction	Reaction			
15	N23	Reaction	Reaction	Reaction			
16	N24	Reaction	Reaction	Reaction			
17	N25	Reaction	Reaction	Reaction			
18	N26	Reaction	Reaction	Reaction			
19	N26A	Reaction	Reaction	Reaction			
20	N27	Reaction	Reaction	Reaction			
21	N28	Reaction	Reaction	Reaction			
22	N29	Reaction	Reaction	Reaction			
23	N30	Reaction	Reaction	Reaction			
24	N32	Reaction	Reaction	Reaction			
25	N33	Reaction	Reaction	Reaction			
26	N34	Reaction	Reaction	Reaction			

Hot Rolled Steel Properties

	Label	E [ksi]	G [ksi]	Nu	Therm (/1...	Density[k/...	Yield[ksi]	Ry	Fu[ksi]	Rt
1	A36 Gr. 36	29000	11154	.3	.65	.49	36	1.5	58	1.2
2	A572 Gr. 50	29000	11154	.3	.65	.49	50	1.1	65	1.1
3	A992	29000	11154	.3	.65	.49	50	1.4	65	1.1
4	A500 Gr. 42	29000	11154	.3	.65	.49	42	1.4	58	1.3
5	A500 Gr. 46	29000	11154	.3	.65	.49	46	1.6	58	1.3
6	A53 Gr.B	29000	11154	.3	.65	.49	35	1.5	60	1.2

Member Primary Data

	Label	I Joint	J Joint	K Joint	Rotate(d...	Section/Shape	Type	Design List	Material	Design Ru...
1	M1	FL-1H	ATT			18" Pipe	Column	Pipe	A500 Gr. 42	Typical
2	M2	FL-2	FL-1H			18" Pipe	Column	Pipe	A500 Gr. 42	Typical
3	M3	FL-3	FL-2			18" Pipe	Column	Pipe	A500 Gr. 42	Typical
4	M4	FL-4	FL-3			18" Pipe	Column	Pipe	A500 Gr. 42	Typical
5	M5	FL-5	FL-4			18" Pipe	Column	Pipe	A500 Gr. 42	Typical
6	M6	FND	FL-5			18" Pipe	Column	Pipe	A500 Gr. 42	Typical
7	M7	PM-1	N17			L2.5x2.5x3	Beam	Single Angle	A36 Gr. 36	Typical
8	M8	PM-1	N15			L2.5x2.5x3	Beam	Single Angle	A36 Gr. 36	Typical

Member Primary Data (Continued)

	Label	I Joint	J Joint	K Joint	Rotate(d...	Section/Shape	Type	Design List	Material	Design Ru...
9	M9	PM-1	N16			L2.5x2.5x3	Beam	Single Angle	A36 Gr. 36	Typical
10	M10	PM-1	N18			L2.5x2.5x3	Beam	Single Angle	A36 Gr. 36	Typical
11	M11	PM-2	N21			L2.5x2.5x3	Beam	Single Angle	A36 Gr. 36	Typical
12	M12	PM-2	N19			L2.5x2.5x3	Beam	Single Angle	A36 Gr. 36	Typical
13	M13	PM-2	N20			L2.5x2.5x3	Beam	Single Angle	A36 Gr. 36	Typical
14	M14	PM-2	N22			L2.5x2.5x3	Beam	Single Angle	A36 Gr. 36	Typical
15	M15	PM-3	N25			L2.5x2.5x3	Beam	Single Angle	A36 Gr. 36	Typical
16	M16	PM-3	N23			L2.5x2.5x3	Beam	Single Angle	A36 Gr. 36	Typical
17	M17	PM-3	N24			L2.5x2.5x3	Beam	Single Angle	A36 Gr. 36	Typical
18	M18	PM-3	N26			L2.5x2.5x3	Beam	Single Angle	A36 Gr. 36	Typical
19	M19	PM-4	N27			L2.5x2.5x3	Beam	Single Angle	A36 Gr. 36	Typical
20	M20	PM-4	N29			L2.5x2.5x3	Beam	Single Angle	A36 Gr. 36	Typical
21	M21	PM-4	N28			L2.5x2.5x3	Beam	Single Angle	A36 Gr. 36	Typical
22	M22	PM-4	N26A			L2.5x2.5x3	Beam	Single Angle	A36 Gr. 36	Typical
23	M23	PM-5	N33			L2.5x2.5x3	Beam	Single Angle	A36 Gr. 36	Typical
24	M24	PM-5	N34			L2.5x2.5x3	Beam	Single Angle	A36 Gr. 36	Typical
25	M25	PM-5	N32			L2.5x2.5x3	Beam	Single Angle	A36 Gr. 36	Typical
26	M26	PM-5	N30			L2.5x2.5x3	Beam	Single Angle	A36 Gr. 36	Typical

Basic Load Cases

	BLC Description	Category	X Gr...	Y Gr...	Z Gr...	Joint	Point	Distri...	Area(...	Surfa...
1	Dead	None		-1			58			
2	No Ice Wind 0 deg	None					51	6		
3	No Ice Wind 30 deg	None					67	12		
4	No Ice Wind 60 deg	None					60	12		
5	No Ice Wind 90 deg	None					58	6		
6	No Ice Wind 120 deg	None					60	12		
7	No Ice Wind 150 deg	None					67	12		
8	No Ice Wind 180 deg	None					51	6		
9	No Ice Wind 210 deg	None					67	12		
10	No Ice Wind 240 deg	None					60	12		
11	No Ice Wind 270 deg	None					58	6		
12	No Ice Wind 300 deg	None					60	12		
13	No Ice Wind 330 deg	None					67	12		
14	Ice	None					58	6		
15	Temperature Drop	None						6		
16	Ice Wind 0 deg	None					49	6		
17	Ice Wind 30 deg	None					67	12		
18	Ice Wind 60 deg	None					60	12		
19	Ice Wind 90 deg	None					56	6		
20	Ice Wind 120 deg	None					60	12		
21	Ice Wind 150 deg	None					67	12		
22	Ice Wind 180 deg	None					49	6		
23	Ice Wind 210 deg	None					67	12		
24	Ice Wind 240 deg	None					60	12		
25	Ice Wind 270 deg	None					56	6		
26	Ice Wind 300 deg	None					60	12		
27	Ice Wind 330 deg	None					67	12		
28	Service Wind 0 deg	None					51	6		
29	Service Wind 30 deg	None					67	12		
30	Service Wind 60 deg	None					60	12		
31	Service Wind 90 deg	None					58	6		
32	Service Wind 120 deg	None					60	12		
33	Service Wind 150 deg	None					67	12		
34	Service Wind 180 deg	None					51	6		

Basic Load Cases (Continued)

	BLC Description	Category	X Gr...	Y Gr...	Z Gr...	Joint	Point	Distri...	Area(...	Surfa...
35	Service Wind 210 deg	None					67	12		
36	Service Wind 240 deg	None					60	12		
37	Service Wind 270 deg	None					58	6		
38	Service Wind 300 deg	None					60	12		
39	Service Wind 330 deg	None					67	12		

Load Combinations

	Description	Sol...	PDelta	SRSS	B...	Fa...	B...	Fac...	B...	Fa...	B...	Fa...	B...	Fa...	B...	Fa...	B...	Fa...	B...	Fa...	B...	Fa...	B...	Fa...
1	Dead Only	Yes	Y		1	1	40	1	41	1	0		0		0		0		0		0			
2	1.2 Dead+1.6 Wind 0 deg - No Ice	Yes	Y		1	1.2	2	1.6	40	1.2	41	1	0		0		0		0		0			
3	0.9 Dead+1.6 Wind 0 deg - No Ice	Yes	Y		1	.9	2	1.6	40	.9	41	1	0		0		0		0		0			
4	1.2 Dead+1.6 Wind 30 deg - No Ice	Yes	Y		1	1.2	3	1.6	40	1.2	41	1	0		0		0		0		0			
5	0.9 Dead+1.6 Wind 30 deg - No Ice	Yes	Y		1	.9	3	1.6	40	.9	41	1	0		0		0		0		0			
6	1.2 Dead+1.6 Wind 60 deg - No Ice	Yes	Y		1	1.2	4	1.6	40	1.2	41	1	0		0		0		0		0			
7	0.9 Dead+1.6 Wind 60 deg - No Ice	Yes	Y		1	.9	4	1.6	40	.9	41	1	0		0		0		0		0			
8	1.2 Dead+1.6 Wind 90 deg - No Ice	Yes	Y		1	1.2	5	1.6	40	1.2	41	1	0		0		0		0		0			
9	0.9 Dead+1.6 Wind 90 deg - No Ice	Yes	Y		1	.9	5	1.6	40	.9	41	1	0		0		0		0		0			
10	1.2 Dead+1.6 Wind 120 deg - No ...	Yes	Y		1	1.2	6	1.6	40	1.2	41	1	0		0		0		0		0			
11	0.9 Dead+1.6 Wind 120 deg - No ...	Yes	Y		1	.9	6	1.6	40	.9	41	1	0		0		0		0		0			
12	1.2 Dead+1.6 Wind 150 deg - No ...	Yes	Y		1	1.2	7	1.6	40	1.2	41	1	0		0		0		0		0			
13	0.9 Dead+1.6 Wind 150 deg - No ...	Yes	Y		1	.9	7	1.6	40	.9	41	1	0		0		0		0		0			
14	1.2 Dead+1.6 Wind 180 deg - No ...	Yes	Y		1	1.2	8	1.6	40	1.2	41	1	0		0		0		0		0			
15	0.9 Dead+1.6 Wind 180 deg - No ...	Yes	Y		1	.9	8	1.6	40	.9	41	1	0		0		0		0		0			
16	1.2 Dead+1.6 Wind 210 deg - No ...	Yes	Y		1	1.2	9	1.6	40	1.2	41	1	0		0		0		0		0			
17	0.9 Dead+1.6 Wind 210 deg - No ...	Yes	Y		1	.9	9	1.6	40	.9	41	1	0		0		0		0		0			
18	1.2 Dead+1.6 Wind 240 deg - No ...	Yes	Y		1	1.2	10	1.6	40	1.2	41	1	0		0		0		0		0			
19	0.9 Dead+1.6 Wind 240 deg - No ...	Yes	Y		1	.9	10	1.6	40	.9	41	1	0		0		0		0		0			
20	1.2 Dead+1.6 Wind 270 deg - No ...	Yes	Y		1	1.2	11	1.6	40	1.2	41	1	0		0		0		0		0			
21	0.9 Dead+1.6 Wind 270 deg - No ...	Yes	Y		1	.9	11	1.6	40	.9	41	1	0		0		0		0		0			
22	1.2 Dead+1.6 Wind 300 deg - No ...	Yes	Y		1	1.2	12	1.6	40	1.2	41	1	0		0		0		0		0			
23	0.9 Dead+1.6 Wind 300 deg - No ...	Yes	Y		1	.9	12	1.6	40	.9	41	1	0		0		0		0		0			
24	1.2 Dead+1.6 Wind 330 deg - No ...	Yes	Y		1	1.2	13	1.6	40	1.2	41	1	0		0		0		0		0			
25	0.9 Dead+1.6 Wind 330 deg - No ...	Yes	Y		1	.9	13	1.6	40	.9	41	1	0		0		0		0		0			
26	1.2 Dead+1.0 Ice+1.0 Temp	Yes	Y		1	1.2	14	1	15	1	40	1.2	41	1	0		0		0		0			
27	1.2 Dead+1.0 Wind 0 deg+1.0 Ice...	Yes	Y		1	1.2	16	1	14	1	15	1	40	1.2	41	1	0		0		0			
28	1.2 Dead+1.0 Wind 30 deg+1.0 Ic...	Yes	Y		1	1.2	17	1	14	1	15	1	40	1.2	41	1	0		0		0			
29	1.2 Dead+1.0 Wind 60 deg+1.0 Ic...	Yes	Y		1	1.2	18	1	14	1	15	1	40	1.2	41	1	0		0		0			
30	1.2 Dead+1.0 Wind 90 deg+1.0 Ic...	Yes	Y		1	1.2	19	1	14	1	15	1	40	1.2	41	1	0		0		0			
31	1.2 Dead+1.0 Wind 120 deg+1.0 I...	Yes	Y		1	1.2	20	1	14	1	15	1	40	1.2	41	1	0		0		0			
32	1.2 Dead+1.0 Wind 150 deg+1.0 I...	Yes	Y		1	1.2	21	1	14	1	15	1	40	1.2	41	1	0		0		0			
33	1.2 Dead+1.0 Wind 180 deg+1.0 I...	Yes	Y		1	1.2	22	1	14	1	15	1	40	1.2	41	1	0		0		0			
34	1.2 Dead+1.0 Wind 210 deg+1.0 I...	Yes	Y		1	1.2	23	1	14	1	15	1	40	1.2	41	1	0		0		0			
35	1.2 Dead+1.0 Wind 240 deg+1.0 I...	Yes	Y		1	1.2	24	1	14	1	15	1	40	1.2	41	1	0		0		0			
36	1.2 Dead+1.0 Wind 270 deg+1.0 I...	Yes	Y		1	1.2	25	1	14	1	15	1	40	1.2	41	1	0		0		0			
37	1.2 Dead+1.0 Wind 300 deg+1.0 I...	Yes	Y		1	1.2	26	1	14	1	15	1	40	1.2	41	1	0		0		0			
38	1.2 Dead+1.0 Wind 330 deg+1.0 I...	Yes	Y		1	1.2	27	1	14	1	15	1	40	1.2	41	1	0		0		0			
39	Dead+Wind 0 deg - Service	Yes	Y		1	1	28	1	40	1	41	1	0		0		0		0		0			
40	Dead+Wind 30 deg - Service	Yes	Y		1	1	29	1	40	1	41	1	0		0		0		0		0			
41	Dead+Wind 60 deg - Service	Yes	Y		1	1	30	1	40	1	41	1	0		0		0		0		0			
42	Dead+Wind 90 deg - Service	Yes	Y		1	1	31	1	40	1	41	1	0		0		0		0		0			
43	Dead+Wind 120 deg - Service	Yes	Y		1	1	32	1	40	1	41	1	0		0		0		0		0			
44	Dead+Wind 150 deg - Service	Yes	Y		1	1	33	1	40	1	41	1	0		0		0		0		0			
45	Dead+Wind 180 deg - Service	Yes	Y		1	1	34	1	40	1	41	1	0		0		0		0		0			
46	Dead+Wind 210 deg - Service	Yes	Y		1	1	35	1	40	1	41	1	0		0		0		0		0			
47	Dead+Wind 240 deg - Service	Yes	Y		1	1	36	1	40	1	41	1	0		0		0		0		0			

Load Combinations (Continued)

	Description	Sol...	PDelta	SRSS	B...	Fa...	B...	Fac...	B...	Fa...	B...	Fa...	B...	Fa...	B...	Fa...	B...	Fa...	B...	Fa...	B...	Fa...	B...	Fa...
48	Dead+Wind 270 deg - Service	Yes	Y		1	1	37	1	40	1	41	1	0		0		0		0		0			
49	Dead+Wind 300 deg - Service	Yes	Y		1	1	38	1	40	1	41	1	0		0		0		0		0			
50	Dead+Wind 330 deg - Service	Yes	Y		1	1	39	1	40	1	41	1	0		0		0		0		0			

Member Distributed Loads (BLC 2 : No Ice Wind 0 deg)

	Member Label	Direction	Start Magnitude[k/ft,F,ksf]	End Magnitude[k/ft,F,ksf]	Start Location[ft,%]	End Location[ft,%]
1	M1	Z	-.034	-.034	0	21.333
2	M2	Z	-.032	-.032	0	20
3	M3	Z	-.031	-.031	0	20
4	M4	Z	-.029	-.029	0	20
5	M5	Z	-.026	-.026	0	20
6	M6	Z	-.022	-.022	0	22.667

Member Distributed Loads (BLC 3 : No Ice Wind 30 deg)

	Member Label	Direction	Start Magnitude[k/ft,F,ksf]	End Magnitude[k/ft,F,ksf]	Start Location[ft,%]	End Location[ft,%]
1	M1	X	.017	.017	0	21.333
2	M1	Z	-.029	-.029	0	21.333
3	M2	X	.016	.016	0	20
4	M2	Z	-.028	-.028	0	20
5	M3	X	.015	.015	0	20
6	M3	Z	-.027	-.027	0	20
7	M4	X	.014	.014	0	20
8	M4	Z	-.025	-.025	0	20
9	M5	X	.013	.013	0	20
10	M5	Z	-.023	-.023	0	20
11	M6	X	.011	.011	0	22.667
12	M6	Z	-.019	-.019	0	22.667

Member Distributed Loads (BLC 4 : No Ice Wind 60 deg)

	Member Label	Direction	Start Magnitude[k/ft,F,ksf]	End Magnitude[k/ft,F,ksf]	Start Location[ft,%]	End Location[ft,%]
1	M1	X	.029	.029	0	21.333
2	M1	Z	-.017	-.017	0	21.333
3	M2	X	.028	.028	0	20
4	M2	Z	-.016	-.016	0	20
5	M3	X	.027	.027	0	20
6	M3	Z	-.015	-.015	0	20
7	M4	X	.025	.025	0	20
8	M4	Z	-.014	-.014	0	20
9	M5	X	.023	.023	0	20
10	M5	Z	-.013	-.013	0	20
11	M6	X	.019	.019	0	22.667
12	M6	Z	-.011	-.011	0	22.667

Member Distributed Loads (BLC 5 : No Ice Wind 90 deg)

	Member Label	Direction	Start Magnitude[k/ft,F,ksf]	End Magnitude[k/ft,F,ksf]	Start Location[ft,%]	End Location[ft,%]
1	M1	X	.034	.034	0	21.333
2	M2	X	.032	.032	0	20
3	M3	X	.031	.031	0	20
4	M4	X	.029	.029	0	20
5	M5	X	.026	.026	0	20
6	M6	X	.022	.022	0	22.667

Member Distributed Loads (BLC 6 : No Ice Wind 120 deg)

	Member Label	Direction	Start Magnitude[k/ft,F,ksf]	End Magnitude[k/ft,F,ksf]	Start Location[ft,%]	End Location[ft,%]

Member Distributed Loads (BLC 6 : No Ice Wind 120 deg) (Continued)

	Member Label	Direction	Start Magnitude[k/ft,F,ksf]	End Magnitude[k/ft,F,ksf]	Start Location[ft,%]	End Location[ft,%]
1	M1	X	.029	.029	0	21.333
2	M1	Z	.017	.017	0	21.333
3	M2	X	.028	.028	0	20
4	M2	Z	.016	.016	0	20
5	M3	X	.027	.027	0	20
6	M3	Z	.015	.015	0	20
7	M4	X	.025	.025	0	20
8	M4	Z	.014	.014	0	20
9	M5	X	.023	.023	0	20
10	M5	Z	.013	.013	0	20
11	M6	X	.019	.019	0	22.667
12	M6	Z	.011	.011	0	22.667

Member Distributed Loads (BLC 7 : No Ice Wind 150 deg)

	Member Label	Direction	Start Magnitude[k/ft,F,ksf]	End Magnitude[k/ft,F,ksf]	Start Location[ft,%]	End Location[ft,%]
1	M1	X	.017	.017	0	21.333
2	M1	Z	.029	.029	0	21.333
3	M2	X	.016	.016	0	20
4	M2	Z	.028	.028	0	20
5	M3	X	.015	.015	0	20
6	M3	Z	.027	.027	0	20
7	M4	X	.014	.014	0	20
8	M4	Z	.025	.025	0	20
9	M5	X	.013	.013	0	20
10	M5	Z	.023	.023	0	20
11	M6	X	.011	.011	0	22.667
12	M6	Z	.019	.019	0	22.667

Member Distributed Loads (BLC 8 : No Ice Wind 180 deg)

	Member Label	Direction	Start Magnitude[k/ft,F,ksf]	End Magnitude[k/ft,F,ksf]	Start Location[ft,%]	End Location[ft,%]
1	M1	Z	.034	.034	0	21.333
2	M2	Z	.032	.032	0	20
3	M3	Z	.031	.031	0	20
4	M4	Z	.029	.029	0	20
5	M5	Z	.026	.026	0	20
6	M6	Z	.022	.022	0	22.667

Member Distributed Loads (BLC 9 : No Ice Wind 210 deg)

	Member Label	Direction	Start Magnitude[k/ft,F,ksf]	End Magnitude[k/ft,F,ksf]	Start Location[ft,%]	End Location[ft,%]
1	M1	X	-.017	-.017	0	21.333
2	M1	Z	.029	.029	0	21.333
3	M2	X	-.016	-.016	0	20
4	M2	Z	.028	.028	0	20
5	M3	X	-.015	-.015	0	20
6	M3	Z	.027	.027	0	20
7	M4	X	-.014	-.014	0	20
8	M4	Z	.025	.025	0	20
9	M5	X	-.013	-.013	0	20
10	M5	Z	.023	.023	0	20
11	M6	X	-.011	-.011	0	22.667
12	M6	Z	.019	.019	0	22.667

Member Distributed Loads (BLC 10 : No Ice Wind 240 deg)

	Member Label	Direction	Start Magnitude[k/ft,F,ksf]	End Magnitude[k/ft,F,ksf]	Start Location[ft,%]	End Location[ft,%]
1	M1	X	-.029	-.029	0	21.333

Member Distributed Loads (BLC 10 : No Ice Wind 240 deg) (Continued)

	Member Label	Direction	Start Magnitude[k/ft,F,ksf]	End Magnitude[k/ft,F,ksf]	Start Location[ft,%]	End Location[ft,%]
2	M1	Z	.017	.017	0	21.333
3	M2	X	-.028	-.028	0	20
4	M2	Z	.016	.016	0	20
5	M3	X	-.027	-.027	0	20
6	M3	Z	.015	.015	0	20
7	M4	X	-.025	-.025	0	20
8	M4	Z	.014	.014	0	20
9	M5	X	-.023	-.023	0	20
10	M5	Z	.013	.013	0	20
11	M6	X	-.019	-.019	0	22.667
12	M6	Z	.011	.011	0	22.667

Member Distributed Loads (BLC 11 : No Ice Wind 270 deg)

	Member Label	Direction	Start Magnitude[k/ft,F,ksf]	End Magnitude[k/ft,F,ksf]	Start Location[ft,%]	End Location[ft,%]
1	M1	X	-.034	-.034	0	21.333
2	M2	X	-.032	-.032	0	20
3	M3	X	-.031	-.031	0	20
4	M4	X	-.029	-.029	0	20
5	M5	X	-.026	-.026	0	20
6	M6	X	-.022	-.022	0	22.667

Member Distributed Loads (BLC 12 : No Ice Wind 300 deg)

	Member Label	Direction	Start Magnitude[k/ft,F,ksf]	End Magnitude[k/ft,F,ksf]	Start Location[ft,%]	End Location[ft,%]
1	M1	X	-.029	-.029	0	21.333
2	M1	Z	-.017	-.017	0	21.333
3	M2	X	-.028	-.028	0	20
4	M2	Z	-.016	-.016	0	20
5	M3	X	-.027	-.027	0	20
6	M3	Z	-.015	-.015	0	20
7	M4	X	-.025	-.025	0	20
8	M4	Z	-.014	-.014	0	20
9	M5	X	-.023	-.023	0	20
10	M5	Z	-.013	-.013	0	20
11	M6	X	-.019	-.019	0	22.667
12	M6	Z	-.011	-.011	0	22.667

Member Distributed Loads (BLC 13 : No Ice Wind 330 deg)

	Member Label	Direction	Start Magnitude[k/ft,F,ksf]	End Magnitude[k/ft,F,ksf]	Start Location[ft,%]	End Location[ft,%]
1	M1	X	-.017	-.017	0	21.333
2	M1	Z	-.029	-.029	0	21.333
3	M2	X	-.016	-.016	0	20
4	M2	Z	-.028	-.028	0	20
5	M3	X	-.015	-.015	0	20
6	M3	Z	-.027	-.027	0	20
7	M4	X	-.014	-.014	0	20
8	M4	Z	-.025	-.025	0	20
9	M5	X	-.013	-.013	0	20
10	M5	Z	-.023	-.023	0	20
11	M6	X	-.011	-.011	0	22.667
12	M6	Z	-.019	-.019	0	22.667

Member Distributed Loads (BLC 14 : Ice)

	Member Label	Direction	Start Magnitude[k/ft,F,ksf]	End Magnitude[k/ft,F,ksf]	Start Location[ft,%]	End Location[ft,%]
1	M1	Y	-.052	-.052	0	0
2	M2	Y	-.051	-.051	0	0

Member Distributed Loads (BLC 14 : Ice) (Continued)

	Member Label	Direction	Start Magnitude[k/ft,F,ksf]	End Magnitude[k/ft,F,ksf]	Start Location[ft,%]	End Location[ft,%]
3	M3	Y	-.05	-.05	0	0
4	M4	Y	-.048	-.048	0	0
5	M5	Y	-.045	-.045	0	0
6	M6	Y	-.041	-.041	0	0

Member Distributed Loads (BLC 15 : Temperature Drop)

	Member Label	Direction	Start Magnitude[k/ft,F,ksf]	End Magnitude[k/ft,F,ksf]	Start Location[ft,%]	End Location[ft,%]
1	M1	T	-50	-50	0	0
2	M2	T	-50	-50	0	0
3	M3	T	-50	-50	0	0
4	M4	T	-50	-50	0	0
5	M5	T	-50	-50	0	0
6	M6	T	-50	-50	0	0

Member Distributed Loads (BLC 16 : Ice Wind 0 deg)

	Member Label	Direction	Start Magnitude[k/ft,F,ksf]	End Magnitude[k/ft,F,ksf]	Start Location[ft,%]	End Location[ft,%]
1	M1	Z	-.019	-.019	0	21.333
2	M2	Z	-.018	-.018	0	20
3	M3	Z	-.017	-.017	0	20
4	M4	Z	-.016	-.016	0	20
5	M5	Z	-.015	-.015	0	20
6	M6	Z	-.012	-.012	0	22.667

Member Distributed Loads (BLC 17 : Ice Wind 30 deg)

	Member Label	Direction	Start Magnitude[k/ft,F,ksf]	End Magnitude[k/ft,F,ksf]	Start Location[ft,%]	End Location[ft,%]
1	M1	X	.01	.01	0	21.333
2	M1	Z	-.017	-.017	0	21.333
3	M2	X	.009	.009	0	20
4	M2	Z	-.016	-.016	0	20
5	M3	X	.009	.009	0	20
6	M3	Z	-.015	-.015	0	20
7	M4	X	.008	.008	0	20
8	M4	Z	-.014	-.014	0	20
9	M5	X	.007	.007	0	20
10	M5	Z	-.013	-.013	0	20
11	M6	X	.006	.006	0	22.667
12	M6	Z	-.011	-.011	0	22.667

Member Distributed Loads (BLC 18 : Ice Wind 60 deg)

	Member Label	Direction	Start Magnitude[k/ft,F,ksf]	End Magnitude[k/ft,F,ksf]	Start Location[ft,%]	End Location[ft,%]
1	M1	X	.017	.017	0	21.333
2	M1	Z	-.01	-.01	0	21.333
3	M2	X	.016	.016	0	20
4	M2	Z	-.009	-.009	0	20
5	M3	X	.015	.015	0	20
6	M3	Z	-.009	-.009	0	20
7	M4	X	.014	.014	0	20
8	M4	Z	-.008	-.008	0	20
9	M5	X	.013	.013	0	20
10	M5	Z	-.007	-.007	0	20
11	M6	X	.011	.011	0	22.667
12	M6	Z	-.006	-.006	0	22.667

Member Distributed Loads (BLC 19 : Ice Wind 90 deg)

	Member Label	Direction	Start Magnitude[k/ft,F,ksf]	End Magnitude[k/ft,F,ksf]	Start Location[ft,%]	End Location[ft,%]

Member Distributed Loads (BLC 19 : Ice Wind 90 deg) (Continued)

	Member Label	Direction	Start Magnitude[k/ft,F,ksf]	End Magnitude[k/ft,F,ksf]	Start Location[ft,%]	End Location[ft,%]
1	M1	X	.019	.019	0	21.333
2	M2	X	.018	.018	0	20
3	M3	X	.017	.017	0	20
4	M4	X	.016	.016	0	20
5	M5	X	.015	.015	0	20
6	M6	X	.012	.012	0	22.667

Member Distributed Loads (BLC 20 : Ice Wind 120 deg)

	Member Label	Direction	Start Magnitude[k/ft,F,ksf]	End Magnitude[k/ft,F,ksf]	Start Location[ft,%]	End Location[ft,%]
1	M1	X	.017	.017	0	21.333
2	M1	Z	.01	.01	0	21.333
3	M2	X	.016	.016	0	20
4	M2	Z	.009	.009	0	20
5	M3	X	.015	.015	0	20
6	M3	Z	.009	.009	0	20
7	M4	X	.014	.014	0	20
8	M4	Z	.008	.008	0	20
9	M5	X	.013	.013	0	20
10	M5	Z	.007	.007	0	20
11	M6	X	.011	.011	0	22.667
12	M6	Z	.006	.006	0	22.667

Member Distributed Loads (BLC 21 : Ice Wind 150 deg)

	Member Label	Direction	Start Magnitude[k/ft,F,ksf]	End Magnitude[k/ft,F,ksf]	Start Location[ft,%]	End Location[ft,%]
1	M1	X	.01	.01	0	21.333
2	M1	Z	.017	.017	0	21.333
3	M2	X	.009	.009	0	20
4	M2	Z	.016	.016	0	20
5	M3	X	.009	.009	0	20
6	M3	Z	.015	.015	0	20
7	M4	X	.008	.008	0	20
8	M4	Z	.014	.014	0	20
9	M5	X	.007	.007	0	20
10	M5	Z	.013	.013	0	20
11	M6	X	.006	.006	0	22.667
12	M6	Z	.011	.011	0	22.667

Member Distributed Loads (BLC 22 : Ice Wind 180 deg)

	Member Label	Direction	Start Magnitude[k/ft,F,ksf]	End Magnitude[k/ft,F,ksf]	Start Location[ft,%]	End Location[ft,%]
1	M1	Z	.019	.019	0	21.333
2	M2	Z	.018	.018	0	20
3	M3	Z	.017	.017	0	20
4	M4	Z	.016	.016	0	20
5	M5	Z	.015	.015	0	20
6	M6	Z	.012	.012	0	22.667

Member Distributed Loads (BLC 23 : Ice Wind 210 deg)

	Member Label	Direction	Start Magnitude[k/ft,F,ksf]	End Magnitude[k/ft,F,ksf]	Start Location[ft,%]	End Location[ft,%]
1	M1	X	-.01	-.01	0	21.333
2	M1	Z	.017	.017	0	21.333
3	M2	X	-.009	-.009	0	20
4	M2	Z	.016	.016	0	20
5	M3	X	-.009	-.009	0	20
6	M3	Z	.015	.015	0	20
7	M4	X	-.008	-.008	0	20

Member Distributed Loads (BLC 23 : Ice Wind 210 deg) (Continued)

	Member Label	Direction	Start Magnitude[k/ft,F,ksf]	End Magnitude[k/ft,F,ksf]	Start Location[ft,%]	End Location[ft,%]
8	M4	Z	.014	.014	0	20
9	M5	X	-.007	-.007	0	20
10	M5	Z	.013	.013	0	20
11	M6	X	-.006	-.006	0	22.667
12	M6	Z	.011	.011	0	22.667

Member Distributed Loads (BLC 24 : Ice Wind 240 deg)

	Member Label	Direction	Start Magnitude[k/ft,F,ksf]	End Magnitude[k/ft,F,ksf]	Start Location[ft,%]	End Location[ft,%]
1	M1	X	-.017	-.017	0	21.333
2	M1	Z	.01	.01	0	21.333
3	M2	X	-.016	-.016	0	20
4	M2	Z	.009	.009	0	20
5	M3	X	-.015	-.015	0	20
6	M3	Z	.009	.009	0	20
7	M4	X	-.014	-.014	0	20
8	M4	Z	.008	.008	0	20
9	M5	X	-.013	-.013	0	20
10	M5	Z	.007	.007	0	20
11	M6	X	-.011	-.011	0	22.667
12	M6	Z	.006	.006	0	22.667

Member Distributed Loads (BLC 25 : Ice Wind 270 deg)

	Member Label	Direction	Start Magnitude[k/ft,F,ksf]	End Magnitude[k/ft,F,ksf]	Start Location[ft,%]	End Location[ft,%]
1	M1	X	-.019	-.019	0	21.333
2	M2	X	-.018	-.018	0	20
3	M3	X	-.017	-.017	0	20
4	M4	X	-.016	-.016	0	20
5	M5	X	-.015	-.015	0	20
6	M6	X	-.012	-.012	0	22.667

Member Distributed Loads (BLC 26 : Ice Wind 300 deg)

	Member Label	Direction	Start Magnitude[k/ft,F,ksf]	End Magnitude[k/ft,F,ksf]	Start Location[ft,%]	End Location[ft,%]
1	M1	X	-.017	-.017	0	21.333
2	M1	Z	-.01	-.01	0	21.333
3	M2	X	-.016	-.016	0	20
4	M2	Z	-.009	-.009	0	20
5	M3	X	-.015	-.015	0	20
6	M3	Z	-.009	-.009	0	20
7	M4	X	-.014	-.014	0	20
8	M4	Z	-.008	-.008	0	20
9	M5	X	-.013	-.013	0	20
10	M5	Z	-.007	-.007	0	20
11	M6	X	-.011	-.011	0	22.667
12	M6	Z	-.006	-.006	0	22.667

Member Distributed Loads (BLC 27 : Ice Wind 330 deg)

	Member Label	Direction	Start Magnitude[k/ft,F,ksf]	End Magnitude[k/ft,F,ksf]	Start Location[ft,%]	End Location[ft,%]
1	M1	X	-.01	-.01	0	21.333
2	M1	Z	-.017	-.017	0	21.333
3	M2	X	-.009	-.009	0	20
4	M2	Z	-.016	-.016	0	20
5	M3	X	-.009	-.009	0	20
6	M3	Z	-.015	-.015	0	20
7	M4	X	-.008	-.008	0	20
8	M4	Z	-.014	-.014	0	20

Member Distributed Loads (BLC 27 : Ice Wind 330 deg) (Continued)

	Member Label	Direction	Start Magnitude[k/ft,F,ksf]	End Magnitude[k/ft,F,ksf]	Start Location[ft,%]	End Location[ft,%]
9	M5	X	-.007	-.007	0	20
10	M5	Z	-.013	-.013	0	20
11	M6	X	-.006	-.006	0	22.667
12	M6	Z	-.011	-.011	0	22.667

Member Distributed Loads (BLC 28 : Service Wind 0 deg)

	Member Label	Direction	Start Magnitude[k/ft,F,ksf]	End Magnitude[k/ft,F,ksf]	Start Location[ft,%]	End Location[ft,%]
1	M1	Z	-.01	-.01	0	21.333
2	M2	Z	-.01	-.01	0	20
3	M3	Z	-.009	-.009	0	20
4	M4	Z	-.009	-.009	0	20
5	M5	Z	-.008	-.008	0	20
6	M6	Z	-.007	-.007	0	22.667

Member Distributed Loads (BLC 29 : Service Wind 30 deg)

	Member Label	Direction	Start Magnitude[k/ft,F,ksf]	End Magnitude[k/ft,F,ksf]	Start Location[ft,%]	End Location[ft,%]
1	M1	X	.005	.005	0	21.333
2	M1	Z	-.009	-.009	0	21.333
3	M2	X	.005	.005	0	20
4	M2	Z	-.008	-.008	0	20
5	M3	X	.005	.005	0	20
6	M3	Z	-.008	-.008	0	20
7	M4	X	.004	.004	0	20
8	M4	Z	-.007	-.007	0	20
9	M5	X	.004	.004	0	20
10	M5	Z	-.007	-.007	0	20
11	M6	X	.003	.003	0	22.667
12	M6	Z	-.006	-.006	0	22.667

Member Distributed Loads (BLC 30 : Service Wind 60 deg)

	Member Label	Direction	Start Magnitude[k/ft,F,ksf]	End Magnitude[k/ft,F,ksf]	Start Location[ft,%]	End Location[ft,%]
1	M1	X	.009	.009	0	21.333
2	M1	Z	-.005	-.005	0	21.333
3	M2	X	.008	.008	0	20
4	M2	Z	-.005	-.005	0	20
5	M3	X	.008	.008	0	20
6	M3	Z	-.005	-.005	0	20
7	M4	X	.007	.007	0	20
8	M4	Z	-.004	-.004	0	20
9	M5	X	.007	.007	0	20
10	M5	Z	-.004	-.004	0	20
11	M6	X	.006	.006	0	22.667
12	M6	Z	-.003	-.003	0	22.667

Member Distributed Loads (BLC 31 : Service Wind 90 deg)

	Member Label	Direction	Start Magnitude[k/ft,F,ksf]	End Magnitude[k/ft,F,ksf]	Start Location[ft,%]	End Location[ft,%]
1	M1	X	.01	.01	0	21.333
2	M2	X	.01	.01	0	20
3	M3	X	.009	.009	0	20
4	M4	X	.009	.009	0	20
5	M5	X	.008	.008	0	20
6	M6	X	.007	.007	0	22.667

Member Distributed Loads (BLC 32 : Service Wind 120 deg)

	Member Label	Direction	Start Magnitude[k/ft,F,ksf]	End Magnitude[k/ft,F,ksf]	Start Location[ft,%]	End Location[ft,%]

Member Distributed Loads (BLC 32 : Service Wind 120 deg) (Continued)

	Member Label	Direction	Start Magnitude[k/ft,F,ksf]	End Magnitude[k/ft,F,ksf]	Start Location[ft,%]	End Location[ft,%]
1	M1	X	.009	.009	0	21.333
2	M1	Z	.005	.005	0	21.333
3	M2	X	.008	.008	0	20
4	M2	Z	.005	.005	0	20
5	M3	X	.008	.008	0	20
6	M3	Z	.005	.005	0	20
7	M4	X	.007	.007	0	20
8	M4	Z	.004	.004	0	20
9	M5	X	.007	.007	0	20
10	M5	Z	.004	.004	0	20
11	M6	X	.006	.006	0	22.667
12	M6	Z	.003	.003	0	22.667

Member Distributed Loads (BLC 33 : Service Wind 150 deg)

	Member Label	Direction	Start Magnitude[k/ft,F,ksf]	End Magnitude[k/ft,F,ksf]	Start Location[ft,%]	End Location[ft,%]
1	M1	X	.005	.005	0	21.333
2	M1	Z	.009	.009	0	21.333
3	M2	X	.005	.005	0	20
4	M2	Z	.008	.008	0	20
5	M3	X	.005	.005	0	20
6	M3	Z	.008	.008	0	20
7	M4	X	.004	.004	0	20
8	M4	Z	.007	.007	0	20
9	M5	X	.004	.004	0	20
10	M5	Z	.007	.007	0	20
11	M6	X	.003	.003	0	22.667
12	M6	Z	.006	.006	0	22.667

Member Distributed Loads (BLC 34 : Service Wind 180 deg)

	Member Label	Direction	Start Magnitude[k/ft,F,ksf]	End Magnitude[k/ft,F,ksf]	Start Location[ft,%]	End Location[ft,%]
1	M1	Z	.01	.01	0	21.333
2	M2	Z	.01	.01	0	20
3	M3	Z	.009	.009	0	20
4	M4	Z	.009	.009	0	20
5	M5	Z	.008	.008	0	20
6	M6	Z	.007	.007	0	22.667

Member Distributed Loads (BLC 35 : Service Wind 210 deg)

	Member Label	Direction	Start Magnitude[k/ft,F,ksf]	End Magnitude[k/ft,F,ksf]	Start Location[ft,%]	End Location[ft,%]
1	M1	X	-.005	-.005	0	21.333
2	M1	Z	.009	.009	0	21.333
3	M2	X	-.005	-.005	0	20
4	M2	Z	.008	.008	0	20
5	M3	X	-.005	-.005	0	20
6	M3	Z	.008	.008	0	20
7	M4	X	-.004	-.004	0	20
8	M4	Z	.007	.007	0	20
9	M5	X	-.004	-.004	0	20
10	M5	Z	.007	.007	0	20
11	M6	X	-.003	-.003	0	22.667
12	M6	Z	.006	.006	0	22.667

Member Distributed Loads (BLC 36 : Service Wind 240 deg)

	Member Label	Direction	Start Magnitude[k/ft,F,ksf]	End Magnitude[k/ft,F,ksf]	Start Location[ft,%]	End Location[ft,%]
1	M1	X	-.009	-.009	0	21.333

Member Distributed Loads (BLC 36 : Service Wind 240 deg) (Continued)

	Member Label	Direction	Start Magnitude[k/ft,F,ksf]	End Magnitude[k/ft,F,ksf]	Start Location[ft,%]	End Location[ft,%]
2	M1	Z	.005	.005	0	21.333
3	M2	X	-.008	-.008	0	20
4	M2	Z	.005	.005	0	20
5	M3	X	-.008	-.008	0	20
6	M3	Z	.005	.005	0	20
7	M4	X	-.007	-.007	0	20
8	M4	Z	.004	.004	0	20
9	M5	X	-.007	-.007	0	20
10	M5	Z	.004	.004	0	20
11	M6	X	-.006	-.006	0	22.667
12	M6	Z	.003	.003	0	22.667

Member Distributed Loads (BLC 37 : Service Wind 270 deg)

	Member Label	Direction	Start Magnitude[k/ft,F,ksf]	End Magnitude[k/ft,F,ksf]	Start Location[ft,%]	End Location[ft,%]
1	M1	X	-.01	-.01	0	21.333
2	M2	X	-.01	-.01	0	20
3	M3	X	-.009	-.009	0	20
4	M4	X	-.009	-.009	0	20
5	M5	X	-.008	-.008	0	20
6	M6	X	-.007	-.007	0	22.667

Member Distributed Loads (BLC 38 : Service Wind 300 deg)

	Member Label	Direction	Start Magnitude[k/ft,F,ksf]	End Magnitude[k/ft,F,ksf]	Start Location[ft,%]	End Location[ft,%]
1	M1	X	-.009	-.009	0	21.333
2	M1	Z	-.005	-.005	0	21.333
3	M2	X	-.008	-.008	0	20
4	M2	Z	-.005	-.005	0	20
5	M3	X	-.008	-.008	0	20
6	M3	Z	-.005	-.005	0	20
7	M4	X	-.007	-.007	0	20
8	M4	Z	-.004	-.004	0	20
9	M5	X	-.007	-.007	0	20
10	M5	Z	-.004	-.004	0	20
11	M6	X	-.006	-.006	0	22.667
12	M6	Z	-.003	-.003	0	22.667

Member Distributed Loads (BLC 39 : Service Wind 330 deg)

	Member Label	Direction	Start Magnitude[k/ft,F,ksf]	End Magnitude[k/ft,F,ksf]	Start Location[ft,%]	End Location[ft,%]
1	M1	X	-.005	-.005	0	21.333
2	M1	Z	-.009	-.009	0	21.333
3	M2	X	-.005	-.005	0	20
4	M2	Z	-.008	-.008	0	20
5	M3	X	-.005	-.005	0	20
6	M3	Z	-.008	-.008	0	20
7	M4	X	-.004	-.004	0	20
8	M4	Z	-.007	-.007	0	20
9	M5	X	-.004	-.004	0	20
10	M5	Z	-.007	-.007	0	20
11	M6	X	-.003	-.003	0	22.667
12	M6	Z	-.006	-.006	0	22.667

Member Point Loads (BLC 1 : Dead)

	Member Label	Direction	Magnitude[k,k-ft]	Location[ft,%]
1	M1	Y	-.048	21.333
2	M1	My	.09	21.333
3	M1	Mz	.156	21.333
4	M1	Y	-.048	21.333
5	M1	My	.09	21.333
6	M1	Mz	-.156	21.333
7	M1	Y	-.048	21.333
8	M1	My	-.18	21.333
9	M1	Y	-.073	21.333
10	M1	My	.137	21.333
11	M1	Mz	.237	21.333
12	M1	Y	-.073	21.333
13	M1	My	.137	21.333
14	M1	Mz	-.237	21.333
15	M1	Y	-.073	21.333
16	M1	My	-.273	21.333
17	M1	Y	-.038	21.333
18	M1	My	.072	21.333
19	M1	Mz	.125	21.333
20	M1	Y	-.038	21.333
21	M1	My	.072	21.333
22	M1	Mz	-.125	21.333
23	M1	Y	-.038	21.333
24	M1	My	-.144	21.333
25	M1	Y	-.002	21.333
26	M1	My	.003	21.333
27	M1	Mz	.006	21.333
28	M1	Y	-.002	21.333
29	M1	My	.003	21.333
30	M1	Mz	-.006	21.333
31	M1	Y	-.002	21.333
32	M1	My	-.007	21.333
33	M1	Y	-.125	21.333
34	M1	My	.235	21.333
35	M1	Mz	.407	21.333
36	M1	Y	-.125	21.333
37	M1	My	.235	21.333
38	M1	Mz	-.407	21.333
39	M1	Y	-.125	21.333
40	M1	My	-.469	21.333
41	M1	Y	-.052	21.333
42	M1	My	.098	21.333
43	M1	Mz	.169	21.333
44	M1	Y	-.052	21.333
45	M1	My	.098	21.333
46	M1	Mz	-.169	21.333
47	M1	Y	-.052	21.333
48	M1	My	-.195	21.333
49	M1	Y	-1.25	21.333
50	M1	Y	-.061	6.333
51	M1	My	.054	6.333
52	M1	Mz	.093	6.333
53	M1	Y	-.061	6.333
54	M1	My	.054	6.333
55	M1	Mz	-.093	6.333
56	M1	Y	-.061	6.333

Member Point Loads (BLC 1 : Dead) (Continued)

	Member Label	Direction	Magnitude[k,k-ft]	Location[ft,%]
57	M1	My	-.107	6.333
58	M1	Y	-.081	6.333

Member Point Loads (BLC 2 : No Ice Wind 0 deg)

	Member Label	Direction	Magnitude[k,k-ft]	Location[ft,%]
1	M1	X	-.061	21.333
2	M1	Z	-.178	21.333
3	M1	Mx	-.463	21.333
4	M1	X	.061	21.333
5	M1	Z	-.178	21.333
6	M1	Mx	.463	21.333
7	M1	Z	-.283	21.333
8	M1	X	-.017	21.333
9	M1	Z	-.143	21.333
10	M1	Mx	-.431	21.333
11	M1	X	.017	21.333
12	M1	Z	-.143	21.333
13	M1	Mx	.431	21.333
14	M1	Z	-.172	21.333
15	M1	X	-.017	21.333
16	M1	Z	-.031	21.333
17	M1	Mx	-.067	21.333
18	M1	X	.017	21.333
19	M1	Z	-.031	21.333
20	M1	Mx	.067	21.333
21	M1	Z	-.06	21.333
22	M1	X	-.022	21.333
23	M1	Z	-.027	21.333
24	M1	Mx	-.046	21.333
25	M1	X	.022	21.333
26	M1	Z	-.027	21.333
27	M1	Mx	.046	21.333
28	M1	Z	-.064	21.333
29	M1	X	-.085	21.333
30	M1	Z	-.283	21.333
31	M1	Mx	-.76	21.333
32	M1	X	.085	21.333
33	M1	Z	-.283	21.333
34	M1	Mx	.76	21.333
35	M1	Z	-.431	21.333
36	M1	X	-.023	21.333
37	M1	Z	-.045	21.333
38	M1	Mx	-.103	21.333
39	M1	X	.023	21.333
40	M1	Z	-.045	21.333
41	M1	Mx	.103	21.333
42	M1	Z	-.084	21.333
43	M1	Z	-.562	21.333
44	M1	X	-.046	6.333
45	M1	Z	-.109	6.333
46	M1	Mx	-.125	6.333
47	M1	X	.046	6.333
48	M1	Z	-.109	6.333
49	M1	Mx	.125	6.333
50	M1	Z	-.188	6.333
51	M1	Z	-.112	6.333

Member Point Loads (BLC 3 : No Ice Wind 30 deg)

	Member Label	Direction	Magnitude[k,k-ft]	Location[ft,%]
1	M1	X	.071	21.333
2	M1	Z	-.123	21.333
3	M1	Mx	-.535	21.333
4	M1	X	.176	21.333
5	M1	Z	-.184	21.333
6	M1	Mx	.267	21.333
7	M1	X	.071	21.333
8	M1	Z	-.245	21.333
9	M1	Mx	.267	21.333
10	M1	X	.066	21.333
11	M1	Z	-.115	21.333
12	M1	Mx	-.497	21.333
13	M1	X	.096	21.333
14	M1	Z	-.132	21.333
15	M1	Mx	.249	21.333
16	M1	X	.066	21.333
17	M1	Z	-.149	21.333
18	M1	Mx	.249	21.333
19	M1	X	.01	21.333
20	M1	Z	-.018	21.333
21	M1	Mx	-.078	21.333
22	M1	X	.04	21.333
23	M1	Z	-.035	21.333
24	M1	Mx	.039	21.333
25	M1	X	.01	21.333
26	M1	Z	-.052	21.333
27	M1	Mx	.039	21.333
28	M1	X	.007	21.333
29	M1	Z	-.012	21.333
30	M1	Mx	-.053	21.333
31	M1	X	.045	21.333
32	M1	Z	-.034	21.333
33	M1	Mx	.026	21.333
34	M1	X	.007	21.333
35	M1	Z	-.056	21.333
36	M1	Mx	.026	21.333
37	M1	X	.117	21.333
38	M1	Z	-.203	21.333
39	M1	Mx	-.877	21.333
40	M1	X	.265	21.333
41	M1	Z	-.288	21.333
42	M1	Mx	.439	21.333
43	M1	X	.117	21.333
44	M1	Z	-.373	21.333
45	M1	Mx	.439	21.333
46	M1	X	.016	21.333
47	M1	Z	-.028	21.333
48	M1	Mx	-.119	21.333
49	M1	X	.055	21.333
50	M1	Z	-.05	21.333
51	M1	Mx	.06	21.333
52	M1	X	.016	21.333
53	M1	Z	-.073	21.333
54	M1	Mx	.06	21.333
55	M1	X	.281	21.333
56	M1	Z	-.487	21.333
57	M1	X	.041	6.333

Member Point Loads (BLC 3 : No Ice Wind 30 deg) (Continued)

	Member Label	Direction	Magnitude[k,k-ft]	Location[ft,%]
58	M1	Z	-.071	6.333
59	M1	Mx	-.144	6.333
60	M1	X	.12	6.333
61	M1	Z	-.117	6.333
62	M1	Mx	.072	6.333
63	M1	X	.041	6.333
64	M1	Z	-.163	6.333
65	M1	Mx	.072	6.333
66	M1	X	.056	6.333
67	M1	Z	-.097	6.333

Member Point Loads (BLC 4 : No Ice Wind 60 deg)

	Member Label	Direction	Magnitude[k,k-ft]	Location[ft,%]
1	M1	X	.184	21.333
2	M1	Z	-.036	21.333
3	M1	Mx	-.463	21.333
4	M1	X	.245	21.333
5	M1	Z	-.141	21.333
6	M1	X	.123	21.333
7	M1	Z	-.141	21.333
8	M1	Mx	.463	21.333
9	M1	X	.132	21.333
10	M1	Z	-.056	21.333
11	M1	Mx	-.431	21.333
12	M1	X	.149	21.333
13	M1	Z	-.086	21.333
14	M1	X	.115	21.333
15	M1	Z	-.086	21.333
16	M1	Mx	.431	21.333
17	M1	X	.035	21.333
18	M1	Z	-.000613	21.333
19	M1	Mx	-.067	21.333
20	M1	X	.052	21.333
21	M1	Z	-.03	21.333
22	M1	X	.018	21.333
23	M1	Z	-.03	21.333
24	M1	Mx	.067	21.333
25	M1	X	.034	21.333
26	M1	Z	.006	21.333
27	M1	Mx	-.046	21.333
28	M1	X	.056	21.333
29	M1	Z	-.032	21.333
30	M1	X	.012	21.333
31	M1	Z	-.032	21.333
32	M1	Mx	.046	21.333
33	M1	X	.288	21.333
34	M1	Z	-.068	21.333
35	M1	Mx	-.76	21.333
36	M1	X	.373	21.333
37	M1	Z	-.215	21.333
38	M1	X	.203	21.333
39	M1	Z	-.215	21.333
40	M1	Mx	.76	21.333
41	M1	X	.05	21.333
42	M1	Z	-.003	21.333
43	M1	Mx	-.103	21.333

Member Point Loads (BLC 4 : No Ice Wind 60 deg) (Continued)

	Member Label	Direction	Magnitude[k,k-ft]	Location[ft,%]
44	M1	X	.073	21.333
45	M1	Z	-.042	21.333
46	M1	X	.028	21.333
47	M1	Z	-.042	21.333
48	M1	Mx	.103	21.333
49	M1	X	.487	21.333
50	M1	Z	-.281	21.333
51	M1	X	.117	6.333
52	M1	Z	-.015	6.333
53	M1	Mx	-.125	6.333
54	M1	X	.163	6.333
55	M1	Z	-.094	6.333
56	M1	X	.071	6.333
57	M1	Z	-.094	6.333
58	M1	Mx	.125	6.333
59	M1	X	.097	6.333
60	M1	Z	-.056	6.333

Member Point Loads (BLC 5 : No Ice Wind 90 deg)

	Member Label	Direction	Magnitude[k,k-ft]	Location[ft,%]
1	M1	X	.248	21.333
2	M1	Z	.061	21.333
3	M1	Mx	-.267	21.333
4	M1	X	.248	21.333
5	M1	Z	-.061	21.333
6	M1	Mx	-.267	21.333
7	M1	X	.143	21.333
8	M1	Mx	.535	21.333
9	M1	X	.163	21.333
10	M1	Z	.017	21.333
11	M1	Mx	-.249	21.333
12	M1	X	.163	21.333
13	M1	Z	-.017	21.333
14	M1	Mx	-.249	21.333
15	M1	X	.133	21.333
16	M1	Mx	.497	21.333
17	M1	X	.05	21.333
18	M1	Z	.017	21.333
19	M1	Mx	-.039	21.333
20	M1	X	.05	21.333
21	M1	Z	-.017	21.333
22	M1	Mx	-.039	21.333
23	M1	X	.021	21.333
24	M1	Mx	.078	21.333
25	M1	X	.052	21.333
26	M1	Z	.022	21.333
27	M1	Mx	-.026	21.333
28	M1	X	.052	21.333
29	M1	Z	-.022	21.333
30	M1	Mx	-.026	21.333
31	M1	X	.014	21.333
32	M1	Mx	.053	21.333
33	M1	X	.382	21.333
34	M1	Z	.085	21.333
35	M1	Mx	-.439	21.333
36	M1	X	.382	21.333

Member Point Loads (BLC 5 : No Ice Wind 90 deg) (Continued)

	Member Label	Direction	Magnitude[k,k-ft]	Location[ft,%]
37	M1	Z	-.085	21.333
38	M1	Mx	-.439	21.333
39	M1	X	.234	21.333
40	M1	Mx	.877	21.333
41	M1	X	.071	21.333
42	M1	Z	.023	21.333
43	M1	Mx	-.06	21.333
44	M1	X	.071	21.333
45	M1	Z	-.023	21.333
46	M1	Mx	-.06	21.333
47	M1	X	.032	21.333
48	M1	Mx	.119	21.333
49	M1	X	.562	21.333
50	M1	X	.161	6.333
51	M1	Z	.046	6.333
52	M1	Mx	-.072	6.333
53	M1	X	.161	6.333
54	M1	Z	-.046	6.333
55	M1	Mx	-.072	6.333
56	M1	X	.082	6.333
57	M1	Mx	.144	6.333
58	M1	X	.112	6.333

Member Point Loads (BLC 6 : No Ice Wind 120 deg)

	Member Label	Direction	Magnitude[k,k-ft]	Location[ft,%]
1	M1	X	.245	21.333
2	M1	Z	.141	21.333
3	M1	X	.184	21.333
4	M1	Z	.036	21.333
5	M1	Mx	-.463	21.333
6	M1	X	.123	21.333
7	M1	Z	.141	21.333
8	M1	Mx	.463	21.333
9	M1	X	.149	21.333
10	M1	Z	.086	21.333
11	M1	X	.132	21.333
12	M1	Z	.056	21.333
13	M1	Mx	-.431	21.333
14	M1	X	.115	21.333
15	M1	Z	.086	21.333
16	M1	Mx	.431	21.333
17	M1	X	.052	21.333
18	M1	Z	.03	21.333
19	M1	X	.035	21.333
20	M1	Z	.000613	21.333
21	M1	Mx	-.067	21.333
22	M1	X	.018	21.333
23	M1	Z	.03	21.333
24	M1	Mx	.067	21.333
25	M1	X	.056	21.333
26	M1	Z	.032	21.333
27	M1	X	.034	21.333
28	M1	Z	-.006	21.333
29	M1	Mx	-.046	21.333
30	M1	X	.012	21.333
31	M1	Z	.032	21.333

Member Point Loads (BLC 6 : No Ice Wind 120 deg) (Continued)

	Member Label	Direction	Magnitude[k,k-ft]	Location[ft,%]
32	M1	Mx	.046	21.333
33	M1	X	.373	21.333
34	M1	Z	.215	21.333
35	M1	X	.288	21.333
36	M1	Z	.068	21.333
37	M1	Mx	-.76	21.333
38	M1	X	.203	21.333
39	M1	Z	.215	21.333
40	M1	Mx	.76	21.333
41	M1	X	.073	21.333
42	M1	Z	.042	21.333
43	M1	X	.05	21.333
44	M1	Z	.003	21.333
45	M1	Mx	-.103	21.333
46	M1	X	.028	21.333
47	M1	Z	.042	21.333
48	M1	Mx	.103	21.333
49	M1	X	.487	21.333
50	M1	Z	.281	21.333
51	M1	X	.163	6.333
52	M1	Z	.094	6.333
53	M1	X	.117	6.333
54	M1	Z	.015	6.333
55	M1	Mx	-.125	6.333
56	M1	X	.071	6.333
57	M1	Z	.094	6.333
58	M1	Mx	.125	6.333
59	M1	X	.097	6.333
60	M1	Z	.056	6.333

Member Point Loads (BLC 7 : No Ice Wind 150 deg)

	Member Label	Direction	Magnitude[k,k-ft]	Location[ft,%]
1	M1	X	.176	21.333
2	M1	Z	.184	21.333
3	M1	Mx	.267	21.333
4	M1	X	.071	21.333
5	M1	Z	.123	21.333
6	M1	Mx	-.535	21.333
7	M1	X	.071	21.333
8	M1	Z	.245	21.333
9	M1	Mx	.267	21.333
10	M1	X	.096	21.333
11	M1	Z	.132	21.333
12	M1	Mx	.249	21.333
13	M1	X	.066	21.333
14	M1	Z	.115	21.333
15	M1	Mx	-.497	21.333
16	M1	X	.066	21.333
17	M1	Z	.149	21.333
18	M1	Mx	.249	21.333
19	M1	X	.04	21.333
20	M1	Z	.035	21.333
21	M1	Mx	.039	21.333
22	M1	X	.01	21.333
23	M1	Z	.018	21.333
24	M1	Mx	-.078	21.333

Member Point Loads (BLC 7 : No Ice Wind 150 deg) (Continued)

	Member Label	Direction	Magnitude[k,k-ft]	Location[ft,%]
25	M1	X	.01	21.333
26	M1	Z	.052	21.333
27	M1	Mx	.039	21.333
28	M1	X	.045	21.333
29	M1	Z	.034	21.333
30	M1	Mx	.026	21.333
31	M1	X	.007	21.333
32	M1	Z	.012	21.333
33	M1	Mx	-.053	21.333
34	M1	X	.007	21.333
35	M1	Z	.056	21.333
36	M1	Mx	.026	21.333
37	M1	X	.265	21.333
38	M1	Z	.288	21.333
39	M1	Mx	.439	21.333
40	M1	X	.117	21.333
41	M1	Z	.203	21.333
42	M1	Mx	-.877	21.333
43	M1	X	.117	21.333
44	M1	Z	.373	21.333
45	M1	Mx	.439	21.333
46	M1	X	.055	21.333
47	M1	Z	.05	21.333
48	M1	Mx	.06	21.333
49	M1	X	.016	21.333
50	M1	Z	.028	21.333
51	M1	Mx	-.119	21.333
52	M1	X	.016	21.333
53	M1	Z	.073	21.333
54	M1	Mx	.06	21.333
55	M1	X	.281	21.333
56	M1	Z	.487	21.333
57	M1	X	.12	6.333
58	M1	Z	.117	6.333
59	M1	Mx	.072	6.333
60	M1	X	.041	6.333
61	M1	Z	.071	6.333
62	M1	Mx	-.144	6.333
63	M1	X	.041	6.333
64	M1	Z	.163	6.333
65	M1	Mx	.072	6.333
66	M1	X	.056	6.333
67	M1	Z	.097	6.333

Member Point Loads (BLC 8 : No Ice Wind 180 deg)

	Member Label	Direction	Magnitude[k,k-ft]	Location[ft,%]
1	M1	X	.061	21.333
2	M1	Z	.178	21.333
3	M1	Mx	.463	21.333
4	M1	X	-.061	21.333
5	M1	Z	.178	21.333
6	M1	Mx	-.463	21.333
7	M1	Z	.283	21.333
8	M1	X	.017	21.333
9	M1	Z	.143	21.333
10	M1	Mx	.431	21.333

Member Point Loads (BLC 8 : No Ice Wind 180 deg) (Continued)

	Member Label	Direction	Magnitude[k,k-ft]	Location[ft,%]
11	M1	X	-.017	21.333
12	M1	Z	.143	21.333
13	M1	Mx	-.431	21.333
14	M1	Z	.172	21.333
15	M1	X	.017	21.333
16	M1	Z	.031	21.333
17	M1	Mx	.067	21.333
18	M1	X	-.017	21.333
19	M1	Z	.031	21.333
20	M1	Mx	-.067	21.333
21	M1	Z	.06	21.333
22	M1	X	.022	21.333
23	M1	Z	.027	21.333
24	M1	Mx	.046	21.333
25	M1	X	-.022	21.333
26	M1	Z	.027	21.333
27	M1	Mx	-.046	21.333
28	M1	Z	.064	21.333
29	M1	X	.085	21.333
30	M1	Z	.283	21.333
31	M1	Mx	.76	21.333
32	M1	X	-.085	21.333
33	M1	Z	.283	21.333
34	M1	Mx	-.76	21.333
35	M1	Z	.431	21.333
36	M1	X	.023	21.333
37	M1	Z	.045	21.333
38	M1	Mx	.103	21.333
39	M1	X	-.023	21.333
40	M1	Z	.045	21.333
41	M1	Mx	-.103	21.333
42	M1	Z	.084	21.333
43	M1	Z	.562	21.333
44	M1	X	.046	6.333
45	M1	Z	.109	6.333
46	M1	Mx	.125	6.333
47	M1	X	-.046	6.333
48	M1	Z	.109	6.333
49	M1	Mx	-.125	6.333
50	M1	Z	.188	6.333
51	M1	Z	.112	6.333

Member Point Loads (BLC 9 : No Ice Wind 210 deg)

	Member Label	Direction	Magnitude[k,k-ft]	Location[ft,%]
1	M1	X	-.071	21.333
2	M1	Z	.123	21.333
3	M1	Mx	.535	21.333
4	M1	X	-.176	21.333
5	M1	Z	.184	21.333
6	M1	Mx	-.267	21.333
7	M1	X	-.071	21.333
8	M1	Z	.245	21.333
9	M1	Mx	-.267	21.333
10	M1	X	-.066	21.333
11	M1	Z	.115	21.333
12	M1	Mx	.497	21.333

Member Point Loads (BLC 9 : No Ice Wind 210 deg) (Continued)

	Member Label	Direction	Magnitude[k,k-ft]	Location[ft,%]
13	M1	X	-.096	21.333
14	M1	Z	.132	21.333
15	M1	Mx	-.249	21.333
16	M1	X	-.066	21.333
17	M1	Z	.149	21.333
18	M1	Mx	-.249	21.333
19	M1	X	-.01	21.333
20	M1	Z	.018	21.333
21	M1	Mx	.078	21.333
22	M1	X	-.04	21.333
23	M1	Z	.035	21.333
24	M1	Mx	-.039	21.333
25	M1	X	-.01	21.333
26	M1	Z	.052	21.333
27	M1	Mx	-.039	21.333
28	M1	X	-.007	21.333
29	M1	Z	.012	21.333
30	M1	Mx	.053	21.333
31	M1	X	-.045	21.333
32	M1	Z	.034	21.333
33	M1	Mx	-.026	21.333
34	M1	X	-.007	21.333
35	M1	Z	.056	21.333
36	M1	Mx	-.026	21.333
37	M1	X	-.117	21.333
38	M1	Z	.203	21.333
39	M1	Mx	.877	21.333
40	M1	X	-.265	21.333
41	M1	Z	.288	21.333
42	M1	Mx	-.439	21.333
43	M1	X	-.117	21.333
44	M1	Z	.373	21.333
45	M1	Mx	-.439	21.333
46	M1	X	-.016	21.333
47	M1	Z	.028	21.333
48	M1	Mx	.119	21.333
49	M1	X	-.055	21.333
50	M1	Z	.05	21.333
51	M1	Mx	-.06	21.333
52	M1	X	-.016	21.333
53	M1	Z	.073	21.333
54	M1	Mx	-.06	21.333
55	M1	X	-.281	21.333
56	M1	Z	.487	21.333
57	M1	X	-.041	6.333
58	M1	Z	.071	6.333
59	M1	Mx	.144	6.333
60	M1	X	-.12	6.333
61	M1	Z	.117	6.333
62	M1	Mx	-.072	6.333
63	M1	X	-.041	6.333
64	M1	Z	.163	6.333
65	M1	Mx	-.072	6.333
66	M1	X	-.056	6.333
67	M1	Z	.097	6.333

Member Point Loads (BLC 10 : No Ice Wind 240 deg)

	Member Label	Direction	Magnitude[k,k-ft]	Location[ft,%]
1	M1	X	-.184	21.333
2	M1	Z	.036	21.333
3	M1	Mx	.463	21.333
4	M1	X	-.245	21.333
5	M1	Z	.141	21.333
6	M1	X	-.123	21.333
7	M1	Z	.141	21.333
8	M1	Mx	-.463	21.333
9	M1	X	-.132	21.333
10	M1	Z	.056	21.333
11	M1	Mx	.431	21.333
12	M1	X	-.149	21.333
13	M1	Z	.086	21.333
14	M1	X	-.115	21.333
15	M1	Z	.086	21.333
16	M1	Mx	-.431	21.333
17	M1	X	-.035	21.333
18	M1	Z	.000613	21.333
19	M1	Mx	.067	21.333
20	M1	X	-.052	21.333
21	M1	Z	.03	21.333
22	M1	X	-.018	21.333
23	M1	Z	.03	21.333
24	M1	Mx	-.067	21.333
25	M1	X	-.034	21.333
26	M1	Z	-.006	21.333
27	M1	Mx	.046	21.333
28	M1	X	-.056	21.333
29	M1	Z	.032	21.333
30	M1	X	-.012	21.333
31	M1	Z	.032	21.333
32	M1	Mx	-.046	21.333
33	M1	X	-.288	21.333
34	M1	Z	.068	21.333
35	M1	Mx	.76	21.333
36	M1	X	-.373	21.333
37	M1	Z	.215	21.333
38	M1	X	-.203	21.333
39	M1	Z	.215	21.333
40	M1	Mx	-.76	21.333
41	M1	X	-.05	21.333
42	M1	Z	.003	21.333
43	M1	Mx	.103	21.333
44	M1	X	-.073	21.333
45	M1	Z	.042	21.333
46	M1	X	-.028	21.333
47	M1	Z	.042	21.333
48	M1	Mx	-.103	21.333
49	M1	X	-.487	21.333
50	M1	Z	.281	21.333
51	M1	X	-.117	6.333
52	M1	Z	.015	6.333
53	M1	Mx	.125	6.333
54	M1	X	-.163	6.333
55	M1	Z	.094	6.333
56	M1	X	-.071	6.333
57	M1	Z	.094	6.333

Member Point Loads (BLC 10 : No Ice Wind 240 deg) (Continued)

	Member Label	Direction	Magnitude[k,k-ft]	Location[ft,%]
58	M1	Mx	-.125	6.333
59	M1	X	-.097	6.333
60	M1	Z	.056	6.333

Member Point Loads (BLC 11 : No Ice Wind 270 deg)

	Member Label	Direction	Magnitude[k,k-ft]	Location[ft,%]
1	M1	X	-.248	21.333
2	M1	Z	-.061	21.333
3	M1	Mx	.267	21.333
4	M1	X	-.248	21.333
5	M1	Z	.061	21.333
6	M1	Mx	.267	21.333
7	M1	X	-.143	21.333
8	M1	Mx	-.535	21.333
9	M1	X	-.163	21.333
10	M1	Z	-.017	21.333
11	M1	Mx	.249	21.333
12	M1	X	-.163	21.333
13	M1	Z	.017	21.333
14	M1	Mx	.249	21.333
15	M1	X	-.133	21.333
16	M1	Mx	-.497	21.333
17	M1	X	-.05	21.333
18	M1	Z	-.017	21.333
19	M1	Mx	.039	21.333
20	M1	X	-.05	21.333
21	M1	Z	.017	21.333
22	M1	Mx	.039	21.333
23	M1	X	-.021	21.333
24	M1	Mx	-.078	21.333
25	M1	X	-.052	21.333
26	M1	Z	-.022	21.333
27	M1	Mx	.026	21.333
28	M1	X	-.052	21.333
29	M1	Z	.022	21.333
30	M1	Mx	.026	21.333
31	M1	X	-.014	21.333
32	M1	Mx	-.053	21.333
33	M1	X	-.382	21.333
34	M1	Z	-.085	21.333
35	M1	Mx	.439	21.333
36	M1	X	-.382	21.333
37	M1	Z	.085	21.333
38	M1	Mx	.439	21.333
39	M1	X	-.234	21.333
40	M1	Mx	-.877	21.333
41	M1	X	-.071	21.333
42	M1	Z	-.023	21.333
43	M1	Mx	.06	21.333
44	M1	X	-.071	21.333
45	M1	Z	.023	21.333
46	M1	Mx	.06	21.333
47	M1	X	-.032	21.333
48	M1	Mx	-.119	21.333
49	M1	X	-.562	21.333
50	M1	X	-.161	6.333

Member Point Loads (BLC 11 : No Ice Wind 270 deg) (Continued)

	Member Label	Direction	Magnitude[k,k-ft]	Location[ft,%]
51	M1	Z	-.046	6.333
52	M1	Mx	.072	6.333
53	M1	X	-.161	6.333
54	M1	Z	.046	6.333
55	M1	Mx	.072	6.333
56	M1	X	-.082	6.333
57	M1	Mx	-.144	6.333
58	M1	X	-.112	6.333

Member Point Loads (BLC 12 : No Ice Wind 300 deg)

	Member Label	Direction	Magnitude[k,k-ft]	Location[ft,%]
1	M1	X	-.245	21.333
2	M1	Z	-.141	21.333
3	M1	X	-.184	21.333
4	M1	Z	-.036	21.333
5	M1	Mx	.463	21.333
6	M1	X	-.123	21.333
7	M1	Z	-.141	21.333
8	M1	Mx	-.463	21.333
9	M1	X	-.149	21.333
10	M1	Z	-.086	21.333
11	M1	X	-.132	21.333
12	M1	Z	-.056	21.333
13	M1	Mx	.431	21.333
14	M1	X	-.115	21.333
15	M1	Z	-.086	21.333
16	M1	Mx	-.431	21.333
17	M1	X	-.052	21.333
18	M1	Z	-.03	21.333
19	M1	X	-.035	21.333
20	M1	Z	-.000613	21.333
21	M1	Mx	.067	21.333
22	M1	X	-.018	21.333
23	M1	Z	-.03	21.333
24	M1	Mx	-.067	21.333
25	M1	X	-.056	21.333
26	M1	Z	-.032	21.333
27	M1	X	-.034	21.333
28	M1	Z	.006	21.333
29	M1	Mx	.046	21.333
30	M1	X	-.012	21.333
31	M1	Z	-.032	21.333
32	M1	Mx	-.046	21.333
33	M1	X	-.373	21.333
34	M1	Z	-.215	21.333
35	M1	X	-.288	21.333
36	M1	Z	-.068	21.333
37	M1	Mx	.76	21.333
38	M1	X	-.203	21.333
39	M1	Z	-.215	21.333
40	M1	Mx	-.76	21.333
41	M1	X	-.073	21.333
42	M1	Z	-.042	21.333
43	M1	X	-.05	21.333
44	M1	Z	-.003	21.333
45	M1	Mx	.103	21.333

Member Point Loads (BLC 12 : No Ice Wind 300 deg) (Continued)

	Member Label	Direction	Magnitude[k,k-ft]	Location[ft,%]
46	M1	X	-.028	21.333
47	M1	Z	-.042	21.333
48	M1	Mx	-.103	21.333
49	M1	X	-.487	21.333
50	M1	Z	-.281	21.333
51	M1	X	-.163	6.333
52	M1	Z	-.094	6.333
53	M1	X	-.117	6.333
54	M1	Z	-.015	6.333
55	M1	Mx	.125	6.333
56	M1	X	-.071	6.333
57	M1	Z	-.094	6.333
58	M1	Mx	-.125	6.333
59	M1	X	-.097	6.333
60	M1	Z	-.056	6.333

Member Point Loads (BLC 13 : No Ice Wind 330 deg)

	Member Label	Direction	Magnitude[k,k-ft]	Location[ft,%]
1	M1	X	-.176	21.333
2	M1	Z	-.184	21.333
3	M1	Mx	-.267	21.333
4	M1	X	-.071	21.333
5	M1	Z	-.123	21.333
6	M1	Mx	.535	21.333
7	M1	X	-.071	21.333
8	M1	Z	-.245	21.333
9	M1	Mx	-.267	21.333
10	M1	X	-.096	21.333
11	M1	Z	-.132	21.333
12	M1	Mx	-.249	21.333
13	M1	X	-.066	21.333
14	M1	Z	-.115	21.333
15	M1	Mx	.497	21.333
16	M1	X	-.066	21.333
17	M1	Z	-.149	21.333
18	M1	Mx	-.249	21.333
19	M1	X	-.04	21.333
20	M1	Z	-.035	21.333
21	M1	Mx	-.039	21.333
22	M1	X	-.01	21.333
23	M1	Z	-.018	21.333
24	M1	Mx	.078	21.333
25	M1	X	-.01	21.333
26	M1	Z	-.052	21.333
27	M1	Mx	-.039	21.333
28	M1	X	-.045	21.333
29	M1	Z	-.034	21.333
30	M1	Mx	-.026	21.333
31	M1	X	-.007	21.333
32	M1	Z	-.012	21.333
33	M1	Mx	.053	21.333
34	M1	X	-.007	21.333
35	M1	Z	-.056	21.333
36	M1	Mx	-.026	21.333
37	M1	X	-.265	21.333
38	M1	Z	-.288	21.333

Member Point Loads (BLC 13 : No Ice Wind 330 deg) (Continued)

	Member Label	Direction	Magnitude[k,k-ft]	Location[ft,%]
39	M1	Mx	-.439	21.333
40	M1	X	-.117	21.333
41	M1	Z	-.203	21.333
42	M1	Mx	.877	21.333
43	M1	X	-.117	21.333
44	M1	Z	-.373	21.333
45	M1	Mx	-.439	21.333
46	M1	X	-.055	21.333
47	M1	Z	-.05	21.333
48	M1	Mx	-.06	21.333
49	M1	X	-.016	21.333
50	M1	Z	-.028	21.333
51	M1	Mx	.119	21.333
52	M1	X	-.016	21.333
53	M1	Z	-.073	21.333
54	M1	Mx	-.06	21.333
55	M1	X	-.281	21.333
56	M1	Z	-.487	21.333
57	M1	X	-.12	6.333
58	M1	Z	-.117	6.333
59	M1	Mx	-.072	6.333
60	M1	X	-.041	6.333
61	M1	Z	-.071	6.333
62	M1	Mx	.144	6.333
63	M1	X	-.041	6.333
64	M1	Z	-.163	6.333
65	M1	Mx	-.072	6.333
66	M1	X	-.056	6.333
67	M1	Z	-.097	6.333

Member Point Loads (BLC 14 : Ice)

	Member Label	Direction	Magnitude[k,k-ft]	Location[ft,%]
1	M1	Y	-.294	21.333
2	M1	My	.552	21.333
3	M1	Mz	.956	21.333
4	M1	Y	-.294	21.333
5	M1	My	.552	21.333
6	M1	Mz	-.956	21.333
7	M1	Y	-.294	21.333
8	M1	My	-1.104	21.333
9	M1	Y	-.274	21.333
10	M1	My	.514	21.333
11	M1	Mz	.891	21.333
12	M1	Y	-.274	21.333
13	M1	My	.514	21.333
14	M1	Mz	-.891	21.333
15	M1	Y	-.274	21.333
16	M1	My	-1.029	21.333
17	M1	Y	-.093	21.333
18	M1	My	.175	21.333
19	M1	Mz	.303	21.333
20	M1	Y	-.093	21.333
21	M1	My	.175	21.333
22	M1	Mz	-.303	21.333
23	M1	Y	-.093	21.333
24	M1	My	-.35	21.333

Member Point Loads (BLC 14 : Ice) (Continued)

	Member Label	Direction	Magnitude[k,k-ft]	Location[ft,%]
25	M1	Y	-.093	21.333
26	M1	My	.174	21.333
27	M1	Mz	.302	21.333
28	M1	Y	-.093	21.333
29	M1	My	.174	21.333
30	M1	Mz	-.302	21.333
31	M1	Y	-.093	21.333
32	M1	My	-.348	21.333
33	M1	Y	-.489	21.333
34	M1	My	.917	21.333
35	M1	Mz	1.588	21.333
36	M1	Y	-.489	21.333
37	M1	My	.917	21.333
38	M1	Mz	-1.588	21.333
39	M1	Y	-.489	21.333
40	M1	My	-1.834	21.333
41	M1	Y	-.12	21.333
42	M1	My	.225	21.333
43	M1	Mz	.389	21.333
44	M1	Y	-.12	21.333
45	M1	My	.225	21.333
46	M1	Mz	-.389	21.333
47	M1	Y	-.12	21.333
48	M1	My	-.449	21.333
49	M1	Y	-.99	21.333
50	M1	Y	-.25	6.333
51	M1	My	.219	6.333
52	M1	Mz	.379	6.333
53	M1	Y	-.25	6.333
54	M1	My	.219	6.333
55	M1	Mz	-.379	6.333
56	M1	Y	-.25	6.333
57	M1	My	-.437	6.333
58	M1	Y	-.127	6.333

Member Point Loads (BLC 16 : Ice Wind 0 deg)

	Member Label	Direction	Magnitude[k,k-ft]	Location[ft,%]
1	M1	X	-.015	21.333
2	M1	Z	-.064	21.333
3	M1	Mx	-.18	21.333
4	M1	X	.015	21.333
5	M1	Z	-.064	21.333
6	M1	Mx	.18	21.333
7	M1	Z	-.09	21.333
8	M1	Z	-.052	21.333
9	M1	Mx	-.169	21.333
10	M1	Z	-.052	21.333
11	M1	Mx	.169	21.333
12	M1	Z	-.052	21.333
13	M1	X	-.005	21.333
14	M1	Z	-.013	21.333
15	M1	Mx	-.034	21.333
16	M1	X	.005	21.333
17	M1	Z	-.013	21.333
18	M1	Mx	.034	21.333
19	M1	Z	-.022	21.333

Member Point Loads (BLC 16 : Ice Wind 0 deg) (Continued)

	Member Label	Direction	Magnitude[k,k-ft]	Location[ft,%]
20	M1	X	-.007	21.333
21	M1	Z	-.012	21.333
22	M1	Mx	-.027	21.333
23	M1	X	.007	21.333
24	M1	Z	-.012	21.333
25	M1	Mx	.027	21.333
26	M1	Z	-.024	21.333
27	M1	X	-.014	21.333
28	M1	Z	-.095	21.333
29	M1	Mx	-.281	21.333
30	M1	X	.014	21.333
31	M1	Z	-.095	21.333
32	M1	Mx	.281	21.333
33	M1	Z	-.118	21.333
34	M1	X	-.006	21.333
35	M1	Z	-.018	21.333
36	M1	Mx	-.047	21.333
37	M1	X	.006	21.333
38	M1	Z	-.018	21.333
39	M1	Mx	.047	21.333
40	M1	Z	-.029	21.333
41	M1	Z	-.289	21.333
42	M1	X	-.011	6.333
43	M1	Z	-.041	6.333
44	M1	Mx	-.053	6.333
45	M1	X	.011	6.333
46	M1	Z	-.041	6.333
47	M1	Mx	.053	6.333
48	M1	Z	-.061	6.333
49	M1	Z	-.043	6.333

Member Point Loads (BLC 17 : Ice Wind 30 deg)

	Member Label	Direction	Magnitude[k,k-ft]	Location[ft,%]
1	M1	X	.028	21.333
2	M1	Z	-.048	21.333
3	M1	Mx	-.208	21.333
4	M1	X	.053	21.333
5	M1	Z	-.063	21.333
6	M1	Mx	.104	21.333
7	M1	X	.028	21.333
8	M1	Z	-.078	21.333
9	M1	Mx	.104	21.333
10	M1	X	.026	21.333
11	M1	Z	-.045	21.333
12	M1	Mx	-.195	21.333
13	M1	X	.026	21.333
14	M1	Z	-.045	21.333
15	M1	Mx	.097	21.333
16	M1	X	.026	21.333
17	M1	Z	-.045	21.333
18	M1	Mx	.097	21.333
19	M1	X	.005	21.333
20	M1	Z	-.009	21.333
21	M1	Mx	-.04	21.333
22	M1	X	.014	21.333
23	M1	Z	-.014	21.333

Member Point Loads (BLC 17 : Ice Wind 30 deg) (Continued)

	Member Label	Direction	Magnitude[k,k-ft]	Location[ft,%]
24	M1	Mx	.02	21.333
25	M1	X	.005	21.333
26	M1	Z	-.019	21.333
27	M1	Mx	.02	21.333
28	M1	X	.004	21.333
29	M1	Z	-.007	21.333
30	M1	Mx	-.031	21.333
31	M1	X	.016	21.333
32	M1	Z	-.014	21.333
33	M1	Mx	.015	21.333
34	M1	X	.004	21.333
35	M1	Z	-.02	21.333
36	M1	Mx	.015	21.333
37	M1	X	.043	21.333
38	M1	Z	-.075	21.333
39	M1	Mx	-.325	21.333
40	M1	X	.067	21.333
41	M1	Z	-.089	21.333
42	M1	Mx	.162	21.333
43	M1	X	.043	21.333
44	M1	Z	-.103	21.333
45	M1	Mx	.162	21.333
46	M1	X	.007	21.333
47	M1	Z	-.012	21.333
48	M1	Mx	-.054	21.333
49	M1	X	.018	21.333
50	M1	Z	-.019	21.333
51	M1	Mx	.027	21.333
52	M1	X	.007	21.333
53	M1	Z	-.025	21.333
54	M1	Mx	.027	21.333
55	M1	X	.145	21.333
56	M1	Z	-.251	21.333
57	M1	X	.017	6.333
58	M1	Z	-.03	6.333
59	M1	Mx	-.061	6.333
60	M1	X	.037	6.333
61	M1	Z	-.041	6.333
62	M1	Mx	.03	6.333
63	M1	X	.017	6.333
64	M1	Z	-.053	6.333
65	M1	Mx	.03	6.333
66	M1	X	.022	6.333
67	M1	Z	-.038	6.333

Member Point Loads (BLC 18 : Ice Wind 60 deg)

	Member Label	Direction	Magnitude[k,k-ft]	Location[ft,%]
1	M1	X	.063	21.333
2	M1	Z	-.019	21.333
3	M1	Mx	-.18	21.333
4	M1	X	.078	21.333
5	M1	Z	-.045	21.333
6	M1	X	.048	21.333
7	M1	Z	-.045	21.333
8	M1	Mx	.18	21.333
9	M1	X	.045	21.333

Member Point Loads (BLC 18 : Ice Wind 60 deg) (Continued)

	Member Label	Direction	Magnitude[k,k-ft]	Location[ft,%]
10	M1	Z	-.026	21.333
11	M1	Mx	-.169	21.333
12	M1	X	.045	21.333
13	M1	Z	-.026	21.333
14	M1	X	.045	21.333
15	M1	Z	-.026	21.333
16	M1	Mx	.169	21.333
17	M1	X	.014	21.333
18	M1	Z	-.002	21.333
19	M1	Mx	-.034	21.333
20	M1	X	.019	21.333
21	M1	Z	-.011	21.333
22	M1	X	.009	21.333
23	M1	Z	-.011	21.333
24	M1	Mx	.034	21.333
25	M1	X	.014	21.333
26	M1	Z	-.000275	21.333
27	M1	Mx	-.027	21.333
28	M1	X	.02	21.333
29	M1	Z	-.012	21.333
30	M1	X	.007	21.333
31	M1	Z	-.012	21.333
32	M1	Mx	.027	21.333
33	M1	X	.089	21.333
34	M1	Z	-.035	21.333
35	M1	Mx	-.281	21.333
36	M1	X	.103	21.333
37	M1	Z	-.059	21.333
38	M1	X	.075	21.333
39	M1	Z	-.059	21.333
40	M1	Mx	.281	21.333
41	M1	X	.019	21.333
42	M1	Z	-.003	21.333
43	M1	Mx	-.047	21.333
44	M1	X	.025	21.333
45	M1	Z	-.015	21.333
46	M1	X	.012	21.333
47	M1	Z	-.015	21.333
48	M1	Mx	.047	21.333
49	M1	X	.251	21.333
50	M1	Z	-.145	21.333
51	M1	X	.041	6.333
52	M1	Z	-.011	6.333
53	M1	Mx	-.053	6.333
54	M1	X	.053	6.333
55	M1	Z	-.03	6.333
56	M1	X	.03	6.333
57	M1	Z	-.03	6.333
58	M1	Mx	.053	6.333
59	M1	X	.038	6.333
60	M1	Z	-.022	6.333

Member Point Loads (BLC 19 : Ice Wind 90 deg)

	Member Label	Direction	Magnitude[k,k-ft]	Location[ft,%]
1	M1	X	.081	21.333
2	M1	Z	.015	21.333

Member Point Loads (BLC 19 : Ice Wind 90 deg) (Continued)

	Member Label	Direction	Magnitude[k,k-ft]	Location[ft,%]
3	M1	Mx	-.104	21.333
4	M1	X	.081	21.333
5	M1	Z	-.015	21.333
6	M1	Mx	-.104	21.333
7	M1	X	.055	21.333
8	M1	Mx	.208	21.333
9	M1	X	.052	21.333
10	M1	Mx	-.097	21.333
11	M1	X	.052	21.333
12	M1	Mx	-.097	21.333
13	M1	X	.052	21.333
14	M1	Mx	.195	21.333
15	M1	X	.019	21.333
16	M1	Z	.005	21.333
17	M1	Mx	-.02	21.333
18	M1	X	.019	21.333
19	M1	Z	-.005	21.333
20	M1	Mx	-.02	21.333
21	M1	X	.011	21.333
22	M1	Mx	.04	21.333
23	M1	X	.02	21.333
24	M1	Z	.007	21.333
25	M1	Mx	-.015	21.333
26	M1	X	.02	21.333
27	M1	Z	-.007	21.333
28	M1	Mx	-.015	21.333
29	M1	X	.008	21.333
30	M1	Mx	.031	21.333
31	M1	X	.11	21.333
32	M1	Z	.014	21.333
33	M1	Mx	-.162	21.333
34	M1	X	.11	21.333
35	M1	Z	-.014	21.333
36	M1	Mx	-.162	21.333
37	M1	X	.087	21.333
38	M1	Mx	.325	21.333
39	M1	X	.025	21.333
40	M1	Z	.006	21.333
41	M1	Mx	-.027	21.333
42	M1	X	.025	21.333
43	M1	Z	-.006	21.333
44	M1	Mx	-.027	21.333
45	M1	X	.014	21.333
46	M1	Mx	.054	21.333
47	M1	X	.289	21.333
48	M1	X	.054	6.333
49	M1	Z	.011	6.333
50	M1	Mx	-.03	6.333
51	M1	X	.054	6.333
52	M1	Z	-.011	6.333
53	M1	Mx	-.03	6.333
54	M1	X	.035	6.333
55	M1	Mx	.061	6.333
56	M1	X	.043	6.333

Member Point Loads (BLC 20 : Ice Wind 120 deg)

Member Label	Direction	Magnitude[k,k-ft]	Location[ft,%]

Member Point Loads (BLC 20 : Ice Wind 120 deg) (Continued)

	Member Label	Direction	Magnitude[k,k-ft]	Location[ft,%]
1	M1	X	.078	21.333
2	M1	Z	.045	21.333
3	M1	X	.063	21.333
4	M1	Z	.019	21.333
5	M1	Mx	-.18	21.333
6	M1	X	.048	21.333
7	M1	Z	.045	21.333
8	M1	Mx	.18	21.333
9	M1	X	.045	21.333
10	M1	Z	.026	21.333
11	M1	X	.045	21.333
12	M1	Z	.026	21.333
13	M1	Mx	-.169	21.333
14	M1	X	.045	21.333
15	M1	Z	.026	21.333
16	M1	Mx	.169	21.333
17	M1	X	.019	21.333
18	M1	Z	.011	21.333
19	M1	X	.014	21.333
20	M1	Z	.002	21.333
21	M1	Mx	-.034	21.333
22	M1	X	.009	21.333
23	M1	Z	.011	21.333
24	M1	Mx	.034	21.333
25	M1	X	.02	21.333
26	M1	Z	.012	21.333
27	M1	X	.014	21.333
28	M1	Z	.000275	21.333
29	M1	Mx	-.027	21.333
30	M1	X	.007	21.333
31	M1	Z	.012	21.333
32	M1	Mx	.027	21.333
33	M1	X	.103	21.333
34	M1	Z	.059	21.333
35	M1	X	.089	21.333
36	M1	Z	.035	21.333
37	M1	Mx	-.281	21.333
38	M1	X	.075	21.333
39	M1	Z	.059	21.333
40	M1	Mx	.281	21.333
41	M1	X	.025	21.333
42	M1	Z	.015	21.333
43	M1	X	.019	21.333
44	M1	Z	.003	21.333
45	M1	Mx	-.047	21.333
46	M1	X	.012	21.333
47	M1	Z	.015	21.333
48	M1	Mx	.047	21.333
49	M1	X	.251	21.333
50	M1	Z	.145	21.333
51	M1	X	.053	6.333
52	M1	Z	.03	6.333
53	M1	X	.041	6.333
54	M1	Z	.011	6.333
55	M1	Mx	-.053	6.333
56	M1	X	.03	6.333
57	M1	Z	.03	6.333

Member Point Loads (BLC 20 : Ice Wind 120 deg) (Continued)

	Member Label	Direction	Magnitude[k,k-ft]	Location[ft,%]
58	M1	Mx	.053	6.333
59	M1	X	.038	6.333
60	M1	Z	.022	6.333

Member Point Loads (BLC 21 : Ice Wind 150 deg)

	Member Label	Direction	Magnitude[k,k-ft]	Location[ft,%]
1	M1	X	.053	21.333
2	M1	Z	.063	21.333
3	M1	Mx	.104	21.333
4	M1	X	.028	21.333
5	M1	Z	.048	21.333
6	M1	Mx	-.208	21.333
7	M1	X	.028	21.333
8	M1	Z	.078	21.333
9	M1	Mx	.104	21.333
10	M1	X	.026	21.333
11	M1	Z	.045	21.333
12	M1	Mx	.097	21.333
13	M1	X	.026	21.333
14	M1	Z	.045	21.333
15	M1	Mx	-.195	21.333
16	M1	X	.026	21.333
17	M1	Z	.045	21.333
18	M1	Mx	.097	21.333
19	M1	X	.014	21.333
20	M1	Z	.014	21.333
21	M1	Mx	.02	21.333
22	M1	X	.005	21.333
23	M1	Z	.009	21.333
24	M1	Mx	-.04	21.333
25	M1	X	.005	21.333
26	M1	Z	.019	21.333
27	M1	Mx	.02	21.333
28	M1	X	.016	21.333
29	M1	Z	.014	21.333
30	M1	Mx	.015	21.333
31	M1	X	.004	21.333
32	M1	Z	.007	21.333
33	M1	Mx	-.031	21.333
34	M1	X	.004	21.333
35	M1	Z	.02	21.333
36	M1	Mx	.015	21.333
37	M1	X	.067	21.333
38	M1	Z	.089	21.333
39	M1	Mx	.162	21.333
40	M1	X	.043	21.333
41	M1	Z	.075	21.333
42	M1	Mx	-.325	21.333
43	M1	X	.043	21.333
44	M1	Z	.103	21.333
45	M1	Mx	.162	21.333
46	M1	X	.018	21.333
47	M1	Z	.019	21.333
48	M1	Mx	.027	21.333
49	M1	X	.007	21.333
50	M1	Z	.012	21.333

Member Point Loads (BLC 21 : Ice Wind 150 deg) (Continued)

	Member Label	Direction	Magnitude[k,k-ft]	Location[ft,%]
51	M1	Mx	-.054	21.333
52	M1	X	.007	21.333
53	M1	Z	.025	21.333
54	M1	Mx	.027	21.333
55	M1	X	.145	21.333
56	M1	Z	.251	21.333
57	M1	X	.037	6.333
58	M1	Z	.041	6.333
59	M1	Mx	.03	6.333
60	M1	X	.017	6.333
61	M1	Z	.03	6.333
62	M1	Mx	-.061	6.333
63	M1	X	.017	6.333
64	M1	Z	.053	6.333
65	M1	Mx	.03	6.333
66	M1	X	.022	6.333
67	M1	Z	.038	6.333

Member Point Loads (BLC 22 : Ice Wind 180 deg)

	Member Label	Direction	Magnitude[k,k-ft]	Location[ft,%]
1	M1	X	.015	21.333
2	M1	Z	.064	21.333
3	M1	Mx	.18	21.333
4	M1	X	-.015	21.333
5	M1	Z	.064	21.333
6	M1	Mx	-.18	21.333
7	M1	Z	.09	21.333
8	M1	Z	.052	21.333
9	M1	Mx	.169	21.333
10	M1	Z	.052	21.333
11	M1	Mx	-.169	21.333
12	M1	Z	.052	21.333
13	M1	X	.005	21.333
14	M1	Z	.013	21.333
15	M1	Mx	.034	21.333
16	M1	X	-.005	21.333
17	M1	Z	.013	21.333
18	M1	Mx	-.034	21.333
19	M1	Z	.022	21.333
20	M1	X	.007	21.333
21	M1	Z	.012	21.333
22	M1	Mx	.027	21.333
23	M1	X	-.007	21.333
24	M1	Z	.012	21.333
25	M1	Mx	-.027	21.333
26	M1	Z	.024	21.333
27	M1	X	.014	21.333
28	M1	Z	.095	21.333
29	M1	Mx	.281	21.333
30	M1	X	-.014	21.333
31	M1	Z	.095	21.333
32	M1	Mx	-.281	21.333
33	M1	Z	.118	21.333
34	M1	X	.006	21.333
35	M1	Z	.018	21.333
36	M1	Mx	.047	21.333

Member Point Loads (BLC 22 : Ice Wind 180 deg) (Continued)

	Member Label	Direction	Magnitude[k,k-ft]	Location[ft,%]
37	M1	X	-.006	21.333
38	M1	Z	.018	21.333
39	M1	Mx	-.047	21.333
40	M1	Z	.029	21.333
41	M1	Z	.289	21.333
42	M1	X	.011	6.333
43	M1	Z	.041	6.333
44	M1	Mx	.053	6.333
45	M1	X	-.011	6.333
46	M1	Z	.041	6.333
47	M1	Mx	-.053	6.333
48	M1	Z	.061	6.333
49	M1	Z	.043	6.333

Member Point Loads (BLC 23 : Ice Wind 210 deg)

	Member Label	Direction	Magnitude[k,k-ft]	Location[ft,%]
1	M1	X	-.028	21.333
2	M1	Z	.048	21.333
3	M1	Mx	.208	21.333
4	M1	X	-.053	21.333
5	M1	Z	.063	21.333
6	M1	Mx	-.104	21.333
7	M1	X	-.028	21.333
8	M1	Z	.078	21.333
9	M1	Mx	-.104	21.333
10	M1	X	-.026	21.333
11	M1	Z	.045	21.333
12	M1	Mx	.195	21.333
13	M1	X	-.026	21.333
14	M1	Z	.045	21.333
15	M1	Mx	-.097	21.333
16	M1	X	-.026	21.333
17	M1	Z	.045	21.333
18	M1	Mx	-.097	21.333
19	M1	X	-.005	21.333
20	M1	Z	.009	21.333
21	M1	Mx	.04	21.333
22	M1	X	-.014	21.333
23	M1	Z	.014	21.333
24	M1	Mx	-.02	21.333
25	M1	X	-.005	21.333
26	M1	Z	.019	21.333
27	M1	Mx	-.02	21.333
28	M1	X	-.004	21.333
29	M1	Z	.007	21.333
30	M1	Mx	.031	21.333
31	M1	X	-.016	21.333
32	M1	Z	.014	21.333
33	M1	Mx	-.015	21.333
34	M1	X	-.004	21.333
35	M1	Z	.02	21.333
36	M1	Mx	-.015	21.333
37	M1	X	-.043	21.333
38	M1	Z	.075	21.333
39	M1	Mx	.325	21.333
40	M1	X	-.067	21.333

Member Point Loads (BLC 23 : Ice Wind 210 deg) (Continued)

	Member Label	Direction	Magnitude[k,k-ft]	Location[ft,%]
41	M1	Z	.089	21.333
42	M1	Mx	-.162	21.333
43	M1	X	-.043	21.333
44	M1	Z	.103	21.333
45	M1	Mx	-.162	21.333
46	M1	X	-.007	21.333
47	M1	Z	.012	21.333
48	M1	Mx	.054	21.333
49	M1	X	-.018	21.333
50	M1	Z	.019	21.333
51	M1	Mx	-.027	21.333
52	M1	X	-.007	21.333
53	M1	Z	.025	21.333
54	M1	Mx	-.027	21.333
55	M1	X	-.145	21.333
56	M1	Z	.251	21.333
57	M1	X	-.017	6.333
58	M1	Z	.03	6.333
59	M1	Mx	.061	6.333
60	M1	X	-.037	6.333
61	M1	Z	.041	6.333
62	M1	Mx	-.03	6.333
63	M1	X	-.017	6.333
64	M1	Z	.053	6.333
65	M1	Mx	-.03	6.333
66	M1	X	-.022	6.333
67	M1	Z	.038	6.333

Member Point Loads (BLC 24 : Ice Wind 240 deg)

	Member Label	Direction	Magnitude[k,k-ft]	Location[ft,%]
1	M1	X	-.063	21.333
2	M1	Z	.019	21.333
3	M1	Mx	.18	21.333
4	M1	X	-.078	21.333
5	M1	Z	.045	21.333
6	M1	X	-.048	21.333
7	M1	Z	.045	21.333
8	M1	Mx	-.18	21.333
9	M1	X	-.045	21.333
10	M1	Z	.026	21.333
11	M1	Mx	.169	21.333
12	M1	X	-.045	21.333
13	M1	Z	.026	21.333
14	M1	X	-.045	21.333
15	M1	Z	.026	21.333
16	M1	Mx	-.169	21.333
17	M1	X	-.014	21.333
18	M1	Z	.002	21.333
19	M1	Mx	.034	21.333
20	M1	X	-.019	21.333
21	M1	Z	.011	21.333
22	M1	X	-.009	21.333
23	M1	Z	.011	21.333
24	M1	Mx	-.034	21.333
25	M1	X	-.014	21.333
26	M1	Z	.000275	21.333

Member Point Loads (BLC 24 : Ice Wind 240 deg) (Continued)

	Member Label	Direction	Magnitude[k,k-ft]	Location[ft,%]
27	M1	Mx	.027	21.333
28	M1	X	-.02	21.333
29	M1	Z	.012	21.333
30	M1	X	-.007	21.333
31	M1	Z	.012	21.333
32	M1	Mx	-.027	21.333
33	M1	X	-.089	21.333
34	M1	Z	.035	21.333
35	M1	Mx	.281	21.333
36	M1	X	-.103	21.333
37	M1	Z	.059	21.333
38	M1	X	-.075	21.333
39	M1	Z	.059	21.333
40	M1	Mx	-.281	21.333
41	M1	X	-.019	21.333
42	M1	Z	.003	21.333
43	M1	Mx	.047	21.333
44	M1	X	-.025	21.333
45	M1	Z	.015	21.333
46	M1	X	-.012	21.333
47	M1	Z	.015	21.333
48	M1	Mx	-.047	21.333
49	M1	X	-.251	21.333
50	M1	Z	.145	21.333
51	M1	X	-.041	6.333
52	M1	Z	.011	6.333
53	M1	Mx	.053	6.333
54	M1	X	-.053	6.333
55	M1	Z	.03	6.333
56	M1	X	-.03	6.333
57	M1	Z	.03	6.333
58	M1	Mx	-.053	6.333
59	M1	X	-.038	6.333
60	M1	Z	.022	6.333

Member Point Loads (BLC 25 : Ice Wind 270 deg)

	Member Label	Direction	Magnitude[k,k-ft]	Location[ft,%]
1	M1	X	-.081	21.333
2	M1	Z	-.015	21.333
3	M1	Mx	.104	21.333
4	M1	X	-.081	21.333
5	M1	Z	.015	21.333
6	M1	Mx	.104	21.333
7	M1	X	-.055	21.333
8	M1	Mx	-.208	21.333
9	M1	X	-.052	21.333
10	M1	Mx	.097	21.333
11	M1	X	-.052	21.333
12	M1	Mx	.097	21.333
13	M1	X	-.052	21.333
14	M1	Mx	-.195	21.333
15	M1	X	-.019	21.333
16	M1	Z	-.005	21.333
17	M1	Mx	.02	21.333
18	M1	X	-.019	21.333
19	M1	Z	.005	21.333

Member Point Loads (BLC 25 : Ice Wind 270 deg) (Continued)

	Member Label	Direction	Magnitude[k,k-ft]	Location[ft,%]
20	M1	Mx	.02	21.333
21	M1	X	-.011	21.333
22	M1	Mx	-.04	21.333
23	M1	X	-.02	21.333
24	M1	Z	-.007	21.333
25	M1	Mx	.015	21.333
26	M1	X	-.02	21.333
27	M1	Z	.007	21.333
28	M1	Mx	.015	21.333
29	M1	X	-.008	21.333
30	M1	Mx	-.031	21.333
31	M1	X	-.11	21.333
32	M1	Z	-.014	21.333
33	M1	Mx	.162	21.333
34	M1	X	-.11	21.333
35	M1	Z	.014	21.333
36	M1	Mx	.162	21.333
37	M1	X	-.087	21.333
38	M1	Mx	-.325	21.333
39	M1	X	-.025	21.333
40	M1	Z	-.006	21.333
41	M1	Mx	.027	21.333
42	M1	X	-.025	21.333
43	M1	Z	.006	21.333
44	M1	Mx	.027	21.333
45	M1	X	-.014	21.333
46	M1	Mx	-.054	21.333
47	M1	X	-.289	21.333
48	M1	X	-.054	6.333
49	M1	Z	-.011	6.333
50	M1	Mx	.03	6.333
51	M1	X	-.054	6.333
52	M1	Z	.011	6.333
53	M1	Mx	.03	6.333
54	M1	X	-.035	6.333
55	M1	Mx	-.061	6.333
56	M1	X	-.043	6.333

Member Point Loads (BLC 26 : Ice Wind 300 deg)

	Member Label	Direction	Magnitude[k,k-ft]	Location[ft,%]
1	M1	X	-.078	21.333
2	M1	Z	-.045	21.333
3	M1	X	-.063	21.333
4	M1	Z	-.019	21.333
5	M1	Mx	.18	21.333
6	M1	X	-.048	21.333
7	M1	Z	-.045	21.333
8	M1	Mx	-.18	21.333
9	M1	X	-.045	21.333
10	M1	Z	-.026	21.333
11	M1	X	-.045	21.333
12	M1	Z	-.026	21.333
13	M1	Mx	.169	21.333
14	M1	X	-.045	21.333
15	M1	Z	-.026	21.333
16	M1	Mx	-.169	21.333

Member Point Loads (BLC 26 : Ice Wind 300 deg) (Continued)

	Member Label	Direction	Magnitude[k,k-ft]	Location[ft,%]
17	M1	X	-.019	21.333
18	M1	Z	-.011	21.333
19	M1	X	-.014	21.333
20	M1	Z	-.002	21.333
21	M1	Mx	.034	21.333
22	M1	X	-.009	21.333
23	M1	Z	-.011	21.333
24	M1	Mx	-.034	21.333
25	M1	X	-.02	21.333
26	M1	Z	-.012	21.333
27	M1	X	-.014	21.333
28	M1	Z	-.000275	21.333
29	M1	Mx	.027	21.333
30	M1	X	-.007	21.333
31	M1	Z	-.012	21.333
32	M1	Mx	-.027	21.333
33	M1	X	-.103	21.333
34	M1	Z	-.059	21.333
35	M1	X	-.089	21.333
36	M1	Z	-.035	21.333
37	M1	Mx	.281	21.333
38	M1	X	-.075	21.333
39	M1	Z	-.059	21.333
40	M1	Mx	-.281	21.333
41	M1	X	-.025	21.333
42	M1	Z	-.015	21.333
43	M1	X	-.019	21.333
44	M1	Z	-.003	21.333
45	M1	Mx	.047	21.333
46	M1	X	-.012	21.333
47	M1	Z	-.015	21.333
48	M1	Mx	-.047	21.333
49	M1	X	-.251	21.333
50	M1	Z	-.145	21.333
51	M1	X	-.053	6.333
52	M1	Z	-.03	6.333
53	M1	X	-.041	6.333
54	M1	Z	-.011	6.333
55	M1	Mx	.053	6.333
56	M1	X	-.03	6.333
57	M1	Z	-.03	6.333
58	M1	Mx	-.053	6.333
59	M1	X	-.038	6.333
60	M1	Z	-.022	6.333

Member Point Loads (BLC 27 : Ice Wind 330 deg)

	Member Label	Direction	Magnitude[k,k-ft]	Location[ft,%]
1	M1	X	-.053	21.333
2	M1	Z	-.063	21.333
3	M1	Mx	-.104	21.333
4	M1	X	-.028	21.333
5	M1	Z	-.048	21.333
6	M1	Mx	.208	21.333
7	M1	X	-.028	21.333
8	M1	Z	-.078	21.333
9	M1	Mx	-.104	21.333

Member Point Loads (BLC 27 : Ice Wind 330 deg) (Continued)

	Member Label	Direction	Magnitude[k,k-ft]	Location[ft,%]
10	M1	X	-.026	21.333
11	M1	Z	-.045	21.333
12	M1	Mx	-.097	21.333
13	M1	X	-.026	21.333
14	M1	Z	-.045	21.333
15	M1	Mx	.195	21.333
16	M1	X	-.026	21.333
17	M1	Z	-.045	21.333
18	M1	Mx	-.097	21.333
19	M1	X	-.014	21.333
20	M1	Z	-.014	21.333
21	M1	Mx	-.02	21.333
22	M1	X	-.005	21.333
23	M1	Z	-.009	21.333
24	M1	Mx	.04	21.333
25	M1	X	-.005	21.333
26	M1	Z	-.019	21.333
27	M1	Mx	-.02	21.333
28	M1	X	-.016	21.333
29	M1	Z	-.014	21.333
30	M1	Mx	-.015	21.333
31	M1	X	-.004	21.333
32	M1	Z	-.007	21.333
33	M1	Mx	.031	21.333
34	M1	X	-.004	21.333
35	M1	Z	-.02	21.333
36	M1	Mx	-.015	21.333
37	M1	X	-.067	21.333
38	M1	Z	-.089	21.333
39	M1	Mx	-.162	21.333
40	M1	X	-.043	21.333
41	M1	Z	-.075	21.333
42	M1	Mx	.325	21.333
43	M1	X	-.043	21.333
44	M1	Z	-.103	21.333
45	M1	Mx	-.162	21.333
46	M1	X	-.018	21.333
47	M1	Z	-.019	21.333
48	M1	Mx	-.027	21.333
49	M1	X	-.007	21.333
50	M1	Z	-.012	21.333
51	M1	Mx	.054	21.333
52	M1	X	-.007	21.333
53	M1	Z	-.025	21.333
54	M1	Mx	-.027	21.333
55	M1	X	-.145	21.333
56	M1	Z	-.251	21.333
57	M1	X	-.037	6.333
58	M1	Z	-.041	6.333
59	M1	Mx	-.03	6.333
60	M1	X	-.017	6.333
61	M1	Z	-.03	6.333
62	M1	Mx	.061	6.333
63	M1	X	-.017	6.333
64	M1	Z	-.053	6.333
65	M1	Mx	-.03	6.333
66	M1	X	-.022	6.333

Member Point Loads (BLC 27 : Ice Wind 330 deg) (Continued)

	Member Label	Direction	Magnitude[k,k-ft]	Location[ft,%]
67	M1	Z	-.038	6.333

Member Point Loads (BLC 28 : Service Wind 0 deg)

	Member Label	Direction	Magnitude[k,k-ft]	Location[ft,%]
1	M1	X	-.018	21.333
2	M1	Z	-.053	21.333
3	M1	Mx	-.138	21.333
4	M1	X	.018	21.333
5	M1	Z	-.053	21.333
6	M1	Mx	.138	21.333
7	M1	Z	-.084	21.333
8	M1	X	-.005	21.333
9	M1	Z	-.042	21.333
10	M1	Mx	-.128	21.333
11	M1	X	.005	21.333
12	M1	Z	-.042	21.333
13	M1	Mx	.128	21.333
14	M1	Z	-.051	21.333
15	M1	X	-.005	21.333
16	M1	Z	-.009	21.333
17	M1	Mx	-.02	21.333
18	M1	X	.005	21.333
19	M1	Z	-.009	21.333
20	M1	Mx	.02	21.333
21	M1	Z	-.018	21.333
22	M1	X	-.006	21.333
23	M1	Z	-.008	21.333
24	M1	Mx	-.014	21.333
25	M1	X	.006	21.333
26	M1	Z	-.008	21.333
27	M1	Mx	.014	21.333
28	M1	Z	-.019	21.333
29	M1	X	-.025	21.333
30	M1	Z	-.084	21.333
31	M1	Mx	-.226	21.333
32	M1	X	.025	21.333
33	M1	Z	-.084	21.333
34	M1	Mx	.226	21.333
35	M1	Z	-.128	21.333
36	M1	X	-.007	21.333
37	M1	Z	-.013	21.333
38	M1	Mx	-.031	21.333
39	M1	X	.007	21.333
40	M1	Z	-.013	21.333
41	M1	Mx	.031	21.333
42	M1	Z	-.025	21.333
43	M1	Z	-.167	21.333
44	M1	X	-.014	6.333
45	M1	Z	-.032	6.333
46	M1	Mx	-.037	6.333
47	M1	X	.014	6.333
48	M1	Z	-.032	6.333
49	M1	Mx	.037	6.333
50	M1	Z	-.056	6.333
51	M1	Z	-.033	6.333

Member Point Loads (BLC 29 : Service Wind 30 deg)

	Member Label	Direction	Magnitude[k,k-ft]	Location[ft,%]
1	M1	X	.021	21.333
2	M1	Z	-.037	21.333
3	M1	Mx	-.159	21.333
4	M1	X	.053	21.333
5	M1	Z	-.055	21.333
6	M1	Mx	.08	21.333
7	M1	X	.021	21.333
8	M1	Z	-.073	21.333
9	M1	Mx	.08	21.333
10	M1	X	.02	21.333
11	M1	Z	-.034	21.333
12	M1	Mx	-.148	21.333
13	M1	X	.029	21.333
14	M1	Z	-.039	21.333
15	M1	Mx	.074	21.333
16	M1	X	.02	21.333
17	M1	Z	-.044	21.333
18	M1	Mx	.074	21.333
19	M1	X	.003	21.333
20	M1	Z	-.005	21.333
21	M1	Mx	-.023	21.333
22	M1	X	.012	21.333
23	M1	Z	-.01	21.333
24	M1	Mx	.012	21.333
25	M1	X	.003	21.333
26	M1	Z	-.015	21.333
27	M1	Mx	.012	21.333
28	M1	X	.002	21.333
29	M1	Z	-.004	21.333
30	M1	Mx	-.016	21.333
31	M1	X	.013	21.333
32	M1	Z	-.01	21.333
33	M1	Mx	.008	21.333
34	M1	X	.002	21.333
35	M1	Z	-.017	21.333
36	M1	Mx	.008	21.333
37	M1	X	.035	21.333
38	M1	Z	-.06	21.333
39	M1	Mx	-.261	21.333
40	M1	X	.079	21.333
41	M1	Z	-.086	21.333
42	M1	Mx	.131	21.333
43	M1	X	.035	21.333
44	M1	Z	-.111	21.333
45	M1	Mx	.131	21.333
46	M1	X	.005	21.333
47	M1	Z	-.008	21.333
48	M1	Mx	-.035	21.333
49	M1	X	.016	21.333
50	M1	Z	-.015	21.333
51	M1	Mx	.018	21.333
52	M1	X	.005	21.333
53	M1	Z	-.022	21.333
54	M1	Mx	.018	21.333
55	M1	X	.084	21.333
56	M1	Z	-.145	21.333
57	M1	X	.012	6.333

Member Point Loads (BLC 29 : Service Wind 30 deg) (Continued)

	Member Label	Direction	Magnitude[k,k-ft]	Location[ft,%]
58	M1	Z	-.021	6.333
59	M1	Mx	-.043	6.333
60	M1	X	.036	6.333
61	M1	Z	-.035	6.333
62	M1	Mx	.021	6.333
63	M1	X	.012	6.333
64	M1	Z	-.048	6.333
65	M1	Mx	.021	6.333
66	M1	X	.017	6.333
67	M1	Z	-.029	6.333

Member Point Loads (BLC 30 : Service Wind 60 deg)

	Member Label	Direction	Magnitude[k,k-ft]	Location[ft,%]
1	M1	X	.055	21.333
2	M1	Z	-.011	21.333
3	M1	Mx	-.138	21.333
4	M1	X	.073	21.333
5	M1	Z	-.042	21.333
6	M1	X	.037	21.333
7	M1	Z	-.042	21.333
8	M1	Mx	.138	21.333
9	M1	X	.039	21.333
10	M1	Z	-.017	21.333
11	M1	Mx	-.128	21.333
12	M1	X	.044	21.333
13	M1	Z	-.026	21.333
14	M1	X	.034	21.333
15	M1	Z	-.026	21.333
16	M1	Mx	.128	21.333
17	M1	X	.01	21.333
18	M1	Z	-.000182	21.333
19	M1	Mx	-.02	21.333
20	M1	X	.015	21.333
21	M1	Z	-.009	21.333
22	M1	X	.005	21.333
23	M1	Z	-.009	21.333
24	M1	Mx	.02	21.333
25	M1	X	.01	21.333
26	M1	Z	.002	21.333
27	M1	Mx	-.014	21.333
28	M1	X	.017	21.333
29	M1	Z	-.01	21.333
30	M1	X	.004	21.333
31	M1	Z	-.01	21.333
32	M1	Mx	.014	21.333
33	M1	X	.086	21.333
34	M1	Z	-.02	21.333
35	M1	Mx	-.226	21.333
36	M1	X	.111	21.333
37	M1	Z	-.064	21.333
38	M1	X	.06	21.333
39	M1	Z	-.064	21.333
40	M1	Mx	.226	21.333
41	M1	X	.015	21.333
42	M1	Z	-.000845	21.333
43	M1	Mx	-.031	21.333

Member Point Loads (BLC 30 : Service Wind 60 deg) (Continued)

	Member Label	Direction	Magnitude[k,k-ft]	Location[ft,%]
44	M1	X	.022	21.333
45	M1	Z	-.013	21.333
46	M1	X	.008	21.333
47	M1	Z	-.013	21.333
48	M1	Mx	.031	21.333
49	M1	X	.145	21.333
50	M1	Z	-.084	21.333
51	M1	X	.035	6.333
52	M1	Z	-.004	6.333
53	M1	Mx	-.037	6.333
54	M1	X	.048	6.333
55	M1	Z	-.028	6.333
56	M1	X	.021	6.333
57	M1	Z	-.028	6.333
58	M1	Mx	.037	6.333
59	M1	X	.029	6.333
60	M1	Z	-.017	6.333

Member Point Loads (BLC 31 : Service Wind 90 deg)

	Member Label	Direction	Magnitude[k,k-ft]	Location[ft,%]
1	M1	X	.074	21.333
2	M1	Z	.018	21.333
3	M1	Mx	-.08	21.333
4	M1	X	.074	21.333
5	M1	Z	-.018	21.333
6	M1	Mx	-.08	21.333
7	M1	X	.042	21.333
8	M1	Mx	.159	21.333
9	M1	X	.048	21.333
10	M1	Z	.005	21.333
11	M1	Mx	-.074	21.333
12	M1	X	.048	21.333
13	M1	Z	-.005	21.333
14	M1	Mx	-.074	21.333
15	M1	X	.039	21.333
16	M1	Mx	.148	21.333
17	M1	X	.015	21.333
18	M1	Z	.005	21.333
19	M1	Mx	-.012	21.333
20	M1	X	.015	21.333
21	M1	Z	-.005	21.333
22	M1	Mx	-.012	21.333
23	M1	X	.006	21.333
24	M1	Mx	.023	21.333
25	M1	X	.015	21.333
26	M1	Z	.006	21.333
27	M1	Mx	-.008	21.333
28	M1	X	.015	21.333
29	M1	Z	-.006	21.333
30	M1	Mx	-.008	21.333
31	M1	X	.004	21.333
32	M1	Mx	.016	21.333
33	M1	X	.114	21.333
34	M1	Z	.025	21.333
35	M1	Mx	-.131	21.333
36	M1	X	.114	21.333

Member Point Loads (BLC 31 : Service Wind 90 deg) (Continued)

	Member Label	Direction	Magnitude[k,k-ft]	Location[ft,%]
37	M1	Z	-.025	21.333
38	M1	Mx	-.131	21.333
39	M1	X	.07	21.333
40	M1	Mx	.261	21.333
41	M1	X	.021	21.333
42	M1	Z	.007	21.333
43	M1	Mx	-.018	21.333
44	M1	X	.021	21.333
45	M1	Z	-.007	21.333
46	M1	Mx	-.018	21.333
47	M1	X	.009	21.333
48	M1	Mx	.035	21.333
49	M1	X	.167	21.333
50	M1	X	.048	6.333
51	M1	Z	.014	6.333
52	M1	Mx	-.021	6.333
53	M1	X	.048	6.333
54	M1	Z	-.014	6.333
55	M1	Mx	-.021	6.333
56	M1	X	.025	6.333
57	M1	Mx	.043	6.333
58	M1	X	.033	6.333

Member Point Loads (BLC 32 : Service Wind 120 deg)

	Member Label	Direction	Magnitude[k,k-ft]	Location[ft,%]
1	M1	X	.073	21.333
2	M1	Z	.042	21.333
3	M1	X	.055	21.333
4	M1	Z	.011	21.333
5	M1	Mx	-.138	21.333
6	M1	X	.037	21.333
7	M1	Z	.042	21.333
8	M1	Mx	.138	21.333
9	M1	X	.044	21.333
10	M1	Z	.026	21.333
11	M1	X	.039	21.333
12	M1	Z	.017	21.333
13	M1	Mx	-.128	21.333
14	M1	X	.034	21.333
15	M1	Z	.026	21.333
16	M1	Mx	.128	21.333
17	M1	X	.015	21.333
18	M1	Z	.009	21.333
19	M1	X	.01	21.333
20	M1	Z	.000182	21.333
21	M1	Mx	-.02	21.333
22	M1	X	.005	21.333
23	M1	Z	.009	21.333
24	M1	Mx	.02	21.333
25	M1	X	.017	21.333
26	M1	Z	.01	21.333
27	M1	X	.01	21.333
28	M1	Z	-.002	21.333
29	M1	Mx	-.014	21.333
30	M1	X	.004	21.333
31	M1	Z	.01	21.333

Member Point Loads (BLC 32 : Service Wind 120 deg) (Continued)

	Member Label	Direction	Magnitude[k,k-ft]	Location[ft,%]
32	M1	Mx	.014	21.333
33	M1	X	.111	21.333
34	M1	Z	.064	21.333
35	M1	X	.086	21.333
36	M1	Z	.02	21.333
37	M1	Mx	-.226	21.333
38	M1	X	.06	21.333
39	M1	Z	.064	21.333
40	M1	Mx	.226	21.333
41	M1	X	.022	21.333
42	M1	Z	.013	21.333
43	M1	X	.015	21.333
44	M1	Z	.000845	21.333
45	M1	Mx	-.031	21.333
46	M1	X	.008	21.333
47	M1	Z	.013	21.333
48	M1	Mx	.031	21.333
49	M1	X	.145	21.333
50	M1	Z	.084	21.333
51	M1	X	.048	6.333
52	M1	Z	.028	6.333
53	M1	X	.035	6.333
54	M1	Z	.004	6.333
55	M1	Mx	-.037	6.333
56	M1	X	.021	6.333
57	M1	Z	.028	6.333
58	M1	Mx	.037	6.333
59	M1	X	.029	6.333
60	M1	Z	.017	6.333

Member Point Loads (BLC 33 : Service Wind 150 deg)

	Member Label	Direction	Magnitude[k,k-ft]	Location[ft,%]
1	M1	X	.053	21.333
2	M1	Z	.055	21.333
3	M1	Mx	.08	21.333
4	M1	X	.021	21.333
5	M1	Z	.037	21.333
6	M1	Mx	-.159	21.333
7	M1	X	.021	21.333
8	M1	Z	.073	21.333
9	M1	Mx	.08	21.333
10	M1	X	.029	21.333
11	M1	Z	.039	21.333
12	M1	Mx	.074	21.333
13	M1	X	.02	21.333
14	M1	Z	.034	21.333
15	M1	Mx	-.148	21.333
16	M1	X	.02	21.333
17	M1	Z	.044	21.333
18	M1	Mx	.074	21.333
19	M1	X	.012	21.333
20	M1	Z	.01	21.333
21	M1	Mx	.012	21.333
22	M1	X	.003	21.333
23	M1	Z	.005	21.333
24	M1	Mx	-.023	21.333

Member Point Loads (BLC 33 : Service Wind 150 deg) (Continued)

	Member Label	Direction	Magnitude[k,k-ft]	Location[ft,%]
25	M1	X	.003	21.333
26	M1	Z	.015	21.333
27	M1	Mx	.012	21.333
28	M1	X	.013	21.333
29	M1	Z	.01	21.333
30	M1	Mx	.008	21.333
31	M1	X	.002	21.333
32	M1	Z	.004	21.333
33	M1	Mx	-.016	21.333
34	M1	X	.002	21.333
35	M1	Z	.017	21.333
36	M1	Mx	.008	21.333
37	M1	X	.079	21.333
38	M1	Z	.086	21.333
39	M1	Mx	.131	21.333
40	M1	X	.035	21.333
41	M1	Z	.06	21.333
42	M1	Mx	-.261	21.333
43	M1	X	.035	21.333
44	M1	Z	.111	21.333
45	M1	Mx	.131	21.333
46	M1	X	.016	21.333
47	M1	Z	.015	21.333
48	M1	Mx	.018	21.333
49	M1	X	.005	21.333
50	M1	Z	.008	21.333
51	M1	Mx	-.035	21.333
52	M1	X	.005	21.333
53	M1	Z	.022	21.333
54	M1	Mx	.018	21.333
55	M1	X	.084	21.333
56	M1	Z	.145	21.333
57	M1	X	.036	6.333
58	M1	Z	.035	6.333
59	M1	Mx	.021	6.333
60	M1	X	.012	6.333
61	M1	Z	.021	6.333
62	M1	Mx	-.043	6.333
63	M1	X	.012	6.333
64	M1	Z	.048	6.333
65	M1	Mx	.021	6.333
66	M1	X	.017	6.333
67	M1	Z	.029	6.333

Member Point Loads (BLC 34 : Service Wind 180 deg)

	Member Label	Direction	Magnitude[k,k-ft]	Location[ft,%]
1	M1	X	.018	21.333
2	M1	Z	.053	21.333
3	M1	Mx	.138	21.333
4	M1	X	-.018	21.333
5	M1	Z	.053	21.333
6	M1	Mx	-.138	21.333
7	M1	Z	.084	21.333
8	M1	X	.005	21.333
9	M1	Z	.042	21.333
10	M1	Mx	.128	21.333

Member Point Loads (BLC 34 : Service Wind 180 deg) (Continued)

	Member Label	Direction	Magnitude[k,k-ft]	Location[ft,%]
11	M1	X	-.005	21.333
12	M1	Z	.042	21.333
13	M1	Mx	-.128	21.333
14	M1	Z	.051	21.333
15	M1	X	.005	21.333
16	M1	Z	.009	21.333
17	M1	Mx	.02	21.333
18	M1	X	-.005	21.333
19	M1	Z	.009	21.333
20	M1	Mx	-.02	21.333
21	M1	Z	.018	21.333
22	M1	X	.006	21.333
23	M1	Z	.008	21.333
24	M1	Mx	.014	21.333
25	M1	X	-.006	21.333
26	M1	Z	.008	21.333
27	M1	Mx	-.014	21.333
28	M1	Z	.019	21.333
29	M1	X	.025	21.333
30	M1	Z	.084	21.333
31	M1	Mx	.226	21.333
32	M1	X	-.025	21.333
33	M1	Z	.084	21.333
34	M1	Mx	-.226	21.333
35	M1	Z	.128	21.333
36	M1	X	.007	21.333
37	M1	Z	.013	21.333
38	M1	Mx	.031	21.333
39	M1	X	-.007	21.333
40	M1	Z	.013	21.333
41	M1	Mx	-.031	21.333
42	M1	Z	.025	21.333
43	M1	Z	.167	21.333
44	M1	X	.014	6.333
45	M1	Z	.032	6.333
46	M1	Mx	.037	6.333
47	M1	X	-.014	6.333
48	M1	Z	.032	6.333
49	M1	Mx	-.037	6.333
50	M1	Z	.056	6.333
51	M1	Z	.033	6.333

Member Point Loads (BLC 35 : Service Wind 210 deg)

	Member Label	Direction	Magnitude[k,k-ft]	Location[ft,%]
1	M1	X	-.021	21.333
2	M1	Z	.037	21.333
3	M1	Mx	.159	21.333
4	M1	X	-.053	21.333
5	M1	Z	.055	21.333
6	M1	Mx	-.08	21.333
7	M1	X	-.021	21.333
8	M1	Z	.073	21.333
9	M1	Mx	-.08	21.333
10	M1	X	-.02	21.333
11	M1	Z	.034	21.333
12	M1	Mx	.148	21.333

Member Point Loads (BLC 35 : Service Wind 210 deg) (Continued)

	Member Label	Direction	Magnitude[k,k-ft]	Location[ft,%]
13	M1	X	-.029	21.333
14	M1	Z	.039	21.333
15	M1	Mx	-.074	21.333
16	M1	X	-.02	21.333
17	M1	Z	.044	21.333
18	M1	Mx	-.074	21.333
19	M1	X	-.003	21.333
20	M1	Z	.005	21.333
21	M1	Mx	.023	21.333
22	M1	X	-.012	21.333
23	M1	Z	.01	21.333
24	M1	Mx	-.012	21.333
25	M1	X	-.003	21.333
26	M1	Z	.015	21.333
27	M1	Mx	-.012	21.333
28	M1	X	-.002	21.333
29	M1	Z	.004	21.333
30	M1	Mx	.016	21.333
31	M1	X	-.013	21.333
32	M1	Z	.01	21.333
33	M1	Mx	-.008	21.333
34	M1	X	-.002	21.333
35	M1	Z	.017	21.333
36	M1	Mx	-.008	21.333
37	M1	X	-.035	21.333
38	M1	Z	.06	21.333
39	M1	Mx	.261	21.333
40	M1	X	-.079	21.333
41	M1	Z	.086	21.333
42	M1	Mx	-.131	21.333
43	M1	X	-.035	21.333
44	M1	Z	.111	21.333
45	M1	Mx	-.131	21.333
46	M1	X	-.005	21.333
47	M1	Z	.008	21.333
48	M1	Mx	.035	21.333
49	M1	X	-.016	21.333
50	M1	Z	.015	21.333
51	M1	Mx	-.018	21.333
52	M1	X	-.005	21.333
53	M1	Z	.022	21.333
54	M1	Mx	-.018	21.333
55	M1	X	-.084	21.333
56	M1	Z	.145	21.333
57	M1	X	-.012	6.333
58	M1	Z	.021	6.333
59	M1	Mx	.043	6.333
60	M1	X	-.036	6.333
61	M1	Z	.035	6.333
62	M1	Mx	-.021	6.333
63	M1	X	-.012	6.333
64	M1	Z	.048	6.333
65	M1	Mx	-.021	6.333
66	M1	X	-.017	6.333
67	M1	Z	.029	6.333

Member Point Loads (BLC 36 : Service Wind 240 deg)

	Member Label	Direction	Magnitude[k,k-ft]	Location[ft,%]
1	M1	X	-.055	21.333
2	M1	Z	.011	21.333
3	M1	Mx	.138	21.333
4	M1	X	-.073	21.333
5	M1	Z	.042	21.333
6	M1	X	-.037	21.333
7	M1	Z	.042	21.333
8	M1	Mx	-.138	21.333
9	M1	X	-.039	21.333
10	M1	Z	.017	21.333
11	M1	Mx	.128	21.333
12	M1	X	-.044	21.333
13	M1	Z	.026	21.333
14	M1	X	-.034	21.333
15	M1	Z	.026	21.333
16	M1	Mx	-.128	21.333
17	M1	X	-.01	21.333
18	M1	Z	.000182	21.333
19	M1	Mx	.02	21.333
20	M1	X	-.015	21.333
21	M1	Z	.009	21.333
22	M1	X	-.005	21.333
23	M1	Z	.009	21.333
24	M1	Mx	-.02	21.333
25	M1	X	-.01	21.333
26	M1	Z	-.002	21.333
27	M1	Mx	.014	21.333
28	M1	X	-.017	21.333
29	M1	Z	.01	21.333
30	M1	X	-.004	21.333
31	M1	Z	.01	21.333
32	M1	Mx	-.014	21.333
33	M1	X	-.086	21.333
34	M1	Z	.02	21.333
35	M1	Mx	.226	21.333
36	M1	X	-.111	21.333
37	M1	Z	.064	21.333
38	M1	X	-.06	21.333
39	M1	Z	.064	21.333
40	M1	Mx	-.226	21.333
41	M1	X	-.015	21.333
42	M1	Z	.000845	21.333
43	M1	Mx	.031	21.333
44	M1	X	-.022	21.333
45	M1	Z	.013	21.333
46	M1	X	-.008	21.333
47	M1	Z	.013	21.333
48	M1	Mx	-.031	21.333
49	M1	X	-.145	21.333
50	M1	Z	.084	21.333
51	M1	X	-.035	6.333
52	M1	Z	.004	6.333
53	M1	Mx	.037	6.333
54	M1	X	-.048	6.333
55	M1	Z	.028	6.333
56	M1	X	-.021	6.333
57	M1	Z	.028	6.333

Member Point Loads (BLC 36 : Service Wind 240 deg) (Continued)

	Member Label	Direction	Magnitude[k,k-ft]	Location[ft,%]
58	M1	Mx	-.037	6.333
59	M1	X	-.029	6.333
60	M1	Z	.017	6.333

Member Point Loads (BLC 37 : Service Wind 270 deg)

	Member Label	Direction	Magnitude[k,k-ft]	Location[ft,%]
1	M1	X	-.074	21.333
2	M1	Z	-.018	21.333
3	M1	Mx	.08	21.333
4	M1	X	-.074	21.333
5	M1	Z	.018	21.333
6	M1	Mx	.08	21.333
7	M1	X	-.042	21.333
8	M1	Mx	-.159	21.333
9	M1	X	-.048	21.333
10	M1	Z	-.005	21.333
11	M1	Mx	.074	21.333
12	M1	X	-.048	21.333
13	M1	Z	.005	21.333
14	M1	Mx	.074	21.333
15	M1	X	-.039	21.333
16	M1	Mx	-.148	21.333
17	M1	X	-.015	21.333
18	M1	Z	-.005	21.333
19	M1	Mx	.012	21.333
20	M1	X	-.015	21.333
21	M1	Z	.005	21.333
22	M1	Mx	.012	21.333
23	M1	X	-.006	21.333
24	M1	Mx	-.023	21.333
25	M1	X	-.015	21.333
26	M1	Z	-.006	21.333
27	M1	Mx	.008	21.333
28	M1	X	-.015	21.333
29	M1	Z	.006	21.333
30	M1	Mx	.008	21.333
31	M1	X	-.004	21.333
32	M1	Mx	-.016	21.333
33	M1	X	-.114	21.333
34	M1	Z	-.025	21.333
35	M1	Mx	.131	21.333
36	M1	X	-.114	21.333
37	M1	Z	.025	21.333
38	M1	Mx	.131	21.333
39	M1	X	-.07	21.333
40	M1	Mx	-.261	21.333
41	M1	X	-.021	21.333
42	M1	Z	-.007	21.333
43	M1	Mx	.018	21.333
44	M1	X	-.021	21.333
45	M1	Z	.007	21.333
46	M1	Mx	.018	21.333
47	M1	X	-.009	21.333
48	M1	Mx	-.035	21.333
49	M1	X	-.167	21.333
50	M1	X	-.048	6.333

Member Point Loads (BLC 37 : Service Wind 270 deg) (Continued)

	Member Label	Direction	Magnitude[k,k-ft]	Location[ft,%]
51	M1	Z	-.014	6.333
52	M1	Mx	.021	6.333
53	M1	X	-.048	6.333
54	M1	Z	.014	6.333
55	M1	Mx	.021	6.333
56	M1	X	-.025	6.333
57	M1	Mx	-.043	6.333
58	M1	X	-.033	6.333

Member Point Loads (BLC 38 : Service Wind 300 deg)

	Member Label	Direction	Magnitude[k,k-ft]	Location[ft,%]
1	M1	X	-.073	21.333
2	M1	Z	-.042	21.333
3	M1	X	-.055	21.333
4	M1	Z	-.011	21.333
5	M1	Mx	.138	21.333
6	M1	X	-.037	21.333
7	M1	Z	-.042	21.333
8	M1	Mx	-.138	21.333
9	M1	X	-.044	21.333
10	M1	Z	-.026	21.333
11	M1	X	-.039	21.333
12	M1	Z	-.017	21.333
13	M1	Mx	.128	21.333
14	M1	X	-.034	21.333
15	M1	Z	-.026	21.333
16	M1	Mx	-.128	21.333
17	M1	X	-.015	21.333
18	M1	Z	-.009	21.333
19	M1	X	-.01	21.333
20	M1	Z	-.000182	21.333
21	M1	Mx	.02	21.333
22	M1	X	-.005	21.333
23	M1	Z	-.009	21.333
24	M1	Mx	-.02	21.333
25	M1	X	-.017	21.333
26	M1	Z	-.01	21.333
27	M1	X	-.01	21.333
28	M1	Z	.002	21.333
29	M1	Mx	.014	21.333
30	M1	X	-.004	21.333
31	M1	Z	-.01	21.333
32	M1	Mx	-.014	21.333
33	M1	X	-.111	21.333
34	M1	Z	-.064	21.333
35	M1	X	-.086	21.333
36	M1	Z	-.02	21.333
37	M1	Mx	.226	21.333
38	M1	X	-.06	21.333
39	M1	Z	-.064	21.333
40	M1	Mx	-.226	21.333
41	M1	X	-.022	21.333
42	M1	Z	-.013	21.333
43	M1	X	-.015	21.333
44	M1	Z	-.000845	21.333
45	M1	Mx	.031	21.333

Member Point Loads (BLC 38 : Service Wind 300 deg) (Continued)

	Member Label	Direction	Magnitude[k,k-ft]	Location[ft,%]
46	M1	X	-.008	21.333
47	M1	Z	-.013	21.333
48	M1	Mx	-.031	21.333
49	M1	X	-.145	21.333
50	M1	Z	-.084	21.333
51	M1	X	-.048	6.333
52	M1	Z	-.028	6.333
53	M1	X	-.035	6.333
54	M1	Z	-.004	6.333
55	M1	Mx	.037	6.333
56	M1	X	-.021	6.333
57	M1	Z	-.028	6.333
58	M1	Mx	-.037	6.333
59	M1	X	-.029	6.333
60	M1	Z	-.017	6.333

Member Point Loads (BLC 39 : Service Wind 330 deg)

	Member Label	Direction	Magnitude[k,k-ft]	Location[ft,%]
1	M1	X	-.053	21.333
2	M1	Z	-.055	21.333
3	M1	Mx	-.08	21.333
4	M1	X	-.021	21.333
5	M1	Z	-.037	21.333
6	M1	Mx	.159	21.333
7	M1	X	-.021	21.333
8	M1	Z	-.073	21.333
9	M1	Mx	-.08	21.333
10	M1	X	-.029	21.333
11	M1	Z	-.039	21.333
12	M1	Mx	-.074	21.333
13	M1	X	-.02	21.333
14	M1	Z	-.034	21.333
15	M1	Mx	.148	21.333
16	M1	X	-.02	21.333
17	M1	Z	-.044	21.333
18	M1	Mx	-.074	21.333
19	M1	X	-.012	21.333
20	M1	Z	-.01	21.333
21	M1	Mx	-.012	21.333
22	M1	X	-.003	21.333
23	M1	Z	-.005	21.333
24	M1	Mx	.023	21.333
25	M1	X	-.003	21.333
26	M1	Z	-.015	21.333
27	M1	Mx	-.012	21.333
28	M1	X	-.013	21.333
29	M1	Z	-.01	21.333
30	M1	Mx	-.008	21.333
31	M1	X	-.002	21.333
32	M1	Z	-.004	21.333
33	M1	Mx	.016	21.333
34	M1	X	-.002	21.333
35	M1	Z	-.017	21.333
36	M1	Mx	-.008	21.333
37	M1	X	-.079	21.333
38	M1	Z	-.086	21.333

Member Point Loads (BLC 39 : Service Wind 330 deg) (Continued)

	Member Label	Direction	Magnitude[k,k-ft]	Location[ft,%]
39	M1	Mx	-.131	21.333
40	M1	X	-.035	21.333
41	M1	Z	-.06	21.333
42	M1	Mx	.261	21.333
43	M1	X	-.035	21.333
44	M1	Z	-.111	21.333
45	M1	Mx	-.131	21.333
46	M1	X	-.016	21.333
47	M1	Z	-.015	21.333
48	M1	Mx	-.018	21.333
49	M1	X	-.005	21.333
50	M1	Z	-.008	21.333
51	M1	Mx	.035	21.333
52	M1	X	-.005	21.333
53	M1	Z	-.022	21.333
54	M1	Mx	-.018	21.333
55	M1	X	-.084	21.333
56	M1	Z	-.145	21.333
57	M1	X	-.036	6.333
58	M1	Z	-.035	6.333
59	M1	Mx	-.021	6.333
60	M1	X	-.012	6.333
61	M1	Z	-.021	6.333
62	M1	Mx	.043	6.333
63	M1	X	-.012	6.333
64	M1	Z	-.048	6.333
65	M1	Mx	-.021	6.333
66	M1	X	-.017	6.333
67	M1	Z	-.029	6.333

Envelope AISC 14th(360-10): LRFD Steel Code Checks

	Mem...	Shape	Code Check	Loc[ft]	LC	Shear ...	Loc[ft]	Dir	LC	phi*Pn...	phi*Pn...	phi*Mn ...	phi*Mn...	Cb	Eqn
1	M1	HSS18x0...	.368	0	24	.032	0		24	733.32	733.32	338.093	338.093	1	H...
2	M2	HSS18x0...	.402	18.3...	24	.048	18.3...		24	733.32	733.32	338.093	338.093	1	H...
3	M3	HSS18x0...	.096	20	24	.021	11.4...		24	733.32	733.32	338.093	338.093	1	H...
4	M4	HSS18x0...	.027	0	38	.002	0		25	733.32	733.32	338.093	338.093	1	H...
5	M5	HSS18x0...	.030	0	38	.003	17.5		25	733.32	733.32	338.093	338.093	1	H...
6	M6	HSS18x0...	.034	0	38	.002	19.8...		20	733.32	733.32	338.093	338.093	1	H...
7	M7	L2.5x2.5x3	.446	1.768	18	.001	0	y	38	19.228	29.192	.873	1.799	1...	H...
8	M8	L2.5x2.5x3	.446	1.768	12	.001	0	y	38	19.228	29.192	.873	1.799	1...	H...
9	M9	L2.5x2.5x3	.446	1.768	6	.001	0	y	38	19.228	29.192	.873	1.799	1...	H...
10	M10	L2.5x2.5x3	.446	1.768	24	.001	0	y	38	19.228	29.192	.873	1.799	1...	H...
11	M11	L2.5x2.5x3	.351	1.768	6	.001	0	y	38	19.228	29.192	.873	1.799	1...	H...
12	M12	L2.5x2.5x3	.351	1.768	24	.001	0	y	38	19.228	29.192	.873	1.799	1...	H...
13	M13	L2.5x2.5x3	.351	1.768	18	.001	0	y	38	19.228	29.192	.873	1.799	1...	H...
14	M14	L2.5x2.5x3	.351	1.768	12	.001	0	y	38	19.228	29.192	.873	1.799	1...	H...
15	M15	L2.5x2.5x3	.145	1.768	18	.001	0	y	38	19.228	29.192	.873	1.799	1...	H...
16	M16	L2.5x2.5x3	.145	1.768	12	.001	0	y	38	19.228	29.192	.873	1.799	1...	H...
17	M17	L2.5x2.5x3	.145	1.768	6	.001	0	y	38	19.228	29.192	.873	1.799	1...	H...
18	M18	L2.5x2.5x3	.145	1.768	24	.001	0	y	38	19.228	29.192	.873	1.799	1...	H...
19	M19	L2.5x2.5x3	.241	5.098	18	.002	10.1...	y	38	3.159	29.192	.873	1.293	1...	H...
20	M20	L2.5x2.5x3	.241	5.098	24	.002	10.1...	y	38	3.159	29.192	.873	1.293	1...	H...
21	M21	L2.5x2.5x3	.241	5.098	6	.002	10.1...	y	38	3.159	29.192	.873	1.293	1...	H...
22	M22	L2.5x2.5x3	.241	5.098	12	.002	10.1...	y	38	3.159	29.192	.873	1.293	1...	H...
23	M23	L2.5x2.5x3	.350	7.057	18	.003	0	y	38	1.649	29.192	.873	1.076	1...	H...

Envelope AISC 14th(360-10): LRFD Steel Code Checks (Continued)

	Mem...	Shape	Code Check	Loc[ft]	LC	Shear ...	Loc[ft]	Dir	LC	phi*Pn...	phi*Pn...	phi*Mn ...	phi*Mn...	Cb	Eqn
24	M24	L2.5x2.5x3	.350	7.057	24	.003	0	y	38	1.649	29.192	.873	1.076	1...	H...
25	M25	L2.5x2.5x3	.350	7.057	6	.003	0	y	38	1.649	29.192	.873	1.076	1...	H...
26	M26	L2.5x2.5x3	.350	7.057	12	.003	0	y	38	1.649	29.192	.873	1.076	1...	H...

Envelope Joint Reactions

	Joint		X [k]	LC	Y [k]	LC	Z [k]	LC	MX [k-ft]	LC	MY [k-ft]	LC	MZ [k-ft]	LC
1	FND	max	.297	21	24.986	38	.297	3	0	50	0	25	0	50
2		min	-.297	9	9.837	3	-.297	15	0	1	0	4	0	1
3	N15	max	5.975	22	.034	38	5.975	24	0	50	0	50	0	50
4		min	-5.975	12	-.021	32	-5.975	10	0	1	0	1	0	1
5	N16	max	5.975	18	.034	34	5.975	6	0	50	0	50	0	50
6		min	-5.975	4	-.021	28	-5.975	16	0	1	0	1	0	1
7	N17	max	5.975	16	.034	28	5.975	4	0	50	0	50	0	50
8		min	-5.975	6	-.021	34	-5.975	18	0	1	0	1	0	1
9	N18	max	5.975	24	.034	32	5.975	22	0	50	0	50	0	50
10		min	-5.975	10	-.021	38	-5.975	12	0	1	0	1	0	1
11	N19	max	4.679	10	.024	32	4.679	12	0	50	0	50	0	50
12		min	-4.679	24	-.011	38	-4.679	22	0	1	0	1	0	1
13	N20	max	4.679	6	.024	28	4.679	18	0	50	0	50	0	50
14		min	-4.679	16	-.011	34	-4.679	4	0	1	0	1	0	1
15	N21	max	4.679	4	.024	34	4.679	16	0	50	0	50	0	50
16		min	-4.679	18	-.011	28	-4.679	6	0	1	0	1	0	1
17	N22	max	4.679	12	.024	38	4.679	10	0	50	0	50	0	50
18		min	-4.679	22	-.011	32	-4.679	24	0	1	0	1	0	1
19	N23	max	1.876	22	.013	38	1.876	24	0	50	0	50	0	50
20		min	-1.876	12	0	31	-1.876	10	0	1	0	1	0	1
21	N24	max	1.876	18	.013	35	1.876	6	0	50	0	50	0	50
22		min	-1.876	4	0	28	-1.876	16	0	1	0	1	0	1
23	N25	max	1.876	16	.013	29	1.876	4	0	50	0	50	0	50
24		min	-1.876	6	0	34	-1.876	18	0	1	0	1	0	1
25	N26	max	1.876	24	.013	32	1.876	22	0	50	0	50	0	50
26		min	-1.876	10	0	37	-1.876	12	0	1	0	1	0	1
27	N26A	max	.393	23	.019	38	.393	25	0	50	0	50	0	50
28		min	-.393	13	.014	11	-.393	11	0	1	0	1	0	1
29	N27	max	.393	17	.019	29	.393	5	0	50	0	50	0	50
30		min	-.393	7	.014	17	-.393	19	0	1	0	1	0	1
31	N28	max	.393	19	.019	35	.393	7	0	50	0	50	0	50
32		min	-.393	5	.014	5	-.393	17	0	1	0	1	0	1
33	N29	max	.393	25	.019	32	.393	23	0	50	0	50	0	50
34		min	-.393	11	.014	23	-.393	13	0	1	0	1	0	1
35	N30	max	.251	22	.026	38	.251	24	0	50	0	50	0	50
36		min	-.251	12	.019	11	-.251	10	0	1	0	1	0	1
37	N32	max	.251	18	.026	35	.251	6	0	50	0	50	0	50
38		min	-.251	4	.019	5	-.251	16	0	1	0	1	0	1
39	N33	max	.251	16	.026	29	.251	4	0	50	0	50	0	50
40		min	-.251	6	.019	17	-.251	18	0	1	0	1	0	1
41	N34	max	.251	24	.026	32	.251	22	0	50	0	50	0	50
42		min	-.251	10	.019	23	-.251	12	0	1	0	1	0	1
43	Totals:	max	11.474	21	25.243	38	11.474	3						
44		min	-11.474	8	10.029	3	-11.474	14						

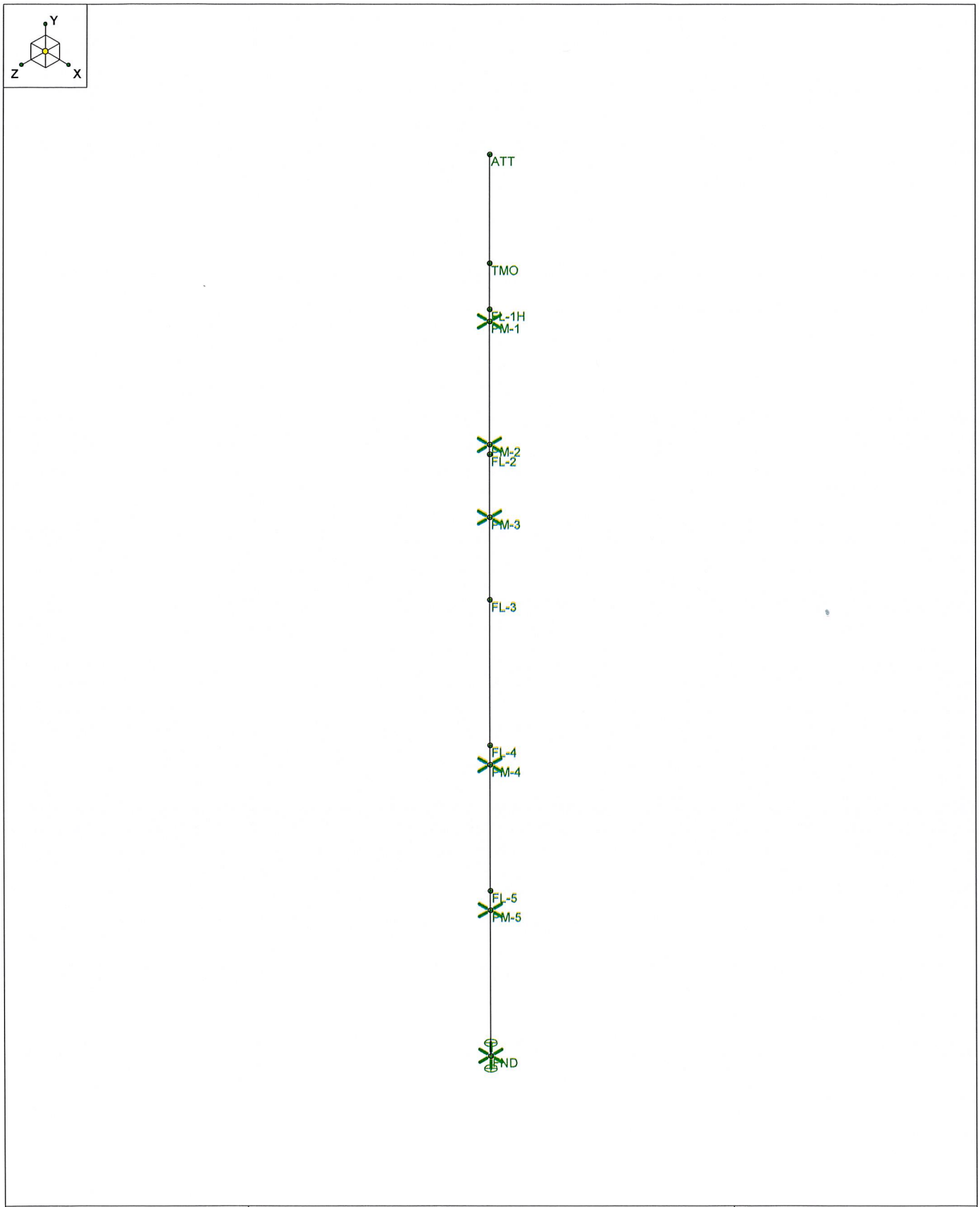

Paul J Ford & Company	Powermount - NESC	PM - 1
CEC		Nov 14, 2019 at 1:51 PM
37519-3029.001.6125		37519-3029.001.6125 NESC - Pip...

(Global) Model Settings

Display Sections for Member Calcs	5
Max Internal Sections for Member Calcs	97
Include Shear Deformation?	Yes
Increase Nailing Capacity for Wind?	Yes
Include Warping?	Yes
Trans Load Btwn Intersecting Wood Wall?	Yes
Area Load Mesh (in^2)	144
Merge Tolerance (in)	.12
P-Delta Analysis Tolerance	0.50%
Include P-Delta for Walls?	Yes
Automatically Iterate Stiffness for Walls?	Yes
Max Iterations for Wall Stiffness	3
Gravity Acceleration (ft/sec^2)	32.2
Wall Mesh Size (in)	24
Eigensolution Convergence Tol. (1.E-)	4
Vertical Axis	Y
Global Member Orientation Plane	XZ
Static Solver	Sparse Accelerated
Dynamic Solver	Accelerated Solver

Hot Rolled Steel Code	AISC 14th(360-10): LRFD
Adjust Stiffness?	Yes(Iterative)
RISAConnection Code	None
Cold Formed Steel Code	None
Wood Code	None
Wood Temperature	< 100F
Concrete Code	None
Masonry Code	None
Aluminum Code	None - Building
Stainless Steel Code	AISC 14th(360-10): ASD
Adjust Stiffness?	Yes(Iterative)

Number of Shear Regions	4
Region Spacing Increment (in)	4
Biaxial Column Method	Exact Integration
Parme Beta Factor (PCA)	.65
Concrete Stress Block	Rectangular
Use Cracked Sections?	Yes
Use Cracked Sections Slab?	No
Bad Framing Warnings?	No
Unused Force Warnings?	Yes
Min 1 Bar Diam. Spacing?	No
Concrete Rebar Set	REBAR_SET_ASTMA615
Min % Steel for Column	1
Max % Steel for Column	8

(Global) Model Settings, Continued

Seismic Code	ASCE 7-10
Seismic Base Elevation (ft)	Not Entered
Add Base Weight?	Yes
Ct X	.02
Ct Z	.02
T X (sec)	Not Entered
T Z (sec)	Not Entered
R X	3
R Z	3
Ct Exp. X	.75
Ct Exp. Z	.75
SD1	1
SDS	1
S1	1
TL (sec)	5
Risk Cat	I or II
Drift Cat	Other
Om Z	1
Om X	1
Cd Z	4
Cd X	4
Rho Z	1
Rho X	1

Joint Coordinates and Temperatures

	Label	X [ft]	Y [ft]	Z [ft]	Temp [F]	Detach From Diaphragm
1	ATT	0	124	0	0	
2	FND	0	0	0	0	
3	PM-1	0	101	0	0	
4	PM-2	0	84	0	0	
5	PM-3	0	74	0	0	
6	PM-4	0	40	0	0	
7	PM-5	0	20	0	0	
8	FL-1H	0	102.666667	0	0	
9	FL-2	0	82.666667	0	0	
10	FL-3	0	62.666667	0	0	
11	FL-4	0	42.666667	0	0	
12	FL-5	0	22.666667	0	0	
13	TMO	0	109	0	0	

Joint Boundary Conditions

	Joint Label	X [k/in]	Y [k/in]	Z [k/in]	X Rot.[k-ft/rad]	Y Rot.[k-ft/rad]	Z Rot.[k-ft/rad]
1	FND	Reaction	Reaction	Reaction		Reaction	
2	PM-1	Reaction		Reaction			
3	PM-2	Reaction		Reaction			
4	PM-3	Reaction		Reaction			
5	PM-4	Reaction		Reaction			
6	PM-5	Reaction		Reaction			

Hot Rolled Steel Properties

	Label	E [ksi]	G [ksi]	Nu	Therm (/1...	Density[k/...	Yield[ksi]	Ry	Fu[ksi]	Rt
1	A36 Gr.36	29000	11154	.3	.65	.49	36	1.5	58	1.2
2	A572 Gr.50	29000	11154	.3	.65	.49	50	1.1	65	1.1

Hot Rolled Steel Properties (Continued)

	Label	E [ksi]	G [ksi]	Nu	Therm (/1...	Density[k/...	Yield[ksi]	Ry	Fu[ksi]	Rt
3	A992	29000	11154	.3	.65	.49	50	1.1	65	1.1
4	A500 Gr.42	29000	11154	.3	.65	.49	42	1.4	58	1.3
5	A500 Gr.46	29000	11154	.3	.65	.49	46	1.4	58	1.3
6	A53 GR. B	29000	11154	.3	.65	.49	35	1.6	60	1.2

Hot Rolled Steel Section Sets

	Label	Shape	Type	Design Li...	Material	Design R...	A [in2]	Iyy [in4]	Izz [in4]	J [in4]
1	12" Pipe	PIPE 12.0	None	None	A500 Gr.42	Typical	13.7	262	262	523
2	18" Pipe	HSS18x0.375	None	None	A500 Gr.42	Typical	19.4	754	754	1510
3	24" Pipe	PIPE_24.0_HRA	None	None	A500 Gr.42	Typical	27.833	1942.299	1942.299	3884.597

Member Primary Data

	Label	I Joint	J Joint	K Joint	Rotate(d...	Section/Shape	Type	Design List	Material	Design Ru...
1	M1	FND	FL-5			18" Pipe	None	None	A500 Gr.42	Typical
2	M2	FL-5	FL-4			18" Pipe	None	None	A500 Gr.42	Typical
3	M3	FL-4	FL-3			18" Pipe	None	None	A500 Gr.42	Typical
4	M4	FL-3	FL-2			18" Pipe	None	None	A500 Gr.42	Typical
5	M5	FL-2	FL-1H			18" Pipe	None	None	A500 Gr.42	Typical
6	M6	FL-1H	ATT			18" Pipe	None	None	A500 Gr.42	Typical

Basic Load Cases

	BLC Description	Category	X Gr...	Y Gr...	Z Gr...	Joint	Point	Distri...	Area(...	Surfa...
1	250B: NESC Heavy	None		-1.5		8		18		
2	250C: Extreme Wind (Trans.)	None		-1		8		12		

Load Combinations

	Description	Sol...	PDelta	SRSS	B...	Fa...	B...	Fac...	B...	Fa...	B...	Fa...	B...	Fa...	B...	Fa...	B...	Fa...	B...	Fa...	B...	Fa...	B...	Fa...
1	250B: NESC Heavy	Yes	Y		1	1																		
2	250C: Extreme Wind (Trans.)	Yes	Y		2	1																		

Joint Loads and Enforced Displacements (BLC 1 : 250B: NESC Heavy)

	Joint Label	L,D,M	Direction	Magnitude[(k,k-ft), (in,rad), (k*s^2/ft, k*s^2*ft)]
1	ATT	L	Y	-5.081
2	ATT	L	X	-1.842
3	TMO	L	Y	-.652
4	TMO	L	X	-.372
5	TMO	L	Y	-.19
6	TMO	L	Y	-.024
7	TMO	L	X	-.156
8	TMO	L	X	-.046

Joint Loads and Enforced Displacements (BLC 2 : 250C: Extreme Wind (Trans.))

	Joint Label	L,D,M	Direction	Magnitude[(k,k-ft), (in,rad), (k*s^2/ft, k*s^2*ft)]
1	ATT	L	Y	-2.388
2	ATT	L	X	-7.042
3	TMO	L	Y	-.269
4	TMO	L	X	-1.417
5	TMO	L	Y	-.032
6	TMO	L	Y	-.002

Joint Loads and Enforced Displacements (BLC 2 : 250C: Extreme Wind (Trans.)) (Continued)

	Joint Label	L,D,M	Direction	Magnitude[(k,k-ft), (in,rad), (k*s^2/ft, k*s^2*ft)]
7	TMO	L	X	-.285
8	TMO	L	X	-.049

Member Distributed Loads (BLC 1 : 250B: NESC Heavy)

	Member Label	Direction	Start Magnitude[lb/ft,...	End Magnitude[lb/ft,F...	Start Location[ft,%]	End Location[ft,%]
1	M1	Y	-35.6	-35.6	0	0
2	M2	Y	-35.6	-35.6	0	0
3	M3	Y	-35.6	-35.6	0	0
4	M4	Y	-35.6	-35.6	0	0
5	M5	Y	-35.6	-35.6	0	0
6	M6	Y	-35.6	-35.6	0	0
7	M1	X	-21	-21	0	0
8	M2	X	-21	-21	0	0
9	M3	X	-21	-21	0	0
10	M4	X	-21	-21	0	0
11	M5	X	-21	-21	0	0
12	M6	X	-21	-21	0	0
13	M1	Y	-17	-17	0	0
14	M2	Y	-17	-17	0	0
15	M3	Y	-17	-17	0	0
16	M4	Y	-17	-17	0	0
17	M5	Y	-17	-17	0	0
18	M6	Y	-17	-17	0	0

Member Distributed Loads (BLC 2 : 250C: Extreme Wind (Trans.))

	Member Label	Direction	Start Magnitude[lb/ft,...	End Magnitude[lb/ft,F...	Start Location[ft,%]	End Location[ft,%]
1	M1	Y	-5.94	-5.94	0	0
2	M2	Y	-5.94	-5.94	0	0
3	M3	Y	-5.94	-5.94	0	0
4	M4	Y	-5.94	-5.94	0	0
5	M5	Y	-5.94	-5.94	0	0
6	M6	Y	-5.94	-5.94	0	0
7	M1	X	-85	-85	0	0
8	M2	X	-85	-85	0	0
9	M3	X	-85	-85	0	0
10	M4	X	-85	-85	0	0
11	M5	X	-85	-85	0	0
12	M6	X	-85	-85	0	0

Joint Reactions (By Combination)

	LC	Joint Label	X [k]	Y [k]	Z [k]	MX [k-ft]	MY [k-ft]	MZ [k-ft]
1	1	FND	.17	24.748	0	0	0	0
2	1	PM-1	7.167	0	0	0	0	0
3	1	PM-2	-5.797	0	0	0	0	0
4	1	PM-3	2.533	0	0	0	0	0
5	1	PM-4	.496	0	0	0	0	0
6	1	PM-5	.451	0	0	0	0	0
7	1	Totals:	5.02	24.748	0			
8	1	COG (ft):	X: 0	Y: 76.374	Z: 0			
9	2	FND	.69	11.613	0	0	0	0
10	2	PM-1	26.794	0	0	0	0	0
11	2	PM-2	-21.68	0	0	0	0	0
12	2	PM-3	9.675	0	0	0	0	0

Joint Reactions (By Combination) (Continued)

	LC	Joint Label	X [k]	Y [k]	Z [k]	MX [k-ft]	MY [k-ft]	MZ [k-ft]
13	2	PM-4	2.043	0	0	0	0	0
14	2	PM-5	1.81	0	0	0	0	0
15	2	Totals:	19.333	11.613	0			
16	2	COG (ft):	X: 0	Y: 75.975	Z: 0			

Paul J. Ford and Company. Project: "37519-3029.001.6125"
Tower Version 16.01, 2:05:16 PM Friday, November 15, 2019
Undeformed geometry displayed

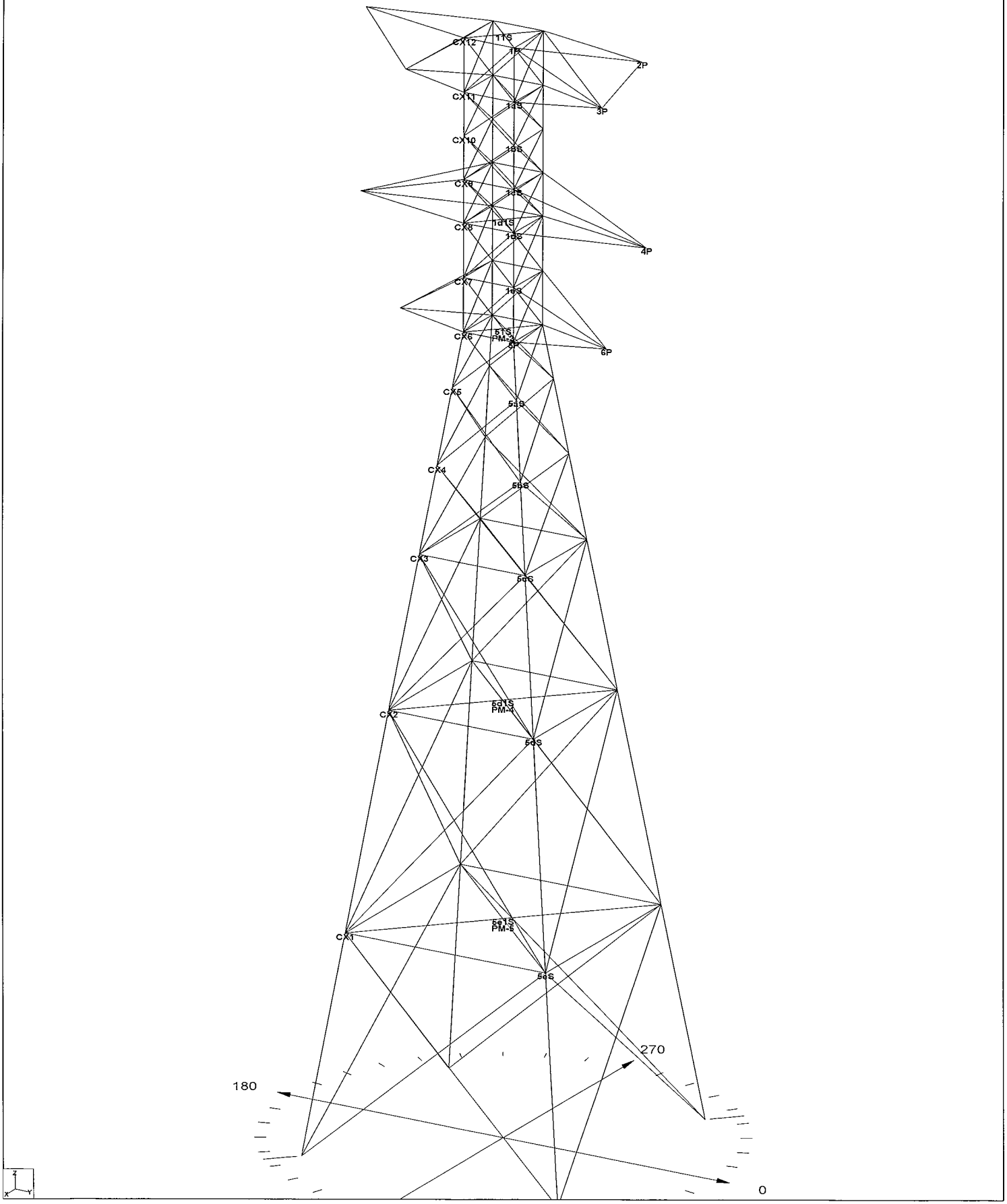

Paul J. Ford and Company. Project: "37519-3029.001.6125"
Tower Version 16.01, 2:05:58 PM Friday, November 15, 2019
Undeformed geometry displayed

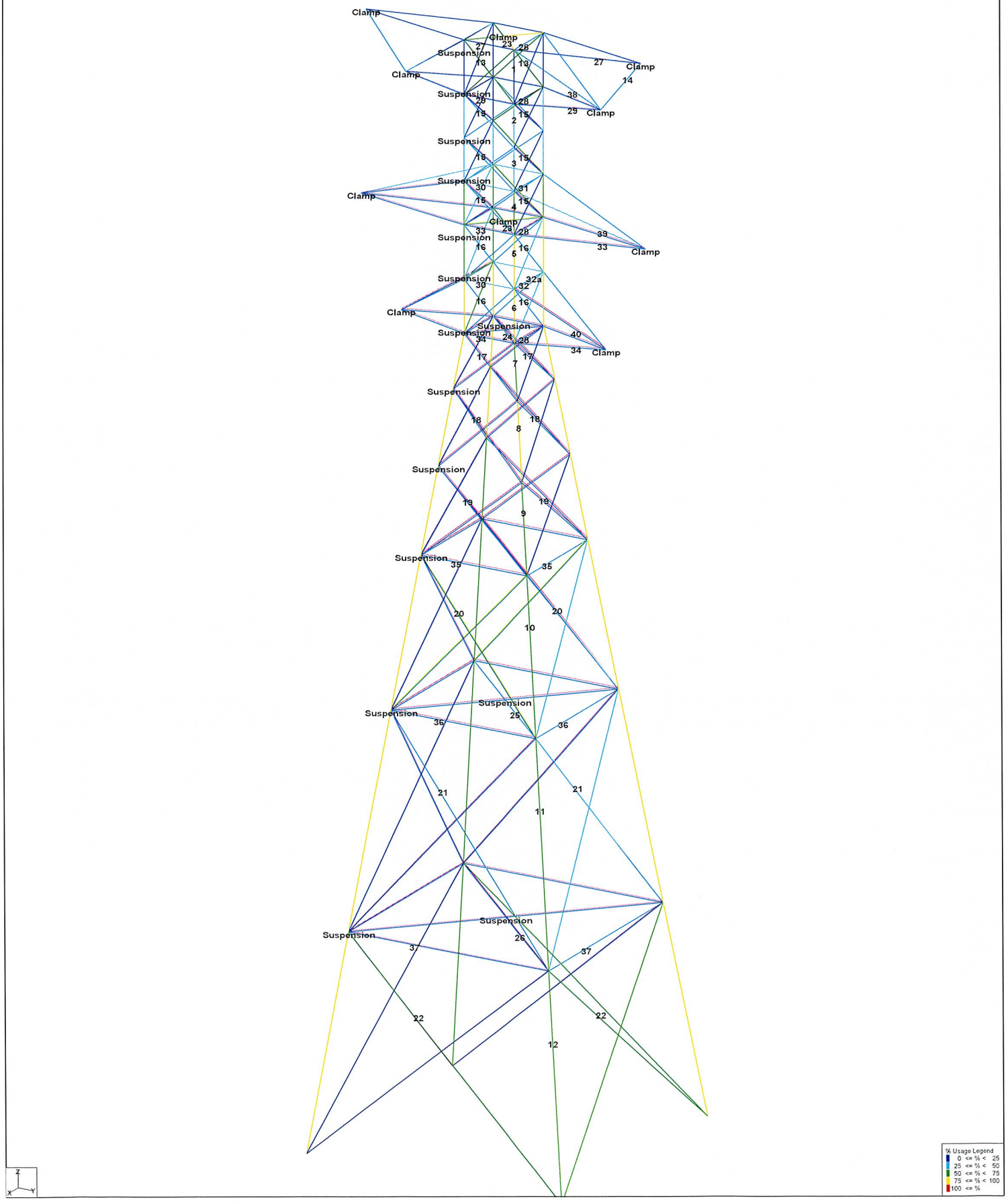

Project Name : Tower 1321
Project Notes: AT&T#CT2043 - STRATFORD NU - 841299
Project File : G:\Transmission\Eversource\2019\375_Crown Castle\37519-3029_Tower 1321_841299_AT&T CT2043\37519-3029.001.6000_SA_1773682\Rev 1\Engineering Docs\PLS-Tower\37519-3029.001.6125.tow
Date run : 2:05:22 PM Friday, November 15, 2019
by : Tower Version 16.01
Licensed to : Paul J. Ford and Company

Successfully performed nonlinear analysis

The following members have the same origin joint label '1eS' and end joint label '1eY'
Member label '55P', member number 113 ??
Member label 'g68P', member number 115 ??
The following members have the same origin joint label '1eX' and end joint label '1eXY'
Member label '55X', member number 114 ??
Member label 'g68X', member number 116 ??
The model has 2 warnings. ??

Member check option: ASCE 10
Connection rupture check: ASCE 10
Crossing diagonal check: ASCE 10 [Alternate Unsupported RLOUT = 1]
Included angle check: None
Climbing load check: None
Redundant members checked with: Actual Force

Loads from file: G:\Transmission\Eversource\2019\375_Crown Castle\37519-3029_Tower 1321_841299_AT&T CT2043\37519-3029.001.6000_SA_1773682\Rev 1\Engineering Docs\PLS-Tower\37519-3029.001.6125.lca

*** Analysis Results:

Maximum element usage is 93.36% for Angle "6Y" in load case "250C: Extreme Wind (Trans.)"
Maximum insulator usage is 53.63% for Suspension "PM-3" in load case "250C: Extreme Wind (Trans.)"

Foundation Design Forces For All Load Cases:

Note: loads are factored.

Load Case	Foundation Description	Axial Force (kips)	Shear Force (kips)	Bending Moment (ft-k)	Foundation Usage %
250B: NESC Heavy	0P	-17.14	4.78	0.00	0.00
250B: NESC Heavy	0X	61.99	12.28	0.00	0.00
250B: NESC Heavy	0XY	48.77	9.71	0.00	0.00
250B: NESC Heavy	0Y	-42.33	12.32	0.00	0.00
250C: Extreme Wind (Trans.)	0P	-73.41	21.43	0.00	0.00
250C: Extreme Wind (Trans.)	0X	101.37	20.12	0.00	0.00
250C: Extreme Wind (Trans.)	0XY	89.67	17.84	0.00	0.00

250C: Extreme Wind (Trans.)	0Y	-90.51	25.05	0.00	0.00					

Summary of Joint Support Reactions For All Load Cases:

Load Case	Joint Label	Long. Force (kips)	Tran. Force (kips)	Vert. Force (kips)	Shear Force (kips)	Tran. Moment (ft-k)	Long. Moment (ft-k)	Bending Moment (ft-k)	Vert. Moment (ft-k)	Found. Usage %
250B: NESC Heavy	0P	3.72	3.00	17.14	4.78	0.00	0.00	0.00	0.00	0.00
250B: NESC Heavy	0X	-8.51	8.86	-61.99	12.28	0.00	0.00	0.00	0.00	0.00
250B: NESC Heavy	0XY	6.71	7.02	-48.77	9.71	0.00	0.00	0.00	0.00	0.00
250B: NESC Heavy	0Y	-7.94	9.42	42.33	12.32	0.00	0.00	0.00	0.00	0.00
250C: Extreme Wind (Trans.)	0P	14.48	15.80	73.41	21.43	0.00	0.00	0.00	0.00	0.00
250C: Extreme Wind (Trans.)	0X	-14.00	14.45	-101.37	20.12	0.00	0.00	0.00	0.00	0.00
250C: Extreme Wind (Trans.)	0XY	12.38	12.85	-89.67	17.84	0.00	0.00	0.00	0.00	0.00
250C: Extreme Wind (Trans.)	0Y	-17.37	18.05	90.51	25.05	0.00	0.00	0.00	0.00	0.00

Summary of Joint Support Reactions For All Load Cases in Direction of Leg:

Load Case	Support Joint	Origin Joint	Member	Leg Force In Leg Dir. (kips)	Residual Shear Perpendicular To Leg (kips)	Residual Shear Horizontal To Leg - Res. (kips)	Residual Shear Horizontal To Leg - Long. (kips)	Residual Shear Horizontal To Leg - Tran. (kips)	Total Long. Force (kips)	Total Tran. Force (kips)	Total Vert. Force (kips)
250B: NESC Heavy	0P	5eS	12P	-17.738	1.460	1.485	-1.347	-0.625	3.72	3.00	17.14
250B: NESC Heavy	0X	5eX	12X	63.198	0.279	0.280	-0.080	-0.269	-8.51	8.86	-61.99
250B: NESC Heavy	0XY	5eXY	12XY	49.724	0.264	0.266	0.044	-0.262	6.71	7.02	-48.77
250B: NESC Heavy	0Y	5eY	12Y	-43.900	4.051	4.123	2.078	-3.560	-7.94	9.42	42.33
250C: Extreme Wind (Trans.)	0P	5eS	12P	-76.156	6.959	7.089	-4.307	-5.630	14.48	15.80	73.41
250C: Extreme Wind (Trans.)	0X	5eX	12X	103.347	0.409	0.412	-0.038	-0.410	-14.00	14.45	-101.37
250C: Extreme Wind (Trans.)	0XY	5eXY	12XY	91.424	0.426	0.429	0.037	-0.427	12.38	12.85	-89.67
250C: Extreme Wind (Trans.)	0Y	5eY	12Y	-93.633	7.199	7.336	4.836	-5.516	-17.37	18.05	90.51

Overturning Moment Summary For All Load Cases:

Load Case	Transverse Moment (ft-k)	Longitudinal Moment (ft-k)	Torsional Moment (ft-k)	Resultant Moment (ft-k)	Transverse Force (kips)	Longitudinal Force (kips)	Vertical Force (kips)
250B: NESC Heavy	-2170.505	-489.751	-27.552	2225.072	-28.296	6.016	51.288
250C: Extreme Wind (Trans.)	-4525.636	-367.193	8.010	4540.508	-61.149	4.517	27.121

Sections Information:

Section Label	Top Z (ft)	Bottom Z (ft)	Joint Count	Member Count	Tran. Face Top Width (ft)	Tran. Face Bot Width (ft)	Tran. Face Gross Area (ft^2)	Long. Face Top Width (ft)	Long. Face Bot Width (ft)	Long. Face Gross Area (ft^2)
Cage	101.000	74.000	31	110	5.00	5.00	135.000	5.00	5.00	135.000
TXarm	101.000	96.000	12	14	5.00	5.00	25.000	27.50	19.50	117.500
MXarm	88.000	84.000	10	8	5.00	5.00	20.000	5.00	28.50	67.000
BXarm	79.000	74.000	10	8	5.00	5.00	25.000	5.00	20.50	63.750
Std Body	74.000	20.000	26	80	5.00	19.96	673.905	5.00	19.96	673.905
20LE	20.000	0.000	8	12	19.96	25.50	454.595	19.96	25.50	454.595

*** Overall summary for all load cases - Usage = Maximum Stress / Allowable Stress
Printed capacities do not include the strength factor entered for each load case.
The Group Summary reports on the member and load case that resulted in maximum usage
which may not necessarily be the same as that which produces maximum force.

Group Summary (Compression Portion):

Group Label	Group Desc.	Angle Type	Angle Size	Steel Strength (ksi)	Max Usage %	Usage Control	Max Use In Comp. %	Comp. Control Member	Comp. Force (kips)	Comp. Control Load Case	L/r Capacity (kips)	Comp. Connect. Shear Capacity (kips)	Comp. Connect. Bearing Capacity (kips)	RLX Comp. (ft)	RLY Comp. (ft)	RLZ Comp. (ft)	L/r Comp. (ft)	KL/r Comp. (ft)	Length Comp. (ft)	Curve No.	Size No.	Of Bolts
1	LEG-H	SAE	5X5X0.3125	33.0	10.25	Tens	9.34	1XY	-8.362	250C: Ex	89.489	0.000	0.000	1.000	1.000	1.000	60.36	60.36	5.000	1	0	
2	LEG-H	SAE	5X5X0.3125	33.0	32.75	Tens	25.08	2X	-23.394	250C: Ex	93.269	0.000	0.000	1.000	1.000	1.000	48.29	48.29	4.000	1	0	
3	LEG-H	SAE	5X5X0.3125	33.0	49.54	Tens	41.48	3X	-38.687	250C: Ex	93.269	0.000	0.000	1.000	1.000	1.000	48.29	48.29	4.000	1	0	
4	LEG-H	SAE	5X5X0.3125	33.0	72.87	Tens	55.42	4X	-51.687	250C: Ex	93.269	0.000	0.000									

```
1.000 1.000 1.000  48.29  48.29  4.000     1     0
     5        LEG-H   SAE     5X5X0.3125     33.0 88.85  Tens 69.56      5X  -62.249250C: Ex   89.489    0.000    0.000
1.000 1.000 1.000  60.36  60.36  5.000     1     0
     6        LEG-H   SAE     5X5X0.3125     33.0 93.36  Tens 82.61      6X  -73.928250C: Ex   89.489  124.400  210.937
1.000 1.000 1.000  60.36  60.36  5.000     1    10
     7      LEG-F/G   SAE     6X6X0.3125     33.0 90.29  Comp 90.29      7X  -88.455250C: Ex   97.972  124.400  210.937
1.000 1.000 1.000  50.95  50.95  5.095     1    10
     8      LEG-F/G   SAE     6X6X0.3125     33.0 90.75  Comp 90.75      8X  -92.063250C: Ex  101.451  124.400  210.937
0.500 0.500 0.500  35.67  35.67  7.133     1    10
     9      LEG-D/E   SAE      6X6X0.375     33.0 79.32  Tens 77.53      9X  -89.824250C: Ex  115.854    0.000    0.000
1.000 1.000 1.000  82.21  82.21  8.152     1     0
    10      LEG-D/E   SAE      6X6X0.375     33.0 75.88  Tens 75.31     10X  -92.193250C: Ex  122.423  149.280  303.750
0.500 0.500 0.500  71.93  71.93 14.266     1    12
    11      LEG-A/C   SAE      6X6X0.375     33.0 77.85  Comp 77.85     11X  -96.887250C: Ex  124.456  149.280  303.750
0.333 0.333 0.333  68.44  68.44 20.380     1    12
    12        LEG-S   SAE      6X6X0.375     33.0 82.68  Comp 82.68     12X -102.906250C: Ex  124.456  149.280  303.750
0.333 0.333 0.333  68.44  68.44 20.380     1    12
    13    VBR-52/53   SAU   2.5X2X0.1875     33.0 59.88  Comp 59.88     13X  -10.469250C: Ex   17.484   24.880   25.312
0.500 0.750 0.500 106.07 109.55  7.071     2     2
    14       VBR-69   SAU   2.5X2X0.1875     33.0 26.35  Comp 26.35     15P   -1.887250B: NE    7.160   12.440   12.656
1.000 1.000 1.000 179.95 179.95  6.403     4     1
    15    VBR-50/51   SAU     2.5X2X0.25     33.0 50.79  Tens 50.02    16XY  -12.147250C: Ex   24.281   24.880   33.750
0.500 0.750 0.500  97.34 103.01  6.403     2     2
    16    VBR-35/36   SAE   2.5X2.5X0.25     33.0 55.26 Cross 55.26    25XY  -13.403250C: Ex   24.256   37.320   50.625
0.500 1.000 0.500 110.34 115.17  7.071     3     3
    17       VBR-16   SAE 2.5X2.5X0.3125     33.0 21.29  Comp 21.29    27XY   -5.297250B: NE   31.823   24.880   42.187
0.561 0.561 0.561 104.70 108.53  7.608     2     2
    18    VBR-15/55   SAE   2.5X2.5X0.25     33.0 16.35  Tens 12.13    28XY   -2.230250B: NE   18.390   24.880   33.750
0.566 0.566 0.566 141.07 136.09 10.200     5     2
    19    VBR-14/54   SAE   2.5X2.5X0.25     33.0 23.18  Comp 23.18    31XY   -3.171250B: NE   13.678   24.880   33.750
0.559 0.559 0.559 169.56 157.80 12.418     5     2
    20        VBR-9   SAU     2.5X2X0.25     33.0 61.58  Comp 61.58    32XY   -2.362250B: NE    3.836   24.880   33.750
0.580 1.000 0.580 382.19 281.25 18.855     6     2
    21        VBR-1   SAU     2.5X2X0.25     33.0 45.37  Comp 45.37     34P   -0.970250B: NE    2.137   24.880   33.750
0.420 1.000 0.420 537.50 376.76 26.517     6     2
    22       VBR-93   SAU     2.5X2X0.25     33.0 63.58  Tens  0.00     37Y    0.000            0.799   12.440   16.875
0.440 1.000 0.440 616.27 616.27 30.403     4     1
    23    HBR-40/41   SAE   2.5X2.5X0.25     36.0 81.46  Tens 56.48     40X   -9.213250C: Ex   28.492   24.880   16.312
1.000 1.000 1.000  86.41 103.20  3.536     3     1
    24    HBR-20/21   SAE 2.5X2.5X0.1875     33.0 18.72  Comp 18.72    41XY   -3.874250C: Ex   20.689   49.760   25.312
1.000 1.000 1.000  85.71 102.85  3.536     3     2
    25         MOD?   SAE      4X4X0.375     33.0 11.68  Comp 11.68    42XY   -3.967250C: Ex   33.956   49.760   50.625
1.000 1.000 1.000 155.26 155.26 10.196     4     2
    26         MOD?   SAE      5X5X0.375     33.0 13.04  Comp 13.04     43X   -4.604250C: Ex   35.306   49.760   50.625
1.000 1.000 1.000 171.07 171.07 14.113     4     2
    27       HRZ-75   SAE       3X3X0.25     33.0 16.17  Tens  1.37     44Y   -0.299250C: Ex   21.752   24.880   33.750
1.000 0.500 0.500 148.70 137.65 11.524     6     2
    28    HRZ-28/46   SAU     3X2.5X0.25     33.0 28.95  Comp 28.95     46P   -7.203250C: Ex   26.226   24.880   33.750
```

```
1.000 1.000 1.000 113.64 116.82  5.000     3     2
    29       HRZ-47   SAE       3X3X0.25     33.0 18.63  Comp 18.63     50Y   -5.795250B: NE   31.104   37.320   50.625
1.000 0.500 0.500  98.95 109.48  7.669     3     3
    30       HRZ-64   Bar          2x1/4     33.0 39.64  Tens  0.00     53Y    0.000           14.788   24.880   33.750
1.000 1.000 1.000  60.00  60.00  5.000     1     2
    31       HRZ-67   SAU   2.5X2X0.1875     33.0 38.56  Tens 33.09     54P   -3.886250C: Ex   11.742   12.440   12.656
1.000 1.000 1.000 140.52 140.52  5.000     4     1
    32       HRZ-68   SAU   2.5X2X0.1875     33.0 57.11  Tens 46.33     55P   -5.439250C: Ex   11.742   24.880   12.656
1.000 1.000 1.000 140.52 140.52  5.000     4     1
   32a      HRZ-MOD   SAE   2.5X2.5X0.25     36.0 61.64  Tens 48.99    g68P   -7.991250C: Ex   22.724   24.880   16.312
1.000 1.000 1.000 122.20 122.20  5.000     4     1
    33       HRZ-37   SAU       4X3X0.25     33.0 22.52  Comp 22.52     56Y   -7.662250B: NE   34.023   49.760   67.500
1.000 0.500 0.500 112.62 116.31 12.013     3     4
    34       HRZ-17   SAE       3X3X0.25     33.0 18.29  Comp 18.29     59P   -4.551250B: NE   30.742   24.880   33.750
1.000 1.000 1.000 101.35 110.68  5.000     3     2
    35       HRZ-12   SAE   2.5X2.5X0.25     33.0 41.01  Comp 41.01     61P   -6.434250C: Ex   15.686   24.880   33.750
1.000 0.500 0.500 164.48 147.36 10.541     6     2
    36        HRZ-5   SAU       4X3X0.25     33.0 36.42  Comp 36.42     63P   -9.061250C: Ex   28.880   24.880   33.750
1.000 0.500 0.500 135.18 129.33 14.419     6     2
    37 HRZ-80/81/82   SAE       4X4X0.25     33.0 39.37  Comp 39.37     65P   -8.124250C: Ex   20.635   24.880   33.750
1.000 0.500 0.500 191.61 164.04 19.959     6     2
    38    STR-70/71   SAU   2.5X2X0.1875     33.0 27.47  Tens  0.00     66Y    0.000            4.594   24.880   25.312
1.000 1.000 1.000 257.28 224.65  9.155     5     2
    39    STR-62/63   SAU     2.5X2X0.25     33.0 29.96  Tens  0.00     67Y    0.000            3.334   24.880   33.750
1.000 1.000 1.000 358.34 301.66 12.661     5     2
    40    STR-29/30   SAU   2.5X2X0.1875     33.0 33.40  Tens  0.00     68Y    0.000            4.262   24.880   25.312
1.000 1.000 1.000 268.55 233.23  9.556     5     2
```

Group Summary (Tension Portion):

```
 Group        Group Angle          Angle    Steel   Max Usage   Max Tension Tension Tension      Net  Tension  Tension
Tension Length   No.   No.     Hole
 Label        Desc.  Type           Size Strength Usage Cont-   Use Control   Force Control  Section Connect. Connect.
Connect.  Tens.    Of    Of Diameter
                                                        rol    In  Member            Load Capacity    Shear  Bearing
Rupture Member Bolts Holes
                                                             Tens.                   Case          Capacity Capacity
Capacity        Tens.
                                          (ksi)     %           %          (kips)           (kips)   (kips)   (kips)
(kips)   (ft)                 (in)
-------------------------------------------------------------------------------------------------------------------------------
-----------------------------------
     1        LEG-H   SAE     5X5X0.3125     33.0 10.25  Tens 10.25      1P   6.550250C: Ex   63.896    0.000    0.000
0.000  5.000     0 4.000    0.875
     2        LEG-H   SAE     5X5X0.3125     33.0 32.75  Tens 32.75      2Y  20.927250C: Ex   63.896    0.000    0.000
0.000  4.000     0 4.000    0.875
     3        LEG-H   SAE     5X5X0.3125     33.0 49.54  Tens 49.54      3Y  34.773250C: Ex   70.195    0.000    0.000
```

```
0.000  4.000     0 3.302    0.875
     4        LEG-H   SAE     5X5X0.3125     33.0 72.87  Tens 72.87      4Y  46.563250C: Ex   63.896    0.000    0.000
0.000  4.000     0 4.000    0.875
     5        LEG-H   SAE     5X5X0.3125     33.0 88.85  Tens 88.85      5Y  56.773250C: Ex   63.896    0.000    0.000
0.000  5.000     0 4.000    0.875
     6        LEG-H   SAE     5X5X0.3125     33.0 93.36  Tens 93.36      6Y  65.073250C: Ex   69.698  124.400  210.937
0.000  5.000    10 3.357    0.875
     7      LEG-F/G   SAE     6X6X0.3125     33.0 90.29  Comp 78.78      7Y  78.109250C: Ex   99.155  124.400  210.937
0.000  5.095    10 2.360    0.875
     8      LEG-F/G   SAE     6X6X0.3125     33.0 90.75  Comp 89.88      8Y  81.033250C: Ex   90.158  124.400  210.937
0.000  7.133    10 3.357    0.875
     9      LEG-D/E   SAE      6X6X0.375     33.0 79.32  Tens 79.32      9Y  79.965250C: Ex  100.816    0.000    0.000
0.000  8.152     0 3.977    0.875
    10      LEG-D/E   SAE      6X6X0.375     33.0 75.88  Tens 75.88     10Y  76.503250C: Ex  100.816  149.280  303.750
0.000 14.266    12 3.977    0.875
    11      LEG-A/C   SAE      6X6X0.375     33.0 77.85  Comp 76.30     11Y  76.923250C: Ex  100.816  149.280  303.750
0.000 20.380    12 3.977    0.875
    12        LEG-S   SAE      6X6X0.375     33.0 82.68  Comp 77.00     12Y  82.799250C: Ex  107.530  149.280  303.750
0.000 20.380    12 3.357    0.875
    13    VBR-52/53   SAU   2.5X2X0.1875     33.0 59.88  Comp 53.55     13Y  10.273250C: Ex   19.184   24.880   25.312
21.094  7.071     2 1.000    0.875
    14       VBR-69   SAU   2.5X2X0.1875     33.0 26.35  Comp  0.00     15X   0.000           19.184   12.440   12.656
8.895  6.403     1 1.000    0.875
    15    VBR-50/51   SAU     2.5X2X0.25     33.0 50.79  Tens 50.79     20Y  12.637250C: Ex   24.985   24.880   33.750
26.766  6.403     2 1.000    0.875
    16    VBR-35/36   SAE   2.5X2.5X0.25     33.0 55.26 Cross 36.78     25Y  10.609250C: Ex   28.846   37.320   50.625
42.187  7.071     3 1.000    0.875
    17       VBR-16   SAE 2.5X2.5X0.3125     33.0 21.29  Comp 10.58     27P   2.632250C: Ex   35.241   24.880   42.187
35.156  7.608     2 1.000    0.875
    18    VBR-15/55   SAE   2.5X2.5X0.25     33.0 16.35  Tens 16.35     29X   4.067250B: NE   28.846   24.880   33.750
28.125 10.200     2 1.000    0.875
    19    VBR-14/54   SAE   2.5X2.5X0.25     33.0 23.18  Comp  7.43     30Y   1.848250B: NE   28.846   24.880   33.750
28.125 12.418     2 1.000    0.875
    20        VBR-9   SAU     2.5X2X0.25     33.0 61.58  Comp 30.61     33P   7.615250C: Ex   24.985   24.880   33.750
28.125 18.855     2 1.000    0.875
    21        VBR-1   SAU     2.5X2X0.25     33.0 45.37  Comp 39.43     35P   8.668250C: Ex   24.985   24.880   33.750
21.984 26.517     2 1.000    0.875
    22       VBR-93   SAU     2.5X2X0.25     33.0 63.58  Tens 63.58     36P   7.541250C: Ex   24.985   12.440   16.875
11.859 30.403     1 1.000    0.875
    23    HBR-40/41   SAE   2.5X2.5X0.25     36.0 81.46  Tens 81.46     40P   9.913250C: Ex   31.468   24.880   16.312
12.169  3.536     1 1.000    0.875
    24    HBR-20/21   SAE 2.5X2.5X0.1875     33.0 18.72  Comp 15.61     41Y   3.422250C: Ex   21.917   49.760   25.312
0.000  3.536     2 1.000    0.875
    25         MOD?   SAE      4X4X0.375     33.0 11.68  Comp  0.04     42Y   0.018250B: NE   75.197   49.760   50.625
0.000 10.196     2 1.000    0.875
    26         MOD?   SAE      5X5X0.375     33.0 13.04  Comp  0.00     43Y   0.000           97.472   49.760   50.625
0.000 14.113     2 1.000    0.875
    27       HRZ-75   SAE       3X3X0.25     33.0 16.17  Tens 16.17     45Y   4.022250B: NE   36.271   24.880   33.750
```

```
25.078  5.000     2 1.000    0.875
    28    HRZ-28/46   SAU     3X2.5X0.25     33.0 28.95  Comp 23.68     46X   5.891250C: Ex   32.410   24.880   33.750
29.412  5.000     2 1.000    0.875
    29       HRZ-47   SAE       3X3X0.25     33.0 18.63  Comp  0.73    50XY   0.263250C: Ex   36.271   37.320   50.625
42.187  7.669     3 1.000    0.875
    30       HRZ-64   Bar          2x1/4     33.0 39.64  Tens 39.64     52Y   3.679250B: NE    9.281   24.880   33.750
28.125  5.000     2 1.000    0.875
    31       HRZ-67   SAU   2.5X2X0.1875     33.0 38.56  Tens 38.56     54X   3.430250C: Ex   19.184   12.440   12.656
8.895  5.000     1 1.000    0.875
    32       HRZ-68   SAU   2.5X2X0.1875     33.0 57.11  Tens 57.11     55X   5.562250C: Ex   19.184   24.880   12.656
9.738  5.000     1 1.000    0.875
   32a      HRZ-MOD   SAE   2.5X2.5X0.25     36.0 61.64  Tens 61.64    g68X   8.171250C: Ex   31.468   24.880   16.312
13.256  5.000     1 1.000    0.875
    33       HRZ-37   SAU       4X3X0.25     33.0 22.52  Comp  1.86    56XY   0.813250C: Ex   43.696   49.760   67.500
56.250 12.013     4 1.000    0.875
    34       HRZ-17   SAE       3X3X0.25     33.0 18.29  Comp  5.41    58XY   1.963250C: Ex   36.271   37.320   50.625
42.187  8.143     3 1.000    0.875
    35       HRZ-12   SAE   2.5X2.5X0.25     33.0 41.01  Comp  7.78     60P   1.711250B: NE   28.846   24.880   33.750
21.984 10.541     2 1.000    0.875
    36        HRZ-5   SAU       4X3X0.25     33.0 36.42  Comp  9.75     62P   2.426250B: NE   36.271   24.880   33.750
25.078 14.419     2 1.000    0.875
    37 HRZ-80/81/82   SAE       4X4X0.25     33.0 39.37  Comp 12.47     65X   3.101250C: Ex   44.624   24.880   33.750
28.125 19.959     2 2.000    0.875
    38    STR-70/71   SAU   2.5X2X0.1875     33.0 27.47  Tens 27.47    66XY   4.955250B: NE   19.184   24.880   25.312
18.035  9.155     2 1.000    0.875
    39    STR-62/63   SAU     2.5X2X0.25     33.0 29.96  Tens 29.96    67XY   6.587250B: NE   24.985   24.880   33.750
21.984 12.661     2 1.000    0.875
    40    STR-29/30   SAU   2.5X2X0.1875     33.0 33.40  Tens 33.40     68Y   5.507250B: NE   19.184   24.880   25.312
16.488  9.556     2 1.000    0.875
```

*** Maximum Stress Summary for Each Load Case

Summary of Maximum Usages by Load Case:

Load Case	Maximum Usage %	Element Label	Element Type
250B: NESC Heavy	61.58	32XY	Angle
250C: Extreme Wind (Trans.)	93.36	6Y	Angle

Summary of Insulator Usages:

Insulator	Insulator Maximum	Load Case	Weight

Label	Type	Usage %		(lbs)
11	Clamp	9.95	250B: NESC Heavy	0.0
21	Clamp	9.76	250B: NESC Heavy	0.0
31	Clamp	16.45	250B: NESC Heavy	0.0
41	Clamp	17.07	250B: NESC Heavy	0.0
32	Clamp	17.68	250B: NESC Heavy	0.0
42	Clamp	16.70	250B: NESC Heavy	0.0
33	Clamp	18.42	250B: NESC Heavy	0.0
43	Clamp	17.91	250B: NESC Heavy	0.0
PM-1	Clamp	44.91	250C: Extreme Wind (Trans.)	0.0
PM-2	Clamp	35.88	250C: Extreme Wind (Trans.)	0.0
CX1	Suspension	2.56	250C: Extreme Wind (Trans.)	0.0
CX2	Suspension	1.45	250C: Extreme Wind (Trans.)	0.0
CX3	Suspension	0.94	250C: Extreme Wind (Trans.)	0.0
CX4	Suspension	0.64	250C: Extreme Wind (Trans.)	0.0
CX5	Suspension	0.51	250C: Extreme Wind (Trans.)	0.0
CX6	Suspension	0.42	250C: Extreme Wind (Trans.)	0.0
CX7	Suspension	0.42	250C: Extreme Wind (Trans.)	0.0
CX8	Suspension	0.38	250C: Extreme Wind (Trans.)	0.0
CX9	Suspension	0.34	250C: Extreme Wind (Trans.)	0.0
CX10	Suspension	0.34	250C: Extreme Wind (Trans.)	0.0
CX11	Suspension	0.38	250C: Extreme Wind (Trans.)	0.0
CX12	Suspension	0.21	250C: Extreme Wind (Trans.)	0.0
PM-3	Suspension	53.63	250C: Extreme Wind (Trans.)	0.0
PM-4	Suspension	11.32	250C: Extreme Wind (Trans.)	0.0
PM-5	Suspension	10.03	250C: Extreme Wind (Trans.)	0.0

*** Weight of structure (lbs):
Weight of Angles*Section DLF: 16645.4
Total: 16645.4

*** End of Report

```
*****************************************************************************
*                                                                           *
* TOWER - Analysis and Design -  Copyright Power Line Systems 1986-2019     *
*                                                                           *
*****************************************************************************
```

Project Name : Tower 1321
Project Notes: AT&T#CT2043 - STRATFORD NU - 841299
Project File : G:\Transmission\Eversource\2019\375_Crown Castle\37519-3029_Tower 1321_841299_AT&T CT2043\37519-3029.001.6000_SA_1773682\Rev 1\Engineering Docs\PLS-Tower\37519-3029.001.6125.tow
Date run : 2:05:21 PM Friday, November 15, 2019
by : Tower Version 16.01
Licensed to : Paul J. Ford and Company

Successfully performed nonlinear analysis

The following members have the same origin joint label '1eS' and end joint label '1eY'
Member label '55P', member number 113 ??
Member label 'g68P', member number 115 ??
The following members have the same origin joint label '1eX' and end joint label '1eXY'
Member label '55X', member number 114 ??
Member label 'g68X', member number 116 ??
The model has 2 warnings. ??

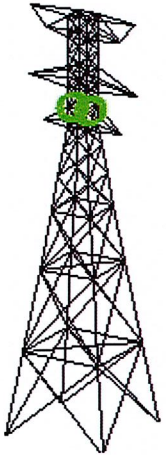

Nonlinear convergence parameters: Use Standard Parameters
Tension only member maximum compression load as a percent of compression capacity: 75%
Member check option: ASCE 10
Connection rupture check: ASCE 10
Crossing diagonal check: ASCE 10 [Alternate Unsupported RLOUT = 1]
Included angle check: None

Climbing load check: None
Redundant members checked with: Actual Force

Joints Geometry:

Joint Label	Symmetry Code	X Coord. (ft)	Y Coord. (ft)	Z Coord. (ft)	X Disp. Rest.	Y Disp. Rest.	Z Disp. Rest.	X Rot. Rest.	Y Rot. Rest.	Z Rot. Rest.
1P	XY-Symmetry	2.5	2.5	101	Free	Free	Free	Free	Free	Free
2P	X-Symmetry	0	13.75	101	Free	Free	Free	Free	Free	Free
3P	X-Symmetry	0	9.75	96	Free	Free	Free	Free	Free	Free
4P	X-Symmetry	0	14.25	84	Free	Free	Free	Free	Free	Free
5P	XY-Symmetry	2.5	2.5	74	Free	Free	Free	Free	Free	Free
6P	X-Symmetry	0	10.25	74	Free	Free	Free	Free	Free	Free
0P	XY-Symmetry	12.75	12.75	0	Fixed	Fixed	Fixed	Free	Free	Free
1X	X-GenXY	2.5	-2.5	101	Free	Free	Free	Free	Free	Free
1XY	XY-GenXY	-2.5	-2.5	101	Free	Free	Free	Free	Free	Free
1Y	Y-GenXY	-2.5	2.5	101	Free	Free	Free	Free	Free	Free
2X	X-Gen	0	-13.75	101	Free	Free	Free	Free	Free	Free
3X	X-Gen	0	-9.75	96	Free	Free	Free	Free	Free	Free
4X	X-Gen	0	-14.25	84	Free	Free	Free	Free	Free	Free
5X	X-GenXY	2.5	-2.5	74	Free	Free	Free	Free	Free	Free
5XY	XY-GenXY	-2.5	-2.5	74	Free	Free	Free	Free	Free	Free
5Y	Y-GenXY	-2.5	2.5	74	Free	Free	Free	Free	Free	Free
6X	X-Gen	0	-10.25	74	Free	Free	Free	Free	Free	Free
0X	X-GenXY	12.75	-12.75	0	Fixed	Fixed	Fixed	Free	Free	Free
0XY	XY-GenXY	-12.75	-12.75	0	Fixed	Fixed	Fixed	Free	Free	Free
0Y	Y-GenXY	-12.75	12.75	0	Fixed	Fixed	Fixed	Free	Free	Free

Secondary Joints:

Joint Label	Symmetry Code	Origin Joint	End Joint	Fraction	Elevation (ft)	X Disp. Rest.	Y Disp. Rest.	Z Disp. Rest.	X Rot. Rest.	Y Rot. Rest.	Z Rot. Rest.
1aS	XY-Symmetry	1P	5P	0	96	Free	Free	Free	Free	Free	Free
1bS	XY-Symmetry	1P	5P	0	92	Free	Free	Free	Free	Free	Free
1cS	XY-Symmetry	1P	5P	0	88	Free	Free	Free	Free	Free	Free
1dS	XY-Symmetry	1P	5P	0	84	Free	Free	Free	Free	Free	Free
1eS	XY-Symmetry	1P	5P	0	79	Free	Free	Free	Free	Free	Free
11S	None	1XY	1P	0.5	0	Free	Free	Free	Free	Free	Free
1d1S	None	1dX	1dY	0.5	0	Free	Free	Free	Free	Free	Free
5aS	XY-Symmetry	5P	0P	0	69	Free	Free	Free	Free	Free	Free
5bS	XY-Symmetry	5P	0P	0	62	Free	Free	Free	Free	Free	Free
5cS	XY-Symmetry	5P	0P	0	54	Free	Free	Free	Free	Free	Free
5dS	XY-Symmetry	5P	0P	0	40	Free	Free	Free	Free	Free	Free
5eS	XY-Symmetry	5P	0P	0	20	Free	Free	Free	Free	Free	Free

51S	None	5X	5Y	0.5	0	Free	Free	Free	Free	Free	Free
5d1S	None	5dX	5dY	0.5	0	Free	Free	Free	Free	Free	Free
5e1S	None	5eX	5eY	0.5	0	Free	Free	Free	Free	Free	Free
1aX	X-GenXY	1P	5P	0	96	Free	Free	Free	Free	Free	Free
1aXY	XY-GenXY	1P	5P	0	96	Free	Free	Free	Free	Free	Free
1aY	Y-GenXY	1P	5P	0	96	Free	Free	Free	Free	Free	Free
1bX	X-GenXY	1P	5P	0	92	Free	Free	Free	Free	Free	Free
1bXY	XY-GenXY	1P	5P	0	92	Free	Free	Free	Free	Free	Free
1bY	Y-GenXY	1P	5P	0	92	Free	Free	Free	Free	Free	Free
1cX	X-GenXY	1P	5P	0	88	Free	Free	Free	Free	Free	Free
1cXY	XY-GenXY	1P	5P	0	88	Free	Free	Free	Free	Free	Free
1cY	Y-GenXY	1P	5P	0	88	Free	Free	Free	Free	Free	Free
1dX	X-GenXY	1P	5P	0	84	Free	Free	Free	Free	Free	Free
1dXY	XY-GenXY	1P	5P	0	84	Free	Free	Free	Free	Free	Free
1dY	Y-GenXY	1P	5P	0	84	Free	Free	Free	Free	Free	Free
1eX	X-GenXY	1P	5P	0	79	Free	Free	Free	Free	Free	Free
1eXY	XY-GenXY	1P	5P	0	79	Free	Free	Free	Free	Free	Free
1eY	Y-GenXY	1P	5P	0	79	Free	Free	Free	Free	Free	Free
5aX	X-GenXY	5P	0P	0	69	Free	Free	Free	Free	Free	Free
5aXY	XY-GenXY	5P	0P	0	69	Free	Free	Free	Free	Free	Free
5aY	Y-GenXY	5P	0P	0	69	Free	Free	Free	Free	Free	Free
5bX	X-GenXY	5P	0P	0	62	Free	Free	Free	Free	Free	Free
5bXY	XY-GenXY	5P	0P	0	62	Free	Free	Free	Free	Free	Free
5bY	Y-GenXY	5P	0P	0	62	Free	Free	Free	Free	Free	Free
5cX	X-GenXY	5P	0P	0	54	Free	Free	Free	Free	Free	Free
5cXY	XY-GenXY	5P	0P	0	54	Free	Free	Free	Free	Free	Free
5cY	Y-GenXY	5P	0P	0	54	Free	Free	Free	Free	Free	Free
5dX	X-GenXY	5P	0P	0	40	Free	Free	Free	Free	Free	Free
5dXY	XY-GenXY	5P	0P	0	40	Free	Free	Free	Free	Free	Free
5dY	Y-GenXY	5P	0P	0	40	Free	Free	Free	Free	Free	Free
5eX	X-GenXY	5P	0P	0	20	Free	Free	Free	Free	Free	Free
5eXY	XY-GenXY	5P	0P	0	20	Free	Free	Free	Free	Free	Free
5eY	Y-GenXY	5P	0P	0	20	Free	Free	Free	Free	Free	Free

The model contains 20 primary and 45 secondary joints for a total of 65 joints.

Steel Material Properties:

Steel Material Label	Modulus of Elasticity (ksi)	Yield Stress Fy (ksi)	Ultimate Stress Fu (ksi)	Member All. Stress Hyp. 1 (ksi)	Member All. Stress Hyp. 2 (ksi)	Member Rupture Hyp. 1 (ksi)	Member Rupture Hyp. 2 (ksi)	Member Bearing Hyp. 1 (ksi)	Member Bearing Hyp. 2 (ksi)
A7	2.9e+04	33	60	0	0	0	0	0	0
A36	2.9e+04	36	58	0	0	0	0	0	0

Bolt Properties:

Bolt Label	Bolt Diameter (in)	Hole Diameter (in)	Ultimate Shear Capacity (kips)	Default End Distance (in)	Default Bolt Spacing (in)	Shear Capacity Hyp. 1 (kips)	Shear Capacity Hyp. 2 (kips)
3/4 A325	0.75	0.875	24.88	0	0	0	0
3/4 A7	0.75	0.875	12.44	0	0	0	0

Number Bolts Used By Type:

Bolt Type	Number Bolts
3/4 A7	604
3/4 A325	36

Angle Properties:

Angle Type	Angle Size	Long Leg (in)	Short Leg (in)	Thick. (in)	Unit Weight (lbs/ft)	Gross Area (in^2)	w/t Ratio	Radius of Gyration Rx (in)	Radius of Gyration Ry (in)	Radius of Gyration Rz (in)	Angle Cross Section	Wind Width (in)	Short Edge Dist. (in)	Long Edge Dist. (in)	Optimize Section Cost Modulus Factor (in^3)
SAE	6X6X0.375	6	6	0.375	14.9	4.36	13.67	1.88	1.88	1.19	Single	6	3	0	1.0000 0
SAE	6X6X0.3125	6	6	0.3125	12.5	3.65	16.6	1.89	1.89	1.2	Single	6	3	0	1.0000 0
SAE	5X5X0.375	5	5	0.375	12.3	3.61	11	1.56	1.56	0.99	Single	5	2.5	0	1.0000 0
SAE	5X5X0.3125	5	5	0.3125	10.3	3.03	13.4	1.57	1.57	0.994	Single	5	2.5	0	1.0000 0
SAE	4X4X0.25	4	4	0.25	6.6	1.94	13.5	1.25	1.25	0.795	Single	4	2	0	1.0000 0
SAE	3X3X0.25	3	3	0.25	4.9	1.44	9.75	0.93	0.93	0.592	Single	3	1.5	0	1.0000 0
SAE	2.5X2.5X0.3125	2.5	2.5	0.3125	5	1.46	6	0.761	0.761	0.489	Single	2.5	1.25	0	1.0000 0
SAE	2.5X2.5X0.25	2.5	2.5	0.25	4.1	1.19	7.75	0.769	0.769	0.491	Single	2.5	1.25	0	1.0000 0
SAE	2.5X2.5X0.1875	2.5	2.5	0.1875	3.07	0.902	10.67	0.778	0.778	0.495	Single	2.5	1.25	0	1.0000 0
SAU	4X3X0.25	4	3	0.25	5.8	1.69	13.25	1.28	0.896	0.651	Single	4	1.5	0	

1.0000	0													
SAU	3X2.5X0.25	3	2.5	0.25	4.5	1.31	9.5	0.945	0.753	0.528	Single	3	1.25	0
1.0000	0													
SAU	2.5X2X0.25	2.5	2	0.25	3.62	1.06	7.75	0.784	0.592	0.424	Single	2.5	1	0
1.0000	0													
SAU	2.5X2X0.1875	2.5	2	0.1875	2.75	0.81	10.67	0.793	0.6	0.427	Single	2.5	1	0
1.0000	0													
Bar	2x1/4	2	0	0.25	1.7	0.5	8	1	1	1	Single	2	0	0
0.0000	0													
SAE	4X4X0.375	4	4	0.375	9.8	2.86	8.67	1.23	1.23	0.788	Single	4	0	0
1.0000	0													

Angle Groups:

Group Label	Group Description	Angle Type	Angle Size	Material Type	Element Type	Group Type	Optimize Group	Allow. Add. Angle Width For Optimize (in)
1	LEG-H	SAE	5X5X0.3125	A7	Beam	Leg	None	0.000
2	LEG-H	SAE	5X5X0.3125	A7	Beam	Leg	None	0.000
3	LEG-H	SAE	5X5X0.3125	A7	Beam	Leg	None	0.000
4	LEG-H	SAE	5X5X0.3125	A7	Beam	Leg	None	0.000
5	LEG-H	SAE	5X5X0.3125	A7	Beam	Leg	None	0.000
6	LEG-H	SAE	5X5X0.3125	A7	Beam	Leg	None	0.000
7	LEG-F/G	SAE	6X6X0.3125	A7	Beam	Leg	None	0.000
8	LEG-F/G	SAE	6X6X0.3125	A7	Beam	Leg	None	0.000
9	LEG-D/E	SAE	6X6X0.375	A7	Beam	Leg	None	0.000
10	LEG-D/E	SAE	6X6X0.375	A7	Beam	Leg	None	0.000
11	LEG-A/C	SAE	6X6X0.375	A7	Beam	Leg	None	0.000
12	LEG-S	SAE	6X6X0.375	A7	Beam	Leg	None	0.000
13	VBR-52/53	SAU	2.5X2X0.1875	A7	Truss	Crossing Diagonal	None	0.000
14	VBR-69	SAU	2.5X2X0.1875	A7	Truss	Other	None	0.000
15	VBR-50/51	SAU	2.5X2X0.25	A7	Truss	Crossing Diagonal	None	0.000
16	VBR-35/36	SAE	2.5X2.5X0.25	A7	Truss	Crossing Diagonal	None	0.000
17	VBR-16	SAE	2.5X2.5X0.3125	A7	Truss	Crossing Diagonal	None	0.000
18	VBR-15/55	SAE	2.5X2.5X0.25	A7	Truss	Crossing Diagonal	None	0.000
19	VBR-14/54	SAE	2.5X2.5X0.25	A7	Truss	Crossing Diagonal	None	0.000
20	VBR-9	SAU	2.5X2X0.25	A7	T-Only	Other	None	0.000
21	VBR-1	SAU	2.5X2X0.25	A7	T-Only	Other	None	0.000
22	VBR-93	SAU	2.5X2X0.25	A7	T-Only	Other	None	0.000
23	HBR-40/41	SAE	2.5X2.5X0.25	A36	Beam	Other	None	0.000
24	HBR-20/21	SAE	2.5X2.5X0.1875	A7	Beam	Other	None	0.000
25	MOD?	SAE	4X4X0.375	A7	Beam	Other	None	0.000
26	MOD?	SAE	5X5X0.375	A7	Beam	Other	None	0.000
27	HRZ-75	SAE	3X3X0.25	A7	Beam	Other	None	0.000
28	HRZ-28/46	SAU	3X2.5X0.25	A7	Truss	Other	None	0.000
29	HRZ-47	SAE	3X3X0.25	A7	Beam	Other	None	0.000

30	HRZ-64	Bar	2x1/4	A7	T-Only	Other	None	0.000
31	HRZ-67	SAU	2.5X2X0.1875	A7	Truss	Other	None	0.000
32	HRZ-68	SAU	2.5X2X0.1875	A7	Truss	Other	None	0.000
32a	HRZ-MOD	SAE	2.5X2.5X0.25	A36	Truss	Other	None	0.000
33	HRZ-37	SAU	4X3X0.25	A7	Beam	Other	None	0.000
34	HRZ-17	SAE	3X3X0.25	A7	Beam	Other	None	0.000
35	HRZ-12	SAE	2.5X2.5X0.25	A7	Truss	Other	None	0.000
36	HRZ-5	SAU	4X3X0.25	A7	Truss	Other	None	0.000
37	HRZ-80/81/82	SAE	4X4X0.25	A7	Truss	Other	None	0.000
38	STR-70/71	SAU	2.5X2X0.1875	A7	T-Only	Other	None	0.000
39	STR-62/63	SAU	2.5X2X0.25	A7	T-Only	Other	None	0.000
40	STR-29/30	SAU	2.5X2X0.1875	A7	T-Only	Other	None	0.000

Aggregate Angle Information:

Note: Estimate of surface area reported for painting purposes, not wind loading.

Angle Type	Angle Size	Material Type	Total Length (ft)	Total Surface Area (ft^2)	Total Weight (lbs)
SAE	5X5X0.3125	A7	108.00	180.00	1112.40
SAE	6X6X0.3125	A7	48.91	97.82	611.40
SAE	6X6X0.375	A7	252.71	505.43	3765.43
SAU	2.5X2X0.1875	A7	164.22	123.16	451.60
SAU	2.5X2X0.25	A7	810.51	607.89	2934.06
SAE	2.5X2.5X0.25	A7	336.24	280.20	1378.57
SAE	2.5X2.5X0.3125	A7	60.87	50.72	304.33
SAE	2.5X2.5X0.25	A36	38.28	31.90	156.97
SAE	2.5X2.5X0.1875	A7	14.14	11.79	43.42
SAE	4X4X0.375	A7	40.78	54.38	399.67
SAE	5X5X0.375	A7	56.45	94.09	694.38
SAE	3X3X0.25	A7	139.35	139.35	682.80
SAU	3X2.5X0.25	A7	40.00	36.67	180.00
Bar	2x1/4	A7	20.00	6.67	34.00
SAU	4X3X0.25	A7	115.73	135.02	671.22
SAE	4X4X0.25	A7	79.84	106.45	526.93

Sections:
The adjustment factors below only apply to dead load and wind areas that are calculated for members in the model.
They do not apply to equipment or to manually input dead load and drag areas.

Section Joint Dead Transverse Longitudinal Transverse Longitudinal Af Flat Ar Round Transverse Longitudinal SAPS Angle SAPS Round Force
Label Defining Load Drag x Area Drag x Area Area Factor Area Factor Factor Factor Drag x Area Drag x Area Drag x Area Drag x Area Solid
Section Adjust. Factor Factor (CD From (CD From For Face For Face Factor Factor

Factor	Factor Bottom	Face Factor	For Face	For Face	Code)	Code)	EIA Only	EIA Only	For All	For All
Cage	1.070	3.200	3.200	1.000	1.000	0.000	0.000	1.600	1.600	1.600
TXarm	1.300	5.100	3.570	1.590	1.120	0.000	0.000	2.550	1.780	2.550
MXarm	1.190	4.550	3.420	1.420	1.070	0.000	0.000	2.280	1.710	2.280
BXarm	1.260	4.550	3.560	1.420	1.110	0.000	0.000	2.280	1.780	2.280
Std Body	1.170	3.630	3.630	1.130	1.130	0.000	0.000	1.820	1.820	1.820
20LE	1.420	4.380	4.380	1.370	1.370	0.000	0.000	2.190	2.190	2.190

Angle Member Connectivity:

Member Connect Label	Group Short Label	Section Long Label	Symmetry End Code	Origin Bolt Joint	End Shear Joint	Ecc. Tension Code	Rest. Rest. Code	Ratio RLX	Ratio RLY	Ratio RLZ	Bolt Type	# Bolts	# Bolt Holes	# Shear Planes	Leg Dist. (in)	Edge Dist. (in)	Edge Dist. (in)	Spacing (in)	Path Length (in)	Path Coef. Length (in)
1P	1	Cage	XY-Symmetry	1P	1aS	1	4	1	1	1	3/4 A7	0	4	1	Both	0	0	0	0	0
1X	1	Cage	X-GenXY	1X	1aX	1	4	1	1	1	3/4 A7	0	4	1	Both	0	0	0	0	0
1XY	1	Cage	XY-GenXY	1XY	1aXY	1	4	1	1	1	3/4 A7	0	4	1	Both	0	0	0	0	0
1Y	1	Cage	Y-GenXY	1Y	1aY	1	4	1	1	1	3/4 A7	0	4	1	Both	0	0	0	0	0
2P	2	Cage	XY-Symmetry	1aS	1bS	1	4	1	1	1	3/4 A7	0	4	1	Both	0	0	0	0	0
2X	2	Cage	X-GenXY	1aX	1bX	1	4	1	1	1	3/4 A7	0	4	1	Both	0	0	0	0	0
2XY	2	Cage	XY-GenXY	1aXY	1bXY	1	4	1	1	1	3/4 A7	0	4	1	Both	0	0	0	0	0
2Y	2	Cage	Y-GenXY	1aY	1bY	1	4	1	1	1	3/4 A7	0	4	1	Both	0	0	0	0	0
3P	3	Cage	XY-Symmetry	1bS	1cS	1	4	1	1	1	3/4 A7	0	3.302	1	Both	0	0	0	0	0
3X	3	Cage	X-GenXY	1bX	1cX	1	4	1	1	1	3/4 A7	0	3.302	1						

```
Both     0     0     0       0      0       0     0
    3XY     3     Cage     XY-GenXY   1bXY  1cXY    1     4      1      1      1   3/4 A7     0  3.302       1
Both     0     0     0       0      0       0     0
     3Y     3     Cage      Y-GenXY    1bY   1cY    1     4      1      1      1   3/4 A7     0  3.302       1
Both     0     0     0       0      0       0     0
     4P     4     Cage  XY-Symmetry    1cS   1dS    1     4      1      1      1   3/4 A7     0      4       1
Both     0     0     0       0      0       0     0
     4X     4     Cage      X-GenXY    1cX   1dX    1     4      1      1      1   3/4 A7     0      4       1
Both     0     0     0       0      0       0     0
    4XY     4     Cage     XY-GenXY   1cXY  1dXY    1     4      1      1      1   3/4 A7     0      4       1
Both     0     0     0       0      0       0     0
     4Y     4     Cage      Y-GenXY    1cY   1dY    1     4      1      1      1   3/4 A7     0      4       1
Both     0     0     0       0      0       0     0
     5P     5     Cage  XY-Symmetry    1dS   1eS    1     4      1      1      1   3/4 A7     0      4       1
Both     0     0     0       0      0       0     0
     5X     5     Cage      X-GenXY    1dX   1eX    1     4      1      1      1   3/4 A7     0      4       1
Both     0     0     0       0      0       0     0
    5XY     5     Cage     XY-GenXY   1dXY  1eXY    1     4      1      1      1   3/4 A7     0      4       1
Both     0     0     0       0      0       0     0
     5Y     5     Cage      Y-GenXY    1dY   1eY    1     4      1      1      1   3/4 A7     0      4       1
Both     0     0     0       0      0       0     0
     6P     6     Cage  XY-Symmetry    1eS    5P    1     4      1      1      1   3/4 A7    10  3.357       1
Both     0     0  1.25       0 10.438  5.1875     0
     6X     6     Cage      X-GenXY    1eX    5X    1     4      1      1      1   3/4 A7    10  3.357       1
Both     0     0  1.25       0 10.438  5.1875     0
    6XY     6     Cage     XY-GenXY   1eXY   5XY    1     4      1      1      1   3/4 A7    10  3.357       1
Both     0     0  1.25       0 10.438  5.1875     0
     6Y     6     Cage      Y-GenXY    1eY    5Y    1     4      1      1      1   3/4 A7    10  3.357       1
Both     0     0  1.25       0 10.438  5.1875     0
     7P     7 Std Body  XY-Symmetry     5P   5aS    1     4      1      1      1   3/4 A7    10   2.36       1
Both     0     0   1.5       0 10.938  6.4375     0
     7X     7 Std Body      X-GenXY     5X   5aX    1     4      1      1      1   3/4 A7    10   2.36       1
Both     0     0   1.5       0 10.938  6.4375     0
    7XY     7 Std Body     XY-GenXY    5XY  5aXY    1     4      1      1      1   3/4 A7    10   2.36       1
Both     0     0   1.5       0 10.938  6.4375     0
     7Y     7 Std Body      Y-GenXY     5Y   5aY    1     4      1      1      1   3/4 A7    10   2.36       1
Both     0     0   1.5       0 10.938  6.4375     0
     8P     8 Std Body  XY-Symmetry    5aS   5bS    1     4    0.5    0.5    0.5   3/4 A7    10  3.357       1
Both     0     0  1.25       0 10.438  5.1875     0
     8X     8 Std Body      X-GenXY    5aX   5bX    1     4    0.5    0.5    0.5   3/4 A7    10  3.357       1
Both     0     0  1.25       0 10.438  5.1875     0
    8XY     8 Std Body     XY-GenXY   5aXY  5bXY    1     4    0.5    0.5    0.5   3/4 A7    10  3.357       1
Both     0     0  1.25       0 10.438  5.1875     0
     8Y     8 Std Body      Y-GenXY    5aY   5bY    1     4    0.5    0.5    0.5   3/4 A7    10  3.357       1
Both     0     0  1.25       0 10.438  5.1875     0
     9P     9 Std Body  XY-Symmetry    5bS   5cS    1     4      1      1      1   3/4 A7     0  3.977       1
Both     0     0     0       0      0       0     0
     9X     9 Std Body      X-GenXY    5bX   5cX    1     4      1      1      1   3/4 A7     0  3.977       1
```

```
Both      0      0      0        0       0        0      0
    9XY      9 Std Body     XY-GenXY   5bXY  5cXY    1     4      1      1      1   3/4 A7     0  3.977        1
Both      0      0      0        0       0        0      0
     9Y      9 Std Body      Y-GenXY    5bY   5cY    1     4      1      1      1   3/4 A7     0  3.977        1
Both      0      0      0        0       0        0      0
    10P     10 Std Body  XY-Symmetry    5cS   5dS    1     4    0.5    0.5    0.5   3/4 A7    12  3.977        1
Both      0      0  1.25        0 12.625  6.0625      0
    10X     10 Std Body      X-GenXY    5cX   5dX    1     4    0.5    0.5    0.5   3/4 A7    12  3.977        1
Both      0      0  1.25        0 12.625  6.0625      0
   10XY     10 Std Body     XY-GenXY   5cXY  5dXY    1     4    0.5    0.5    0.5   3/4 A7    12  3.977        1
Both      0      0  1.25        0 12.625  6.0625      0
    10Y     10 Std Body      Y-GenXY    5cY   5dY    1     4    0.5    0.5    0.5   3/4 A7    12  3.977        1
Both      0      0  1.25        0 12.625  6.0625      0
    11P     11 Std Body  XY-Symmetry    5dS   5eS    1     4  0.333  0.333  0.333   3/4 A7    12  3.977        1
Both      0      0  1.25        0 12.625  10.375      0
    11X     11 Std Body      X-GenXY    5dX   5eX    1     4  0.333  0.333  0.333   3/4 A7    12  3.977        1
Both      0      0  1.25        0 12.625  10.375      0
   11XY     11 Std Body     XY-GenXY   5dXY  5eXY    1     4  0.333  0.333  0.333   3/4 A7    12  3.977        1
Both      0      0  1.25        0 12.625  10.375      0
    11Y     11 Std Body      Y-GenXY    5dY   5eY    1     4  0.333  0.333  0.333   3/4 A7    12  3.977        1
Both      0      0  1.25        0 12.625  10.375      0
    12P     12      20LE  XY-Symmetry    5eS    0P    1     4  0.333  0.333  0.333   3/4 A7    12  3.357        1
Both      0      0  1.25        0 12.625    5.25      0
    12X     12      20LE      X-GenXY    5eX    0X    1     4  0.333  0.333  0.333   3/4 A7    12  3.357        1
Both      0      0  1.25        0 12.625    5.25      0
   12XY     12      20LE     XY-GenXY   5eXY   0XY    1     4  0.333  0.333  0.333   3/4 A7    12  3.357        1
Both      0      0  1.25        0 12.625    5.25      0
    12Y     12      20LE      Y-GenXY    5eY    0Y    1     4  0.333  0.333  0.333   3/4 A7    12  3.357        1
Both      0      0  1.25        0 12.625    5.25      0
    13P     13      Cage  XY-Symmetry     1X   1aS    2     5    0.5   0.75    0.5   3/4 A7     2      1        1  Long
only 1.125      0 1.125  2.8125      0        0      0
    13X     13      Cage      X-GenXY     1P   1aX    2     5    0.5   0.75    0.5   3/4 A7     2      1        1  Long
only 1.125      0 1.125  2.8125      0        0      0
   13XY     13      Cage     XY-GenXY     1Y  1aXY    2     5    0.5   0.75    0.5   3/4 A7     2      1        1  Long
only 1.125      0 1.125  2.8125      0        0      0
    13Y     13      Cage      Y-GenXY    1XY   1aY    2     5    0.5   0.75    0.5   3/4 A7     2      1        1  Long
only 1.125      0 1.125  2.8125      0        0      0
    14P     13      Cage  XY-Symmetry     1P   1aY    2     5    0.5   0.75    0.5   3/4 A7     2      1        1  Long
only 1.125      0 1.125  2.8125      0        0      0
    14X     13      Cage      X-GenXY     1X  1aXY    2     5    0.5   0.75    0.5   3/4 A7     2      1        1  Long
only 1.125      0 1.125  2.8125      0        0      0
   14XY     13      Cage     XY-GenXY    1XY   1aX    2     5    0.5   0.75    0.5   3/4 A7     2      1        1  Long
only 1.125      0 1.125  2.8125      0        0      0
    14Y     13      Cage      Y-GenXY     1Y   1aS    2     5    0.5   0.75    0.5   3/4 A7     2      1        1  Long
only 1.125      0 1.125  2.8125      0        0      0
    15P     14     TXarm   X-Symmetry     2P    3P    3     4      1      1      1   3/4 A7     1      1        1  Long
only 1.125      0 1.125        0       0        0      0
    15X     14     TXarm        X-Gen     2X    3X    3     4      1      1      1   3/4 A7     1      1        1  Long
```

```
only 1.125     0 1.125       0      0       0     0
    16P    15     Cage  XY-Symmetry    1aX   1bS    2     5    0.5   0.75    0.5   3/4 A7     2      1       1  Long
only 1.125     0 1.125  2.5313      0       0     0
    16X    15     Cage      X-GenXY    1aS   1bX    2     5    0.5   0.75    0.5   3/4 A7     2      1       1  Long
only 1.125     0 1.125  2.5313      0       0     0
   16XY    15     Cage     XY-GenXY    1aY  1bXY    2     5    0.5   0.75    0.5   3/4 A7     2      1       1  Long
only 1.125     0 1.125  2.5313      0       0     0
    16Y    15     Cage      Y-GenXY   1aXY   1bY    2     5    0.5   0.75    0.5   3/4 A7     2      1       1  Long
only 1.125     0 1.125  2.5313      0       0     0
    17P    15     Cage  XY-Symmetry    1aS   1bY    2     5    0.5   0.75    0.5   3/4 A7     2      1       1  Long
only 1.125     0 1.125  2.5313      0       0     0
    17X    15     Cage      X-GenXY    1aX  1bXY    2     5    0.5   0.75    0.5   3/4 A7     2      1       1  Long
only 1.125     0 1.125  2.5313      0       0     0
   17XY    15     Cage     XY-GenXY   1aXY   1bX    2     5    0.5   0.75    0.5   3/4 A7     2      1       1  Long
only 1.125     0 1.125  2.5313      0       0     0
    17Y    15     Cage      Y-GenXY    1aY   1bS    2     5    0.5   0.75    0.5   3/4 A7     2      1       1  Long
only 1.125     0 1.125  2.5313      0       0     0
    18P    15     Cage  XY-Symmetry    1bX   1cS    2     5    0.5   0.75    0.5   3/4 A7     2      1       1  Long
only 1.125     0 1.125  2.5313      0       0     0
    18X    15     Cage      X-GenXY    1bS   1cX    2     5    0.5   0.75    0.5   3/4 A7     2      1       1  Long
only 1.125     0 1.125  2.5313      0       0     0
   18XY    15     Cage     XY-GenXY    1bY  1cXY    2     5    0.5   0.75    0.5   3/4 A7     2      1       1  Long
only 1.125     0 1.125  2.5313      0       0     0
    18Y    15     Cage      Y-GenXY   1bXY   1cY    2     5    0.5   0.75    0.5   3/4 A7     2      1       1  Long
only 1.125     0 1.125  2.5313      0       0     0
    19P    15     Cage  XY-Symmetry    1bS   1cY    2     5    0.5   0.75    0.5   3/4 A7     2      1       1  Long
only 1.125     0 1.125  2.5313      0       0     0
    19X    15     Cage      X-GenXY    1bX  1cXY    2     5    0.5   0.75    0.5   3/4 A7     2      1       1  Long
only 1.125     0 1.125  2.5313      0       0     0
   19XY    15     Cage     XY-GenXY   1bXY   1cX    2     5    0.5   0.75    0.5   3/4 A7     2      1       1  Long
only 1.125     0 1.125  2.5313      0       0     0
    19Y    15     Cage      Y-GenXY    1bY   1cS    2     5    0.5   0.75    0.5   3/4 A7     2      1       1  Long
only 1.125     0 1.125  2.5313      0       0     0
    20P    15     Cage  XY-Symmetry    1cX   1dS    2     5    0.5   0.75    0.5   3/4 A7     2      1       1  Long
only 1.125     0 1.125  2.5313      0       0     0
    20X    15     Cage      X-GenXY    1cS   1dX    2     5    0.5   0.75    0.5   3/4 A7     2      1       1  Long
only 1.125     0 1.125  2.5313      0       0     0
   20XY    15     Cage     XY-GenXY    1cY  1dXY    2     5    0.5   0.75    0.5   3/4 A7     2      1       1  Long
only 1.125     0 1.125  2.5313      0       0     0
    20Y    15     Cage      Y-GenXY   1cXY   1dY    2     5    0.5   0.75    0.5   3/4 A7     2      1       1  Long
only 1.125     0 1.125  2.5313      0       0     0
    21P    15     Cage  XY-Symmetry    1cS   1dY    2     5    0.5   0.75    0.5   3/4 A7     2      1       1  Long
only 1.125     0 1.125  2.5313      0       0     0
    21X    15     Cage      X-GenXY    1cX  1dXY    2     5    0.5   0.75    0.5   3/4 A7     2      1       1  Long
only 1.125     0 1.125  2.5313      0       0     0
   21XY    15     Cage     XY-GenXY   1cXY   1dX    2     5    0.5   0.75    0.5   3/4 A7     2      1       1  Long
only 1.125     0 1.125  2.5313      0       0     0
    21Y    15     Cage      Y-GenXY    1cY   1dS    2     5    0.5   0.75    0.5   3/4 A7     2      1       1  Long
```

only 1.125	0	1.125	2.5313	0	0	0												
22P	16	Cage	XY-Symmetry	1dX	1eS	2	5	0.75	0.5	0.5	3/4	A7	3	1	1	Long		
only 1.125	0	1.125	2.8125	0	0	0												
22X	16	Cage	X-GenXY	1dS	1eX	2	5	0.75	0.5	0.5	3/4	A7	3	1	1	Long		
only 1.125	0	1.125	2.8125	0	0	0												
22XY	16	Cage	XY-GenXY	1dY	1eXY	2	5	0.75	0.5	0.5	3/4	A7	3	1	1	Long		
only 1.125	0	1.125	2.8125	0	0	0												
22Y	16	Cage	Y-GenXY	1dXY	1eY	2	5	0.75	0.5	0.5	3/4	A7	3	1	1	Long		
only 1.125	0	1.125	2.8125	0	0	0												
23P	16	Cage	XY-Symmetry	1dS	1eY	2	5	0.75	0.5	0.5	3/4	A7	3	1	1	Long		
only 1.125	0	1.125	2.8125	0	0	0												
23X	16	Cage	X-GenXY	1dX	1eXY	2	5	0.75	0.5	0.5	3/4	A7	3	1	1	Long		
only 1.125	0	1.125	2.8125	0	0	0												
23XY	16	Cage	XY-GenXY	1dXY	1eX	2	5	0.75	0.5	0.5	3/4	A7	3	1	1	Long		
only 1.125	0	1.125	2.8125	0	0	0												
23Y	16	Cage	Y-GenXY	1dY	1eS	2	5	0.75	0.5	0.5	3/4	A7	3	1	1	Long		
only 1.125	0	1.125	2.8125	0	0	0												
24P	16	Cage	XY-Symmetry	1eX	5P	2	5	0.5	0.5	0.5	3/4	A7	3	1	1	Long		
only 1.125	0	1.125	2.8125	0	0	0												
24X	16	Cage	X-GenXY	1eS	5X	2	5	0.5	0.5	0.5	3/4	A7	3	1	1	Long		
only 1.125	0	1.125	2.8125	0	0	0												
24XY	16	Cage	XY-GenXY	1eY	5XY	2	5	0.5	0.5	0.5	3/4	A7	3	1	1	Long		
only 1.125	0	1.125	2.8125	0	0	0												
24Y	16	Cage	Y-GenXY	1eXY	5Y	2	5	0.5	0.5	0.5	3/4	A7	3	1	1	Long		
only 1.125	0	1.125	2.8125	0	0	0												
25P	16	Cage	XY-Symmetry	1eS	5Y	2	5	0.5	0.5	0.5	3/4	A7	3	1	1	Long		
only 1.125	0	1.125	2.8125	0	0	0												
25X	16	Cage	X-GenXY	1eX	5XY	2	5	0.5	0.5	0.5	3/4	A7	3	1	1	Long		
only 1.125	0	1.125	2.8125	0	0	0												
25XY	16	Cage	XY-GenXY	1eXY	5X	2	5	0.5	0.5	0.5	3/4	A7	3	1	1	Long		
only 1.125	0	1.125	2.8125	0	0	0												
25Y	16	Cage	Y-GenXY	1eY	5P	2	5	0.5	0.5	0.5	3/4	A7	3	1	1	Long		
only 1.125	0	1.125	2.8125	0	0	0												
26P	17	Std Body	XY-Symmetry	5X	5aS	2	5	0.5608	0.5608	0.5608	3/4	A7	2	1	1	Long		
only 1.125	0	1.125	3.0625	0	0	0												
26X	17	Std Body	X-GenXY	5P	5aX	2	5	0.5608	0.5608	0.5608	3/4	A7	2	1	1	Long		
only 1.125	0	1.125	3.0625	0	0	0												
26XY	17	Std Body	XY-GenXY	5Y	5aXY	2	5	0.5608	0.5608	0.5608	3/4	A7	2	1	1	Long		
only 1.125	0	1.125	3.0625	0	0	0												
26Y	17	Std Body	Y-GenXY	5XY	5aY	2	5	0.5608	0.5608	0.5608	3/4	A7	2	1	1	Long		
only 1.125	0	1.125	3.0625	0	0	0												
27P	17	Std Body	XY-Symmetry	5P	5aY	2	5	0.5608	0.5608	0.5608	3/4	A7	2	1	1	Long		
only 1.125	0	1.125	3.0625	0	0	0												
27X	17	Std Body	X-GenXY	5X	5aXY	2	5	0.5608	0.5608	0.5608	3/4	A7	2	1	1	Long		
only 1.125	0	1.125	3.0625	0	0	0												
27XY	17	Std Body	XY-GenXY	5XY	5aX	2	5	0.5608	0.5608	0.5608	3/4	A7	2	1	1	Long		
only 1.125	0	1.125	3.0625	0	0	0												
27Y	17	Std Body	Y-GenXY	5Y	5aS	2	5	0.5608	0.5608	0.5608	3/4	A7	2	1	1	Long		

only 1.125	0 1.125	3.0625	0	0	0												
28P	18 Std Body	XY-Symmetry	5aX	5bS	2	5	0.5659	0.5659	0.5659	3/4	A7	2	1	1	Long		
only 1.125	0 1.125	3.3125	0	0	0												
28X	18 Std Body	X-GenXY	5aS	5bX	2	5	0.5659	0.5659	0.5659	3/4	A7	2	1	1	Long		
only 1.125	0 1.125	3.3125	0	0	0												
28XY	18 Std Body	XY-GenXY	5aY	5bXY	2	5	0.5659	0.5659	0.5659	3/4	A7	2	1	1	Long		
only 1.125	0 1.125	3.3125	0	0	0												
28Y	18 Std Body	Y-GenXY	5aXY	5bY	2	5	0.5659	0.5659	0.5659	3/4	A7	2	1	1	Long		
only 1.125	0 1.125	3.3125	0	0	0												
29P	18 Std Body	XY-Symmetry	5aS	5bY	2	5	0.5659	0.5659	0.5659	3/4	A7	2	1	1	Long		
only 1.125	0 1.125	3.3125	0	0	0												
29X	18 Std Body	X-GenXY	5aX	5bXY	2	5	0.5659	0.5659	0.5659	3/4	A7	2	1	1	Long		
only 1.125	0 1.125	3.3125	0	0	0												
29XY	18 Std Body	XY-GenXY	5aXY	5bX	2	5	0.5659	0.5659	0.5659	3/4	A7	2	1	1	Long		
only 1.125	0 1.125	3.3125	0	0	0												
29Y	18 Std Body	Y-GenXY	5aY	5bS	2	5	0.5659	0.5659	0.5659	3/4	A7	2	1	1	Long		
only 1.125	0 1.125	3.3125	0	0	0												
30P	19 Std Body	XY-Symmetry	5bX	5cS	2	5	0.5587	0.5587	0.5587	3/4	A7	2	1	1	Long		
only 1.125	0 1.125	3	0	0	0												
30X	19 Std Body	X-GenXY	5bS	5cX	2	5	0.5587	0.5587	0.5587	3/4	A7	2	1	1	Long		
only 1.125	0 1.125	3	0	0	0												
30XY	19 Std Body	XY-GenXY	5bY	5cXY	2	5	0.5587	0.5587	0.5587	3/4	A7	2	1	1	Long		
only 1.125	0 1.125	3	0	0	0												
30Y	19 Std Body	Y-GenXY	5bXY	5cY	2	5	0.5587	0.5587	0.5587	3/4	A7	2	1	1	Long		
only 1.125	0 1.125	3	0	0	0												
31P	19 Std Body	XY-Symmetry	5bS	5cY	2	5	0.5587	0.5587	0.5587	3/4	A7	2	1	1	Long		
only 1.125	0 1.125	3	0	0	0												
31X	19 Std Body	X-GenXY	5bX	5cXY	2	5	0.5587	0.5587	0.5587	3/4	A7	2	1	1	Long		
only 1.125	0 1.125	3	0	0	0												
31XY	19 Std Body	XY-GenXY	5bXY	5cX	2	5	0.5587	0.5587	0.5587	3/4	A7	2	1	1	Long		
only 1.125	0 1.125	3	0	0	0												
31Y	19 Std Body	Y-GenXY	5bY	5cS	2	5	0.5587	0.5587	0.5587	3/4	A7	2	1	1	Long		
only 1.125	0 1.125	3	0	0	0												
32P	20 Std Body	XY-Symmetry	5cX	5dS	3	6	0.58	1	0.58	3/4	A7	2	1	1	Long		
only 1.125	0 1.125	3.625	0	0	0												
32X	20 Std Body	X-GenXY	5cS	5dX	3	6	0.58	1	0.58	3/4	A7	2	1	1	Long		
only 1.125	0 1.125	3.625	0	0	0												
32XY	20 Std Body	XY-GenXY	5cY	5dXY	3	6	0.58	1	0.58	3/4	A7	2	1	1	Long		
only 1.125	0 1.125	3.625	0	0	0												
32Y	20 Std Body	Y-GenXY	5cXY	5dY	3	6	0.58	1	0.58	3/4	A7	2	1	1	Long		
only 1.125	0 1.125	3.625	0	0	0												
33P	20 Std Body	XY-Symmetry	5cS	5dY	3	6	0.58	1	0.58	3/4	A7	2	1	1	Long		
only 1.125	0 1.125	3.625	0	0	0												
33X	20 Std Body	X-GenXY	5cX	5dXY	3	6	0.58	1	0.58	3/4	A7	2	1	1	Long		
only 1.125	0 1.125	3.625	0	0	0												
33XY	20 Std Body	XY-GenXY	5cXY	5dX	3	6	0.58	1	0.58	3/4	A7	2	1	1	Long		
only 1.125	0 1.125	3.625	0	0	0												
33Y	20 Std Body	Y-GenXY	5cY	5dS	3	6	0.58	1	0.58	3/4	A7	2	1	1	Long		

only	1.125	0	1.125	3.625	0		0	0										
34P	21	Std	Body	XY-Symmetry	5dX	5eS	3	6	0.42	1	0.42	3/4	A7	2	1	1	Long	
only	1.125	0	1.125	2	0		0	0										
34X	21	Std	Body	X-GenXY	5dS	5eX	3	6	0.42	1	0.42	3/4	A7	2	1	1	Long	
only	1.125	0	1.125	2	0		0	0										
34XY	21	Std	Body	XY-GenXY	5dY	5eXY	3	6	0.42	1	0.42	3/4	A7	2	1	1	Long	
only	1.125	0	1.125	2	0		0	0										
34Y	21	Std	Body	Y-GenXY	5dXY	5eY	3	6	0.42	1	0.42	3/4	A7	2	1	1	Long	
only	1.125	0	1.125	2	0		0	0										
35P	21	Std	Body	XY-Symmetry	5dS	5eY	3	6	0.42	1	0.42	3/4	A7	2	1	1	Long	
only	1.125	0	1.125	2	0		0	0										
35X	21	Std	Body	X-GenXY	5dX	5eXY	3	6	0.42	1	0.42	3/4	A7	2	1	1	Long	
only	1.125	0	1.125	2	0		0	0										
35XY	21	Std	Body	XY-GenXY	5dXY	5eX	3	6	0.42	1	0.42	3/4	A7	2	1	1	Long	
only	1.125	0	1.125	2	0		0	0										
35Y	21	Std	Body	Y-GenXY	5dY	5eS	3	6	0.42	1	0.42	3/4	A7	2	1	1	Long	
only	1.125	0	1.125	2	0		0	0										
36P	22		20LE	XY-Symmetry	5eX	0P	3	4	0.4391	1	0.4391	3/4	A7	1	1	1	Long	
only	1.125	0	1.125	2	0		0	0										
36X	22		20LE	X-GenXY	5eS	0X	3	4	0.4391	1	0.4391	3/4	A7	1	1	1	Long	
only	1.125	0	1.125	2	0		0	0										
36XY	22		20LE	XY-GenXY	5eY	0XY	3	4	0.4391	1	0.4391	3/4	A7	1	1	1	Long	
only	1.125	0	1.125	2	0		0	0										
36Y	22		20LE	Y-GenXY	5eXY	0Y	3	4	0.4391	1	0.4391	3/4	A7	1	1	1	Long	
only	1.125	0	1.125	2	0		0	0										
37P	22		20LE	XY-Symmetry	5eS	0Y	3	4	0.44	1	0.44	3/4	A7	1	1	1	Long	
only	1.125	0	1.125	2	0		0	0										
37X	22		20LE	X-GenXY	5eX	0XY	3	4	0.44	1	0.44	3/4	A7	1	1	1	Long	
only	1.125	0	1.125	2	0		0	0										
37XY	22		20LE	XY-GenXY	5eXY	0X	3	4	0.44	1	0.44	3/4	A7	1	1	1	Long	
only	1.125	0	1.125	2	0		0	0										
37Y	22		20LE	Y-GenXY	5eY	0P	3	4	0.44	1	0.44	3/4	A7	1	1	1	Long	
only	1.125	0	1.125	2	0		0	0										
38P	23		Cage	XY-Symmetry	1d1S	1dS	3	4	1	1	1	3/4	A325	1	1	1	Long	
only	1.125	0	1.125	0	0		0	0										
38X	23		Cage	X-GenXY	1d1S	1dX	3	4	1	1	1	3/4	A325	1	1	1	Long	
only	1.125	0	1.125	0	0		0	0										
38XY	23		Cage	XY-GenXY	1dXY	1d1S	3	4	1	1	1	3/4	A325	1	1	1	Long	
only	1.125	0	1.125	0	0		0	0										
38Y	23		Cage	Y-GenXY	1d1S	1dY	3	4	1	1	1	3/4	A325	1	1	1	Long	
only	1.125	0	1.125	0	0		0	0										
40P	23		Cage	XY-Symmetry	11S	1P	3	4	1	1	1	3/4	A325	1	1	1	Long	
only	1.125	0	1.125	0	0		0	0										
40X	23		Cage	X-GenXY	11S	1X	3	4	1	1	1	3/4	A325	1	1	1	Long	
only	1.125	0	1.125	0	0		0	0										
40XY	23		Cage	XY-GenXY	1XY	11S	3	4	1	1	1	3/4	A325	1	1	1	Long	
only	1.125	0	1.125	0	0		0	0										
40Y	23		Cage	Y-GenXY	11S	1Y	3	4	1	1	1	3/4	A325	1	1	1	Long	

only	1.125	0	1.125	0	0	0	0											
41P	24		Cage	XY-Symmetry	51S	5P	3	4	1	1	1	3/4	A325	2	1	1	Long	
only	1.125	0	1.125	0	0	0	0											
41X	24		Cage	X-GenXY	51S	5X	3	4	1	1	1	3/4	A325	2	1	1	Long	
only	1.125	0	1.125	0	0	0	0											
41XY	24		Cage	XY-GenXY	5XY	51S	3	4	1	1	1	3/4	A325	2	1	1	Long	
only	1.125	0	1.125	0	0	0	0											
41Y	24		Cage	Y-GenXY	51S	5Y	3	4	1	1	1	3/4	A325	2	1	1	Long	
only	1.125	0	1.125	0	0	0	0											
42P	25	Std	Body	XY-Symmetry	5d1S	5dS	3	4	1	1	1	3/4	A325	2	1	1	Long	
only	2	0	1.125	0	0	0	0											
42X	25	Std	Body	X-GenXY	5d1S	5dX	3	4	1	1	1	3/4	A325	2	1	1	Long	
only	2	0	1.125	0	0	0	0											
42XY	25	Std	Body	XY-GenXY	5dXY	5d1S	3	4	1	1	1	3/4	A325	2	1	1	Long	
only	2	0	1.125	0	0	0	0											
42Y	25	Std	Body	Y-GenXY	5d1S	5dY	3	4	1	1	1	3/4	A325	2	1	1	Long	
only	2	0	1.125	0	0	0	0											
43P	26	Std	Body	XY-Symmetry	5e1S	5eS	3	4	1	1	1	3/4	A325	2	1	1	Long	
only	2	0	1.125	0	0	0	0											
43X	26	Std	Body	X-GenXY	5e1S	5eX	3	4	1	1	1	3/4	A325	2	1	1	Long	
only	2	0	1.125	0	0	0	0											
43XY	26	Std	Body	XY-GenXY	5eXY	5e1S	3	4	1	1	1	3/4	A325	2	1	1	Long	
only	2	0	1.125	0	0	0	0											
43Y	26	Std	Body	Y-GenXY	5e1S	5eY	3	4	1	1	1	3/4	A325	2	1	1	Long	
only	2	0	1.125	0	0	0	0											
44P	27		TXarm	XY-Symmetry	2P	1P	3	6	1	0.5	0.5	3/4	A7	2	1	1	Long	
only	1.5	0	1.125	3	0	0	0											
44X	27		TXarm	X-GenXY	2X	1X	3	6	1	0.5	0.5	3/4	A7	2	1	1	Long	
only	1.5	0	1.125	3	0	0	0											
44XY	27		TXarm	XY-GenXY	2X	1XY	3	6	1	0.5	0.5	3/4	A7	2	1	1	Long	
only	1.5	0	1.125	3	0	0	0											
44Y	27		TXarm	Y-GenXY	2P	1Y	3	6	1	0.5	0.5	3/4	A7	2	1	1	Long	
only	1.5	0	1.125	3	0	0	0											
45P	27		Cage	Y-Symmetry	1X	1P	3	6	1	1	1	3/4	A7	2	1	1	Long	
only	1.5	0	1.125	2	0	0	0											
45Y	27		Cage	Y-Gen	1XY	1Y	3	6	1	1	1	3/4	A7	2	1	1	Long	
only	1.5	0	1.125	2	0	0	0											
46P	28		Cage	X-Symmetry	1P	1Y	3	6	1	1	1	3/4	A7	2	1	1	Long	
only	1	0	1.5	3	0	0	0											
46X	28		Cage	X-Gen	1X	1XY	3	6	1	1	1	3/4	A7	2	1	1	Long	
only	1	0	1.5	3	0	0	0											
47P	28		Cage	X-Symmetry	1dS	1dY	3	6	1	1	1	3/4	A7	2	1	1	Long	
only	1	0	1.5	3	0	0	0											
47X	28		Cage	X-Gen	1dX	1dXY	3	6	1	1	1	3/4	A7	2	1	1	Long	
only	1	0	1.5	3	0	0	0											
48P	28		Cage	X-Symmetry	5P	5Y	3	6	1	1	1	3/4	A7	2	1	1	Long	
only	1	0	1.125	3	0	0	0											
48X	28		Cage	X-Gen	5X	5XY	3	6	1	1	1	3/4	A7	2	1	1	Long	

only	1	0	1.125	3	0	0	0												
49P	28		Cage	X-Symmetry	1aS	1aY	3	6	1	1	1	3/4	A7	2	1	1	Long		
only	1	0	1.5	3	0	0	0												
49X	28		Cage	X-Gen	1aX	1aXY	3	6	1	1	1	3/4	A7	2	1	1	Long		
only	1	0	1.5	3	0	0	0												
50P	29		TXarm	XY-Symmetry	3P	1aS	3	6	1	0.5	0.5	3/4	A7	3	1	1	Long		
only	1.5	0	1.125	2.5	0	0	0												
50X	29		TXarm	X-GenXY	3X	1aX	3	6	1	0.5	0.5	3/4	A7	3	1	1	Long		
only	1.5	0	1.125	2.5	0	0	0												
50XY	29		TXarm	XY-GenXY	3X	1aXY	3	6	1	0.5	0.5	3/4	A7	3	1	1	Long		
only	1.5	0	1.125	2.5	0	0	0												
50Y	29		TXarm	Y-GenXY	3P	1aY	3	6	1	0.5	0.5	3/4	A7	3	1	1	Long		
only	1.5	0	1.125	2.5	0	0	0												
51P	29		Cage	Y-Symmetry	1aX	1aS	3	6	1	1	1	3/4	A7	2	1	1	Long		
only	1.5	0	1.125	2	0	0	0												
51Y	29		Cage	Y-Gen	1aXY	1aY	3	6	1	1	1	3/4	A7	2	1	1	Long		
only	1.5	0	1.125	2	0	0	0												
52P	30		Cage	Y-Symmetry	1cX	1cS	1	4	1	1	1	3/4	A7	2	1	1			
Both	1.125	0	1.125	2	0	0	0												
52Y	30		Cage	Y-Gen	1cXY	1cY	1	4	1	1	1	3/4	A7	2	1	1			
Both	1.125	0	1.125	2	0	0	0												
53P	30		Cage	Y-Symmetry	1eX	1eS	1	4	1	1	1	3/4	A7	2	1	1			
Both	1.25	0	1.125	2	0	0	0												
53Y	30		Cage	Y-Gen	1eXY	1eY	1	4	1	1	1	3/4	A7	2	1	1			
Both	1.25	0	1.125	2	0	0	0												
54P	31		Cage	X-Symmetry	1cS	1cY	3	4	1	1	1	3/4	A7	1	1	1	Long		
only	1.125	0	1.125	0	0	0	0												
54X	31		Cage	X-Gen	1cX	1cXY	3	4	1	1	1	3/4	A7	1	1	1	Long		
only	1.125	0	1.125	0	0	0	0												
55P	32		Cage	X-Symmetry	1eS	1eY	3	4	1	1	1	3/4	A325	1	1	1	Long		
only	1.125	0	1.25	0	0	0	0												
55X	32		Cage	X-Gen	1eX	1eXY	3	4	1	1	1	3/4	A325	1	1	1	Long		
only	1.125	0	1.25	0	0	0	0												
g68P	32a		Cage	X-Symmetry	1eY	1eS	3	4	1	1	1	3/4	A325	1	1	1	Long		
only	1.125	0	1.25	0	0	0	0												
g68X	32a		Cage	X-Gen	1eXY	1eX	3	4	1	1	1	3/4	A325	1	1	1	Long		
only	1.125	0	1.25	0	0	0	0												
56P	33		MXarm	XY-Symmetry	4P	1dS	3	5	1	0.5	0.5	3/4	A7	4	1	1	Long		
only	1.5	0	1.125	2.5	0	0	0												
56X	33		MXarm	X-GenXY	4X	1dX	3	5	1	0.5	0.5	3/4	A7	4	1	1	Long		
only	1.5	0	1.125	2.5	0	0	0												
56XY	33		MXarm	XY-GenXY	4X	1dXY	3	5	1	0.5	0.5	3/4	A7	4	1	1	Long		
only	1.5	0	1.125	2.5	0	0	0												
56Y	33		MXarm	Y-GenXY	4P	1dY	3	5	1	0.5	0.5	3/4	A7	4	1	1	Long		
only	1.5	0	1.125	2.5	0	0	0												
57P	33		Cage	Y-Symmetry	1dX	1dS	3	6	1	1	1	3/4	A7	2	1	1	Long		
only	1.125	0	1.125	2	0	0	0												
57Y	33		Cage	Y-Gen	1dXY	1dY	3	6	1	1	1	3/4	A7	2	1	1	Long		

only	1.125	0	1.125	2	0	0	0											
58P	34	BXarm	XY-Symmetry	6P	5P	3	5	1	0.5	0.5	3/4	A7	3	1	1	Long		
only	1.5	0	1.125	2.5	0	0	0											
58X	34	BXarm	X-GenXY	6X	5X	3	5	1	0.5	0.5	3/4	A7	3	1	1	Long		
only	1.5	0	1.125	2.5	0	0	0											
58XY	34	BXarm	XY-GenXY	6X	5XY	3	5	1	0.5	0.5	3/4	A7	3	1	1	Long		
only	1.5	0	1.125	2.5	0	0	0											
58Y	34	BXarm	Y-GenXY	6P	5Y	3	5	1	0.5	0.5	3/4	A7	3	1	1	Long		
only	1.5	0	1.125	2.5	0	0	0											
59P	34	Cage	Y-Symmetry	5X	5P	3	6	1	1	1	3/4	A7	2	1	1	Long		
only	1.125	0	1.125	2	0	0	0											
59Y	34	Cage	Y-Gen	5XY	5Y	3	6	1	1	1	3/4	A7	2	1	1	Long		
only	1.125	0	1.125	2	0	0	0											
60P	35	Std Body	Y-Symmetry	5cX	5cS	3	6	1	0.5	0.5	3/4	A7	2	1	1	Long		
only	1.125	0	1.125	2	0	0	0											
60Y	35	Std Body	Y-Gen	5cXY	5cY	3	6	1	0.5	0.5	3/4	A7	2	1	1	Long		
only	1.125	0	1.125	2	0	0	0											
61P	35	Std Body	X-Symmetry	5cS	5cY	3	6	1	0.5	0.5	3/4	A7	2	1	1	Long		
only	1.125	0	1.125	2	0	0	0											
61X	35	Std Body	X-Gen	5cX	5cXY	3	6	1	0.5	0.5	3/4	A7	2	1	1	Long		
only	1.125	0	1.125	2	0	0	0											
62P	36	Std Body	Y-Symmetry	5dX	5dS	3	6	1	0.5	0.5	3/4	A7	2	1	1	Short		
only	1.5	0	1.125	2	0	0	0											
62Y	36	Std Body	Y-Gen	5dXY	5dY	3	6	1	0.5	0.5	3/4	A7	2	1	1	Short		
only	1.5	0	1.125	2	0	0	0											
63P	36	Std Body	X-Symmetry	5dS	5dY	3	6	1	0.5	0.5	3/4	A7	2	1	1	Short		
only	1.5	0	1.125	2	0	0	0											
63X	36	Std Body	X-Gen	5dX	5dXY	3	6	1	0.5	0.5	3/4	A7	2	1	1	Short		
only	1.5	0	1.125	2	0	0	0											
64P	37	Std Body	Y-Symmetry	5eX	5eS	3	6	1	0.5	0.5	3/4	A7	2	2	1	Long		
only	2	0	1.125	2	0	0	0											
64Y	37	Std Body	Y-Gen	5eXY	5eY	3	6	1	0.5	0.5	3/4	A7	2	2	1	Long		
only	2	0	1.125	2	0	0	0											
65P	37	Std Body	X-Symmetry	5eS	5eY	3	6	1	0.5	0.5	3/4	A7	2	2	1	Long		
only	2	0	1.125	2	0	0	0											
65X	37	Std Body	X-Gen	5eX	5eXY	3	6	1	0.5	0.5	3/4	A7	2	2	1	Long		
only	2	0	1.125	2	0	0	0											
66P	38	TXarm	XY-Symmetry	3P	1P	3	5	1	1	1	3/4	A7	2	1	1	Long		
only	1.375	0	1.125	2	0	0	0											
66X	38	TXarm	X-GenXY	3X	1X	3	5	1	1	1	3/4	A7	2	1	1	Long		
only	1.375	0	1.125	2	0	0	0											
66XY	38	TXarm	XY-GenXY	3X	1XY	3	5	1	1	1	3/4	A7	2	1	1	Long		
only	1.375	0	1.125	2	0	0	0											
66Y	38	TXarm	Y-GenXY	3P	1Y	3	5	1	1	1	3/4	A7	2	1	1	Long		
only	1.375	0	1.125	2	0	0	0											
67P	39	MXarm	XY-Symmetry	4P	1cS	3	5	1	1	1	3/4	A7	2	1	1	Long		
only	1.125	0	1.125	2	0	0	0											
67X	39	MXarm	X-GenXY	4X	1cX	3	5	1	1	1	3/4	A7	2	1	1	Long		

```
only 1.125     0 1.125       2      0       0     0
   67XY    39    MXarm     XY-GenXY     4X  1cXY    3     5      1      1      1   3/4 A7     2      1       1  Long
only 1.125     0 1.125       2      0       0     0
    67Y    39    MXarm      Y-GenXY     4P   1cY    3     5      1      1      1   3/4 A7     2      1       1  Long
only 1.125     0 1.125       2      0       0     0
    68P    40    BXarm  XY-Symmetry     6P   1eS    3     5      1      1      1   3/4 A7     2      1       1  Long
only 1.125     0 1.125       2      0       0     0
    68X    40    BXarm      X-GenXY     6X   1eX    3     5      1      1      1   3/4 A7     2      1       1  Long
only 1.125     0 1.125       2      0       0     0
   68XY    40    BXarm     XY-GenXY     6X  1eXY    3     5      1      1      1   3/4 A7     2      1       1  Long
only 1.125     0 1.125       2      0       0     0
    68Y    40    BXarm      Y-GenXY     6P   1eY    3     5      1      1      1   3/4 A7     2      1       1  Long
only 1.125     0 1.125       2      0       0     0
```

Member Capacities and Overrides:

```
 Member Group   Design     Comp.   Design   Tension  L/r Length      L/r Connection Connection      Net  Rupture  RTE
End RTE Edge Override Override  Override Override  Override  Override Override Heuristic Override
Warnings
  Label Label    Comp.   Control  Tension   Control                 Comp.      Shear    Bearing  Section  Tension
Dist.    Dist.    Comp.    Comp.     Comp.  Tension   Tension       Face       RL      Beta     Beta
or Errors
              Capacity Criterion Capacity Criterion              Capacity   Capacity   Capacity  Tension Capacity
Tension  Tension Capacity Capacity   Control Capacity   Control    Member    Climb
                                                                                                  Capacity
Capacity Capacity            Unsup. Criterion          Criterion      ship
                (kips)              (kips)                 (ft)   (kips)     (kips)     (kips)   (kips)   (kips)
(kips)   (kips)   (kips)   (kips)              (kips)                                   (deg)    (deg)
-------------------------------------------------------------------------------------------------------------------------
-------------------------------------------------------------------------------------------------------------------------
-----------------------------------------
     1P     1   89.489       L/r   63.896  Net Sect   60   5.00   89.489      0.000      0.000   63.896    0.000
0.000    0.000    0.000    0.000              0.000           Automatic        0        180
     1X     1   89.489       L/r   63.896  Net Sect   60   5.00   89.489      0.000      0.000   63.896    0.000
0.000    0.000    0.000    0.000              0.000           Automatic        0       -270
    1XY     1   89.489       L/r   63.896  Net Sect   60   5.00   89.489      0.000      0.000   63.896    0.000
0.000    0.000    0.000    0.000              0.000           Automatic        0          0
     1Y     1   89.489       L/r   63.896  Net Sect   60   5.00   89.489      0.000      0.000   63.896    0.000
0.000    0.000    0.000    0.000              0.000           Automatic        0        -90
     2P     2   93.269       L/r   63.896  Net Sect   48   4.00   93.269      0.000      0.000   63.896    0.000
0.000    0.000    0.000    0.000              0.000           Automatic        0        180
     2X     2   93.269       L/r   63.896  Net Sect   48   4.00   93.269      0.000      0.000   63.896    0.000
0.000    0.000    0.000    0.000              0.000           Automatic        0       -270
    2XY     2   93.269       L/r   63.896  Net Sect   48   4.00   93.269      0.000      0.000   63.896    0.000
0.000    0.000    0.000    0.000              0.000           Automatic        0          0
     2Y     2   93.269       L/r   63.896  Net Sect   48   4.00   93.269      0.000      0.000   63.896    0.000
0.000    0.000    0.000    0.000              0.000           Automatic        0        -90
     3P     3   93.269       L/r   70.195  Net Sect   48   4.00   93.269      0.000      0.000   70.195    0.000
```

```
0.000    0.000    0.000    0.000              0.000          Automatic        0       180
     3X     3   93.269       L/r   70.195  Net Sect   48   4.00   93.269      0.000      0.000   70.195    0.000
0.000    0.000    0.000    0.000              0.000          Automatic        0      -270
    3XY     3   93.269       L/r   70.195  Net Sect   48   4.00   93.269      0.000      0.000   70.195    0.000
0.000    0.000    0.000    0.000              0.000          Automatic        0         0
     3Y     3   93.269       L/r   70.195  Net Sect   48   4.00   93.269      0.000      0.000   70.195    0.000
0.000    0.000    0.000    0.000              0.000          Automatic        0       -90
     4P     4   93.269       L/r   63.896  Net Sect   48   4.00   93.269      0.000      0.000   63.896    0.000
0.000    0.000    0.000    0.000              0.000          Automatic        0       180
     4X     4   93.269       L/r   63.896  Net Sect   48   4.00   93.269      0.000      0.000   63.896    0.000
0.000    0.000    0.000    0.000              0.000          Automatic        0      -270
    4XY     4   93.269       L/r   63.896  Net Sect   48   4.00   93.269      0.000      0.000   63.896    0.000
0.000    0.000    0.000    0.000              0.000          Automatic        0         0
     4Y     4   93.269       L/r   63.896  Net Sect   48   4.00   93.269      0.000      0.000   63.896    0.000
0.000    0.000    0.000    0.000              0.000          Automatic        0       -90
     5P     5   89.489       L/r   63.896  Net Sect   60   5.00   89.489      0.000      0.000   63.896    0.000
0.000    0.000    0.000    0.000              0.000          Automatic        0       180
     5X     5   89.489       L/r   63.896  Net Sect   60   5.00   89.489      0.000      0.000   63.896    0.000
0.000    0.000    0.000    0.000              0.000          Automatic        0      -270
    5XY     5   89.489       L/r   63.896  Net Sect   60   5.00   89.489      0.000      0.000   63.896    0.000
0.000    0.000    0.000    0.000              0.000          Automatic        0         0
     5Y     5   89.489       L/r   63.896  Net Sect   60   5.00   89.489      0.000      0.000   63.896    0.000
0.000    0.000    0.000    0.000              0.000          Automatic        0       -90
     6P     6   89.489       L/r   69.698  Net Sect   60   5.00   89.489    124.400    210.937   69.698    0.000
0.000    0.000    0.000    0.000              0.000          Automatic        0       180            Rupture capacity
for member "6P" controlled by RDis, not RBsh.
     6X     6   89.489       L/r   69.698  Net Sect   60   5.00   89.489    124.400    210.937   69.698    0.000
0.000    0.000    0.000    0.000              0.000          Automatic        0      -270            Rupture capacity
for member "6X" controlled by RDis, not RBsh.
    6XY     6   89.489       L/r   69.698  Net Sect   60   5.00   89.489    124.400    210.937   69.698    0.000
0.000    0.000    0.000    0.000              0.000          Automatic        0         0           Rupture capacity
for member "6XY" controlled by RDis, not RBsh.
     6Y     6   89.489       L/r   69.698  Net Sect   60   5.00   89.489    124.400    210.937   69.698    0.000
0.000    0.000    0.000    0.000              0.000          Automatic        0       -90            Rupture capacity
for member "6Y" controlled by RDis, not RBsh.
     7P     7   97.972       L/r   99.155  Net Sect   51   5.10   97.972    124.400    210.937   99.155    0.000
0.000    0.000    0.000    0.000              0.000          Automatic        0   226.059            Rupture capacity
for member "7P" controlled by RDis, not RBsh.
     7X     7   97.972       L/r   99.155  Net Sect   51   5.10   97.972    124.400    210.937   99.155    0.000
0.000    0.000    0.000    0.000              0.000          Automatic        0  -136.059            Rupture capacity
for member "7X" controlled by RDis, not RBsh.
    7XY     7   97.972       L/r   99.155  Net Sect   51   5.10   97.972    124.400    210.937   99.155    0.000
0.000    0.000    0.000    0.000              0.000          Automatic        0   226.059           Rupture capacity
for member "7XY" controlled by RDis, not RBsh.
     7Y     7   97.972       L/r   99.155  Net Sect   51   5.10   97.972    124.400    210.937   99.155    0.000
0.000    0.000    0.000    0.000              0.000          Automatic        0  -136.059            Rupture capacity
for member "7Y" controlled by RDis, not RBsh.
     8P     8  101.451       L/r   90.158  Net Sect   36   7.13  101.451    124.400    210.937   90.158    0.000
```

```
0.000    0.000    0.000    0.000              0.000          Automatic        0   226.059            Rupture capacity
for member "8P" controlled by RDis, not RBsh.
     8X     8  101.451       L/r   90.158  Net Sect   36   7.13  101.451    124.400    210.937   90.158    0.000
0.000    0.000    0.000    0.000              0.000          Automatic        0  -136.059            Rupture capacity
for member "8X" controlled by RDis, not RBsh.
    8XY     8  101.451       L/r   90.158  Net Sect   36   7.13  101.451    124.400    210.937   90.158    0.000
0.000    0.000    0.000    0.000              0.000          Automatic        0   226.059           Rupture capacity
for member "8XY" controlled by RDis, not RBsh.
     8Y     8  101.451       L/r   90.158  Net Sect   36   7.13  101.451    124.400    210.937   90.158    0.000
0.000    0.000    0.000    0.000              0.000          Automatic        0  -136.059            Rupture capacity
for member "8Y" controlled by RDis, not RBsh.
     9P     9  115.854       L/r  100.816  Net Sect   82   8.15  115.854      0.000      0.000  100.816    0.000
0.000    0.000    0.000    0.000              0.000          Automatic        0   226.059
     9X     9  115.854       L/r  100.816  Net Sect   82   8.15  115.854      0.000      0.000  100.816    0.000
0.000    0.000    0.000    0.000              0.000          Automatic        0  -136.059
    9XY     9  115.854       L/r  100.816  Net Sect   82   8.15  115.854      0.000      0.000  100.816    0.000
0.000    0.000    0.000    0.000              0.000          Automatic        0   226.059
     9Y     9  115.854       L/r  100.816  Net Sect   82   8.15  115.854      0.000      0.000  100.816    0.000
0.000    0.000    0.000    0.000              0.000          Automatic        0  -136.059
    10P    10  122.423       L/r  100.816  Net Sect   72  14.27  122.423    149.280    303.750  100.816    0.000
0.000    0.000    0.000    0.000              0.000          Automatic        0   226.059           Rupture capacity
for member "10P" controlled by RDis, not RBsh.
    10X    10  122.423       L/r  100.816  Net Sect   72  14.27  122.423    149.280    303.750  100.816    0.000
0.000    0.000    0.000    0.000              0.000          Automatic        0  -136.059           Rupture capacity
for member "10X" controlled by RDis, not RBsh.
   10XY    10  122.423       L/r  100.816  Net Sect   72  14.27  122.423    149.280    303.750  100.816    0.000
0.000    0.000    0.000    0.000              0.000          Automatic        0   226.059          Rupture capacity for
member "10XY" controlled by RDis, not RBsh.
    10Y    10  122.423       L/r  100.816  Net Sect   72  14.27  122.423    149.280    303.750  100.816    0.000
0.000    0.000    0.000    0.000              0.000          Automatic        0  -136.059           Rupture capacity
for member "10Y" controlled by RDis, not RBsh.
    11P    11  124.456       L/r  100.816  Net Sect   68  20.38  124.456    149.280    303.750  100.816    0.000
0.000    0.000    0.000    0.000              0.000          Automatic        0   226.059           Rupture capacity
for member "11P" controlled by RDis, not RBsh.
    11X    11  124.456       L/r  100.816  Net Sect   68  20.38  124.456    149.280    303.750  100.816    0.000
0.000    0.000    0.000    0.000              0.000          Automatic        0  -136.059           Rupture capacity
for member "11X" controlled by RDis, not RBsh.
   11XY    11  124.456       L/r  100.816  Net Sect   68  20.38  124.456    149.280    303.750  100.816    0.000
0.000    0.000    0.000    0.000              0.000          Automatic        0   226.059          Rupture capacity for
member "11XY" controlled by RDis, not RBsh.
    11Y    11  124.456       L/r  100.816  Net Sect   68  20.38  124.456    149.280    303.750  100.816    0.000
0.000    0.000    0.000    0.000              0.000          Automatic        0  -136.059           Rupture capacity
for member "11Y" controlled by RDis, not RBsh.
    12P    12  124.456       L/r  107.530  Net Sect   68  20.38  124.456    149.280    303.750  107.530    0.000
0.000    0.000    0.000    0.000              0.000          Automatic        0   226.059           Rupture capacity
for member "12P" controlled by RDis, not RBsh.
    12X    12  124.456       L/r  107.530  Net Sect   68  20.38  124.456    149.280    303.750  107.530    0.000
0.000    0.000    0.000    0.000              0.000          Automatic        0  -136.059           Rupture capacity
```

for member "12X" controlled by RDis, not RBsh.
12XY 12 124.456 L/r 107.530 Net Sect 68 20.38 124.456 149.280 303.750 107.530 0.000
0.000 0.000 0.000 0.000 0.000 Automatic 0 226.059 Rupture capacity for
member "12XY" controlled by RDis, not RBsh.
12Y 12 124.456 L/r 107.530 Net Sect 68 20.38 124.456 149.280 303.750 107.530 0.000
0.000 0.000 0.000 0.000 0.000 Automatic 0 -136.059 Rupture capacity
for member "12Y" controlled by RDis, not RBsh.
13P 13 17.484 L/r 19.184 Net Sect 106 7.07 17.484 24.880 25.312 19.184 21.094
0.000 0.000 0.000 0.000 0.000 Automatic 0 180 Rupture capacity
for member "13P" controlled by RDis, not RBsh.
13X 13 17.484 L/r 19.184 Net Sect 106 7.07 17.484 24.880 25.312 19.184 21.094
0.000 0.000 0.000 0.000 0.000 Automatic 0 180 Rupture capacity
for member "13X" controlled by RDis, not RBsh.
13XY 13 17.484 L/r 19.184 Net Sect 106 7.07 17.484 24.880 25.312 19.184 21.094
0.000 0.000 0.000 0.000 0.000 Automatic 0 180 Rupture capacity for
member "13XY" controlled by RDis, not RBsh.
13Y 13 17.484 L/r 19.184 Net Sect 106 7.07 17.484 24.880 25.312 19.184 21.094
0.000 0.000 0.000 0.000 0.000 Automatic 0 180 Rupture capacity
for member "13Y" controlled by RDis, not RBsh.
14P 13 17.484 L/r 19.184 Net Sect 106 7.07 17.484 24.880 25.312 19.184 21.094
0.000 0.000 0.000 0.000 0.000 Automatic 0 180 Rupture capacity
for member "14P" controlled by RDis, not RBsh.
14X 13 17.484 L/r 19.184 Net Sect 106 7.07 17.484 24.880 25.312 19.184 21.094
0.000 0.000 0.000 0.000 0.000 Automatic 0 180 Rupture capacity
for member "14X" controlled by RDis, not RBsh.
14XY 13 17.484 L/r 19.184 Net Sect 106 7.07 17.484 24.880 25.312 19.184 21.094
0.000 0.000 0.000 0.000 0.000 Automatic 0 180 Rupture capacity for
member "14XY" controlled by RDis, not RBsh.
14Y 13 17.484 L/r 19.184 Net Sect 106 7.07 17.484 24.880 25.312 19.184 21.094
0.000 0.000 0.000 0.000 0.000 Automatic 0 270 Rupture capacity
for member "14Y" controlled by RDis, not RBsh.
15P 14 7.160 L/r 8.895 Rupture 180 6.40 7.160 12.440 12.656 19.184 8.895
0.000 0.000 0.000 0.000 0.000 Automatic 0 279.844
15X 14 7.160 L/r 8.895 Rupture 180 6.40 7.160 12.440 12.656 19.184 8.895
0.000 0.000 0.000 0.000 0.000 Automatic 0 170.156
16P 15 24.281 L/r 24.880 Shear 97 6.40 24.281 24.880 33.750 24.985 26.766
0.000 0.000 0.000 0.000 0.000 Automatic 0 180
16X 15 24.281 L/r 24.880 Shear 97 6.40 24.281 24.880 33.750 24.985 26.766
0.000 0.000 0.000 0.000 0.000 Automatic 0 270
16XY 15 24.281 L/r 24.880 Shear 97 6.40 24.281 24.880 33.750 24.985 26.766
0.000 0.000 0.000 0.000 0.000 Automatic 0 180
16Y 15 24.281 L/r 24.880 Shear 97 6.40 24.281 24.880 33.750 24.985 26.766
0.000 0.000 0.000 0.000 0.000 Automatic 0 270
17P 15 24.281 L/r 24.880 Shear 97 6.40 24.281 24.880 33.750 24.985 26.766
0.000 0.000 0.000 0.000 0.000 Automatic 0 180
17X 15 24.281 L/r 24.880 Shear 97 6.40 24.281 24.880 33.750 24.985 26.766
0.000 0.000 0.000 0.000 0.000 Automatic 0 270
17XY 15 24.281 L/r 24.880 Shear 97 6.40 24.281 24.880 33.750 24.985 26.766

```
0.000    0.000    0.000    0.000                0.000          Automatic        0       180
    17Y    15   24.281      L/r   24.880     Shear   97   6.40   24.281    24.880    33.750   24.985   26.766
0.000    0.000    0.000    0.000                0.000          Automatic        0       270
    18P    15   24.281      L/r   24.880     Shear   97   6.40   24.281    24.880    33.750   24.985   26.766
0.000    0.000    0.000    0.000                0.000          Automatic        0       180
    18X    15   24.281      L/r   24.880     Shear   97   6.40   24.281    24.880    33.750   24.985   26.766
0.000    0.000    0.000    0.000                0.000          Automatic        0       270
   18XY    15   24.281      L/r   24.880     Shear   97   6.40   24.281    24.880    33.750   24.985   26.766
0.000    0.000    0.000    0.000                0.000          Automatic        0       180
    18Y    15   24.281      L/r   24.880     Shear   97   6.40   24.281    24.880    33.750   24.985   26.766
0.000    0.000    0.000    0.000                0.000          Automatic        0       270
    19P    15   24.281      L/r   24.880     Shear   97   6.40   24.281    24.880    33.750   24.985   26.766
0.000    0.000    0.000    0.000                0.000          Automatic        0       180
    19X    15   24.281      L/r   24.880     Shear   97   6.40   24.281    24.880    33.750   24.985   26.766
0.000    0.000    0.000    0.000                0.000          Automatic        0       270
   19XY    15   24.281      L/r   24.880     Shear   97   6.40   24.281    24.880    33.750   24.985   26.766
0.000    0.000    0.000    0.000                0.000          Automatic        0       180
    19Y    15   24.281      L/r   24.880     Shear   97   6.40   24.281    24.880    33.750   24.985   26.766
0.000    0.000    0.000    0.000                0.000          Automatic        0       270
    20P    15   24.281      L/r   24.880     Shear   97   6.40   24.281    24.880    33.750   24.985   26.766
0.000    0.000    0.000    0.000                0.000          Automatic        0       180
    20X    15   24.281      L/r   24.880     Shear   97   6.40   24.281    24.880    33.750   24.985   26.766
0.000    0.000    0.000    0.000                0.000          Automatic        0       270
   20XY    15   24.281      L/r   24.880     Shear   97   6.40   24.281    24.880    33.750   24.985   26.766
0.000    0.000    0.000    0.000                0.000          Automatic        0       180
    20Y    15   24.281      L/r   24.880     Shear   97   6.40   24.281    24.880    33.750   24.985   26.766
0.000    0.000    0.000    0.000                0.000          Automatic        0       270
    21P    15   24.281      L/r   24.880     Shear   97   6.40   24.281    24.880    33.750   24.985   26.766
0.000    0.000    0.000    0.000                0.000          Automatic        0       180
    21X    15   24.281      L/r   24.880     Shear   97   6.40   24.281    24.880    33.750   24.985   26.766
0.000    0.000    0.000    0.000                0.000          Automatic        0       270
   21XY    15   24.281      L/r   24.880     Shear   97   6.40   24.281    24.880    33.750   24.985   26.766
0.000    0.000    0.000    0.000                0.000          Automatic        0       180
    21Y    15   24.281      L/r   24.880     Shear   97   6.40   24.281    24.880    33.750   24.985   26.766
0.000    0.000    0.000    0.000                0.000          Automatic        0       270
    22P    16   29.096      L/r   28.846  Net Sect   86   7.07   29.096    37.320    50.625   28.846   42.187
0.000    0.000    0.000    0.000                0.000          Automatic        0       180          Rupture capacity
for member "22P" controlled by RDis, not RBsh.
    22X    16   29.096      L/r   28.846  Net Sect   86   7.07   29.096    37.320    50.625   28.846   42.187
0.000    0.000    0.000    0.000                0.000          Automatic        0       180          Rupture capacity
for member "22X" controlled by RDis, not RBsh.
   22XY    16   29.096      L/r   28.846  Net Sect   86   7.07   29.096    37.320    50.625   28.846   42.187
0.000    0.000    0.000    0.000                0.000          Automatic        0       180          Rupture capacity for
member "22XY" controlled by RDis, not RBsh.
    22Y    16   29.096      L/r   28.846  Net Sect   86   7.07   29.096    37.320    50.625   28.846   42.187
0.000    0.000    0.000    0.000                0.000          Automatic        0       180          Rupture capacity
for member "22Y" controlled by RDis, not RBsh.
    23P    16   29.096      L/r   28.846  Net Sect   86   7.07   29.096    37.320    50.625   28.846   42.187
```

```
0.000    0.000    0.000    0.000              0.000          Automatic        0       180          Rupture capacity
for member "23P" controlled by RDis, not RBsh.
    23X    16   29.096       L/r   28.846  Net Sect   86   7.07   29.096     37.320     50.625   28.846   42.187
0.000    0.000    0.000    0.000              0.000          Automatic        0       180          Rupture capacity
for member "23X" controlled by RDis, not RBsh.
   23XY    16   29.096       L/r   28.846  Net Sect   86   7.07   29.096     37.320     50.625   28.846   42.187
0.000    0.000    0.000    0.000              0.000          Automatic        0       180          Rupture capacity for
member "23XY" controlled by RDis, not RBsh.
    23Y    16   29.096       L/r   28.846  Net Sect   86   7.07   29.096     37.320     50.625   28.846   42.187
0.000    0.000    0.000    0.000              0.000          Automatic        0       180          Rupture capacity
for member "23Y" controlled by RDis, not RBsh.
    24P    16   29.096       L/r   28.846  Net Sect   86   7.07   29.096     37.320     50.625   28.846   42.187
0.000    0.000    0.000    0.000              0.000          Automatic        0       180          Rupture capacity
for member "24P" controlled by RDis, not RBsh.
    24X    16   29.096       L/r   28.846  Net Sect   86   7.07   29.096     37.320     50.625   28.846   42.187
0.000    0.000    0.000    0.000              0.000          Automatic        0       180          Rupture capacity
for member "24X" controlled by RDis, not RBsh.
   24XY    16   29.096       L/r   28.846  Net Sect   86   7.07   29.096     37.320     50.625   28.846   42.187
0.000    0.000    0.000    0.000              0.000          Automatic        0       180          Rupture capacity for
member "24XY" controlled by RDis, not RBsh.
    24Y    16   29.096       L/r   28.846  Net Sect   86   7.07   29.096     37.320     50.625   28.846   42.187
0.000    0.000    0.000    0.000              0.000          Automatic        0       180          Rupture capacity
for member "24Y" controlled by RDis, not RBsh.
    25P    16   29.096       L/r   28.846  Net Sect   86   7.07   29.096     37.320     50.625   28.846   42.187
0.000    0.000    0.000    0.000              0.000          Automatic        0       180          Rupture capacity
for member "25P" controlled by RDis, not RBsh.
    25X    16   29.096       L/r   28.846  Net Sect   86   7.07   29.096     37.320     50.625   28.846   42.187
0.000    0.000    0.000    0.000              0.000          Automatic        0       180          Rupture capacity
for member "25X" controlled by RDis, not RBsh.
   25XY    16   29.096       L/r   28.846  Net Sect   86   7.07   29.096     37.320     50.625   28.846   42.187
0.000    0.000    0.000    0.000              0.000          Automatic        0       180          Rupture capacity for
member "25XY" controlled by RDis, not RBsh.
    25Y    16   29.096       L/r   28.846  Net Sect   86   7.07   29.096     37.320     50.625   28.846   42.187
0.000    0.000    0.000    0.000              0.000          Automatic        0       180          Rupture capacity
for member "25Y" controlled by RDis, not RBsh.
    26P    17   24.880     Shear   24.880     Shear  105   7.61   31.823     24.880     42.187   35.241   35.156
0.000    0.000    0.000    0.000              0.000          Automatic        0   184.571          Rupture capacity
for member "26P" controlled by RDis, not RBsh.
    26X    17   24.880     Shear   24.880     Shear  105   7.61   31.823     24.880     42.187   35.241   35.156
0.000    0.000    0.000    0.000              0.000          Automatic        0   265.429          Rupture capacity
for member "26X" controlled by RDis, not RBsh.
   26XY    17   24.880     Shear   24.880     Shear  105   7.61   31.823     24.880     42.187   35.241   35.156
0.000    0.000    0.000    0.000              0.000          Automatic        0   184.571          Rupture capacity for
member "26XY" controlled by RDis, not RBsh.
    26Y    17   24.880     Shear   24.880     Shear  105   7.61   31.823     24.880     42.187   35.241   35.156
0.000    0.000    0.000    0.000              0.000          Automatic        0   265.429          Rupture capacity
for member "26Y" controlled by RDis, not RBsh.
    27P    17   24.880     Shear   24.880     Shear  105   7.61   31.823     24.880     42.187   35.241   35.156
```

0.000 0.000 0.000 0.000 0.000 Automatic 0 184.571 Rupture capacity
for member "27P" controlled by RDis, not RBsh.
27X 17 24.880 Shear 24.880 Shear 105 7.61 31.823 24.880 42.187 35.241 35.156
0.000 0.000 0.000 0.000 0.000 Automatic 0 265.429 Rupture capacity
for member "27X" controlled by RDis, not RBsh.
27XY 17 24.880 Shear 24.880 Shear 105 7.61 31.823 24.880 42.187 35.241 35.156
0.000 0.000 0.000 0.000 0.000 Automatic 0 184.571 Rupture capacity for
member "27XY" controlled by RDis, not RBsh.
27Y 17 24.880 Shear 24.880 Shear 105 7.61 31.823 24.880 42.187 35.241 35.156
0.000 0.000 0.000 0.000 0.000 Automatic 0 265.429 Rupture capacity
for member "27Y" controlled by RDis, not RBsh.
28P 18 18.390 L/r 24.880 Shear 141 10.20 18.390 24.880 33.750 28.846 28.125
0.000 0.000 0.000 0.000 0.000 Automatic 0 190.568 Rupture capacity
for member "28P" controlled by RDis, not RBsh.
28X 18 18.390 L/r 24.880 Shear 141 10.20 18.390 24.880 33.750 28.846 28.125
0.000 0.000 0.000 0.000 0.000 Automatic 0 259.432 Rupture capacity
for member "28X" controlled by RDis, not RBsh.
28XY 18 18.390 L/r 24.880 Shear 141 10.20 18.390 24.880 33.750 28.846 28.125
0.000 0.000 0.000 0.000 0.000 Automatic 0 190.568 Rupture capacity for
member "28XY" controlled by RDis, not RBsh.
28Y 18 18.390 L/r 24.880 Shear 141 10.20 18.390 24.880 33.750 28.846 28.125
0.000 0.000 0.000 0.000 0.000 Automatic 0 259.432 Rupture capacity
for member "28Y" controlled by RDis, not RBsh.
29P 18 18.390 L/r 24.880 Shear 141 10.20 18.390 24.880 33.750 28.846 28.125
0.000 0.000 0.000 0.000 0.000 Automatic 0 191.814 Rupture capacity
for member "29P" controlled by RDis, not RBsh.
29X 18 18.390 L/r 24.880 Shear 141 10.20 18.390 24.880 33.750 28.846 28.125
0.000 0.000 0.000 0.000 0.000 Automatic 0 258.186 Rupture capacity
for member "29X" controlled by RDis, not RBsh.
29XY 18 18.390 L/r 24.880 Shear 141 10.20 18.390 24.880 33.750 28.846 28.125
0.000 0.000 0.000 0.000 0.000 Automatic 0 191.814 Rupture capacity for
member "29XY" controlled by RDis, not RBsh.
29Y 18 18.390 L/r 24.880 Shear 141 10.20 18.390 24.880 33.750 28.846 28.125
0.000 0.000 0.000 0.000 0.000 Automatic 0 258.186 Rupture capacity
for member "29Y" controlled by RDis, not RBsh.
30P 19 13.678 L/r 24.880 Shear 170 12.42 13.678 24.880 33.750 28.846 28.125
0.000 0.000 0.000 0.000 0.000 Automatic 0 190.053 Rupture capacity
for member "30P" controlled by RDis, not RBsh.
30X 19 13.678 L/r 24.880 Shear 170 12.42 13.678 24.880 33.750 28.846 28.125
0.000 0.000 0.000 0.000 0.000 Automatic 0 259.947 Rupture capacity
for member "30X" controlled by RDis, not RBsh.
30XY 19 13.678 L/r 24.880 Shear 170 12.42 13.678 24.880 33.750 28.846 28.125
0.000 0.000 0.000 0.000 0.000 Automatic 0 190.053 Rupture capacity for
member "30XY" controlled by RDis, not RBsh.
30Y 19 13.678 L/r 24.880 Shear 170 12.42 13.678 24.880 33.750 28.846 28.125
0.000 0.000 0.000 0.000 0.000 Automatic 0 259.947 Rupture capacity
for member "30Y" controlled by RDis, not RBsh.
31P 19 13.678 L/r 24.880 Shear 170 12.42 13.678 24.880 33.750 28.846 28.125

```
0.000    0.000    0.000    0.000              0.000          Automatic        0   191.199          Rupture capacity
for member "31P" controlled by RDis, not RBsh.
    31X    19   13.678       L/r   24.880     Shear  170  12.42   13.678     24.880     33.750   28.846   28.125
0.000    0.000    0.000    0.000              0.000          Automatic        0   258.801          Rupture capacity
for member "31X" controlled by RDis, not RBsh.
   31XY    19   13.678       L/r   24.880     Shear  170  12.42   13.678     24.880     33.750   28.846   28.125
0.000    0.000    0.000    0.000              0.000          Automatic        0   191.199          Rupture capacity for
member "31XY" controlled by RDis, not RBsh.
    31Y    19   13.678       L/r   24.880     Shear  170  12.42   13.678     24.880     33.750   28.846   28.125
0.000    0.000    0.000    0.000              0.000          Automatic        0   258.801          Rupture capacity
for member "31Y" controlled by RDis, not RBsh.
    32P    20    3.836       L/r   24.880     Shear  382  18.85    3.836     24.880     33.750   24.985   28.125
0.000    0.000    0.000    0.000              0.000          Automatic        0   191.481          Rupture capacity
for member "32P" controlled by RDis, not RBsh.
    32X    20    3.836       L/r   24.880     Shear  382  18.85    3.836     24.880     33.750   24.985   28.125
0.000    0.000    0.000    0.000              0.000          Automatic        0   258.519          Rupture capacity
for member "32X" controlled by RDis, not RBsh.
   32XY    20    3.836       L/r   24.880     Shear  382  18.85    3.836     24.880     33.750   24.985   28.125
0.000    0.000    0.000    0.000              0.000          Automatic        0   191.481          Rupture capacity for
member "32XY" controlled by RDis, not RBsh.
    32Y    20    3.836       L/r   24.880     Shear  382  18.85    3.836     24.880     33.750   24.985   28.125
0.000    0.000    0.000    0.000              0.000          Automatic        0   258.519          Rupture capacity
for member "32Y" controlled by RDis, not RBsh.
    33P    20    3.836       L/r   24.880     Shear  382  18.85    3.836     24.880     33.750   24.985   28.125
0.000    0.000    0.000    0.000              0.000          Automatic        0   192.863          Rupture capacity
for member "33P" controlled by RDis, not RBsh.
    33X    20    3.836       L/r   24.880     Shear  382  18.85    3.836     24.880     33.750   24.985   28.125
0.000    0.000    0.000    0.000              0.000          Automatic        0   257.137          Rupture capacity
for member "33X" controlled by RDis, not RBsh.
   33XY    20    3.836       L/r   24.880     Shear  382  18.85    3.836     24.880     33.750   24.985   28.125
0.000    0.000    0.000    0.000              0.000          Automatic        0   192.863          Rupture capacity for
member "33XY" controlled by RDis, not RBsh.
    33Y    20    3.836       L/r   24.880     Shear  382  18.85    3.836     24.880     33.750   24.985   28.125
0.000    0.000    0.000    0.000              0.000          Automatic        0   257.137          Rupture capacity
for member "33Y" controlled by RDis, not RBsh.
    34P    21    2.137       L/r   21.984   Rupture  538  26.52    2.137     24.880     33.750   24.985   21.984
0.000    0.000    0.000    0.000              0.000          Automatic        0   191.715
    34X    21    2.137       L/r   21.984   Rupture  538  26.52    2.137     24.880     33.750   24.985   21.984
0.000    0.000    0.000    0.000              0.000          Automatic        0   258.285
   34XY    21    2.137       L/r   21.984   Rupture  538  26.52    2.137     24.880     33.750   24.985   21.984
0.000    0.000    0.000    0.000              0.000          Automatic        0   191.715
    34Y    21    2.137       L/r   21.984   Rupture  538  26.52    2.137     24.880     33.750   24.985   21.984
0.000    0.000    0.000    0.000              0.000          Automatic        0   258.285
    35P    21    2.137       L/r   21.984   Rupture  538  26.52    2.137     24.880     33.750   24.985   21.984
0.000    0.000    0.000    0.000              0.000          Automatic        0   193.126
    35X    21    2.137       L/r   21.984   Rupture  538  26.52    2.137     24.880     33.750   24.985   21.984
0.000    0.000    0.000    0.000              0.000          Automatic        0   256.874
   35XY    21    2.137       L/r   21.984   Rupture  538  26.52    2.137     24.880     33.750   24.985   21.984
```

```
0.000    0.000    0.000    0.000              0.000           Automatic        0   193.126
    35Y    21    2.137       L/r   21.984   Rupture  538  26.52    2.137     24.880     33.750   24.985   21.984
0.000    0.000    0.000    0.000              0.000           Automatic        0   256.874
    36P    22    0.799       L/r   11.859   Rupture  616  30.40    0.799     12.440     16.875   24.985   11.859
0.000    0.000    0.000    0.000              0.000           Automatic        0   190.207
    36X    22    0.799       L/r   11.859   Rupture  616  30.40    0.799     12.440     16.875   24.985   11.859
0.000    0.000    0.000    0.000              0.000           Automatic        0   259.793
   36XY    22    0.799       L/r   11.859   Rupture  616  30.40    0.799     12.440     16.875   24.985   11.859
0.000    0.000    0.000    0.000              0.000           Automatic        0   190.207
    36Y    22    0.799       L/r   11.859   Rupture  616  30.40    0.799     12.440     16.875   24.985   11.859
0.000    0.000    0.000    0.000              0.000           Automatic        0   259.793
    37P    22    0.799       L/r   11.859   Rupture  616  30.40    0.799     12.440     16.875   24.985   11.859
0.000    0.000    0.000    0.000              0.000           Automatic        0   191.386
    37X    22    0.799       L/r   11.859   Rupture  616  30.40    0.799     12.440     16.875   24.985   11.859
0.000    0.000    0.000    0.000              0.000           Automatic        0   258.614
   37XY    22    0.799       L/r   11.859   Rupture  616  30.40    0.799     12.440     16.875   24.985   11.859
0.000    0.000    0.000    0.000              0.000           Automatic        0   191.386
    37Y    22    0.799       L/r   11.859   Rupture  616  30.40    0.799     12.440     16.875   24.985   11.859
0.000    0.000    0.000    0.000              0.000           Automatic        0   258.614
    38P    23   16.312   Bearing   12.169   Rupture   86   3.54   28.492     24.880     16.312   31.468   12.169
0.000    0.000    0.000    0.000              0.000           Automatic        0       270
    38X    23   16.312   Bearing   12.169   Rupture   86   3.54   28.492     24.880     16.312   31.468   12.169
0.000    0.000    0.000    0.000              0.000           Automatic        0       270
   38XY    23   16.312   Bearing   12.169   Rupture   86   3.54   28.492     24.880     16.312   31.468   12.169
0.000    0.000    0.000    0.000              0.000           Automatic        0       180
    38Y    23   16.312   Bearing   12.169   Rupture   86   3.54   28.492     24.880     16.312   31.468   12.169
0.000    0.000    0.000    0.000              0.000           Automatic        0       270
    40P    23   16.312   Bearing   12.169   Rupture   86   3.54   28.492     24.880     16.312   31.468   12.169
0.000    0.000    0.000    0.000              0.000           Automatic        0       270
    40X    23   16.312   Bearing   12.169   Rupture   86   3.54   28.492     24.880     16.312   31.468   12.169
0.000    0.000    0.000    0.000              0.000           Automatic        0       270
   40XY    23   16.312   Bearing   12.169   Rupture   86   3.54   28.492     24.880     16.312   31.468   12.169
0.000    0.000    0.000    0.000              0.000           Automatic        0       180
    40Y    23   16.312   Bearing   12.169   Rupture   86   3.54   28.492     24.880     16.312   31.468   12.169
0.000    0.000    0.000    0.000              0.000           Automatic        0       270
    41P    24   20.689       L/r   21.917  Net Sect   86   3.54   20.689     49.760     25.312   21.917    0.000
0.000    0.000    0.000    0.000              0.000           Automatic        0       270           Rupture capacity
for member "41P" controlled by RDis, not RBsh.
    41X    24   20.689       L/r   21.917  Net Sect   86   3.54   20.689     49.760     25.312   21.917    0.000
0.000    0.000    0.000    0.000              0.000           Automatic        0       270           Rupture capacity
for member "41X" controlled by RDis, not RBsh.
   41XY    24   20.689       L/r   21.917  Net Sect   86   3.54   20.689     49.760     25.312   21.917    0.000
0.000    0.000    0.000    0.000              0.000           Automatic        0       180           Rupture capacity for
member "41XY" controlled by RDis, not RBsh.
    41Y    24   20.689       L/r   21.917  Net Sect   86   3.54   20.689     49.760     25.312   21.917    0.000
0.000    0.000    0.000    0.000              0.000           Automatic        0       270           Rupture capacity
for member "41Y" controlled by RDis, not RBsh.
    42P    25   33.956       L/r   49.760     Shear  155  10.20   33.956     49.760     50.625   75.197    0.000
```

```
0.000    0.000    0.000    0.000              0.000          Automatic        0   259.505          Rupture capacity
for member "42P" controlled by RDis, not RBsh.
    42X    25   33.956       L/r   49.760     Shear  155  10.20   33.956     49.760     50.625   75.197    0.000
0.000    0.000    0.000    0.000              0.000          Automatic        0   190.495          Rupture capacity
for member "42X" controlled by RDis, not RBsh.
   42XY    25   33.956       L/r   49.760     Shear  155  10.20   33.956     49.760     50.625   75.197    0.000
0.000    0.000    0.000    0.000              0.000          Automatic        0   190.495         Rupture capacity for
member "42XY" controlled by RDis, not RBsh.
    42Y    25   33.956       L/r   49.760     Shear  155  10.20   33.956     49.760     50.625   75.197    0.000
0.000    0.000    0.000    0.000              0.000          Automatic        0   190.495          Rupture capacity
for member "42Y" controlled by RDis, not RBsh.
    43P    26   35.306       L/r   49.760     Shear  171  14.11   35.306     49.760     50.625   97.472    0.000
0.000    0.000    0.000    0.000              0.000          Automatic        0   259.505          Rupture capacity
for member "43P" controlled by RDis, not RBsh.
    43X    26   35.306       L/r   49.760     Shear  171  14.11   35.306     49.760     50.625   97.472    0.000
0.000    0.000    0.000    0.000              0.000          Automatic        0   190.495          Rupture capacity
for member "43X" controlled by RDis, not RBsh.
   43XY    26   35.306       L/r   49.760     Shear  171  14.11   35.306     49.760     50.625   97.472    0.000
0.000    0.000    0.000    0.000              0.000          Automatic        0   190.495         Rupture capacity for
member "43XY" controlled by RDis, not RBsh.
    43Y    26   35.306       L/r   49.760     Shear  171  14.11   35.306     49.760     50.625   97.472    0.000
0.000    0.000    0.000    0.000              0.000          Automatic        0   190.495          Rupture capacity
for member "43Y" controlled by RDis, not RBsh.
    44P    27   21.752       L/r   24.880     Shear  149  11.52   21.752     24.880     33.750   36.271   28.125
0.000    0.000    0.000    0.000              0.000          Automatic        0       270          Rupture capacity
for member "44P" controlled by RDis, not RBsh.
    44X    27   21.752       L/r   24.880     Shear  149  11.52   21.752     24.880     33.750   36.271   28.125
0.000    0.000    0.000    0.000              0.000          Automatic        0       180          Rupture capacity
for member "44X" controlled by RDis, not RBsh.
   44XY    27   21.752       L/r   24.880     Shear  149  11.52   21.752     24.880     33.750   36.271   28.125
0.000    0.000    0.000    0.000              0.000          Automatic        0       270         Rupture capacity for
member "44XY" controlled by RDis, not RBsh.
    44Y    27   21.752       L/r   24.880     Shear  149  11.52   21.752     24.880     33.750   36.271   28.125
0.000    0.000    0.000    0.000              0.000          Automatic        0       180          Rupture capacity
for member "44Y" controlled by RDis, not RBsh.
    45P    27   24.880     Shear   24.880     Shear  101   5.00   30.742     24.880     33.750   36.271   25.078
0.000    0.000    0.000    0.000              0.000          Automatic        0       180
    45Y    27   24.880     Shear   24.880     Shear  101   5.00   30.742     24.880     33.750   36.271   25.078
0.000    0.000    0.000    0.000              0.000          Automatic        0       270
    46P    28   24.880     Shear   24.880     Shear  114   5.00   26.226     24.880     33.750   32.410   29.412
0.000    0.000    0.000    0.000              0.000          Automatic        0       180          Rupture capacity
for member "46P" controlled by RDis, not RBsh.
    46X    28   24.880     Shear   24.880     Shear  114   5.00   26.226     24.880     33.750   32.410   29.412
0.000    0.000    0.000    0.000              0.000          Automatic        0       270          Rupture capacity
for member "46X" controlled by RDis, not RBsh.
    47P    28   24.880     Shear   24.880     Shear  114   5.00   26.226     24.880     33.750   32.410   29.412
0.000    0.000    0.000    0.000              0.000          Automatic        0       180          Rupture capacity
for member "47P" controlled by RDis, not RBsh.
```

```
    47X    28   24.880     Shear   24.880     Shear  114   5.00   26.226     24.880     33.750   32.410   29.412
0.000    0.000    0.000    0.000              0.000           Automatic        0       270           Rupture capacity
for member "47X" controlled by RDis, not RBsh.
    48P    28   24.880     Shear   24.880     Shear  114   5.00   26.226     24.880     33.750   32.410   28.125
0.000    0.000    0.000    0.000              0.000           Automatic        0       180           Rupture capacity
for member "48P" controlled by RDis, not RBsh.
    48X    28   24.880     Shear   24.880     Shear  114   5.00   26.226     24.880     33.750   32.410   28.125
0.000    0.000    0.000    0.000              0.000           Automatic        0       270           Rupture capacity
for member "48X" controlled by RDis, not RBsh.
    49P    28   24.880     Shear   24.880     Shear  114   5.00   26.226     24.880     33.750   32.410   29.412
0.000    0.000    0.000    0.000              0.000           Automatic        0       180           Rupture capacity
for member "49P" controlled by RDis, not RBsh.
    49X    28   24.880     Shear   24.880     Shear  114   5.00   26.226     24.880     33.750   32.410   29.412
0.000    0.000    0.000    0.000              0.000           Automatic        0       270           Rupture capacity
for member "49X" controlled by RDis, not RBsh.
    50P    29   31.104       L/r   36.271  Net Sect   99   7.67   31.104     37.320     50.625   36.271   42.187
0.000    0.000    0.000    0.000              0.000           Automatic        0       270           Rupture capacity
for member "50P" controlled by RDis, not RBsh.
    50X    29   31.104       L/r   36.271  Net Sect   99   7.67   31.104     37.320     50.625   36.271   42.187
0.000    0.000    0.000    0.000              0.000           Automatic        0       180           Rupture capacity
for member "50X" controlled by RDis, not RBsh.
   50XY    29   31.104       L/r   36.271  Net Sect   99   7.67   31.104     37.320     50.625   36.271   42.187
0.000    0.000    0.000    0.000              0.000           Automatic        0       270          Rupture capacity for
member "50XY" controlled by RDis, not RBsh.
    50Y    29   31.104       L/r   36.271  Net Sect   99   7.67   31.104     37.320     50.625   36.271   42.187
0.000    0.000    0.000    0.000              0.000           Automatic        0       180           Rupture capacity
for member "50Y" controlled by RDis, not RBsh.
    51P    29   24.880     Shear   24.880     Shear  101   5.00   30.742     24.880     33.750   36.271   25.078
0.000    0.000    0.000    0.000              0.000           Automatic        0       180
    51Y    29   24.880     Shear   24.880     Shear  101   5.00   30.742     24.880     33.750   36.271   25.078
0.000    0.000    0.000    0.000              0.000           Automatic        0       270
    52P    30   14.788       L/r    9.281  Net Sect   60   5.00   14.788     24.880     33.750    9.281   28.125
0.000    0.000    0.000    0.000              0.000           Automatic        0       180
    52Y    30   14.788       L/r    9.281  Net Sect   60   5.00   14.788     24.880     33.750    9.281   28.125
0.000    0.000    0.000    0.000              0.000           Automatic        0       270
    53P    30   14.788       L/r    9.281  Net Sect   60   5.00   14.788     24.880     33.750    9.281   28.125
0.000    0.000    0.000    0.000              0.000           Automatic        0       180
    53Y    30   14.788       L/r    9.281  Net Sect   60   5.00   14.788     24.880     33.750    9.281   28.125
0.000    0.000    0.000    0.000              0.000           Automatic        0       270
    54P    31   11.742       L/r    8.895   Rupture  141   5.00   11.742     12.440     12.656   19.184    8.895
0.000    0.000    0.000    0.000              0.000           Automatic        0       180
    54X    31   11.742       L/r    8.895   Rupture  141   5.00   11.742     12.440     12.656   19.184    8.895
0.000    0.000    0.000    0.000              0.000           Automatic        0       270
    55P    32   11.742       L/r    9.738   Rupture  141   5.00   11.742     24.880     12.656   19.184    9.738
0.000    0.000    0.000    0.000              0.000           Automatic        0       180
    55X    32   11.742       L/r    9.738   Rupture  141   5.00   11.742     24.880     12.656   19.184    9.738
0.000    0.000    0.000    0.000              0.000           Automatic        0       270
   g68P   32a   16.312   Bearing   13.256   Rupture  122   5.00   22.724     24.880     16.312   31.468   13.256
```

```
0.000    0.000    0.000    0.000              0.000          Automatic        0       270
   g68X   32a   16.312   Bearing   13.256   Rupture  122   5.00   22.724     24.880     16.312   31.468   13.256
0.000    0.000    0.000    0.000              0.000          Automatic        0       180
    56P    33   34.023       L/r   43.696  Net Sect  113  12.01   34.023     49.760     67.500   43.696   56.250
0.000    0.000    0.000    0.000              0.000          Automatic        0       270          Rupture capacity
for member "56P" controlled by RDis, not RBsh.
    56X    33   34.023       L/r   43.696  Net Sect  113  12.01   34.023     49.760     67.500   43.696   56.250
0.000    0.000    0.000    0.000              0.000          Automatic        0       180          Rupture capacity
for member "56X" controlled by RDis, not RBsh.
   56XY    33   34.023       L/r   43.696  Net Sect  113  12.01   34.023     49.760     67.500   43.696   56.250
0.000    0.000    0.000    0.000              0.000          Automatic        0       270          Rupture capacity for
member "56XY" controlled by RDis, not RBsh.
    56Y    33   34.023       L/r   43.696  Net Sect  113  12.01   34.023     49.760     67.500   43.696   56.250
0.000    0.000    0.000    0.000              0.000          Automatic        0       180          Rupture capacity
for member "56Y" controlled by RDis, not RBsh.
    57P    33   24.880     Shear   21.984   Rupture   92   5.00   37.680     24.880     33.750   43.696   21.984
0.000    0.000    0.000    0.000              0.000          Automatic        0       180
    57Y    33   24.880     Shear   21.984   Rupture   92   5.00   37.680     24.880     33.750   43.696   21.984
0.000    0.000    0.000    0.000              0.000          Automatic        0       270
    58P    34   30.173       L/r   36.271  Net Sect  105   8.14   30.173     37.320     50.625   36.271   42.187
0.000    0.000    0.000    0.000              0.000          Automatic        0       270          Rupture capacity
for member "58P" controlled by RDis, not RBsh.
    58X    34   30.173       L/r   36.271  Net Sect  105   8.14   30.173     37.320     50.625   36.271   42.187
0.000    0.000    0.000    0.000              0.000          Automatic        0       180          Rupture capacity
for member "58X" controlled by RDis, not RBsh.
   58XY    34   30.173       L/r   36.271  Net Sect  105   8.14   30.173     37.320     50.625   36.271   42.187
0.000    0.000    0.000    0.000              0.000          Automatic        0       270          Rupture capacity for
member "58XY" controlled by RDis, not RBsh.
    58Y    34   30.173       L/r   36.271  Net Sect  105   8.14   30.173     37.320     50.625   36.271   42.187
0.000    0.000    0.000    0.000              0.000          Automatic        0       180          Rupture capacity
for member "58Y" controlled by RDis, not RBsh.
    59P    34   24.880     Shear   21.984   Rupture  101   5.00   30.742     24.880     33.750   36.271   21.984
0.000    0.000    0.000    0.000              0.000          Automatic        0       180
    59Y    34   24.880     Shear   21.984   Rupture  101   5.00   30.742     24.880     33.750   36.271   21.984
0.000    0.000    0.000    0.000              0.000          Automatic        0       270
    60P    35   15.686       L/r   21.984   Rupture  164  10.54   15.686     24.880     33.750   28.846   21.984
0.000    0.000    0.000    0.000              0.000          Automatic        0   187.957
    60Y    35   15.686       L/r   21.984   Rupture  164  10.54   15.686     24.880     33.750   28.846   21.984
0.000    0.000    0.000    0.000              0.000          Automatic        0   262.043
    61P    35   15.686       L/r   21.984   Rupture  164  10.54   15.686     24.880     33.750   28.846   21.984
0.000    0.000    0.000    0.000              0.000          Automatic        0   187.669
    61X    35   15.686       L/r   21.984   Rupture  164  10.54   15.686     24.880     33.750   28.846   21.984
0.000    0.000    0.000    0.000              0.000          Automatic        0   262.331
    62P    36   24.880     Shear   24.880     Shear  135  14.42   28.880     24.880     33.750   36.271   25.078
0.000    0.000    0.000    0.000              0.000          Automatic        0   187.957
    62Y    36   24.880     Shear   24.880     Shear  135  14.42   28.880     24.880     33.750   36.271   25.078
0.000    0.000    0.000    0.000              0.000          Automatic        0   262.043
    63P    36   24.880     Shear   24.880     Shear  135  14.42   28.880     24.880     33.750   36.271   25.078
```

```
0.000    0.000    0.000    0.000              0.000          Automatic        0   187.669
    63X    36   24.880     Shear   24.880     Shear  135  14.42   28.880     24.880     33.750   36.271   25.078
0.000    0.000    0.000    0.000              0.000          Automatic        0   262.331
    64P    37   20.635       L/r   24.880     Shear  192  19.96   20.635     24.880     33.750   44.624   28.125
0.000    0.000    0.000    0.000              0.000          Automatic        0   187.957          Rupture capacity
for member "64P" controlled by RDis, not RBsh.
    64Y    37   20.635       L/r   24.880     Shear  192  19.96   20.635     24.880     33.750   44.624   28.125
0.000    0.000    0.000    0.000              0.000          Automatic        0   262.043          Rupture capacity
for member "64Y" controlled by RDis, not RBsh.
    65P    37   20.635       L/r   24.880     Shear  192  19.96   20.635     24.880     33.750   44.624   28.125
0.000    0.000    0.000    0.000              0.000          Automatic        0   187.669          Rupture capacity
for member "65P" controlled by RDis, not RBsh.
    65X    37   20.635       L/r   24.880     Shear  192  19.96   20.635     24.880     33.750   44.624   28.125
0.000    0.000    0.000    0.000              0.000          Automatic        0   262.331          Rupture capacity
for member "65X" controlled by RDis, not RBsh.
    66P    38    4.594       L/r   18.035   Rupture  257   9.15    4.594     24.880     25.312   19.184   18.035
0.000    0.000    0.000    0.000              0.000          Automatic        0   280.666
    66X    38    4.594       L/r   18.035   Rupture  257   9.15    4.594     24.880     25.312   19.184   18.035
0.000    0.000    0.000    0.000              0.000          Automatic        0   169.334
   66XY    38    4.594       L/r   18.035   Rupture  257   9.15    4.594     24.880     25.312   19.184   18.035
0.000    0.000    0.000    0.000              0.000          Automatic        0   280.666
    66Y    38    4.594       L/r   18.035   Rupture  257   9.15    4.594     24.880     25.312   19.184   18.035
0.000    0.000    0.000    0.000              0.000          Automatic        0   169.334
    67P    39    3.334       L/r   21.984   Rupture  358  12.66    3.334     24.880     33.750   24.985   21.984
0.000    0.000    0.000    0.000              0.000          Automatic        0   273.845
    67X    39    3.334       L/r   21.984   Rupture  358  12.66    3.334     24.880     33.750   24.985   21.984
0.000    0.000    0.000    0.000              0.000          Automatic        0   176.155
   67XY    39    3.334       L/r   21.984   Rupture  358  12.66    3.334     24.880     33.750   24.985   21.984
0.000    0.000    0.000    0.000              0.000          Automatic        0   273.845
    67Y    39    3.334       L/r   21.984   Rupture  358  12.66    3.334     24.880     33.750   24.985   21.984
0.000    0.000    0.000    0.000              0.000          Automatic        0   176.155
    68P    40    4.262       L/r   16.488   Rupture  269   9.56    4.262     24.880     25.312   19.184   16.488
0.000    0.000    0.000    0.000              0.000          Automatic        0   279.581
    68X    40    4.262       L/r   16.488   Rupture  269   9.56    4.262     24.880     25.312   19.184   16.488
0.000    0.000    0.000    0.000              0.000          Automatic        0   170.419
   68XY    40    4.262       L/r   16.488   Rupture  269   9.56    4.262     24.880     25.312   19.184   16.488
0.000    0.000    0.000    0.000              0.000          Automatic        0   279.581
    68Y    40    4.262       L/r   16.488   Rupture  269   9.56    4.262     24.880     25.312   19.184   16.488
0.000    0.000    0.000    0.000              0.000          Automatic        0   170.419
```

The model contains 232 angle members.

Sum of Unfactored Dead Load and Drag Areas From Equipment, Input and Calculated:

Joint Label	Dead Load (kips)	X-Drag Area (ft^2)	Y-Drag Area (ft^2)

1P	0.117	5.508	4.079
2P	0.0653	3.479	1.146
3P	0.0716	4.314	2.310
4P	0.116	6.503	1.816
5P	0.174	6.730	6.074
6P	0.0662	3.859	1.790
0P	0.262	10.305	10.305
1X	0.117	5.508	4.079
1XY	0.117	5.508	4.079
1Y	0.117	5.508	4.079
2X	0.0653	3.479	1.146
3X	0.0716	4.314	2.310
4X	0.116	6.503	1.816
5X	0.174	6.730	6.074
5XY	0.174	6.730	6.074
5Y	0.174	6.730	6.074
6X	0.0662	3.859	1.790
0X	0.262	10.305	10.305
0XY	0.262	10.305	10.305
0Y	0.262	10.305	10.305
1aS	0.131	5.747	5.154
1bS	0.0876	3.834	3.834
1cS	0.122	5.544	4.846
1dS	0.166	7.268	5.518
1eS	0.144	5.976	6.222
11S	0.029	1.042	1.042
1d1S	0.029	1.042	1.042
5aS	0.156	6.137	6.137
5bS	0.198	7.709	7.709
5cS	0.329	12.206	12.206
5dS	0.556	20.462	20.462
5eS	0.728	25.608	25.608
51S	0.0217	1.042	1.042
5d1S	0.2	4.806	4.806
5e1S	0.347	8.316	8.316
1aX	0.131	5.747	5.154
1aXY	0.131	5.747	5.154
1aY	0.131	5.747	5.154
1bX	0.0876	3.834	3.834
1bXY	0.0876	3.834	3.834
1bY	0.0876	3.834	3.834
1cX	0.122	5.544	4.846
1cXY	0.122	5.544	4.846
1cY	0.122	5.544	4.846
1dX	0.166	7.268	5.518
1dXY	0.166	7.268	5.518
1dY	0.166	7.268	5.518
1eX	0.144	5.976	6.222

1eXY	0.144	5.976	6.222
1eY	0.144	5.976	6.222
5aX	0.156	6.137	6.137
5aXY	0.156	6.137	6.137
5aY	0.156	6.137	6.137
5bX	0.198	7.709	7.709
5bXY	0.198	7.709	7.709
5bY	0.198	7.709	7.709
5cX	0.329	12.206	12.206
5cXY	0.329	12.206	12.206
5cY	0.329	12.206	12.206
5dX	0.556	20.462	20.462
5dXY	0.556	20.462	20.462
5dY	0.556	20.462	20.462
5eX	0.728	25.608	25.608
5eXY	0.728	25.608	25.608
5eY	0.728	25.608	25.608
Total	13.9	544.697	502.992

Unadjusted Dead Load and Drag Areas by Section:

Section Label	Unfactored Dead Load (kips)	X-Drag Area All (ft^2)	Y-Drag Area All (ft^2)	X-Drag Area Face (ft^2)	Y-Drag Area Face (ft^2)
Cage	2.963	121.602	123.685	46.426	47.468
TXarm	0.512	28.507	11.742	15.588	5.871
MXarm	0.462	26.010	7.264	13.005	3.632
BXarm	0.265	15.436	7.158	7.718	3.579
Std Body	7.651	270.704	270.704	99.515	99.515
20LE	2.095	82.438	82.438	32.806	32.806
Total	13.947	544.697	502.992	215.057	192.871

Angle Member Weights and Surface Areas by Section:

Section Label	Unfactored Weight (kips)	Factored Weight (kips)	Unfactored Surface Area (ft^2)	Factored Surface Area (ft^2)
Cage	2.963	3.170	575.652	615.948
TXarm	0.512	0.666	113.843	147.996
MXarm	0.462	0.550	94.045	111.914
BXarm	0.265	0.334	61.240	77.163
Std Body	7.651	8.951	1271.284	1487.403
20LE	2.095	2.975	345.456	490.548
Total	13.947	16.645	2461.521	2930.971

Section Joint Information:

Section Label	Joint Label	Joint Elevation (ft)
Cage	1P	101.000
Cage	1aS	96.000
Cage	1X	101.000
Cage	1aX	96.000
Cage	1XY	101.000
Cage	1aXY	96.000
Cage	1Y	101.000
Cage	1aY	96.000
Cage	1bS	92.000
Cage	1bX	92.000
Cage	1bXY	92.000
Cage	1bY	92.000
Cage	1cS	88.000
Cage	1cX	88.000
Cage	1cXY	88.000
Cage	1cY	88.000
Cage	1dS	84.000
Cage	1dX	84.000
Cage	1dXY	84.000
Cage	1dY	84.000
Cage	1eS	79.000
Cage	1eX	79.000
Cage	1eXY	79.000
Cage	1eY	79.000
Cage	5P	74.000
Cage	5X	74.000
Cage	5XY	74.000
Cage	5Y	74.000
Cage	1d1S	84.000
Cage	11S	101.000
Cage	51S	74.000
TXarm	2P	101.000
TXarm	3P	96.000
TXarm	2X	101.000
TXarm	3X	96.000
TXarm	1P	101.000
TXarm	1X	101.000
TXarm	1XY	101.000
TXarm	1Y	101.000
TXarm	1aS	96.000
TXarm	1aX	96.000
TXarm	1aXY	96.000
TXarm	1aY	96.000

MXarm	4P	84.000
MXarm	1dS	84.000
MXarm	4X	84.000
MXarm	1dX	84.000
MXarm	1dXY	84.000
MXarm	1dY	84.000
MXarm	1cS	88.000
MXarm	1cX	88.000
MXarm	1cXY	88.000
MXarm	1cY	88.000
BXarm	6P	74.000
BXarm	5P	74.000
BXarm	6X	74.000
BXarm	5X	74.000
BXarm	5XY	74.000
BXarm	5Y	74.000
BXarm	1eS	79.000
BXarm	1eX	79.000
BXarm	1eXY	79.000
BXarm	1eY	79.000
Std Body	5P	74.000
Std Body	5aS	69.000
Std Body	5X	74.000
Std Body	5aX	69.000
Std Body	5XY	74.000
Std Body	5aXY	69.000
Std Body	5Y	74.000
Std Body	5aY	69.000
Std Body	5bS	62.000
Std Body	5bX	62.000
Std Body	5bXY	62.000
Std Body	5bY	62.000
Std Body	5cS	54.000
Std Body	5cX	54.000
Std Body	5cXY	54.000
Std Body	5cY	54.000
Std Body	5dS	40.000
Std Body	5dX	40.000
Std Body	5dXY	40.000
Std Body	5dY	40.000
Std Body	5eS	20.000
Std Body	5eX	20.000
Std Body	5eXY	20.000
Std Body	5eY	20.000
Std Body	5d1S	40.000
Std Body	5e1S	20.000
20LE	5eS	20.000
20LE	0P	0.000

20LE	5eX	20.000
20LE	0X	0.000
20LE	5eXY	20.000
20LE	0XY	0.000
20LE	5eY	20.000
20LE	0Y	0.000

Sections Information:

Section Label	Top Z (ft)	Bottom Z (ft)	Joint Count	Member Count	Tran. Face Top Width (ft)	Tran. Face Bot Width (ft)	Tran. Face Gross Area (ft^2)	Long. Face Top Width (ft)	Long. Face Bot Width (ft)	Long. Face Gross Area (ft^2)
Cage	101.000	74.000	31	110	5.00	5.00	135.000	5.00	5.00	135.000
TXarm	101.000	96.000	12	14	5.00	5.00	25.000	27.50	19.50	117.500
MXarm	88.000	84.000	10	8	5.00	5.00	20.000	5.00	28.50	67.000
BXarm	79.000	74.000	10	8	5.00	5.00	25.000	5.00	20.50	63.750
Std Body	74.000	20.000	26	80	5.00	19.96	673.905	5.00	19.96	673.905
20LE	20.000	0.000	8	12	19.96	25.50	454.595	19.96	25.50	454.595

*** Insulator Data

Clamp Properties:

Label	Stock Number	Holding Capacity (lbs)	Hardware Capacity (lbs)	Notes
Ground Wire		2e+04	0	
STATIC		2.5e+04	0	
Collar		6e+04	0	

Clamp Insulator Connectivity:

Clamp Label	Structure And Tip Attach	Property Set	Min. Required Vertical Load (uplift) (lbs)
11	2X	Ground Wire	No Limit
21	2P	Ground Wire	No Limit
31	3X	STATIC	No Limit
41	3P	STATIC	No Limit
32	4X	STATIC	No Limit
42	4P	STATIC	No Limit
33	6X	STATIC	No Limit
43	6P	STATIC	No Limit
PM-1	11S	Collar	No Limit

PM-2 1d1S Collar No Limit

Suspension Properties:

Label	Stock Length	Weight	Wind	Tension	Top Rect	Top Rect	Bot. Rect	Bot. Rect	Vert. Rect	Vert. Rect	Hardware	Notes
Draw Number	Rigid (ft)	(lbs)	Area (ft^2)	Capacity (lbs)	Width (ft)	Height (ft)	Width (ft)	Height (ft)	Width (ft)	Height (ft)	Capacity (lbs)	
Coax	0.1	0	0	5e+04	0	0	0	0	0	0	0	Sheds No
PM-SC(4)5/8	0.1	0	0	1.804e+04	0	0	0	0	0	0	0	Sheds No

Suspension Insulator Connectivity:

Suspension Label	Structure Attach	Tip Label	Property Set	Cond. 1 Minimum Swing (deg)	Cond. 1 Maximum Swing (deg)	Cond. 2 Minimum Swing (deg)	Cond. 2 Maximum Swing (deg)	Cond. 3 Minimum Swing (deg)	Cond. 3 Maximum Swing (deg)	Cond. 4 Minimum Swing (deg)	Cond. 4 Maximum Swing (deg)	Min. Required Vertical Load (uplift) (lbs)
CX1	5eX	CX1	Coax	0.00	180.00	0.00	180.00	0.00	180.00	0.00	180.00	No Limit
CX2	5dX	CX2	Coax	0.00	180.00	0.00	180.00	0.00	180.00	0.00	180.00	No Limit
CX3	5cX	CX3	Coax	0.00	180.00	0.00	180.00	0.00	180.00	0.00	180.00	No Limit
CX4	5bX	CX4	Coax	0.00	180.00	0.00	180.00	0.00	180.00	0.00	180.00	No Limit
CX5	5aX	CX5	Coax	0.00	180.00	0.00	180.00	0.00	180.00	0.00	180.00	No Limit
CX6	5X	CX6	Coax	0.00	180.00	0.00	180.00	0.00	180.00	0.00	180.00	No Limit
CX7	1eX	CX7	Coax	0.00	180.00	0.00	180.00	0.00	180.00	0.00	180.00	No Limit
CX8	1dX	CX8	Coax	0.00	180.00	0.00	180.00	0.00	180.00	0.00	180.00	No Limit
CX9	1cX	CX9	Coax	0.00	180.00	0.00	180.00	0.00	180.00	0.00	180.00	No Limit
CX10	1bX	CX10	Coax	0.00	180.00	0.00	180.00	0.00	180.00	0.00	180.00	No Limit
CX11	1aX	CX11	Coax	0.00	180.00	0.00	180.00	0.00	180.00	0.00	180.00	No Limit
CX12	1X	CX12	Coax	0.00	180.00	0.00	180.00	0.00	180.00	0.00	180.00	No Limit
PM-3	51S	PM-3	PM-SC(4)5/8	0.00	180.00	0.00	180.00	0.00	180.00	0.00	180.00	No Limit
PM-4	5d1S	PM-4	PM-SC(4)5/8	0.00	180.00	0.00	180.00	0.00	180.00	0.00	180.00	No Limit
PM-5	5e1S	PM-5	PM-SC(4)5/8	0.00	180.00	0.00	180.00	0.00	180.00	0.00	180.00	No Limit

*** Loads Data

Loads from file: G:\Transmission\Eversource\2019\375_Crown Castle\37519-3029_Tower 1321_841299_AT&T CT2043\37519-3029.001.6000_SA_1773682\Rev 1\Engineering Docs\PLS-Tower\37519-3029.001.6125.lca

Insulator dead and wind loads are already included in the point loads printed below.

Loading Method Parameters:

Structure Height Summary (used for calculating wind/ice adjust with height):
Z of ground for wind height adjust 0.00 (ft) and structure Z coordinate that will be put on the centerline ground profile in PLS-CADD.

Ground elevation shift	0.00	(ft)
Z of ground with shift	0.00	(ft)
Z of structure top (highest joint)	101.00	(ft)
Structure height	101.00	(ft)
Structure height above ground	101.00	(ft)
Tower Shape	Rectangular	

Load distributed evenly among joints in section for section based load cases

Vector Load Cases:

Longit. Wind Pressure (psf)	Ice Thick. (in)	Ice Density (lbs/ft^3)	Ice Temperature (deg F)	Load Case Description	Dead Load Factor	Wind Displ. Factor	Joint Area Factor	SF for Steel Poles Tubular Arms and Towers	SF for Guys and Cables	SF for Insuls.	SF for Hardware	SF For Found.	Point Loads	Wind/Ice Model	Trans. Wind Pressure (psf)
0	0.000	56.000	60.0	250B: NESC Heavy	1.5000	2.5000		1.00000	1.0000	1.0000	0.0000	1.0000	25 loads	Wind on Face	-4
0	0.000	56.000	60.0	250C: Extreme Wind (Trans.)	1.0000	1.0000		1.00000	1.0000	1.0000	0.0000	1.0000	25 loads	NESC 2007	-31

Point Loads for Load Case "250B: NESC Heavy":

Joint Label	Vertical Load (lbs)	Transverse Load (lbs)	Longitudinal Load (lbs)	Load Comment

2X	1359	-1264	0
2P	1359	-1264	0
3X	3394	-1824	804
3P	3683	-1891	-120
4X	3401	-1833	1687
4P	3495	-1872	-470
6X	3417	-1845	2222
6P	3474	-1873	1893
CX1	817	-771	0
CX2	463	-437	0
CX3	300	-283	0
CX4	204	-193	0
CX5	164	-154	0
CX6	135	-127	0
CX7	134	-126	0
CX8	120	-114	0
CX9	107	-101	0
CX10	107	-101	0
CX11	120	-114	0
CX12	67	-63	0
11S	0	-7167	0
1d1S	0	5797	0
PM-3	0	-2533	0
PM-4	0	-496	0
PM-5	0	-451	0

Section Load Case Information (Standard) for "250B: NESC Heavy":

Section Label	Z of Top (ft)	Z of Bottom (ft)	Ave. Elev. Above Ground (ft)	Res. Adj. Wind Pres. (psf)	Tran Adj. Wind Pres. (psf)	Tran Drag Coef	Tran Wind Load (lbs)	Long Adj. Wind Pres. (psf)	Long Drag Coef	Long Wind Load (lbs)	Ice Weight (lbs)	Total Weight (lbs)
Cage	101.00	74.00	87.50	10.00	-10.00	3.200	-1519.0	0.00	3.200	0.0	0	4755
TXarm	101.00	96.00	98.50	10.00	-10.00	5.100	-299.4	0.00	3.570	0.0	0	999
MXarm	88.00	84.00	86.00	10.00	-10.00	4.550	-165.3	0.00	3.420	0.0	0	825
BXarm	79.00	74.00	76.50	10.00	-10.00	4.550	-162.9	0.00	3.560	0.0	0	500
Std Body	74.00	20.00	47.00	10.00	-10.00	3.630	-3612.4	0.00	3.630	0.0	0	13427
20LE	20.00	0.00	10.00	10.00	-10.00	4.380	-1436.9	0.00	4.380	0.0	0	4463

Point Loads for Load Case "250C: Extreme Wind (Trans.)":

Joint Label	Vertical Load (lbs)	Transverse Load (lbs)	Longitudinal Load (lbs)	Load Comment
2X	415	-860	0	

2P	415	-860	0
3X	1494	-2367	590
3P	1646	-2401	270
4X	1493	-2313	1046
4P	1552	-2329	72
6X	1497	-2267	1302
6P	1533	-2280	1237
CX1	128	-1276	0
CX2	73	-723	0
CX3	47	-468	0
CX4	32	-319	0
CX5	26	-255	0
CX6	21	-211	0
CX7	21	-209	0
CX8	19	-188	0
CX9	17	-167	0
CX10	17	-167	0
CX11	19	-188	0
CX12	11	-104	0
11S	0	-26794	0
1d1S	0	21680	0
PM-3	0	-9675	0
PM-4	0	-2043	0
PM-5	0	-1810	0

Section Load Case Information (Code) for "250C: Extreme Wind (Trans.)":

Section Label	Z of Top (ft)	Z of Bottom (ft)	Ave. Elev. Above Ground (ft)	Res. Adj. Wind Pres. (psf)	Tran Adj. Wind Pres. (psf)	Tran Angle Face Area (ft^2)	Tran Gross Area (ft^2)	Tran Soli-dity Ratio	Tran Angle Drag Coef	Tran Wind Load (lbs)	Long Adj. Wind Pres. (psf)	Long Angle Face Area (ft^2)	Long Gross Area (ft^2)	Long Soli-dity Ratio	Long Angle Drag Coef	Long Wind Load (lbs)	Ice Weight (lbs)	Total Weight (lbs)
Cage	101.00	74.00	87.50	31.41	-31.41	47.47	135.00	0.352	3.200	-4770.4	0.00	46.43	135.00	0.344	3.200	0.0	0	3170
TXarm	101.00	96.00	98.50	31.41	-31.41	9.33	25.00	0.373	3.200	-938.1	0.00	17.46	117.50	0.149	3.200	0.0	0	666
MXarm	88.00	84.00	86.00	31.41	-31.41	5.16	20.00	0.258	3.200	-518.3	0.00	13.92	67.00	0.208	3.200	0.0	0	550
BXarm	79.00	74.00	76.50	31.41	-31.41	5.08	25.00	0.203	3.200	-510.8	0.00	8.57	63.75	0.134	3.200	0.0	0	334
Std Body	74.00	20.00	47.00	31.41	-31.41	112.45	673.91	0.167	3.200	-11301.0	0.00	112.45	673.91	0.167	3.200	0.0	0	8951
20LE	20.00	0.00	10.00	31.41	-31.41	44.94	454.59	0.099	3.200	-4516.7	0.00	44.94	454.59	0.099	3.200	0.0		

0 2975

*** Analysis Results:

Maximum element usage is 93.36% for Angle "6Y" in load case "250C: Extreme Wind (Trans.)"
Maximum insulator usage is 53.63% for Suspension "PM-3" in load case "250C: Extreme Wind (Trans.)"

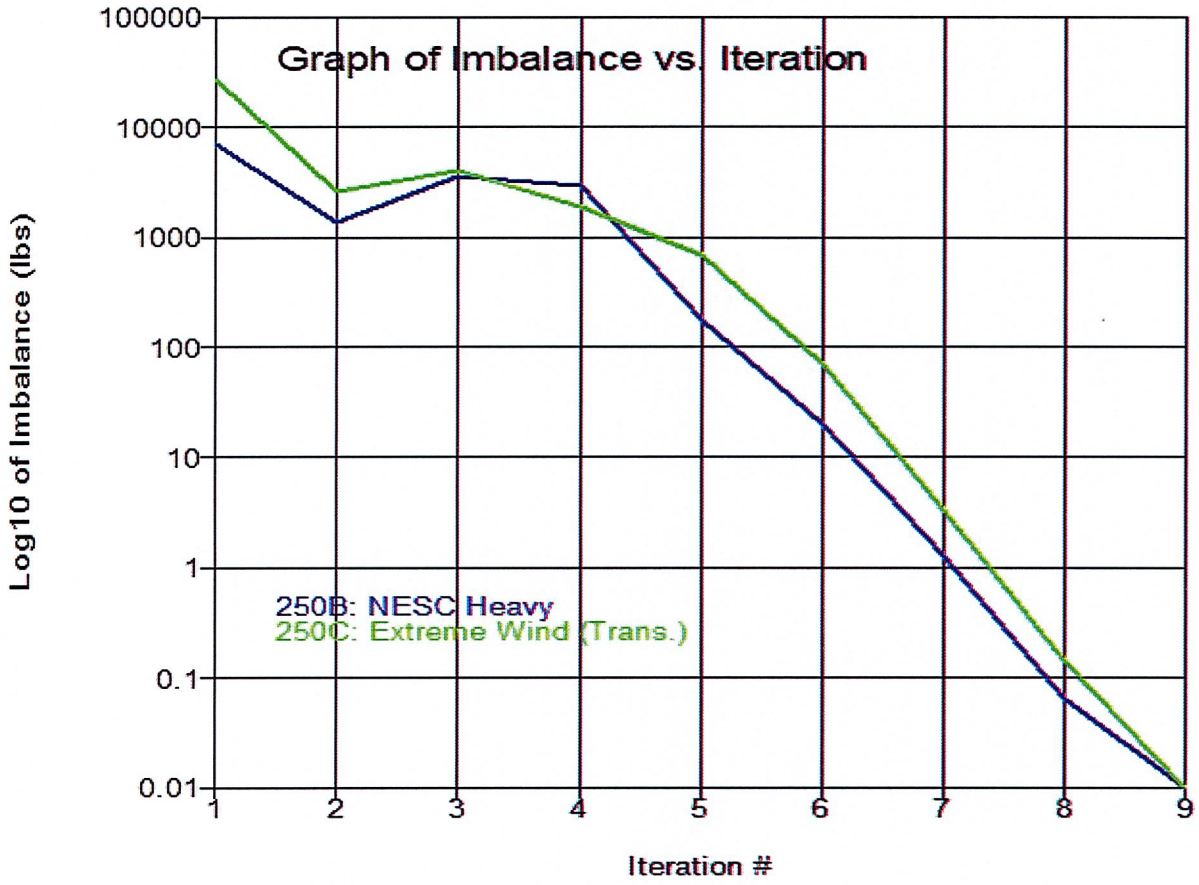

Angle Forces For All Load Cases:
Positive for tension - negative for compression

Group Label	Angle Label	Max. Usage For All LC %	Max. Tens. For All LC (kips)	Max. Comp. For All LC (kips)	LC 1 (kips)	LC 2 (kips)
1	1P	10.25	6.550	0.000	0.136	6.550

1	1X	9.22	0.000	-8.250	-4.778	-8.250
1	1XY	9.34	0.000	-8.362	-4.595	-8.362
1	1Y	9.81	6.266	-0.312	-0.312	6.266
2	2P	32.71	20.900	0.000	5.468	20.900
2	2X	25.08	0.000	-23.394	-10.814	-23.394
2	2XY	24.33	0.000	-22.692	-9.513	-22.692
2	2Y	32.75	20.927	0.000	4.935	20.927
3	3P	48.92	34.338	0.000	9.543	34.338
3	3X	41.48	0.000	-38.687	-18.220	-38.687
3	3XY	39.88	0.000	-37.193	-16.361	-37.193
3	3Y	49.54	34.773	0.000	9.409	34.773
4	4P	71.67	45.792	0.000	12.670	45.792
4	4X	55.42	0.000	-51.687	-24.430	-51.687
4	4XY	53.71	0.000	-50.099	-23.074	-50.099
4	4Y	72.87	46.563	0.000	13.289	46.563
5	5P	86.01	54.958	0.000	16.937	54.958
5	5X	69.56	0.000	-62.249	-29.462	-62.249
5	5XY	65.82	0.000	-58.902	-27.474	-58.902
5	5Y	88.85	56.773	0.000	19.469	56.773
6	6P	91.84	64.009	0.000	21.459	64.009
6	6X	82.61	0.000	-73.928	-38.077	-73.928
6	6XY	75.33	0.000	-67.410	-33.450	-67.410
6	6Y	93.36	65.073	0.000	23.051	65.073
7	7P	74.87	74.237	0.000	25.830	74.237
7	7X	90.29	0.000	-88.455	-48.146	-88.455
7	7XY	80.16	0.000	-78.533	-38.673	-78.533
7	7Y	78.78	78.109	0.000	30.726	78.109
8	8P	81.13	73.143	0.000	24.432	73.143
8	8X	90.75	0.000	-92.063	-53.321	-92.063
8	8XY	79.74	0.000	-80.893	-40.135	-80.893
8	8Y	89.88	81.033	0.000	33.640	81.033
9	9P	69.33	69.894	0.000	23.027	69.894
9	9X	77.53	0.000	-89.824	-53.587	-89.824
9	9XY	67.50	0.000	-78.197	-38.352	-78.197
9	9Y	79.32	79.965	0.000	34.501	79.965
10	10P	64.96	65.486	0.000	21.490	65.486
10	10X	75.31	0.000	-92.193	-57.061	-92.193
10	10XY	65.57	0.000	-80.275	-40.378	-80.275
10	10Y	75.88	76.503	0.000	34.156	76.503
11	11P	62.72	63.231	0.000	18.570	63.231
11	11X	77.85	0.000	-96.887	-59.633	-96.887
11	11XY	68.48	0.000	-85.227	-44.758	-85.227
11	11Y	76.30	76.923	0.000	34.004	76.923
12	12P	61.18	65.783	0.000	16.154	65.783
12	12X	82.68	0.000	-102.906	-62.602	-102.906
12	12XY	73.10	0.000	-90.982	-49.128	-90.982
12	12Y	77.00	82.799	0.000	38.101	82.799
13	13P	53.10	10.187	0.000	3.143	10.187

13	13X	59.88	0.000	-10.469	-3.639	-10.469
13	13XY	59.09	0.000	-10.330	-3.497	-10.330
13	13Y	53.55	10.273	0.000	3.191	10.273
13	14P	4.43	0.000	-0.579	-0.579	-0.173
13	14X	0.27	0.018	-0.036	-0.036	0.018
13	14XY	6.60	0.000	-0.862	-0.862	-0.350
13	14Y	0.64	0.023	-0.084	0.023	-0.084
14	15P	26.35	0.000	-1.887	-1.887	-0.585
14	15X	26.31	0.000	-1.884	-1.884	-0.582
15	16P	43.80	10.897	0.000	2.830	10.897
15	16X	48.68	0.000	-11.821	-5.245	-11.821
15	16XY	50.02	0.000	-12.147	-6.396	-12.147
15	16Y	44.47	11.063	0.000	3.812	11.063
15	17P	0.68	0.170	-0.014	-0.014	0.170
15	17X	4.59	1.143	0.000	1.143	0.669
15	17XY	1.44	0.000	-0.349	-0.349	-0.204
15	17Y	2.61	0.650	-0.003	0.650	-0.003
15	18P	49.48	12.310	0.000	5.644	12.310
15	18X	45.60	0.000	-11.072	-2.696	-11.072
15	18XY	46.12	0.000	-11.198	-3.665	-11.198
15	18Y	50.22	12.494	0.000	6.760	12.494
15	19P	3.02	0.285	-0.574	-0.574	0.285
15	19X	0.90	0.223	-0.044	0.223	-0.044
15	19XY	6.73	0.000	-1.276	-1.276	-0.926
15	19Y	0.40	0.099	0.000	0.076	0.099
15	20P	46.12	11.474	0.000	3.982	11.474
15	20X	47.54	0.000	-11.542	-3.320	-11.542
15	20XY	48.00	0.000	-11.656	-4.789	-11.656
15	20Y	50.79	12.637	0.000	6.546	12.637
15	21P	16.83	4.188	0.000	0.788	4.188
15	21X	19.92	0.000	-3.779	-0.885	-3.779
15	21XY	26.54	0.000	-5.034	-2.905	-5.034
15	21Y	15.78	3.925	0.000	1.464	3.925
16	22P	22.79	6.574	0.000	1.495	6.574
16	22X	25.24	0.000	-7.344	-2.504	-7.344
16	22XY	29.34	0.000	-8.538	-7.312	-8.538
16	22Y	30.81	8.886	0.000	7.703	8.886
16	23P	27.15	7.832	0.000	0.920	7.832
16	23X	28.33	0.000	-6.872	-0.526	-6.872
16	23XY	43.99	0.000	-10.670	-7.047	-10.670
16	23Y	30.61	8.831	0.000	4.752	8.831
16	24P	23.81	6.868	0.000	2.259	6.868
16	24X	28.49	0.000	-8.290	-4.098	-8.290
16	24XY	26.75	0.000	-7.782	-5.837	-7.782
16	24Y	29.91	8.627	0.000	6.956	8.627
16	25P	36.11	10.416	0.000	2.609	10.416
16	25X	39.04	0.000	-9.470	-2.599	-9.470
16	25XY	55.26	0.000	-13.403	-9.183	-13.403

16	25Y	36.78	10.609	0.000	4.976	10.609
17	26P	12.07	0.000	-3.003	-3.003	-2.872
17	26X	7.59	1.888	0.000	1.402	1.888
17	26XY	12.22	0.000	-3.041	-3.041	-0.013
17	26Y	10.45	2.599	-0.162	2.599	-0.162
17	27P	10.58	2.632	-0.017	-0.017	2.632
17	27X	8.23	2.048	-1.594	2.048	-1.594
17	27XY	21.29	0.000	-5.297	-5.297	-4.431
17	27Y	8.30	2.064	0.000	2.060	2.064
18	28P	6.14	0.000	-1.129	-1.096	-1.129
18	28X	8.89	2.213	0.000	2.213	1.602
18	28XY	12.13	0.000	-2.230	-2.230	-0.525
18	28Y	9.89	2.461	0.000	2.461	0.218
18	29P	9.18	0.000	-1.507	-1.507	-1.246
18	29X	16.35	4.067	0.000	4.067	3.221
18	29XY	9.57	1.051	-1.760	-1.760	1.051
18	29Y	10.50	0.148	-1.723	0.148	-1.723
19	30P	8.88	0.000	-1.214	-1.214	-0.457
19	30X	3.23	0.804	0.000	0.804	0.214
19	30XY	13.55	0.000	-1.854	-1.854	-0.813
19	30Y	7.43	1.848	0.000	1.848	0.725
19	31P	4.60	1.145	-0.210	-0.210	1.145
19	31X	5.62	1.261	-0.699	1.261	-0.699
19	31XY	23.18	0.000	-3.171	-3.171	-2.535
19	31Y	4.08	1.014	0.000	1.014	0.783
20	32P	60.68	0.000	-2.327	-2.327	-0.859
20	32X	52.15	0.000	-2.000	-1.326	-2.000
20	32XY	61.58	0.000	-2.362	-2.362	-1.574
20	32Y	5.62	1.398	0.000	1.398	0.971
20	33P	30.61	7.615	0.000	2.396	7.615
20	33X	14.77	3.674	0.000	3.674	1.426
20	33XY	0.00	0.000	0.000	0.000	0.000
20	33Y	29.23	7.272	0.000	3.445	7.272
21	34P	45.37	3.423	-0.970	-0.970	3.423
21	34X	0.00	0.000	0.000	0.000	0.000
21	34XY	0.00	0.000	0.000	0.000	0.000
21	34Y	26.02	5.720	0.000	5.577	5.720
21	35P	39.43	8.668	0.000	3.482	8.668
21	35X	4.32	0.950	0.000	0.950	0.000
21	35XY	0.00	0.000	0.000	0.000	0.000
21	35Y	33.30	7.320	0.000	2.517	7.320
22	36P	63.58	7.541	0.000	0.850	7.541
22	36X	0.00	0.000	0.000	0.000	0.000
22	36XY	0.00	0.000	0.000	0.000	0.000
22	36Y	62.00	7.353	0.000	5.294	7.353
22	37P	61.49	7.292	0.000	3.063	7.292
22	37X	0.00	0.000	0.000	0.000	0.000
22	37XY	0.00	0.000	0.000	0.000	0.000

22	37Y	54.80	6.498	0.000	1.956	6.498
23	38P	44.21	0.000	-7.211	-1.481	-7.211
23	38X	54.41	6.621	0.000	0.085	6.621
23	38XY	65.65	7.989	0.000	2.621	7.989
23	38Y	52.42	0.000	-8.551	-4.000	-8.551
23	40P	81.46	9.913	0.000	3.639	9.913
23	40X	56.48	0.000	-9.213	-1.950	-9.213
23	40XY	55.61	0.000	-9.072	-1.419	-9.072
23	40Y	79.96	9.730	0.000	3.081	9.730
24	41P	13.91	3.049	0.000	0.731	3.049
24	41X	16.90	0.000	-3.496	-1.672	-3.496
24	41XY	18.72	0.000	-3.874	-1.052	-3.874
24	41Y	15.61	3.422	0.000	0.114	3.422
25	42P	6.57	0.000	-2.230	-1.848	-2.230
25	42X	8.28	0.000	-2.813	-0.327	-2.813
25	42XY	11.68	0.000	-3.967	-2.196	-3.967
25	42Y	3.16	0.018	-1.074	0.018	-1.074
26	43P	8.20	0.000	-2.894	-1.564	-2.894
26	43X	13.04	0.000	-4.604	-1.326	-4.604
26	43XY	12.67	0.000	-4.473	-1.881	-4.473
26	43Y	8.57	0.000	-3.027	-1.012	-3.027
27	44P	1.36	0.000	-0.296	-0.043	-0.296
27	44X	5.19	1.292	0.000	1.292	0.673
27	44XY	5.13	1.278	0.000	1.278	0.669
27	44Y	1.37	0.000	-0.299	-0.053	-0.299
27	45P	15.52	3.861	0.000	3.861	1.418
27	45Y	16.17	4.022	0.000	4.022	1.625
28	46P	28.95	0.000	-7.203	-3.451	-7.203
28	46X	23.68	5.891	-0.033	-0.033	5.891
28	47P	11.39	0.316	-2.834	0.316	-2.834
28	47X	19.08	4.748	0.000	4.080	4.748
28	48P	4.11	1.023	-0.732	1.023	-0.732
28	48X	6.98	1.737	0.000	1.119	1.737
28	49P	6.95	1.729	0.000	1.729	0.831
28	49X	4.75	1.181	0.000	1.181	0.216
29	50P	17.86	0.000	-5.554	-5.554	-3.464
29	50X	13.78	0.000	-4.286	-4.286	-1.043
29	50XY	8.07	0.263	-2.510	-2.510	0.263
29	50Y	18.63	0.000	-5.795	-5.795	-2.824
29	51P	13.73	0.000	-3.417	-3.417	-1.596
29	51Y	11.16	0.000	-2.776	-2.776	-0.816
30	52P	35.71	3.314	0.000	3.314	1.315
30	52Y	39.64	3.679	0.000	3.679	1.626
30	53P	29.95	2.780	0.000	2.780	1.302
30	53Y	31.66	2.938	0.000	2.938	1.140
31	54P	33.09	0.000	-3.886	-1.815	-3.886
31	54X	38.56	3.430	0.000	0.854	3.430
32	55P	46.33	0.000	-5.439	-2.206	-5.439

32	55X	57.11	5.562	0.000	2.387	5.562
32a	g68P	48.99	0.000	-7.991	-3.241	-7.991
32a	g68X	61.64	8.171	0.000	3.507	8.171
33	56P	15.58	0.000	-5.300	-5.300	-3.583
33	56X	22.03	0.000	-7.494	-7.494	-2.842
33	56XY	3.59	0.813	-1.222	-1.222	0.813
33	56Y	22.52	0.000	-7.662	-7.662	-3.633
33	57P	21.18	0.000	-5.270	-5.270	-2.496
33	57Y	17.46	0.000	-4.344	-4.344	-1.647
34	58P	17.33	0.000	-5.229	-5.229	-3.562
34	58X	17.91	0.000	-5.404	-5.404	-1.898
34	58XY	5.41	1.963	0.000	1.745	1.963
34	58Y	8.64	0.000	-2.608	-2.608	-1.465
34	59P	18.29	0.000	-4.551	-4.551	-2.444
34	59Y	3.23	0.000	-0.804	-0.804	-0.098
35	60P	7.78	1.711	0.000	1.711	1.232
35	60Y	1.97	0.433	0.000	0.433	0.092
35	61P	41.01	0.000	-6.434	-2.598	-6.434
35	61X	5.29	0.517	-0.829	-0.829	0.517
36	62P	9.75	2.426	0.000	2.426	1.485
36	62Y	3.85	0.000	-0.959	-0.959	-0.364
36	63P	36.42	0.000	-9.061	-3.411	-9.061
36	63X	7.58	1.887	-0.718	-0.718	1.887
37	64P	5.73	1.426	-0.989	1.426	-0.989
37	64Y	12.36	0.000	-2.549	-2.549	-2.182
37	65P	39.37	0.000	-8.124	-3.019	-8.124
37	65X	12.47	3.101	0.000	0.623	3.101
38	66P	27.17	4.901	0.000	4.901	1.832
38	66X	23.05	4.156	0.000	4.156	1.500
38	66XY	27.47	4.955	0.000	4.955	2.087
38	66Y	26.33	4.748	0.000	4.748	2.052
39	67P	26.21	5.761	0.000	5.761	2.303
39	67X	21.35	4.694	0.000	4.694	1.643
39	67XY	29.96	6.587	0.000	6.587	3.066
39	67Y	26.69	5.868	0.000	5.868	2.716
40	68P	8.24	1.358	0.000	1.358	0.372
40	68X	20.09	3.313	0.000	3.313	1.188
40	68XY	20.52	3.383	0.000	3.383	1.614
40	68Y	33.40	5.507	0.000	5.507	2.633

*** Analysis Results for Load Case No. 1 "250B: NESC Heavy" - Number of iterations in SAPS 9

Equilibrium Joint Positions and Rotations for Load Case "250B: NESC Heavy":

Joint Label	X-Displ (ft)	Y-Displ (ft)	Z-Displ (ft)	X-Rot (deg)	Y-Rot (deg)	Z-Rot (deg)	X-Pos (ft)	Y-Pos (ft)	Z-Pos (ft)
1P	0.0323	-0.2471	0.004111	0.3357	0.0189	0.1525	2.532	2.253	101
2P	0.003291	-0.2537	0.065	0.2901	0.0249	0.1502	0.003291	13.5	101.1
3P	0.01124	-0.2252	0.04301	0.2789	0.0259	0.1544	0.01124	9.525	96.04
4P	-0.00462	-0.1574	0.0539	0.2179	0.0276	0.1501	-0.00462	14.09	84.05
5P	0.02134	-0.1042	0.001044	0.2137	0.0300	0.1060	2.521	2.396	74
6P	0.008186	-0.1096	0.03226	0.2237	0.0255	0.0956	0.008186	10.14	74.03
0P	0	0	0	-0.0027	0.0180	0.0224	12.75	12.75	0
1X	0.04545	-0.2474	-0.02466	0.3485	0.0288	0.1486	2.545	-2.747	101
1XY	0.04547	-0.2604	-0.02226	0.3453	0.0294	0.1466	-2.455	-2.76	101
1Y	0.03277	-0.2601	0.006381	0.3344	0.0306	0.1410	-2.467	2.24	101
2X	0.07473	-0.254	-0.09767	0.3927	0.0301	0.1501	0.07473	-14	100.9
3X	0.06241	-0.2226	-0.07173	0.4008	0.0284	0.1594	0.06241	-9.973	95.93
4X	0.06843	-0.1536	-0.09883	0.4190	0.0253	0.1662	0.06843	-14.4	83.9
5X	0.03043	-0.1036	-0.01772	0.2103	0.0159	0.1019	2.53	-2.604	73.98
5XY	0.03029	-0.113	-0.01589	0.2286	0.0432	0.1098	-2.47	-2.613	73.98
5Y	0.02121	-0.1132	0.003128	0.2215	0.0116	0.0964	-2.479	2.387	74
6X	0.04724	-0.1078	-0.05694	0.3297	0.0188	0.1320	0.04724	-10.36	73.94
0X	0	0	0	0.0335	0.0337	0.0164	12.75	-12.75	0
0XY	0	0	0	0.0454	0.0041	0.0195	-12.75	-12.75	0
0Y	0	0	0	0.0152	-0.0164	0.0219	-12.75	12.75	0
1aS	0.03041	-0.2174	0.004191	0.3373	0.0259	0.1466	2.53	2.283	96
1bS	0.02826	-0.1937	0.004013	0.3432	0.0288	0.1415	2.528	2.306	92
1cS	0.02645	-0.1703	0.003648	0.3159	0.0223	0.1364	2.526	2.33	88
1dS	0.02485	-0.1496	0.003125	0.2860	0.0228	0.1314	2.525	2.35	84
1eS	0.02286	-0.1248	0.002223	0.2655	0.0158	0.1187	2.523	2.375	79
11S	0.03899	-0.2542	-0.009052	0.3236	0.0277	0.1494	0.03899	-0.2542	101
1d1S	0.03062	-0.1551	-0.008537	0.2827	0.0272	0.1371	0.03062	-0.1551	83.99
5aS	0.01712	-0.08564	0.001799	0.1744	0.0308	0.0954	3.21	3.107	69
5bS	0.01379	-0.06623	0.002377	0.1252	0.0105	0.0784	4.176	4.096	62
5cS	0.01092	-0.04886	0.002892	0.0987	0.0129	0.0679	5.281	5.221	54
5dS	0.006428	-0.02714	0.002824	0.0688	0.0061	0.0502	7.216	7.182	40
5eS	0.001531	-0.008562	0.001678	0.0662	-0.0296	0.0253	9.981	9.971	20
51S	0.02571	-0.1087	-0.007596	0.2224	0.0241	0.1056	0.02571	-0.1087	73.99
5d1S	0.01259	-0.03296	-0.01429	0.0706	0.0039	0.0416	0.01259	-0.03296	39.99
5e1S	0.004574	-0.01126	-0.02938	0.0291	0.0027	0.0086	0.004574	-0.01126	19.97
1aX	0.04288	-0.2169	-0.0243	0.3446	0.0251	0.1445	2.543	-2.717	95.98
1aXY	0.04274	-0.2301	-0.0219	0.3468	0.0342	0.1458	-2.457	-2.73	95.98
1aY	0.0302	-0.2305	0.006486	0.3368	0.0238	0.1404	-2.47	2.269	96.01
1bX	0.04104	-0.1935	-0.02374	0.3230	0.0300	0.1413	2.541	-2.694	91.98

1bXY	0.04027	-0.2064	-0.0214	0.3269	0.0292	0.1413	-2.46	-2.706	91.98
1bY	0.02871	-0.2067	0.006333	0.3475	0.0212	0.1366	-2.471	2.293	92.01
1cX	0.03865	-0.1713	-0.02284	0.3234	0.0310	0.1380	2.539	-2.671	87.98
1cXY	0.03848	-0.184	-0.02059	0.3279	0.0259	0.1367	-2.462	-2.684	87.98
1cY	0.02685	-0.1828	0.005976	0.3235	0.0294	0.1329	-2.473	2.317	88.01
1dX	0.03672	-0.149	-0.02167	0.2973	0.0263	0.1348	2.537	-2.649	83.98
1dXY	0.0362	-0.1611	-0.01947	0.3096	0.0366	0.1323	-2.464	-2.661	83.98
1dY	0.02482	-0.1616	0.005428	0.2959	0.0224	0.1292	-2.475	2.338	84.01
1eX	0.03357	-0.1257	-0.01994	0.2638	0.0420	0.1184	2.534	-2.626	78.98
1eXY	0.03307	-0.1361	-0.01785	0.2785	0.0295	0.1210	-2.467	-2.636	78.98
1eY	0.02334	-0.1351	0.004391	0.2865	0.0210	0.1128	-2.477	2.365	79
5aX	0.03062	-0.08695	-0.01761	0.1555	0.0068	0.0892	3.223	-3.28	68.98
5aXY	0.02745	-0.09647	-0.01587	0.1840	0.0476	0.1013	-3.165	-3.289	68.98
5aY	0.01952	-0.09611	0.004249	0.1883	0.0062	0.0887	-3.173	3.096	69
5bX	0.02964	-0.06713	-0.0168	0.1321	0.0203	0.0753	4.192	-4.229	61.98
5bXY	0.02568	-0.07714	-0.01552	0.1507	0.0091	0.0916	-4.136	-4.239	61.98
5bY	0.0157	-0.07709	0.005129	0.1466	0.0199	0.0802	-4.146	4.085	62.01
5cX	0.0269	-0.04935	-0.01611	0.0998	0.0342	0.0603	5.297	-5.32	53.98
5cXY	0.02715	-0.05996	-0.01556	0.1161	0.0164	0.0764	-5.243	-5.33	53.98
5cY	0.01172	-0.05986	0.005819	0.1144	0.0107	0.0677	-5.259	5.21	54.01
5dX	0.01765	-0.02784	-0.01379	0.0552	0.0331	0.0393	7.227	-7.237	39.99
5dXY	0.01786	-0.03784	-0.01268	0.0824	0.0572	0.0422	-7.192	-7.247	39.99
5dY	0.007436	-0.03814	0.005511	0.0881	0.0116	0.0441	-7.202	7.171	40.01
5eX	0.006491	-0.009065	-0.00813	-0.0078	-0.0165	0.0177	9.986	-9.989	19.99
5eXY	0.00627	-0.01257	-0.007201	0.0155	0.0626	0.0156	-9.973	-9.992	19.99
5eY	0.002603	-0.01348	0.004026	0.0871	0.0391	0.0197	-9.977	9.966	20

Joint Support Reactions for Load Case "250B: NESC Heavy":

Joint Label	X Force (kips)	X Usage %	Y Force (kips)	Y Usage %	H-Shear Usage %	Z Comp. Force (kips)	Uplift Usage %	Result. Usage %	Result. Force (kips)	X Moment (ft-k)	X-M. Usage %	Y Moment (ft-k)	Y-M. Usage %	H-Bend-M Usage %	Z Moment (ft-k)	Z-M. Usage %	Max. Usage %
0P	3.72	0.0	3.00	0.0	0.0	17.14	0.0	0.0	17.80	0.0	0.00	0.0	0.0	0.0	0.0	0.00	0.0
0X	-8.51	0.0	8.86	0.0	0.0	-61.99	0.0	0.0	63.20	0.0	0.00	0.0	0.0	0.0	0.0	0.00	0.0
0XY	6.71	0.0	7.02	0.0	0.0	-48.77	0.0	0.0	49.72	0.0	0.00	0.0	0.0	0.0	0.0	0.00	0.0
0Y	-7.94	0.0	9.42	0.0	0.0	42.33	0.0	0.0	44.09	0.0	0.00	0.0	0.0	0.0	0.0	0.00	0.0

Joint Displacements, Loads and Member Forces on Joints for Load Case "250B: NESC Heavy":

Joint Label	X External Load (kips)	Y External Load (kips)	Z External Load (kips)	X Member Force (kips)	Y Member Force (kips)	Z Member Force (kips)	X Disp. (ft)	Y Disp. (ft)	Z Disp. (ft)
1P	0.0000	0.0000	-0.2015	0.0000	-0.0000	0.2015	0.0323	-0.2471	0.0041
2P	0.0000	-1.2640	-1.4863	0.0000	1.2640	1.4863	0.0033	-0.2537	0.0650
3P	-0.1200	-1.8910	-3.8225	0.1200	1.8910	3.8225	0.0112	-0.2252	0.0430
4P	-0.4700	-1.8720	-3.7012	0.4700	1.8720	3.7012	-0.0046	-0.1574	0.0539
5P	0.0000	0.0000	-0.2946	-0.0000	-0.0000	0.2946	0.0213	-0.1042	0.0010
6P	1.8930	-1.8730	-3.5991	-1.8930	1.8730	3.5991	0.0082	-0.1096	0.0323
0P	0.0000	0.0000	-0.5578	-3.7216	-2.9997	17.7023	0.0000	0.0000	0.0000
1X	0.0000	-0.1855	-0.2685	0.0000	0.1855	0.2685	0.0455	-0.2474	-0.0247
1XY	0.0000	-0.1225	-0.2015	0.0000	0.1225	0.2015	0.0455	-0.2604	-0.0223
1Y	0.0000	0.0000	-0.2015	0.0000	-0.0000	0.2015	0.0328	-0.2601	0.0064
2X	0.0000	-1.3224	-1.4863	0.0000	1.3224	1.4863	0.0747	-0.2540	-0.0977
3X	0.8040	-1.9418	-3.5335	-0.8040	1.9418	3.5335	0.0624	-0.2226	-0.0717
4X	1.6870	-1.9156	-3.6072	-1.6870	1.9156	3.6072	0.0684	-0.1536	-0.0988
5X	0.0000	-0.2926	-0.4296	-0.0000	0.2926	0.4296	0.0304	-0.1036	-0.0177
5XY	0.0000	-0.1656	-0.2946	0.0000	0.1656	0.2946	0.0303	-0.1130	-0.0159
5Y	0.0000	0.0000	-0.2946	0.0000	-0.0000	0.2946	0.0212	-0.1132	0.0031
6X	2.2220	-1.9264	-3.5421	-2.2220	1.9264	3.5421	0.0472	-0.1078	-0.0569
0X	0.0000	-0.3592	-0.5578	8.5067	-8.4964	-61.4366	0.0000	0.0000	0.0000
0XY	0.0000	-0.3592	-0.5578	-6.7108	-6.6577	-48.2096	0.0000	0.0000	0.0000
0Y	0.0000	0.0000	-0.5578	7.9417	-9.4235	42.8871	0.0000	0.0000	0.0000
1aS	0.0000	0.0000	-0.2172	0.0000	-0.0000	0.2172	0.0304	-0.2174	0.0042
1bS	0.0000	0.0000	-0.1405	0.0000	-0.0000	0.1405	0.0283	-0.1937	0.0040
1cS	0.0000	0.0000	-0.1993	0.0000	-0.0000	0.1993	0.0264	-0.1703	0.0036
1dS	0.0000	0.0000	-0.2733	-0.0000	-0.0000	0.2733	0.0248	-0.1496	0.0031
1eS	0.0000	0.0000	-0.2349	0.0000	-0.0000	0.2349	0.0229	-0.1248	0.0022
11S	0.0000	-7.1670	-0.0465	0.0000	7.1670	0.0465	0.0390	-0.2542	-0.0091
1d1S	0.0000	5.7970	-0.0465	0.0000	-5.7970	0.0465	0.0306	-0.1551	-0.0085
5aS	0.0000	0.0000	-0.2743	-0.0000	-0.0000	0.2743	0.0171	-0.0856	0.0018
5bS	0.0000	0.0000	-0.3476	0.0000	-0.0000	0.3476	0.0138	-0.0662	0.0024
5cS	0.0000	0.0000	-0.5781	0.0000	-0.0000	0.5781	0.0109	-0.0489	0.0029
5dS	0.0000	0.0000	-0.9757	0.0000	-0.0000	0.9757	0.0064	-0.0271	0.0028
5eS	0.0000	0.0000	-1.3763	0.0000	-0.0000	1.3763	0.0015	-0.0086	0.0017
51S	0.0000	-2.5330	-0.0348	0.0000	2.5330	0.0348	0.0257	-0.1087	-0.0076
5d1S	0.0000	-0.4960	-0.3507	0.0000	0.4960	0.3507	0.0126	-0.0330	-0.0143
5e1S	0.0000	-0.4510	-0.6093	0.0000	0.4510	0.6093	0.0046	-0.0113	-0.0294
1aX	0.0000	-0.2549	-0.3372	0.0000	0.2548	0.3372	0.0429	-0.2169	-0.0243
1aXY	0.0000	-0.1409	-0.2172	0.0000	0.1408	0.2172	0.0427	-0.2301	-0.0219
1aY	0.0000	0.0000	-0.2172	0.0000	-0.0000	0.2172	0.0302	-0.2305	0.0065
1bX	0.0000	-0.1970	-0.2475	0.0000	0.1970	0.2475	0.0410	-0.1935	-0.0237
1bXY	0.0000	-0.0960	-0.1405	0.0000	0.0960	0.1405	0.0403	-0.2064	-0.0214
1bY	0.0000	0.0000	-0.1405	0.0000	-0.0000	0.1405	0.0287	-0.2067	0.0063
1cX	0.0000	-0.2360	-0.3063	0.0000	0.2360	0.3063	0.0386	-0.1713	-0.0228
1cXY	0.0000	-0.1350	-0.1993	0.0000	0.1350	0.1993	0.0385	-0.1840	-0.0206

1cY	0.0000	0.0000	-0.1993	0.0000	-0.0000	0.1993	0.0269	-0.1828	0.0060
1dX	0.0000	-0.2579	-0.3933	-0.0000	0.2579	0.3933	0.0367	-0.1490	-0.0217
1dXY	0.0000	-0.1439	-0.2733	-0.0000	0.1439	0.2733	0.0362	-0.1611	-0.0195
1dY	0.0000	0.0000	-0.2733	-0.0000	-0.0000	0.2733	0.0248	-0.1616	0.0054
1eX	0.0000	-0.2996	-0.3689	0.0000	0.2996	0.3689	0.0336	-0.1257	-0.0199
1eXY	0.0000	-0.1736	-0.2349	0.0000	0.1736	0.2349	0.0331	-0.1361	-0.0178
1eY	0.0000	0.0000	-0.2349	0.0000	-0.0000	0.2349	0.0233	-0.1351	0.0044
5aX	0.0000	-0.3310	-0.4383	-0.0000	0.3310	0.4383	0.0306	-0.0869	-0.0176
5aXY	0.0000	-0.1770	-0.2743	-0.0000	0.1770	0.2743	0.0274	-0.0965	-0.0159
5aY	0.0000	0.0000	-0.2743	-0.0000	-0.0000	0.2743	0.0195	-0.0961	0.0042
5bX	0.0000	-0.4156	-0.5516	0.0000	0.4156	0.5516	0.0296	-0.0671	-0.0168
5bXY	0.0000	-0.2226	-0.3476	0.0000	0.2226	0.3476	0.0257	-0.0771	-0.0155
5bY	0.0000	0.0000	-0.3476	0.0000	-0.0000	0.3476	0.0157	-0.0771	0.0051
5cX	0.0000	-0.6421	-0.8781	0.0000	0.6421	0.8781	0.0269	-0.0493	-0.0161
5cXY	0.0000	-0.3591	-0.5781	-0.0000	0.3591	0.5781	0.0272	-0.0600	-0.0156
5cY	0.0000	0.0000	-0.5781	-0.0000	-0.0000	0.5781	0.0117	-0.0599	0.0058
5dX	0.0000	-1.0064	-1.4387	0.0000	1.0064	1.4387	0.0176	-0.0278	-0.0138
5dXY	0.0000	-0.5694	-0.9757	0.0000	0.5694	0.9757	0.0179	-0.0378	-0.0127
5dY	0.0000	0.0000	-0.9757	0.0000	-0.0000	0.9757	0.0074	-0.0381	0.0055
5eX	0.0000	-1.5339	-2.1933	0.0000	1.5339	2.1933	0.0065	-0.0091	-0.0081
5eXY	0.0000	-0.7629	-1.3763	0.0000	0.7629	1.3763	0.0063	-0.0126	-0.0072
5eY	0.0000	0.0000	-1.3763	0.0000	-0.0000	1.3763	0.0026	-0.0135	0.0040

Crossing Diagonal Check for Load Case "250B: NESC Heavy" (RLOUT controls):

Comp. Member Label	Tens. Member Label	Connect Leg for Comp. Member	Force In Comp. Member (kips)	Force In Tens. Member (kips)	Original Supported L/R Cap. (kips)	RLX	RLY	RLZ	L/R	KL/R	Curve No.	Alternate Unsupported L/R Cap. (kips)	RLOUT	L/R	KL/R	Curve No.
14P	14Y	Long only	-0.58	0.02	17.48	0.500	0.750	0.500	106.07	109.55	2	13.07	1.000	141.42	133.17	6
14X	14XY	Long only	-0.04	-0.86	17.48	0.500	0.750	0.500	106.07	109.55	2	13.07	1.000	141.42	133.17	6
14XY	14X	Long only	-0.86	-0.04	17.48	0.500	0.750	0.500	106.07	109.55	2	13.07	1.000	141.42	133.17	6
19P	19Y	Long only	-0.57	0.08	24.28	0.500	0.750	0.500	97.34	103.01	2	18.97	1.000	129.79	126.02	6
19XY	19X	Long only	-1.28	0.22	24.28	0.500	0.750	0.500	97.34	103.01	2	18.97	1.000	129.79	126.02	6
21X	21XY	Long only	-0.89	-2.90	24.28	0.500	0.750	0.500	97.34	103.01	2	18.97	1.000	129.79	126.02	

6																
	21XY	21X	Long only	-2.90	-0.89	24.28	0.500	0.750	0.500	97.34	103.01	2	18.97	1.000	129.79	126.02
6																
	23X	23XY	Long only	-0.53	-7.05	29.10	0.750	0.500	0.500	86.41	94.81	2	24.26	1.000	110.34	115.17
3																
	23XY	23X	Long only	-7.05	-0.53	29.10	0.750	0.500	0.500	86.41	94.81	2	24.26	1.000	110.34	115.17
3																
	25X	25XY	Long only	-2.60	-9.18	29.10	0.500	0.500	0.500	86.41	94.81	2	24.26	1.000	110.34	115.17
3																
	25XY	25X	Long only	-9.18	-2.60	29.10	0.500	0.500	0.500	86.41	94.81	2	24.26	1.000	110.34	115.17
3																
	29P	29Y	Long only	-1.51	0.15	18.39	0.566	0.566	0.566	141.07	136.09	5	16.41	1.000	159.16	144.08
6																

Summary of Clamp Capacities and Usages for Load Case "250B: NESC Heavy":

Clamp Label	Force (kips)	Input Holding Capacity (kips)	Factored Holding Capacity (kips)	Holding Usage %	Input Hardware Capacity (kips)	Factored Hardware Capacity (kips)	Hardware Usage %	Max. Usage %
11	1.989	20.00	20.00	9.95	0.00	0.00	0.00	9.95
21	1.951	20.00	20.00	9.76	0.00	0.00	0.00	9.76
31	4.111	25.00	25.00	16.45	0.00	0.00	0.00	16.45
41	4.266	25.00	25.00	17.07	0.00	0.00	0.00	17.07
32	4.419	25.00	25.00	17.68	0.00	0.00	0.00	17.68
42	4.174	25.00	25.00	16.70	0.00	0.00	0.00	16.70
33	4.604	25.00	25.00	18.42	0.00	0.00	0.00	18.42
43	4.477	25.00	25.00	17.91	0.00	0.00	0.00	17.91
PM-1	7.167	60.00	60.00	11.95	0.00	0.00	0.00	11.95
PM-2	5.797	60.00	60.00	9.66	0.00	0.00	0.00	9.66

Summary of Suspension Capacities and Usages for Load Case "250B: NESC Heavy":

Suspension Label	Tension (kips)	Input Tension Capacity (kips)	Factored Tension Capacity (kips)	Tension Usage %	Input Hardware Capacity (kips)	Factored Hardware Capacity (kips)	Hardware Usage %	Max. Usage %
CX1	1.123	50.00	50.00	2.25	0.00	0.00	0.00	2.25
CX2	0.637	50.00	50.00	1.27	0.00	0.00	0.00	1.27
CX3	0.412	50.00	50.00	0.82	0.00	0.00	0.00	0.82
CX4	0.281	50.00	50.00	0.56	0.00	0.00	0.00	0.56
CX5	0.225	50.00	50.00	0.45	0.00	0.00	0.00	0.45
CX6	0.185	50.00	50.00	0.37	0.00	0.00	0.00	0.37
CX7	0.184	50.00	50.00	0.37	0.00	0.00	0.00	0.37

CX8	0.166	50.00	50.00	0.33	0.00	0.00	0.00	0.33
CX9	0.147	50.00	50.00	0.29	0.00	0.00	0.00	0.29
CX10	0.147	50.00	50.00	0.29	0.00	0.00	0.00	0.29
CX11	0.166	50.00	50.00	0.33	0.00	0.00	0.00	0.33
CX12	0.092	50.00	50.00	0.18	0.00	0.00	0.00	0.18
PM-3	2.533	18.04	18.04	14.04	0.00	0.00	0.00	14.04
PM-4	0.496	18.04	18.04	2.75	0.00	0.00	0.00	2.75
PM-5	0.451	18.04	18.04	2.50	0.00	0.00	0.00	2.50

*** Analysis Results for Load Case No. 2 "250C: Extreme Wind (Trans.)" - Number of iterations in SAPS 9

Equilibrium Joint Positions and Rotations for Load Case "250C: Extreme Wind (Trans.)":

Joint Label	X-Displ (ft)	Y-Displ (ft)	Z-Displ (ft)	X-Rot (deg)	Y-Rot (deg)	Z-Rot (deg)	X-Pos (ft)	Y-Pos (ft)	Z-Pos (ft)
1P	0.03003	-0.5444	0.02329	0.7822	0.0183	0.0728	2.53	1.956	101
2P	0.0188	-0.548	0.1769	0.7747	0.0253	0.0605	0.0188	13.2	101.2
3P	0.02085	-0.4791	0.1227	0.7722	0.0252	0.0596	0.02085	9.271	96.12
4P	0.01113	-0.3248	0.1592	0.6835	0.0255	0.0588	0.01113	13.93	84.16
5P	0.01861	-0.2207	0.01353	0.4606	0.0482	0.0464	2.519	2.279	74.01
6P	0.01358	-0.2234	0.08787	0.5745	0.0251	0.0366	0.01358	10.03	74.09
0P	0	0	0	0.0415	0.0104	0.0028	12.75	12.75	0
1X	0.03609	-0.5441	-0.04215	0.7950	0.0369	0.0709	2.536	-3.044	101
1XY	0.03532	-0.5494	-0.0399	0.7931	0.0160	0.0489	-2.465	-3.049	101
1Y	0.03098	-0.5496	0.02549	0.7824	0.0315	0.0450	-2.469	1.95	101
2X	0.04746	-0.5457	-0.1991	0.8119	0.0271	0.0604	0.04746	-14.3	100.8
3X	0.04138	-0.4764	-0.1426	0.8196	0.0264	0.0661	0.04138	-10.23	95.86
4X	0.04141	-0.3213	-0.1845	0.7702	0.0245	0.0737	0.04141	-14.57	83.82
5X	0.02269	-0.2202	-0.02677	0.4569	-0.0043	0.0445	2.523	-2.72	73.97
5XY	0.02246	-0.2242	-0.02523	0.4699	0.0460	0.0449	-2.478	-2.724	73.97
5Y	0.01871	-0.2244	0.01554	0.4657	-0.0017	0.0363	-2.481	2.276	74.02
6X	0.02998	-0.2218	-0.1037	0.6196	0.0147	0.0587	0.02998	-10.47	73.9
0X	0	0	0	0.0563	0.0035	0.0008	12.75	-12.75	0
0XY	0	0	0	0.0495	-0.0084	-0.0011	-12.75	-12.75	0
0Y	0	0	0	0.0332	-0.0058	-0.0040	-12.75	12.75	0
1aS	0.0283	-0.4751	0.0234	0.7829	0.0300	0.0621	2.528	2.025	96.02
1bS	0.0256	-0.4211	0.02281	0.7628	0.0313	0.0596	2.526	2.079	92.02
1cS	0.02414	-0.369	0.02159	0.7243	0.0171	0.0569	2.524	2.131	88.02
1dS	0.02254	-0.3207	0.0198	0.6545	0.0264	0.0545	2.523	2.179	84.02
1eS	0.02013	-0.2668	0.01696	0.5797	0.0141	0.0503	2.52	2.233	79.02
11S	0.0331	-0.5487	-0.006328	0.7343	0.0262	0.0600	0.0331	-0.5487	101
1d1S	0.02509	-0.322	-0.008718	0.6245	0.0255	0.0567	0.02509	-0.322	83.99
5aS	0.01309	-0.1839	0.01436	0.3653	0.0536	0.0372	3.206	3.009	69.01
5bS	0.0104	-0.1438	0.01463	0.2797	0.0090	0.0233	4.173	4.018	62.01
5cS	0.008933	-0.1081	0.01486	0.2164	0.0173	0.0198	5.279	5.162	54.01
5dS	0.004498	-0.06347	0.01297	0.1526	0.0110	0.0174	7.214	7.146	40.01
5eS	0.0001236	-0.02251	0.007693	0.0962	-0.0092	0.0076	9.98	9.957	20.01
51S	0.02055	-0.2231	-0.005914	0.4793	0.0217	0.0454	0.02055	-0.2231	73.99
5d1S	0.006495	-0.06503	-0.01368	0.1495	0.0067	0.0025	0.006495	-0.06503	39.99
5e1S	0.0008826	-0.02268	-0.01735	0.0613	0.0061	-0.0062	0.0008826	-0.02268	19.98
1aX	0.03331	-0.4745	-0.0412	0.7835	0.0178	0.0628	2.533	-2.975	95.96
1aXY	0.03329	-0.4799	-0.03894	0.7848	0.0363	0.0560	-2.467	-2.98	95.96
1aY	0.0282	-0.4804	0.02561	0.7814	0.0206	0.0530	-2.472	2.02	96.03
1bX	0.03222	-0.4208	-0.03977	0.7545	0.0232	0.0607	2.532	-2.921	91.96

1bXY	0.03045	-0.4259	-0.03754	0.7551	0.0310	0.0557	-2.47	-2.926	91.96
1bY	0.02719	-0.4265	0.02502	0.7634	0.0198	0.0524	-2.473	2.074	92.03
1cX	0.02977	-0.3691	-0.03767	0.7295	0.0355	0.0587	2.53	-2.869	87.96
1cXY	0.02905	-0.3744	-0.03552	0.7295	0.0172	0.0552	-2.471	-2.874	87.96
1cY	0.02497	-0.3742	0.02378	0.7276	0.0344	0.0521	-2.475	2.126	88.02
1dX	0.02781	-0.3201	-0.03502	0.6543	0.0183	0.0563	2.528	-2.82	83.96
1dXY	0.02719	-0.3251	-0.03293	0.6599	0.0366	0.0552	-2.473	-2.825	83.97
1dY	0.02291	-0.3256	0.02196	0.6574	0.0218	0.0514	-2.477	2.174	84.02
1eX	0.02549	-0.267	-0.0312	0.5811	0.0391	0.0507	2.525	-2.767	78.97
1eXY	0.02431	-0.2713	-0.02929	0.5853	0.0189	0.0499	-2.476	-2.771	78.97
1eY	0.02129	-0.2712	0.01903	0.5882	0.0297	0.0440	-2.479	2.229	79.02
5aX	0.02454	-0.1846	-0.02699	0.3547	-0.0197	0.0342	3.217	-3.377	68.97
5aXY	0.0183	-0.1879	-0.02571	0.3758	0.0532	0.0432	-3.174	-3.38	68.97
5aY	0.01916	-0.188	0.01682	0.3747	-0.0088	0.0347	-3.173	3.005	69.02
5bX	0.02385	-0.1443	-0.02623	0.2825	0.0152	0.0222	4.186	-4.306	61.97
5bXY	0.01697	-0.147	-0.02552	0.2959	-0.0085	0.0430	-4.145	-4.309	61.97
5bY	0.01551	-0.1472	0.01753	0.2948	0.0297	0.0329	-4.147	4.015	62.02
5cX	0.02002	-0.1084	-0.02575	0.2194	0.0394	0.0128	5.29	-5.379	53.97
5cXY	0.01987	-0.1105	-0.02576	0.2299	0.0135	0.0303	-5.25	-5.381	53.97
5cY	0.0109	-0.1106	0.01808	0.2274	0.0151	0.0224	-5.259	5.16	54.02
5dX	0.007168	-0.06386	-0.02303	0.1339	0.0279	0.0070	7.217	-7.273	39.98
5dXY	0.006613	-0.06445	-0.02099	0.1494	0.0662	0.0016	-7.203	-7.274	39.98
5dY	0.007165	-0.06461	0.01624	0.1612	0.0149	0.0003	-7.202	7.145	40.02
5eX	0.0005425	-0.02214	-0.01377	0.0577	-0.0209	0.0043	9.98	-10	19.99
5eXY	-0.0005576	-0.02039	-0.01205	0.0579	0.0279	-0.0073	-9.98	-10	19.99
5eY	0.003006	-0.02117	0.01024	0.0977	0.0243	-0.0087	-9.977	9.959	20.01

Joint Support Reactions for Load Case "250C: Extreme Wind (Trans.)":

Joint Label	X Force (kips)	X Usage %	Y Force (kips)	Y Usage %	H-Shear Usage %	Z Comp. Force (kips)	Uplift Usage %	Uplift Usage %	Result. Force (kips)	Result. Usage %	X Moment (ft-k)	X-M. Usage %	Y Moment (ft-k)	Y-M. Usage %	H-Bend-M Usage %	Z Moment (ft-k)	Z-M. Usage %	Max. Usage %
0P	14.48	0.0	15.80	0.0	0.0	73.41	0.0	0.0	76.47	0.0	0.00	0.0	0.0	0.0	0.0	0.00	0.0	0.0
0X	-14.00	0.0	14.45	0.0	0.0	-101.37	0.0	0.0	103.35	0.0	0.00	0.0	0.0	0.0	0.0	0.00	0.0	0.0
0XY	12.38	0.0	12.85	0.0	0.0	-89.67	0.0	0.0	91.42	0.0	0.00	0.0	0.0	0.0	0.0	0.00	0.0	0.0
0Y	-17.37	0.0	18.05	0.0	0.0	90.51	0.0	0.0	93.91	0.0	0.00	0.0	0.0	0.0	0.0	0.00	0.0	0.0

Joint Displacements, Loads and Member Forces on Joints for Load Case "250C: Extreme Wind (Trans.)":

Joint Label	X External Load (kips)	Y External Load (kips)	Z External Load (kips)	X Member Force (kips)	Y Member Force (kips)	Z Member Force (kips)	X Disp. (ft)	Y Disp. (ft)	Z Disp. (ft)
1P	0.0000	-0.2321	-0.1577	0.0000	0.2321	0.1577	0.0300	-0.5444	0.0233
2P	0.0000	-0.9382	-0.4705	0.0000	0.9382	0.4705	0.0188	-0.5480	0.1769
3P	0.2700	-2.4792	-1.7015	-0.2700	2.4792	1.7015	0.0209	-0.4791	0.1227
4P	0.0720	-2.3808	-1.6070	-0.0720	2.3808	1.6070	0.0111	-0.3248	0.1592
5P	0.0000	-0.6396	-0.4799	-0.0000	0.6396	0.4799	0.0186	-0.2207	0.0135
6P	1.2370	-2.3311	-1.5664	-1.2370	2.3311	1.5664	0.0136	-0.2234	0.0879
0P	0.0000	-0.5646	-0.3719	-14.4755	-15.2339	73.7818	0.0000	0.0000	0.0000
1X	0.0000	-0.3361	-0.1687	-0.0000	0.3361	0.1687	0.0361	-0.5441	-0.0422
1XY	0.0000	-0.2321	-0.1577	0.0000	0.2321	0.1577	0.0353	-0.5494	-0.0399
1Y	0.0000	-0.2321	-0.1577	-0.0000	0.2321	0.1577	0.0310	-0.5496	0.0255
2X	0.0000	-0.9382	-0.4705	0.0000	0.9382	0.4705	0.0475	-0.5457	-0.1991
3X	0.5900	-2.4452	-1.5495	-0.5900	2.4452	1.5495	0.0414	-0.4764	-0.1426
4X	1.0460	-2.3648	-1.5480	-1.0460	2.3648	1.5480	0.0414	-0.3213	-0.1845
5X	0.0000	-0.8506	-0.5009	-0.0000	0.8506	0.5009	0.0227	-0.2202	-0.0268
5XY	0.0000	-0.6396	-0.4799	-0.0000	0.6396	0.4799	0.0225	-0.2242	-0.0252
5Y	0.0000	-0.6396	-0.4799	0.0000	0.6396	0.4799	0.0187	-0.2244	0.0155
6X	1.3020	-2.3181	-1.5304	-1.3020	2.3181	1.5304	0.0300	-0.2218	-0.1037
0X	0.0000	-0.5646	-0.3719	14.0030	-13.8870	-100.9984	0.0000	0.0000	0.0000
0XY	0.0000	-0.5646	-0.3719	-12.3831	-12.2826	-89.2944	0.0000	0.0000	0.0000
0Y	0.0000	-0.5646	-0.3719	17.3726	-17.4872	90.8772	0.0000	0.0000	0.0000
1aS	0.0000	-0.2321	-0.1577	-0.0000	0.2321	0.1577	0.0283	-0.4751	0.0234
1bS	0.0000	-0.1539	-0.1023	0.0000	0.1539	0.1023	0.0256	-0.4211	0.0228
1cS	0.0000	-0.2057	-0.1572	0.0000	0.2057	0.1572	0.0241	-0.3690	0.0216
1dS	0.0000	-0.2057	-0.1572	0.0000	0.2057	0.1572	0.0225	-0.3207	0.0198
1eS	0.0000	-0.2050	-0.1356	0.0000	0.2050	0.1356	0.0201	-0.2668	0.0170
11S	0.0000	-26.9479	-0.1023	0.0000	26.9479	0.1023	0.0331	-0.5487	-0.0063
1d1S	0.0000	21.5261	-0.1023	0.0000	-21.5261	0.1023	0.0251	-0.3220	-0.0087
5aS	0.0000	-0.4347	-0.3443	0.0000	0.4347	0.3443	0.0131	-0.1839	0.0144
5bS	0.0000	-0.4347	-0.3443	0.0000	0.4347	0.3443	0.0104	-0.1438	0.0146
5cS	0.0000	-0.4347	-0.3443	0.0000	0.4347	0.3443	0.0089	-0.1081	0.0149
5dS	0.0000	-0.4347	-0.3443	0.0000	0.4347	0.3443	0.0045	-0.0635	0.0130
5eS	0.0000	-0.9992	-0.7162	0.0000	0.9992	0.7162	0.0001	-0.0225	0.0077
51S	0.0000	-9.8289	-0.1023	0.0000	9.8289	0.1023	0.0205	-0.2231	-0.0059
5d1S	0.0000	-2.4777	-0.3443	0.0000	2.4777	0.3443	0.0065	-0.0650	-0.0137
5e1S	0.0000	-2.2447	-0.3443	0.0000	2.2447	0.3443	0.0009	-0.0227	-0.0173
1aX	0.0000	-0.4201	-0.1767	0.0000	0.4201	0.1767	0.0333	-0.4745	-0.0412
1aXY	0.0000	-0.2321	-0.1577	-0.0000	0.2321	0.1577	0.0333	-0.4799	-0.0389
1aY	0.0000	-0.2321	-0.1577	0.0000	0.2321	0.1577	0.0282	-0.4804	0.0256
1bX	0.0000	-0.3209	-0.1193	0.0000	0.3209	0.1193	0.0322	-0.4208	-0.0398
1bXY	0.0000	-0.1539	-0.1023	0.0000	0.1539	0.1023	0.0304	-0.4259	-0.0375
1bY	0.0000	-0.1539	-0.1023	0.0000	0.1539	0.1023	0.0272	-0.4265	0.0250
1cX	0.0000	-0.3727	-0.1742	0.0000	0.3727	0.1742	0.0298	-0.3691	-0.0377
1cXY	0.0000	-0.2057	-0.1572	0.0000	0.2057	0.1572	0.0290	-0.3744	-0.0355

1cY	0.0000	-0.2057	-0.1572	0.0000	0.2057	0.1572	0.0250	-0.3742	0.0238
1dX	0.0000	-0.3937	-0.1762	-0.0000	0.3937	0.1762	0.0278	-0.3201	-0.0350
1dXY	0.0000	-0.2057	-0.1572	-0.0000	0.2057	0.1572	0.0272	-0.3251	-0.0329
1dY	0.0000	-0.2057	-0.1572	-0.0000	0.2057	0.1572	0.0229	-0.3256	0.0220
1eX	0.0000	-0.4140	-0.1566	0.0000	0.4140	0.1566	0.0255	-0.2670	-0.0312
1eXY	0.0000	-0.2050	-0.1356	0.0000	0.2050	0.1356	0.0243	-0.2713	-0.0293
1eY	0.0000	-0.2050	-0.1356	0.0000	0.2050	0.1356	0.0213	-0.2712	0.0190
5aX	0.0000	-0.6897	-0.3703	-0.0000	0.6897	0.3703	0.0245	-0.1846	-0.0270
5aXY	0.0000	-0.4347	-0.3443	0.0000	0.4347	0.3443	0.0183	-0.1879	-0.0257
5aY	0.0000	-0.4347	-0.3443	-0.0000	0.4347	0.3443	0.0192	-0.1880	0.0168
5bX	0.0000	-0.7537	-0.3763	0.0000	0.7537	0.3763	0.0238	-0.1443	-0.0262
5bXY	0.0000	-0.4347	-0.3443	-0.0000	0.4347	0.3443	0.0170	-0.1470	-0.0255
5bY	0.0000	-0.4347	-0.3443	0.0000	0.4347	0.3443	0.0155	-0.1472	0.0175
5cX	0.0000	-0.9027	-0.3913	0.0000	0.9027	0.3913	0.0200	-0.1084	-0.0258
5cXY	0.0000	-0.4347	-0.3443	-0.0000	0.4347	0.3443	0.0199	-0.1105	-0.0258
5cY	0.0000	-0.4347	-0.3443	-0.0000	0.4347	0.3443	0.0109	-0.1106	0.0181
5dX	0.0000	-1.1577	-0.4173	0.0000	1.1577	0.4173	0.0072	-0.0639	-0.0230
5dXY	0.0000	-0.4347	-0.3443	-0.0000	0.4347	0.3443	0.0066	-0.0645	-0.0210
5dY	0.0000	-0.4347	-0.3443	-0.0000	0.4347	0.3443	0.0072	-0.0646	0.0162
5eX	0.0000	-2.2752	-0.8442	0.0000	2.2752	0.8442	0.0005	-0.0221	-0.0138
5eXY	0.0000	-0.9992	-0.7162	-0.0000	0.9992	0.7162	-0.0006	-0.0204	-0.0121
5eY	0.0000	-0.9992	-0.7162	0.0000	0.9992	0.7162	0.0030	-0.0212	0.0102

Crossing Diagonal Check for Load Case "250C: Extreme Wind (Trans.)" (RLOUT controls):

Comp. Member Label	Tens. Member Label	Connect Leg for Comp. Member	Force In Comp. Member (kips)	Force In Tens. Member (kips)	Original Supported L/R Cap. (kips)	RLX	RLY	RLZ	L/R	KL/R	Curve No.	Alternate Unsupported L/R Cap. (kips)	RLOUT	L/R	KL/R	Curve No.
14P	14Y	Long only	-0.17	-0.08	17.48	0.500	0.750	0.500	106.07	109.55	2	13.07	1.000	141.42	133.17	6
14XY	14X	Long only	-0.35	0.02	17.48	0.500	0.750	0.500	106.07	109.55	2	13.07	1.000	141.42	133.17	6
14Y	14P	Long only	-0.08	-0.17	17.48	0.500	0.750	0.500	106.07	109.55	2	13.07	1.000	141.42	133.17	6
19X	19XY	Long only	-0.04	-0.93	24.28	0.500	0.750	0.500	97.34	103.01	2	18.97	1.000	129.79	126.02	6
19XY	19X	Long only	-0.93	-0.04	24.28	0.500	0.750	0.500	97.34	103.01	2	18.97	1.000	129.79	126.02	6
21X	21XY	Long only	-3.78	-5.03	24.28	0.500	0.750	0.500	97.34	103.01	2	18.97	1.000	129.79	126.02	

6																
	21XY	21X	Long only	-5.03	-3.78	24.28	0.500	0.750	0.500	97.34	103.01	2	18.97	1.000	129.79	126.02
6																
	23X	23XY	Long only	-6.87	-10.67	29.10	0.750	0.500	0.500	86.41	94.81	2	24.26	1.000	110.34	115.17
3																
	23XY	23X	Long only	-10.67	-6.87	29.10	0.750	0.500	0.500	86.41	94.81	2	24.26	1.000	110.34	115.17
3																
	25X	25XY	Long only	-9.47	-13.40	29.10	0.500	0.500	0.500	86.41	94.81	2	24.26	1.000	110.34	115.17
3																
	25XY	25X	Long only	-13.40	-9.47	29.10	0.500	0.500	0.500	86.41	94.81	2	24.26	1.000	110.34	115.17
3																
	26XY	26Y	Long only	-0.01	-0.16	31.82	0.561	0.561	0.561	104.70	108.53	2	28.19	1.000	119.97	119.99
3																
	26Y	26XY	Long only	-0.16	-0.01	31.82	0.561	0.561	0.561	104.70	108.53	2	28.19	1.000	119.97	119.99
3																
	27X	27XY	Long only	-1.59	-4.43	31.82	0.561	0.561	0.561	104.70	108.53	2	28.19	1.000	119.97	119.99
3																
	27XY	27X	Long only	-4.43	-1.59	31.82	0.561	0.561	0.561	104.70	108.53	2	28.19	1.000	119.97	119.99
3																
	29P	29Y	Long only	-1.25	-1.72	18.39	0.566	0.566	0.566	141.07	136.09	5	16.41	1.000	159.16	144.08
6																
	29Y	29P	Long only	-1.72	-1.25	18.39	0.566	0.566	0.566	141.07	136.09	5	16.41	1.000	159.16	144.08
6																
	31X	31XY	Long only	-0.70	-2.54	13.68	0.559	0.559	0.559	169.56	157.80	5	12.45	1.000	193.77	165.37
6																
	31XY	31X	Long only	-2.54	-0.70	13.68	0.559	0.559	0.559	169.56	157.80	5	12.45	1.000	193.77	165.37
6																

Summary of Clamp Capacities and Usages for Load Case "250C: Extreme Wind (Trans.)":

Clamp Label	Force (kips)	Input Holding Capacity (kips)	Factored Holding Capacity (kips)	Holding Usage %	Input Hardware Capacity (kips)	Factored Hardware Capacity (kips)	Hardware Usage %	Max. Usage %
11	1.050	20.00	20.00	5.25	0.00	0.00	0.00	5.25
21	1.050	20.00	20.00	5.25	0.00	0.00	0.00	5.25
31	2.954	25.00	25.00	11.82	0.00	0.00	0.00	11.82
41	3.019	25.00	25.00	12.08	0.00	0.00	0.00	12.08
32	3.014	25.00	25.00	12.06	0.00	0.00	0.00	12.06
42	2.873	25.00	25.00	11.49	0.00	0.00	0.00	11.49
33	3.068	25.00	25.00	12.27	0.00	0.00	0.00	12.27
43	3.069	25.00	25.00	12.28	0.00	0.00	0.00	12.28
PM-1	26.948	60.00	60.00	44.91	0.00	0.00	0.00	44.91
PM-2	21.526	60.00	60.00	35.88	0.00	0.00	0.00	35.88

Summary of Suspension Capacities and Usages for Load Case "250C: Extreme Wind (Trans.)":

Suspension Label	Tension (kips)	Input Tension Capacity (kips)	Factored Tension Capacity (kips)	Tension Usage %	Input Hardware Capacity (kips)	Factored Hardware Capacity (kips)	Hardware Usage %	Max. Usage %
CX1	1.282	50.00	50.00	2.56	0.00	0.00	0.00	2.56
CX2	0.727	50.00	50.00	1.45	0.00	0.00	0.00	1.45
CX3	0.470	50.00	50.00	0.94	0.00	0.00	0.00	0.94
CX4	0.321	50.00	50.00	0.64	0.00	0.00	0.00	0.64
CX5	0.256	50.00	50.00	0.51	0.00	0.00	0.00	0.51
CX6	0.212	50.00	50.00	0.42	0.00	0.00	0.00	0.42
CX7	0.210	50.00	50.00	0.42	0.00	0.00	0.00	0.42
CX8	0.189	50.00	50.00	0.38	0.00	0.00	0.00	0.38
CX9	0.168	50.00	50.00	0.34	0.00	0.00	0.00	0.34
CX10	0.168	50.00	50.00	0.34	0.00	0.00	0.00	0.34
CX11	0.189	50.00	50.00	0.38	0.00	0.00	0.00	0.38
CX12	0.105	50.00	50.00	0.21	0.00	0.00	0.00	0.21
PM-3	9.675	18.04	18.04	53.63	0.00	0.00	0.00	53.63
PM-4	2.043	18.04	18.04	11.32	0.00	0.00	0.00	11.32
PM-5	1.810	18.04	18.04	10.03	0.00	0.00	0.00	10.03

*** Overall summary for all load cases - Usage = Maximum Stress / Allowable Stress
Printed capacities do not include the strength factor entered for each load case.
The Group Summary reports on the member and load case that resulted in maximum usage
which may not necessarily be the same as that which produces maximum force.

Group Summary (Compression Portion):

Group Label	Group Desc.	Angle Type	Angle Size	Steel Strength (ksi)	Max Usage %	Usage Control	Max Comp. Use %	Comp. Control Member	Comp. Force (kips)	Comp. Control Load Case	L/r Capacity (kips)	Comp. Connect. Shear Capacity (kips)	Comp. Connect. Bearing Capacity (kips)	RLX (ft)	RLY (ft)	RLZ (ft)	L/r Comp.	KL/r Member	Length Comp.	Curve Comp.	No. Bolts
1	LEG-H	SAE	5X5X0.3125	33.0	10.25	Tens	9.34	1XY	-8.362250	C: Ex	89.489	0.000	0.000	1.000	1.000	1.000	60.36	60.36	5.000	1	0
2	LEG-H	SAE	5X5X0.3125	33.0	32.75	Tens	25.08	2X	-23.394250	C: Ex	93.269	0.000	0.000	1.000	1.000	1.000	48.29	48.29	4.000	1	0
3	LEG-H	SAE	5X5X0.3125	33.0	49.54	Tens	41.48	3X	-38.687250	C: Ex	93.269	0.000	0.000	1.000	1.000	1.000	48.29	48.29	4.000	1	0
4	LEG-H	SAE	5X5X0.3125	33.0	72.87	Tens	55.42	4X	-51.687250	C: Ex	93.269	0.000	0.000	1.000	1.000	1.000	48.29	48.29	4.000	1	0
5	LEG-H	SAE	5X5X0.3125	33.0	88.85	Tens	69.56	5X	-62.249250	C: Ex	89.489	0.000	0.000	1.000	1.000	1.000	60.36	60.36	5.000	1	0
6	LEG-H	SAE	5X5X0.3125	33.0	93.36	Tens	82.61	6X	-73.928250	C: Ex	89.489	124.400	210.937	1.000	1.000	1.000	60.36	60.36	5.000	1	10
7	LEG-F/G	SAE	6X6X0.3125	33.0	90.29	Comp	90.29	7X	-88.455250	C: Ex	97.972	124.400	210.937	1.000	1.000	1.000	50.95	50.95	5.095	1	10
8	LEG-F/G	SAE	6X6X0.3125	33.0	90.75	Comp	90.75	8X	-92.063250	C: Ex	101.451	124.400	210.937	0.500	0.500	0.500	35.67	35.67	7.133	1	10
9	LEG-D/E	SAE	6X6X0.375	33.0	79.32	Tens	77.53	9X	-89.824250	C: Ex	115.854	0.000	0.000	1.000	1.000	1.000	82.21	82.21	8.152	1	0
10	LEG-D/E	SAE	6X6X0.375	33.0	75.88	Tens	75.31	10X	-92.193250	C: Ex	122.423	149.280	303.750	0.500	0.500	0.500	71.93	71.93	14.266	1	12
11	LEG-A/C	SAE	6X6X0.375	33.0	77.85	Comp	77.85	11X	-96.887250	C: Ex	124.456	149.280	303.750	0.333	0.333	0.333	68.44	68.44	20.380	1	12
12	LEG-S	SAE	6X6X0.375	33.0	82.68	Comp	82.68	12X	-102.906250	C: Ex	124.456	149.280	303.750	0.333	0.333	0.333	68.44	68.44	20.380	1	12
13	VBR-52/53	SAU	2.5X2X0.1875	33.0	59.88	Comp	59.88	13X	-10.469250	C: Ex	17.484	24.880	25.312	0.500	0.750	0.500	106.07	109.55	7.071	2	2

```
    14       VBR-69   SAU   2.5X2X0.1875     33.0 26.35  Comp 26.35     15P   -1.887250B: NE    7.160   12.440   12.656
1.000 1.000 1.000 179.95 179.95  6.403     4     1
    15    VBR-50/51   SAU     2.5X2X0.25     33.0 50.79  Tens 50.02    16XY  -12.147250C: Ex   24.281   24.880   33.750
0.500 0.750 0.500  97.34 103.01  6.403     2     2
    16    VBR-35/36   SAE   2.5X2.5X0.25     33.0 55.26 Cross 55.26    25XY  -13.403250C: Ex   24.256   37.320   50.625
0.500 1.000 0.500 110.34 115.17  7.071     3     3
    17       VBR-16   SAE 2.5X2.5X0.3125     33.0 21.29  Comp 21.29    27XY   -5.297250B: NE   31.823   24.880   42.187
0.561 0.561 0.561 104.70 108.53  7.608     2     2
    18    VBR-15/55   SAE   2.5X2.5X0.25     33.0 16.35  Tens 12.13    28XY   -2.230250B: NE   18.390   24.880   33.750
0.566 0.566 0.566 141.07 136.09 10.200     5     2
    19    VBR-14/54   SAE   2.5X2.5X0.25     33.0 23.18  Comp 23.18    31XY   -3.171250B: NE   13.678   24.880   33.750
0.559 0.559 0.559 169.56 157.80 12.418     5     2
    20        VBR-9   SAU     2.5X2X0.25     33.0 61.58  Comp 61.58    32XY   -2.362250B: NE    3.836   24.880   33.750
0.580 1.000 0.580 382.19 281.25 18.855     6     2
    21        VBR-1   SAU     2.5X2X0.25     33.0 45.37  Comp 45.37     34P   -0.970250B: NE    2.137   24.880   33.750
0.420 1.000 0.420 537.50 376.76 26.517     6     2
    22       VBR-93   SAU     2.5X2X0.25     33.0 63.58  Tens  0.00     37Y    0.000            0.799   12.440   16.875
0.440 1.000 0.440 616.27 616.27 30.403     4     1
    23    HBR-40/41   SAE   2.5X2.5X0.25     36.0 81.46  Tens 56.48     40X   -9.213250C: Ex   28.492   24.880   16.312
1.000 1.000 1.000  86.41 103.20  3.536     3     1
    24    HBR-20/21   SAE 2.5X2.5X0.1875     33.0 18.72  Comp 18.72    41XY   -3.874250C: Ex   20.689   49.760   25.312
1.000 1.000 1.000  85.71 102.85  3.536     3     2
    25         MOD?   SAE      4X4X0.375     33.0 11.68  Comp 11.68    42XY   -3.967250C: Ex   33.956   49.760   50.625
1.000 1.000 1.000 155.26 155.26 10.196     4     2
    26         MOD?   SAE      5X5X0.375     33.0 13.04  Comp 13.04     43X   -4.604250C: Ex   35.306   49.760   50.625
1.000 1.000 1.000 171.07 171.07 14.113     4     2
    27       HRZ-75   SAE       3X3X0.25     33.0 16.17  Tens  1.37     44Y   -0.299250C: Ex   21.752   24.880   33.750
1.000 0.500 0.500 148.70 137.65 11.524     6     2
    28    HRZ-28/46   SAU     3X2.5X0.25     33.0 28.95  Comp 28.95     46P   -7.203250C: Ex   26.226   24.880   33.750
1.000 1.000 1.000 113.64 116.82  5.000     3     2
    29       HRZ-47   SAE       3X3X0.25     33.0 18.63  Comp 18.63     50Y   -5.795250B: NE   31.104   37.320   50.625
1.000 0.500 0.500  98.95 109.48  7.669     3     3
    30       HRZ-64   Bar          2x1/4     33.0 39.64  Tens  0.00     53Y    0.000           14.788   24.880   33.750
1.000 1.000 1.000  60.00  60.00  5.000     1     2
    31       HRZ-67   SAU   2.5X2X0.1875     33.0 38.56  Tens 33.09     54P   -3.886250C: Ex   11.742   12.440   12.656
1.000 1.000 1.000 140.52 140.52  5.000     4     1
    32       HRZ-68   SAU   2.5X2X0.1875     33.0 57.11  Tens 46.33     55P   -5.439250C: Ex   11.742   24.880   12.656
1.000 1.000 1.000 140.52 140.52  5.000     4     1
   32a      HRZ-MOD   SAE   2.5X2.5X0.25     36.0 61.64  Tens 48.99    g68P   -7.991250C: Ex   22.724   24.880   16.312
1.000 1.000 1.000 122.20 122.20  5.000     4     1
    33       HRZ-37   SAU       4X3X0.25     33.0 22.52  Comp 22.52     56Y   -7.662250B: NE   34.023   49.760   67.500
1.000 0.500 0.500 112.62 116.31 12.013     3     4
    34       HRZ-17   SAE       3X3X0.25     33.0 18.29  Comp 18.29     59P   -4.551250B: NE   30.742   24.880   33.750
1.000 1.000 1.000 101.35 110.68  5.000     3     2
    35       HRZ-12   SAE   2.5X2.5X0.25     33.0 41.01  Comp 41.01     61P   -6.434250C: Ex   15.686   24.880   33.750
1.000 0.500 0.500 164.48 147.36 10.541     6     2
    36        HRZ-5   SAU       4X3X0.25     33.0 36.42  Comp 36.42     63P   -9.061250C: Ex   28.880   24.880   33.750
1.000 0.500 0.500 135.18 129.33 14.419     6     2
```

```
   37 HRZ-80/81/82   SAE       4X4X0.25     33.0 39.37  Comp 39.37     65P   -8.124250C: Ex   20.635   24.880   33.750
1.000 0.500 0.500 191.61 164.04 19.959     6     2
   38    STR-70/71   SAU   2.5X2X0.1875     33.0 27.47  Tens  0.00     66Y    0.000            4.594   24.880   25.312
1.000 1.000 1.000 257.28 224.65  9.155     5     2
   39    STR-62/63   SAU     2.5X2X0.25     33.0 29.96  Tens  0.00     67Y    0.000            3.334   24.880   33.750
1.000 1.000 1.000 358.34 301.66 12.661     5     2
   40    STR-29/30   SAU   2.5X2X0.1875     33.0 33.40  Tens  0.00     68Y    0.000            4.262   24.880   25.312
1.000 1.000 1.000 268.55 233.23  9.556     5     2
```

Group Summary (Tension Portion):

```
 Group        Group Angle          Angle    Steel   Max Usage   Max Tension Tension Tension      Net  Tension  Tension
Tension Length   No.   No.     Hole
 Label        Desc.  Type           Size Strength Usage Cont-   Use Control   Force Control  Section Connect. Connect.
Connect.  Tens.    Of    Of Diameter
                                                        rol    In  Member            Load Capacity    Shear  Bearing
Rupture Member Bolts Holes
                                                             Tens.                  Case          Capacity Capacity
Capacity        Tens.
                                                (ksi)     %          %          (kips)           (kips)   (kips)   (kips)
(kips)   (ft)                  (in)
-------------------------------------------------------------------------------------------------------------------------------
-----------------------------------
     1        LEG-H   SAE     5X5X0.3125     33.0 10.25  Tens 10.25      1P   6.550250C: Ex   63.896    0.000    0.000
0.000  5.000     0 4.000    0.875
     2        LEG-H   SAE     5X5X0.3125     33.0 32.75  Tens 32.75      2Y  20.927250C: Ex   63.896    0.000    0.000
0.000  4.000     0 4.000    0.875
     3        LEG-H   SAE     5X5X0.3125     33.0 49.54  Tens 49.54      3Y  34.773250C: Ex   70.195    0.000    0.000
0.000  4.000     0 3.302    0.875
     4        LEG-H   SAE     5X5X0.3125     33.0 72.87  Tens 72.87      4Y  46.563250C: Ex   63.896    0.000    0.000
0.000  4.000     0 4.000    0.875
     5        LEG-H   SAE     5X5X0.3125     33.0 88.85  Tens 88.85      5Y  56.773250C: Ex   63.896    0.000    0.000
0.000  5.000     0 4.000    0.875
     6        LEG-H   SAE     5X5X0.3125     33.0 93.36  Tens 93.36      6Y  65.073250C: Ex   69.698  124.400  210.937
0.000  5.000    10 3.357    0.875
     7      LEG-F/G   SAE     6X6X0.3125     33.0 90.29  Comp 78.78      7Y  78.109250C: Ex   99.155  124.400  210.937
0.000  5.095    10 2.360    0.875
     8      LEG-F/G   SAE     6X6X0.3125     33.0 90.75  Comp 89.88      8Y  81.033250C: Ex   90.158  124.400  210.937
0.000  7.133    10 3.357    0.875
     9      LEG-D/E   SAE      6X6X0.375     33.0 79.32  Tens 79.32      9Y  79.965250C: Ex  100.816    0.000    0.000
0.000  8.152     0 3.977    0.875
    10      LEG-D/E   SAE      6X6X0.375     33.0 75.88  Tens 75.88     10Y  76.503250C: Ex  100.816  149.280  303.750
0.000 14.266    12 3.977    0.875
    11      LEG-A/C   SAE      6X6X0.375     33.0 77.85  Comp 76.30     11Y  76.923250C: Ex  100.816  149.280  303.750
0.000 20.380    12 3.977    0.875
    12        LEG-S   SAE      6X6X0.375     33.0 82.68  Comp 77.00     12Y  82.799250C: Ex  107.530  149.280  303.750
0.000 20.380    12 3.357    0.875
```

```
    13    VBR-52/53   SAU   2.5X2X0.1875     33.0 59.88  Comp 53.55     13Y  10.273250C: Ex   19.184   24.880   25.312
21.094  7.071     2 1.000    0.875
    14        VBR-69   SAU   2.5X2X0.1875     33.0 26.35  Comp  0.00     15X   0.000           19.184   12.440   12.656
8.895  6.403     1 1.000    0.875
    15    VBR-50/51   SAU     2.5X2X0.25     33.0 50.79  Tens 50.79     20Y  12.637250C: Ex   24.985   24.880   33.750
26.766  6.403     2 1.000    0.875
    16    VBR-35/36   SAE   2.5X2.5X0.25     33.0 55.26 Cross 36.78     25Y  10.609250C: Ex   28.846   37.320   50.625
42.187  7.071     3 1.000    0.875
    17        VBR-16   SAE 2.5X2.5X0.3125     33.0 21.29  Comp 10.58     27P   2.632250C: Ex   35.241   24.880   42.187
35.156  7.608     2 1.000    0.875
    18    VBR-15/55   SAE   2.5X2.5X0.25     33.0 16.35  Tens 16.35     29X   4.067250B: NE   28.846   24.880   33.750
28.125 10.200     2 1.000    0.875
    19    VBR-14/54   SAE   2.5X2.5X0.25     33.0 23.18  Comp  7.43     30Y   1.848250B: NE   28.846   24.880   33.750
28.125 12.418     2 1.000    0.875
    20         VBR-9   SAU     2.5X2X0.25     33.0 61.58  Comp 30.61     33P   7.615250C: Ex   24.985   24.880   33.750
28.125 18.855     2 1.000    0.875
    21         VBR-1   SAU     2.5X2X0.25     33.0 45.37  Comp 39.43     35P   8.668250C: Ex   24.985   24.880   33.750
21.984 26.517     2 1.000    0.875
    22        VBR-93   SAU     2.5X2X0.25     33.0 63.58  Tens 63.58     36P   7.541250C: Ex   24.985   12.440   16.875
11.859 30.403     1 1.000    0.875
    23    HBR-40/41   SAE   2.5X2.5X0.25     36.0 81.46  Tens 81.46     40P   9.913250C: Ex   31.468   24.880   16.312
12.169  3.536     1 1.000    0.875
    24    HBR-20/21   SAE 2.5X2.5X0.1875     33.0 18.72  Comp 15.61     41Y   3.422250C: Ex   21.917   49.760   25.312
0.000  3.536     2 1.000    0.875
    25         MOD?   SAE      4X4X0.375     33.0 11.68  Comp  0.04     42Y   0.018250B: NE   75.197   49.760   50.625
0.000 10.196     2 1.000    0.875
    26         MOD?   SAE      5X5X0.375     33.0 13.04  Comp  0.00     43Y   0.000           97.472   49.760   50.625
0.000 14.113     2 1.000    0.875
    27        HRZ-75   SAE       3X3X0.25     33.0 16.17  Tens 16.17     45Y   4.022250B: NE   36.271   24.880   33.750
25.078  5.000     2 1.000    0.875
    28    HRZ-28/46   SAU     3X2.5X0.25     33.0 28.95  Comp 23.68     46X   5.891250C: Ex   32.410   24.880   33.750
29.412  5.000     2 1.000    0.875
    29        HRZ-47   SAE       3X3X0.25     33.0 18.63  Comp  0.73    50XY   0.263250C: Ex   36.271   37.320   50.625
42.187  7.669     3 1.000    0.875
    30        HRZ-64   Bar          2x1/4     33.0 39.64  Tens 39.64     52Y   3.679250B: NE    9.281   24.880   33.750
28.125  5.000     2 1.000    0.875
    31        HRZ-67   SAU   2.5X2X0.1875     33.0 38.56  Tens 38.56     54X   3.430250C: Ex   19.184   12.440   12.656
8.895  5.000     1 1.000    0.875
    32        HRZ-68   SAU   2.5X2X0.1875     33.0 57.11  Tens 57.11     55X   5.562250C: Ex   19.184   24.880   12.656
9.738  5.000     1 1.000    0.875
   32a       HRZ-MOD   SAE   2.5X2.5X0.25     36.0 61.64  Tens 61.64    g68X   8.171250C: Ex   31.468   24.880   16.312
13.256  5.000     1 1.000    0.875
    33        HRZ-37   SAU       4X3X0.25     33.0 22.52  Comp  1.86    56XY   0.813250C: Ex   43.696   49.760   67.500
56.250 12.013     4 1.000    0.875
    34        HRZ-17   SAE       3X3X0.25     33.0 18.29  Comp  5.41    58XY   1.963250C: Ex   36.271   37.320   50.625
42.187  8.143     3 1.000    0.875
    35        HRZ-12   SAE   2.5X2.5X0.25     33.0 41.01  Comp  7.78     60P   1.711250B: NE   28.846   24.880   33.750
21.984 10.541     2 1.000    0.875
```

```
    36        HRZ-5   SAU       4X3X0.25     33.0 36.42  Comp  9.75     62P   2.426250B: NE   36.271   24.880   33.750
25.078 14.419     2 1.000    0.875
    37 HRZ-80/81/82   SAE       4X4X0.25     33.0 39.37  Comp 12.47     65X   3.101250C: Ex   44.624   24.880   33.750
28.125 19.959     2 2.000    0.875
    38    STR-70/71   SAU   2.5X2X0.1875     33.0 27.47  Tens 27.47    66XY   4.955250B: NE   19.184   24.880   25.312
18.035  9.155     2 1.000    0.875
    39    STR-62/63   SAU     2.5X2X0.25     33.0 29.96  Tens 29.96    67XY   6.587250B: NE   24.985   24.880   33.750
21.984 12.661     2 1.000    0.875
    40    STR-29/30   SAU   2.5X2X0.1875     33.0 33.40  Tens 33.40     68Y   5.507250B: NE   19.184   24.880   25.312
16.488  9.556     2 1.000    0.875
```

*** Maximum Stress Summary for Each Load Case

Summary of Maximum Usages by Load Case:

Load Case	Maximum Usage %	Element Label	Element Type
250B: NESC Heavy	61.58	32XY	Angle
250C: Extreme Wind (Trans.)	93.36	6Y	Angle

Summary of Insulator Usages:

Insulator Label	Insulator Type	Maximum Usage %	Load Case	Weight (lbs)
11	Clamp	9.95	250B: NESC Heavy	0.0
21	Clamp	9.76	250B: NESC Heavy	0.0
31	Clamp	16.45	250B: NESC Heavy	0.0
41	Clamp	17.07	250B: NESC Heavy	0.0
32	Clamp	17.68	250B: NESC Heavy	0.0
42	Clamp	16.70	250B: NESC Heavy	0.0
33	Clamp	18.42	250B: NESC Heavy	0.0
43	Clamp	17.91	250B: NESC Heavy	0.0
PM-1	Clamp	44.91	250C: Extreme Wind (Trans.)	0.0
PM-2	Clamp	35.88	250C: Extreme Wind (Trans.)	0.0
CX1	Suspension	2.56	250C: Extreme Wind (Trans.)	0.0
CX2	Suspension	1.45	250C: Extreme Wind (Trans.)	0.0
CX3	Suspension	0.94	250C: Extreme Wind (Trans.)	0.0
CX4	Suspension	0.64	250C: Extreme Wind (Trans.)	0.0
CX5	Suspension	0.51	250C: Extreme Wind (Trans.)	0.0
CX6	Suspension	0.42	250C: Extreme Wind (Trans.)	0.0
CX7	Suspension	0.42	250C: Extreme Wind (Trans.)	0.0

CX8	Suspension	0.38	250C: Extreme Wind (Trans.)	0.0
CX9	Suspension	0.34	250C: Extreme Wind (Trans.)	0.0
CX10	Suspension	0.34	250C: Extreme Wind (Trans.)	0.0
CX11	Suspension	0.38	250C: Extreme Wind (Trans.)	0.0
CX12	Suspension	0.21	250C: Extreme Wind (Trans.)	0.0
PM-3	Suspension	53.63	250C: Extreme Wind (Trans.)	0.0
PM-4	Suspension	11.32	250C: Extreme Wind (Trans.)	0.0
PM-5	Suspension	10.03	250C: Extreme Wind (Trans.)	0.0

Loads At Insulator Attachments For All Load Cases:

Load Case	Insulator Label	Insulator Type	Structure Attach Label	Structure Attach Load X (kips)	Structure Attach Load Y (kips)	Structure Attach Load Z (kips)	Structure Attach Load Res. (kips)
250B: NESC Heavy	11	Clamp	2X	0.000	-1.322	1.486	1.989
250B: NESC Heavy	21	Clamp	2P	0.000	-1.264	1.486	1.951
250B: NESC Heavy	31	Clamp	3X	0.804	-1.942	3.534	4.111
250B: NESC Heavy	41	Clamp	3P	-0.120	-1.891	3.823	4.266
250B: NESC Heavy	32	Clamp	4X	1.687	-1.916	3.607	4.419
250B: NESC Heavy	42	Clamp	4P	-0.470	-1.872	3.701	4.174
250B: NESC Heavy	33	Clamp	6X	2.222	-1.926	3.542	4.604
250B: NESC Heavy	43	Clamp	6P	1.893	-1.873	3.599	4.477
250B: NESC Heavy	PM-1	Clamp	11S	0.000	-7.167	0.047	7.167
250B: NESC Heavy	PM-2	Clamp	1d1S	0.000	5.797	0.047	5.797
250B: NESC Heavy	CX1	Suspension	5eX	0.000	-0.771	0.817	1.123
250B: NESC Heavy	CX2	Suspension	5dX	0.000	-0.437	0.463	0.637
250B: NESC Heavy	CX3	Suspension	5cX	0.000	-0.283	0.300	0.412
250B: NESC Heavy	CX4	Suspension	5bX	0.000	-0.193	0.204	0.281
250B: NESC Heavy	CX5	Suspension	5aX	0.000	-0.154	0.164	0.225
250B: NESC Heavy	CX6	Suspension	5X	0.000	-0.127	0.135	0.185
250B: NESC Heavy	CX7	Suspension	1eX	0.000	-0.126	0.134	0.184
250B: NESC Heavy	CX8	Suspension	1dX	0.000	-0.114	0.120	0.166
250B: NESC Heavy	CX9	Suspension	1cX	0.000	-0.101	0.107	0.147
250B: NESC Heavy	CX10	Suspension	1bX	0.000	-0.101	0.107	0.147
250B: NESC Heavy	CX11	Suspension	1aX	0.000	-0.114	0.120	0.166
250B: NESC Heavy	CX12	Suspension	1X	0.000	-0.063	0.067	0.092
250B: NESC Heavy	PM-3	Suspension	51S	0.000	-2.533	-0.000	2.533
250B: NESC Heavy	PM-4	Suspension	5d1S	0.000	-0.496	-0.000	0.496
250B: NESC Heavy	PM-5	Suspension	5e1S	0.000	-0.451	-0.000	0.451
250C: Extreme Wind (Trans.)	11	Clamp	2X	0.000	-0.938	0.470	1.050
250C: Extreme Wind (Trans.)	21	Clamp	2P	0.000	-0.938	0.470	1.050
250C: Extreme Wind (Trans.)	31	Clamp	3X	0.590	-2.445	1.549	2.954
250C: Extreme Wind (Trans.)	41	Clamp	3P	0.270	-2.479	1.701	3.019
250C: Extreme Wind (Trans.)	32	Clamp	4X	1.046	-2.365	1.548	3.014
250C: Extreme Wind (Trans.)	42	Clamp	4P	0.072	-2.381	1.607	2.873
250C: Extreme Wind (Trans.)	33	Clamp	6X	1.302	-2.318	1.530	3.068

250C: Extreme Wind (Trans.)	43	Clamp	6P	1.237	-2.331	1.566	3.069
250C: Extreme Wind (Trans.)	PM-1	Clamp	11S	0.000	-26.948	0.102	26.948
250C: Extreme Wind (Trans.)	PM-2	Clamp	1d1S	0.000	21.526	0.102	21.526
250C: Extreme Wind (Trans.)	CX1	Suspension	5eX	0.000	-1.276	0.128	1.282
250C: Extreme Wind (Trans.)	CX2	Suspension	5dX	0.000	-0.723	0.073	0.727
250C: Extreme Wind (Trans.)	CX3	Suspension	5cX	0.000	-0.468	0.047	0.470
250C: Extreme Wind (Trans.)	CX4	Suspension	5bX	0.000	-0.319	0.032	0.321
250C: Extreme Wind (Trans.)	CX5	Suspension	5aX	0.000	-0.255	0.026	0.256
250C: Extreme Wind (Trans.)	CX6	Suspension	5X	0.000	-0.211	0.021	0.212
250C: Extreme Wind (Trans.)	CX7	Suspension	1eX	0.000	-0.209	0.021	0.210
250C: Extreme Wind (Trans.)	CX8	Suspension	1dX	0.000	-0.188	0.019	0.189
250C: Extreme Wind (Trans.)	CX9	Suspension	1cX	0.000	-0.167	0.017	0.168
250C: Extreme Wind (Trans.)	CX10	Suspension	1bX	0.000	-0.167	0.017	0.168
250C: Extreme Wind (Trans.)	CX11	Suspension	1aX	0.000	-0.188	0.019	0.189
250C: Extreme Wind (Trans.)	CX12	Suspension	1X	0.000	-0.104	0.011	0.105
250C: Extreme Wind (Trans.)	PM-3	Suspension	51S	0.000	-9.675	-0.000	9.675
250C: Extreme Wind (Trans.)	PM-4	Suspension	5d1S	0.000	-2.043	-0.000	2.043
250C: Extreme Wind (Trans.)	PM-5	Suspension	5e1S	0.000	-1.810	-0.000	1.810

Overturning Moments For User Input Concentrated Loads:

Moments are static equivalents based on central axis of 0,0 (i.e. a single pole).

Load Case	Total Tran. Load (kips)	Total Long. Load (kips)	Total Vert. Load (kips)	Transverse Overturning Moment (ft-k)	Longitudinal Overturning Moment (ft-k)	Torsional Moment (ft-k)
250B: NESC Heavy	-21.100	6.016	26.320	-1798.409	-488.822	-27.622
250C: Extreme Wind (Trans.)	-38.594	4.517	10.476	-3300.300	-366.938	7.974

*** Weight of structure (lbs):
Weight of Angles*Section DLF: 16645.4
Total: 16645.4

*** End of Report

APPENDIX D

SUPPLEMENTAL CALCULATIONS

Collar Connection to Tower - AISC

Clamping Collar Bolt Checks

Risa-3D Reactions:

$Axial := 0$	Not Applicable
$Shear := 10.52\ kip$	Worst Case (from Risa3D)
$Moment := 134.95\ kip \cdot ft$	Worst Case (from Risa3D)
$AngleTension := 8.45\ kip$	Worst Case (from Risa3D) - in Single Angle member

Plates Connecting Clamping Collar Halves:

$Fy_{plate} := 36\ ksi$	Yield Strength
$W_{plate} := 5\ in$	Width of plate
$t_{plate} := 1.25\ in$	Thickness of Plate
$d_{plate} := 1.75\ in$	Distance from center of bolt to collar
$N_{plate} := 2$	Number of Bolts per Connection
$n1 := 2$	Number of Connections
$D_{b1} := 0.625 \cdot in$	Nominal Diameter of Bolt
$w_{plate} := 0.3125\ in$	Weld Size
$L_{plate} := 5 \cdot in$	Weld Length
$n2 := 2$	Number of welds
$Fw_{plate} := 70\ ksi$	Weld Strength

Bolt Input: (ASTM A325):

$F_{u\_bolt} := 120\ ksi$ — Minimum tensile strength of bolt

$F_{nt} := 90\ ksi$ — Nominal tensile strength of bolt

$F_{nv} := 54\ ksi$ — Nominal shear strength of bolt

$N := 1$ — Number of Bolts per Connection

$n := 1$ — Number of Connections

$D_{bolt} := 0.625 \cdot in$ — Nominal Diameter of Bolt

$\Phi := 0.75$

$A_b := \frac{\pi}{4} \cdot (D_{bolt})^2 = 0.307\ in^2$ — Nominal Area of Bolt

$R_{nt} := \Phi \cdot A_b \cdot F_{nt} = 20.709\ kip$ — Available Tensile Strength per bolt (LRFD)

$R_{nv} := \Phi \cdot A_b \cdot F_{nv} = 12.425\ kip$ — Available Shear Strength per bolt (LRFD)

Check Collar Bolts:

$$CollarBolt_{usage} := \frac{\frac{Shear}{N_{plate} \cdot n}}{R_{nt}} = 25.4\%$$

$$Status_{plate} := \left\| \begin{array}{l} \text{if } CollarBolt_{usage} \le 1 \\ \quad \text{"OK"} \\ \text{else} \\ \quad \text{"NG"} \end{array} \right\| = \text{"OK"}$$

Check Pipe Collar Plate:

$F_b := \Phi \cdot Fy_{plate} = 27\ ksi$

$S := \frac{1}{6} \cdot W_{plate} \cdot t_{plate}^2 = 1.302\ in^3$

$M := d_{plate} \cdot \frac{Shear}{2} = 9.205\ kip \cdot in$

$$CollarPlate_{usage} := \frac{\frac{M}{S}}{F_b} = 26.2\%$$

$$Status_{plate} := \left\| \begin{array}{l} \text{if } CollarPlate_{usage} \le 1 \\ \quad \text{"OK"} \\ \text{else} \\ \quad \text{"NG"} \end{array} \right\| = \text{"OK"}$$

Check Pipe Collar Weld:

$$R_n := \Phi \cdot 0.6 \cdot Fw_{plate} \cdot \frac{\sqrt{2}}{2} \cdot w_{plate} \cdot L_{plate} = 34.803\ kip$$

$$CollarWeld_{usage} := \frac{\frac{Shear}{n2}}{R_n} = 15.1\%$$

$$Status_{plate} := \left\| \begin{array}{l} \text{if } CollarWeld_{usage} \le 1 \\ \quad \text{"OK"} \\ \text{else} \\ \quad \text{"NG"} \end{array} \right. = \text{"OK"}$$

Angle Plate (tabs):

$Fy_{tab} := 36\ ksi$	Yield Strength
$Fu_{tab} := 58\ ksi$	Yield Strength
$W_{tab} := 3\ in$	Width of plate
$t_{tab} := 0.75\ in$	Thickness of Plate
$d_{tab} := 1.5\ in$	Distance from center of bolt to collar
$dh_{tab} := 0.8125\ in$	Hole Diameter
$N_{tab} := 1$	Number of Bolts per Connection
$n1 := 1$	Number of Connections
$D_{b2} := 0.75 \cdot in$	Nominal Diameter of Bolt
$w_{tab} := 0.3125\ in$	Weld Size
$L_{tab} := 3 \cdot in$	Weld Length
$n2 := 2$	Number of welds
$Fw := 70\ ksi$	Weld Strength

Bolt Input: (ASTM A325):

$F_{u\_bolt} := 120\ ksi$	Minimum tensile strength of bolt
$F_{nt} := 90\ ksi$	Nominal tensile strength of bolt
$F_{nv} := 54\ ksi$	Nominal shear strength of bolt
$N := 1$	Number of Bolts per Connection
$n := 1$	Number of Connections
$D_{bolt} := 0.75 \cdot in$	Nominal Diameter of Bolt
$\Phi := 0.75$	
$\Phi_{yield} := 0.9$	
$A_b := \frac{\pi}{4} \cdot (D_{bolt})^2 = 0.442\ in^2$	Nominal Area of Bolt
$R_{nt} := \Phi \cdot A_b \cdot F_{nt} = 29.821\ kip$	Available Tensile Strength per bolt (LRFD)
$R_{nv} := \Phi \cdot A_b \cdot F_{nv} = 17.892\ kip$	Available Shear Strength per bolt (LRFD)

Check Angle Bolts:

$$AngleBolt_{usage} := \frac{\frac{AngleTension}{N \cdot n}}{R_{nv}} = 47.2\%$$

$$Status_{plate} := \left\| \begin{array}{l} \text{if } AngleBolt_{usage} \le 1 \\ \quad \text{"OK"} \\ \text{else} \\ \quad \text{"NG"} \end{array} \right\| = \text{"OK"}$$

Check Angle Connection Tab:

$A_g := W_{tab} \cdot t_{tab} = 2.25\ in^2$

$A_n := \left(W_{tab} - \left(dh_{tab} + \frac{1}{16}\ in\right)\right) \cdot t_{tab} = 1.594\ in^2$

$U := 1$ Shear lag factor AISC Table D3.1 case 1

$A_e := A_n \cdot U = 1.594\ in^2$

$L_c := 1.0625\ in$

$Pn_{rupture} := \Phi \cdot Fu_{tab} \cdot A_e = 69.328\ kip$ Tensile rupture in net section

$Pn_{yield} := \Phi_{yield} \cdot Fy_{tab} \cdot A_g = 72.9\ kip$ Tensile yielding in gross section

$Rn_{boltbearing} := \Phi \cdot 1.2 \cdot L_c \cdot t_{tab} \cdot Fu_{tab} = 41.597\ kip$ Bolt bearing (governs)

$$AngleTab_{usage} := \frac{AngleTension}{Rn_{boltbearing}} = 20.3\%$$

$$Status_{plate} := \left\| \begin{array}{l} \text{if } AngleTab_{usage} \le 1 \\ \quad \text{"OK"} \\ \text{else} \\ \quad \text{"NG"} \end{array} \right\| = \text{"OK"}$$

Check Angle Connection Tab Weld:

$R_n := \Phi \cdot 0.6 \cdot Fw_{plate} \cdot \frac{\sqrt{2}}{2} \cdot w_{tab} \cdot L_{tab} = 20.882\ kip$

$$CollarWeld_{usage} := \frac{\frac{AngleTension}{n2}}{R_n} = 20.2\%$$

$$Status_{plate} := \left\| \begin{array}{l} \text{if } CollarWeld_{usage} \le 1 \\ \quad \text{"OK"} \\ \text{else} \\ \quad \text{"NG"} \end{array} \right\| = \text{"OK"}$$

Powermount Flange Bolt and Flange Plate Analysis - TIA/222-G

Max Flange Loads

Overturning Moment (Max):	$OM := 123 \cdot ft \cdot kip$	User Input - from Risa-3D
Axial Load (Max):	$A := 4.7 \cdot kip$	User Input - from Risa-3D

Flange Bolt Input:

Bolt Type:	ASTM A325 bolts	User Input
Bolt Quantity:	$N := 12$	User Input
Bolt Circle:	$BC := 21 \cdot in$	User Input
Bolt Ultimate Strength:	$Fu_{bolt} := 120 \cdot ksi$	User Input
Bolt Yield Strength:	$Fy_{bolt} := 92\ ksi$	User Input
Bolt Nominal Diameter:	$D_{bolt} := 0.75 \cdot in$	User Input
Bolt Threads per Inch:	$n := 10$	User Input

Flange Plate Input:

Flange Steel Grade:	ASTM A572-50	User Input
Flange Yield Strength:	$Fy_{plate} := 50 \cdot ksi$	User Input
Flange Thickness:	$t_{Plate} := 1.25 \cdot in$	User Input
Flange Diameter:	$D_{Plate} := 24 \cdot in$	User Input
Pole Diameter:	$D_{Pole} := 18 \cdot in$	User Input

Distance from Bolts to Centroid of Pole:

$$R_{BC} := \frac{BC}{2} = 10.5\ in$$

$$i := 1 .. N$$

$$d_i := \left\| \begin{array}{l} \Theta \leftarrow 2 \cdot \pi \cdot \frac{i}{N} \\ d \leftarrow R_{BC} \cdot \sin(\Theta) \end{array} \right.$$

$$d = \begin{bmatrix} 5.25 \\ 9.09 \\ 10.5 \\ 9.09 \\ 5.25 \\ 0 \\ -5.25 \\ -9.09 \\ -10.5 \\ -9.09 \\ -5.25 \\ 0 \end{bmatrix} in$$

Flange Bolt Properties:

$I_p := \sum_i d_i^2 = 661.5\ in^2$

$A_g := \frac{\pi \cdot D_{bolt}^2}{4} = 0.442\ in^2$ Gross Area of Bolt Shank

$A_s := \frac{\pi}{4} \cdot \left(D_{bolt} - \frac{0.9743\ in}{n}\right)^2 = 0.334\ in^2$ Stress Area of Bolt through the threads

Flange Bolt Tension Check:

$T_{max} := OM \cdot \frac{R_{BC}}{I_p} = 23.429\ kip$

$f_t := \frac{T_{max}}{A_s} = 70.049\ ksi$

$F_t := 0.75 \cdot Fu_{bolt} = 90\ ksi$ As per TIA-222-G Section 4.9.6.1

$Bolt_{usage\_tension} := \frac{f_t}{F_t} = 77.8\%$

$Status_{bolt\_tension} := \left\| \begin{array}{l} \text{if } Bolt_{usage\_tension} \le 1 \\ \quad \text{"OK"} \\ \text{else} \\ \quad \text{"NG"} \end{array} \right\| = \text{"OK"}$

Flange Plate Check:

$W := \pi \cdot \frac{D_{Pole}}{N} = 4.712\ in$ Bend Plane

$S_{plate} := \frac{W \cdot t_{Plate}^2}{6} = 1.227\ in^3$

$M_n := 0.9 \cdot Fy_{plate} \cdot S_{plate} = 55.223\ kip \cdot in$

$M_u := \frac{BC - D_{Pole}}{2} \cdot T_{max} = 35.143\ kip \cdot in$

$Plate_{usage} := \frac{M_u}{M_n} = 63.6\%$

$Status_{plate} := \left\| \begin{array}{l} \text{if } Plate_{usage} \le 1 \\ \quad \text{"OK"} \\ \text{else} \\ \quad \text{"NG"} \end{array} \right\| = \text{"OK"}$

Anchor Rod Check

Reactions

$NESC250B_{shear} := 12.3\ kip$ Maximum Shear Force

$NESC250B_{comp} := 62\ kip$ Maximum Compression Force

$NESC250B_{tens} := 42.3\ kip$ Maximum Tension Force

$NESC250C_{shear} := 20.1\ kip$ Maximum Shear Force

$NESC250C_{comp} := 101.4\ kip$ Maximum Compression Force

$NESC250C_{tens} := 90.5\ kip$ Maximum Tension Force

Anchor Properties:

$d := 1.25\ in$

$\mu := 0.7$ ASCE 10-15 Fig. 7-2 (b)

$N := 4$

$F_y := 36\ ksi$

$$A_{sReq} := \frac{NESC250B_{tens}}{F_y} + \frac{NESC250B_{shear}}{\mu \cdot 0.85 \cdot F_y} = 1.749\ in^2$$

$$A_{sReq} := \frac{NESC250C_{tens}}{F_y} + \frac{NESC250C_{shear}}{\mu \cdot 0.85 \cdot F_y} = 3.452\ in^2 \quad \text{(governs)}$$

$$A_s := \frac{\pi}{4} \cdot \left(d - \frac{0.974}{12}\ in\right)^2 = 1.073\ in^2 \quad \text{(per bolt)}$$

$A_s \cdot N = 4.292\ in^2$ (total area > required area (ok))

Foundation Analysis (OTRM 059.1)

Reactions

$NESC250B_{shear} := 12.3\ kip \cdot 1.1 = 13.53\ kip$ Maximum Shear Force

$NESC250B_{comp} := 62\ kip \cdot 1.1 = 68.2\ kip$ Maximum Compression Force

$NESC250B_{tens} := 42.3\ kip \cdot 1.1 = 46.53\ kip$ Maximum Tension Force

$NESC250C_{shear} := 20.1\ kip \cdot 1.1 = 22.11\ kip$ Maximum Shear Force

$NESC250C_{comp} := 101.4\ kip \cdot 1.1 = 111.54\ kip$ Maximum Compression Force

$NESC250C_{tens} := 90.5\ kip \cdot 1.1 = 99.55\ kip$ Maximum Tension Force

Foundation Properties

$Pier_{height} := 5.67\ ft$

$Pier_{width.top} := 3.85\ ft$ (Pier width at the bottom of the mat)

$Pier_{width.bot} := 5\ ft$

$Pier_{projection} := 0.5\ ft$

$Ftg_{width} := 8\ ft$

$Ftg_{thick} := 2\ ft$

$Mat_{width} := 33.5\ ft$

$Mat_{thick} := 3.5\ ft$

Geotechnical Properties

$\gamma_{conc} := 150\ pcf$

$\gamma_{water} := 62.4\ pcf$

$\gamma_{soil} := 100\ pcf$

$\phi_{soil} := 30\ deg$

$q_{soil} := 2\ ksf$

$\mu := 0.35$ Coefficient of Friction between concrete and soil

Calculations

$$V_{ftg} := Ftg_{width}^{2} \cdot Ftg_{thick} = 128\ ft^3$$

$$V_{pier} := \frac{Pier_{height} - Mat_{thick}}{3} \cdot \left(Pier_{width.top}^{2} + Pier_{width.bot}^{2} + \sqrt{Pier_{width.top}^{2} \cdot Pier_{width.bot}^{2}}\right) = 42.729\ ft^3$$

$$V_{mat} := \frac{Mat_{width}^{2} \cdot Mat_{thick}}{4} = 981.969\ ft^3$$

$$V_{conc} := V_{ftg} + V_{pier} + V_{mat} = 1152.698\ ft^3$$

$$W_{conc} := V_{conc} \cdot \gamma_{conc} = 172.905\ kip$$

$$W_{tot} := W_{conc} = 172.905\ kip$$

Uplift Check

$FS_{uplift\_req} := 1.0$

$FS_{uplift} := \frac{W_{tot}}{NESC250C_{tens}} = 1.737$

$Status_{uplift} := \left\| \begin{array}{l} \text{if } FS_{uplift\_req} \le FS_{uplift} \\ \quad \text{"OK"} \\ \text{else} \\ \quad \text{"NG"} \end{array} \right. = \text{"OK"}$

Overturning Check

$FS_{moment\_req} := 1.0$

$M_{ot} := NESC250C_{shear} \cdot \left(Pier_{height} + Pier_{projection} + Ftg_{thick}\right) = 180.639\ kip \cdot ft$

$M_{res} := W_{conc} \cdot \frac{Ftg_{width}}{2} = 691.619\ kip \cdot ft$

$FS_{moment} := \frac{M_{res}}{M_{ot}} = 3.829$

$Status_{ot} := \left\| \begin{array}{l} \text{if } FS_{moment\_req} \le FS_{moment} \\ \quad \text{"OK"} \\ \text{else} \\ \quad \text{"NG"} \end{array} \right. = \text{"OK"}$

Soil Bearing Check

$FS_{bearing\_req} := 1.0$

$A_{ftg} := \frac{Mat_{width}^{\ 2}}{4} = 280.563\ ft^2$

$S_{ftg} := \frac{\left(\frac{Mat_{width}}{2}\right)^3}{6} = 783.237\ ft^3$

$q_{brg} := \frac{NESC250C_{comp} + W_{conc}}{A_{ftg}} + \frac{NESC250C_{shear} \cdot \left(Pier_{height} + Pier_{projection} + Ftg_{thick}\right)}{S_{ftg}} = 1.244\ ksf$

$FS_{bearing} := \frac{q_{soil}}{q_{brg}} = 1.607$

$Status_{bearing} := \left\| \begin{array}{l} \text{if } FS_{bearing\_req} \le FS_{bearing} \\ \quad \text{"OK"} \\ \text{else} \\ \quad \text{"NG"} \end{array} \right. = \text{"OK"}$

Sliding Check

$FS_{sliding\_req} := 1.0$

$A_{total\_250B} := NESC250C_{comp} + W_{conc} = 284.445\ \mathbf{kip}$

$V_{cap} := A_{total\_250B} \cdot \mu = 99.556\ \mathbf{kip}$

$FS_{sliding} := \dfrac{V_{cap}}{NESC250C_{shear}} = 4.503$

$$Status_{bearing} := \left\| \begin{array}{l} \text{if } FS_{sliding\_req} \le FS_{sliding} \\ \quad \| \text{"OK"} \\ \text{else} \\ \quad \| \text{"NG"} \end{array} \right\| = \text{"OK"}$$

APPENDIX E

SUPPLEMENTAL INFORMATION

DATA SHEET

PCS Twin TMA with 700/850 Bypass

DTMABP7819VG12A

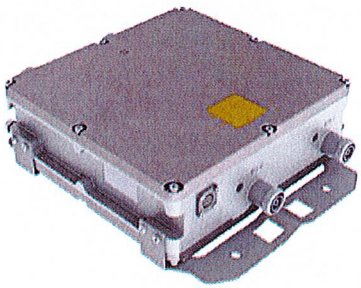

- Small, lightweight, twin unit
- Twin PCS Band Dual Duplexed TMA with 700/850 Band Bypass
- Optional AISG 2.0 compatible unit
- AISG TMA detects BTS port that DC voltage and AISG sampling is applied to, and automatically switches to utilize that port
- AISG TMA operates at constant power
- AISG TMA may be powered by a standard PDU
- High Linearity
- Lightning protected
- Fail-safe bypass mode
- High reliability

Overview

CCI's PCS Twin TMA with 700/850 Bypass contains two PCS TMA's and 700/850 Bypass in a single housing. The PCS TMA is full band and fully duplexed, while the 700 Band and Cellular (850) RF is bypassed and combined (Diplexed) with the PCS RF signal. High linearity improves the uplink sensitivity and the receive performance of base stations. The TMA is fully compliant with the latest AISG 2.0 specification. The TMA supports EDGE/GSM, UMTS and LTE BTS equipment. It provides a convenient package for sites upgraded to triple or quad antenna configurations. The twin TMA package reduces tower loading, leasing, and installation costs. Unit count on the tower is cut in half. An excellent match for two branch receive diversity applications using triple polarization antennas. The input and output connectors are located inline for ease of installation in space constrained areas such as uni-pole structures and stealth antennas.

The TMA system consists of a twin PCS band with 700/850 Bypass tower mount unit which combine separate PCS and the 700/850 Band antennas onto a single BTS port. The PCS path of the tower mount unit is dual duplexed to separate the low-power uplink signals from the high-power downlink signals at the antenna port, amplifies the low-level uplink signals using an ultra-low noise amplifier (LNA), and recombines the two paths at the BTS port. The 700/850 Band path is ultra low loss and passive. Both paths are diplexed at the BTS port. The tower mount units consist of eight band-pass filters, two redundant low-noise amplifiers, bypass failure circuitry, and bias tee's which are all housed in an IP65 moisture proof enclosure, with IP68 Immersion proof connectors suited to long-life masthead mounting. The unit provides protection against lightning strikes via a multi-stage surge protection circuit. DC power and control is provided via the feeder cable from the BTS or a Power Distribution Unit (PDU). Optional AISG 2.0 DC power and control is provided via the feeder cable from the BTS using the AISG 2.0 and 3GPP standard. The optional AISG TMA detects which BTS port has DC Voltage/AISG Sampling applied and automatically switches to utilize that port. Additionally the AISG TMA operates at constant power when powered by an AISG 2.0 Compatible Site Control Unit, but may be powered by a "Standard Power distribution Unit. A separate AISG connector is also provided to allow direct AISG connection or "Daisy Chaining" to multiple AISG products at the top of the tower.
An optional indoor site control unit (SCU) is available to power up to up to 32 AISG modules per sector and to provide the all the monitoring and alarm functions for the system. The SCU is housed in a single (1U) 1.75" x 19" rack and contains triple redundant power supplies capable of being "hot swapped" that provide a regulated DC supply voltage on the RF coax for the tower mount amplifiers.

© 2016 CCI All rights reserved. Specifications are subject to change.

Electrical

RF Parameters	Ports	Frequency(MHz)	Specification
Return Loss	PCS ANT	1850 - 1910	18 dB min. (15 dB bypass mode)
		1930 - 1990	18 dB min.
	BTS	1850 - 1910	18 dB min. (15 dB bypass mode)
		1930 - 1990	18 dB min.
		698 - 894	18 dB min.
	700/850 ANT	698 - 894	18 dB min.
Gain	PCS ANT - BTS	1850 - 1910	6 to 12 dB adjustable in 0.25 dB steps via AISG (± 1.0 dB)
Insertion Loss	PCS ANT - BTS (RX Bypass mode)	1850 - 1910	1.6 dB typ. @ 25°C, 1.8 dB @ 65°C; 2.3 dB typ. @ 25°C, 2.5 dB @ 65°C @ 1910 MHz (band edge) (± 1.0 dB)
	PCS ANT - BTS (TX)	1930 - 1990	0.4 dB typ. (±0.2dB)
	700/850 ANT - BTS	698 - 894	0.1 dB typ., 0.2 dB max.
Rejection	700/850 ANT - BTS	1850 - 1910	70 dB
	PCS ANT- BTS	698 - 894	80 dB
Noise Figure	PCS ANT - BTS	1850 - 1910	1.4 dB @ 25°C, 1.6 dB @ 65°C; 1.7 dB @ 25°C, 1.9 dB @ 65°C @ 1910 MHz (band edge)
Input Third Order Intercept Point	PCS ANT - BTS	1850 - 1910	+12 dBm min. at max. gain

General Characteristics	
Impedance	50 ohms
Continuous Average Power	200 W max.
Peak Envelope Power	2 kW max.
Intermodulation Performance(all ports)	<-110 dBm (-153 dBc) typical (2 x +43 dBm tones) all bands
Operating Voltage	+10V to +30V DC provided via coax or AISG
Power Consumption	< 1.8 W

Environmental

Operating Temperature	-40˚C to +65˚C
Enclosure	IP65 (Unit Body), IP68 (Connector)
MTBF	>500,000 hours
Lightning Protection	8/20us, ±2KA max, 10 strikes each per IEC61000-4-5

Mechanical

Connectors	6 x 7-16 DIN female(long neck), 1 x AISG
Dimensions (body only)(HxWxD)	10.63 x 11.02 x 3.78 in. (270 x 280 x 96 mm)
Dimensions (w/bracket)(HxWxD)	14.25 x 11.46 x 4.17 in. (362 x 291 x 106 mm)
Weight	19.18 lbs max (8.7 kg)-without bracket
Mounting	Pole/Wall mounting bracket

© 2016 CCI All rights reserved. Specifications are subject to change.

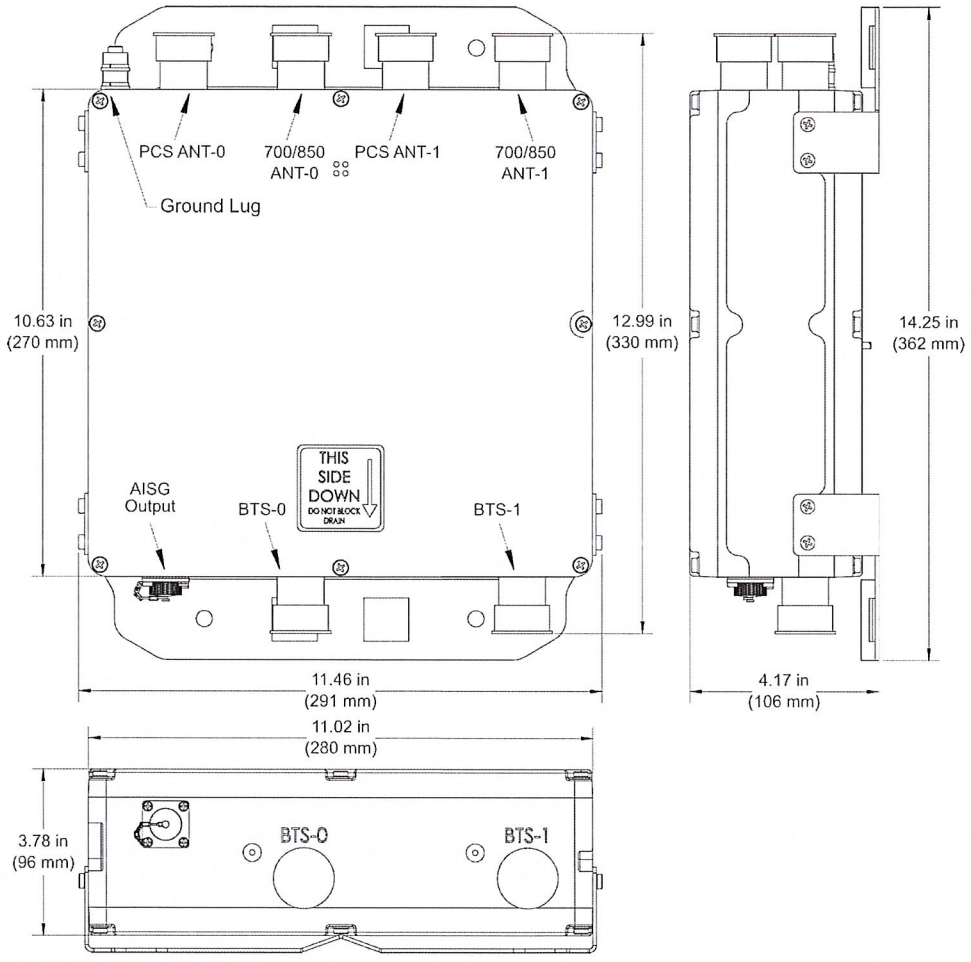

DTMABP7819VG12A Outline Drawing

© 2016 CCI All rights reserved. Specifications are subject to change.

Block Diagram

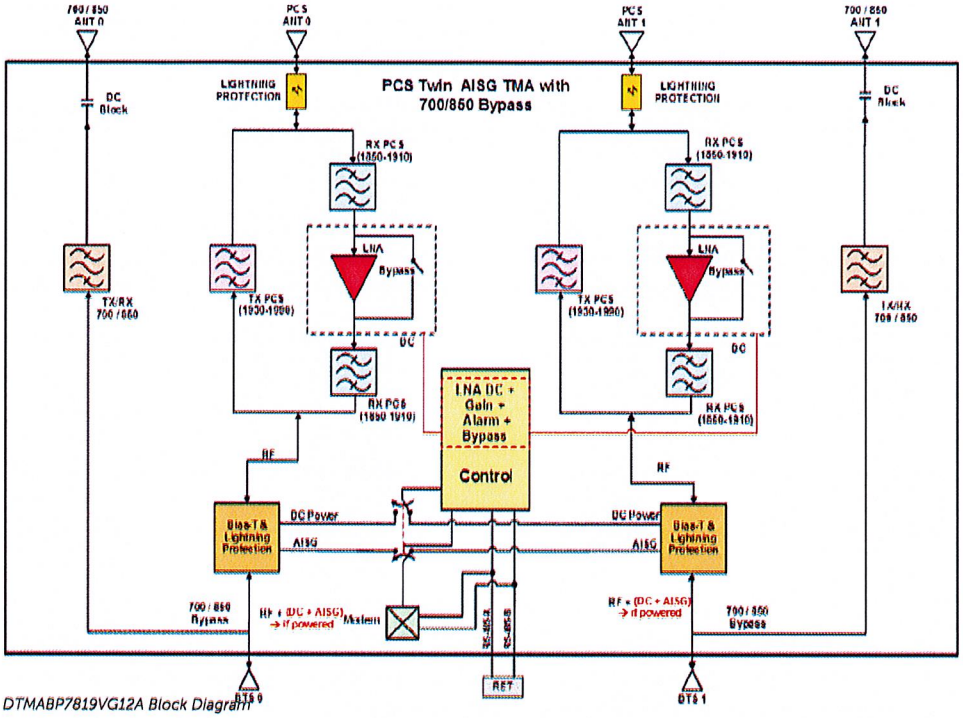

DTMABP7819VG12A Block Diagram

© 2016 CCI All rights reserved. Specifications are subject to change.

Parts & Accessories

DTMABP7819VG12A	PCS Full band AISG Twin TMA with 700/850 Bypass

© 2016 CCI All rights reserved. Specifications are subject to change.

Certifications

Antenna Interface Standards Group (AISG), Federal Communication Commission (FCC) Part 15 Class B, CE, CSA US

© 2016 CCI All rights reserved. Specifications are subject to change.

FILTER BY SELECTION

PRODUCTS

- Amplifiers
- Antennas
- Co-Siting & Antenna Sharing
- DAS Products
- Filters & Combiners
- PIM Analyzers

ANTENNAS

- Antenna Accessories
- Bi-Sector
- iDAS
- Multi-Sector/Special Events
- Single Sector Multiport
- Small Cell/oDAS
- Specialty

DATASHEET

HexPort Multi-Band Ar

OVERVIEW SPECIFICATIONS ACCESSORIES

RESOURCES ORDERING

STANDARDS & CERTIFICATIONS PATTERN VIEWER

Electrical

Ports	2 x Low Band Ports for 698-894 MHz		4 x High Band Ports for 1710-23		
Frequency Range	698-806 MHz	824-894 MHz	1850-1990 MHz	1710-1780 MHz	2110-218 MHz
Gain	14.1 dBi	14.8 dBi	16.9 dBi	16.3 dBi	17.2 dB
Azimuth Beamwidth (-3dB)	66°	65°	61°	66°	62°
Elevation Beamwidth (-3dB)	12.5°	10.5°	5.7°	6.3°	5.1°

FREQUENCY BAND

- [ ] 698-787 MHz
- [ ] 698-894 MHz
- [ ] 698-960 MHz
- [ ] 790-960 MHz
- [ ] 824-894 MHz
- [ ] 1710-1880 MHz
- [ ] 1710-2170 MHz
- [ ] 1710-2360 MHz
- [ ] 1710-2690 MHz
- [ ] 1850-1990 MHz
- [ ] 2300-2400 MHz
- [ ] 2300-2690 MHz
- [ ] 2500-2690 MHz

HEIGHT

- [ ] 2 ft. (458 - 761 mm)
- [ ] 4 ft. (1067 - 1371 mm)
- [ ] 5 ft. (1372 - 1676 mm)
- [ ] 6 ft. (1677 - 1981 mm)
- [ ] 7 ft. (1982 - 2286 mm)
- [ ] 8 ft. (2287 - 2590 mm)

HORIZONTAL BEAMWIDTH

- [ ] 30° to 40°
- [ ] 40° to 50°
- [ ] 50° to 70°
- [ ] 80° to 100°

NUMBER OF PORTS

EXTENDED WIDEBAND PERFORMANCE

Electrical Downtilt	0° to 10°	0° to 10°	0° to 8°	0° to 8°	0° to 8°
Elevation Sidelobes (1st Upper)	< -17 dB	< -19 dB	< -19 dB	< -18 dB	< -18 dB
Front-to-Back Ratio @180°	> 30 dB	> 30 dB	> 30 dB	> 30 dB	> 30 dB
Front-to-Back Ratio over ± 20°	> 30 dB	> 30 dB	> 30 dB	> 30 dB	> 30 dB
Cross-Polar Discrimination (at Peak)	> 25 dB	> 20 dB	> 25 dB	> 25 dB	> 25 dB
Cross-polar Discrimination at ± 60°	> 17 dB	> 14 dB	> 17 dB	> 17 dB	> 17 dB
Cross-Polar Port-to-Port Isolation	> 25 dB	> 25 dB	> 26 dB	> 25 dB	> 26 dB
Voltage Standing Wave Ratio (VSWR)	< 1.5:1	< 1.5:1	< 1.5:1	< 1.5:1	< 1.5:1
Passive Intermodulation (2x20W)	≤ -150 dBc	≤ -150 dBc	≤ -150 dBc	≤ -150 dBc	≤ -150 dB
Input Power Continuous Wave (CW)	500 watts	500 watts	300 watts	300 watts	300 wat
Polarization (Pol)	Dual Pol 45°	Dual Pol 45°	Dual Pol 45°	Dual Pol 45°	Dual Po 45°
Input Impedance	50 ohms	50 ohms	50 ohms	50 ohms	50 ohm
Lightning Protection	DC Ground	DC Ground	DC Ground	DC Ground	DC Ground

Communication Components Inc.
89 Leuning Street
South Hackensack, NJ 07606
+1 (201) 342-3338
+1 (201) 342-3339 fax
sales@prosolutions.com

Copyright © 2018 CCI

Mechanical

Dimensions (LxWxD)	72.3x14.4x7.3 in (1836x366x185 mm)
Survival Wind Speed	> 150 mph (> 241 kph)
Front Wind Load	243 lbs (1081 N) @ 100 mph (161 kph)
Side Wind Load	140 lbs (622 N) @ 100 mph (161 kph)
Equivalent Flat Plate Area	9.5 ft^2 (0.9 m^2)
Weight *	42.9 lbs (19.5 kg)
RET System Weight	5.0 lbs (2.3 kg)
Connector	6 x 7-16 DIN female long neck
Mounting Pole	2 to 5 in (5 to 12 cm)

** Weight excludes mounting and RET*

Bottom View

RET Connection Diagram

- ☐ 4
- ☐ 6
- ☐ 8
- ☐ 10
- ☐ 12

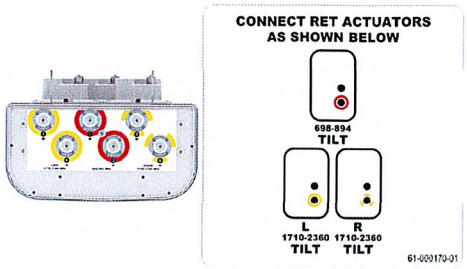

Connector

Spacing

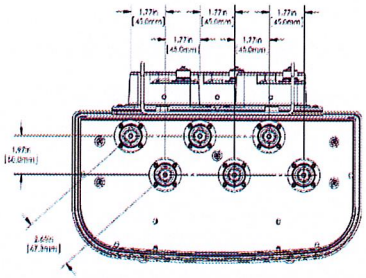

Typical Antenna Patterns

For detailed information on additional antenna patterns, contact customer support at support@cciproducts.com

Interactive Pattern Viewer

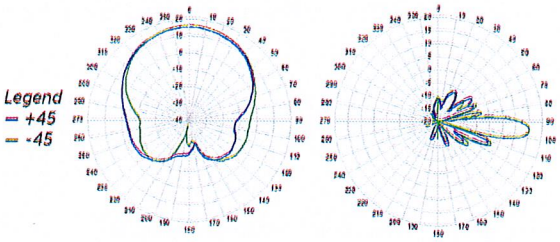

894 MHz Azimuth

894 MHz Elevation 5°

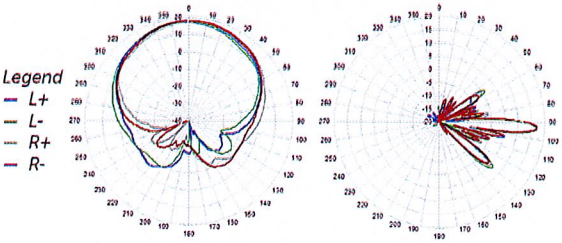

1920 MHz Azimuth

1920 MHz Elevation 4°

Tweet

Email Link

back to top

DATA SHEET

Triple Band Twin TMA (AWS/PCS/WCS) with AWS-3 and 700/850 Bypass

TMABPD7823VG12A

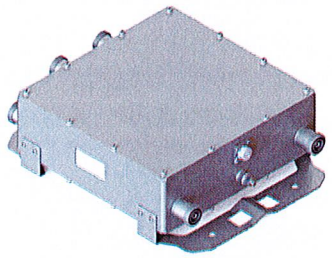

- Triple Band Twin TMA (AWS/PCS/WCS) which includes AWS-3 and 700/850 Bypass
- Each TMA has independent gain control of 6 to 12dB
- Fail-safe bypass mode and multi-strike lightning protection
- Small lightweight unit offers high reliability of >500K Hours MTBF
- Highly linear amplifier with low intermodulation

Overview

CCI's Triple Band Twin TMA (AWS/PCS/WCS), which includes AWS-3 and 700/850 bypass, contains two triple band TMA's in a single housing. Each TMA in the housing is fully duplexed and shares a single LNA for all three bands. The bypass path provides excellent isolation to the TMA path. Separate antenna ports for the bypass path and TMA path are combined onto a single BTS port. The Twin TMA's low noise, highly linear amplifiers improve the uplink sensitivity and the receive performance of the base station. The TMA is fully compliant with the AISG 2.0 specification and supports CDMA, EDGE/GSM, UMTS and LTE BTS equipment. The unit is ideally suited for sites upgraded to quad-band using the existing infrastructure. The TMA allows the sharing of feeder lines for all bands thus reducing tower loading, leasing, and installation costs. The input and output connectors are located inline for ease of installation in space constrained areas such as uni-pole structures and stealth antennas.

Technical Description:

The TMA system is an outdoor triple band twin tower mount unit which provides low noise amplification of PCS, AWS, AWS-3, and WCS uplink signals combined with 700/850 bypassed signals from separate antenna ports to a common BTS port. The tower mount unit consists of 14 band-pass filters, two redundant low noise amplifiers (LNA) with bypass failure circuitry, two bias tees, AISG control circuitry, and lightning protection circuitry all housed in an IP67 enclosure suited to long life masthead mounting. The AWS, PCS and WCS paths are dual duplexed to separate the low power uplink signals from the high power down link signals at the BTS and antenna ports. The AWS, PCS, and WCS uplink signals are amplified with a dedicated ultra-low noise PHEMT LNA with adjustable gain control. The unit provides protection against lightning strikes via a multistage surge protection circuit. DC power and AISG 2.0 control is provided via the BTS feeder cable. The unit operates in current window alarm (CWA) mode until a valid AISG message is detected, at which point it automatically switches to AISG mode. Once in AISG mode, the unit can only switch back to CWA mode with the receipt of an AISG CCI vendor defined command. In CWA mode, the unit requires 12VDC at each BTS port and follows typical current window convention. In AISG mode, the unit will accept 10-30 VDC from either BTS port. In AISG mode, the unit does not require an AISG 2.0 compatible site control unit (SCU) and may also be powered by a standard power distribution unit (PDU).
An optional Site Control Unit (SCU) is available to power up to 32 AISG modules per sector and to provide the monitoring and alarm functions for the system. The SCU is housed in a single (1U) 1.75" x 19" rack and contains dual redundant power supplies capable of being "hot swapped" that provide a regulated DC supply voltage on the RF coax for the tower mount amplifiers.

© 2017 CCI All rights reserved. Specifications are subject to change.

Electrical

RF Parameters	Ports	Frequency(MHz)	Specification
Return Loss (minimum)	700/850 ANT	698 - 894	18 dB
	PCS/AWS/WCS ANT	1850 - 1910	18 dB (10 dB bypass mode)
		1930 - 1990	18 dB
		1710 - 1780	18 dB (10 dB bypass mode)
		2110 - 2180	18 dB
		2305 - 2320	18 dB (10 dB bypass mode)
		2345 - 2360	18 dB
	BTS	698 - 894	18 dB
		1850 - 1910	18 dB (10 dB bypass mode)
		1930 - 1990	18 dB
		1710 - 1780	18 dB (10 dB bypass mode)
		2110 - 2180	18 dB
		2305 - 2320	18 dB (10 dB bypass mode)
		2345 - 2360	18 dB
Gain Setting	PCS/AWS/WCS ANT to BTS	1710 - 1780, 1850 - 1910, 2305 - 2320	6 to 12 dB adjustable in 0.25 dB steps via AISG (± 1.0 dB)
Gain, Actual (when set for 6 dB)	PCS/AWS/WCS ANT to BTS	1710 - 1780, 1850 - 1910	6 ± 1.0 dB
		2305 - 2320	5 ± 1.0 dB
Gain, Actual (when set for 9 dB)	PCS/AWS/WCS ANT to BTS	1710 - 1780, 1850 - 1910	9 ± 1.0 dB
		2305 - 2320	8 ± 1.0 dB
Gain, Actual (when set for 12 dB)	PCS/AWS/WCS ANT to BTS	1710 - 1780, 1850 - 1910	12 ± 1.0 dB
		2305 - 2320	11 ± 1.0 dB
Insertion Loss	700/850 ANT - BTS	698 - 894	0.25 dB typical
	PCS/AWS/WCS ANT to BTS (RX Bypass mode)	1850 - 1910	2.5 dB typical
		1710 - 1780	2.5 dB typical
		2305 - 2320	4.5 dB typical
	PCS/AWS/WCS ANT to BTS (TX)	1930 - 1990	0.5 dB typical
		2110 - 2180	0.4 dB typical
		2345 - 2360	0.7 dB typical
Isolation	700/850 ANT to PCS/AWS/WCS ANT	698 - 894	70 dB
		1710 - 2360	70 dB
Noise Figure	PCS/AWS/WCS ANT to BTS	1850 - 1910	1.5 dB typical
		1710 - 1780	1.3 dB typical
		2305 - 2320	2.3 dB typical
Input Third Order Intercept Point (minimum)	PCS/AWS/WCS ANT to BTS	1710 - 1780	+12 dBm at maximum gain
		1850 - 1910	+12 dBm at maximum gain
		2305 - 2320	+12 dBm at maximum gain

General Characteristics	
Impedance	50 ohms
Continuous Average Power	200 W max.
Peak Envelope Power	2 kW max.
Intermodulation Performance(all ports)	<-117 dBm (-160 dBc) typical (2 × +43 dBm tones) all bands
Operating Voltage	+10V to +30V DC provided via coax or AISG
Power Consumption	< 2.0 W

© 2017 CCI All rights reserved. Specifications are subject to change.

Environmental

Operating Temperature	-40˚C to +65˚C
Ingress Protection	IP67
MTBF	>500,000 hours
Lightning Protection	8/20us, ±10KA max, 10 strikes each per IEC61000-4-5

Mechanical

Connectors	6 x 7-16 DIN female 1 x AISG
Dimensions enclosure (HxWxD)	10.63 x 11.04 x 3.75 in. (270.0 x 280.3 x 95.2 mm)
Dimensions with brackets (HxWxD)	14.22 x 11.56 x 4.24 in. (361.8 x 293.5 x 107.6 mm)
Weight enclosure	25.0 lbs (11.3 kg)
Weight with brackets	26.0 lbs (11.8 kg)
Mounting	Pole/Wall mounting bracket

© 2017 CCI All rights reserved. Specifications are subject to change.

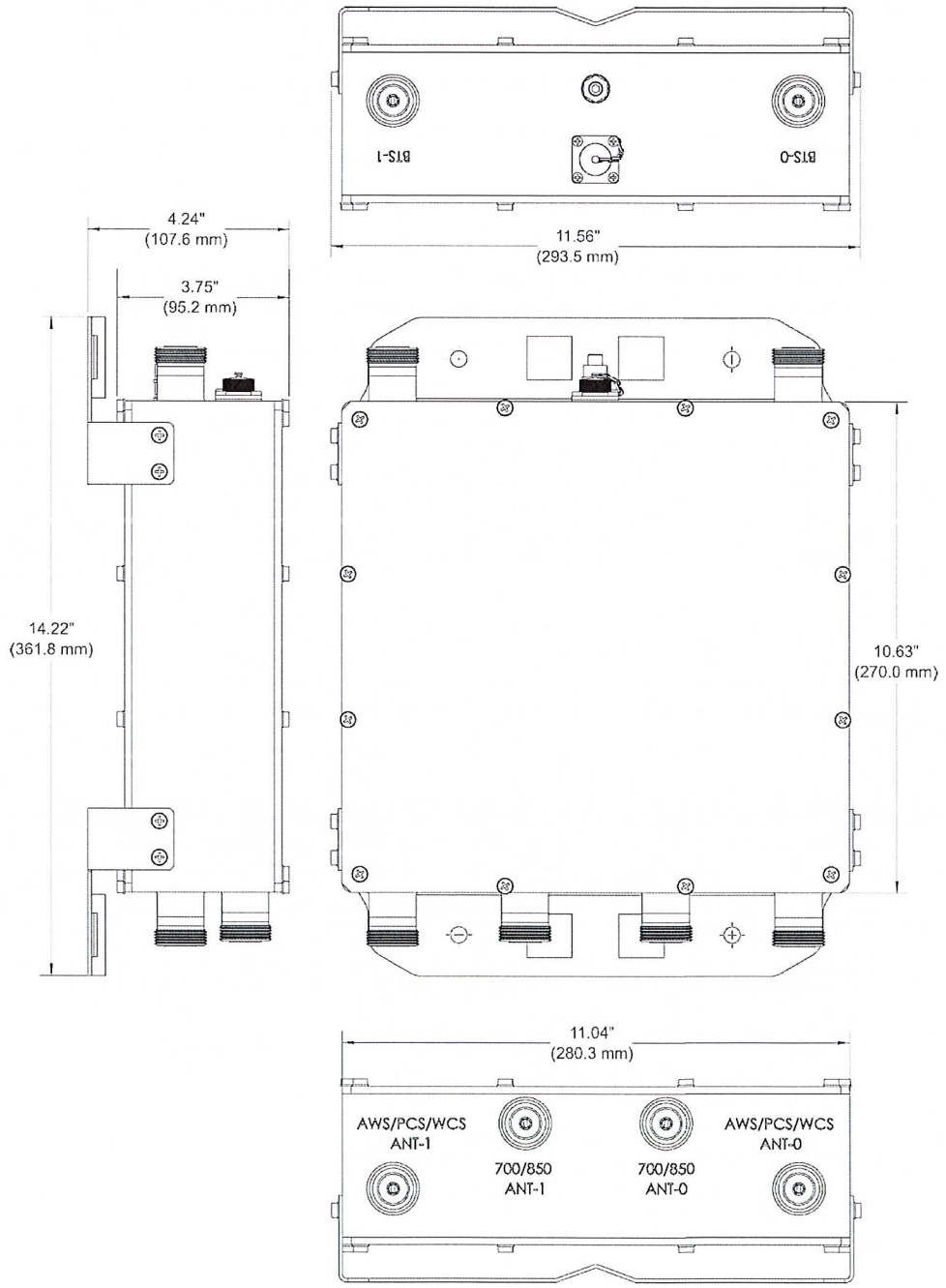

TMABPD7823VG12A Outline Drawing

© 2017 CCI All rights reserved. Specifications are subject to change.

Block Diagram

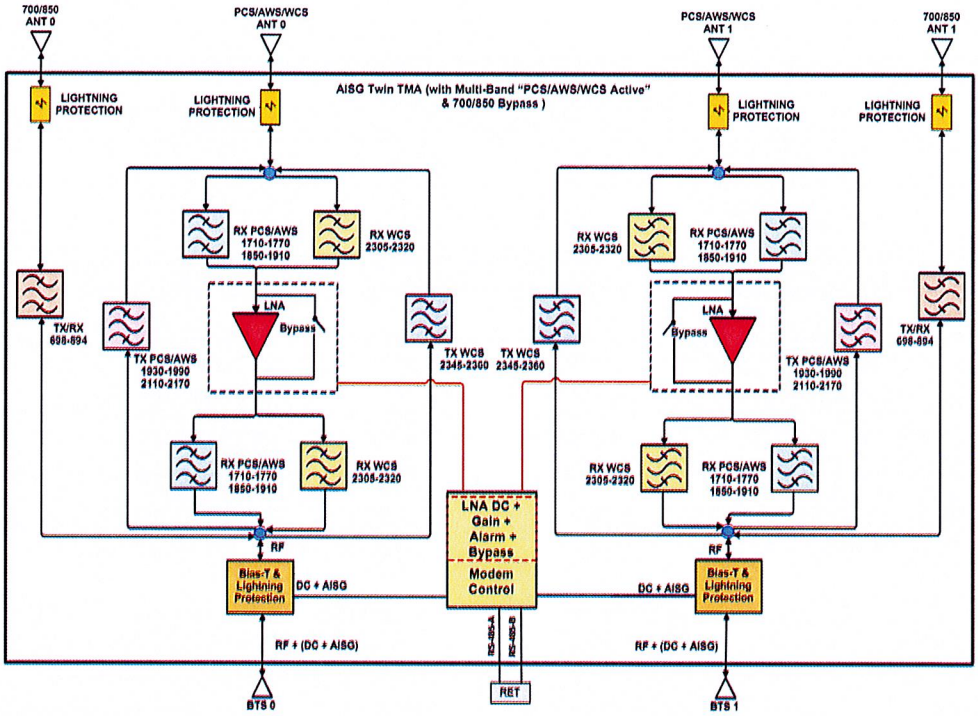

TMABPD7823VG12A Block Diagram

© 2017 CCI All rights reserved. Specifications are subject to change.

STANDARDS & CERTIFICATIONS

Parts & Accessories

TMABPD7823VG12A	Triple Band Twin TMA (PCS/AWS/WCS) with 700/850 Bypass with 7/16 DIN connectors

Standards & Compliance

Safety	EN 60950-1, UL 60950-1
Emission	EN 55022
Immunity	EN 55024
Environmental	IEC 60068-2-1, IEC 60068-2-2, IEC 60068-2-5, IEC 60068-2-6, IEC-60068-2-11, IEC 60068-2-14, IEC 60068-2-18, IEC 60068-2-27, IEC 60068-2-29, IEC 60068-02-30, IEC 60068-2-52, IEC 60068-2-64, IEC61000-4-5, GR-63-CORE 4.3.1, EN 60529 IP68

Certifications

Antenna Interface Standards Group (AISG), Federal Communication Commission (FCC) Part 15 Class B, CE, CSA US, ISO 9001:2008

© 2017 CCI All rights reserved. Specifications are subject to change.

8-Port Antenna	R1	R2	Y1	Y2
Frequency Range	698–960	698–960	1695–2690	1695–2690
Dual Polarization	X	X	X	X
HPBW	65°	65°	65°	65°
Adjust. Electr. DT set by *FlexRET*	2°–12°	2°–12°	2.5°–12°	2.5°–12°

KATHREIN

AISG Antenna Interface Standards Group

8-Port Antenna 698–960/698–960/1695–2690/1695–2690 65°/65°/65°/65° 15.5/15.5/18/18dBi 2°–12°/2°–12°/2.5°–12°/2.5°–12°T

Type No.		80010965			
Left side, lowband		R1, connector 1–2			
		698–960			
Frequency Range	MHz	698 – 806	790 – 862	824 – 894	880 – 960
Gain at mid Tilt	dBi	14.8	15.4	15.6	15.9
Gain over all Tilts	dBi	14.8 ± 0.6	15.4 ± 0.4	15.6 ± 0.2	15.8 ± 0.2
Horizontal Pattern:					
Azimuth Beamwidth	°	62 ± 3.9	61 ± 3.2	60 ± 2.7	60 ± 2.1
Front-to-Back Ratio, Total Power, ± 30°	dB	> 22	> 25	> 27	> 25
Vertical Pattern:					
Elevation Beamwidth	°	11.9 ± 0.8	11.0 ± 0.8	10.5 ± 0.4	10.2 ± 0.4
Electrical Downtilt continuously adjustable	°	2.0 – 12.0			
Tilt Accuracy	°	< 0.7	< 0.7	< 0.7	< 0.7
First Upper Side Lobe Suppression	dB	> 14	> 14	> 15	> 14
Cross Polar Isolation	dB	> 30			
Port to Port Isolation	dB	> 27 (R1 // R2) > 30 (R1 // Y1, Y2)			
Max. Effective Power per Port	W	400 (at 50 °C ambient temperature)			
Max. Effective Power Port 1–2	W	800 (at 50 °C ambient temperature)			

Values based on NGMN-P-BASTA (version 9.6) requirements.

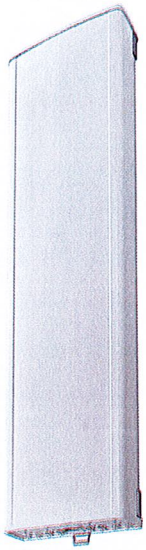

936.5306/b.1 ngmn 04.24.02.03 Subject to alteration.

Kathrein USA Greenway Plaza II, 2400 Lakeside Blvd., Suite 650, Richardson TX 75082
Phone: 214.238.8800 Fax: 214.238.8801 Email: info@kathrein.com

Right side, lowband		R2, connector 3–4			
		698–960			
Frequency Range	MHz	698 – 806	790 – 862	824 – 894	880 – 960
Gain at mid Tilt	dBi	14.8	15.3	15.5	15.8
Gain over all Tilts	dBi	14.8 ± 0.6	15.3 ± 0.3	15.5 ± 0.3	15.7 ± 0.3
Horizontal Pattern:					
Azimuth Beamwidth	°	63 ± 3.6	62 ± 1.8	62 ± 2.1	60 ± 3.7
Front-to-Back Ratio, Total Power, ± 30°	dB	> 22	> 24	> 26	> 27
Vertical Pattern:					
Elevation Beamwidth	°	11.6 ± 0.7	11.0 ± 0.6	10.7 ± 0.4	10.2 ± 0.5
Electrical Downtilt continuously adjustable	°	2.0 – 12.0			
Tilt Accuracy	°	< 0.7	< 0.6	< 0.6	< 0.5
First Upper Side Lobe Suppression	dB	> 14	> 16	> 16	> 16
Cross Polar Isolation	dB	> 30			
Port to Port Isolation	dB	> 27 (R2 // R1) > 30 (R2 // Y1, Y2)			
Max. Effective Power per Port	W	400 (at 50 °C ambient temperature)			
Max. Effective Power Port 3–4	W	800 (at 50 °C ambient temperature)			

Values based on NGMN-P-BASTA (version 9.6) requirements.

Left side, highband		Y1, connector 5–6				
		1695–2690				
Frequency Range	MHz	1695 – 1880	1850 – 1990	1920 – 2180	2300 – 2400	2490 – 2690
Gain at mid Tilt	dBi	17.6	17.9	18.3	18.1	18.1
Gain over all Tilts	dBi	17.5 ± 0.4	17.8 ± 0.4	18.1 ± 0.5	18.0 ± 0.6	18.0 ± 0.4
Horizontal Pattern:						
Azimuth Beamwidth	°	62 ± 5.1	65 ± 4.1	62 ± 7.2	56 ± 4.1	57 ± 5.1
Front-to-Back Ratio, Total Power, ± 30°	dB	> 22	> 25	> 25	> 25	> 25
Vertical Pattern:						
Elevation Beamwidth	°	6.4 ± 0.5	5.9 ± 0.3	5.5 ± 0.4	4.8 ± 0.3	4.4 ± 0.2
Electrical Downtilt continuously adjustable	°	2.5 – 12.0				
Tilt Accuracy	°	< 0.2	< 0.1	< 0.2	< 0.3	< 0.2
First Upper Side Lobe Suppression	dB	> 19	> 18	> 16	> 18	> 16
Cross Polar Isolation	dB	> 28				
Port to Port Isolation	dB	> 30 (Y1 // R1, R2, Y2)				
Max. Effective Power per Port	W	200 (at 50 °C ambient temperature)				
Max. Effective Power Port 5–6	W	400 (at 50 °C ambient temperature)				

Values based on NGMN-P-BASTA (version 9.6) requirements.

936.5306/b.1 ngmn 04.24.02.03 Subject to alteration.

All specifications are subject to change without notice.
The latest specifications are available at www.kathreinusa.com

Kathrein USA Greenway Plaza II, 2400 Lakeside Blvd., Suite 650, Richardson TX 75082
Phone: 214.238.8800 Fax: 214.238.8801 Email: info@kathrein.com

Right side, highband		Y2, connector 7–8				
		1695–2690				
Frequency Range	MHz	1695 – 1880	1850 – 1990	1920 – 2180	2300 – 2400	2490 – 2690
Gain at mid Tilt	dBi	17.5	18.0	18.3	18.2	17.9
Gain over all Tilts	dBi	17.4 ± 0.4	17.8 ± 0.4	18.1 ± 0.6	18.0 ± 0.7	17.8 ± 0.7
Horizontal Pattern:						
Azimuth Beamwidth	°	65 ± 4.7	66 ± 4.7	62 ± 7.8	57 ± 3.8	59 ± 7.1
Front-to-Back Ratio, Total Power, ± 30°	dB	> 24	> 26	> 26	> 25	> 24
Vertical Pattern:						
Elevation Beamwidth	°	6.4 ± 0.4	5.9 ± 0.3	5.5 ± 0.5	4.8 ± 0.3	4.4 ± 0.3
Electrical Downtilt continuously adjustable	°	2.5 – 12.0				
Tilt Accuracy	°	< 0.2	< 0.2	< 0.2	< 0.3	< 0.2
First Upper Side Lobe Suppression	dB	> 18	> 18	> 15	> 17	> 16
Cross Polar Isolation	dB	> 28				
Port to Port Isolation	dB	> 30 (Y2 // R1, R2, Y1)				
Max. Effective Power per Port	W	200 (at 50 °C ambient temperature)				
Max. Effective Power Port 7–8	W	400 (at 50 °C ambient temperature)				

Values based on NGMN-P-BASTA (version 9.6) requirements.

936.5306/b.1 ngmn 04.24.02.03 Subject to alteration.

Kathrein USA Greenway Plaza II, 2400 Lakeside Blvd., Suite 650, Richardson TX 75082
Phone: 214.238.8800 Fax: 214.238.8801 Email: info@kathrein.com

KATHREIN

Electrical specifications, all systems

Impedance	Ω	50
VSWR		< 1.5
Return Loss	dB	> 14
Interband Isolation	dB	> 27
Passive Intermodulation	dBc	< –153 (2 x 43 dBm carrier)
Polarization	°	+45, –45
Max. Effective Power for the Antenna	W	1200 (at 50 °C ambient temperature)

Values based on NGMN-P-BASTA (version 9.6) requirements.

Mechanical specifications

Input		8 x 4.3-10 female
Connector Position		bottom
Adjustment Mechanism		FlexRET, continuously adjustable
Wind load (at Rated Wind Speed: 150 km/h) (93 mph)	N | lbf	Frontal: 1130 | 254 Maximal: 1140 | 256
Max. Wind Velocity	km/h mph	241 150
Height / Width / Depth	mm inches	1999 / 508 / 175 78.7 / 20.0 / 6.9
Category of Mounting Hardware		XH (X-Heavy)
Weight	kg lb	44.3 / 49.3 (clamps incl.) 97.6 / 108.6 (clamps incl.)
Packing Size	mm inches	2200 / 542 / 268 86.6 / 21.3 / 10.6
Scope of Supply		Panel, FlexRET and clamps for 55–115 mm | 2.2–4.5 inches diameter

Accessories (order separately if required)

Type No.	Description	Remarks mm | inches	Weight approx. kg | lb	Units per antenna
85010097	2 clamps	Mast diameter: 110 – 220 | 4.3 – 8.7	9.4 | 20.7	1
85010099	1 downtilt kit	Downtilt angle: 0° – 13°	10.6 | 23.4	1
86010154	Site Sharing Adapter	3-way (see figure below)	0.7 | 1.5	
86010155	Site Sharing Adapter	6-way (see figure below)	1.4 | 3.1	
86010162	Gender Adapter	Solely to be used in combination with the FlexRET module 86010153V01	0.045 | 0.099	1
86010163	Port Extender		0.16 | 0.35	1

Accessories (included in the scope of supply)

85010096	2 clamps	Mast diameter: 55 – 115 | 2.2 – 4.5	5.0 | 11.0	1
86010153V01	FlexRET			1

For downtilt mounting use the clamps for an appropriate mast diameter together with the downtilt kit.
Wall mounting: No additional mounting kit needed.

Material: **Reflector screen:** Aluminum.
Fiberglass housing: It covers totally the internal antenna components. The special design reduces the sealing areas to a minimum and guarantees the best weather protection. Fiberglass material guarantees optimum performance with regards to stability, stiffness, UV resistance and painting. The color of the radome is light grey.
All nuts and bolts: Stainless steel or hot-dip galvanized steel.

Grounding: The metal parts of the antenna including the mounting kit and the inner conductors are DC grounded.

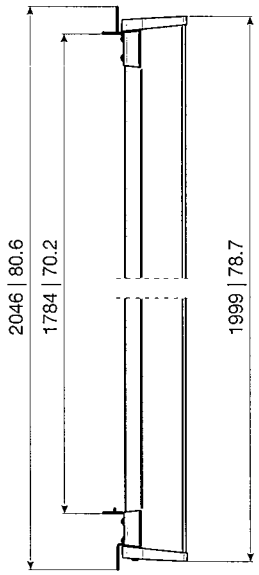

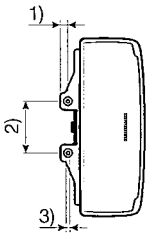

1) 22 | 0.9
2) 150 | 5.9
3) ∅ 11 | 0.4

All dimensions in mm | inches

Configuration example with Site Sharing Adapter 86010154

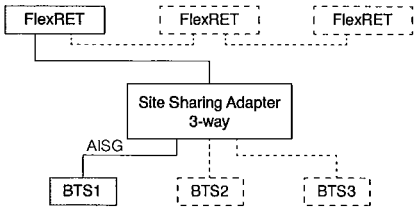

Configuration example with Site Sharing Adapter 86010155

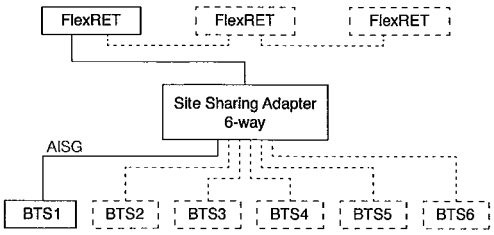

For more information please refer to the respective data sheets.

936.5306/b.1 ngmn 04.24.02.03 Subject to alteration.

KATHREIN

Layout of interface:

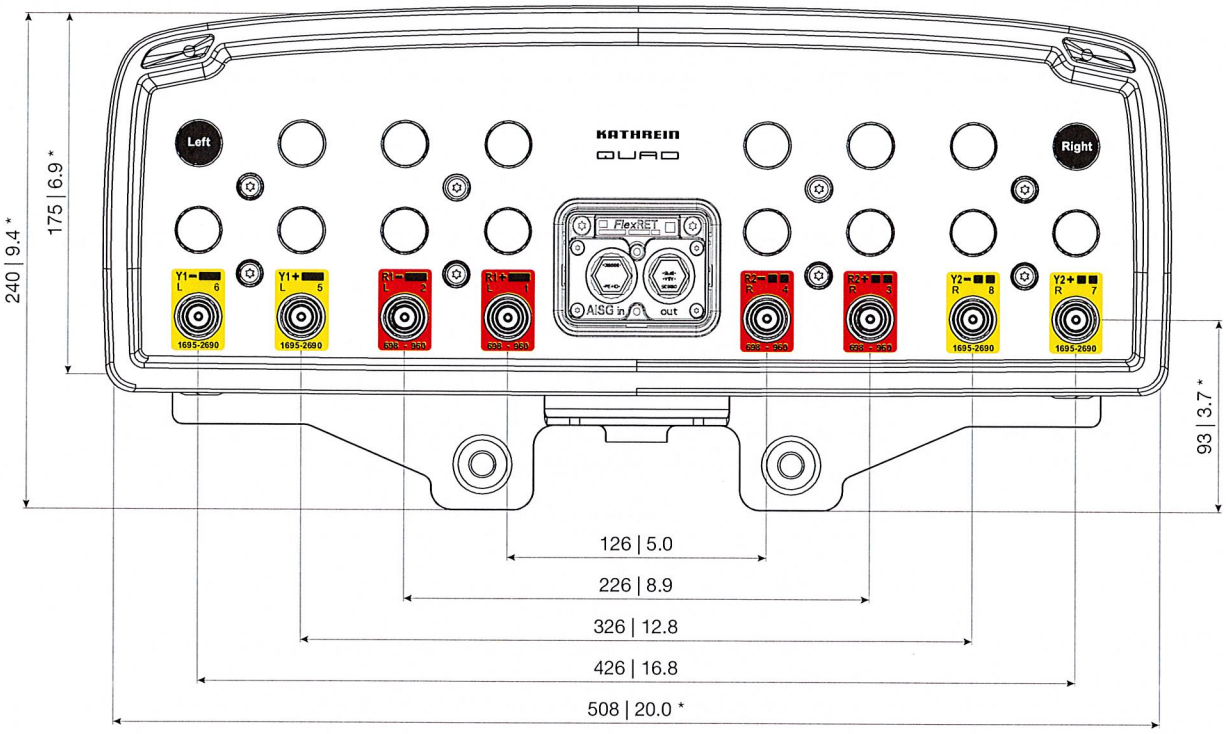

Bottom view
* Dimensions refer to radome
All dimensions in mm | inches

Correlation Table

Frequency range	Array	Connector
698– 960 MHz	R1	1–2
698– 960 MHz	R2	3–4
1695–2690 MHz	Y1	5–6
1695–2690 MHz	Y2	7–8

Order Information

Model	Description
80010965	8-Port antenna with mounting bracket
80010965K	8-Port antenna with mounting bracket and mechanical tilt bracket

936.5306/b.1 ngmn 04.24.02.03 Subject to alteration.

Any previous data sheet issues have now become invalid.

All specifications are subject to change without notice.
The latest specifications are available at www.kathreinusa.com

Kathrein USA Greenway Plaza II, 2400 Lakeside Blvd., Suite 650, Richardson TX 75082
Phone: 214.238.8800 Fax: 214.238.8801 Email: info@kathrein.com

Dual Broadband Antenna

90° 1.4 m MET Antenna

806-960/1710-2170 MHz

Part Number: 7770.00	Horizontal Beamwidth: 90° Gain: 13.5/16 dBi	Electrical Downtilt: Adjustable Connector Type: 7/16 female

The Powerwave dual band dual polarized broadband antenna has individual adjustable electrical downtilt per band (upgradeable to Remote Electrical Tilt (RET). Four connector ports allow separate tilts on each frequency band and ensure the use of diversity concepts. The phase shifter technology, based on a patented sliding dielectric, minimizes intermodulation distortion and maximizes efficiency. The slant +/- 45° dual polarization system provides the independent fading signals needed for achieving top-quality coverage via diversity concepts. The Powerwave Broadband antenna design is based on a patented stacked aperture-coupled patch technology, which provides high isolation performance and a wide VSWR bandwidth. The antennas have superior radiation patterns due to a unique reflector design which provides a very small variation of the –3dB horizontal beam width over the frequency band as well as a high front-to-back ratio.

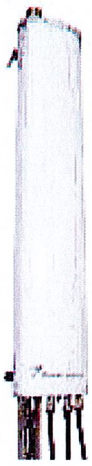

Key Benefits

- Excellent broad- and multi-band capabilities
- Polarization purity makes good diversity gain
- Excellent pattern performance and high gain over frequency
- High passive intermodulation performance
- Light, slim and robust design

Preliminary

ANTENNA SYSTEMS

BASE STATION SYSTEMS

COVERAGE SYSTEMS

Dual Broadband Antenna

806-960/1710-2170 MHz

Electrical Specifications (Preliminary)

Frequency band (MHz)	806-960		1710-2170
Gain, ± 0.5dB (dBi)	13.5		16.0
Polarization		Dual linear ±45°	
Nominal Impedance (Ohm)		50	
VSWR	1.5:1		
VSWR			1.5:1
Isolation between inputs (dB)	30		
Isolation between inputs (dB)			30
Inter band isolation (dB)		40	
Horizontal -3 dB beamwidth	85 ± 5°		85 ± 5°
Tracking, Horizontal plane, ±60° (dB)	<2.0		
Tracking, Horizontal plane, ±60° (dB)			<2.0
Electrical downtilt range (adjustable)	0° to 10°		0° to 8°
Vertical -3 dB beamwidth	14.3 ± 2.0°		6.6 ± 1°
Sidelobe suppression, Vertical 1 st upper (dB)	>17,16,15 x=0, 5, 10° MET		> 17, 16,15 x=0, 4, 8° MET
Vertical beam squint	<0.8°		<0.5°
First null-fill (dB)	<-25		<-25
Front-to-back ratio (dB)	>25		>27
Front-to-back ratio, total power (dB)	>20		>23
IM3, 2Tx@43dBm (dBc)	<-153		
IM3, 2Tx@43dBm (dBc)			<-153
IM7, 2Tx@43dBm (dBc)			<-160
Power Handling, Average per input (W)	400		250
Power Handling, Average total (W)	800		500

All specifications are subject to change without notice.
Contact your Powerwave representative for complete performance data.

Mechanical Specifications

Connector Type	4 x 7/16 DIN female
Connector Position	Bottom
Dimensions, HxWxD	1408mm x 280mm x 125mm (55"x11"x5")
Weight Including Brackets	15.8 kg (35 lbs)
Wind Load, Frontal, 42m/s Cd=1	435N (98 lbf)
Survival Wind Speed (m/s)	70 (156mph)
Lightning Protection	DC grounded
Radome Material	GRP
Radome Color	Light Gray
Mounting	Pre-mounted Standard Brackets
Packing Size	1550mm x 355mm x 255mm (61"x14"x10")

Corporate Headquarters
Powerwave Technologies, Inc.
1801 East St. Andrew Place
Santa Ana, CA 92705 USA
Tel: 714-466-1000
Fax: 714-466-5800
www.powerwave.com

Main European Office
Antennvägen 6
SE-187 80 Täby
Sweden
Tel: +46 8 540 822 00
Fax: +46 8 540 823 40

Main Asia Pacific Office
23 F Tai Yau Building
181 Johnston Road
Wanchai, Hong Kong
Tel: +852 2512 6123
Fax: +852 2575 4860

Powerwave technologies

©Copyright March 2005, Powerwave Technologies, Inc. All Rights reserved. Powerwave, Powerwave Technologies, The Power in Wireless and the Powerwave logo are registered trademarks of Powerwave Technologies, Inc.

COVERAGE AND CAPACITY | TECHNOLOGY LEADERSHIP | GLOBAL PARTNER | INTEGRATED SOLUTIONS | QUALITY AND RELIABILITY

D031-08208 Rev A

Tower Mounted Amplifier

Dual Band 1900 MHz with 850 MHz Bypass

1900/850 MHz

Part Number: LGP 214nn	Up-link: 1850-1910 MHz Down-link: 1930-1990 MHz Bypass: 824-894 MHz	Gain: 12 dB Noise Figure: < 1.7 dB

The Powerwave® TMA-DD 1900/850 is a dual band Tower Mounted Amplifier (TMA) to be installed near the antenna. Deployed in an AMPS, GSM, GPRS, EDGE and CDMA network it will increase capacity and coverage as well as extend the battery life time for the handsets. The TMA System will provide enhanced coverage and improved up-link signal quality. Appropriate for new rollouts by optimizing coverage with a reduced number of BTSs or as an upgrade to existing BTSs for enhancing the existing coverage.

Extended band TMA facilitates simplified logistics, especially when the frequency bands are scattered. The unit comprises of high Q band-pass filters, dual balanced low noise amplifiers with circuits for active bias, supervision, alarms and lightning protection circuit. The Powerwave patented design with all active components integrated within the filter body provides an extremely reliable, compact and lightweight TMA solution. The vented enclosure design is employed to prevent the effect of condensation, thereby guaranteeing long, reliable, maintenance-free service in all environmental conditions. These TMAs offer an easy to install, maintenance free, cost effective solution for coverage enhancement and increased quality in mobile communication networks.

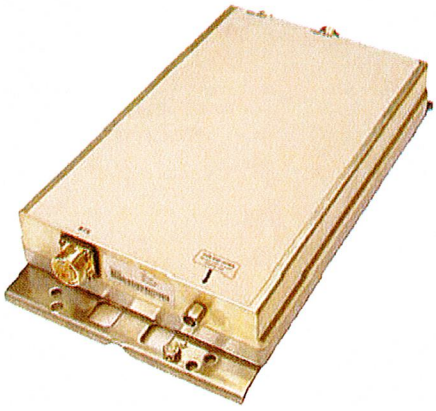

Key Benefits:

- 850 MHz Bypass
- Improved Network Quality
- Increased Coverage
- State of the Art Performance
- Excellent Power Handling
- Low Tx Loss
- Exceptional Reliability

THE POWER IN WIRELESS®

Powerwave technologies

Tower Mounted Amplifier

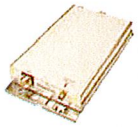

1900/850 MHz

Technical Specifications

Product Number	LGP214nn	
850 MHz	Bypass (MHz)	824-894
	Return loss* (dB)	> 20
	Insertion loss* (dB)	< 0.3
1900 MHz		
Up-link	Frequency range, full band (60 MHz)	1850-1910
	Nominal gain (dB)	12
	Return loss* (dB)	> 20
	Noise figure* (dB)	< 1.7
	Output 3rd order Intercept Point* (dBm)	> +23
Down-link	Frequency range, full band (60 MHz)	1930-1990
	Insertion loss* (dB)	< 0.6
	Return loss* (dB)	> 20
Intermodulation	2 Tx@x43 dBm (dBc)	<-158
Alarm Functionality	Two levels,individually supervised LNAs	
Power Consumption	@12 VDC	1.2 W

* Typical

All specifications subject to change without notice. Please contact your Powerwave representative for complete performance data.

Mechanical Specifications

Size,W x H x D (without mounting plate)	235 x 366 x 66 mm (9.2 x 14.4 x 2.6 in)
Weight	6.4 kg (14.1 lbs)
Color	Off white (NCS 1502-R)
Housing	Aluminum
RF-connectors	DIN 7/16 female.
Mounting kit	Mounting kit for pole and wall is included
Temperature range	-40 °C to +65 °C (-40 °F to +149 °F)
MTBF	>1 million hours
Safety	UL 60 950
Ingress protection, IP 65	EN 60 529
Environmental	ETS 300 019
EMC	FCC Part 15

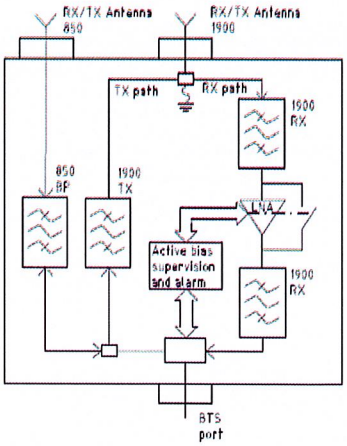

Corporate Headquarters
Powerwave Technologies, Inc.
1801 East St. Andrew Place
Santa Ana, CA 92705 USA
Tel: 714-466-1000
Fax: 714-466-5800
www.powerwave.com

Main European Office
Antennvägen 6
SE-187 80 Täby
Sweden
Tel: +46 8 540 822 00
Fax: +46 8 540 823 40

Main Asia-Pacific Office
23 F Tai Yau Building
181 Johnston Road
Wanchai, Hong Kong
Tel: +852 2512 6123
Fax: +852 2575 4860

Powerwave technologies

©Copyright 2006, Powerwave Technologies, Inc. All Rights reserved. Powerwave, Powerwave Technologies, The Power in Wireless and the Powerwave logo are registered trademarks of Powerwave Technologies, Inc.

COVERAGE AND CAPACITY | TECHNOLOGY LEADERSHIP | GLOBAL PARTNER | INTEGRATED SOLUTIONS | QUALITY AND RELIABILITY

Product Data Sheet **APX16DWV-16DWVS-E-A20**

Optimizer® Side-by-Side Dual Polarized Antenna, 1710-2200, 65deg, 18.4dBi, 1.4m, VET, 0-10deg RET

Product Description

A combination of two X-Polarized antennas in a single radome, this pair of variable tilt antennas provides exceptional suppression of all upper sidelobes at all downtilt angles. It also features a wide downtilt range. This antenna is optimized for performance across the entire frequency band (1710-2200 MHz). The antenna comes pre-connected with two antenna control units (ACU).

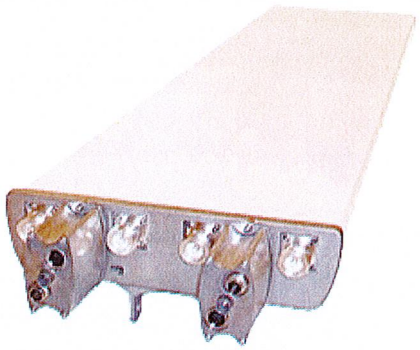

Features/Benefits

- **Variable electrical downtilt - provides enhanced precision in controlling intercell interference. The tilt is infield adjustable 0-10 deg.**
- **High Suppression of all Upper Sidelobes (Typically <-20dB).**
- **Gain tracking – difference between AWS UL (1710-1755 MHz) and DL (2110-2155 MHz) <1dB.**
- **Two X-Polarised panels in a single radome.**
- **Azimuth horizontal beamwidth difference <4deg between AWS UL (1710-1755 MHz) and DL (2110-2155 MHz).**
- **Low profile for low visual impact.**
- **Dual polarization; Broadband design.**
- **Includes (2) AISG 2.0 Compatible ACU-A20-N antenna control units.**

Technical Specifications

Electrical Specifications

Frequency Range, MHz	1710-2200
Horizontal Beamwidth, deg	65
Vertical Beamwidth, deg	5.9 to 7.7
Electrical Downtilt, deg	0-10
Gain, dBi (dBd)	18.4 (16.3)
1st Upper Sidelobe Suppression, dB	> 18 (typically > 20)
Upper Sidelobe Suppression, dB	> 18 all (typically > 20)
Front-To-Back Ratio, dB	>26 (typically 28)
Polarization	Dual pol +/-45°
VSWR	< 1.5:1
Isolation between Ports, dB	> 30
3rd Order IMP @ 2 x 43 dBm, dBc	> 150 (155 Typical)
Impedance, Ohms	50
Maximum Power Input, W	300
Lightning Protection	Direct Ground
Connector Type	(4) 7-16 Long Neck Female

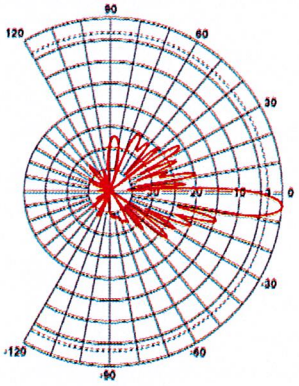

Vertical Pattern

Mechanical Specifications

Dimensions - HxWxD, mm (in)	1420 x 331 x 80 (55.9 x 13 x 3.15)
Weight w/o Mtg Hardware, kg (lb)	18.5 (40.7)
Survival Wind Speed, km/h (mph)	200 (125)
Rated Wind Speed, km/h (mph)	160 (100)
Max Wind Loading Area, m² (ft²)	0.47 (5.03)
Front Thrust @ Rated Wind, N (lbf)	756 (170)
Maximum Thrust @ Rated Wind, N (lbf)	756 (170)
Wind Load - Side @ Rated Wind, N (lbf)	231 (52)
Wind Load - Rear @ Rated Wind, N (lbf)	408 (92)
Radome Material	Fiberglass
Radome Color	Light Grey RAL7035
Mounting Hardware Material	Diecasted Aluminum
Shipping Weight, kg (lb)	24.5 (53.9)
Packing Dimensions, HxWxD, mm (in)	1520 x 408 x 198 (59.8 x 16 x 7.8)

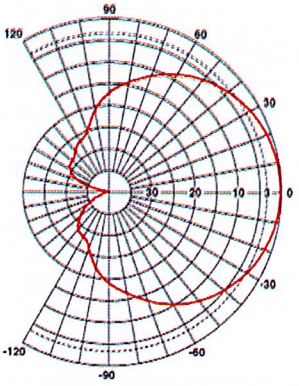

Horizontal Pattern

Ordering Information

Mounting Hardware	APM40-2 + APM40-E2

Other Documentation

APM40 Series Datasheet
APM40 Series Installation Instructions

All information contained in the present datasheet is subject to confirmation at time of ordering

MODIFIED 101'-0" TRANSMISSION TOWER
EVERSOURCE STRUCTURE #1321
CIRCUIT #1483/1545

BU #841299 / AT&T SITE #CTL02043, FA #10035240

670 CHAPEL STREET
STRATFORD, FAIRFIELD COUNTY, CONNECTICUT
LAT: 41° 14' 16.80"; LONG: -73° 7' 20.60"

PROJECT CONTACTS

STRUCTURE OWNER:
EVERSOURCE ENERGY
CONTACT: JOEL SZARKOWICZ AT
JOEL.SZARKOWICZ@EVERSOURCE.COM
PH: (860) 728-4503

CARRIER INFO:
CROWN CASTLE
CONTACT: CHARLES TRASK AT CHARLES.TRASK@CROWNCASTLE.COM
PH: (980) 209-8228

ENGINEER OF RECORD:
PJFMOD@PAULJFORD.COM

THIS PROJECT INCLUDES THE FOLLOWING ITEMS
TOWER & PIPE RISER REINFORCING

SHEET INDEX

SHEET NUMBER	DESCRIPTION
T-1	TITLE SHEET
N-1	GENERAL NOTES
MI-1	INSPECTION NOTES
MI-2	FIELD MEASUREMENTS AND NOTES
S-1	TOWER ELEVATION AND SECTIONS
1 S-2	DETAILS AND MATERIAL LIST

DESIGN DATA - ANTENNA MOUNT		
REFERENCE STANDARD	TIA/EIA-222-G (W/ ALL ADDENDUMS)	
STRUCTURE CLASS	III	
EXPOSURE CATEGORY	C	
TOPOGRAPHIC CATEGORY	1	
LOAD CASE DESCRIPTION	WIND WITHOUT ICE	WIND WITH ICE
BASIC WIND SPEED (MPH)	97	50
ICE THICKNESS (IN)	0	0.75

DESIGN DATA - TOWER				
REFERENCE STANDARD(S)	NESC C2-2017			
STRUCTURE OWNER STANDARD	EVERSOURCE OTRM 059			
NESC SECTION	250B			250C
LOAD CASE DESCRIPTION	HEAVY	MEDIUM	LIGHT	EXTREME WIND
LOAD CASE USED	X			X
RADIAL ICE (IN)	0.5	0.25	0	0
WIND SPEED (3-SEC GUST) MPH	40	40	60	110
TEMPERATURE (DEG F)	0	15	30	60

STATE OF CONNECTICUT
JAMES R. ANTOSZEWSKI
31499
LICENSED
PROFESSIONAL ENGINEER
11/18/2019

REV	DATE	DESCRIPTION
1	11-15-2019	ADDED SHEET S-2

© Copyright 2019, by Paul J. Ford and Company. All Rights Reserved. This document and the data contained herein, is proprietary to Paul J. Ford and Company, issued in strict confidence and shall not, without the prior written permission of Paul J. Ford and Company, be reproduced, copied or used for any purpose other than the intended use for this specific project.

PJF PAUL J. FORD & COMPANY
250 E Broad St, Ste 600 · Columbus, OH 43215
Phone 614.221.6679 www.pauljford.com

AT&T MOBILITY
1025 LENOX PARK BLVD, 3RD FLOOR TOWER ASSET GROUP
ATLANTA, GEORGIA 30319

EVERSOURCE STRUCTURE #1321
CIRCUIT #1483/1545
670 CHAPEL STREET
STRATFORD, FAIRFIELD COUNTY, CONNECTICUT
BU #841299 / AT&T SITE #CTL02043, FA #10035240

PROJECT No:	37519-3029,001,6125 R1
DRAWN BY:	FE
DESIGNED BY:	CEC
CHECKED BY:	CJH
DATE:	8-15-2019

TITLE SHEET

T-1
SHEET #1 OF 5

37519-3029,001,6125 R1.DWG

EVERSOURCE PROJECT 670 CHAPEL STREET, STRATFORD, FAIRFIELD COUNTY, CONNECTICUT
UTILITY PROJECT MASTER NOTES DOCUMENT (REV. 1, 6/21/2018)

1. **GENERAL NOTES**
   - 1.1. THE STRUCTURAL ANALYSIS ASSUMES THAT ALL TOWER COMPONENTS ARE IN BRAND-NEW CONDITION. NO ALLOWANCE WAS MADE FOR ANY DAMAGED, MISSING OR RUSTED MEMBERS. IF ANY OF THESE CONDITIONS ARE DISCOVERED, THE CONTRACTOR SHALL BRING THEM TO THE ATTENTION OF THE OWNERS REPRESENTATIVE.
   - 1.2. THESE DRAWINGS WERE PREPARED FROM INFORMATION AND DOCUMENTS PROVIDED BY OWNER. THE INFORMATION PROVIDED HAS NOT BEEN FIELD VERIFIED BY THE ENGINEER OF RECORD (EOR) FOR ACCURACY AND THEREFORE DISCREPANCIES BETWEEN THESE DRAWINGS AND ACTUAL SITE CONDITIONS SHOULD BE ANTICIPATED. IT IS THE CONTRACTOR'S RESPONSIBILITY TO FIELD VERIFY ALL EXISTING CONDITIONS AND DIMENSIONS AND COORDINATE WITH THE AVAILABLE SOURCES OF INFORMATION ABOVE AND WITH THE PROJECT DRAWINGS BEFORE PROCEEDING WITH THE WORK. CONTRACTOR SHALL IMMEDIATELY REPORT ANY AND ALL DISCREPANCIES TO THE EOR AND OWNER FIELD PERSONNEL BEFORE PROCEEDING WITH THE WORK.
   - 1.3. IF MATERIALS, QUANTITIES, STRENGTHS OR SIZES INDICATED BY THE DRAWINGS OR SPECIFICATIONS ARE NOT IN AGREEMENT WITH THESE NOTES, THE BETTER QUALITY AND/OR GREATER QUANTITY, STRENGTH OR SIZE INDICATED, SPECIFIED OR NOTED SHALL BE PROVIDED.
   - 1.4. THIS STRUCTURE IS DESIGNED TO BE SELF-SUPPORTING AND STABLE AFTER THE INSTALLATION OF THE MODIFICATIONS DESCRIBED HEREIN. IT IS THE CONTRACTOR'S SOLE RESPONSIBILITY TO ENSURE THE SAFETY AND STABILITY OF THE STRUCTURE AND ITS COMPONENT PARTS DURING FIELD MODIFICATIONS. THIS INCLUDES, BUT IS NOT LIMITED TO, THE ADDITION OF WHATEVER TEMPORARY BRACING, GUYS OR TIE DOWNS THAT MAY BE NECESSARY. SUCH MATERIAL SHALL BE REMOVED AND SHALL REMAIN THE PROPERTY OF THE CONTRACTOR AFTER THE COMPLETION OF THE PROJECT.
   - 1.5. ALL CONSTRUCTION MEANS AND METHODS; INCLUDING BUT NOT LIMITED TO, ERECTION PLANS, RIGGING PLANS, CLIMBING PLANS AND RESCUE PLANS SHALL BE THE RESPONSIBILITY OF THE GENERAL CONTRACTOR RESPONSIBLE FOR THE EXECUTION OF THE WORK CONTAINED HEREIN AND SHALL MEET OSHA AND GENERAL INDUSTRY STANDARDS.
   - 1.6. OBSERVATION VISITS TO THE SITE BY OWNER AND/OR THE EOR SHALL NOT INCLUDE INSPECTIONS OF THE PROTECTIVE MEASURES OR THE CONSTRUCTION PROCEDURES.
   - 1.7. ANY SUPPORT SERVICES PERFORMED BY THE EOR DURING CONSTRUCTION ARE SOLELY FOR THE PURPOSE OF ASSISTING IN QUALITY CONTROL AND IN ACHIEVING GENERAL CONFORMANCE WITH CONTRACT DOCUMENTS. THEY DO NOT GUARANTEE CONTRACTOR'S PERFORMANCE AND SHALL NOT BE CONSTRUED AS SUPERVISION OF CONSTRUCTION.
   - 1.8. ALL MATERIALS AND EQUIPMENT FURNISHED SHALL BE NEW AND OF GOOD QUALITY, FREE FROM FAULTS AND DEFECTS AND IN CONFORMANCE WITH THE CONTRACT DOCUMENTS. ANY AND ALL SUBSTITUTIONS MUST BE PROPERLY APPROVED AND AUTHORIZED IN WRITING BY OWNER AND EOR PRIOR TO INSTALLATION. THE CONTRACTOR SHALL FURNISH SATISFACTORY EVIDENCE AS TO THE KIND AND QUALITY OF MATERIALS AND EQUIPMENT BEING SUBSTITUTED.
   - 1.9. THE CONTRACTOR SHALL BE RESPONSIBLE FOR INITIATING, MAINTAINING, AND SUPERVISING ALL SAFETY PRECAUTIONS AND PROGRAMS IN CONNECTION WITH THE WORK. THE CONTRACTOR IS RESPONSIBLE TO ENSURE THAT THIS PROJECT AND RELATED WORK COMPLIES WITH ALL APPLICABLE LOCAL, STATE, AND FEDERAL SAFETY CODES AND REGULATIONS GOVERNING THIS WORK AS WELL AS OWNER SAFETY GUIDELINES.
   - 1.10. THE CONTRACTOR SHALL BE RESPONSIBLE FOR PROTECTING ALL EXISTING AND NEW EQUIPMENT DURING CONSTRUCTION.
   - 1.11. ANY EXISTING ATTACHMENTS AND/OR PROJECTIONS ON THE STRUCTURE THAT MAY INTERFERE WITH THE INSTALLATION OF THE MODIFICATION SYSTEM WILL HAVE TO BE REMOVED AND RELOCATED, REPLACED, OR RE-INSTALLED AS REQUIRED AFTER THE MODIFICATION IS SUCCESSFULLY COMPLETED. THE CONTRACTOR SHALL IDENTIFY AND COORDINATE THESE ITEMS PRIOR TO CONSTRUCTION WITH OWNER, TESTING AGENCY, AND EOR.
   - 1.12. THE CLIMBING FACILITIES, SAFETY CLIMB AND ALL PARTS THEREOF SHALL NOT BE IMPEDED, MODIFIED OR ALTERED WITHOUT THE EXPRESS APPROVAL OF THE EOR.

2. **STRUCTURAL STEEL**
   - 2.1. SHOP DRAWINGS SHALL BE SUBMITTED TO ENGINEER FOR APPROVAL. DRAWINGS MUST BEAR THE CHECKERS INITIALS BEFORE SUBMITTING TO ENGINEER. CONTRACTOR SHALL REVIEW THE SHOP DRAWINGS FOR GENERAL CONFORMANCE TO THE PLANS PRIOR TO SUBMITTING TO ENGINEER. SHOP DRAWINGS SHALL INCLUDE ERECTION DRAWINGS, ELEVATIONS AND SECTIONS. SHOP DRAWINGS SHALL ALSO INCLUDE SECTION PROFILES, SIZES, CONNECTIONS, ATTACHMENTS, REINFORCING, ANCHORAGE SIZE AND TYPE OF FASTENERS AND ASSEMBLIES.
   - 2.2. STRUCTURAL STEEL MATERIALS, FABRICATION, DETAILING, AND WORKMANSHIP SHALL CONFORM TO THE LATEST EDITION OF THE FOLLOWING REFERENCE STANDARDS:
     - 2.2.1. BY THE AMERICAN INSTITUTE OF STEEL CONSTRUCTION (AISC):
       - 2.2.1.1. "SPECIFICATION FOR STRUCTURAL STEEL BUILDINGS."
       - 2.2.1.2. SPECIFICATION FOR STRUCTURAL JOINTS USING ASTM HIGH STRENGTH BOLTS," AS APPROVED BY THE RESEARCH COUNCIL ON STRUCTURAL CONNECTIONS.
       - 2.2.1.3. "CODE OF STANDARD PRACTICE FOR STEEL BUILDINGS AND BRIDGES"
     - 2.2.2. BY THE AMERICAN WELDING SOCIETY (AWS):
       - 2.2.2.1. "STRUCTURAL WELDING CODE – STEEL D1.1."
       - 2.2.2.2. "STANDARD SYMBOLS FOR WELDING, BRAZING, AND NONDESTRUCTIVE EXAMINATION"
     - 2.2.3. BY THE AMERICAN SOCIETY OF CIVIL ENGINEERS:
       - 2.2.3.1. DESIGN OF LATTICED STEEL TRANSMISSION STRUCTURES (ASCE 10-XX)
       - 2.2.3.2. DESIGN OF STEEL TRANSMISSION POLE STRUCTURES (ASCE 48-XX)
   - 2.3. NEW STEEL (UNLESS NOTED OTHERWISE) SHALL CONFORM TO THE REQUIREMENTS OF THE ASTM STANDARD SPECIFICATION FOR STRUCTURAL STEEL AS NOTED BELOW:
     - M, S, C, MC, L, PLATES & BARS - ASTM A36 (36 KSI YIELD POINT MATERIAL)
     - W - ASTM A992 (50 KSI YIELD POINT MATERIAL)
     - HSS RECTANGULAR - ASTM A500, GRADE B (46 KSI YIELD POINT MATERIAL)
     - HSS ROUND - ASTM A500, GRADE B (42 KSI YIELD POINT MATERIAL)
     - PIPE - ASTM A53, GRADE B (35 KSI YIELD POINT MATERIAL)
   - 2.4. NEW BOLTS SHALL CONFORM TO THE REQUIREMENTS OF ASTM A325, TYPE "X" UNLESS NOTED OTHERWISE. ALL HOLES FOR BOLTS SHALL BE 1/16" LARGER THAN THE BOLT DIAMETER WITH AN EDGE DISTANCE OF AT LEAST 1 3/4 TIMES THE BOLT DIAMETER AND A SPACING OF AT LEAST 3 TIMES THE BOLT DIAMETER UNLESS NOTED OTHERWISE. ALL BOLTS SHALL BE PROVIDED WITH LOCK WASHERS, PALNUTS, OR LOCK NUTS.
   - 2.5. ALL STRUCTURAL BOLTS SHALL BE INSTALLED AND TIGHTENED TO A SNUG TIGHT CONDITION ACCORDING TO THE REQUIREMENTS OF THE AISC 'SPECIFICATION FOR STRUCTURAL JOINTS USING HIGH-STRENGTH BOLTS'; UNLESS NOTED OTHERWISE ON DRAWINGS.
   - 2.6. ALL U-BOLTS SHALL BE A307 UNLESS NOTED OTHERWISE.
   - 2.7. ANY MATERIAL OR WORKMANSHIP WHICH IS OBSERVED TO BE DEFECTIVE OR INCONSISTENT WITH THE CONTRACT DOCUMENTS SHALL BE CORRECTED, MODIFIED, OR REPLACED AT THE CONTRACTOR'S EXPENSE.
   - 2.8. WELDED CONNECTIONS SHALL CONFORM TO THE LATEST REVISED CODE OF THE AMERICAN WELDING SOCIETY, AWS D1.1. ALL WELD ELECTRODES SHALL BE E70XX UNLESS NOTED OTHERWISE ON THE DRAWINGS.
   - 2.9. ALL WELDED CONNECTIONS SHALL BE MADE BY WELDERS CERTIFIED BY AWS. CONTRACTOR SHALL SUBMIT WELDERS' CERTIFICATION AND QUALIFICATION DOCUMENTATION TO OWNER'S TESTING AGENCY FOR REVIEW AND APPROVAL PRIOR TO CONSTRUCTION.
   - 2.10. ALL SURFACES MUST BE CLEAN AND FREE OF WELD SPATTER. ALL EDGES SHALL BE DEBURRED.
   - 2.11. ALL PARTS ARE TO BE MARKED WITH ITEM NUMBERS USING 3/4" HIGH STEEL STENCILS.
   - 2.12. SHOP SHALL ASSEMBLE AND VERIFY FIT AND GAPS BEFORE BREAKDOWN FOR GALVANIZING.
   - 2.13. NO FIELD WELDING SHALL BE DONE TO THE EXISTING STRUCTURE WITHOUT THE PRIOR APPROVAL OF THE OWNER AND SUPERVISION BY THE INSPECTION/TESTING AGENCY.
   - 2.14. FIELD CUTTING OF STEEL:
     - 2.14.1. IMPORTANT CUTTING AND WELDING SAFETY GUIDELINES. THE CONTRACTOR SHALL FOLLOW ALL OWNER CUTTING, WELDING, FIRE PREVENTION AND SAFETY GUIDELINES. PRIOR TO CONSTRUCTION, THE CONTRACTOR SHALL OBTAIN A COPY OF THE CURRENT OWNER GUIDELINES. ANY DAMAGE TO THE COAX CABLES, AND/OR OTHER EQUIPMENT AND/OR THE STRUCTURE, RESULTING FROM THE CONTRACTOR'S ACTIVITIES SHALL BE REPAIRED AT THE CONTRACTOR'S EXPENSE. THE INSPECTION/TESTING AGENCY SHALL CLOSELY AND CONTINUOUSLY MONITOR THIS ACTIVITY.
     - 2.14.2. ALL REQUIRED CUTS SHALL BE CUT WITHIN THE DIMENSIONS SHOWN ON THE DRAWINGS. NO CUTS SHALL EXTEND BEYOND THE OUTLINE OF THE DIMENSIONS SHOWN ON THE DRAWINGS. ALL CUT EDGES SHALL BE GROUND SMOOTH AND DE-BURRED. CONTRACTOR TO AVOID 90 DEGREE CORNERS. IT MAY BE NECESSARY TO DRILL STARTER HOLES AS REQUIRED TO MAKE THE CUTS.
     - 2.14.3. FIELD HOLES SHALL BE PUNCHED OR DRILLED. BURNING OF MEMBERS SHALL NOT BE PERMITTED.

3. **BASE PLATE GROUT - (NOT REQUIRED)**

4. **FOUNDATION WORK - (NOT REQUIRED)**

5. **CAST-IN-PLACE CONCRETE - NOT REQUIRED)**

6. **EPOXY GROUTED REINFORCING ANCHOR RODS - (NOT REQUIRED)**

7. **TOUCH UP OF GALVANIZING**
   - 7.1. THE CONTRACTOR SHALL TOUCH UP ANY AND ALL AREAS OF GALVANIZING ON THE EXISTING STRUCTURE OR NEW COMPONENTS THAT ARE DAMAGED OR ABRADED DURING CONSTRUCTION. GALVANIZED SURFACES DAMAGED DURING TRANSPORTATION OR ERECTION AND ASSEMBLY AS WELL AS ANY AND ALL ABRASIONS, CUTS AND FIELD DRILLING SHALL BE TOUCHED UP WITH TWO (2) COATS OF ZRC COLD GALVANIZING COMPOUND. FILM THICKNESS PER COAT SHALL BE: WET 3.0 MILS, DRY 1.5 MILS. APPLY PER ZRC (MANUFACTURER) RECOMMENDED PROCEDURES. CONTACT ZRC AT 1-800-831-3275 FOR PRODUCT INFORMATION.
   - 7.2. CONTRACTOR SHALL CLEAN AND PREPARE ALL FIELD WELDS ON GALVANIZED AND PRIME PAINTED SURFACES FOR TOUCH-UP COATING IN ACCORDANCE WITH AWS D1.1. OWNER'S TESTING AGENCY SHALL VERIFY THE PREPARED SURFACE PRIOR TO APPLICATION OF THE TOUCH-UP COATING.
   - 7.3. OWNER'S TESTING AGENCY SHALL TEST AND VERIFY THE COATING THICKNESS AFTER THE CONTRACTOR HAS APPLIED THE ZRC COLD GALVANIZING COMPOUND AND IT HAS SUFFICIENTLY DRIED. AREAS FOUND TO BE INADEQUATELY COATED, SHALL BE RE-COATED BY THE CONTRACTOR AND RE-TESTED BY THE TESTING AGENCY.

8. **HOT-DIP GALVANIZING**
   - 8.1. HOT-DIP GALVANIZE ALL STRUCTURAL STEEL MEMBERS AND ALL STEEL ACCESSORIES, BOLTS, WASHERS. ETC. PER ASTM A123, ASTM A386 OR PER ASTM A153, AS APPROPRIATE.
   - 8.2. PROPERLY PREPARE STEEL ITEMS FOR GALVANIZING.
   - 8.3. DRILL OR PUNCH WEEP AND/OR DRAINAGE HOLES WITH EOR APPROVAL OF LOCATIONS.
   - 8.4. ALL GALVANIZING SHALL BE DONE AFTER FABRICATION IS COMPLETED AND PRIOR TO FIELD INSTALLATION.

9. **PERPETUAL INSPECTION AND MAINTENANCE BY THE OWNER**
   - 9.1. AFTER THE CONTRACTOR HAS SUCCESSFULLY COMPLETED THE INSTALLATION OF THE MODIFICATION SYSTEM AND THE WORK HAS BEEN ACCEPTED BY OWNER, OWNER WILL BE RESPONSIBLE FOR THE LONG TERM AND PERPETUAL INSPECTION AND MAINTENANCE OF THE STRUCTURE AND MODIFICATION SYSTEM.

STATE OF CONNECTICUT
JAMES R. ANTOSZIEWSKI
31499
LICENSED
PROFESSIONAL ENGINEER

11/18/2019

REV	DATE	DESCRIPTION
1	11-15-2019	NO CHANGE

© Copyright 2019, by Paul J. Ford and Company. All Rights Reserved. This document and the data contained herein, is proprietary to Paul J. Ford and Company, issued in strict confidence and shall not, without the prior written permission of Paul J. Ford and Company, be reproduced, copied or used for any purpose other than the intended use for this specific project.

PJF PAUL J. FORD & COMPANY
250 E Broad St, Ste 600 · Columbus, OH 43215
Phone 614.221.6679 www.pauljford.com

AT&T MOBILITY
1025 LENOX PARK BLVD, 3RD FLOOR TOWER ASSET GROUP
ATLANTA, GEORGIA 30319

EVERSOURCE STRUCTURE #1321
CIRCUIT #1483/1545
670 CHAPEL STREET
STRATFORD, FAIRFIELD COUNTY, CONNECTICUT
BU #841299 / AT&T SITE #CTL02043, FA #10035240

PROJECT No:	37519-3029.001.6125 R1
DRAWN BY:	FE
DESIGNED BY:	CEC
CHECKED BY:	CJH
DATE:	8-15-2019

GENERAL NOTES

N-1

SHEET #2 OF 5

37519-3029.001.6125 R1.DWG

MODIFICATION INSPECTION NOTES:

1. **INSPECTION AND TESTING**
   1.1. INSPECTION SERVICES WHICH ARE FURNISHED BY OTHERS ARE STILL REQUIRED WHEN THE EOR PERFORMS SUPPORT SERVICES DURING CONSTRUCTION.
   1.2. OBSERVED DISCREPANCIES BETWEEN THE WORK AND THE CONTRACT DOCUMENTS SHALL BE CORRECTED BY THE CONTRACTOR AT NO ADDITIONAL COST.
   1.3. AN INDEPENDENT QUALIFIED INSPECTION/TESTING AGENCY SHALL BE SELECTED, RETAINED AND PAID FOR BY OWNER FOR THE SOLE PURPOSE OF INSPECTING, TESTING, DOCUMENTING, AND APPROVING ALL WELDING AND FIELD WORK PERFORMED BY THE CONTRACTOR.
      1.3.1. ACCESS TO ANY PLACE WHERE WORK IS BEING DONE SHALL BE PERMITTED AT ALL TIMES.
      1.3.2. THE INSPECTION AGENCY SHALL SO SCHEDULE THIS WORK AS TO CAUSE A MINIMUM OF INTERRUPTION TO, AND COORDINATE WITH, THE WORK IN PROGRESS. IT IS THE CONTRACTOR'S RESPONSIBILITY TO COORDINATE THE WORK SCHEDULE WITH THE TESTING AGENCY. THE CONTRACTOR SHALL ALLOW FOR ADEQUATE TIME AND ACCESS FOR THE TESTING AGENCY TO PERFORM THEIR DUTIES.

   1.4. GENERAL
   1.4.1. PERFORM PERIODIC ON-SITE OBSERVATION, INSPECTION, VERIFICATION, AND TESTING DURING THE TIME THE CONTRACTOR IS WORKING ON-SITE. AGENCY SHALL NOTIFY OWNER AND THE EOR IMMEDIATELY WHEN FIELD PROBLEMS OR DISCREPANCIES OCCUR.

   1.5. FOUNDATIONS AND SOIL PREPARATION
   1.5.1. VERIFY MATERIALS AT BOTTOM OF EXCAVATION ARE ADEQUATE TO ACHIEVE THE DESIGN BEARING CAPACITY.
   1.5.2. VERIFY THAT EXCAVATIONS HAVE EXTENDED TO PROPER DEPTH AND ARE FOUNDED ON PROPER MATERIAL.
   1.5.3. PERFORM CLASSIFICATION AND TESTING OF COMPACTED FILL MATERIALS AS SPECIFIED.
   1.5.4. VERIFY USE OF PROPER MATERIALS, DENSITIES AND LIFT THICKNESS DURING PLACEMENT AND COMPACTION OF COMPACTED FILL.
   1.5.5. PRIOR TO PLACEMENT OF COMPACTED FILL, OBSERVE SUBGRADE AND VERIFY SITE HAS BEEN PREPARED PROPERLY.

   1.6. CONCRETE TESTING PER ACI
   1.6.1. INSPECT PLACEMENT OF REINFORCING STEEL.
   1.6.2. INSPECT BOLTS TO BE INSTALLED IN CONCRETE PRIOR TO AND DURING PLACEMENT OF CONCRETE.
   1.6.3. VERIFY USE OF REQUIRED MIX DESIGN.
   1.6.4. AT THE TIME FRESH CONCRETE IS SAMPLED FABRICATE SPECIMENS FOR STRENGTH TEST, PERFORM SLUMP AND AIR CONTENT TEST AND DETERMINE TEMPERATURE OF THE CONCRETE.
   1.6.5. INSPECT CONCRETE PLACEMENT FOR PROPER APPLICATION TECHNIQUE.
   1.6.6. INSPECT SPECIFIED CURING AND TEMPERATURE TECHNIQUES.

   1.7. STRUCTURAL STEEL
   1.7.1. CHECK STEEL ON THE JOB WITH THE PLANS.
   1.7.2. CHECK MILL CERTIFICATIONS. CALL FOR LABORATORY TEST REPORTS WHEN MILL CERTIFICATION IS IN QUESTION.
   1.7.3. CHECK GRADE OF STEEL MEMBERS, AND BOLTS FOR CONFORMANCE WITH DRAWINGS.
   1.7.4. INSPECT STEEL MEMBERS FOR DISTORTION, EXCESSIVE RUST, FLAWS AND BURNED HOLES.
   1.7.5. CHECK STEEL MEMBERS FOR SIZES, SWEEP AND DIMENSIONAL TOLERANCES.
   1.7.6. CHECK FOR SURFACE FINISH SPECIFIED, GALVANIZED.
   1.7.7. CHECK THAT BOLTS HAVE BEEN TIGHTENED PROPERLY.
   1.7.8. PRIOR TO ANY FIELD CUTTING THE CONTRACTOR SHALL MARK THE CUTOUT LINES ON THE STEEL AND THE INSPECTION/TESTING AGENCY SHALL VERIFY PROPOSED LAYOUT, LOCATION, AND DIMENSIONS. THE INSPECTION/TESTING AGENCY SHALL CLOSELY AND CONTINUOUSLY MONITOR THIS ACTIVITY.

   1.8. WELDING:
   1.8.1. VERIFY FIELD WELDING PROCEDURES, WELDERS, AND WELDING OPERATORS, NOT DEEMED PREQUALIFIED, IN ACCORDANCE WITH AWS D1.1.
   1.8.2. INSPECT FIELD WELDED CONNECTIONS IN ACCORDANCE WITH THE REQUIREMENTS SPECIFIED AND WITH AWS D1.1.
   1.8.3. APPROVE FIELD WELDING SEQUENCE.
   1.8.4. INSPECT WELDED CONNECTIONS AS FOLLOWS AND IN ACCORDANCE WITH AWS D1.1:
      1.8.4.1. INSPECT WELDING EQUIPMENT FOR CAPACITY, MAINTENANCE, AND WORKING CONDITIONS.
      1.8.4.2. VERIFY SPECIFIED ELECTRODES AND HANDLING AND STORAGE OF ELECTRODES FOR CONFORMANCE TO SPECIFICATIONS.
      1.8.4.3. INSPECT PREHEATING AND INTERPASS TEMPERATURES FOR CONFORMANCE WITH AWS D1.1.
      1.8.4.4. VISUALLY INSPECT ALL WELDS AND VERIFY THAT QUALITY OF WELDS MEETS THE REQUIREMENTS OF AWS D1.1. OTHER TESTS MAY ALSO BE PERFORMED ON THE WELDS BY THE TESTING AGENCY IN ORDER FOR THEM TO PERFORM THEIR DUTIES FOR THIS PROJECT.
      1.8.4.5. SPOT TEST AT LEAST ONE FILLET WELD OF EACH MEMBER USING MAGNETIC PARTICLE.
      1.8.4.6. INSPECT FOR SIZE, SPACING, TYPE AND LOCATION AS PER APPROVED DRAWINGS.
      1.8.4.7. VERIFY THAT THE BASE METAL CONFORMS TO THE DRAWINGS.
      1.8.4.8. REVIEW THE REPORTS BY TESTING LABS.
      1.8.4.9. CHECK TO SEE THAT WELDS ARE CLEAN AND FREE FROM SLAG.
      1.8.4.10. INSPECT RUST PROTECTION OF WELDS AS PER SPECIFICATIONS.
      1.8.4.11. CHECK THAT DEFECTIVE WELDS ARE CLEARLY MARKED AND HAVE BEEN ADEQUATELY REPAIRED.
      1.8.4.12. FULL PENETRATION WELDS IN THE VICINITY OF THE BASE OF THE TOWER ARE REQUIRED TO BE 100% NDE INSPECTED BY UT IN ACCORDANCE WITH AWS D1.1.
      1.8.4.13. PARTIAL PENETRATION AND FILLET WELDS IN THE VICINITY OF THE BASE OF THE TOWER ARE REQUIRED TO BE 50% NDE INSPECTED BY MP IN ACCORDANCE WITH AWS D1.1.

   1.9. REPORTS:
   1.9.1. COMPILE AND PERIODICALLY SUBMIT DAILY INSPECTION REPORTS TO OWNER.
   1.9.2. THE INSPECTION PLAN OUTLINED HEREIN IS INTENDED AS A DESCRIPTION OF GENERAL AND SPECIFIC ITEMS OF CONCERN. IT IS NOT INTENDED TO BE ALL-INCLUSIVE. IT DOES NOT LIMIT THE TESTING AND INSPECTION AGENCY TO THE ITEMS LISTED. ADDITIONAL TESTING, INSPECTION, AND CHECKING MAY BE REQUIRED AND SHOULD BE ANTICIPATED. THE TESTING AGENCY SHALL USE THEIR PROFESSIONAL JUDGMENT AND KNOWLEDGE OF THE JOB SITE CONDITIONS AND THE CONTRACTOR'S PERFORMANCE TO DECIDE WHAT OTHER ITEMS REQUIRE ADDITIONAL ATTENTION. THE TESTING AGENCY'S JUDGMENT MUST PREVAIL ON ITEMS NOT SPECIFICALLY COVERED. ANY DISCREPANCIES OR PROBLEMS SHALL BE BROUGHT IMMEDIATELY TO OWNER'S ATTENTION. RESOLUTIONS ARE NOT TO BE MADE WITHOUT OWNER'S REVIEW AND SPECIFIC WRITTEN CONSENT. OWNER RESERVES THE RIGHT TO DETERMINE WHETHER OR NOT A RESOLUTION IS ACCEPTABLE.
   1.9.3. AFTER EACH INSPECTION, THE TESTING AGENCY WILL PREPARE A WRITTEN ACCEPTANCE OR REJECTION WHICH WILL BE GIVEN TO THE CONTRACTOR AND FILED AS DAILY REPORTS TO OWNER. THIS WRITTEN ACTION WILL GIVE THE CONTRACTOR A LIST OF ITEMS TO BE CORRECTED, PRIOR TO CONTINUING CONSTRUCTION, AND/OR LOADING OF STRUCTURAL ITEMS.
   1.9.4. THE TESTING AGENCY DOES NOT RELIEVE THE CONTRACTOR'S CONTRACTUAL OR STATUTORY OBLIGATIONS. THE CONTRACTOR HAS THE SOLE RESPONSIBILITY FOR ANY DEVIATIONS FROM THE OFFICIAL CONTRACT DOCUMENTS. THE TESTING AGENCY WILL NOT REPLACE THE CONTRACTOR'S QUALITY CONTROL PERSONNEL.

   1.10. CORRECTION OF FAILING MI'S
   1.10.1. IF THE MODIFICATION INSTALLATION WOULD FAIL THE MI ("FAILED MI"), THE GC SHALL WORK WITH THE OWNER TO COORDINATE A REMEDIATION PLAN IN ONE OF TWO WAYS:
      1.10.1.1. CORRECT FAILING ISSUES TO COMPLY WITH THE SPECIFICATIONS CONTAINED IN THE ORIGINAL CONTRACT DOCUMENTS AND COORDINATE A SUPPLEMENT MI.
      1.10.1.2. OR, WITH THE OWNERS APPROVAL, THE GC MAY WORK WITH THE EOR TO RE-ANALYZE THE MODIFICATION/REINFORCEMENT USING THE AS-BUILT CONDITION

   1.11. PHOTOGRAPHS
   1.11.1. BETWEEN THE GC AND THE MI INSPECTOR THE FOLLOWING PHOTOGRAPHS, AT A MINIMUM, ARE TO BE TAKEN AND INCLUDED IN THE MI REPORT:
      1.11.1.1. PRE-CONSTRUCTION GENERAL SITE CONDITION
      1.11.1.2. PHOTOGRAPHS DURING THE REINFORCEMENT MODIFICATION CONSTRUCTION/ERECTION AND INSPECTION
         1.11.1.2.1. RAW MATERIALS
         1.11.1.2.2. PHOTOS OF ALL CRITICAL DETAILS
         1.11.1.2.3. FOUNDATION MODIFICATIONS
         1.11.1.2.4. WELD PREPARATION
         1.11.1.2.5. BOLT INSTALLATION AND TORQUE
         1.11.1.2.6. FINAL INSTALLED CONDITION
         1.11.1.2.7. SURFACE COATING REPAIR
      1.11.1.3. POST CONSTRUCTION PHOTOGRAPHS
         1.11.1.3.1. FINAL INFIELD CONDITION
   1.11.2. PHOTOS OF ELEVATED MODIFICATIONS TAKEN FROM THE GROUND SHALL BE CONSIDERED INADEQUATE.

STATE OF CONNECTICUT
JAMES R. ANTOSZEWSKI
31499
LICENSED
PROFESSIONAL ENGINEER

11/18/2019

POST-MODIFICATION CHECKLIST

REQUIRED	REPORT ITEM	BRIEF DESCRIPTION
	PRE-CONSTRUCTION	
X	MI CHECKLIST DRAWING	THIS CHECKLIST SHALL BE INCLUDED IN THE MI REPORT
X	EOR APPROVED SHOP DRAWINGS	FABRICATION DRAWINGS SHALL BE SUBMITTED TO THE ENGINEER OF RECORD FOR REVIEW. THE CONTRACTOR SHALL PROVIDE THE APPROVED SHOP DRAWINGS TO THE MI INSPECTOR FOR INCLUSION IN THE MI REPORT.
NA	FABRICATION INSPECTION	A LETTER FROM THE FABRICATOR, STATING THAT THE WORK WAS PERFORMED IN ACCORDANCE WITH INDUSTRY STANDARDS AND THE CONTRACT DOCUMENTS SHALL BE PROVIDED TO THE MI INSPECTOR FOR INCLUSION IN THE MI REPORT.
NA	FABRICATOR CERTIFIED WELD INSPECTION	CRITICAL SHOP WELDS THAT REQUIRE TESTING ARE NOTED ON THESE CONTRACT DRAWINGS. A CERTIFIED WELD INSPECTOR SHALL PERFORM NON-DESTRUCTIVE TESTING AND A REPORT SHALL BE PROVIDED TO THE MI INSPECTOR FOR INCLUSION IN THE MI REPORT.
NA	MATERIAL TEST REPORT (MTR)	MILL CERTIFICATION SHALL BE PROVIDED FOR ALL STEEL WITH A YIELD STRENGTH GREATER THAN 36 KSI AND THIS DOCUMENTATION SHALL BE PROVIDED TO THE MI INSPECTOR FOR INCLUSION IN THE MI REPORT.
NA	FABRICATOR NDE INSPECTION	A VISUAL OBSERVATION OF A PORTION OF THE EXISTING STRUCTURE (AS NOTED ON THESE DRAWINGS) IS REQUIRED AND A WRITTEN REPORT SHALL BE PROVIDED TO THE MI INSPECTOR FOR INCLUSION IN THE MI REPORT.
NA	NDE REPORT OF MONOPOLE BASE PLATE (AS REQUIRED)	A VISUAL OBSERVATION OF THE POLE TO BASE PLATE CONNECTION IS REQUIRED AND A WRITTEN REPORT SHALL BE PROVIDED TO THE MI INSPECTOR FOR INCLUSION IN THE MI REPORT.
X	PACKING SLIPS	THE MATERIAL SHIPPING LIST SHALL BE PROVIDED TO THE MI INSPECTOR FOR INCLUSION IN THE MI REPORT.
	CONSTRUCTION	
X	CONSTRUCTION INSPECTIONS	A LETTER FROM THE GENERAL CONTRACTOR STATING THAT THE WORKMANSHIP WAS PERFORMED IN ACCORDANCE WITH INDUSTRY STANDARDS AND THESE CONTRACT DRAWINGS SHALL BE PROVIDED TO THE MI INSPECTOR FOR INCLUSION IN THE MI REPORT.
NA	FOUNDATION INSPECTIONS	A VISUAL OBSERVATION OF THE EXCAVATION AND REBAR SHALL BE PERFORMED BEFORE PLACING THE CONCRETE. A WRITTEN REPORT SHALL BE PROVIDED TO THE MI INSPECTOR FOR INCLUSION IN THE MI REPORT.
NA	CONCRETE COMP. STRENGTH AND SLUMP TESTS	THE CONCRETE MIX DESIGN, SLUMP TEST, AND COMPRESSIVE STRENGTH TESTS SHALL BE PROVIDED TO THE MI INSPECTOR FOR INCLUSION IN THE MI REPORT.
NA	POST INSTALLED ANCHOR ROD VERIFICATION	ANCHOR ROD INSTALLATION SHALL INCLUDE VERIFICATION BY LETTER AND PHOTOGRAPHIC DOCUMENTATION.
NA	BASE PLATE GROUT VERIFICATION	A LETTER FROM THE GENERAL CONTRACTOR SHALL BE PROVIDED TO THE MI INSPECTOR THAT CERTIFIES THAT THE GROUT WAS INSTALLED IN ACCORDANCE WITH SPECIFICATIONS FOR INCLUSION IN THE MI REPORT.
NA	CONTRACTOR'S CERTIFIED WELD INSPECTION	A CERTIFIED WELD INSPECTOR SHALL INSPECT AND TEST AS NECESSARY ALL FIELD WELDS AND A REPORT SHALL BE PROVIDED TO THE MI INSPECTOR FOR INCLUSION IN THE MI REPORT. PRE, DURING AND POST WELD INSPECTION IS REQUIRED.
NA	EARTHWORK: LIFT AND DENSITY	FOUNDATION SUB-GRADES SHALL BE INSPECTED AND APPROVED BY A GEOTECHNICAL ENGINEER AND A REPORT SHALL BE PROVIDED TO THE MI INSPECTOR FOR INCLUSION IN THE MI REPORT.
X	ON SITE COLD GALVANIZING VERIFICATION	THE GENERAL CONTRACTOR SHALL PROVIDE DOCUMENTATION TO THE MI INSPECTOR VERIFYING THAT ANY ON-SITE COLD GALVANIZING WAS APPLIED IN ACCORDANCE WITH SPECIFICATIONS.
NA	GUY WIRE TENSION REPORT	THE GENERAL CONTRACTOR SHALL PROVIDE A REPORT TO THE MI INSPECTOR INDICATING THE TEMPERATURE AND TENSION IN EVERY GUY CABLE FOR INCLUSION IN THE MI REPORT.
X	GC AS-BUILT DOCUMENTS	THE GENERAL CONTRACTOR SHALL SUBMIT A COPY OF THE CONTRACT DRAWINGS EITHER STATING "INSTALLED AS DESIGNED" OR NOTING ANY CHANGES THAT WERE REQUIRED AND APPROVED BY THE ENGINEER OF RECORD DUE TO FIELD CONDITIONS.
NA	MICROPILE / ROCK ANCHOR	THE GENERAL CONTRACTOR SHALL PROVIDE INSTALLER'S DRILLING AND INSTALLATION LOGS AND QA/QC DOCUMENTATION TO THE MI INSPECTOR FOR INCLUSION IN THE MI REPORT.
X	EQUIPMENT CLEARANCE VERIFICATION	THE GENERAL CONTRACTOR SHALL PROVIDE MEASUREMENTS INDICATED ON DRAWING MI-2 FOR INCLUSION IN THE MI-REPORT.
	POST-CONSTRUCTION	
X	MI INSPECTOR REDLINE OR RECORD DRAWING(S)	THE MI INSPECTOR SHALL OBSERVE AND REPORT ANY DISCREPANCIES BETWEEN THE CONTRACTORS REDLINE DRAWING AND THE ACTUAL COMPLETED INSTALLATION.
NA	POST INSTALLED ANCHOR ROD PULL TESTING	POST INSTALLED ANCHOR RODS SHALL BE TESTED IN ACCORDANCE WITH SPECIFICATIONS AND A REPORT SHALL BE PROVIDED TO THE MI INSPECTOR FOR INCLUSION IN THE MI REPORT.
X	PHOTOGRAPHS	PHOTOGRAPHS SHALL BE SUBMITTED TO THE MI WHICH DOCUMENT ALL PHASES OF THE CONSTRUCTION. THE PHOTOS SHALL BE ORGANIZED IN A MANNER THAT EASILY IDENTIFIES THE EXACT LOCATION OF THE PHOTO.
NA	POST INSTALLED MICROPILE / ROCK ANCHOR TESTING	POST INSTALLED ANCHORS SHALL BE TESTED AND INSPECTED IN ACCORDANCE WITH SPECIFICATION STATED ON MICROPILE/ROCK ANCHOR NOTES.

NOTE: X DENOTES A DOCUMENT NEEDED FROM THE CONTRACTOR FOR THE MI REPORT
NA DENOTES A DOCUMENT THAT IS NOT REQUIRED FOR THE MI REPORT

REV	DATE	DESCRIPTION
1	11-15-2019	NO CHANGE

© Copyright 2019, by Paul J. Ford and Company. All Rights Reserved. This document and the data contained herein, is proprietary to Paul J. Ford and Company, issued in strict confidence and shall not, without the prior written permission of Paul J. Ford and Company, be reproduced, copied or used for any purpose other than the intended use for this specific project.

PJF PAUL J. FORD & COMPANY
250 E Broad St, Ste 600 · Columbus OH 43215
Phone 614.221.6679 www.paulford.com

AT&T MOBILITY
1025 LENOX PARK BLVD, 3RD FLOOR TOWER ASSET GROUP
ATLANTA, GEORGIA 30319

EVERSOURCE STRUCTURE #1321
CIRCUIT #1483/1545
670 CHAPEL STREET
STRATFORD, FARFIELD COUNTY, CONNECTICUT
BU #841299 / AT&T SITE #CTL02043, FA #10035240

PROJECT No:	37519-3029.001.6125 R1
DRAWN BY:	FE
DESIGNED BY:	CEC
CHECKED BY:	CEH
DATE:	8-15-2019

INSPECTION NOTES

MI-1

SHEET #3 OF 5

37519-3029.001.6125 R1.DWG

NOTE:
TOWER SHOWN IS GENERIC AND
MAY NOT REFLECT ACTUAL TOWER

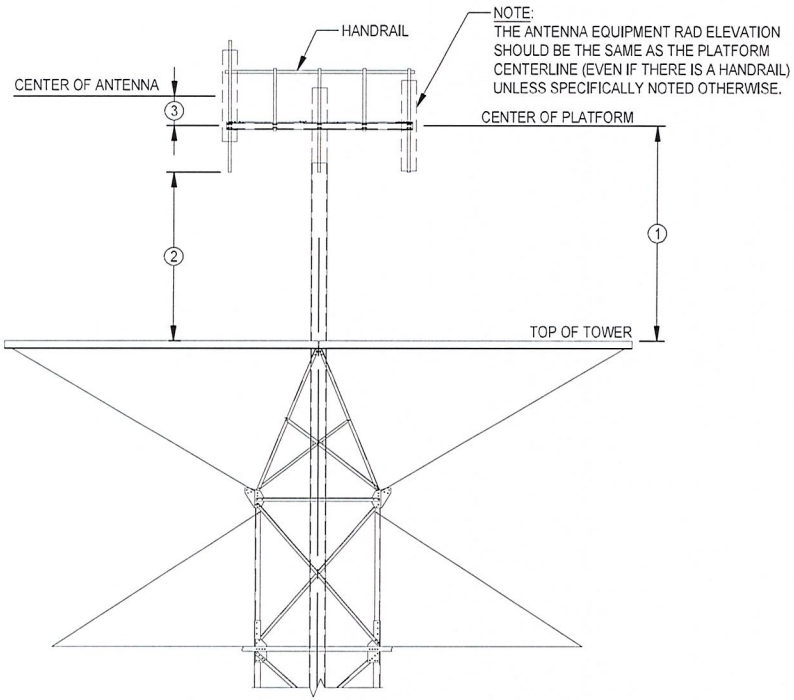

EQUIPMENT CLEARANCE VERIFICATION

FIELD MEASUREMENTS		
MARK	MEASURMENT	DESCRIPTION
1		DISTANCE FROM CENTER OF PLATFORM TO HIGHEST POINT ON THE SUPPORTING STRUCTURE
2		DISTANCE BETWEEN LOWEST PIECE OF ANTENNA EQUIPMENT (OR MOUNTING PIPE) AND THE HIGHEST POINT ON SUPPORTING STRUCTURE
3		IF ANTENNA EQUIPMENT RAD ELEVATION IS NOT THE SAME AS THE CENTERLINE OF PLATFORM, THEN PROVIDE VERTICAL OFFSET DIMENSION AS SHOWN

STATE OF CONNECTICUT
JAMES R. ANTOSZEWSKI
31499
LICENSED
PROFESSIONAL ENGINEER

11/18/2019

REV	DATE	DESCRIPTION
1	11-15-2019	NO CHANGE

© Copyright 2019, by Paul J. Ford and Company. All Rights Reserved. This document and the data contained herein, is proprietary to Paul J. Ford and Company, issued in strict confidence and shall not, without the prior written permission of Paul J. Ford and Company, be reproduced, copied or used for any purpose other than the intended use for this specific project.

PJF PAUL J. FORD & COMPANY
250 E Broad St, Ste 600 · Columbus, OH 43215
Phone 614.221.6679 www.paulford.com

AT&T MOBILITY
1025 LENOX PARK BLVD, 3RD FLOOR TOWER ASSET GROUP
ATLANTA, GEORGIA 30319

EVERSOURCE STRUCTURE #1321
CIRCUIT #1483/1545
670 CHAPEL STREET
STRATFORD, FAIRFIELD COUNTY, CONNECTICUT
BU #841299 / AT&T SITE #CTL02043, FA #10035240

PROJECT No:	37519-3029.001.6125 R1
DRAWN BY:	FE
DESIGNED BY:	CEC
CHECKED BY:	CFH
DATE:	8-15-2019

FIELD MEASUREMENTS AND NOTES

MI-2

SHEET #4 OF 5

37519-3029.001.6125 R1.DWG

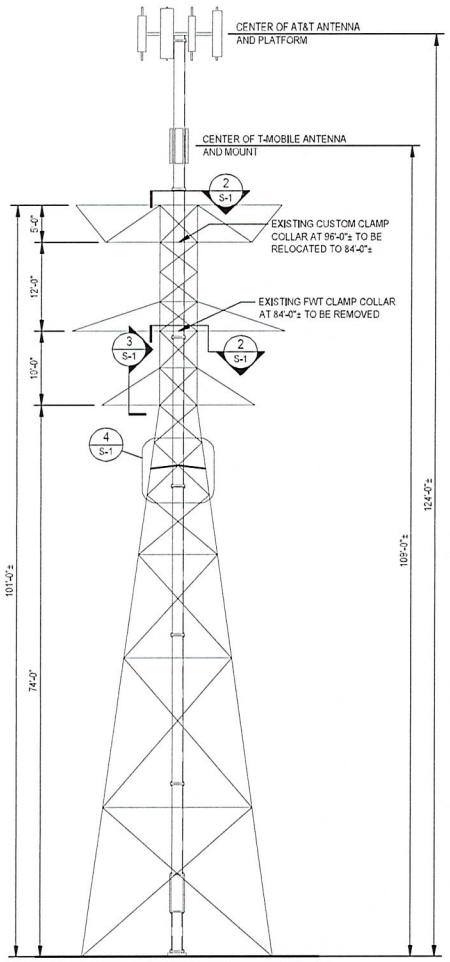

TOWER ELEVATION 1 / S-1
TRANSVERSE FACE

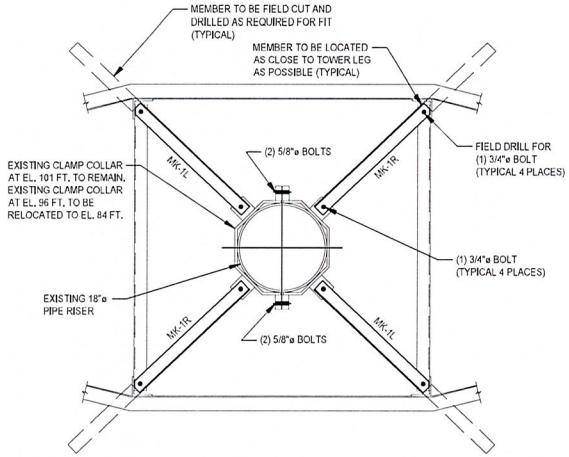

SECTION 2 / S-1
TYPICAL TWO ELEVATIONS

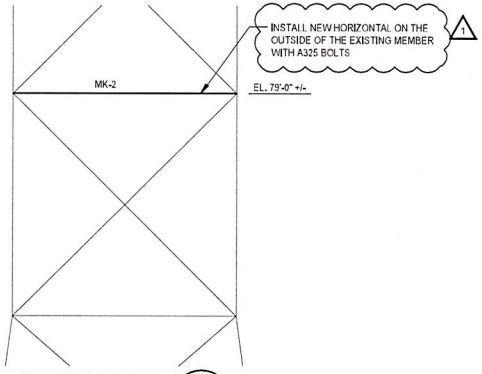

ELEVATION 3 / S-1
LONGITUDINAL FACE
(TYPICAL TWO FACES)

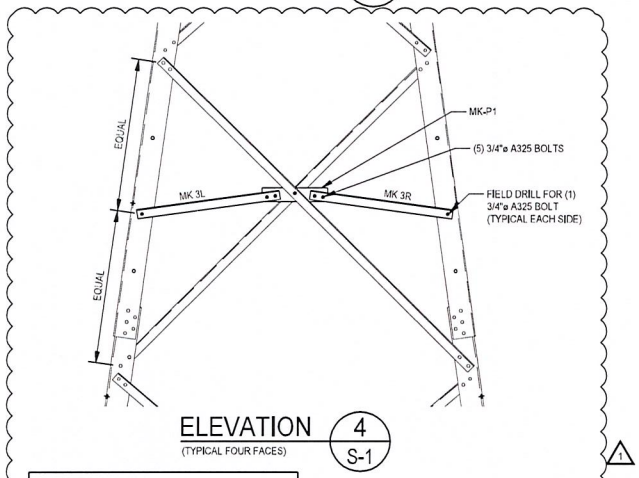

ELEVATION 4 / S-1
(TYPICAL FOUR FACES)

NOTICE TO ERECTOR
BACKCHARGES FOR CORRECTIVE WORK OR REPLACED MATERIALS WILL NOT BE ACCEPTED UNLESS EXPRESSLY AUTHORIZED BY PAUL J. FORD & COMPANY BEFORE ANY SUCH COST ARE INCURRED

DO NOT SCALE THIS DRAWING

STATE OF CONNECTICUT
JAMES R. ANTOSZEWSKI
31499
LICENSED
PROFESSIONAL ENGINEER

11/18/2019

REV	DATE	DESCRIPTION
1	11-15-2019	MOVED DETAILS, MATERIAL LIST & ADDED ELEVATION 4 & NOTE

© Copyright 2019, by Paul J. Ford and Company. All Rights Reserved. This document and the data contained herein, is proprietary to Paul J. Ford and Company, issued in strict confidence and shall not, without the prior written permission of Paul J. Ford and Company, be reproduced, copied or used for any purpose other than the intended use for this specific project.

PJF PAUL J. FORD & COMPANY
250 E Broad St, Ste 600 · Columbus, OH 43215
Phone 614.221.6679 www.pauljford.com

AT&T MOBILITY
1025 LENOX PARK BLVD, 3RD FLOOR TOWER ASSET GROUP
ATLANTA, GEORGIA 30319

EVERSOURCE STRUCTURE #1321
CIRCUIT #1483/1545
670 CHAPEL STREET
STRATFORD, FAIRFIELD COUNTY, CONNECTICUT
BU #841299 / AT&T SITE #CTL02043, FA #10035240

PROJECT No:	37519-3029,001,6125 R1
DRAWN BY:	FE
DESIGNED BY:	CEC
CHECKED BY:	CEH
DATE:	8-15-2019

TOWER ELEVATIONS AND DETAILS

S-1
SHEET #5 OF 5

37519-3029,001,6125 R1.DWG

MATERIAL LIST

FOR "ONE" TOWER MODIFICATION

MARK NO.	DETAILED ON SHT.	NO. REQ'D.	TOTAL REQ'D.	DESCRIPTION	LENGTH	TOTAL WT. (lb)
MK-1L/1R	S-2	4L/4R	8	L2 1/2 x 2 1/2 x 1/4	4'-0"	131
MK-2	S-2	2	2	L2 1/2 x 2 1/2 x 1/4	4'-0 1/2"	33
MK-3L/3R	S-2	4L/4R	8	L2 1/2 x 2 1/2 x 1/4	3'-2 1/2"	104
MK-P1	S-2	4	4	PLATE 3/8" x 2 3/4"	1'-5 1/2"	28
TOTAL GALVANIZED WEIGHT (+3.5%) = 306 LB					TOTAL MEMBER WEIGHT	296

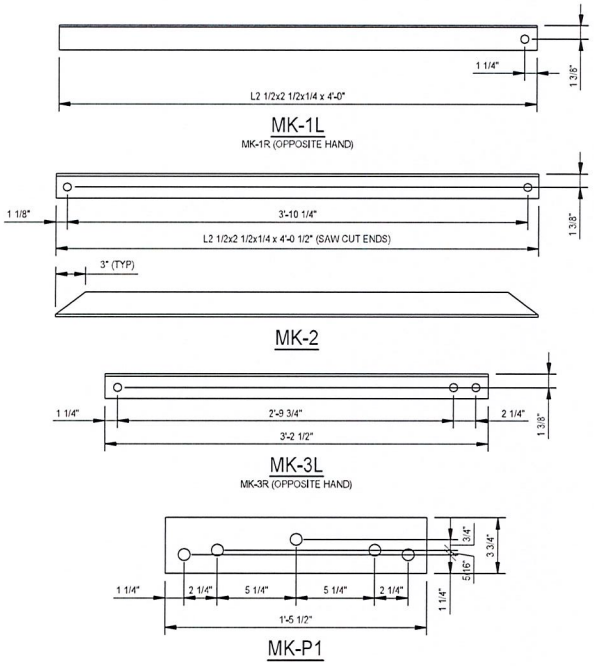

NOTATION:
FOR OPPOSITE HAND NOTES SEE ERECTION VIEW FOR CLARIFICATIONS.

NOTE:
ALL HOLES TO BE 13/16"ø UNLESS OTHERWISE NOTED.

DO NOT SCALE THIS DRAWING

REV	DATE	DESCRIPTION
1	11-15-2019	ADDED SHEET

STATE OF CONNECTICUT
JAMES R. ANTOSZEWSKI
31499
LICENSED
PROFESSIONAL ENGINEER

11/18/2019

© Copyright 2019, by Paul J. Ford and Company. All Rights Reserved. This document and the data contained herein, is proprietary to Paul J. Ford and Company, issued in strict confidence and shall not, without the prior written permission of Paul J. Ford and Company, be reproduced, copied or used for any purpose other than the intended use for this specific project.

PJF PAUL J. FORD & COMPANY
250 E Broad St, Ste 600 · Columbus, OH 43215
Phone 614.221.6679 www.pauljford.com

AT&T MOBILITY
1025 LENOX PARK BLVD, 3RD FLOOR TOWER ASSET GROUP
ATLANTA, GEORGIA 30319

EVERSOURCE STRUCTURE #1321
CIRCUIT #1483/1545
670 CHAPEL STREET
STRATFORD, FAIRFIELD COUNTY, CONNECTICUT
BU #841299 / AT&T SITE #CTL02043, FA #10035240

PROJECT No:	37519-3029,001,6125 R1
DRAWN BY:	FE
DESIGNED BY:	CEC
CHECKED BY:	CEH
DATE:	8-15-2019

DETAILS AND MATERIAL LIST

S-2

SHEET #5 OF 5

37519-3029,001,6125 R1.DWG

Exhibit E

Mount Analysis

PAUL J. FORD & COMPANY

Date: February 20, 2019

Rob Kulbacki
Crown Castle
1500 Corporate Drive
Canonsburg, PA 15317

Paul J Ford and Company
250 E. Broad Street, Suite 600
Columbus, OH 43215
614.221.6679

Subject:	**Mount Analysis Report**	
Carrier Designation:	***AT&T* Equipment Change-out**	
	Carrier Site Number:	10035240
	Carrier Site Name:	CTL02043
Crown Castle Designation:	**Crown Castle BU Number:**	841299
	Crown Castle Site Name:	STRATFORD NU
	Crown Castle JDE Job Number:	548267
	Crown Castle Purchase Order Number:	1317410
	Crown Castle Order Number:	471412 Rev. 0
Engineering Firm Designation:	**Paul J Ford and Company Project Number:**	A37519-0674.001.8190
Site Data:	**670 CHAPEL STREET, STRATFORD, FAIRFIELD County, CT** **Latitude 41.238°, Longitude -73.122389°**	
Structure Information:	**Tower Height & Type:**	**101 Foot Transmission**
	Mount Elevation:	**124.0 Foot**
	Mount Type:	**(1) 11 Foot Platform**

Dear Rob Kulbacki,

Paul J Ford and Company is pleased to submit this "Mount Analysis Report" to determine the structural integrity of the AT&T antenna mounting system with the proposed appurtenance and equipment addition on the abovementioned supporting tower structure. Analysis of the existing supporting tower structure is to be completed by others and therefore is not part of this analysis. Analysis of the antenna mounting system as a tie-off point is not part of this document.

The purpose of the analysis is to determine acceptability of the mount stress level. Based on our analysis we have determined the mount stress level to be:

11' Platform (typical)	**SUFFICIENT**

This analysis utilizes an ultimate 3-second gust wind speed of 125 mph as required by the 2018 Connecticut State Building Code and Appendix N. Applicable Standard references and design criteria are listed in Section 2 - Analysis Criteria.

Respectfully submitted by:

Robert C. Kozak Jr., E.I.
Structural Designer
rkozak@pauljford.com

RMD

STATE OF CONNECTICUT
JUSTIN T. KLINE
No. 30301
LICENSED
PROFESSIONAL ENGINEER

2019.02.22
15:50-05'00'

TABLE OF CONTENTS

1) INTRODUCTION

2) ANALYSIS CRITERIA
Table 1 - Proposed Equipment Configuration

3) ANALYSIS PROCEDURE
Table 2 - Documents Provided
3.1) Analysis Method
3.2) Assumptions

4) ANALYSIS RESULTS
Table 3 - Mount Component Capacity
4.1) Recommendations

5) STANDARD CONDITIONS

6) APPENDIX A
WIRE FRAME AND RENDERED MODELS

7) APPENDIX B
SOFTWARE INPUT CALCULATIONS

8) APPENDIX C
SOFTWARE ANALYSIS OUTPUT

1) INTRODUCTION

The existing mount under consideration is (1) 11' Platform FWT mount designed 2/18/1997.

2) ANALYSIS CRITERIA

TIA-222 Revision:	TIA-222-H
Risk Category:	II
Ultimate Wind Speed:	125 mph
Exposure Category:	C
Topographic Factor at Base:	1
Topographic Factor at Mount:	1
Ice Thickness:	1.5 in
Wind Speed with Ice:	50 mph
Live Loading Wind Speed:	30 mph
Man Live Load at Mid/End-Points:	250 lb
Man Live Load at Mount Pipes:	500 lb

Table 1 - Proposed Equipment Configuration

Mount Centerline (ft)	Antenna Centerline (ft)	Number of Antennas	Antenna Manufacturer	Antenna Model	Mount / Modification Details
124.0	124.0	3	cci antennas	HPA-65R-BUU-H6	(1) 11' Platform
		3	kathrein	80010965	
		3	powerwave technologies	7770.00	
		6	cci antennas	DTMABP7819VG12A	
		6	cci antennas	TMABPD7823VG12A	
		6	powerwave technologies	LGP21401	

3) ANALYSIS PROCEDURE

Table 2 - Documents Provided

Document	Remarks	Reference	Source
Photos	Dated: 9/11/2018	--	CCISites
Order	ID: 471412 Rev. 0 Dated: 12/4/2018	--	CCISites
Mount Manufacturer Drawings	Model #: FWT Z011040 Dated: 2/18/1997	--	PJF

3.1) Analysis Method

RISA-3D (version 15.0.4), a commercially available analysis software package, was used to create a three-dimensional model of the tower and calculate member stresses for various loading cases.

This analysis was performed in accordance with Crown Castle's ENG-SOW-10208 *Tower Mount Analysis* (Revision C). In addition, this analysis is in accordance with AT&T's *Mount Technical Directive – R5.*

3.2) Assumptions

1) *The analysis of the existing tower or the effect of the mount attachment to the tower is not within the current scope of work.*
2) *The antenna mounting system was properly fabricated, installed and maintained in good condition, twist free and plumb in accordance with its original design and manufacturer's specifications and all bolts are tightened as specified by the manufacturer and AISC requirements.*
3) *The configuration of antennas, mounts, and other appurtenances are as specified in Table 1.*
4) *All member connections have been designed to meet or exceed the load carrying capacity of the connected member unless otherwise specified in this report. All U-Bolt connections have been properly tightened. This analysis will be required to be revised if the existing conditions in the field differ from those shown in the above referenced documents or assumed in this analysis. No allowance was made for any damaged, missing, or rusted members.*
5) *Steel grades are as follows, unless noted otherwise:*
   - *a) Channel, Solid Round, Angle, Plate, Unistrut* — *ASTM A36 (GR 36)*
   - *b) Pipe* — *ASTM A53 (GR 35)*
   - *c) HSS (Rectangular)* — *ASTM 500 (GR B-46)*
   - *d) HSS (Round)* — *ASTM 500 (GR B-42)*
   - *e) Threaded Rods* — *ASTM F1554 (GR 36)*
   - *f) Connection Bolts* — *ASTM A325*
6) *Proposed equipment is to be installed in the locations specified in Appendix A. Any changes to the proposed equipment locations will render this report invalid.*
7) *Mount has been modeled based on the photographs and/or the TIA inspection referenced in Table 2, indicating a match to the MNF mount model FWT Z011040. Member information and dimensions not provided have been assumed to match those specified in the manufacturer drawings referenced in Table 2. No guarantee can be made as to the accuracy of these assumptions without a complete mount mapping.*

This analysis may be affected if any assumptions are not valid or have been made in error. Paul J Ford and Company should be notified to determine the effect on the structural integrity of the mount.

4) ANALYSIS RESULTS

Table 3- Mount Component Capacity

Notes	Component	Elevation (ft)	% Capacity	Pass / Fail
1	Face Horizontals	124.0	7.8	Pass
1	Bracing Members		25.3	Pass
1	Support Rails		2.0	Pass
1	Grating Support Members		5.5	Pass
1	Standoff Members		46.7	Pass
1	Corner Plates		15.2	Pass
1	Mount Pipes		52.2	Pass
1	Mount to Tower Connection		70.6	Pass

Mount Rating (max from all components) =	**70.6%**

Notes:
1) See additional documentation in "Appendix C – Software Analysis Output" for calculations supporting the % capacity consumed.

4.1) Recommendations

The mount has sufficient capacity to carry the proposed loading configuration. No modifications are required at this time.

STANDARD CONDITIONS FOR FURNISHING OF PROFESSIONAL ENGINEERING SERVICES ON EXISTING MOUNTS BY PAUL J. FORD AND COMPANY

1) It is the responsibility of the client to ensure that the information provided to Paul J. Ford and Company is accurate and complete. Paul J. Ford and Company will rely on the accuracy and completeness of such information in performing or furnishing services under this project.

2) If the existing conditions are not as represented on the referenced drawings and/or documents, Paul J. Ford and Company should be contacted immediately to evaluate the significance of the deviation.

3) The mount has been analyzed according to the minimum design loads recommended by the Reference Standard. If additional design loads are required, Paul J. Ford and Company should be made aware of this prior to the start of the project.

4) The standard of care for all Professional Engineering Services performed or furnished by Paul J. Ford and Company under this project will be the skill and care used by members of the Consultant's profession practicing under similar circumstances at the same time and in the same locality.

5) All Services are performed, results obtained, and recommendations made in accordance with generally accepted engineering principles and practices. Paul J. Ford and Company is not responsible for the conclusions, opinions and/or recommendations made by others based on the information supplied herein.

****

APPENDIX A

WIRE FRAME AND RENDERED MODELS

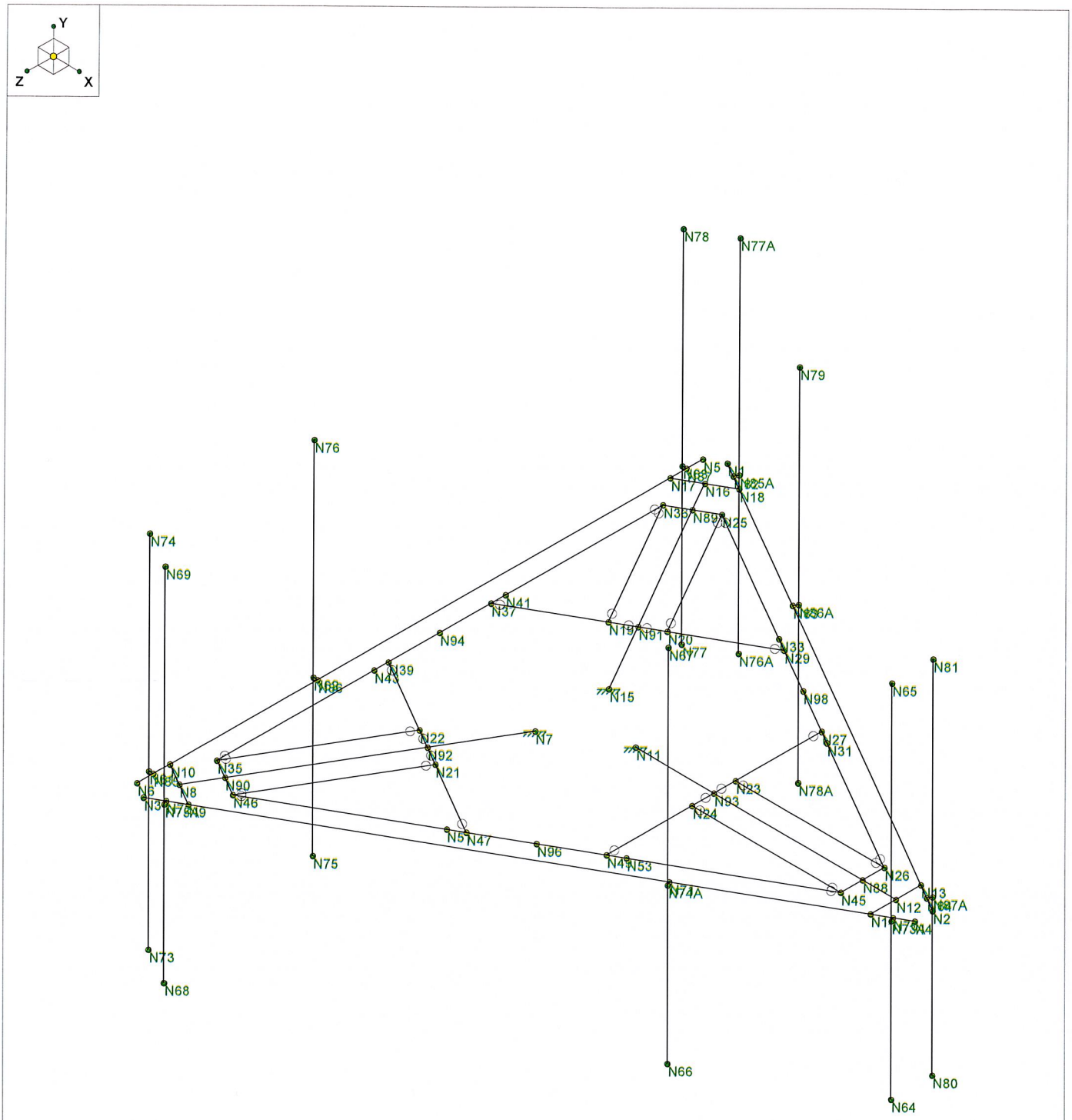

Envelope Only Solution

Paul J. Ford & Company	823463 / Country View	SK - 1
RCK		Feb 20, 2019 at 3:59 PM
37519-0674.001.8190		37519-0674.001.8190_Wind Load....

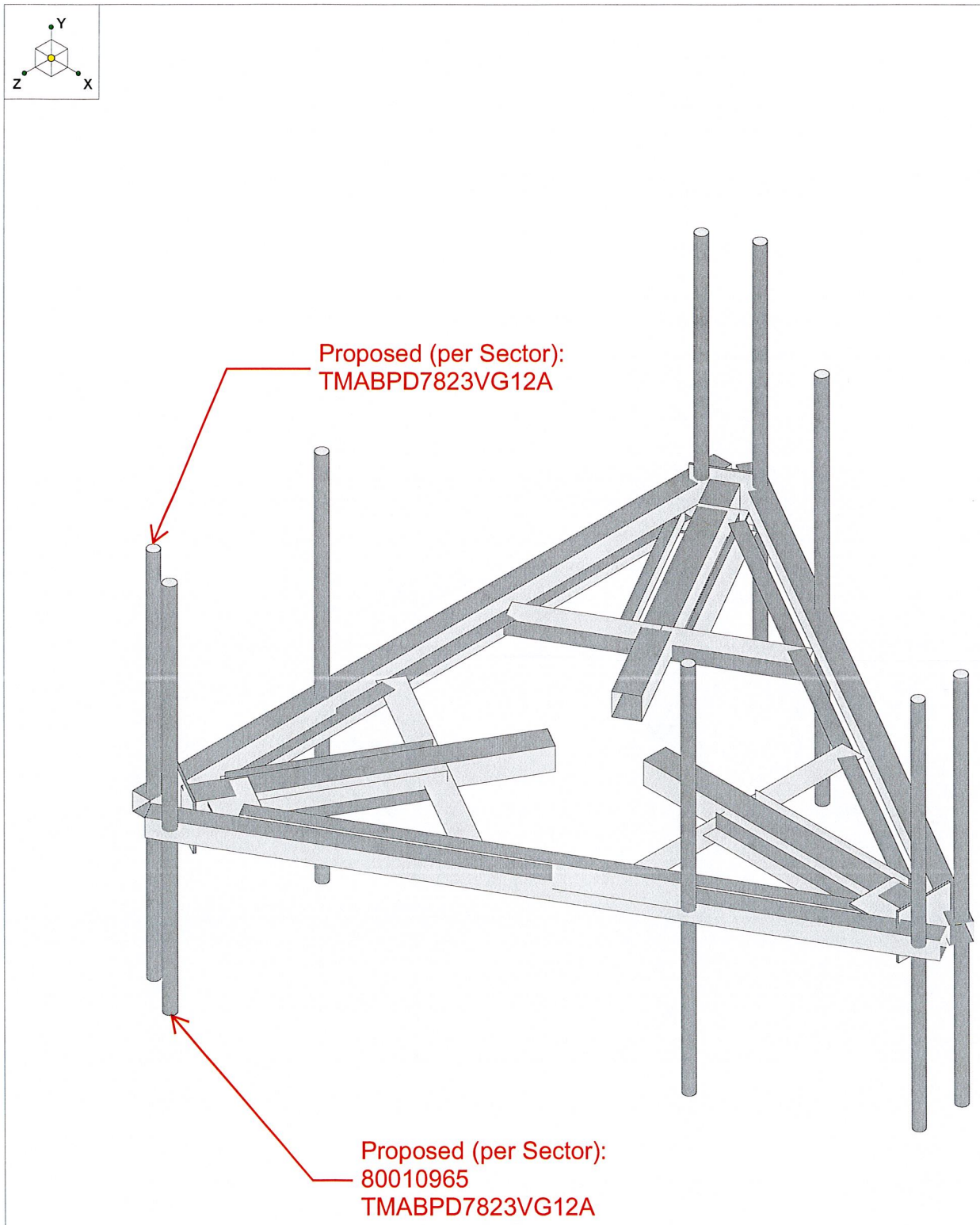

Envelope Only Solution

Paul J. Ford & Company	823463 / Country View	SK - 2
RCK		Feb 20, 2019 at 4:00 PM
37519-0674.001.8190		37519-0674.001.8190_Wind Load....

APPENDIX B

SOFTWARE INPUT CALCULATION

PAUL J. FORD & COMPANY
250 E Broad St, Ste 600 • Columbus, OH 43215
Phone 614.221.6679 www.pauljford.com

Project # 37519-0674.001.8190
By RCK

Analysis 30 degrees

Date: 02/20/19

v1.0, Effective 04/03/2018

Mount Loading per TIA-222-H

Structure Information

Mount Type =	3 Sectors	
Mount Elev, z =	124	ft
Ground Elev, z_s =	156	ft
Wind Speed =	125	mph
Ice Wind Speed =	50	mph
Ice Thickness =	1.5	in
Exposure Cat =	C	
Structure Class =	II	
Topographic Cat =	1	
Crest Height =		ft

Velocity Pressure Coefficients

z_g =	900	ft	
a =	9.50		
K_{zmin} =	0.85		
K_z =	1.32		Calculated Value
Ke =	0.99		Ground Elevation Factor
K_z =	1.32		Velocity Press Coef (Section 2.6.5.2)
K_{zt} =	1.00		Topographic Factor (Section 2.6.6.4)
Gh =	1.00		Gust Effect Factor (Section 2.6.7)
K_d =	0.95		Wind Dir Probability Factor (Table 2-2)
K_a =	0.90		Shielding factor (Section 16.6)
q_z=	45.03	psf	Velocity Pressure (Section 2.6.9.6)

Ice Loading

Ii =	1.00		Ice Importance Factor (Table 2-3)
Iwi =	1.00		Wind Ice Importance Factor (Table 2-3)
q_{iz}=	8.05	psf	Ice Velocity Pressure (Section 2.6.9.6)
K_{iz} =	1.14		Ice Escalation Factor (Section 2.6.8)
T_{iz} =	1.71	in	Factored Ice Thickness (Section 2.6.8)
h =	1.00	in	Bar Grating Height
W_i =	12.66	psf	Grating Ice Weight

Wind Pressures

Pressure =	45.034	psf
Ice Pressure =	8.051	psf

Antenna Attachment Labels & Elevations (inches with Respect to Bottom of Member)

Face	Label	Top Elev (in)	Bot Elev (in)	Length, in	Face	Label	Top Elev (in)	Bot Elev (in)	Length, in	Face	Label	Top Elev (in)	Bot Elev (in)	Length, in	Face	Label	Top Elev (in)	Bot Elev (in)
A	A1	69.4	6	84.0	B	B1	69.4	6	84.0	C	C1	69.4	6	84.0	D			
A (2)	A1	36.0	36	84.0	B (2)	B1	36.0	36	84.0	C (2)	C1	36.0	36	84.0	D			
A (3)	A1	37.1	34.9	84.0	B (3)	B1	37.1	34.9	84.0	C (3)	C1	37.1	34.9	84.0	D			
A (4)	A1	37.2	34.8	84.0	B (4)	B1	37.2	34.8	84.0	C (4)	C1	37.2	34.8	84.0	D			
A	A2	66	6	84.0	B	B2	66	6	84.0	C	C2	66	6	84.0	D			
A	A3	57.5	14.5	84.0	B	B3	57.5	14.5	84.0	C	C3	57.5	14.5	84.0	D			
A (2)	A3	36	36	84.0	B (2)	B3	36	36	84.0	C (2)	C3	36	36	84.0	D			
A (3)	A3	37.1	34.9	84.0	B (3)	B3	37.1	34.9	84.0	C (3)	C3	37.1	34.9	84.0	D			
A (4)	A3	37.2	34.8	84.0	B (4)	B3	37.2	34.8	84.0	C (4)	C3	37.2	34.8	84.0	D			
A					B					C					D			

Antennas

Item	Manufacturer	Antenna	Height (in)	Width (in)	Depth (in)	Flat or Round	Weight (lbs)	Antenna Attachment Locations: Label	Label	Label	Label	Label	Label
1	CCI ANTENNAS	HPA-65R-BUU-H6	72	14.8	9	Flat	51	A2	B2	C2			
2	KATHREIN	80010965	78.7	20	6.9	Flat	97.6	A1	B1	C1			
3	POWERWAVE TECHNOLOGIES	7770.00	55	11	5	Flat	35	A3	B3	C3			
4													
5	CCI ANTENNAS	DTMABP7819VG12A	10.63	11.02	3.78	Flat	19.18	A1(2)	A3(2)	B1(2)	B3(2)	C1(2)	C1(3)
6	CCI ANTENNAS	TMABPD7823VG12A	14.22	11.56	4.24	Flat	26	A1(3)	A3(3)	B1(3)	B3(3)	C1(3)	C3(3)
7	POWERWAVE TECHNOLOGIES	LGP21401	14.4	9.2	2.6	Flat	14.1	A1(4)	A3(4)	B1(4)	B3(4)	C1(4)	C3(4)
8													
9													
10													
11													
12													
13													
14													
15													

Dishes

Item	Manufacturer	Microwave Dish	Dia (in)	Dish Type	Weight (lbs)	Dish Attachment Locations: Label	Label	Label	Label	Label	Label
1											
2											
3											
4											
5											

ASCE 7 Hazards Report

Address:
No Address at This Location

Standard: ASCE/SEI 7-10
Risk Category: II
Soil Class: D - Stiff Soil

Elevation: 155.93 ft (NAVD 88)
Latitude: 41.238
Longitude: -73.1225

Wind

Results:

Wind Speed:	123 Vmph
10-year MRI	77 Vmph
25-year MRI	87 Vmph
50-year MRI	93 Vmph
100-year MRI	100 Vmph
Data Source:	ASCE/SEI 7-10, Fig. 26.5-1A and Figs. CC-1–CC-4, incorporating errata of March 12, 2014
Date Accessed:	Wed Feb 20 2019

Value provided is 3-second gust wind speeds at 33 ft above ground for Exposure C Category, based on linear interpolation between contours. Wind speeds are interpolated in accordance with the 7-10 Standard. Wind speeds correspond to approximately a 7% probability of exceedance in 50 years (annual exceedance probability = 0.00143, MRI = 700 years).

Site is in a hurricane-prone region as defined in ASCE/SEI 7-10 Section 26.2. Glazed openings need not be protected against wind-borne debris.

Mountainous terrain, gorges, ocean promontories, and special wind regions should be examined for unusual wind conditions.

AMERICAN SOCIETY OF CIVIL ENGINEERS

Ice

Results:

Ice Thickness:	0.75 in.
Concurrent Temperature:	15 F
Gust Speed:	50 mph
Data Source:	Standard ASCE/SEI 7-10, Figs. 10-2 through 10-8
Date Accessed:	Wed Feb 20 2019

Ice thicknesses on structures in exposed locations at elevations higher than the surrounding terrain and in valleys and gorges may exceed the mapped values.

Values provided are equivalent radial ice thicknesses due to freezing rain with concurrent 3-second gust speeds, for a 50-year mean recurrence interval, and temperatures concurrent with ice thicknesses due to freezing rain. Thicknesses for ice accretions caused by other sources shall be obtained from local meteorological studies. Ice thicknesses in exposed locations at elevations higher than the surrounding terrain and in valleys and gorges may exceed the mapped values.

The ASCE 7 Hazard Tool is provided for your convenience, for informational purposes only, and is provided "as is" and without warranties of any kind. The location data included herein has been obtained from information developed, produced, and maintained by third party providers; or has been extrapolated from maps incorporated in the ASCE 7 standard. While ASCE has made every effort to use data obtained from reliable sources or methodologies, ASCE does not make any representations or warranties as to the accuracy, completeness, reliability, currency, or quality of any data provided herein. Any third-party links provided by this Tool should not be construed as an endorsement, affiliation, relationship, or sponsorship of such third-party content by or from ASCE.

ASCE does not intend, nor should anyone interpret, the results provided by this Tool to replace the sound judgment of a competent professional, having knowledge and experience in the appropriate field(s) of practice, nor to substitute for the standard of care required of such professionals in interpreting and applying the contents of this Tool or the ASCE 7 standard.

In using this Tool, you expressly assume all risks associated with your use. Under no circumstances shall ASCE or its officers, directors, employees, members, affiliates, or agents be liable to you or any other person for any direct, indirect, special, incidental, or consequential damages arising from or related to your use of, or reliance on, the Tool or any information obtained therein. To the fullest extent permitted by law, you agree to release and hold harmless ASCE from any and all liability of any nature arising out of or resulting from any use of data provided by the ASCE 7 Hazard Tool.

APPENDIX C

SOFTWARE ANALYSIS OUTPUT

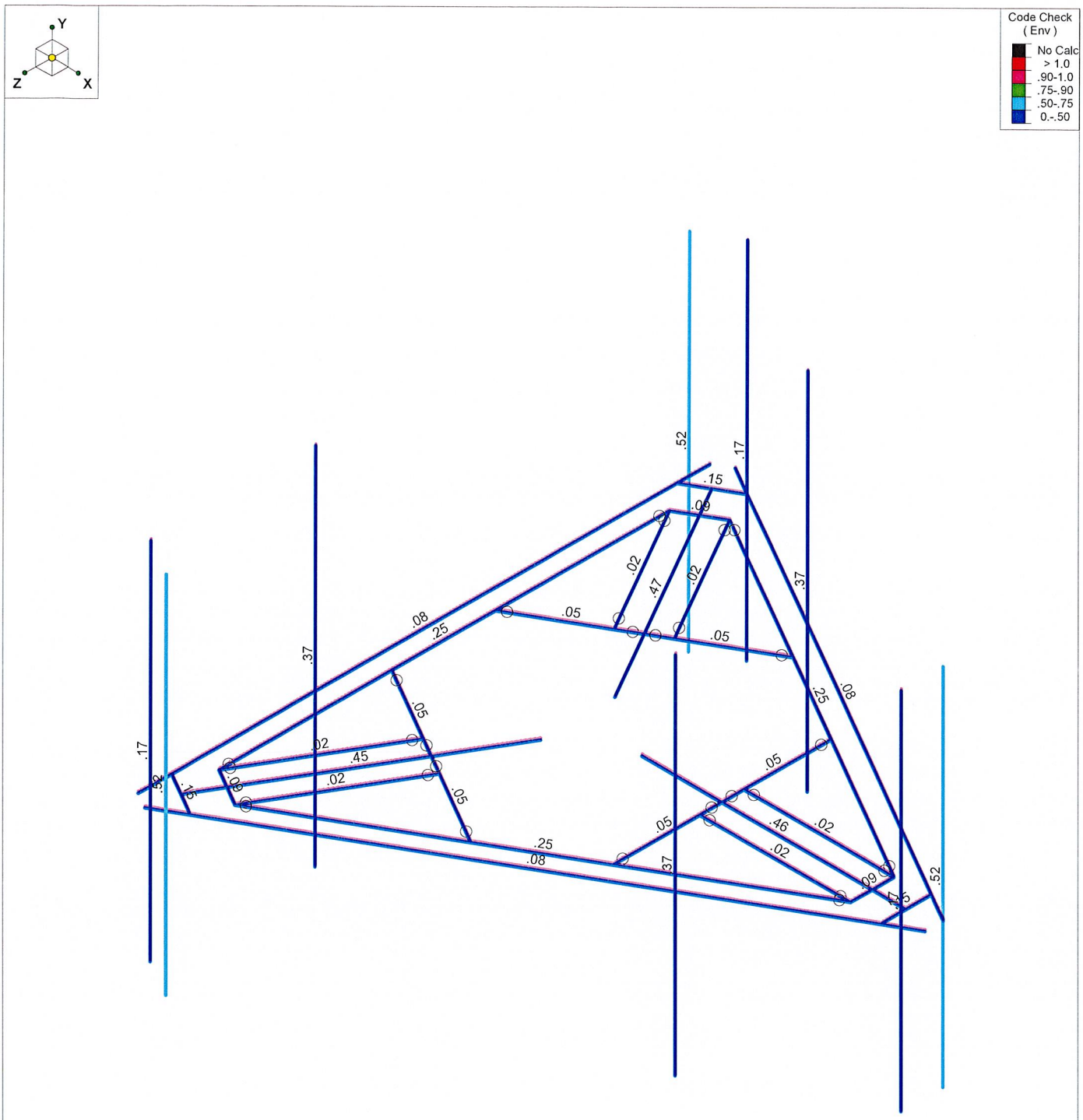

Member Code Checks Displayed (Enveloped)
Envelope Only Solution

Paul J. Ford & Company	823463 / Country View	SK - 3
RCK		Feb 20, 2019 at 4:01 PM
37519-0674.001.8190		37519-0674.001.8190_Wind Load....

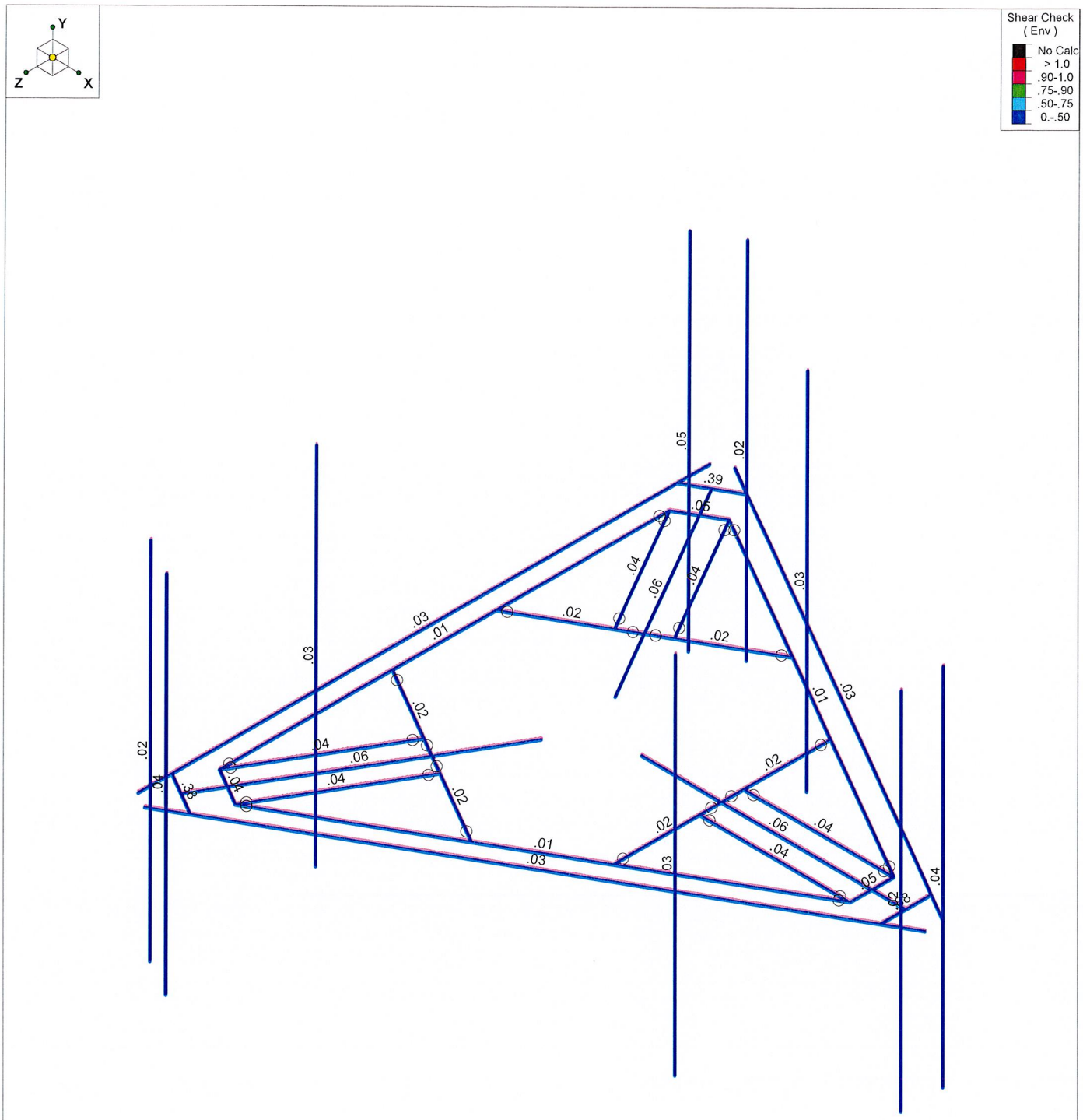

Member Shear Checks Displayed (Enveloped)
Envelope Only Solution

Paul J. Ford & Company	823463 / Country View	SK - 4
RCK		Feb 20, 2019 at 4:02 PM
37519-0674.001.8190		37519-0674.001.8190_Wind Load....

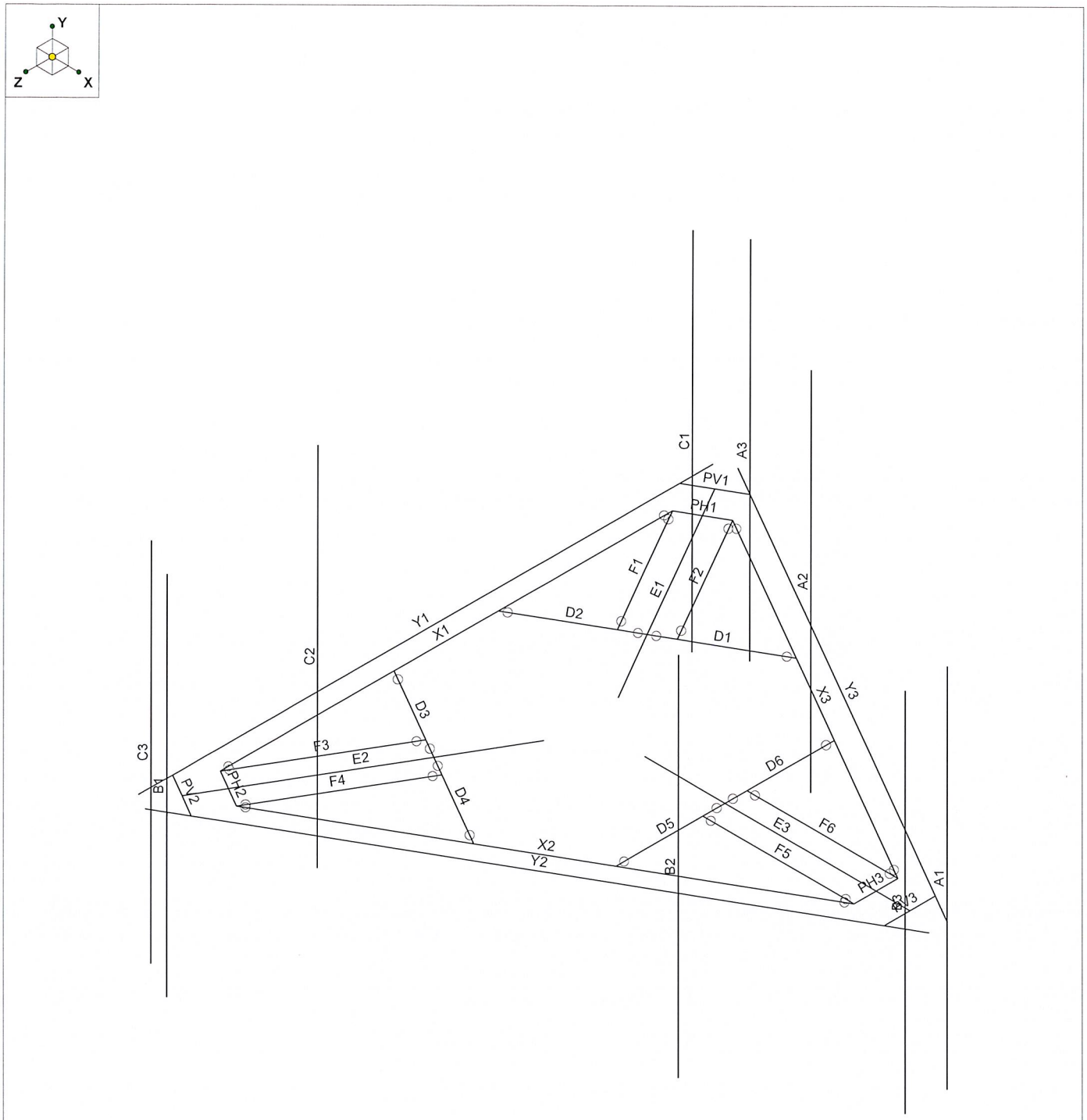

Envelope Only Solution

Paul J. Ford & Company	823463 / Country View	SK - 5
RCK		Feb 20, 2019 at 4:02 PM
37519-0674.001.8190		37519-0674.001.8190_Wind Load....

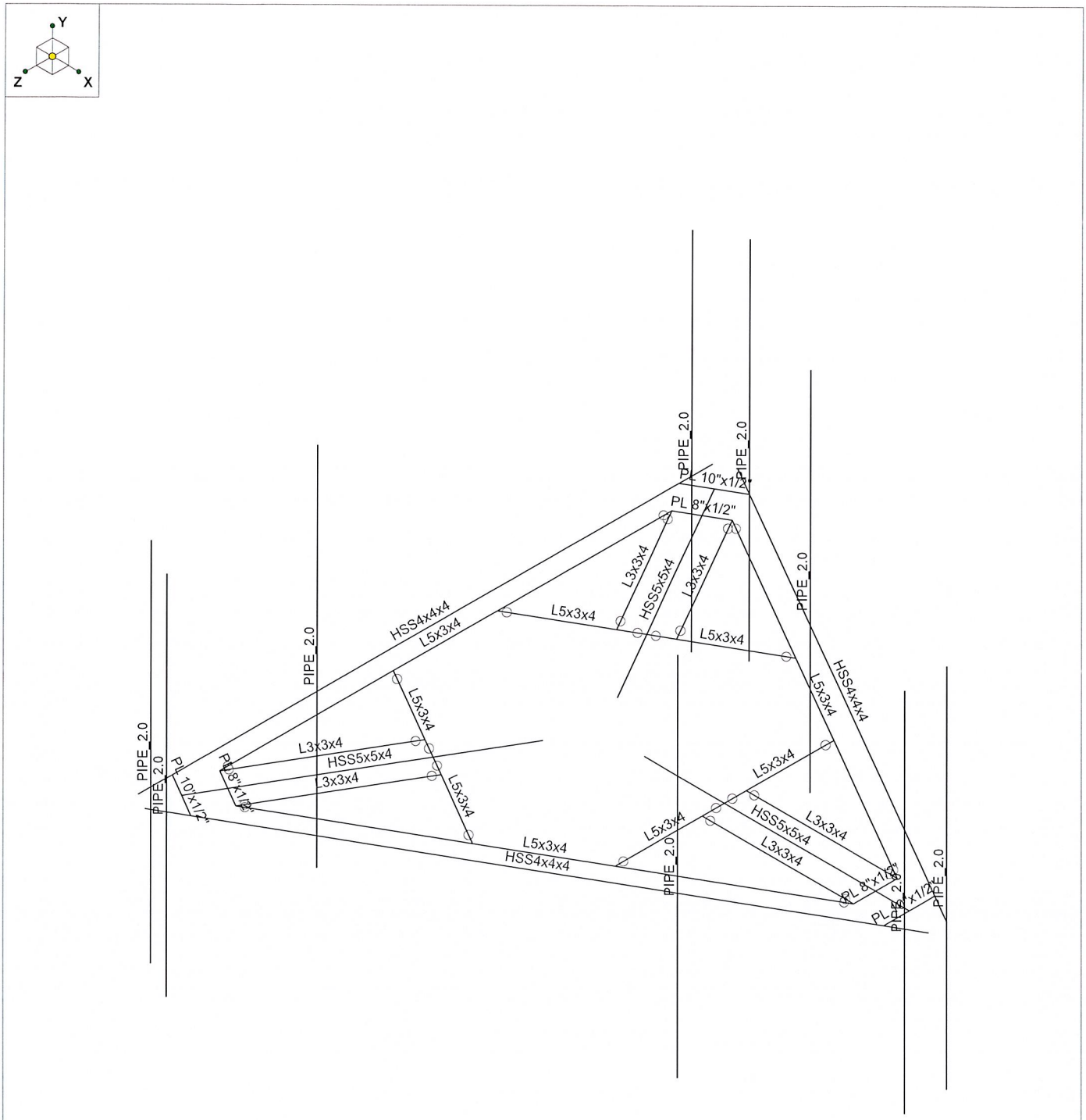

Envelope Only Solution

Paul J. Ford & Company	823463 / Country View	SK - 6
RCK		Feb 20, 2019 at 4:02 PM
37519-0674.001.8190		37519-0674.001.8190_Wind Load....

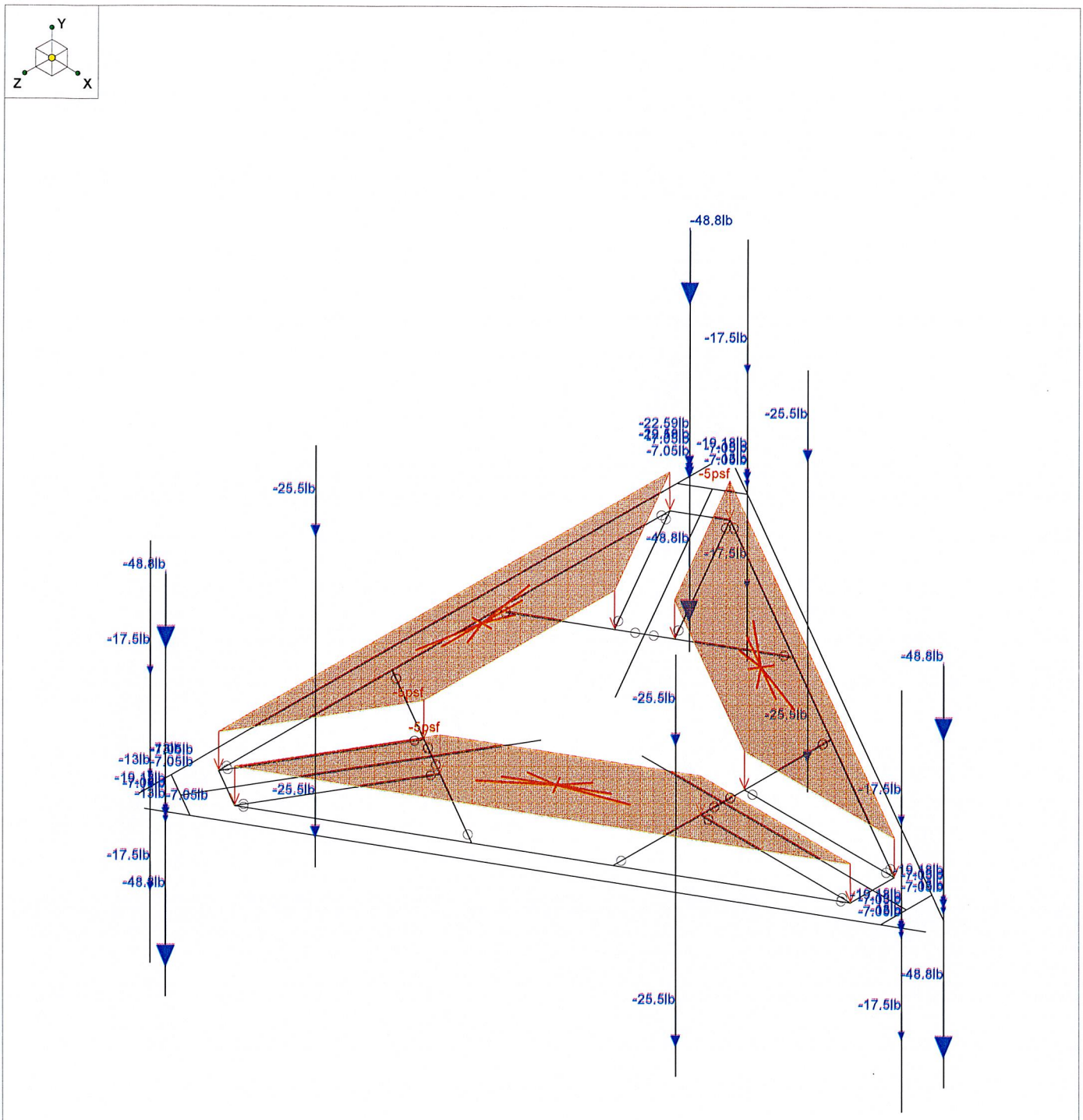

Loads: BLC 1, Dead
Envelope Only Solution

Paul J. Ford & Company	823463 / Country View	SK - 7
RCK		Feb 20, 2019 at 4:03 PM
37519-0674.001.8190		37519-0674.001.8190_Wind Load....

(Global) Model Settings

Display Sections for Member Calcs	2
Max Internal Sections for Member Calcs	100
Include Shear Deformation?	Yes
Increase Nailing Capacity for Wind?	Yes
Include Warping?	Yes
Trans Load Btwn Intersecting Wood Wall?	Yes
Area Load Mesh (in^2)	144
Merge Tolerance (in)	.12
P-Delta Analysis Tolerance	0.50%
Include P-Delta for Walls?	Yes
Automatically Iterate Stiffness for Walls?	Yes
Max Iterations for Wall Stiffness	3
Gravity Acceleration (in/sec^2)	386.4
Wall Mesh Size (in)	12
Eigensolution Convergence Tol. (1.E-)	4
Vertical Axis	Y
Global Member Orientation Plane	XZ
Static Solver	Sparse Accelerated
Dynamic Solver	Accelerated Solver

Hot Rolled Steel Code	AISC 14th(360-10): LRFD
Adjust Stiffness?	Yes(Iterative)
RISAConnection Code	None
Cold Formed Steel Code	None
Wood Code	None
Wood Temperature	< 100F
Concrete Code	None
Masonry Code	None
Aluminum Code	None - Building

Number of Shear Regions	4
Region Spacing Increment (in)	4
Biaxial Column Method	Exact Integration
Parme Beta Factor (PCA)	.65
Concrete Stress Block	Rectangular
Use Cracked Sections?	Yes
Use Cracked Sections Slab?	No
Bad Framing Warnings?	No
Unused Force Warnings?	Yes
Min 1 Bar Diam. Spacing?	No
Concrete Rebar Set	REBAR_SET_ASTMA615
Min % Steel for Column	1
Max % Steel for Column	8

(Global) Model Settings, Continued

Seismic Code	ASCE 7-10
Seismic Base Elevation (in)	Not Entered
Add Base Weight?	Yes
Ct X	.02
Ct Z	.02
T X (sec)	Not Entered
T Z (sec)	Not Entered
R X	3
R Z	3
Ct Exp. X	.75
Ct Exp. Z	.75
SD1	1
SDS	1
S1	1
TL (sec)	5
Risk Cat	I or II
Drift Cat	Other
Om Z	1
Om X	1
Cd Z	4
Cd X	4
Rho Z	1
Rho X	1

Hot Rolled Steel Properties

	Label	E [ksi]	G [ksi]	Nu	Therm (\1E...	Density[k/ft...	Yield[ksi]	Ry	Fu[ksi]	Rt
1	A36 Gr.36	29000	11154	.3	.65	.49	36	1.5	58	1.2
2	A572 Gr.50	29000	11154	.3	.65	.49	50	1.1	65	1.1
3	A992	29000	11154	.3	.65	.49	50	1.1	65	1.1
4	A500 Gr.42	29000	11154	.3	.65	.49	42	1.4	58	1.3
5	A500 Gr.46	29000	11154	.3	.65	.49	46	1.4	58	1.3
6	A53 Gr. B (35 ksi)	29000	11154	.3	.65	.49	35	1.5	60	1.2

Member Primary Data

	Label	I Joint	J Joint	K Joint	Rotate(...	Section/Shape	Type	Design List	Material	Design ...
1	Y3	N1	N2			HSS4x4x4	None	None	A500 Gr.46	Typical
2	E2	N7	N8			HSS5x5x4	None	None	A500 Gr.46	Typical
3	Y2	N3	N4			HSS4x4x4	None	None	A500 Gr.46	Typical
4	Y1	N5	N6			HSS4x4x4	None	None	A500 Gr.46	Typical
5	PV2	N9	N10			PL 10"x1/2"	None	None	A36 Gr.36	Typical
6	E3	N11	N12			HSS5x5x4	None	None	A500 Gr.46	Typical
7	PV3	N13	N14			PL 10"x1/2"	None	None	A36 Gr.36	Typical
8	E1	N15	N16			HSS5x5x4	None	None	A500 Gr.46	Typical
9	PV1	N17	N18			PL 10"x1/2"	None	None	A36 Gr.36	Typical
10	X3	N26	N25		180	L5x3x4	None	None	A36 Gr.36	Typical
11	PH3	N45	N26		90	PL 8"x1/2"	None	None	A36 Gr.36	Typical
12	X1	N36	N35		180	L5x3x4	None	None	A36 Gr.36	Typical
13	PH1	N25	N36		90	PL 8"x1/2"	None	None	A36 Gr.36	Typical
14	X2	N46	N45		180	L5x3x4	None	None	A36 Gr.36	Typical
15	PH2	N35	N46		90	PL 8"x1/2"	None	None	A36 Gr.36	Typical
16	D1	N29	N91		90	L5x3x4	None	None	A36 Gr.36	Typical
17	F1	N36	N19			L3x3x4	None	None	A36 Gr.36	Typical
18	F2	N25	N20		270	L3x3x4	None	None	A36 Gr.36	Typical
19	D3	N39	N92		90	L5x3x4	None	None	A36 Gr.36	Typical
20	F4	N46	N21			L3x3x4	None	None	A36 Gr.36	Typical

Member Primary Data (Continued)

	Label	I Joint	J Joint	K Joint	Rotate(...	Section/Shape	Type	Design List	Material	Design ...
21	F3	N35	N22		270	L3x3x4	None	None	A36 Gr.36	Typical
22	D5	N49	N93		90	L5x3x4	None	None	A36 Gr.36	Typical
23	F6	N26	N23			L3x3x4	None	None	A36 Gr.36	Typical
24	F5	N45	N24		270	L3x3x4	None	None	A36 Gr.36	Typical
25	C3	N73	N74			PIPE_2.0	None	None	A53 Gr. B (35 ksi)	Typical
26	C2	N75	N76			PIPE_2.0	None	None	A53 Gr. B (35 ksi)	Typical
27	C1	N77	N78			PIPE_2.0	None	None	A53 Gr. B (35 ksi)	Typical
28	D2	N91	N37		90	L5x3x4	None	None	A36 Gr.36	Typical
29	D4	N92	N47		90	L5x3x4	None	None	A36 Gr.36	Typical
30	D6	N93	N27		90	L5x3x4	None	None	A36 Gr.36	Typical
31	M31	N63	N87			RIGID	None	None	RIGID	Typical
32	M32	N62	N86			RIGID	None	None	RIGID	Typical
33	M33	N61	N85			RIGID	None	None	RIGID	Typical
34	B3	N64	N65			PIPE_2.0	None	None	A53 Gr. B (35 ksi)	Typical
35	B2	N66	N67			PIPE_2.0	None	None	A53 Gr. B (35 ksi)	Typical
36	B1	N68	N69			PIPE_2.0	None	None	A53 Gr. B (35 ksi)	Typical
37	M37	N75A	N72			RIGID	None	None	RIGID	Typical
38	M38	N74A	N71			RIGID	None	None	RIGID	Typical
39	M39	N73A	N70			RIGID	None	None	RIGID	Typical
40	A3	N76A	N77A			PIPE_2.0	None	None	A53 Gr. B (35 ksi)	Typical
41	A2	N78A	N79			PIPE_2.0	None	None	A53 Gr. B (35 ksi)	Typical
42	A1	N80	N81			PIPE_2.0	None	None	A53 Gr. B (35 ksi)	Typical
43	M43	N87A	N84			RIGID	None	None	RIGID	Typical
44	M44	N86A	N83			RIGID	None	None	RIGID	Typical
45	M45	N85A	N82			RIGID	None	None	RIGID	Typical

Member Advanced Data

	Label	I Release	J Release	I Offset[in]	J Offset[in]	T/C Only	Physical	Analysis ...	Inactive	Seismic Design ...
1	Y3						Yes			None
2	E2						Yes			None
3	Y2						Yes			None
4	Y1						Yes			None
5	PV2						Yes			None
6	E3						Yes			None
7	PV3						Yes			None
8	E1						Yes			None
9	PV1						Yes			None
10	X3	BenPIN	BenPIN				Yes			None
11	PH3						Yes			None
12	X1	BenPIN	BenPIN				Yes			None
13	PH1						Yes			None
14	X2	BenPIN	BenPIN				Yes			None
15	PH2						Yes			None
16	D1	BenPIN	BenPIN				Yes			None
17	F1	BenPIN	BenPIN				Yes			None
18	F2	BenPIN	BenPIN				Yes			None
19	D3	BenPIN	BenPIN				Yes			None
20	F4	BenPIN	BenPIN				Yes			None
21	F3	BenPIN	BenPIN				Yes			None
22	D5	BenPIN	BenPIN				Yes			None
23	F6	BenPIN	BenPIN				Yes			None
24	F5	BenPIN	BenPIN				Yes			None
25	C3						Yes			None
26	C2						Yes			None
27	C1						Yes			None

Member Advanced Data (Continued)

	Label	I Release	J Release	I Offset[in]	J Offset[in]	T/C Only	Physical	Analysis ...	Inactive	Seismic Design ...
28	D2	BenPIN	BenPIN				Yes			None
29	D4	BenPIN	BenPIN				Yes			None
30	D6	BenPIN	BenPIN				Yes			None
31	M31						Yes			None
32	M32						Yes			None
33	M33						Yes			None
34	B3						Yes			None
35	B2						Yes			None
36	B1						Yes			None
37	M37						Yes			None
38	M38						Yes			None
39	M39						Yes			None
40	A3						Yes			None
41	A2						Yes			None
42	A1						Yes			None
43	M43						Yes			None
44	M44						Yes			None
45	M45						Yes			None

Hot Rolled Steel Design Parameters

	Label	Shape	Length[in]	Lbyy[in]	Lbzz[in]	Lcomp top[in]	Lcomp bot[in]	L-torq...	Kyy	Kzz	Cb	Function
1	Y3	HSS4x4x4	132.007			Lbyy						Lateral
2	E2	HSS5x5x4	60.926			Lbyy						Lateral
3	Y2	HSS4x4x4	132.007			Lbyy						Lateral
4	Y1	HSS4x4x4	132.007			Lbyy						Lateral
5	PV2	PL 10"x1/2"	11.847			Lbyy						Lateral
6	E3	HSS5x5x4	60.926			Lbyy						Lateral
7	PV3	PL 10"x1/2"	11.847			Lbyy						Lateral
8	E1	HSS5x5x4	60.926			Lbyy						Lateral
9	PV1	PL 10"x1/2"	11.847			Lbyy						Lateral
10	X3	L5x3x4	104.083			Lbyy						Lateral
11	PH3	PL 8"x1/2"	10.154			Lbyy						Lateral
12	X1	L5x3x4	104.083			Lbyy						Lateral
13	PH1	PL 8"x1/2"	10.154			Lbyy						Lateral
14	X2	L5x3x4	104.083			Lbyy						Lateral
15	PH2	PL 8"x1/2"	10.154			Lbyy						Lateral
16	D1	L5x3x4	25.108			Lbyy						Lateral
17	F1	L3x3x4	34.694			Lbyy						Lateral
18	F2	L3x3x4	34.694			Lbyy						Lateral
19	D3	L5x3x4	25.108			Lbyy						Lateral
20	F4	L3x3x4	34.694			Lbyy						Lateral
21	F3	L3x3x4	34.694			Lbyy						Lateral
22	D5	L5x3x4	25.108			Lbyy						Lateral
23	F6	L3x3x4	34.694			Lbyy						Lateral
24	F5	L3x3x4	34.694			Lbyy						Lateral
25	C3	PIPE_2.0	84			Lbyy						Lateral
26	C2	PIPE_2.0	84			Lbyy						Lateral
27	C1	PIPE_2.0	84			Lbyy						Lateral
28	D2	L5x3x4	25.108			Lbyy						Lateral
29	D4	L5x3x4	25.108			Lbyy						Lateral
30	D6	L5x3x4	25.108			Lbyy						Lateral
31	B3	PIPE_2.0	84			Lbyy						Lateral
32	B2	PIPE_2.0	84			Lbyy						Lateral
33	B1	PIPE_2.0	84			Lbyy						Lateral
34	A3	PIPE_2.0	84			Lbyy						Lateral

Hot Rolled Steel Design Parameters (Continued)

	Label	Shape	Length[in]	Lbyy[in]	Lbzz[in]	Lcomp top[in]	Lcomp bot[in]	L-torq...	Kyy	Kzz	Cb	Function
35	A2	PIPE_2.0	84			Lbyy						Lateral
36	A1	PIPE_2.0	84			Lbyy						Lateral

Basic Load Cases

	BLC Description	Category	X Gravity	Y Gravity	Z Gravity	Joint	Point	Distributed	Area(Me...	Surface(P...
1	Dead	None		-1.1			52		3	
2	Live	None								
3	Wind 0	None					104	72		
4	Wind 30	None					104	72		
5	Wind 60	None					104	72		
6	Wind 90	None					104	72		
7	Wind 120	None					104	72		
8	Wind 150	None					104	72		
9	Ice Load	None					52	36	3	
10	Ice 0	None					104	72		
11	Ice 30	None					104	72		
12	Ice 60	None					104	72		
13	Ice 90	None					104	72		
14	Ice 120	None					104	72		
15	Ice 150	None					104	72		
16	Lm	None				1				
17	Lv	None				1				
18	BLC 1 Transient Area...	None						33		
19	BLC 9 Transient Area...	None						33		

Load Combinations

	Description	S...	P...	S...	B...	F...	B...	F...	B...	F...	B...	F...	B...	F...	B...	F...	B...	F...	B...	F...	B...	F...	B...	F...
1	1.4 D	Y...	Y		1	1.4																		
2	1.2 D + 1.6 L	Y...	Y		1	1.2	2	1.6																
3	1.2 D + 1.0 Wo @ 0	Y...	Y		1	1.2	3	1																
4	1.2 D + 1.0 Wo @ 30	Y...	Y		1	1.2	4	1																
5	1.2 D + 1.0 Wo @ 60	Y...	Y		1	1.2	5	1																
6	1.2 D + 1.0 Wo @ 90	Y...	Y		1	1.2	6	1																
7	1.2 D + 1.0 Wo @ 120	Y...	Y		1	1.2	7	1																
8	1.2 D + 1.0 Wo @ 150	Y...	Y		1	1.2	8	1																
9	1.2 D + 1.0 Wo @ 180	Y...	Y		1	1.2	3	-1																
10	1.2 D + 1.0 Wo @ 210	Y...	Y		1	1.2	4	-1																
11	1.2 D + 1.0 Wo @ 240	Y...	Y		1	1.2	5	-1																
12	1.2 D + 1.0 Wo @ 270	Y...	Y		1	1.2	6	-1																
13	1.2 D + 1.0 Wo @ 300	Y...	Y		1	1.2	7	-1																
14	1.2 D + 1.0 Wo @ 330	Y...	Y		1	1.2	8	-1																
15	1.2 D + 1.0 Di + 1.0 Wi @ 0	Y...	Y		1	1.2	9	1	10	1														
16	1.2 D + 1.0 Di + 1.0 Wi @ 30	Y...	Y		1	1.2	9	1	11	1														
17	1.2 D + 1.0 Di + 1.0 Wi @ 60	Y...	Y		1	1.2	9	1	12	1														
18	1.2 D + 1.0 Di + 1.0 Wi @ 90	Y...	Y		1	1.2	9	1	13	1														
19	1.2 D + 1.0 Di + 1.0 Wi @ 120	Y...	Y		1	1.2	9	1	14	1														
20	1.2 D + 1.0 Di + 1.0 Wi @ 150	Y...	Y		1	1.2	9	1	15	1														
21	1.2 D + 1.0 Di + 1.0 Wi @ 180	Y...	Y		1	1.2	9	1	10	-1														
22	1.2 D + 1.0 Di + 1.0 Wi @ 210	Y...	Y		1	1.2	9	1	11	-1														
23	1.2 D + 1.0 Di + 1.0 Wi @ 240	Y...	Y		1	1.2	9	1	12	-1														
24	1.2 D + 1.0 Di + 1.0 Wi @ 270	Y...	Y		1	1.2	9	1	13	-1														
25	1.2 D + 1.0 Di + 1.0 Wi @ 300	Y...	Y		1	1.2	9	1	14	-1														
26	1.2 D + 1.0 Di + 1.0 Wi @ 330	Y...	Y		1	1.2	9	1	15	-1														
27	1.2 D + 1.5 Lm + 1.0 Wm @ 0	Y...	Y		1	1.2	3	.0...	16	1.5														

Load Combinations (Continued)

	Description	S...	P...	S...	B...	F...	B...	F...	B...	F...	B...	F...	B...	F...	B...	F...	B...	F...	B...	F...	B...	F...	B...	F...
28	1.2 D + 1.5 Lm + 1.0 Wm @ 30	Y...	Y		1	1.2	4	.0...	16	1.5														
29	1.2 D + 1.5 Lm + 1.0 Wm @ 60	Y...	Y		1	1.2	5	.0...	16	1.5														
30	1.2 D + 1.5 Lm + 1.0 Wm @ 90	Y...	Y		1	1.2	6	.0...	16	1.5														
31	1.2 D + 1.5 Lm + 1.0 Wm @ 120	Y...	Y		1	1.2	7	.0...	16	1.5														
32	1.2 D + 1.5 Lm + 1.0 Wm @ 150	Y...	Y		1	1.2	8	.0...	16	1.5														
33	1.2 D + 1.5 Lm + 1.0 Wm @ 180	Y...	Y		1	1.2	3	-....	16	1.5														
34	1.2 D + 1.5 Lm + 1.0 Wm @ 210	Y...	Y		1	1.2	4	-....	16	1.5														
35	1.2 D + 1.5 Lm + 1.0 Wm @ 240	Y...	Y		1	1.2	5	-....	16	1.5														
36	1.2 D + 1.5 Lm + 1.0 Wm @ 270	Y...	Y		1	1.2	6	-....	16	1.5														
37	1.2 D + 1.5 Lm + 1.0 Wm @ 300	Y...	Y		1	1.2	7	-....	16	1.5														
38	1.2 D + 1.5 Lm + 1.0 Wm @ 330	Y...	Y		1	1.2	8	-....	16	1.5														
39	1.2 D + 1.5 Lv	Y...	Y		1	1.2	17	1.5																

Envelope Joint Reactions

	Joint		X [lb]	LC	Y [lb]	LC	Z [lb]	LC	MX [k-ft]	LC	MY [k-ft]	LC	MZ [k-ft]	LC
1	N15	max	2082.319	14	2758.429	26	3651.914	14	10.154	15	2.194	5	-1.91	6
2		min	-2080.218	8	948.019	8	-3648.427	8	3.451	8	-2.195	11	-5.893	24
3	N11	max	4198.672	12	2709.038	18	965.782	3	.154	3	2.088	9	11.483	18
4		min	-4202.725	6	924.435	12	-965.556	9	-.152	33	-2.088	3	3.859	12
5	N7	max	2120.4	10	2659.743	22	3623.884	4	-3.211	3	1.982	13	-1.822	6
6		min	-2118.459	4	900.743	4	-3627.397	10	-9.747	21	-1.982	7	-5.637	24
7	Totals:	max	7065.704	12	8088.82	24	6767.453	3						
8		min	-7065.704	6	2891.166	6	-6767.453	9						

Envelope AISC 14th(360-10): LRFD Steel Code Checks

	Member	Shape	Code Check	Loc[in]	LC	Shear ...	Loc[in]	Dir	LC	phi*Pnc [...	phi*Pnt [lb]	phi*Mn y...	phi*Mn z...	Cb	Eqn
1	C1	PIPE_2.0	.522	36.485	13	.046	36.485		13	17855.085	32130	1.872	1.872	1....	H1-1b
2	B1	PIPE_2.0	.521	36.485	9	.044	36.485		9	17855.085	32130	1.872	1.872	1....	H1-1b
3	A1	PIPE_2.0	.521	36.485	5	.044	36.485		5	17855.085	32130	1.872	1.872	1....	H1-1b
4	E1	HSS5x5x4	.467	0	23	.061	53.541	z	11	166465.65	178020	26.255	26.255	1....	H1-1b
5	E3	HSS5x5x4	.457	0	15	.061	53.541	z	3	166465.65	178020	26.255	26.255	1....	H1-1b
6	E2	HSS5x5x4	.446	0	19	.060	53.541	z	7	166465.65	178020	26.255	26.255	1....	H1-1b
7	C2	PIPE_2.0	.373	36.485	13	.030	36.485		13	17855.085	32130	1.872	1.872	1....	H1-1b
8	A2	PIPE_2.0	.373	36.485	5	.030	36.485		5	17855.085	32130	1.872	1.872	1....	H1-1b
9	B2	PIPE_2.0	.373	36.485	9	.030	36.485		9	17855.085	32130	1.872	1.872	1....	H1-1b
10	X3	L5x3x4	.253	64.132	5	.012	0	y	21	17198.101	62856	1.939	5.622	1....	H2-1
11	X1	L5x3x4	.249	39.951	11	.012	104.0...	y	20	17198.101	62856	1.939	5.63	1....	H2-1
12	X2	L5x3x4	.248	64.132	9	.012	0	y	25	17198.101	62856	1.939	5.605	1....	H2-1
13	A3	PIPE_2.0	.174	36.485	3	.024	36.485		3	17855.085	32130	1.872	1.872	1	H1-1b
14	B3	PIPE_2.0	.174	36.485	3	.024	36.485		3	17855.085	32130	1.872	1.872	1....	H1-1b
15	C3	PIPE_2.0	.174	36.485	7	.024	36.485		7	17855.085	32130	1.872	1.872	1....	H1-1b
16	PV1	PL 10"x1/2"	.152	5.864	14	.390	5.983	y	23	105440....	162000	1.688	33.75	1....	H1-1b
17	PV2	PL 10"x1/2"	.150	5.864	10	.384	5.983	y	19	105440....	162000	1.688	33.75	1....	H1-1b
18	PV3	PL 10"x1/2"	.150	5.864	6	.383	5.983	y	15	105440....	162000	1.688	33.75	1....	H1-1b
19	PH1	PL 8"x1/2"	.093	5.128	24	.045	5.128	y	12	99712.854	129600	1.35	21.6	1....	H1-1b
20	PH3	PL 8"x1/2"	.093	5.128	16	.045	5.128	y	4	99712.854	129600	1.35	21.6	1....	H1-1b
21	PH2	PL 8"x1/2"	.093	5.128	20	.045	5.128	y	8	99712.854	129600	1.35	21.6	1....	H1-1b
22	Y1	HSS4x4x4	.078	89.338	6	.035	6.667	z	12	84077.717	139518	16.181	16.181	2....	H1-1b
23	Y2	HSS4x4x4	.077	89.338	14	.033	6.667	z	8	84077.717	139518	16.181	16.181	2....	H1-1b
24	Y3	HSS4x4x4	.077	42.669	10	.033	125.34	z	4	84077.717	139518	16.181	16.181	2....	H1-1b
25	D6	L5x3x4	.055	5.326	11	.017	0	y	11	47486.876	62856	1.574	5.529	1....	H2-1
26	D3	L5x3x4	.054	19.782	5	.017	25.108	y	11	47486.876	62856	1.574	5.529	1....	H2-1
27	D4	L5x3x4	.053	5.326	3	.017	0	y	3	47486.876	62856	1.574	5.529	1....	H2-1
28	D1	L5x3x4	.053	19.782	9	.017	25.108	y	3	47486.876	62856	1.574	5.529	1....	H2-1

Envelope AISC 14th(360-10): LRFD Steel Code Checks (Continued)

	Member	Shape	Code Check	Loc[in]	LC	Shear ...	Loc[in]	Dir	LC	phi*Pnc [...	phi*Pnt [lb]	phi*Mn y...	phi*Mn z...	Cb	Eqn
29	D2	L5x3x4	.052	5.326	7	.016	0	y	7	47486.876	62856	1.574	5.529	1....	H2-1
30	D5	L5x3x4	.052	19.782	13	.016	25.108	y	7	47486.876	62856	1.574	5.529	1....	H2-1
31	F6	L3x3x4	.020	17.522	23	.037	34.694	y	19	38769.677	46656	1.688	3.737	1....	H2-1
32	F3	L3x3x4	.020	17.522	17	.037	34.694	z	21	38769.677	46656	1.688	3.737	1....	H2-1
33	F2	L3x3x4	.020	17.522	21	.037	34.694	z	25	38769.677	46656	1.688	3.737	1....	H2-1
34	F4	L3x3x4	.020	17.522	15	.036	34.694	y	23	38769.677	46656	1.688	3.737	1....	H2-1
35	F1	L3x3x4	.020	17.522	19	.037	34.694	y	15	38769.677	46656	1.688	3.737	1....	H2-1
36	F5	L3x3x4	.020	17.522	25	.036	34.694	z	17	38769.677	46656	1.688	3.737	1....	H2-1

PAUL J. FORD & COMPANY
250 E Broad St, Ste 600 • Columbus, OH 43215
Phone 614.221.6679 www.pauljford.com

Project # A37519-0674.001.8190
By RCK
Date: 02/21/19
v0.1, Effective 07/10/18

MOUNT TO TOWER CONNECTION CHECKS

REACTIONS

Px=	0.966	Kip
Py=	2.758	Kip
(Axial)Pz=	4.199	Kip
Mx=	137.796	Kip-in
My=	25.056	Kip-in
(Torque)Mz=	1.848	Kip-in

Number of Bolts	=	4	
Plate Size	b=	9	in
	d=	9	in
Edge distance for Bolts	=	1.5	in
Bolt group centroid y-coordinate, Yc		4.5	in
Bolt group centroid x-coordinate, Xc		4.5	in
Load eccentricity in x-direction, ex		0	in
Load eccentricity in y-direction, ey		0	in
Total Moment including load eccentricity ΣMx=		137.8	Kips-in
Total Moment including load eccentricity ΣMy=		25.056	Kips-in
Total Moment including load eccentricity ΣMz=		1.848	Kips-in

WELD CHECKS

Standoff Member Type		Square	
Width	=	5	in
Depth (only for square members)	=	5	in
Weld Size	=	0.5000	
Total Forces in X direction	=	0.124	kips
Total Forces in Y direction	=	0.304	kips
Total Forces in Z direction	=	5.10	kips
Resultant	=	5.11	kips
Φ*Fw (Kip/in)/16" weld	=	1.392	
Capacity used		45.85%	

BOLT CHECKS

Tension Reaction	14.62	kip
Shear Reaction	0.83	kip
Bolt Type	A325N	
Bolt Diameter	0.625	in
Tensile Strength	20.7	kips
Shear Strength	12.4	kips
Reduced Tensile Strength	-	kips
Tensile Capacity Used	70.6%	
Shear Capacity Used	6.7%	

Note: Tension reduction not required if tension or shear capacity < 30%

Exhibit F

Power Density/RF Emissions Report

RF EMISSIONS COMPLIANCE REPORT

Crown Castle on behalf of AT&T Mobility, LLC

Crown Castle Site Name: STRATFORD NU
Crown Castle Site ID: 841299
AT&T Mobility, LLC FA #: 10035240
670 CHAPEL STREET
STRATFORD, CT
1/14/2019

Report Status:

AT&T Mobility, LLC Is Compliant

COMMONWEALTH OF VIRGINIA
KLAUS BENDER
No. 39384
PROFESSIONAL ENGINEER

1/15/2019

Klaus Bender, P.E.
Commonwealth of Virginia PE#: 0402039384
Velocitel LLC (License #: 0404007330)

Prepared By:

Sitesafe, LLC

8618 Westwood Center Drive,
Suite 315

Vienna, VA 22182

Voice 703-276-1100
Fax 703-276-1169

Engineering Statement in Re:
Electromagnetic Energy Analysis
Crown Castle
STRATFORD, CT

My signature on the cover of this document indicates:

That I am registered as a Professional Engineer in the jurisdiction indicated; and

That I have extensive professional experience in the wireless communications engineering industry; and

That I am an employee of Sitesafe, LLC in Vienna, Virginia; and

That I am thoroughly familiar with the Rules and Regulations of the Federal Communications Commission ("the FCC" and "the FCC Rules") both in general and specifically as they apply to the FCC's Guidelines for Human Exposure to Radiofrequency Electromagnetic Fields; and

That the technical information serving as the basis for this report was supplied by Crown Castle (See attached Site Summary and Carrier documents), and that AT&T Mobility, LLC's installations involve communications equipment, antennas and associated technical equipment at a location referred to as the "STRATFORD NU" ("the site"); and

That AT&T Mobility, LLC proposes to operate at the site with transmit antennas listed in the carrier summary and with a maximum effective radiated power as specified by AT&T Mobility, LLC and shown on the worksheet, and that worst-case 100% duty cycle have been assumed; and

That this analysis has been performed with the assumption that the ground immediately surrounding the tower is primarily flat or falling; and

That at this time, the FCC requires that certain licensees address specific levels of radio-frequency energy to which workers or members of the public might possibly be exposed (at §1.1307(b) of the FCC Rules); and

That such consideration of possible exposure of humans to radio-frequency radiation must utilize the standards set by the FCC, which is the Federal Agency having jurisdiction over communications facilities; and

That the FCC rules define two tiers of permissible exposure guidelines: 1) "uncontrolled environments," defined as situations in which persons may not be aware of (the "general public"), or may not be able to control their exposure to a transmission facility; and (2) "controlled environments," which defines situations in which persons are aware of their potential for exposure (industry personnel); and

That this statement specifically addresses the uncontrolled environment (which is more conservative than the controlled environment) and the limit set forth in the FCC rules for licensees of AT&T Mobility, LLC's operating frequency as shown on the attached antenna worksheet; and

That when applying the uncontrolled environment standards, the predicted Maximum Power Density at two meters above ground level from the proposed AT&T Mobility, LLC operation is no more than 2.484% of the maximum in any accessible area on the ground and

That it is understood per FCC Guidelines and OET65 Appendix A, that regardless of the existent radio-frequency environment, only those licenses whose contributions exceed five percent of the exposure limit pertinent to their operation(s) bear any responsibility for bringing any non-compliant area(s) into compliance; and

That when applying the uncontrolled environment standards, the cumulative predicted energy density from the proposed operation is no more than 2.95% of the maximum in any accessible area up to two meters above the ground per OET-65; and

That the calculations provided in this report are based on data provided by the client and antenna pattern data supplied by the antenna manufacturer, in accordance with FCC guidelines listed in OET-65. Horizontal and vertical antenna patterns are combined for modeling purposes to accurately reflect the energy two meters above ground level where on-axis energy refers to maximum energy two meters above the ground along the azimuth of the antenna and where area energy refers to the maximum energy anywhere two meters above the ground regardless of the antenna azimuth, accounting for cumulative energy from multiple antennas for the carrier and frequency range indicated; and

That the Occupational Safety and Health Administration has policies in place which address worker safety in and around communications sites, thus individual companies will be responsible for their employees' training regarding Radio Frequency Safety.

In summary, it is stated here that the proposed operation at the site would not result in exposure of the Public to excessive levels of radio-frequency energy as defined in the FCC Rules and Regulations, specifically 47 CFR 1.1307 and that AT&T Mobility, LLC's proposed operation is completely compliant.

Finally, it is stated that access to the tower should be restricted to communication industry professionals, and approved contractor personnel trained in radio-frequency safety; and that the instant analysis addresses exposure levels at two meters above ground level and does not address exposure levels on the tower, or in the immediate proximity of the antennas.

Crown Castle
STRATFORD NU
Site Summary

Carrier	Area Maximum Percentage MPE
AT&T Mobility, LLC	0.222 %
AT&T Mobility, LLC (Proposed)	0.511 %
AT&T Mobility, LLC (Proposed)	0.406 %
AT&T Mobility, LLC (Proposed)	0.369 %
AT&T Mobility, LLC (Proposed)	0.474 %
AT&T Mobility, LLC (Proposed)	0.502 %
T-Mobile	0.304 %
T-Mobile	0.161 %
Composite Site MPE:	2.95 %

AT&T Mobility, LLC
STRATFORD NU
Carrier Summary

Frequency:	850	MHz
Maximum Permissible Exposure (MPE):	566.67	μW/cm^2
Maximum power density at ground level:	1.25594	μW/cm^2
Highest percentage of Maximum Permissible Exposure:	0.22164	%

					On Axis		Area	
Antenna Make	**Model**	**Height (feet)**	**Orientation (degrees true)**	**ERP (Watts)**	**Max Power Density (μW/cm^2)**	**Percent of MPE**	**Max Power Density (μW/cm^2)**	**Percent of MPE**
Powerwave	7770	124	23	1094	0.698956	0.123345	1.076309	0.189937
Powerwave	7770	124	143	1094	0.699847	0.123502	1.076309	0.189937
Powerwave	7770	124	263	1094	0.698956	0.123345	1.076309	0.189937

AT&T Mobility, LLC (Proposed)
STRATFORD NU
Carrier Summary

Frequency:	2100	MHz
Maximum Permissible Exposure (MPE):	1000	µW/cm^2
Maximum power density at ground level:	5.11341	µW/cm^2
Highest percentage of Maximum Permissible Exposure:	0.51134	%

					On Axis		Area	
Antenna Make	**Model**	**Height (feet)**	**Orientation (degrees true)**	**ERP (Watts)**	**Max Power Density (µW/cm^2)**	**Percent of MPE**	**Max Power Density (µW/cm^2)**	**Percent of MPE**
Kathrein-Scala	800-10965	124	30	7114	2.049592	0.204959	4.854895	0.485489
Kathrein-Scala	800-10965	124	150	7114	2.000051	0.200005	4.854894	0.485489
Kathrein-Scala	800-10965	124	270	7114	2.049591	0.204959	4.854894	0.485489

AT&T Mobility, LLC (Proposed)
STRATFORD NU
Carrier Summary

Frequency:	1900	MHz
Maximum Permissible Exposure (MPE):	1000	µW/cm^2
Maximum power density at ground level:	4.06266	µW/cm^2
Highest percentage of Maximum Permissible Exposure:	0.40627	%

					On Axis		Area	
Antenna Make	**Model**	**Height (feet)**	**Orientation (degrees true)**	**ERP (Watts)**	**Max Power Density (µW/cm^2)**	**Percent of MPE**	**Max Power Density (µW/cm^2)**	**Percent of MPE**
Kathrein-Scala	800-10965	124	30	6168	1.775559	0.177556	3.766038	0.376604
Kathrein-Scala	800-10965	124	150	6168	1.766081	0.176608	3.766038	0.376604
Kathrein-Scala	800-10965	124	270	6168	1.766081	0.176608	3.766038	0.376604

AT&T Mobility, LLC (Proposed)
STRATFORD NU
Carrier Summary

Frequency:	850	MHz
Maximum Permissible Exposure (MPE):	566.67	µW/cm^2
Maximum power density at ground level:	2.08962	µW/cm^2
Highest percentage of Maximum Permissible Exposure:	0.36876	%

					On Axis		Area	
Antenna Make	**Model**	**Height (feet)**	**Orientation (degrees true)**	**ERP (Watts)**	**Max Power Density (µW/cm^2)**	**Percent of MPE**	**Max Power Density (µW/cm^2)**	**Percent of MPE**
Kathrein-Scala	800-10965	124	30	3607	1.486624	0.262345	1.521978	0.268584
Kathrein-Scala	800-10965	124	150	3607	1.492509	0.263384	1.521978	0.268584
Kathrein-Scala	800-10965	124	270	3607	1.486624	0.262345	1.521978	0.268584

AT&T Mobility, LLC (Proposed)
STRATFORD NU
Carrier Summary

Frequency:	2300	MHz
Maximum Permissible Exposure (MPE):	1000	µW/cm^2
Maximum power density at ground level:	4.74307	µW/cm^2
Highest percentage of Maximum Permissible Exposure:	0.47431	%

					On Axis		Area	
Antenna Make	**Model**	**Height (feet)**	**Orientation (degrees true)**	**ERP (Watts)**	**Max Power Density (µW/cm^2)**	**Percent of MPE**	**Max Power Density (µW/cm^2)**	**Percent of MPE**
CCI Antennas	HPA-65R-BUU-H6	124	30	2831	3.975213	0.397521	4.695027	0.469503
CCI Antennas	HPA-65R-BUU-H6	124	150	2831	3.941919	0.394192	4.695027	0.469503
CCI Antennas	HPA-65R-BUU-H6	124	270	2831	3.941919	0.394192	4.695027	0.469503

AT&T Mobility, LLC (Proposed)
STRATFORD NU
Carrier Summary

Frequency:	737	MHz
Maximum Permissible Exposure (MPE):	491.33	µW/cm^2
Maximum power density at ground level:	2.46544	µW/cm^2
Highest percentage of Maximum Permissible Exposure:	0.50179	%

					On Axis		Area	
Antenna Make	**Model**	**Height (feet)**	**Orientation (degrees true)**	**ERP (Watts)**	**Max Power Density (µW/cm^2)**	**Percent of MPE**	**Max Power Density (µW/cm^2)**	**Percent of MPE**
CCI Antennas	HPA-65R-BUU-H6	124	30	2350	1.536101	0.312639	2.352421	0.478783
CCI Antennas	HPA-65R-BUU-H6	124	150	2350	1.541985	0.313837	2.352422	0.478783
CCI Antennas	HPA-65R-BUU-H6	124	270	2350	1.536101	0.312639	2.352422	0.478783

T-Mobile
STRATFORD NU
Carrier Summary

Frequency:	2100	MHz
Maximum Permissible Exposure (MPE):	1000	µW/cm^2
Maximum power density at ground level:	3.04211	µW/cm^2
Highest percentage of Maximum Permissible Exposure:	0.30421	%

					On Axis		Area	
Antenna Make	**Model**	**Height (feet)**	**Orientation (degrees true)**	**ERP (Watts)**	**Max Power Density (µW/cm^2)**	**Percent of MPE**	**Max Power Density (µW/cm^2)**	**Percent of MPE**
RFS	APX16DWV-16DWVS-C-A20	109	60	2536	2.430015	0.243001	2.755029	0.275503
RFS	APX16DWV-16DWVS-C-A20	109	160	2536	2.430015	0.243001	2.755029	0.275503
RFS	APX16DWV-16DWVS-C-A20	109	260	2536	2.430015	0.243001	2.755029	0.275503

T-Mobile
STRATFORD NU
Carrier Summary

Frequency:	1900	MHz
Maximum Permissible Exposure (MPE):	1000	µW/cm^2
Maximum power density at ground level:	1.61239	µW/cm^2
Highest percentage of Maximum Permissible Exposure:	0.16124	%

					On Axis		Area	
Antenna Make	**Model**	**Height (feet)**	**Orientation (degrees true)**	**ERP (Watts)**	**Max Power Density (µW/cm^2)**	**Percent of MPE**	**Max Power Density (µW/cm^2)**	**Percent of MPE**
RFS	APX16DWV-16DWVS-C-A20	109	60	2536	0.993604	0.09936	1.200362	0.120036
RFS	APX16DWV-16DWVS-C-A20	109	160	2536	0.993604	0.09936	1.200362	0.120036
RFS	APX16DWV-16DWVS-C-A20	109	260	2536	0.993536	0.099354	1.200362	0.120036