AMERICAN TOWER®
CORPORATION

Structural Analysis Report

Structure	:	**148 ft Monopole**
ATC Site Name	:	**SMFR - North, CT**
ATC Site Number	:	**302515**
Engineering Number	:	**64131621**
Proposed Carrier	:	**AT&T Mobility**
Carrier Site Name	:	**Stamford North**
Carrier Site Number	:	**CTL02109/FA#10034979**
Site Location	:	**0 Lot 4 Eastover Road** **Stamford, CT 06905-1403** **41.112750,-73.538353**
County	:	**Fairfield**
Date	:	**November 9, 2015**
Max Usage	:	**100%**
Result	:	**Pass**

Reviewed by:
Scott Wirgau, PE
Structural Team Leader

Prepared By:
Jessica Abbott, E.I.
Structural Engineer I

Jessica Abbott

STATE OF CONNECTICUT
SCOTT A. WIRGAU
30575
LICENSED
PROFESSIONAL ENGINEER

Nov 17 2015 2:57 PM

COA: PEC.0001553

Table of Contents

Introduction 1

Supporting Documents 1

Analysis 1

Conclusion 1

Existing and Reserved Equipment 2

Equipment to be Removed 2

Proposed Equipment 3

Structure Usages 3

Foundations 3

Deflection, Twist, and Sway 3

Standard Conditions 4

Calculations ..... Attached

Introduction

The purpose of this report is to summarize results of a structural analysis performed on the 148 ft monopole to reflect the change in loading by AT&T Mobility.

Supporting Documents

Tower Drawings	Engineered Endeavors Job #4370, dated October 21, 1998
Foundation Drawing	Engineered Endeavors Job #5591, dated November 17, 1999
Geotechnical Report	Dr. Clarence Welti, dated October 25, 2000
Modifications	ATC Project #43868633, dated September 1, 2009 ATC Project #51772939, dated April 11, 2013

Analysis

The tower was analyzed using American Tower Corporation's tower analysis software. This program considers an elastic three-dimensional model and second-order effects per ANSI/EIA-222.

Basic Wind Speed:	90 mph (Fastest Mile)
Basic Wind Speed w/ Ice:	78 mph (Fastest Mile)w/ 1/2" radial ice concurrent
Code:	ANSI/TIA/EIA-222-F / 2003 IBC , Sec. 1609.1.1, Exception (5) & Sec. 3108.4 w/ 2005 CT Supplement & 2009 CT Amendment

Conclusion

Based on the analysis results, the structure meets the requirements per the applicable codes listed above. The tower and foundation can support the equipment as described in this report.

If you have any questions or require additional information, please contact American Tower via email at Engineering@americantower.com. Please include the American Tower site name, site number, and engineering number in the subject line for any questions.

Existing and Reserved Equipment

Elevation[1] (ft)		Qty	Antenna	Mount Type	Lines	Carrier
Mount	RAD					
160.0	160.0	3	Andrew E15S09P94	Platform w/ Handrails	(12) 1 5/8" Coax	T-Mobile
		3	RFS ATMAP1412D-1A20			
		2	Andrew ADFD1820-9090B-R2DM			
		1	Andrew TMZXXX-6516-R2M			
152.0	153.0	12	Powerwave LGP21401		(12) 1 1/4" Coax	AT&T Mobility
	152.0	6	Ericsson RRUS 11 (Band 12) (55 lb)			
		3	Powerwave 7770.00			
		3	Powerwave P65-16-XLH-RR			
141.0	141.0	3	Antel BXA-171063/8CF	Low Profile Platform	(12) 1 5/8" Coax (1) 1 5/8" Hybriflex	Verizon
		1	RFS DB-T1-6Z-8AB-0Z			
		2	Antel BXA-80063-6BF-EDIN-X			
		6	Antel BXA-70063/6CF			
		1	Antel BXA-80080/6CF			
	139.0	6	RFS FD9R6004			
		3	Alcatel-Lucent RRH2x40-AWS			
137.0	137.0	1	DragonWave Horizon Compact	Side Arms	(6) 5/16" Coax (1) 1/2" Coax (1) 2" Conduit (1) 1 1/4" Hybriflex	Clearwire
		3	NextNet BTS-2500			
		3	Argus LLPX310R			
		1	DragonWave A-ANT-18G-2.5-C			
133.0	133.0	3	KMW KMDAPS2040000 (E-F Band)	Flush	-	Sprint Nextel
131.0	131.0	3	KMW AM-X-WM-17-65-00T	Low Profile Platform	(9) 1 1/4" Coax (6) 1 5/8 Coax	
		9	Decibel DB844H90E-XY			
120.0	120.0	3	Alcatel-Lucent 800MHz 2X50W RRH w/ Filter	Low Profile Platform	(4) 1 1/4" Hybriflex	
		3	Alcatel-Lucent 4x40W RRH			
		3	Alcatel-Lucent TD-RRH8x20-25 w/ Solar Shield			
		3	RFS APXVTM14-C-I20			
		3	RFS APXVSPP18-C-A20			
110.0	110.0	2	Diamond X50A	Side Arms	(2) 1/2" Coax	Senet
100.0	105.0	1	Antel BCD-87010 ___ 4°	Side Arm	(1) 7/8" Coax	Sensus USA
75.0	75.0	1	PCTEL GPS-TMG-HR-26N	Side Arm	(1) 1/2" Coax	Sprint Nextel

Equipment to be Removed

Elevation[1] (ft)		Qty	Antenna	Mount Type	Lines	Carrier
Mount	RAD					
152.0	152.0	3	Powerwave 7770.00	-	-	AT&T Mobility
		1	Raycap DC6-48-60-18-8F.			

Proposed Equipment

Elevation[1] (ft)		Qty	Antenna	Mount Type	Lines	Carrier
Mount	RAD					
147.9	151.9	2	Raycap DC6-48-60-18-8F	Platform w/ Handrails	(4) 0.78" 8 AWG 6 (2) 0.39" Fiber Trunk (2) 0.74" 8 AWG 7 (1) 3" Conduit	AT&T Mobility
	147.9	3	Ericsson RRUS 32			
		3	CCI OPA-65R-LCUU-H6			

[1]Mount elevation is defined as height above bottom of steel structure to the bottom of mount, RAD elevation is defined as center of antenna above ground level (AGL).

Install proposed coax inside the pole shaft.

Structure Usages

Structural Component	Controlling Usage	Pass/Fail
Anchor Bolts	89%	Pass
Shaft	95%	Pass
Base Plate	43%	Pass
Reinforcement	100%	Pass

Foundations

Reaction Component	Analysis Reactions	% of Usage
Moment (Kips-Ft)	4,3617	83%
Axial (Kips)	53.0	8%

The structure base reactions resulting from this analysis were found to be acceptable through analysis based on geotechnical and foundation information, therefore no modification or reinforcement of the foundation will be required.

Deflection and Sway*

Antenna Elevation (ft)	Antenna	Carrier	Deflection (ft)	Sway (Rotation) (°)
147.9	Raycap DC6-48-60-18-8F	AT&T Mobility	2.873	2.135
	Ericsson RRUS 32			
	CCI OPA-65R-LCUU-H6			
137.0	DragonWave A-ANT-18G-2.5-C	Clearwire	2.471	2.073

***Deflection and Sway was evaluated considering a design wind speed of 50 mph (Fastest Mile) per ANSI/TIA/EIA-222-F.**

AMERICAN TOWER®
CORPORATION

Standard Conditions

All engineering services are performed on the basis that the information used is current and correct. This information may consist of, but is not necessary limited, to:

-- Information supplied by the client regarding the structure itself, antenna, mounts and feed line loading on the structure and its components, or other relevant information.

-- Information from drawings in the possession of American Tower Corporation, or generated by field inspections or measurements of the structure.

It is the responsibility of the client to ensure that the information provided to A.T. Engineering Service, PLLC and used in the performance of our engineering services is correct and complete. In the absence of information to the contrary, we assume that all structures were constructed in accordance with the drawings and specifications and that their capacity has not significantly changed from the "as new" condition.

Unless explicitly agreed by both the client and American Tower Corporation, all services will be performed in accordance with the current revision of ANSI/TIA -222. The design basic wind speed will be determined based on the minimum basic wind speed as prescribed in ANSI/TIA-222. Although every effort is taken to ensure that the loading considered is adequate to meet the requirements of all applicable regulatory entities, we can provide no assurance to meet any other local and state codes or requirements. If wind and ice loads or other relevant parameters are to be different from the minimum values recommended by the codes, the client shall specify the exact requirement.

All services are performed, results obtained, and recommendations made in accordance with generally accepted engineering principles and practices. A.T. Engineering Service, PLLC is not responsible for the conclusions, opinions and recommendations made by others based on the information we supply.

© 2007 - 2015 by ATC IP LLC. All rights reserved.

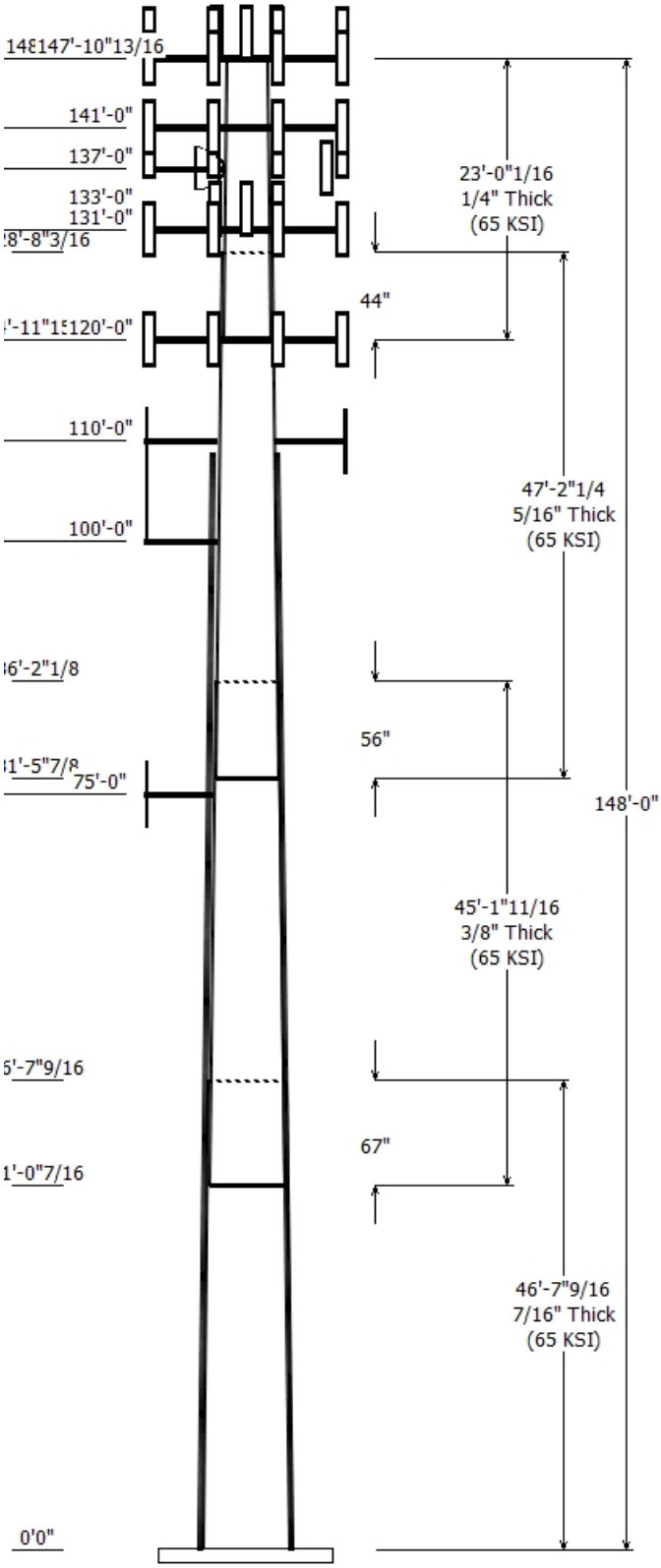

Job Information

Pole :	302515	Code:	TIA/EIA-222-F
Description :	148 ft EEI Monopole		
Client :	AT&T MOBILITY		
Location :	SMFR - North, CT		
Shape :	18 Sides		
Height :	148.00 (ft)		
Base Elev (ft):	0.00		
Taper:	0.195479(in/ft)		

Sections Properties

Shaft Section	Length (ft)	Diameter (in) Accross Flats Top	Bottom	Thick (in)	Joint Type	Overlap Length (in)	Taper (in/ft)	Steel Grade (ksi)
1	46.630	38.885	48.000	0.438		0.000	0.195500	65
2	45.140	31.904	40.728	0.375	Slip Joint	67.125	0.195500	65
3	47.190	24.220	33.445	0.313	Slip Joint	56.218	0.195500	65
4	23.006	20.944	25.441	0.250	Slip Joint	44.251	0.195500	65

Discrete Appurtenance

Attach Elev (ft)	Force Elev (ft)	Qty	Description
148.000	148.000	1	Pipe
148.000	160.000	3	RFS ATMAP1412D-1A20
148.000	160.000	2	Andrew ADFD1820-9090B-R2DM
148.000	160.000	1	Andrew TMZXXX-6516-R2M
148.000	160.000	3	Andrew E15S09P94
147.900	147.900	3	CCI OPA-65R-LCUU-H6
147.900	147.900	3	Ericsson RRUS 32
147.900	147.900	1	Flat Platform w/ Handrails
147.900	151.900	3	Powerwave P65-16-XLH-RR
147.900	151.900	3	Powerwave Allgon 7770.00
147.900	151.900	6	Ericsson RRUS 11 (Band 12) (55
147.900	151.900	2	Raycap DC6-48-60-18-8F
147.900	151.900	12	Powerwave LGP21401
141.000	141.000	1	Flat Low Profile Platform
141.000	141.000	1	RFS DB-T1-6Z-8AB-0Z
141.000	141.000	1	Antel BXA-80080/6CF
141.000	141.000	3	Antel BXA-171063/8CF
141.000	141.000	6	Antel BXA-70063/6CF
141.000	139.000	3	Alcatel-Lucent RRH2x40-AWS
141.000	139.000	6	RFS FD9R6004
141.000	141.000	2	Antel BXA-80063-6BF-EDIN-X
137.000	137.000	1	DragonWave A-ANT-18G-2.5-C
137.000	137.000	1	Side Arms
137.000	137.000	3	NextNet BTS-2500
137.000	137.000	1	DragonWave Horizon Compact
137.000	137.000	3	Argus LLPX310R
133.000	133.000	3	KMW KMDAPS2040000 (E-F
131.000	131.000	3	KMW AM-X-WM-17-65-00T
131.000	131.000	9	Decibel DB844H90E-XY
131.000	131.000	1	Flat Low Profile Platform
120.000	120.000	3	RFS APXVSPP18-C-A20
120.000	120.000	3	Alcatel-Lucent 4x40W RRH
120.000	120.000	3	Alcatel-Lucent 800 MHz 2X50W R
120.000	120.000	3	RFS APXVTM14-C-I20
120.000	120.000	3	Alcatel-Lucent TD-RRH8x20-25 w
120.000	120.000	1	Flat Low Profile Platform
110.000	110.000	2	Diamond X50A
110.000	110.000	2	Flat Side Arm
100.000	100.000	1	Side Arm
100.000	105.000	1	Antel BCD-87010 ___ 4°
75.000	75.000	1	Side Arm
75.000	75.000	1	PCTEL GPS-TMG-HR-26N

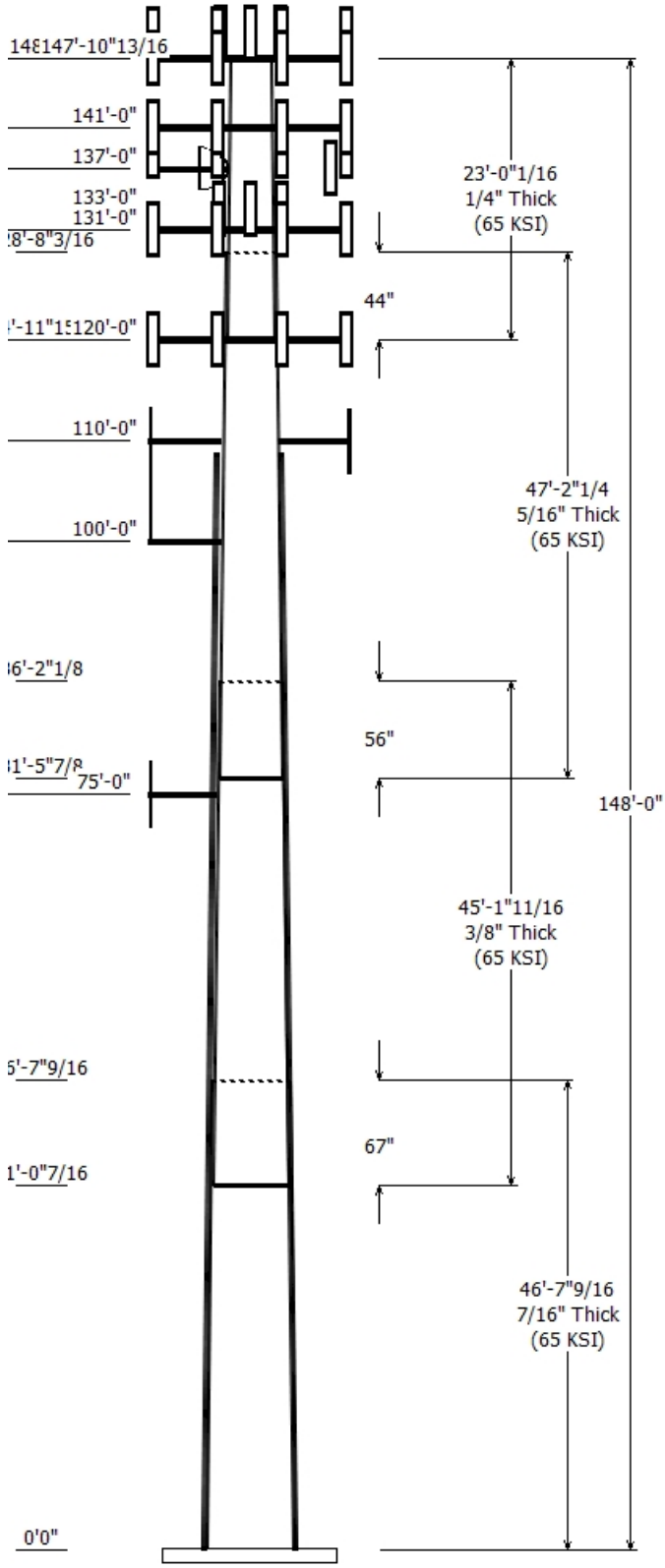

Linear Appurtenance

Elev (ft) From	To	Description	Exposed To Wind
10.000	120.00	1 1/4" Hybriflex	Yes
10.000	120.00	1 1/4" Hybriflex	Yes
10.000	131.00	1 1/4" Coax	Yes
10.000	131.00	1 5/8 Coax	No
10.000	137.00	1 1/4" Hybriflex	Yes
10.000	137.00	1/2" Coax	Yes
10.000	137.00	2" Conduit	Yes
10.000	137.00	5/16" Coax	No
10.000	141.00	1 5/8" Coax	No
10.000	141.00	1 5/8" Coax	No
10.000	141.00	1 5/8" Hybriflex	Yes
10.000	75.000	1/2" Coax	Yes
10.000	100.00	7/8" Coax	Yes
10.000	110.00	1/2" Coax	No
10.000	147.90	0.78" 8 AWG 6	No
10.000	147.90	1 1/4" Coax	No
10.000	147.90	3" Conduit	No
5.000	148.00	1 5/8" Coax	Yes
5.000	148.00	1 5/8" Coax	No
5.000	147.90	0.39" Fiber Trunk	No
5.000	147.90	0.74" 8 AWG 7	No
0.000	113.25	DYWIDAG	Yes

Load Cases

No Ice	90.00 mph Wind with No Ice
Ice	77.94 mph Wind with Ice
Twist/Sway	50.00 mph Wind with No Ice

Reactions

Load Case	Moment (kip-ft)	Shear (kip)	Axial (kip)
No Ice	4361.73	39.10	48.29
Ice	3687.46	33.74	52.99
Twist/Sway	1348.26	12.07	48.31

Dish Deflections

Load Case	Attach Elev (ft)	Deflection (in)	Rotation (deg)
Twist/Sway	137.00	29.649	2.073

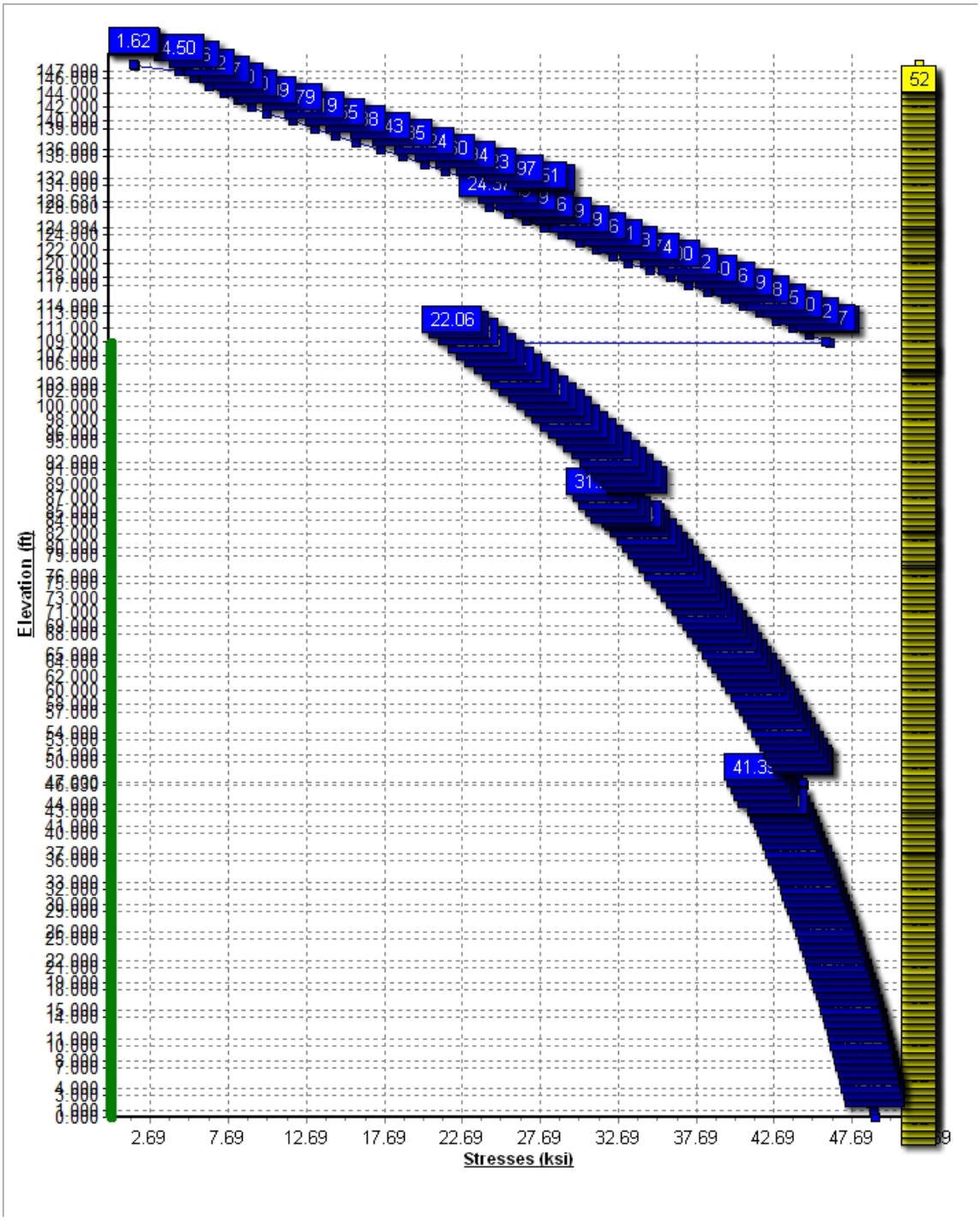
1.62
22.06
52
Elevation (ft)
Stresses (ksi)
2.69
7.69
12.69
17.69
22.69
27.69
32.69
37.69
42.69
47.69

Site Number:	**302515**	**Code: TIA/EIA-222-F**	*©2007 - 2015 by ATC IP LLC. All rights reserved.*
Site Name:	**SMFR - North, CT**	**Engineering Number: 64131621**	**11/9/2015 1:09:31 PM**
Customer:	**AT&T MOBILITY**		

Analysis Parameters

Location:	**Fairfield County, CT**		
Code:	**TIA/EIA-222-F**	**Height (ft):**	**148**
Shape:	**18 Sides**	**Base Diameter (in):**	**48.00**
Pole Type:	**Taper**	**Top Diameter (in):**	**20.94**
Pole Manfacturer:	**EEI**	**Taper (in/ft) :**	**0.195**

Load Cases

No Ice	**90.00 mph Wind with No Ice**
Ice	**77.94 mph Wind with Ice**
Twist/Sway	**50.00 mph Wind with No Ice**

©2007 - 2015 by ATC IP LLC. All rights reserved.

Shaft Section Properties

Sect Info	Length (ft)	Thick (in)	Fy (ksi)	Joint Type	Slip Joint Len (in)	Weight (lb)	Bottom Dia (in)	Bottom Elev (ft)	Bottom Area (in 2)	Bottom Ix (in 4)	Bottom W/t Ratio	Bottom D/t Ratio	Top Dia (in)	Top Elev (ft)	Top Area (in 2)	Top Ix (in 4)	Top W/t Ratio	Top D/t Ratio	Taper (in/ft)
1-18	46.630	0.4375	65		0.00	9,475	48.00	0.00	66.04	18876.3	17.93	109.71	38.885	46.63	53.39	9970.6	14.26	88.88	0.195479
2-18	45.140	0.3750	65	Slip	67.13	6,571	40.72	41.04	48.03	9881.2	17.74	108.61	31.904	86.18	37.53	4713.2	13.59	85.08	0.195479
3-18	47.190	0.3125	65	Slip	56.22	4,542	33.44	81.49	32.86	4557.9	17.46	107.02	24.220	128.68	23.71	1712.5	12.26	77.51	0.195479
4-18	23.006	0.2500	65	Slip	44.25	1,425	25.44	124.99	19.99	1602.6	16.53	101.77	20.944	148.00	16.42	888.4	13.36	83.78	0.195479
				Shaft Weight		22,013													

Discrete Appurtenance Properties

Attach Elev (ft)	Description	Qty	No Ice Weight (lb)	No Ice EPAa (sf)	No Ice Orientation Factor	Ice Weight (lb)	Ice EPAa (sf)	Ice Orientation Factor	Distance From Face (ft)	Vert Ecc (ft)
148.00	Andrew ADFD1820-9090B-	2	22.00	6.070	0.62	54.00	6.700	0.62	0.000	12.000
148.00	Andrew E15S09P94	3	14.60	0.660	0.50	19.50	0.840	0.50	0.000	12.000
148.00	Andrew TMZXXX-6516-R2M	1	35.20	11.490	0.57	85.00	12.280	0.57	0.000	12.000
148.00	Pipe	1	200.00	6.400	1.00	0.00	0.000	1.00	0.000	0.000
148.00	RFS ATMAP1412D-1A20	3	13.00	1.170	0.50	20.60	1.390	0.50	0.000	12.000
147.90	CCI OPA-65R-LCUU-H6	3	73.00	10.360	0.65	0.00	0.000	0.65	0.000	0.000
147.90	Ericsson RRUS 11 (Band 12)	6	55.00	2.940	0.50	74.30	3.290	0.50	0.000	4.000
147.90	Ericsson RRUS 32	3	50.80	3.140	0.50	69.90	3.340	0.50	0.000	0.000
147.90	Flat Platform w/ Handrails	1	2000.00	42.400	1.00	2,450.00	48.400	1.00	0.000	0.000
147.90	Powerwave Allgon 7770.00	3	35.00	5.880	0.64	68.00	6.430	0.64	0.000	4.000
147.90	Powerwave LGP21401	12	14.10	1.290	0.50	21.26	1.530	0.50	0.000	4.000
147.90	Powerwave P65-16-XLH-RR	3	53.00	8.400	0.66	100.20	9.220	0.66	0.000	4.000
147.90	Raycap DC6-48-60-18-8F	2	20.00	1.260	1.00	49.50	1.670	1.00	0.000	4.000
141.00	Alcatel-Lucent RRH2x40-AWS	3	44.00	2.520	0.50	61.40	2.870	0.50	0.000	-2.000
141.00	Antel BXA-171063/8CF	3	10.50	2.900	0.73	29.80	3.370	0.73	0.000	0.000
141.00	Antel BXA-70063/6CF	6	14.90	7.740	0.65	56.00	8.550	0.65	0.000	0.000
141.00	Antel BXA-80063-6BF-EDIN-X	2	19.20	7.460	0.66	70.60	9.080	0.66	0.000	0.000
141.00	Antel BXA-80080/6CF	1	22.00	7.900	0.65	67.30	8.730	0.65	0.000	0.000
141.00	Flat Low Profile Platform	1	1500.00	26.100	1.00	1,700.00	31.600	1.00	0.000	0.000
141.00	RFS DB-T1-6Z-8AB-0Z	1	44.00	5.600	0.67	0.00	0.000	0.67	0.000	0.000
141.00	RFS FD9R6004	6	3.10	0.370	0.50	5.40	0.500	0.50	0.000	-2.000
137.00	Argus LLPX310R	3	28.60	4.830	0.62	54.50	5.360	0.62	0.000	0.000
137.00	DragonWave A-ANT-18G-2.5-	1	47.60	8.430	0.62	101.80	9.420	0.62	0.000	0.000
137.00	DragonWave Horizon	1	10.60	0.430	0.50	17.00	0.580	0.50	0.000	0.000
137.00	NextNet BTS-2500	3	35.00	2.120	0.50	48.30	2.430	0.50	0.000	0.000
137.00	Side Arms	1	560.00	8.500	1.00	680.00	10.500	1.00	0.000	0.000
133.00	KMW KMDAPS2040000 (E-F	3	15.90	1.140	0.50	23.35	1.360	0.50	0.000	0.000
131.00	Decibel DB844H90E-XY	9	14.00	3.730	0.73	40.00	4.290	0.73	0.000	0.000
131.00	Flat Low Profile Platform	1	1500.00	26.100	1.00	1,700.00	31.600	1.00	0.000	0.000
131.00	KMW AM-X-WM-17-65-00T	3	14.20	3.400	0.63	33.80	3.950	0.63	0.000	0.000
120.00	Alcatel-Lucent 4x40W RRH	3	91.00	3.830	0.50	122.40	4.230	0.50	0.000	0.000
120.00	Alcatel-Lucent 800 MHz	3	53.00	2.400	0.50	86.10	2.720	0.50	0.000	0.000
120.00	Alcatel-Lucent TD-RRH8x20-	3	70.00	4.720	0.67	122.40	4.230	0.67	0.000	0.000
120.00	Flat Low Profile Platform	1	1500.00	26.100	1.00	1,700.00	31.600	1.00	0.000	0.000
120.00	RFS APXVSPP18-C-A20	3	57.00	8.260	0.68	106.50	9.080	0.68	0.000	0.000
120.00	RFS APXVTM14-C-I20	3	52.90	6.900	0.65	71.44	7.420	0.65	0.000	0.000
110.00	Diamond X50A	2	2.30	1.120	0.95	57.20	1.630	0.95	0.000	0.000
110.00	Flat Side Arm	2	150.00	6.300	0.90	230.00	7.000	0.90	0.000	0.000
100.00	Antel BCD-87010 ___ 4°	1	26.50	2.900	1.00	47.98	4.050	1.00	0.000	5.000
100.00	Side Arm	1	150.00	5.200	1.00	175.00	5.900	1.00	0.000	0.000
75.00	PCTEL GPS-TMG-HR-26N	1	0.60	0.090	0.50	3.50	0.800	0.50	0.000	0.000
75.00	Side Arm	1	30.00	3.000	1.00	230.00	7.000	1.00	0.000	0.000
	Totals	115	10921.20			14,424.07			Number of Loadings :	42

©2007 - 2015 by ATC IP LLC. All rights reserved.

Linear Appurtenance Properties

Elev From (ft)	Elev To (ft)	Qty	Description	No Ice Weight (lb/ft)	No Ice CaAa (sf/ft)	Ice Weight (lb/ft)	Ice CaAa (sf/ft)	Exposed To Wind
5.00	148.00	6	1 5/8" Coax	4.92	0.20	4.92	0.30	Y
5.00	148.00	6	1 5/8" Coax	4.92	0.00	0.00	0.00	N
5.00	147.90	2	0.39" Fiber Trunk	0.06	0.00	0.00	0.00	N
5.00	147.90	2	0.74" 8 AWG 7	0.49	0.00	0.00	0.00	N
10.00	147.90	4	0.78" 8 AWG 6	0.59	0.00	0.00	0.00	N
10.00	147.90	12	1 1/4" Coax	7.56	0.00	0.00	0.00	N
10.00	147.90	1	3" Conduit	7.58	0.00	0.00	0.00	N
10.00	141.00	6	1 5/8" Coax	4.92	0.00	0.00	0.00	N
10.00	141.00	6	1 5/8" Coax	4.92	0.00	0.00	0.00	N
10.00	141.00	1	1 5/8" Hybriflex	1.30	0.20	0.00	0.30	Y
10.00	137.00	1	1 1/4" Hybriflex	1.00	0.00	0.14	0.30	Y
10.00	137.00	1	1/2" Coax	0.15	0.00	0.14	0.30	Y
10.00	137.00	1	2" Conduit	3.65	0.24	0.00	0.00	Y
10.00	137.00	6	5/16" Coax	2.94	0.00	0.00	0.00	N
10.00	131.00	9	1 1/4" Coax	5.67	0.00	0.00	0.00	Y
10.00	131.00	6	1 5/8 Coax	4.92	0.00	0.00	0.00	N
10.00	120.00	3	1 1/4" Hybriflex	3.00	0.00	1.25	0.00	Y
10.00	120.00	1	1 1/4" Hybriflex	3.00	0.00	0.00	0.00	Y
0.00	113.25	4	DYWIDAG	0.00	0.50	0.00	0.70	Y
10.00	110.00	2	1/2" Coax	0.30	0.00	0.00	0.00	N
10.00	100.00	1	7/8" Coax	0.33	0.00	0.00	0.00	Y
10.00	75.00	1	1/2" Coax	0.15	0.00	0.00	0.00	Y
			Total Weight	8,108.04 (lb)		876.62 (lb)		

Additional Steel

Elev From (ft)	Elev To (ft)	Qty	Description	Fy (ksi)	Offset (in)	Intermediate Connections Description	Spacing (in)	Len (in)	Connectors	Continuation?
0.00	108.75	4	SOL #20 All Thread	80	2.19	6" Angle Bracket	30.00	3.31	5/8" A36 U-Bolt	No

©2007 - 2015 by ATC IP LLC. All rights reserved.

Segment Properties (Max Len : 1. ft)

Seg Top Elev (ft)	Description	Thick (in)	Flat Dia (in)	Area (in^2)	Ix (in^4)	W/t Ratio	D/t Ratio	Fy (ksi)	Fb (ksi)	Fa (ksi)	Weight (lb)	Additional Reinforcing Area (in^2)	Additional Reinforcing Ix (in^4)	Additional Reinforcing Weight (lb)
0.00		0.4375	48.000	66.044	18,876.3	17.93	109.71	65	52	0	0.0	19.64	7,401.	0.0
1.00		0.4375	47.805	65.773	18,644.5	17.86	109.27	65	52	0	224.3	19.64	7,349.	66.8
2.00		0.4375	47.609	65.501	18,414.6	17.78	108.82	65	52	0	223.3	19.64	7,296.	66.8
3.00		0.4375	47.414	65.230	18,186.6	17.70	108.37	65	52	0	222.4	19.64	7,244.	66.8
4.00		0.4375	47.218	64.958	17,960.5	17.62	107.93	65	52	0	221.5	19.64	7,192.	66.8
5.00		0.4375	47.023	64.687	17,736.3	17.54	107.48	65	52	0	220.6	19.64	7,140.	66.8
6.00		0.4375	46.827	64.415	17,514.0	17.46	107.03	65	52	0	219.7	19.64	7,089.	66.8
7.00		0.4375	46.632	64.144	17,293.5	17.38	106.59	65	52	0	218.7	19.64	7,037.	66.8
8.00		0.4375	46.436	63.873	17,074.9	17.30	106.14	65	52	0	217.8	19.64	6,986.	66.8
9.00		0.4375	46.241	63.601	16,858.1	17.23	105.69	65	52	0	216.9	19.64	6,935.	66.8
10.00		0.4375	46.045	63.330	16,643.2	17.15	105.25	65	52	0	216.0	19.64	6,884.	66.8
11.00		0.4375	45.850	63.058	16,430.1	17.07	104.80	65	52	0	215.0	19.64	6,833.	66.8
12.00		0.4375	45.654	62.787	16,218.9	16.99	104.35	65	52	0	214.1	19.64	6,783.	66.8
13.00		0.4375	45.459	62.515	16,009.4	16.91	103.91	65	52	0	213.2	19.64	6,732.	66.8
14.00		0.4375	45.263	62.244	15,801.8	16.83	103.46	65	52	0	212.3	19.64	6,682.	66.8
15.00		0.4375	45.068	61.973	15,596.0	16.75	103.01	65	52	0	211.3	19.64	6,632.	66.8
16.00		0.4375	44.872	61.701	15,391.9	16.67	102.57	65	52	0	210.4	19.64	6,582.	66.8
17.00		0.4375	44.677	61.430	15,189.7	16.60	102.12	65	52	0	209.5	19.64	6,533.	66.8
18.00		0.4375	44.481	61.158	14,989.2	16.52	101.67	65	52	0	208.6	19.64	6,483.	66.8
19.00		0.4375	44.286	60.887	14,790.5	16.44	101.22	65	52	0	207.6	19.64	6,434.	66.8
20.00		0.4375	44.090	60.615	14,593.6	16.36	100.78	65	52	0	206.7	19.64	6,385.	66.8
21.00		0.4375	43.895	60.344	14,398.4	16.28	100.33	65	52	0	205.8	19.64	6,336.	66.8
22.00		0.4375	43.699	60.072	14,205.0	16.20	99.88	65	52	0	204.9	19.64	6,288.	66.8
23.00		0.4375	43.504	59.801	14,013.3	16.12	99.44	65	52	0	204.0	19.64	6,239.	66.8
24.00		0.4375	43.308	59.530	13,823.3	16.04	98.99	65	52	0	203.0	19.64	6,191.	66.8
25.00		0.4375	43.113	59.258	13,635.1	15.97	98.54	65	52	0	202.1	19.64	6,143.	66.8
26.00		0.4375	42.918	58.987	13,448.6	15.89	98.10	65	52	0	201.2	19.64	6,095.	66.8
27.00		0.4375	42.722	58.715	13,263.8	15.81	97.65	65	52	0	200.3	19.64	6,047.	66.8
28.00		0.4375	42.527	58.444	13,080.7	15.73	97.20	65	52	0	199.3	19.64	6,000.	66.8
29.00		0.4375	42.331	58.172	12,899.3	15.65	96.76	65	52	0	198.4	19.64	5,953.	66.8
30.00		0.4375	42.136	57.901	12,719.6	15.57	96.31	65	52	0	197.5	19.64	5,905.	66.8
31.00		0.4375	41.940	57.630	12,541.5	15.49	95.86	65	52	0	196.6	19.64	5,858.	66.8
32.00		0.4375	41.745	57.358	12,365.1	15.41	95.42	65	52	0	195.6	19.64	5,812.	66.8
33.00		0.4375	41.549	57.087	12,190.4	15.34	94.97	65	52	0	194.7	19.64	5,765.	66.8
34.00		0.4375	41.354	56.815	12,017.3	15.26	94.52	65	52	0	193.8	19.64	5,719.	66.8
35.00		0.4375	41.158	56.544	11,845.9	15.18	94.08	65	52	0	192.9	19.64	5,673.	66.8
36.00		0.4375	40.963	56.272	11,676.1	15.10	93.63	65	52	0	191.9	19.64	5,627.	66.8
37.00		0.4375	40.767	56.001	11,508.0	15.02	93.18	65	52	0	191.0	19.64	5,581.	66.8
38.00		0.4375	40.572	55.729	11,341.5	14.94	92.74	65	52	0	190.1	19.64	5,535.	66.8
39.00		0.4375	40.376	55.458	11,176.5	14.86	92.29	65	52	0	189.2	19.64	5,490.	66.8
40.00		0.4375	40.181	55.187	11,013.2	14.78	91.84	65	52	0	188.2	19.64	5,444.	66.8
41.00		0.4375	39.985	54.915	10,851.5	14.70	91.40	65	52	0	187.3	19.64	5,399.	66.8
41.04	Bot - Section 2	0.4375	39.978	54.905	10,845.7	14.70	91.38	65	52	0	6.8	19.64	5,398.	2.4
42.00		0.4375	39.790	54.644	10,691.4	14.63	90.95	65	52	0	336.8	19.64	5,528.	64.4
43.00		0.4375	39.594	54.372	10,532.9	14.55	90.50	65	52	0	347.8	19.64	5,482.	66.8
44.00		0.4375	39.399	54.101	10,375.9	14.47	90.05	65	52	0	346.0	19.64	5,437.	66.8
45.00		0.4375	39.203	53.829	10,220.5	14.39	89.61	65	52	0	344.3	19.64	5,392.	66.8
46.00		0.4375	39.008	53.558	10,066.7	14.31	89.16	65	52	0	342.6	19.64	5,347.	66.8
46.63	Top - Section 1	0.3750	39.635	46.727	9,099.6	17.23	105.69	65	52	0	215.0	19.64	5,319.	42.1
47.00		0.3750	39.562	46.641	9,049.4	17.19	105.50	65	52	0	58.8	19.64	5,302.	24.7
48.00		0.3750	39.367	46.409	8,914.6	17.10	104.98	65	52	0	158.3	19.64	5,258.	66.8
49.00		0.3750	39.172	46.176	8,781.2	17.01	104.46	65	52	0	157.5	19.64	5,214.	66.8
50.00		0.3750	38.976	45.943	8,649.1	16.92	103.94	65	52	0	156.7	19.64	5,170.	66.8
51.00		0.3750	38.781	45.711	8,518.4	16.82	103.41	65	52	0	155.9	19.64	5,126.	66.8
52.00		0.3750	38.585	45.478	8,389.0	16.73	102.89	65	52	0	155.1	19.64	5,082.	66.8
53.00		0.3750	38.390	45.245	8,260.9	16.64	102.37	65	52	0	154.4	19.64	5,038.	66.8
54.00		0.3750	38.194	45.013	8,134.1	16.55	101.85	65	52	0	153.6	19.64	4,995.	66.8
55.00		0.3750	37.999	44.780	8,008.6	16.46	101.33	65	52	0	152.8	19.64	4,952.	66.8

©2007 - 2015 by ATC IP LLC. All rights reserved.

56.00		0.3750	37.803	44.547	7,884.4	16.36	100.81	65	52	0	152.0	19.64	4,909.	66.8
57.00		0.3750	37.608	44.315	7,761.6	16.27	100.29	65	52	0	151.2	19.64	4,866.	66.8
58.00		0.3750	37.412	44.082	7,639.9	16.18	99.77	65	52	0	150.4	19.64	4,823.	66.8
59.00		0.3750	37.217	43.849	7,519.6	16.09	99.24	65	52	0	149.6	19.64	4,781.	66.8
60.00		0.3750	37.021	43.617	7,400.6	16.00	98.72	65	52	0	148.8	19.64	4,739.	66.8
61.00		0.3750	36.826	43.384	7,282.8	15.91	98.20	65	52	0	148.0	19.64	4,697.	66.8
62.00		0.3750	36.630	43.151	7,166.2	15.81	97.68	65	52	0	147.2	19.64	4,655.	66.8
63.00		0.3750	36.435	42.919	7,050.9	15.72	97.16	65	52	0	146.4	19.64	4,613.	66.8
64.00		0.3750	36.239	42.686	6,936.9	15.63	96.64	65	52	0	145.6	19.64	4,572.	66.8
65.00		0.3750	36.044	42.453	6,824.1	15.54	96.12	65	52	0	144.9	19.64	4,530.	66.8
66.00		0.3750	35.848	42.221	6,712.5	15.45	95.60	65	52	0	144.1	19.64	4,489.	66.8
67.00		0.3750	35.653	41.988	6,602.1	15.35	95.07	65	52	0	143.3	19.64	4,448.	66.8
68.00		0.3750	35.457	41.755	6,493.0	15.26	94.55	65	52	0	142.5	19.64	4,408.	66.8
69.00		0.3750	35.262	41.523	6,385.0	15.17	94.03	65	52	0	141.7	19.64	4,367.	66.8
70.00		0.3750	35.066	41.290	6,278.3	15.08	93.51	65	52	0	140.9	19.64	4,327.	66.8
71.00		0.3750	34.871	41.057	6,172.8	14.99	92.99	65	52	0	140.1	19.64	4,287.	66.8
72.00		0.3750	34.675	40.825	6,068.4	14.89	92.47	65	52	0	139.3	19.64	4,247.	66.8
73.00		0.3750	34.480	40.592	5,965.3	14.80	91.95	65	52	0	138.5	19.64	4,207.	66.8
74.00		0.3750	34.285	40.359	5,863.3	14.71	91.43	65	52	0	137.7	19.64	4,167.	66.8
75.00		0.3750	34.089	40.127	5,762.5	14.62	90.90	65	52	0	136.9	19.64	4,128.	66.8
76.00		0.3750	33.894	39.894	5,662.8	14.53	90.38	65	52	0	136.1	19.64	4,089.	66.8
77.00		0.3750	33.698	39.661	5,564.3	14.43	89.86	65	52	0	135.4	19.64	4,050.	66.8
78.00		0.3750	33.503	39.429	5,467.0	14.34	89.34	65	52	0	134.6	19.64	4,011.	66.8
79.00		0.3750	33.307	39.196	5,370.8	14.25	88.82	65	52	0	133.8	19.64	3,972.	66.8
80.00		0.3750	33.112	38.963	5,275.7	14.16	88.30	65	52	0	133.0	19.64	3,934.	66.8
81.00		0.3750	32.916	38.731	5,181.7	14.07	87.78	65	52	0	132.2	19.64	3,895.	66.8
81.49	Bot - Section 3	0.3750	32.820	38.616	5,136.0	14.02	87.52	65	52	0	64.7	19.64	3,877.	32.8
82.00		0.3750	32.721	38.498	5,088.9	13.97	87.26	65	52	0	123.5	19.64	3,980.	34.0
83.00		0.3750	32.525	38.265	4,997.2	13.88	86.73	65	52	0	241.8	19.64	3,941.	66.8
84.00		0.3750	32.330	38.033	4,906.6	13.79	86.21	65	52	0	240.3	19.64	3,903.	66.8
85.00		0.3750	32.134	37.800	4,817.1	13.70	85.69	65	52	0	238.9	19.64	3,865.	66.8
86.00		0.3750	31.939	37.567	4,728.7	13.61	85.17	65	52	0	237.4	19.64	3,827.	66.8
86.18	Top - Section 2	0.3125	32.529	31.954	4,190.3	16.94	104.09	65	52	0	41.7	19.64	3,820.	11.8
87.00		0.3125	32.368	31.794	4,127.8	16.85	103.58	65	52	0	89.3	19.64	3,789.	55.0
88.00		0.3125	32.173	31.600	4,052.7	16.74	102.95	65	52	0	107.9	19.64	3,751.	66.8
89.00		0.3125	31.977	31.406	3,978.6	16.63	102.33	65	52	0	107.2	19.64	3,714.	66.8
90.00		0.3125	31.782	31.213	3,905.3	16.52	101.70	65	52	0	106.5	19.64	3,677.	66.8
91.00		0.3125	31.586	31.019	3,833.0	16.41	101.08	65	52	0	105.9	19.64	3,640.	66.8
92.00		0.3125	31.391	30.825	3,761.6	16.30	100.45	65	52	0	105.2	19.64	3,603.	66.8
93.00		0.3125	31.195	30.631	3,691.0	16.19	99.83	65	52	0	104.6	19.64	3,566.	66.8
94.00		0.3125	31.000	30.437	3,621.4	16.08	99.20	65	52	0	103.9	19.64	3,530.	66.8
95.00		0.3125	30.804	30.243	3,552.6	15.97	98.57	65	52	0	103.2	19.64	3,494.	66.8
96.00		0.3125	30.609	30.049	3,484.7	15.86	97.95	65	52	0	102.6	19.64	3,458.	66.8
97.00		0.3125	30.414	29.855	3,417.7	15.75	97.32	65	52	0	101.9	19.64	3,422.	66.8
98.00		0.3125	30.218	29.661	3,351.6	15.64	96.70	65	52	0	101.3	19.64	3,386.	66.8
99.00		0.3125	30.023	29.468	3,286.3	15.53	96.07	65	52	0	100.6	19.64	3,350.	66.8
100.00		0.3125	29.827	29.274	3,221.8	15.42	95.45	65	52	0	99.9	19.64	3,315.	66.8
101.00		0.3125	29.632	29.080	3,158.2	15.31	94.82	65	52	0	99.3	19.64	3,280.	66.8
102.00		0.3125	29.436	28.886	3,095.5	15.20	94.20	65	52	0	98.6	19.64	3,245.	66.8
103.00		0.3125	29.241	28.692	3,033.6	15.09	93.57	65	52	0	98.0	19.64	3,210.	66.8
104.00		0.3125	29.045	28.498	2,972.5	14.98	92.94	65	52	0	97.3	19.64	3,176.	66.8
105.00		0.3125	28.850	28.304	2,912.2	14.87	92.32	65	52	0	96.6	19.64	3,141.	66.8
106.00		0.3125	28.654	28.110	2,852.8	14.76	91.69	65	52	0	96.0	19.64	3,107.	66.8
107.00		0.3125	28.459	27.917	2,794.2	14.65	91.07	65	52	0	95.3	19.64	3,073.	66.8
108.00		0.3125	28.263	27.723	2,736.4	14.54	90.44	65	52	0	94.7	19.64	3,039.	66.8
108.75	Reinf. Top	0.3125	28.117	27.577	2,693.5	14.45	89.97	65	52	0	70.6	19.64	3,014.	50.1
109.00		0.3125	28.068	27.529	2,679.4	14.43	89.82	65	52	0	23.4			
110.00		0.3125	27.872	27.335	2,623.1	14.32	89.19	65	52	0	93.3			
111.00		0.3125	27.677	27.141	2,567.7	14.21	88.57	65	52	0	92.7			
112.00		0.3125	27.481	26.947	2,513.1	14.10	87.94	65	52	0	92.0			
113.00		0.3125	27.286	26.753	2,459.2	13.99	87.31	65	52	0	91.4			
114.00		0.3125	27.090	26.559	2,406.1	13.88	86.69	65	52	0	90.7			
115.00		0.3125	26.895	26.365	2,353.8	13.76	86.06	65	52	0	90.0			
116.00		0.3125	26.699	26.172	2,302.3	13.65	85.44	65	52	0	89.4			

©2007 - 2015 by ATC IP LLC. All rights reserved.

117.00		0.3125	26.504	25.978	2,251.5	13.54	84.81	65	52	0	88.7	
118.00		0.3125	26.308	25.784	2,201.5	13.43	84.19	65	52	0	88.1	
119.00		0.3125	26.113	25.590	2,152.2	13.32	83.56	65	52	0	87.4	
120.00		0.3125	25.917	25.396	2,103.6	13.21	82.94	65	52	0	86.7	
121.00		0.3125	25.722	25.202	2,055.8	13.10	82.31	65	52	0	86.1	
122.00		0.3125	25.527	25.008	2,008.7	12.99	81.68	65	52	0	85.4	
123.00		0.3125	25.331	24.814	1,962.4	12.88	81.06	65	52	0	84.8	
124.00		0.3125	25.136	24.620	1,916.7	12.77	80.43	65	52	0	84.1	
124.99	Bot - Section 4	0.3125	24.941	24.428	1,872.1	12.66	79.81	65	52	0	82.9	
125.00		0.3125	24.940	24.427	1,871.8	12.66	79.81	65	52	0	0.9	
126.00		0.3125	24.745	24.233	1,827.6	12.55	79.18	65	52	0	150.5	
127.00		0.3125	24.549	24.039	1,784.1	12.44	78.56	65	52	0	149.4	
128.00		0.3125	24.354	23.845	1,741.2	12.33	77.93	65	52	0	148.2	
128.68	Top - Section 3	0.2500	24.720	19.417	1,469.0	16.02	98.88	65	52	0	100.3	
129.00		0.2500	24.658	19.367	1,457.8	15.98	98.63	65	52	0	21.0	
130.00		0.2500	24.463	19.212	1,423.0	15.84	97.85	65	52	0	65.6	
131.00		0.2500	24.267	19.057	1,388.8	15.71	97.07	65	52	0	65.1	
132.00		0.2500	24.072	18.902	1,355.2	15.57	96.29	65	52	0	64.6	
133.00		0.2500	23.876	18.747	1,322.1	15.43	95.51	65	52	0	64.1	
134.00		0.2500	23.681	18.592	1,289.6	15.29	94.72	65	52	0	63.5	
135.00		0.2500	23.485	18.437	1,257.6	15.15	93.94	65	52	0	63.0	
136.00		0.2500	23.290	18.281	1,226.1	15.02	93.16	65	52	0	62.5	
137.00		0.2500	23.094	18.126	1,195.1	14.88	92.38	65	52	0	61.9	
138.00		0.2500	22.899	17.971	1,164.7	14.74	91.60	65	52	0	61.4	
139.00		0.2500	22.703	17.816	1,134.8	14.60	90.81	65	52	0	60.9	
140.00		0.2500	22.508	17.661	1,105.4	14.46	90.03	65	52	0	60.4	
141.00		0.2500	22.312	17.506	1,076.6	14.33	89.25	65	52	0	59.8	
142.00		0.2500	22.117	17.351	1,048.2	14.19	88.47	65	52	0	59.3	
143.00		0.2500	21.921	17.196	1,020.3	14.05	87.69	65	52	0	58.8	
144.00		0.2500	21.726	17.041	993.0	13.91	86.90	65	52	0	58.2	
145.00		0.2500	21.531	16.885	966.1	13.78	86.12	65	52	0	57.7	
146.00		0.2500	21.335	16.730	939.7	13.64	85.34	65	52	0	57.2	
147.00		0.2500	21.140	16.575	913.8	13.50	84.56	65	52	0	56.7	
147.90		0.2500	20.964	16.436	890.9	13.38	83.85	65	52	0	50.5	
148.00		0.2500	20.944	16.420	888.4	13.36	83.78	65	52	0	5.6	
											22,013.3	7,264.5

©2007 - 2015 by ATC IP LLC. All rights reserved.

Load Case: No Ice 90.00 mph Wind with No Ice 30 Iterations

Gust Response Factor 1.69
Dead Load Factor : 1.00
Wind Load Factor : 1.00

Applied Segment Forces Summary

		Shaft Forces		Discrete Forces				Linear Forces		Sum of Forces			
Seg Elev (ft)	Description	Wind FX (lb)	Dead Load (lb)	Wind FX (lb)	Torsion MY (lb-ft)	Moment MZ (lb-ft)	Dead Load (lb)	Wind FX (lb)	Dead Load (lb)	Wind FX (lb)	Dead Load (lb)	Torsion MY (lb-ft)	Moment MZ (lb)
0.00		45.5	0.0					0.0	0.0	45.5	0.0	0.0	0.0
1.00		90.7	224.3					17.5	66.8	108.3	291.1	0.0	0.0
2.00		90.4	223.3					17.5	66.8	107.9	290.1	0.0	0.0
3.00		90.0	222.4					17.5	66.8	107.5	289.2	0.0	0.0
4.00		89.6	221.5					17.5	66.8	107.2	288.3	0.0	0.0
5.00		89.3	220.6					17.5	66.8	106.8	287.4	0.0	0.0
6.00		88.9	219.7					24.5	77.2	113.4	296.8	0.0	0.0
7.00		88.5	218.7					24.5	77.2	113.0	295.9	0.0	0.0
8.00		88.1	217.8					24.5	77.2	112.7	295.0	0.0	0.0
9.00		87.8	216.9					24.5	77.2	112.3	294.1	0.0	0.0
10.00		87.4	216.0					24.5	77.2	111.9	293.1	0.0	0.0
11.00		87.0	215.0					39.9	129.2	127.0	344.2	0.0	0.0
12.00		86.7	214.1					39.9	129.2	126.6	343.3	0.0	0.0
13.00		86.3	213.2					39.9	129.2	126.2	342.4	0.0	0.0
14.00		85.9	212.3					39.9	129.2	125.9	341.4	0.0	0.0
15.00		85.5	211.3					39.9	129.2	125.5	340.5	0.0	0.0
16.00		85.2	210.4					39.9	129.2	125.1	339.6	0.0	0.0
17.00		84.8	209.5					39.9	129.2	124.8	338.7	0.0	0.0
18.00		84.4	208.6					39.9	129.2	124.4	337.7	0.0	0.0
19.00		84.1	207.6					39.9	129.2	124.0	336.8	0.0	0.0
20.00		83.7	206.7					39.9	129.2	123.6	335.9	0.0	0.0
21.00		83.3	205.8					39.9	129.2	123.3	335.0	0.0	0.0
22.00		83.0	204.9					39.9	129.2	122.9	334.0	0.0	0.0
23.00		82.6	204.0					39.9	129.2	122.5	333.1	0.0	0.0
24.00		82.2	203.0					39.9	129.2	122.2	332.2	0.0	0.0
25.00		81.8	202.1					39.9	129.2	121.8	331.3	0.0	0.0
26.00		81.5	201.2					39.9	129.2	121.4	330.4	0.0	0.0
27.00		81.1	200.3					39.9	129.2	121.0	329.4	0.0	0.0
28.00		80.7	199.3					39.9	129.2	120.7	328.5	0.0	0.0
29.00		80.4	198.4					39.9	129.2	120.3	327.6	0.0	0.0
30.00		80.0	197.5					39.9	129.2	119.9	326.7	0.0	0.0
31.00		79.6	196.6					39.9	129.2	119.6	325.7	0.0	0.0
32.00		79.2	195.6					39.9	129.2	119.2	324.8	0.0	0.0
33.00		79.0	194.7					39.9	129.2	119.0	323.9	0.0	0.0
34.00		79.2	193.8					40.1	129.2	119.3	323.0	0.0	0.0
35.00		79.4	192.9					40.5	129.2	119.9	322.0	0.0	0.0
36.00		79.7	191.9					40.8	129.2	120.5	321.1	0.0	0.0
37.00		80.0	191.0					41.1	129.2	121.1	320.2	0.0	0.0
38.00		80.2	190.1					41.4	129.2	121.6	319.3	0.0	0.0
39.00		80.4	189.2					41.7	129.2	122.1	318.3	0.0	0.0
40.00		80.6	188.2					42.1	129.2	122.6	317.4	0.0	0.0
41.00		41.8	187.3					42.4	129.2	84.2	316.5	0.0	0.0
41.04	Bot - Section 2	41.2	6.8					1.5	4.7	42.7	11.5	0.0	0.0
42.00		80.9	336.8					41.1	124.5	122.1	461.3	0.0	0.0
43.00		82.6	347.8					42.9	129.2	125.5	476.9	0.0	0.0
44.00		82.7	346.0					43.2	129.2	126.0	475.2	0.0	0.0
45.00		82.9	344.3					43.5	129.2	126.4	473.5	0.0	0.0

©2007 - 2015 by ATC IP LLC. All rights reserved.

Load Case: No Ice — 90.00 mph Wind with No Ice — 30 Iterations

Gust Response Factor 1.69
Dead Load Factor : 1.00
Wind Load Factor : 1.00

46.00		67.6	342.6					43.8	129.2	111.4	471.8	0.0	0.0
46.63	Top - Section 1	41.5	215.0					27.7	81.4	69.2	296.3	0.0	0.0
47.00		56.9	58.8					16.3	47.8	73.3	106.6	0.0	0.0
48.00		83.2	158.3					44.3	129.2	127.5	287.5	0.0	0.0
49.00		83.2	157.5					44.6	129.2	127.8	286.7	0.0	0.0
50.00		83.3	156.7					44.9	129.2	128.2	285.9	0.0	0.0
51.00		83.4	155.9					45.1	129.2	128.5	285.1	0.0	0.0
52.00		83.4	155.1					45.4	129.2	128.8	284.3	0.0	0.0
53.00		83.4	154.4					45.6	129.2	129.1	283.5	0.0	0.0
54.00		83.5	153.6					45.9	129.2	129.3	282.7	0.0	0.0
55.00		83.5	152.8					46.1	129.2	129.6	281.9	0.0	0.0
56.00		83.5	152.0					46.3	129.2	129.8	281.1	0.0	0.0
57.00		83.5	151.2					46.6	129.2	130.0	280.4	0.0	0.0
58.00		83.4	150.4					46.8	129.2	130.2	279.6	0.0	0.0
59.00		83.4	149.6					47.0	129.2	130.5	278.8	0.0	0.0
60.00		83.4	148.8					47.3	129.2	130.6	278.0	0.0	0.0
61.00		83.3	148.0					47.5	129.2	130.8	277.2	0.0	0.0
62.00		83.3	147.2					47.7	129.2	131.0	276.4	0.0	0.0
63.00		83.2	146.4					47.9	129.2	131.1	275.6	0.0	0.0
64.00		83.1	145.6					48.2	129.2	131.3	274.8	0.0	0.0
65.00		83.0	144.9					48.4	129.2	131.4	274.0	0.0	0.0
66.00		83.0	144.1					48.6	129.2	131.5	273.2	0.0	0.0
67.00		82.9	143.3					48.8	129.2	131.7	272.4	0.0	0.0
68.00		82.7	142.5					49.0	129.2	131.8	271.6	0.0	0.0
69.00		82.6	141.7					49.2	129.2	131.9	270.9	0.0	0.0
70.00		82.5	140.9					49.4	129.2	131.9	270.1	0.0	0.0
71.00		82.4	140.1					49.6	129.2	132.0	269.3	0.0	0.0
72.00		82.3	139.3					49.8	129.2	132.1	268.5	0.0	0.0
73.00		82.1	138.5					50.0	129.2	132.1	267.7	0.0	0.0
74.00		82.0	137.7					50.2	129.2	132.2	266.9	0.0	0.0
75.00	Appertunance(s)	81.8	136.9	134.9	0.0	0.0	30.6	50.4	129.2	267.1	296.7	0.0	0.0
76.00		81.7	136.1					50.6	129.0	132.3	265.2	0.0	0.0
77.00		81.5	135.4					50.8	129.0	132.3	264.4	0.0	0.0
78.00		81.3	134.6					51.0	129.0	132.3	263.6	0.0	0.0
79.00		81.1	133.8					51.2	129.0	132.3	262.8	0.0	0.0
80.00		80.9	133.0					51.4	129.0	132.3	262.0	0.0	0.0
81.00		60.3	132.2					51.5	129.0	111.8	261.2	0.0	0.0
81.49	Bot - Section 3	40.7	64.7					25.4	63.4	66.1	128.1	0.0	0.0
82.00		61.9	123.5					26.3	65.6	88.2	189.1	0.0	0.0
83.00		81.9	241.8					51.9	129.0	133.8	370.8	0.0	0.0
84.00		81.7	240.3					52.1	129.0	133.8	369.3	0.0	0.0
85.00		81.5	238.9					52.3	129.0	133.7	367.9	0.0	0.0
86.00		47.8	237.4					52.4	129.0	100.3	366.4	0.0	0.0
86.18	Top - Section 2	40.6	41.7					9.3	22.7	49.8	64.4	0.0	0.0
87.00		73.9	89.3					43.4	106.3	117.2	195.6	0.0	0.0
88.00		80.8	107.9					52.8	129.0	133.6	236.9	0.0	0.0
89.00		80.6	107.2					53.0	129.0	133.5	236.2	0.0	0.0
90.00		80.4	106.5					53.1	129.0	133.5	235.6	0.0	0.0
91.00		80.1	105.9					53.3	129.0	133.4	234.9	0.0	0.0
92.00		79.9	105.2					53.5	129.0	133.3	234.2	0.0	0.0
93.00		79.6	104.6					53.6	129.0	133.2	233.6	0.0	0.0
94.00		79.4	103.9					53.8	129.0	133.2	232.9	0.0	0.0
95.00		79.1	103.2					54.0	129.0	133.1	232.3	0.0	0.0
96.00		78.8	102.6					54.1	129.0	133.0	231.6	0.0	0.0
97.00		78.6	101.9					54.3	129.0	132.8	230.9	0.0	0.0
98.00		78.3	101.3					54.4	129.0	132.7	230.3	0.0	0.0
99.00		78.0	100.6					54.6	129.0	132.6	229.6	0.0	0.0

©2007 - 2015 by ATC IP LLC. All rights reserved.

Load Case: No Ice 90.00 mph Wind with No Ice 30 Iterations

Gust Response Factor 1.69
Dead Load Factor : 1.00
Wind Load Factor : 1.00

100.00	Appertunance(s)	77.7	99.9	391.6	0.0	707.3	176.5	54.8	129.0	524.1	405.5	0.0	0.0
101.00		77.4	99.3					54.9	128.7	132.3	228.0	0.0	0.0
102.00		77.1	98.6					55.1	128.7	132.2	227.3	0.0	0.0
103.00		76.8	98.0					55.2	128.7	132.1	226.7	0.0	0.0
104.00		76.5	97.3					55.4	128.7	131.9	226.0	0.0	0.0
105.00		76.2	96.6					55.5	128.7	131.8	225.3	0.0	0.0
106.00		75.9	96.0					55.7	128.7	131.6	224.7	0.0	0.0
107.00		75.6	95.3					55.8	128.7	131.4	224.0	0.0	0.0
108.00		65.9	94.7					56.0	128.7	121.9	223.4	0.0	0.0
108.75	Reinf. Top	37.6	70.6					42.1	96.5	79.6	167.1	0.0	0.0
109.00		46.8	23.4					14.0	15.5	60.8	38.9	0.0	0.0
110.00	Appertunance(s)	74.6	93.3	665.7	0.0	0.0	304.6	56.3	61.9	796.7	459.8	0.0	0.0
111.00		74.3	92.7					56.4	61.6	130.7	154.3	0.0	0.0
112.00		74.0	92.0					56.6	61.6	130.5	153.6	0.0	0.0
113.00		73.6	91.4					56.7	61.6	130.3	153.0	0.0	0.0
114.00		73.3	90.7					38.2	61.6	111.4	152.3	0.0	0.0
115.00		72.9	90.0					32.0	61.6	104.9	151.6	0.0	0.0
116.00		72.6	89.4					32.1	61.6	104.7	151.0	0.0	0.0
117.00		72.2	88.7					32.2	61.6	104.4	150.3	0.0	0.0
118.00		71.9	88.1					32.2	61.6	104.1	149.7	0.0	0.0
119.00		71.5	87.4					32.3	61.6	103.8	149.0	0.0	0.0
120.00	Appertunance(s)	71.1	86.7	3,812.7	0.0	0.0	2,471.7	32.4	61.6	3,916.3	2,620.0	0.0	0.0
121.00		70.8	86.1					32.5	55.6	103.2	141.7	0.0	0.0
122.00		70.4	85.4					32.5	55.6	102.9	141.0	0.0	0.0
123.00		70.0	84.8					32.6	55.6	102.6	140.4	0.0	0.0
124.00		69.4	84.1					32.7	55.6	102.1	139.7	0.0	0.0
124.99	Bot - Section 4	34.7	82.9					32.6	55.2	67.3	138.2	0.0	0.0
125.00		35.4	0.9					0.2	0.3	35.6	1.3	0.0	0.0
126.00		70.3	150.5					32.9	55.6	103.1	206.1	0.0	0.0
127.00		69.9	149.4					32.9	55.6	102.8	204.9	0.0	0.0
128.00		58.5	148.2					33.0	55.6	91.5	203.8	0.0	0.0
128.68	Top - Section 3	34.6	100.3					22.5	37.9	57.2	138.2	0.0	0.0
129.00		45.5	21.0					10.5	17.7	56.0	38.7	0.0	0.0
130.00		68.7	65.6					33.1	55.6	101.8	121.2	0.0	0.0
131.00	Appertunance(s)	68.3	65.1	2,963.5	0.0	0.0	1,668.6	33.2	55.6	3,065.0	1,789.3	0.0	0.0
132.00		67.9	64.6					33.3	45.0	101.2	109.6	0.0	0.0
133.00	Appertunance(s)	67.5	64.1	89.2	0.0	0.0	47.7	33.4	45.0	190.1	156.8	0.0	0.0
134.00		67.1	63.5					33.4	45.0	100.5	108.5	0.0	0.0
135.00		66.7	63.0					33.5	45.0	100.2	108.0	0.0	0.0
136.00		66.3	62.5					33.6	45.0	99.8	107.5	0.0	0.0
137.00	Appertunance(s)	65.8	61.9	1,374.0	0.0	0.0	809.0	33.6	45.0	1,473.4	915.9	0.0	0.0
138.00		65.4	61.4					21.1	37.3	86.5	98.7	0.0	0.0
139.00		65.0	60.9					21.1	37.3	86.1	98.1	0.0	0.0
140.00		64.6	60.4					21.2	37.3	85.7	97.6	0.0	0.0
141.00	Appertunance(s)	64.1	59.8	4,576.4	0.0	-516.9	1,875.9	21.2	37.3	4,661.8	1,973.0	0.0	0.0
142.00		63.7	59.3					10.6	26.1	74.3	85.4	0.0	0.0
143.00		63.3	58.8					10.6	26.1	73.9	84.9	0.0	0.0
144.00		62.8	58.2					10.7	26.1	73.5	84.4	0.0	0.0
145.00		62.4	57.7					10.7	26.1	73.1	83.8	0.0	0.0
146.00		61.9	57.2					10.7	26.1	72.6	83.3	0.0	0.0
147.00		58.4	56.7					10.7	26.1	69.2	82.8	0.0	0.0
147.90		30.6	50.5					9.7	23.5	40.3	74.1	0.0	0.0
148.00	Appertunance(s)	3.1	5.6	1,269.8	0.0	11,105.4	362.0	1.1	1.0	1,273.9	368.6	0.0	0.0
									Totals:	32,960.54	45,132.40	0.00	0.00

©2007 - 2015 by ATC IP LLC. All rights reserved.

Load Case: No Ice 90.00 mph Wind with No Ice 30 Iterations

Gust Response Factor 1.69
Dead Load Factor : 1.00
Wind Load Factor : 1.00

Calculated Shaft Forces and Deflections

Seg Elev (ft)	Lateral FX (-) (kips)	Axial FY (-) (kips)	Lateral FZ (kips)	Moment MX (ft-kips)	Torsion MY (ft-kips)	Moment MZ (ft-kips)	X Deflect (in)	Z Deflect (in)	Total Deflect (in)	Rotation (deg)
0.00	-39.104	-48.289	0.000	0.000	0.000	-4,361.733	0.000	0.000	0.000	0.000
1.00	-39.035	-47.966	0.000	0.000	0.000	-4,322.630	-0.005	0.000	0.005	-0.047
2.00	-38.966	-47.644	0.000	0.000	0.000	-4,283.596	-0.021	0.000	0.021	-0.094
3.00	-38.897	-47.323	0.000	0.000	0.000	-4,244.631	-0.046	0.000	0.046	-0.141
4.00	-38.828	-47.003	0.000	0.000	0.000	-4,205.735	-0.081	0.000	0.081	-0.189
5.00	-38.758	-46.684	0.000	0.000	0.000	-4,166.908	-0.126	0.000	0.126	-0.236
6.00	-38.682	-46.356	0.000	0.000	0.000	-4,128.150	-0.181	0.000	0.181	-0.283
7.00	-38.606	-46.028	0.000	0.000	0.000	-4,089.469	-0.246	0.000	0.246	-0.331
8.00	-38.529	-45.702	0.000	0.000	0.000	-4,050.864	-0.320	0.000	0.320	-0.378
9.00	-38.453	-45.377	0.000	0.000	0.000	-4,012.335	-0.405	0.000	0.405	-0.426
10.00	-38.376	-45.052	0.000	0.000	0.000	-3,973.883	-0.500	0.000	0.500	-0.474
11.00	-38.283	-44.677	0.000	0.000	0.000	-3,935.508	-0.605	0.000	0.605	-0.522
12.00	-38.191	-44.303	0.000	0.000	0.000	-3,897.225	-0.719	0.000	0.719	-0.570
13.00	-38.098	-43.931	0.000	0.000	0.000	-3,859.036	-0.844	0.000	0.844	-0.618
14.00	-38.004	-43.559	0.000	0.000	0.000	-3,820.939	-0.979	0.000	0.979	-0.666
15.00	-37.911	-43.188	0.000	0.000	0.000	-3,782.935	-1.124	0.000	1.124	-0.714
16.00	-37.818	-42.818	0.000	0.000	0.000	-3,745.025	-1.279	0.000	1.279	-0.762
17.00	-37.724	-42.449	0.000	0.000	0.000	-3,707.208	-1.444	0.000	1.444	-0.810
18.00	-37.630	-42.082	0.000	0.000	0.000	-3,669.484	-1.619	0.000	1.619	-0.858
19.00	-37.536	-41.715	0.000	0.000	0.000	-3,631.855	-1.805	0.000	1.805	-0.907
20.00	-37.442	-41.350	0.000	0.000	0.000	-3,594.319	-2.000	0.000	2.000	-0.955
21.00	-37.348	-40.985	0.000	0.000	0.000	-3,556.878	-2.206	0.000	2.206	-1.004
22.00	-37.254	-40.622	0.000	0.000	0.000	-3,519.531	-2.422	0.000	2.422	-1.052
23.00	-37.159	-40.260	0.000	0.000	0.000	-3,482.278	-2.648	0.000	2.648	-1.101
24.00	-37.064	-39.898	0.000	0.000	0.000	-3,445.120	-2.884	0.000	2.884	-1.150
25.00	-36.969	-39.538	0.000	0.000	0.000	-3,408.056	-3.130	0.000	3.130	-1.198
26.00	-36.874	-39.179	0.000	0.000	0.000	-3,371.087	-3.387	0.000	3.387	-1.247
27.00	-36.779	-38.821	0.000	0.000	0.000	-3,334.214	-3.654	0.000	3.654	-1.296
28.00	-36.684	-38.464	0.000	0.000	0.000	-3,297.436	-3.931	0.000	3.931	-1.345
29.00	-36.588	-38.109	0.000	0.000	0.000	-3,260.753	-4.218	0.000	4.218	-1.394
30.00	-36.492	-37.754	0.000	0.000	0.000	-3,224.166	-4.515	0.000	4.515	-1.442
31.00	-36.396	-37.400	0.000	0.000	0.000	-3,187.674	-4.823	0.000	4.823	-1.491
32.00	-36.300	-37.048	0.000	0.000	0.000	-3,151.278	-5.141	0.000	5.141	-1.540
33.00	-36.204	-36.696	0.000	0.000	0.000	-3,114.979	-5.469	0.000	5.469	-1.589
34.00	-36.107	-36.346	0.000	0.000	0.000	-3,078.775	-5.808	0.000	5.808	-1.639
35.00	-36.008	-35.996	0.000	0.000	0.000	-3,042.669	-6.157	0.000	6.157	-1.688
36.00	-35.909	-35.648	0.000	0.000	0.000	-3,006.661	-6.516	0.000	6.516	-1.737
37.00	-35.808	-35.301	0.000	0.000	0.000	-2,970.753	-6.885	0.000	6.885	-1.786
38.00	-35.707	-34.955	0.000	0.000	0.000	-2,934.945	-7.265	0.000	7.265	-1.835
39.00	-35.604	-34.611	0.000	0.000	0.000	-2,899.239	-7.655	0.000	7.655	-1.884
40.00	-35.500	-34.267	0.000	0.000	0.000	-2,863.636	-8.055	0.000	8.055	-1.933
41.00	-35.420	-33.938	0.000	0.000	0.000	-2,828.136	-8.465	0.000	8.465	-1.983
41.04	-35.392	-33.913	0.000	0.000	0.000	-2,826.852	-8.480	0.000	8.480	-1.984
42.00	-35.282	-33.426	0.000	0.000	0.000	-2,792.744	-8.886	0.000	8.886	-2.032
43.00	-35.167	-32.924	0.000	0.000	0.000	-2,757.462	-9.317	0.000	9.317	-2.081
44.00	-35.051	-32.424	0.000	0.000	0.000	-2,722.295	-9.759	0.000	9.759	-2.129
45.00	-34.935	-31.926	0.000	0.000	0.000	-2,687.244	-10.210	0.000	10.210	-2.178
46.00	-34.827	-31.435	0.000	0.000	0.000	-2,652.311	-10.672	0.000	10.672	-2.226
46.63	-34.759	-31.127	0.000	0.000	0.000	-2,630.370	-10.968	0.000	10.968	-2.257
47.00	-34.701	-31.002	0.000	0.000	0.000	-2,617.509	-11.144	0.000	11.144	-2.275
48.00	-34.590	-30.689	0.000	0.000	0.000	-2,582.809	-11.626	0.000	11.626	-2.327

©2007 - 2015 by ATC IP LLC. All rights reserved.

Load Case: No Ice 90.00 mph Wind with No Ice 30 Iterations

Gust Response Factor 1.69
Dead Load Factor : 1.00
Wind Load Factor : 1.00

49.00	-34.477	-30.377	0.000	0.000	0.000	-2,548.220	-12.119	0.000	12.119	-2.378
50.00	-34.364	-30.066	0.000	0.000	0.000	-2,513.743	-12.623	0.000	12.623	-2.430
51.00	-34.250	-29.756	0.000	0.000	0.000	-2,479.379	-13.138	0.000	13.138	-2.481
52.00	-34.136	-29.447	0.000	0.000	0.000	-2,445.130	-13.663	0.000	13.663	-2.533
53.00	-34.020	-29.139	0.000	0.000	0.000	-2,410.994	-14.200	0.000	14.200	-2.584
54.00	-33.904	-28.832	0.000	0.000	0.000	-2,376.975	-14.747	0.000	14.747	-2.635
55.00	-33.787	-28.526	0.000	0.000	0.000	-2,343.072	-15.304	0.000	15.304	-2.686
56.00	-33.669	-28.221	0.000	0.000	0.000	-2,309.285	-15.873	0.000	15.873	-2.737
57.00	-33.550	-27.918	0.000	0.000	0.000	-2,275.617	-16.452	0.000	16.452	-2.788
58.00	-33.431	-27.615	0.000	0.000	0.000	-2,242.067	-17.041	0.000	17.041	-2.839
59.00	-33.311	-27.314	0.000	0.000	0.000	-2,208.636	-17.642	0.000	17.642	-2.890
60.00	-33.190	-27.014	0.000	0.000	0.000	-2,175.326	-18.252	0.000	18.252	-2.941
61.00	-33.069	-26.715	0.000	0.000	0.000	-2,142.136	-18.874	0.000	18.874	-2.991
62.00	-32.947	-26.416	0.000	0.000	0.000	-2,109.067	-19.506	0.000	19.506	-3.042
63.00	-32.824	-26.119	0.000	0.000	0.000	-2,076.121	-20.149	0.000	20.149	-3.092
64.00	-32.701	-25.824	0.000	0.000	0.000	-2,043.297	-20.802	0.000	20.802	-3.142
65.00	-32.577	-25.529	0.000	0.000	0.000	-2,010.597	-21.466	0.000	21.466	-3.192
66.00	-32.452	-25.235	0.000	0.000	0.000	-1,978.021	-22.140	0.000	22.140	-3.242
67.00	-32.327	-24.943	0.000	0.000	0.000	-1,945.570	-22.824	0.000	22.824	-3.292
68.00	-32.201	-24.651	0.000	0.000	0.000	-1,913.244	-23.519	0.000	23.519	-3.342
69.00	-32.074	-24.361	0.000	0.000	0.000	-1,881.043	-24.224	0.000	24.224	-3.391
70.00	-31.947	-24.072	0.000	0.000	0.000	-1,848.969	-24.940	0.000	24.940	-3.441
71.00	-31.819	-23.784	0.000	0.000	0.000	-1,817.023	-25.666	0.000	25.666	-3.490
72.00	-31.691	-23.497	0.000	0.000	0.000	-1,785.204	-26.402	0.000	26.402	-3.539
73.00	-31.562	-23.211	0.000	0.000	0.000	-1,753.513	-27.149	0.000	27.149	-3.588
74.00	-31.433	-22.926	0.000	0.000	0.000	-1,721.951	-27.905	0.000	27.905	-3.636
75.00	-31.167	-22.621	0.000	0.000	0.000	-1,690.518	-28.672	0.000	28.672	-3.685
76.00	-31.036	-22.339	0.000	0.000	0.000	-1,659.352	-29.449	0.000	29.449	-3.733
77.00	-30.905	-22.058	0.000	0.000	0.000	-1,628.317	-30.236	0.000	30.236	-3.781
78.00	-30.774	-21.778	0.000	0.000	0.000	-1,597.412	-31.033	0.000	31.033	-3.828
79.00	-30.642	-21.500	0.000	0.000	0.000	-1,566.638	-31.840	0.000	31.840	-3.876
80.00	-30.510	-21.222	0.000	0.000	0.000	-1,535.996	-32.656	0.000	32.656	-3.923
81.00	-30.393	-20.951	0.000	0.000	0.000	-1,505.487	-33.483	0.000	33.483	-3.970
81.49	-30.327	-20.815	0.000	0.000	0.000	-1,490.551	-33.893	0.000	33.893	-3.993
82.00	-30.238	-20.614	0.000	0.000	0.000	-1,475.129	-34.319	0.000	34.319	-4.017
83.00	-30.095	-20.230	0.000	0.000	0.000	-1,444.891	-35.165	0.000	35.165	-4.063
84.00	-29.950	-19.847	0.000	0.000	0.000	-1,414.797	-36.021	0.000	36.021	-4.108
85.00	-29.806	-19.467	0.000	0.000	0.000	-1,384.847	-36.886	0.000	36.886	-4.154
86.00	-29.688	-19.095	0.000	0.000	0.000	-1,355.041	-37.761	0.000	37.761	-4.198
86.18	-29.641	-19.023	0.000	0.000	0.000	-1,349.809	-37.916	0.000	37.916	-4.206
87.00	-29.524	-18.814	0.000	0.000	0.000	-1,325.392	-38.645	0.000	38.645	-4.243
88.00	-29.388	-18.564	0.000	0.000	0.000	-1,295.869	-39.538	0.000	39.538	-4.290
89.00	-29.252	-18.315	0.000	0.000	0.000	-1,266.482	-40.441	0.000	40.441	-4.337
90.00	-29.115	-18.067	0.000	0.000	0.000	-1,237.230	-41.355	0.000	41.355	-4.383
91.00	-28.979	-17.819	0.000	0.000	0.000	-1,208.115	-42.277	0.000	42.277	-4.429
92.00	-28.841	-17.574	0.000	0.000	0.000	-1,179.137	-43.209	0.000	43.209	-4.475
93.00	-28.704	-17.329	0.000	0.000	0.000	-1,150.296	-44.151	0.000	44.151	-4.520
94.00	-28.566	-17.085	0.000	0.000	0.000	-1,121.593	-45.102	0.000	45.102	-4.564
95.00	-28.427	-16.842	0.000	0.000	0.000	-1,093.027	-46.062	0.000	46.062	-4.608
96.00	-28.289	-16.601	0.000	0.000	0.000	-1,064.600	-47.032	0.000	47.032	-4.652
97.00	-28.150	-16.361	0.000	0.000	0.000	-1,036.312	-48.010	0.000	48.010	-4.695
98.00	-28.010	-16.121	0.000	0.000	0.000	-1,008.163	-48.998	0.000	48.998	-4.737
99.00	-27.871	-15.883	0.000	0.000	0.000	-980.153	-49.994	0.000	49.994	-4.779
100.0	-27.326	-15.504	0.000	0.000	0.000	-951.575	-50.999	0.000	50.999	-4.821
101.0	-27.185	-15.268	0.000	0.000	0.000	-924.249	-52.012	0.000	52.012	-4.861
102.0	-27.045	-15.034	0.000	0.000	0.000	-897.064	-53.034	0.000	53.034	-4.902
103.0	-26.904	-14.801	0.000	0.000	0.000	-870.020	-54.064	0.000	54.064	-4.941

©2007 - 2015 by ATC IP LLC. All rights reserved.

Load Case: No Ice 90.00 mph Wind with No Ice 30 Iterations

Gust Response Factor 1.69
Dead Load Factor : 1.00
Wind Load Factor : 1.00

104.0	-26.763	-14.569	0.000	0.000	0.000	-843.116	-55.103	0.000	55.103	-4.980
105.0	-26.622	-14.339	0.000	0.000	0.000	-816.353	-56.149	0.000	56.149	-5.019
106.0	-26.480	-14.109	0.000	0.000	0.000	-789.732	-57.204	0.000	57.204	-5.056
107.0	-26.338	-13.881	0.000	0.000	0.000	-763.252	-58.266	0.000	58.266	-5.094
108.0	-26.204	-13.655	0.000	0.000	0.000	-736.914	-59.336	0.000	59.336	-5.130
108.7	-26.114	-13.487	0.000	0.000	0.000	-717.261	-60.144	0.000	60.144	-5.157
109.0	-26.060	-13.435	0.000	0.000	0.000	-710.733	-60.414	0.000	60.414	-5.166
110.0	-25.242	-13.017	0.000	0.000	0.000	-684.673	-61.503	0.000	61.503	-5.240
111.0	-25.114	-12.844	0.000	0.000	0.000	-659.432	-62.607	0.000	62.607	-5.313
112.0	-24.985	-12.672	0.000	0.000	0.000	-634.319	-63.726	0.000	63.726	-5.384
113.0	-24.856	-12.502	0.000	0.000	0.000	-609.334	-64.860	0.000	64.860	-5.455
114.0	-24.745	-12.332	0.000	0.000	0.000	-584.479	-66.009	0.000	66.009	-5.524
115.0	-24.640	-12.162	0.000	0.000	0.000	-559.734	-67.172	0.000	67.172	-5.591
116.0	-24.535	-11.994	0.000	0.000	0.000	-535.094	-68.349	0.000	68.349	-5.658
117.0	-24.430	-11.828	0.000	0.000	0.000	-510.559	-69.540	0.000	69.540	-5.722
118.0	-24.324	-11.663	0.000	0.000	0.000	-486.130	-70.743	0.000	70.743	-5.785
119.0	-24.217	-11.500	0.000	0.000	0.000	-461.807	-71.960	0.000	71.960	-5.846
120.0	-20.063	-9.274	0.000	0.000	0.000	-437.590	-73.190	0.000	73.190	-5.906
121.0	-19.955	-9.124	0.000	0.000	0.000	-417.527	-74.431	0.000	74.431	-5.964
122.0	-19.846	-8.975	0.000	0.000	0.000	-397.573	-75.684	0.000	75.684	-6.020
123.0	-19.738	-8.828	0.000	0.000	0.000	-377.727	-76.949	0.000	76.949	-6.075
124.0	-19.629	-8.682	0.000	0.000	0.000	-357.990	-78.225	0.000	78.225	-6.128
124.9	-19.551	-8.543	0.000	0.000	0.000	-338.481	-79.505	0.000	79.505	-6.180
125.0	-19.520	-8.537	0.000	0.000	0.000	-338.361	-79.513	0.000	79.513	-6.180
126.0	-19.402	-8.327	0.000	0.000	0.000	-318.842	-80.810	0.000	80.810	-6.230
127.0	-19.284	-8.118	0.000	0.000	0.000	-299.440	-82.118	0.000	82.118	-6.278
128.0	-19.176	-7.913	0.000	0.000	0.000	-280.157	-83.436	0.000	83.436	-6.324
128.6	-19.107	-7.775	0.000	0.000	0.000	-267.089	-84.339	0.000	84.339	-6.355
129.0	-19.051	-7.732	0.000	0.000	0.000	-261.003	-84.763	0.000	84.763	-6.369
130.0	-18.943	-7.607	0.000	0.000	0.000	-241.952	-86.100	0.000	86.100	-6.418
131.0	-15.701	-6.160	0.000	0.000	0.000	-223.009	-87.447	0.000	87.447	-6.464
132.0	-15.593	-6.051	0.000	0.000	0.000	-207.307	-88.804	0.000	88.804	-6.508
133.0	-15.391	-5.906	0.000	0.000	0.000	-191.714	-90.169	0.000	90.169	-6.550
134.0	-15.282	-5.800	0.000	0.000	0.000	-176.324	-91.543	0.000	91.543	-6.590
135.0	-15.174	-5.694	0.000	0.000	0.000	-161.042	-92.924	0.000	92.924	-6.627
136.0	-15.066	-5.590	0.000	0.000	0.000	-145.868	-94.313	0.000	94.313	-6.662
137.0	-13.498	-4.845	0.000	0.000	0.000	-130.803	-95.710	0.000	95.710	-6.694
138.0	-13.403	-4.750	0.000	0.000	0.000	-117.305	-97.112	0.000	97.112	-6.723
139.0	-13.308	-4.657	0.000	0.000	0.000	-103.902	-98.521	0.000	98.521	-6.750
140.0	-13.213	-4.565	0.000	0.000	0.000	-90.594	-99.934	0.000	99.934	-6.775
141.0	-8.352	-3.154	0.000	0.000	0.000	-77.380	-101.353	0.000	101.353	-6.796
142.0	-8.269	-3.075	0.000	0.000	0.000	-69.028	-102.775	0.000	102.775	-6.816
143.0	-8.187	-2.997	0.000	0.000	0.000	-60.759	-104.202	0.000	104.202	-6.833
144.0	-8.105	-2.920	0.000	0.000	0.000	-52.572	-105.632	0.000	105.632	-6.849
145.0	-8.023	-2.844	0.000	0.000	0.000	-44.468	-107.065	0.000	107.065	-6.863
146.0	-7.941	-2.768	0.000	0.000	0.000	-36.445	-108.500	0.000	108.500	-6.875
147.0	-7.863	-2.693	0.000	0.000	0.000	-28.504	-109.938	0.000	109.938	-6.885
147.9	-1.309	-0.213	0.000	0.000	0.000	-11.236	-111.234	0.000	111.234	-6.892
148.0	-1.274	0.000	0.000	0.000	0.000	-11.105	-111.378	0.000	111.378	-6.892

©2007 - 2015 by ATC IP LLC. All rights reserved.

Load Case: No Ice 90.00 mph Wind with No Ice 30 Iterations

Gust Response Factor 1.69
Dead Load Factor : 1.00
Wind Load Factor : 1.00

Calculated Stresses

Seg Elev (ft)	Applied Stresses Axial (Y) (ksi)	Shear (X) (ksi)	Shear (Z) (ksi)	Torsion (ksi)	Bending (X) (ksi)	Bending (Z) (ksi)	Combined (ksi)	Allowable Stress (Fb) (ksi)	Allowable Stress (Fa) (ksi)	Stress Ratio
0.00	0.56	1.19	0.00	0.00	0.00	48.54	49.15	52.0	0.0	0.946
1.00	0.56	1.20	0.00	0.00	0.00	48.43	49.04	52.0	0.0	0.943
2.00	0.56	1.20	0.00	0.00	0.00	48.33	48.93	52.0	0.0	0.941
3.00	0.56	1.20	0.00	0.00	0.00	48.21	48.82	52.0	0.0	0.939
4.00	0.56	1.20	0.00	0.00	0.00	48.10	48.70	52.0	0.0	0.937
5.00	0.55	1.21	0.00	0.00	0.00	47.99	48.59	52.0	0.0	0.935
6.00	0.55	1.21	0.00	0.00	0.00	47.87	48.47	52.0	0.0	0.932
7.00	0.55	1.21	0.00	0.00	0.00	47.75	48.35	52.0	0.0	0.930
8.00	0.55	1.22	0.00	0.00	0.00	47.63	48.22	52.0	0.0	0.928
9.00	0.55	1.22	0.00	0.00	0.00	47.51	48.10	52.0	0.0	0.925
10.00	0.54	1.22	0.00	0.00	0.00	47.38	47.97	52.0	0.0	0.923
11.00	0.54	1.22	0.00	0.00	0.00	47.26	47.84	52.0	0.0	0.920
12.00	0.54	1.23	0.00	0.00	0.00	47.13	47.71	52.0	0.0	0.918
13.00	0.53	1.23	0.00	0.00	0.00	47.00	47.58	52.0	0.0	0.915
14.00	0.53	1.23	0.00	0.00	0.00	46.86	47.44	52.0	0.0	0.913
15.00	0.53	1.23	0.00	0.00	0.00	46.73	47.31	52.0	0.0	0.910
16.00	0.53	1.24	0.00	0.00	0.00	46.59	47.17	52.0	0.0	0.907
17.00	0.52	1.24	0.00	0.00	0.00	46.45	47.03	52.0	0.0	0.905
18.00	0.52	1.24	0.00	0.00	0.00	46.31	46.88	52.0	0.0	0.902
19.00	0.52	1.24	0.00	0.00	0.00	46.17	46.74	52.0	0.0	0.899
20.00	0.52	1.24	0.00	0.00	0.00	46.02	46.59	52.0	0.0	0.896
21.00	0.51	1.25	0.00	0.00	0.00	45.87	46.44	52.0	0.0	0.893
22.00	0.51	1.25	0.00	0.00	0.00	45.72	46.28	52.0	0.0	0.890
23.00	0.51	1.25	0.00	0.00	0.00	45.57	46.13	52.0	0.0	0.887
24.00	0.50	1.25	0.00	0.00	0.00	45.42	45.97	52.0	0.0	0.884
25.00	0.50	1.26	0.00	0.00	0.00	45.26	45.81	52.0	0.0	0.881
26.00	0.50	1.26	0.00	0.00	0.00	45.10	45.65	52.0	0.0	0.878
27.00	0.50	1.26	0.00	0.00	0.00	44.94	45.49	52.0	0.0	0.875
28.00	0.49	1.27	0.00	0.00	0.00	44.77	45.32	52.0	0.0	0.872
29.00	0.49	1.27	0.00	0.00	0.00	44.61	45.15	52.0	0.0	0.869
30.00	0.49	1.27	0.00	0.00	0.00	44.44	44.98	52.0	0.0	0.865
31.00	0.48	1.27	0.00	0.00	0.00	44.27	44.80	52.0	0.0	0.862
32.00	0.48	1.28	0.00	0.00	0.00	44.09	44.63	52.0	0.0	0.859
33.00	0.48	1.28	0.00	0.00	0.00	43.91	44.45	52.0	0.0	0.855
34.00	0.48	1.28	0.00	0.00	0.00	43.73	44.27	52.0	0.0	0.852
35.00	0.47	1.28	0.00	0.00	0.00	43.55	44.08	52.0	0.0	0.848
36.00	0.47	1.29	0.00	0.00	0.00	43.37	43.89	52.0	0.0	0.844
37.00	0.47	1.29	0.00	0.00	0.00	43.18	43.70	52.0	0.0	0.841
38.00	0.46	1.29	0.00	0.00	0.00	42.99	43.51	52.0	0.0	0.837
39.00	0.46	1.29	0.00	0.00	0.00	42.79	43.31	52.0	0.0	0.833
40.00	0.46	1.30	0.00	0.00	0.00	42.59	43.11	52.0	0.0	0.829
41.00	0.46	1.30	0.00	0.00	0.00	42.39	42.91	52.0	0.0	0.825
41.04	0.45	1.30	0.00	0.00	0.00	42.39	42.90	52.0	0.0	0.825
42.00	0.45	1.30	0.00	0.00	0.00	41.74	42.25	52.0	0.0	0.813
43.00	0.44	1.30	0.00	0.00	0.00	41.53	42.04	52.0	0.0	0.809
44.00	0.44	1.31	0.00	0.00	0.00	41.32	41.82	52.0	0.0	0.805
45.00	0.43	1.31	0.00	0.00	0.00	41.11	41.61	52.0	0.0	0.800
46.00	0.43	1.31	0.00	0.00	0.00	40.89	41.39	52.0	0.0	0.796
46.63	0.47	1.50	0.00	0.00	0.00	44.05	44.60	52.0	0.0	0.858
47.00	0.47	1.50	0.00	0.00	0.00	43.96	44.50	52.0	0.0	0.856
48.00	0.46	1.50	0.00	0.00	0.00	43.71	44.25	52.0	0.0	0.851

©2007 - 2015 by ATC IP LLC. All rights reserved.

Load Case: No Ice 90.00 mph Wind with No Ice 30 Iterations

Gust Response Factor 1.69
Dead Load Factor : 1.00
Wind Load Factor : 1.00

49.00	0.46	1.50	0.00	0.00	0.00	43.45	43.99	52.0	0.0	0.846
50.00	0.46	1.51	0.00	0.00	0.00	43.20	43.73	52.0	0.0	0.841
51.00	0.46	1.51	0.00	0.00	0.00	42.93	43.47	52.0	0.0	0.836
52.00	0.45	1.51	0.00	0.00	0.00	42.67	43.20	52.0	0.0	0.831
53.00	0.45	1.52	0.00	0.00	0.00	42.40	42.93	52.0	0.0	0.826
54.00	0.45	1.52	0.00	0.00	0.00	42.13	42.66	52.0	0.0	0.821
55.00	0.44	1.52	0.00	0.00	0.00	41.85	42.38	52.0	0.0	0.815
56.00	0.44	1.52	0.00	0.00	0.00	41.57	42.10	52.0	0.0	0.810
57.00	0.44	1.53	0.00	0.00	0.00	41.29	41.81	52.0	0.0	0.804
58.00	0.43	1.53	0.00	0.00	0.00	41.00	41.52	52.0	0.0	0.799
59.00	0.43	1.53	0.00	0.00	0.00	40.71	41.23	52.0	0.0	0.793
60.00	0.43	1.53	0.00	0.00	0.00	40.42	40.93	52.0	0.0	0.787
61.00	0.42	1.54	0.00	0.00	0.00	40.12	40.63	52.0	0.0	0.782
62.00	0.42	1.54	0.00	0.00	0.00	39.82	40.32	52.0	0.0	0.776
63.00	0.42	1.54	0.00	0.00	0.00	39.51	40.02	52.0	0.0	0.770
64.00	0.41	1.54	0.00	0.00	0.00	39.20	39.70	52.0	0.0	0.764
65.00	0.41	1.55	0.00	0.00	0.00	38.88	39.39	52.0	0.0	0.758
66.00	0.41	1.55	0.00	0.00	0.00	38.57	39.07	52.0	0.0	0.752
67.00	0.40	1.55	0.00	0.00	0.00	38.24	38.74	52.0	0.0	0.745
68.00	0.40	1.55	0.00	0.00	0.00	37.91	38.41	52.0	0.0	0.739
69.00	0.40	1.56	0.00	0.00	0.00	37.58	38.08	52.0	0.0	0.733
70.00	0.40	1.56	0.00	0.00	0.00	37.25	37.74	52.0	0.0	0.726
71.00	0.39	1.56	0.00	0.00	0.00	36.91	37.40	52.0	0.0	0.719
72.00	0.39	1.56	0.00	0.00	0.00	36.56	37.05	52.0	0.0	0.713
73.00	0.39	1.57	0.00	0.00	0.00	36.21	36.70	52.0	0.0	0.706
74.00	0.38	1.57	0.00	0.00	0.00	35.86	36.34	52.0	0.0	0.699
75.00	0.38	1.57	0.00	0.00	0.00	35.50	35.98	52.0	0.0	0.692
76.00	0.38	1.57	0.00	0.00	0.00	35.14	35.62	52.0	0.0	0.685
77.00	0.37	1.57	0.00	0.00	0.00	34.77	35.25	52.0	0.0	0.678
78.00	0.37	1.57	0.00	0.00	0.00	34.40	34.88	52.0	0.0	0.671
79.00	0.37	1.58	0.00	0.00	0.00	34.03	34.50	52.0	0.0	0.664
80.00	0.36	1.58	0.00	0.00	0.00	33.65	34.12	52.0	0.0	0.656
81.00	0.36	1.58	0.00	0.00	0.00	33.26	33.73	52.0	0.0	0.649
81.49	0.36	1.58	0.00	0.00	0.00	33.07	33.54	52.0	0.0	0.645
82.00	0.35	1.58	0.00	0.00	0.00	32.43	32.89	52.0	0.0	0.633
83.00	0.35	1.59	0.00	0.00	0.00	32.03	32.50	52.0	0.0	0.625
84.00	0.34	1.59	0.00	0.00	0.00	31.63	32.09	52.0	0.0	0.617
85.00	0.34	1.59	0.00	0.00	0.00	31.23	31.69	52.0	0.0	0.610
86.00	0.33	1.59	0.00	0.00	0.00	30.82	31.27	52.0	0.0	0.602
86.18	0.37	1.87	0.00	0.00	0.00	33.39	33.92	52.0	0.0	0.653
87.00	0.37	1.87	0.00	0.00	0.00	33.01	33.54	52.0	0.0	0.645
88.00	0.36	1.87	0.00	0.00	0.00	32.55	33.07	52.0	0.0	0.636
89.00	0.36	1.88	0.00	0.00	0.00	32.07	32.59	52.0	0.0	0.627
90.00	0.36	1.88	0.00	0.00	0.00	31.59	32.12	52.0	0.0	0.618
91.00	0.35	1.88	0.00	0.00	0.00	31.11	31.63	52.0	0.0	0.609
92.00	0.35	1.89	0.00	0.00	0.00	30.62	31.14	52.0	0.0	0.599
93.00	0.34	1.89	0.00	0.00	0.00	30.12	30.64	52.0	0.0	0.590
94.00	0.34	1.89	0.00	0.00	0.00	29.62	30.14	52.0	0.0	0.580
95.00	0.34	1.89	0.00	0.00	0.00	29.11	29.63	52.0	0.0	0.570
96.00	0.33	1.90	0.00	0.00	0.00	28.60	29.12	52.0	0.0	0.560
97.00	0.33	1.90	0.00	0.00	0.00	28.07	28.60	52.0	0.0	0.550
98.00	0.33	1.90	0.00	0.00	0.00	27.55	28.07	52.0	0.0	0.540
99.00	0.32	1.91	0.00	0.00	0.00	27.01	27.53	52.0	0.0	0.530
100.00	0.32	1.88	0.00	0.00	0.00	26.45	26.97	52.0	0.0	0.519
101.00	0.31	1.88	0.00	0.00	0.00	25.91	26.43	52.0	0.0	0.508
102.00	0.31	1.89	0.00	0.00	0.00	25.37	25.89	52.0	0.0	0.498
103.00	0.31	1.89	0.00	0.00	0.00	24.82	25.34	52.0	0.0	0.487

©2007 - 2015 by ATC IP LLC. All rights reserved.

Load Case: No Ice 90.00 mph Wind with No Ice 30 Iterations

Gust Response Factor 1.69
Dead Load Factor : 1.00
Wind Load Factor : 1.00

104.00	0.30	1.89	0.00	0.00	0.00	24.27	24.79	52.0	0.0	0.477
105.00	0.30	1.90	0.00	0.00	0.00	23.70	24.22	52.0	0.0	0.466
106.00	0.30	1.90	0.00	0.00	0.00	23.13	23.66	52.0	0.0	0.455
107.00	0.29	1.90	0.00	0.00	0.00	22.55	23.08	52.0	0.0	0.444
108.00	0.29	1.91	0.00	0.00	0.00	21.97	22.50	52.0	0.0	0.433
108.75	0.29	1.91	0.00	0.00	0.00	21.53	22.06	52.0	0.0	0.424
108.75	0.49	1.91	0.00	0.00	0.00	45.62	46.22	52.0	0.0	0.889
109.00	0.49	1.91	0.00	0.00	0.00	45.36	45.97	52.0	0.0	0.884
110.00	0.48	1.86	0.00	0.00	0.00	44.32	44.92	52.0	0.0	0.864
111.00	0.47	1.86	0.00	0.00	0.00	43.31	43.90	52.0	0.0	0.844
112.00	0.47	1.87	0.00	0.00	0.00	42.26	42.85	52.0	0.0	0.824
113.00	0.47	1.87	0.00	0.00	0.00	41.19	41.78	52.0	0.0	0.804
114.00	0.46	1.88	0.00	0.00	0.00	40.09	40.69	52.0	0.0	0.783
115.00	0.46	1.88	0.00	0.00	0.00	38.97	39.56	52.0	0.0	0.761
116.00	0.46	1.89	0.00	0.00	0.00	37.81	38.40	52.0	0.0	0.739
117.00	0.46	1.90	0.00	0.00	0.00	36.62	37.22	52.0	0.0	0.716
118.00	0.45	1.90	0.00	0.00	0.00	35.39	36.00	52.0	0.0	0.693
119.00	0.45	1.91	0.00	0.00	0.00	34.14	34.74	52.0	0.0	0.668
120.00	0.37	1.59	0.00	0.00	0.00	32.85	33.33	52.0	0.0	0.641
121.00	0.36	1.60	0.00	0.00	0.00	31.83	32.31	52.0	0.0	0.622
122.00	0.36	1.60	0.00	0.00	0.00	30.78	31.26	52.0	0.0	0.601
123.00	0.36	1.60	0.00	0.00	0.00	29.71	30.19	52.0	0.0	0.581
124.00	0.35	1.61	0.00	0.00	0.00	28.60	29.09	52.0	0.0	0.560
124.99	0.35	1.61	0.00	0.00	0.00	27.47	27.96	52.0	0.0	0.538
125.00	0.35	1.61	0.00	0.00	0.00	27.47	27.96	52.0	0.0	0.538
126.00	0.34	1.61	0.00	0.00	0.00	26.30	26.79	52.0	0.0	0.515
127.00	0.34	1.62	0.00	0.00	0.00	25.10	25.59	52.0	0.0	0.492
128.00	0.33	1.62	0.00	0.00	0.00	23.87	24.37	52.0	0.0	0.469
128.68	0.40	1.98	0.00	0.00	0.00	27.38	28.00	52.0	0.0	0.539
129.00	0.40	1.98	0.00	0.00	0.00	26.90	27.51	52.0	0.0	0.529
130.00	0.40	1.99	0.00	0.00	0.00	25.34	25.97	52.0	0.0	0.500
131.00	0.32	1.66	0.00	0.00	0.00	23.74	24.23	52.0	0.0	0.466
132.00	0.32	1.66	0.00	0.00	0.00	22.43	22.94	52.0	0.0	0.441
133.00	0.32	1.65	0.00	0.00	0.00	21.09	21.60	52.0	0.0	0.416
134.00	0.31	1.66	0.00	0.00	0.00	19.73	20.24	52.0	0.0	0.389
135.00	0.31	1.66	0.00	0.00	0.00	18.32	18.85	52.0	0.0	0.363
136.00	0.31	1.66	0.00	0.00	0.00	16.88	17.43	52.0	0.0	0.335
137.00	0.27	1.50	0.00	0.00	0.00	15.40	15.88	52.0	0.0	0.306
138.00	0.26	1.50	0.00	0.00	0.00	14.05	14.55	52.0	0.0	0.280
139.00	0.26	1.51	0.00	0.00	0.00	12.66	13.19	52.0	0.0	0.254
140.00	0.26	1.51	0.00	0.00	0.00	11.24	11.79	52.0	0.0	0.227
141.00	0.18	0.96	0.00	0.00	0.00	9.77	10.09	52.0	0.0	0.194
142.00	0.18	0.96	0.00	0.00	0.00	8.87	9.20	52.0	0.0	0.177
143.00	0.17	0.96	0.00	0.00	0.00	7.95	8.30	52.0	0.0	0.160
144.00	0.17	0.96	0.00	0.00	0.00	7.01	7.37	52.0	0.0	0.142
145.00	0.17	0.96	0.00	0.00	0.00	6.04	6.42	52.0	0.0	0.124
146.00	0.17	0.96	0.00	0.00	0.00	5.04	5.46	52.0	0.0	0.105
147.00	0.16	0.96	0.00	0.00	0.00	4.02	4.50	52.0	0.0	0.086
147.90	0.01	0.16	0.00	0.00	0.00	1.61	1.65	52.0	0.0	0.032
148.00	0.00	0.16	0.00	0.00	0.00	1.60	1.62	52.0	0.0	0.031

©2007 - 2015 by ATC IP LLC. All rights reserved.

Load Case: Ice 77.94 mph Wind with Ice 29 Iterations

Gust Response Factor 1.69
Dead Load Factor : 1.00
Wind Load Factor : 1.00

Applied Segment Forces Summary

		Shaft Forces		Discrete Forces				Linear Forces		Sum of Forces			
Seg Elev (ft)	Description	Wind FX (lb)	Dead Load (lb)	Wind FX (lb)	Torsion MY (lb-ft)	Moment MZ (lb-ft)	Dead Load (lb)	Wind FX (lb)	Dead Load (lb)	Wind FX (lb)	Dead Load (lb)	Torsion MY (lb-ft)	Moment MZ (lb)
0.00		34.8	0.0					0.0	0.0	34.8	0.0	0.0	0.0
1.00		69.5	254.1					18.4	66.8	87.9	320.9	0.0	0.0
2.00		69.2	253.0					18.4	66.8	87.6	319.8	0.0	0.0
3.00		68.9	252.0					18.4	66.8	87.3	318.8	0.0	0.0
4.00		68.6	250.9					18.4	66.8	87.0	317.7	0.0	0.0
5.00		68.4	249.9					18.4	66.8	86.8	316.7	0.0	0.0
6.00		68.1	248.9					26.3	77.2	94.4	326.1	0.0	0.0
7.00		67.8	247.8					26.3	77.2	94.1	325.0	0.0	0.0
8.00		67.5	246.8					26.3	77.2	93.8	324.0	0.0	0.0
9.00		67.3	245.7					26.3	77.2	93.5	322.9	0.0	0.0
10.00		67.0	244.7					26.3	77.2	93.3	321.9	0.0	0.0
11.00		66.7	243.6					49.9	112.4	116.6	356.1	0.0	0.0
12.00		66.4	242.6					49.9	112.4	116.4	355.0	0.0	0.0
13.00		66.1	241.6					49.9	112.4	116.1	354.0	0.0	0.0
14.00		65.9	240.5					49.9	112.4	115.8	353.0	0.0	0.0
15.00		65.6	239.5					49.9	112.4	115.5	351.9	0.0	0.0
16.00		65.3	238.4					49.9	112.4	115.2	350.9	0.0	0.0
17.00		65.0	237.4					49.9	112.4	115.0	349.8	0.0	0.0
18.00		64.7	236.3					49.9	112.4	114.7	348.8	0.0	0.0
19.00		64.5	235.3					49.9	112.4	114.4	347.7	0.0	0.0
20.00		64.2	234.2					49.9	112.4	114.1	346.7	0.0	0.0
21.00		63.9	233.2					49.9	112.4	113.8	345.6	0.0	0.0
22.00		63.6	232.2					49.9	112.4	113.6	344.6	0.0	0.0
23.00		63.4	231.1					49.9	112.4	113.3	343.6	0.0	0.0
24.00		63.1	230.1					49.9	112.4	113.0	342.5	0.0	0.0
25.00		62.8	229.0					49.9	112.4	112.7	341.5	0.0	0.0
26.00		62.5	228.0					49.9	112.4	112.5	340.4	0.0	0.0
27.00		62.2	226.9					49.9	112.4	112.2	339.4	0.0	0.0
28.00		62.0	225.9					49.9	112.4	111.9	338.3	0.0	0.0
29.00		61.7	224.8					49.9	112.4	111.6	337.3	0.0	0.0
30.00		61.4	223.8					49.9	112.4	111.3	336.2	0.0	0.0
31.00		61.1	222.8					49.9	112.4	111.1	335.2	0.0	0.0
32.00		60.9	221.7					49.9	112.4	110.8	334.2	0.0	0.0
33.00		60.7	220.7					49.9	112.4	110.6	333.1	0.0	0.0
34.00		60.8	219.6					50.1	112.4	111.0	332.1	0.0	0.0
35.00		61.0	218.6					50.6	112.4	111.6	331.0	0.0	0.0
36.00		61.2	217.5					51.0	112.4	112.2	330.0	0.0	0.0
37.00		61.4	216.5					51.4	112.4	112.8	328.9	0.0	0.0
38.00		61.6	215.4					51.8	112.4	113.4	327.9	0.0	0.0
39.00		61.8	214.4					52.2	112.4	114.0	326.8	0.0	0.0
40.00		61.9	213.4					52.6	112.4	114.5	325.8	0.0	0.0
41.00		32.1	212.3					52.9	112.4	85.1	324.8	0.0	0.0
41.04	Bot - Section 2	31.6	7.7					1.9	4.1	33.5	11.8	0.0	0.0
42.00		62.2	361.2					51.4	108.4	113.6	469.5	0.0	0.0
43.00		63.5	373.0					53.7	112.4	117.2	485.4	0.0	0.0
44.00		63.6	371.1					54.0	112.4	117.6	483.6	0.0	0.0
45.00		63.7	369.3					54.4	112.4	118.1	481.7	0.0	0.0

©2007 - 2015 by ATC IP LLC. All rights reserved.

Load Case: Ice 77.94 mph Wind with Ice 29 Iterations

Gust Response Factor 1.69
Dead Load Factor : 1.00
Wind Load Factor : 1.00

46.00		52.0	367.4					54.7	112.4	106.7	479.9	0.0	0.0
46.63	Top - Section 1	31.9	230.6					34.7	70.8	66.6	301.4	0.0	0.0
47.00		43.8	67.9					20.4	41.6	64.2	109.5	0.0	0.0
48.00		64.0	182.9					55.4	112.4	119.4	295.4	0.0	0.0
49.00		64.0	182.0					55.7	112.4	119.8	294.5	0.0	0.0
50.00		64.1	181.1					56.1	112.4	120.1	293.5	0.0	0.0
51.00		64.1	180.2					56.4	112.4	120.5	292.6	0.0	0.0
52.00		64.2	179.3					56.7	112.4	120.9	291.7	0.0	0.0
53.00		64.2	178.4					57.0	112.4	121.2	290.8	0.0	0.0
54.00		64.2	177.4					57.3	112.4	121.6	289.9	0.0	0.0
55.00		64.2	176.5					57.6	112.4	121.9	289.0	0.0	0.0
56.00		64.2	175.6					57.9	112.4	122.2	288.1	0.0	0.0
57.00		64.2	174.7					58.2	112.4	122.5	287.2	0.0	0.0
58.00		64.2	173.8					58.5	112.4	122.8	286.2	0.0	0.0
59.00		64.2	172.9					58.8	112.4	123.0	285.3	0.0	0.0
60.00		64.2	172.0					59.1	112.4	123.3	284.4	0.0	0.0
61.00		64.2	171.1					59.4	112.4	123.6	283.5	0.0	0.0
62.00		64.1	170.1					59.7	112.4	123.8	282.6	0.0	0.0
63.00		64.1	169.2					59.9	112.4	124.0	281.7	0.0	0.0
64.00		64.1	168.3					60.2	112.4	124.3	280.8	0.0	0.0
65.00		64.0	167.4					60.5	112.4	124.5	279.9	0.0	0.0
66.00		63.9	166.5					60.7	112.4	124.7	278.9	0.0	0.0
67.00		63.9	165.6					61.0	112.4	124.9	278.0	0.0	0.0
68.00		63.8	164.7					61.3	112.4	125.1	277.1	0.0	0.0
69.00		63.7	163.8					61.5	112.4	125.3	276.2	0.0	0.0
70.00		63.6	162.8					61.8	112.4	125.4	275.3	0.0	0.0
71.00		63.6	161.9					62.0	112.4	125.6	274.4	0.0	0.0
72.00		63.5	161.0					62.3	112.4	125.7	273.5	0.0	0.0
73.00		63.4	160.1					62.5	112.4	125.9	272.6	0.0	0.0
74.00		63.3	159.2					62.8	112.4	126.0	271.6	0.0	0.0
75.00	Appertunance(s)	63.2	158.3	245.9	0.0	0.0	233.5	63.0	112.4	372.1	504.2	0.0	0.0
76.00		63.0	157.4					63.3	112.4	126.3	269.8	0.0	0.0
77.00		62.9	156.5					63.5	112.4	126.4	268.9	0.0	0.0
78.00		62.8	155.5					63.7	112.4	126.5	268.0	0.0	0.0
79.00		62.7	154.6					64.0	112.4	126.6	267.1	0.0	0.0
80.00		62.5	153.7					64.2	112.4	126.7	266.2	0.0	0.0
81.00		46.6	152.8					64.4	112.4	111.0	265.3	0.0	0.0
81.49	Bot - Section 3	31.5	74.8					31.7	55.3	63.2	130.0	0.0	0.0
82.00		47.8	134.1					32.9	57.2	80.7	191.3	0.0	0.0
83.00		63.3	262.5					64.9	112.4	128.2	375.0	0.0	0.0
84.00		63.1	261.0					65.1	112.4	128.2	373.4	0.0	0.0
85.00		63.0	259.4					65.3	112.4	128.3	371.8	0.0	0.0
86.00		37.0	257.8					65.5	112.4	102.5	370.3	0.0	0.0
86.18	Top - Section 2	31.4	45.3					11.6	19.8	42.9	65.1	0.0	0.0
87.00		57.1	106.1					54.2	92.6	111.3	198.7	0.0	0.0
88.00		62.5	128.0					66.0	112.4	128.5	240.5	0.0	0.0
89.00		62.3	127.2					66.2	112.4	128.5	239.7	0.0	0.0
90.00		62.2	126.5					66.4	112.4	128.6	238.9	0.0	0.0
91.00		62.0	125.7					66.6	112.4	128.6	238.1	0.0	0.0
92.00		61.8	124.9					66.8	112.4	128.6	237.4	0.0	0.0
93.00		61.6	124.1					67.0	112.4	128.7	236.6	0.0	0.0
94.00		61.4	123.3					67.2	112.4	128.7	235.8	0.0	0.0
95.00		61.2	122.6					67.4	112.4	128.7	235.0	0.0	0.0
96.00		61.1	121.8					67.6	112.4	128.7	234.2	0.0	0.0
97.00		60.9	121.0					67.8	112.4	128.7	233.4	0.0	0.0
98.00		60.7	120.2					68.0	112.4	128.7	232.7	0.0	0.0
99.00		60.4	119.4					68.2	112.4	128.7	231.9	0.0	0.0

©2007 - 2015 by ATC IP LLC. All rights reserved.

Load Case: Ice 77.94 mph Wind with Ice 29 Iterations

Gust Response Factor 1.69
Dead Load Factor : 1.00
Wind Load Factor : 1.00

100.00	Appertunance(s)	60.2	118.7	361.0	0.0	740.8	223.0	68.4	112.4	489.7	454.1	0.0	0.0
101.00		60.0	117.9					68.6	112.4	128.7	230.3	0.0	0.0
102.00		59.8	117.1					68.8	112.4	128.6	229.5	0.0	0.0
103.00		59.6	116.3					69.0	112.4	128.6	228.8	0.0	0.0
104.00		59.4	115.5					69.2	112.4	128.6	228.0	0.0	0.0
105.00		59.1	114.8					69.4	112.4	128.6	227.2	0.0	0.0
106.00		58.9	114.0					69.6	112.4	128.5	226.4	0.0	0.0
107.00		58.7	113.2					69.8	112.4	128.5	225.6	0.0	0.0
108.00		51.2	112.4					70.0	112.4	121.1	224.9	0.0	0.0
108.75	Reinf. Top	29.2	83.8					52.6	84.3	81.8	168.1	0.0	0.0
109.00		36.3	27.8					17.6	11.4	53.9	39.3	0.0	0.0
110.00	Appertunance(s)	58.0	110.9	581.9	0.0	0.0	574.4	70.3	45.7	710.2	730.9	0.0	0.0
111.00		57.7	110.1					70.5	45.4	128.3	155.4	0.0	0.0
112.00		57.5	109.3					70.7	45.4	128.2	154.6	0.0	0.0
113.00		57.2	108.5					70.9	45.4	128.1	153.9	0.0	0.0
114.00		57.0	107.7					51.4	45.4	108.4	153.1	0.0	0.0
115.00		56.7	107.0					45.0	45.4	101.7	152.3	0.0	0.0
116.00		56.5	106.2					45.1	45.4	101.6	151.5	0.0	0.0
117.00		56.2	105.4					45.2	45.4	101.4	150.7	0.0	0.0
118.00		55.9	104.6					45.3	45.4	101.3	150.0	0.0	0.0
119.00		55.7	103.8					45.4	45.4	101.1	149.2	0.0	0.0
120.00	Appertunance(s)	55.4	103.1	3,174.1	0.0	0.0	3,226.5	45.6	45.4	3,275.1	3,374.9	0.0	0.0
121.00		55.1	102.3					45.7	44.1	100.8	146.4	0.0	0.0
122.00		54.9	101.5					45.8	44.1	100.6	145.6	0.0	0.0
123.00		54.6	100.7					45.9	44.1	100.5	144.8	0.0	0.0
124.00		54.1	99.9					46.0	44.1	100.1	144.0	0.0	0.0
124.99	Bot - Section 4	27.1	98.5					45.8	43.8	72.9	142.4	0.0	0.0
125.00		27.6	1.0					0.3	0.3	27.9	1.3	0.0	0.0
126.00		54.8	166.4					46.2	44.1	101.0	210.5	0.0	0.0
127.00		54.5	165.1					46.3	44.1	100.8	209.2	0.0	0.0
128.00		45.6	163.8					46.4	44.1	92.0	207.9	0.0	0.0
128.68	Top - Section 3	27.0	110.9					31.7	30.1	58.7	140.9	0.0	0.0
129.00		35.5	26.0					14.8	14.0	50.3	40.0	0.0	0.0
130.00		53.6	81.0					46.6	44.1	100.2	125.1	0.0	0.0
131.00	Appertunance(s)	53.3	80.4	2,620.7	0.0	0.0	2,161.4	46.7	44.1	2,720.8	2,285.9	0.0	0.0
132.00		53.0	79.7					46.8	39.2	99.9	118.9	0.0	0.0
133.00	Appertunance(s)	52.7	79.1	79.8	0.0	0.0	70.1	46.9	39.2	179.5	188.3	0.0	0.0
134.00		52.4	78.5					47.0	39.2	99.5	117.6	0.0	0.0
135.00		52.1	77.8					47.1	39.2	99.2	117.0	0.0	0.0
136.00		51.8	77.2					47.2	39.2	99.0	116.3	0.0	0.0
137.00	Appertunance(s)	51.5	76.5	1,193.8	0.0	0.0	1,107.2	47.3	39.2	1,292.6	1,222.9	0.0	0.0
138.00		51.2	75.9					23.7	36.0	74.9	111.8	0.0	0.0
139.00		50.9	75.2					23.8	36.0	74.6	111.2	0.0	0.0
140.00		50.6	74.6					23.8	36.0	74.4	110.5	0.0	0.0
141.00	Appertunance(s)	50.3	73.9	3,811.2	0.0	-460.2	2,550.5	23.9	36.0	3,885.3	2,660.4	0.0	0.0
142.00		49.9	73.3					12.0	26.1	61.9	99.4	0.0	0.0
143.00		49.6	72.6					12.0	26.1	61.6	98.7	0.0	0.0
144.00		49.3	72.0					12.0	26.1	61.3	98.1	0.0	0.0
145.00		49.0	71.3					12.0	26.1	61.0	97.4	0.0	0.0
146.00		48.6	70.7					12.0	26.1	60.7	96.8	0.0	0.0
147.00		45.9	70.0					12.1	26.1	58.0	96.1	0.0	0.0
147.90		24.1	62.5					10.9	23.5	34.9	86.0	0.0	0.0
148.00	Appertunance(s)	2.4	6.9	769.6	0.0	9,235.4	313.3	1.2	1.0	773.2	321.2	0.0	0.0
									Totals:	29,447.36	49,035.39	0.00	0.00

©2007 - 2015 by ATC IP LLC. All rights reserved.

Load Case: Ice 77.94 mph Wind with Ice 29 Iterations

Gust Response Factor 1.69
Dead Load Factor : 1.00
Wind Load Factor : 1.00

Calculated Shaft Forces and Deflections

Seg Elev (ft)	Lateral FX (-) (kips)	Axial FY (-) (kips)	Lateral FZ (kips)	Moment MX (ft-kips)	Torsion MY (ft-kips)	Moment MZ (ft-kips)	X Deflect (in)	Z Deflect (in)	Total Deflect (in)	Rotation (deg)
0.00	-33.737	-52.986	0.000	0.000	0.000	-3,687.459	0.000	0.000	0.000	0.000
1.00	-33.686	-52.642	0.000	0.000	0.000	-3,653.722	-0.005	0.000	0.005	-0.040
2.00	-33.634	-52.299	0.000	0.000	0.000	-3,620.037	-0.018	0.000	0.018	-0.080
3.00	-33.583	-51.957	0.000	0.000	0.000	-3,586.403	-0.039	0.000	0.039	-0.119
4.00	-33.531	-51.616	0.000	0.000	0.000	-3,552.821	-0.068	0.000	0.068	-0.159
5.00	-33.479	-51.276	0.000	0.000	0.000	-3,519.291	-0.106	0.000	0.106	-0.199
6.00	-33.419	-50.927	0.000	0.000	0.000	-3,485.813	-0.153	0.000	0.153	-0.239
7.00	-33.359	-50.579	0.000	0.000	0.000	-3,452.394	-0.208	0.000	0.208	-0.280
8.00	-33.299	-50.233	0.000	0.000	0.000	-3,419.036	-0.271	0.000	0.271	-0.320
9.00	-33.238	-49.887	0.000	0.000	0.000	-3,385.738	-0.342	0.000	0.342	-0.360
10.00	-33.178	-49.542	0.000	0.000	0.000	-3,352.501	-0.422	0.000	0.422	-0.400
11.00	-33.093	-49.164	0.000	0.000	0.000	-3,319.324	-0.511	0.000	0.511	-0.441
12.00	-33.008	-48.786	0.000	0.000	0.000	-3,286.231	-0.608	0.000	0.608	-0.481
13.00	-32.923	-48.410	0.000	0.000	0.000	-3,253.224	-0.713	0.000	0.713	-0.521
14.00	-32.838	-48.035	0.000	0.000	0.000	-3,220.301	-0.827	0.000	0.827	-0.562
15.00	-32.753	-47.661	0.000	0.000	0.000	-3,187.464	-0.949	0.000	0.949	-0.602
16.00	-32.667	-47.289	0.000	0.000	0.000	-3,154.712	-1.080	0.000	1.080	-0.643
17.00	-32.582	-46.917	0.000	0.000	0.000	-3,122.045	-1.220	0.000	1.220	-0.684
18.00	-32.496	-46.547	0.000	0.000	0.000	-3,089.464	-1.368	0.000	1.368	-0.724
19.00	-32.410	-46.177	0.000	0.000	0.000	-3,056.969	-1.524	0.000	1.524	-0.765
20.00	-32.323	-45.809	0.000	0.000	0.000	-3,024.560	-1.689	0.000	1.689	-0.806
21.00	-32.237	-45.442	0.000	0.000	0.000	-2,992.237	-1.862	0.000	1.862	-0.847
22.00	-32.150	-45.077	0.000	0.000	0.000	-2,960.001	-2.044	0.000	2.044	-0.887
23.00	-32.064	-44.712	0.000	0.000	0.000	-2,927.851	-2.235	0.000	2.235	-0.928
24.00	-31.977	-44.349	0.000	0.000	0.000	-2,895.789	-2.434	0.000	2.434	-0.969
25.00	-31.889	-43.986	0.000	0.000	0.000	-2,863.813	-2.642	0.000	2.642	-1.010
26.00	-31.802	-43.625	0.000	0.000	0.000	-2,831.924	-2.858	0.000	2.858	-1.051
27.00	-31.714	-43.265	0.000	0.000	0.000	-2,800.123	-3.083	0.000	3.083	-1.092
28.00	-31.627	-42.907	0.000	0.000	0.000	-2,768.409	-3.316	0.000	3.316	-1.133
29.00	-31.539	-42.549	0.000	0.000	0.000	-2,736.783	-3.558	0.000	3.558	-1.174
30.00	-31.451	-42.193	0.000	0.000	0.000	-2,705.245	-3.809	0.000	3.809	-1.215
31.00	-31.363	-41.838	0.000	0.000	0.000	-2,673.795	-4.068	0.000	4.068	-1.256
32.00	-31.274	-41.483	0.000	0.000	0.000	-2,642.433	-4.336	0.000	4.336	-1.297
33.00	-31.185	-41.131	0.000	0.000	0.000	-2,611.159	-4.613	0.000	4.613	-1.339
34.00	-31.096	-40.779	0.000	0.000	0.000	-2,579.975	-4.898	0.000	4.898	-1.380
35.00	-31.005	-40.429	0.000	0.000	0.000	-2,548.880	-5.191	0.000	5.191	-1.421
36.00	-30.913	-40.079	0.000	0.000	0.000	-2,517.875	-5.494	0.000	5.494	-1.462
37.00	-30.821	-39.731	0.000	0.000	0.000	-2,486.962	-5.805	0.000	5.805	-1.503
38.00	-30.727	-39.384	0.000	0.000	0.000	-2,456.142	-6.124	0.000	6.124	-1.544
39.00	-30.632	-39.039	0.000	0.000	0.000	-2,425.416	-6.452	0.000	6.452	-1.585
40.00	-30.536	-38.694	0.000	0.000	0.000	-2,394.785	-6.789	0.000	6.789	-1.626
41.00	-30.456	-38.361	0.000	0.000	0.000	-2,364.249	-7.134	0.000	7.134	-1.668
41.04	-30.436	-38.339	0.000	0.000	0.000	-2,363.145	-7.147	0.000	7.147	-1.669
42.00	-30.335	-37.852	0.000	0.000	0.000	-2,333.813	-7.488	0.000	7.488	-1.709
43.00	-30.230	-37.349	0.000	0.000	0.000	-2,303.478	-7.851	0.000	7.851	-1.749
44.00	-30.124	-36.848	0.000	0.000	0.000	-2,273.249	-8.222	0.000	8.222	-1.790
45.00	-30.016	-36.349	0.000	0.000	0.000	-2,243.126	-8.602	0.000	8.602	-1.831
46.00	-29.915	-35.855	0.000	0.000	0.000	-2,213.110	-8.990	0.000	8.990	-1.871
46.63	-29.851	-35.546	0.000	0.000	0.000	-2,194.264	-9.239	0.000	9.239	-1.897
47.00	-29.801	-35.423	0.000	0.000	0.000	-2,183.220	-9.386	0.000	9.386	-1.912
48.00	-29.698	-35.110	0.000	0.000	0.000	-2,153.419	-9.792	0.000	9.792	-1.955

©2007 - 2015 by ATC IP LLC. All rights reserved.

Load Case: Ice 77.94 mph Wind with Ice 29 Iterations

Gust Response Factor 1.69
Dead Load Factor : 1.00
Wind Load Factor : 1.00

49.00	-29.595	-34.797	0.000	0.000	0.000	-2,123.721	-10.206	0.000	10.206	-1.998
50.00	-29.490	-34.486	0.000	0.000	0.000	-2,094.128	-10.629	0.000	10.629	-2.041
51.00	-29.384	-34.176	0.000	0.000	0.000	-2,064.638	-11.062	0.000	11.062	-2.084
52.00	-29.278	-33.867	0.000	0.000	0.000	-2,035.255	-11.503	0.000	11.503	-2.126
53.00	-29.171	-33.560	0.000	0.000	0.000	-2,005.977	-11.953	0.000	11.953	-2.169
54.00	-29.063	-33.253	0.000	0.000	0.000	-1,976.806	-12.412	0.000	12.412	-2.212
55.00	-28.955	-32.948	0.000	0.000	0.000	-1,947.744	-12.881	0.000	12.881	-2.254
56.00	-28.845	-32.643	0.000	0.000	0.000	-1,918.790	-13.357	0.000	13.357	-2.297
57.00	-28.735	-32.340	0.000	0.000	0.000	-1,889.945	-13.843	0.000	13.843	-2.339
58.00	-28.624	-32.038	0.000	0.000	0.000	-1,861.210	-14.338	0.000	14.338	-2.381
59.00	-28.513	-31.737	0.000	0.000	0.000	-1,832.586	-14.842	0.000	14.842	-2.423
60.00	-28.401	-31.437	0.000	0.000	0.000	-1,804.074	-15.354	0.000	15.354	-2.465
61.00	-28.288	-31.139	0.000	0.000	0.000	-1,775.674	-15.875	0.000	15.875	-2.507
62.00	-28.174	-30.842	0.000	0.000	0.000	-1,747.387	-16.405	0.000	16.405	-2.549
63.00	-28.060	-30.545	0.000	0.000	0.000	-1,719.214	-16.943	0.000	16.943	-2.591
64.00	-27.945	-30.250	0.000	0.000	0.000	-1,691.155	-17.491	0.000	17.491	-2.632
65.00	-27.829	-29.956	0.000	0.000	0.000	-1,663.211	-18.047	0.000	18.047	-2.674
66.00	-27.713	-29.664	0.000	0.000	0.000	-1,635.382	-18.612	0.000	18.612	-2.715
67.00	-27.596	-29.372	0.000	0.000	0.000	-1,607.670	-19.185	0.000	19.185	-2.756
68.00	-27.478	-29.082	0.000	0.000	0.000	-1,580.075	-19.767	0.000	19.767	-2.797
69.00	-27.360	-28.793	0.000	0.000	0.000	-1,552.597	-20.357	0.000	20.357	-2.838
70.00	-27.241	-28.505	0.000	0.000	0.000	-1,525.238	-20.956	0.000	20.956	-2.879
71.00	-27.122	-28.218	0.000	0.000	0.000	-1,497.997	-21.564	0.000	21.564	-2.920
72.00	-27.002	-27.932	0.000	0.000	0.000	-1,470.876	-22.180	0.000	22.180	-2.960
73.00	-26.881	-27.648	0.000	0.000	0.000	-1,443.874	-22.804	0.000	22.804	-3.000
74.00	-26.760	-27.364	0.000	0.000	0.000	-1,416.993	-23.437	0.000	23.437	-3.040
75.00	-26.381	-26.862	0.000	0.000	0.000	-1,390.233	-24.078	0.000	24.078	-3.080
76.00	-26.258	-26.582	0.000	0.000	0.000	-1,363.853	-24.728	0.000	24.728	-3.120
77.00	-26.135	-26.302	0.000	0.000	0.000	-1,337.595	-25.385	0.000	25.385	-3.159
78.00	-26.012	-26.024	0.000	0.000	0.000	-1,311.461	-26.051	0.000	26.051	-3.198
79.00	-25.888	-25.747	0.000	0.000	0.000	-1,285.449	-26.725	0.000	26.725	-3.237
80.00	-25.763	-25.471	0.000	0.000	0.000	-1,259.562	-27.408	0.000	27.408	-3.276
81.00	-25.650	-25.200	0.000	0.000	0.000	-1,233.799	-28.098	0.000	28.098	-3.314
81.49	-25.588	-25.065	0.000	0.000	0.000	-1,221.194	-28.440	0.000	28.440	-3.333
82.00	-25.508	-24.866	0.000	0.000	0.000	-1,208.181	-28.796	0.000	28.796	-3.353
83.00	-25.374	-24.483	0.000	0.000	0.000	-1,182.673	-29.503	0.000	29.503	-3.390
84.00	-25.240	-24.101	0.000	0.000	0.000	-1,157.299	-30.217	0.000	30.217	-3.428
85.00	-25.105	-23.722	0.000	0.000	0.000	-1,132.060	-30.939	0.000	30.939	-3.465
86.00	-24.989	-23.349	0.000	0.000	0.000	-1,106.955	-31.668	0.000	31.668	-3.501
86.18	-24.949	-23.279	0.000	0.000	0.000	-1,102.551	-31.797	0.000	31.797	-3.508
87.00	-24.840	-23.072	0.000	0.000	0.000	-1,082.000	-32.405	0.000	32.405	-3.538
88.00	-24.712	-22.824	0.000	0.000	0.000	-1,057.160	-33.150	0.000	33.150	-3.576
89.00	-24.584	-22.576	0.000	0.000	0.000	-1,032.448	-33.904	0.000	33.904	-3.614
90.00	-24.455	-22.330	0.000	0.000	0.000	-1,007.865	-34.665	0.000	34.665	-3.652
91.00	-24.326	-22.085	0.000	0.000	0.000	-983.411	-35.434	0.000	35.434	-3.689
92.00	-24.196	-21.841	0.000	0.000	0.000	-959.085	-36.210	0.000	36.210	-3.726
93.00	-24.066	-21.598	0.000	0.000	0.000	-934.890	-36.995	0.000	36.995	-3.763
94.00	-23.935	-21.356	0.000	0.000	0.000	-910.824	-37.787	0.000	37.787	-3.799
95.00	-23.805	-21.115	0.000	0.000	0.000	-886.889	-38.586	0.000	38.586	-3.835
96.00	-23.673	-20.876	0.000	0.000	0.000	-863.085	-39.393	0.000	39.393	-3.870
97.00	-23.542	-20.637	0.000	0.000	0.000	-839.412	-40.207	0.000	40.207	-3.905
98.00	-23.409	-20.400	0.000	0.000	0.000	-815.871	-41.029	0.000	41.029	-3.939
99.00	-23.277	-20.164	0.000	0.000	0.000	-792.462	-41.857	0.000	41.857	-3.973
100.0	-22.768	-19.732	0.000	0.000	0.000	-768.445	-42.693	0.000	42.693	-4.007
101.0	-22.635	-19.498	0.000	0.000	0.000	-745.677	-43.536	0.000	43.536	-4.040
102.0	-22.501	-19.266	0.000	0.000	0.000	-723.043	-44.385	0.000	44.385	-4.072
103.0	-22.367	-19.034	0.000	0.000	0.000	-700.542	-45.241	0.000	45.241	-4.104

©2007 - 2015 by ATC IP LLC. All rights reserved.

Load Case: Ice 77.94 mph Wind with Ice 29 Iterations

Gust Response Factor 1.69
Dead Load Factor : 1.00
Wind Load Factor : 1.00

104.0	-22.233	-18.804	0.000	0.000	0.000	-678.175	-46.104	0.000	46.104	-4.136
105.0	-22.098	-18.575	0.000	0.000	0.000	-655.943	-46.973	0.000	46.973	-4.166
106.0	-21.963	-18.347	0.000	0.000	0.000	-633.845	-47.849	0.000	47.849	-4.197
107.0	-21.828	-18.120	0.000	0.000	0.000	-611.883	-48.731	0.000	48.731	-4.227
108.0	-21.698	-17.895	0.000	0.000	0.000	-590.055	-49.619	0.000	49.619	-4.256
108.7	-21.608	-17.728	0.000	0.000	0.000	-573.782	-50.289	0.000	50.289	-4.277
109.0	-21.562	-17.681	0.000	0.000	0.000	-568.380	-50.513	0.000	50.513	-4.284
110.0	-20.816	-16.984	0.000	0.000	0.000	-546.819	-51.416	0.000	51.416	-4.343
111.0	-20.694	-16.818	0.000	0.000	0.000	-526.003	-52.332	0.000	52.332	-4.402
112.0	-20.570	-16.653	0.000	0.000	0.000	-505.310	-53.259	0.000	53.259	-4.459
113.0	-20.447	-16.490	0.000	0.000	0.000	-484.740	-54.199	0.000	54.199	-4.515
114.0	-20.342	-16.327	0.000	0.000	0.000	-464.294	-55.150	0.000	55.150	-4.570
115.0	-20.243	-16.165	0.000	0.000	0.000	-443.952	-56.112	0.000	56.112	-4.623
116.0	-20.144	-16.004	0.000	0.000	0.000	-423.710	-57.086	0.000	57.086	-4.676
117.0	-20.045	-15.844	0.000	0.000	0.000	-403.566	-58.070	0.000	58.070	-4.727
118.0	-19.945	-15.686	0.000	0.000	0.000	-383.522	-59.065	0.000	59.065	-4.777
119.0	-19.845	-15.529	0.000	0.000	0.000	-363.577	-60.070	0.000	60.070	-4.825
120.0	-16.306	-12.430	0.000	0.000	0.000	-343.733	-61.084	0.000	61.084	-4.872
121.0	-16.203	-12.281	0.000	0.000	0.000	-327.427	-62.109	0.000	62.109	-4.917
122.0	-16.099	-12.132	0.000	0.000	0.000	-311.225	-63.143	0.000	63.143	-4.961
123.0	-15.995	-11.985	0.000	0.000	0.000	-295.127	-64.185	0.000	64.185	-5.004
124.0	-15.891	-11.839	0.000	0.000	0.000	-279.132	-65.237	0.000	65.237	-5.046
124.9	-15.810	-11.698	0.000	0.000	0.000	-263.338	-66.291	0.000	66.291	-5.086
125.0	-15.787	-11.693	0.000	0.000	0.000	-263.241	-66.297	0.000	66.297	-5.086
126.0	-15.675	-11.482	0.000	0.000	0.000	-247.455	-67.366	0.000	67.366	-5.125
127.0	-15.563	-11.273	0.000	0.000	0.000	-231.781	-68.442	0.000	68.442	-5.162
128.0	-15.458	-11.066	0.000	0.000	0.000	-216.218	-69.526	0.000	69.526	-5.198
128.6	-15.390	-10.927	0.000	0.000	0.000	-205.684	-70.269	0.000	70.269	-5.221
129.0	-15.341	-10.885	0.000	0.000	0.000	-200.782	-70.617	0.000	70.617	-5.232
130.0	-15.237	-10.760	0.000	0.000	0.000	-185.441	-71.716	0.000	71.716	-5.270
131.0	-12.322	-8.727	0.000	0.000	0.000	-170.204	-72.823	0.000	72.823	-5.305
132.0	-12.217	-8.611	0.000	0.000	0.000	-157.882	-73.936	0.000	73.936	-5.339
133.0	-12.025	-8.434	0.000	0.000	0.000	-145.665	-75.057	0.000	75.057	-5.371
134.0	-11.919	-8.320	0.000	0.000	0.000	-133.640	-76.184	0.000	76.184	-5.401
135.0	-11.814	-8.207	0.000	0.000	0.000	-121.721	-77.317	0.000	77.317	-5.429
136.0	-11.708	-8.096	0.000	0.000	0.000	-109.908	-78.455	0.000	78.455	-5.455
137.0	-10.307	-6.997	0.000	0.000	0.000	-98.201	-79.599	0.000	79.599	-5.479
138.0	-10.224	-6.889	0.000	0.000	0.000	-87.894	-80.748	0.000	80.748	-5.502
139.0	-10.142	-6.783	0.000	0.000	0.000	-77.669	-81.901	0.000	81.901	-5.522
140.0	-10.059	-6.677	0.000	0.000	0.000	-67.528	-83.058	0.000	83.058	-5.540
141.0	-5.936	-4.403	0.000	0.000	0.000	-57.469	-84.219	0.000	84.219	-5.556
142.0	-5.866	-4.309	0.000	0.000	0.000	-51.533	-85.383	0.000	85.383	-5.571
143.0	-5.796	-4.215	0.000	0.000	0.000	-45.667	-86.549	0.000	86.549	-5.584
144.0	-5.726	-4.122	0.000	0.000	0.000	-39.872	-87.718	0.000	87.718	-5.596
145.0	-5.657	-4.030	0.000	0.000	0.000	-34.145	-88.890	0.000	88.890	-5.606
146.0	-5.588	-3.939	0.000	0.000	0.000	-28.489	-90.063	0.000	90.063	-5.615
147.0	-5.521	-3.849	0.000	0.000	0.000	-22.901	-91.239	0.000	91.239	-5.623
147.9	-0.801	-0.244	0.000	0.000	0.000	-9.315	-92.298	0.000	92.298	-5.629
148.0	-0.773	0.000	0.000	0.000	0.000	-9.235	-92.415	0.000	92.415	-5.629

©2007 - 2015 by ATC IP LLC. All rights reserved.

Load Case: Ice 77.94 mph Wind with Ice 29 Iterations

Gust Response Factor 1.69
Dead Load Factor : 1.00
Wind Load Factor : 1.00

Calculated Stresses

Seg Elev (ft)	Applied Stresses Axial (Y) (ksi)	Shear (X) (ksi)	Shear (Z) (ksi)	Torsion (ksi)	Bending (X) (ksi)	Bending (Z) (ksi)	Combined (ksi)	Allowable Stress (Fb) (ksi)	Allowable Stress (Fa) (ksi)	Stress Ratio
0.00	0.62	1.03	0.00	0.00	0.00	41.04	41.69	52.0	0.0	0.802
1.00	0.62	1.03	0.00	0.00	0.00	40.94	41.59	52.0	0.0	0.800
2.00	0.61	1.03	0.00	0.00	0.00	40.84	41.49	52.0	0.0	0.798
3.00	0.61	1.04	0.00	0.00	0.00	40.74	41.39	52.0	0.0	0.796
4.00	0.61	1.04	0.00	0.00	0.00	40.63	41.28	52.0	0.0	0.794
5.00	0.61	1.04	0.00	0.00	0.00	40.53	41.18	52.0	0.0	0.792
6.00	0.61	1.05	0.00	0.00	0.00	40.42	41.07	52.0	0.0	0.790
7.00	0.60	1.05	0.00	0.00	0.00	40.31	40.96	52.0	0.0	0.788
8.00	0.60	1.05	0.00	0.00	0.00	40.20	40.84	52.0	0.0	0.786
9.00	0.60	1.05	0.00	0.00	0.00	40.09	40.73	52.0	0.0	0.784
10.00	0.60	1.06	0.00	0.00	0.00	39.97	40.61	52.0	0.0	0.781
11.00	0.59	1.06	0.00	0.00	0.00	39.86	40.49	52.0	0.0	0.779
12.00	0.59	1.06	0.00	0.00	0.00	39.74	40.37	52.0	0.0	0.777
13.00	0.59	1.06	0.00	0.00	0.00	39.62	40.25	52.0	0.0	0.774
14.00	0.59	1.06	0.00	0.00	0.00	39.50	40.13	52.0	0.0	0.772
15.00	0.58	1.07	0.00	0.00	0.00	39.37	40.00	52.0	0.0	0.770
16.00	0.58	1.07	0.00	0.00	0.00	39.25	39.87	52.0	0.0	0.767
17.00	0.58	1.07	0.00	0.00	0.00	39.12	39.74	52.0	0.0	0.765
18.00	0.58	1.07	0.00	0.00	0.00	38.99	39.61	52.0	0.0	0.762
19.00	0.57	1.07	0.00	0.00	0.00	38.86	39.48	52.0	0.0	0.759
20.00	0.57	1.07	0.00	0.00	0.00	38.73	39.34	52.0	0.0	0.757
21.00	0.57	1.08	0.00	0.00	0.00	38.59	39.20	52.0	0.0	0.754
22.00	0.57	1.08	0.00	0.00	0.00	38.46	39.07	52.0	0.0	0.752
23.00	0.56	1.08	0.00	0.00	0.00	38.32	38.92	52.0	0.0	0.749
24.00	0.56	1.08	0.00	0.00	0.00	38.18	38.78	52.0	0.0	0.746
25.00	0.56	1.08	0.00	0.00	0.00	38.03	38.64	52.0	0.0	0.743
26.00	0.55	1.09	0.00	0.00	0.00	37.89	38.49	52.0	0.0	0.740
27.00	0.55	1.09	0.00	0.00	0.00	37.74	38.34	52.0	0.0	0.738
28.00	0.55	1.09	0.00	0.00	0.00	37.59	38.19	52.0	0.0	0.735
29.00	0.55	1.09	0.00	0.00	0.00	37.44	38.03	52.0	0.0	0.732
30.00	0.54	1.09	0.00	0.00	0.00	37.29	37.88	52.0	0.0	0.729
31.00	0.54	1.10	0.00	0.00	0.00	37.13	37.72	52.0	0.0	0.726
32.00	0.54	1.10	0.00	0.00	0.00	36.97	37.56	52.0	0.0	0.723
33.00	0.54	1.10	0.00	0.00	0.00	36.81	37.40	52.0	0.0	0.719
34.00	0.53	1.10	0.00	0.00	0.00	36.65	37.23	52.0	0.0	0.716
35.00	0.53	1.11	0.00	0.00	0.00	36.48	37.06	52.0	0.0	0.713
36.00	0.53	1.11	0.00	0.00	0.00	36.32	36.89	52.0	0.0	0.710
37.00	0.53	1.11	0.00	0.00	0.00	36.15	36.72	52.0	0.0	0.706
38.00	0.52	1.11	0.00	0.00	0.00	35.97	36.55	52.0	0.0	0.703
39.00	0.52	1.11	0.00	0.00	0.00	35.80	36.37	52.0	0.0	0.700
40.00	0.52	1.12	0.00	0.00	0.00	35.62	36.19	52.0	0.0	0.696
41.00	0.51	1.12	0.00	0.00	0.00	35.44	36.01	52.0	0.0	0.693
41.04	0.51	1.12	0.00	0.00	0.00	35.43	36.00	52.0	0.0	0.693
42.00	0.51	1.12	0.00	0.00	0.00	34.88	35.44	52.0	0.0	0.682
43.00	0.50	1.12	0.00	0.00	0.00	34.70	35.25	52.0	0.0	0.678
44.00	0.50	1.12	0.00	0.00	0.00	34.51	35.06	52.0	0.0	0.674
45.00	0.49	1.12	0.00	0.00	0.00	34.32	34.86	52.0	0.0	0.671
46.00	0.49	1.13	0.00	0.00	0.00	34.12	34.67	52.0	0.0	0.667
46.63	0.54	1.29	0.00	0.00	0.00	36.75	37.35	52.0	0.0	0.719
47.00	0.53	1.29	0.00	0.00	0.00	36.67	37.27	52.0	0.0	0.717
48.00	0.53	1.29	0.00	0.00	0.00	36.44	37.04	52.0	0.0	0.713

©2007 - 2015 by ATC IP LLC. All rights reserved.

Load Case: Ice 77.94 mph Wind with Ice 29 Iterations

Gust Response Factor 1.69
Dead Load Factor : 1.00
Wind Load Factor : 1.00

49.00	0.53	1.29	0.00	0.00	0.00	36.21	36.81	52.0	0.0	0.708
50.00	0.53	1.29	0.00	0.00	0.00	35.98	36.58	52.0	0.0	0.704
51.00	0.52	1.30	0.00	0.00	0.00	35.75	36.34	52.0	0.0	0.699
52.00	0.52	1.30	0.00	0.00	0.00	35.52	36.11	52.0	0.0	0.695
53.00	0.52	1.30	0.00	0.00	0.00	35.28	35.87	52.0	0.0	0.690
54.00	0.51	1.30	0.00	0.00	0.00	35.04	35.62	52.0	0.0	0.685
55.00	0.51	1.30	0.00	0.00	0.00	34.79	35.37	52.0	0.0	0.681
56.00	0.51	1.31	0.00	0.00	0.00	34.54	35.12	52.0	0.0	0.676
57.00	0.51	1.31	0.00	0.00	0.00	34.29	34.87	52.0	0.0	0.671
58.00	0.50	1.31	0.00	0.00	0.00	34.04	34.61	52.0	0.0	0.666
59.00	0.50	1.31	0.00	0.00	0.00	33.78	34.35	52.0	0.0	0.661
60.00	0.50	1.31	0.00	0.00	0.00	33.52	34.09	52.0	0.0	0.656
61.00	0.49	1.31	0.00	0.00	0.00	33.26	33.83	52.0	0.0	0.651
62.00	0.49	1.32	0.00	0.00	0.00	32.99	33.56	52.0	0.0	0.646
63.00	0.49	1.32	0.00	0.00	0.00	32.72	33.28	52.0	0.0	0.640
64.00	0.49	1.32	0.00	0.00	0.00	32.44	33.01	52.0	0.0	0.635
65.00	0.48	1.32	0.00	0.00	0.00	32.17	32.73	52.0	0.0	0.630
66.00	0.48	1.32	0.00	0.00	0.00	31.88	32.45	52.0	0.0	0.624
67.00	0.48	1.32	0.00	0.00	0.00	31.60	32.16	52.0	0.0	0.619
68.00	0.47	1.33	0.00	0.00	0.00	31.31	31.87	52.0	0.0	0.613
69.00	0.47	1.33	0.00	0.00	0.00	31.02	31.58	52.0	0.0	0.607
70.00	0.47	1.33	0.00	0.00	0.00	30.73	31.28	52.0	0.0	0.602
71.00	0.46	1.33	0.00	0.00	0.00	30.43	30.98	52.0	0.0	0.596
72.00	0.46	1.33	0.00	0.00	0.00	30.12	30.67	52.0	0.0	0.590
73.00	0.46	1.33	0.00	0.00	0.00	29.82	30.36	52.0	0.0	0.584
74.00	0.46	1.34	0.00	0.00	0.00	29.51	30.05	52.0	0.0	0.578
75.00	0.45	1.32	0.00	0.00	0.00	29.19	29.73	52.0	0.0	0.572
76.00	0.45	1.33	0.00	0.00	0.00	28.88	29.42	52.0	0.0	0.566
77.00	0.44	1.33	0.00	0.00	0.00	28.56	29.10	52.0	0.0	0.560
78.00	0.44	1.33	0.00	0.00	0.00	28.24	28.78	52.0	0.0	0.554
79.00	0.44	1.33	0.00	0.00	0.00	27.92	28.45	52.0	0.0	0.547
80.00	0.43	1.33	0.00	0.00	0.00	27.59	28.12	52.0	0.0	0.541
81.00	0.43	1.33	0.00	0.00	0.00	27.26	27.79	52.0	0.0	0.535
81.49	0.43	1.34	0.00	0.00	0.00	27.09	27.62	52.0	0.0	0.531
82.00	0.43	1.34	0.00	0.00	0.00	26.56	27.08	52.0	0.0	0.521
83.00	0.42	1.34	0.00	0.00	0.00	26.22	26.74	52.0	0.0	0.514
84.00	0.42	1.34	0.00	0.00	0.00	25.87	26.39	52.0	0.0	0.508
85.00	0.41	1.34	0.00	0.00	0.00	25.53	26.04	52.0	0.0	0.501
86.00	0.41	1.34	0.00	0.00	0.00	25.18	25.69	52.0	0.0	0.494
86.18	0.45	1.57	0.00	0.00	0.00	27.28	27.86	52.0	0.0	0.536
87.00	0.45	1.57	0.00	0.00	0.00	26.95	27.54	52.0	0.0	0.530
88.00	0.45	1.58	0.00	0.00	0.00	26.55	27.13	52.0	0.0	0.522
89.00	0.44	1.58	0.00	0.00	0.00	26.15	26.73	52.0	0.0	0.514
90.00	0.44	1.58	0.00	0.00	0.00	25.74	26.32	52.0	0.0	0.506
91.00	0.44	1.58	0.00	0.00	0.00	25.32	25.90	52.0	0.0	0.498
92.00	0.43	1.58	0.00	0.00	0.00	24.91	25.49	52.0	0.0	0.490
93.00	0.43	1.58	0.00	0.00	0.00	24.48	25.06	52.0	0.0	0.482
94.00	0.43	1.58	0.00	0.00	0.00	24.05	24.63	52.0	0.0	0.474
95.00	0.42	1.59	0.00	0.00	0.00	23.62	24.20	52.0	0.0	0.466
96.00	0.42	1.59	0.00	0.00	0.00	23.18	23.76	52.0	0.0	0.457
97.00	0.42	1.59	0.00	0.00	0.00	22.74	23.32	52.0	0.0	0.449
98.00	0.41	1.59	0.00	0.00	0.00	22.29	22.87	52.0	0.0	0.440
99.00	0.41	1.59	0.00	0.00	0.00	21.84	22.42	52.0	0.0	0.431
100.00	0.40	1.57	0.00	0.00	0.00	21.36	21.93	52.0	0.0	0.422
101.00	0.40	1.57	0.00	0.00	0.00	20.91	21.48	52.0	0.0	0.413
102.00	0.40	1.57	0.00	0.00	0.00	20.45	21.02	52.0	0.0	0.404
103.00	0.39	1.57	0.00	0.00	0.00	19.99	20.56	52.0	0.0	0.396

©2007 - 2015 by ATC IP LLC. All rights reserved.

Load Case: Ice 77.94 mph Wind with Ice 29 Iterations

Gust Response Factor 1.69
Dead Load Factor : 1.00
Wind Load Factor : 1.00

104.00	0.39	1.57	0.00	0.00	0.00	19.52	20.09	52.0	0.0	0.387
105.00	0.39	1.57	0.00	0.00	0.00	19.04	19.62	52.0	0.0	0.377
106.00	0.38	1.57	0.00	0.00	0.00	18.57	19.14	52.0	0.0	0.368
107.00	0.38	1.58	0.00	0.00	0.00	18.08	18.66	52.0	0.0	0.359
108.00	0.38	1.58	0.00	0.00	0.00	17.59	18.18	52.0	0.0	0.350
108.75	0.38	1.58	0.00	0.00	0.00	17.22	17.81	52.0	0.0	0.343
108.75	0.64	1.58	0.00	0.00	0.00	36.49	37.23	52.0	0.0	0.716
109.00	0.64	1.58	0.00	0.00	0.00	36.28	37.02	52.0	0.0	0.712
110.00	0.62	1.53	0.00	0.00	0.00	35.40	36.12	52.0	0.0	0.695
111.00	0.62	1.54	0.00	0.00	0.00	34.54	35.26	52.0	0.0	0.678
112.00	0.62	1.54	0.00	0.00	0.00	33.67	34.39	52.0	0.0	0.662
113.00	0.62	1.54	0.00	0.00	0.00	32.77	33.49	52.0	0.0	0.644
114.00	0.61	1.54	0.00	0.00	0.00	31.85	32.57	52.0	0.0	0.627
115.00	0.61	1.55	0.00	0.00	0.00	30.91	31.63	52.0	0.0	0.609
116.00	0.61	1.55	0.00	0.00	0.00	29.94	30.67	52.0	0.0	0.590
117.00	0.61	1.56	0.00	0.00	0.00	28.94	29.68	52.0	0.0	0.571
118.00	0.61	1.56	0.00	0.00	0.00	27.92	28.66	52.0	0.0	0.551
119.00	0.61	1.56	0.00	0.00	0.00	26.88	27.62	52.0	0.0	0.531
120.00	0.49	1.29	0.00	0.00	0.00	25.80	26.39	52.0	0.0	0.508
121.00	0.49	1.30	0.00	0.00	0.00	24.96	25.55	52.0	0.0	0.491
122.00	0.49	1.30	0.00	0.00	0.00	24.10	24.68	52.0	0.0	0.475
123.00	0.48	1.30	0.00	0.00	0.00	23.21	23.80	52.0	0.0	0.458
124.00	0.48	1.30	0.00	0.00	0.00	22.30	22.89	52.0	0.0	0.440
124.99	0.48	1.30	0.00	0.00	0.00	21.38	21.97	52.0	0.0	0.423
125.00	0.48	1.30	0.00	0.00	0.00	21.37	21.96	52.0	0.0	0.423
126.00	0.47	1.30	0.00	0.00	0.00	20.41	21.01	52.0	0.0	0.404
127.00	0.47	1.30	0.00	0.00	0.00	19.43	20.03	52.0	0.0	0.385
128.00	0.46	1.31	0.00	0.00	0.00	18.42	19.02	52.0	0.0	0.366
128.68	0.56	1.60	0.00	0.00	0.00	21.09	21.83	52.0	0.0	0.420
129.00	0.56	1.60	0.00	0.00	0.00	20.69	21.43	52.0	0.0	0.412
130.00	0.56	1.60	0.00	0.00	0.00	19.42	20.17	52.0	0.0	0.388
131.00	0.46	1.30	0.00	0.00	0.00	18.12	18.71	52.0	0.0	0.360
132.00	0.46	1.30	0.00	0.00	0.00	17.09	17.69	52.0	0.0	0.340
133.00	0.45	1.29	0.00	0.00	0.00	16.03	16.63	52.0	0.0	0.320
134.00	0.45	1.29	0.00	0.00	0.00	14.95	15.56	52.0	0.0	0.299
135.00	0.45	1.29	0.00	0.00	0.00	13.85	14.47	52.0	0.0	0.278
136.00	0.44	1.29	0.00	0.00	0.00	12.72	13.35	52.0	0.0	0.257
137.00	0.39	1.15	0.00	0.00	0.00	11.56	12.11	52.0	0.0	0.233
138.00	0.38	1.15	0.00	0.00	0.00	10.53	11.09	52.0	0.0	0.213
139.00	0.38	1.15	0.00	0.00	0.00	9.47	10.05	52.0	0.0	0.193
140.00	0.38	1.15	0.00	0.00	0.00	8.38	8.98	52.0	0.0	0.173
141.00	0.25	0.68	0.00	0.00	0.00	7.26	7.60	52.0	0.0	0.146
142.00	0.25	0.68	0.00	0.00	0.00	6.62	6.97	52.0	0.0	0.134
143.00	0.25	0.68	0.00	0.00	0.00	5.98	6.33	52.0	0.0	0.122
144.00	0.24	0.68	0.00	0.00	0.00	5.31	5.68	52.0	0.0	0.109
145.00	0.24	0.68	0.00	0.00	0.00	4.64	5.01	52.0	0.0	0.096
146.00	0.24	0.67	0.00	0.00	0.00	3.94	4.34	52.0	0.0	0.083
147.00	0.23	0.67	0.00	0.00	0.00	3.23	3.65	52.0	0.0	0.070
147.90	0.01	0.10	0.00	0.00	0.00	1.34	1.36	52.0	0.0	0.026
148.00	0.00	0.09	0.00	0.00	0.00	1.33	1.34	52.0	0.0	0.026

©2007 - 2015 by ATC IP LLC. All rights reserved.

Load Case: Twist/Sway 50.00 mph Wind with No Ice 28 Iterations

Gust Response Factor 1.69
Dead Load Factor : 1.00
Wind Load Factor : 1.00

Applied Segment Forces Summary

		Shaft Forces		Discrete Forces				Linear Forces		Sum of Forces			
Seg Elev (ft)	Description	Wind FX (lb)	Dead Load (lb)	Wind FX (lb)	Torsion MY (lb-ft)	Moment MZ (lb-ft)	Dead Load (lb)	Wind FX (lb)	Dead Load (lb)	Wind FX (lb)	Dead Load (lb)	Torsion MY (lb-ft)	Moment MZ (lb)
0.00		14.0	0.0					0.0	0.0	14.0	0.0	0.0	0.0
1.00		28.0	224.3					5.4	66.8	33.4	291.1	0.0	0.0
2.00		27.9	223.3					5.4	66.8	33.3	290.1	0.0	0.0
3.00		27.8	222.4					5.4	66.8	33.2	289.2	0.0	0.0
4.00		27.7	221.5					5.4	66.8	33.1	288.3	0.0	0.0
5.00		27.5	220.6					5.4	66.8	33.0	287.4	0.0	0.0
6.00		27.4	219.7					7.6	77.2	35.0	296.8	0.0	0.0
7.00		27.3	218.7					7.6	77.2	34.9	295.9	0.0	0.0
8.00		27.2	217.8					7.6	77.2	34.8	295.0	0.0	0.0
9.00		27.1	216.9					7.6	77.2	34.7	294.1	0.0	0.0
10.00		27.0	216.0					7.6	77.2	34.5	293.1	0.0	0.0
11.00		26.9	215.0					12.3	129.2	39.2	344.2	0.0	0.0
12.00		26.7	214.1					12.3	129.2	39.1	343.3	0.0	0.0
13.00		26.6	213.2					12.3	129.2	39.0	342.4	0.0	0.0
14.00		26.5	212.3					12.3	129.2	38.8	341.4	0.0	0.0
15.00		26.4	211.3					12.3	129.2	38.7	340.5	0.0	0.0
16.00		26.3	210.4					12.3	129.2	38.6	339.6	0.0	0.0
17.00		26.2	209.5					12.3	129.2	38.5	338.7	0.0	0.0
18.00		26.1	208.6					12.3	129.2	38.4	337.7	0.0	0.0
19.00		25.9	207.6					12.3	129.2	38.3	336.8	0.0	0.0
20.00		25.8	206.7					12.3	129.2	38.2	335.9	0.0	0.0
21.00		25.7	205.8					12.3	129.2	38.0	335.0	0.0	0.0
22.00		25.6	204.9					12.3	129.2	37.9	334.0	0.0	0.0
23.00		25.5	204.0					12.3	129.2	37.8	333.1	0.0	0.0
24.00		25.4	203.0					12.3	129.2	37.7	332.2	0.0	0.0
25.00		25.3	202.1					12.3	129.2	37.6	331.3	0.0	0.0
26.00		25.1	201.2					12.3	129.2	37.5	330.4	0.0	0.0
27.00		25.0	200.3					12.3	129.2	37.4	329.4	0.0	0.0
28.00		24.9	199.3					12.3	129.2	37.2	328.5	0.0	0.0
29.00		24.8	198.4					12.3	129.2	37.1	327.6	0.0	0.0
30.00		24.7	197.5					12.3	129.2	37.0	326.7	0.0	0.0
31.00		24.6	196.6					12.3	129.2	36.9	325.7	0.0	0.0
32.00		24.5	195.6					12.3	129.2	36.8	324.8	0.0	0.0
33.00		24.4	194.7					12.3	129.2	36.7	323.9	0.0	0.0
34.00		24.4	193.8					12.4	129.2	36.8	323.0	0.0	0.0
35.00		24.5	192.9					12.5	129.2	37.0	322.0	0.0	0.0
36.00		24.6	191.9					12.6	129.2	37.2	321.1	0.0	0.0
37.00		24.7	191.0					12.7	129.2	37.4	320.2	0.0	0.0
38.00		24.7	190.1					12.8	129.2	37.5	319.3	0.0	0.0
39.00		24.8	189.2					12.9	129.2	37.7	318.3	0.0	0.0
40.00		24.9	188.2					13.0	129.2	37.9	317.4	0.0	0.0
41.00		12.9	187.3					13.1	129.2	26.0	316.5	0.0	0.0
41.04	Bot - Section 2	12.7	6.8					0.5	4.7	13.2	11.5	0.0	0.0
42.00		25.0	336.8					12.7	124.5	37.7	461.3	0.0	0.0
43.00		25.5	347.8					13.3	129.2	38.7	476.9	0.0	0.0
44.00		25.5	346.0					13.3	129.2	38.9	475.2	0.0	0.0
45.00		25.6	344.3					13.4	129.2	39.0	473.5	0.0	0.0

©2007 - 2015 by ATC IP LLC. All rights reserved.

Load Case: Twist/Sway 50.00 mph Wind with No Ice 28 Iterations

Gust Response Factor 1.69
Dead Load Factor : 1.00
Wind Load Factor : 1.00

46.00		20.9	342.6					13.5	129.2	34.4	471.8	0.0	0.0
46.63	Top - Section 1	12.8	215.0					8.6	81.4	21.4	296.3	0.0	0.0
47.00		17.6	58.8					5.0	47.8	22.6	106.6	0.0	0.0
48.00		25.7	158.3					13.7	129.2	39.4	287.5	0.0	0.0
49.00		25.7	157.5					13.8	129.2	39.5	286.7	0.0	0.0
50.00		25.7	156.7					13.8	129.2	39.6	285.9	0.0	0.0
51.00		25.7	155.9					13.9	129.2	39.7	285.1	0.0	0.0
52.00		25.7	155.1					14.0	129.2	39.7	284.3	0.0	0.0
53.00		25.8	154.4					14.1	129.2	39.8	283.5	0.0	0.0
54.00		25.8	153.6					14.2	129.2	39.9	282.7	0.0	0.0
55.00		25.8	152.8					14.2	129.2	40.0	281.9	0.0	0.0
56.00		25.8	152.0					14.3	129.2	40.1	281.1	0.0	0.0
57.00		25.8	151.2					14.4	129.2	40.1	280.4	0.0	0.0
58.00		25.8	150.4					14.5	129.2	40.2	279.6	0.0	0.0
59.00		25.7	149.6					14.5	129.2	40.3	278.8	0.0	0.0
60.00		25.7	148.8					14.6	129.2	40.3	278.0	0.0	0.0
61.00		25.7	148.0					14.7	129.2	40.4	277.2	0.0	0.0
62.00		25.7	147.2					14.7	129.2	40.4	276.4	0.0	0.0
63.00		25.7	146.4					14.8	129.2	40.5	275.6	0.0	0.0
64.00		25.7	145.6					14.9	129.2	40.5	274.8	0.0	0.0
65.00		25.6	144.9					14.9	129.2	40.6	274.0	0.0	0.0
66.00		25.6	144.1					15.0	129.2	40.6	273.2	0.0	0.0
67.00		25.6	143.3					15.1	129.2	40.6	272.4	0.0	0.0
68.00		25.5	142.5					15.1	129.2	40.7	271.6	0.0	0.0
69.00		25.5	141.7					15.2	129.2	40.7	270.9	0.0	0.0
70.00		25.5	140.9					15.3	129.2	40.7	270.1	0.0	0.0
71.00		25.4	140.1					15.3	129.2	40.7	269.3	0.0	0.0
72.00		25.4	139.3					15.4	129.2	40.8	268.5	0.0	0.0
73.00		25.3	138.5					15.4	129.2	40.8	267.7	0.0	0.0
74.00		25.3	137.7					15.5	129.2	40.8	266.9	0.0	0.0
75.00	Appertunance(s)	25.3	136.9	41.6	0.0	0.0	30.6	15.6	129.2	82.5	296.7	0.0	0.0
76.00		25.2	136.1					15.6	129.0	40.8	265.2	0.0	0.0
77.00		25.1	135.4					15.7	129.0	40.8	264.4	0.0	0.0
78.00		25.1	134.6					15.7	129.0	40.8	263.6	0.0	0.0
79.00		25.0	133.8					15.8	129.0	40.8	262.8	0.0	0.0
80.00		25.0	133.0					15.9	129.0	40.8	262.0	0.0	0.0
81.00		18.6	132.2					15.9	129.0	34.5	261.2	0.0	0.0
81.49	Bot - Section 3	12.6	64.7					7.8	63.4	20.4	128.1	0.0	0.0
82.00		19.1	123.5					8.1	65.6	27.2	189.1	0.0	0.0
83.00		25.3	241.8					16.0	129.0	41.3	370.8	0.0	0.0
84.00		25.2	240.3					16.1	129.0	41.3	369.3	0.0	0.0
85.00		25.1	238.9					16.1	129.0	41.3	367.9	0.0	0.0
86.00		14.8	237.4					16.2	129.0	31.0	366.4	0.0	0.0
86.18	Top - Section 2	12.5	41.7					2.9	22.7	15.4	64.4	0.0	0.0
87.00		22.8	89.3					13.4	106.3	36.2	195.6	0.0	0.0
88.00		24.9	107.9					16.3	129.0	41.2	236.9	0.0	0.0
89.00		24.9	107.2					16.3	129.0	41.2	236.2	0.0	0.0
90.00		24.8	106.5					16.4	129.0	41.2	235.6	0.0	0.0
91.00		24.7	105.9					16.4	129.0	41.2	234.9	0.0	0.0
92.00		24.7	105.2					16.5	129.0	41.2	234.2	0.0	0.0
93.00		24.6	104.6					16.6	129.0	41.1	233.6	0.0	0.0
94.00		24.5	103.9					16.6	129.0	41.1	232.9	0.0	0.0
95.00		24.4	103.2					16.7	129.0	41.1	232.3	0.0	0.0
96.00		24.3	102.6					16.7	129.0	41.0	231.6	0.0	0.0
97.00		24.2	101.9					16.8	129.0	41.0	230.9	0.0	0.0
98.00		24.2	101.3					16.8	129.0	41.0	230.3	0.0	0.0
99.00		24.1	100.6					16.9	129.0	40.9	229.6	0.0	0.0

©2007 - 2015 by ATC IP LLC. All rights reserved.

Load Case: Twist/Sway 50.00 mph Wind with No Ice 28 Iterations

Gust Response Factor 1.69
Dead Load Factor : 1.00
Wind Load Factor : 1.00

100.00	Appertunance(s)	24.0	99.9	120.9	0.0	218.3	176.5	16.9	129.0	161.8	405.5	0.0	0.0
101.00		23.9	99.3					16.9	128.7	40.8	228.0	0.0	0.0
102.00		23.8	98.6					17.0	128.7	40.8	227.3	0.0	0.0
103.00		23.7	98.0					17.0	128.7	40.8	226.7	0.0	0.0
104.00		23.6	97.3					17.1	128.7	40.7	226.0	0.0	0.0
105.00		23.5	96.6					17.1	128.7	40.7	225.3	0.0	0.0
106.00		23.4	96.0					17.2	128.7	40.6	224.7	0.0	0.0
107.00		23.3	95.3					17.2	128.7	40.6	224.0	0.0	0.0
108.00		20.3	94.7					17.3	128.7	37.6	223.4	0.0	0.0
108.75	Reinf. Top	11.6	70.6					13.0	96.5	24.6	167.1	0.0	0.0
109.00		14.4	23.4					4.3	15.5	18.8	38.9	0.0	0.0
110.00	Appertunance(s)	23.0	93.3	205.5	0.0	0.0	304.6	17.4	61.9	245.9	459.8	0.0	0.0
111.00		22.9	92.7					17.4	61.6	40.3	154.3	0.0	0.0
112.00		22.8	92.0					17.5	61.6	40.3	153.6	0.0	0.0
113.00		22.7	91.4					17.5	61.6	40.2	153.0	0.0	0.0
114.00		22.6	90.7					11.8	61.6	34.4	152.3	0.0	0.0
115.00		22.5	90.0					9.9	61.6	32.4	151.6	0.0	0.0
116.00		22.4	89.4					9.9	61.6	32.3	151.0	0.0	0.0
117.00		22.3	88.7					9.9	61.6	32.2	150.3	0.0	0.0
118.00		22.2	88.1					10.0	61.6	32.1	149.7	0.0	0.0
119.00		22.1	87.4					10.0	61.6	32.0	149.0	0.0	0.0
120.00	Appertunance(s)	22.0	86.7	1,176.8	0.0	0.0	2,471.7	10.0	61.6	1,208.7	2,620.0	0.0	0.0
121.00		21.8	86.1					10.0	55.6	31.9	141.7	0.0	0.0
122.00		21.7	85.4					10.0	55.6	31.8	141.0	0.0	0.0
123.00		21.6	84.8					10.1	55.6	31.7	140.4	0.0	0.0
124.00		21.4	84.1					10.1	55.6	31.5	139.7	0.0	0.0
124.99	Bot - Section 4	10.7	82.9					10.1	55.2	20.8	138.2	0.0	0.0
125.00		10.9	0.9					0.1	0.3	11.0	1.3	0.0	0.0
126.00		21.7	150.5					10.1	55.6	31.8	206.1	0.0	0.0
127.00		21.6	149.4					10.2	55.6	31.7	204.9	0.0	0.0
128.00		18.0	148.2					10.2	55.6	28.2	203.8	0.0	0.0
128.68	Top - Section 3	10.7	100.3					7.0	37.9	17.6	138.2	0.0	0.0
129.00		14.0	21.0					3.3	17.7	17.3	38.7	0.0	0.0
130.00		21.2	65.6					10.2	55.6	31.4	121.2	0.0	0.0
131.00	Appertunance(s)	21.1	65.1	914.7	0.0	0.0	1,668.6	10.3	55.6	946.0	1,789.3	0.0	0.0
132.00		21.0	64.6					10.3	45.0	31.2	109.6	0.0	0.0
133.00	Appertunance(s)	20.8	64.1	27.5	0.0	0.0	47.7	10.3	45.0	58.7	156.8	0.0	0.0
134.00		20.7	63.5					10.3	45.0	31.0	108.5	0.0	0.0
135.00		20.6	63.0					10.3	45.0	30.9	108.0	0.0	0.0
136.00		20.4	62.5					10.4	45.0	30.8	107.5	0.0	0.0
137.00	Appertunance(s)	20.3	61.9	424.1	0.0	0.0	809.0	10.4	45.0	454.8	915.9	0.0	0.0
138.00		20.2	61.4					6.5	37.3	26.7	98.7	0.0	0.0
139.00		20.1	60.9					6.5	37.3	26.6	98.1	0.0	0.0
140.00		19.9	60.4					6.5	37.3	26.5	97.6	0.0	0.0
141.00	Appertunance(s)	19.8	59.8	1,412.5	0.0	-159.5	1,875.9	6.5	37.3	1,438.8	1,973.0	0.0	0.0
142.00		19.7	59.3					3.3	26.1	22.9	85.4	0.0	0.0
143.00		19.5	58.8					3.3	26.1	22.8	84.9	0.0	0.0
144.00		19.4	58.2					3.3	26.1	22.7	84.4	0.0	0.0
145.00		19.3	57.7					3.3	26.1	22.6	83.8	0.0	0.0
146.00		19.1	57.2					3.3	26.1	22.4	83.3	0.0	0.0
147.00		18.0	56.7					3.3	26.1	21.3	82.8	0.0	0.0
147.90		9.5	50.5					3.0	23.5	12.4	74.1	0.0	0.0
148.00	Appertunance(s)	0.9	5.6	391.9	0.0	3,427.6	362.0	0.3	1.0	393.2	368.6	0.0	0.0
									Totals:	10,173.01	45,132.40	0.00	0.00

©2007 - 2015 by ATC IP LLC. All rights reserved.

Load Case: Twist/Sway 50.00 mph Wind with No Ice 28 Iterations

Gust Response Factor 1.69
Dead Load Factor : 1.00
Wind Load Factor : 1.00

Calculated Shaft Forces and Deflections

Seg Elev (ft)	Lateral FX (-) (kips)	Axial FY (-) (kips)	Lateral FZ (kips)	Moment MX (ft-kips)	Torsion MY (ft-kips)	Moment MZ (ft-kips)	X Deflect (in)	Z Deflect (in)	Total Deflect (in)	Rotation (deg)
0.00	-12.066	-48.305	0.000	0.000	0.000	-1,348.264	0.000	0.000	0.000	0.000
1.00	-12.044	-48.011	0.000	0.000	0.000	-1,336.199	-0.002	0.000	0.002	-0.015
2.00	-12.023	-47.718	0.000	0.000	0.000	-1,324.155	-0.006	0.000	0.006	-0.029
3.00	-12.002	-47.426	0.000	0.000	0.000	-1,312.132	-0.014	0.000	0.014	-0.044
4.00	-11.980	-47.134	0.000	0.000	0.000	-1,300.131	-0.025	0.000	0.025	-0.058
5.00	-11.959	-46.844	0.000	0.000	0.000	-1,288.151	-0.039	0.000	0.039	-0.073
6.00	-11.936	-46.544	0.000	0.000	0.000	-1,276.192	-0.056	0.000	0.056	-0.088
7.00	-11.912	-46.245	0.000	0.000	0.000	-1,264.256	-0.076	0.000	0.076	-0.102
8.00	-11.889	-45.947	0.000	0.000	0.000	-1,252.344	-0.099	0.000	0.099	-0.117
9.00	-11.865	-45.650	0.000	0.000	0.000	-1,240.456	-0.125	0.000	0.125	-0.132
10.00	-11.841	-45.354	0.000	0.000	0.000	-1,228.591	-0.155	0.000	0.155	-0.146
11.00	-11.813	-45.007	0.000	0.000	0.000	-1,216.750	-0.187	0.000	0.187	-0.161
12.00	-11.784	-44.661	0.000	0.000	0.000	-1,204.937	-0.222	0.000	0.222	-0.176
13.00	-11.756	-44.315	0.000	0.000	0.000	-1,193.153	-0.261	0.000	0.261	-0.191
14.00	-11.727	-43.971	0.000	0.000	0.000	-1,181.398	-0.303	0.000	0.303	-0.206
15.00	-11.699	-43.628	0.000	0.000	0.000	-1,169.671	-0.347	0.000	0.347	-0.221
16.00	-11.670	-43.285	0.000	0.000	0.000	-1,157.972	-0.395	0.000	0.395	-0.236
17.00	-11.641	-42.944	0.000	0.000	0.000	-1,146.303	-0.446	0.000	0.446	-0.250
18.00	-11.612	-42.603	0.000	0.000	0.000	-1,134.662	-0.501	0.000	0.501	-0.265
19.00	-11.583	-42.263	0.000	0.000	0.000	-1,123.050	-0.558	0.000	0.558	-0.280
20.00	-11.555	-41.925	0.000	0.000	0.000	-1,111.467	-0.618	0.000	0.618	-0.295
21.00	-11.526	-41.587	0.000	0.000	0.000	-1,099.912	-0.682	0.000	0.682	-0.310
22.00	-11.497	-41.250	0.000	0.000	0.000	-1,088.387	-0.749	0.000	0.749	-0.325
23.00	-11.468	-40.914	0.000	0.000	0.000	-1,076.890	-0.819	0.000	0.819	-0.340
24.00	-11.439	-40.579	0.000	0.000	0.000	-1,065.423	-0.892	0.000	0.892	-0.355
25.00	-11.410	-40.245	0.000	0.000	0.000	-1,053.985	-0.968	0.000	0.968	-0.370
26.00	-11.380	-39.912	0.000	0.000	0.000	-1,042.575	-1.047	0.000	1.047	-0.386
27.00	-11.351	-39.580	0.000	0.000	0.000	-1,031.195	-1.130	0.000	1.130	-0.401
28.00	-11.322	-39.249	0.000	0.000	0.000	-1,019.844	-1.215	0.000	1.215	-0.416
29.00	-11.293	-38.918	0.000	0.000	0.000	-1,008.523	-1.304	0.000	1.304	-0.431
30.00	-11.263	-38.589	0.000	0.000	0.000	-997.230	-1.396	0.000	1.396	-0.446
31.00	-11.234	-38.261	0.000	0.000	0.000	-985.967	-1.491	0.000	1.491	-0.461
32.00	-11.205	-37.933	0.000	0.000	0.000	-974.733	-1.590	0.000	1.590	-0.476
33.00	-11.175	-37.607	0.000	0.000	0.000	-963.529	-1.691	0.000	1.691	-0.491
34.00	-11.145	-37.281	0.000	0.000	0.000	-952.354	-1.796	0.000	1.796	-0.507
35.00	-11.115	-36.957	0.000	0.000	0.000	-941.209	-1.904	0.000	1.904	-0.522
36.00	-11.085	-36.633	0.000	0.000	0.000	-930.094	-2.015	0.000	2.015	-0.537
37.00	-11.054	-36.310	0.000	0.000	0.000	-919.009	-2.129	0.000	2.129	-0.552
38.00	-11.023	-35.988	0.000	0.000	0.000	-907.956	-2.246	0.000	2.246	-0.567
39.00	-10.992	-35.667	0.000	0.000	0.000	-896.933	-2.367	0.000	2.367	-0.583
40.00	-10.960	-35.347	0.000	0.000	0.000	-885.942	-2.491	0.000	2.491	-0.598
41.00	-10.935	-35.030	0.000	0.000	0.000	-874.982	-2.618	0.000	2.618	-0.613
41.04	-10.927	-35.017	0.000	0.000	0.000	-874.586	-2.622	0.000	2.622	-0.614
42.00	-10.893	-34.553	0.000	0.000	0.000	-864.055	-2.748	0.000	2.748	-0.628
43.00	-10.858	-34.074	0.000	0.000	0.000	-853.163	-2.881	0.000	2.881	-0.643
44.00	-10.822	-33.596	0.000	0.000	0.000	-842.305	-3.018	0.000	3.018	-0.658
45.00	-10.787	-33.121	0.000	0.000	0.000	-831.483	-3.157	0.000	3.157	-0.674
46.00	-10.754	-32.647	0.000	0.000	0.000	-820.696	-3.300	0.000	3.300	-0.689
46.63	-10.733	-32.350	0.000	0.000	0.000	-813.922	-3.392	0.000	3.392	-0.698
47.00	-10.715	-32.241	0.000	0.000	0.000	-809.951	-3.446	0.000	3.446	-0.704
48.00	-10.681	-31.951	0.000	0.000	0.000	-799.236	-3.595	0.000	3.595	-0.720

©2007 - 2015 by ATC IP LLC. All rights reserved.

Load Case: Twist/Sway 50.00 mph Wind with No Ice 28 Iterations

Gust Response Factor 1.69
Dead Load Factor : 1.00
Wind Load Factor : 1.00

49.00	-10.647	-31.662	0.000	0.000	0.000	-788.555	-3.748	0.000	3.748	-0.736
50.00	-10.612	-31.374	0.000	0.000	0.000	-777.908	-3.904	0.000	3.904	-0.751
51.00	-10.578	-31.086	0.000	0.000	0.000	-767.296	-4.063	0.000	4.063	-0.767
52.00	-10.543	-30.800	0.000	0.000	0.000	-756.719	-4.226	0.000	4.226	-0.783
53.00	-10.507	-30.514	0.000	0.000	0.000	-746.176	-4.391	0.000	4.391	-0.799
54.00	-10.472	-30.229	0.000	0.000	0.000	-735.669	-4.561	0.000	4.561	-0.815
55.00	-10.436	-29.945	0.000	0.000	0.000	-725.198	-4.733	0.000	4.733	-0.831
56.00	-10.400	-29.661	0.000	0.000	0.000	-714.762	-4.909	0.000	4.909	-0.847
57.00	-10.364	-29.379	0.000	0.000	0.000	-704.363	-5.088	0.000	5.088	-0.862
58.00	-10.327	-29.097	0.000	0.000	0.000	-693.999	-5.271	0.000	5.271	-0.878
59.00	-10.291	-28.816	0.000	0.000	0.000	-683.672	-5.456	0.000	5.456	-0.894
60.00	-10.254	-28.536	0.000	0.000	0.000	-673.382	-5.645	0.000	5.645	-0.910
61.00	-10.217	-28.256	0.000	0.000	0.000	-663.128	-5.838	0.000	5.838	-0.925
62.00	-10.179	-27.978	0.000	0.000	0.000	-652.912	-6.033	0.000	6.033	-0.941
63.00	-10.142	-27.700	0.000	0.000	0.000	-642.733	-6.232	0.000	6.232	-0.956
64.00	-10.104	-27.424	0.000	0.000	0.000	-632.591	-6.434	0.000	6.434	-0.972
65.00	-10.066	-27.147	0.000	0.000	0.000	-622.487	-6.640	0.000	6.640	-0.987
66.00	-10.028	-26.872	0.000	0.000	0.000	-612.421	-6.848	0.000	6.848	-1.003
67.00	-9.990	-26.598	0.000	0.000	0.000	-602.393	-7.060	0.000	7.060	-1.018
68.00	-9.951	-26.324	0.000	0.000	0.000	-592.403	-7.275	0.000	7.275	-1.034
69.00	-9.913	-26.052	0.000	0.000	0.000	-582.452	-7.494	0.000	7.494	-1.049
70.00	-9.874	-25.780	0.000	0.000	0.000	-572.539	-7.715	0.000	7.715	-1.064
71.00	-9.835	-25.509	0.000	0.000	0.000	-562.666	-7.940	0.000	7.940	-1.080
72.00	-9.796	-25.238	0.000	0.000	0.000	-552.831	-8.168	0.000	8.168	-1.095
73.00	-9.757	-24.969	0.000	0.000	0.000	-543.035	-8.399	0.000	8.399	-1.110
74.00	-9.717	-24.700	0.000	0.000	0.000	-533.279	-8.633	0.000	8.633	-1.125
75.00	-9.635	-24.403	0.000	0.000	0.000	-523.562	-8.870	0.000	8.870	-1.140
76.00	-9.595	-24.136	0.000	0.000	0.000	-513.927	-9.111	0.000	9.111	-1.155
77.00	-9.555	-23.870	0.000	0.000	0.000	-504.332	-9.354	0.000	9.354	-1.170
78.00	-9.515	-23.605	0.000	0.000	0.000	-494.777	-9.601	0.000	9.601	-1.184
79.00	-9.475	-23.341	0.000	0.000	0.000	-485.262	-9.851	0.000	9.851	-1.199
80.00	-9.434	-23.077	0.000	0.000	0.000	-475.788	-10.104	0.000	10.104	-1.214
81.00	-9.399	-22.815	0.000	0.000	0.000	-466.353	-10.360	0.000	10.360	-1.228
81.49	-9.378	-22.686	0.000	0.000	0.000	-461.735	-10.487	0.000	10.487	-1.236
82.00	-9.351	-22.496	0.000	0.000	0.000	-456.965	-10.619	0.000	10.619	-1.243
83.00	-9.307	-22.124	0.000	0.000	0.000	-447.614	-10.881	0.000	10.881	-1.257
84.00	-9.263	-21.753	0.000	0.000	0.000	-438.307	-11.146	0.000	11.146	-1.271
85.00	-9.219	-21.384	0.000	0.000	0.000	-429.044	-11.414	0.000	11.414	-1.285
86.00	-9.183	-21.017	0.000	0.000	0.000	-419.825	-11.684	0.000	11.684	-1.299
86.18	-9.169	-20.952	0.000	0.000	0.000	-418.206	-11.732	0.000	11.732	-1.302
87.00	-9.133	-20.755	0.000	0.000	0.000	-410.654	-11.958	0.000	11.958	-1.313
88.00	-9.091	-20.517	0.000	0.000	0.000	-401.521	-12.235	0.000	12.235	-1.328
89.00	-9.050	-20.280	0.000	0.000	0.000	-392.430	-12.515	0.000	12.515	-1.342
90.00	-9.008	-20.043	0.000	0.000	0.000	-383.381	-12.797	0.000	12.797	-1.356
91.00	-8.966	-19.807	0.000	0.000	0.000	-374.373	-13.083	0.000	13.083	-1.371
92.00	-8.924	-19.571	0.000	0.000	0.000	-365.407	-13.372	0.000	13.372	-1.385
93.00	-8.882	-19.337	0.000	0.000	0.000	-356.483	-13.664	0.000	13.664	-1.399
94.00	-8.840	-19.103	0.000	0.000	0.000	-347.601	-13.958	0.000	13.958	-1.412
95.00	-8.798	-18.869	0.000	0.000	0.000	-338.761	-14.256	0.000	14.256	-1.426
96.00	-8.755	-18.637	0.000	0.000	0.000	-329.964	-14.556	0.000	14.556	-1.440
97.00	-8.713	-18.405	0.000	0.000	0.000	-321.209	-14.859	0.000	14.859	-1.453
98.00	-8.670	-18.174	0.000	0.000	0.000	-312.496	-15.165	0.000	15.165	-1.466
99.00	-8.627	-17.944	0.000	0.000	0.000	-303.826	-15.474	0.000	15.474	-1.479
100.0	-8.459	-17.541	0.000	0.000	0.000	-294.981	-15.785	0.000	15.785	-1.492
101.0	-8.416	-17.312	0.000	0.000	0.000	-286.522	-16.099	0.000	16.099	-1.505
102.0	-8.373	-17.084	0.000	0.000	0.000	-278.106	-16.415	0.000	16.415	-1.517
103.0	-8.330	-16.857	0.000	0.000	0.000	-269.733	-16.735	0.000	16.735	-1.529

©2007 - 2015 by ATC IP LLC. All rights reserved.

Load Case: Twist/Sway 50.00 mph Wind with No Ice 28 Iterations

Gust Response Factor 1.69
Dead Load Factor : 1.00
Wind Load Factor : 1.00

104.0	-8.287	-16.630	0.000	0.000	0.000	-261.403	-17.056	0.000	17.056	-1.541
105.0	-8.243	-16.404	0.000	0.000	0.000	-253.117	-17.381	0.000	17.381	-1.553
106.0	-8.200	-16.179	0.000	0.000	0.000	-244.874	-17.708	0.000	17.708	-1.565
107.0	-8.156	-15.955	0.000	0.000	0.000	-236.674	-18.037	0.000	18.037	-1.577
108.0	-8.115	-15.731	0.000	0.000	0.000	-228.518	-18.368	0.000	18.368	-1.588
108.7	-8.088	-15.564	0.000	0.000	0.000	-222.431	-18.618	0.000	18.618	-1.596
109.0	-8.071	-15.524	0.000	0.000	0.000	-220.409	-18.702	0.000	18.702	-1.599
110.0	-7.819	-15.068	0.000	0.000	0.000	-212.338	-19.040	0.000	19.040	-1.622
111.0	-7.780	-14.912	0.000	0.000	0.000	-204.520	-19.382	0.000	19.382	-1.644
112.0	-7.741	-14.756	0.000	0.000	0.000	-196.740	-19.729	0.000	19.729	-1.667
113.0	-7.702	-14.602	0.000	0.000	0.000	-188.999	-20.080	0.000	20.080	-1.689
114.0	-7.668	-14.448	0.000	0.000	0.000	-181.298	-20.437	0.000	20.437	-1.710
115.0	-7.637	-14.294	0.000	0.000	0.000	-173.630	-20.797	0.000	20.797	-1.731
116.0	-7.605	-14.142	0.000	0.000	0.000	-165.994	-21.162	0.000	21.162	-1.751
117.0	-7.573	-13.990	0.000	0.000	0.000	-158.389	-21.531	0.000	21.531	-1.772
118.0	-7.541	-13.839	0.000	0.000	0.000	-150.816	-21.904	0.000	21.904	-1.791
119.0	-7.509	-13.688	0.000	0.000	0.000	-143.276	-22.282	0.000	22.282	-1.810
120.0	-6.221	-11.106	0.000	0.000	0.000	-135.768	-22.663	0.000	22.663	-1.828
121.0	-6.188	-10.964	0.000	0.000	0.000	-129.547	-23.048	0.000	23.048	-1.846
122.0	-6.155	-10.822	0.000	0.000	0.000	-123.360	-23.436	0.000	23.436	-1.864
123.0	-6.122	-10.681	0.000	0.000	0.000	-117.205	-23.829	0.000	23.829	-1.881
124.0	-6.089	-10.541	0.000	0.000	0.000	-111.084	-24.225	0.000	24.225	-1.898
124.9	-6.065	-10.402	0.000	0.000	0.000	-105.032	-24.621	0.000	24.621	-1.913
125.0	-6.055	-10.401	0.000	0.000	0.000	-104.995	-24.624	0.000	24.624	-1.914
126.0	-6.019	-10.194	0.000	0.000	0.000	-98.940	-25.026	0.000	25.026	-1.929
127.0	-5.983	-9.989	0.000	0.000	0.000	-92.921	-25.432	0.000	25.432	-1.944
128.0	-5.950	-9.785	0.000	0.000	0.000	-86.938	-25.841	0.000	25.841	-1.958
128.6	-5.929	-9.647	0.000	0.000	0.000	-82.883	-26.121	0.000	26.121	-1.968
129.0	-5.912	-9.607	0.000	0.000	0.000	-80.995	-26.253	0.000	26.253	-1.972
130.0	-5.879	-9.486	0.000	0.000	0.000	-75.083	-26.667	0.000	26.667	-1.987
131.0	-4.873	-7.729	0.000	0.000	0.000	-69.204	-27.085	0.000	27.085	-2.002
132.0	-4.840	-7.620	0.000	0.000	0.000	-64.331	-27.506	0.000	27.506	-2.015
133.0	-4.778	-7.464	0.000	0.000	0.000	-59.491	-27.930	0.000	27.930	-2.028
134.0	-4.744	-7.356	0.000	0.000	0.000	-54.714	-28.356	0.000	28.356	-2.041
135.0	-4.711	-7.248	0.000	0.000	0.000	-49.970	-28.785	0.000	28.785	-2.052
136.0	-4.678	-7.141	0.000	0.000	0.000	-45.259	-29.216	0.000	29.216	-2.063
137.0	-4.191	-6.241	0.000	0.000	0.000	-40.581	-29.649	0.000	29.649	-2.073
138.0	-4.162	-6.143	0.000	0.000	0.000	-36.390	-30.084	0.000	30.084	-2.082
139.0	-4.133	-6.045	0.000	0.000	0.000	-32.228	-30.521	0.000	30.521	-2.091
140.0	-4.104	-5.948	0.000	0.000	0.000	-28.096	-30.960	0.000	30.960	-2.098
141.0	-2.594	-4.029	0.000	0.000	0.000	-23.992	-31.400	0.000	31.400	-2.105
142.0	-2.568	-3.944	0.000	0.000	0.000	-21.398	-31.842	0.000	31.842	-2.111
143.0	-2.543	-3.860	0.000	0.000	0.000	-18.830	-32.285	0.000	32.285	-2.116
144.0	-2.517	-3.776	0.000	0.000	0.000	-16.288	-32.728	0.000	32.728	-2.121
145.0	-2.492	-3.693	0.000	0.000	0.000	-13.771	-33.173	0.000	33.173	-2.125
146.0	-2.467	-3.611	0.000	0.000	0.000	-11.279	-33.619	0.000	33.619	-2.129
147.0	-2.443	-3.529	0.000	0.000	0.000	-8.812	-34.065	0.000	34.065	-2.132
147.9	-0.407	-0.354	0.000	0.000	0.000	-3.468	-34.467	0.000	34.467	-2.134
148.0	-0.393	0.000	0.000	0.000	0.000	-3.428	-34.512	0.000	34.512	-2.134

©2007 - 2015 by ATC IP LLC. All rights reserved.

Load Case: Twist/Sway 50.00 mph Wind with No Ice 28 Iterations

Gust Response Factor 1.69
Dead Load Factor : 1.00
Wind Load Factor : 1.00

Calculated Stresses

Seg Elev (ft)	Applied Stresses Axial (Y) (ksi)	Shear (X) (ksi)	Shear (Z) (ksi)	Torsion (ksi)	Bending (X) (ksi)	Bending (Z) (ksi)	Combined (ksi)	Allowable Stress (Fb) (ksi)	Allowable Stress (Fa) (ksi)	Stress Ratio
0.00	0.56	0.37	0.00	0.00	0.00	15.00	15.58	52.0	0.0	0.300
1.00	0.56	0.37	0.00	0.00	0.00	14.97	15.55	52.0	0.0	0.299
2.00	0.56	0.37	0.00	0.00	0.00	14.94	15.51	52.0	0.0	0.298
3.00	0.56	0.37	0.00	0.00	0.00	14.90	15.48	52.0	0.0	0.298
4.00	0.56	0.37	0.00	0.00	0.00	14.87	15.44	52.0	0.0	0.297
5.00	0.56	0.37	0.00	0.00	0.00	14.83	15.40	52.0	0.0	0.296
6.00	0.55	0.37	0.00	0.00	0.00	14.80	15.37	52.0	0.0	0.296
7.00	0.55	0.37	0.00	0.00	0.00	14.76	15.33	52.0	0.0	0.295
8.00	0.55	0.38	0.00	0.00	0.00	14.73	15.29	52.0	0.0	0.294
9.00	0.55	0.38	0.00	0.00	0.00	14.69	15.25	52.0	0.0	0.293
10.00	0.55	0.38	0.00	0.00	0.00	14.65	15.21	52.0	0.0	0.293
11.00	0.54	0.38	0.00	0.00	0.00	14.61	15.17	52.0	0.0	0.292
12.00	0.54	0.38	0.00	0.00	0.00	14.57	15.13	52.0	0.0	0.291
13.00	0.54	0.38	0.00	0.00	0.00	14.53	15.08	52.0	0.0	0.290
14.00	0.54	0.38	0.00	0.00	0.00	14.49	15.04	52.0	0.0	0.289
15.00	0.53	0.38	0.00	0.00	0.00	14.45	15.00	52.0	0.0	0.289
16.00	0.53	0.38	0.00	0.00	0.00	14.41	14.95	52.0	0.0	0.288
17.00	0.53	0.38	0.00	0.00	0.00	14.36	14.91	52.0	0.0	0.287
18.00	0.53	0.38	0.00	0.00	0.00	14.32	14.86	52.0	0.0	0.286
19.00	0.52	0.38	0.00	0.00	0.00	14.28	14.82	52.0	0.0	0.285
20.00	0.52	0.38	0.00	0.00	0.00	14.23	14.77	52.0	0.0	0.284
21.00	0.52	0.38	0.00	0.00	0.00	14.19	14.72	52.0	0.0	0.283
22.00	0.52	0.39	0.00	0.00	0.00	14.14	14.67	52.0	0.0	0.282
23.00	0.52	0.39	0.00	0.00	0.00	14.09	14.62	52.0	0.0	0.281
24.00	0.51	0.39	0.00	0.00	0.00	14.05	14.57	52.0	0.0	0.280
25.00	0.51	0.39	0.00	0.00	0.00	14.00	14.52	52.0	0.0	0.279
26.00	0.51	0.39	0.00	0.00	0.00	13.95	14.47	52.0	0.0	0.278
27.00	0.51	0.39	0.00	0.00	0.00	13.90	14.42	52.0	0.0	0.277
28.00	0.50	0.39	0.00	0.00	0.00	13.85	14.37	52.0	0.0	0.276
29.00	0.50	0.39	0.00	0.00	0.00	13.80	14.31	52.0	0.0	0.275
30.00	0.50	0.39	0.00	0.00	0.00	13.74	14.26	52.0	0.0	0.274
31.00	0.50	0.39	0.00	0.00	0.00	13.69	14.20	52.0	0.0	0.273
32.00	0.49	0.39	0.00	0.00	0.00	13.64	14.15	52.0	0.0	0.272
33.00	0.49	0.39	0.00	0.00	0.00	13.58	14.09	52.0	0.0	0.271
34.00	0.49	0.40	0.00	0.00	0.00	13.53	14.03	52.0	0.0	0.270
35.00	0.49	0.40	0.00	0.00	0.00	13.47	13.97	52.0	0.0	0.269
36.00	0.48	0.40	0.00	0.00	0.00	13.42	13.91	52.0	0.0	0.268
37.00	0.48	0.40	0.00	0.00	0.00	13.36	13.85	52.0	0.0	0.267
38.00	0.48	0.40	0.00	0.00	0.00	13.30	13.79	52.0	0.0	0.265
39.00	0.47	0.40	0.00	0.00	0.00	13.24	13.73	52.0	0.0	0.264
40.00	0.47	0.40	0.00	0.00	0.00	13.18	13.67	52.0	0.0	0.263
41.00	0.47	0.40	0.00	0.00	0.00	13.12	13.60	52.0	0.0	0.262
41.04	0.47	0.40	0.00	0.00	0.00	13.11	13.60	52.0	0.0	0.262
42.00	0.47	0.40	0.00	0.00	0.00	12.91	13.40	52.0	0.0	0.258
43.00	0.46	0.40	0.00	0.00	0.00	12.85	13.33	52.0	0.0	0.256
44.00	0.46	0.40	0.00	0.00	0.00	12.79	13.26	52.0	0.0	0.255
45.00	0.45	0.40	0.00	0.00	0.00	12.72	13.19	52.0	0.0	0.254
46.00	0.45	0.40	0.00	0.00	0.00	12.65	13.12	52.0	0.0	0.252
46.63	0.49	0.46	0.00	0.00	0.00	13.63	14.14	52.0	0.0	0.272
47.00	0.49	0.46	0.00	0.00	0.00	13.60	14.11	52.0	0.0	0.271
48.00	0.48	0.46	0.00	0.00	0.00	13.53	14.03	52.0	0.0	0.270

©2007 - 2015 by ATC IP LLC. All rights reserved.

Load Case: Twist/Sway 50.00 mph Wind with No Ice 28 Iterations

Gust Response Factor 1.69
Dead Load Factor : 1.00
Wind Load Factor : 1.00

49.00	0.48	0.46	0.00	0.00	0.00	13.45	13.95	52.0	0.0	0.268
50.00	0.48	0.47	0.00	0.00	0.00	13.37	13.87	52.0	0.0	0.267
51.00	0.48	0.47	0.00	0.00	0.00	13.29	13.79	52.0	0.0	0.265
52.00	0.47	0.47	0.00	0.00	0.00	13.21	13.70	52.0	0.0	0.264
53.00	0.47	0.47	0.00	0.00	0.00	13.12	13.62	52.0	0.0	0.262
54.00	0.47	0.47	0.00	0.00	0.00	13.04	13.53	52.0	0.0	0.260
55.00	0.46	0.47	0.00	0.00	0.00	12.95	13.44	52.0	0.0	0.259
56.00	0.46	0.47	0.00	0.00	0.00	12.87	13.35	52.0	0.0	0.257
57.00	0.46	0.47	0.00	0.00	0.00	12.78	13.26	52.0	0.0	0.255
58.00	0.46	0.47	0.00	0.00	0.00	12.69	13.17	52.0	0.0	0.253
59.00	0.45	0.47	0.00	0.00	0.00	12.60	13.08	52.0	0.0	0.252
60.00	0.45	0.47	0.00	0.00	0.00	12.51	12.99	52.0	0.0	0.250
61.00	0.45	0.47	0.00	0.00	0.00	12.42	12.89	52.0	0.0	0.248
62.00	0.45	0.48	0.00	0.00	0.00	12.33	12.80	52.0	0.0	0.246
63.00	0.44	0.48	0.00	0.00	0.00	12.23	12.70	52.0	0.0	0.244
64.00	0.44	0.48	0.00	0.00	0.00	12.14	12.60	52.0	0.0	0.242
65.00	0.44	0.48	0.00	0.00	0.00	12.04	12.50	52.0	0.0	0.241
66.00	0.43	0.48	0.00	0.00	0.00	11.94	12.40	52.0	0.0	0.239
67.00	0.43	0.48	0.00	0.00	0.00	11.84	12.30	52.0	0.0	0.237
68.00	0.43	0.48	0.00	0.00	0.00	11.74	12.20	52.0	0.0	0.235
69.00	0.43	0.48	0.00	0.00	0.00	11.64	12.09	52.0	0.0	0.233
70.00	0.42	0.48	0.00	0.00	0.00	11.53	11.99	52.0	0.0	0.231
71.00	0.42	0.48	0.00	0.00	0.00	11.43	11.88	52.0	0.0	0.229
72.00	0.42	0.48	0.00	0.00	0.00	11.32	11.77	52.0	0.0	0.226
73.00	0.41	0.48	0.00	0.00	0.00	11.21	11.66	52.0	0.0	0.224
74.00	0.41	0.49	0.00	0.00	0.00	11.10	11.55	52.0	0.0	0.222
75.00	0.41	0.48	0.00	0.00	0.00	10.99	11.43	52.0	0.0	0.220
76.00	0.41	0.48	0.00	0.00	0.00	10.88	11.32	52.0	0.0	0.218
77.00	0.40	0.49	0.00	0.00	0.00	10.77	11.20	52.0	0.0	0.216
78.00	0.40	0.49	0.00	0.00	0.00	10.66	11.09	52.0	0.0	0.213
79.00	0.40	0.49	0.00	0.00	0.00	10.54	10.97	52.0	0.0	0.211
80.00	0.39	0.49	0.00	0.00	0.00	10.42	10.85	52.0	0.0	0.209
81.00	0.39	0.49	0.00	0.00	0.00	10.30	10.73	52.0	0.0	0.206
81.49	0.39	0.49	0.00	0.00	0.00	10.24	10.67	52.0	0.0	0.205
82.00	0.39	0.49	0.00	0.00	0.00	10.04	10.47	52.0	0.0	0.201
83.00	0.38	0.49	0.00	0.00	0.00	9.92	10.34	52.0	0.0	0.199
84.00	0.38	0.49	0.00	0.00	0.00	9.80	10.21	52.0	0.0	0.196
85.00	0.37	0.49	0.00	0.00	0.00	9.67	10.08	52.0	0.0	0.194
86.00	0.37	0.49	0.00	0.00	0.00	9.55	9.95	52.0	0.0	0.191
86.18	0.41	0.58	0.00	0.00	0.00	10.35	10.80	52.0	0.0	0.208
87.00	0.40	0.58	0.00	0.00	0.00	10.23	10.68	52.0	0.0	0.205
88.00	0.40	0.58	0.00	0.00	0.00	10.08	10.53	52.0	0.0	0.203
89.00	0.40	0.58	0.00	0.00	0.00	9.94	10.38	52.0	0.0	0.200
90.00	0.39	0.58	0.00	0.00	0.00	9.79	10.23	52.0	0.0	0.197
91.00	0.39	0.58	0.00	0.00	0.00	9.64	10.08	52.0	0.0	0.194
92.00	0.39	0.58	0.00	0.00	0.00	9.49	9.93	52.0	0.0	0.191
93.00	0.38	0.58	0.00	0.00	0.00	9.34	9.77	52.0	0.0	0.188
94.00	0.38	0.59	0.00	0.00	0.00	9.18	9.61	52.0	0.0	0.185
95.00	0.38	0.59	0.00	0.00	0.00	9.02	9.46	52.0	0.0	0.182
96.00	0.38	0.59	0.00	0.00	0.00	8.86	9.29	52.0	0.0	0.179
97.00	0.37	0.59	0.00	0.00	0.00	8.70	9.13	52.0	0.0	0.176
98.00	0.37	0.59	0.00	0.00	0.00	8.54	8.97	52.0	0.0	0.172
99.00	0.37	0.59	0.00	0.00	0.00	8.37	8.80	52.0	0.0	0.169
100.00	0.36	0.58	0.00	0.00	0.00	8.20	8.62	52.0	0.0	0.166
101.00	0.36	0.58	0.00	0.00	0.00	8.03	8.45	52.0	0.0	0.163
102.00	0.35	0.58	0.00	0.00	0.00	7.87	8.28	52.0	0.0	0.159
103.00	0.35	0.59	0.00	0.00	0.00	7.70	8.11	52.0	0.0	0.156

©2007 - 2015 by ATC IP LLC. All rights reserved.

Load Case: Twist/Sway 50.00 mph Wind with No Ice 28 Iterations

Gust Response Factor 1.69
Dead Load Factor : 1.00
Wind Load Factor : 1.00

104.00	0.35	0.59	0.00	0.00	0.00	7.52	7.93	52.0	0.0	0.153
105.00	0.34	0.59	0.00	0.00	0.00	7.35	7.76	52.0	0.0	0.149
106.00	0.34	0.59	0.00	0.00	0.00	7.17	7.58	52.0	0.0	0.146
107.00	0.34	0.59	0.00	0.00	0.00	6.99	7.40	52.0	0.0	0.142
108.00	0.33	0.59	0.00	0.00	0.00	6.81	7.22	52.0	0.0	0.139
108.75	0.33	0.59	0.00	0.00	0.00	6.68	7.08	52.0	0.0	0.136
108.75	0.56	0.59	0.00	0.00	0.00	14.15	14.75	52.0	0.0	0.284
109.00	0.56	0.59	0.00	0.00	0.00	14.07	14.67	52.0	0.0	0.282
110.00	0.55	0.58	0.00	0.00	0.00	13.75	14.33	52.0	0.0	0.276
111.00	0.55	0.58	0.00	0.00	0.00	13.43	14.02	52.0	0.0	0.270
112.00	0.55	0.58	0.00	0.00	0.00	13.11	13.69	52.0	0.0	0.263
113.00	0.55	0.58	0.00	0.00	0.00	12.78	13.36	52.0	0.0	0.257
114.00	0.54	0.58	0.00	0.00	0.00	12.44	13.02	52.0	0.0	0.250
115.00	0.54	0.58	0.00	0.00	0.00	12.09	12.67	52.0	0.0	0.244
116.00	0.54	0.59	0.00	0.00	0.00	11.73	12.31	52.0	0.0	0.237
117.00	0.54	0.59	0.00	0.00	0.00	11.36	11.94	52.0	0.0	0.230
118.00	0.54	0.59	0.00	0.00	0.00	10.98	11.56	52.0	0.0	0.222
119.00	0.53	0.59	0.00	0.00	0.00	10.59	11.17	52.0	0.0	0.215
120.00	0.44	0.49	0.00	0.00	0.00	10.19	10.66	52.0	0.0	0.205
121.00	0.44	0.49	0.00	0.00	0.00	9.88	10.35	52.0	0.0	0.199
122.00	0.43	0.50	0.00	0.00	0.00	9.55	10.02	52.0	0.0	0.193
123.00	0.43	0.50	0.00	0.00	0.00	9.22	9.69	52.0	0.0	0.186
124.00	0.43	0.50	0.00	0.00	0.00	8.88	9.34	52.0	0.0	0.180
124.99	0.43	0.50	0.00	0.00	0.00	8.53	8.99	52.0	0.0	0.173
125.00	0.43	0.50	0.00	0.00	0.00	8.52	8.99	52.0	0.0	0.173
126.00	0.42	0.50	0.00	0.00	0.00	8.16	8.63	52.0	0.0	0.166
127.00	0.42	0.50	0.00	0.00	0.00	7.79	8.25	52.0	0.0	0.159
128.00	0.41	0.50	0.00	0.00	0.00	7.41	7.87	52.0	0.0	0.151
128.68	0.50	0.62	0.00	0.00	0.00	8.50	9.06	52.0	0.0	0.174
129.00	0.50	0.62	0.00	0.00	0.00	8.35	8.91	52.0	0.0	0.171
130.00	0.49	0.62	0.00	0.00	0.00	7.86	8.43	52.0	0.0	0.162
131.00	0.41	0.52	0.00	0.00	0.00	7.37	7.82	52.0	0.0	0.151
132.00	0.40	0.52	0.00	0.00	0.00	6.96	7.42	52.0	0.0	0.143
133.00	0.40	0.51	0.00	0.00	0.00	6.55	7.00	52.0	0.0	0.135
134.00	0.40	0.51	0.00	0.00	0.00	6.12	6.58	52.0	0.0	0.127
135.00	0.39	0.51	0.00	0.00	0.00	5.69	6.14	52.0	0.0	0.118
136.00	0.39	0.52	0.00	0.00	0.00	5.24	5.70	52.0	0.0	0.110
137.00	0.34	0.47	0.00	0.00	0.00	4.78	5.19	52.0	0.0	0.100
138.00	0.34	0.47	0.00	0.00	0.00	4.36	4.77	52.0	0.0	0.092
139.00	0.34	0.47	0.00	0.00	0.00	3.93	4.34	52.0	0.0	0.084
140.00	0.34	0.47	0.00	0.00	0.00	3.49	3.91	52.0	0.0	0.075
141.00	0.23	0.30	0.00	0.00	0.00	3.03	3.30	52.0	0.0	0.063
142.00	0.23	0.30	0.00	0.00	0.00	2.75	3.02	52.0	0.0	0.058
143.00	0.22	0.30	0.00	0.00	0.00	2.46	2.74	52.0	0.0	0.053
144.00	0.22	0.30	0.00	0.00	0.00	2.17	2.45	52.0	0.0	0.047
145.00	0.22	0.30	0.00	0.00	0.00	1.87	2.15	52.0	0.0	0.041
146.00	0.22	0.30	0.00	0.00	0.00	1.56	1.85	52.0	0.0	0.036
147.00	0.21	0.30	0.00	0.00	0.00	1.24	1.54	52.0	0.0	0.030
147.90	0.02	0.05	0.00	0.00	0.00	0.50	0.53	52.0	0.0	0.010
148.00	0.00	0.05	0.00	0.00	0.00	0.49	0.50	52.0	0.0	0.010

©2007 - 2015 by ATC IP LLC. All rights reserved.

Analysis Summary

Load Case	Reactions Shear FX (kips)	Shear FZ (kips)	Axial FY (kips)	Moment MX (ft-kips)	Moment MY (ft-kips)	Moment MZ (ft-kips)	Max Stresses Combined Stress (ksi)	Allowable Stress (ksi)	Elev (ft)	Stress Ratio
No Ice	39.1	0.00	48.29	0.00	0.00	4361.73	49.15	52.0	0.00	0.946
Ice	33.7	0.00	52.99	0.00	0.00	3687.46	41.69	52.0	0.00	0.802
Twist/Sway	12.1	0.00	48.31	0.00	0.00	1348.26	15.58	52.0	0.00	0.300

Additional Steel Summary

Elev From (ft)	Elev To (ft)	Member	Intermediate Connectors VQ/I (lb/in)	Shear Applied (kips)	Shear Allow (kips)	Upper Termination Connectors MQ/I (kips)	Allow (kips)	Num Reqd	Num Actual	Lower Termination Connectors MQ/I (kips)	Allow (kips)	Num Reqd	Num Actual	Max Member fb (ksi)	Fb (ksi)	Ratio
0.00	108.7	(4) SOL-#20 All Thre	393.1	11.8	12.9	129.6	8.1	16	20	0.0	8.1	0	0	57.7	57.8	0.998

Base/Flange Plate	Plate Type	***Baseplate***	
	Pole Diameter	48	in
	Pole Thickness	0.4375	in
	Plate Diameter	63	in
	Plate Thickness	2	in
	Plate Fy	60	ksi
	Weld Length	0.3125	in
	Allowable	1154.59	k-in
	Applied	497.85	k-in
Stiffeners	#	***12***	***Show***
	Thickness	0.75	in
	Length	6	in
	Height	12	in
	Chamfer	1	in
	Offset Angle	22.5	°
	Fy	36	ksi

Bolts	#	***16***	
	Bolt Circle	57	in
	(R)adial / (S)quare	R	
●	Diameter	2.25	in
	Hole Diameter	2.625	in
	Type	A615-75	
	Fy	75	ksi
	Fu	100	ksi
	Allowable	194.86	k
	Applied	173.17	k
Reinforcement	#	***4***	
●	DYW. Circle	54.9	in
	Offset Angle	10	°
	Type	#20	
	Diameter	2.5	in
	Fu	100	ksi
Extra Bolts O	#	***0***	

Code Rev.	***F***
A.S.I.	1.33
Moment	4361.7 k-ft
Axial	53.0 k

Date	11/9/2015
Engineer	JAA
Site #	302515
Carrier	AT&T

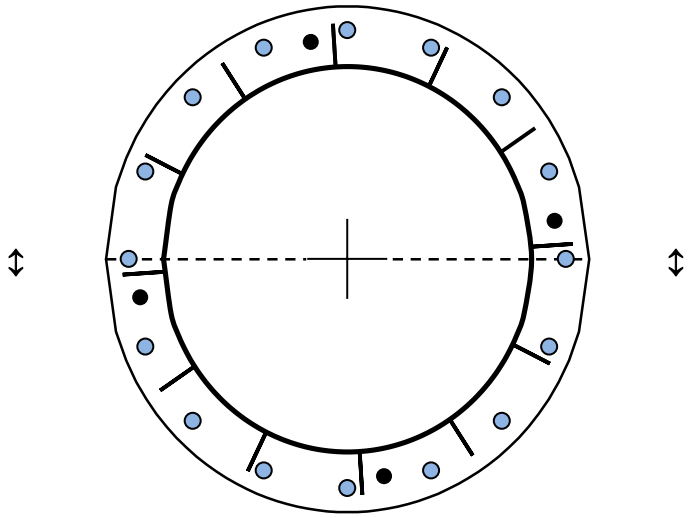

Plate Stress Ratio:
0.43 (Pass)

Bolt Stress Ratio:
0.89 (Pass)

Site Name:	SMFR - North, CT	*Program Last Updated:*	*9/18/2012*
Site Number:	302515	*American Tower Corporation*	
Engineer:	JAA		
Engineering Number:	64131621		
Date:	11/09/15		

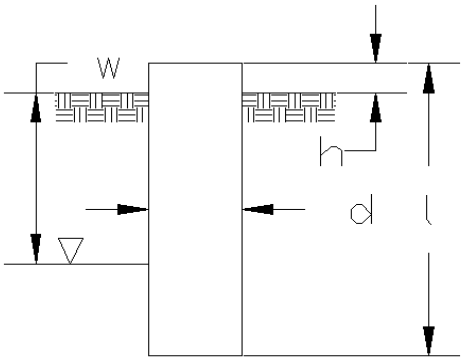

Design Base Loads (Unfactored) - Analysis per TIA-222-F Standards

Analyze or Design a Foundation?	Analyze	
Foundation Mapped:	N	
Moment (M):	4361.7	k-ft
Shear/Leg (V):	39.1	k
Axial Load (P):	53.0	k
Uplift/Leg (U):	0.0	k
Tower Type (GT / SST / MP):	MP	
Diameter of Caisson (d):	6.5	ft
Caisson Embedment (L-h):	24.0	ft
Caisson Height Above Ground (h):	1.0	ft
Depth Below Ground Surface to Water Table (w):	22.0	ft
Unit Weight of Concrete:	150.0	pcf
Unit Weight of Water:	62.4	pcf
Tension Skin Friction/Compression Skin Friction:	1.00	
Pullout Angle:	30.0	degrees

Soil Mechanical Properties

Depth (ft) Top	Depth (ft) Bottom	γ_{Soil} (pcf)	Cohesion (psf)	ϕ (degree)	Allowable Skin Friction (psf)	Allowable Bearing Pressure (psf)
0.0	2.0	110	0	10	0	0
2.0	10.0	125	0	35	200	6000
10.0	16.0	125	250	36	700	6000
16.0	22.0	125	0	39	700	20000
22.0	27.0	125	6000	0	1500	20000

Volume of Concrete:	829.6	ft^3 = 30.7 yd^3
Weight of Concrete (Buoyancy Effect Considered):	120.3	k
Average Soil Unit Weight:	118.6	pcf
Skin Friction Resistance:	265.5	k
Compressive Bearing Resistance:	663.7	k
Pullout Weight (Minus Concrete Weight):	974.6	k
Allowable Uplift Capacity (U_{Allow}):	361.7	k
Allowable Compressive Capacity (P_{Allow}):	929.1	k
Compressive Design Load (P):	73.9	k
U / U_{Allow}:	0.00	Result: OK
P / P_{Allow}:	0.08	Result: OK
Total Lateral Resistance:	2317.1	k
Inflection Point (Below Ground Surface):	17.3	ft
Design Overturning Moment At Inflection Point (M_D):	5077.8	k-ft
Nominal Moment Capacity (M_{Allow}):	10126.5	k-ft
M_{Allow} / M_D Factor of Safety:	1.99	Result: Acceptable Overstress

Caisson Strength Capacity

Concrete Compressive Strength (f'_c):	4000	psi
Vertical Steel Rebar Size #:	11	
Vertical Steel Rebar Area:	1.56	in^2
Required # of Vertical Rebar to Satisfy Reinforcement Strength:	1	
Design # of Vertical Steel Rebars:	20	
Vertical Steel Rebar Yield Strength (F_y):	60	ksi
Horizontal Tie / Stirrup Size #:	5	
Horizontal Tie / Stirrup Area:	0.31	in^2
48 * Tie Diameter:	30.00	in
16 * Vertical Bar Diameter:	22.00	in
0.8 * Diameter of Pier / 2:	31.20	in
12":	12.00	in
Minimum Spacing:	12.00	in
If $V_u > 0.5\phi V_c$:		
ϕV_c:	455.8	k
S, Based on strength requirements:	4.59	in
S_{Min}:	10.05	in
S_{Min}:	9.54	in
Minimum Spacing:	9.5	in
If $V_u > \phi V_c$:		
ϕV_c:	455.8	k
S, Based on strength requirements:	11.53	in
S_{Min}:	10.05	in
S_{Min}:	9.54	in
Minimum Spacing:	9.54	in
ϕV_s:	145.1	k
Required Horizontal Tie / Stirrup Spacing:	9.5	in
Design Horizontal Tie / Stirrup Spacing:	12.0	
Horizontal Tie / Stirrup Steel Yield Strength (F_y):	60	ksi
Rebar Cage Diameter:	67.0	in
Strength Bending/Tension Reduction Factor (ϕ_B):	0.90	ACI318-05 - 9.3.2.1
Strength Shear Reduction Factor (ϕ_V):	0.75	ACI318-05 - 9.3.2.3
Strength Compression Reduction Factor (ϕ_V):	0.65	ACI318-05 - 9.3.2.2
Wind Design Factor:	1.30	ACI318-05 - 9.2.1
Steel Elastic Modulus:	29000	ksi
Maximum Allowable Strain in Rebar:	0.008	ACI318-05 - 10.3.5
Design Moment (M_u):	5743.1	k-ft
Nominal Moment Capacity ($\phi_B M_n$):	6899.9	k-ft - ACI318-005 - 10.2
$M_u/\phi_B M_n$:	0.83	Result: OK
Design Shear (V_u):	606.9	k
Nominal Shear Capacity ($\phi_V V_n$):	600.9	k - ACI318-05 - 11.3.1.1 or 11.5.7.2
$V_u/\phi_V V_n$:	1.01	Result: Acceptable Overstress
Design Tension (T_u):	0.0	k
Nominal Tension Capacity ($\phi_T T_n$):	1684.8	k - ACI318-05 - 10.2
$T_u/\phi_T T_n$:	0.00	Result: OK
Design Compression (P_u):	96.1	k
Nominal Compression Capacity ($\phi_P P_n$):	8393.0	k - ACI318-05 - 10.3.6.2

$P_u/\phi_P P_n$:	0.01	Result: OK
Bending Reinforcement Ratio:	0.007	ACI318-05 - 10.8.4 & 10.9.1
$M_u/\phi_B M_n + T_u/\phi_T T_n$:	0.83	Result: OK