SITE NAME: STAMFORD NORTH
FA NUMBER: 10034979
SITE NUMBER: CTL02109

1590 NEWFIELD AVENUE
STAMFORD, CT 06905
COUNTY: FAIRFIELD

AMERICAN TOWER SITE NAME: SMFR - NORTH
AMERICAN TOWER SITE NUMBER: 302515

PROJECT TEAM

CLIENT REPRESENTATIVE

COMPANY: SMARTLINK, LLC
ADDRESS: 1362 MELLON ROAD, SUITE 140
CITY, STATE, ZIP: HANOVER, MD 21076
CONTACT: RICH WAGNER
E-MAIL: RWAGNER@SMARTLINKLLC.COM

SITE ACQUISITION

COMPANY: SMARTLINK, LLC
ADDRESS: 33 BOSTON POST ROAD WEST, SUITE 210
CITY, STATE, ZIP: MARLBOROUGH, MA 01752
CONTACT: TODD OLIVER
PHONE: (774) 369-3618
E-MAIL: TODD.OLIVER@SMARTLINKLLC.COM

ENGINEER

COMPANY: MASER CONSULTING P.A.
ADDRESS: 400 VALLEY ROAD, SUITE 304
CITY, STATE, ZIP: MT. ARLINGTON, NJ 07856
CONTACT: FRANK PAZDEN
PHONE: (973) 398-3110 x4505
E-MAIL: FPAZDEN@MASERCONSULTING.COM

RF ENGINEER

COMPANY: NEW CINGULAR WIRELESS PCS, LLC
ADDRESS: 550 COCHITUATE RD.
CITY, STATE, ZIP: FRAMINGHAM, MA 01701
CONTACT: CAMERON SYME
E-MAIL: CS6970@ATT.COM

CONSTRUCTION MANAGER

COMPANY: SMARTLINK, LLC.
ADDRESS: 33 BOSTON POST ROAD WEST, SUITE 210
CITY, STATE, ZIP: MARLBOROUGH, MA 01752
CONTACT: MARK DONNELLY
PHONE: (617) 515-2080
E-MAIL: MARK.DONNELLY@SMARTLINKLLC.COM

SITE INFORMATION

APPLICANT/LESSEE

NEW CINGULAR WIRELESS PCS, LLC
550 COCHITUATE RD.
FRAMINGHAM, MA 01701

PROPERTY/TOWER OWNER:

NAME:	AMERICAN TOWER
ADDRESS:	116 HUNTINGTON AVE., 11TH FLOOR
CITY, STATE, ZIP:	BOSTON, MA 02116
SITE ID #:	302515
LATITUDE:	41.11274167° N
LONGITUDE:	73.53836111° W
LAT./LONG. TYPE:	NAD 83
AREA OF CONSTRUCTION:	EXISTING EQUIPMENT SHELTER AND MONOPOLE
ZONING/JURISDICTION:	CITY OF STAMFORD
CURRENT USE/PROPOSED USE:	UNMANNED TELECOMMUNICATIONS FACILITY
HANDICAP REQUIREMENTS:	FACILITY IS UNMANNED AND NOT FOR HUMAN HABITATION. HANDICAPPED ACCESS NOT REQUIRED.
CONSTRUCTION TYPE:	IIB
USE GROUP:	U

VICINITY MAP

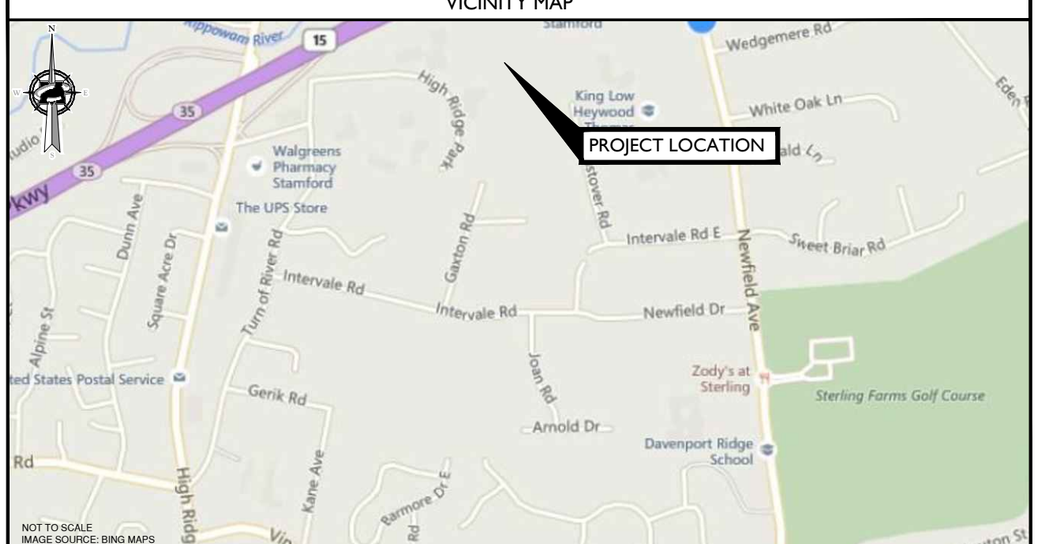

CODE COMPLIANCE

ALL WORK AND MATERIALS SHALL BE PERFORMED AND INSTALLED IN ACCORDANCE WITH THE CURRENT EDITIONS OF THE FOLLOWING CODES AS ADOPTED BY THE LOCAL GOVERNING AUTHORITIES. NOTHING IN THESE PLANS IS TO BE CONSTRUED TO PERMIT WORK NOT CONFORMING TO THE LATEST EDITIONS OF THE FOLLOWING CODES.

1. CONNECTICUT STATE BUILDING CODE (2005) & ALL SUBSEQUENT AMENDMENTS
2. NATIONAL ELECTRIC CODE 2011
3. NATIONAL FIRE PROTECTION ASSOCIATION 70 - 2011
4. LIGHTNING PROTECTION CODE 201
5. AMERICAN CONCRETE INSTITUTE 318
6. AMERICAN INSTITUTE OF STEEL CONSTRICTION 14 ED.
7. EIA/TIA-222 REVISION F
8. TIA 607 FOR GROUNDING
9. INSTITUTE FOR ELECTRICAL AND ELECTRONICS ENGINEERS 81
10. IEEE C2 LATEST EDITION
11. TELCORDIA GR-1275 12. ANSI T1.311

GENERAL CONTRACTOR NOTES

DO NOT SCALE DRAWINGS

CONTRACTOR SHALL VERIFY ALL PLANS AND EXISTING DIMENSIONS AND CONDITIONS ON THE JOB SITE AND SHALL IMMEDIATELY NOTIFY THE ARCHITECT/ENGINEER IN WRITING OF ANY DISCREPANCIES BEFORE PROCEEDING WITH THE WORK OR BE RESPONSIBLE FOR SAME.

GENERAL NOTES

THE FACILITY IS UNMANNED AND NOT FOR HUMAN HABITATION. A TECHNICIAN WILL VISIT THE SITE AS REQUIRED FOR ROUTINE MAINTENANCE. THE PROJECT WILL NOT RESULT IN ANY SIGNIFICANT DISTURBANCE OR EFFECT ON DRAINAGE; NO SANITARY SEWER SERVICE, POTABLE WATER, OR TRASH DISPOSAL IS REQUIRED AND NO COMMERCIAL SIGNAGE IS PROPOSED.

SHEET	DESCRIPTION
T-1	TITLE SHEET
GN-1	GENERAL NOTES
A-1	COMPOUND PLAN AND EQUIPMENT PLAN
A-2	ELEVATION VIEW AND ANTENNA SCHEDULE
A-3	ANTENNA LAYOUTS
A-4	DETAILS
A-5	RF PLUMBING DIAGRAMS
G-1	GROUNDING DETAILS
S-1	STRUCTURAL DETAILS
S-2	STRUCTURAL GENERAL NOTES

PROJECT DESCRIPTION/SCOPE OF WORK

LTE WCS WILL BE 3C AT THE SITE WITH BRONZE STANDARD CONFIGURATION.
PROJECT BASED ON RFDS ID: 758467, LAST REVISED 7/07/2015.

THIS PROJECT WILL BE COMPRISED OF:

- (3) NEW ANTENNAS TO REPLACE (3) EXISTING ANTENNAS, (1) PER SECTOR
- (3) NEW WCS LTE RRUS-32'S, (1) PER SECTOR
- (3) NEW DC6 FIBER SURGE SUPPRESSORS
- ADD (1) FIBER CABLE
- ADD (2) DC TRUNKS
- (3) NEW LTE WCS 3C WITH BRONZE STANDARD CONFIGURATION

MASER CONSULTING P.A.
Customer Loyalty Through Client Satisfaction
www.maserconsulting.com
Engineers ■ Planners ■ Surveyors
Landscape Architects ■ Environmental Scientists
Office Locations:
■ Red Bank, NJ ■ Clinton, NJ ■ Hamilton, NJ ■ Marmora, NJ ■ Mt. Arlington, NJ ■ Mt. Laurel, NJ
■ Sterling, VA ■ Norfolk, VA ■ Albuquerque, NM ■ Albany, NY ■ Chestnut Ridge, NY ■ Newburgh, NY
■ Hawthorne, NY ■ Lehigh Valley, PA ■ Exton, PA ■ Philadelphia, PA ■ Columbia, MD ■ Tampa, FL

Copyright © 2016. Maser Consulting P.A. All Rights Reserved. This drawing and all the information contained herein is authorized for use only by the party for whom the services were contracted or to whom it is certified. This drawing may not be copied, reused, disclosed, distributed or relied upon for any other purpose without the express written consent of Maser Consulting P.A.

smartlink
1362 MELLON ROAD
SUITE 140
HANOVER, MD 21076
TEL: (410) 582-8043 FAX: (443) 221-2962

at&t

NEW CINGULAR WIRELESS PCS, LLC
550 COCHITUATE ROAD
FRAMINGHAM, MA 01701

811 Know what's below. Call before you dig.

PROTECT YOURSELF
ALL STATES REQUIRE NOTIFICATION OF EXCAVATORS, DESIGNERS, OR ANY PERSON PREPARING TO DISTURB THE EARTH'S SURFACE ANYWHERE IN ANY STATE

FOR STATE SPECIFIC DIRECT PHONE NUMBERS VISIT: WWW.CALL811.COM

SCALE :	JOB NUMBER :
AS SHOWN	15946020A

REV	DATE	DESCRIPTION	DRAWN BY	CHECKED BY
1	02/26/16	REVISED PER SMARTLINK'S COMMENTS	DTS	FEP
0	10/29/15	ISSUED FOR REVIEW	KRO/SMG	FEP

STATE OF CONNECTICUT
FRANK E. PAZDEN
No. 28188
LICENSED PROFESSIONAL ENGINEER
FRANK E. PAZDEN
LICENSED PROFESSIONAL ENGINEER
No. 28188

IT IS A VIOLATION OF LAW FOR ANY PERSON, UNLESS THEY ARE ACTING UNDER THE DIRECTION OF THE RESPONSIBLE LICENSED PROFFESIONAL ENGINEER, TO ALTER THIS DOCUMENT.

SITE NAME:

STAMFORD NORTH
FA# 10034979
SITE # CTL02109

1590 NEWFIELD AVENUE
STAMFORD, CT 06905
COUNTY OF FAIRFIELD

MT. ARLINGTON OFFICE
400 Valley Road
Suite 304
Mount Arlington, NJ 07856
Phone: 973.398.3110
Fax: 973.398.3199
email: solutions @maserconsulting.com

SHEET TITLE :
TITLE SHEET

SHEET NUMBER :
T-1

1. THE SUBCONTRACTOR SHALL REVIEW AND INSPECT THE EXISTING FACILITY GROUNDING SYSTEM (AS DESIGNED AND INSTALLED) FOR STRICT COMPLIANCE WITH THE NEC (AS ADOPTED BY THE AHJ), THE SITE-SPECIFIC (UL, LPI, OR NFPA) LIGHTING PROTECTION CODE, AND GENERAL COMPLIANCE WITH TELCORDIA AND TIA GROUNDING STANDARDS. THE SUBCONTRACTOR SHALL REPORT ANY VIOLATIONS OR ADVERSE FINDINGS TO THE CONTRACTOR FOR RESOLUTION.
2. ALL GROUND ELECTRODE SYSTEMS (INCLUDING TELECOMMUNICATION, RADIO, LIGHTNING PROTECTION, AND AC POWER GES'S) SHALL BE BONDED TOGETHER, AT OR BELOW GRADE, BY TWO OR MORE COPPER BONDING CONDUCTORS IN ACCORDANCE WITH THE NEC.
3. THE SUBCONTRACTOR SHALL PERFORM IEEE FALL-OF-POTENTIAL RESISTANCE TO EARTH TESTING (PER IEEE 1100 AND 81) FOR GROUND ELECTRODE SYSTEMS. THE SUBCONTRACTOR SHALL FURNISH AND INSTALL SUPPLEMENTAL GROUND ELECTRODES AS NEEDED TO ACHIEVE A TEST RESULT OF 5O HMS OR LESS.
4. THE SUBCONTRACTOR IS RESPONSIBLE FOR PROPERLY SEQUENCING GROUNDING AND UNDERGROUND CONDUIT INSTALLATION AS TO PREVENT ANY LOSS OF CONTINUITY IN THE GROUNDING SYSTEM OR DAMAGE TO THE CONDUIT.
5. METAL CONDUIT AND TRAY SHALL BE GROUNDED AND MADE ELECTRICALLY CONTINUOUS WITH LISTED BONDING FITTINGS OR BY BONDING ACROSS THE DISCONTINUITY WITH #6 AWG COPPER WIRE UL APPROVED GROUNDING TYPE CONDUIT CLAMPS.
6. METAL RACEWAY SHALL NOT BE USED AS THE NEC REQUIRED EQUIPMENT GROUND CONDUCTOR. STRANDED COPPER CONDUCTORS WITH GREEN INSULATION, SIZED IN ACCORDANCE WITH THE NEC, SHALL BE FURNISHED AND INSTALLED WITH THE POWER CIRCUITS TO BTS EQUIPMENT.
7. EACH BTS CABINET FRAME SHALL BE DIRECTLY CONNECTED TO THE EQUIPMENT GROUND RING WITH GREEN INSULATED SUPPLEMENTAL EQUIPMENT GROUND WIRES, 6 AWG STRANDED COPPER OR LARGER FOR INDOOR BTS; 2 AWG STRANDED COPPER FOR OUTDOOR BTS.
8. CONNECTIONS TO THE GROUND BUS SHALL NOT BE DOUBLED UP OR STACKED. BACK TO BACK CONNECTIONS ON OPPOSITE SIDES OF THE GROUND BUS ARE PERMITTED.
9. ALL EXTERIOR GROUND CONDUCTORS BETWEEN EQUIPMENT/GROUND BARS AND THE GROUND RING, SHALL BE #2 AWG SOLID TINNED COPPER UNLESS OTHERWISE INDICATED.
10. ALUMINUM CONDUCTOR OR COPPER CLAD STEEL CONDUCTOR SHALL NOT BE USED FOR GROUNDING CONNECTIONS.
11. USE OF 90° BENDS IN THE PROTECTION GROUNDING CONDUCTORS SHALL BE AVOIDED WHEN 45° BENDS CAN BE ADEQUATELY SUPPORTED. ALL BENDS SHALL BE MADE WITH 12" RADIUS OR LARGER.
12. EXOTHERMIC WELDS SHALL BE USED FOR ALL GROUNDING CONNECTIONS BELOW GRADE.
13. ALL GROUND CONNECTIONS ABOVE GRADE (INTERIOR) SHALL BE FORMED USING HIGH PRESS CRIMPS EXCEPT FOR GROUND BAR CONNECTION FROM MGB TO OUTSIDE EXTERIOR GROUND SHALL ALL BE CADWELD CONNECTIONS.
14. COMPRESSION GROUND CONNECTIONS MAY BE REPLACED BY EXOTHERMIC WELD CONNECTIONS.
15. ICE BRIDGE BONDING CONDUCTORS SHALL BE EXOTHERMICALLY BONDED TO THE TOWER GROUND BAR.
16. APPROVED ANTIOXIDANT COATINGS (I.E. CONDUCTIVE GEL OR PASTE) SHALL BE USED ON ALL COMPRESSION AND BOLTED GROUND CONNECTIONS.
17. ALL EXTERIOR AND INTERIOR GROUND CONNECTIONS SHALL BE COATED WITH A CORROSION RESISTANT MATERIAL.
18. MISCELLANEOUS ELECTRICAL AND NON-ELECTRICAL METAL BOXES, FRAMES AND SUPPORTS SHALL BE BONDED TO THE GROUND RING, IN ACCORDANCE WITH THE NEC.
19. BOND ALL METALLIC OBJECTS WITHIN 6 FT OF MAIN GROUND WIRES WITH 1-#2 AWG TIN-PLATED COPPER GROUND CONDUCTOR.
20. GROUND CONDUCTORS USED IN THE FACILITY GROUND AND LIGHTNING PROTECTION SYSTEMS SHALL NOT BE ROUTED THROUGH METALLIC OBJECTS THAT FORM A RING AROUND THE CONDUCTOR, SUCH AS METALLIC CONDUITS, METAL SUPPORT CLIPS OR SLEEVES THROUGH WALLS OR FLOORS. WHEN IT IS REQUIRED TO BE HOUSED IN CONDUIT TO MEET CODE REQUIREMENTS OR LOCAL CONDITIONS, NON-METALLIC MATERIAL SUCH AS PVC PLASTIC CONDUIT SHALL BE USED. WHERE USE OF METAL CONDUIT IS UNAVOIDABLE (E.G. NON-METALLIC CONDUIT PROHIBITED BY LOCAL CODE) THE GROUND CONDUCTOR SHALL BE BONDED TO EACH END OF THE METAL CONDUIT.
21. ALL NEW STRUCTURES WITH A FOUNDATION AND/OR FOOTING HAVING 20 FT. OR MORE OF 1/4" IN. OR GREATER ELECTRICALLY CONDUCTIVE REINFORCING STEEL MUST HAVE IT BONDED TO THE GROUND RING USING AN EXOTHERMIC WELD CONNECTION USING #2 AWG SOLID BARE TINNED COPPER GROUND WIRE, PER NEC 250.50.

1. FOR THE PURPOSE OF CONSTRUCTION DRAWING, THE FOLLOWING DEFINITIONS SHALL APPLY:

   CONTRACTOR – SMARTLINK
   SUBCONTRACTOR – GENERAL CONTRACTOR (CONSTRUCTION)
   OWNER – AT&T (NEW CINGULAR WIRELESS PCS, LLC)

2. ALL SITE WORK SHALL BE COMPLETED AS INDICATED ON THE DRAWINGS AND PROJECT SPECIFICATIONS.
3. DRAWINGS PROVIDED HERE ARE NOT TO BE SCALED AND ARE INTENDED TO SHOW OUTLINE ONLY.
4. ALL MATERIALS FURNISHED AND INSTALLED SHALL BE IN STRICT ACCORDANCE WITH ALL APPLICABLE CODES, REGULATIONS, AND ORDINANCES. SUBCONTRACTOR SHALL ISSUE ALL APPROPRIATE NOTICES AND COMPLY WITH ALL LAWS, ORDINANCES, RULES, REGULATIONS, AND LAWFUL ORDERS OF ANY PUBLIC AUTHORITY REGARDING THE PERFORMANCE OF THE WORK.
5. ALL WORK CARRIED OUT SHALL COMPLY WITH ALL APPLICABLE MUNICIPAL AND UTILITY COMPANY SPECIFICATIONS AND LOCAL JURISDICTIONAL CODES, ORDINANCES AND APPLICABLE REGULATIONS.
6. UNLESS NOTED OTHERWISE, THE WORK SHALL INCLUDE FURNISHING MATERIALS, EQUIPMENT, APPURTENANCES, AND LABOR NECESSARY TO COMPLETE ALL INSTALLATIONS AS INDICATED ON THE DRAWINGS.
7. THE SUBCONTRACTOR SHALL INSTALL ALL EQUIPMENT AND MATERIALS IN ACCORDANCE WITH MANUFACTURER'S RECOMMENDATIONS UNLESS SPECIFICALLY STATED OTHERWISE.
8. IF THE SPECIFIED EQUIPMENT CANNOT BE INSTALLED AS SHOWN ON THESE DRAWINGS, THE SUBCONTRACTOR SHALL PROPOSE AN ALTERNATIVE INSTALLATION SPACE FOR APPROVAL BY THE CONTRACTOR.
9. THE SUBCONTRACTOR SHALL PROTECT EXISTING IMPROVEMENTS, PAVEMENTS, CURBS, LANDSCAPING AND STRUCTURES. ANY DAMAGED PART SHALL BE REPAIRED AT SUBCONTRACTOR'S EXPENSE TO THE SATISFACTION OF OWNER.
10. THE SUBCONTRACTOR SHALL CONTACT UTILITY LOCATING SERVICES PRIOR TO THE START OF CONSTRUCTION.
11. ALL EXISTING ACTIVE SEWER, WATER, GAS, ELECTRIC, AND OTHER UTILITIES WHERE ENCOUNTERED IN THE WORK, SHALL BE PROTECTED AT ALL TIMES, AND WHERE REQUIRED FOR THE PROPER EXECUTION OF THE WORK, SHALL BE RELOCATED AS DIRECTED BY THE RESPONSIBLE ENGINEER. EXTREME CAUTION SHOULD BE USED BY THE SUBCONTRACTOR WHEN EXCAVATING OR DRILLING PIERS AROUND OR NEAR UTILITIES. SUBCONTRACTOR SHALL PROVIDE SAFETY TRAINING FOR THE WORKING CREW. THIS WILL INCLUDE BUT NOT BE LIMITED TO A) FALL PROTECTION B) CONFINED SPACE C) ELECTRICAL SAFETY D) TRENCHING & EXCAVATION.
12. ALL EXISTING INACTIVE SEWER, WATER, GAS, ELECTRIC AND OTHER UTILITIES, WHICH INTERFERE WITH THE EXECUTION OF THE WORK, SHALL BE REMOVED AND/OR CAPPED, PLUGGED OR OTHERWISE DISCONTINUED AT POINTS WHICH WILL NOT INTERFERE WITH THE EXECUTION OF THE WORK, AS DIRECTED BY THE RESPONSIBLE ENGINEER, AND SUBJECT TO THE APPROVAL OF THE OWNER AND/OR LOCAL UTILITIES.
13. THE AREAS OF THE OWNER'S PROPERTY DISTURBED BY THE WORK AND NOT COVERED BY THE TOWER, EQUIPMENT OR DRIVEWAY SHALL BE GRADED TO A UNIFORM SLOPE AND STABILIZED TO PREVENT EROSION.
14. SUBCONTRACTOR SHALL MINIMIZE DISTURBANCE TO EXISTING SITE DURING CONSTRUCTION. EROSION CONTROL MEASURES, IF REQUIRED DURING CONSTRUCTION, SHALL BE IN CONFORMANCE WITH THE LOCAL GUIDELINES FOR EROSION AND SEDIMENT CONTROL.
15. NO FILL OR EMBANKMENT MATERIAL SHALL BE PLACED ON FROZEN GROUND. FROZEN MATERIALS, SNOW OR ICE SHALL NOT BE PLACED IN ANY FILL OR EMBANKMENT.
16. THE SUBGRADE SHALL BE COMPACTED AND BROUGHT TO A SMOOTH UNIFORM GRADE PRIOR TO FINISHED SURFACE APPLICATION.
17. THE SITE SHALL BE GRADED TO CAUSE SURFACE WATER TO FLOW AWAY FROM THE BTS EQUIPMENT AND TOWER AREAS.
18. IF NECESSARY, RUBBISH, STUMPS, DEBRIS, STICKS, STONES AND OTHER REFUSE SHALL BE REMOVED FROM THE SITE AND DISPOSED OF LEGALLY.
19. THE SUBCONTRACTOR SHALL PROVIDE SITE SIGNAGE IN ACCORDANCE WITH THE TECHNICAL SPECIFICATION FOR SITE SIGNAGE.
20. SUBCONTRACTOR SHALL LEAVE PREMISES IN CLEAN CONDITION.
21. PRIOR TO THE SUBMISSION OF BIDS, THE BIDDING SUBCONTRACTOR SHALL VISIT THE CELL SITE TO FAMILIARIZE WITH THE EXISTING CONDITIONS AND TO CONSTRUCTION DRAWINGS. ANY DISCREPANCY FOUND SHALL BE BROUGHT TO THE ATTENTION OF THE CONTRACTOR.
22. SUBCONTRACTOR SHALL DETERMINE ACTUAL ROUTING OF CONDUIT, POWER AND T1 CABLES, GROUNDING CABLES AS SHOWN ON THE POWER, GROUNDING AND TELCO PLAN DRAWING. SUBCONTRACTOR SHALL UTILITIZE EXISTING TRAYS AND/OR SHALL ADD NEW TRAYS AS NECESSARY. SUBCONTRACTOR SHALL CONFIRM THE ACTUAL ROUTING WITH THE CONTRACTOR.
23. ALL CONCRETE REPAIR WORK SHALL BE DONE IN ACCORDANCE WITH AMERICAN CONCRETE INSTITUTE (ACI) 301.
24. ANY NEW CONCRETE NEEDED FOR THE CONSTRUCTION SHALL BE AIR-ENTRAINED AND SHALL HAVE 4000 PSI STRENGTH AT 28 DAYS.
25. ALL STRUCTUAL STEEL WORK SHALL BE DETAILED, FABRICATED AND ERECTED IN ACCORDANCE WITH AISC SPECIFICATIONS. ALL STRUCTURAL STEEL SHALL BE ASTM A36 (Fy = 36 ksi) UNLESS OTHERWISE NOTED. PIPES SHALL BE ASTM A53 TYPE E (Fy = 36 ksi). ALL STEEL EXPOSED TO WEATHER SHALL BE HOT DIPPED GALVANIZED. TOUCHUP ALL SCRATCHES AND OTHER MARKS IN THE FIELD AFTER STEEL IS ERECTED USING A COMPATIBLE ZINC RICH PAINT.
26. CONSTRUCTION SHALL COMPLY WITH SPECIFICATIONS AND "GENERAL CONSTRUCTION SERVICES FOR CONSTRUCTION OF AT&T MOBILITY SITES."
27. SUBCONTRACTOR SHALL VERIFY ALL EXISTING DIMENSIONS AND CONDITIONS PRIOR TO COMMENCING ANY WORK. ALL DIMENSIONS OF EXISTING CONSTRUCTION SHOWN ON THE DRAWINGS MUST BE VERIFIED. SUBCONTRACTOR SHALL NOTIFY THE CONTRACTOR OF ANY DESCREPANCIES PRIOR TO ORDERING MATERIAL OR PROCEEDING WITH CONSTRUCTION.
28. THE EXISTING CELL SITE IS IN FULL COMMERCIAL OPERATION, ANY CONSTRUCTION WORK BY SUBCONTRACTOR SHALL NOT DISRUPT THE EXISTING NORMAL OPERATION. ANY WORK ON EXISTING EQUIPMENT MUST BE COORDINATED WITH CONTRACTOR. ALSO, WORK SHOULD BE SCHEDULED FOR AN APPROPRIATE MAINTENANCE WINDOW USUALLY IN LOW TRAFFIC PERIODS AFTER MIDNIGHT.
29. SINCE THE CELL SITE IS ACTIVE, ALL SAFETY PRECAUTIONS MUST BE TAKEN WHEN WORKING AROUND HIGH LEVELS OF ELECTROMAGNETIC RADIATION. EQUIPMENT SHOULD BE SHUTDOWN PRIOR TO PERFORMING ANY WORK THAT COULD EXPOSE THE WORKERS TO DANGER. PERSONAL RF EXPOSURE MONITORS ARE ADVISED TO BE WORN ALERT OF DANGEROUS EXOPOSURE LEVELS.

MASER CONSULTING P.A.
Customer Loyalty Through Client Satisfaction
www.maserconsulting.com
Engineers ■ Planners ■ Surveyors
Landscape Architects ■ Environmental Scientists
Office Locations:
■ Red Bank, NJ ■ Clinton, NJ ■ Hamilton, NJ ■ Marmora, NJ ■ Mt. Arlington, NJ ■ Mt. Laurel, NJ
■ Sterling, VA ■ Norfolk, VA ■ Albuquerque, NM ■ Albany, NY ■ Chestnut Ridge, NY ■ Newburgh, NY
■ Hawthorne, NY ■ Lehigh Valley, PA ■ Exton, PA ■ Philadelphia, PA ■ Columbia, MD ■ Tampa, FL

Copyright © 2016. Maser Consulting P.A. All Rights Reserved. This drawing and all the information contained herein is authorized for use only by the party for whom the services were contracted or to whom it is certified. This drawing may not be copied, reused, disclosed, distributed or relied upon for any other purpose without the express written consent of Maser Consulting P.A.

smartlink
1362 MELLON ROAD
SUITE 140
HANOVER, MD 21076
TEL: (410) 582-8043 FAX: (443) 221-2962

at&t

NEW CINGULAR WIRELESS PCS, LLC
550 COCHITUATE ROAD
FRAMINGHAM, MA 01701

811 Know what's below. Call before you dig.

PROTECT YOURSELF
ALL STATES REQUIRE NOTIFICATION OF EXCAVATORS, DESIGNERS, OR ANY PERSON PREPARING TO DISTURB THE EARTH'S SURFACE ANYWHERE IN ANY STATE

FOR STATE SPECIFIC DIRECT PHONE NUMBERS VISIT: WWW.CALL811.COM

SCALE:	JOB NUMBER:
AS SHOWN	15946020A

REV	DATE	DESCRIPTION	DRAWN BY	CHECKED BY
1	02/26/16	REVISED PER SMARTLINK'S COMMENTS	DTS	FEP
0	10/29/15	ISSUED FOR REVIEW	KRO/SMG	FEP

STATE OF CONNECTICUT
FRANK E. PALDEN
LICENSED PROFESSIONAL ENGINEER
No. 28188
FRANK E. PALDEN
ENGINEER LICENSE NO. 28188

IT IS A VIOLATION OF LAW FOR ANY PERSON, UNLESS THEY ARE ACTING UNDER THE DIRECTION OF THE RESPONSIBLE LICENSED PROFFESIONAL ENGINEER, TO ALTER THIS DOCUMENT.

SITE NAME:

STAMFORD NORTH
FA# 10034979
SITE # CTL02109

1590 NEWFIELD AVENUE
STAMFORD, CT 06905
COUNTY OF FAIRFIELD

MT. ARLINGTON OFFICE
400 Valley Road
Suite 304
Mount Arlington, NJ 07856
Phone: 973.398.3110
Fax: 973.398.3199
email: solutions @maserconsulting.com

SHEET TITLE:
GENERAL NOTES

SHEET NUMBER:
GN-1

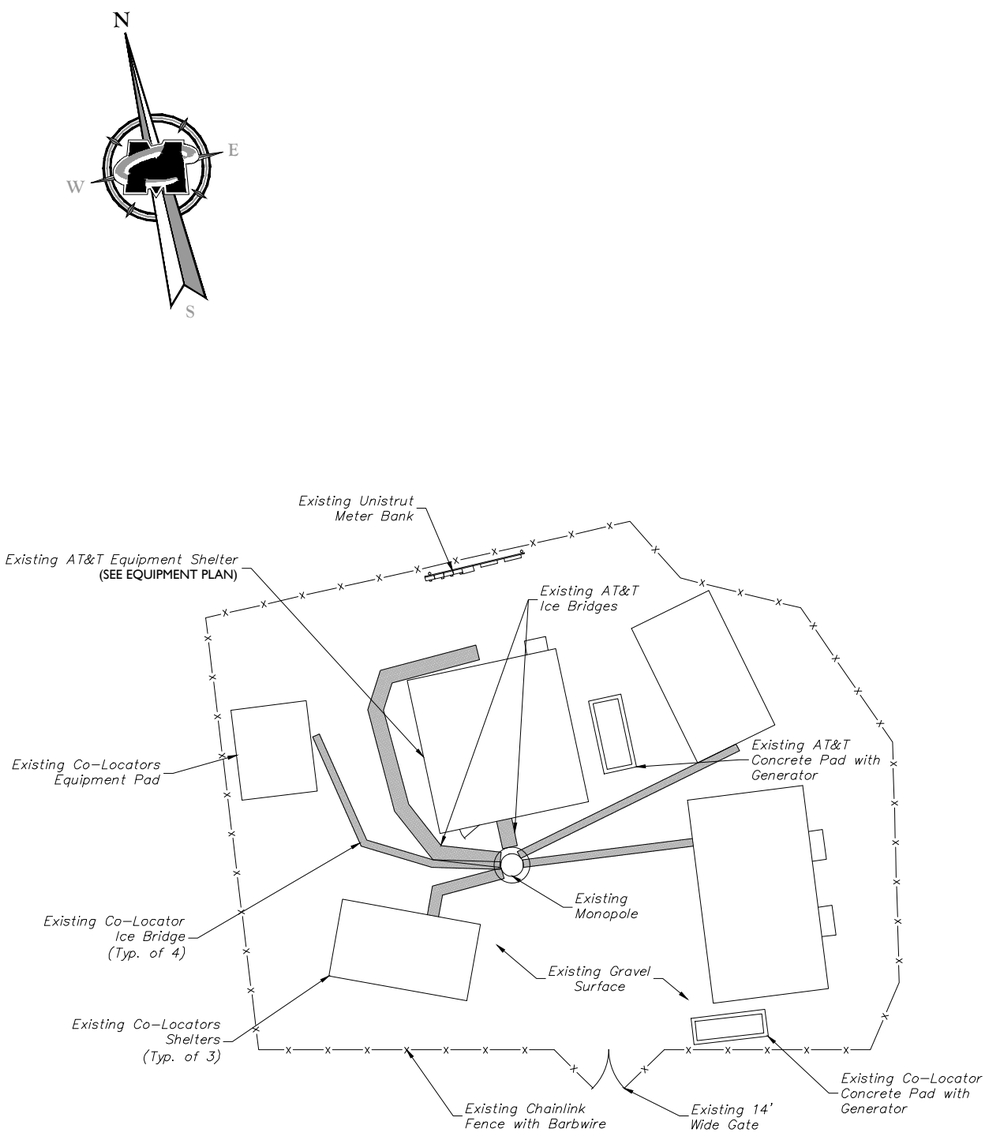

COMPOUND PLAN

GRAPHIC SCALE

10 0 5 10 20

(IN FEET)

SCALE: 1" = 10' FOR 24"X36" DRAWINGS

(DO NOT SCALE 11"X17" DRAWINGS)

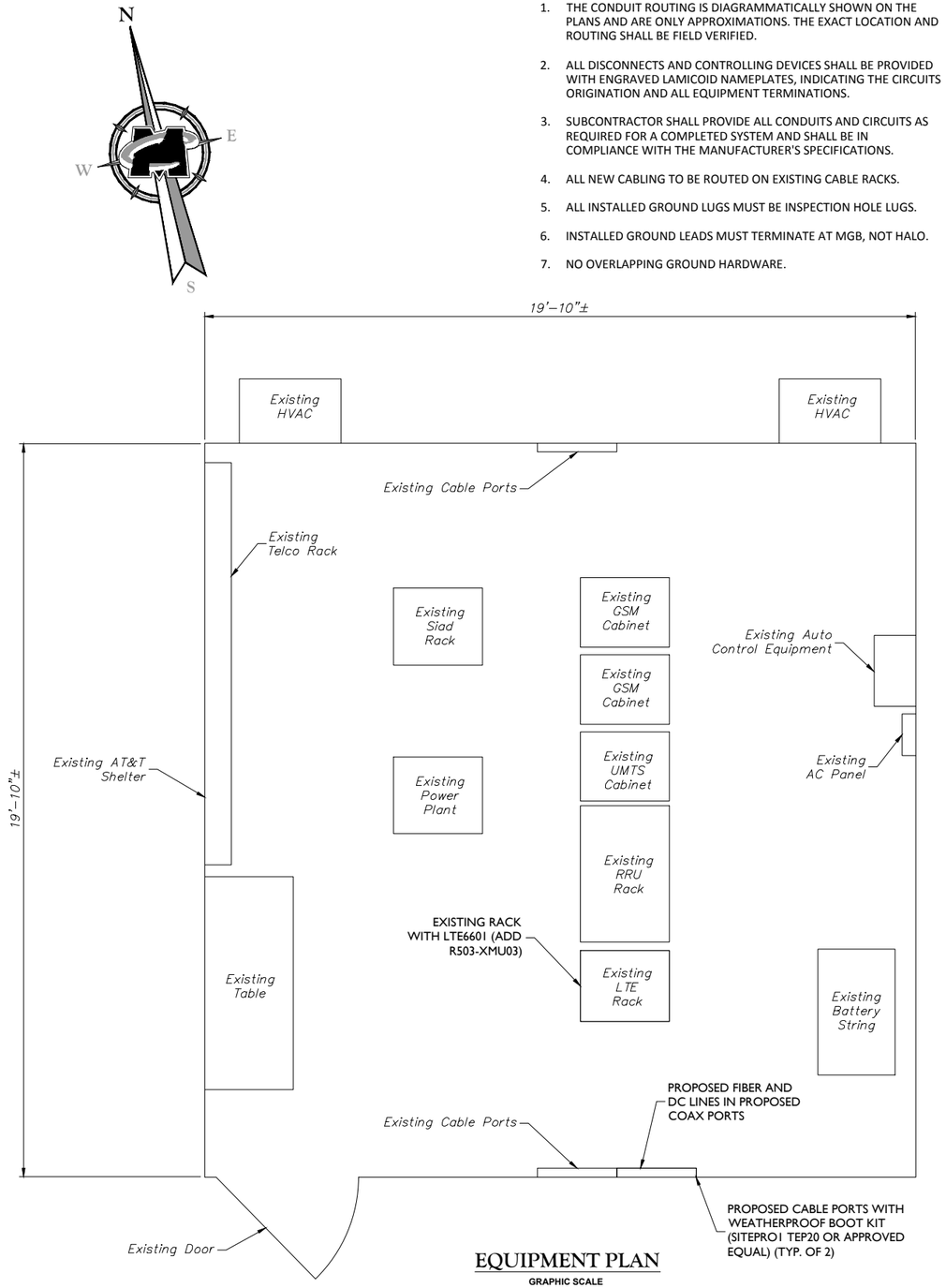

EQUIPMENT PLAN

GRAPHIC SCALE

2 0 1 2 4

(IN FEET)

SCALE: 1" = 2' FOR 24"X36" DRAWINGS

(DO NOT SCALE 11"X17" DRAWINGS)

NOTES:

1. THE CONDUIT ROUTING IS DIAGRAMMATICALLY SHOWN ON THE PLANS AND ARE ONLY APPROXIMATIONS. THE EXACT LOCATION AND ROUTING SHALL BE FIELD VERIFIED.
2. ALL DISCONNECTS AND CONTROLLING DEVICES SHALL BE PROVIDED WITH ENGRAVED LAMICOID NAMEPLATES, INDICATING THE CIRCUITS ORIGINATION AND ALL EQUIPMENT TERMINATIONS.
3. SUBCONTRACTOR SHALL PROVIDE ALL CONDUITS AND CIRCUITS AS REQUIRED FOR A COMPLETED SYSTEM AND SHALL BE IN COMPLIANCE WITH THE MANUFACTURER'S SPECIFICATIONS.
4. ALL NEW CABLING TO BE ROUTED ON EXISTING CABLE RACKS.
5. ALL INSTALLED GROUND LUGS MUST BE INSPECTION HOLE LUGS.
6. INSTALLED GROUND LEADS MUST TERMINATE AT MGB, NOT HALO.
7. NO OVERLAPPING GROUND HARDWARE.

MASER CONSULTING P.A.

Customer Loyalty Through Client Satisfaction
www.maserconsulting.com
Engineers ■ Planners ■ Surveyors
Landscape Architects ■ Environmental Scientists

Office Locations:
■ Red Bank, NJ ■ Clinton, NJ ■ Hamilton, NJ ■ Marmora, NJ ■ Mt. Arlington, NJ ■ Mt. Laurel, NJ
■ Sterling, VA ■ Norfolk, VA ■ Albuquerque, NM ■ Albany, NY ■ Chestnut Ridge, NY ■ Newburgh, NY
■ Hawthorne, NY ■ Lehigh Valley, PA ■ Exton, PA ■ Philadelphia, PA ■ Columbia, MD ■ Tampa, FL

Copyright © 2016. Maser Consulting P.A. All Rights Reserved. This drawing and all the information contained herein is authorized for use only by the party for whom the services were contracted or to whom it is certified. This drawing may not be copied, reused, disclosed, distributed or relied upon for any other purpose without the express written consent of Maser Consulting P.A.

smartlink
1362 MELLON ROAD
SUITE 140
HANOVER, MD 21076
TEL: (410) 582-8043 FAX: (443) 221-2962

at&t
NEW CINGULAR WIRELESS PCS, LLC
550 COCHITUATE ROAD
FRAMINGHAM, MA 01701

811 Know what's below. Call before you dig.

PROTECT YOURSELF
ALL STATES REQUIRE NOTIFICATION OF EXCAVATORS, DESIGNERS, OR ANY PERSON PREPARING TO DISTURB THE EARTH'S SURFACE ANYWHERE IN ANY STATE

FOR STATE SPECIFIC DIRECT PHONE NUMBERS VISIT: WWW.CALL811.COM

SCALE :	JOB NUMBER :
AS SHOWN	15946020A

REV	DATE	DESCRIPTION	DRAWN BY	CHECKED BY
1	02/26/16	REVISED PER SMARTLINK'S COMMENTS	DTS	FEP
0	10/29/15	ISSUED FOR REVIEW	KRO/SMG	FEP

STATE OF CONNECTICUT FRANK E. PADDEN LICENSED PROFESSIONAL ENGINEER No. 28188

FRANK E. PADDEN
CONSULTING ENGINEER
ENGINEER LICENSE NO. 28188

IT IS A VIOLATION OF LAW FOR ANY PERSON, UNLESS THEY ARE ACTING UNDER THE DIRECTION OF THE RESPONSIBLE LICENSED PROFFESIONAL ENGINEER, TO ALTER THIS DOCUMENT.

SITE NAME:

STAMFORD NORTH
FA# 10034979
SITE # CTL02109

1590 NEWFIELD AVENUE
STAMFORD, CT 06905
COUNTY OF FAIRFIELD

MT. ARLINGTON OFFICE
400 Valley Road
Suite 304
Mount Arlington, NJ 07856
Phone: 973.398.3110
Fax: 973.398.3199
email: solutions @maserconsulting.com

SHEET TITLE :

COMPOUND PLAN AND EQUIPMENT PLAN

SHEET NUMBER :

A-1

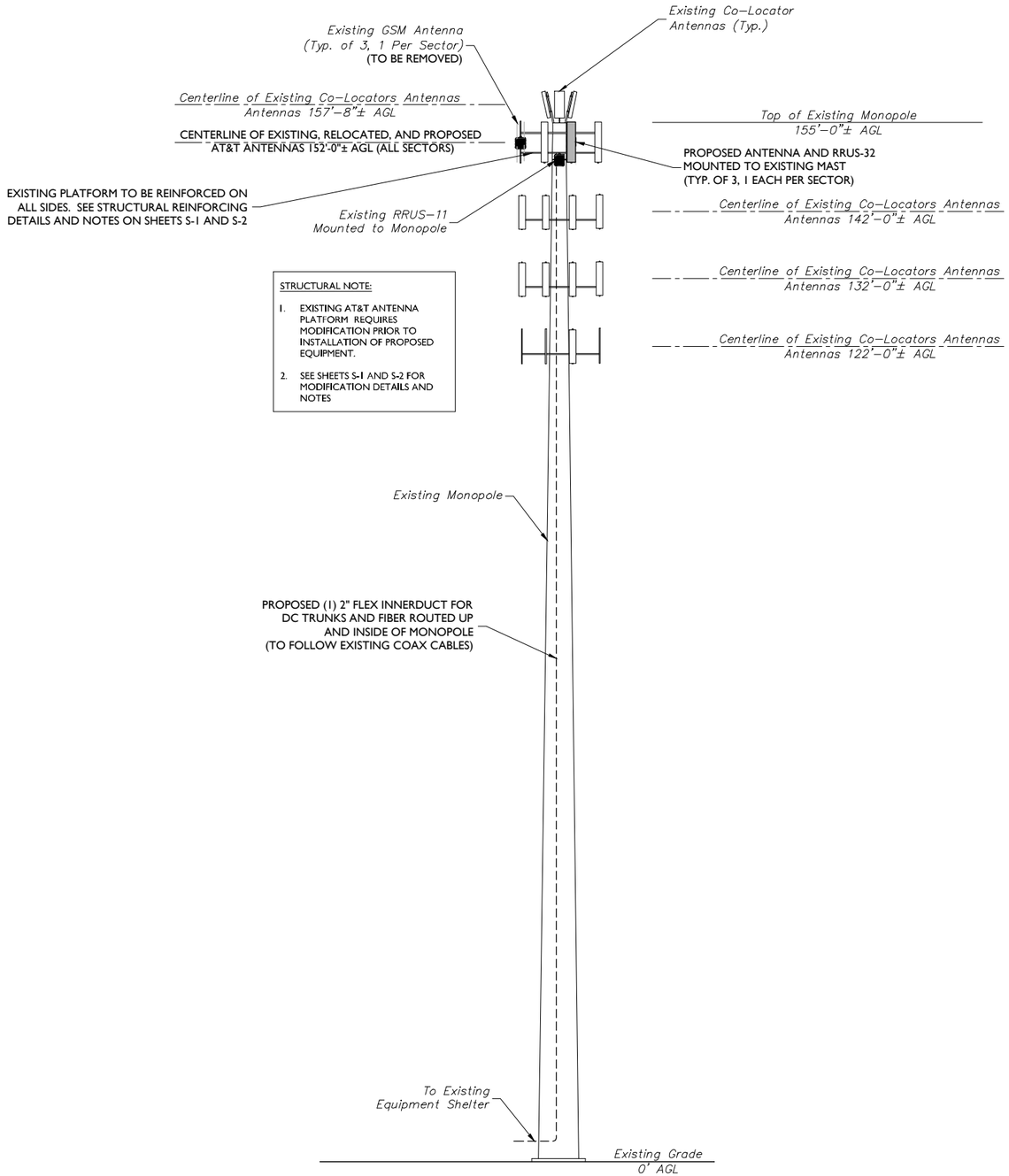

ELEVATION VIEW

GRAPHIC SCALE

20 0 10 20 40

(IN FEET)

SCALE: 1" = 20' FOR 24"X36" DRAWINGS
(DO NOT SCALE 11"X17" DRAWINGS)

PROPOSED ANTENNA AND RRUS CONFIGURATION

SECTOR		EXISTING ANTENNA CONFIGURATION	PROPOSED ANTENNA CONFIGURATION	TECHNOLOGY	ANTENNA STATUS	HEIGHT (in)	WIDTH (in)	DEPTH (in)	WEIGHT (lbs)	ANTENNA AZIMUTH	ANT. CL ELEV (ft.)	RRUS CONFIGURATION	STATUS
ALPHA	C1	Powerwave 7770	Powerwave 7770	UMTS	REMAIN	48.00	12.00	7.30	41.00	23°	152'	-	-
	A2	VACANT MAST	CCI OPA-65R-LCUU-H6	GSM/WCS LTE	NEW	92.70	14.40	7.00	88.00	30°	152'	RRUS 32	NEW
	A3	Powerwave P65-16-XLH-RR	Powerwave P65-16-XLH-RR	700/1900 LTE	REMAIN	55.00	11.00	5.00	35.00	30°	152'	RRUS 11	RELOCATE
	A4	Powerwave 7770	VACANT MAST	-	REMOVED	-	-	-	-	-	-	RRUS 11	RELOCATED
BETA	A1	Powerwave 7770	Powerwave 7770	UMTS	REMAIN	48.00	12.00	7.30	41.00	143°	152'	-	-
	B2	VACANT MAST	CCI OPA-65R-LCUU-H6	GSM/WCS LTE	NEW	92.70	14.40	7.00	88.00	150°	152'	RRUS 32	NEW
	B3	Powerwave P65-16-XLH-RR	Powerwave P65-16-XLH-RR	700/1900 LTE	REMAIN	55.00	11.00	5.00	35.00	150°	152'	RRUS 11	RELOCATE
	B4	Powerwave 7770	VACANT MAST	-	REMOVED	-	-	-	-	-	-	RRUS 11	RELOCATED
GAMMA	B1	Powerwave 7770	Powerwave 7770	UMTS	REMAIN	48.00	12.00	7.30	41.00	263°	152'	-	-
	C2	VACANT MAST	CCI OPA-65R-LCUU-H6	GSM/WCS LTE	NEW	92.70	14.40	7.00	88.00	270°	152'	RRUS 32	NEW
	C3	Powerwave P65-16-XLH-RR	Powerwave P65-16-XLH-RR	700/1900 LTE	REMAIN	55.00	11.00	5.00	35.00	270°	152'	RRUS 11	RELOCATE
	C4	Powerwave 7770	VACANT MAST	-	REMOVED	-	-	-	-	-	-	RRUS 11	RELOCATED

ANTENNA SCHEDULE

STRUCTURAL NOTES:

1. NO CONSTRUCTION OF THE PROPOSED LOADING SHOWN SHALL PROCEED UNTIL ADEQUACY OF THE EXISTING STRUCTURE AND FOUNDATION, INCLUDING THE PROPOSED AT&T ANTENNA MOUNTING CONFIGURATION SHOWN HEREIN, HAS BEEN COMPLETED.
2. THE STRUCTURE ELEVATION IS SHOWN FOR INFORMATIONAL PURPOSES ONLY AND MAY NOT REFLECT AS-BUILT FIELD CONDITIONS FOR ALL EXISTING INVENTORY LOADING/ANTENNAS/APPURTANENCES ON STRUCTURE. REFER TO THE LATEST STRUCTURAL ANALYSIS FOR EXISTING STRUCTURE LOADING AND THE PROPOSED METHOD OF ATTACHMENT OF THE PROPOSED ANTENNAS/CABLES.
3. THE CONTRACTOR IS RESPONSIBLE TO CONFIRM THAT ANY IMPROVEMENTS AND REINFORCEMENTS REQUIRED BY THE STRUCTURAL ANALYSIS CERTIFICATION ARE PROPERLY INSTALLED PRIOR TO THE ADDITION OF ANTENNAS, CABLES, SUPPORTS AND APPURTENANCES PROPOSED ON THESE DRAWINGS OR OTHERWISE NOTED IN THE STRUCTURAL ANALYSIS.

MASER CONSULTING P.A.
Customer Loyalty Through Client Satisfaction
www.maserconsulting.com
Engineers ■ Planners ■ Surveyors
Landscape Architects ■ Environmental Scientists
Office Locations:
■ Red Bank, NJ ■ Clinton, NJ ■ Hamilton, NJ ■ Marmora, NJ ■ Mt. Arlington, NJ ■ Mt. Laurel, NJ
■ Sterling, VA ■ Norfolk, VA ■ Albuquerque, NM ■ Albany, NY ■ Chestnut Ridge, NY ■ Newburgh, NY
■ Hawthorne, NY ■ Lehigh Valley, PA ■ Exton, PA ■ Philadelphia, PA ■ Columbia, MD ■ Tampa, FL

Copyright © 2016. Maser Consulting P.A. All Rights Reserved. This drawing and all the information contained herein is authorized for use only by the party for whom the services were contracted or to whom it is certified. This drawing may not be copied, reused, disclosed, distributed or relied upon for any other purpose without the express written consent of Maser Consulting P.A.

smartlink
1362 MELLON ROAD
SUITE 140
HANOVER, MD 21076
TEL: (410) 582-8043 FAX: (443) 221-2962

at&t
NEW CINGULAR WIRELESS PCS, LLC
550 COCHITUATE ROAD
FRAMINGHAM, MA 01701

811 Know what's below. Call before you dig.

PROTECT YOURSELF
ALL STATES REQUIRE NOTIFICATION OF EXCAVATORS, DESIGNERS, OR ANY PERSON PREPARING TO DISTURB THE EARTH'S SURFACE ANYWHERE IN ANY STATE

FOR STATE SPECIFIC DIRECT PHONE NUMBERS VISIT: WWW.CALL811.COM

SCALE : AS SHOWN

JOB NUMBER : 15946020A

REV	DATE	DESCRIPTION	DRAWN BY	CHECKED BY
1	02/26/16	REVISED PER SMARTLINK'S COMMENTS	DTS	FEP
0	10/29/15	ISSUED FOR REVIEW	KRO/SMG	FEP

STATE OF CONNECTICUT
FRANK E. PAZDEN
LICENSED PROFESSIONAL ENGINEER
No. 28188

FRANK E. PAZDEN
CONNECTICUT LICENSED PROFESSIONAL ENGINEER
ENGINEER LICENSE NUMBER: 28188

IT IS A VIOLATION OF LAW FOR ANY PERSON, UNLESS THEY ARE ACTING UNDER THE DIRECTION OF THE RESPONSIBLE LICENSED PROFFESIONAL ENGINEER, TO ALTER THIS DOCUMENT.

SITE NAME:

STAMFORD NORTH
FA# 10034979
SITE # CTL02109

1590 NEWFIELD AVENUE
STAMFORD, CT 06905
COUNTY OF FAIRFIELD

MT. ARLINGTON OFFICE
400 Valley Road
Suite 304
Mount Arlington, NJ 07856
Phone: 973.398.3110
Fax: 973.398.3199
email: solutions @maserconsulting.com

SHEET TITLE :
ELEVATION VIEW AND ANTENNA SCHEDULE

SHEET NUMBER :
A-2

NOTE:

REMOVE CROSS SECTOR REDUNDANCY IF PRESENT

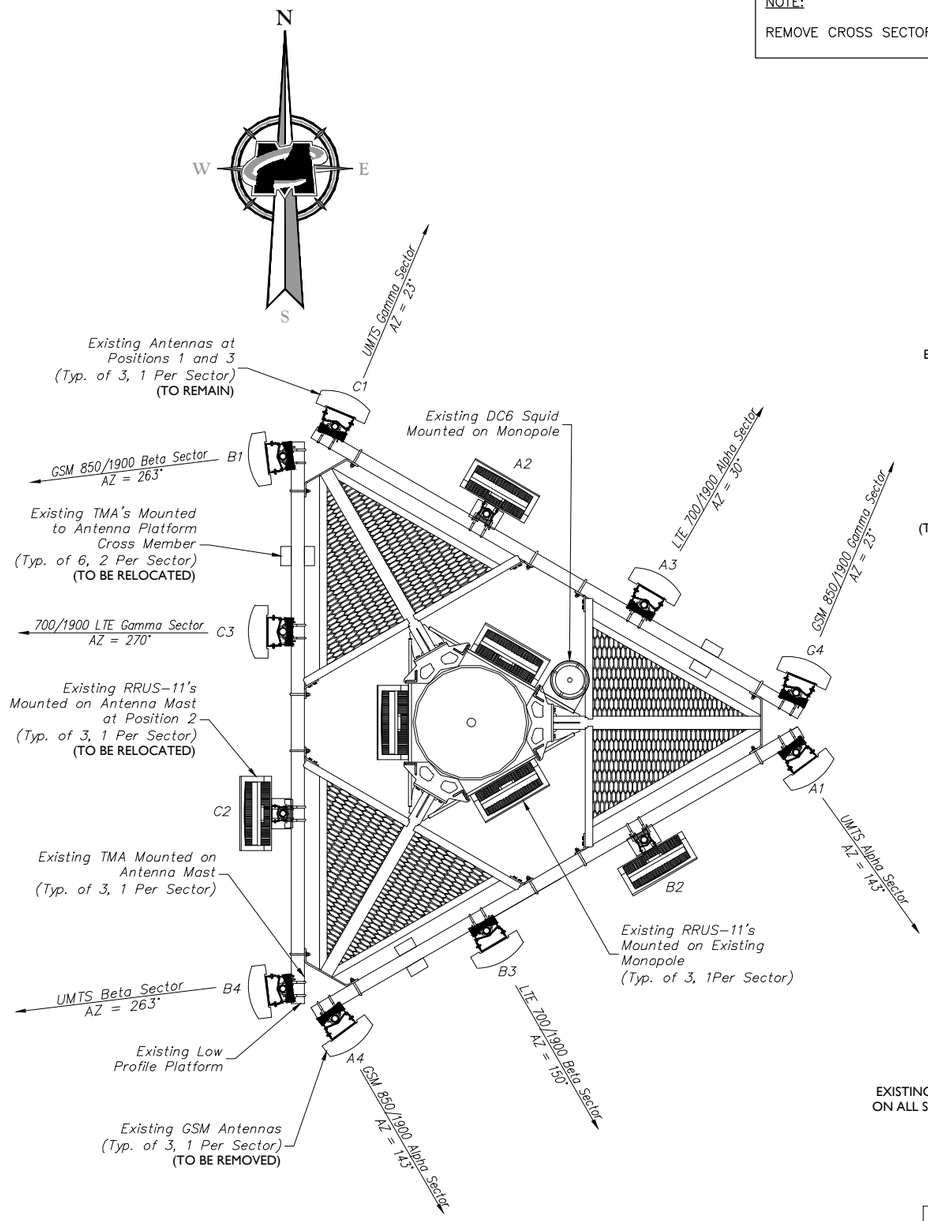

EXISTING - ANTENNA LAYOUT

NOT TO SCALE

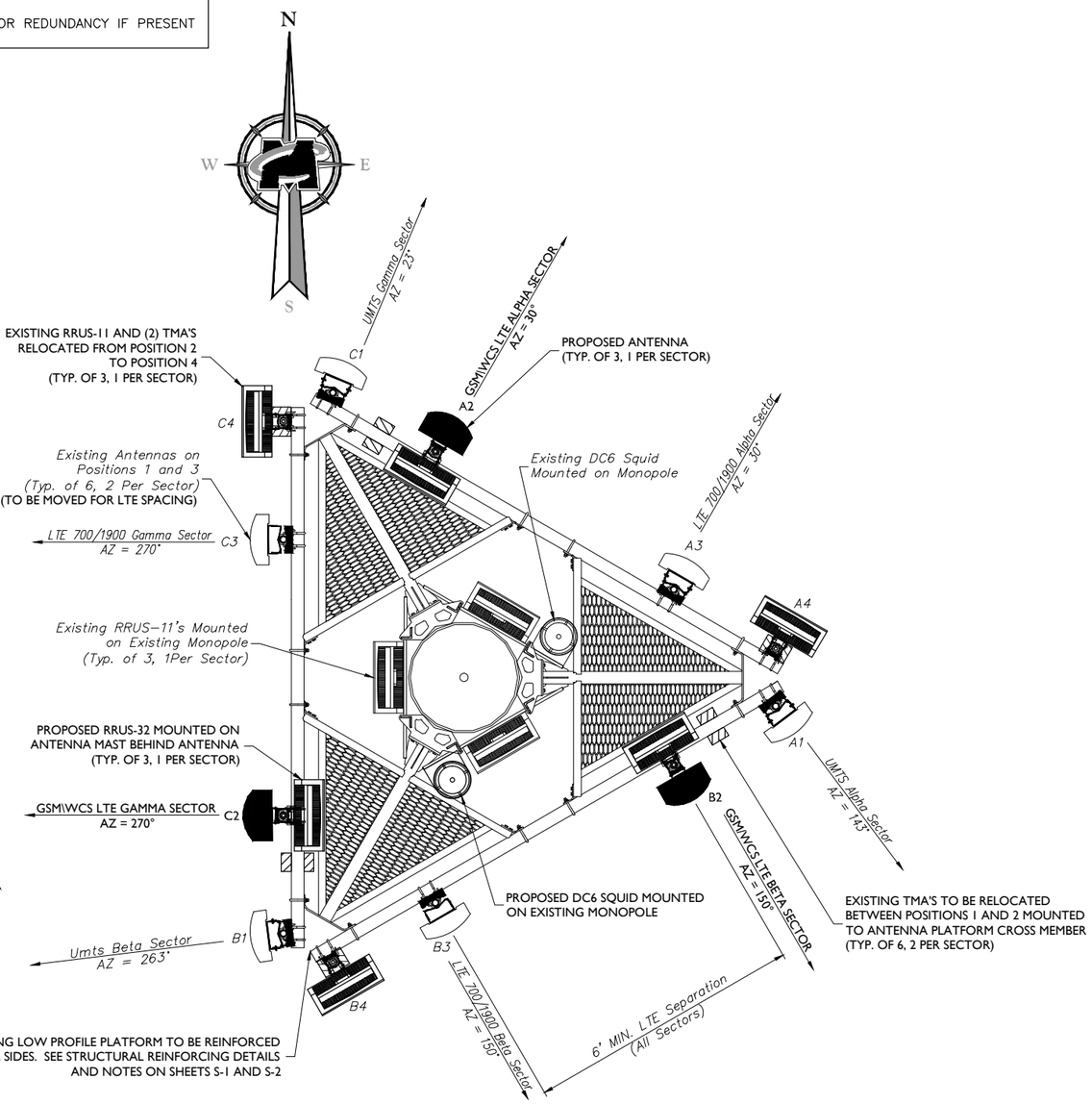

PROPOSED - ANTENNA LAYOUT

NOT TO SCALE

STRUCTURAL NOTE:

1. EXISTING AT&T ANTENNA PLATFORM REQUIRES MODIFICATION PRIOR TO INSTALLATION OF PROPOSED EQUIPMENT.
2. SEE SHEETS S-1 AND S-2 FOR MODIFICATION DETAILS AND NOTES

MASER CONSULTING P.A.

Customer Loyalty Through Client Satisfaction
www.maserconsulting.com
Engineers ■ Planners ■ Surveyors
Landscape Architects ■ Environmental Scientists

Office Locations:
■ Red Bank, NJ ■ Clinton, NJ ■ Hamilton, NJ ■ Marmora, NJ ■ Mt. Arlington, NJ ■ Mt. Laurel, NJ
■ Sterling, VA ■ Norfolk, VA ■ Albuquerque, NM ■ Albany, NY ■ Chestnut Ridge, NY ■ Newburgh, NY
■ Hawthorne, NY ■ Lehigh Valley, PA ■ Exton, PA ■ Philadelphia, PA ■ Columbia, MD ■ Tampa, FL

Copyright © 2016. Maser Consulting P.A. All Rights Reserved. This drawing and all the information contained herein is authorized for use only by the party for whom the services were contracted or to whom it is certified. This drawing may not be copied, reused, disclosed, distributed or relied upon for any other purpose without the express written consent of Maser Consulting P.A.

smartlink
1362 MELLON ROAD
SUITE 140
HANOVER, MD 21076
TEL: (410) 582-8043 FAX: (443) 221-2962

at&t
NEW CINGULAR WIRELESS PCS, LLC
550 COCHITUATE ROAD
FRAMINGHAM, MA 01701

811 Know what's below. Call before you dig.

PROTECT YOURSELF
ALL STATES REQUIRE NOTIFICATION OF EXCAVATORS, DESIGNERS, OR ANY PERSON PREPARING TO DISTURB THE EARTH'S SURFACE ANYWHERE IN ANY STATE

FOR STATE SPECIFIC DIRECT PHONE NUMBERS VISIT: WWW.CALL811.COM

SCALE:	JOB NUMBER:
AS SHOWN	15946020A

REV	DATE	DESCRIPTION	DRAWN BY	CHECKED BY
1	02/26/16	REVISED PER SMARTLINK'S COMMENTS	DTS	FEP
0	10/29/15	ISSUED FOR REVIEW	KRO/SMG	FEP

STATE OF CONNECTICUT
FRANK E. PAZDEN
No. 28188
LICENSED PROFESSIONAL ENGINEER

FRANK E. PAZDEN
CERTIFICATE OF AUTHORITY
ENGINEERING BUSINESS NUMBER: PEN.28188

IT IS A VIOLATION OF LAW FOR ANY PERSON, UNLESS THEY ARE ACTING UNDER THE DIRECTION OF THE RESPONSIBLE LICENSED PROFFESIONAL ENGINEER, TO ALTER THIS DOCUMENT.

SITE NAME:

STAMFORD NORTH
FA# 10034979
SITE # CTL02109

1590 NEWFIELD AVENUE
STAMFORD, CT 06905
COUNTY OF FAIRFIELD

MT. ARLINGTON OFFICE
400 Valley Road
Suite 304
Mount Arlington, NJ 07856
Phone: 973.398.3110
Fax: 973.398.3199
email: solutions @maserconsulting.com

SHEET TITLE:

ANTENNA LAYOUTS

SHEET NUMBER:

A-3

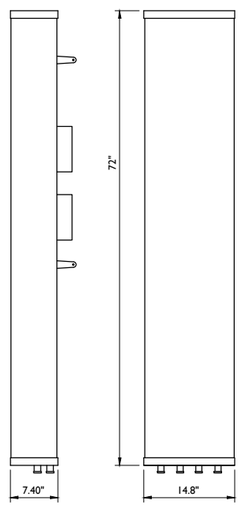

WEIGHT = 73 LBS

CCI OPA-65R-LCUU-H6

ANTENNA DETAIL

NOT TO SCALE

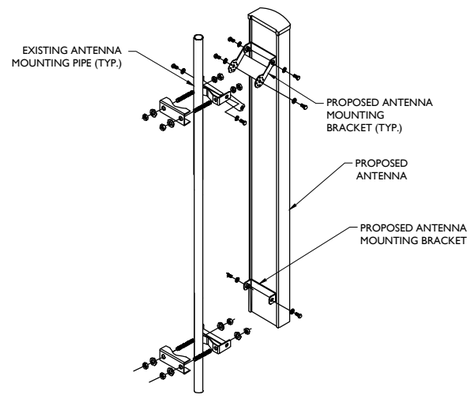

ANTENNA MOUNTING DETAIL

NOT TO SCALE

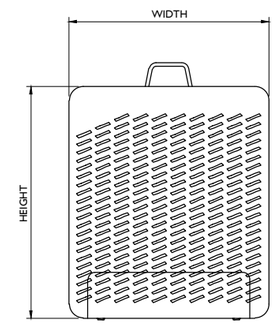

RRUS FRONT VIEW

SIZE AND WEIGHT TABLE

RRUS	WIDTH	DEPTH	HEIGHT	WEIGHT W/O BRACKET
RRUS-32 4X40-1900 (WITH SOLAR SHIELD)	-	-	-	-
RRUS-32 4X40-1900 (WITHOUT SOLAR SHIELD)	17"	7.2"	19.7"	50.7

MINIMUM CLEARANCE TABLE

RRUS CABINET	CLEARANCES (INCHES)	COMMENTS
FRONT	-	INSTALLATION ACCESS
REAR	-	ZERO REAR CLEARANCE IS ALLOWED USING SUPPLIED MOUNTING BRACKETS
RIGHT	-	AIR FLOW
LEFT	-	AIR FLOW
TOP	-	AIR FLOW
BOTTOM	-	CONDUIT ROUTING

NOTE:

USE 1/2" COAXIAL CABLE W/7/16 DIN MALE CONNECTORS ON BOTH ENDS.

RRUS DETAIL

NOT TO SCALE

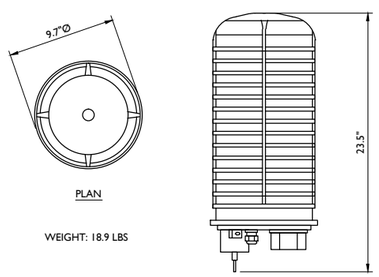

PLAN

WEIGHT: 18.9 LBS

ELEVATION

RAYCAP DC6-48-60-18-8F SURGE SUPPRESSOR

NOT TO SCALE

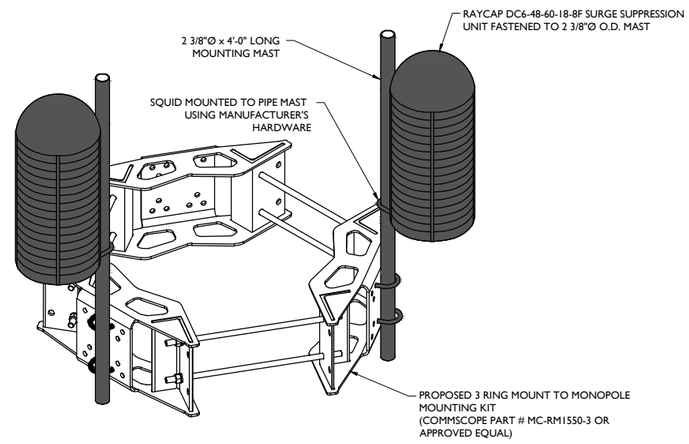

DC6-48-60-18-8F SURGE SUPPRESSOR PIPE RING MOUNT

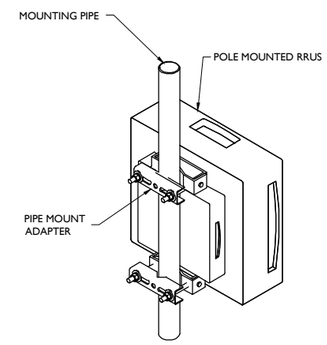

RRUS MOUNTING DETAIL

NOT TO SCALE

MASER CONSULTING P.A.

Customer Loyalty Through Client Satisfaction
www.maserconsulting.com
Engineers ■ Planners ■ Surveyors
Landscape Architects ■ Environmental Scientists

Office Locations:
■ Red Bank, NJ ■ Clinton, NJ ■ Hamilton, NJ ■ Marmora, NJ ■ Mt. Arlington, NJ ■ Mt. Laurel, NJ ■ Sterling, VA ■ Norfolk, VA ■ Albuquerque, NM ■ Albany, NY ■ Chestnut Ridge, NY ■ Newburgh, NY ■ Hawthorne, NY ■ Lehigh Valley, PA ■ Exton, PA ■ Philadelphia, PA ■ Columbia, MD ■ Tampa, FL

Copyright © 2016. Maser Consulting P.A. All Rights Reserved. This drawing and all the information contained herein is authorized for use only by the party for whom the services were contracted or to whom it is certified. This drawing may not be copied, reused, disclosed, distributed or relied upon for any other purpose without the express written consent of Maser Consulting P.A.

smartlink
1362 MELLON ROAD
SUITE 140
HANOVER, MD 21076
TEL: (410) 582-8043 FAX: (443) 221-2962

at&t

NEW CINGULAR WIRELESS PCS, LLC
550 COCHITUATE ROAD
FRAMINGHAM, MA 01701

811 Know what's below. Call before you dig

PROTECT YOURSELF
ALL STATES REQUIRE NOTIFICATION OF EXCAVATORS, DESIGNERS, OR ANY PERSON PREPARING TO DISTURB THE EARTH'S SURFACE ANYWHERE IN ANY STATE

FOR STATE SPECIFIC DIRECT PHONE NUMBERS VISIT: WWW.CALL811.COM

SCALE: AS SHOWN

JOB NUMBER: 15946020A

REV	DATE	DESCRIPTION	DRAWN BY	CHECKED BY
.	.	.	.	.
.	.	.	.	.
.	.	.	.	.
.	.	.	.	.
.	.	.	.	.
.	.	.	.	.
1	02/26/16	REVISED PER SMARTLINK'S COMMENTS	DTS	FEP
0	10/29/15	ISSUED FOR REVIEW	KRO/SMG	FEP

STATE OF CONNECTICUT · FRANK E. PAZDEN · No. 28188 · LICENSED PROFESSIONAL ENGINEER

FRANK E. PAZDEN
CERTIFICATE OF AUTHORITY
ENGINEERING FIRM: PROFESSIONAL ENGINEER No. 28188

IT IS A VIOLATION OF LAW FOR ANY PERSON, UNLESS THEY ARE ACTING UNDER THE DIRECTION OF THE RESPONSIBLE LICENSED PROFFESIONAL ENGINEER, TO ALTER THIS DOCUMENT.

SITE NAME:

STAMFORD NORTH
FA# 10034979
SITE # CTL02109

1590 NEWFIELD AVENUE
STAMFORD, CT 06905
COUNTY OF FAIRFIELD

MT. ARLINGTON OFFICE
400 Valley Road
Suite 304
Mount Arlington, NJ 07856
Phone: 973.398.3110
Fax: 973.398.3199
email: solutions @maserconsulting.com

SHEET TITLE: DETAILS

SHEET NUMBER: A-4

Diagram - Sector A | Diagram File Name - CT2109_23.vsd
Atoll Site Name - CT2109 | Location Name - STAMFORD NORTH | Market - CONNECTICUT | Market Cluster - NEW ENGLAND
Comments: On each of the faces swap GSM ant to OCTO move it to position 2 and add RRH 32 WCS to it along with FIBER DC SQUID

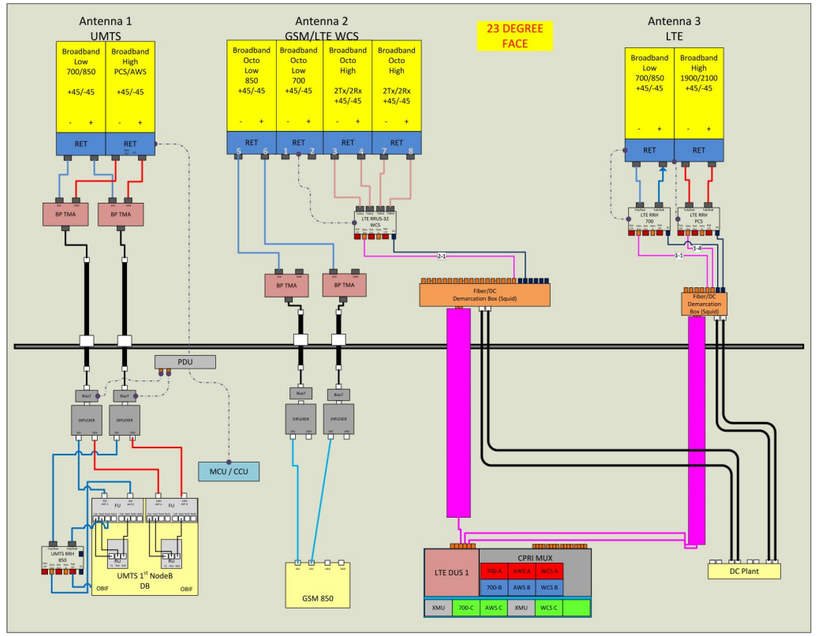

ALPHA SECTOR

Diagram - Sector B | Diagram File Name - CT2109_143.vsd
Atoll Site Name - CT2109 | Location Name - STAMFORD NORTH | Market - CONNECTICUT | Market Cluster - NEW ENGLAND
Comments: On each of the faces swap GSM ant to OCTO move it to position 2 and add RRH 32 WCS to it along with FIBER DC SQUID

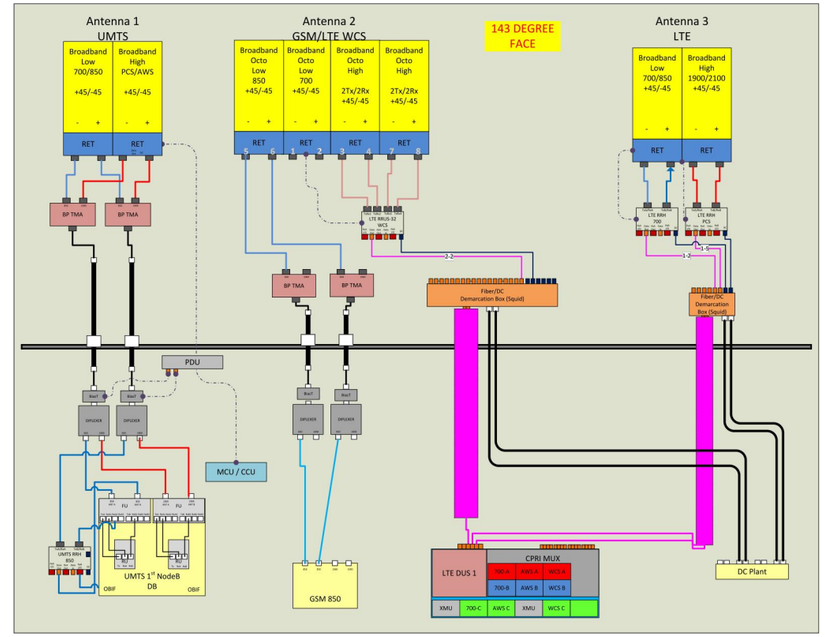

BETA SECTOR

Diagram - Sector C | Diagram File Name - CT2109_263.vsd
Atoll Site Name - CT2109 | Location Name - STAMFORD NORTH | Market - CONNECTICUT | Market Cluster - NEW ENGLAND
Comments: On each of the faces swap GSM ant to OCTO move it to position 2 and add RRH 32 WCS to it along with FIBER DC SQUID

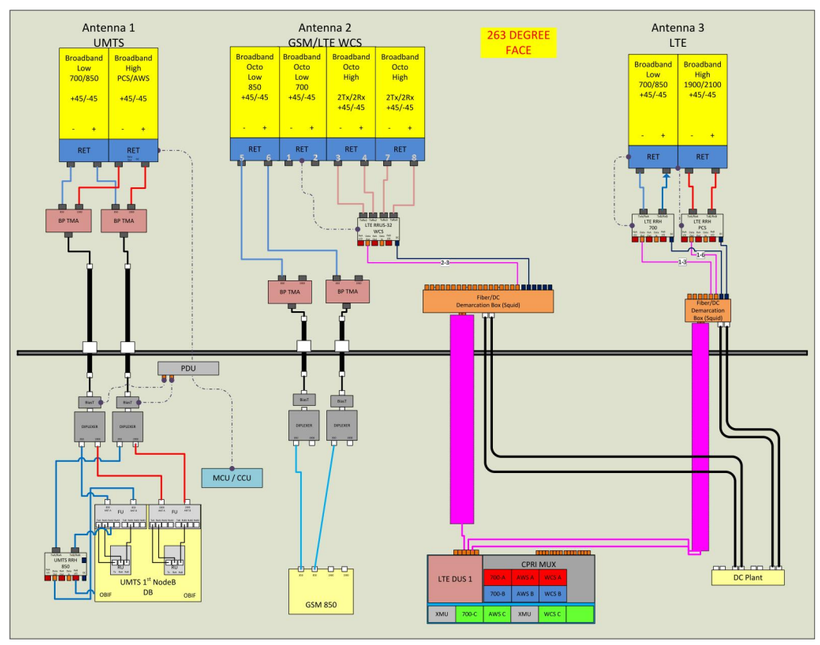

GAMMA SECTOR

BASED ON RF ENGINEERING DESIGN ENTITLED "NEW-ENGLAND_CONNECTICUT_CT2109_2016-LTE-Next-Carrier_LTE-3C_ra9161_PTN_10034979_60396_07-06-2015_Preliminary-Approved_v1.00"

RF PLUMBING DIAGRAMS

MASER CONSULTING P.A.
Customer Loyalty Through Client Satisfaction
www.maserconsulting.com
Engineers ■ Planners ■ Surveyors
Landscape Architects ■ Environmental Scientists
Office Locations:
■ Red Bank, NJ ■ Clinton, NJ ■ Hamilton, NJ ■ Marmora, NJ ■ Mt. Arlington, NJ ■ Mt. Laurel, NJ
■ Sterling, VA ■ Norfolk, VA ■ Albuquerque, NM ■ Albany, NY ■ Chestnut Ridge, NY ■ Newburgh, NY
■ Hawthorne, NY ■ Lehigh Valley, PA ■ Exton, PA ■ Philadelphia, PA ■ Columbia, MD ■ Tampa, FL

Copyright © 2016. Maser Consulting P.A. All Rights Reserved. This drawing and all the information contained herein is authorized for use only by the party for whom the services were contracted or to whom it is certified. This drawing may not be copied, reused, disclosed, distributed or relied upon for any other purpose without the express written consent of Maser Consulting P.A.

smartlink
1362 MELLON ROAD
SUITE 140
HANOVER, MD 21076
TEL: (410) 582-8043 FAX: (443) 221-2962

at&t

NEW CINGULAR WIRELESS PCS, LLC
550 COCHITUATE ROAD
FRAMINGHAM, MA 01701

811 Know what's below. Call before you dig.
PROTECT YOURSELF
ALL STATES REQUIRE NOTIFICATION OF EXCAVATORS, DESIGNERS, OR ANY PERSON PREPARING TO DISTURB THE EARTH'S SURFACE ANYWHERE IN ANY STATE
FOR STATE SPECIFIC DIRECT PHONE NUMBERS VISIT: WWW.CALL811.COM

SCALE: AS SHOWN
JOB NUMBER: 15946020A

REV	DATE	DESCRIPTION	DRAWN BY	CHECKED BY
1	02/26/16	REVISED PER SMARTLINK'S COMMENTS	DTS	FEP
0	10/29/15	ISSUED FOR REVIEW	KRO/SMG	FEP

STATE OF CONNECTICUT
FRANK E. PAZDEN
COMMERCIAL CONSTRUCTION
ENGINEER
PROFESSIONAL ENGINEER
No. 28188

IT IS A VIOLATION OF LAW FOR ANY PERSON, UNLESS THEY ARE ACTING UNDER THE DIRECTION OF THE RESPONSIBLE LICENSED PROFFESIONAL ENGINEER, TO ALTER THIS DOCUMENT.

SITE NAME:

STAMFORD NORTH
FA# 10034979
SITE # CTL02109

1590 NEWFIELD AVENUE
STAMFORD, CT 06905
COUNTY OF FAIRFIELD

MT. ARLINGTON OFFICE
400 Valley Road
Suite 304
Mount Arlington, NJ 07856
Phone: 973.398.3110
Fax: 973.398.3199
email: solutions @maserconsulting.com

SHEET TITLE: RF PLUMBING DIAGRAM

SHEET NUMBER: A-5

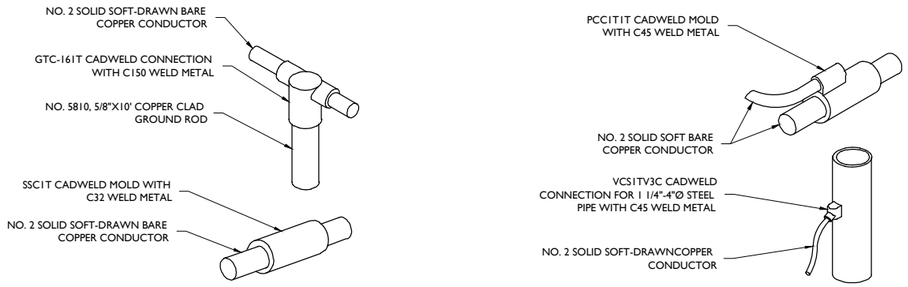

CADWELD DETAILS

NOT TO SCALE

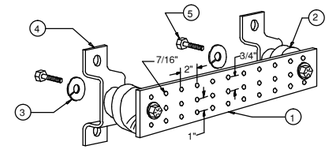

LEGEND

1- TINNED COPPER GROUND BAR, 1/4"x4"x20", NEWTON INSTRUMENT CO. CAT. NO. B-6142 OR EQUAL. HOLE CENTERS TO MATCH NEMA DOUBLE LUG CONFIGURATION.

2- INSULATORS, NEWTON INSTRUMENT CAT. NO. 3061-4

3- 5/8" LOCKWASHERS, NEWTON INSTRUMENT CO. CAT. NO. 3015-8

4- WALL MOUNTING BRACKET, NEWTON INSTRUMENT CO. CAT NO. A-5056

5- 5/8-11 X 1" HHCS BOLTS, NEWTON INSTRUMENT CO. CAT NO. 3012-1

6- EACH GROUND CONDUCTOR TERMINATING ON ANY GROUND BAR HAVE AN IDENTIFICATION TAG ATTACHED AT EACH END THAT WILL IDENTIFY ITS ORIGIN AND DESTINATION.

SECTION "P" - SURGE PRODUCERS

CABLE ENTRY PORTS (HATCH PLATES) (#2)
GENERATOR FRAMEWORK (IF AVAILABLE) (#2)
TELCO GROUND BAR
COMMERCIAL POWER COMMON NEUTRAL/GROUND BOND (#2)
+24V POWER SUPPLY RETURN BAR (#2)
-48V POWER SUPPLT RETURN BAR (#2)
RECTIFIER FRAMES.

SECTION "A" - SURGE ABSORBERS

INTERIOR GROUND RING (#2)
EXTERNAL EARTH GROUND FIELD (BURIED GROUND RING) (#2)
METALLIC COLD WATER PIPE (IF AVAILABLE) (#2)
BUILDING STEEL (IF AVAILABLE) (#2)

MASTER GROUND BAR

NOT TO SCALE

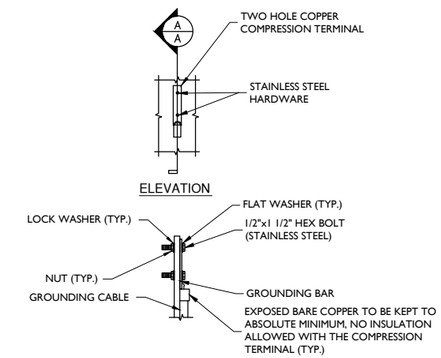

TYPICAL GROUND BAR CONNECTION DETAIL

NOT TO SCALE

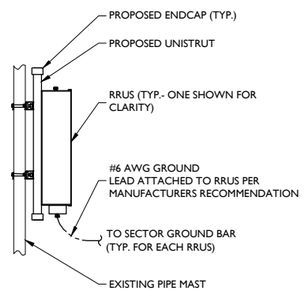

RRH GROUNDING

NOT TO SCALE

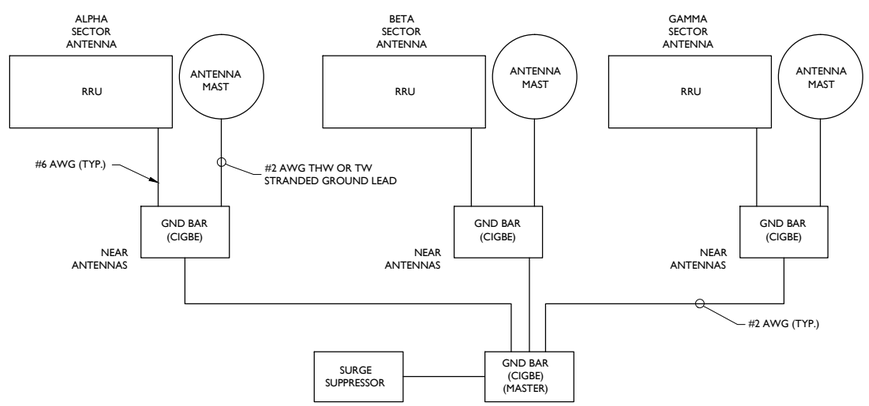

SCHEMATIC DIAGRAM GROUNDING SYSTEM

NOT TO SCALE

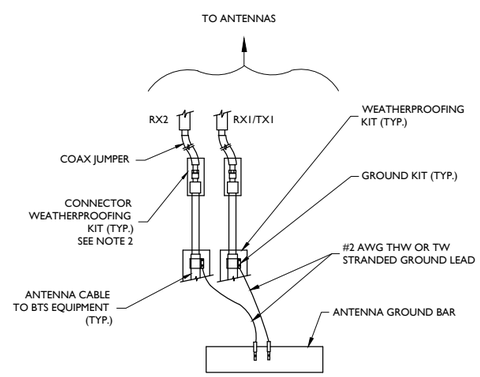

NOTES:

1. DO NOT INSTALL CABLE GROUND KIT AT A BEND AND ALWAYS DIRECT GROUND WIRE DOWN TO ANTENNA GROUND BAR.
2. WEATHER PROOFING SHALL BE TWO-PART TAPE KIT, COLD SHRINK SHALL NOT BE USED.

TYPICAL GROUND WIRE TO GROUNDING BAR

NOT TO SCALE

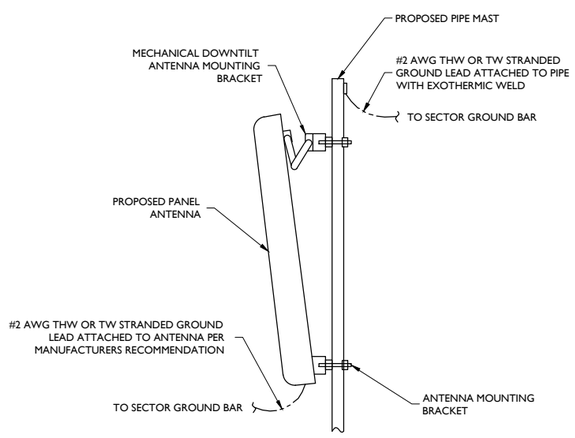

ANTENNA GROUNDING

NOT TO SCALE

MASER CONSULTING P.A.
Customer Loyalty Through Client Satisfaction
www.maserconsulting.com
Engineers ■Planners ■Surveyors
Landscape Architects ■Environmental Scientists
Office Locations:
■ Red Bank, NJ ■ Clinton, NJ ■ Hamilton, NJ ■ Marmora, NJ ■ Mt. Arlington, NJ ■ Mt. Laurel, NJ
■ Sterling, VA ■ Norfolk, VA ■ Albuquerque, NM ■ Albany, NY ■ Chestnut Ridge, NY ■ Newburgh, NY
■ Hawthorne, NY ■ Lehigh Valley, PA ■ Exton, PA ■ Philadelphia, PA ■ Columbia, MD ■ Tampa, FL

Copyright © 2016. Maser Consulting P.A. All Rights Reserved. This drawing and all the information contained herein is authorized for use only by the party for whom the services were contracted or to whom it is certified. This drawing may not be copied, reused, disclosed, distributed or relied upon for any other purpose without the express written consent of Maser Consulting P.A.

smartlink
1362 MELLON ROAD
SUITE 140
HANOVER, MD 21076
TEL: (410) 582-8043 FAX: (443) 221-2962

at&t

NEW CINGULAR WIRELESS PCS, LLC
550 COCHITUATE ROAD
FRAMINGHAM, MA 01701

811 Know what's below. Call before you dig.

PROTECT YOURSELF
ALL STATES REQUIRE NOTIFICATION OF EXCAVATORS, DESIGNERS, OR ANY PERSON PREPARING TO DISTURB THE EARTH'S SURFACE ANYWHERE IN ANY STATE

FOR STATE SPECIFIC DIRECT PHONE NUMBERS VISIT: WWW.CALL811.COM

SCALE: AS SHOWN
JOB NUMBER: 15946020A

REV	DATE	DESCRIPTION	DRAWN BY	CHECKED BY
.	.	.	.	.
.	.	.	.	.
.	.	.	.	.
.	.	.	.	.
.	.	.	.	.
.	.	.	.	.
1	02/26/16	REVISED PER SMARTLINK'S COMMENTS	DTS	FEP
0	10/29/15	ISSUED FOR REVIEW	KRO/SMG	FEP

STATE OF CONNECTICUT
FRANK E. PAZDEN
No. 28188
LICENSED PROFESSIONAL ENGINEER
FRANK E. PAZDEN
CERTIFICATE OF AUTHORIZATION
ENGINEERING PROFESSIONAL ENGINEER No. 28188

IT IS A VIOLATION OF LAW FOR ANY PERSON, UNLESS THEY ARE ACTING UNDER THE DIRECTION OF THE RESPONSIBLE LICENSED PROFFESIONAL ENGINEER, TO ALTER THIS DOCUMENT.

SITE NAME:

STAMFORD NORTH
FA# 10034979
SITE # CTL02109

1590 NEWFIELD AVENUE
STAMFORD, CT 06905
COUNTY OF FAIRFIELD

MT. ARLINGTON OFFICE
400 Valley Road
Suite 304
Mount Arlington, NJ 07856
Phone: 973.398.3110
Fax: 973.398.3199
email: solutions @maserconsulting.com

SHEET TITLE: GROUNDING DETAILS

SHEET NUMBER: G-1

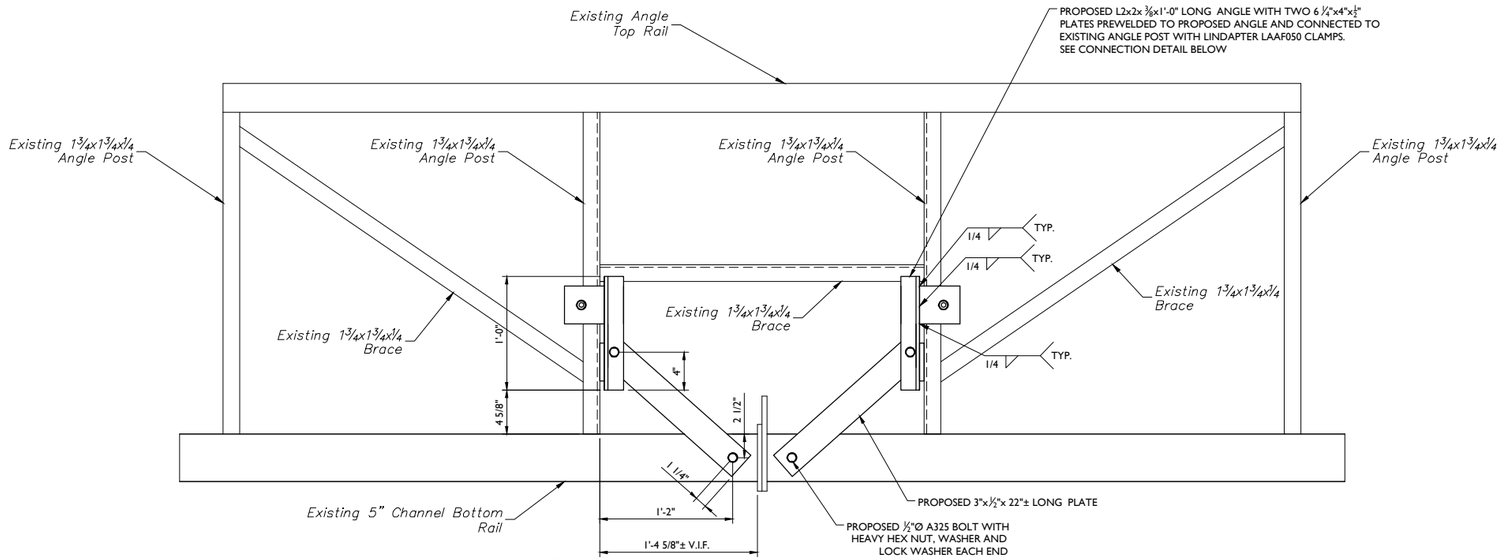

NOTE:
1. ALL MEMBERS TO BE CENTERED WHERE APPLICABLE. ALL BOLTS TO BE CENTERED ON MEMBERS U.N.O.
2. ANTENNA PIPE MASTS NOT SHOWN FOR CLARITY.
3. CONTRACTOR IS TO FIELD VERIFY ALL MEASUREMENTS PRIOR TO ANY DETAILING OR FABRICATION.
4. MINIMUM EDGE DISTANCE REQUIREMENTS PER THE AISC SPECIFICATION MUST BE MAINTAINED FOR ALL CONNECTED PARTS.
5. LINDAPTER DISTRIBUTOR CONTACT IS BRIAN BAYDA AT UCC STEELWORK CONNECTIONS WHICH CAN BE REACHED AT 1-610-248-0955 OR BBAYDA@UCCI.CA

PLATFORM REINFORCING ELEVATION (TYPICAL ALL SIDES)

NOT TO SCALE

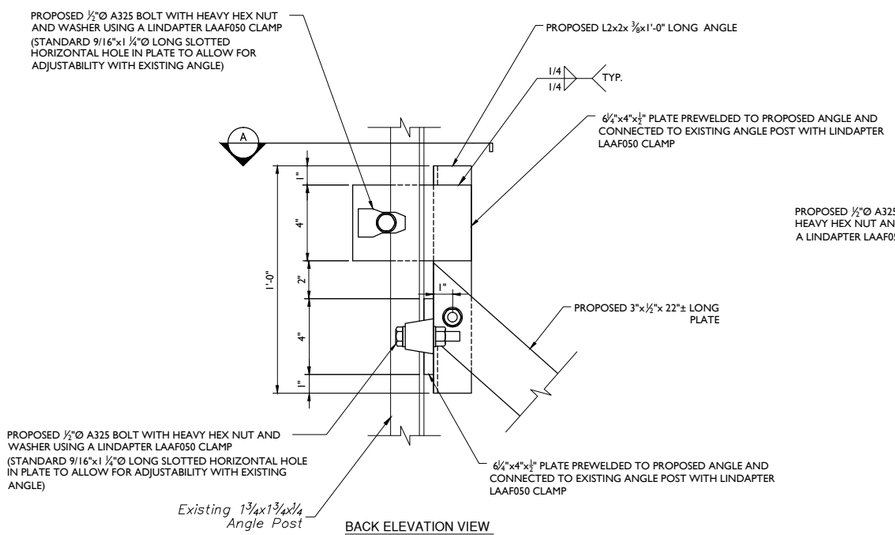

BACK ELEVATION VIEW

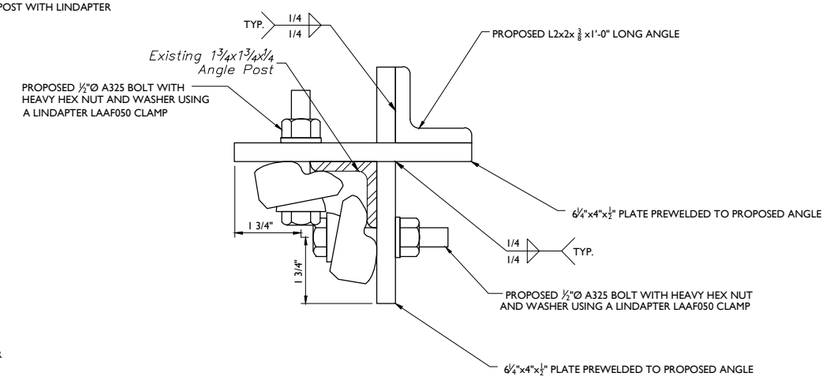

SECTION A

NOTE:
1. ALL MEMBERS TO BE CENTERED WHERE APPLICABLE. ALL BOLTS TO BE CENTERED ON MEMBERS U.N.O.

LINDAPTER REINFORCING CONNECTION DETAIL

NOT TO SCALE

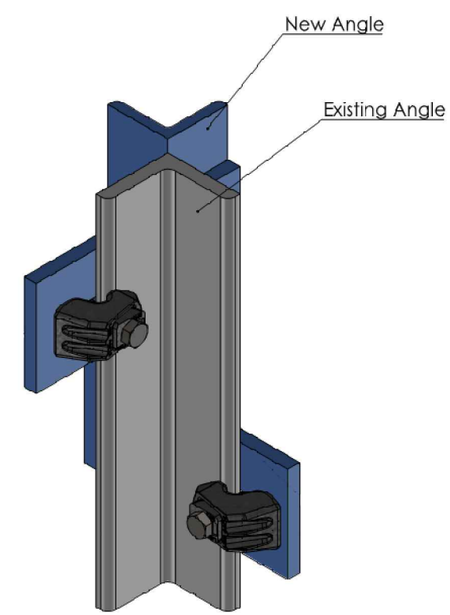

LINDAPTER REINFORCING CONNECTION DETAIL 3D VIEW

NOT TO SCALE

MASER CONSULTING P.A.
Customer Loyalty Through Client Satisfaction
www.maserconsulting.com
Engineers ■ Planners ■ Surveyors
Landscape Architects ■ Environmental Scientists
Office Locations:
■ Red Bank, NJ ■ Clinton, NJ ■ Hamilton, NJ ■ Marmora, NJ ■ Mt. Arlington, NJ ■ Mt. Laurel, NJ
■ Sterling, VA ■ Norfolk, VA ■ Albuquerque, NM ■ Albany, NY ■ Chestnut Ridge, NY ■ Newburgh, NY
■ Hawthorne, NY ■ Lehigh Valley, PA ■ Exton, PA ■ Philadelphia, PA ■ Columbia, MD ■ Tampa, FL

Copyright © 2016. Maser Consulting P.A. All Rights Reserved. This drawing and all the information contained herein is authorized for use only by the party for whom the services were contracted or to whom it is certified. This drawing may not be copied, reused, disclosed, distributed or relied upon for any other purpose without the express written consent of Maser Consulting P.A.

smartlink
1362 MELLON ROAD
SUITE 140
HANOVER, MD 21076
TEL: (410) 582-8043 FAX: (443) 221-2962

at&t

NEW CINGULAR WIRELESS PCS, LLC
550 COCHITUATE ROAD
FRAMINGHAM, MA 01701

811 Know what's below. Call before you dig.

PROTECT YOURSELF
ALL STATES REQUIRE NOTIFICATION OF EXCAVATORS, DESIGNERS, OR ANY PERSON PREPARING TO DISTURB THE EARTH'S SURFACE ANYWHERE IN ANY STATE

FOR STATE SPECIFIC DIRECT PHONE NUMBERS VISIT: WWW.CALL811.COM

SCALE :	JOB NUMBER :
AS SHOWN	15946020A

REV	DATE	DESCRIPTION	DRAWN BY	CHECKED BY
1	02/26/16	REVISED PER SMARTLINK'S COMMENTS	DTS	FEP
0	10/29/15	ISSUED FOR REVIEW	KRO/SMG	FEP

STATE OF CONNECTICUT
FRANK E. PADDEN
No. 28188
PROFESSIONAL ENGINEER

FRANK E. PADDEN
CONNECTICUT LICENSE NO. 28188
ENGINEER OF RECORD

IT IS A VIOLATION OF LAW FOR ANY PERSON, UNLESS THEY ARE ACTING UNDER THE DIRECTION OF THE RESPONSIBLE LICENSED PROFFESIONAL ENGINEER, TO ALTER THIS DOCUMENT.

SITE NAME:

STAMFORD NORTH
FA# 10034979
SITE # CTL02109

1590 NEWFIELD AVENUE
STAMFORD, CT 06905
COUNTY OF FAIRFIELD

MT. ARLINGTON OFFICE
400 Valley Road
Suite 304
Mount Arlington, NJ 07856
Phone: 973.398.3110
Fax: 973.398.3199
email: solutions @maserconsulting.com

SHEET TITLE :
STRUCTURAL DETAILS

SHEET NUMBER :
S-1

GENERAL NOTES

1. CONTRACTOR IS RESPONSIBLE FOR DISSEMINATION OF REVISIONS TO CONTRACT DOCUMENTS AND REQUIREMENTS TO ALL SUBCONTRACTORS. THE CONTRACTOR SHALL COORDINATE ALL WORK WITH OTHER TRADES AND EQUIPMENT MANUFACTURERS.
2. CONTRACTOR SHALL VERIFY ALL DIMENSIONS, ELEVATIONS AND EXISTING FIELD CONDITIONS BEFORE PROCEEDING WITH CONSTRUCTION. DETERMINE EXACT LOCATIONS OF EXISTING UTILITIES, GROUNDS, DRAIN PIPES AND VENTS BEFORE COMMENCING WORK. CONTRACTOR SHALL NOTIFY ENGINEER IF ACTUAL CONDITIONS DIFFER SIGNIFICANTLY FROM WHAT IS SHOWN ON DRAWINGS.
3. THE CONTRACTOR IS RESPONSIBLE FOR MAINTAINING A NEAT AND ORDERLY PROJECT SITE, REMOVE AND DISPOSE OF OFF SITE RUBBISH, WASTE MATERIALS, LITTER, AND ALL FOREIGN SUBSTANCES DAILY.
4. INCORRECTLY FABRICATED, DAMAGED, OR OTHERWISE MISFITTING OR NONCONFORMING MATERIALS OR CONDITIONS SHALL BE REPORTED TO THE ENGINEER PRIOR TO REMEDIAL OR CORRECTIVE ACTION. ANY SUCH ACTION SHALL REQUIRE OWNER'S WRITTEN APPROVAL.
5. THE CONTRACTOR IS RESPONSIBLE FOR PROVIDING SUCH COVERING, SHIELDING, AND BARRICADES AS REQUIRED TO PROTECT BYSTANDERS AND PASSERSBY, EQUIPMENT, SUPPLIES, ETC. FROM DUST, DEBRIS AND OTHER CAUSE OF DAMAGE RESULTING FROM CONSTRUCTION. ANY DAMAGE DURING CONSTRUCTION SHALL BE RESTORED TO PREVIOUS CONDITIONS.
6. IN AREAS WHERE EXISTING ANTENNA MOUNTS, TRANSMISSION LINES OR OTHER SUPPORTING EQUIPMENT IS TO BE REMOVED, THE EXISTING STRUCTURE SHALL BE REPAIRED AS REQUIRED.
7. ALL SAFETY AND OSHA REGULATIONS SHALL BE FOLLOWED STRICTLY. METHODS OF CONSTRUCTION AND ERECTION OF STRUCTURAL MATERIAL ARE THE CONTRACTOR'S RESPONSIBILITY.
8. CONTRACTOR TO PROVIDE TEMPORARY SUPPORT FOR ALL EXISTING ANTENNAS, TRANSMISSION LINES OR OTHER APPURTENANCES DURING CONSTRUCTION.
9. CONTRACTOR SHALL PROTECT EXISTING APPURTENANCES FROM DAMAGE DURING CONSTRUCTION.
10. NO ANTENNAS, CABLES, OR OTHER APPURTENANCES SHALL BE ADDED TO THE TOWER UNTIL THE MODIFICATION WORK IS COMPLETE.
11. ALL DIMENSIONS SHOWN ARE APPROXIMATE. CONTRACTOR SHALL COORDINATE DIMENSIONS WITH TOWER MANUFACTURER OR FIELD VERIFY DIMENSIONS PRIOR TO FABRICATING MEMBERS.
12. THE CONTRACTOR SHALL LOCATE ALL UTILITIES IN THE AREA OF CONSTRUCTION AND PREVENT DAMAGE TO THEM. SHOULD DAMAGE OCCUR TO ANY UTILITIES, THE CONTRACTOR IS REQUIRED TO REPAIR THE DAMAGE TO THE SATISFACTION OF THE OWNER AT HIS OWN EXPENSE.
13. ALL EXISTING PLANS, DETAILS, DIMENSIONS, AND ELEVATIONS INDICATE EXISTING CONDITIONS AS KNOWN. THE EXISTING INFORMATION SHOWN IS NOT INTENDED TO BE "AS BUILT" AND THE ACTUAL CONSTRUCTION MAY DIFFER FROM THAT SHOWN. THE CONTRACTOR SHALL FIELD VERIFY ALL EXISTING CONDITIONS INCLUDING DIMENSIONS AND ELEVATIONS PRIOR TO STARTING CONSTRUCTION. MINOR VARIATIONS CAN BE EXPECTED AND ANY REQUIRED DEVIATION FROM THE CONTRACT DOCUMENTS SHALL BE APPROVED BY THE ENGINEER PRIOR TO PROCEEDING WITH CONSTRUCTION.
14. MODIFICATION DETAILS REPRESENTS TYPICAL CONDITIONS. CONTRACTOR SHALL NOTIFY ENGINEER OF ANY DEVIATION AS A RESULT OF SITE SPECIFIC CONDITIONS. REINFORCE ALL TOWER FACES IDENTICALLY, UNLESS OTHERWISE NOTED.
15. IN AREAS TO BE MODIFIED, ANY ANTENNA, COAX, OR CONDUIT SHALL BE TEMPORARILY MOVED AND THEN REPLACED AFTER COMPLETION OF WORK. COORDINATE WITH OWNER.
16. CONTRACTOR IS RESPONSIBLE FOR DISPOSAL OF ALL MATERIAL TO BE REMOVED.
17. CONTRACTOR SHALL ENSURE STABILITY OF THE ANTENNA PLATFORM DURING ALL WORK.
18. CONTRACTOR IS RESPONSIBLE FOR PROVIDING ADEQUATE TEMPORARY BRACING OF THE STRUCTURE DURING ALL STAGES OF CONSTRUCTION. THE STRUCTURE IS DESIGNED FOR A COMPLETED CONDITION ONLY AND THEREFORE MAY REQUIRE ADDITIONAL SUPPORT BEFORE COMPLETIONS.
19. THIS DESIGN ASSUMES THE MONOPOLE AND FOUNDATIONS HAVE BEEN WELL MAINTAINED, IN GOOD COMMON, AND ARE WITHOUT DEFECT. BENT MEMBERS, CORRODED MEMBERS, LOOSE BOLTS, CRACKED WELDS AND OTHER MEMBER DEFECTS HAVE NOT BEEN CONSIDERED. THE TOWER IS ASSUMED TO BE PLUMB AND THE SITE IS ASSUMED TO BE LEVEL. THIS DESIGN IS BEING PROVIDED WITHOUT THE BENEFIT OF A COMMON ASSESSMENT BY MASER CONSULTING P.A.. CONTRACTOR SHALL COMMISSION A COMPLETE CONDITION ASSESSMENT PRIOR TO ORDERING ANY REINFORCING MATERIALS. CONTRACTOR SHALL SUPPLY CONDITION ASSESSMENT TD ENGINEER FOR REVIEW. SEE CONTRACTOR NOTES.
20. ALL SUBSTITUTES PROPOSED BY THE CONTRACTOR SHALL BE APPROVED IN WRITING BY THE ENGINEER. CONTRACTOR SHALL PROVIDE DOCUMENTATION TO ENGINEER FOR DETERMINING IF SUBSTITUTE IS SUITABLE FOR USE AND MEETS THE ORIGINAL DESIGN CRITERIA. DIFFERENCES FROM THE ORIGINAL DESIGN, INCLUDING MAINTENANCE. REPAIR AND REPLACEMENT, SHALL BE NOTED. ESTIMATES OF COSTS/CREDITS ASSOCIATED WITH THE SUBSTITUTION (INCLUDING RE-DESIGN COSTS AND COSTS TO SUB-CONTRACTORS) SHALL BE PROVIDED TO THE ENGINEER. CONTRACTOR SHALL PROVIDE ADDITIONAL DOCUMENTATION AND/OR SPECIFICATIONS TO THE ENGINEER AS REQUESTED.
21. PROVIDE STRUCTURAL STEEL SHOP DRAWINGS TO ENGINEER FOR APPROVAL PRIOR TO FABRICATION.
22. INSPECTION OF THE MODIFICATIONS SHALL BE COMPLETED BY A THIRD PARTY. INSPECTION SHALL TAKE PLACE WITHIN 72 HOURS OF THE COMPLETION OF THE ANTENNA PLATFORM MODIFICATIONS. NO PROPOSED LOADING SHALL BE INSTALLED PRIOR TO INSPECTOR APPROVAL.

DESIGN LOADS

1. WIND: TIA/EIA-222-F
   BASIC WIND SPEED: 85 MPH, 50 MPH WITH 0.75 INCH ICE THICKNESS
2. ANTENNA PLATFORM MODIFICATIONS WERE DESIGNED IN ACCORDANCE TO TIA-222-F AND 2005 CT BUILDING CODE AND ALL SUBSEQUENT AMENDMENTS , AS WELL AS APPLICABLE LOCAL BUILDING CODES.

STRUCTURAL STEEL

1. ALL STRUCTURAL STEEL PLATES SHALL CONFORM TO ASTM A 572-50.
2. DESIGN, FABRICATION, ERECTION AND WORKMANSHIP SHALL CONFORM TO AISC MANUAL OF STEEL CONSTRUCTION, THIRTEENTH EDITION.
3. CONNECTION BOLTS SHALL BE 3/4"Ø ASTM A325N UNLESS OTHERWISE NOTED.
4. WELDING SHALL BE PERFORMED BY WELDERS THAT ARE CERTIFIED (AWS "STANDARD QUALIFICATION PROCEDURE") TO PERFORM THE TYPE OF WORK REQUIRED. WELDS SHALL CONFORM TO AMERICAN WELDING SOCIETY (AWS) D1.1 "STRUCTURAL WELDING CODE - STEEL". PROVIDE THE MINIMUM SIZE PER TABLE J2.4 IN THE AISC "MANUAL OF STEEL CONSTRUCTION", 13TH EDITION, WHEN WELD SIZES ARE NOT SHOWN. USE E70XX ELECTRODES FOR ALL WELDING.
5. RETURN ALL WELDS AT CORNERS TWICE THE NOMINAL SIZE OF THE WELD MINIMUM, UNLESS OTHERWISE NOTED.
6. TO REDUCE WARPING TO A MINIMUM WHEN WELDING TO EXISTING MEMBERS CARRYING LOAD, SHORE OR BRACE EXISTING MEMBER DURING WELDING.
7. ALL COPES, BLOCKS, CUT OUTS, AND OTHER CUTTING OF STRUCTURAL MEMBERS SHALL HAVE ALL RE-ENTRANT CORNERS SHAPED, NOTCHED FREE TO A RADIUS OF AT LEAST 1/2".
8. CONTRACTOR IS RESPONSIBLE FOR ADEQUATE BRACING OF STEEL CONSTRUCTION.
9. ALL NEW STRUCTURAL STEEL SHAPES SHALL BE GALVANIZED IN ACCORDANCE WITH ASTM A123.
10. ALL NEW STEEL BOLTS, NUTS, AND HARDWARE SHALL BE GALVANIZED IN ACCORDANCE WITH ASTM A153.
11. DAMAGED GALVANIZED SURFACES SHALL BE REPAIRED BY COLD GALVANIZING IN ACCORDANCE WITH ASTM A780.
12. ALL STRUCTURAL STEEL SHALL ABIDE BY THE FOLLOWING MATERIAL STRENGTH LIST UNLESS OTHERWISE NOTED:

PLATES	ASTM A572 (GR 50)
ANGLES	ASTM A36 (GR 36)
SOLID ROUND	ASTM A572 (GR 50)
BOLTS	ASTM A325 (ALL BOLT HOLES STANDARD SIZE U.N.O.)
NUTS	ASTM A194-2H
WASHERS	ASTM F436
HOT-DIPPED GALVANIZING	ASTM A123
WELDS	E70XX
PAINT	NEW STEEL TO BE PAINTED TO MATCH EXISTING TOWER

CONTRACTOR NOTES

1. ALL CONTRACTORS AND LOWER TIER CONTRACTORS MUST ACKNOWLEDGE IN WRITING TO MONOPOLE OWNER AND MASER CONSULTING P.A. THAT THEY HAVE OBTAINED, UNDERSTAND, AND WILL FOLLOW MONOPOLE OWNER STANDARDS OF PRACTICE, CONSTRUCTION GUIDELINES, ALL SITE AND TOWER SAFETY PROCEDURES, ALL PRODUCT LIMITATIONS AND INSTALLATION PROCEDURES USED ON SITE, AND PROPOSED MODIFICATIONS DESCRIBED. RECEIPT OF ACKNOWLEDGMENT MUST OCCUR PRIOR TO BEGINNING CONSTRUCTION OR CLIMBING. IT IS THE RESPONSIBILITY OF THE GENERAL CONTRACTOR TO PROVIDE THIS DOCUMENTATION FOR MONOPOLE OWNER AND MASER CONSULTING P.A. ON COMPANY LETTERHEAD AND THE RESPONSIBILITY OF THE GENERAL CONTRACTOR TO OBTAIN THIS DOCUMENTATION FROM LOWER TIER SUBCONTRACTORS (ON SUBCONTRACTOR LETTERHEAD) AND DELIVER IT TO MONOPOLE OWNER AND MASER CONSULTING P.A.
2. IF THE CONTRACTOR DISCOVERS ANY EXISTING CONDITIONS THAT ARE NOT REPRESENTED ON THESE DRAWINGS, OR ANY CONDITIONS THAT WOULD INTERFERE WITH THE INSTALLATION OF THE MODIFICATIONS, MASER CONSULTING P.A. SHALL BE CONTACTED IMMEDIATELY TO EVALUATE THE SIGNIFICANCE OF THE DEVIATION.
3. IT IS ASSUMED THAT ANY STRUCTURAL MODIFICATION WORK SPECIFIED ON THESE PLANS WILL BE ACCOMPLISHED BY KNOWLEDGEABLE WORKMEN WITH TELECOMMUNICATION CONSTRUCTION EXPERIENCE. THIS INCLUDES PROVIDING THE NECESSARY CERTIFICATIONS TO THE MONOPOLE OWNER AND ENGINEER.
4. THESE DRAWINGS DO NOT INDICATE THE METHOD OF CONSTRUCTION. THE CONTRACTOR SHALL SUPERVISE AND DIRECT THE WORK AND SHALL BE SOLELY RESPONSIBLE FOR ALL CONSTRUCTION METHODS, MEANS, TECHNIQUES, SEQUENCES, AND PROCEDURES.
5. THE CONTRACTOR IS SOLELY RESPONSIBLE FOR INITIATING, MAINTAINING, AND SUPERVISING ALL SAFETY PROGRAMS AND PRECAUTIONS IN CONNECTION WITH THIS WORK.
6. THE CONTRACTOR SHALL VISIT THE SITE PRIOR TO BIDDING; ANY PROBLEMS WITH ACCESS, INTERFERENCE, ETC. SHALL BE RESOLVED PRIOR TO MOBILIZATION. THE CONTRACTOR MUST VISIT THE SITE PRIOR TO ORDERING ANY MATERIAL AND MUST RESOLVE ALL ISSUES WITH THE OWNER PREVENTING A CONTINUOUS INSTALLATION. CONTRACTOR SHALL NOTE ALL ANTENNAS, MOUNTS, COAX, LIGHTING, CLIMBING SUPPORTS, STEP BOLTS, PORT HOLES, AND ANY OTHER MONOPOLE APPURTENANCES IN THE REGION OF THE MODIFICATIONS.
7. CONTRACTOR IS RESPONSIBLE FOR TEMPORARILY REMOVING ALL COAX, T-BRACKETS, ANTENNA MOUNTS, AND ANY OTHER MONOPOLE APPURTENANCE THAT MAY INTERFERE WITH THE ANTENNA PLATFORM MODIFICATIONS. ALL MONOPOLE APPURTENANCES MUST BE REPLACED AND/OR RESTORED TO ITS ORIGINAL LOCATION. ANY CARRIER DOWNTIME MUST BE COORDINATED WITH THE MONOPOLE OWNER IN WRITING.
8. SOME ATTACHMENTS MAY REQUIRE CUSTOM MODIFICATIONS TO PROPERLY FIT THE MODIFIED REGION OF THE STRUCTURE. THESE CUSTOMIZATIONS ARE DESIGNED BY OTHERS AND MUST BE APPROVED BY THE ENGINEER PRIOR TO REMOVING SUCH ATTACHMENTS. ANY CARRIER DOWNTIME MUST BE COORDINATED WITH THE TOWER OWNER IN WRITING.
9. CONTRACTOR SHALL ONLY WORK WITHIN THE LIMITS OF THE MONOPOLE OWNER'S PROPERTY OR LEASE AREA AND APPROVED EASEMENTS. IT IS THE RESPONSIBILITY OF THE CONTRACTOR TO VERIFY WORK IS WITHIN THESE BOUNDARIES. CONTRACTOR SHALL EMPLOY A SURVEYOR AS REQUIRED. ANY WORK OUTSIDE THESE BOUNDARIES SHALL BE APPROVED IN WRITING BY THE LAND OWNER PRIOR TO MOBILIZATION. CONSTRUCTION STAKING AND BOUNDARY MARKING IS THE RESPONSIBILITY OF THE CONTRACTOR.
10. WORK SHALL ONLY BE PERFORMED DURING CALM DRY DAYS (WINDS LESS THAN 10-MPH) CONTRACTOR IS RESPONSIBLE FOR ALL TEMPORARY LOCAL ANTENNA PLATFORM SHORING, TEMPORARY GLOBAL ANTENNA PLATFORM SHORING, AND ALL SHORING OF SURROUNDING BUILDINGS, PADS, AND OTHER OUTDOOR SITE OBSTRUCTIONS. ALL SHORING. TEMPORARY BRACING, AND TEMPORARY SUPPORTS ARE THE RESPONSIBILITY OF THE CONTRACTOR.
11. MODIFICATIONS SHOWN SHALL BE INSTALLED ON ALL FACES OF THE EXISTING PLATFORM.

MASER CONSULTING P.A.
Customer Loyalty Through Client Satisfaction
www.maserconsulting.com
Engineers ■ Planners ■ Surveyors
Landscape Architects ■ Environmental Scientists
Office Locations:
■ Red Bank, NJ ■ Clinton, NJ ■ Hamilton, NJ ■ Marmora, NJ ■ Mt. Arlington, NJ ■ Mt. Laurel, NJ ■ Sterling, VA ■ Norfolk, VA ■ Albuquerque, NM ■ Albany, NY ■ Chestnut Ridge, NY ■ Newburgh, NY ■ Hawthorne, NY ■ Lehigh Valley, PA ■ Exton, PA ■ Philadelphia, PA ■ Columbia, MD ■ Tampa, FL

Copyright © 2016. Maser Consulting P.A. All Rights Reserved. This drawing and all the information contained herein is authorized for use only by the party for whom the services were contracted or to whom it is certified. This drawing may not be copied, reused, disclosed, distributed or relied upon for any other purpose without the express written consent of Maser Consulting P.A.

smartlink
1362 MELLON ROAD
SUITE 140
HANOVER, MD 21076
TEL: (410) 582-8043 FAX: (443) 221-2962

at&t

NEW CINGULAR WIRELESS PCS, LLC
550 COCHITUATE ROAD
FRAMINGHAM, MA 01701

811 Know what's below. Call before you dig.

PROTECT YOURSELF
ALL STATES REQUIRE NOTIFICATION OF EXCAVATORS, DESIGNERS, OR ANY PERSON PREPARING TO DISTURB THE EARTH'S SURFACE ANYWHERE IN ANY STATE

FOR STATE SPECIFIC DIRECT PHONE NUMBERS VISIT: WWW.CALL811.COM

SCALE :	JOB NUMBER :
AS SHOWN	15946020A

REV	DATE	DESCRIPTION	DRAWN BY	CHECKED BY
1	02/26/16	REVISED PER SMARTLINK'S COMMENTS	DTS	FEP
0	10/29/15	ISSUED FOR REVIEW	KRO/SMG	FEP

STATE OF CONNECTICUT
FRANK E. PAZDEN
LIC. 28188
PROFESSIONAL ENGINEER

FRANK E. PAZDEN
CONNECTICUT LICENSED PROFESSIONAL ENGINEER
ENGINEER LICENSE NUMBER: 28188

IT IS A VIOLATION OF LAW FOR ANY PERSON, UNLESS THEY ARE ACTING UNDER THE DIRECTION OF THE RESPONSIBLE LICENSED PROFFESIONAL ENGINEER, TO ALTER THIS DOCUMENT.

SITE NAME:

STAMFORD NORTH
FA# 10034979
SITE # CTL02109

1590 NEWFIELD AVENUE
STAMFORD, CT 06905
COUNTY OF FAIRFIELD

MT. ARLINGTON OFFICE
400 Valley Road
Suite 304
Mount Arlington, NJ 07856
Phone: 973.398.3110
Fax: 973.398.3199
email: solutions @maserconsulting.com

SHEET TITLE :
STRUCTURAL GENERAL NOTES

SHEET NUMBER :
S-2