AMERICAN TOWER®
CORPORATION

Structural Analysis Report

Structure	:	**300 ft Self Supported AT&T TAG Tower**
ATC Site Name	:	**Stamford (Katoona), CT**
ATC Site Number	:	**88018**
Engineering Number	:	**64349922**
Proposed Carrier	:	**AT&T Mobility**
Carrier Site Name	:	**Stamford West**
Carrier Site Number	:	**CTL02135/FA#10034997**
Site Location	:	**Catoona Lane** **Stamford, CT 06902-4573** **41.052825,-73.563047**
County	:	**Fairfield**
Date	:	**November 20, 2015**
Max Usage	:	**99%**
Result	:	**Pass**

Reviewed by:
William Garrett, PE
Chief Engineer

STATE OF CONNECTICUT
WILLIAM GARRETT
No. 23235
LICENSED
PROFESSIONAL ENGINEER

Prepared By:
Robert D. Barrett, E.I.
Structural Engineer I

Robert D. Barrett

Nov 20 2015 4:09 PM

COA: PEC.0001553

AMERICAN TOWER®
CORPORATION

Table of Contents

Introduction 1

Supporting Documents 1

Analysis 1

Conclusion 1

Existing and Reserved Equipment 2-3

Equipment to be Removed 3

Proposed Equipment 3

Structure Usages 4

Foundations 4

Standard Conditions 5

Calculations ..... Attached

Introduction

The purpose of this report is to summarize results of a structural analysis performed on the 300 ft self supported AT&T tag tower to reflect the change in loading by AT&T Mobility.

Supporting Documents

Tower Drawings	CSEI Analysis, ATC Eng. #73123451, dated September 28, 2005
Foundation Drawing	Rose, Chulkoff, and Rose Job #C67229, dated August 9, 1967
Geotechnical Report	Rose, Chulkoff, and Rose Job #C67229, dated August 9, 1967
Modifications	ATC Eng. #42439132, dated September 26, 2008 ATC Eng. #44209632, dated December 2, 2009

Analysis

The tower was analyzed using Power Line Systems, Inc.'s tower analysis software. This program considers an elastic three-dimensional model and second-order effects per ANSI/EIA-222.

Basic Wind Speed:	85 mph (Fastest Mile)
Basic Wind Speed w/ Ice:	74 mph (Fastest Mile)w/ 1/2" radial ice concurrent
Code:	ANSI/TIA/EIA-222-F / 2003 IBC , Sec. 1609.1.1, Exception (5) & Sec. 3108.4 w/ 2005 CT Supplement & 2009 CT Amendment

Conclusion

Based on the analysis results, the structure meets the requirements per the applicable codes listed above. The tower and foundation can support the equipment as described in this report.

If you have any questions or require additional information, please contact American Tower via email at Engineering@americantower.com. Please include the American Tower site name, site number, and engineering number in the subject line for any questions.

Existing and Reserved Equipment

Elevation[1] (ft)		Qty	Antenna	Mount Type	Lines	Carrier
Mount	RAD					
300.0	306.0	1	3' HP Dish	Platform w/ Handrails	(1) 1/2" Coax	--
	300.0	3	Horizon Compact		(5) 7/8" Coax	Clearwire
		3	DragonWave A-ANT-18G-2-C			
	335.0	1	TX RX Systems 101-68-10-X-03N		(2) 1 1/4" Coax	Marcus Comm.
	317.0	1	16' Omni			
	311.0	1	Radio/ODU			
		1	4' Std. Dish			
	320.0	1	16' Omni		(1) 7/8" Coax	UNITed Wireless Holdings
270.0	276.0	1	Dielectric TLP-08M-2E	Side Arm	(1) 3 1/8" HL	Qualcomm
269.0	275.0	1	ADD090	Side Arm	(2) 7/8" Coax	US Dept Of Homeland Security
265.0	272.0	2	Til-Tek TA-2350-DAB	Side Arms	(1) EW20	Sirius XM Radio
	265.0	3	RFS ATMAA1412D-1A20	Sector Frames	(2) 7/8" Fiber (13) 1 5/8" Coax	T-Mobile
		3	Ericsson RRUS 11 B12			
		3	Ericsson AIR 21, 1.3 M, B2A B4P			
		3	Ericsson AIR 21, 1.3M, B4A B2P			
		3	Andrew LNX-6515DS-VTM			
240.0	250.0	1	Sinclair SC281-L	Side Arms	(2) 7/8" Coax	US Dept Of Homeland Security
	245.0	1	Sinclair SC381-HL			
231.0	235.0	6	Powerwave TT19-08BP111-001	Sector Frames	(12) 1 5/8" Coax (2) 0.74" 8 AWG 7	AT&T Mobility
		2	Raycap DC2-48-60-0-9E			
		6	Ericsson RRUS A2			
		3	Ericsson RRUS E2 B29			
		3	Ericsson RRUS-32			
		3	Ericsson RRUS-11			
		3	Powerwave 7770.00			
		3	Andrew SBNHH-1D65A			
224.0	222.0	12	Decibel DB844H90E-XY	Sector Frames	(15) 1 5/8" Coax	Sprint Nextel
200.0	201.0	2	TX RX Systems 101-68-10-X-03N	Side Arms	(2) 1 1/4" Coax	Marcus Comm.
	210.0	1	Sinclair SC281-L		(1) 7/8" Coax	US Dept Of Homeland Security
189.0	193.0	1	30" x 30" Reflector	Leg	-	Town Of Stanford
178.0	183.0	3	Antel BCD-87010 ___	Side Arms	(3) 7/8" Coax	Spok Holdings
171.0	175.0	1	24" x 24" Junction Box	T-Arms	(2) 2" conduit	Clearwire
167.0	171.0	3	NextNet BTS-2500		(6) 5/16" (0.31") Coax	
		3	Argus LLPX310R		(1) 2" conduit	
160.0	161.0	6	Kathrein 800 10504	Leg	(12) 1 5/8" Coax (2) 3/8" Coax	Metro PCS
	160.0	18	RCU			

Existing and Reserved Equipment (Continued)

Elevation[1] (ft)		Qty	Antenna	Mount Type	Lines	Carrier
Mount	RAD					
150.0	150.0	3	Alcatel-Lucent ALU 800MHz External Notch Filter	Sector Frame	(4) 1 1/4" Hybriflex (1) 1/2" Coax	Sprint Nextel
		3	Alcatel-Lucent TD-RRH8x20-25 w/ Solar Shield			
		3	RFS IBC1900HB-2			
		3	Alcatel-Lucent 800MHz RRH			
		6	Alcatel-Lucent 1900MHz RRH			
		3	RFS APXVTM14-C-I20			
		3	RFS APXVSPP18-C-A20			
137.0	142.0	1	Antel BCD-87010 ___ 4°	Stand-Off	(1) 7/8" Coax	Sensus USA
120.0	120.0	1	Channel Master Type 120	Leg	(1) 1/2" Coax	Spok Holdings
100.0	100.0	1	TX RX Systems 101-68-10-X-03N	Side Arm	(1) 1 1/4" Coax	Marcus Comm.
92.0	92.0	3	Alcatel-Lucent RRH2X60-1900A-4R	Sector Frames	(2) 1 5/8" Hybriflex	Verizon
		3	Alcatel-Lucent RRH2x60 700			
		3	Alcatel-Lucent RRH2X60-AWS Band 4			
		2	RFS DB-T1-6Z-8AB-0Z			
		6	Antel WWX063X19G00			
		4	CSS X7C-FRO-660			
		2	CSS X7C-FRO-640-V			
24.0	22.0	1	Til-Tek TA-2324-LHCP	Leg	(1) 7/8" Coax	Sirius XM Radio
6.0	6.0	1	Trimble Acutime 2000	Leg	(1) 1/2" Coax (1) 1/4" Coax	Spok Holdings
		1	Channel Master Type 120			

Equipment to be Removed

Elevation[1] (ft)		Qty	Antenna	Mount Type	Lines	Carrier
Mount	RAD					
231.0	235.0	6	Powerwave LGP21401	-	(1) 0.28" RG-6	AT&T Mobility
		6	LGP LGP21903			
		6	Ericsson RRUS 12 w/ Solar Shield			

Proposed Equipment

Elevation[1] (ft)		Qty	Antenna	Mount Type	Lines	Carrier
Mount	RAD					
231.0	235.0	3	Ericsson RRUS-11 800MHz	Sector Frame	(2) 0.39" Fiber Trunk (2) 0.74" 8 AWG 7	AT&T Mobility
		6	Ericsson RRUS 12			
		3	KMW AM-X-CD-14-65-00T-RET			
		3	CCI OPA-65R-LCUU-H4			

[1]Mount elevation is defined as height above bottom of steel structure to the bottom of mount, RAD elevation is defined as center of antenna above ground level (AGL).

Install proposed coax stacked on top of existing AT&T Mobility coax.

Structure Usages

Structural Component	Controlling Usage	Pass/Fail
Legs	89%	Pass
Diagonals	98%	Pass
Truss Diagonals	99%	Pass
Horizontals	95%	Pass
Truss Horizontals	85%	Pass
Anchor Bolts*	84%	Pass

***Includes a factor of safety of 2 or greater.**

Foundations*

Reaction Component	Analysis Reactions	% of Usage
Uplift (Kips)	384.6	91%
Axial (Kips)	494.0	8%

***Includes a factor of safety of 2 or greater.**

The structure base reactions resulting from this analysis were found to be acceptable through analysis based on geotechnical and foundation information, therefore no modification or reinforcement of the foundation will be required.

AMERICAN TOWER®
CORPORATION

Standard Conditions

All engineering services are performed on the basis that the information used is current and correct. This information may consist of, but is not necessary limited, to:

-- Information supplied by the client regarding the structure itself, antenna, mounts and feed line loading on the structure and its components, or other relevant information.

-- Information from drawings in the possession of American Tower Corporation, or generated by field inspections or measurements of the structure.

It is the responsibility of the client to ensure that the information provided to A.T. Engineering Service, PLLC and used in the performance of our engineering services is correct and complete. In the absence of information to the contrary, we assume that all structures were constructed in accordance with the drawings and specifications and that their capacity has not significantly changed from the "as new" condition.

Unless explicitly agreed by both the client and American Tower Corporation, all services will be performed in accordance with the current revision of ANSI/TIA -222. The design basic wind speed will be determined based on the minimum basic wind speed as prescribed in ANSI/TIA-222. Although every effort is taken to ensure that the loading considered is adequate to meet the requirements of all applicable regulatory entities, we can provide no assurance to meet any other local and state codes or requirements. If wind and ice loads or other relevant parameters are to be different from the minimum values recommended by the codes, the client shall specify the exact requirement.

All services are performed, results obtained, and recommendations made in accordance with generally accepted engineering principles and practices. A.T. Engineering Service, PLLC is not responsible for the conclusions, opinions and recommendations made by others based on the information we supply.

American Tower Corp., Project: "15-20-AT&TMobility 11-20-15"
Tower Version 13.01, 3:06:00 PM Friday, November 20, 2015
Undeformed geometry displayed

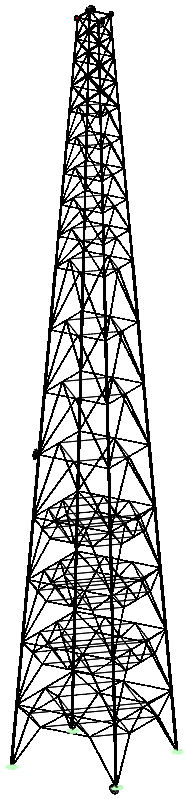

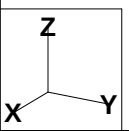

Project Name : 88018 - Stamford (Katoona), CT
Project Notes: T-Mobile - 63541021
Project File : \\srncvnx01\cary\engineering\L2 - ATC\88018\15-20-AT&TMobility 11-20-15\15-20-AT&TMobility 11-20-15.tow
Date run : 3:04:46 PM Friday, November 20, 2015
by : Tower Version 13.01
Licensed to : American Tower Corp.

Successfully performed nonlinear analysis

Member check option: TIA/EIA 222-F
Connection rupture check: Not Checked
Crossing diagonal check: Fixed
Included angle check: None
Climbing load check: None
Redundant members checked with: Actual Force
Loads from file: \\srncvnx01\cary\engineering\L2 - atc\88018\15-20-at&tmobility 11-20-15\15-20-at&tmobility 11-20-15.eia

*** Analysis Results:

Maximum element usage is 99.40% for Angle "LD 15X" in load case "W -90"

Summary of Joint Support Reactions For All Load Cases:

Load Case	Joint Label	Long. Force (kips)	Tran. Force (kips)	Vert. Force (kips)	Shear Force (kips)	Tran. Moment (ft-k)	Long. Moment (ft-k)	Bending Moment (ft-k)	Vert. Moment (ft-k)	Found. Usage %
W 0	0P	-46.68	-24.52	-334.42	52.73	-0.42	-5.85	5.86	-2.37	0.00
W 0	0X	-44.68	25.26	-328.46	51.33	0.09	-5.51	5.51	2.39	0.00
W 0	0XY	-36.70	-16.29	224.26	40.16	0.57	-5.96	5.98	2.19	0.00
W 0	0Y	-38.25	15.55	226.73	41.29	-0.33	-6.30	6.30	-2.16	0.00
W 180	0P	38.61	15.35	224.22	41.55	-0.33	6.34	6.35	2.17	0.00
W 180	0X	36.72	-16.15	222.09	40.11	0.57	6.01	6.03	-2.20	0.00
W 180	0XY	44.70	25.13	-326.29	51.28	0.08	5.56	5.56	-2.40	0.00
W 180	0Y	46.37	-24.31	-331.91	52.36	-0.43	5.89	5.90	2.39	0.00
W 45	0P	-52.89	-53.19	-494.35	75.01	4.54	-4.45	6.36	-0.14	0.00
W 45	0X	-21.10	-12.55	-50.09	24.55	4.91	-4.27	6.51	3.54	0.00
W 45	0XY	-44.80	-44.68	382.15	63.27	5.02	-5.05	7.12	-0.01	0.00
W 45	0Y	-12.27	-20.95	-49.62	24.28	4.24	-4.83	6.43	-3.55	0.00
W -45	0P	-22.42	13.20	-53.59	26.02	-5.13	-4.51	6.83	-3.39	0.00
W -45	0X	-51.54	53.52	-489.97	74.31	-4.74	-4.21	6.35	0.01	0.00
W -45	0XY	-11.11	20.54	-52.53	23.35	-4.09	-4.59	6.14	3.56	0.00
W -45	0Y	-45.92	44.19	384.19	63.73	-4.85	-5.28	7.17	0.03	0.00
W 90	0P	-24.47	-46.84	-335.84	52.85	5.91	0.46	5.92	2.24	0.00
W 90	0X	15.52	-38.59	227.94	41.59	6.36	0.30	6.36	2.16	0.00
W 90	0XY	-16.45	-36.66	224.73	40.18	5.94	-0.60	5.97	-2.20	0.00
W 90	0Y	25.43	-44.63	-328.73	51.36	5.49	-0.05	5.49	-2.39	0.00
W -90	0P	15.38	38.64	226.32	41.59	-6.38	0.30	6.39	-2.03	0.00
W -90	0X	-24.34	46.72	-334.22	52.68	-5.93	0.47	5.95	-2.39	0.00
W -90	0XY	25.37	44.68	-327.61	51.38	-5.53	-0.04	5.53	2.40	0.00
W -90	0Y	-16.38	36.72	223.61	40.21	-5.98	-0.60	6.01	2.20	0.00
W 0 Ice	0P	-43.65	-23.17	-327.07	49.42	-1.54	-4.23	4.50	-2.18	0.00
W 0 Ice	0X	-41.69	23.87	-320.44	48.04	1.21	-3.90	4.08	2.19	0.00
W 0 Ice	0XY	-33.38	-14.64	189.33	36.45	1.66	-6.62	6.82	2.03	0.00
W 0 Ice	0Y	-34.82	13.94	190.97	37.51	-1.45	-6.95	7.10	-2.00	0.00
W 180 Ice	0P	35.08	13.67	187.62	37.65	-1.44	7.00	7.15	2.01	0.00
W 180 Ice	0X	33.41	-14.45	186.39	36.40	1.66	6.69	6.89	-2.04	0.00
W 180 Ice	0XY	41.72	23.69	-317.50	47.98	1.20	3.97	4.15	-2.20	0.00
W 180 Ice	0Y	43.39	-22.89	-323.73	49.06	-1.55	4.29	4.56	2.20	0.00
W 45 Ice	0P	-50.22	-50.49	-480.28	71.21	3.13	-3.06	4.38	-0.11	0.00
W 45 Ice	0X	-20.27	-11.47	-64.04	23.29	5.78	-2.90	6.47	3.38	0.00
W 45 Ice	0XY	-41.72	-41.60	340.57	58.92	5.87	-5.90	8.32	-0.01	0.00
W 45 Ice	0Y	-11.23	-20.11	-63.46	23.04	2.87	-5.71	6.39	-3.39	0.00
W -45 Ice	0P	-21.61	12.06	-68.52	24.75	-6.01	-3.13	6.78	-3.26	0.00
W -45 Ice	0X	-48.86	50.83	-475.12	70.50	-3.35	-2.82	4.38	0.00	0.00
W -45 Ice	0XY	-10.18	19.72	-65.23	22.19	-2.74	-5.47	6.12	3.41	0.00
W -45 Ice	0Y	-42.74	41.14	341.65	59.33	-5.73	-6.13	8.39	0.03	0.00
W 90 Ice	0P	-23.12	-43.80	-328.23	49.53	4.29	1.58	4.57	2.08	0.00
W 90 Ice	0X	13.89	-35.10	191.79	37.75	7.00	1.42	7.14	2.00	0.00
W 90 Ice	0XY	-14.77	-33.33	189.64	36.45	6.60	-1.69	6.81	-2.04	0.00
W 90 Ice	0Y	24.01	-41.62	-320.42	48.05	3.88	-1.17	4.06	-2.20	0.00
W -90 Ice	0P	13.69	35.13	189.32	37.70	-7.04	1.41	7.18	-1.91	0.00
W -90 Ice	0X	-22.91	43.68	-325.76	49.33	-4.32	1.59	4.61	-2.20	0.00
W -90 Ice	0XY	23.90	41.68	-318.47	48.04	-3.94	-1.16	4.11	2.21	0.00
W -90 Ice	0Y	-14.65	33.39	187.70	36.47	-6.66	-1.69	6.87	2.05	0.00

Summary of Joint Support Reactions For All Load Cases in Direction of Leg:

Load Case	Support Joint	Origin Joint	Leg Member	Force In Leg Dir. (kips)	Residual Shear Perpendicular To Leg (kips)	Residual Shear Horizontal To Leg - Res. (kips)	Residual Shear Horizontal To Leg - Long. (kips)	Residual Shear Horizontal To Leg - Tran. (kips)	Total Long. Force (kips)	Total Tran. Force (kips)	Total Vert. Force (kips)
W 0	0P	1P	L 1P	337.533	26.283	26.348	26.058	3.894	-46.68	-24.52	-334.42
W 0	0X	1X	L 1X	331.518	24.872	24.938	24.430	-5.008	-44.68	25.26	-328.46
W 0	0XY	1XY	L 1XY	-226.670	22.955	23.007	22.875	2.459	-36.70	-16.29	224.26
W 0	0Y	1Y	L 1Y	-229.174	24.269	24.321	24.270	-1.572	-38.25	15.55	226.73
W 180	0P	1P	L 1P	-226.684	24.774	24.826	-24.779	-1.525	38.61	15.35	224.22
W 180	0X	1X	L 1X	-224.497	23.104	23.156	-23.026	2.451	36.72	-16.15	222.09
W 180	0XY	1XY	L 1XY	329.346	25.017	25.083	-24.578	-5.004	44.70	25.13	-326.29
W 180	0Y	1Y	L 1Y	335.000	26.125	26.189	-25.906	3.844	46.37	-24.31	-331.91
W 45	0P	1P	L 1P	498.994	31.778	31.898	22.407	22.703	-52.89	-53.19	-494.35
W 45	0X	1X	L 1X	50.425	23.858	23.858	18.014	15.643	-21.10	-12.55	-50.09
W 45	0XY	1XY	L 1XY	-386.205	29.830	29.943	21.234	21.112	-44.80	-44.68	382.15
W 45	0Y	1Y	L 1Y	49.961	23.557	23.557	15.330	17.887	-12.27	-20.95	-49.62
W -45	0P	1P	L 1P	53.952	25.256	25.257	19.116	-16.508	-22.42	13.20	-53.59
W -45	0X	1X	L 1X	494.575	31.474	31.593	21.330	-23.305	-51.54	53.52	-489.97
W -45	0XY	1XY	L 1XY	52.910	22.478	22.478	14.352	-17.300	-11.11	20.54	-52.53
W -45	0Y	1Y	L 1Y	-388.276	30.127	30.241	22.233	-20.499	-45.92	44.19	384.19
W 90	0P	1P	L 1P	338.949	26.335	26.399	3.764	26.129	-24.47	-46.84	-335.84
W 90	0X	1X	L 1X	-230.403	24.526	24.578	-1.460	24.535	15.52	-38.59	227.94
W 90	0XY	1XY	L 1XY	-227.144	22.896	22.949	2.590	22.803	-16.45	-36.66	224.73
W 90	0Y	1Y	L 1Y	331.792	24.830	24.896	-5.159	24.356	25.43	-44.63	-328.73
W -90	0P	1P	L 1P	-228.784	24.675	24.727	-1.425	-24.686	15.38	38.64	226.32
W -90	0X	1X	L 1X	337.319	26.306	26.370	3.728	-26.105	-24.34	46.72	-334.22
W -90	0XY	1XY	L 1XY	330.672	24.953	25.020	-5.166	-24.481	25.37	44.68	-327.61
W -90	0Y	1Y	L 1Y	-226.024	23.024	23.077	2.594	-22.931	-16.38	36.72	223.61
W 0 Ice	0P	1P	L 1P	329.939	23.615	23.671	23.480	3.001	-43.65	-23.17	-327.07
W 0 Ice	0X	1X	L 1X	323.260	22.256	22.314	21.932	-4.113	-41.69	23.87	-320.44
W 0 Ice	0XY	1XY	L 1XY	-191.568	21.850	21.903	21.702	2.962	-33.38	-14.64	189.33
W 0 Ice	0Y	1Y	L 1Y	-193.241	23.094	23.146	23.044	-2.168	-34.82	13.94	190.97
W 180 Ice	0P	1P	L 1P	-189.910	23.554	23.607	-23.513	-2.100	35.08	13.67	187.62
W 180 Ice	0X	1X	L 1X	-188.623	22.061	22.113	-21.915	2.953	33.41	-14.45	186.39
W 180 Ice	0XY	1XY	L 1XY	320.316	22.462	22.519	-22.142	-4.107	41.72	23.69	-317.50
W 180 Ice	0Y	1Y	L 1Y	326.575	23.551	23.607	-23.424	2.931	43.39	-22.89	-323.73
W 45 Ice	0P	1P	L 1P	484.649	29.219	29.330	20.607	20.872	-50.22	-50.49	-480.28
W 45 Ice	0X	1X	L 1X	64.343	22.454	22.454	16.323	15.419	-20.27	-11.47	-64.04
W 45 Ice	0XY	1XY	L 1XY	-344.402	29.107	29.217	20.717	20.602	-41.72	-41.60	340.57
W 45 Ice	0Y	1Y	L 1Y	63.769	22.177	22.177	15.143	16.201	-11.23	-20.11	-63.46
W -45 Ice	0P	1P	L 1P	68.844	23.822	23.822	17.387	-16.284	-21.61	12.06	-68.52
W -45 Ice	0X	1X	L 1X	479.444	28.977	29.087	19.562	-21.526	-48.86	50.83	-475.12
W -45 Ice	0XY	1XY	L 1XY	65.568	21.166	21.166	14.200	-15.696	-10.18	19.72	-65.23
W -45 Ice	0Y	1Y	L 1Y	-345.509	29.433	29.545	21.676	-20.076	-42.74	41.14	341.65
W 90 Ice	0P	1P	L 1P	331.098	23.680	23.735	2.874	23.561	-23.12	-43.80	-328.23
W 90 Ice	0X	1X	L 1X	-194.075	23.314	23.366	-2.066	23.275	13.89	-35.10	191.79
W 90 Ice	0XY	1XY	L 1XY	-191.881	21.797	21.850	3.077	21.632	-14.77	-33.33	189.64
W 90 Ice	0Y	1Y	L 1Y	323.239	22.212	22.269	-4.254	21.859	24.01	-41.62	-320.42
W -90 Ice	0P	1P	L 1P	-191.606	23.485	23.537	-2.010	-23.451	13.69	35.13	189.32
W -90 Ice	0X	1X	L 1X	328.621	23.708	23.763	2.817	-23.596	-22.91	43.68	-325.76
W -90 Ice	0XY	1XY	L 1XY	321.299	22.389	22.448	-4.259	-22.040	23.90	41.68	-318.47
W -90 Ice	0Y	1Y	L 1Y	-189.942	21.980	22.034	3.080	-21.817	-14.65	33.39	187.70

Overturning Moment Summary For All Load Cases:

Load Case	Transverse Moment (ft-k)	Longitudinal Moment (ft-k)	Resultant Moment (ft-k)
W 0	80.425	25619.102	25619.228
W 180	80.349	-25403.717	25403.844
W 45	20148.603	20170.390	28509.837
W -45	-20081.473	20130.180	28433.954
W 90	25696.550	89.649	25696.706
W -90	-25570.327	89.612	25570.484
W 0 Ice	114.844	23639.778	23640.057
W 180 Ice	114.819	-23350.445	23350.727
W 45 Ice	18866.157	18892.891	26699.686
W -45 Ice	-18709.960	18861.179	26567.022
W 90 Ice	23691.836	130.250	23692.194
W -90 Ice	-23488.980	130.258	23489.341

EIA Sections Information:

Section Label	Top Z (ft)	Bottom Z (ft)	Joint Count	Member Count	Top Width (ft)	Bottom Width (ft)	Gross Area (ft^2)	Face Adjust Factor	Face Adjust Factor	Dead Load Factor
291.4-300.0	300.000	291.420	8	20	9.00	10.06	81.76	1.1670	1.1670	1.401
282.8-291.4	291.420	282.840	8	16	10.06	11.12	90.84	1.2150	1.2150	1.458
272.7-282.8	282.840	272.670	8	16	11.12	12.37	119.43	1.1960	1.1960	1.436
262.5-272.7	272.670	262.500	12	24	12.37	13.63	132.19	1.2030	1.2030	1.444

250.0-262.5	262.500	250.000	16	24	13.63	15.17	179.95	1.2010	1.2010	1.441
237.5-250.0	250.000	237.500	16	24	15.17	16.71	199.22	1.2070	1.2070	1.449
225.0-237.5	237.500	225.000	16	24	16.71	18.25	218.49	1.2130	1.2130	1.456
212.5-225.0	225.000	212.500	16	24	18.25	19.79	237.76	1.2190	1.2190	1.463
200.0-212.5	212.500	200.000	16	24	19.79	21.33	257.03	1.2250	1.2250	1.470
175.0-200.0	200.000	175.000	16	24	21.33	24.42	571.87	1.2320	1.2320	1.479
150.0-175.0	175.000	150.000	16	24	24.42	27.50	648.96	1.2570	1.2570	1.509
125.0-150.0	150.000	125.000	16	24	27.50	30.58	726.04	1.2660	1.2660	1.519
100.0-125.0	125.000	100.000	20	32	30.58	33.67	803.13	1.2790	1.2790	1.535
75.00-100.0	100.000	75.000	36	76	33.67	36.75	880.21	1.2240	1.2240	1.469
50.00-75.00	75.000	50.000	36	76	36.75	39.83	957.29	1.2290	1.2290	1.475
25.00-50.00	50.000	25.000	32	68	39.83	42.92	1034.38	1.2340	1.2340	1.481
0.000-25.00	25.000	0.000	20	40	42.92	46.00	1111.46	1.2520	1.2520	1.503

*** Overall summary for all load cases - Usage = Maximum Stress / Allowable Stress
Printed capacities do not include EIA allowable stress increase for wind load cases.
Printed capacities do not include the strength factor entered for each load case.
The Group Summary reports on the member and load case that resulted in maximum usage which may not necessarily be the same as that which produces maximum force.

Group Summary (Compression Portion):

Group Label	Group Desc.	Angle Type	Angle Size	Steel Strength (ksi)	Max Usage %	Usage Cont-rol	Max Use In Comp. %	Comp. Control Member	Comp. Force (kips)	Comp. Control Load Case	L/R Capacity (kips)	Comp. Connect. Shear Capacity (kips)	Comp. Connect. Bearing Capacity (kips)	RLX	RLY	RLZ	L/R	KL/R	Length Comp. Member (ft)	Curve No.	No. Of Bolts Comp.
Leg S1	L 8" x 8" x 1.125"	SAE	8X8X1.13	36.0	89.13	Comp	89.13	L 1P	-422.034	W 45	300.572	0.000	0.000	0.281	0.281	0.281	54.28	54.28	25.095	1	0
Leg S2	L 8" x 8" x 1.125"	SAE	8X8X1.13	36.0	85.08	Comp	85.08	L 2P	-363.459	W 45	300.572	0.000	0.000	0.281	0.281	0.281	54.28	54.28	25.095	1	0
Leg S3	L 8" x 8" x 1.125"	SAE	8X8X1.13	36.0	77.21	Comp	77.21	L 3P	-309.428	W 45	300.572	0.000	0.000	0.281	0.281	0.281	54.28	54.28	25.095	1	0
Leg S4	L 8" x 8" x 1"	SAE	8X8X1	36.0	70.83	Comp	70.83	L 4P	-254.487	W 45	269.490	0.000	0.000	0.281	0.281	0.281	54.28	54.28	25.095	1	0
Leg S5	L 8" x 8" x 0.875"	SAE	8X8X0.88	36.0	80.86	Comp	80.86	L 5P	-243.140	W 45	225.521	0.000	0.000	0.333	0.333	0.333	63.93	63.93	25.095	1	0
Leg S6	L 8" x 8" x 0.875"	SAE	8X8X0.88	36.0	65.50	Comp	65.50	L 6P	-196.960	W 45	225.521	0.000	0.000	0.333	0.333	0.333	63.93	63.93	25.095	1	0
Leg S7	L 8" x 8" x 0.75"	SAE	8X8X0.75	36.0	58.96	Comp	58.96	L 7P	-153.669	W 45	195.467	0.000	0.000	0.333	0.333	0.333	63.53	63.53	25.095	1	0
Leg S8	L 8" x 8" x 0.625"	SAE	8X8X0.63	36.0	52.04	Comp	52.04	L 8X	-113.918	W -45	164.199	0.000	0.000	0.333	0.333	0.333	63.53	63.53	25.095	1	0
Leg S9	L 6" x 6" x 0.75"	SAE	6X6X0.75	36.0	49.43	Comp	49.43	L 9X	-94.587	W -45	143.521	0.000	0.000	0.500	0.500	0.500	64.35	64.35	12.547	1	0
Leg S10	L 6" x 6" x 0.75"	SAE	6X6X0.75	36.0	39.59	Comp	39.59	L 10X	-75.765	W -45	143.521	0.000	0.000	0.500	0.500	0.500	64.35	64.35	12.547	1	0
Leg S11	L 6" x 6" x 0.5625"	SAE	6X6X0.56	36.0	40.04	Comp	40.04	L 11X	-58.555	W -45	109.689	0.000	0.000	0.500	0.500	0.500	63.80	63.80	12.547	1	0
Leg S12	L 6" x 6" x 0.5625"	SAE	6X6X0.56	36.0	29.58	Comp	29.58	L 12X	-43.267	W -45	109.689	0.000	0.000	0.500	0.500	0.500	63.80	63.80	12.547	1	0
Leg S13	L 6" x 6" x 0.4375"	SAE	6X6X0.44	36.0	25.15	Comp	25.15	L 13X	-29.035	W -45	86.587	0.000	0.000	0.500	0.500	0.500	63.26	63.26	12.547	1	0
Leg S14	L 5" x 5" x 0.4375"	SAE	5X5X0.44	36.0	23.00	Comp	23.00	L 14X	-22.083	W -45	71.997	0.000	0.000	0.500	0.500	0.500	62.12	62.12	10.209	1	0
Leg S15	L 5" x 5" x 0.4375"	SAE	5X5X0.44	36.0	14.80	Comp	14.80	L 15X	-14.204	W -45	71.997	0.000	0.000	0.500	0.500	0.500	62.12	62.12	10.209	1	0
Leg S16	L 5" x 5" x 0.3125"	SAE	5X5X0.31	36.0	10.26	Comp	10.26	L 16X	-7.509	W -45 Ic	54.905	0.000	0.000	0.500	0.500	0.500	51.99	51.99	8.613	1	0
Leg S17	L 5" x 5" x 0.3125"	SAE	5X5X0.31	36.0	4.50	Comp	4.50	L 17P	-3.297	W 45 Ice	54.905	0.000	0.000	0.500	0.500	0.500	51.99	51.99	8.613	1	0
Diag S1	B/B L3"x4"x0.3125"	DAS	4X3X0.31	36.0	91.89	Comp	91.89	D 2X	-50.550	W -90	41.258	0.000	0.000	0.310	0.920	0.310	124.63	122.85	21.788	6	0
Diag S2	B/B L3"x3.5"x0.25"	DAS	3.5X3X0.25	36.0	97.61	Comp	97.61	D 4X	-55.739	W -90	42.829	0.000	0.000	0.310	0.620	0.310	94.33	94.33	20.919	1	0
Diag S3	B/B L2.5"x3.5"x0.25"	DAS	3.5X2.5X0.25	36.0	66.36	Comp	66.36	D 6X	-55.563	W -90	32.896	0.000	0.000	0.333	0.667	0.333	111.84	111.84	20.553	1	0
Diag S4	B/B L2.5"x3.5"x0.25"	DAS	3.5X2.5X0.25	36.0	65.52	Comp	65.52	D 8X	-55.997	W -90	33.631	0.000	0.000	0.333	0.667	0.333	109.96	109.96	20.207	1	0
Diag S5	B/B L3"x4"x0.25"	DAS	4X3X0.25	36.0	86.52	Comp	86.52	D 9P	-34.964	W 90	30.309	0.000	0.000	0.333	0.667	0.333	134.71	129.05	30.178	6	0
Diag S6	B/B L3"x4"x0.25"	DAS	4X3X0.25	36.0	81.66	Comp	81.66	D 11X	-34.198	W -90	31.411	0.000	0.000	0.333	0.667	0.333	131.00	126.76	29.346	6	0
Diag S7	B/B L3"x4"x0.25"	DAS	4X3X0.25	36.0	71.02	Comp	71.02	D 13X	-30.748	W -90	32.473	0.000	0.000	0.333	0.667	0.333	127.55	124.64	28.573	6	0
Diag S8	B/B L3.5"x3.5"x0.25"	DAE	3.5X3.5X0.25	36.0	74.61	Comp	74.61	D 15X	-28.631	W -90	28.782	0.000	0.000	0.333	0.667	0.333	140.20	132.43	27.864	6	0
Diag S9	B/B L2.5"x2.5"x0.25"	DAE	2.5X2.5X0.25	36.0	38.67	Comp	38.67	D 17X	-16.253	W -90	31.523	0.000	0.000	0.320	0.590	0.320	97.87	97.87	16.451	1	0
Diag S10	B/B L2.5"x2.5"x0.25"	DAE	2.5X2.5X0.25	36.0	67.55	Comp	67.55	D 19X	-15.186	W -90	16.860	0.000	0.000	0.500	1.000	0.500	160.96	145.19	15.962	6	0
Diag S11	B/B L2.5"x2"x0.25"	DAL	2.5X2X0.25	36.0	88.64	Comp	88.64	D 21X	-14.043	W -90	11.882	0.000	0.000	0.480	0.960	0.580	190.92	163.61	15.495	6	0
Diag S12	B/B L2.5"x2"x0.25"	DAL	2.5X2X0.25	36.0	70.36	Comp	70.36	D 23X	-10.957	W -90	11.680	0.000	0.000	0.500	1.000	0.500	193.21	165.03	15.054	6	0
Diag S13	B/B L2.5"x2"x0.25"	DAL	2.5X2X0.25	36.0	69.17	Comp	69.17	D 25X	-11.210	W -90	12.156	0.000	0.000	0.500	1.000	0.500	187.90	161.76	14.641	6	0
Diag S14	L 3.5" x 3.5" x 0.25"	SAE	3.5X3.5X0.25	36.0	31.11	Comp	31.11	D 28X	-5.210	W -90	12.559	0.000	0.000	0.520	0.750	0.520	148.50	141.76	16.516	5	0
Diag S15	L 3.5" x 3.5" x 0.25"	SAE	3.5X3.5X0.25	36.0	21.36	Comp	21.36	D 30X	-3.936	W -90	13.822	0.000	0.000	0.520	0.750	0.520	139.80	135.12	15.548	5	0
Diag S16	L 3" x 3" x 0.25"	SAE	3X3X0.25	36.0	17.38	Comp	17.38	D 32X	-2.612	W -90	11.269	0.000	0.000	0.520	0.750	0.520	143.75	138.14	13.638	5	0
Diag S17	L 3" x 3" x 0.25"	SAE	3X3X0.25	36.0	13.00	Comp	13.00	D 34X	-2.149	W -90	12.402	0.000	0.000	0.520	0.750	0.520	135.27	131.68	12.834	5	0
Horiz 1	B/B L3.5"x2.5"x0.25"	DAL	3.5X2.5X0.25	36.0	94.73	Comp	94.73	H 1P	-40.774	W -90	32.284	0.000	0.000	0.480	0.480	0.480	113.39	113.39	21.458	1	0
Horiz 2	B/B L3.5"x2.5"x0.25"	DAL	3.5X2.5X0.25	36.0	68.51	Comp	68.51	H 3P	-42.369	W -90	46.387	0.000	0.000	0.500	0.500	0.500	73.09	73.09	13.278	1	0
Horiz 3	B/B L3.5"x2.5"x0.25"	DAL	3.5X2.5X0.25	36.0	61.79	Comp	61.79	H 5P	-39.609	W -90	48.080	0.000	0.000	0.500	0.500	0.500	67.43	67.43	12.250	1	0
Horiz 4	B/B L3"x2.5"x0.25"	DAL	3X2.5X0.25	36.0	92.68	Comp	92.68	H 7P	-37.042	W -90	29.976	0.000	0.000	0.470	0.940	0.470	112.02	112.02	11.222	1	0
Horiz 5	B/B L3"x2.5"x0.25"	DAL	3X2.5X0.25	36.0	91.39	Comp	91.39	H 9X	-17.446	W 90	14.318	0.000	0.000	1.000	1.000	1.000	194.18	165.62	15.292	6	0
Horiz 6	B/B L3"x2.5"x0.25"	DAL	3X2.5X0.25	36.0	70.76	Comp	70.76	H 11P	-15.708	W -90	16.651	0.000	0.000	1.000	1.000	1.000	174.60	153.58	13.750	6	0
Horiz 7	B/B L2.5"x2.5"x0.25"	DAE	2.5X2.5X0.25	36.0	72.99	Comp	72.99	H 13P	-12.960	W -90	13.318	0.000	0.000	1.000	1.000	1.000	190.51	163.36	12.208	6	0
Horiz 8	B/B L2.5"x2.5"x0.25"	DAE	2.5X2.5X0.25	36.0	54.19	Comp	54.19	H 15P	-11.635	W -90	16.102	0.000	0.000	1.000	1.000	1.000	166.45	148.57	10.667	6	0
Horiz 9	B/B L2.5"x2.5"x0.25"	DAE	2.5X2.5X0.25	36.0	40.41	Comp	40.41	H 17P	-9.609	W -90	17.834	0.000	0.000	1.000	1.000	1.000	154.42	141.17	9.896	6	0
Horiz 10	B/B L2.5"x2.5"x0.25"	DAE	2.5X2.5X0.25	36.0	32.61	Comp	32.61	H 19P	-8.634	W -90	19.861	0.000	0.000	1.000	1.000	1.000	142.39	133.77	9.125	6	0
Horiz 11	B/B L2.5"x2.5"x0.25"	DAE	2.5X2.5X0.25	36.0	26.86	Comp	26.86	H 21P	-7.970	W -90	22.254	0.000	0.000	1.000	1.000	1.000	130.36	126.37	8.354	6	0
Horiz 12	B/B L2.5"x2.5"x0.25"	DAE	2.5X2.5X0.25	36.0	16.54	Comp	16.54	H 23P	-5.520	W -90	25.037	0.000	0.000	1.000	1.000	1.000	118.34	118.34	7.583	1	0
Horiz 13	B/B L2.5"x2.5"x0.25"	DAE	2.5X2.5X0.25	36.0	13.63	Comp	13.63	H 25X	-5.263	W 90	28.949	0.000	0.000	1.000	1.000	1.000	106.31	106.31	6.813	1	0
Horiz 14	L 3" x 2.5" x 0.25"	SAU	3X2.5X0.25	36.0	10.63	Comp	10.63	H 28P	-0.867	W -90	6.118	0.000	0.000	0.500	1.000	0.500	197.14	178.82	12.371	5	0
Horiz 15	B/B L3"x2.5"x0.25"	DAL	3X2.5X0.25	36.0	1.48	Tens	1.23	H 30P	-0.455	W -90	27.773	0.000	0.000	0.500	1.000	0.500	118.05	118.05	11.116	1	0
Horiz 16	L 3" x 2.5" x 0.25"	SAU	3X2.5X0.25	36.0	1.88	Tens	1.07	H 32P	-0.123	W -90	8.609	0.000	0.000	0.500	1.000	0.500	160.29	150.74	10.058	5	0
Horiz 17	C8x11.5	CHN	C8x11.5	36.0	1.42	Comp	1.42	H 33P	-0.372	W -90	19.649	0.000	0.000	0.500	1.000	0.500	172.80	160.27	9.000	5	0
LD 1	B/B L3"x2"x0.25"	DAL	3X2X0.25	36.0	94.23	Comp	94.23	LD 1X	-23.945	W -45	19.058	0.000	0.000	0.850	0.850	0.850	146.93	136.56	12.834	6	0
LD 2	B/B L4"x3"x0.25"	DAL	4X3X0.25	36.0	90.06	Comp	90.06	LD 3X	-53.356	W -90	44.434	0.000	0.000	0.820	0.820	0.820	98.67	98.67	12.834	1	0
LD 4	B/B L2.5"x2"x0.25"	DAL	2.5X2X0.25	36.0	56.77	Comp	56.77	LD 7X	-26.947	W -45	16.111	0.000	0.000	0.870	0.870	0.870	153.35	140.51	11.516	6	0
LD 5	B/B L2.5"x2"x0.25"	DAL	2.5X2X0.25	36.0	99.37	Comp	99.37	LD 9X	-36.547	W -90	27.586	0.000	0.000	0.800	0.800	0.800	100.21	100.21	8.184	1	0
LD 6	B/B L3"x3"x0.25"	DAE	3X3X0.25	36.0	84.71	Comp	84.71	LD 11P	-40.162	W -90	35.559	0.000	0.000	0.840	0.840	0.840	104.91	104.91	9.679	1	0
LD 7	B/B L3"x3"x0.25"	DAE	3X3X0.25	36.0	70.57	Comp	70.57	LD 13X	-27.356	W -45	29.075	0.000	0.000	0.865	0.865	0.865	122.11	121.30	10.941	6	0
LD 8	B/B L2.5"x2"x0.25"	DAL	2.5X2X0.25	36.0	99.40	Comp	99.40	LD 15X	-36.306	W -90	27.395	0.000	0.000	0.820	0.820	0.820	100.92	100.92	8.040	1	0
LD 9	B/B L3"x2"x0.25"	DAL	3X2X0.25	36.0	98.97	Comp	98.97	LD 17P	-39.521	W -90	29.949	0.000	0.000	0.820	0.820	0.820	103.08	103.08	9.334	1	0
LD 10	B/B L3"x3"x0.25"	DAE	3X3X0.25	36.0	65.84	Comp	65.84	LD 19X	-27.691	W -45	31.544	0.000	0.000	0.860	0.860	0.860	115.25	115.25	10.386	1	0
LD 11	B/B L2.5"x2"x0.25"	DAL	2.5X2X0.25	36.0	98.10	Comp	98.10	LD 21X	-36.430	W -90	27.853	0.000	0.000	0.820	0.820	0.820	99.22	99.22	7.905	1	0
LD 12	B/B L2.5"x2.5"x0.375"	DAE	2.5X2.5X0.38	36.0	82.91	Comp	82.91	LD 23P	-38.769	W -90	35.071	0.000	0.000	0.850	0.850	0.850	121.98	121.22	9.005	6	0
LH 1	B/B L2.5"x3"x0.25"	DAS	3X2.5X0.25	36.0	53.23	Comp	53.23	LH 2P	-11.540	W 90	16.260	0.000	0.000	0.500	1.000	0.500	177.59	155.42	21.458	6	0
LH 2	B/B L2.5"x3"x0.25"	DAS	3X2.5X0.25	36.0	65.30	Comp	65.30	LH 3X	-30.735	W -45	16.097	0.000	0.000	1.000	2.000	1.000	178.86	156.20	10.806	6	0
LH 3	B/B L2.5"x3"x0.375"	DAS	3X2.5X0.38	36.0	85.07	Comp	85.07	LH 5X	-30.246	W -45	26.667	0.000	0.000	1.000	2.000	1.000	163.32	146.64	10.003	6	0
LH 4	B/B L3.5"x3.5"x0.25"	DAE	3.5X3.5X0.25	36.0	75.41	Comp	75.41	LH 7X	-29.397	W -45	29.236	0.000	0.000	0.998	1.995	0.998	138.53	131.39	9.200	6	0
DUM 1	Dummy Bracing Member	DUM	0.1X0.1X1	36.0	0.00		0.00	BR 11XY	-1.314	W 45	0.215	0.000	0.000	1.000	1.000	1.000	2.33	2.33	19.445	1	0

Group Summary (Tension Portion):

Group Label	Group Desc.	Angle Type	Angle Size	Steel Strength (ksi)	Max Usage %	Usage Cont-rol	Max Use In Tens. %	Tension Control Member	Tension Force (kips)	Tension Control Load Case	Net Section Capacity (kips)	Tension Connect. Shear Capacity (kips)	Tension Connect. Bearing Capacity (kips)	Tension Connect. Rupture Capacity (kips)	Length Tens. Member (ft)	No. Of Bolts Tens.	No. Of Holes	Hole Diameter (in)
Leg S1	L 8" x 8" x 1.125"	SAE	8X8X1.13	36.0	89.13	Comp	66.88	L 1Y	322.218	W -45	361.367	0.000	0.000	0.000	25.095	0	0.000	0
Leg S2	L 8" x 8" x 1.125"	SAE	8X8X1.13	36.0	85.08	Comp	57.73	L 2Y	278.164	W -45	361.367	0.000	0.000	0.000	25.095	0	0.000	0
Leg S3	L 8" x 8" x 1.125"	SAE	8X8X1.13	36.0	77.21	Comp	49.07	L 3XY	236.425	W 45	361.367	0.000	0.000	0.000	25.095	0	0.000	0
Leg S4	L 8" x 8" x 1"	SAE	8X8X1	36.0	70.83	Comp	45.36	L 4XY	195.934	W 45	323.999	0.000	0.000	0.000	25.095	0	0.000	0
Leg S5	L 8" x 8" x 0.875"	SAE	8X8X0.88	36.0	80.86	Comp	50.05	L 5XY	190.690	W 45	285.768	0.000	0.000	0.000	25.095	0	0.000	0
Leg S6	L 8" x 8" x 0.875"	SAE	8X8X0.88	36.0	65.50	Comp	40.36	L 6XY	153.780	W 45	285.768	0.000	0.000	0.000	25.095	0	0.000	0
Leg S7	L 8" x 8" x 0.75"	SAE	8X8X0.75	36.0	58.96	Comp	36.26	L 7XY	119.448	W 45	247.104	0.000	0.000	0.000	25.095	0	0.000	0
Leg S8	L 8" x 8" x 0.625"	SAE	8X8X0.63	36.0	52.04	Comp	31.28	L 8XY	86.560	W 45	207.576	0.000	0.000	0.000	25.095	0	0.000	0
Leg S9	L 6" x 6" x 0.75"	SAE	6X6X0.75	36.0	49.43	Comp	29.31	L 9XY	71.243	W 45	182.304	0.000	0.000	0.000	12.547	0	0.000	0
Leg S10	L 6" x 6" x 0.75"	SAE	6X6X0.75	36.0	39.59	Comp	23.16	L 10XY	56.306	W 45	182.304	0.000	0.000	0.000	12.547	0	0.000	0
Leg S11	L 6" x 6" x 0.5625"	SAE	6X6X0.56	36.0	40.04	Comp	22.81	L 11XY	42.235	W 45	138.888	0.000	0.000	0.000	12.547	0	0.000	0
Leg S12	L 6" x 6" x 0.5625"	SAE	6X6X0.56	36.0	29.58	Comp	16.12	L 12XY	29.842	W 45	138.888	0.000	0.000	0.000	12.547	0	0.000	0
Leg S13	L 6" x 6" x 0.4375"	SAE	6X6X0.44	36.0	25.15	Comp	12.39	L 13XY	18.053	W 45	109.296	0.000	0.000	0.000	12.547	0	0.000	0
Leg S14	L 5" x 5" x 0.4375"	SAE	5X5X0.44	36.0	23.00	Comp	11.66	L 14XY	14.034	W 45	90.288	0.000	0.000	0.000	10.209	0	0.000	0
Leg S15	L 5" x 5" x 0.4375"	SAE	5X5X0.44	36.0	14.80	Comp	6.29	L 15XY	7.572	W 45	90.288	0.000	0.000	0.000	10.209	0	0.000	0
Leg S16	L 5" x 5" x 0.3125"	SAE	5X5X0.31	36.0	10.26	Comp	3.49	L 16XY	3.049	W 45	65.448	0.000	0.000	0.000	8.613	0	0.000	0
Leg S17	L 5" x 5" x 0.3125"	SAE	5X5X0.31	36.0	4.50	Comp	0.19	L 17Y	0.169	W -45	65.448	0.000	0.000	0.000	8.613	0	0.000	0
Diag S1	B/B L3"x4"x0.3125"	DAS	4X3X0.31	36.0	91.89	Comp	37.64	D 2P	45.314	W -90	90.288	0.000	0.000	0.000	21.788	0	0.000	0
Diag S2	B/B L3"x3.5"x0.25"	DAS	3.5X3X0.25	36.0	97.61	Comp	54.46	D 4P	49.091	W -90	67.608	0.000	0.000	0.000	20.919	0	0.000	0
Diag S3	B/B L2.5"x3.5"x0.25"	DAS	3.5X2.5X0.25	36.0	66.36	Comp	59.53	D 6P	49.375	W -90	62.208	0.000	0.000	0.000	20.553	0	0.000	0
Diag S4	B/B L2.5"x3.5"x0.25"	DAS	3.5X2.5X0.25	36.0	65.52	Comp	59.26	D 8X	49.154	W 90	62.208	0.000	0.000	0.000	20.207	0	0.000	0
Diag S5	B/B L3"x4"x0.25"	DAS	4X3X0.25	36.0	86.52	Comp	33.55	D 9X	32.662	W 90	73.008	0.000	0.000	0.000	30.178	0	0.000	0
Diag S6	B/B L3"x4"x0.25"	DAS	4X3X0.25	36.0	81.66	Comp	32.75	D 11P	31.883	W -90	73.008	0.000	0.000	0.000	29.346	0	0.000	0
Diag S7	B/B L3"x4"x0.25"	DAS	4X3X0.25	36.0	71.02	Comp	29.56	D 13P	28.778	W -90	73.008	0.000	0.000	0.000	28.573	0	0.000	0
Diag S8	B/B L3.5"x3.5"x0.25"	DAE	3.5X3.5X0.25	36.0	74.61	Comp	28.06	D 15P	27.316	W -90	73.008	0.000	0.000	0.000	27.864	0	0.000	0
Diag S9	B/B L2.5"x2.5"x0.25"	DAE	2.5X2.5X0.25	36.0	38.67	Comp	22.26	D 17P	15.257	W -90	51.408	0.000	0.000	0.000	16.451	0	0.000	0
Diag S10	B/B L2.5"x2.5"x0.25"	DAE	2.5X2.5X0.25	36.0	67.55	Comp	20.90	D 19P	14.326	W -90	51.408	0.000	0.000	0.000	15.962	0	0.000	0
Diag S11	B/B L2.5"x2"x0.25"	DAL	2.5X2X0.25	36.0	88.64	Comp	21.71	D 21P	13.316	W -90	46.008	0.000	0.000	0.000	15.495	0	0.000	0
Diag S12	B/B L2.5"x2"x0.25"	DAL	2.5X2X0.25	36.0	70.36	Comp	16.80	D 23P	10.308	W -90	46.008	0.000	0.000	0.000	15.054	0	0.000	0
Diag S13	B/B L2.5"x2"x0.25"	DAL	2.5X2X0.25	36.0	69.17	Comp	17.28	D 25P	10.603	W -90	46.008	0.000	0.000	0.000	14.641	0	0.000	0
Diag S14	L 3.5" x 3.5" x 0.25"	SAE	3.5X3.5X0.25	36.0	31.11	Comp	9.06	D 28X	4.408	W 90	36.504	0.000	0.000	0.000	16.516	0	0.000	0
Diag S15	L 3.5" x 3.5" x 0.25"	SAE	3.5X3.5X0.25	36.0	21.36	Comp	6.69	D 30X	3.255	W 90	36.504	0.000	0.000	0.000	15.548	0	0.000	0
Diag S16	L 3" x 3" x 0.25"	SAE	3X3X0.25	36.0	17.38	Comp	5.37	D 32P	2.227	W -90	31.104	0.000	0.000	0.000	13.638	0	0.000	0
Diag S17	L 3" x 3" x 0.25"	SAE	3X3X0.25	36.0	13.00	Comp	4.06	D 34P	1.685	W -90	31.104	0.000	0.000	0.000	12.834	0	0.000	0
Horiz 1	B/B L3.5"x2.5"x0.25"	DAL	3.5X2.5X0.25	36.0	94.73	Comp	53.05	H 1X	43.997	W -90	62.208	0.000	0.000	0.000	21.458	0	0.000	0
Horiz 2	B/B L3.5"x2.5"x0.25"	DAL	3.5X2.5X0.25	36.0	68.51	Comp	55.46	H 3X	45.996	W -90	62.208	0.000	0.000	0.000	13.278	0	0.000	0
Horiz 3	B/B L3.5"x2.5"x0.25"	DAL	3.5X2.5X0.25	36.0	61.79	Comp	52.53	H 5X	43.567	W -90	62.208	0.000	0.000	0.000	12.250	0	0.000	0
Horiz 4	B/B L3"x2.5"x0.25"	DAL	3X2.5X0.25	36.0	92.68	Comp	52.50	H 7P	39.764	W 90	56.808	0.000	0.000	0.000	11.222	0	0.000	0
Horiz 5	B/B L3"x2.5"x0.25"	DAL	3X2.5X0.25	36.0	91.39	Comp	23.79	H 9X	18.017	W -90	56.808	0.000	0.000	0.000	15.292	0	0.000	0
Horiz 6	B/B L3"x2.5"x0.25"	DAL	3X2.5X0.25	36.0	70.76	Comp	21.17	H 11P	16.032	W 90	56.808	0.000	0.000	0.000	13.750	0	0.000	0
Horiz 7	B/B L2.5"x2.5"x0.25"	DAE	2.5X2.5X0.25	36.0	72.99	Comp	19.12	H 13X	13.106	W -90	51.408	0.000	0.000	0.000	12.208	0	0.000	0
Horiz 8	B/B L2.5"x2.5"x0.25"	DAE	2.5X2.5X0.25	36.0	54.19	Comp	17.44	H 15P	11.952	W 90	51.408	0.000	0.000	0.000	10.667	0	0.000	0
Horiz 9	B/B L2.5"x2.5"x0.25"	DAE	2.5X2.5X0.25	36.0	40.41	Comp	14.38	H 17X	9.853	W -90	51.408	0.000	0.000	0.000	9.896	0	0.000	0
Horiz 10	B/B L2.5"x2.5"x0.25"	DAE	2.5X2.5X0.25	36.0	32.61	Comp	12.93	H 19X	8.859	W -90	51.408	0.000	0.000	0.000	9.125	0	0.000	0
Horiz 11	B/B L2.5"x2.5"x0.25"	DAE	2.5X2.5X0.25	36.0	26.86	Comp	11.72	H 21P	8.030	W 90	51.408	0.000	0.000	0.000	8.354	0	0.000	0
Horiz 12	B/B L2.5"x2.5"x0.25"	DAE	2.5X2.5X0.25	36.0	16.54	Comp	8.34	H 23X	5.715	W -90	51.408	0.000	0.000	0.000	7.583	0	0.000	0
Horiz 13	B/B L2.5"x2.5"x0.25"	DAE	2.5X2.5X0.25	36.0	13.63	Comp	8.28	H 25X	5.675	W -90	51.408	0.000	0.000	0.000	6.813	0	0.000	0
Horiz 14	L 3" x 2.5" x 0.25"	SAU	3X2.5X0.25	36.0	10.63	Comp	4.83	H 27P	1.823	W 45	28.296	0.000	0.000	0.000	12.371	0	0.000	0
Horiz 15	B/B L3"x2.5"x0.25"	DAL	3X2.5X0.25	36.0	1.48	Tens	1.48	H 30X	1.121	W -90 Ic	56.808	0.000	0.000	0.000	11.116	0	0.000	0
Horiz 16	L 3" x 2.5" x 0.25"	SAU	3X2.5X0.25	36.0	1.88	Tens	1.88	H 32X	0.709	W -90 Ic	28.296	0.000	0.000	0.000	10.058	0	0.000	0
Horiz 17	C8x11.5	CHN	C8x11.5	36.0	1.42	Comp	0.38	H 33P	0.372	W 90	73.008	0.000	0.000	0.000	9.000	0	0.000	0
LD 1	B/B L3"x2"x0.25"	DAL	3X2X0.25	36.0	94.23	Comp	35.49	LD 2Y	24.325	W -45 Ic	51.408	0.000	0.000	0.000	12.834	0	0.000	0
LD 2	B/B L4"x3"x0.25"	DAL	4X3X0.25	36.0	90.06	Comp	51.30	LD 3P	49.934	W -90	73.008	0.000	0.000	0.000	12.834	0	0.000	0
LD 4	B/B L2.5"x2"x0.25"	DAL	2.5X2X0.25	36.0	56.77	Comp	41.18	LD 8Y	25.259	W -45	46.008	0.000	0.000	0.000	11.516	0	0.000	0
LD 5	B/B L2.5"x2"x0.25"	DAL	2.5X2X0.25	36.0	99.37	Comp	52.90	LD 9P	32.449	W -90	46.008	0.000	0.000	0.000	8.184	0	0.000	0
LD 6	B/B L3"x3"x0.25"	DAE	3X3X0.25	36.0	84.71	Comp	49.63	LD 11X	41.166	W -90	62.208	0.000	0.000	0.000	9.679	0	0.000	0

LD 7	B/B L3"x3"x0.25"	DAE	3X3X0.25	36.0	70.57	Comp	30.53	LD 14Y	25.322	W -45	62.208	0.000	0.000	0.000	10.941	0	0.000	0
LD 8	B/B L2.5"x2"x0.25"	DAL	2.5X2X0.25	36.0	99.40	Comp	53.31	LD 15P	32.704	W -90	46.008	0.000	0.000	0.000	8.040	0	0.000	0
LD 9	B/B L3"x2"x0.25"	DAL	3X2X0.25	36.0	98.97	Comp	58.92	LD 17X	40.382	W -90	51.408	0.000	0.000	0.000	9.334	0	0.000	0
LD 10	B/B L3"x3"x0.25"	DAE	3X3X0.25	36.0	65.84	Comp	30.51	LD 20Y	25.306	W -45	62.208	0.000	0.000	0.000	10.386	0	0.000	0
LD 11	B/B L2.5"x2"x0.25"	DAL	2.5X2X0.25	36.0	98.10	Comp	52.84	LD 21P	32.415	W -90	46.008	0.000	0.000	0.000	7.905	0	0.000	0
LD 12	B/B L2.5"x2.5"x0.375"	DAE	2.5X2.5X0.38	36.0	82.91	Comp	39.57	LD 23X	39.546	W -90	74.952	0.000	0.000	0.000	9.005	0	0.000	0
LH 1	B/B L2.5"x3"x0.25"	DAS	3X2.5X0.25	36.0	53.23	Comp	17.20	LH 2X	13.024	W 90 Ice	56.808	0.000	0.000	0.000	21.458	0	0.000	0
LH 2	B/B L2.5"x3"x0.25"	DAS	3X2.5X0.25	36.0	65.30	Comp	37.14	LH 4Y	28.131	W -45	56.808	0.000	0.000	0.000	10.806	0	0.000	0
LH 3	B/B L2.5"x3"x0.375"	DAS	3X2.5X0.38	36.0	85.07	Comp	24.83	LH 6Y	27.456	W -45	82.944	0.000	0.000	0.000	10.003	0	0.000	0
LH 4	B/B L3.5"x3.5"x0.25"	DAE	3.5X3.5X0.25	36.0	75.41	Comp	27.10	LH 8Y	26.378	W -45	73.008	0.000	0.000	0.000	9.200	0	0.000	0
DUM 1	Dummy Bracing Member	DUM	0.1X0.1X1	36.0	0.00		0.00	BR 11X	1.097	W -45	0.216	0.000	0.000	0.000	19.445	0	0.000	0

*** Maximum Stress Summary for Each Load Case

Summary of Maximum Usages by Load Case:

Load Case	Maximum Usage %	Element Label	Element Type
W 0	98.11	LD 10P	Angle
W 180	98.50	LD 10Y	Angle
W 45	91.96	LD 1P	Angle
W -45	94.23	LD 1X	Angle
W 90	99.26	LD 15P	Angle
W -90	99.40	LD 15X	Angle
W 0 Ice	92.42	LD 10P	Angle
W 180 Ice	92.98	LD 10Y	Angle
W 45 Ice	88.65	H 2XY	Angle
W -45 Ice	92.36	H 2Y	Angle
W 90 Ice	93.39	LD 9P	Angle
W -90 Ice	93.72	LD 9X	Angle

*** Weight of structure (lbs):

Weight of Angles*Section DLF:	143635.5
Weight of Equipment:	1109.0
Total:	144744.5

*** End of Report

Site #:	88018	Engineer:	RDB	Windspeed: No Ice:	85 mph	Ice:	74 mph
Name:	Stamford (Katiina), CT	Date:	11/20/15	Carrier	AT&T Mobility		

Taper:	-0.123333		Taper Change:	300	ft
FW @ Base:	46	ft	FW @ Top:	9	ft

Spreadsheet Version Last Updated: 11/12/2014

Joint Label	Symmetry Code	X Coord. *(ft)*	Y Coord. *(ft)*	Z Coord. *(ft)*	X Disp. Rest.	Y Disp. Rest.	Z Disp. Rest.	X Rot. Rest.	Y Rot. Rest.	Z Rot. Rest.	Drop Sub-Brace *(Y or Blank)*	# Vert	Drop (ft)	Height (ft)	Type	Count	Z-Elev. (ft)	FW (ft)	# Sub-Brace
0	XY-Symmetry	23	23	0	Fixed	Fixed	Fixed	Fixed	Fixed	Fixed			7.030	25	1	1	0	46	3
1	XY-Symmetry	21.45833333	21.45833333	25	Free	Free	Free	Free	Free	Free			7.030	25	2	2	25	42.91666667	3
2	XY-Symmetry	19.91666667	19.91666667	50	Free	Free	Free	Free	Free	Free			7.030	25	2	3	50	39.83333333	3
3	XY-Symmetry	18.375	18.375	75	Free	Free	Free	Free	Free	Free			7.030	25	2	4	75	36.75	3
4	XY-Symmetry	16.83333333	16.83333333	100	Free	Free	Free	Free	Free	Free				25	A	5	100	33.66666667	2
5	XY-Symmetry	15.29166667	15.29166667	125	Free	Free	Free	Free	Free	Free				25	A	6	125	30.58333333	2
6	XY-Symmetry	13.75	13.75	150	Free	Free	Free	Free	Free	Free				25	A	7	150	27.5	2
7	XY-Symmetry	12.20833333	12.20833333	175	Free	Free	Free	Free	Free	Free				25	A	8	175	24.41666667	2
8	XY-Symmetry	10.66666667	10.66666667	200	Free	Free	Free	Free	Free	Free				12.5	A	9	200	21.33333333	1
9	XY-Symmetry	9.895833333	9.895833333	212.5	Free	Free	Free	Free	Free	Free				12.5	A	10	212.5	19.79166667	1
10	XY-Symmetry	9.125	9.125	225	Free	Free	Free	Free	Free	Free				12.5	A	11	225	18.25	1
11	XY-Symmetry	8.354166667	8.354166667	237.5	Free	Free	Free	Free	Free	Free				12.5	A	12	237.5	16.70833333	1
12	XY-Symmetry	7.583333333	7.583333333	250	Free	Free	Free	Free	Free	Free				12.5	A	13	250	15.16666667	1
13	XY-Symmetry	6.8125	6.8125	262.5	Free	Free	Free	Free	Free	Free		1		10.17	X	14	262.5	13.625	1
14	XY-Symmetry	6.18535	6.18535	272.67	Free	Free	Free	Free	Free	Free		1		10.17	X	15	272.67	12.3707	1
15	XY-Symmetry	5.5582	5.5582	282.84	Free	Free	Free	Free	Free	Free		1		8.58	X	16	282.84	11.1164	1
16	XY-Symmetry	5.0291	5.0291	291.42	Free	Free	Free	Free	Free	Free		1		8.58	X	17	291.42	10.0582	1
17	XY-Symmetry	4.5	4.5	300	Free	Free	Free	Free	Free	Free						18	300	9	
A1	Y-Symmetry	21.45833333	0	25	Free	Free	Free	Free	Free	Free									
A2	X-Symmetry	0	21.45833333	25	Free	Free	Free	Free	Free	Free									
A3	XY-Symmetry	19.91666667	6.638888889	50	Free	Free	Free	Free	Free	Free									
A4	XY-Symmetry	6.638888889	19.91666667	50	Free	Free	Free	Free	Free	Free									
A5	XY-Symmetry	18.375	6.125	75	Free	Free	Free	Free	Free	Free									
A6	XY-Symmetry	6.125	18.375	75	Free	Free	Free	Free	Free	Free									
A7	XY-Symmetry	16.83333333	5.611111111	100	Free	Free	Free	Free	Free	Free									
A8	XY-Symmetry	5.611111111	16.83333333	100	Free	Free	Free	Free	Free	Free									
A9	Y-Symmetry	15.29166667	0	125	Free	Free	Free	Free	Free	Free									
A10	X-Symmetry	0	15.29166667	125	Free	Free	Free	Free	Free	Free									
A11	Y-Symmetry	13.75	0	150	Free	Free	Free	Free	Free	Free									
A12	X-Symmetry	0	13.75	150	Free	Free	Free	Free	Free	Free									
A13	Y-Symmetry	12.20833333	0	175	Free	Free	Free	Free	Free	Free									
A14	X-Symmetry	0	12.20833333	175	Free	Free	Free	Free	Free	Free									
A15	Y-Symmetry	10.66666667	0	200	Free	Free	Free	Free	Free	Free									
A16	X-Symmetry	0	10.66666667	200	Free	Free	Free	Free	Free	Free									
A17	Y-Symmetry	9.895833333	0	212.5	Free	Free	Free	Free	Free	Free									
A18	X-Symmetry	0	9.895833333	212.5	Free	Free	Free	Free	Free	Free									
A19	Y-Symmetry	9.125	0	225	Free	Free	Free	Free	Free	Free									
A20	X-Symmetry	0	9.125	225	Free	Free	Free	Free	Free	Free									
A21	Y-Symmetry	8.354166667	0	237.5	Free	Free	Free	Free	Free	Free									
A22	X-Symmetry	0	8.354166667	237.5	Free	Free	Free	Free	Free	Free									
A23	Y-Symmetry	7.583333333	0	250	Free	Free	Free	Free	Free	Free									
A24	X-Symmetry	0	7.583333333	250	Free	Free	Free	Free	Free	Free									
A25	Y-Symmetry	6.8125	0	262.5	Free	Free	Free	Free	Free	Free									
A26	X-Symmetry	0	6.8125	262.5	Free	Free	Free	Free	Free	Free									
H1	XY-Symmetry	21.89185	10.72916667	17.97	Free	Free	Free	Free	Free	Free									
H2	XY-Symmetry	10.72916667	21.89185	17.97	Free	Free	Free	Free	Free	Free									
H5	XY-Symmetry	20.35018333	10.80611667	42.97	Free	Free	Free	Free	Free	Free									
H6	XY-Symmetry	10.80611667	20.35018333	42.97	Free	Free	Free	Free	Free	Free									
H7	Y-Symmetry	20.35018333	0	42.97	Free	Free	Free	Free	Free	Free									
H8	X-Symmetry	0	20.35018333	42.97	Free	Free	Free	Free	Free	Free									
H9	XY-Symmetry	18.80851667	10.00321667	67.97	Free	Free	Free	Free	Free	Free									
H10	XY-Symmetry	10.00321667	18.80851667	67.97	Free	Free	Free	Free	Free	Free									
H11	Y-Symmetry	18.80851667	0	67.97	Free	Free	Free	Free	Free	Free									
H12	X-Symmetry	0	18.80851667	67.97	Free	Free	Free	Free	Free	Free									
H13	XY-Symmetry	17.26685	9.200316667	92.97	Free	Free	Free	Free	Free	Free									
H14	XY-Symmetry	9.200316667	17.26685	92.97	Free	Free	Free	Free	Free	Free									
H15	Y-Symmetry	17.26685	0	92.97	Free	Free	Free	Free	Free	Free									
H16	X-Symmetry	0	17.26685	92.97	Free	Free	Free	Free	Free	Free									

NOTES	
Types:	
1:	Built up Horizs. w/ A
2:	Built up Horizs. w/ M
A:	Typical A brace
X:	Typical X brace
Drop:	Use only for types 1 & 2

# Sections:	17

Legs

Site No.:	88018
Engineer:	RDB
Date:	11/20/2015
Carrier:	AT&T Mobility

When inputting thickness values, include all decimal places.

Tower Section #	Section Elevations *(ft)*	Type of Shape [1]	Diameter or Length *(in)*	Thickness [2] *(in)*	F_Y *(ksi)*
1	0.000-25.00	L	8	1.125	36
2	25.00-50.00	L	8	1.125	36
3	50.00-75.00	L	8	1.125	36
4	75.00-100.0	L	8	1	36
5	100.0-125.0	L	8	0.875	36
6	125.0-150.0	L	8	0.875	36
7	150.0-175.0	L	8	0.75	36
8	175.0-200.0	L	8	0.625	36
9	200.0-212.5	L	6	0.75	36
10	212.5-225.0	L	6	0.75	36
11	225.0-237.5	L	6	0.5625	36
12	237.5-250.0	L	6	0.5625	36
13	250.0-262.5	L	6	0.4375	36
14	262.5-272.7	L	5	0.4375	36
15	272.7-282.8	L	5	0.4375	36
16	282.8-291.4	L	5	0.3125	36
17	291.4-300.0	L	5	0.3125	36

Notes:

[1] Type of Leg Shape: **R** = Round or **P** = Bent Plate or **S** = Schifflerized Angle. **L** = Even Leg

[2] For Solid Round Leg Shapes Thickness Equals Zero.

[3] Adjust for Bent Plate Leg Shapes.

Diagonals

Site No.:	88018
Engineer:	RDB
Date:	11/20/2015
Carrier:	AT&T Mobility

When inputting thickness values, include all decimal places.

Tower Section #	Section Elevations *(ft)*	Type of Shape [1]	Diameter [2] *(in)*	Web Length [3] *(in)*	Flange Length [3] *(in)*	Thickness *(in)*	F_y *(ksi)*	Is Diag. Tension Only? *(Y/N)*
1	0.000-25.00	2L		3	4	0.3125	36	
2	25.00-50.00	2L		3	3.5	0.25	36	
3	50.00-75.00	2L		2.5	3.5	0.25	36	
4	75.00-100.0	2L		2.5	3.5	0.25	36	
5	100.0-125.0	2L		3	4	0.25	36	
6	125.0-150.0	2L		3	4	0.25	36	
7	150.0-175.0	2L		3	4	0.25	36	
8	175.0-200.0	2L		3.5	3.5	0.25	36	
9	200.0-212.5	2L		2.5	2.5	0.25	36	
10	212.5-225.0	2L		2.5	2.5	0.25	36	
11	225.0-237.5	2L		2.5	2	0.25	36	
12	237.5-250.0	2L		2.5	2	0.25	36	
13	250.0-262.5	2L		2.5	2	0.25	36	
14	262.5-272.7	L		3.5	3.5	0.25	36	
15	272.7-282.8	L		3.5	3.5	0.25	36	
16	282.8-291.4	L		3	3	0.25	36	
17	291.4-300.0	L		3	3	0.25	36	

Notes:

[1] Type of Diagonal Shape: **R** = Round, **L** = Single-Angle or **2L** = Double-Angle.

[2] Applies to Pipes and Solid Round Shapes only. For Solid Round Shapes Thickness Equals Zero.

[3] Applies to Single-Angle and Double-Angle Shapes only.

[4] Applies to Double-Angle Shapes only.

[5] Applies to Single-Angle Shapes only.

Horizontals

Site No.:	88018
Engineer:	RDB
Date:	11/20/2015
Carrier:	AT&T Mobility

When inputting thickness values, include all decimal places.

Tower Section #	Section Elevations *(ft)*	Type of Shape [1]	Diameter [2] *(in)*	Web Length [3] *(in)*	Flange Length [3] *(in)*	Thickness *(in)*	F_y *(ksi)*	
1	0.000-25.00	2L		3.5	2.5	0.25	36	
2	25.00-50.00	2L		3.5	2.5	0.25	36	
3	50.00-75.00	2L		3.5	2.5	0.25	36	
4	75.00-100.0	2L		3	2.5	0.25	36	
5	100.0-125.0	2L		3	2.5	0.25	36	
6	125.0-150.0	2L		3	2.5	0.25	36	
7	150.0-175.0	2L		2.5	2.5	0.25	36	
8	175.0-200.0	2L		2.5	2.5	0.25	36	
9	200.0-212.5	2L		2.5	2.5	0.25	36	
10	212.5-225.0	2L		2.5	2.5	0.25	36	
11	225.0-237.5	2L		2.5	2.5	0.25	36	
12	237.5-250.0	2L		2.5	2.5	0.25	36	
13	250.0-262.5	2L		2.5	2.5	0.25	36	
14	262.5-272.7	L		3	2.5	0.25	36	
15	272.7-282.8	2L		3	2.5	0.25	36	
16	282.8-291.4	L		3	2.5	0.25	36	
17	291.4-300.0	C		8	11.5		36	

Notes:

[1] Type of Horizontal Shape: **R** = Round, **L** = Single-Angle, **2L** = Double-Angle, **C** = Channel, **W** = W Shape

[2] Applies to Pipes and Solid Round Shapes only. For Solid Round Shapes Thickness Equals Zero.

[3] Applies to Single-Angle and Double-Angle Shapes only.

[4] Applies to Double-Angle Shapes only.

[5] Applies to Single-Angle Shapes only.

Built-up Diagonals

Site No.:	88018
Engineer:	RDB
Date:	11/20/2015
Carrier:	AT&T Mobility

When inputting thickness values, include all decimal places.
Input diags. from left to center & from base section upward.

Tower Built-up Diag. #	Section Elevations *(ft)*	Type of Shape [1]	Diameter [2] *(in)*	Web Length [3] *(in)*	Flange Length [3] *(in)*	Thickness *(in)*	F_y *(ksi)*
1	0.000-25.00	2L		3	2	0.25	36
2	0.000-25.00	2L		4	3	0.25	36
3	25.00-50.00	2L		2.5	2	0.25	36
4	25.00-50.00	2L		2.5	2	0.25	36
5	25.00-50.00	2L		3	3	0.25	36
6	50.00-75.00	2L		3	3	0.25	36
7	50.00-75.00	2L		2.5	2	0.25	36
8	50.00-75.00	2L		3	2	0.25	36
9	75.00-100.0	2L		3	3	0.25	36
10	75.00-100.0	2L		2.5	2	0.25	36
11	75.00-100.0	2L		2.5	2.5	0.375	36

Notes:

[1] Type of Diagonal Shape: **R** = Round, **L** = Single-Angle or **2L** = Double-Angle.

[2] Applies to Pipes and Solid Round Shapes only. For Solid Round Shapes Thickness Equals Zero.

[3] Applies to Single-Angle and Double-Angle Shapes only.

[4] Applies to Double-Angle Shapes only.

[5] Applies to Single-Angle Shapes only.

Built-up Horizontals

Site No.:	88018
Engineer:	RDB
Date:	11/20/2015
Carrier:	AT&T Mobility

When inputting thickness values, include all decimal places.

Tower Section #	Section Elevations *(ft)*	Type of Shape [1]	Diameter [2] *(in)*	Web Length [3] *(in)*	Flange Length [3] *(in)*	Thickness *(in)*	F_y *(ksi)*	Is Horiz. Tension Only? *(Y/N)*
1	0.000-25.00	2L		2.5	3	0.25	36	Y
2	25.00-50.00	2L		2.5	3	0.25	36	
3	50.00-75.00	2L		2.5	3	0.375	36	
4	75.00-100.0	2L		3.5	3.5	0.25	36	

Notes:

[1] Type of Horizontal Shape: **R** = Round, **L** = Single-Angle or **2L** = Double-Angle.

[2] Applies to Pipes and Solid Round Shapes only. For Solid Round Shapes Thickness Equals Zero.

[3] Applies to Single-Angle and Double-Angle Shapes only.

[4] Applies to Double-Angle Shapes only.

[5] Applies to Single-Angle Shapes only.

Coax and Dishes (p. 1 of 2)

Orig by MED, Improved by ABL. Last update 6/25/13 MED

Site No.:	88018
Engineer:	RDB
Date:	11/20/15
Carrier:	AT&T Mobility

Dish Types	
S	Standard
R	Standard w/ Radome
H	High Performance
G	Grid

Joint Orientation

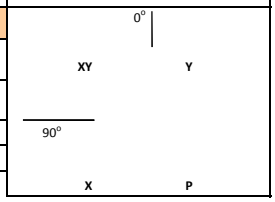

Dish Elevation (ft)	Dish Dia. (ft)	Dish Angle (deg)	Dish Type	Joint Orientation

Equipment Label	Attach Label	Equipment Property Set	EIA Antenna Orientation Angle

Description	From (ft)	To (ft)	Quantity	Shape	Width or Diameter (in)	Perimeter (in)	Unit Weight (lb/ft)	Part of Face Solidity Ratio (Yes/No)	Include in Wind Load (Yes/No)
LADDER	0	300	1	Flat	1	4.0	6	No	Yes
Short Ladder1	8.3333	33.3333	2	Flat	1	4.0	6	Yes	No
Short Ladder2	8.3333	33.3333	2	Flat	1	4.0	6	Yes	No
WG1	5	300	1	Flat	1	4.0	6	Yes	No
WG2	5	160	1	Flat	1	4.0	6	Yes	Yes
WG3	5	272	1	Flat	1	4.0	6	Yes	No
Clearwire1	5	300	5	Round	1.09	3.4	0.33	Yes	Yes
MC1	5	300	2	Round	1.55	4.9	0.63	No	Yes
UWH1	5	300	1	Round	1.09	3.4	0.33	No	Yes
UNK1	5	300	1	Round	0.63	2.0	0.15	No	Yes
QualComm1	5	270	1	Round	3.13	9.8	3.04	No	Yes
USDOHS1	5	269	2	Round	1.09	3.4	0.33	Yes	Yes
Sirus1	5	265	1	Round	5.02	15.8	1.85	Yes	No
Sirus2	5	265	1	Round	1.98	6.2	0.82	Yes	No
T-Mobile1	5	265	1	Flat	7.92	27.7	9.84	Yes	No
T-Mobile2	5	265	2	Round	0.88	2.8	0.88	Yes	No
USDOHS2	5	240	2	Round	1.09	3.4	0.33	Yes	Yes
AT&T1	5	231	4	Round	0.74	2.3	0.74	Yes	No
AT&T2	5	231	2	Round	0.39	1.2	0.06	Yes	No
AT&T3	5	231	1	Flat	11.88	31.7	9.84	Yes	No
Sprint1	5	224	1	Flat	9.9	31.7	12.3	Yes	Yes
MC2	5	200	2	Round	1.55	4.9	0.63	No	Yes
USDOHS3	5	200	1	Round	1.09	3.4	0.33	Yes	Yes
Spok1	5	178	3	Round	1.09	3.4	0.33	No	Yes
Clearwire2	5	171	1	Flat	2.38	14.3	7.3	Yes	Yes
Clearwire3	5	167	6	Round	0.31	1.0	0.03	Yes	Yes
Clearwire4	5	167	1	Round	2.38	7.5	0.05	Yes	Yes
Metro1	5	160	1	Flat	11.88	31.7	9.84	Yes	No
Metro2	5	160	2	Round	0.44	1.4	0.08	Yes	No
Sprint2	5	150	4	Round	1.54	4.8	1	Yes	Yes
Sprint3	5	150	1	Round	0.63	2.0	0.15	Yes	Yes
Sensus1	5	137	1	Round	1.09	3.4	0.33	No	Yes
Spok2	5	120	1	Round	0.63	2.0	0.15	No	Yes
MC3	5	100	1	Round	1.55	4.9	0.63	No	Yes
Verizon1	5	92	2	Round	1.98	6.2	0.82	No	Yes
Spok3	5	6	1	Round	0.63	2.0	1.3	No	Yes
Spok4	5	6	1	Round	0.34	1.1	0.06	No	Yes

Coax and Dishes (p. 2 of 2)

Tia Code: TIA-222-F

α	7	$k_{z\,max}$	2.58
z_g	33	$k_{z\,min}$	1
e		t	

Description	From (ft)	To (ft)	Quantity	Face # (1-4, A-D)	Coax Width (in)	Considered Coax Shape (Block / Flat / Ind)	% Exposed	Spacing (in)	Shape (Round/Flat)	Block Width (# coax)	Block Depth (# coax)	Perimeter (in)	Unit Weight (lb/ft)	In Face Zone (Yes/No)	Include in Wind Load (Yes/No)
							100							No	No
LADDER	0	300	1	B	1	Flat	100	0	Flat	1	1	4.0	6	No	Yes
Short Ladder1	8.3333	33.3333	2	1	1	Flat	100		Flat	2	1	4.0	6	Yes	No
Short Ladder2	8.3333	33.3333	2	3	1	Flat	100	0	Flat	2	1	4.0	6	Yes	No
							100							No	No
WG1	5	300	1	1	1	Flat	100	0	Flat	1	1	4.0	6	Yes	No
WG2	5	160	1	2	1	Flat	100		Flat	1	1	4.0	6	Yes	Yes
WG3	5	272	1	1	1	Flat	100	0	Flat	1	1	4.0	6	Yes	No
Clearwire1	5	300	5	2	1.09	Ind	100		Round	5	1	3.4	0.33	Yes	Yes
MC1	5	300	2	B	1.55	Ind	100	0	Round	2	1	4.9	0.63	No	Yes
UWH1	5	300	1	B	1.09	Ind	100		Round	1	1	3.4	0.33	No	Yes
UNK1	5	300	1	B	0.63	Ind	100	0	Round	1	1	2.0	0.15	No	Yes
QualComm1	5	270	1	B	3.13	Ind	100		Round	1	1	9.8	3.04	No	Yes
USDOHS1	5	269	2	2	1.09	Ind	100	0	Round	2	1	3.4	0.33	Yes	Yes
Sirus1	5	265	1	4	5.02	Ind	100		Round	1	1	15.8	1.85	Yes	No
Sirus2	5	265	1	4	1.98	Ind	100	0	Round	1	1	6.2	0.82	Yes	No
T-Mobile1	5	265	12	3	1.98	Block	33	0	Flat	4	3	27.7	9.84	Yes	No
T-Mobile2	5	265	2	4	0.88	Ind	100	0	Round	2	1	2.8	0.88	Yes	No
USDOHS2	5	240	2	2	1.09	Ind	100		Round	2	1	3.4	0.33	Yes	Yes
AT&T1	5	231	4	1	0.74	Ind	100	0	Round	4	1	2.3	0.74	Yes	No
AT&T2	5	231	2	1	0.39	Ind	100		Round	2	1	1.2	0.06	Yes	No
AT&T3	5	231	12	1	1.98	Block	50	0	Flat	6	2	31.7	9.84	Yes	No
Sprint1	5	224	15	2	1.98	Block	33	0	Flat	5	3	31.7	12.3	Yes	Yes
MC2	5	200	2	B	1.55	Ind	100	0	Round	2	1	4.9	0.63	No	Yes
USDOHS3	5	200	1	2	1.09	Ind	100		Round	1	1	3.4	0.33	Yes	Yes
Spok1	5	178	3	B	1.09	Ind	100	0	Round	3	1	3.4	0.33	No	Yes
Clearwire2	5	171	2	2	2.38	Block	50	0	Flat	1	2	14.3	7.3	Yes	Yes
Clearwire3	5	167	6	2	0.31	Ind	100	0	Round	6	1	1.0	0.03	Yes	Yes
Clearwire4	5	167	1	2	2.38	Ind	100		Round	1	1	7.5	0.05	Yes	Yes
Metro1	5	160	12	1	1.98	Block	50	0	Flat	6	2	31.7	9.84	Yes	No
Metro2	5	160	2	1	0.44	Ind	100		Round	2	1	1.4	0.08	Yes	No
Sprint2	5	150	4	2	1.54	Ind	100	0	Round	4	1	4.8	1	Yes	Yes
Sprint3	5	150	1	2	0.63	Ind	100		Round	1	1	2.0	0.15	Yes	Yes
Sensus1	5	137	1	B	1.09	Ind	100	0	Round	1	1	3.4	0.33	No	Yes
Spok2	5	120	1	B	0.63	Ind	100		Round	1	1	2.0	0.15	No	Yes
MC3	5	100	1	B	1.55	Ind	100	0	Round	1	1	4.9	0.63	No	Yes
Verizon1	5	92	2	B	1.98	Ind	100		Round	2	1	6.2	0.82	No	Yes
Spok3	5	6	1	B	0.63	Ind	100	0	Round	1	1	2.0	1.3	No	Yes
Spok4	5	6	1	B	0.34	Ind	100		Round	1	1	1.1	0.06	No	Yes
								0						No	No

Coax & Dishes

Dish Types	
S	Standard
R	Standard w/ Radome
H	High Performance
G	Grid

Dish Elevation (ft)	Dish Dia. (ft)	Dish Angle (deg)	Dish Type	Joint Orientation
300	2	0	H	Y
300	2	90	H	XY
300	2	180	H	X
300	4	270	S	P
300	3	0	H	XY
120	4	90	S	X
24	2	235	R	P
6	4	180	S	P

Equipment Label	Attach Label	Equipment Property Set	EIA Antenna Orientation Angle *(deg)*
2' HP 1 @ 300'	17Y	2 ft HP Dish	0
2' HP 2 @ 300'	17XY	2 ft HP Dish	90
2' HP 3 @ 300'	17X	2 ft HP Dish	180
4' STD 4 @ 300'	17P	4 ft STD Dish	270
3' HP 5 @ 300'	17XY	3 ft HP Dish	0
4' STD 6 @ 120'	5X	4 ft STD Dish	90
2' RAD 7 @ 24'	1P	2 ft RAD Dish	235
4' STD 8 @ 6'	0P	4 ft STD Dish	180

Joint Orientation

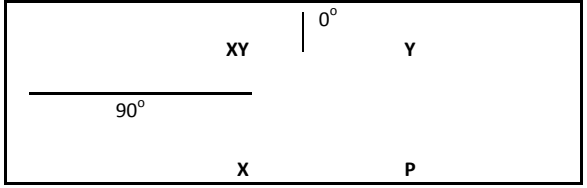

Site #:	88018
Name:	AT&T Mobility

Engineer:	RDB
Date:	11/20/15

Member Label	Group Label	Section Label	Symmetry Code	Origin Joint	End Joint	Ecc. Code	Rest. Code	Ratio RLX	Ratio RLY	Ratio RLZ
L 1	Leg S1		XY-Symmetry	0P	1P	1	4	0.2812	0.2812	0.2812
L 2	Leg S2		XY-Symmetry	1P	2P	1	4	0.2812	0.2812	0.2812
L 3	Leg S3		XY-Symmetry	2P	3P	1	4	0.2812	0.2812	0.2812
L 4	Leg S4		XY-Symmetry	3P	4P	1	4	0.2812	0.2812	0.2812
L 5	Leg S5		XY-Symmetry	4P	5P	1	4	0.333333333	0.333333333	0.333333333
L 6	Leg S6		XY-Symmetry	5P	6P	1	4	0.333333333	0.333333333	0.333333333
L 7	Leg S7		XY-Symmetry	6P	7P	1	4	0.333333333	0.333333333	0.333333333
L 8	Leg S8		XY-Symmetry	7P	8P	1	4	0.333333333	0.333333333	0.333333333
L 9	Leg S9		XY-Symmetry	8P	9P	1	4	0.5	0.5	0.5
L 10	Leg S10		XY-Symmetry	9P	10P	1	4	0.5	0.5	0.5
L 11	Leg S11		XY-Symmetry	10P	11P	1	4	0.5	0.5	0.5
L 12	Leg S12		XY-Symmetry	11P	12P	1	4	0.5	0.5	0.5
L 13	Leg S13		XY-Symmetry	12P	13P	1	4	0.5	0.5	0.5
L 14	Leg S14		XY-Symmetry	13P	14P	1	4	0.5	0.5	0.5
L 15	Leg S15		XY-Symmetry	14P	15P	1	4	0.5	0.5	0.5
L 16	Leg S16		XY-Symmetry	15P	16P	1	4	0.5	0.5	0.5
L 17	Leg S17		XY-Symmetry	16P	17P	1	4	0.5	0.5	0.5
D 1	Diag S1		XY-Symmetry	0P	H2P	1	6	0.31	0.92	0.31
D 2	Diag S1		XY-Symmetry	0P	H1P	1	6	0.31	0.92	0.31
D 3	Diag S2		XY-Symmetry	1P	H6P	1	6	0.31	0.62	0.31
D 4	Diag S2		XY-Symmetry	1P	H5P	1	6	0.31	0.62	0.31
D 5	Diag S3		XY-Symmetry	2P	H10P	1	6	0.333333333	0.667	0.333333333
D 6	Diag S3		XY-Symmetry	2P	H9P	1	6	0.333333333	0.667	0.333333333
D 7	Diag S4		XY-Symmetry	3P	H14P	1	6	0.333333333	0.667	0.333333333
D 8	Diag S4		XY-Symmetry	3P	H13P	1	6	0.333333333	0.667	0.333333333
D 9	Diag S5		XY-Symmetry	4P	A9P	1	6	0.333333333	0.666666667	0.333333333
D 10	Diag S5		XY-Symmetry	4P	A10P	1	6	0.333333333	0.666666667	0.333333333
D 11	Diag S6		XY-Symmetry	5P	A11P	1	6	0.333333333	0.666666667	0.333333333
D 12	Diag S6		XY-Symmetry	5P	A12P	1	6	0.333333333	0.666666667	0.333333333
D 13	Diag S7		XY-Symmetry	6P	A13P	1	6	0.333333333	0.666666667	0.333333333
D 14	Diag S7		XY-Symmetry	6P	A14P	1	6	0.333333333	0.666666667	0.333333333
D 15	Diag S8		XY-Symmetry	7P	A15P	1	6	0.333333333	0.666666667	0.333333333
D 16	Diag S8		XY-Symmetry	7P	A16P	1	6	0.333333333	0.666666667	0.333333333
D 17	Diag S9		XY-Symmetry	8P	A17P	1	6	0.32	0.59	0.32
D 18	Diag S9		XY-Symmetry	8P	A18P	1	6	0.32	0.59	0.32
D 19	Diag S10		XY-Symmetry	9P	A19P	1	6	0.5	1	0.5
D 20	Diag S10		XY-Symmetry	9P	A20P	1	6	0.5	1	0.5
D 21	Diag S11		XY-Symmetry	10P	A21P	1	6	0.48	0.96	0.58
D 22	Diag S11		XY-Symmetry	10P	A22P	1	6	0.48	0.96	0.58
D 23	Diag S12		XY-Symmetry	11P	A23P	1	6	0.5	1	0.5
D 24	Diag S12		XY-Symmetry	11P	A24P	1	6	0.5	1	0.5
D 25	Diag S13		XY-Symmetry	12P	A25P	1	6	0.5	1	0.5
D 26	Diag S13		XY-Symmetry	12P	A26P	1	6	0.5	1	0.5
D 27	Diag S14		XY-Symmetry	13P	14Y	2	5	0.52	0.75	0.52
D 28	Diag S14		XY-Symmetry	13P	14X	2	5	0.52	0.75	0.52
D 29	Diag S15		XY-Symmetry	14P	15Y	2	5	0.52	0.75	0.52
D 30	Diag S15		XY-Symmetry	14P	15X	2	5	0.52	0.75	0.52
D 31	Diag S16		XY-Symmetry	15P	16Y	2	5	0.52	0.75	0.52
D 32	Diag S16		XY-Symmetry	15P	16X	2	5	0.52	0.75	0.52
D 33	Diag S17		XY-Symmetry	16P	17Y	2	5	0.52	0.75	0.52
D 34	Diag S17		XY-Symmetry	16P	17X	2	5	0.52	0.75	0.52
H 1	Horiz 1		XY-Symmetry	1P	A1P	1	6	0.48	0.48	0.48
H 2	Horiz 1		XY-Symmetry	1P	A2P	1	6	0.48	0.48	0.48
H 3	Horiz 2		XY-Symmetry	2P	A3P	1	6	0.5	0.5	0.5
H 4	Horiz 2		XY-Symmetry	2P	A4P	1	6	0.5	0.5	0.5
H 5	Horiz 3		XY-Symmetry	3P	A5P	1	6	0.5	0.5	0.5
H 6	Horiz 3		XY-Symmetry	3P	A6P	1	6	0.5	0.5	0.5
H 7	Horiz 4		XY-Symmetry	4P	A7P	1	6	0.47	0.94	0.47
H 8	Horiz 4		XY-Symmetry	4P	A8P	1	6	0.47	0.94	0.47
H 9	Horiz 5		XY-Symmetry	5P	A9P	1	6	1	1	1
H 10	Horiz 5		XY-Symmetry	5P	A10P	1	6	1	1	1
H 11	Horiz 6		XY-Symmetry	6P	A11P	1	6	1	1	1

Member Label	Group Label	Section Label	Symmetry Code	Origin Joint	End Joint	Ecc. Code	Rest. Code	Ratio RLX	Ratio RLY	Ratio RLZ
H 12	Horiz 6		XY-Symmetry	6P	A12P	1	6	1	1	1
H 13	Horiz 7		XY-Symmetry	7P	A13P	1	6	1	1	1
H 14	Horiz 7		XY-Symmetry	7P	A14P	1	6	1	1	1
H 15	Horiz 8		XY-Symmetry	8P	A15P	1	6	1	1	1
H 16	Horiz 8		XY-Symmetry	8P	A16P	1	6	1	1	1
H 17	Horiz 9		XY-Symmetry	9P	A17P	1	6	1	1	1
H 18	Horiz 9		XY-Symmetry	9P	A18P	1	6	1	1	1
H 19	Horiz 10		XY-Symmetry	10P	A19P	1	6	1	1	1
H 20	Horiz 10		XY-Symmetry	10P	A20P	1	6	1	1	1
H 21	Horiz 11		XY-Symmetry	11P	A21P	1	6	1	1	1
H 22	Horiz 11		XY-Symmetry	11P	A22P	1	6	1	1	1
H 23	Horiz 12		XY-Symmetry	12P	A23P	1	6	1	1	1
H 24	Horiz 12		XY-Symmetry	12P	A24P	1	6	1	1	1
H 25	Horiz 13		XY-Symmetry	13P	A25P	1	6	1	1	1
H 26	Horiz 13		XY-Symmetry	13P	A26P	1	6	1	1	1
H 27	Horiz 14		Y-Symmetry	14P	14X	3	5	0.5	1	0.5
H 28	Horiz 14		X-Symmetry	14P	14Y	3	5	0.5	1	0.5
H 29	Horiz 15		Y-Symmetry	15P	15X	1	6	0.5	1	0.5
H 30	Horiz 15		X-Symmetry	15P	15Y	1	6	0.5	1	0.5
H 31	Horiz 16		Y-Symmetry	16P	16X	3	5	0.5	1	0.5
H 32	Horiz 16		X-Symmetry	16P	16Y	3	5	0.5	1	0.5
H 33	Horiz 17		Y-Symmetry	17P	17X	3	5	0.5	1	0.5
H 34	Horiz 17		X-Symmetry	17P	17Y	3	5	0.5	1	0.5
H 37	Horiz 2		Y-Symmetry	A3P	A3X	1	5	1	1	1
H 38	Horiz 2		X-Symmetry	A4P	A4Y	1	5	1	1	1
H 39	Horiz 3		Y-Symmetry	A5P	A5X	1	5	1	1	1
H 40	Horiz 3		X-Symmetry	A6P	A6Y	1	5	1	1	1
H 41	Horiz 4		Y-Symmetry	A7P	A7X	1	5	1	1	1
H 42	Horiz 4		X-Symmetry	A8P	A8Y	1	5	1	1	1
LH 1	LH 1		Y-Symmetry	H1P	H1X	1	6	0.5	1	0.5
LH 2	LH 1		X-Symmetry	H2P	H2Y	1	6	0.5	1	0.5
LH 3	LH 2		XY-Symmetry	H5P	H7P	1	6	1	2	1
LH 4	LH 2		XY-Symmetry	H6P	H8P	1	6	1	2	1
LH 5	LH 3		XY-Symmetry	H9P	H11P	1	6	1	2	1
LH 6	LH 3		XY-Symmetry	H10P	H12P	1	6	1	2	1
LH 7	LH 4		XY-Symmetry	H13P	H15P	1	6	0.998	1.995	0.998
LH 8	LH 4		XY-Symmetry	H14P	H16P	1	6	0.998	1.995	0.998
LD 1	LD 1		XY-Symmetry	H1P	1P	1	6	0.85	0.85	0.85
LD 2	LD 1		XY-Symmetry	H2P	1P	1	6	0.85	0.85	0.85
LD 3	LD 2		XY-Symmetry	H1P	A1P	1	6	0.82	0.82	0.82
LD 4	LD 2		XY-Symmetry	H2P	A2P	1	6	0.82	0.82	0.82
LD 7	LD 4		XY-Symmetry	H5P	2P	1	6	0.87	0.87	0.87
LD 8	LD 4		XY-Symmetry	H6P	2P	1	6	0.87	0.87	0.87
LD 9	LD 5		XY-Symmetry	H5P	A3P	1	6	0.8	0.8	0.8
LD 10	LD 5		XY-Symmetry	H6P	A4P	1	6	0.8	0.8	0.8
LD 11	LD 6		XY-Symmetry	A3P	H7P	1	6	0.84	0.84	0.84
LD 12	LD 6		XY-Symmetry	A4P	H8P	1	6	0.84	0.84	0.84
LD 13	LD 7		XY-Symmetry	H9P	3P	1	6	0.865	0.865	0.865
LD 14	LD 7		XY-Symmetry	H10P	3P	1	6	0.865	0.865	0.865
LD 15	LD 8		XY-Symmetry	H9P	A5P	1	6	0.82	0.82	0.82
LD 16	LD 8		XY-Symmetry	H10P	A6P	1	6	0.82	0.82	0.82
LD 17	LD 9		XY-Symmetry	A5P	H11P	1	6	0.82	0.82	0.82
LD 18	LD 9		XY-Symmetry	A6P	H12P	1	6	0.82	0.82	0.82
LD 19	LD 10		XY-Symmetry	H13P	4P	1	6	0.86	0.86	0.86
LD 20	LD 10		XY-Symmetry	H14P	4P	1	6	0.86	0.86	0.86
LD 21	LD 11		XY-Symmetry	H13P	A7P	1	6	0.82	0.82	0.82
LD 22	LD 11		XY-Symmetry	H14P	A8P	1	6	0.82	0.82	0.82
LD 23	LD 12		XY-Symmetry	A7P	H15P	1	6	0.85	0.85	0.85
LD 24	LD 12		XY-Symmetry	A8P	H16P	1	6	0.85	0.85	0.85
BR 1	DUM 1		XY-Symmetry	A1P	A2P	1	4	1	1	1

Member Label	Group Label	Section Label	Symmetry Code	Origin Joint	End Joint	Ecc. Code	Rest. Code	Ratio RLX	Ratio RLY	Ratio RLZ
BR 3	DUM 1		XY-Symmetry	A3P	A4P	1	4	1	1	1
BR 4	DUM 1		XY-Symmetry	A3P	A4XY	1	4	1	1	1
BR 5	DUM 1		XY-Symmetry	A5P	A6P	1	4	1	1	1
BR 6	DUM 1		XY-Symmetry	A5P	A6XY	1	4	1	1	1
BR 7	DUM 1		XY-Symmetry	A7P	A8P	1	4	1	1	1
BR 8	DUM 1		XY-Symmetry	A7P	A8XY	1	4	1	1	1
BR 9	DUM 1		XY-Symmetry	A9P	A10P	1	4	1	1	1
BR 11	DUM 1		XY-Symmetry	A11P	A12P	1	4	1	1	1
BR 13	DUM 1		XY-Symmetry	A13P	A14P	1	4	1	1	1
BR 15	DUM 1		XY-Symmetry	A15P	A16P	1	4	1	1	1
BR 17	DUM 1		XY-Symmetry	A17P	A18P	1	4	1	1	1
BR 19	DUM 1		XY-Symmetry	A19P	A20P	1	4	1	1	1
BR 21	DUM 1		XY-Symmetry	A21P	A22P	1	4	1	1	1
BR 23	DUM 1		XY-Symmetry	A23P	A24P	1	4	1	1	1
BR 25	DUM 1		XY-Symmetry	A25P	A26P	1	4	1	1	1
BR 61	DUM 1		XY-Symmetry	H1P	H2P	1	4	1	1	1
BR 62	DUM 1		XY-Symmetry	H1P	H2XY	1	4	1	1	1
BR 64	DUM 1		XY-Symmetry	H5P	H6P	1	4	1	1	1
BR 65	DUM 1		XY-Symmetry	H5P	H6XY	1	4	1	1	1
BR 66	DUM 1		XY-Symmetry	H7P	H8P	1	4	1	1	1
BR 67	DUM 1		XY-Symmetry	H9P	H10P	1	4	1	1	1
BR 68	DUM 1		XY-Symmetry	H9P	H10XY	1	4	1	1	1
BR 69	DUM 1		XY-Symmetry	H11P	H12P	1	4	1	1	1
BR 70	DUM 1		XY-Symmetry	H13P	H14P	1	4	1	1	1
BR 71	DUM 1		XY-Symmetry	H13P	H14XY	1	4	1	1	1
BR 72	DUM 1		XY-Symmetry	H15P	H16P	1	4	1	1	1

Point Loads

Tower Height:	300	ft
Gh:	1.09	
Wind Speed:	85.00	
Wind Speed (Ice):	73.95	
Radial Ice Diameter:	0.5	in

Site No.:	88018
Engineer:	RDB
Date:	11/20/2015
Carrier:	AT&T Mobility

KS-15676 Horn Antennas: ~128 ft^2

No.	Carrier	Elevation (ft)	Quantity	Number of Azimuths	Model	Height (in)	Width (in)	Depth (in)	Weight (lbs/ea)	Flat/Round (F/R)	Reduction Factor	C_AA_C (ft^2/ea)	Weight (k/ea)	H/W	C_A	q_Z (psf)	q_Z (Ice) (psf)
1		300	1	1	-	0.01	0.01	0.01	0.01	R	0.001			1.00	0.80	34.75	26.30
			1	4	Platform						1.000	55.00	4.00	-	-		
2		283	1	4	-	0.01	0.01	0.01	0.01	R	0.001			1.00	0.80	34.18	25.87
			1	4	Catwalk						1.000	40.00	2.75	-	-		
3		212.5	1	3	-	0.01	0.01	0.01	0.01	R	0.001			1.00	0.80	31.49	23.83
			1	3	Platform						1.000	50.00	3.00	-	-		
4		100	1	3	-	0.01	0.01	0.01	0.01	R	0.001			1.00	0.80	25.39	19.22
			1	3	Platform						1.000	50.00	3.00	-	-		
5	Clearwire	300	1	1	Horizon Compact	4.7	9.3	9.3	10.6	R	1.000			0.51	0.80	34.75	26.30
	Marcus Comm.		1	1	Radio/ODU						0.500	1.87	0.03	-	-		
6	United/Marcus	300	2	2	16' Omni	192	3	3	55	R	1.000			64.00	1.20	34.75	26.30
	Marcus Comm.		1	1	101-68-10-X-03N						1.000	5.53	0.07	-	-		
7	Qualcomm	270	1	1	TLP-08M-2E	146.4	10.5	10.5	130	R	1.000			13.94	0.95	33.72	25.52
	Qualcomm		1	1	Side Arm						1.000	5.20	0.15	-	-		
8	US DOHS	269	1	1	ADD090	78.7	31.5	31.5	88.2	F	1.000			2.50	1.40	33.68	25.50
	-		1	1	-						1.000	0.00	0.00	-	-		
9	Sirus	265	2	2	TA-2350-DAB	70	2.3	2.3	15	R	1.000			30.43	1.20	33.54	25.39
	Sirus		2	2	Side Arm						0.900	5.20	0.15	-	-		
10	T-Mobile	265	3	3	ATMAA1412D-1A20	12	10	4	13	F	0.500			1.20	1.40	33.54	25.39
	T-Mobile		3	3	RRUS 11 B12						0.500	3.25	0.05	-	-		
11	T-Mobile	265	3	3	AIR 21, 1.3 M, B2A B4P	56	12	8	83	F	0.690			4.67	1.40	33.54	25.39
	T-Mobile		3	3	AIR 21, 1.3M, B4A B2P						0.690	6.58	0.08	-	-		
12	T-Mobile	265	3	3	LNX-6515DS-VTM	96.3	11.9	7.1	51.3	F	0.700			8.09	1.44	33.54	25.39
	T-Mobile		3	3	Sector Frame						0.670	17.90	0.40	-	-		
13	US DOHS	240	1	1	SC381-HL	148.3	4.5	4.5	47	R	1.000			32.96	1.20	32.60	24.68
	US DOHS		1	1	SC281-L						1.000	10.46	0.08	-	-		
14	US DOHS	240	1	1	-	0.01	0.01	0.01	0.01	R	0.001			1.00	0.80	32.60	24.68
	US DOHS		2	2	Side Arm						0.900	5.20	0.15	-	-		
15	AT&T Mobility	231	3	3	7770	55	11	5	35	F	0.640			5.00	1.40	32.25	24.41
	AT&T Mobility		3	3	Sector Frame						0.670	14.40	0.40	-	-		
16																	
17	AT&T Mobility	231	3	3	SBNHH-1D65A	55	11.9	7.1	40.9	F	0.670			4.62	1.40	32.25	24.41
	AT&T Mobility		1	3	32 BOB, TTA, RET						0.500	83.84	1.26	-	-		
18	AT&T Mobility	231	3	3	AM-X-CD-14-65-00T-RET	48	11.8	5.9	36.4	F	0.650			4.07	1.40	32.25	24.41
	AT&T Mobility		3	3	OPA-65R-LCUU-H4						0.640	6.91	0.06	-	-		
19	Sprint Nextel	224	12	3	Decibel DB844H90E-XY	48	6.5	8	14	F	0.730			7.38	1.41	31.97	24.20
	Sprint Nextel		3	3	Sector Frame						0.670	17.90	0.40	-	-		
20	US DOHS	200	1	1	Sinclair SC281-L	251	5	5	79	R	1.000			50.20	1.20	30.95	23.43
	US DOHS		1	1	Side Arm						1.000	5.20	0.15	-	-		
21	Marcus Comm.	200	2	2	TX RX 101-68-10-X-03N	189.6	3.5	3.5	70	R	1.000			54.17	1.20	30.95	23.43
	Marcus Comm.		2	2	Side Arm						0.900	5.20	0.15	-	-		
22	Town of Stamford	189	1	1	-	0.01	0.01	0.01	0.01	R	0.001			1.00	0.80	30.45	23.05
	Town of Stamford		1	1	30" x 30" Reflector						1.000	8.75	0.03	-	-		
23	Spok Holdings	178	3	3	BCD-87010 ___	134	2.6	2.6	26.5	R	1.000			51.54	1.20	29.94	22.66
	Spok Holdings		3	3	Side Arm						0.670	5.20	0.15	-	-		
24	Clearwire	171	3	3	24" x 24" Junction Box	24	24	8	20	F	0.670			1.00	1.40	29.59	22.40
	Clearwire		1	1	-						1.000	0.01	0.01	-	-		
25	Clearwire	167	3	3	BTS-2500	19.3	11.3	5.1	35	F	0.670			1.71	1.40	29.40	22.25
	Clearwire		3	3	LLPX310R						0.620	4.83	0.03	-	-		
26	Clearwire	167	1	1	-	0.01	0.01	0.01	0.01	R	0.001			1.00	0.80	29.40	22.25
	Clearwire		3	3	T-Arm						0.670	5.20	0.15	-	-		
27	Metro PCS	160	18	3	RCU (Remote Control Unit)	8	2	2	1	R	0.500			4.00	0.80	29.04	21.98
	Metro PCS		6	3	800 10504						0.670	3.35	0.02	-	-		
28	Sprint Nextel	150	3	3	APXVTM14-C-I20	56.3	12.6	6.3	52.9	F	0.650			4.47	1.40	28.51	21.58
	Sprint Nextel		1	3	18 RRH						0.500	50.70	0.78	-	-		
29	Sprint Nextel	150	3	3	APXVSPP18-C-A20	72	11.8	7	57	F	0.680			6.10	1.40	28.51	21.58
	Sprint Nextel		3	3	Sector Frame						0.670	17.90	0.40	-	-		
30	Senus	137	1	1	BCD-87010 ___ 4°	134	2.6	2.6	26.5	R	1.000			51.54	1.20	27.78	21.03
	Senus		1	1	Side Arm						1.000	5.20	0.15	-	-		

31	Marcus Comm.	100	1	1	101-68-10-X-03N	189.6	3.5	3.5	70	R	1.000			54.17	1.20	25.39	19.22
	Marcus Comm.		1	1	Side Arm						1.000	5.20	0.15	-	-		
32	Verizon	92	6	3	WWX063X19G00	75	12.1	7	32.7	F	0.680			6.20	1.40	24.79	18.76
	Verizon		4	3	X7C-FRO-660 (35 Lbs)						0.670	10.22	0.04	-	-		
33	Verizon	92	3	3	X7C-FRO-640-V	72	18.8	9.1	42.4	F	0.640			3.83	1.40	24.79	18.76
	Verizon		1	3	11 RET, BOB						0.500	36.61	0.56	-	-		
34	Verizon	92	1	1	-	0.01	0.01	0.01	0.01	R	0.001			1.00	0.80	24.79	18.76
	Verizon		1	3	Sector Frame						0.670	17.90	0.40	-	-		
35	Spok Holdings	6	1	1	Acutime 2000	5	6.1	6.1	1.3	F	1.000			0.82	1.40	18.50	14.00
	Spok Holdings		1	1	-						1.000	0.00	0.00	-	-		
36																	
37																	
38																	
39																	
40																	
41																	
42																	
43																	
44																	
45																	
46																	
47																	
48																	
49																	
50																	

No.	Elevation (ft)	C_AA_C (ft^2)	C_AA_C (Ice) (ft^2)	Force (k)	Force (Ice) (k)	Weight (k)	Weight (Ice) (k)	Σ Force (k)	Σ Force (Ice) (k)	Σ Weight (k)	Σ Weight (Ice) (k)
1	300	0.00	0.00	0.000	0.000	0.000	0.000	2.08	2.12	4.00	5.20
		55.00	74.25	2.079	2.124	4.000	5.200				
2	283	0.00	0.00	0.000	0.000	0.000	0.000	1.49	1.52	2.75	3.58
		40.00	54.00	1.487	1.519	2.750	3.575				
3	212.5	0.00	0.00	0.000	0.000	0.000	0.000	1.71	1.75	3.00	3.90
		50.00	67.50	1.713	1.750	3.000	3.900				
4	100	0.00	0.00	0.000	0.000	0.000	0.000	1.38	1.41	3.00	3.90
		50.00	67.50	1.381	1.411	3.000	3.900				
5	300	0.24	0.33	0.009	0.009	0.011	0.017	0.04	0.05	0.04	0.06
		0.94	1.26	0.035	0.036	0.030	0.039				
6	300	9.60	12.87	0.363	0.368	0.110	0.198	0.57	0.58	0.18	0.29
		5.53	7.47	0.209	0.214	0.070	0.091				
7	270	10.19	11.23	0.374	0.312	0.130	0.239	0.56	0.51	0.28	0.43
		5.20	7.02	0.191	0.195	0.150	0.195				
8	269	24.10	25.18	0.883	0.698	0.088	0.286	0.88	0.70	0.09	0.29
		0.00	0.00	0.000	0.000	0.000	0.000				
9	265	2.68	3.91	0.098	0.108	0.030	0.056	0.44	0.46	0.33	0.45
		9.36	12.64	0.341	0.349	0.300	0.390				
10	265	1.75	2.09	0.064	0.058	0.039	0.062	0.24	0.24	0.19	0.26
		4.88	6.58	0.178	0.182	0.152	0.198				
11	265	13.52	14.91	0.493	0.412	0.249	0.375	0.99	0.92	0.49	0.69
		13.62	18.39	0.497	0.508	0.245	0.318				
12	265	24.01	26.29	0.876	0.726	0.154	0.351	2.19	2.07	1.35	1.91
		35.98	48.57	1.313	1.341	1.200	1.560				
13	240	5.56	6.84	0.197	0.184	0.047	0.096	0.57	0.56	0.13	0.20

13	240	10.46	14.12	0.371	0.379	0.079	0.103		0.37	0.36		0.13	0.20
14	240	0.00	0.00	0.000	0.000	0.000	0.000		0.33	0.34		0.30	0.39
		9.36	12.64	0.332	0.339	0.300	0.390						
15	231	11.29	12.54	0.396	0.333	0.105	0.203		1.41	1.37		1.31	1.76
		28.94	39.07	1.015	1.037	1.200	1.560						
16													
17	231	12.79	14.12	0.449	0.375	0.123	0.240		1.92	1.88		1.38	1.87
		41.92	56.59	1.471	1.503	1.256	1.633						
18	231	10.74	11.89	0.377	0.316	0.109	0.205		0.84	0.79		0.28	0.43
		13.27	17.91	0.465	0.476	0.171	0.222						
19	224	26.82	31.59	0.932	0.831	0.168	0.484		2.18	2.11		1.37	2.04
		35.98	48.57	1.251	1.278	1.200	1.560						
20	200	10.46	12.60	0.352	0.321	0.079	0.170		0.53	0.50		0.23	0.36
		5.20	7.02	0.175	0.179	0.150	0.195						
21	200	11.06	14.30	0.372	0.364	0.140	0.240		0.69	0.69		0.44	0.63
		9.36	12.64	0.315	0.322	0.300	0.390						
22	189	0.00	0.00	0.000	0.000	0.000	0.000		0.29	0.30		0.03	0.04
		8.75	11.81	0.290	0.296	0.030	0.039						
23	178	8.71	12.15	0.284	0.299	0.080	0.162		0.62	0.65		0.53	0.75
		10.45	14.11	0.340	0.348	0.450	0.585						
24	171	11.26	12.21	0.362	0.298	0.060	0.159		0.36	0.30		0.07	0.17
		0.01	0.01	0.000	0.000	0.010	0.013						
25	167	4.26	4.88	0.136	0.118	0.105	0.145		0.42	0.41		0.19	0.26
		8.98	12.13	0.287	0.294	0.086	0.112						
26	167	0.00	0.00	0.000	0.000	0.000	0.000		0.33	0.34		0.45	0.59
		10.45	14.11	0.334	0.341	0.450	0.585						
27	160	0.80	1.35	0.025	0.032	0.018	0.047		0.45	0.47		0.12	0.18
		13.47	18.18	0.425	0.435	0.106	0.137						
28	150	13.45	14.77	0.417	0.347	0.159	0.277		1.20	1.15		0.94	1.29
		25.35	34.22	0.786	0.803	0.779	1.013						
29	150	16.85	18.53	0.523	0.435	0.171	0.320		1.64	1.57		1.37	1.88
		35.98	48.57	1.116	1.140	1.200	1.560						
30	137	2.90	4.05	0.088	0.093	0.027	0.054		0.24	0.25		0.18	0.25
		5.20	7.02	0.157	0.161	0.150	0.195						
31	100	5.53	7.15	0.153	0.149	0.070	0.120		0.30	0.30		0.22	0.31
		5.20	7.02	0.144	0.147	0.150	0.195						
32	92	36.00	39.49	0.971	0.806	0.196	0.510		1.71	1.56		0.34	0.69
		27.39	36.98	0.739	0.755	0.140	0.182						
33	92	25.27	26.98	0.681	0.551	0.127	0.349		1.17	1.06		0.69	1.08
		18.31	24.71	0.494	0.504	0.561	0.729						
34	92	0.00	0.00	0.000	0.000	0.000	0.000		0.32	0.33		0.40	0.52
		11.99	16.19	0.323	0.330	0.400	0.520						
35	6	0.30	0.41	0.006	0.006	0.001	0.005		0.01	0.01		0.00	0.01
		0.00	0.00	0.000	0.000	0.000	0.000						
36													
37													
38													
39													
40													
41													
42													
43													
44													
45													
46													
47													

Foundation

Site No.:	88018
Engineer:	RDB
Date:	11/20/15
Carrier:	AT&T Mobility

Design Loads (Unfactored)

Compression/Leg:	493.97	k
Uplift/Leg:	384.56	k

Face Width @ Top of Pier (d_1):	4.00	ft
Face Width @ Bottom of Pier (d_2):	8.00	ft
Total Length of Pier (l):	8.00	ft
Height of Pedestal Above Ground (h):	0.50	ft
Width of Pad (W):	18.00	ft
Length of Pad (L):	18.00	ft
Thickness of Pad (t):	3.00	ft
Water Table Depth (w):	99	ft
Unit Weight of Concrete:	150.0	pcf
Unit Weight of Soil (Above Water Table):	110.0	pcf
Unit Weight of Soil (Below Water Table):	55.0	pcf
Friction Angle of Uplift (A):	20	°
Allowable Compressive Bearing Pressure:	20000	psf

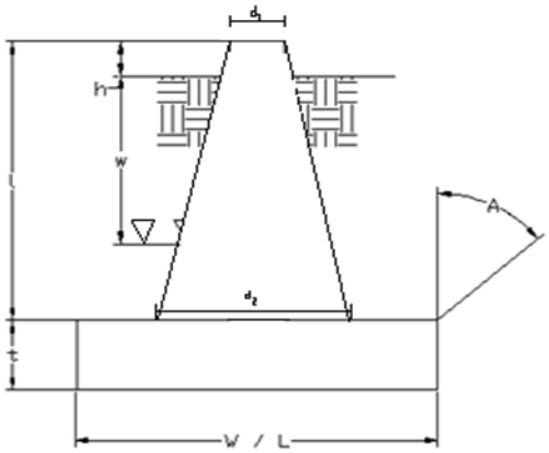

Volume Pier (Total):	298.67	ft^3
Volume Pad (Total):	972.00	ft^3
Volume Soil (Total):	2935.41	ft^3
Volume Pier (Buoyant):	0.00	ft^3
Volume Pad (Buoyant):	0.00	ft^3
Volume Soil (Buoyant):	0.00	ft^3
Weight Pier:	44.80	k
Weight Pad:	145.80	k
Weight Soil:	322.89	k

Uplift Check

TIA Case 1: $\frac{\text{Wt. Soil + Wt. Concrete}}{1.5}$

TIA Case 2: $\frac{\text{Wt. Soil}}{2.0} + \frac{\text{Wt. Concrete}}{1.25}$

	Allowable Uplift (k)	Ratio	Result
TIA Case 1:	451.68	0.85	**OK**
TIA Case 2:	423.28	0.91	**OK**

Axial Check

Allowable Axial: Allowable Bearing Pressure * W * L

	Allowable Axial (k)	Ratio	Result
	6480.00	0.08	**OK**

Anchor Bolt Check

Bolt Description	Allowable Uplift (k)	Ratio	Result
(6) 2 1/4" A36	456.61	0.84	**OK**