Crown Castle
3 Corporate Park Drive, Suite 101
Clifton Park, NY 12065

EM-AT&T-126-200107

January 6, 2020

Melanie A. Bachman
Executive Director
Connecticut Siting Council
10 Franklin Square
New Britain, CT 06051

RECEIVED
JAN 7 2020
Connecticut Siting Council

RE: **Notice of Exempt Modification for AT&T - 842873**
30 Oliver Terrace, Shelton, CT 06484
Latitude: 41° 17′ 38.21″ / Longitude: -73° 6′ 25.83″

Dear Ms. Bachman:

AT&T currently maintains six (6) antennas at the 129-foot mount on the existing 140-foot Monopole Tower, located at 30 Oliver Terrace, Shelton, CT. The tower is owned by Crown Castle and the property is owned by Brennan Realty LLC. AT&T now intends to add three (3) antennas to their existing configuration. The new antennas will be installed at the 129-ft level of the tower.

The facility was approved by the Connecticut Siting Council in Petition 608 on March 25, 2003. Said approval given without conditions.

Please accept this letter as notification pursuant to Regulations of Connecticut State Agencies §16-50j-73, for construction that constitutes an exempt modification pursuant to R.C.S.A. § 16-50j-72(b)(2). In accordance with R.C.S.A. § 16-50j-73, a copy of this letter is being sent to James B. Cosgrove, Mayor for the City of Shelton, Rick Schultz, Planning & Zoning Administrator, Crown Castle as the tower owner, and Brennan Realty LLC, the property owner.

1. The proposed modifications will not result in an increase in the height of the existing tower.
2. The proposed modifications will not require the extension of the site boundary.
3. The proposed modification will not increase noise levels at the facility by six decibels or more, or to levels that exceed state and local criteria.
4. The operation of the replacement antennas will not increase radio frequency emissions at the facility to a level at or above the Federal Communication Commission safety standard.
5. The proposed modifications will not cause a change or alteration in the physical or environmental characteristics of the site.
6. The existing structure and its foundation can support the proposed loading.

For the foregoing reasons, AT&T respectfully submits that the proposed modifications to the above-reference telecommunications facility constitutes an exempt modification under R.C.S.A. § 16-50j-72(b)(2). Please send approval/rejection letter to Attn: Anne Marie Zsamba.

Sincerely,

Anne Marie Zsamba
Network Real Estate Specialist
3 Corporate Park Drive, Suite 101
Clifton Park, NY 12065
(201) 236-9224
AnneMarie.Zsamba@crowncastle.com

Attachments
cc:

The Honorable Mark A. Lauretti, Mayor
City Hall, Room 202
54 Hill Street
Shelton CT, 06484
203-924-1555

Rick Schultz, AICP, Planning & Zoning Administrator
City Hall, Third Floor
54 Hill Street
Shelton CT, 06484
203-924-1555 ext. 1510

Brennan Realty LLC
70 Platt Road
PO Box 788
Shelton, CT 06484

Crown Castle, Tower Owner

ORIGIN ID:ONHA (585) 445-5896
RICHARD ZAJAC
CROWN CASTLE
4545 EAST RIVER ROAD
SUITE 320
WEST HENRIETTA, NY 14568
UNITED STATES US

SHIP DATE: 06JAN20
ACTWGT: 4.00 LB
CAD: 104924194/INET4160

BILL SENDER

TO **MELANIE BACHMAN**
CONNECTICUT SITING COUNCIL
10 FRANKLIN SQUARE

NEW BRITAIN CT 06051
(860) 827-2951 REF: 1765.6680
INV:
PO: DEPT:

567J2/DF82/05A2

FedEx Express

J192119091901uv

TRK# 0201 **7773 9963 5792**

TUE - 07 JAN 3:00P
STANDARD OVERNIGHT

XE BDLA

CT-US **06051**
BDL

After printing this label:
1. Use the 'Print' button on this page to print your label to your laser or inkjet printer.
2. Fold the printed page along the horizontal line.
3. Place label in shipping pouch and affix it to your shipment so that the barcode portion of the label can be read and scanned.

Warning: Use only the printed original label for shipping. Using a photocopy of this label for shipping purposes is fraudulent and could result in additional billing charges, along with the cancellation of your FedEx account number.

Use of this system constitutes your agreement to the service conditions in the current FedEx Service Guide, available on fedex.com.FedEx will not be responsible for any claim in excess of $100 per package, whether the result of loss, damage, delay, non-delivery,misdelivery,or misinformation, unless you declare a higher value, pay an additional charge, document your actual loss and file a timely claim.Limitations found in the current FedEx Service Guide apply. Your right to recover from FedEx for any loss, including intrinsic value of the package, loss of sales, income interest, profit, attorney's fees, costs, and other forms of damage whether direct, incidental,consequential, or special is limited to the greater of $100 or the authorized declared value. Recovery cannot exceed actual documented loss.Maximum for items of extraordinary value is $1,000, e.g. jewelry, precious metals, negotiable instruments and other items listed in our ServiceGuide. Written claims must be filed within strict time limits, see current FedEx Service Guide.

ORIGIN ID:ONHA (585) 445-5896
RICHARD ZAJAC
CROWN CASTLE
4545 EAST RIVER ROAD
SUITE 320
WEST HENRIETTA, NY 14568
UNITED STATES US

SHIP DATE: 06JAN20
ACTWGT: 1.50 LB
CAD: 104924194/INET4160

BILL SENDER

TO **MAYOR MARK LAURETTI**
CITY OF SHELTON
54 HILL STREET

SHELTON CT 06484
(518) 373-3543 REF: 1734.7680
INV:
PO: DEPT:

567.02/DF62/05A2

FedEx Express

J192119091901uz

TUE - 07 JAN 3:00P
STANDARD OVERNIGHT

TRK# 0201 **7773 9965 0830**

XE CIVA

06484
CT-US **BDL**

After printing this label:
1. Use the 'Print' button on this page to print your label to your laser or inkjet printer.
2. Fold the printed page along the horizontal line.
3. Place label in shipping pouch and affix it to your shipment so that the barcode portion of the label can be read and scanned.

Warning: Use only the printed original label for shipping. Using a photocopy of this label for shipping purposes is fraudulent and could result in additional billing charges, along with the cancellation of your FedEx account number.
Use of this system constitutes your agreement to the service conditions in the current FedEx Service Guide, available on fedex.com.FedEx will not be responsible for any claim in excess of $100 per package, whether the result of loss, damage, delay, non-delivery,misdelivery,or misinformation, unless you declare a higher value, pay an additional charge, document your actual loss and file a timely claim.Limitations found in the current FedEx Service Guide apply. Your right to recover from FedEx for any loss, including intrinsic value of the package, loss of sales, income interest, profit, attorney's fees, costs, and other forms of damage whether direct, incidental,consequential, or special is limited to the greater of $100 or the authorized declared value. Recovery cannot exceed actual documented loss.Maximum for items of extraordinary value is $1,000, e.g. jewelry, precious metals, negotiable instruments and other items listed in our ServiceGuide. Written claims must be filed within strict time limits, see current FedEx Service Guide.

ORIGIN ID:ONHA (585) 445-5896
RICHARD ZAJAC
CROWN CASTLE
4545 EAST RIVER ROAD
SUITE 320
WEST HENRIETTA, NY 14568
UNITED STATES US

SHIP DATE: 06JAN20
ACTWGT: 1.50 LB
CAD: 104924194/INET4160

BILL SENDER

TO **RICK SCHULTZ, AICP**
CITY OF SHELTON
54 HILL STREET - 3RD FLOOR

SHELTON CT 06484
(518) 373-3543 REF: 1734.7680
INV:
PO: DEPT:

567 J2/DF82/05A2

FedEx Express

J192119091901uv

TUE - 07 JAN 3:00P
STANDARD OVERNIGHT

TRK# 0201 **7773 9966 6081**

XE CIVA

06484
CT-US **BDL**

After printing this label:
1. Use the 'Print' button on this page to print your label to your laser or inkjet printer.
2. Fold the printed page along the horizontal line.
3. Place label in shipping pouch and affix it to your shipment so that the barcode portion of the label can be read and scanned.

Warning: Use only the printed original label for shipping. Using a photocopy of this label for shipping purposes is fraudulent and could result in additional billing charges, along with the cancellation of your FedEx account number.
Use of this system constitutes your agreement to the service conditions in the current FedEx Service Guide, available on fedex.com.FedEx will not be responsible for any claim in excess of $100 per package, whether the result of loss, damage, delay, non-delivery,misdelivery,or misinformation, unless you declare a higher value, pay an additional charge, document your actual loss and file a timely claim.Limitations found in the current FedEx Service Guide apply. Your right to recover from FedEx for any loss, including intrinsic value of the package, loss of sales, income interest, profit, attorney's fees, costs, and other forms of damage whether direct, incidental,consequential, or special is limited to the greater of $100 or the authorized declared value. Recovery cannot exceed actual documented loss.Maximum for items of extraordinary value is $1,000, e.g. jewelry, precious metals, negotiable instruments and other items listed in our ServiceGuide. Written claims must be filed within strict time limits, see current FedEx Service Guide.

ORIGIN ID:ONHA (585) 445-5896
RICHARD ZAJAC
CROWN CASTLE
4545 EAST RIVER ROAD
SUITE 320
WEST HENRIETTA, NY 14568
UNITED STATES US

SHIP DATE: 06JAN20
ACTWGT: 2.00 LB
CAD: 104924194/INET4160

BILL SENDER

TO **BRENNAN REALTY LLC**

70 PLATT ROAD

SHELTON CT 06484

(518) 373-3543 REF: 1734.7680
INV:
PO: DEPT:

567J2/DF82/05A2

FedEx Express

J192119091901uv

TRK# 0201 **7773 9967 5498**

TUE - 07 JAN 3:00P
STANDARD OVERNIGHT

XE CIVA

CT-US **06484**
BDL

After printing this label:
1. Use the 'Print' button on this page to print your label to your laser or inkjet printer.
2. Fold the printed page along the horizontal line.
3. Place label in shipping pouch and affix it to your shipment so that the barcode portion of the label can be read and scanned.

Warning: Use only the printed original label for shipping. Using a photocopy of this label for shipping purposes is fraudulent and could result in additional billing charges, along with the cancellation of your FedEx account number.

Use of this system constitutes your agreement to the service conditions in the current FedEx Service Guide, available on fedex.com.FedEx will not be responsible for any claim in excess of $100 per package, whether the result of loss, damage, delay, non-delivery,misdelivery,or misinformation, unless you declare a higher value, pay an additional charge, document your actual loss and file a timely claim.Limitations found in the current FedEx Service Guide apply. Your right to recover from FedEx for any loss, including intrinsic value of the package, loss of sales, income interest, profit, attorney's fees, costs, and other forms of damage whether direct, incidental,consequential, or special is limited to the greater of $100 or the authorized declared value. Recovery cannot exceed actual documented loss.Maximum for items of extraordinary value is $1,000, e.g. jewelry, precious metals, negotiable instruments and other items listed in our ServiceGuide. Written claims must be filed within strict time limits, see current FedEx Service Guide.

Exhibit A

Original Facility Approval

Petition No. 608
AT&T Wireless PCS, LLC
Shelton, Connecticut
Staff Report
March 25, 2003

On February 4, 2003, Connecticut Siting Council (Council) member Gerald Heffernan and Robert Mercier of Council staff met with AT&T Wireless PCS, Inc. (AT&T) representative Christopher Fisher at 70 Platt Road in Shelton to review this petition. AT&T proposes to replace an existing 75-foot monopole with a 100-foot monopole 275 feet west of its existing location. AT&T is petitioning the Council for a declaratory ruling that no Certificate of Environmental Compatibility and Public Need (Certificate) is required for the tower replacement and relocation.

The existing monopole is owned by the John J. Brennan Construction Company and is located adjacent to an office/garage building. The existing monopole, with a base diameter of 8 inches tapering to 4 inches at the top, has limited structural capability and supports one whip antenna extending to a height of 81 feet above ground level. The proposed 100-foot replacement tower would be located approximately 275 feet west of the existing tower, adjacent to a warehouse building in an area used for equipment storage.

The new tower would have a base diameter of 3.5 feet tapering to 1.5 feet at the top and would be designed to support three antenna platforms and the whip antenna. AT&T would place 6 panel antennas at the 95-foot level of the tower. The whip antenna would be placed at the top of the tower and would extend to a height of 107 feet above ground level. Nextel and Sprint intend on locating on the tower at the 85-foot and 75-foot levels at a future date. The existing monopole would be removed once the new tower is operational.

AT&T would install equipment cabinets on a concrete pad within a fenced compound at the base of the tower. Compound expansion would be necessary to accommodate future carriers. Utilities would be installed underground from a utility pole on Oliver Terrace, an abutting street.

The proposed site is located in an industrial and commercial area adjacent to Route 8. A residence is located approximately 200 feet north of the proposed tower site. A band of mature trees along the north property boundary would provide some screening of views from Platt Road and the adjacent residence.

The worst-case power density for the telecommunications operations at the site has been calculated to be 4.3% of the applicable standard for uncontrolled environments.

Exhibit B

Property Card

City of Shelton
Property Listing Report

Parcel ID 77.-23

Account 6072

Property Information

Owner	BRENNAN REALTY LLC
Address	30 OLIVER TERR
Mailing Address	PO BOX 788 70 PLATT , RD 06484
Land Use	- RESIDENTIAL
Land Class	3-2

Census Tract	1102
Neighborhood	
Zoning	IA-2
Acreage	1.18
Utilities	GAS/ELECTRIC
Lot Setting/ Desc	/

Photo

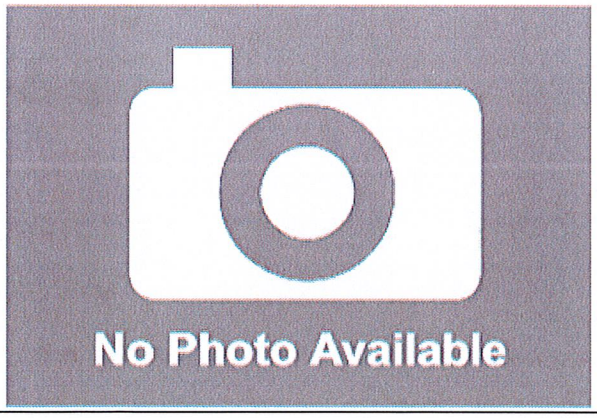

PARCEL VALUATIONS (Assessed value = 70% of Appraised Value)

	Appraised	Assessed
Buildings		
Outbuildings		
Improvements		
Extras		
Land		
Total	238000	166600
Previous		

Construction Details

Year Built	
Stories	
Building Style	
Building Use	
Building Condition	
Total Rooms	
Bedrooms	
Full Bathrooms	
Half Bathrooms	
Bath Style	
Kitchen Style	
Roof Style	
Roof Cover	

EXTERIOR WALLS:	
Primary	
Secondary	
INTERIOR WALLS:	
Primary	
Secondary	
FLOORS:	
Primary	
Secondary	
HEATING/AC:	
Heating Type	
Heating Fuel	
AC Type	

BUILDING AREA:	
Effective Building Area	
Gross Building Area	
Total Living Area	

SALES HISTORY:	
Sale Date	20040702
Sale Price	0
Book/ Page	2400/316-2

Report Created On 1/6/2020

City of Shelton, Connecticut - Parcel Map

Parcels: 77.-23 **Address: 30 OLIVER TERR**

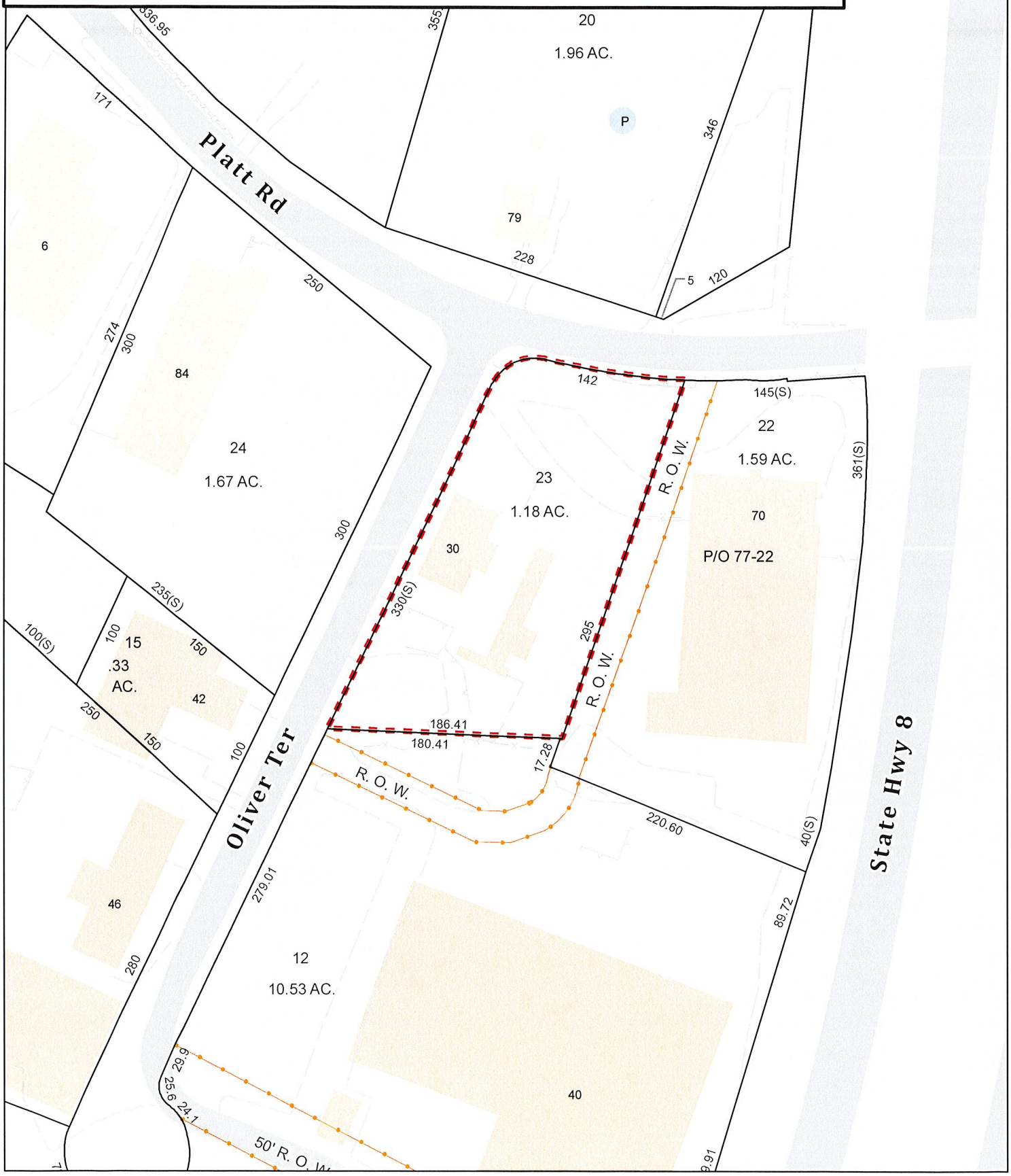

N

Approximate Scale: 1:1,200

50 0 50 100 Feet

Map Produced
April 2017

Disclaimer: This map is for informational purposes only.
All information is subject to verification by any user.
The City of Shelton and its mapping contractors assume
no legal responsibility for the information contained herein.

Exhibit C

Construction Drawings

AT&T

AT&T SITE NUMBER:	**CTL05431**	**BUSINESS UNIT #:**	**842873**
AT&T SITE NAME:	**SHELTON NE**	**SITE ADDRESS:**	**30 OLIVER TERRACE SHELTON, CT 06484**
AT&T FA CODE:	**10071231**		
AT&T PACE NUMBER:	**MRCTB040486/MRCTB040534/MRCTB040765**	**COUNTY:**	**FAIRFIELD COUNTY**
SITE TYPE:	**MONOPOLE**	**TOWER HEIGHT:**	**140'-0"**

PROJECT: AT&T LTE 3C/4C/4T4R

SITE INFORMATION

CROWN CASTLE USA INC. SITE NAME:	SHELTON NE
SITE ADDRESS:	30 OLIVER TERRACE SHELTON, CT 06484
COUNTY:	FAIRFIELD COUNTY
AREA OF CONSTRUCTION:	EXISTING
LATITUDE:	41.2937919
LONGITUDE:	-73.1072989
LAT/LONG TYPE:	NAD83
OCCUPANCY CLASSIFICATION:	U
TYPE OF CONSTRUCTION:	IIB
A.D.A. COMPLIANCE:	FACILITY IS UNMANNED AND NOT FOR HUMAN HABITATION
TOWER OWNER:	CROWN CASTLE 2000 CORPORATE DRIVE CANONSBURG, PA 15317
CARRIER/APPLICANT:	AT&T MOBILITY ONE AT&T WAY BEDMINSTER, NJ 07921
CROWN CASTLE USA INC. APPLICATION ID:	492771

PROJECT TEAM

A&E FIRM:	B+T GROUP 1717 SOUTH BOULDER, SUITE 300 TULSA, OK 74119 MIKE OAKES (918) 217-8574
CROWN CASTLE USA INC. DISTRICT CONTACTS:	3200 HORIZON SRIVE, SUITE 150 KING OF PRUSSIA, PA 19406

DRAWING INDEX

SHEET #	SHEET DESCRIPTION
T-1	TITLE SHEET
T-2	GENERAL NOTES
C-1	SITE PLAN
C-2	EQUIPMENT PLAN
C-3	TOWER ELEVATIONS
C-4	ANTENNA ORIENTATION
C-5	ANTENNA SCHEDULE
C-6	ANTENNA AND RRH SPECS.
C-7	ANTENNA AND RRH DETAIL
C-8	PLUMBING DIAGRAM
G-1	GROUNDING DETAILS
G-2	GROUNDING DETAILS

ALL DRAWINGS CONTAINED HEREIN ARE FORMATTED FOR 11x17. CONTRACTOR SHALL VERIFY ALL PLANS AND EXISTING DIMENSIONS AND CONDITIONS ON THE JOB SITE AND SHALL IMMEDIATELY NOTIFY THE ENGINEER IN WRITING OF ANY DISCREPANCIES BEFORE PROCEEDING WITH THE WORK OR BE RESPONSIBLE FOR SAME.

PROJECT DESCRIPTION

THE PURPOSE OF THIS PROJECT IS TO PROPOSE AN ANTENNA MODIFICATION ON AN EXISTING WIRELESS SITE.

GROUND SCOPE OF WORK
- REMOVE (1) DUS41
- INSTALL (1) FIBER MANAGEMENT BOX
- INSTALL (1) DC12
- INSTALL (2) BB6630 & (1) IDLe

TOWER SCOPE OF WORK
- RELOCATE (3) CCI HPA-65R-BUU-H6 ANTENNAS
- INSTALL (3) CCI DMP65R-BU8DA ANTENNAS
- INSTALL (3) ERICSSON 4449 B5/B12 RRHS
- INSTALL (3) ERICSSON 4415 B30 RRHS
- INSTALL (1) DC6-48-60-0-18C-EV SQUID
- INSTALL (1) ROSENBERGER LEONI - FB-L98B-034-XXX FIBERS
- INSTALL (2) ROSENBERGER LEONI - WR-VG66ST-BRD CABLES

DESIGN PACKAGE BASED ON THE RFDS
REVISION: 2.0
DATE: 8/20/19

DESIGN PACKAGE BASED ON THE APPLICATION
ID: 492771
REVISION: 0

LOCATION MAP

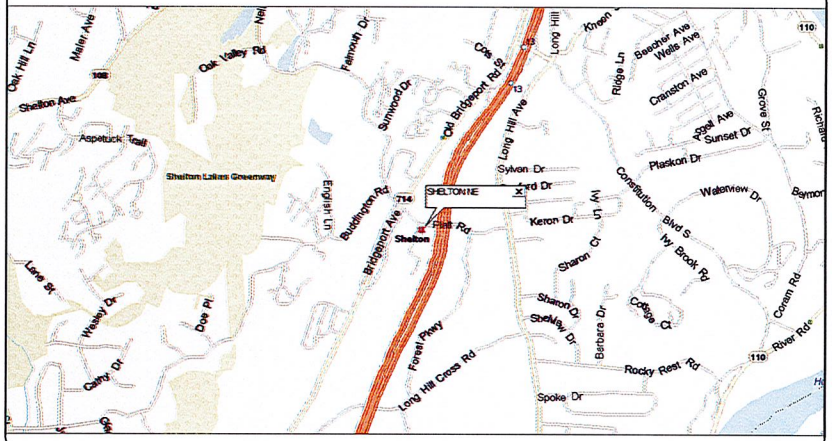

NO SCALE

APPLICABLE CODES/REFERENCE DOCUMENTS

ALL WORK SHALL BE PERFORMED AND MATERIALS INSTALLED IN ACCORDANCE WITH THE CURRENT EDITIONS OF THE FOLLOWING CODES AS ADOPTED BY THE LOCAL GOVERNING AUTHORITIES. NOTHING IN THESE PLANS IS TO BE CONSTRUED TO PERMIT WORK NOT CONFORMING TO THESE CODES:

CODE TYPE	CODE
BUILDING	2015 IBC
MECHANICAL	2015 IMC
ELECTRICAL	2017 NEC

REFERENCE DOCUMENTS:

STRUCTURAL ANALYSIS: CROWN CASTLE OCTOBER 16, 2019

MOUNT ANALYSIS: TOWER ENGINEERING PROFESSIONALS SEPTEMBER 17, 2019

NOTE:
PRIOR TO ACCESSING/ENTERING THE SITE YOU MUST CONTACT THE CROWN NOC AT (800) 788-7011 & CROWN CONSTRUCTION MANAGER

CALL CONNECTICUT ONE CALL
(800) 922-4455
CALL 3 WORKING DAYS
BEFORE YOU DIG!

AT&T
ONE AT&T WAY
BEDMINSTER, NJ 07921

CROWN CASTLE
3200 HORIZON DRIVE, SUITE 150
KING OF PRUSSIA, PA 19406

B+T GRP
1717 S. BOULDER
SUITE 300
TULSA, OK 74119
PH: (918) 587-4630
www.btgrp.com

AT&T SITE NUMBER:
CTL05431

BU #: **842873**
SHELTON NE

30 OLIVER TERRACE
SHELTON, CT 06484

EXISTING 140'-0"
MONOPOLE

ISSUED FOR:

REV	DATE	DRWN	DESCRIPTION	DES./QA
0	11/11/19	MLC	CONSTRUCTION	FWP
1	12/11/19	MLC	CONSTRUCTION	GEH

STATE OF CONNECTICUT
31627
LICENSED
PROFESSIONAL ENGINEER
12/11/19

B&T ENGINEERING, INC.
PEC.0001564
Expires 2/10/20

IT IS A VIOLATION OF LAW FOR ANY PERSON, UNLESS THEY ARE ACTING UNDER THE DIRECTION OF A LICENSED PROFESSIONAL ENGINEER, TO ALTER THIS DOCUMENT.

SHEET NUMBER: T-1
REVISION: 1

139006_842873_Shelton NE_CDs.dwg - Sheet1-1 - User: gholes - Dec 11, 2019 - 4:18pm

SITE WORK GENERAL NOTES:

1. THE SUBCONTRACTOR SHALL CONTACT UTILITY LOCATING SERVICES PRIOR TO THE START OF CONSTRUCTION.
2. ALL EXISTING ACTIVE SEWER, WATER, GAS, ELECTRIC AND OTHER UTILITIES WHERE ENCOUNTERED IN THE WORK, SHALL BE PROTECTED AT ALL TIMES AND WHERE REQUIRED FOR THE PROPER EXECUTION OF THE WORK, SHALL BE RELOCATED AS DIRECTED BY CONTRACTOR. EXTREME CAUTION SHOULD BE USED BY THE SUBCONTRACTOR WHEN EXCAVATING OR DRILLING PIERS AROUND OR NEAR UTILITIES. SUBCONTRACTOR SHALL PROVIDE SAFETY TRAINING FOR THE WORKING CREW. THIS WILL INCLUDE BUT NOT BE LIMITED TO A) FALL PROTECTION B) CONFINED SPACE C) ELECTRICAL SAFETY D) TRENCHING AND EXCAVATION.
3. ALL SITE WORK TO COMPLY WITH QAS-STD-10068 "INSTALLATION STANDARDS FOR CONSTRUCTION ACTIVITIES ON CROWN CASTLE USA INC. TOWER SITE" AND LATEST VERSION OF TIA 1019 "STANDARD FOR INSTALLATION, ALTERATION, AND MAINTENANCE OF ANTENNA SUPPORTING STRUCTURES AND ANTENNAS."
4. ALL SITE WORK SHALL BE AS INDICATED ON THE STAMPED CONSTRUCTION DRAWINGS AND PROJECT SPECIFICATIONS.
5. IF NECESSARY, RUBBISH, STUMPS, DEBRIS, STICKS, STONES AND OTHER REFUSE SHALL BE REMOVED FROM THE SITE AND DISPOSED OF LEGALLY.
6. ALL EXISTING INACTIVE SEWER, WATER, GAS, ELECTRIC AND OTHER UTILITIES, WHICH INTERFERE WITH THE EXECUTION OF THE WORK, SHALL BE REMOVED AND/OR CAPPED, PLUGGED OR OTHERWISE DISCONTINUED AT POINTS WHICH WILL NOT INTERFERE WITH THE EXECUTION OF THE WORK, SUBJECT TO THE APPROVAL OF CONTRACTOR, OWNER AND/OR LOCAL UTILITIES.
7. THE SUBCONTRACTOR SHALL PROVIDE SITE SIGNAGE IN ACCORDANCE WITH THE TECHNICAL SPECIFICATION FOR SITE SIGNAGE.
8. THE SITE SHALL BE GRADED TO CAUSE SURFACE WATER TO FLOW AWAY FROM THE BTS EQUIPMENT AND TOWER AREAS.
9. NO FILL OR EMBANKMENT MATERIAL SHALL BE PLACED ON FROZEN GROUND. FROZEN MATERIALS, SNOW OR ICE SHALL NOT BE PLACED IN ANY FILL OR EMBANKMENT.
10. THE SUB GRADE SHALL BE COMPACTED AND BROUGHT TO A SMOOTH UNIFORM GRADE PRIOR TO FINISHED SURFACE APPLICATION.
11. THE AREAS OF THE OWNERS PROPERTY DISTURBED BY THE WORK AND NOT COVERED BY THE TOWER, EQUIPMENT OR DRIVEWAY, SHALL BE GRADED TO A UNIFORM SLOPE, AND STABILIZED TO PREVENT EROSION AS SPECIFIED ON THE PROJECT SPECIFICATIONS.
12. SUBCONTRACTOR SHALL MINIMIZE DISTURBANCE TO EXISTING SITE DURING CONSTRUCTION. EROSION CONTROL MEASURES, IF REQUIRED DURING CONSTRUCTION, SHALL BE IN CONFORMANCE WITH THE LOCAL GUIDELINES FOR EROSION AND SEDIMENT CONTROL.
13. NOTICE TO PROCEED– NO WORK TO COMMENCE PRIOR TO COMPANY'S WRITTEN NOTICE TO PROCEED AND THE ISSUANCE OF A PURCHASE ORDER.
14. ALL CONSTRUCTION MEANS AND METHODS; INCLUDING BUT NOT LIMITED TO, ERECTION PLANS, RIGGING PLANS, CLIMBING PLANS, AND RESCUE PLANS SHALL BE THE RESPONSIBILITY OF THE GENERAL CONTRACTOR RESPONSIBLE FOR THE EXECUTION OF THE WORK CONTAINED HEREIN AND SHALL MEET ANSI/ASSE A10.48 (LATEST EDITION); FEDERAL, STATE, AND LOCAL REGULATIONS; AND ANY APPLICABLE INDUSTRY CONSENSUS STANDARDS RELATED TO THE CONSTRUCTION ACTIVITIES BEING PERFORMED. ALL RIGGING PLANS SHALL ADHERE TO ANSI/ASSE A10.48 (LATEST EDITION) AND CROWN STANDARD CED-STD-10253 INCLUDING THE REQUIRED INVOLVEMENT OF A QUALIFIED ENGINEER FOR CLASS IV CONSTRUCTION TO CERTIFY THE SUPPORTING STRUCTURE(S) IN ACCORDANCE WITH THE ANSI/TIA-322 (LATEST EDITION).

STRUCTURAL STEEL NOTES:

1. ALL STEEL WORK SHALL BE PAINTED IN ACCORDANCE WITH THE PROJECT SPECIFICATIONS AND IN ACCORDANCE WITH ASTM A36 UNLESS OTHERWISE NOTED.
2. BOLTED CONNECTIONS SHALL BE ASTM A325 BEARING TYPE (3/4"ø) CONNECTIONS AND SHALL HAVE MINIMUM OF TWO BOLTS UNLESS NOTED OTHERWISE.
3. NON-STRUCTURAL CONNECTIONS FOR STEEL GRATING MAY USE 5/8"ø ASTM A307 BOLTS UNLESS NOTED OTHERWISE.
4. INSTALLATION OF CONCRETE EXPANSION/WEDGE ANCHOR, SHALL BE PER MANUFACTURER'S RECOMMENDED PROCEDURE. THE ANCHOR BOLT, DOWEL OR ROD SHALL CONFORM TO MANUFACTURER'S RECOMMENDATION FOR EMBEDMENT DEPTH OR AS SHOWN ON THE DRAWINGS. NO REBAR SHALL BE CUT WITHOUT PRIOR CONTRACTOR APPROVAL WHEN DRILLING HOLES IN CONCRETE. SPECIAL INSPECTIONS, REQUIRED BY GOVERNING CODES, SHALL BE PERFORMED IN ORDER TO MAINTAIN MANUFACTURER'S MAXIMUM ALLOWABLE LOADS.

CONCRETE AND REINFORCING STEEL NOTES:

1. ALL CONCRETE WORK SHALL BE IN ACCORDANCE WITH THE ACI 301, ACI 318, ACI 336, ASTM A184, ASTM A185 AND THE DESIGN AND CONSTRUCTION SPECIFICATION FOR CAST-IN-PLACE CONCRETE.
2. ALL CONCRETE SHALL HAVE A MINIMUM COMPRESSIVE STRENGTH OF 3000 PSI AT 28 DAYS, UNLESS NOTED OTHERWISE. SLAB FOUNDATION DESIGN ASSUMING ALLOWABLE SOIL BEARING PRESSURE OF 2000 PSF.
3. REINFORCING STEEL SHALL CONFORM TO ASTM A615, GRADE 60, DEFORMED UNLESS NOTED OTHERWISE. WELDED WIRE FABRIC SHALL CONFORM TO ASTM A185 WELDED STEEL WIRE FABRIC UNLESS NOTED OTHERWISE. SPLICES SHALL BE CLASS "B" AND ALL HOOKS SHALL BE STANDARD, UNO.
4. THE FOLLOWING MINIMUM CONCRETE COVER SHALL BE PROVIDED FOR REINFORCING STEEL UNLESS SHOWN OTHERWISE ON DRAWINGS:

   CONCRETE CAST AGAINST EARTH....................3 IN.
   CONCRETE EXPOSED TO EARTH OR WEATHER:
   #6 AND LARGER....................................2 IN.
   #5 AND SMALLER & WWF............................1 1/2 IN.
   CONCRETE NOT EXPOSED TO EARTH OR WEATHER OR NOT CAST AGAINST THE GROUND:
   SLAB AND WALLS....................................3/4 IN.
   BEAMS AND COLUMNS...............................1 1/2 IN.
5. A CHAMFER 3/4" SHALL BE PROVIDED AT ALL EXPOSED EDGES OF CONCRETE, UNLESS NOTED OTHERWISE. IN ACCORDANCE WITH ACI 301 SECTION 4.2.4.

MASONRY NOTES:

1. HOLLOW CONCRETE MASONRY UNITS SHALL MEET A.S.T.M. SPECIFICATION C90, GRADE N, TYPE 1. THE SPECIFIED DESIGN COMPRESSIVE STRENGTH OF CONCRETE MASONRY (F'm) SHALL BE 1500 PSI.
2. MORTAR SHALL MEET THE PROPERTY SPECIFICATION OF A.S.T.M. C270 TYP. "S" MORTAR AND SHALL HAVE A MINIMUM COMPRESSIVE STRENGTH OF 2000 PSI.
3. GROUT SHALL MEET A.S.T.M. SPECIFICATION C475 AND HAVE A MINIMUM 28 DAY COMPRESSIVE STRENGTH OF 2000 PSI.
4. CONCRETE MASONRY SHALL BE LAID IN RUNNING (COMMON) BOND.
5. WALL SHALL RECEIVE TEMPORARY BRACING. TEMPORARY BRACING SHALL NOT BE REMOVED UNTIL GROUT IS FULLY CURED.

GENERAL NOTES:

1. FOR THE PURPOSE OF CONSTRUCTION DRAWING, THE FOLLOWING DEFINITIONS SHALL APPLY:
   CONTRACTOR– __________
   SUBCONTRACTOR– GENERAL CONTRACTOR (CONSTRUCTION)
   CARRIER– AT&T
   TOWER OWNER– CROWN CASTLE USA INC.
   OEM– ORIGINAL EQUIPMENT MANUFACTURER
2. PRIOR TO THE SUBMISSION OF BIDS, THE BIDDING SUBCONTRACTOR SHALL VISIT THE CELL SITE TO FAMILIARIZE WITH THE EXISTING CONDITIONS AND TO CONFIRM THAT THE WORK CAN BE ACCOMPLISHED AS SHOWN ON THE CONSTRUCTION DRAWINGS. ANY DISCREPANCY FOUND SHALL BE BROUGHT TO THE ATTENTION OF CONTRACTOR AND CROWN CASTLE USA INC.
3. ALL MATERIALS FURNISHED AND INSTALLED SHALL BE IN STRICT ACCORDANCE WITH ALL APPLICABLE CODES, REGULATIONS AND ORDINANCES. SUBCONTRACTOR SHALL ISSUE ALL APPROPRIATE NOTICES AND COMPLY WITH ALL LAWS, ORDINANCES, RULES, REGULATIONS AND LAWFUL ORDERS OF ANY PUBLIC AUTHORITY REGARDING THE PERFORMANCE OF THE WORK. ALL WORK CARRIED OUT SHALL COMPLY WITH ALL APPLICABLE MUNICIPAL AND UTILITY COMPANY SPECIFICATIONS AND LOCAL JURISDICTIONAL CODES, ORDINANCES AND APPLICABLE REGULATIONS.
4. DRAWINGS PROVIDED HERE ARE NOT TO SCALE AND ARE INTENDED TO SHOW OUTLINE ONLY.
5. UNLESS NOTED OTHERWISE, THE WORK SHALL INCLUDE FURNISHING MATERIALS, EQUIPMENT, APPURTENANCES AND LABOR NECESSARY TO COMPLETE ALL INSTALLATIONS AS INDICATED ON THE DRAWINGS.
6. "KITTING LIST" SUPPLIED WITH THE BID PACKAGE IDENTIFIES ITEMS THAT WILL BE SUPPLIED BY CONTRACTOR. ITEMS NOT INCLUDED IN THE BILL OF MATERIALS AND KITTING LIST SHALL BE SUPPLIED BY THE SUBCONTRACTOR.
7. THE SUBCONTRACTOR SHALL INSTALL ALL EQUIPMENT AND MATERIALS IN ACCORDANCE WITH MANUFACTURER'S RECOMMENDATIONS UNLESS SPECIFICALLY STATED OTHERWISE.
8. IF THE SPECIFIED EQUIPMENT CAN NOT BE INSTALLED AS SHOWN ON THESE DRAWINGS, THE SUBCONTRACTOR SHALL PROPOSE AN ALTERNATIVE INSTALLATION FOR APPROVAL BY THE CONTRACTOR AND CROWN CASTLE USA INC. PRIOR TO PROCEEDING WITH ANY SUCH CHANGE OF INSTALLATION.
9. SUBCONTRACTOR SHALL DETERMINE ACTUAL ROUTING OF CONDUIT, POWER AND T1 CABLES, GROUNDING CABLES AS SHOWN ON THE POWER, GROUNDING AND TELCO PLAN DRAWINGS.
10. THE SUBCONTRACTOR SHALL PROTECT EXISTING IMPROVEMENTS, PAVEMENTS, CURBS, LANDSCAPING AND STRUCTURES. ANY DAMAGED PART SHALL BE REPAIRED AT SUBCONTRACTOR'S EXPENSE TO THE SATISFACTION OF OWNER.
11. SUBCONTRACTOR SHALL LEGALLY AND PROPERLY DISPOSE OF ALL SCRAP MATERIALS SUCH AS COAXIAL CABLES AND OTHER ITEMS REMOVED FROM THE EXISTING FACILITY. ANTENNAS REMOVED SHALL BE RETURNED TO THE OWNER'S DESIGNATED LOCATION.
12. SUBCONTRACTOR SHALL LEAVE PREMISES IN CLEAN CONDITION. TRASH AND DEBRIS SHOULD BE REMOVED FROM SITE ON A DAILY BASIS.

ABBREVIATIONS AND SYMBOLS:

ABBREVIATIONS:

AGL	ABOVE GRADE LEVEL
BTS	BASE TRANSCEIVER STATION
EXISTING	EXISTING
MIN.	MINIMUM
REF	REFERENCE
RF	RADIO FREQUENCY
T.B.D.	TO BE DETERMINED
T.B.R.	TO BE RESOLVED
TYP	TYPICAL
REQ	REQUIRED
EGR	EQUIPMENT GROUND RING
AWG	AMERICAN WIRE GAUGE
MGB	MASTER GROUND BAR
EG	EQUIPMENT GROUND
BCW	BARE COPPER WIRE
SIAD	SMART INTEGRATED ACCESS DEVICE
GEN	GENERATOR
IGR	INTERIOR GROUND RING (HALO)
RBS	RADIO BASE STATION

SYMBOLS:

- S/G — SOLID GROUND BUS BAR
- S/N — SOLID NEUTRAL BUS BAR
- SUPPLEMENTAL GROUND CONDUCTOR
- 2-POLE THERMAL-MAGNETIC CIRCUIT BREAKER
- SINGLE-POLE THERMAL-MAGNETIC CIRCUIT BREAKER
- CHEMICAL GROUND ROD
- TEST WELL
- DISCONNECT SWITCH
- M — METER
- EXOTHERMIC WELD (CADWELD) (UNLESS OTHERWISE NOTED)
- MECHANICAL CONNECTION
- GROUNDING WIRE

ELECTRICAL INSTALLATION NOTES:

1. ALL ELECTRICAL WORK SHALL BE PERFORMED IN ACCORDANCE WITH THE PROJECT SPECIFICATIONS, NEC AND ALL APPLICABLE FEDERAL, STATE, AND LOCAL CODES/ORDINANCES.
2. CONDUIT ROUTINGS ARE SCHEMATIC. SUBCONTRACTOR SHALL INSTALL CONDUITS SO THAT ACCESS TO EQUIPMENT IS NOT BLOCKED AND TRIP HAZARDS ARE ELIMINATED.
3. WIRING, RACEWAY AND SUPPORT METHODS AND MATERIALS SHALL COMPLY WITH THE REQUIREMENTS OF THE NEC. HILTI EPOXY ANCHORS ARE REQUIRED BY CROWN CASTLE USA INC.
4. ALL CIRCUITS SHALL BE SEGREGATED AND MAINTAIN MINIMUM CABLE SEPARATION AS REQUIRED BY THE NEC.
5. CABLES SHALL NOT BE ROUTED THROUGH LADDER-STYLE CABLE TRAY RUNGS.
6. EACH END OF EVERY POWER, POWER PHASE CONDUCTOR (I.E., HOTS), GROUNDING AND T1 CONDUCTOR AND CABLE SHALL BE LABELED WITH COLOR-CODED INSULATION OR ELECTRICAL TAPE (3M BRAND, 1/2" PLASTIC ELECTRICAL TAPE WITH UV PROTECTION, OR EQUAL). THE IDENTIFICATION METHOD SHALL CONFORM WITH NEC AND OSHA.
7. ALL ELECTRICAL COMPONENTS SHALL BE CLEARLY LABELED WITH PLASTIC TAPE PER COLOR SCHEDULE. ALL EQUIPMENT SHALL BE LABELED WITH THEIR VOLTAGE RATING, PHASE CONFIGURATION, WIRE CONFIGURATION, POWER OR AMPACITY RATING AND BRANCH CIRCUIT ID NUMBERS (I.E. PANEL BOARD AND CIRCUIT ID'S).
8. PANEL BOARDS (ID NUMBERS) AND INTERNAL CIRCUIT BREAKERS (CIRCUIT ID NUMBERS) SHALL BE CLEARLY LABELED WITH PLASTIC LABELS.
9. ALL TIE WRAPS SHALL BE CUT FLUSH WITH APPROVED CUTTING TOOL TO REMOVE SHARP EDGES.
10. POWER, CONTROL AND EQUIPMENT GROUND WIRING IN TUBING OR CONDUIT SHALL BE SINGLE CONDUCTOR (#14 AWG OR LARGER), 600 V, OIL RESISTANT THHN OR THWN-2, CLASS B STRANDED COPPER CABLE RATED FOR 90° C (WET & DRY) OPERATION LISTED OR LABELED FOR THE LOCATION AND RACEWAY SYSTEM USED UNLESS OTHERWISE SPECIFIED.
11. SUPPLEMENTAL EQUIPMENT GROUND WIRING LOCATED INDOORS SHALL BE SINGLE CONDUCTOR (#6 AWG OR LARGER), 600V, OIL RESISTANT THHN OR THWN-2 GREEN INSULATION CLASS B STRANDED COPPER CABLE RATED FOR 90° C (WET AND DRY) OPERATION LISTED OR LABELED FOR THE LOCATION AND RACEWAY SYSTEM USED UNLESS OTHERWISE SPECIFIED.
12. POWER AND CONTROL WIRING, NOT IN TUBING OR CONDUIT, SHALL BE MULTI-CONDUCTOR, TYPE TC CABLE (#14 AWG OR LARGER), 600 V, OIL RESISTANT THHN OR THWN-2, CLASS B STRANDED COPPER CABLE RATED FOR 90° C (WET AND DRY) OPERATION WITH OUTER JACKET LISTED OR LABELED FOR THE LOCATION USED UNLESS OTHERWISE SPECIFIED.
13. ALL POWER AND GROUNDING CONNECTIONS SHALL BE CRIMP-STYLE, COMPRESSION WIRE LUGS AND WIRE NUTS BY THOMAS AND BETTS (OR EQUAL). LUGS AND WIRE NUTS SHALL BE RATED FOR OPERATION AT NO LESS THAN 75° C (90° C IF AVAILABLE).
14. RACEWAY AND CABLE TRAY SHALL BE LISTED OR LABELED FOR ELECTRICAL USE IN ACCORDANCE WITH NEMA, UL, ANSI/IEEE AND NEC.
15. ELECTRICAL METALLIC TUBING (EMT) OR RIGID NONMETALLIC CONDUIT (I.E. RIGID PVC SCHEDULE 40 OR RIGID PVC SCHEDULE 80 FOR LOCATIONS SUBJECT TO PHYSICAL DAMAGE) SHALL BE USED FOR EXPOSED INDOOR LOCATIONS.
16. ELECTRICAL METALLIC TUBING (EMT), ELECTRICAL NONMETALLIC TUBING (ENT) OR RIGID NONMETALLIC CONDUIT (RIGID PVC, SCHEDULE 40) SHALL BE USED FOR CONCEALED INDOOR LOCATIONS.
17. SCHEDULE 40 PVC UNDERGROUND ON STRAIGHTS AND SCHEDULE 80 PVC FOR ALL ELBOWS/90s AND ALL APPROVED ABOVE GRADE PVC CONDUIT.
18. LIQUID-TIGHT FLEXIBLE METALLIC CONDUIT (LIQUID-TITE FLEX) SHALL BE USED INDOORS AND OUTDOORS, WHERE VIBRATION OCCURS OR FLEXIBILITY IS NEEDED.
19. CONDUIT AND TUBING FITTINGS SHALL BE THREADED OR COMPRESSION-TYPE AND APPROVED FOR THE LOCATION USED. SET SCREW FITTINGS ARE NOT ACCEPTABLE.
20. CABINETS, BOXES AND WIRE WAYS SHALL BE LABELED FOR ELECTRICAL USE IN ACCORDANCE WITH NEMA, UL, ANSI/IEEE AND NEC.
21. WIREWAYS SHALL BE EPOXY-COATED (GRAY) AND INCLUDE A HINGED COVER, DESIGNED TO SWING OPEN DOWNWARDS; SHALL BE PANDUIT TYPE E (OR EQUAL); AND RATED NEMA 1 (OR BETTER).
22. CONDUITS SHALL BE FASTENED SECURELY IN PLACE WITH APPROVED NON-PERFORATED STRAPS AND HANGERS. EXPLOSIVE DEVICES FOR ATTACHING HANGERS TO STRUCTURE WILL NOT BE PERMITTED. CLOSELY FOLLOW THE LINES OF THE STRUCTURE, MAINTAIN CLOSE PROXIMITY TO THE STRUCTURE AND KEEP CONDUITS IN TIGHT ENVELOPES. CHANGES IN DIRECTION TO ROUTE AROUND OBSTACLES SHALL BE MADE WITH CONDUIT OUTLET BODIES. CONDUIT SHALL BE INSTALLED IN A NEAT AND WORKMANLIKE MANNER. PARALLEL AND PERPENDICULAR TO STRUCTURE WALL AND CEILING LINES. ALL CONDUIT SHALL BE FISHED TO CLEAR OBSTRUCTIONS. ENDS OF CONDUITS SHALL BE TEMPORARILY CAPPED FLUSH TO FINISH GRADE TO PREVENT CONCRETE, PLASTER OR DIRT FROM ENTERING. CONDUITS SHALL BE RIGIDLY CLAMPED TO BOXES BY GALVANIZED MALLEABLE IRON BUSHIN ON INSIDE AND GALVANIZED MALLEABLE IRON LOCKNUT ON OUTSIDE AND INSIDE.
23. EQUIPMENT CABINETS, TERMINAL BOXES, JUNCTION BOXES AND PULL BOXES SHALL BE GALVANIZED OR EPOXY-COATED SHEET STEEL; SHALL MEET OR EXCEED UL 50 AND RATED NEMA 1 (OR BETTER) INDOORS OR NEMA 3R (OR BETTER) OUTDOORS.
24. METAL RECEPTACLE, SWITCH AND DEVICE BOXES SHALL BE GALVANIZED, EPOXY-COATED OR NON-CORRODING; SHALL MEET OR EXCEED UL 514A AND NEMA OS 1; AND RATED NEMA 1 (OR BETTER) INDOORS OR WEATHER PROTECTED (WP OR BETTER) OUTDOORS.
25. NONMETALLIC RECEPTACLE, SWITCH AND DEVICE BOXES SHALL MEET OR EXCEED NEMA OS 2; AND RATED NEMA 1 (OR BETTER) INDOORS OR WEATHER PROTECTED (WP OR BETTER) OUTDOORS.
26. THE SUBCONTRACTOR SHALL NOTIFY AND OBTAIN NECESSARY AUTHORIZATION FROM THE CONTRACTOR BEFORE COMMENCING WORK ON THE AC POWER DISTRIBUTION PANELS.
27. THE SUBCONTRACTOR SHALL PROVIDE NECESSARY TAGGING ON THE BREAKERS, CABLES AND DISTRIBUTION PANELS IN ACCORDANCE WITH THE APPLICABLE CODES AND STANDARDS TO SAFEGUARD LIFE AND PROPERTY.
28. INSTALL PLASTIC LABEL ON THE METER CENTER TO SHOW "AT&T".
29. ALL CONDUITS THAT ARE INSTALLED ARE TO HAVE A METERED MULE TAPE PULL CORD INSTALLED.

GREENFIELD GROUNDING NOTES:

1. ALL GROUND ELECTRODE SYSTEMS (INCLUDING TELECOMMUNICATION, RADIO, LIGHTNING PROTECTION AND AC POWER GES'S) SHALL BE BONDED TOGETHER AT OR BELOW GRADE, BY TWO OR MORE COPPER BONDING CONDUCTORS IN ACCORDANCE WITH THE NEC.
2. THE SUBCONTRACTOR SHALL PERFORM IEEE FALL-OF-POTENTAL RESISTANCE TO EARTH TESTING (PER IEEE 1100 AND 81) FOR GROUND ELECTRODE SYSTEMS, THE SUBCONTRACTOR SHALL FURNISH AND INSTALL SUPPLEMENTAL GROUND ELECTRODES AS NEEDED TO ACHIEVE A TEST RESULT OF 5 OHMS OR LESS.
3. THE SUBCONTRACTOR IS RESPONSIBLE FOR PROPERLY SEQUENCING GROUNDING AND UNDERGROUND CONDUIT INSTALLATION AS TO PREVENT ANY LOSS OF CONTINUITY IN THE GROUNDING SYSTEM OR DAMAGE TO THE CONDUIT AND PROVIDE TESTING RESULTS.
4. METAL CONDUIT AND TRAY SHALL BE GROUNDED AND MADE ELECTRICALLY CONTINUOUS WITH LISTED BONDING FITTINGS OR BY BONDING ACROSS THE DISCONTINUITY WITH #6 AWG COPPER WIRE UL APPROVED GROUNDING TYPE CONDUIT CLAMPS.
5. METAL RACEWAY SHALL NOT BE USED AS THE NEC REQUIRED EQUIPMENT GROUND CONDUCTOR. STRANDED COPPER CONDUCTORS WITH GREEN INSULATION, SIZED IN ACCORDANCE WITH THE NEC, SHALL BE FURNISHED AND INSTALLED WITH THE POWER CIRCUITS TO BTS EQUIPMENT.
6. EACH CABINET FRAME SHALL BE DIRECTLY CONNECTED TO THE MASTER GROUND BAR WITH GREEN INSULATED SUPPLEMENTAL EQUIPMENT GROUND WIRES, 6 AWG STRANDED COPPER OR LARGER FOR INDOOR BTS; #2 AWG SOLID TINNED COPPER FOR OUTDOOR BTS.
7. CONNECTIONS TO THE GROUND BUS SHALL NOT BE DOUBLED UP OR STACKED BACK TO BACK CONNECTIONS ON OPPOSITE SIDE OF THE GROUND BUS ARE PERMITTED.
8. ALL EXTERIOR GROUND CONDUCTORS BETWEEN EQUIPMENT/GROUND BARS AND THE GROUND RING SHALL BE #2 AWG SOLID TINNED COPPER UNLESS OTHERWISE INDICATED.
9. ALUMINUM CONDUCTOR OR COPPER CLAD STEEL CONDUCTOR SHALL NOT BE USED FOR GROUNDING CONNECTIONS.
10. USE OF 90° BENDS IN THE PROTECTION GROUNDING CONDUCTORS SHALL BE AVOIDED WHEN 45° BENDS CAN BE ADEQUATELY SUPPORTED.
11. EXOTHERMIC WELDS SHALL BE USED FOR ALL GROUNDING CONNECTIONS BELOW GRADE.
12. ALL GROUND CONNECTIONS ABOVE GRADE (INTERIOR AND EXTERIOR) SHALL BE FORMED USING HIGH PRESS CRIMPS.
13. COMPRESSION GROUND CONNECTIONS MAY BE REPLACED BY EXOTHERMIC WELD CONNECTIONS.
14. ICE BRIDGE BONDING CONDUCTORS SHALL BE EXOTHERMICALLY BONDED OR BOLTED TO THE BRIDGE AND THE TOWER GROUND BAR.
15. APPROVED ANTIOXIDANT COATINGS (I.E. CONDUCTIVE GEL OR PASTE) SHALL BE USED ON ALL COMPRESSION AND BOLTED GROUND CONNECTIONS.
16. ALL EXTERIOR GROUND CONNECTIONS SHALL BE COATED WITH A CORROSION RESISTANT MATERIAL.
17. MISCELLANEOUS ELECTRICAL AND NON-ELECTRICAL METAL BOXES, FRAMES AND SUPPORTS SHALL BE BONDED TO THE GROUND RING, IN ACCORDANCE WITH THE NEC.
18. BOND ALL METALLIC OBJECTS WITHIN 6 FT. OF MAIN GROUND WIRES WITH 1-#2 AWG TIN-PLATED COPPER GROUND CONDUCTOR.
19. GROUND CONDUCTORS USED IN THE FACILITY GROUND AND LIGHTNING PROTECTION SYSTEMS SHALL NOT BE ROUTED THROUGH METALLIC OBJECTS THAT FORM A RING AROUND THE CONDUCTOR, SUCH AS METALLIC CONDUITS, METAL SUPPORT CLIPS OR SLEEVES THROUGH WALLS OR FLOORS. WHEN IT IS REQUIRED TO BE HOUSED IN CONDUIT TO MEET CODE REQUIREMENTS OR LOCAL CONDITIONS, NON-METALLIC MATERIAL SUCH AS PVC PLASTIC CONDUIT SHALL BE USED. WHERE USE OF METAL CONDUIT IS UNAVOIDABLE (E.G., NONMETALLIC CONDUIT PROHIBITED BY LOCAL CODE) THE GROUND CONDUCTOR SHALL BE BONDED TO EACH END OF THE METAL CONDUIT.
20. ALL GROUNDS THAT TRANSITION FROM BELOW GRADE TO ABOVE GRADE MUST BE #2 TINNED SOLID IN 3/4" LIQUID TIGHT CONDUIT FROM 24" BELOW GRADE TO WITHIN 3" TO 6" OF CAD-WELD TERMINATION POINT. THE EXPOSED END OF THE LIQUID TIGHT CONDUIT MUST BE SEALED WITH SILICONE CAULK. (ADD TRANSITIONING GROUND STANDARD DETAIL AS WELL).

NEC INSULATOR COLOR CODE

DESCRIPTION	PHASE/CODE LETTER	WIRE COLOR
240/120 1Ø	LEG 1	BLACK
	LEG 2	RED
AC NEUTRAL	N	WHITE
GROUND (EGC)	G	GREEN
VDC POS	+	*RED-POLARITY MARK AT TERMINATION
VDC NEG	–	*BLACK-POLARITY MARK AT TERMINATION
240V OR 208V, 3Ø	PHASE A	BLACK
	PHASE B	RED(ORG. IF HI LEG)
	PHASE C	BLUE
480V, 3Ø	PHASE A	BROWN
	PHASE B	ORANGE OR PURPLE
	PHASE C	YELLOW

* SEE NEC 210.5(C)(1) AND (2)

AT&T
ONE AT&T WAY
BEDMINSTER, NJ 07921

CROWN CASTLE
3200 HORIZON DRIVE, SUITE 150
KING OF PRUSSIA, PA 19406

B+T GRP
1717 S. BOULDER
SUITE 300
TULSA, OK 74119
PH: (918) 587-4630
www.btgrp.com

AT&T SITE NUMBER:
CTL05431

BU #: 842873
SHELTON NE

30 OLIVER TERRACE
SHELTON, CT 06484

EXISTING 140'-0"
MONOPOLE

ISSUED FOR:

REV	DATE	DRWN	DESCRIPTION	DES./QA
0	11/11/19	MLC	CONSTRUCTION	FWP
1	12/11/19	MLC	CONSTRUCTION	GEH

STATE OF CONNECTICUT * 31627 LICENSED PROFESSIONAL ENGINEER
12/11/19

B&T ENGINEERING, INC.
PEC.0001564
Expires 2/10/20

IT IS A VIOLATION OF LAW FOR ANY PERSON, UNLESS THEY ARE ACTING UNDER THE DIRECTION OF A LICENSED PROFESSIONAL ENGINEER, TO ALTER THIS DOCUMENT.

SHEET NUMBER: **T-2**
REVISION: **1**

139608_842873_Shelton NE_CDs.dwg – Sheet:T-2 – User: ghoyes – Dec 11, 2019 – 4:18pm

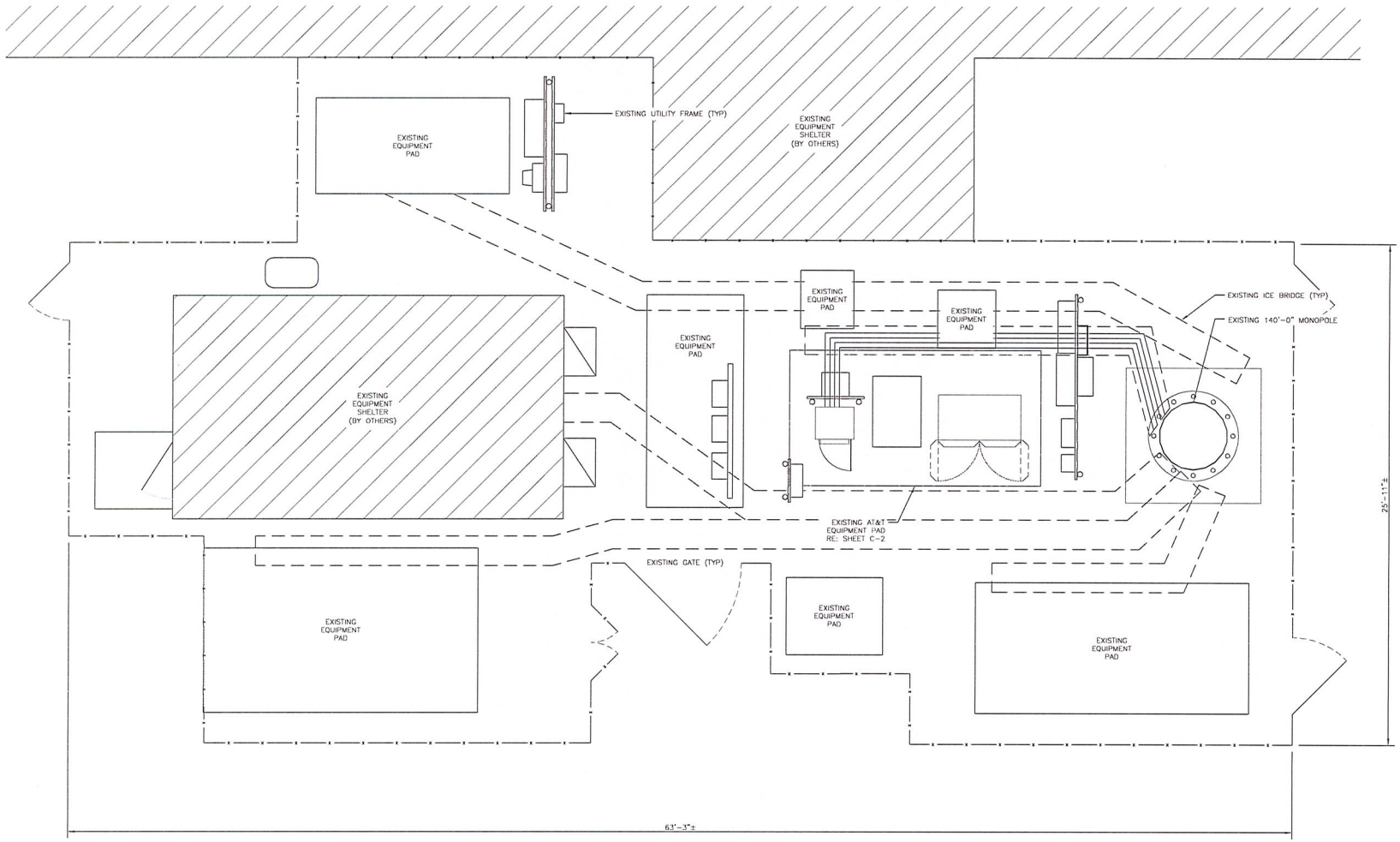

1 SITE PLAN
SCALE: 3/8"=1'-0" (FULL SIZE) 3/16"=1'-0" (11x17)

N

AT&T
ONE AT&T WAY
BEDMINSTER, NJ 07921

CROWN CASTLE
3200 HORIZON DRIVE, SUITE 150
KING OF PRUSSIA, PA 19406

B+T GRP
1717 S. BOULDER
SUITE 300
TULSA, OK 74119
PH: (918) 587-4630
www.btgrp.com

AT&T SITE NUMBER:
CTL05431

BU #: **842873**
SHELTON NE

30 OLIVER TERRACE
SHELTON, CT 06484

EXISTING 140'-0"
MONOPOLE

ISSUED FOR:

REV	DATE	DRWN	DESCRIPTION	DES./QA
0	11/11/19	MLC	CONSTRUCTION	FWP
1	12/11/19	MLC	CONSTRUCTION	GEH

STATE OF CONNECTICUT
SCOTT S. WICE
31627
LICENSED
PROFESSIONAL ENGINEER
12/11/19

B&T ENGINEERING, INC.
PEC.0001564
Expires 2/10/20

IT IS A VIOLATION OF LAW FOR ANY PERSON, UNLESS THEY ARE ACTING UNDER THE DIRECTION OF A LICENSED PROFESSIONAL ENGINEER, TO ALTER THIS DOCUMENT

SHEET NUMBER: C-1
REVISION: 1

139608_842873_Shelton NE_CDs.dwg - Sheet:C-1 - User: ghayes - Dec 11, 2019 - 4:18pm

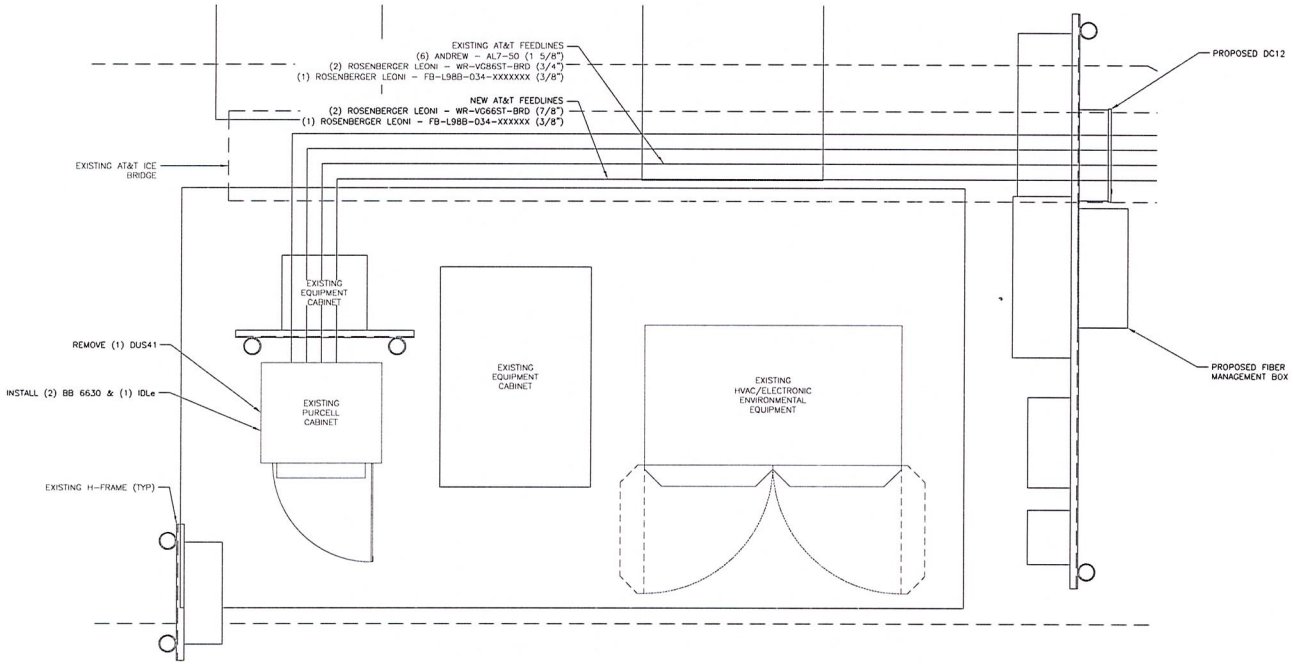

1 EXISTING EQUIPMENT PLAN
SCALE: 1' 6" 0 1' 3/4"=1'-0" (FULL SIZE) 3/8"=1'-0" (11x17)

N

AT&T
ONE AT&T WAY
BEDMINSTER, NJ 07921

CROWN CASTLE
3200 HORIZON DRIVE, SUITE 150
KING OF PRUSSIA, PA 19406

B+T GRP
1717 S. BOULDER
SUITE 300
TULSA, OK 74119
PH: (918) 587-4630
www.btgrp.com

AT&T SITE NUMBER:
CTL05431

BU #: **842873**
SHELTON NE

30 OLIVER TERRACE
SHELTON, CT 06484

EXISTING 140'-0"
MONOPOLE

ISSUED FOR:

REV	DATE	DRWN	DESCRIPTION	DES./QA
0	11/11/19	MLC	CONSTRUCTION	FWP
1	12/11/19	MLC	CONSTRUCTION	GEH

STATE OF CONNECTICUT
31627
LICENSED
PROFESSIONAL ENGINEER
12/11/19

B&T ENGINEERING, INC.
PEC.0001564
Expires 2/10/20

IT IS A VIOLATION OF LAW FOR ANY PERSON, UNLESS THEY ARE ACTING UNDER THE DIRECTION OF A LICENSED PROFESSIONAL ENGINEER, TO ALTER THIS DOCUMENT

SHEET NUMBER: C-2
REVISION: 1

139608_842873_Shelton NE_CDs.dwg - Sheet C-2 - User: ghayes - Dec 11, 2019 - 4:19pm

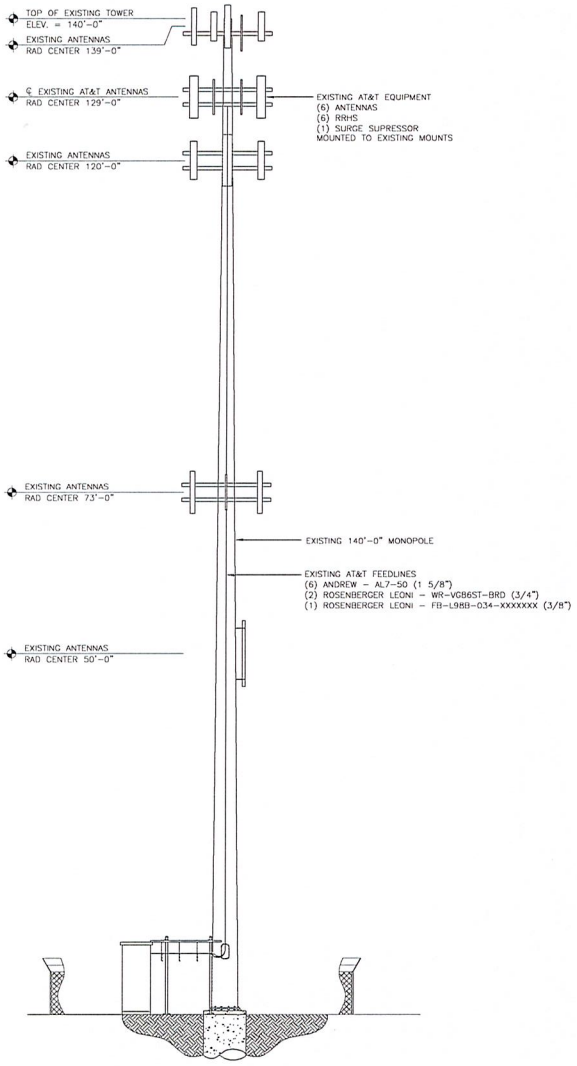

1 EXISTING ELEVATION
SCALE: NOT TO SCALE

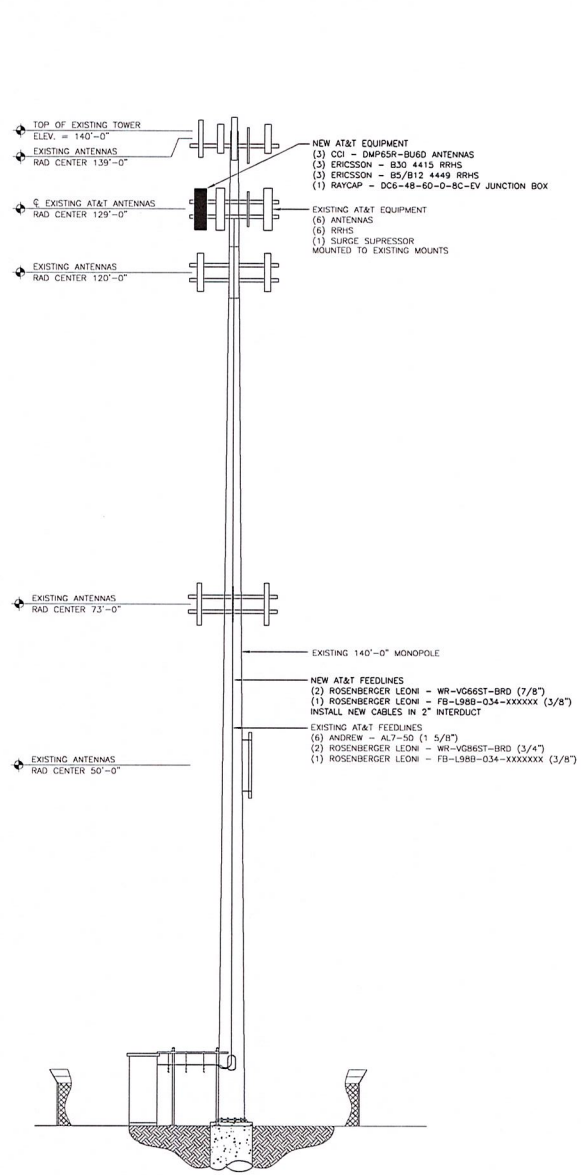

2 FINAL ELEVATION
SCALE: NOT TO SCALE

AT&T
ONE AT&T WAY
BEDMINSTER, NJ 07921

CROWN CASTLE
3200 HORIZON DRIVE, SUITE 150
KING OF PRUSSIA, PA 19406

B+T GRP
1717 S. BOULDER
SUITE 300
TULSA, OK 74119
PH: (918) 587-4630
www.btgrp.com

AT&T SITE NUMBER:
CTL05431

BU #: **842873**
SHELTON NE

30 OLIVER TERRACE
SHELTON, CT 06484

EXISTING 140'-0"
MONOPOLE

ISSUED FOR:

REV	DATE	DRWN	DESCRIPTION	DES./QA
0	11/11/19	MLC	CONSTRUCTION	FWP
1	12/11/19	MLC	CONSTRUCTION	GEH

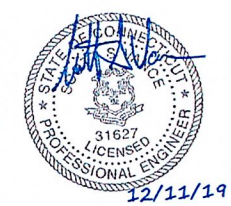

B&T ENGINEERING, INC.
PEC.0001564
Expires 2/10/20

IT IS A VIOLATION OF LAW FOR ANY PERSON, UNLESS THEY ARE ACTING UNDER THE DIRECTION OF A LICENSED PROFESSIONAL ENGINEER, TO ALTER THIS DOCUMENT.

SHEET NUMBER: C-3
REVISION: 1

139608_842873_Shelton NE_CDs.dwg - SheetC-3 - User: ghayes - Dec 11, 2019 - 4:19pm

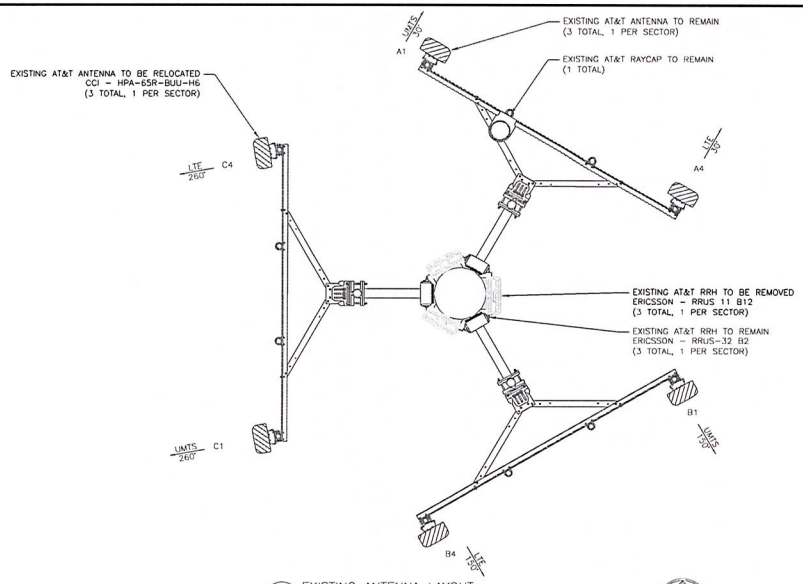

1 EXISTING ANTENNA LAYOUT
SCALE: NOT TO SCALE

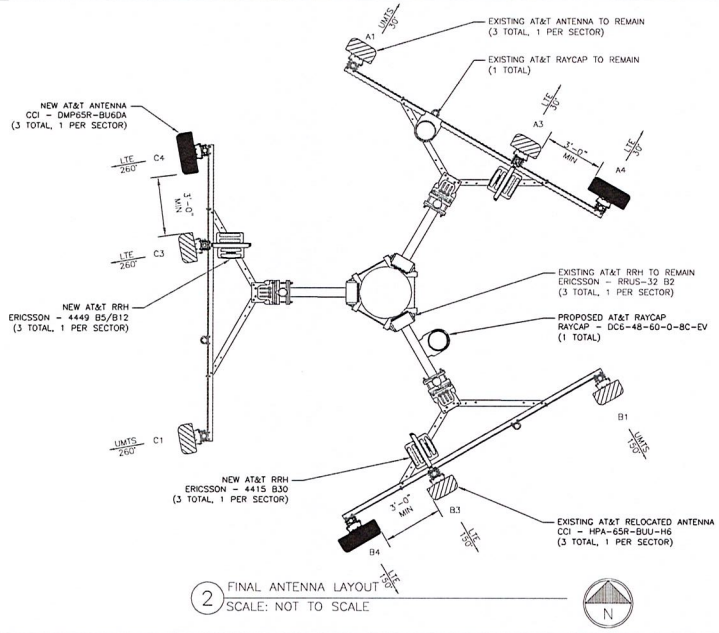

2 FINAL ANTENNA LAYOUT
SCALE: NOT TO SCALE

AT&T
ONE AT&T WAY
BEDMINSTER, NJ 07921

CROWN CASTLE
3200 HORIZON DRIVE, SUITE 150
KING OF PRUSSIA, PA 19406

B+T GRP
1717 S. BOULDER
SUITE 300
TULSA, OK 74119
PH: (918) 587-4630
www.btgrp.com

AT&T SITE NUMBER:
CTL05431

BU #: **842873**
SHELTON NE

30 OLIVER TERRACE
SHELTON, CT 06484

EXISTING 140'-0"
MONOPOLE

ISSUED FOR:

REV	DATE	DRWN	DESCRIPTION	DES./QA
0	11/11/19	MLC	CONSTRUCTION	FWP
1	12/11/19	MLC	CONSTRUCTION	GEH

STATE OF CONNECTICUT
31627
LICENSED
PROFESSIONAL ENGINEER
12/11/19

B&T ENGINEERING, INC.
PEC.0001564
Expires 2/10/20

IT IS A VIOLATION OF LAW FOR ANY PERSON, UNLESS THEY ARE ACTING UNDER THE DIRECTION OF A LICENSED PROFESSIONAL ENGINEER, TO ALTER THIS DOCUMENT

SHEET NUMBER: C-4
REVISION: 1

139506_842873_Shelton NE_CDs.dwg - SheetC-4 - User: ghajes - Dec 11, 2019 - 4:19pm

FINAL ANTENNA AND COAXIAL CABLE SCHEDULE

POS.	TECH	STATUS	AZIMUTH	ANTENNA TYPE	ANTENNA RAD CENTER	MECHANICAL DOWNTILT	ELECTRICAL DOWNTILT	MAIN COAX SIZE	MAIN COAX LENGTH	COAX QTY	TMA QTY AND MODEL	RAYCAP	DC (WR-VG86ST-BRD) FIBER CABLES (FB-L98B-034-XXXXXX)	RRHs QTY ON TOWER	RRHs ON GROUND	DIPLEXER ON TOWER	DIPLEXER ON GROUND	RET CABLE
ALPHA SECTOR																		
A1	UMTS	EXISTING	30°	CCI HPA-65R-BUU-H6	129'-0"	0°	2°	1 5/8"	179'-0"	2	–	(1) DC6-48-60-18-8F (1) DC6-48-60-0-8C-EV	(2) FIBER (4) DC LINES	–	–	–	–	Y
–	–	–	–	–	–	–	–	–	–	–	–			–	–	–	–	–
A3	LTE	EXISTING	30°	CCI HPA-65R-BUU-H6	129'-0"	0°	4°	–	–	–	–			(1) RRUS-32 B2	–	–	–	Y
A4	LTE	NEW	30°	CCI DMP65R-BU8DA	129'-0"	0°	2°/3°/2°/2°	–	–	–	–			(1) 4449 B5/B12 (1) 4415 B30	–	–	–	Y
BETA SECTOR																		
B1	UMTS	EXISTING	150°	CCI HPA-65R-BUU-H6	129'-0"	0°	2°	–	–	–	–	–	–	–	–	–	–	Y
–	–	–	–	–	–	–	–	–	–	–	–			–	–	–	–	–
B3	LTE	EXISTING	150°	CCI HPA-65R-BUU-H6	129'-0"	0°	4°	1 5/8"	179'-0"	2	–			(1) RRUS-32 B2	–	–	–	Y
B4	LTE	NEW	150°	CCI DMP65R-BU8DA	129'-0"	0°	2°/3°/2°/2°	–	–	–	–			(1) 4449 B5/B12 (1) 4415 B30	–	–	–	Y
GAMMA SECTOR																		
C1	UMTS	EXISTING	260°	CCI HPA-65R-BUU-H6	129'-0"	0°	2°	–	–	–	–	–	–	–	–	–	–	Y
–	–	–	–	–	–	–	–	–	–	–	–			–	–	–	–	–
C3	LTE	EXISTING	260°	CCI HPA-65R-BUU-H6	129'-0"	0°	4°	1 5/8"	179'-0"	2	–			(1) RRUS-32 B2	–	–	–	Y
C4	LTE	NEW	260°	CCI DMP65R-BU8DA	129'-0"	0°	2°/3°/2°/2°	–	–	–	–			(1) 4449 B5/B12 (1) 4415 B30	–	–	–	Y

NOTE: BOLD DENOTES NEW EQUIPMENT

1 FINAL ANTENNA AND COAXIAL CABLE SCHEDULE
SCALE: NOT TO SCALE

AT&T
ONE AT&T WAY
BEDMINSTER, NJ 07921

CROWN CASTLE
3200 HORIZON DRIVE, SUITE 150
KING OF PRUSSIA, PA 19406

B+T GRP
1717 S. BOULDER
SUITE 300
TULSA, OK 74119
PH: (918) 587-4630
www.btgrp.com

AT&T SITE NUMBER:
CTL05431

BU #: **842873**
SHELTON NE

30 OLIVER TERRACE
SHELTON, CT 06484

EXISTING 140'-0"
MONOPOLE

ISSUED FOR:

REV	DATE	DRWN	DESCRIPTION	DES./QA
0	11/11/19	MLC	CONSTRUCTION	FWP
1	12/11/19	MLC	CONSTRUCTION	GEH

STATE OF CONNECTICUT
31627
LICENSED
PROFESSIONAL ENGINEER
12/11/19

B&T ENGINEERING, INC.
PEC.0001564
Expires 2/10/20

IT IS A VIOLATION OF LAW FOR ANY PERSON, UNLESS THEY ARE ACTING UNDER THE DIRECTION OF A LICENSED PROFESSIONAL ENGINEER, TO ALTER THIS DOCUMENT.

SHEET NUMBER: C-5
REVISION: 1

139608_842873_Shelton NE_CDs.dwg - Sheet C-5 - User: ghayes - Dec 11, 2019 - 4:19pm

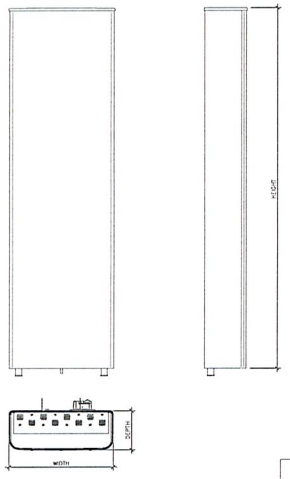

ANTENNA SPECS	
MANUFACTURER	CCI
MODEL #	DMP65R-BU6D
WIDTH	20.7"
DEPTH	7.7"
HEIGHT	71.2"
WEIGHT	79.4 LBS

1 ANTENNA DETAIL
SCALE: NOT TO SCALE

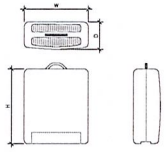

RRH SPECIFICATIONS	
MANUFACTURER	ERICSSON
MODEL #	4449 B5/B12
WIDTH	13.2"
DEPTH	9.4"
HEIGHT	17.9"
WEIGHT	71 LBS

2 RRH DETAIL
SCALE: NOT TO SCALE

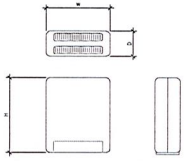

RRH SPECIFICATIONS	
MANUFACTURER	ERICSSON
MODEL #	4415 B30
WIDTH	13.2"
DEPTH	5.0"
HEIGHT	14.9"
WEIGHT	42.9 LBS

3 RRH DETAIL
SCALE: NOT TO SCALE

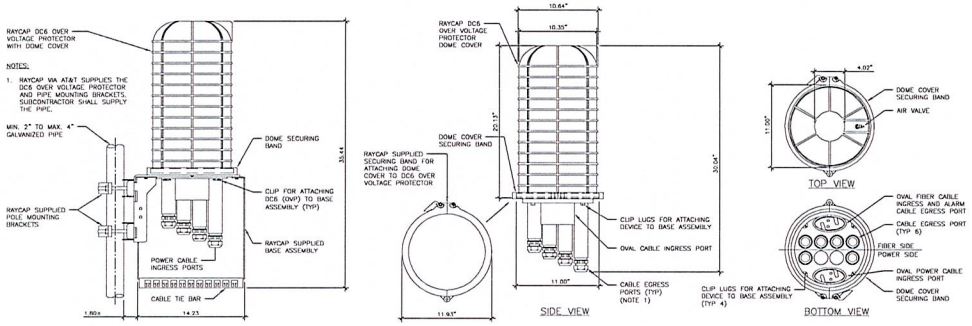

4 RAYCAP SPECIFICATIONS
SCALE: NOT TO SCALE

AT&T
ONE AT&T WAY
BEDMINSTER, NJ 07921

CROWN CASTLE
3200 HORIZON DRIVE, SUITE 150
KING OF PRUSSIA, PA 19406

B+T GRP
1717 S. BOULDER
SUITE 300
TULSA, OK 74119
PH: (918) 587-4630
www.btgrp.com

AT&T SITE NUMBER:
CTL05431

BU #: **842873**
SHELTON NE

30 OLIVER TERRACE
SHELTON, CT 06484

EXISTING 140'-0"
MONOPOLE

ISSUED FOR:

REV	DATE	DRWN	DESCRIPTION	DES./QA
0	11/11/19	MLC	CONSTRUCTION	FWP
1	12/11/19	MLC	CONSTRUCTION	GEH

12/11/19

B&T ENGINEERING, INC.
PEC.0001564
Expires 2/10/20

IT IS A VIOLATION OF LAW FOR ANY PERSON, UNLESS THEY ARE ACTING UNDER THE DIRECTION OF A LICENSED PROFESSIONAL ENGINEER, TO ALTER THIS DOCUMENT.

SHEET NUMBER: C-6
REVISION: 1

139608_842873_Shelton NE_CD2.dwg - SheetC-6 - User: ghayes - Dec 11, 2019 - 4:19pm

NOTES:

1. UNIT SHALL BE MOUNTED AS PER MANUFACTURER'S RECOMMENDATIONS.

2. CONTRACTOR SHALL TIGHTEN ALL BOLTS TO A "SNUG TIGHT" CONDITION AS DEFINED BY AISC.

3. CONTRACTOR SHALL INSTALL RAYCAP DISTRIBUTION UNIT WITHIN 15 FEET FROM ALL RRHS.

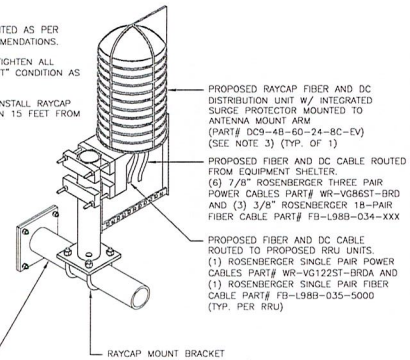

1 RAYCAP MOUNTING DETAIL
SCALE: NOT TO SCALE

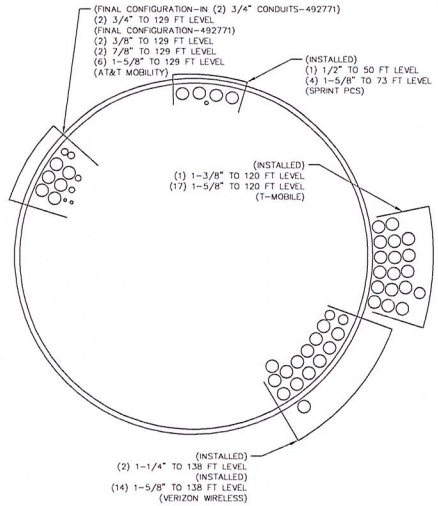

2 BASE LEVEL DRAWING
SCALE: NOT TO SCALE

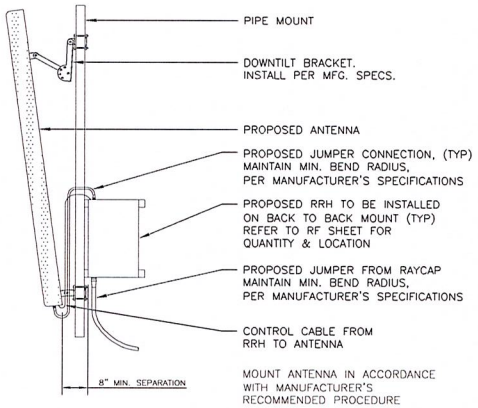

MOUNT ANTENNA IN ACCORDANCE WITH MANUFACTURER'S RECOMMENDED PROCEDURE

3 ANTENNA MOUNTING DETAIL
SCALE: NOT TO SCALE

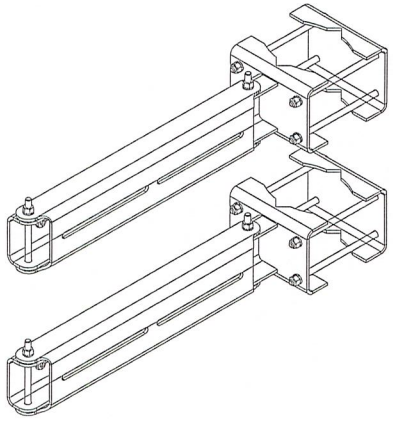

4 VALMONT - RRUDSM BACK-TO-BACK BRACKET
SCALE: NOT TO SCALE

NOTE:

COMPLY WITH MANUFACTURERS INSTRUCTIONS TO ENSURE THAT ALL RRH'S RECEIVE ELECTRICAL POWER WITHIN 24 HOURS OF BEING REMOVED FROM THE MANUFACTURER'S PACKAGING. DO NOT OPEN RRH PACKAGES IN THE RAIN.

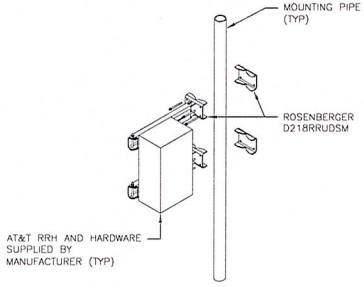

5 RRH DUAL BRACKET MOUNT DETAIL
SCALE: NOT TO SCALE

AT&T
ONE AT&T WAY
BEDMINSTER, NJ 07921

CROWN CASTLE
3200 HORIZON DRIVE, SUITE 150
KING OF PRUSSIA, PA 19406

B+T GRP
1717 S. BOULDER
SUITE 300
TULSA, OK 74119
PH: (918) 587-4630
www.btgrp.com

AT&T SITE NUMBER:
CTL05431

BU #: **842873**
SHELTON NE

30 OLIVER TERRACE
SHELTON, CT 06484

EXISTING 140'-0"
MONOPOLE

ISSUED FOR:

REV	DATE	DRWN	DESCRIPTION	DES./QA
0	11/11/19	MLC	CONSTRUCTION	FWP
1	12/11/19	MLC	CONSTRUCTION	GFH

STATE OF CONNECTICUT
31627
LICENSED
PROFESSIONAL ENGINEER
12/11/19

B&T ENGINEERING, INC.
PEC.0001564
Expires 2/10/20

IT IS A VIOLATION OF LAW FOR ANY PERSON, UNLESS THEY ARE ACTING UNDER THE DIRECTION OF A LICENSED PROFESSIONAL ENGINEER, TO ALTER THIS DOCUMENT.

SHEET NUMBER: C-7
REVISION: 1

139508_842873_Shelton NE_CDs.dwg - SheetC-7 - User: gh5v68 - Dec 11, 2019 - 4:18pm

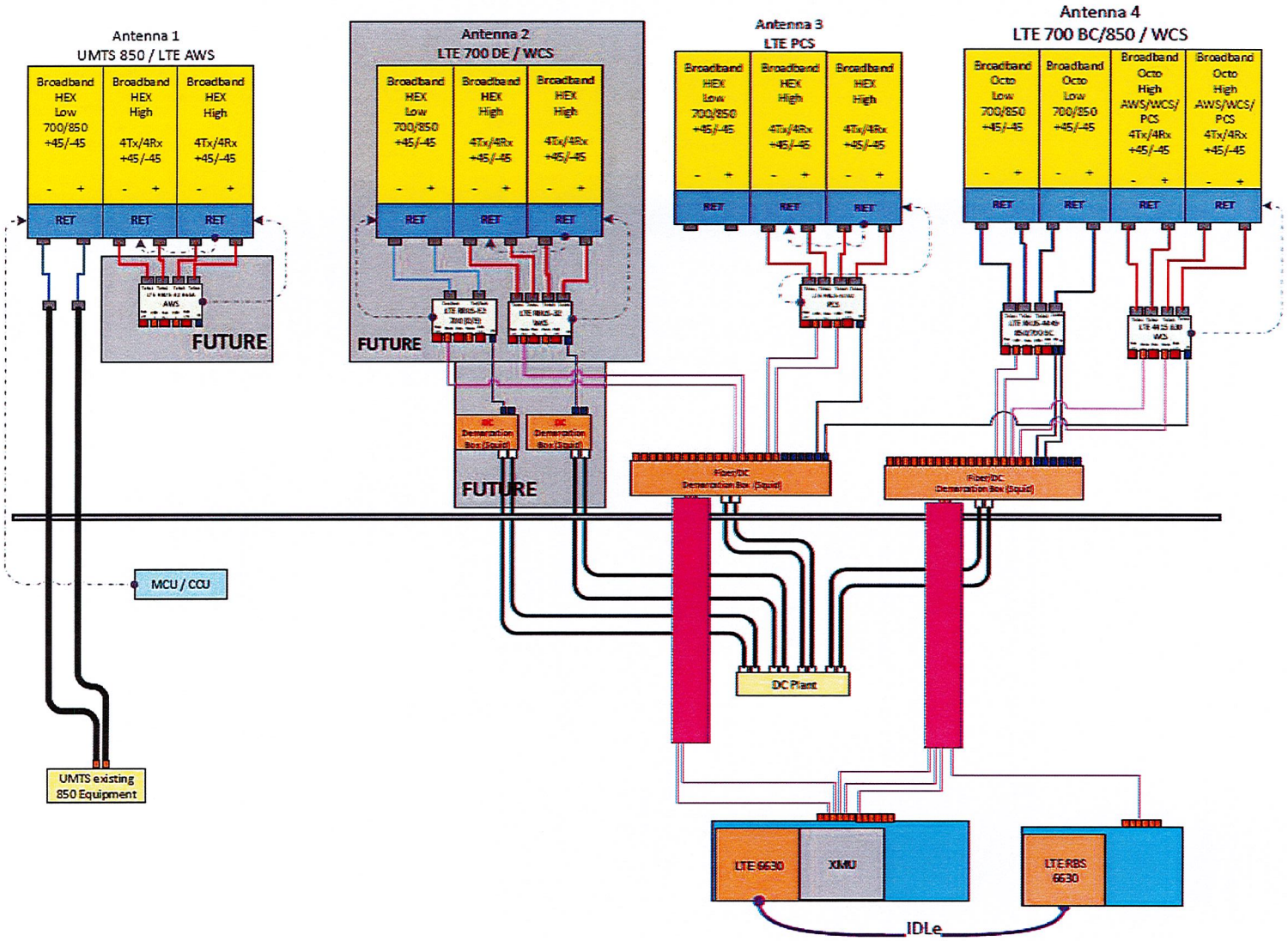

1 PLUMBING DIAGRAM
SCALE: NOT TO SCALE

AT&T
ONE AT&T WAY
BEDMINSTER, NJ 07921

CROWN CASTLE
3200 HORIZON DRIVE, SUITE 150
KING OF PRUSSIA, PA 19406

B+T GRP
1717 S. BOULDER
SUITE 300
TULSA, OK 74119
PH: (918) 587-4630
www.btgrp.com

AT&T SITE NUMBER:
CTL05431

BU #: **842873**
SHELTON NE

30 OLIVER TERRACE
SHELTON, CT 06484

EXISTING 140'-0"
MONOPOLE

ISSUED FOR:

REV	DATE	DRWN	DESCRIPTION	DES./QA
0	11/11/19	MLC	CONSTRUCTION	FWP
1	12/11/19	MLC	CONSTRUCTION	GEH

STATE OF CONNECTICUT
31627
LICENSED
PROFESSIONAL ENGINEER
12/11/19

B&T ENGINEERING, INC.
PEC.0001564
Expires 2/10/20

IT IS A VIOLATION OF LAW FOR ANY PERSON, UNLESS THEY ARE ACTING UNDER THE DIRECTION OF A LICENSED PROFESSIONAL ENGINEER, TO ALTER THIS DOCUMENT.

SHEET NUMBER: C-8
REVISION: 1

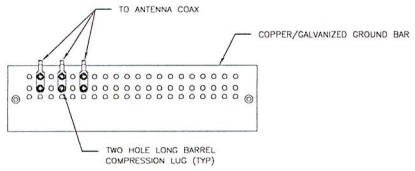

NOTES:

1. DOUBLING UP "OR STACKING" OF CONNECTIONS IS NOT PERMITTED.
2. EXTERIOR ANTIOXIDANT JOINT COMPOUND TO BE USED ON ALL EXTERIOR CONNECTIONS.
3. GROUND BAR SHALL NOT BE ISOLATED FROM TOWER. MOUNT DIRECTLY TO TOWER STEEL.

1 ANTENNA GROUND BAR DETAIL
SCALE: NOT TO SCALE

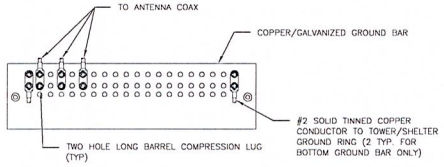

NOTES:

1. EXTERIOR ANTIOXIDANT JOINT COMPOUND TO BE USED ON ALL EXTERIOR CONNECTIONS.
2. GROUND BAR SHALL NOT BE ISOLATED FROM TOWER. MOUNT DIRECTLY TO TOWER STEEL (TOWER ONLY).
3. GROUND BAR SHALL BE ISOLATED FROM BUILDING OR SHELTER.

2 TOWER/SHELTER GROUND BAR DETAIL
SCALE: NOT TO SCALE

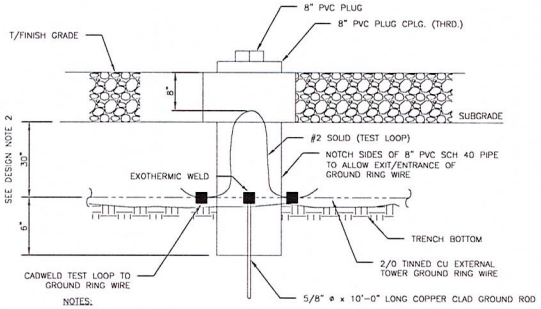

NOTES:

1. GROUND ROD SHALL BE DRIVEN VERTICALLY, NOT TO EXCEED 45 DEGREES FROM THE VERTICAL.
2. GROUND WIRE SHALL BE MIN. 30" BELOW GRADE OR 6" BELOW FROST LINE. (WHICH EVER IS GREATER) AS PER N.E.C. ARTICLE 250-50(D)

3 INSPECTION WELL DETAIL
SCALE: NOT TO SCALE

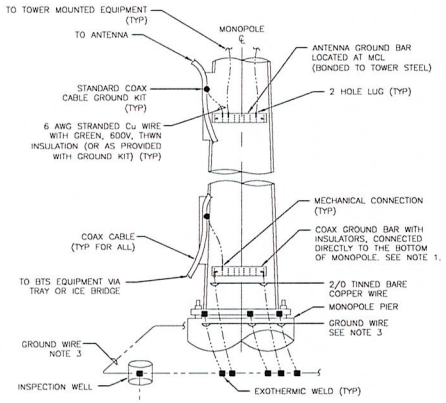

NOTES:

1. NUMBER OF GROUNDING BARS MAY VARY DEPENDING ON THE TYPE OF TOWER, ANTENNA LOCATIONS AND CONNECTION ORIENTATION. COAXIAL CABLES EXCEEDING 200 FEET ON THE TOWER SHALL HAVE GROUND KITS AT THE MIDPOINT. PROVIDE AS REQUIRED.
2. ONLY MECHANICAL CONNECTIONS ARE ALLOWED TO BE MADE TO CROWN CASTLE USA INC. TOWERS. ALL MECHANICAL CONNECTIONS SHALL BE TREATED WITH AN ANTI-OXIDANT COATING.
3. ALL TOWER GROUNDING SYSTEMS SHALL COMPLY WITH THE REQUIREMENTS OF THE RECOGNIZED EDITION OF ANSI/TIA 222 AND NFPA 780.

4 TYPICAL ANTENNA CABLE GROUNDING
SCALE: NOT TO SCALE

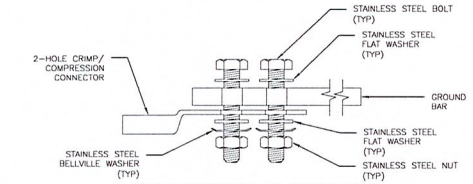

SINGLE CONNECTOR AT GROUND BARS

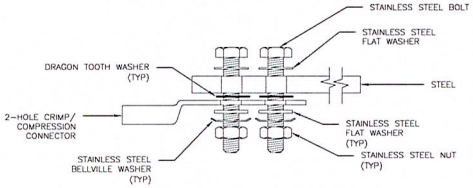

SINGLE CONNECTOR AT STEEL OBJECTS

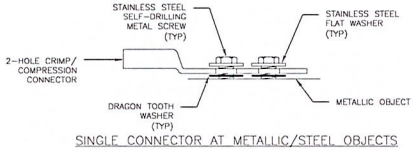

SINGLE CONNECTOR AT METALLIC/STEEL OBJECTS

5 HARDWARE DETAIL FOR EXTERIOR CONNECTIONS
SCALE: NOT TO SCALE

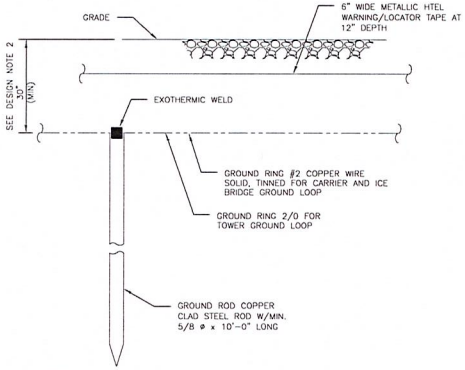

NOTES:

1. GROUND ROD SHALL BE DRIVEN VERTICALLY, NOT TO EXCEED 45 DEGREES FROM THE VERTICAL.
2. GROUND WIRE SHALL BE MIN. 30" BELOW GRADE OR 6" BELOW FROST LINE. (WHICH EVER IS GREATER) AS PER N.E.C. ARTICLE 250-50(D)

6 GROUND ROD DETAIL
SCALE: NOT TO SCALE

AT&T
ONE AT&T WAY
BEDMINSTER, NJ 07921

CROWN CASTLE
3200 HORIZON DRIVE, SUITE 150
KING OF PRUSSIA, PA 19406

B+T GRP
1717 S. BOULDER
SUITE 300
TULSA, OK 74119
PH: (918) 587-4630
www.btgrp.com

AT&T SITE NUMBER:
CTL05431

BU #: **842873**
SHELTON NE

30 OLIVER TERRACE
SHELTON, CT 06484

EXISTING 140'-0"
MONOPOLE

ISSUED FOR:

REV	DATE	DRWN	DESCRIPTION	DES./QA
0	11/11/19	MLC	CONSTRUCTION	FWP
1	12/11/19	MLC	CONSTRUCTION	GEH

STATE OF CONNECTICUT
31627
LICENSED
PROFESSIONAL ENGINEER
12/11/19

B&T ENGINEERING, INC.
PEC.0001564
Expires 2/10/20

IT IS A VIOLATION OF LAW FOR ANY PERSON, UNLESS THEY ARE ACTING UNDER THE DIRECTION OF A LICENSED PROFESSIONAL ENGINEER, TO ALTER THIS DOCUMENT.

SHEET NUMBER: G-1
REVISION: 1

139808_842873_Shelton NE_Cbs.dwg - SheetG-1 - User:gbyles - Dec 11, 2019 - 4:19pm

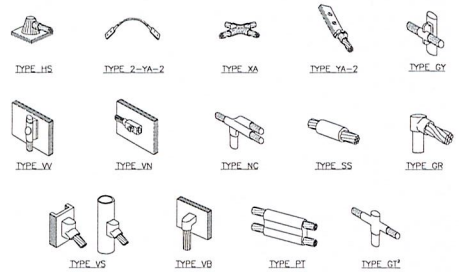

NOTE:

1. ERICO EXOTHERMIC "MOLD TYPES" SHOWN HERE ARE EXAMPLES. CONSULT WITH CONSTRUCTION MANAGER FOR SPECIFIC MOLDS TO BE USED FOR THIS PROJECT.
2. MOLD TYPE ONLY TO BE USED BELOW GRADE WHEN CONNECTING GROUND RING TO GROUND ROD.

1 CADWELD GROUNDING CONNECTIONS
SCALE: NOT TO SCALE

WIRE SIZE	BURNDY LUG	BOLT SIZE
#6 AWG GREEN INSULATED	YA6C-2TC38	3/8" - 16 NC S 2 BOLT
#2 AWG SOLID TINNED	YA3C-2TC38	3/8" - 16 NC S 2 BOLT
#2 AWG STRANDED	YA2C-2TC38	3/8" - 16 NC S 2 BOLT
#2/0 AWG STRANDED	YA26-2TC38	3/8" - 16 NC S 2 BOLT
#4/0 AWG STRANDED	YA28-2N	1/2" - 16 NC S 2 BOLT

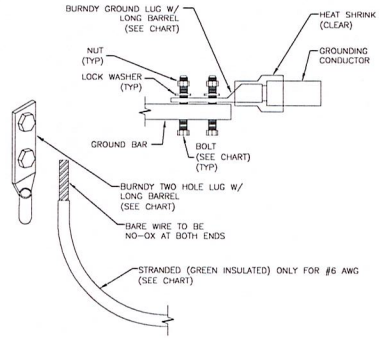

NOTES:

1. ALL GROUNDING LUGS ARE TO BE INSTALLED PER MANUFACTURER'S SPECIFICATIONS. ALL HARDWARE BOLTS, NUTS, LOCK WASHERS SHALL BE STAINLESS STEEL. ALL HARDWARE ARE TO BE AS FOLLOWS: BOLT, FLAT WASHER,GROUND BAR, GROUND LUG, FLAT WASHER AND NUT.

2 MECHANICAL LUG CONNECTION
SCALE: NOT TO SCALE

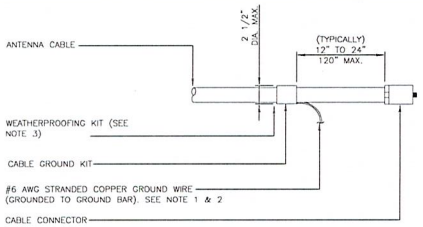

NOTES:

1. DO NOT INSTALL CABLE GROUND KIT AT A BEND AND ALWAYS DIRECT GROUND WIRE DOWN TO GROUND BAR.
2. GROUNDING KIT SHALL BE TYPE AND PART NUMBER AS SUPPLIED OR RECOMMENDED BY CABLE MANUFACTURER.
3. WEATHER PROOFING SHALL BE TWO-PART TAPE KIT, COLD SHRINK SHALL NOT BE USED.

3 CABLE GROUND KIT CONNECTION
SCALE: NOT TO SCALE

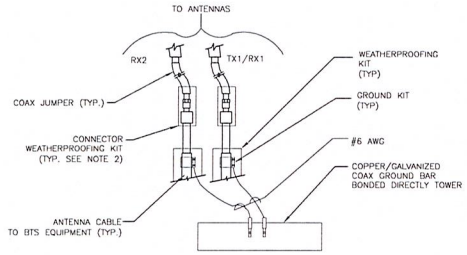

NOTES:

1. DO NOT INSTALL CABLE GROUND KIT AT A BEND AND ALWAYS DIRECT GROUND WIRE DOWN TO ANTENNA GROUND BAR.
2. WEATHER PROOFING SHALL BE TWO-PART TAPE KIT. COLD SHRINK SHALL NOT BE USED.

4 GROUND CABLE CONNECTION
SCALE: NOT TO SCALE

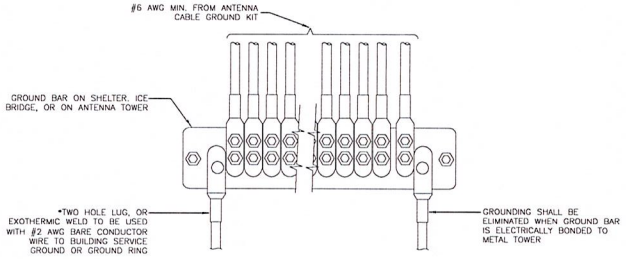

5 GROUNDWIRE INSTALLATION
SCALE: NOT TO SCALE

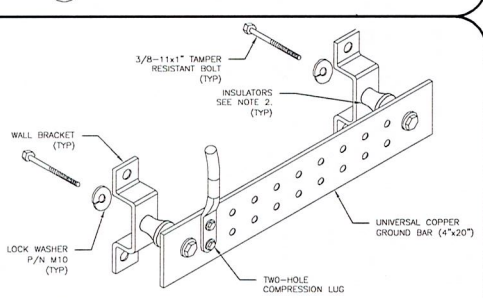

NOTES:

1. DOWN LEAD (HOME RUN) CONDUCTORS ARE NOT TO BE INSTALLED ON CROWN CASTLE USA INC. TOWER, PER THE GROUNDING DOWN CONDUCTOR POLICY QAS-STD-10091. NO MODIFICATION OR DRILLING TO TOWER STEEL IS ALLOWED IN ANY FORM OR FASHION, CAD-WELDING ON THE TOWER AND/OR IN THE AIR ARE NOT PERMITTED.
2. OMIT INSULATOR WHEN MOUNTING TO TOWER STEEL OR PLATFORM STEEL USE INSULATORS WHEN ATTACHING TO BUILDING OR SHELTERS.

6 GROUND BAR DETAIL
SCALE: NOT TO SCALE

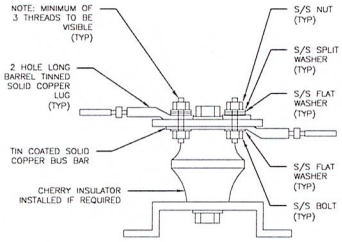

7 LUG DETAIL
SCALE: NOT TO SCALE

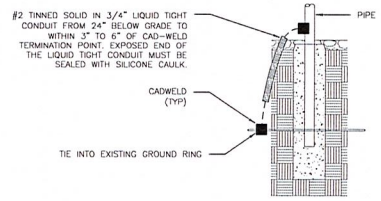

8 TRANSITIONING GROUND DETAIL
SCALE: NOT TO SCALE

AT&T
ONE AT&T WAY
BEDMINSTER, NJ 07921

CROWN CASTLE
3200 HORIZON DRIVE, SUITE 150
KING OF PRUSSIA, PA 19406

B+T GRP
1717 S. BOULDER
SUITE 300
TULSA, OK 74119
PH: (918) 587-4630
www.btgrp.com

AT&T SITE NUMBER:
CTL05431

BU #: **842873**
SHELTON NE

30 OLIVER TERRACE
SHELTON, CT 06484

EXISTING 140'-0"
MONOPOLE

ISSUED FOR:

REV	DATE	DRWN	DESCRIPTION	DES./QA
0	11/11/19	MLC	CONSTRUCTION	FWP
1	12/11/19	MLC	CONSTRUCTION	GEH

STATE OF CONNECTICUT
31627
LICENSED
PROFESSIONAL ENGINEER
12/11/19

B&T ENGINEERING, INC.
PEC.0001564
Expires 2/10/20

IT IS A VIOLATION OF LAW FOR ANY PERSON, UNLESS THEY ARE ACTING UNDER THE DIRECTION OF A LICENSED PROFESSIONAL ENGINEER, TO ALTER THIS DOCUMENT.

SHEET NUMBER: G-2
REVISION: 1

139568_842873_Shelton NE_CD2.dwg - Sheet:G-2 - User:phuas - Dec 11, 2019 - 4:13pm

Exhibit D

Structural Analysis Report

Date: **October 16, 2019**

Chanhdara Ratsavong
Crown Castle
3530 Toringdon Way
Charlotte, NC 28277

Crown Castle
2000 Corporate Drive
Canonsburg, PA 15317
(724) 416-2000

Subject:	**Structural Analysis Report**	
Carrier Designation:	***AT&T Mobility* Co-Locate**	
	Carrier Site Number:	CTL05431
	Carrier Site Name:	SHELTON NE
Crown Castle Designation:	**Crown Castle BU Number:**	842873
	Crown Castle Site Name:	SHELTON NE
	Crown Castle JDE Job Number:	574647
	Crown Castle Work Order Number:	1800857
	Crown Castle Order Number:	492771 Rev. 0
Engineering Firm Designation:	**Crown Castle Project Number:**	1800857
Site Data:	**30 Oliver Terrace, SHELTON, Fairfield County, CT**	
	Latitude *41° 17' 38.21"*, Longitude *-73° 6' 25.83"*	
	140 Foot - Monopole Tower	

Dear Chanhdara Ratsavong,

Crown Castle is pleased to submit this **"Structural Analysis Report"** to determine the structural integrity of the above-mentioned tower.

The purpose of the analysis is to determine acceptability of the tower stress level. Based on our analysis we have determined the tower stress level for the structure and foundation, under the following load case, to be:

LC5: Proposed Equipment Configuration **Sufficient Capacity**

This analysis utilizes an ultimate 3-second gust wind speed of 125 mph as required by the 2018 Connecticut Building Code. Applicable Standard references and design criteria are listed in Section 2 - Analysis Criteria.

Structural analysis prepared by: Nicholas Cvetic, E.I.T. / BMR

Respectfully submitted by:

Maham Barimani, P.E.
Senior Project Engineer

STATE OF CONNECTICUT
MAHAM BARIMANI
30501
LICENSED
PROFESSIONAL ENGINEER

Oct 18 2019 11:34 AM

TABLE OF CONTENTS

1) INTRODUCTION

2) ANALYSIS CRITERIA
- Table 1 - Proposed Equipment Configuration
- Table 2 - Other Considered Equipment

3) ANALYSIS PROCEDURE
- Table 3 - Documents Provided
- 3.1) Analysis Method
- 3.2) Assumptions

4) ANALYSIS RESULTS
- Table 4 - Section Capacity (Summary)
- Table 5 - Tower Component Stresses vs. Capacity - LC5
- 4.1) Recommendations

5) APPENDIX A
- tnxTower Output

6) APPENDIX B
- Base Level Drawing

7) APPENDIX C
- Additional Calculations

1) INTRODUCTION

This tower is a 140 ft monopole tower designed by FWT Inc.

The tower has been modified multiple times to accommodate additional loading.

2) ANALYSIS CRITERIA

TIA-222 Revision:	TIA-222-H
Risk Category:	II
Wind Speed:	125 mph
Exposure Category:	B
Topographic Factor:	1
Ice Thickness:	1.5 in
Wind Speed with Ice:	50 mph
Service Wind Speed:	60 mph

Table 1 - Proposed Equipment Configuration

Mounting Level (ft)	Center Line Elevation (ft)	Number of Antennas	Antenna Manufacturer	Antenna Model	Number of Feed Lines	Feed Line Size (in)
129.0	129.0	3	cci antennas	DMP65R-BU6D w/ Mount Pipe	6 2 2 2	1-5/8 7/8 3/8 3/4
		6	cci antennas	HPA-65R-BUU-H6 w/ Mount Pipe		
		3	ericsson	RADIO 4415 B30		
		3	ericsson	RRUS 32 B2		
		3	ericsson	RRUS 4449 B5/B12		
		2	raycap	DC6-48-60-0-8C-EV		
		1	tower mounts	Sector Mount [SM 503-3]		

Table 2 - Other Considered Equipment

Mounting Level (ft)	Center Line Elevation (ft)	Number of Antennas	Antenna Manufacturer	Antenna Model	Number of Feed Lines	Feed Line Size (in)
138.0	140.0	3	alcatel lucent	AWS4 (B66) 4X45 RRH	14 2	1-5/8 1-1/4
		3	alcatel lucent	RRH2X60-700		
		3	alcatel lucent	RRH2X60-PCS		
		3	amphenol	BXA-80063-6BF-EDIN-4 w/ Mount Pipe		
		6	andrew	HBXX-6516DS-A2M w/ Mount Pipe		
		3	css	X7C-FRO-660-VR0 w/ Mount Pipe		
		2	rfs celwave	DB-T1-6Z-8AB-0Z		
	138.0	1	andrew	DB636-C		
		1	tower mounts	Platform Mount [LP 403-1]		
120.0	120.0	3	ericsson	AIR 32 B2A B66AA w/ Mount Pipe	17 1	1-5/8 1-3/8
		3	ericsson	KRY 112 144/1		
		3	ericsson	KRY 112 489/2		

Mounting Level (ft)	Center Line Elevation (ft)	Number of Antennas	Antenna Manufacturer	Antenna Model	Number of Feed Lines	Feed Line Size (in)
		3	ericsson	RADIO 4449 B12/B71		
		3	rfs celwave	APX16DWV-16DWVS-E-A20 w/ Mount Pipe		
		3	rfs celwave	APXVAARR24_43-U-NA20 w/ Mount Pipe		
		1	tower mounts	T-Arm Mount [TA 602-3]		
73.0	75.0	3	alcatel lucent	1900MHZ 4X40W RRH	4	1-5/8
		3	alcatel lucent	RRH2x50-800		
		3	commscope	DT465B-2XR w/ Mount Pipe		
		3	nokia	FZHN		
		3	rfs celwave	APXVSPP18-C-A20 w/ Mount Pipe		
	73.0	1	tower mounts	Miscellaneous [NA 510-1]		
		1	tower mounts	Platform Mount [LP 1201-1]		
50.0	50.0	1	pctel	GPS-TMG-HR-26NCM	1	1/2
		1	tower mounts	Pipe Mount [PM 601-1]		

3) ANALYSIS PROCEDURE

Table 3 - Documents Provided

Document	Remarks	Reference	Source
4-GEOTECHNICAL REPORTS	Clarence Welti Assoc., Inc.	4529442	CCISITES
4-TOWER FOUNDATION DRAWINGS/DESIGN/SPECS	Dewberry-Goodkind, Inc.	4598376	CCISITES
4-TOWER MANUFACTURER DRAWINGS	FWT	4598387	CCISITES
4-TOWER REINFORCEMENT DESIGN/DRAWINGS/DATA	B+T	4858944	CCISITES
4-TOWER REINFORCEMENT DESIGN/DRAWINGS/DATA	GPD	5461041	CCISITES
4-TOWER REINFORCEMENT DESIGN/DRAWINGS/DATA	GPD	5461043	CCISITES
4-TOWER REINFORCEMENT DESIGN/DRAWINGS/DATA	FDH	5785413	CCISITES
4-TOWER REINFORCEMENT DESIGN/DRAWINGS/DATA	Jacobs	5963243	CCISITES
4-TOWER REINFORCEMENT DESIGN/DRAWINGS/DATA	Jacobs	6087139	CCISITES
4-POST-MODIFICATION INSPECTION	B+T	5095590	CCISITES
4-POST-MODIFICATION INSPECTION	TEP	5994609	CCISITES
4-POST-MODIFICATION INSPECTION	FDH	6086125	CCISITES
4-POST-MODIFICATION INSPECTION	FDH	6231105	CCISITES

3.1) Analysis Method

tnxTower (version 8.0.5.0), a commercially available analysis software package, was used to create a three-dimensional model of the tower and calculate member stresses for various loading cases. Selected output from the analysis is included in Appendix A.

tnxTower was used to determine the loads on the modified structure. Additional calculations were performed to determine the stresses in the pole and in the reinforcing elements. These calculations are presented in Appendix C.

3.2) Assumptions

1) Tower and structures were built and maintained in accordance with the manufacturer's specifications.
2) The configuration of antennas, transmission cables, mounts and other appurtenances are as specified in Tables 1 and 2 and the referenced drawings.
3) The existing base plate grout was considered in this analysis. Grout must be maintained and inspected periodically and must be replaced if damaged or cracked. Refer to Crown Castle document ENG-STD-10323, Base Plate Grout.

This analysis may be affected if any assumptions are not valid or have been made in error. Crown Castle should be notified to determine the effect on the structural integrity of the tower.

4) ANALYSIS RESULTS

Table 4 - Section Capacity (Summary)

Elevation (ft)	Component Type	Size	Critical Element	% Capacity	Pass / Fail
140 - 135	Pole	TP14.296x13.161x0.1875	Pole	13.4%	Pass
135 - 130	Pole	TP15.431x14.296x0.1875	Pole	24.0%	Pass
130 - 125	Pole	TP16.566x15.431x0.1875	Pole	40.3%	Pass
125 - 120	Pole	TP17.701x16.566x0.1875	Pole	54.1%	Pass
120 - 115	Pole	TP18.836x17.701x0.1875	Pole	70.8%	Pass
115 - 114.75	Pole + Reinf.	TP18.893x18.836x0.4625	Reinf. 9 Tension Rupture	52.5%	Pass
114.75 - 109.75	Pole + Reinf.	TP20.027x18.893x0.45	Reinf. 9 Tension Rupture	63.7%	Pass
109.75 - 104.75	Pole + Reinf.	TP21.162x20.027x0.425	Reinf. 9 Tension Rupture	73.4%	Pass
104.75 - 101.58	Pole + Reinf.	TP21.882x21.162x0.4188	Reinf. 9 Tension Rupture	79.4%	Pass
101.58 - 101.33	Pole	TP21.939x21.882x0.3125	Pole	59.8%	Pass
101.33 - 96.33	Pole	TP23.074x21.939x0.3125	Pole	64.3%	Pass
96.33 - 91.33	Pole	TP24.209x23.074x0.3125	Pole	67.9%	Pass
91.33 - 91	Pole	TP24.284x24.209x0.3125	Pole	68.1%	Pass
91 - 90.75	Pole + Reinf.	TP24.34x24.284x0.6	Reinf. 8 Tension Rupture	59.1%	Pass
90.75 - 85.75	Pole + Reinf.	TP25.475x24.34x0.5875	Reinf. 8 Tension Rupture	63.1%	Pass
85.75 - 80.75	Pole + Reinf.	TP26.61x25.475x0.5625	Reinf. 8 Tension Rupture	66.6%	Pass
80.75 - 75.75	Pole + Reinf.	TP27.745x26.61x0.55	Reinf. 8 Tension Rupture	69.8%	Pass
75.75 - 70.75	Pole + Reinf.	TP28.88x27.745x0.5438	Reinf. 8 Tension Rupture	73.5%	Pass
70.75 - 69.98	Pole + Reinf.	TP29.055x28.88x0.5313	Reinf. 3 Tension Rupture	77.3%	Pass
69.98 - 69.73	Pole + Reinf.	TP29.112x29.055x0.5313	Reinf. 3 Tension Rupture	77.5%	Pass

69.73 - 64.73	Pole + Reinf.	TP30.247x29.112x0.525	Reinf. 3 Tension Rupture	81.0%	Pass
64.73 - 63	Pole + Reinf.	TP30.64x30.247x0.5188	Reinf. 3 Tension Rupture	82.2%	Pass
63 - 62.75	Pole + Reinf.	TP30.696x30.64x0.7	Reinf. 3 Tension Rupture	63.4%	Pass
62.75 - 59.08	Pole + Reinf.	TP31.53x30.696x0.6875	Reinf. 3 Tension Rupture	65.5%	Pass
59.08 - 58.82	Pole + Reinf.	TP31.589x31.53x0.625	Reinf. 4 Tension Rupture	67.0%	Pass
58.82 - 58.67	Pole + Reinf.	TP31.623x31.589x0.625	Reinf. 4 Tension Rupture	67.1%	Pass
58.67 - 53.67	Pole + Reinf.	TP32.758x31.623x0.6125	Reinf. 4 Tension Rupture	69.7%	Pass
53.67 - 53	Pole + Reinf.	TP33.913x32.758x0.6125	Reinf. 4 Tension Rupture	70.0%	Pass
53 - 47.58	Pole + Reinf.	TP33.515x32.285x0.6375	Reinf. 2 Tension Rupture	74.5%	Pass
47.58 - 42.58	Pole + Reinf.	TP34.65x33.515x0.625	Reinf. 2 Tension Rupture	76.8%	Pass
42.58 - 39.67	Pole + Reinf.	TP35.311x34.65x0.6125	Reinf. 2 Tension Rupture	78.0%	Pass
39.67 - 39.42	Pole + Reinf.	TP35.368x35.311x0.8125	Reinf. 2 Tension Rupture	60.6%	Pass
39.42 - 34.42	Pole + Reinf.	TP36.503x35.368x0.7875	Reinf. 2 Tension Rupture	62.4%	Pass
34.42 - 32.5	Pole + Reinf.	TP36.939x36.503x0.7875	Reinf. 2 Tension Rupture	63.1%	Pass
32.5 - 32.25	Pole + Reinf.	TP36.995x36.939x0.6125	Reinf. 5 Tension Rupture	78.1%	Pass
32.25 - 31.42	Pole + Reinf.	TP37.184x36.995x0.6	Reinf. 5 Tension Rupture	78.4%	Pass
31.42 - 31.17	Pole + Reinf.	TP37.241x37.184x0.775	Reinf. 1 Tension Rupture	63.6%	Pass
31.17 - 29	Pole + Reinf.	TP37.733x37.241x0.7625	Reinf. 1 Tension Rupture	64.3%	Pass
29 - 28.65	Pole + Reinf.	TP37.813x37.733x0.675	Reinf. 1 Tension Rupture	76.6%	Pass
28.65 - 28.42	Pole + Reinf.	TP37.865x37.813x0.675	Reinf. 1 Tension Rupture	76.7%	Pass
28.42 - 23.5	Pole + Reinf.	TP38.982x37.865x0.6625	Reinf. 1 Tension Rupture	78.4%	Pass
23.5 - 23.25	Pole + Reinf.	TP39.039x38.982x0.7875	Reinf. 1 Tension Rupture	64.1%	Pass
23.25 - 23	Pole + Reinf.	TP39.095x39.039x0.7875	Reinf. 1 Tension Rupture	64.2%	Pass
23 - 22.75	Pole + Reinf.	TP39.152x39.095x0.65	Reinf. 1 Tension Rupture	77.9%	Pass
22.75 - 17.75	Pole + Reinf.	TP40.287x39.152x0.6375	Reinf. 1 Tension Rupture	79.5%	Pass
17.75 - 12.75	Pole + Reinf.	TP41.422x40.287x0.625	Reinf. 1 Tension Rupture	81.0%	Pass
12.75 - 7.75	Pole + Reinf.	TP42.558x41.422x0.6125	Reinf. 1 Tension Rupture	82.4%	Pass
7.75 - 2.75	Pole + Reinf.	TP43.693x42.558x0.6	Reinf. 1 Tension Rupture	83.7%	Pass
2.75 - 0	Pole + Reinf.	TP44.317x43.693x0.6	Reinf. 1 Tension Rupture	84.4%	Pass
				Summary	
			Pole	70.8%	Pass
			Reinforcement	84.4%	Pass
			Overall	84.4%	Pass

Table 5 - Tower Component Stresses vs. Capacity - LC5

Notes	Component	Elevation (ft)	% Capacity	Pass / Fail
1	Flange Bolts	101.58	85.9	Pass
1	Flange Plates	101.58	54.8	Pass
1	Anchor Rods	0	67.9	Pass
1	Base Plate	0	56.7	Pass
1	Base Foundation Structure	0	54.4	Pass
1	Base Foundation Soil Interaction	0	70.6	Pass

Structure Rating (max from all components) =	**85.9%**

Notes:
1) See additional documentation in "Appendix C - Additional Calculations" for calculations supporting the % capacity consumed.

4.1) Recommendations

The tower and its foundation have sufficient capacity to carry the proposed load configuration. No modifications are required at this time.

APPENDIX A

TNXTOWER OUTPUT

Section	Length (ft)	Number of Sides	Thickness (in)	Socket Length (ft)	Top Dia (in)	Bot Dia (in)	Grade	Weight (K)
1	5.0000	18	0.1875		13.1610	14.2960		0.1
2	5.0000	18	0.1875		14.2960	15.4309		0.1
3	5.0000	18	0.1875		15.4309	16.5659		0.2
4	5.0000	18	0.1875		16.5659	17.7008		0.2
5	5.0000	18	0.1875		17.7008	18.8358		0.2
6	5.0000	18	0.1875		18.8358	20.0275		0.4
7	5.0000	18	0.4250		20.0275	21.1624		0.4
8	5.0000	18	0.4250		21.1624	23.0738		0.3
9	5.0000	18	0.3125		23.0738	24.3487		0.4
10	5.0000	18	0.3125		24.3487	25.4754		0.4
11	5.0000	18	0.3125		25.4754	26.6104		0.7
12	5.0000	18	0.3125		26.6104	27.7454		0.7
13	5.0000	18	0.5625		27.7454	28.8804		0.8
14	5.0000	18	0.5500		28.8804	29.1128		0.8
15	5.0000	18	0.5625		29.1128	30.2429		0.8
16	5.0000	18	0.5625		30.2429	31.6228		0.3
17	5.0000	18	0.5500		31.6228	32.7576		0.8
18	5.0000	18	0.5437		32.7576	33.5192		0.8
19	5.0000	18	0.5437		33.5192	34.6503		0.8
20	5.0000	18	0.5437		34.6503	35.3655		0.8
21	5.0000	18	0.5437		35.3655	36.5025		0.8
22	5.0000	18	0.5437		36.5025	37.0785		0.8
23	5.0000	18	0.5437		37.0785	38.2155		0.8
24	5.0000	18	0.5437		38.2155	39.1128		0.8
25	5.0000	18	0.5437		39.1128	40.2873		0.8
26	5.0000	18	0.5437		40.2873	41.4224		0.8
27	5.0000	18	0.6125		41.4224	42.5576		0.8
28	5.0000	18	0.6125		42.5576	43.6927		0.8
29	5.0000	18	0.6125		43.6927	44.3170		0.8
30	5.0000	18	0.6250		44.3170	45.6927		0.8
31	5.0000	18	0.6250		45.6927	46.2873		0.8
32	5.0000	18	0.6250		46.2873	47.4224		0.8
33	5.0000	18	0.6250		47.4224	48.5576		0.8
34	5.0000	18	0.6250		48.5576	49.6927		0.8
35	5.0000	18	0.6250		49.6927	50.7875		0.8
36	5.0000	18	0.6250		50.7875	51.8125		0.8
37	5.0000	18	0.6250		51.8125	52.8125		0.8
38	5.0000	18	0.6250		52.8125	53.8125		0.8
39	5.0000	18	0.6250		53.8125	54.6503		0.8
40	5.0000	18	0.6250		54.6503	55.3655		0.8
41	5.0000	18	0.6250		55.3655	56.5025		0.8
42	5.0000	18	0.6250		56.5025	57.0785		0.8
43	5.0000	18	0.6250		57.0785	58.2155		0.8
44	5.0000	18	0.6250		58.2155	59.1128		0.8
45	5.0000	18	0.6250		59.1128	60.2873		0.8
46	5.0000	18	0.6250		60.2873	61.4224		0.8
47	5.0000	18	0.6125		61.4224	62.5576		0.8
48	5.0000	18	0.6000		62.5576	63.6927		0.8
49	2.7500	18	0.6000		63.6927	64.3170		0.8

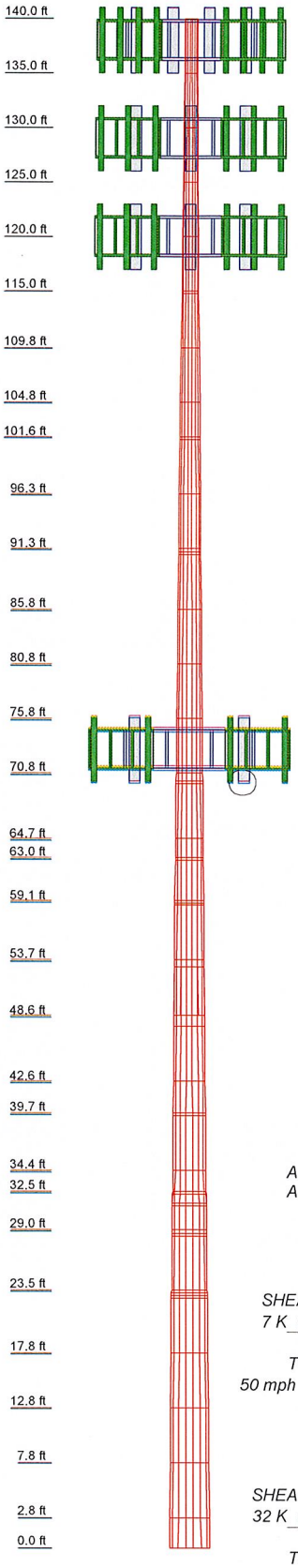

MATERIAL STRENGTH

GRADE	Fy	Fu	GRADE	Fy	Fu
A572-65	65 ksi	80 ksi			

TOWER DESIGN NOTES

1. Tower is located in Fairfield County, Connecticut.
2. Tower designed for Exposure B to the TIA-222-H Standard.
3. Tower designed for a 125 mph basic wind in accordance with the TIA-222-H Standard.
4. Tower is also designed for a 50 mph basic wind with 1.50 in ice. Ice is considered to increase in thickness with height.
5. Deflections are based upon a 60 mph wind.
6. Tower Risk Category II.
7. Topographic Category 1 with Crest Height of 0.0000 ft
8. TOWER RATING: 84.4%

ALL REACTIONS ARE FACTORED

AXIAL 88 K

SHEAR 7 K — *MOMENT 697 kip-ft*

TORQUE 0 kip-ft
50 mph WIND - 1.5000 in ICE

AXIAL 50 K

SHEAR 32 K — *MOMENT 2946 kip-ft*

TORQUE 1 kip-ft
REACTIONS - 125 mph WIND

CROWN CASTLE The Pathway to Possible	*Crown Castle* 2000 Corporate Drive Canonsburg, PA 15317 Phone: (724) 416-2000 FAX:	Job: **BU# 842873**	
		Project:	
		Client: Crown Castle	Drawn by: NCvetic	App'd:
		Code: TIA-222-H	Date: 10/16/19	Scale: NT:
		Path:		Dwg No. E-

Tower Input Data

The tower is a monopole.
This tower is designed using the TIA-222-H standard.
The following design criteria apply:

4) Tower is located in Fairfield County, Connecticut.
5) Tower base elevation above sea level: 311.0000 ft.
6) Basic wind speed of 125 mph.
7) Risk Category II.
8) Exposure Category B.
9) Simplified Topographic Factor Procedure for wind speed-up calculations is used.
10) Topographic Category: 1.
11) Crest Height: 0.0000 ft.
12) Nominal ice thickness of 1.5000 in.
13) Ice thickness is considered to increase with height.
14) Ice density of 56.0000 pcf.
15) A wind speed of 50 mph is used in combination with ice.
16) Temperature drop of 50.0000 °F.
17) Deflections calculated using a wind speed of 60 mph.
18) TOWER RATING: 84.4%.
19) A non-linear (P-delta) analysis was used.
20) Pressures are calculated at each section.
21) Stress ratio used in pole design is 1.05.
22) Tower analysis based on target reliabilities in accordance with Annex S.
23) Load Modification Factors used: $K_{es}(F_w) = 0.95$, $K_{es}(t_i) = 0.85$.
24) Local bending stresses due to climbing loads, feed line supports, and appurtenance mounts are not considered.

Options

	Consider Moments - Legs		Distribute Leg Loads As Uniform		Use ASCE 10 X-Brace Ly Rules
	Consider Moments - Horizontals		Assume Legs Pinned		Calculate Redundant Bracing Forces
	Consider Moments - Diagonals	√	Assume Rigid Index Plate		Ignore Redundant Members in FEA
	Use Moment Magnification	√	Use Clear Spans For Wind Area		SR Leg Bolts Resist Compression
	Use Code Stress Ratios		Use Clear Spans For KL/r		All Leg Panels Have Same Allowable
	Use Code Safety Factors - Guys		Retension Guys To Initial Tension		Offset Girt At Foundation
	Escalate Ice	√	Bypass Mast Stability Checks	√	Consider Feed Line Torque
	Always Use Max Kz	√	Use Azimuth Dish Coefficients		Include Angle Block Shear Check
	Use Special Wind Profile	√	Project Wind Area of Appurt.		Use TIA-222-H Bracing Resist. Exemption
	Include Bolts In Member Capacity		Autocalc Torque Arm Areas		Use TIA-222-H Tension Splice Exemption
	Leg Bolts Are At Top Of Section		Add IBC .6D+W Combination		Poles
	Secondary Horizontal Braces Leg	√	Sort Capacity Reports By Component	√	Include Shear-Torsion Interaction
	Use Diamond Inner Bracing (4 Sided)		Triangulate Diamond Inner Bracing		Always Use Sub-Critical Flow
	SR Members Have Cut Ends		Treat Feed Line Bundles As Cylinder		Use Top Mounted Sockets
	SR Members Are Concentric		Ignore KL/ry For 60 Deg. Angle Legs		Pole Without Linear Attachments
					Pole With Shroud Or No Appurtenances
					Outside and Inside Corner Radii Are Known

Tapered Pole Section Geometry

Section	Elevation ft	Section Length ft	Splice Length ft	Number of Sides	Top Diameter in	Bottom Diameter in	Wall Thickness in	Bend Radius in	Pole Grade

Section	Elevation ft	Section Length ft	Splice Length ft	Number of Sides	Top Diameter in	Bottom Diameter in	Wall Thickness in	Bend Radius in	Pole Grade
L1	140.0000-135.0000	5.0000	0.0000	18	13.1610	14.2960	0.1875	0.7500	A572-65 (65 ksi)
L2	135.0000-130.0000	5.0000	0.0000	18	14.2960	15.4309	0.1875	0.7500	A572-65 (65 ksi)
L3	130.0000-125.0000	5.0000	0.0000	18	15.4309	16.5659	0.1875	0.7500	A572-65 (65 ksi)
L4	125.0000-120.0000	5.0000	0.0000	18	16.5659	17.7008	0.1875	0.7500	A572-65 (65 ksi)
L5	120.0000-115.0000	5.0000	0.0000	18	17.7008	18.8358	0.1875	0.7500	A572-65 (65 ksi)
L6	115.0000-114.7500	0.2500	0.0000	18	18.8358	18.8925	0.4625	1.8500	A572-65 (65 ksi)
L7	114.7500-109.7500	5.0000	0.0000	18	18.8925	20.0275	0.4500	1.8000	A572-65 (65 ksi)
L8	109.7500-104.7500	5.0000	0.0000	18	20.0275	21.1624	0.4250	1.7000	A572-65 (65 ksi)
L9	104.7500-101.5800	3.1700	0.0000	18	21.1624	21.8820	0.4188	1.6750	A572-65 (65 ksi)
L10	101.5800-101.3300	0.2500	0.0000	18	21.8820	21.9387	0.3125	1.2500	A572-65 (65 ksi)
L11	101.3300-96.3300	5.0000	0.0000	18	21.9387	23.0738	0.3125	1.2500	A572-65 (65 ksi)
L12	96.3300-91.3300	5.0000	0.0000	18	23.0738	24.2087	0.3125	1.2500	A572-65 (65 ksi)
L13	91.3300-91.0000	0.3300	0.0000	18	24.2087	24.2837	0.3125	1.2500	A572-65 (65 ksi)
L14	91.0000-90.7500	0.2500	0.0000	18	24.2837	24.3404	0.6000	2.4000	A572-65 (65 ksi)
L15	90.7500-85.7500	5.0000	0.0000	18	24.3404	25.4754	0.5875	2.3500	A572-65 (65 ksi)
L16	85.7500-80.7500	5.0000	0.0000	18	25.4754	26.6104	0.5625	2.2500	A572-65 (65 ksi)
L17	80.7500-75.7500	5.0000	0.0000	18	26.6104	27.7454	0.5500	2.2000	A572-65 (65 ksi)
L18	75.7500-70.7500	5.0000	0.0000	18	27.7454	28.8804	0.5437	2.1750	A572-65 (65 ksi)
L19	70.7500-69.9800	0.7700	0.0000	18	28.8804	29.0552	0.5313	2.1250	A572-65 (65 ksi)
L20	69.9800-69.7300	0.2500	0.0000	18	29.0552	29.1120	0.5313	2.1250	A572-65 (65 ksi)
L21	69.7300-64.7300	5.0000	0.0000	18	29.1120	30.2469	0.5250	2.1000	A572-65 (65 ksi)
L22	64.7300-63.0000	1.7300	0.0000	18	30.2469	30.6397	0.5188	2.0750	A572-65 (65 ksi)
L23	63.0000-62.7500	0.2500	0.0000	18	30.6397	30.6964	0.7000	2.8000	A572-65 (65 ksi)
L24	62.7500-59.0800	3.6700	0.0000	18	30.6964	31.5295	0.6875	2.7500	A572-65 (65 ksi)
L25	59.0800-58.8200	0.2600	0.0000	18	31.5295	31.5885	0.6250	2.5000	A572-65 (65 ksi)
L26	58.8200-58.6700	0.1500	0.0000	18	31.5885	31.6226	0.6250	2.5000	A572-65 (65 ksi)
L27	58.6700-53.6700	5.0000	0.0000	18	31.6226	32.7576	0.6125	2.4500	A572-65 (65 ksi)
L28	53.6700-48.5800	5.0900	4.4200	18	32.7576	33.9130	0.6125	2.4500	A572-65 (65 ksi)
L29	48.5800-47.5800	5.4200	0.0000	18	32.2847	33.5151	0.6375	2.5500	A572-65 (65 ksi)
L30	47.5800-42.5800	5.0000	0.0000	18	33.5151	34.6503	0.6250	2.5000	A572-65 (65 ksi)
L31	42.5800-39.6700	2.9100	0.0000	18	34.6503	35.3109	0.6125	2.4500	A572-65 (65 ksi)
L32	39.6700-39.4200	0.2500	0.0000	18	35.3109	35.3677	0.8125	3.2500	A572-65 (65 ksi)
L33	39.4200-34.4200	5.0000	0.0000	18	35.3677	36.5028	0.7875	3.1500	A572-65 (65 ksi)
L34	34.4200-32.5000	1.9200	0.0000	18	36.5028	36.9387	0.7875	3.1500	A572-65 (65 ksi)
L35	32.5000-	0.2500	0.0000	18	36.9387	36.9954	0.6125	2.4500	A572-65

Section	Elevation ft	Section Length ft	Splice Length ft	Number of Sides	Top Diameter in	Bottom Diameter in	Wall Thickness in	Bend Radius in	Pole Grade
	32.2500								
L36	32.2500-31.4200	0.8300	0.0000	18	36.9954	37.1839	0.6000	2.4000	(65 ksi) A572-65 (65 ksi)
L37	31.4200-31.1700	0.2500	0.0000	18	37.1839	37.2406	0.7750	3.1000	A572-65 (65 ksi)
L38	31.1700-29.0000	2.1700	0.0000	18	37.2406	37.7333	0.7625	3.0500	A572-65 (65 ksi)
L39	29.0000-28.6500	0.3500	0.0000	18	37.7333	37.8127	0.6750	2.7000	A572-65 (65 ksi)
L40	28.6500-28.4200	0.2300	0.0000	18	37.8127	37.8649	0.6750	2.7000	A572-65 (65 ksi)
L41	28.4200-23.5000	4.9200	0.0000	18	37.8649	38.9819	0.6625	2.6500	A572-65 (65 ksi)
L42	23.5000-23.2500	0.2500	0.0000	18	38.9819	39.0387	0.7875	3.1500	A572-65 (65 ksi)
L43	23.2500-23.0000	0.2500	0.0000	18	39.0387	39.0954	0.7875	3.1500	A572-65 (65 ksi)
L44	23.0000-22.7500	0.2500	0.0000	18	39.0954	39.1522	0.6500	2.6000	A572-65 (65 ksi)
L45	22.7500-17.7500	5.0000	0.0000	18	39.1522	40.2873	0.6375	2.5500	A572-65 (65 ksi)
L46	17.7500-12.7500	5.0000	0.0000	18	40.2873	41.4224	0.6250	2.5000	A572-65 (65 ksi)
L47	12.7500-7.7500	5.0000	0.0000	18	41.4224	42.5576	0.6125	2.4500	A572-65 (65 ksi)
L48	7.7500-2.7500	5.0000	0.0000	18	42.5576	43.6927	0.6000	2.4000	A572-65 (65 ksi)
L49	2.7500-0.0000	2.7500		18	43.6927	44.3170	0.6000	2.4000	A572-65 (65 ksi)

Tapered Pole Properties

Section	Tip Dia. in	Area in^2	I in^4	r in	C in	I/C in^3	J in^4	It/Q in^2	w in	w/t
L1	13.3351	7.7209	164.1788	4.6056	6.6858	24.5564	328.5737	3.8612	1.9863	10.594
	14.4876	8.3963	211.1466	5.0085	7.2623	29.0742	422.5710	4.1989	2.1861	11.659
L2	14.4876	8.3963	211.1466	5.0085	7.2623	29.0742	422.5710	4.1989	2.1861	11.659
	15.6400	9.0717	266.3129	5.4114	7.8389	33.9732	532.9762	4.5367	2.3858	12.724
L3	15.6400	9.0717	266.3129	5.4114	7.8389	33.9732	532.9762	4.5367	2.3858	12.724
	16.7925	9.7472	330.3372	5.8143	8.4155	39.2536	661.1090	4.8745	2.5856	13.79
L4	16.7925	9.7472	330.3372	5.8143	8.4155	39.2536	661.1090	4.8745	2.5856	13.79
	17.9450	10.4226	403.8790	6.2172	8.9920	44.9153	808.2895	5.2123	2.7853	14.855
L5	17.9450	10.4226	403.8790	6.2172	8.9920	44.9153	808.2895	5.2123	2.7853	14.855
	19.0974	11.0981	487.5980	6.6201	9.5686	50.9583	975.8376	5.5501	2.9851	15.921
L6	19.0550	26.9715	1150.3132	6.5225	9.5686	120.2178	2302.1400	13.4883	2.5011	5.408
	19.1126	27.0548	1161.0047	6.5427	9.5974	120.9707	2323.5372	13.5300	2.5111	5.429
L7	19.1146	26.3415	1131.9263	6.5471	9.5974	117.9409	2265.3420	13.1732	2.5331	5.629
	20.2670	27.9625	1354.0273	6.9500	10.1740	133.0875	2709.8362	13.9839	2.7328	6.073
L8	20.2709	26.4428	1283.7088	6.9589	10.1740	126.1759	2569.1067	13.2239	2.7768	6.534
	21.4233	27.9738	1519.8426	7.3618	10.7505	141.3739	3041.6850	13.9895	2.9766	7.004
L9	21.4243	27.5707	1498.8463	7.3640	10.7505	139.4208	2999.6649	13.7880	2.9876	7.135
	22.1550	28.5271	1660.2965	7.6195	11.1161	149.3602	3322.7776	14.2662	3.1142	7.437
L10	22.1714	21.3942	1257.5192	7.6572	11.1161	113.1264	2516.6931	10.6992	3.3012	10.564
	22.2290	21.4505	1267.4711	7.6773	11.1449	113.7267	2536.6099	10.7273	3.3112	10.596
L11	22.2290	21.4505	1267.4711	7.6773	11.1449	113.7267	2536.6099	10.7273	3.3112	10.596
	23.3815	22.5763	1477.6879	8.0802	11.7215	126.0668	2957.3202	11.2903	3.5110	11.235
L12	23.3815	22.5763	1477.6879	8.0802	11.7215	126.0668	2957.3202	11.2903	3.5110	11.235
	24.5340	23.7021	1709.9510	8.4832	12.2980	139.0425	3422.1519	11.8533	3.7107	11.874
L13	24.5340	23.7021	1709.9510	8.4832	12.2980	139.0425	3422.1519	11.8533	3.7107	11.874
	24.6101	23.7764	1726.0825	8.5098	12.3361	139.9213	3454.4362	11.8905	3.7239	11.917
L14	24.5657	45.1032	3196.2598	8.4077	12.3361	259.0981	6396.7254	22.5559	3.2179	5.363
	24.6233	45.2112	3219.2912	8.4278	12.3649	260.3566	6442.8185	22.6099	3.2279	5.38
L15	24.6253	44.2926	3157.2045	8.4323	12.3649	255.3354	6318.5633	22.1505	3.2499	5.532
	25.7778	46.4091	3631.7632	8.8352	12.9415	280.6291	7268.3052	23.2090	3.4497	5.872
L16	25.7816	44.4789	3487.7093	8.8441	12.9415	269.4979	6980.0078	22.2437	3.4937	6.211

Section	Tip Dia. in	Area in^2	I in^4	r in	C in	I/C in^3	J in^4	It/Q in^2	w in	w/t
	26.9341	46.5053	3986.4429	9.2470	13.5181	294.8969	7978.1313	23.2571	3.6934	6.566
L17	26.9361	45.4937	3903.4695	9.2514	13.5181	288.7590	7812.0754	22.7512	3.7154	6.755
	28.0886	47.4750	4436.0241	9.6544	14.0947	314.7306	8877.8852	23.7420	3.9152	7.119
L18	28.0895	46.9463	4388.6391	9.6566	14.0947	311.3687	8783.0529	23.4776	3.9262	7.221
	29.2421	48.9052	4961.2330	10.0595	14.6712	338.1602	9928.9940	24.4572	4.1260	7.588
L19	29.2440	47.8020	4853.5991	10.0640	14.6712	330.8239	9713.5847	23.9055	4.1480	7.808
	29.4215	48.0967	4943.9300	10.1260	14.7600	334.9537	9894.3654	24.0529	4.1787	7.866
L20	29.4215	48.0967	4943.9300	10.1260	14.7600	334.9537	9894.3654	24.0529	4.1787	7.866
	29.4791	48.1924	4973.4975	10.1461	14.7889	336.3000	9953.5392	24.1008	4.1887	7.885
L21	29.4801	47.6359	4918.2108	10.1484	14.7889	332.5616	9842.8932	23.8225	4.1997	7.999
	30.6326	49.5272	5527.5868	10.5513	15.3655	359.7413	11062.4470	24.7683	4.3995	8.38
L22	30.6335	48.9479	5465.2285	10.5535	15.3655	355.6829	10937.6483	24.4786	4.4105	8.502
	31.0323	49.5945	5684.6895	10.6929	15.5649	365.2238	11376.8590	24.8019	4.4796	8.635
L23	31.0043	66.5199	7533.2608	10.6286	15.5649	483.9888	15076.4341	33.2663	4.1606	5.944
	31.0620	66.6460	7576.1795	10.6487	15.5938	485.8464	15162.3279	33.3293	4.1706	5.958
L24	31.0639	65.4832	7450.1967	10.6532	15.5938	477.7673	14910.1965	32.7478	4.1926	6.098
	31.9098	67.3011	8088.0658	10.9489	16.0170	504.9680	16186.7740	33.6569	4.3392	6.312
L25	31.9195	61.3068	7397.5780	10.9711	16.0170	461.8583	14804.8900	30.6592	4.4492	7.119
	31.9794	61.4239	7440.0417	10.9920	16.0470	463.6416	14889.8732	30.7178	4.4596	7.135
L26	31.9794	61.4239	7440.0417	10.9920	16.0470	463.6416	14889.8732	30.7178	4.4596	7.135
	32.0140	61.4914	7464.6137	11.0041	16.0643	464.6720	14939.0496	30.7516	4.4656	7.145
L27	32.0159	60.2859	7324.1749	11.0086	16.0643	455.9296	14657.9871	30.1487	4.4876	7.327
	33.1684	62.4924	8158.1858	11.4115	16.6408	490.2507	16327.1064	31.2522	4.6873	7.653
L28	33.1684	62.4924	8158.1858	11.4115	16.6408	490.2507	16327.1064	31.2522	4.6873	7.653
	34.3417	64.7387	9069.9048	11.8217	17.2278	526.4690	18151.7440	32.3755	4.8907	7.985
L29	33.7033	64.0357	8102.6819	11.2347	16.4006	494.0477	16216.0255	32.0239	4.5601	7.153
	33.9338	66.5254	9085.0297	11.6716	17.0257	533.6071	18182.0137	33.2690	4.7767	7.493
L30	33.9357	65.2458	8917.0549	11.6760	17.0257	523.7412	17845.8430	32.6291	4.7987	7.678
	35.0884	67.4976	9872.5395	12.0790	17.6023	560.8654	19758.0695	33.7552	4.9984	7.998
L31	35.0903	66.1720	9685.7557	12.0834	17.6023	550.2541	19384.2563	33.0923	5.0204	8.197
	35.7611	67.4563	10260.7493	12.3179	17.9379	572.0138	20535.0000	33.7346	5.1367	8.386
L32	35.7303	88.9671	13377.1891	12.2469	17.9379	745.7483	26771.9803	44.4920	4.7847	5.889
	35.7879	89.1134	13443.3217	12.2671	17.9668	748.2324	26904.3326	44.5652	4.7947	5.901
L33	35.7918	86.4340	13057.9817	12.2760	17.9668	726.7850	26133.1455	43.2252	4.8387	6.144
	36.9444	89.2713	14386.5768	12.6789	18.5434	775.8320	28792.0839	44.6441	5.0385	6.398
L34	36.9444	89.2713	14386.5768	12.6789	18.5434	775.8320	28792.0839	44.6441	5.0385	6.398
	37.3870	90.3608	14919.7761	12.8337	18.7648	795.0917	29859.1841	45.1890	5.1152	6.496
L35	37.4140	70.6208	11773.6087	12.8958	18.7648	627.4289	23562.7093	35.3171	5.4232	8.854
	37.4717	70.7312	11828.8805	12.9159	18.7937	629.4073	23673.3257	35.3723	5.4332	8.871
L36	37.4736	69.3115	11599.4221	12.9204	18.7937	617.1980	23214.1070	34.6623	5.4552	9.092

Section	Tip Dia. in	Area in^2	I in^4	r in	C in	I/C in^3	J in^4	It/Q in^2	w in	w/t
	37.6649	69.6703	11780.5184	12.9873	18.8894	623.6575	23576.5379	34.8418	5.4884	9.147
L37	37.6379	89.5603	14999.1801	12.9251	18.8894	794.0526	30018.0964	44.7887	5.1804	6.684
	37.6956	89.7000	15069.4343	12.9453	18.9182	796.5560	30158.6974	44.8585	5.1903	6.697
L38	37.6975	88.2834	14841.6311	12.9497	18.9182	784.5145	29702.7912	44.1501	5.2123	6.836
	38.1977	89.4757	15451.1068	13.1246	19.1685	806.0676	30922.5446	44.7464	5.2991	6.95
L39	38.2112	79.3955	13775.3758	13.1557	19.1685	718.6465	27568.8776	39.7053	5.4531	8.079
	38.2919	79.5657	13864.1758	13.1839	19.2089	721.7593	27746.5944	39.7904	5.4670	8.099
L40	38.2919	79.5657	13864.1758	13.1839	19.2089	721.7593	27746.5944	39.7904	5.4670	8.099
	38.3449	79.6776	13922.7373	13.2024	19.2354	723.8084	27863.7945	39.8464	5.4762	8.113
L41	38.3469	78.2284	13678.6923	13.2069	19.2354	711.1211	27375.3834	39.1216	5.4982	8.299
	39.4811	80.5771	14948.1193	13.6034	19.8028	754.8485	29915.9077	40.2962	5.6948	8.596
L42	39.4618	95.4679	17595.2001	13.5590	19.8028	888.5205	35213.5525	47.7430	5.4748	6.952
	39.5194	95.6097	17673.7554	13.5792	19.8316	891.1898	35370.7663	47.8140	5.4848	6.965
L43	39.5194	95.6097	17673.7554	13.5792	19.8316	891.1898	35370.7663	47.8140	5.4848	6.965
	39.5770	95.7516	17752.5441	13.5993	19.8605	893.8631	35528.4474	47.8849	5.4948	6.978
L44	39.5983	79.3167	14811.2430	13.6481	19.8605	745.7649	29641.9750	39.6659	5.7368	8.826
	39.6559	79.4338	14876.9367	13.6683	19.8893	747.9868	29773.4488	39.7245	5.7468	8.841
L45	39.6578	77.9316	14605.0574	13.6727	19.8893	734.3171	29229.3325	38.9732	5.7688	9.049
	40.8105	80.2284	15934.8363	14.0757	20.4659	778.6024	31890.6400	40.1218	5.9686	9.362
L46	40.8124	78.6801	15637.1685	14.0801	20.4659	764.0578	31294.9128	39.3475	5.9906	9.585
	41.9650	80.9319	17018.5570	14.4831	21.0426	808.7671	34059.5074	40.4736	6.1903	9.905
L47	41.9669	79.3376	16693.5207	14.4875	21.0426	793.3205	33409.0072	39.6763	6.2123	10.143
	43.1196	81.5443	18125.6146	14.8905	21.6192	838.4021	36275.0793	40.7799	6.4121	10.469
L48	43.1215	79.9040	17771.5829	14.8949	21.6192	822.0264	35566.5501	39.9596	6.4341	10.724
	44.2742	82.0657	19253.3431	15.2979	22.1959	867.4286	38532.0203	41.0406	6.6339	11.057
L49	44.2742	82.0657	19253.3431	15.2979	22.1959	867.4286	38532.0203	41.0406	6.6339	11.057
	44.9081	83.2547	20102.3430	15.5195	22.5130	892.9201	40231.1371	41.6352	6.7438	11.24

Tower Elevation ft	Gusset Area (per face) ft^2	Gusset Thickness in	Gusset Grade	Adjust. Factor A_f	Adjust. Factor A_r	Weight Mult.	Double Angle Stitch Bolt Spacing Diagonals in	Double Angle Stitch Bolt Spacing Horizontals in	Double Angle Stitch Bolt Spacing Redundants in
L1 140.0000-135.0000				1	1	1			
L2 135.0000-130.0000				1	1	1			
L3 130.0000-125.0000				1	1	1			
L4 125.0000-120.0000				1	1	1			
L5 120.0000-				1	1	1			

Tower Elevation ft	Gusset Area (per face) ft^2	Gusset Thickness in	Gusset Grade	Adjust. Factor A_f	Adjust. Factor A_r	Weight Mult.	Double Angle Stitch Bolt Spacing Diagonals in	Double Angle Stitch Bolt Spacing Horizontals in	Double Angle Stitch Bolt Spacing Redundants in
115.0000									
L6 115.0000-114.7500				1	1	0.910459			
L7 114.7500-109.7500				1	1	0.90506			
L8 109.7500-104.7500				1	1	0.928842			
L9 104.7500-101.5800				1	1	0.925837			
L10 101.5800-101.3300				1	1	1			
L11 101.3300-96.3300				1	1	1			
L12 96.3300-91.3300				1	1	1			
L13 91.3300-91.0000				1	1	1			
L14 91.0000-90.7500				1	1	0.925286			
L15 90.7500-85.7500				1	1	0.925661			
L16 85.7500-80.7500				1	1	0.947954			
L17 80.7500-75.7500				1	1	0.952304			
L18 75.7500-70.7500				1	1	0.947475			
L19 70.7500-69.9800				1	1	0.951412			
L20 69.9800-69.7300				1	1	0.950691			
L21 69.7300-64.7300				1	1	0.9478			
L22 64.7300-63.0000				1	1	0.954368			
L23 63.0000-62.7500				1	1	0.981128			
L24 62.7500-59.0800				1	1	0.983857			
L25 59.0800-58.8200				1	1	0.999823			
L26 58.8200-58.6700				1	1	0.999274			
L27 58.6700-53.6700				1	1	1.00128			
L28 53.6700-48.5800				1	1	0.99897			
L29 48.5800-47.5800				1	1	0.940602			
L30 47.5800-42.5800				1	1	0.943735			
L31 42.5800-39.6700				1	1	0.954027			
L32 39.6700-39.4200				1	1	0.924799			
L33 39.4200-34.4200				1	1	0.935777			
L34 34.4200-32.5000				1	1	0.929278			
L35 32.5000-32.2500				1	1	0.944082			
L36 32.2500-31.4200				1	1	0.961139			
L37 31.4200-31.1700				1	1	0.939463			

Tower Elevation ft	Gusset Area (per face) ft^2	Gusset Thickness in	Gusset Grade	Adjust. Factor A_f	Adjust. Factor A_r	Weight Mult.	Double Angle Stitch Bolt Spacing Diagonals in	Double Angle Stitch Bolt Spacing Horizontals in	Double Angle Stitch Bolt Spacing Redundants in
L38 31.1700-29.0000				1	1	0.947279			
L39 29.0000-28.6500				1	1	0.990842			
L40 28.6500-28.4200				1	1	0.990101			
L41 28.4200-23.5000				1	1	0.992797			
L42 23.5000-23.2500				1	1	1.02556			
L43 23.2500-23.0000				1	1	1.02463			
L44 23.0000-22.7500				1	1	1.08475			
L45 22.7500-17.7500				1	1	1.08804			
L46 17.7500-12.7500				1	1	1.09249			
L47 12.7500-7.7500				1	1	1.0981			
L48 7.7500-2.7500				1	1	1.10484			
L49 2.7500-0.0000				1	1	1.0965			

Feed Line/Linear Appurtenances - Entered As Round Or Flat

Description	Sector	Exclude From Torque Calculation	Component Type	Placement ft	Total Number	Number Per Row	Start/End Position	Width or Diameter in	Perimeter in	Weight plf
5.75" x 1" Flat Plate (G)	A	No	Surface Af (CaAa)	33.3300 - 0.5000	1	1	0.500 0.500	5.7500	13.5000	0.0000
5.75" x 1" Flat Plate (G)	B	No	Surface Af (CaAa)	33.3300 - 0.5000	1	1	0.500 0.500	5.7500	13.5000	0.0000
5.75" x 1" Flat Plate (G) **	C	No	Surface Af (CaAa)	33.3300 - 0.5000	1	1	0.500 0.500	5.7500	13.5000	0.0000
5.75" x 1" Flat Plate (G)	A	No	Surface Af (CaAa)	50.5800 - 30.5800	1	1	-0.300 -0.300	5.7500	13.5000	0.0000
5.75" x 1" Flat Plate (G)	B	No	Surface Af (CaAa)	50.5800 - 30.5800	1	1	-0.300 -0.300	5.7500	13.5000	0.0000
5.75" x 1" Flat Plate (G) **	C	No	Surface Af (CaAa)	50.5800 - 30.5800	1	1	-0.300 -0.300	5.7500	13.5000	0.0000
5.75" x 1" Flat Plate (G)	A	No	Surface Af (CaAa)	72.0000 - 57.0000	1	1	-0.300 -0.300	5.7500	13.5000	0.0000
5.75" x 1" Flat Plate (G)	B	No	Surface Af (CaAa)	72.0000 - 57.0000	1	1	-0.300 -0.300	5.7500	13.5000	0.0000
5.75" x 1" Flat Plate (G) **	C	No	Surface Af (CaAa)	72.0000 - 57.0000	1	1	-0.300 -0.300	5.7500	13.5000	0.0000
MP3-04	A	No	Surface Af (CaAa)	60.5000 - 0.5000	1	1	0.000 0.000	4.7800	12.7800	0.0000
MP3-04	B	No	Surface Af (CaAa)	60.5000 - 0.5000	1	1	0.000 0.000	4.7800	12.7800	0.0000
MP3-04 **	C	No	Surface Af (CaAa)	60.5000 - 0.5000	1	1	0.000 0.000	4.7800	12.7800	0.0000
CCI-65FP-060100	A	No	Surface Af (CaAa)	41.6700 - 26.6700	1	1	0.000 0.000	6.0000	14.0000	0.0000
CCI-65FP-060100	B	No	Surface Af (CaAa)	41.6700 - 26.6700	1	1	0.000 0.000	6.0000	14.0000	0.0000

Description	Sector	Exclude From Torque Calculation	Component Type	Placement ft	Total Number	Number Per Row	Start/End Position	Width or Diameter in	Perimeter in	Weight plf
CCI-65FP-060100	C	No	Surface Af (CaAa)	41.6700 - 26.6700	1	1	0.000 0.000	6.0000	14.0000	0.0000
**										
CCI-65FP-060100	A	No	Surface Af (CaAa)	25.5000 - 0.5000	1	1	0.000 0.000	6.0000	14.0000	0.0000
CCI-65FP-060100	B	No	Surface Af (CaAa)	25.5000 - 0.5000	1	1	0.000 0.000	6.0000	14.0000	0.0000
CCI-65FP-060100	C	No	Surface Af (CaAa)	25.5000 - 0.5000	1	1	0.000 0.000	6.0000	14.0000	0.0000
**										
CCI-65FP-060100	A	No	Surface Af (CaAa)	65.0000 - 50.0000	1	1	0.000 0.000	6.0000	14.0000	0.0000
CCI-65FP-060100	B	No	Surface Af (CaAa)	65.0000 - 50.0000	1	1	0.000 0.000	6.0000	14.0000	0.0000
CCI-65FP-060100	C	No	Surface Af (CaAa)	65.0000 - 50.0000	1	1	0.000 0.000	6.0000	14.0000	0.0000
**										
CCI-65FP-060100	A	No	Surface Af (CaAa)	93.0000 - 68.0000	1	1	0.000 0.000	6.0000	14.0000	0.0000
CCI-65FP-060100	B	No	Surface Af (CaAa)	93.0000 - 68.0000	1	1	0.000 0.000	6.0000	14.0000	0.0000
CCI-65FP-060100	C	No	Surface Af (CaAa)	93.0000 - 68.0000	1	1	0.000 0.000	6.0000	14.0000	0.0000
**										
CCI-65FP-045100	A	No	Surface Af (CaAa)	117.0000 - 102.0000	1	1	0.300 0.300	4.5000	11.0000	0.0000
CCI-65FP-045100	B	No	Surface Af (CaAa)	117.0000 - 102.0000	1	1	0.300 0.300	4.5000	11.0000	0.0000
CCI-65FP-045100	C	No	Surface Af (CaAa)	117.0000 - 102.0000	1	1	0.300 0.300	4.5000	11.0000	0.0000
**										
CCI-65FP-060100	A	No	Surface Af (CaAa)	31.0000 - 21.0000	1	1	-0.200 -0.200	6.0000	14.0000	0.0000
CCI-65FP-060100	C	No	Surface Af (CaAa)	31.0000 - 21.0000	1	1	-0.200 -0.200	6.0000	14.0000	0.0000
**										
**										
HB158-1-08U8-S8J18(1-5/8)	B	No	Surface Ar (CaAa)	138.0000 - 0.0000	1	1	0.340 0.360	1.9800		1.3000
**										
LDF7-50A(1-5/8)	B	No	Surface Ar (CaAa)	120.0000 - 0.0000	18	6	-0.100 0.100	1.9800		0.8200
**										

Feed Line/Linear Appurtenances - Entered As Area

Description	Face or Leg	Allow Shield	Exclude From Torque Calculation	Component Type	Placement ft	Total Number		C_AA_A ft^2/ft	Weight plf
**									
**									
**									
LDF7-50A(1-5/8)	C	No	No	Inside Pole	138.0000 - 0.0000	13	No Ice	0.0000	0.8200
							1/2" Ice	0.0000	0.8200
							1" Ice	0.0000	0.8200
							2" Ice	0.0000	0.8200
**									
AVA6-50(1-1/4)	C	No	No	Inside Pole	138.0000 - 0.0000	2	No Ice	0.0000	0.4600
							1/2" Ice	0.0000	0.4600
							1" Ice	0.0000	0.4600
							2" Ice	0.0000	0.4600
**									
WR-VG86ST-BRD(3/4)	C	No	No	Inside Pole	129.0000 - 0.0000	2	No Ice	0.0000	0.5840
							1/2" Ice	0.0000	0.5840

Description	Face or Leg	Allow Shield	Exclude From Torque Calculation	Component Type	Placement ft	Total Number		C_AA_A ft^2/ft	Weight plf
							1" Ice	0.0000	0.5840
							2" Ice	0.0000	0.5840
FB-L98B-034-XXXXXX(3/8)	C	No	No	Inside Pole	129.0000 - 0.0000	2	No Ice	0.0000	0.0500
							1/2" Ice	0.0000	0.0500
							1" Ice	0.0000	0.0500
							2" Ice	0.0000	0.0500
WR-VG66ST-BRD_CCIV2(7/8)	C	No	No	Inside Pole	129.0000 - 0.0000	2	No Ice	0.0000	0.8800
							1/2" Ice	0.0000	0.8800
							1" Ice	0.0000	0.8800
							2" Ice	0.0000	0.8800
AL7-50(1-5/8)	C	No	No	Inside Pole	129.0000 - 0.0000	6	No Ice	0.0000	0.5200
							1/2" Ice	0.0000	0.5200
							1" Ice	0.0000	0.5200
							2" Ice	0.0000	0.5200
**									
HB158-21U6M48-30F(1-5/8)	C	No	No	Inside Pole	73.0000 - 0.0000	4	No Ice	0.0000	2.3900
							1/2" Ice	0.0000	2.3900
							1" Ice	0.0000	2.3900
							2" Ice	0.0000	2.3900
LDF4-50A(1/2)	C	No	No	Inside Pole	50.0000 - 0.0000	1	No Ice	0.0000	0.1500
							1/2" Ice	0.0000	0.1500
							1" Ice	0.0000	0.1500
							2" Ice	0.0000	0.1500
**									

Feed Line/Linear Appurtenances Section Areas

Tower Section	Tower Elevation ft	Face	A_R ft^2	A_F ft^2	C_AA_A In Face ft^2	C_AA_A Out Face ft^2	Weight K
L1	140.0000-135.0000	A	0.000	0.000	0.000	0.000	0.0000
		B	0.000	0.000	0.594	0.000	0.0039
		C	0.000	0.000	0.000	0.000	0.0347
L2	135.0000-130.0000	A	0.000	0.000	0.000	0.000	0.0000
		B	0.000	0.000	0.990	0.000	0.0065
		C	0.000	0.000	0.000	0.000	0.0579
L3	130.0000-125.0000	A	0.000	0.000	0.000	0.000	0.0000
		B	0.000	0.000	0.990	0.000	0.0065
		C	0.000	0.000	0.000	0.000	0.0825
L4	125.0000-120.0000	A	0.000	0.000	0.000	0.000	0.0000
		B	0.000	0.000	0.990	0.000	0.0065
		C	0.000	0.000	0.000	0.000	0.0886
L5	120.0000-115.0000	A	0.000	0.000	1.500	0.000	0.0000
		B	0.000	0.000	8.430	0.000	0.0803
		C	0.000	0.000	1.500	0.000	0.0886
L6	115.0000-114.7500	A	0.000	0.000	0.188	0.000	0.0000
		B	0.000	0.000	0.534	0.000	0.0040
		C	0.000	0.000	0.188	0.000	0.0044
L7	114.7500-109.7500	A	0.000	0.000	3.750	0.000	0.0000
		B	0.000	0.000	10.680	0.000	0.0803
		C	0.000	0.000	3.750	0.000	0.0886
L8	109.7500-104.7500	A	0.000	0.000	3.750	0.000	0.0000
		B	0.000	0.000	10.680	0.000	0.0803
		C	0.000	0.000	3.750	0.000	0.0886
L9	104.7500-101.5800	A	0.000	0.000	2.063	0.000	0.0000
		B	0.000	0.000	6.456	0.000	0.0509
		C	0.000	0.000	2.063	0.000	0.0562
L10	101.5800-101.3300	A	0.000	0.000	0.000	0.000	0.0000
		B	0.000	0.000	0.346	0.000	0.0040
		C	0.000	0.000	0.000	0.000	0.0044
L11	101.3300-96.3300	A	0.000	0.000	0.000	0.000	0.0000
		B	0.000	0.000	6.930	0.000	0.0803

Tower Sectio n	Tower Elevation ft	Face	A_R ft^2	A_F ft^2	C_AA_A In Face ft^2	C_AA_A Out Face ft^2	Weight K
		C	0.000	0.000	0.000	0.000	0.0886
L12	96.3300-91.3300	A	0.000	0.000	1.670	0.000	0.0000
		B	0.000	0.000	8.600	0.000	0.0803
		C	0.000	0.000	1.670	0.000	0.0886
L13	91.3300-91.0000	A	0.000	0.000	0.330	0.000	0.0000
		B	0.000	0.000	0.787	0.000	0.0053
		C	0.000	0.000	0.330	0.000	0.0059
L14	91.0000-90.7500	A	0.000	0.000	0.250	0.000	0.0000
		B	0.000	0.000	0.597	0.000	0.0040
		C	0.000	0.000	0.250	0.000	0.0044
L15	90.7500-85.7500	A	0.000	0.000	5.000	0.000	0.0000
		B	0.000	0.000	11.930	0.000	0.0803
		C	0.000	0.000	5.000	0.000	0.0886
L16	85.7500-80.7500	A	0.000	0.000	5.000	0.000	0.0000
		B	0.000	0.000	11.930	0.000	0.0803
		C	0.000	0.000	5.000	0.000	0.0886
L17	80.7500-75.7500	A	0.000	0.000	5.000	0.000	0.0000
		B	0.000	0.000	11.930	0.000	0.0803
		C	0.000	0.000	5.000	0.000	0.0886
L18	75.7500-70.7500	A	0.000	0.000	6.198	0.000	0.0000
		B	0.000	0.000	13.128	0.000	0.0803
		C	0.000	0.000	6.198	0.000	0.1101
L19	70.7500-69.9800	A	0.000	0.000	1.508	0.000	0.0000
		B	0.000	0.000	2.575	0.000	0.0124
		C	0.000	0.000	1.508	0.000	0.0210
L20	69.9800-69.7300	A	0.000	0.000	0.490	0.000	0.0000
		B	0.000	0.000	0.836	0.000	0.0040
		C	0.000	0.000	0.490	0.000	0.0068
L21	69.7300-64.7300	A	0.000	0.000	6.792	0.000	0.0000
		B	0.000	0.000	13.722	0.000	0.0803
		C	0.000	0.000	6.792	0.000	0.1364
L22	64.7300-63.0000	A	0.000	0.000	3.388	0.000	0.0000
		B	0.000	0.000	5.786	0.000	0.0278
		C	0.000	0.000	3.388	0.000	0.0472
L23	63.0000-62.7500	A	0.000	0.000	0.490	0.000	0.0000
		B	0.000	0.000	0.836	0.000	0.0040
		C	0.000	0.000	0.490	0.000	0.0068
L24	62.7500-59.0800	A	0.000	0.000	8.318	0.000	0.0000
		B	0.000	0.000	13.405	0.000	0.0589
		C	0.000	0.000	8.318	0.000	0.1001
L25	59.0800-58.8200	A	0.000	0.000	0.716	0.000	0.0000
		B	0.000	0.000	1.077	0.000	0.0042
		C	0.000	0.000	0.716	0.000	0.0071
L26	58.8200-58.6700	A	0.000	0.000	0.413	0.000	0.0000
		B	0.000	0.000	0.621	0.000	0.0024
		C	0.000	0.000	0.413	0.000	0.0041
L27	58.6700-53.6700	A	0.000	0.000	10.584	0.000	0.0000
		B	0.000	0.000	17.514	0.000	0.0803
		C	0.000	0.000	10.584	0.000	0.1364
L28	53.6700-48.5800	A	0.000	0.000	9.642	0.000	0.0000
		B	0.000	0.000	16.696	0.000	0.0817
		C	0.000	0.000	9.642	0.000	0.1391
L29	48.5800-47.5800	A	0.000	0.000	1.755	0.000	0.0000
		B	0.000	0.000	3.141	0.000	0.0161
		C	0.000	0.000	1.755	0.000	0.0274
L30	47.5800-42.5800	A	0.000	0.000	8.775	0.000	0.0000
		B	0.000	0.000	15.705	0.000	0.0803
		C	0.000	0.000	8.775	0.000	0.1372
L31	42.5800-39.6700	A	0.000	0.000	7.107	0.000	0.0000
		B	0.000	0.000	11.140	0.000	0.0467
		C	0.000	0.000	7.107	0.000	0.0798
L32	39.6700-39.4200	A	0.000	0.000	0.689	0.000	0.0000
		B	0.000	0.000	1.035	0.000	0.0040
		C	0.000	0.000	0.689	0.000	0.0069
L33	39.4200-34.4200	A	0.000	0.000	13.775	0.000	0.0000
		B	0.000	0.000	20.705	0.000	0.0803
		C	0.000	0.000	13.775	0.000	0.1372
L34	34.4200-32.5000	A	0.000	0.000	6.085	0.000	0.0000
		B	0.000	0.000	8.746	0.000	0.0308

Tower Section	Tower Elevation ft	Face	A_R ft²	A_F ft²	C_AA_A In Face ft²	C_AA_A Out Face ft²	Weight K
		C	0.000	0.000	6.085	0.000	0.0527
L35	32.5000-32.2500	A	0.000	0.000	0.928	0.000	0.0000
		B	0.000	0.000	1.275	0.000	0.0040
		C	0.000	0.000	0.928	0.000	0.0069
L36	32.2500-31.4200	A	0.000	0.000	3.082	0.000	0.0000
		B	0.000	0.000	4.232	0.000	0.0133
		C	0.000	0.000	3.082	0.000	0.0228
L37	31.4200-31.1700	A	0.000	0.000	0.928	0.000	0.0000
		B	0.000	0.000	1.275	0.000	0.0040
		C	0.000	0.000	0.928	0.000	0.0069
L38	31.1700-29.0000	A	0.000	0.000	8.368	0.000	0.0000
		B	0.000	0.000	9.551	0.000	0.0349
		C	0.000	0.000	8.368	0.000	0.0595
L39	29.0000-28.6500	A	0.000	0.000	1.283	0.000	0.0000
		B	0.000	0.000	1.449	0.000	0.0056
		C	0.000	0.000	1.283	0.000	0.0096
L40	28.6500-28.4200	A	0.000	0.000	0.843	0.000	0.0000
		B	0.000	0.000	0.952	0.000	0.0037
		C	0.000	0.000	0.843	0.000	0.0063
L41	28.4200-23.5000	A	0.000	0.000	16.872	0.000	0.0000
		B	0.000	0.000	19.204	0.000	0.0790
		C	0.000	0.000	16.872	0.000	0.1350
L42	23.5000-23.2500	A	0.000	0.000	0.917	0.000	0.0000
		B	0.000	0.000	1.035	0.000	0.0040
		C	0.000	0.000	0.917	0.000	0.0069
L43	23.2500-23.0000	A	0.000	0.000	0.917	0.000	0.0000
		B	0.000	0.000	1.035	0.000	0.0040
		C	0.000	0.000	0.917	0.000	0.0069
L44	23.0000-22.7500	A	0.000	0.000	0.917	0.000	0.0000
		B	0.000	0.000	1.035	0.000	0.0040
		C	0.000	0.000	0.917	0.000	0.0069
L45	22.7500-17.7500	A	0.000	0.000	15.371	0.000	0.0000
		B	0.000	0.000	20.705	0.000	0.0803
		C	0.000	0.000	15.371	0.000	0.1372
L46	17.7500-12.7500	A	0.000	0.000	13.775	0.000	0.0000
		B	0.000	0.000	20.705	0.000	0.0803
		C	0.000	0.000	13.775	0.000	0.1372
L47	12.7500-7.7500	A	0.000	0.000	13.775	0.000	0.0000
		B	0.000	0.000	20.705	0.000	0.0803
		C	0.000	0.000	13.775	0.000	0.1372
L48	7.7500-2.7500	A	0.000	0.000	13.775	0.000	0.0000
		B	0.000	0.000	20.705	0.000	0.0803
		C	0.000	0.000	13.775	0.000	0.1372
L49	2.7500-0.0000	A	0.000	0.000	6.199	0.000	0.0000
		B	0.000	0.000	10.010	0.000	0.0442
		C	0.000	0.000	6.199	0.000	0.0755

Feed Line/Linear Appurtenances Section Areas - With Ice

Tower Section	Tower Elevation ft	Face or Leg	Ice Thickness in	A_R ft²	A_F ft²	C_AA_A In Face ft²	C_AA_A Out Face ft²	Weight K
L1	140.0000-	A	1.471	0.000	0.000	0.000	0.000	0.0000
	135.0000	B		0.000	0.000	1.476	0.000	0.0225
		C		0.000	0.000	0.000	0.000	0.0347
L2	135.0000-	A	1.465	0.000	0.000	0.000	0.000	0.0000
	130.0000	B		0.000	0.000	2.455	0.000	0.0373
		C		0.000	0.000	0.000	0.000	0.0579
L3	130.0000-	A	1.459	0.000	0.000	0.000	0.000	0.0000
	125.0000	B		0.000	0.000	2.449	0.000	0.0372
		C		0.000	0.000	0.000	0.000	0.0825
L4	125.0000-	A	1.454	0.000	0.000	0.000	0.000	0.0000
	120.0000	B		0.000	0.000	2.444	0.000	0.0370
		C		0.000	0.000	0.000	0.000	0.0886
L5	120.0000-	A	1.448	0.000	0.000	2.072	0.000	0.0186
	115.0000	B		0.000	0.000	13.744	0.000	0.2653

Tower Section	Tower Elevation ft	Face or Leg	Ice Thickness in	A_R ft²	A_F ft²	C_AA_A In Face ft²	C_AA_A Out Face ft²	Weight K
		C		0.000	0.000	2.072	0.000	0.1072
L6	115.0000-114.7500	A	1.444	0.000	0.000	0.259	0.000	0.0023
		B		0.000	0.000	0.842	0.000	0.0146
		C		0.000	0.000	0.259	0.000	0.0067
L7	114.7500-109.7500	A	1.441	0.000	0.000	5.175	0.000	0.0461
		B		0.000	0.000	16.833	0.000	0.2921
		C		0.000	0.000	5.175	0.000	0.1347
L8	109.7500-104.7500	A	1.434	0.000	0.000	5.170	0.000	0.0458
		B		0.000	0.000	16.812	0.000	0.2911
		C		0.000	0.000	5.170	0.000	0.1345
L9	104.7500-101.5800	A	1.429	0.000	0.000	2.841	0.000	0.0251
		B		0.000	0.000	10.214	0.000	0.1802
		C		0.000	0.000	2.841	0.000	0.0813
L10	101.5800-101.3300	A	1.427	0.000	0.000	0.000	0.000	0.0000
		B		0.000	0.000	0.581	0.000	0.0122
		C		0.000	0.000	0.000	0.000	0.0044
L11	101.3300-96.3300	A	1.423	0.000	0.000	0.000	0.000	0.0000
		B		0.000	0.000	11.616	0.000	0.2439
		C		0.000	0.000	0.000	0.000	0.0886
L12	96.3300-91.3300	A	1.415	0.000	0.000	2.143	0.000	0.0178
		B		0.000	0.000	13.742	0.000	0.2609
		C		0.000	0.000	2.143	0.000	0.1064
L13	91.3300-91.0000	A	1.411	0.000	0.000	0.423	0.000	0.0035
		B		0.000	0.000	1.188	0.000	0.0195
		C		0.000	0.000	0.423	0.000	0.0094
L14	91.0000-90.7500	A	1.411	0.000	0.000	0.321	0.000	0.0027
		B		0.000	0.000	0.900	0.000	0.0148
		C		0.000	0.000	0.321	0.000	0.0071
L15	90.7500-85.7500	A	1.407	0.000	0.000	6.407	0.000	0.0529
		B		0.000	0.000	17.987	0.000	0.2950
		C		0.000	0.000	6.407	0.000	0.1415
L16	85.7500-80.7500	A	1.399	0.000	0.000	6.399	0.000	0.0525
		B		0.000	0.000	17.960	0.000	0.2937
		C		0.000	0.000	6.399	0.000	0.1411
L17	80.7500-75.7500	A	1.390	0.000	0.000	6.390	0.000	0.0521
		B		0.000	0.000	17.932	0.000	0.2923
		C		0.000	0.000	6.390	0.000	0.1407
L18	75.7500-70.7500	A	1.381	0.000	0.000	7.874	0.000	0.0642
		B		0.000	0.000	19.396	0.000	0.3034
		C		0.000	0.000	7.874	0.000	0.1743
L19	70.7500-69.9800	A	1.375	0.000	0.000	1.901	0.000	0.0156
		B		0.000	0.000	3.673	0.000	0.0524
		C		0.000	0.000	1.901	0.000	0.0366
L20	69.9800-69.7300	A	1.374	0.000	0.000	0.617	0.000	0.0051
		B		0.000	0.000	1.192	0.000	0.0170
		C		0.000	0.000	0.617	0.000	0.0119
L21	69.7300-64.7300	A	1.369	0.000	0.000	8.499	0.000	0.0702
		B		0.000	0.000	19.994	0.000	0.3081
		C		0.000	0.000	8.499	0.000	0.2066
L22	64.7300-63.0000	A	1.362	0.000	0.000	4.170	0.000	0.0346
		B		0.000	0.000	8.142	0.000	0.1167
		C		0.000	0.000	4.170	0.000	0.0819
L23	63.0000-62.7500	A	1.360	0.000	0.000	0.602	0.000	0.0050
		B		0.000	0.000	1.176	0.000	0.0168
		C		0.000	0.000	0.602	0.000	0.0118
L24	62.7500-59.0800	A	1.356	0.000	0.000	10.358	0.000	0.0865
		B		0.000	0.000	18.773	0.000	0.2600
		C		0.000	0.000	10.358	0.000	0.1866
L25	59.0800-58.8200	A	1.351	0.000	0.000	0.904	0.000	0.0076
		B		0.000	0.000	1.499	0.000	0.0199
		C		0.000	0.000	0.904	0.000	0.0147
L26	58.8200-58.6700	A	1.351	0.000	0.000	0.521	0.000	0.0044
		B		0.000	0.000	0.865	0.000	0.0115
		C		0.000	0.000	0.521	0.000	0.0085
L27	58.6700-53.6700	A	1.345	0.000	0.000	13.397	0.000	0.1129
		B		0.000	0.000	24.838	0.000	0.3481
		C		0.000	0.000	13.397	0.000	0.2493
L28	53.6700-48.5800	A	1.332	0.000	0.000	12.319	0.000	0.1024
		B		0.000	0.000	23.937	0.000	0.3404

Tower Section	Tower Elevation ft	Face or Leg	Ice Thickness in	A_R ft²	A_F ft²	C_AA_A In Face ft²	C_AA_A Out Face ft²	Weight K
		C		0.000	0.000	12.319	0.000	0.2415
L29	48.5800-47.5800	A	1.324	0.000	0.000	2.288	0.000	0.0188
		B		0.000	0.000	4.570	0.000	0.0656
		C		0.000	0.000	2.288	0.000	0.0463
L30	47.5800-42.5800	A	1.315	0.000	0.000	11.406	0.000	0.0927
		B		0.000	0.000	22.780	0.000	0.3246
		C		0.000	0.000	11.406	0.000	0.2299
L31	42.5800-39.6700	A	1.303	0.000	0.000	9.048	0.000	0.0725
		B		0.000	0.000	15.653	0.000	0.2067
		C		0.000	0.000	9.048	0.000	0.1524
L32	39.6700-39.4200	A	1.298	0.000	0.000	0.871	0.000	0.0069
		B		0.000	0.000	1.438	0.000	0.0184
		C		0.000	0.000	0.871	0.000	0.0138
L33	39.4200-34.4200	A	1.289	0.000	0.000	17.407	0.000	0.1377
		B		0.000	0.000	28.723	0.000	0.3668
		C		0.000	0.000	17.407	0.000	0.2749
L34	34.4200-32.5000	A	1.277	0.000	0.000	7.680	0.000	0.0598
		B		0.000	0.000	12.014	0.000	0.1472
		C		0.000	0.000	7.680	0.000	0.1125
L35	32.5000-32.2500	A	1.273	0.000	0.000	1.171	0.000	0.0090
		B		0.000	0.000	1.735	0.000	0.0204
		C		0.000	0.000	1.171	0.000	0.0159
L36	32.2500-31.4200	A	1.270	0.000	0.000	3.888	0.000	0.0299
		B		0.000	0.000	5.759	0.000	0.0676
		C		0.000	0.000	3.888	0.000	0.0527
L37	31.4200-31.1700	A	1.268	0.000	0.000	1.171	0.000	0.0090
		B		0.000	0.000	1.734	0.000	0.0203
		C		0.000	0.000	1.171	0.000	0.0159
L38	31.1700-29.0000	A	1.263	0.000	0.000	10.334	0.000	0.0820
		B		0.000	0.000	13.127	0.000	0.1617
		C		0.000	0.000	10.334	0.000	0.1415
L39	29.0000-28.6500	A	1.258	0.000	0.000	1.579	0.000	0.0126
		B		0.000	0.000	2.000	0.000	0.0251
		C		0.000	0.000	1.579	0.000	0.0222
L40	28.6500-28.4200	A	1.257	0.000	0.000	1.038	0.000	0.0082
		B		0.000	0.000	1.314	0.000	0.0165
		C		0.000	0.000	1.038	0.000	0.0146
L41	28.4200-23.5000	A	1.245	0.000	0.000	20.833	0.000	0.1636
		B		0.000	0.000	26.729	0.000	0.3396
		C		0.000	0.000	20.833	0.000	0.2986
L42	23.5000-23.2500	A	1.232	0.000	0.000	1.134	0.000	0.0087
		B		0.000	0.000	1.433	0.000	0.0176
		C		0.000	0.000	1.134	0.000	0.0156
L43	23.2500-23.0000	A	1.230	0.000	0.000	1.134	0.000	0.0087
		B		0.000	0.000	1.432	0.000	0.0176
		C		0.000	0.000	1.134	0.000	0.0156
L44	23.0000-22.7500	A	1.229	0.000	0.000	1.134	0.000	0.0087
		B		0.000	0.000	1.432	0.000	0.0176
		C		0.000	0.000	1.134	0.000	0.0156
L45	22.7500-17.7500	A	1.214	0.000	0.000	19.240	0.000	0.1430
		B		0.000	0.000	28.564	0.000	0.3486
		C		0.000	0.000	19.240	0.000	0.2802
L46	17.7500-12.7500	A	1.180	0.000	0.000	17.316	0.000	0.1232
		B		0.000	0.000	28.386	0.000	0.3405
		C		0.000	0.000	17.316	0.000	0.2604
L47	12.7500-7.7500	A	1.134	0.000	0.000	17.178	0.000	0.1172
		B		0.000	0.000	28.144	0.000	0.3296
		C		0.000	0.000	17.178	0.000	0.2544
L48	7.7500-2.7500	A	1.061	0.000	0.000	16.957	0.000	0.1079
		B		0.000	0.000	27.759	0.000	0.3126
		C		0.000	0.000	16.957	0.000	0.2451
L49	2.7500-0.0000	A	0.928	0.000	0.000	7.451	0.000	0.0412
		B		0.000	0.000	13.227	0.000	0.1463
		C		0.000	0.000	7.451	0.000	0.1167

Feed Line Center of Pressure

Section	Elevation ft	CP_X in	CP_Z in	CP_X Ice in	CP_Z Ice in
L1	140.0000-135.0000	0.9594	0.2039	1.1619	0.2470
L2	135.0000-130.0000	1.4219	0.3022	1.7660	0.3754
L3	130.0000-125.0000	1.4554	0.3094	1.7923	0.3810
L4	125.0000-120.0000	1.4753	0.3136	1.8156	0.3859
L5	120.0000-115.0000	3.4832	-1.6368	3.8219	-1.6040
L6	115.0000-114.7500	2.5898	-1.2158	2.9401	-1.2325
L7	114.7500-109.7500	2.6274	-1.2324	2.9934	-1.2535
L8	109.7500-104.7500	2.6970	-1.2631	3.0929	-1.2928
L9	104.7500-101.5800	2.9163	-1.3641	3.3473	-1.3973
L10	101.5800-101.3300	4.6146	-2.1575	5.1259	-2.1386
L11	101.3300-96.3300	4.6378	-2.1668	5.1810	-2.1600
L12	96.3300-91.3300	3.6996	-1.7263	4.2961	-1.7888
L13	91.3300-91.0000	2.6273	-1.2251	3.1630	-1.3162
L14	91.0000-90.7500	2.6323	-1.2274	3.1693	-1.3188
L15	90.7500-85.7500	2.6632	-1.2411	3.2142	-1.3367
L16	85.7500-80.7500	2.7207	-1.2665	3.2980	-1.3703
L17	80.7500-75.7500	2.7765	-1.2912	3.3797	-1.4033
L18	75.7500-70.7500	2.5471	-1.1834	3.1431	-1.3042
L19	70.7500-69.9800	1.9847	-0.9216	2.5028	-1.0383
L20	69.9800-69.7300	1.9893	-0.9237	2.5092	-1.0409
L21	69.7300-64.7300	2.4548	-1.1393	3.0762	-1.2758
L22	64.7300-63.0000	2.0429	-0.9477	2.6139	-1.0839
L23	63.0000-62.7500	2.0522	-0.9518	2.6265	-1.0891
L24	62.7500-59.0800	1.8962	-0.8792	2.4233	-1.0048
L25	59.0800-58.8200	1.6892	-0.7830	2.1541	-0.8931
L26	58.8200-58.6700	1.6908	-0.7837	2.1562	-0.8940
L27	58.6700-53.6700	2.0379	-0.9442	2.5741	-1.0672
L28	53.6700-48.5800	2.2163	-1.0262	2.7819	-1.1535
L29	48.5800-47.5800	2.2908	-1.0606	2.8482	-1.1809
L30	47.5800-42.5800	2.3165	-1.0721	2.8829	-1.1964
L31	42.5800-39.6700	1.9437	-0.8991	2.4589	-1.0208
L32	39.6700-39.4200	1.8138	-0.8388	2.3072	-0.9580
L33	39.4200-34.4200	1.8328	-0.8473	2.3325	-0.9689
L34	34.4200-32.5000	1.6870	-0.7796	2.1539	-0.8952
L35	32.5000-32.2500	1.5120	-0.6987	1.9361	-0.8049
L36	32.2500-31.4200	1.5154	-0.7002	1.9405	-0.8068
L37	31.4200-31.1700	1.5189	-0.7018	1.9451	-0.8088
L38	31.1700-29.0000	1.3072	0.2834	1.7888	0.0753
L39	29.0000-28.6500	1.3495	0.3883	1.8578	0.1618
L40	28.6500-28.4200	1.3510	0.3890	1.8598	0.1622
L41	28.4200-23.5000	1.4320	0.4146	1.9614	0.1735
L42	23.5000-23.2500	1.3775	0.4009	1.8841	0.1689
L43	23.2500-23.0000	1.3788	0.4015	1.8858	0.1693
L44	23.0000-22.7500	1.3799	0.4020	1.8874	0.1697
L45	22.7500-17.7500	1.7387	-0.4058	2.2566	-0.5791
L46	17.7500-12.7500	1.9835	-0.9149	2.5113	-1.0505
L47	12.7500-7.7500	2.0169	-0.9299	2.5516	-1.0715
L48	7.7500-2.7500	2.0498	-0.9446	2.5867	-1.0936
L49	2.7500-0.0000	2.3372	-1.0767	2.9226	-1.2522

Note: For pole sections, center of pressure calculations do not consider feed line shielding.

Shielding Factor Ka

Tower Section	Feed Line Record No.	Description	Feed Line Segment Elev.	K_a No Ice	K_a Ice
L1	43	HB158-1-08U8-S8J18(1-5/8)	135.00 - 138.00	1.0000	1.0000
L2	43	HB158-1-08U8-S8J18(1-5/8)	130.00 - 135.00	1.0000	1.0000
L3	43	HB158-1-08U8-S8J18(1-5/8)	125.00 - 130.00	1.0000	1.0000
L4	43	HB158-1-08U8-S8J18(1-5/8)	120.00 - 125.00	1.0000	1.0000
L5	33	CCI-65FP-045100	115.00 - 117.00	1.0000	1.0000
L5	34	CCI-65FP-045100	115.00 - 117.00	1.0000	1.0000
L5	35	CCI-65FP-045100	115.00 - 117.00	1.0000	1.0000
L5	43	HB158-1-08U8-S8J18(1-5/8)	115.00 - 120.00	1.0000	1.0000
L5	52	LDF7-50A(1-5/8)	115.00 - 120.00	1.0000	1.0000
L6	33	CCI-65FP-045100	114.75 - 115.00	1.0000	1.0000
L6	34	CCI-65FP-045100	114.75 - 115.00	1.0000	1.0000
L6	35	CCI-65FP-045100	114.75 - 115.00	1.0000	1.0000
L6	43	HB158-1-08U8-S8J18(1-5/8)	114.75 - 115.00	1.0000	1.0000
L6	52	LDF7-50A(1-5/8)	114.75 - 115.00	1.0000	1.0000
L7	33	CCI-65FP-045100	109.75 - 114.75	1.0000	1.0000
L7	34	CCI-65FP-045100	109.75 - 114.75	1.0000	1.0000
L7	35	CCI-65FP-045100	109.75 - 114.75	1.0000	1.0000
L7	43	HB158-1-08U8-S8J18(1-5/8)	109.75 - 114.75	1.0000	1.0000
L7	52	LDF7-50A(1-5/8)	109.75 - 114.75	1.0000	1.0000
L8	33	CCI-65FP-045100	104.75 - 109.75	1.0000	1.0000
L8	34	CCI-65FP-045100	104.75 - 109.75	1.0000	1.0000
L8	35	CCI-65FP-045100	104.75 - 109.75	1.0000	1.0000
L8	43	HB158-1-08U8-S8J18(1-5/8)	104.75 - 109.75	1.0000	1.0000
L8	52	LDF7-50A(1-5/8)	104.75 - 109.75	1.0000	1.0000
L9	33	CCI-65FP-045100	102.00 - 104.75	1.0000	1.0000
L9	34	CCI-65FP-045100	102.00 - 104.75	1.0000	1.0000
L9	35	CCI-65FP-045100	102.00 - 104.75	1.0000	1.0000
L9	43	HB158-1-08U8-S8J18(1-5/8)	101.58 - 104.75	1.0000	1.0000
L9	52	LDF7-50A(1-5/8)	101.58 - 104.75	1.0000	1.0000
L10	43	HB158-1-08U8-S8J18(1-5/8)	101.33 - 101.58	1.0000	1.0000
L10	52	LDF7-50A(1-5/8)	101.33 - 101.58	1.0000	1.0000
L11	43	HB158-1-08U8-S8J18(1-5/8)	96.33 - 101.33	1.0000	1.0000

Tower Section	Feed Line Record No.	Description	Feed Line Segment Elev.	K_a No Ice	K_a Ice
L11	52	LDF7-50A(1-5/8)	96.33 - 101.33	1.0000	1.0000
L12	29	CCI-65FP-060100	91.33 - 93.00	1.0000	1.0000
L12	30	CCI-65FP-060100	91.33 - 93.00	1.0000	1.0000
L12	31	CCI-65FP-060100	91.33 - 93.00	1.0000	1.0000
L12	43	HB158-1-08U8-S8J18(1-5/8)	91.33 - 96.33	1.0000	1.0000
L12	52	LDF7-50A(1-5/8)	91.33 - 96.33	1.0000	1.0000
L13	29	CCI-65FP-060100	91.00 - 91.33	1.0000	1.0000
L13	30	CCI-65FP-060100	91.00 - 91.33	1.0000	1.0000
L13	31	CCI-65FP-060100	91.00 - 91.33	1.0000	1.0000
L13	43	HB158-1-08U8-S8J18(1-5/8)	91.00 - 91.33	1.0000	1.0000
L13	52	LDF7-50A(1-5/8)	91.00 - 91.33	1.0000	1.0000
L14	29	CCI-65FP-060100	90.75 - 91.00	1.0000	1.0000
L14	30	CCI-65FP-060100	90.75 - 91.00	1.0000	1.0000
L14	31	CCI-65FP-060100	90.75 - 91.00	1.0000	1.0000
L14	43	HB158-1-08U8-S8J18(1-5/8)	90.75 - 91.00	1.0000	1.0000
L14	52	LDF7-50A(1-5/8)	90.75 - 91.00	1.0000	1.0000
L15	29	CCI-65FP-060100	85.75 - 90.75	1.0000	1.0000
L15	30	CCI-65FP-060100	85.75 - 90.75	1.0000	1.0000
L15	31	CCI-65FP-060100	85.75 - 90.75	1.0000	1.0000
L15	43	HB158-1-08U8-S8J18(1-5/8)	85.75 - 90.75	1.0000	1.0000
L15	52	LDF7-50A(1-5/8)	85.75 - 90.75	1.0000	1.0000
L16	29	CCI-65FP-060100	80.75 - 85.75	1.0000	1.0000
L16	30	CCI-65FP-060100	80.75 - 85.75	1.0000	1.0000
L16	31	CCI-65FP-060100	80.75 - 85.75	1.0000	1.0000
L16	43	HB158-1-08U8-S8J18(1-5/8)	80.75 - 85.75	1.0000	1.0000
L16	52	LDF7-50A(1-5/8)	80.75 - 85.75	1.0000	1.0000
L17	29	CCI-65FP-060100	75.75 - 80.75	1.0000	1.0000
L17	30	CCI-65FP-060100	75.75 - 80.75	1.0000	1.0000
L17	31	CCI-65FP-060100	75.75 - 80.75	1.0000	1.0000
L17	43	HB158-1-08U8-S8J18(1-5/8)	75.75 - 80.75	1.0000	1.0000
L17	52	LDF7-50A(1-5/8)	75.75 - 80.75	1.0000	1.0000
L18	9	5.75" x 1" Flat Plate (G)	70.75 - 72.00	1.0000	1.0000
L18	10	5.75" x 1" Flat Plate (G)	70.75 - 72.00	1.0000	1.0000
L18	11	5.75" x 1" Flat Plate (G)	70.75 - 72.00	1.0000	1.0000
L18	29	CCI-65FP-060100	70.75 -	1.0000	1.0000

Tower Section	Feed Line Record No.	Description	Feed Line Segment Elev.	K_a No Ice	K_a Ice
L18	30	CCI-65FP-060100	75.75 70.75 - 75.75	1.0000	1.0000
L18	31	CCI-65FP-060100	75.75 70.75 - 75.75	1.0000	1.0000
L18	43	HB158-1-08U8-S8J18(1-5/8)	75.75 70.75 - 75.75	1.0000	1.0000
L18	52	LDF7-50A(1-5/8)	75.75 70.75 - 75.75	1.0000	1.0000
L19	9	5.75" x 1" Flat Plate (G)	69.98 - 70.75	1.0000	1.0000
L19	10	5.75" x 1" Flat Plate (G)	69.98 - 70.75	1.0000	1.0000
L19	11	5.75" x 1" Flat Plate (G)	69.98 - 70.75	1.0000	1.0000
L19	29	CCI-65FP-060100	69.98 - 70.75	1.0000	1.0000
L19	30	CCI-65FP-060100	69.98 - 70.75	1.0000	1.0000
L19	31	CCI-65FP-060100	69.98 - 70.75	1.0000	1.0000
L19	43	HB158-1-08U8-S8J18(1-5/8)	69.98 - 70.75	1.0000	1.0000
L19	52	LDF7-50A(1-5/8)	69.98 - 70.75	1.0000	1.0000
L20	9	5.75" x 1" Flat Plate (G)	69.73 - 69.98	1.0000	1.0000
L20	10	5.75" x 1" Flat Plate (G)	69.73 - 69.98	1.0000	1.0000
L20	11	5.75" x 1" Flat Plate (G)	69.73 - 69.98	1.0000	1.0000
L20	29	CCI-65FP-060100	69.73 - 69.98	1.0000	1.0000
L20	30	CCI-65FP-060100	69.73 - 69.98	1.0000	1.0000
L20	31	CCI-65FP-060100	69.73 - 69.98	1.0000	1.0000
L20	43	HB158-1-08U8-S8J18(1-5/8)	69.73 - 69.98	1.0000	1.0000
L20	52	LDF7-50A(1-5/8)	69.73 - 69.98	1.0000	1.0000
L21	9	5.75" x 1" Flat Plate (G)	64.73 - 69.73	1.0000	1.0000
L21	10	5.75" x 1" Flat Plate (G)	64.73 - 69.73	1.0000	1.0000
L21	11	5.75" x 1" Flat Plate (G)	64.73 - 69.73	1.0000	1.0000
L21	25	CCI-65FP-060100	64.73 - 65.00	1.0000	1.0000
L21	26	CCI-65FP-060100	64.73 - 65.00	1.0000	1.0000
L21	27	CCI-65FP-060100	64.73 - 65.00	1.0000	1.0000
L21	29	CCI-65FP-060100	68.00 - 69.73	1.0000	1.0000
L21	30	CCI-65FP-060100	68.00 - 69.73	1.0000	1.0000
L21	31	CCI-65FP-060100	68.00 - 69.73	1.0000	1.0000
L21	43	HB158-1-08U8-S8J18(1-5/8)	64.73 - 69.73	1.0000	1.0000
L21	52	LDF7-50A(1-5/8)	64.73 - 69.73	1.0000	1.0000
L22	9	5.75" x 1" Flat Plate (G)	63.00 - 64.73	1.0000	1.0000
L22	10	5.75" x 1" Flat Plate (G)	63.00 - 64.73	1.0000	1.0000
L22	11	5.75" x 1" Flat Plate (G)	63.00 - 64.73	1.0000	1.0000

Tower Section	Feed Line Record No.	Description	Feed Line Segment Elev.	K_a No Ice	K_a Ice
L22	25	CCI-65FP-060100	63.00 - 64.73	1.0000	1.0000
L22	26	CCI-65FP-060100	63.00 - 64.73	1.0000	1.0000
L22	27	CCI-65FP-060100	63.00 - 64.73	1.0000	1.0000
L22	43	HB158-1-08U8-S8J18(1-5/8)	63.00 - 64.73	1.0000	1.0000
L22	52	LDF7-50A(1-5/8)	63.00 - 64.73	1.0000	1.0000
L23	9	5.75" x 1" Flat Plate (G)	62.75 - 63.00	1.0000	1.0000
L23	10	5.75" x 1" Flat Plate (G)	62.75 - 63.00	1.0000	1.0000
L23	11	5.75" x 1" Flat Plate (G)	62.75 - 63.00	1.0000	1.0000
L23	25	CCI-65FP-060100	62.75 - 63.00	1.0000	1.0000
L23	26	CCI-65FP-060100	62.75 - 63.00	1.0000	1.0000
L23	27	CCI-65FP-060100	62.75 - 63.00	1.0000	1.0000
L23	43	HB158-1-08U8-S8J18(1-5/8)	62.75 - 63.00	1.0000	1.0000
L23	52	LDF7-50A(1-5/8)	62.75 - 63.00	1.0000	1.0000
L24	9	5.75" x 1" Flat Plate (G)	59.08 - 62.75	1.0000	1.0000
L24	10	5.75" x 1" Flat Plate (G)	59.08 - 62.75	1.0000	1.0000
L24	11	5.75" x 1" Flat Plate (G)	59.08 - 62.75	1.0000	1.0000
L24	13	MP3-04	59.08 - 60.50	1.0000	1.0000
L24	14	MP3-04	59.08 - 60.50	1.0000	1.0000
L24	15	MP3-04	59.08 - 60.50	1.0000	1.0000
L24	25	CCI-65FP-060100	59.08 - 62.75	1.0000	1.0000
L24	26	CCI-65FP-060100	59.08 - 62.75	1.0000	1.0000
L24	27	CCI-65FP-060100	59.08 - 62.75	1.0000	1.0000
L24	43	HB158-1-08U8-S8J18(1-5/8)	59.08 - 62.75	1.0000	1.0000
L24	52	LDF7-50A(1-5/8)	59.08 - 62.75	1.0000	1.0000
L25	9	5.75" x 1" Flat Plate (G)	58.82 - 59.08	1.0000	1.0000
L25	10	5.75" x 1" Flat Plate (G)	58.82 - 59.08	1.0000	1.0000
L25	11	5.75" x 1" Flat Plate (G)	58.82 - 59.08	1.0000	1.0000
L25	13	MP3-04	58.82 - 59.08	1.0000	1.0000
L25	14	MP3-04	58.82 - 59.08	1.0000	1.0000
L25	15	MP3-04	58.82 - 59.08	1.0000	1.0000
L25	25	CCI-65FP-060100	58.82 - 59.08	1.0000	1.0000
L25	26	CCI-65FP-060100	58.82 - 59.08	1.0000	1.0000
L25	27	CCI-65FP-060100	58.82 - 59.08	1.0000	1.0000
L25	43	HB158-1-08U8-S8J18(1-5/8)	58.82 - 59.08	1.0000	1.0000
L25	52	LDF7-50A(1-5/8)	58.82 -	1.0000	1.0000

Tower Section	Feed Line Record No.	Description	Feed Line Segment Elev.	K_a No Ice	K_a Ice
			59.08		
L26	9	5.75" x 1" Flat Plate (G)	58.67 - 58.82	1.0000	1.0000
L26	10	5.75" x 1" Flat Plate (G)	58.67 - 58.82	1.0000	1.0000
L26	11	5.75" x 1" Flat Plate (G)	58.67 - 58.82	1.0000	1.0000
L26	13	MP3-04	58.67 - 58.82	1.0000	1.0000
L26	14	MP3-04	58.67 - 58.82	1.0000	1.0000
L26	15	MP3-04	58.67 - 58.82	1.0000	1.0000
L26	25	CCI-65FP-060100	58.67 - 58.82	1.0000	1.0000
L26	26	CCI-65FP-060100	58.67 - 58.82	1.0000	1.0000
L26	27	CCI-65FP-060100	58.67 - 58.82	1.0000	1.0000
L26	43	HB158-1-08U8-S8J18(1-5/8)	58.67 - 58.82	1.0000	1.0000
L26	52	LDF7-50A(1-5/8)	58.67 - 58.82	1.0000	1.0000
L27	9	5.75" x 1" Flat Plate (G)	57.00 - 58.67	1.0000	1.0000
L27	10	5.75" x 1" Flat Plate (G)	57.00 - 58.67	1.0000	1.0000
L27	11	5.75" x 1" Flat Plate (G)	57.00 - 58.67	1.0000	1.0000
L27	13	MP3-04	53.67 - 58.67	1.0000	1.0000
L27	14	MP3-04	53.67 - 58.67	1.0000	1.0000
L27	15	MP3-04	53.67 - 58.67	1.0000	1.0000
L27	25	CCI-65FP-060100	53.67 - 58.67	1.0000	1.0000
L27	26	CCI-65FP-060100	53.67 - 58.67	1.0000	1.0000
L27	27	CCI-65FP-060100	53.67 - 58.67	1.0000	1.0000
L27	43	HB158-1-08U8-S8J18(1-5/8)	53.67 - 58.67	1.0000	1.0000
L27	52	LDF7-50A(1-5/8)	53.67 - 58.67	1.0000	1.0000
L28	5	5.75" x 1" Flat Plate (G)	48.58 - 50.58	1.0000	1.0000
L28	6	5.75" x 1" Flat Plate (G)	48.58 - 50.58	1.0000	1.0000
L28	7	5.75" x 1" Flat Plate (G)	48.58 - 50.58	1.0000	1.0000
L28	13	MP3-04	48.58 - 53.67	1.0000	1.0000
L28	14	MP3-04	48.58 - 53.67	1.0000	1.0000
L28	15	MP3-04	48.58 - 53.67	1.0000	1.0000
L28	25	CCI-65FP-060100	50.00 - 53.67	1.0000	1.0000
L28	26	CCI-65FP-060100	50.00 - 53.67	1.0000	1.0000
L28	27	CCI-65FP-060100	50.00 - 53.67	1.0000	1.0000
L28	43	HB158-1-08U8-S8J18(1-5/8)	48.58 - 53.67	1.0000	1.0000
L28	52	LDF7-50A(1-5/8)	48.58 - 53.67	1.0000	1.0000
L30	5	5.75" x 1" Flat Plate (G)	42.58 - 47.58	1.0000	1.0000

Tower Section	Feed Line Record No.	Description	Feed Line Segment Elev.	K_a No Ice	K_a Ice
L30	6	5.75" x 1" Flat Plate (G)	42.58 - 47.58	1.0000	1.0000
L30	7	5.75" x 1" Flat Plate (G)	42.58 - 47.58	1.0000	1.0000
L30	13	MP3-04	42.58 - 47.58	1.0000	1.0000
L30	14	MP3-04	42.58 - 47.58	1.0000	1.0000
L30	15	MP3-04	42.58 - 47.58	1.0000	1.0000
L30	43	HB158-1-08U8-S8J18(1-5/8)	42.58 - 47.58	1.0000	1.0000
L30	52	LDF7-50A(1-5/8)	42.58 - 47.58	1.0000	1.0000
L31	5	5.75" x 1" Flat Plate (G)	39.67 - 42.58	1.0000	1.0000
L31	6	5.75" x 1" Flat Plate (G)	39.67 - 42.58	1.0000	1.0000
L31	7	5.75" x 1" Flat Plate (G)	39.67 - 42.58	1.0000	1.0000
L31	13	MP3-04	39.67 - 42.58	1.0000	1.0000
L31	14	MP3-04	39.67 - 42.58	1.0000	1.0000
L31	15	MP3-04	39.67 - 42.58	1.0000	1.0000
L31	17	CCI-65FP-060100	39.67 - 41.67	1.0000	1.0000
L31	18	CCI-65FP-060100	39.67 - 41.67	1.0000	1.0000
L31	19	CCI-65FP-060100	39.67 - 41.67	1.0000	1.0000
L31	43	HB158-1-08U8-S8J18(1-5/8)	39.67 - 42.58	1.0000	1.0000
L31	52	LDF7-50A(1-5/8)	39.67 - 42.58	1.0000	1.0000
L32	5	5.75" x 1" Flat Plate (G)	39.42 - 39.67	1.0000	1.0000
L32	6	5.75" x 1" Flat Plate (G)	39.42 - 39.67	1.0000	1.0000
L32	7	5.75" x 1" Flat Plate (G)	39.42 - 39.67	1.0000	1.0000
L32	13	MP3-04	39.42 - 39.67	1.0000	1.0000
L32	14	MP3-04	39.42 - 39.67	1.0000	1.0000
L32	15	MP3-04	39.42 - 39.67	1.0000	1.0000
L32	17	CCI-65FP-060100	39.42 - 39.67	1.0000	1.0000
L32	18	CCI-65FP-060100	39.42 - 39.67	1.0000	1.0000
L32	19	CCI-65FP-060100	39.42 - 39.67	1.0000	1.0000
L32	43	HB158-1-08U8-S8J18(1-5/8)	39.42 - 39.67	1.0000	1.0000
L32	52	LDF7-50A(1-5/8)	39.42 - 39.67	1.0000	1.0000
L33	5	5.75" x 1" Flat Plate (G)	34.42 - 39.42	1.0000	1.0000
L33	6	5.75" x 1" Flat Plate (G)	34.42 - 39.42	1.0000	1.0000
L33	7	5.75" x 1" Flat Plate (G)	34.42 - 39.42	1.0000	1.0000
L33	13	MP3-04	34.42 - 39.42	1.0000	1.0000
L33	14	MP3-04	34.42 - 39.42	1.0000	1.0000
L33	15	MP3-04	34.42 -	1.0000	1.0000

Tower Section	Feed Line Record No.	Description	Feed Line Segment Elev.	K_a No Ice	K_a Ice
L33	17	CCI-65FP-060100	39.42 34.42 - 39.42	1.0000	1.0000
L33	18	CCI-65FP-060100	34.42 - 39.42	1.0000	1.0000
L33	19	CCI-65FP-060100	34.42 - 39.42	1.0000	1.0000
L33	43	HB158-1-08U8-S8J18(1-5/8)	34.42 - 39.42	1.0000	1.0000
L33	52	LDF7-50A(1-5/8)	34.42 - 39.42	1.0000	1.0000
L34	1	5.75" x 1" Flat Plate (G)	32.50 - 33.33	1.0000	1.0000
L34	2	5.75" x 1" Flat Plate (G)	32.50 - 33.33	1.0000	1.0000
L34	3	5.75" x 1" Flat Plate (G)	32.50 - 33.33	1.0000	1.0000
L34	5	5.75" x 1" Flat Plate (G)	32.50 - 34.42	1.0000	1.0000
L34	6	5.75" x 1" Flat Plate (G)	32.50 - 34.42	1.0000	1.0000
L34	7	5.75" x 1" Flat Plate (G)	32.50 - 34.42	1.0000	1.0000
L34	13	MP3-04	32.50 - 34.42	1.0000	1.0000
L34	14	MP3-04	32.50 - 34.42	1.0000	1.0000
L34	15	MP3-04	32.50 - 34.42	1.0000	1.0000
L34	17	CCI-65FP-060100	32.50 - 34.42	1.0000	1.0000
L34	18	CCI-65FP-060100	32.50 - 34.42	1.0000	1.0000
L34	19	CCI-65FP-060100	32.50 - 34.42	1.0000	1.0000
L34	43	HB158-1-08U8-S8J18(1-5/8)	32.50 - 34.42	1.0000	1.0000
L34	52	LDF7-50A(1-5/8)	32.50 - 34.42	1.0000	1.0000
L35	1	5.75" x 1" Flat Plate (G)	32.25 - 32.50	1.0000	1.0000
L35	2	5.75" x 1" Flat Plate (G)	32.25 - 32.50	1.0000	1.0000
L35	3	5.75" x 1" Flat Plate (G)	32.25 - 32.50	1.0000	1.0000
L35	5	5.75" x 1" Flat Plate (G)	32.25 - 32.50	1.0000	1.0000
L35	6	5.75" x 1" Flat Plate (G)	32.25 - 32.50	1.0000	1.0000
L35	7	5.75" x 1" Flat Plate (G)	32.25 - 32.50	1.0000	1.0000
L35	13	MP3-04	32.25 - 32.50	1.0000	1.0000
L35	14	MP3-04	32.25 - 32.50	1.0000	1.0000
L35	15	MP3-04	32.25 - 32.50	1.0000	1.0000
L35	17	CCI-65FP-060100	32.25 - 32.50	1.0000	1.0000
L35	18	CCI-65FP-060100	32.25 - 32.50	1.0000	1.0000
L35	19	CCI-65FP-060100	32.25 - 32.50	1.0000	1.0000
L35	43	HB158-1-08U8-S8J18(1-5/8)	32.25 - 32.50	1.0000	1.0000
L35	52	LDF7-50A(1-5/8)	32.25 - 32.50	1.0000	1.0000
L36	1	5.75" x 1" Flat Plate (G)	31.42 - 32.25	1.0000	1.0000

Tower Section	Feed Line Record No.	Description	Feed Line Segment Elev.	K_a No Ice	K_a Ice
L36	2	5.75" x 1" Flat Plate (G)	31.42 - 32.25	1.0000	1.0000
L36	3	5.75" x 1" Flat Plate (G)	31.42 - 32.25	1.0000	1.0000
L36	5	5.75" x 1" Flat Plate (G)	31.42 - 32.25	1.0000	1.0000
L36	6	5.75" x 1" Flat Plate (G)	31.42 - 32.25	1.0000	1.0000
L36	7	5.75" x 1" Flat Plate (G)	31.42 - 32.25	1.0000	1.0000
L36	13	MP3-04	31.42 - 32.25	1.0000	1.0000
L36	14	MP3-04	31.42 - 32.25	1.0000	1.0000
L36	15	MP3-04	31.42 - 32.25	1.0000	1.0000
L36	17	CCI-65FP-060100	31.42 - 32.25	1.0000	1.0000
L36	18	CCI-65FP-060100	31.42 - 32.25	1.0000	1.0000
L36	19	CCI-65FP-060100	31.42 - 32.25	1.0000	1.0000
L36	43	HB158-1-08U8-S8J18(1-5/8)	31.42 - 32.25	1.0000	1.0000
L36	52	LDF7-50A(1-5/8)	31.42 - 32.25	1.0000	1.0000
L37	1	5.75" x 1" Flat Plate (G)	31.17 - 31.42	1.0000	1.0000
L37	2	5.75" x 1" Flat Plate (G)	31.17 - 31.42	1.0000	1.0000
L37	3	5.75" x 1" Flat Plate (G)	31.17 - 31.42	1.0000	1.0000
L37	5	5.75" x 1" Flat Plate (G)	31.17 - 31.42	1.0000	1.0000
L37	6	5.75" x 1" Flat Plate (G)	31.17 - 31.42	1.0000	1.0000
L37	7	5.75" x 1" Flat Plate (G)	31.17 - 31.42	1.0000	1.0000
L37	13	MP3-04	31.17 - 31.42	1.0000	1.0000
L37	14	MP3-04	31.17 - 31.42	1.0000	1.0000
L37	15	MP3-04	31.17 - 31.42	1.0000	1.0000
L37	17	CCI-65FP-060100	31.17 - 31.42	1.0000	1.0000
L37	18	CCI-65FP-060100	31.17 - 31.42	1.0000	1.0000
L37	19	CCI-65FP-060100	31.17 - 31.42	1.0000	1.0000
L37	43	HB158-1-08U8-S8J18(1-5/8)	31.17 - 31.42	1.0000	1.0000
L37	52	LDF7-50A(1-5/8)	31.17 - 31.42	1.0000	1.0000
L38	1	5.75" x 1" Flat Plate (G)	29.00 - 31.17	1.0000	1.0000
L38	2	5.75" x 1" Flat Plate (G)	29.00 - 31.17	1.0000	1.0000
L38	3	5.75" x 1" Flat Plate (G)	29.00 - 31.17	1.0000	1.0000
L38	5	5.75" x 1" Flat Plate (G)	30.58 - 31.17	1.0000	1.0000
L38	6	5.75" x 1" Flat Plate (G)	30.58 - 31.17	1.0000	1.0000
L38	7	5.75" x 1" Flat Plate (G)	30.58 - 31.17	1.0000	1.0000
L38	13	MP3-04	29.00 - 31.17	1.0000	1.0000
L38	14	MP3-04	29.00 -	1.0000	1.0000

Tower Section	Feed Line Record No.	Description	Feed Line Segment Elev.	K_a No Ice	K_a Ice
L38	15	MP3-04	29.00 - 31.17	1.0000	1.0000
L38	17	CCI-65FP-060100	29.00 - 31.17	1.0000	1.0000
L38	18	CCI-65FP-060100	29.00 - 31.17	1.0000	1.0000
L38	19	CCI-65FP-060100	29.00 - 31.17	1.0000	1.0000
L38	37	CCI-65FP-060100	29.00 - 31.17	1.0000	1.0000
L38	38	CCI-65FP-060100	29.00 - 31.00	1.0000	1.0000
L38	43	HB158-1-08U8-S8J18(1-5/8)	29.00 - 31.00	1.0000	1.0000
L38	52	LDF7-50A(1-5/8)	29.00 - 31.17	1.0000	1.0000
L39	1	5.75" x 1" Flat Plate (G)	28.65 - 29.00	1.0000	1.0000
L39	2	5.75" x 1" Flat Plate (G)	28.65 - 29.00	1.0000	1.0000
L39	3	5.75" x 1" Flat Plate (G)	28.65 - 29.00	1.0000	1.0000
L39	13	MP3-04	28.65 - 29.00	1.0000	1.0000
L39	14	MP3-04	28.65 - 29.00	1.0000	1.0000
L39	15	MP3-04	28.65 - 29.00	1.0000	1.0000
L39	17	CCI-65FP-060100	28.65 - 29.00	1.0000	1.0000
L39	18	CCI-65FP-060100	28.65 - 29.00	1.0000	1.0000
L39	19	CCI-65FP-060100	28.65 - 29.00	1.0000	1.0000
L39	37	CCI-65FP-060100	28.65 - 29.00	1.0000	1.0000
L39	38	CCI-65FP-060100	28.65 - 29.00	1.0000	1.0000
L39	43	HB158-1-08U8-S8J18(1-5/8)	28.65 - 29.00	1.0000	1.0000
L39	52	LDF7-50A(1-5/8)	28.65 - 29.00	1.0000	1.0000
L40	1	5.75" x 1" Flat Plate (G)	28.42 - 28.65	1.0000	1.0000
L40	2	5.75" x 1" Flat Plate (G)	28.42 - 28.65	1.0000	1.0000
L40	3	5.75" x 1" Flat Plate (G)	28.42 - 28.65	1.0000	1.0000
L40	13	MP3-04	28.42 - 28.65	1.0000	1.0000
L40	14	MP3-04	28.42 - 28.65	1.0000	1.0000
L40	15	MP3-04	28.42 - 28.65	1.0000	1.0000
L40	17	CCI-65FP-060100	28.42 - 28.65	1.0000	1.0000
L40	18	CCI-65FP-060100	28.42 - 28.65	1.0000	1.0000
L40	19	CCI-65FP-060100	28.42 - 28.65	1.0000	1.0000
L40	37	CCI-65FP-060100	28.42 - 28.65	1.0000	1.0000
L40	38	CCI-65FP-060100	28.42 - 28.65	1.0000	1.0000
L40	43	HB158-1-08U8-S8J18(1-5/8)	28.42 - 28.65	1.0000	1.0000
L40	52	LDF7-50A(1-5/8)	28.42 - 28.65	1.0000	1.0000

Tower Section	Feed Line Record No.	Description	Feed Line Segment Elev.	K_a No Ice	K_a Ice
L41	1	5.75" x 1" Flat Plate (G)	23.50 - 28.42	1.0000	1.0000
L41	2	5.75" x 1" Flat Plate (G)	23.50 - 28.42	1.0000	1.0000
L41	3	5.75" x 1" Flat Plate (G)	23.50 - 28.42	1.0000	1.0000
L41	13	MP3-04	23.50 - 28.42	1.0000	1.0000
L41	14	MP3-04	23.50 - 28.42	1.0000	1.0000
L41	15	MP3-04	23.50 - 28.42	1.0000	1.0000
L41	17	CCI-65FP-060100	26.67 - 28.42	1.0000	1.0000
L41	18	CCI-65FP-060100	26.67 - 28.42	1.0000	1.0000
L41	19	CCI-65FP-060100	26.67 - 28.42	1.0000	1.0000
L41	21	CCI-65FP-060100	23.50 - 25.50	1.0000	1.0000
L41	22	CCI-65FP-060100	23.50 - 25.50	1.0000	1.0000
L41	23	CCI-65FP-060100	23.50 - 25.50	1.0000	1.0000
L41	37	CCI-65FP-060100	23.50 - 28.42	1.0000	1.0000
L41	38	CCI-65FP-060100	23.50 - 28.42	1.0000	1.0000
L41	43	HB158-1-08U8-S8J18(1-5/8)	23.50 - 28.42	1.0000	1.0000
L41	52	LDF7-50A(1-5/8)	23.50 - 28.42	1.0000	1.0000
L42	1	5.75" x 1" Flat Plate (G)	23.25 - 23.50	1.0000	1.0000
L42	2	5.75" x 1" Flat Plate (G)	23.25 - 23.50	1.0000	1.0000
L42	3	5.75" x 1" Flat Plate (G)	23.25 - 23.50	1.0000	1.0000
L42	13	MP3-04	23.25 - 23.50	1.0000	1.0000
L42	14	MP3-04	23.25 - 23.50	1.0000	1.0000
L42	15	MP3-04	23.25 - 23.50	1.0000	1.0000
L42	21	CCI-65FP-060100	23.25 - 23.50	1.0000	1.0000
L42	22	CCI-65FP-060100	23.25 - 23.50	1.0000	1.0000
L42	23	CCI-65FP-060100	23.25 - 23.50	1.0000	1.0000
L42	37	CCI-65FP-060100	23.25 - 23.50	1.0000	1.0000
L42	38	CCI-65FP-060100	23.25 - 23.50	1.0000	1.0000
L42	43	HB158-1-08U8-S8J18(1-5/8)	23.25 - 23.50	1.0000	1.0000
L42	52	LDF7-50A(1-5/8)	23.25 - 23.50	1.0000	1.0000
L43	1	5.75" x 1" Flat Plate (G)	23.00 - 23.25	1.0000	1.0000
L43	2	5.75" x 1" Flat Plate (G)	23.00 - 23.25	1.0000	1.0000
L43	3	5.75" x 1" Flat Plate (G)	23.00 - 23.25	1.0000	1.0000
L43	13	MP3-04	23.00 - 23.25	1.0000	1.0000
L43	14	MP3-04	23.00 - 23.25	1.0000	1.0000
L43	15	MP3-04	23.00 -	1.0000	1.0000

Tower Section	Feed Line Record No.	Description	Feed Line Segment Elev.	K_a No Ice	K_a Ice
L43	21	CCI-65FP-060100	23.25 23.00 - 23.25	1.0000	1.0000
L43	22	CCI-65FP-060100	23.00 - 23.25	1.0000	1.0000
L43	23	CCI-65FP-060100	23.00 - 23.25	1.0000	1.0000
L43	37	CCI-65FP-060100	23.00 - 23.25	1.0000	1.0000
L43	38	CCI-65FP-060100	23.00 - 23.25	1.0000	1.0000
L43	43	HB158-1-08U8-S8J18(1-5/8)	23.00 - 23.25	1.0000	1.0000
L43	52	LDF7-50A(1-5/8)	23.00 - 23.25	1.0000	1.0000
L44	1	5.75" x 1" Flat Plate (G)	22.75 - 23.00	1.0000	1.0000
L44	2	5.75" x 1" Flat Plate (G)	22.75 - 23.00	1.0000	1.0000
L44	3	5.75" x 1" Flat Plate (G)	22.75 - 23.00	1.0000	1.0000
L44	13	MP3-04	22.75 - 23.00	1.0000	1.0000
L44	14	MP3-04	22.75 - 23.00	1.0000	1.0000
L44	15	MP3-04	22.75 - 23.00	1.0000	1.0000
L44	21	CCI-65FP-060100	22.75 - 23.00	1.0000	1.0000
L44	22	CCI-65FP-060100	22.75 - 23.00	1.0000	1.0000
L44	23	CCI-65FP-060100	22.75 - 23.00	1.0000	1.0000
L44	37	CCI-65FP-060100	22.75 - 23.00	1.0000	1.0000
L44	38	CCI-65FP-060100	22.75 - 23.00	1.0000	1.0000
L44	43	HB158-1-08U8-S8J18(1-5/8)	22.75 - 23.00	1.0000	1.0000
L44	52	LDF7-50A(1-5/8)	22.75 - 23.00	1.0000	1.0000
L45	1	5.75" x 1" Flat Plate (G)	17.75 - 22.75	1.0000	1.0000
L45	2	5.75" x 1" Flat Plate (G)	17.75 - 22.75	1.0000	1.0000
L45	3	5.75" x 1" Flat Plate (G)	17.75 - 22.75	1.0000	1.0000
L45	13	MP3-04	17.75 - 22.75	1.0000	1.0000
L45	14	MP3-04	17.75 - 22.75	1.0000	1.0000
L45	15	MP3-04	17.75 - 22.75	1.0000	1.0000
L45	21	CCI-65FP-060100	17.75 - 22.75	1.0000	1.0000
L45	22	CCI-65FP-060100	17.75 - 22.75	1.0000	1.0000
L45	23	CCI-65FP-060100	17.75 - 22.75	1.0000	1.0000
L45	37	CCI-65FP-060100	21.00 - 22.75	1.0000	1.0000
L45	38	CCI-65FP-060100	21.00 - 22.75	1.0000	1.0000
L45	43	HB158-1-08U8-S8J18(1-5/8)	17.75 - 22.75	1.0000	1.0000
L45	52	LDF7-50A(1-5/8)	17.75 - 22.75	1.0000	1.0000
L46	1	5.75" x 1" Flat Plate (G)	12.75 - 17.75	1.0000	1.0000

Tower Section	Feed Line Record No.	Description	Feed Line Segment Elev.	K_a No Ice	K_a Ice
L46	2	5.75" x 1" Flat Plate (G)	12.75 - 17.75	1.0000	1.0000
L46	3	5.75" x 1" Flat Plate (G)	12.75 - 17.75	1.0000	1.0000
L46	13	MP3-04	12.75 - 17.75	1.0000	1.0000
L46	14	MP3-04	12.75 - 17.75	1.0000	1.0000
L46	15	MP3-04	12.75 - 17.75	1.0000	1.0000
L46	21	CCI-65FP-060100	12.75 - 17.75	1.0000	1.0000
L46	22	CCI-65FP-060100	12.75 - 17.75	1.0000	1.0000
L46	23	CCI-65FP-060100	12.75 - 17.75	1.0000	1.0000
L46	43	HB158-1-08U8-S8J18(1-5/8)	12.75 - 17.75	1.0000	1.0000
L46	52	LDF7-50A(1-5/8)	12.75 - 17.75	1.0000	1.0000
L47	1	5.75" x 1" Flat Plate (G)	7.75 - 12.75	1.0000	1.0000
L47	2	5.75" x 1" Flat Plate (G)	7.75 - 12.75	1.0000	1.0000
L47	3	5.75" x 1" Flat Plate (G)	7.75 - 12.75	1.0000	1.0000
L47	13	MP3-04	7.75 - 12.75	1.0000	1.0000
L47	14	MP3-04	7.75 - 12.75	1.0000	1.0000
L47	15	MP3-04	7.75 - 12.75	1.0000	1.0000
L47	21	CCI-65FP-060100	7.75 - 12.75	1.0000	1.0000
L47	22	CCI-65FP-060100	7.75 - 12.75	1.0000	1.0000
L47	23	CCI-65FP-060100	7.75 - 12.75	1.0000	1.0000
L47	43	HB158-1-08U8-S8J18(1-5/8)	7.75 - 12.75	1.0000	1.0000
L47	52	LDF7-50A(1-5/8)	7.75 - 12.75	1.0000	1.0000
L48	1	5.75" x 1" Flat Plate (G)	2.75 - 7.75	1.0000	1.0000
L48	2	5.75" x 1" Flat Plate (G)	2.75 - 7.75	1.0000	1.0000
L48	3	5.75" x 1" Flat Plate (G)	2.75 - 7.75	1.0000	1.0000
L48	13	MP3-04	2.75 - 7.75	1.0000	1.0000
L48	14	MP3-04	2.75 - 7.75	1.0000	1.0000
L48	15	MP3-04	2.75 - 7.75	1.0000	1.0000
L48	21	CCI-65FP-060100	2.75 - 7.75	1.0000	1.0000
L48	22	CCI-65FP-060100	2.75 - 7.75	1.0000	1.0000
L48	23	CCI-65FP-060100	2.75 - 7.75	1.0000	1.0000
L48	43	HB158-1-08U8-S8J18(1-5/8)	2.75 - 7.75	1.0000	1.0000
L48	52	LDF7-50A(1-5/8)	2.75 - 7.75	1.0000	1.0000
L49	1	5.75" x 1" Flat Plate (G)	0.50 - 2.75	1.0000	1.0000
L49	2	5.75" x 1" Flat Plate (G)	0.50 - 2.75	1.0000	1.0000
L49	3	5.75" x 1" Flat Plate (G)	0.50 - 2.75	1.0000	1.0000
L49	13	MP3-04	0.50 - 2.75	1.0000	1.0000
L49	14	MP3-04	0.50 - 2.75	1.0000	1.0000
L49	15	MP3-04	0.50 - 2.75	1.0000	1.0000
L49	21	CCI-65FP-060100	0.50 - 2.75	1.0000	1.0000
L49	22	CCI-65FP-060100	0.50 - 2.75	1.0000	1.0000
L49	23	CCI-65FP-060100	0.50 - 2.75	1.0000	1.0000
L49	43	HB158-1-08U8-S8J18(1-5/8)	0.00 - 2.75	1.0000	1.0000
L49	52	LDF7-50A(1-5/8)	0.00 - 2.75	1.0000	1.0000

Discrete Tower Loads

Description	Face or Leg	Offset Type	Offsets: Horz Lateral Vert ft ft ft	Azimuth Adjustment °	Placement ft		C_AA_A Front ft^2	C_AA_A Side ft^2	Weight K
(2) HBXX-6516DS-A2M w/ Mount Pipe	A	From Leg	4.0000 0.0000 2.0000	0.0000	138.0000	No Ice 1/2" Ice 1" Ice 2" Ice	5.1800 5.7000 6.2400 7.3600	3.9700 4.4700 4.9800 6.0600	0.0498 0.0944 0.1474 0.2796
(2) HBXX-6516DS-A2M w/ Mount Pipe	B	From Leg	4.0000 0.0000 2.0000	0.0000	138.0000	No Ice 1/2" Ice 1" Ice 2" Ice	5.1800 5.7000 6.2400 7.3600	3.9700 4.4700 4.9800 6.0600	0.0498 0.0944 0.1474 0.2796
(2) HBXX-6516DS-A2M w/ Mount Pipe	C	From Leg	4.0000 0.0000 2.0000	0.0000	138.0000	No Ice 1/2" Ice 1" Ice 2" Ice	5.1800 5.7000 6.2400 7.3600	3.9700 4.4700 4.9800 6.0600	0.0498 0.0944 0.1474 0.2796
X7C-FRO-660-VR0 w/ Mount Pipe	A	From Leg	4.0000 0.0000 2.0000	0.0000	138.0000	No Ice 1/2" Ice 1" Ice 2" Ice	8.8800 9.6000 10.3400 11.8700	6.4400 7.1300 7.8300 9.2900	0.0750 0.1470 0.2301 0.4306
X7C-FRO-660-VR0 w/ Mount Pipe	B	From Leg	4.0000 0.0000 2.0000	0.0000	138.0000	No Ice 1/2" Ice 1" Ice 2" Ice	8.8800 9.6000 10.3400 11.8700	6.4400 7.1300 7.8300 9.2900	0.0750 0.1470 0.2301 0.4306
X7C-FRO-660-VR0 w/ Mount Pipe	C	From Leg	4.0000 0.0000 2.0000	0.0000	138.0000	No Ice 1/2" Ice 1" Ice 2" Ice	8.8800 9.6000 10.3400 11.8700	6.4400 7.1300 7.8300 9.2900	0.0750 0.1470 0.2301 0.4306
BXA-80063-6BF-EDIN-4 w/ Mount Pipe	A	From Leg	4.0000 0.0000 2.0000	0.0000	138.0000	No Ice 1/2" Ice 1" Ice 2" Ice	7.4998 8.0328 8.5348 9.5641	5.6302 6.7191 7.5606 9.2937	0.0437 0.1029 0.1695 0.3290
BXA-80063-6BF-EDIN-4 w/ Mount Pipe	B	From Leg	4.0000 0.0000 2.0000	0.0000	138.0000	No Ice 1/2" Ice 1" Ice 2" Ice	7.4998 8.0328 8.5348 9.5641	5.6302 6.7191 7.5606 9.2937	0.0437 0.1029 0.1695 0.3290
BXA-80063-6BF-EDIN-4 w/ Mount Pipe	C	From Leg	4.0000 0.0000 2.0000	0.0000	138.0000	No Ice 1/2" Ice 1" Ice 2" Ice	7.4998 8.0328 8.5348 9.5641	5.6302 6.7191 7.5606 9.2937	0.0437 0.1029 0.1695 0.3290
AWS4 (B66) 4X45 RRH	A	From Leg	4.0000 0.0000 2.0000	0.0000	138.0000	No Ice 1/2" Ice 1" Ice 2" Ice	2.6600 2.8781 3.1037 3.5770	1.5861 1.7690 1.9588 2.3594	0.0640 0.0844 0.1078 0.1650
AWS4 (B66) 4X45 RRH	B	From Leg	4.0000 0.0000 2.0000	0.0000	138.0000	No Ice 1/2" Ice 1" Ice 2" Ice	2.6600 2.8781 3.1037 3.5770	1.5861 1.7690 1.9588 2.3594	0.0640 0.0844 0.1078 0.1650
AWS4 (B66) 4X45 RRH	C	From Leg	4.0000 0.0000 2.0000	0.0000	138.0000	No Ice 1/2" Ice 1" Ice 2" Ice	2.6600 2.8781 3.1037 3.5770	1.5861 1.7690 1.9588 2.3594	0.0640 0.0844 0.1078 0.1650
RRH2X60-PCS	A	From Leg	4.0000 0.0000 2.0000	0.0000	138.0000	No Ice 1/2" Ice 1" Ice 2" Ice	2.2000 2.3926 2.5926 3.0148	1.7233 1.9015 2.0870 2.4804	0.0550 0.0754 0.0987 0.1552

Description	Face or Leg	Offset Type	Offsets: Horz Lateral Vert ft ft ft	Azimuth Adjustment °	Placement ft		C_AA_A Front ft^2	C_AA_A Side ft^2	Weight K
RRH2X60-PCS	B	From Leg	4.0000	0.0000	138.0000	No Ice	2.2000	1.7233	0.0550
			0.0000			1/2"	2.3926	1.9015	0.0754
			2.0000			Ice	2.5926	2.0870	0.0987
						1" Ice	3.0148	2.4804	0.1552
						2" Ice			
RRH2X60-PCS	C	From Leg	4.0000	0.0000	138.0000	No Ice	2.2000	1.7233	0.0550
			0.0000			1/2"	2.3926	1.9015	0.0754
			2.0000			Ice	2.5926	2.0870	0.0987
						1" Ice	3.0148	2.4804	0.1552
						2" Ice			
RRH2X60-700	A	From Leg	4.0000	0.0000	138.0000	No Ice	3.5002	1.8157	0.0600
			0.0000			1/2"	3.7609	2.0519	0.0827
			2.0000			Ice	4.0285	2.2894	0.1091
						1" Ice	4.5849	2.7852	0.1734
						2" Ice			
RRH2X60-700	B	From Leg	4.0000	0.0000	138.0000	No Ice	3.5002	1.8157	0.0600
			0.0000			1/2"	3.7609	2.0519	0.0827
			2.0000			Ice	4.0285	2.2894	0.1091
						1" Ice	4.5849	2.7852	0.1734
						2" Ice			
RRH2X60-700	C	From Leg	4.0000	0.0000	138.0000	No Ice	3.5002	1.8157	0.0600
			0.0000			1/2"	3.7609	2.0519	0.0827
			2.0000			Ice	4.0285	2.2894	0.1091
						1" Ice	4.5849	2.7852	0.1734
						2" Ice			
(2) DB-T1-6Z-8AB-0Z	C	From Leg	4.0000	0.0000	138.0000	No Ice	4.8000	2.0000	0.0440
			0.0000			1/2"	5.0704	2.1926	0.0801
			2.0000			Ice	5.3481	2.3926	0.1202
						1" Ice	5.9259	2.8148	0.2130
						2" Ice			
Platform Mount [LP 403-1]	C	None		0.0000	138.0000	No Ice	18.9400	18.9400	1.5000
						1/2"	23.3100	23.3100	1.9017
						Ice	27.7400	27.7400	2.3739
						1" Ice	36.7700	36.7700	3.5301
						2" Ice			
4' x 2" Pipe Mount	C	From Leg	4.0000	0.0000	138.0000	No Ice	0.7852	0.7852	0.0290
			0.0000			1/2"	1.0284	1.0284	0.0353
			0.0000			Ice	1.2809	1.2809	0.0445
						1" Ice	1.8136	1.8136	0.0718
						2" Ice			
**									
DB636-C	C	None		0.0000	138.0000	No Ice	2.3750	2.3750	0.0300
						1/2"	3.3542	3.3542	0.0477
						Ice	4.3500	4.3500	0.0717
						1" Ice	5.5813	5.5813	0.1388
						2" Ice			
**									
(2) HPA-65R-BUU-H6 w/ Mount Pipe	A	From Leg	4.0000	0.0000	129.0000	No Ice	9.2200	6.2500	0.0736
			0.0000			1/2"	9.9800	6.9600	0.1434
			0.0000			Ice	10.7600	7.7000	0.2242
						1" Ice	12.3600	9.2200	0.4201
						2" Ice			
(2) HPA-65R-BUU-H6 w/ Mount Pipe	B	From Leg	4.0000	0.0000	129.0000	No Ice	9.2200	6.2500	0.0736
			0.0000			1/2"	9.9800	6.9600	0.1434
			0.0000			Ice	10.7600	7.7000	0.2242
						1" Ice	12.3600	9.2200	0.4201
						2" Ice			
(2) HPA-65R-BUU-H6 w/ Mount Pipe	C	From Leg	4.0000	0.0000	129.0000	No Ice	9.2200	6.2500	0.0736
			0.0000			1/2"	9.9800	6.9600	0.1434
			0.0000			Ice	10.7600	7.7000	0.2242
						1" Ice	12.3600	9.2200	0.4201
						2" Ice			
DMP65R-BU6D w/ Mount Pipe	A	From Leg	4.0000	0.0000	129.0000	No Ice	12.9469	7.2619	0.1047
			0.0000			1/2"	13.5467	8.4329	0.1970
			0.0000			Ice	14.1107	9.3147	0.2978

Description	Face or Leg	Offset Type	Offsets: Horz Lateral Vert ft ft ft	Azimuth Adjustment °	Placement ft		C_AA_A Front ft^2	C_AA_A Side ft^2	Weight K
						1" Ice	15.2638	11.1283	0.5285
						2" Ice			
DMP65R-BU6D w/ Mount Pipe	B	From Leg	4.0000	0.0000	129.0000	No Ice	12.9469	7.2619	0.1047
			0.0000			1/2"	13.5467	8.4329	0.1970
			0.0000			Ice	14.1107	9.3147	0.2978
						1" Ice	15.2638	11.1283	0.5285
						2" Ice			
DMP65R-BU6D w/ Mount Pipe	C	From Leg	4.0000	0.0000	129.0000	No Ice	12.9469	7.2619	0.1047
			0.0000			1/2"	13.5467	8.4329	0.1970
			0.0000			Ice	14.1107	9.3147	0.2978
						1" Ice	15.2638	11.1283	0.5285
						2" Ice			
RRUS 32 B2	A	From Leg	4.0000	0.0000	129.0000	No Ice	2.7313	1.6681	0.0529
			0.0000			1/2"	2.9531	1.8552	0.0740
			0.0000			Ice	3.1823	2.0493	0.0982
						1" Ice	3.6628	2.4585	0.1571
						2" Ice			
RRUS 32 B2	B	From Leg	4.0000	0.0000	129.0000	No Ice	2.7313	1.6681	0.0529
			0.0000			1/2"	2.9531	1.8552	0.0740
			0.0000			Ice	3.1823	2.0493	0.0982
						1" Ice	3.6628	2.4585	0.1571
						2" Ice			
RRUS 32 B2	C	From Leg	4.0000	0.0000	129.0000	No Ice	2.7313	1.6681	0.0529
			0.0000			1/2"	2.9531	1.8552	0.0740
			0.0000			Ice	3.1823	2.0493	0.0982
						1" Ice	3.6628	2.4585	0.1571
						2" Ice			
RRUS 4449 B5/B12	A	From Leg	4.0000	0.0000	129.0000	No Ice	1.9675	1.4081	0.0710
			0.0000			1/2"	2.1439	1.5637	0.0895
			0.0000			Ice	2.3278	1.7267	0.1108
						1" Ice	2.7177	2.0749	0.1627
						2" Ice			
RRUS 4449 B5/B12	B	From Leg	4.0000	0.0000	129.0000	No Ice	1.9675	1.4081	0.0710
			0.0000			1/2"	2.1439	1.5637	0.0895
			0.0000			Ice	2.3278	1.7267	0.1108
						1" Ice	2.7177	2.0749	0.1627
						2" Ice			
RRUS 4449 B5/B12	C	From Leg	4.0000	0.0000	129.0000	No Ice	1.9675	1.4081	0.0710
			0.0000			1/2"	2.1439	1.5637	0.0895
			0.0000			Ice	2.3278	1.7267	0.1108
						1" Ice	2.7177	2.0749	0.1627
						2" Ice			
RADIO 4415 B30	A	From Leg	4.0000	0.0000	129.0000	No Ice	1.6431	0.6392	0.0429
			0.0000			1/2"	1.8031	0.7497	0.0550
			0.0000			Ice	1.9706	0.8672	0.0694
						1" Ice	2.3277	1.1320	0.1061
						2" Ice			
RADIO 4415 B30	B	From Leg	4.0000	0.0000	129.0000	No Ice	1.6431	0.6392	0.0429
			0.0000			1/2"	1.8031	0.7497	0.0550
			0.0000			Ice	1.9706	0.8672	0.0694
						1" Ice	2.3277	1.1320	0.1061
						2" Ice			
RADIO 4415 B30	C	From Leg	4.0000	0.0000	129.0000	No Ice	1.6431	0.6392	0.0429
			0.0000			1/2"	1.8031	0.7497	0.0550
			0.0000			Ice	1.9706	0.8672	0.0694
						1" Ice	2.3277	1.1320	0.1061
						2" Ice			
DC6-48-60-0-8C-EV	A	From Leg	4.0000	0.0000	129.0000	No Ice	2.7357	4.7833	0.0262
			0.0000			1/2"	2.9620	5.0630	0.0633
			0.0000			Ice	3.1953	5.3501	0.1044
						1" Ice	3.6830	5.9465	0.1997
						2" Ice			
DC6-48-60-0-8C-EV	B	From Leg	4.0000	0.0000	129.0000	No Ice	2.7357	4.7833	0.0262
			0.0000			1/2"	2.9620	5.0630	0.0633
			0.0000			Ice	3.1953	5.3501	0.1044

Description	Face or Leg	Offset Type	Offsets: Horz Lateral Vert ft ft ft	Azimuth Adjustment °	Placement ft		C_AA_A Front ft^2	C_AA_A Side ft^2	Weight K
						1" Ice	3.6830	5.9465	0.1997
						2" Ice			
Sector Mount [SM 503-3]	C	None		0.0000	129.0000	No Ice	30.4300	30.4300	1.6905
						1/2" Ice	43.0200	43.0200	2.2961
						1" Ice	55.4300	55.4300	3.0974
						2" Ice	79.8900	79.8900	5.2687
**									
AIR 32 B2A B66AA w/ Mount Pipe	A	From Leg	4.0000 0.0000 0.0000	0.0000	120.0000	No Ice	7.0872	6.3736	0.1647
						1/2" Ice	7.5606	7.2305	0.2280
						1" Ice	8.0206	7.9731	0.2984
						2" Ice	8.9662	9.5071	0.4638
AIR 32 B2A B66AA w/ Mount Pipe	B	From Leg	4.0000 0.0000 0.0000	0.0000	120.0000	No Ice	7.0872	6.3736	0.1647
						1/2" Ice	7.5606	7.2305	0.2280
						1" Ice	8.0206	7.9731	0.2984
						2" Ice	8.9662	9.5071	0.4638
AIR 32 B2A B66AA w/ Mount Pipe	C	From Leg	4.0000 0.0000 0.0000	0.0000	120.0000	No Ice	7.0872	6.3736	0.1647
						1/2" Ice	7.5606	7.2305	0.2280
						1" Ice	8.0206	7.9731	0.2984
						2" Ice	8.9662	9.5071	0.4638
APXVAARR24_43-U-NA20 w/ Mount Pipe	A	From Leg	4.0000 0.0000 0.0000	0.0000	120.0000	No Ice	14.6900	6.8700	0.1862
						1/2" Ice	15.4600	7.5500	0.3147
						1" Ice	16.2300	8.2500	0.4577
						2" Ice	17.8200	9.6700	0.7882
APXVAARR24_43-U-NA20 w/ Mount Pipe	B	From Leg	4.0000 0.0000 0.0000	0.0000	120.0000	No Ice	14.6900	6.8700	0.1862
						1/2" Ice	15.4600	7.5500	0.3147
						1" Ice	16.2300	8.2500	0.4577
						2" Ice	17.8200	9.6700	0.7882
APXVAARR24_43-U-NA20 w/ Mount Pipe	C	From Leg	4.0000 0.0000 0.0000	0.0000	120.0000	No Ice	14.6900	6.8700	0.1862
						1/2" Ice	15.4600	7.5500	0.3147
						1" Ice	16.2300	8.2500	0.4577
						2" Ice	17.8200	9.6700	0.7882
APX16DWV-16DWVS-E-A20 w/ Mount Pipe	A	From Leg	4.0000 0.0000 0.0000	0.0000	120.0000	No Ice	6.2900	2.7600	0.0614
						1/2" Ice	6.8600	3.2700	0.1050
						1" Ice	7.4500	3.7900	0.1574
						2" Ice	8.6800	4.9000	0.2897
APX16DWV-16DWVS-E-A20 w/ Mount Pipe	B	From Leg	4.0000 0.0000 0.0000	0.0000	120.0000	No Ice	6.2900	2.7600	0.0614
						1/2" Ice	6.8600	3.2700	0.1050
						1" Ice	7.4500	3.7900	0.1574
						2" Ice	8.6800	4.9000	0.2897
APX16DWV-16DWVS-E-A20 w/ Mount Pipe	C	From Leg	4.0000 0.0000 0.0000	0.0000	120.0000	No Ice	6.2900	2.7600	0.0614
						1/2" Ice	6.8600	3.2700	0.1050
						1" Ice	7.4500	3.7900	0.1574
						2" Ice	8.6800	4.9000	0.2897
RADIO 4449 B12/B71	A	From Leg	4.0000 0.0000 0.0000	0.0000	120.0000	No Ice	1.6500	1.1625	0.0740
						1/2" Ice	1.8104	1.3012	0.0902
						1" Ice	1.9781	1.4473	0.1090
						2" Ice	2.3359	1.7618	0.1552
RADIO 4449 B12/B71	B	From Leg	4.0000 0.0000 0.0000	0.0000	120.0000	No Ice	1.6500	1.1625	0.0740
						1/2" Ice	1.8104	1.3012	0.0902
						1" Ice	1.9781	1.4473	0.1090
						2" Ice	2.3359	1.7618	0.1552
RADIO 4449 B12/B71	C	From Leg	4.0000 0.0000	0.0000	120.0000	No Ice	1.6500	1.1625	0.0740
						1/2"	1.8104	1.3012	0.0902

Description	Face or Leg	Offset Type	Offsets: Horz Lateral Vert ft ft ft	Azimuth Adjustment °	Placement ft		C_AA_A Front ft^2	C_AA_A Side ft^2	Weight K
			0.0000			Ice	1.9781	1.4473	0.1090
						1" Ice	2.3359	1.7618	0.1552
						2" Ice			
KRY 112 489/2	A	From Leg	4.0000	0.0000	120.0000	No Ice	0.5592	0.3651	0.0154
			0.0000			1/2"	0.6579	0.4484	0.0205
			0.0000			Ice	0.7640	0.5420	0.0271
						1" Ice	0.9984	0.7524	0.0458
						2" Ice			
KRY 112 489/2	B	From Leg	4.0000	0.0000	120.0000	No Ice	0.5592	0.3651	0.0154
			0.0000			1/2"	0.6579	0.4484	0.0205
			0.0000			Ice	0.7640	0.5420	0.0271
						1" Ice	0.9984	0.7524	0.0458
						2" Ice			
KRY 112 489/2	C	From Leg	4.0000	0.0000	120.0000	No Ice	0.5592	0.3651	0.0154
			0.0000			1/2"	0.6579	0.4484	0.0205
			0.0000			Ice	0.7640	0.5420	0.0271
						1" Ice	0.9984	0.7524	0.0458
						2" Ice			
KRY 112 144/1	A	From Leg	4.0000	0.0000	120.0000	No Ice	0.3500	0.1750	0.0110
			0.0000			1/2"	0.4259	0.2343	0.0142
			0.0000			Ice	0.5093	0.3009	0.0186
						1" Ice	0.6981	0.4565	0.0319
						2" Ice			
KRY 112 144/1	B	From Leg	4.0000	0.0000	120.0000	No Ice	0.3500	0.1750	0.0110
			0.0000			1/2"	0.4259	0.2343	0.0142
			0.0000			Ice	0.5093	0.3009	0.0186
						1" Ice	0.6981	0.4565	0.0319
						2" Ice			
KRY 112 144/1	C	From Leg	4.0000	0.0000	120.0000	No Ice	0.3500	0.1750	0.0110
			0.0000			1/2"	0.4259	0.2343	0.0142
			0.0000			Ice	0.5093	0.3009	0.0186
						1" Ice	0.6981	0.4565	0.0319
						2" Ice			
T-Arm Mount [TA 602-3]	C	None		0.0000	120.0000	No Ice	13.4000	13.4000	0.7743
						1/2"	16.4400	16.4400	1.0040
						Ice	19.7000	19.7000	1.2915
						1" Ice	25.8600	25.8600	2.0526
						2" Ice			
10' horizontal x 2" Pipe Mount	A	From Leg	4.0000	0.0000	120.0000	No Ice	0.8333	0.8333	0.1000
			0.0000			1/2"	1.7646	1.7646	0.4849
			0.0000			Ice	2.3722	2.3722	0.8823
						1" Ice	3.6167	3.6167	1.7151
						2" Ice			
10' horizontal x 2" Pipe Mount	B	From Leg	4.0000	0.0000	120.0000	No Ice	0.8333	0.8333	0.1000
			0.0000			1/2"	1.7646	1.7646	0.4849
			0.0000			Ice	2.3722	2.3722	0.8823
						1" Ice	3.6167	3.6167	1.7151
						2" Ice			
10' horizontal x 2" Pipe Mount	C	From Leg	4.0000	0.0000	120.0000	No Ice	0.8333	0.8333	0.1000
			0.0000			1/2"	1.7646	1.7646	0.4849
			0.0000			Ice	2.3722	2.3722	0.8823
						1" Ice	3.6167	3.6167	1.7151
						2" Ice			
**									
DT465B-2XR w/ Mount Pipe	A	From Leg	4.0000	0.0000	73.0000	No Ice	5.5000	4.3800	0.0908
			0.0000			1/2"	5.9700	4.8400	0.1639
			2.0000			Ice	6.4500	5.3000	0.2480
						1" Ice	7.4400	6.2600	0.4507
						2" Ice			
DT465B-2XR w/ Mount Pipe	B	From Leg	4.0000	0.0000	73.0000	No Ice	5.5000	4.3800	0.0908
			0.0000			1/2"	5.9700	4.8400	0.1639
			2.0000			Ice	6.4500	5.3000	0.2480
						1" Ice	7.4400	6.2600	0.4507
						2" Ice			
DT465B-2XR w/ Mount	C	From Leg	4.0000	0.0000	73.0000	No Ice	5.5000	4.3800	0.0908

Description	Face or Leg	Offset Type	Offsets: Horz Lateral Vert ft ft ft	Azimuth Adjustment °	Placement ft		C_AA_A Front ft^2	C_AA_A Side ft^2	Weight K
Pipe			0.0000			1/2"	5.9700	4.8400	0.1639
			2.0000			Ice	6.4500	5.3000	0.2480
						1" Ice	7.4400	6.2600	0.4507
						2" Ice			
APXVSPP18-C-A20 w/ Mount Pipe	A	From Leg	4.0000	0.0000	73.0000	No Ice	4.6000	4.0100	0.0951
			0.0000			1/2"	5.0500	4.4500	0.1595
			2.0000			Ice	5.5000	4.8900	0.2348
						1" Ice	6.4400	5.8200	0.4191
						2" Ice			
APXVSPP18-C-A20 w/ Mount Pipe	B	From Leg	4.0000	0.0000	73.0000	No Ice	4.6000	4.0100	0.0951
			0.0000			1/2"	5.0500	4.4500	0.1595
			2.0000			Ice	5.5000	4.8900	0.2348
						1" Ice	6.4400	5.8200	0.4191
						2" Ice			
APXVSPP18-C-A20 w/ Mount Pipe	C	From Leg	4.0000	0.0000	73.0000	No Ice	4.6000	4.0100	0.0951
			0.0000			1/2"	5.0500	4.4500	0.1595
			2.0000			Ice	5.5000	4.8900	0.2348
						1" Ice	6.4400	5.8200	0.4191
						2" Ice			
RRH2x50-800	A	From Leg	4.0000	0.0000	73.0000	No Ice	1.7008	1.2822	0.0529
			0.0000			1/2"	1.8640	1.4275	0.0699
			2.0000			Ice	2.0345	1.5803	0.0896
						1" Ice	2.3979	1.9081	0.1379
						2" Ice			
RRH2x50-800	B	From Leg	4.0000	0.0000	73.0000	No Ice	1.7008	1.2822	0.0529
			0.0000			1/2"	1.8640	1.4275	0.0699
			2.0000			Ice	2.0345	1.5803	0.0896
						1" Ice	2.3979	1.9081	0.1379
						2" Ice			
RRH2x50-800	C	From Leg	4.0000	0.0000	73.0000	No Ice	1.7008	1.2822	0.0529
			0.0000			1/2"	1.8640	1.4275	0.0699
			2.0000			Ice	2.0345	1.5803	0.0896
						1" Ice	2.3979	1.9081	0.1379
						2" Ice			
FZHN	A	From Leg	4.0000	0.0000	73.0000	No Ice	2.0197	0.6068	0.0441
			0.0000			1/2"	2.1967	0.7146	0.0581
			2.0000			Ice	2.3811	0.8294	0.0747
						1" Ice	2.7723	1.0888	0.1161
						2" Ice			
FZHN	B	From Leg	4.0000	0.0000	73.0000	No Ice	2.0197	0.6068	0.0441
			0.0000			1/2"	2.1967	0.7146	0.0581
			2.0000			Ice	2.3811	0.8294	0.0747
						1" Ice	2.7723	1.0888	0.1161
						2" Ice			
FZHN	C	From Leg	4.0000	0.0000	73.0000	No Ice	2.0197	0.6068	0.0441
			0.0000			1/2"	2.1967	0.7146	0.0581
			2.0000			Ice	2.3811	0.8294	0.0747
						1" Ice	2.7723	1.0888	0.1161
						2" Ice			
1900MHZ 4X40W RRH	A	From Leg	4.0000	0.0000	73.0000	No Ice	2.3218	2.2360	0.0595
			0.0000			1/2"	2.5266	2.4385	0.0826
			2.0000			Ice	2.7388	2.6485	0.1090
						1" Ice	3.1855	3.0906	0.1722
						2" Ice			
1900MHZ 4X40W RRH	B	From Leg	4.0000	0.0000	73.0000	No Ice	2.3218	2.2360	0.0595
			0.0000			1/2"	2.5266	2.4385	0.0826
			2.0000			Ice	2.7388	2.6485	0.1090
						1" Ice	3.1855	3.0906	0.1722
						2" Ice			
1900MHZ 4X40W RRH	C	From Leg	4.0000	0.0000	73.0000	No Ice	2.3218	2.2360	0.0595
			0.0000			1/2"	2.5266	2.4385	0.0826
			2.0000			Ice	2.7388	2.6485	0.1090
						1" Ice	3.1855	3.0906	0.1722
						2" Ice			
Platform Mount [LP 1201-	C	None		0.0000	73.0000	No Ice	18.3800	18.3800	2.1000

Description	Face or Leg	Offset Type	Offsets: Horz Lateral Vert ft ft ft	Azimuth Adjustment °	Placement ft		C_AA_A Front ft^2	C_AA_A Side ft^2	Weight K
1]						1/2" Ice	22.1100	22.1100	2.6519
						1" Ice	25.8700	25.8700	3.2630
						2" Ice	33.4700	33.4700	4.6624
Miscellaneous [NA 510-1]	C	None		0.0000	73.0000	No Ice	6.3600	6.3600	0.2557
						1/2" Ice	8.5200	8.5200	0.3438
						1" Ice	10.6200	10.6200	0.4587
						2" Ice	14.6400	14.6400	0.7690
(2) 6' x 2" Mount Pipe	A	From Leg	4.0000	0.0000	73.0000	No Ice	1.4250	1.4250	0.0220
			0.0000			1/2" Ice	1.9250	1.9250	0.0328
			0.0000			1" Ice	2.2939	2.2939	0.0477
						2" Ice	3.0596	3.0596	0.0903
(2) 6' x 2" Mount Pipe	B	From Leg	4.0000	0.0000	73.0000	No Ice	1.4250	1.4250	0.0220
			0.0000			1/2" Ice	1.9250	1.9250	0.0328
			0.0000			1" Ice	2.2939	2.2939	0.0477
						2" Ice	3.0596	3.0596	0.0903
(2) 6' x 2" Mount Pipe	C	From Leg	4.0000	0.0000	73.0000	No Ice	1.4250	1.4250	0.0220
			0.0000			1/2" Ice	1.9250	1.9250	0.0328
			0.0000			1" Ice	2.2939	2.2939	0.0477
						2" Ice	3.0596	3.0596	0.0903
**									
GPS-TMG-HR-26NCM	C	From Leg	1.0000	0.0000	50.0000	No Ice	0.1333	0.1333	0.0006
			0.0000			1/2" Ice	0.1826	0.1826	0.0024
			0.0000			1" Ice	0.2393	0.2393	0.0051
						2" Ice	0.3748	0.3748	0.0141
Pipe Mount [PM 601-1]	C	From Leg	0.5000	0.0000	50.0000	No Ice	1.3200	1.3200	0.0650
			0.0000			1/2" Ice	1.5800	1.5800	0.0775
			0.0000			1" Ice	1.8400	1.8400	0.0930
						2" Ice	2.4000	2.4000	0.1338
**									

Load Combinations

Comb. No.	Description
1	Dead Only
2	1.2 Dead+1.0 Wind 0 deg - No Ice
3	0.9 Dead+1.0 Wind 0 deg - No Ice
4	1.2 Dead+1.0 Wind 30 deg - No Ice
5	0.9 Dead+1.0 Wind 30 deg - No Ice
6	1.2 Dead+1.0 Wind 60 deg - No Ice
7	0.9 Dead+1.0 Wind 60 deg - No Ice
8	1.2 Dead+1.0 Wind 90 deg - No Ice
9	0.9 Dead+1.0 Wind 90 deg - No Ice
10	1.2 Dead+1.0 Wind 120 deg - No Ice
11	0.9 Dead+1.0 Wind 120 deg - No Ice
12	1.2 Dead+1.0 Wind 150 deg - No Ice
13	0.9 Dead+1.0 Wind 150 deg - No Ice
14	1.2 Dead+1.0 Wind 180 deg - No Ice
15	0.9 Dead+1.0 Wind 180 deg - No Ice
16	1.2 Dead+1.0 Wind 210 deg - No Ice
17	0.9 Dead+1.0 Wind 210 deg - No Ice
18	1.2 Dead+1.0 Wind 240 deg - No Ice

Comb. No.	Description
19	0.9 Dead+1.0 Wind 240 deg - No Ice
20	1.2 Dead+1.0 Wind 270 deg - No Ice
21	0.9 Dead+1.0 Wind 270 deg - No Ice
22	1.2 Dead+1.0 Wind 300 deg - No Ice
23	0.9 Dead+1.0 Wind 300 deg - No Ice
24	1.2 Dead+1.0 Wind 330 deg - No Ice
25	0.9 Dead+1.0 Wind 330 deg - No Ice
26	1.2 Dead+1.0 Ice+1.0 Temp
27	1.2 Dead+1.0 Wind 0 deg+1.0 Ice+1.0 Temp
28	1.2 Dead+1.0 Wind 30 deg+1.0 Ice+1.0 Temp
29	1.2 Dead+1.0 Wind 60 deg+1.0 Ice+1.0 Temp
30	1.2 Dead+1.0 Wind 90 deg+1.0 Ice+1.0 Temp
31	1.2 Dead+1.0 Wind 120 deg+1.0 Ice+1.0 Temp
32	1.2 Dead+1.0 Wind 150 deg+1.0 Ice+1.0 Temp
33	1.2 Dead+1.0 Wind 180 deg+1.0 Ice+1.0 Temp
34	1.2 Dead+1.0 Wind 210 deg+1.0 Ice+1.0 Temp
35	1.2 Dead+1.0 Wind 240 deg+1.0 Ice+1.0 Temp
36	1.2 Dead+1.0 Wind 270 deg+1.0 Ice+1.0 Temp
37	1.2 Dead+1.0 Wind 300 deg+1.0 Ice+1.0 Temp
38	1.2 Dead+1.0 Wind 330 deg+1.0 Ice+1.0 Temp
39	Dead+Wind 0 deg - Service
40	Dead+Wind 30 deg - Service
41	Dead+Wind 60 deg - Service
42	Dead+Wind 90 deg - Service
43	Dead+Wind 120 deg - Service
44	Dead+Wind 150 deg - Service
45	Dead+Wind 180 deg - Service
46	Dead+Wind 210 deg - Service
47	Dead+Wind 240 deg - Service
48	Dead+Wind 270 deg - Service
49	Dead+Wind 300 deg - Service
50	Dead+Wind 330 deg - Service

Maximum Member Forces

Section No.	Elevation ft	Component Type	Condition	Gov. Load Comb.	Axial K	Major Axis Moment kip-ft	Minor Axis Moment kip-ft
L1	140 - 135	Pole	Max Tension	8	0.0000	0.0000	-0.0000
			Max. Compression	26	-8.5121	1.6114	-0.9304
			Max. Mx	20	-2.9373	24.0472	-0.7426
			Max. My	14	-2.9232	0.9290	-23.3256
			Max. Vy	8	5.3414	-22.9426	0.2151
			Max. Vx	14	5.2499	0.9290	-23.3256
			Max. Torque	24			0.9186
L2	135 - 130	Pole	Max Tension	1	0.0000	0.0000	0.0000
			Max. Compression	26	-8.9462	1.5931	-0.9198
			Max. Mx	20	-3.1857	51.2695	-1.2310
			Max. My	14	-3.1686	1.4144	-50.1165
			Max. Vy	8	5.5549	-50.1792	0.7051
			Max. Vx	14	5.4713	1.4144	-50.1165
			Max. Torque	24			0.9185
L3	130 - 125	Pole	Max Tension	1	0.0000	0.0000	0.0000
			Max. Compression	26	-18.5676	0.9492	-0.5481
			Max. Mx	20	-6.4958	99.5125	-1.8286
			Max. My	14	-6.4523	1.9918	-97.9445
			Max. Vy	8	10.7883	-98.6986	1.3565
			Max. Vx	14	10.6903	1.9918	-97.9445
			Max. Torque	24			0.9182
L4	125 - 120	Pole	Max Tension	1	0.0000	0.0000	0.0000
			Max. Compression	26	-19.0849	0.9193	-0.5308
			Max. Mx	20	-6.8787	153.9023	-2.4829
			Max. My	14	-6.8317	2.6397	-151.8682
			Max. Vy	8	10.9867	-153.1151	2.0154
			Max. Vx	2	-10.8912	-1.8566	151.3917
			Max. Torque	24			0.1624
L5	120 - 115	Pole	Max Tension	1	0.0000	0.0000	0.0000

Section No.	Elevation ft	Component Type	Condition	Gov. Load Comb.	Axial K	Major Axis Moment kip-ft	Minor Axis Moment kip-ft
			Max. Compression	26	-29.9950	0.6760	-0.3905
			Max. Mx	20	-10.1942	225.7899	-3.1040
			Max. My	14	-10.0884	3.2302	-224.2148
			Max. Vy	8	14.4942	-225.1938	2.7325
			Max. Vx	2	-14.7386	-2.6037	223.8365
			Max. Torque	24			0.1624
L6	115 - 114.75	Pole	Max Tension	1	0.0000	0.0000	0.0000
			Max. Compression	26	-30.0545	0.6623	-0.3826
			Max. Mx	20	-10.2456	229.4076	-3.1356
			Max. My	14	-10.1388	3.2595	-227.8978
			Max. Vy	8	14.5065	-228.8214	2.7689
			Max. Vx	2	-14.7599	-2.6414	227.5247
			Max. Torque	16			-0.0939
L7	114.75 - 109.75	Pole	Max Tension	1	0.0000	0.0000	0.0000
			Max. Compression	26	-31.2489	0.4045	-0.2338
			Max. Mx	20	-10.9782	302.8288	-3.7502
			Max. My	14	-10.8502	3.8380	-303.1263
			Max. Vy	8	14.9496	-302.5218	3.4857
			Max. Vx	2	-15.3951	-3.3943	302.9336
			Max. Torque	16			-0.0938
L8	109.75 - 104.75	Pole	Max Tension	1	0.0000	0.0000	0.0000
			Max. Compression	26	-32.4651	0.1335	-0.0774
			Max. Mx	8	-11.7307	-378.4245	4.2049
			Max. My	2	-11.5917	-4.1512	381.4942
			Max. Vy	8	15.3911	-378.4245	4.2049
			Max. Vx	2	-16.0255	-4.1512	381.4942
			Max. Torque	3			-0.1166
L9	104.75 - 101.58	Pole	Max Tension	1	0.0000	0.0000	0.0000
			Max. Compression	26	-33.2375	-0.0443	0.0251
			Max. Mx	8	-12.2292	-427.6871	4.6616
			Max. My	2	-12.0809	-4.6324	432.9265
			Max. Vy	8	15.6684	-427.6871	4.6616
			Max. Vx	2	-16.4193	-4.6324	432.9265
			Max. Torque	3			-0.1631
L10	101.58 - 101.33	Pole	Max Tension	1	0.0000	0.0000	0.0000
			Max. Compression	26	-33.2880	-0.0592	0.0338
			Max. Mx	8	-12.2739	-431.6083	4.6979
			Max. My	2	-12.1247	-4.6701	437.0354
			Max. Vy	8	15.6745	-431.6083	4.6979
			Max. Vx	2	-16.4409	-4.6701	437.0354
			Max. Torque	3			-0.1711
L11	101.33 - 96.33	Pole	Max Tension	1	0.0000	0.0000	0.0000
			Max. Compression	26	-34.3139	-0.3479	0.2003
			Max. Mx	8	-13.0256	-510.5934	5.4180
			Max. My	2	-12.8547	-5.4229	520.6429
			Max. Vy	8	15.8958	-510.5934	5.4180
			Max. Vx	2	-16.9964	-5.4229	520.6429
			Max. Torque	3			-0.3324
L12	96.33 - 91.33	Pole	Max Tension	1	0.0000	0.0000	0.0000
			Max. Compression	26	-35.4242	-0.6470	0.3730
			Max. Mx	8	-13.8152	-590.6467	6.1371
			Max. My	2	-13.6298	-6.1821	606.9906
			Max. Vy	8	16.1085	-590.6467	6.1371
			Max. Vx	2	-17.5455	-6.1821	606.9906
			Max. Torque	3			-0.4282
L13	91.33 - 91	Pole	Max Tension	1	0.0000	0.0000	0.0000
			Max. Compression	26	-35.5055	-0.6676	0.3848
			Max. Mx	8	-13.8767	-595.9698	6.1847
			Max. My	2	-13.6925	-6.2325	612.7866
			Max. Vy	8	16.1275	-595.9698	6.1847
			Max. Vx	2	-17.5741	-6.2325	612.7866
			Max. Torque	3			-0.4317
L14	91 - 90.75	Pole	Max Tension	1	0.0000	0.0000	0.0000

Section No.	Elevation ft	Component Type	Condition	Gov. Load Comb.	Axial K	Major Axis Moment kip-ft	Minor Axis Moment kip-ft
			Max. Compression	26	-35.5856	-0.6839	0.3942
			Max. Mx	8	-13.9341	-600.0088	6.2209
			Max. My	2	-13.7500	-6.2706	617.1861
			Max. Vy	8	16.1497	-600.0088	6.2209
			Max. Vx	2	-17.6037	-6.2706	617.1861
			Max. Torque	3			-0.4343
L15	90.75 - 85.75	Pole	Max Tension	1	0.0000	0.0000	0.0000
			Max. Compression	26	-37.1943	-0.9923	0.5722
			Max. Mx	8	-15.0303	-682.0423	6.9396
			Max. My	2	-14.8415	-7.0356	706.8401
			Max. Vy	8	16.6338	-682.0423	6.9396
			Max. Vx	2	-18.2459	-7.0356	706.8401
			Max. Torque	3			-0.4878
L16	85.75 - 80.75	Pole	Max Tension	1	0.0000	0.0000	0.0000
			Max. Compression	26	-38.8327	-1.3115	0.7563
			Max. Mx	8	-16.1615	-766.4826	7.6605
			Max. My	2	-15.9714	-7.8038	799.6760
			Max. Vy	8	17.1157	-766.4826	7.6605
			Max. Vx	14	18.8844	7.0829	-797.6787
			Max. Torque	3			-0.5425
L17	80.75 - 75.75	Pole	Max Tension	1	0.0000	0.0000	0.0000
			Max. Compression	26	-40.5004	-1.6396	0.9457
			Max. Mx	8	-17.3207	-853.3372	8.3825
			Max. My	2	-17.1319	-8.5748	895.6845
			Max. Vy	8	17.5991	-853.3372	8.3825
			Max. Vx	14	19.5521	7.6199	-893.6537
			Max. Torque	3			-0.5981
L18	75.75 - 70.75	Pole	Max Tension	1	0.0000	0.0000	0.0000
			Max. Compression	26	-50.6092	-1.9787	1.1413
			Max. Mx	8	-22.6252	-950.8262	9.1093
			Max. My	2	-22.4286	-9.3529	1003.1384
			Max. Vy	8	20.6393	-950.8262	9.1093
			Max. Vx	14	22.7945	8.1542	-1001.2185
			Max. Torque	3			-0.6483
L19	70.75 - 69.98	Pole	Max Tension	1	0.0000	0.0000	0.0000
			Max. Compression	26	-50.9036	-2.0322	1.1722
			Max. Mx	8	-22.8217	-966.7580	9.2220
			Max. My	2	-22.6259	-9.4738	1020.6852
			Max. Vy	8	20.7135	-966.7580	9.2220
			Max. Vx	14	22.8990	8.2365	-1018.7919
			Max. Torque	3			-0.6543
L20	69.98 - 69.73	Pole	Max Tension	1	0.0000	0.0000	0.0000
			Max. Compression	26	-50.9993	-2.0507	1.1829
			Max. Mx	8	-22.8902	-971.9435	9.2587
			Max. My	2	-22.6954	-9.5131	1026.3998
			Max. Vy	8	20.7343	-971.9435	9.2587
			Max. Vx	14	22.9293	8.2632	-1024.5154
			Max. Torque	3			-0.6563
L21	69.73 - 64.73	Pole	Max Tension	1	0.0000	0.0000	0.0000
			Max. Compression	26	-52.8299	-2.4007	1.3848
			Max. Mx	8	-24.1583	-1076.8936	9.9899
			Max. My	2	-23.9674	-10.2978	1142.4364
			Max. Vy	8	21.2151	-1076.8936	9.9899
			Max. Vx	14	23.5844	8.7942	-1140.6787
			Max. Torque	3			-0.7087
L22	64.73 - 63	Pole	Max Tension	1	0.0000	0.0000	0.0000

Section No.	Elevation ft	Component Type	Condition	Gov. Load Comb.	Axial K	Major Axis Moment kip-ft	Minor Axis Moment kip-ft
			Max. Compression	26	-53.5028	-2.5237	1.4558
			Max. Mx	8	-24.5993	-1113.7660	10.2428
			Max. My	2	-24.4094	-10.5698	1183.3674
			Max. Vy	8	21.3942	-1113.7660	10.2428
			Max. Vx	14	23.8296	8.9761	-1181.6374
			Max. Torque	3			-0.7225
L23	63 - 62.75	Pole	Max Tension	1	0.0000	0.0000	0.0000
			Max. Compression	26	-53.6188	-2.5434	1.4671
			Max. Mx	8	-24.6975	-1119.1193	10.2795
			Max. My	2	-24.5106	-10.6090	1189.3163
			Max. Vy	8	21.4045	-1119.1193	10.2795
			Max. Vx	14	23.8486	9.0023	-1187.5905
			Max. Torque	3			-0.7244
L24	62.75 - 59.08	Pole	Max Tension	1	0.0000	0.0000	0.0000
			Max. Compression	26	-55.3619	-2.8064	1.6188
			Max. Mx	8	-25.8997	-1198.4787	10.8158
			Max. My	2	-25.7143	-11.1868	1277.6914
			Max. Vy	8	21.8091	-1198.4787	10.8158
			Max. Vx	14	24.3998	9.3856	-1276.0386
			Max. Torque	3			-0.7504
L25	59.08 - 58.82	Pole	Max Tension	1	0.0000	0.0000	0.0000
			Max. Compression	26	-55.4858	-2.8266	1.6305
			Max. Mx	8	-25.9892	-1204.1566	10.8540
			Max. My	2	-25.8056	-11.2277	1284.0270
			Max. Vy	8	21.8299	-1204.1566	10.8540
			Max. Vx	14	24.4312	9.4126	-1282.3807
			Max. Torque	3			-0.7520
L26	58.82 - 58.67	Pole	Max Tension	1	0.0000	0.0000	0.0000
			Max. Compression	26	-55.5572	-2.8388	1.6376
			Max. Mx	8	-26.0375	-1207.4356	10.8760
			Max. My	2	-25.8542	-11.2514	1287.6866
			Max. Vy	8	21.8485	-1207.4356	10.8760
			Max. Vx	14	24.4562	9.4281	-1286.0443
			Max. Torque	3			-0.7529
L27	58.67 - 53.67	Pole	Max Tension	1	0.0000	0.0000	0.0000
			Max. Compression	26	-57.8441	-3.2035	1.8480
			Max. Mx	8	-27.6118	-1318.0617	11.6068
			Max. My	2	-27.4362	-12.0401	1411.3874
			Max. Vy	8	22.3693	-1318.0617	11.6068
			Max. Vx	14	25.1725	9.9449	-1409.9852
			Max. Torque	3			-0.7875
L28	53.67 - 48.58	Pole	Max Tension	1	0.0000	0.0000	0.0000
			Max. Compression	26	-58.1494	-3.2540	1.8771
			Max. Mx	8	-27.8301	-1333.0821	11.7049
			Max. My	2	-27.6565	-12.1460	1428.2164

Section No.	Elevation ft	Component Type	Condition	Gov. Load Comb.	Axial K	Major Axis Moment kip-ft	Minor Axis Moment kip-ft
			Max. Vy	8	22.4326	-1333.0821	11.7049
			Max. Vx	14	25.2595	10.0135	-1426.8627
			Max. Torque	3			-0.7926
L29	48.58 - 47.58	Pole	Max Tension	1	0.0000	0.0000	0.0000
			Max. Compression	26	-62.1170	-3.4189	1.9723
			Max. Mx	8	-30.7310	-1456.5202	12.4253
			Max. My	2	-30.5601	-12.8774	1566.8485
			Max. Vy	8	23.1154	-1456.5202	12.4253
			Max. Vx	14	26.1436	10.6949	-1566.1464
			Max. Torque	3			-0.7585
L30	47.58 - 42.58	Pole	Max Tension	1	0.0000	0.0000	0.0000
			Max. Compression	26	-64.3740	-3.7722	2.1763
			Max. Mx	8	-32.3465	-1573.3480	13.1574
			Max. My	2	-32.1881	-13.6693	1698.4928
			Max. Vy	8	23.5875	-1573.3480	13.1574
			Max. Vx	14	26.7783	11.2029	-1698.2976
			Max. Torque	3			-0.8018
L31	42.58 - 39.67	Pole	Max Tension	1	0.0000	0.0000	0.0000
			Max. Compression	26	-65.7582	-3.9812	2.2970
			Max. Mx	8	-33.2970	-1642.4381	13.5829
			Max. My	14	-33.1410	11.4951	-1776.6896
			Max. Vy	8	23.8735	-1642.4381	13.5829
			Max. Vx	14	27.1674	11.4951	-1776.6896
			Max. Torque	3			-0.8209
L32	39.67 - 39.42	Pole	Max Tension	1	0.0000	0.0000	0.0000
			Max. Compression	26	-65.8983	-4.0009	2.3083
			Max. Mx	8	-33.4091	-1648.4122	13.6195
			Max. My	14	-33.2563	11.5201	-1783.4768
			Max. Vy	8	23.8847	-1648.4122	13.6195
			Max. Vx	14	27.1867	11.5201	-1783.4768
			Max. Torque	3			-0.8224
L33	39.42 - 34.42	Pole	Max Tension	1	0.0000	0.0000	0.0000
			Max. Compression	26	-68.6958	-4.3652	2.5186
			Max. Mx	8	-35.4028	-1769.2399	14.3499
			Max. My	14	-35.2597	12.0166	-1921.0371
			Max. Vy	8	24.4056	-1769.2399	14.3499
			Max. Vx	14	27.8897	12.0166	-1921.0371
			Max. Torque	13			0.8591
L34	34.42 - 32.5	Pole	Max Tension	1	0.0000	0.0000	0.0000
			Max. Compression	26	-69.8013	-4.5072	2.6007
			Max. Mx	8	-36.1735	-1816.3245	14.6303
			Max. My	14	-36.0334	12.2055	-1974.7850

Section No.	Elevation ft	Component Type	Condition	Gov. Load Comb.	Axial K	Major Axis Moment kip-ft	Minor Axis Moment kip-ft
			Max. Vy	20	-24.6223	1803.7970	-12.8530
			Max. Vx	14	28.1661	12.2055	-1974.7850
			Max. Torque	13			0.8722
L35	32.5 - 32.25	Pole	Max Tension	1	0.0000	0.0000	0.0000
			Max. Compression	26	-69.9320	-4.5269	2.6120
			Max. Mx	8	-36.2705	-1822.4834	14.6669
			Max. My	14	-36.1343	12.2301	-1981.8201
			Max. Vy	20	-24.6325	1809.9434	-12.8808
			Max. Vx	14	28.1755	12.2301	-1981.8201
			Max. Torque	13			0.8738
L36	32.25 - 31.42	Pole	Max Tension	1	0.0000	0.0000	0.0000
			Max. Compression	26	-70.3658	-4.5879	2.6472
			Max. Mx	8	-36.5482	-1842.9736	14.7880
			Max. My	14	-36.4141	12.3114	-2005.2228
			Max. Vy	20	-24.7238	1830.3944	-12.9728
			Max. Vx	14	28.2696	12.3114	-2005.2228
			Max. Torque	13			0.8790
L37	31.42 - 31.17	Pole	Max Tension	1	0.0000	0.0000	0.0000
			Max. Compression	26	-70.5142	-4.6077	2.6587
			Max. Mx	8	-36.6564	-1849.1589	14.8245
			Max. My	14	-36.5246	12.3358	-2012.2863
			Max. Vy	20	-24.7437	1836.5686	-13.0006
			Max. Vx	14	28.2896	12.3358	-2012.2863
			Max. Torque	13			0.8806
L38	31.17 - 29	Pole	Max Tension	1	0.0000	0.0000	0.0000
			Max. Compression	26	-71.7954	-4.7494	2.7271
			Max. Mx	8	-37.5370	-1903.1176	15.1412
			Max. My	14	-37.4095	12.5475	-2073.9509
			Max. Vy	20	-24.9795	1890.4344	-13.2404
			Max. Vx	14	28.5976	12.5475	-2073.9509
			Max. Torque	13			0.8886
L39	29 - 28.65	Pole	Max Tension	1	0.0000	0.0000	0.0000
			Max. Compression	26	-71.9921	-4.7729	2.7384
			Max. Mx	8	-37.6783	-1911.8663	15.1922
			Max. My	14	-37.5534	12.5815	-2083.9558
			Max. Vy	20	-25.0072	1899.1685	-13.2790
			Max. Vx	14	28.6273	12.5815	-2083.9558
			Max. Torque	13			0.8899
L40	28.65 - 28.42	Pole	Max Tension	1	0.0000	0.0000	0.0000
			Max. Compression	26	-72.1214	-4.7884	2.7458
			Max. Mx	8	-37.7687	-1917.6221	15.2258
			Max. My	14	-37.6450	12.6038	-2090.5377
			Max. Vy	20	-25.0297	1904.9147	-13.3043
			Max. Vx	14	28.6515	12.6038	-2090.5377
			Max. Torque	13			0.8907
L41	28.42 - 23.5	Pole	Max Tension	1	0.0000	0.0000	0.0000
			Max. Compression	26	-74.8495	-5.1121	2.8997

Section No.	Elevation ft	Component Type	Condition	Gov. Load Comb.	Axial K	Major Axis Moment kip-ft	Minor Axis Moment kip-ft
			Max. Mx	8	-39.6753	-2041.9897	15.9426
			Max. My	14	-39.5689	13.0777	-2232.6540
			Max. Vy	20	-25.5261	2029.0751	-13.8436
			Max. Vx	14	29.1795	13.0777	-2232.6540
			Max. Torque	13			0.9098
L42	23.5 - 23.25	Pole	Max Tension	1	0.0000	0.0000	0.0000
			Max. Compression	26	-75.0090	-5.1298	2.9083
			Max. Mx	8	-39.8004	-2048.3734	15.9790
			Max. My	14	-39.6970	13.1017	-2239.9435
			Max. Vy	20	-25.5402	2035.4481	-13.8708
			Max. Vx	14	29.1943	13.1017	-2239.9435
			Max. Torque	13			0.9107
L43	23.25 - 23	Pole	Max Tension	1	0.0000	0.0000	0.0000
			Max. Compression	26	-75.1685	-5.1465	2.9162
			Max. Mx	8	-39.9167	-2054.7636	16.0154
			Max. My	14	-39.8141	13.1256	-2247.2400
			Max. Vy	20	-25.5666	2041.8276	-13.8981
			Max. Vx	14	29.2227	13.1256	-2247.2400
			Max. Torque	13			0.9116
L44	23 - 22.75	Pole	Max Tension	1	0.0000	0.0000	0.0000
			Max. Compression	26	-75.3157	-5.1629	2.9240
			Max. Mx	8	-40.0212	-2061.1601	16.0518
			Max. My	14	-39.9196	13.1494	-2254.5434
			Max. Vy	20	-25.5923	2048.2135	-13.9253
			Max. Vx	14	29.2502	13.1494	-2254.5434
			Max. Torque	13			0.9126
L45	22.75 - 17.75	Pole	Max Tension	1	0.0000	0.0000	0.0000
			Max. Compression	26	-78.1945	-5.5307	3.1247
			Max. Mx	8	-42.1130	-2190.3643	16.7782
			Max. My	14	-42.0305	13.6230	-2401.9740
			Max. Vy	20	-26.0866	2177.2018	-14.4665
			Max. Vx	14	29.7808	13.6230	-2401.9740
			Max. Torque	13			0.9461
L46	17.75 - 12.75	Pole	Max Tension	1	0.0000	0.0000	0.0000
			Max. Compression	26	-81.0483	-5.9203	3.3497
			Max. Mx	8	-44.2379	-2321.9756	17.5022
			Max. My	14	-44.1771	14.0890	-2551.9808
			Max. Vy	20	-26.5650	2308.5930	-15.0015
			Max. Vx	14	30.2927	14.0890	-2551.9808
			Max. Torque	13			0.9898
L47	12.75 - 7.75	Pole	Max Tension	1	0.0000	0.0000	0.0000
			Max. Compression	26	-83.8984	-6.3111	3.5753
			Max. Mx	8	-46.3891	-2455.9810	18.2235
			Max. My	14	-46.3507	14.5473	-2704.5419
			Max. Vy	20	-27.0453	2442.3743	-15.5298
			Max. Vx	14	30.8048	14.5473	-2704.5419

Section No.	Elevation ft	Component Type	Condition	Gov. Load Comb.	Axial K	Major Axis Moment kip-ft	Minor Axis Moment kip-ft
			Max. Torque	13			1.0347
L48	7.75 - 2.75	Pole	Max Tension	1	0.0000	0.0000	0.0000
			Max. Compression	26	-86.7235	-6.6980	3.7987
			Max. Mx	8	-48.5668	-2592.3889	18.9417
			Max. My	14	-48.5516	14.9974	-2859.6573
			Max. Vy	20	-27.5273	2578.5542	-16.0511
			Max. Vx	14	31.3167	14.9974	-2859.6573
			Max. Torque	13			1.0806
L49	2.75 - 0	Pole	Max Tension	1	0.0000	0.0000	0.0000
			Max. Compression	26	-88.2110	-6.9013	3.9161
			Max. Mx	8	-49.7748	-2668.4333	19.3352
			Max. My	14	-49.7716	15.2414	-2946.0464
			Max. Vy	20	-27.7933	2654.4716	-16.3348
			Max. Vx	14	31.5946	15.2414	-2946.0464
			Max. Torque	13			1.0806

Maximum Reactions

Location	Condition	Gov. Load Comb.	Vertical K	Horizontal, X K	Horizontal, Z K
Pole	Max. Vert	27	88.2110	-0.0212	6.5816
	Max. H_x	20	49.7875	27.7707	-0.1228
	Max. H_z	3	37.3406	-0.1228	31.2799
	Max. M_x	2	2938.9986	-0.1228	31.2799
	Max. M_z	8	2668.4333	-27.7476	0.1228
	Max. Torsion	13	1.0806	-15.9199	-27.5740
	Min. Vert	17	37.3406	13.9544	-23.9241
	Min. H_x	8	49.7875	-27.7476	0.1228
	Min. H_z	14	49.7875	0.1228	-31.5696
	Min. M_x	14	-2946.0464	0.1228	-31.5696
	Min. M_z	20	-2654.4716	27.7707	-0.1228
	Min. Torsion	25	-1.0805	15.8553	27.4623

Tower Mast Reaction Summary

Load Combination	Vertical K	$Shear_x$ K	$Shear_z$ K	Overturning Moment, M_x kip-ft	Overturning Moment, M_z kip-ft	Torque kip-ft
Dead Only	41.4896	0.0000	0.0000	-1.2124	-2.0999	0.0000
1.2 Dead+1.0 Wind 0 deg - No Ice	49.7875	0.1228	-31.2799	-2938.9986	-20.4187	0.8548
0.9 Dead+1.0 Wind 0 deg - No Ice	37.3406	0.1228	-31.2799	-2904.4237	-19.4944	0.8697
1.2 Dead+1.0 Wind 30 deg - No Ice	49.7875	14.0175	-24.0334	-2294.8246	-1347.2445	-0.1084
0.9 Dead+1.0 Wind 30 deg - No Ice	37.3406	14.0175	-24.0334	-2267.1092	-1330.4967	-0.1006
1.2 Dead+1.0 Wind 60 deg - No Ice	49.7875	24.6054	-14.2059	-1346.1737	-2331.6412	-0.0000
0.9 Dead+1.0 Wind 60 deg - No Ice	37.3406	24.6054	-14.2059	-1329.7959	-2303.2740	-0.0000
1.2 Dead+1.0 Wind 90 deg - No Ice	49.7875	27.7476	-0.1228	-19.3352	-2668.4333	0.1084
0.9 Dead+1.0 Wind 90 deg -	37.3406	27.7476	-0.1228	-18.6890	-2635.9137	0.1005

Load Combination	Vertical K	$Shear_x$ K	$Shear_z$ K	Overturning Moment, M_x kip-ft	Overturning Moment, M_z kip-ft	Torque kip-ft
No Ice						
1.2 Dead+1.0 Wind 120 deg - No Ice	49.7875	25.3795	14.5110	1381.3647	-2433.4463	-0.1672
0.9 Dead+1.0 Wind 120 deg - No Ice	37.3406	25.3795	14.5110	1365.4168	-2403.9719	-0.1817
1.2 Dead+1.0 Wind 150 deg - No Ice	49.7875	15.9199	27.5740	2527.0050	-1462.4201	-1.0631
0.9 Dead+1.0 Wind 150 deg - No Ice	37.3406	15.9199	27.5740	2498.1037	-1444.8504	-1.0806
1.2 Dead+1.0 Wind 180 deg - No Ice	49.7875	-0.1228	31.5696	2946.0464	15.2416	-0.8227
0.9 Dead+1.0 Wind 180 deg - No Ice	37.3406	-0.1228	31.5696	2912.2055	15.6418	-0.8384
1.2 Dead+1.0 Wind 210 deg - No Ice	49.7875	-13.9544	23.9241	2297.1139	1345.1007	0.1377
0.9 Dead+1.0 Wind 210 deg - No Ice	37.3406	-13.9544	23.9241	2270.0413	1329.6109	0.1292
1.2 Dead+1.0 Wind 240 deg - No Ice	49.7875	-24.3606	14.0646	1342.5577	2325.3781	-0.0000
0.9 Dead+1.0 Wind 240 deg - No Ice	37.3406	-24.3606	14.0646	1326.9059	2298.2684	-0.0000
1.2 Dead+1.0 Wind 270 deg - No Ice	49.7875	-27.7707	0.1228	16.3348	2654.4716	-0.1375
0.9 Dead+1.0 Wind 270 deg - No Ice	37.3406	-27.7707	0.1228	16.4565	2623.4269	-0.1290
1.2 Dead+1.0 Wind 300 deg - No Ice	49.7875	-25.6304	-14.6559	-1389.3821	2436.9569	0.1362
0.9 Dead+1.0 Wind 300 deg - No Ice	37.3406	-25.6304	-14.6559	-1372.6509	2408.7809	0.1513
1.2 Dead+1.0 Wind 330 deg - No Ice	49.7875	-15.8553	-27.4623	-2527.7650	1455.9527	1.0630
0.9 Dead+1.0 Wind 330 deg - No Ice	37.3406	-15.8553	-27.4623	-2498.0735	1439.6939	1.0805
1.2 Dead+1.0 Ice+1.0 Temp	88.2110	0.0000	-0.0000	-3.9161	-6.9013	0.0000
1.2 Dead+1.0 Wind 0 deg+1.0 Ice+1.0 Temp	88.2110	0.0212	-6.5816	-697.4104	-10.4275	0.1641
1.2 Dead+1.0 Wind 30 deg+1.0 Ice+1.0 Temp	88.2110	2.9682	-5.0987	-555.5677	-329.3839	-0.0548
1.2 Dead+1.0 Wind 60 deg+1.0 Ice+1.0 Temp	88.2110	5.1970	-3.0005	-326.2498	-565.2026	-0.0000
1.2 Dead+1.0 Wind 90 deg+1.0 Ice+1.0 Temp	88.2110	5.8693	-0.0212	-7.3659	-645.3253	0.0548
1.2 Dead+1.0 Wind 120 deg+1.0 Ice+1.0 Temp	88.2110	5.2734	3.0201	321.4723	-577.5421	0.0250
1.2 Dead+1.0 Wind 150 deg+1.0 Ice+1.0 Temp	88.2110	3.3524	5.8066	590.9956	-350.6120	-0.2001
1.2 Dead+1.0 Wind 180 deg+1.0 Ice+1.0 Temp	88.2110	-0.0212	6.6309	691.0891	-3.7333	-0.1626
1.2 Dead+1.0 Wind 210 deg+1.0 Ice+1.0 Temp	88.2110	-2.9487	5.0647	546.8453	314.8245	0.0562
1.2 Dead+1.0 Wind 240 deg+1.0 Ice+1.0 Temp	88.2110	-5.1397	2.9674	317.1371	549.1763	0.0000
1.2 Dead+1.0 Wind 270 deg+1.0 Ice+1.0 Temp	88.2110	-5.8909	0.0212	-0.6716	631.4966	-0.0561
1.2 Dead+1.0 Wind 300 deg+1.0 Ice+1.0 Temp	88.2110	-5.3162	-3.0448	-330.3668	564.8649	-0.0264
1.2 Dead+1.0 Wind 330 deg+1.0 Ice+1.0 Temp	88.2110	-3.3416	-5.7879	-598.7444	336.2847	0.2000
Dead+Wind 0 deg - Service	41.4896	0.0267	-6.7902	-635.1072	-5.9953	0.1864
Dead+Wind 30 deg - Service	41.4896	3.0430	-5.2174	-495.9783	-292.2246	-0.0252
Dead+Wind 60 deg - Service	41.4896	5.3415	-3.0839	-291.3358	-504.6083	-0.0000
Dead+Wind 90 deg - Service	41.4896	6.0237	-0.0267	-5.0847	-577.2465	0.0252
Dead+Wind 120 deg - Service	41.4896	5.5095	3.1501	297.1178	-526.6141	-0.0361
Dead+Wind 150 deg - Service	41.4896	3.4558	5.9857	544.3594	-317.1592	-0.2346
Dead+Wind 180 deg - Service	41.4896	-0.0267	6.8531	634.7932	1.6856	-0.1849
Dead+Wind 210 deg -	41.4896	-3.0293	5.1937	494.6280	288.5713	0.0266

Load Combination	Vertical K	$Shear_x$ K	$Shear_z$ K	Overturning Moment, M_x kip-ft	Overturning Moment, M_z kip-ft	Torque kip-ft
Service						
Dead+Wind 240 deg - Service	41.4896	-5.2884	3.0533	288.7106	500.0614	-0.0000
Dead+Wind 270 deg - Service	41.4896	-6.0287	0.0267	2.5961	571.0417	-0.0265
Dead+Wind 300 deg - Service	41.4896	-5.5639	-3.1816	-300.6934	524.1871	0.0347
Dead+Wind 330 deg - Service	41.4896	-3.4418	-5.9614	-546.3635	312.5699	0.2346

Solution Summary

	Sum of Applied Forces			Sum of Reactions			
Load Comb.	PX K	PY K	PZ K	PX K	PY K	PZ K	% Error
1	0.0000	-41.4896	0.0000	0.0000	41.4896	0.0000	0.000%
2	0.1228	-49.7875	-31.2799	-0.1228	49.7875	31.2799	0.000%
3	0.1228	-37.3406	-31.2799	-0.1228	37.3406	31.2799	0.000%
4	14.0175	-49.7875	-24.0334	-14.0175	49.7875	24.0334	0.000%
5	14.0175	-37.3406	-24.0334	-14.0175	37.3406	24.0334	0.000%
6	24.6054	-49.7875	-14.2059	-24.6054	49.7875	14.2059	0.000%
7	24.6054	-37.3406	-14.2059	-24.6054	37.3406	14.2059	0.000%
8	27.7476	-49.7875	-0.1228	-27.7476	49.7875	0.1228	0.000%
9	27.7476	-37.3406	-0.1228	-27.7476	37.3406	0.1228	0.000%
10	25.3795	-49.7875	14.5110	-25.3795	49.7875	-14.5110	0.000%
11	25.3795	-37.3406	14.5110	-25.3795	37.3406	-14.5110	0.000%
12	15.9199	-49.7875	27.5740	-15.9199	49.7875	-27.5740	0.000%
13	15.9199	-37.3406	27.5740	-15.9199	37.3406	-27.5740	0.000%
14	-0.1228	-49.7875	31.5696	0.1228	49.7875	-31.5696	0.000%
15	-0.1228	-37.3406	31.5696	0.1228	37.3406	-31.5696	0.000%
16	-13.9544	-49.7875	23.9241	13.9544	49.7875	-23.9241	0.000%
17	-13.9544	-37.3406	23.9241	13.9544	37.3406	-23.9241	0.000%
18	-24.3606	-49.7875	14.0646	24.3606	49.7875	-14.0646	0.000%
19	-24.3606	-37.3406	14.0646	24.3606	37.3406	-14.0646	0.000%
20	-27.7707	-49.7875	0.1228	27.7707	49.7875	-0.1228	0.000%
21	-27.7707	-37.3406	0.1228	27.7707	37.3406	-0.1228	0.000%
22	-25.6304	-49.7875	-14.6559	25.6304	49.7875	14.6559	0.000%
23	-25.6304	-37.3406	-14.6559	25.6304	37.3406	14.6559	0.000%
24	-15.8553	-49.7875	-27.4623	15.8553	49.7875	27.4623	0.000%
25	-15.8553	-37.3406	-27.4623	15.8553	37.3406	27.4623	0.000%
26	0.0000	-88.2110	0.0000	-0.0000	88.2110	0.0000	0.000%
27	0.0212	-88.2110	-6.5816	-0.0212	88.2110	6.5816	0.000%
28	2.9682	-88.2110	-5.0987	-2.9682	88.2110	5.0987	0.000%
29	5.1970	-88.2110	-3.0005	-5.1970	88.2110	3.0005	0.000%
30	5.8693	-88.2110	-0.0212	-5.8693	88.2110	0.0212	0.000%
31	5.2734	-88.2110	3.0201	-5.2734	88.2110	-3.0201	0.000%
32	3.3524	-88.2110	5.8066	-3.3524	88.2110	-5.8066	0.000%
33	-0.0212	-88.2110	6.6309	0.0212	88.2110	-6.6309	0.000%
34	-2.9486	-88.2110	5.0647	2.9487	88.2110	-5.0647	0.000%
35	-5.1397	-88.2110	2.9674	5.1397	88.2110	-2.9674	0.000%
36	-5.8909	-88.2110	0.0212	5.8909	88.2110	-0.0212	0.000%
37	-5.3162	-88.2110	-3.0448	5.3162	88.2110	3.0448	0.000%
38	-3.3416	-88.2110	-5.7879	3.3416	88.2110	5.7879	0.000%
39	0.0267	-41.4896	-6.7902	-0.0267	41.4896	6.7902	0.000%
40	3.0430	-41.4896	-5.2174	-3.0430	41.4896	5.2174	0.000%
41	5.3415	-41.4896	-3.0839	-5.3415	41.4896	3.0839	0.000%
42	6.0237	-41.4896	-0.0267	-6.0237	41.4896	0.0267	0.000%
43	5.5095	-41.4896	3.1501	-5.5095	41.4896	-3.1501	0.000%
44	3.4558	-41.4896	5.9857	-3.4558	41.4896	-5.9857	0.000%
45	-0.0267	-41.4896	6.8531	0.0267	41.4896	-6.8531	0.000%
46	-3.0293	-41.4896	5.1937	3.0293	41.4896	-5.1937	0.000%
47	-5.2884	-41.4896	3.0533	5.2884	41.4896	-3.0533	0.000%
48	-6.0287	-41.4896	0.0267	6.0287	41.4896	-0.0267	0.000%
49	-5.5639	-41.4896	-3.1816	5.5639	41.4896	3.1816	0.000%
50	-3.4418	-41.4896	-5.9614	3.4418	41.4896	5.9614	0.000%

Non-Linear Convergence Results

Load Combination	Converged?	Number of Cycles	Displacement Tolerance	Force Tolerance
1	Yes	4	0.00000001	0.00000001
2	Yes	6	0.00000001	0.00005958
3	Yes	5	0.00000001	0.00045510
4	Yes	7	0.00000001	0.00006406
5	Yes	6	0.00000001	0.00035754
6	Yes	7	0.00000001	0.00006463
7	Yes	6	0.00000001	0.00036012
8	Yes	5	0.00000001	0.00046207
9	Yes	5	0.00000001	0.00019162
10	Yes	7	0.00000001	0.00006789
11	Yes	6	0.00000001	0.00037612
12	Yes	7	0.00000001	0.00007119
13	Yes	6	0.00000001	0.00039241
14	Yes	5	0.00000001	0.00038447
15	Yes	5	0.00000001	0.00015375
16	Yes	7	0.00000001	0.00006475
17	Yes	6	0.00000001	0.00036155
18	Yes	7	0.00000001	0.00006483
19	Yes	6	0.00000001	0.00036153
20	Yes	5	0.00000001	0.00054759
21	Yes	5	0.00000001	0.00023583
22	Yes	7	0.00000001	0.00006851
23	Yes	6	0.00000001	0.00037980
24	Yes	7	0.00000001	0.00006913
25	Yes	6	0.00000001	0.00038036
26	Yes	4	0.00000001	0.00063512
27	Yes	7	0.00000001	0.00038376
28	Yes	7	0.00000001	0.00041405
29	Yes	7	0.00000001	0.00041673
30	Yes	7	0.00000001	0.00036733
31	Yes	7	0.00000001	0.00042107
32	Yes	7	0.00000001	0.00043043
33	Yes	7	0.00000001	0.00038140
34	Yes	7	0.00000001	0.00040771
35	Yes	7	0.00000001	0.00040933
36	Yes	7	0.00000001	0.00036289
37	Yes	7	0.00000001	0.00041893
38	Yes	7	0.00000001	0.00042844
39	Yes	5	0.00000001	0.00006956
40	Yes	5	0.00000001	0.00025984
41	Yes	5	0.00000001	0.00026449
42	Yes	5	0.00000001	0.00005804
43	Yes	5	0.00000001	0.00028108
44	Yes	5	0.00000001	0.00031211
45	Yes	5	0.00000001	0.00006579
46	Yes	5	0.00000001	0.00026218
47	Yes	5	0.00000001	0.00026302
48	Yes	5	0.00000001	0.00005796
49	Yes	5	0.00000001	0.00028762
50	Yes	5	0.00000001	0.00028896

Maximum Tower Deflections - Service Wind

Section No.	Elevation ft	Horz. Deflection in	Gov. Load Comb.	Tilt °	Twist °
L1	140 - 135	22.3805	39	1.7165	0.0024
L2	135 - 130	20.5949	39	1.7012	0.0015
L3	130 - 125	18.8409	39	1.6531	0.0005
L4	125 - 120	17.1471	39	1.5788	0.0006

Section No.	Elevation ft	Horz. Deflection in	Gov. Load Comb.	Tilt °	Twist °
L5	120 - 115	15.5460	39	1.4754	0.0008
L6	115 - 114.75	14.0660	39	1.3471	0.0008
L7	114.75 - 109.75	13.9956	39	1.3442	0.0008
L8	109.75 - 104.75	12.6216	39	1.2790	0.0008
L9	104.75 - 101.58	11.3210	39	1.2043	0.0008
L10	101.58 - 101.33	10.5381	39	1.1542	0.0008
L11	101.33 - 96.33	10.4778	39	1.1490	0.0008
L12	96.33 - 91.33	9.3303	39	1.0421	0.0007
L13	91.33 - 91	8.2957	39	0.9337	0.0006
L14	91 - 90.75	8.2314	39	0.9266	0.0006
L15	90.75 - 85.75	8.1830	39	0.9237	0.0006
L16	85.75 - 80.75	7.2471	39	0.8639	0.0006
L17	80.75 - 75.75	6.3749	39	0.8021	0.0005
L18	75.75 - 70.75	5.5677	39	0.7397	0.0005
L19	70.75 - 69.98	4.8256	39	0.6775	0.0004
L20	69.98 - 69.73	4.7172	39	0.6679	0.0004
L21	69.73 - 64.73	4.6823	39	0.6647	0.0004
L22	64.73 - 63	4.0196	39	0.6010	0.0004
L23	63 - 62.75	3.8057	39	0.5793	0.0003
L24	62.75 - 59.08	3.7754	39	0.5769	0.0003
L25	59.08 - 58.82	3.3457	39	0.5412	0.0003
L26	58.82 - 58.67	3.3163	39	0.5384	0.0003
L27	58.67 - 53.67	3.2995	39	0.5369	0.0003
L28	53.67 - 48.58	2.7653	39	0.4834	0.0003
L29	53 - 47.58	2.6980	39	0.4763	0.0003
L30	47.58 - 42.58	2.1741	39	0.4422	0.0002
L31	42.58 - 39.67	1.7390	39	0.3889	0.0002
L32	39.67 - 39.42	1.5115	39	0.3578	0.0002
L33	39.42 - 34.42	1.4928	39	0.3558	0.0002
L34	34.42 - 32.5	1.1420	39	0.3143	0.0002
L35	32.5 - 32.25	1.0187	39	0.2989	0.0002
L36	32.25 - 31.42	1.0031	39	0.2964	0.0002
L37	31.42 - 31.17	0.9523	39	0.2878	0.0001
L38	31.17 - 29	0.9373	39	0.2857	0.0001
L39	29 - 28.65	0.8116	39	0.2678	0.0001
L40	28.65 - 28.42	0.7920	39	0.2645	0.0001
L41	28.42 - 23.5	0.7794	39	0.2624	0.0001
L42	23.5 - 23.25	0.5325	39	0.2168	0.0001
L43	23.25 - 23	0.5212	39	0.2149	0.0001
L44	23 - 22.75	0.5100	39	0.2130	0.0001
L45	22.75 - 17.75	0.4989	39	0.2106	0.0001
L46	17.75 - 12.75	0.3029	39	0.1639	0.0001
L47	12.75 - 7.75	0.1558	39	0.1173	0.0001
L48	7.75 - 2.75	0.0573	39	0.0710	0.0000
L49	2.75 - 0	0.0072	39	0.0249	0.0000

Critical Deflections and Radius of Curvature - Service Wind

Elevation ft	Appurtenance	Gov. Load Comb.	Deflection in	Tilt °	Twist °	Radius of Curvature ft
138.0000	(2) HBXX-6516DS-A2M w/ Mount Pipe	39	21.6644	1.7128	0.0021	7960
129.0000	(2) HPA-65R-BUU-H6 w/ Mount Pipe	39	18.4963	1.6399	0.0005	4161
120.0000	AIR 32 B2A B66AA w/ Mount Pipe	39	15.5460	1.4754	0.0008	2390
73.0000	DT465B-2XR w/ Mount Pipe	39	5.1515	0.7055	0.0004	4597
50.0000	GPS-TMG-HR-26NCM	39	2.4027	0.4560	0.0003	7650

Maximum Tower Deflections - Design Wind

Section No.	Elevation ft	Horz. Deflection in	Gov. Load Comb.	Tilt °	Twist °
L1	140 - 135	103.6888	14	7.9544	0.0123
L2	135 - 130	95.4043	2	7.8875	0.0081
L3	130 - 125	87.2776	2	7.6706	0.0033
L4	125 - 120	79.4321	2	7.3301	0.0028
L5	120 - 115	72.0170	2	6.8490	0.0034
L6	115 - 114.75	65.1620	2	6.2515	0.0037
L7	114.75 - 109.75	64.8357	2	6.2377	0.0037
L8	109.75 - 104.75	58.4753	14	5.9344	0.0037
L9	104.75 - 101.58	52.4552	14	5.5871	0.0036
L10	101.58 - 101.33	48.8308	14	5.3546	0.0036
L11	101.33 - 96.33	48.5517	14	5.3302	0.0036
L12	96.33 - 91.33	43.2397	14	4.8336	0.0033
L13	91.33 - 91	38.4492	14	4.3301	0.0029
L14	91 - 90.75	38.1515	14	4.2969	0.0029
L15	90.75 - 85.75	37.9272	14	4.2833	0.0029
L16	85.75 - 80.75	33.5929	14	4.0057	0.0026
L17	80.75 - 75.75	29.5528	14	3.7187	0.0024
L18	75.75 - 70.75	25.8133	14	3.4293	0.0022
L19	70.75 - 69.98	22.3750	14	3.1413	0.0019
L20	69.98 - 69.73	21.8723	14	3.0965	0.0019
L21	69.73 - 64.73	21.7106	14	3.0819	0.0019
L22	64.73 - 63	18.6392	14	2.7869	0.0016
L23	63 - 62.75	17.6479	14	2.6864	0.0016
L24	62.75 - 59.08	17.5076	14	2.6752	0.0016
L25	59.08 - 58.82	15.5157	14	2.5096	0.0014
L26	58.82 - 58.67	15.3794	14	2.4969	0.0014
L27	58.67 - 53.67	15.3011	14	2.4896	0.0014
L28	53.67 - 48.58	12.8248	14	2.2417	0.0012
L29	53 - 47.58	12.5126	14	2.2088	0.0012
L30	47.58 - 42.58	10.0834	14	2.0511	0.0011
L31	42.58 - 39.67	8.0658	14	1.8038	0.0010
L32	39.67 - 39.42	7.0105	14	1.6595	0.0009
L33	39.42 - 34.42	6.9239	14	1.6501	0.0009
L34	34.42 - 32.5	5.2971	14	1.4580	0.0008
L35	32.5 - 32.25	4.7251	14	1.3867	0.0007
L36	32.25 - 31.42	4.6528	14	1.3748	0.0007
L37	31.42 - 31.17	4.4173	14	1.3348	0.0007
L38	31.17 - 29	4.3477	14	1.3253	0.0007
L39	29 - 28.65	3.7643	14	1.2420	0.0006
L40	28.65 - 28.42	3.6739	14	1.2271	0.0006
L41	28.42 - 23.5	3.6150	14	1.2173	0.0006
L42	23.5 - 23.25	2.4700	14	1.0058	0.0005
L43	23.25 - 23	2.4176	14	0.9968	0.0005
L44	23 - 22.75	2.3656	14	0.9878	0.0005
L45	22.75 - 17.75	2.3142	14	0.9771	0.0005
L46	17.75 - 12.75	1.4051	14	0.7601	0.0004
L47	12.75 - 7.75	0.7226	14	0.5442	0.0003
L48	7.75 - 2.75	0.2657	14	0.3293	0.0002
L49	2.75 - 0	0.0332	14	0.1154	0.0001

Critical Deflections and Radius of Curvature - Design Wind

Elevation ft	Appurtenance	Gov. Load Comb.	Deflection in	Tilt °	Twist °	Radius of Curvature ft
138.0000	(2) HBXX-6516DS-A2M w/ Mount Pipe	14	100.3657	7.9386	0.0109	1919
129.0000	(2) HPA-65R-BUU-H6 w/ Mount Pipe	2	85.6814	7.6104	0.0033	957
120.0000	AIR 32 B2A B66AA w/ Mount Pipe	2	72.0170	6.8490	0.0045	535
73.0000	DT465B-2XR w/ Mount Pipe	14	23.8850	3.2710	0.0020	997
50.0000	GPS-TMG-HR-26NCM	14	11.1436	2.1150	0.0012	1654

Compression Checks

Pole Design Data

Section No.	Elevation ft	Size	L ft	L_u ft	Kl/r	A in^2	P_u K	ϕP_n K	Ratio $\frac{P_u}{\phi P_n}$
L1	140 - 135 (1)	TP14.296x13.161x0.1875	5.0000	0.0000	0.0	8.3963	-2.9227	491.1830	0.006
L2	135 - 130 (2)	TP15.4309x14.296x0.1875	5.0000	0.0000	0.0	9.0717	-3.1713	530.6970	0.006
L3	130 - 125 (3)	TP16.5659x15.4309x0.1875	5.0000	0.0000	0.0	9.7472	-6.4733	570.2100	0.011
L4	125 - 120 (4)	TP17.7008x16.5659x0.1875	5.0000	0.0000	0.0	10.4226	-6.8574	609.7230	0.011
L5	120 - 115 (5)	TP18.8358x17.7008x0.1875	5.0000	0.0000	0.0	11.0981	-10.1706	649.2360	0.016
L6	115 - 114.75 (6)	TP18.8925x18.8358x0.4625	0.2500	0.0000	0.0	27.0548	-10.2221	1582.7100	0.006
L7	114.75 - 109.75 (7)	TP20.0275x18.8925x0.45	5.0000	0.0000	0.0	27.9625	-10.9524	1635.8100	0.007
L8	109.75 - 104.75 (8)	TP21.1624x20.0275x0.425	5.0000	0.0000	0.0	27.9738	-11.5917	1636.4700	0.007
L9	104.75 - 101.58 (9)	TP21.882x21.1624x0.4188	3.1700	0.0000	0.0	28.5271	-12.0809	1668.8300	0.007
L10	101.58 - 101.33 (10)	TP21.9388x21.882x0.3125	0.2500	0.0000	0.0	21.4505	-12.1247	1254.8600	0.010
L11	101.33 - 96.33 (11)	TP23.0738x21.9388x0.3125	5.0000	0.0000	0.0	22.5763	-12.8547	1320.7100	0.010
L12	96.33 - 91.33 (12)	TP24.2088x23.0738x0.3125	5.0000	0.0000	0.0	23.7021	-13.6298	1386.5700	0.010
L13	91.33 - 91 (13)	TP24.2837x24.2088x0.3125	0.3300	0.0000	0.0	23.7764	-13.6925	1390.9200	0.010
L14	91 - 90.75 (14)	TP24.3404x24.2837x0.6	0.2500	0.0000	0.0	45.2112	-13.7500	2644.8600	0.005
L15	90.75 - 85.75 (15)	TP25.4754x24.3404x0.5875	5.0000	0.0000	0.0	46.4091	-14.8415	2714.9300	0.005
L16	85.75 - 80.75 (16)	TP26.6104x25.4754x0.5625	5.0000	0.0000	0.0	46.5053	-15.9714	2720.5600	0.006
L17	80.75 - 75.75 (17)	TP27.7454x26.6104x0.55	5.0000	0.0000	0.0	47.4750	-17.1319	2777.2900	0.006
L18	75.75 - 70.75 (18)	TP28.8804x27.7454x0.5438	5.0000	0.0000	0.0	48.9052	-22.4286	2860.9500	0.008
L19	70.75 - 69.98 (19)	TP29.0552x28.8804x0.5313	0.7700	0.0000	0.0	48.0967	-22.6259	2813.6600	0.008
L20	69.98 - 69.73 (20)	TP29.112x29.0552x0.5313	0.2500	0.0000	0.0	48.1924	-22.6954	2819.2600	0.008
L21	69.73 - 64.73 (21)	TP30.247x29.112x0.525	5.0000	0.0000	0.0	49.5272	-23.9674	2897.3400	0.008
L22	64.73 - 63 (22)	TP30.6397x30.247x0.5188	1.7300	0.0000	0.0	49.5945	-24.4094	2901.2800	0.008
L23	63 - 62.75 (23)	TP30.6964x30.6397x0.7	0.2500	0.0000	0.0	66.6460	-24.5106	3898.7900	0.006
L24	62.75 - 59.08 (24)	TP31.5295x30.6964x0.6875	3.6700	0.0000	0.0	67.3011	-25.7143	3937.1100	0.007
L25	59.08 - 58.82 (25)	TP31.5885x31.5295x0.625	0.2600	0.0000	0.0	61.4239	-25.8056	3593.3000	0.007
L26	58.82 - 58.67 (26)	TP31.6226x31.5885x0.625	0.1500	0.0000	0.0	61.4914	-25.8542	3597.2500	0.007
L27	58.67 - 53.67 (27)	TP32.7576x31.6226x0.6125	5.0000	0.0000	0.0	62.4924	-27.4362	3655.8100	0.008
L28	53.67 - 48.58 (28)	TP33.913x32.7576x0.6125	5.0900	0.0000	0.0	62.7881	-27.6565	3673.1000	0.008
L29	48.58 - 47.58 (29)	TP33.5151x32.2847x0.6375	5.4200	0.0000	0.0	66.5254	-30.5601	3891.7400	0.008
L30	47.58 - 42.58 (30)	TP34.6503x33.5151x0.625	5.0000	0.0000	0.0	67.4976	-32.1881	3948.6100	0.008

Section No.	Elevation ft	Size	L ft	L_u ft	Kl/r	A in^2	P_u K	ϕP_n K	Ratio $\frac{P_u}{\phi P_n}$
L31	42.58 - 39.67 (31)	TP35.3109x34.6503x0.6125	2.9100	0.0000	0.0	67.4563	-33.1410	3946.1900	0.008
L32	39.67 - 39.42 (32)	TP35.3677x35.3109x0.8125	0.2500	0.0000	0.0	89.1134	-33.2563	5213.1400	0.006
L33	39.42 - 34.42 (33)	TP36.5028x35.3677x0.7875	5.0000	0.0000	0.0	89.2713	-35.2597	5222.3700	0.007
L34	34.42 - 32.5 (34)	TP36.9387x36.5028x0.7875	1.9200	0.0000	0.0	90.3608	-36.0334	5286.1100	0.007
L35	32.5 - 32.25 (35)	TP36.9954x36.9387x0.6125	0.2500	0.0000	0.0	70.7312	-36.1343	4137.7700	0.009
L36	32.25 - 31.42 (36)	TP37.1839x36.9954x0.6	0.8300	0.0000	0.0	69.6703	-36.4141	4075.7100	0.009
L37	31.42 - 31.17 (37)	TP37.2406x37.1839x0.775	0.2500	0.0000	0.0	89.7000	-36.5246	5247.4500	0.007
L38	31.17 - 29 (38)	TP37.7333x37.2406x0.7625	2.1700	0.0000	0.0	89.4757	-37.4095	5234.3300	0.007
L39	29 - 28.65 (39)	TP37.8127x37.7333x0.675	0.3500	0.0000	0.0	79.5657	-37.5534	4654.5900	0.008
L40	28.65 - 28.42 (40)	TP37.8649x37.8127x0.675	0.2300	0.0000	0.0	79.6776	-37.6450	4661.1400	0.008
L41	28.42 - 23.5 (41)	TP38.9819x37.8649x0.6625	4.9200	0.0000	0.0	80.5771	-39.5689	4713.7600	0.008
L42	23.5 - 23.25 (42)	TP39.0387x38.9819x0.7875	0.2500	0.0000	0.0	95.6097	-39.6970	5593.1700	0.007
L43	23.25 - 23 (43)	TP39.0954x39.0387x0.7875	0.2500	0.0000	0.0	95.7516	-39.8141	5601.4700	0.007
L44	23 - 22.75 (44)	TP39.1522x39.0954x0.65	0.2500	0.0000	0.0	79.4338	-39.9196	4646.8800	0.009
L45	22.75 - 17.75 (45)	TP40.2873x39.1522x0.6375	5.0000	0.0000	0.0	80.2284	-42.0305	4693.3600	0.009
L46	17.75 - 12.75 (46)	TP41.4224x40.2873x0.625	5.0000	0.0000	0.0	80.9319	-44.1771	4734.5200	0.009
L47	12.75 - 7.75 (47)	TP42.5576x41.4224x0.6125	5.0000	0.0000	0.0	81.5443	-46.3507	4770.3400	0.010
L48	7.75 - 2.75 (48)	TP43.6927x42.5576x0.6	5.0000	0.0000	0.0	82.0657	-48.5516	4800.8400	0.010
L49	2.75 - 0 (49)	TP44.317x43.6927x0.6	2.7500	0.0000	0.0	83.2547	-49.7716	4870.4000	0.010

Pole Bending Design Data

Section No.	Elevation ft	Size	M_{ux} kip-ft	ϕM_{nx} kip-ft	Ratio $\frac{M_{ux}}{\phi M_{nx}}$	M_{uy} kip-ft	ϕM_{ny} kip-ft	Ratio $\frac{M_{uy}}{\phi M_{ny}}$
L1	140 - 135 (1)	TP14.296x13.161x0.1875	24.4122	180.0050	0.136	0.0000	180.0050	0.000
L2	135 - 130 (2)	TP15.4309x14.296x0.1875	51.9215	210.3367	0.247	0.0000	210.3367	0.000
L3	130 - 125 (3)	TP16.5659x15.4309x0.1875	100.5167	243.0292	0.414	0.0000	243.0292	0.000
L4	125 - 120 (4)	TP17.7008x16.5659x0.1875	155.3000	278.0817	0.558	0.0000	278.0817	0.000
L5	120 - 115 (5)	TP18.8358x17.7008x0.1875	227.5842	312.0175	0.729	0.0000	312.0175	0.000
L6	115 - 114.75 (6)	TP18.8925x18.8358x0.4625	231.2217	748.9600	0.309	0.0000	748.9600	0.000
L7	114.75 - 109.75 (7)	TP20.0275x18.8925x0.45	305.1167	823.9783	0.370	0.0000	823.9783	0.000
L8	109.75 - 104.75 (8)	TP21.1624x20.0275x0.425	381.5167	875.2833	0.436	0.0000	875.2833	0.000
L9	104.75 - 101.58 (9)	TP21.882x21.1624x0.4188	432.9517	924.7250	0.468	0.0000	924.7250	0.000
L10	101.58 - 101.33 (10)	TP21.9388x21.882x0.3125	437.0600	704.1108	0.621	0.0000	704.1108	0.000
L11	101.33 - 96.33 (11)	TP23.0738x21.9388x0.3125	520.6708	780.5117	0.667	0.0000	780.5117	0.000

Section No.	Elevation ft	Size	M_{ux} kip-ft	ϕM_{nx} kip-ft	Ratio $\frac{M_{ux}}{\phi M_{nx}}$	M_{uy} kip-ft	ϕM_{ny} kip-ft	Ratio $\frac{M_{uy}}{\phi M_{ny}}$
L12	96.33 - 91.33 (12)	TP24.2088x23.0738x0.31 25	607.0225	860.8500	0.705	0.0000	860.8500	0.000
L13	91.33 - 91 (13)	TP24.2837x24.2088x0.31 25	612.8183	866.2917	0.707	0.0000	866.2917	0.000
L14	91 - 90.75 (14)	TP24.3404x24.2837x0.6	617.2183	1611.9333	0.383	0.0000	1611.9333	0.000
L15	90.75 - 85.75 (15)	TP25.4754x24.3404x0.58 75	706.8750	1737.4417	0.407	0.0000	1737.4417	0.000
L16	85.75 - 80.75 (16)	TP26.6104x25.4754x0.56 25	799.7142	1825.7833	0.438	0.0000	1825.7833	0.000
L17	80.75 - 75.75 (17)	TP27.7454x26.6104x0.55	895.7250	1948.5750	0.460	0.0000	1948.5750	0.000
L18	75.75 - 70.75 (18)	TP28.8804x27.7454x0.54 38	1003.1833	2093.6333	0.479	0.0000	2093.6333	0.000
L19	70.75 - 69.98 (19)	TP29.0552x28.8804x0.53 13	1020.7333	2073.7833	0.492	0.0000	2073.7833	0.000
L20	69.98 - 69.73 (20)	TP29.112x29.0552x0.531 3	1026.4417	2082.1167	0.493	0.0000	2082.1167	0.000
L21	69.73 - 64.73 (21)	TP30.247x29.112x0.525	1142.4833	2227.2500	0.513	0.0000	2227.2500	0.000
L22	64.73 - 63 (22)	TP30.6397x30.247x0.518 8	1183.4167	2261.1917	0.523	0.0000	2261.1917	0.000
L23	63 - 62.75 (23)	TP30.6964x30.6397x0.7	1189.3667	3008.0000	0.395	0.0000	3008.0000	0.000
L24	62.75 - 59.08 (24)	TP31.5295x30.6964x0.68 75	1277.7417	3126.3833	0.409	0.0000	3126.3833	0.000
L25	59.08 - 58.82 (25)	TP31.5885x31.5295x0.62 5	1284.0750	2870.5250	0.447	0.0000	2870.5250	0.000
L26	58.82 - 58.67 (26)	TP31.6226x31.5885x0.62 5	1287.7333	2876.9000	0.448	0.0000	2876.9000	0.000
L27	58.67 - 53.67 (27)	TP32.7576x31.6226x0.61 25	1411.4417	3035.2667	0.465	0.0000	3035.2667	0.000
L28	53.67 - 48.58 (28)	TP33.913x32.7576x0.612 5	1428.2667	3064.3250	0.466	0.0000	3064.3250	0.000
L29	48.58 - 47.58 (29)	TP33.5151x32.2847x0.63 75	1566.9000	3303.6917	0.474	0.0000	3303.6917	0.000
L30	47.58 - 42.58 (30)	TP34.6503x33.5151x0.62 5	1698.5500	3472.4583	0.489	0.0000	3472.4583	0.000
L31	42.58 - 39.67 (31)	TP35.3109x34.6503x0.61 25	1776.7250	3541.4833	0.502	0.0000	3541.4833	0.000
L32	39.67 - 39.42 (32)	TP35.3677x35.3109x0.81 25	1783.5167	4632.4917	0.385	0.0000	4632.4917	0.000
L33	39.42 - 34.42 (33)	TP36.5028x35.3677x0.78 75	1921.0750	4803.3667	0.400	0.0000	4803.3667	0.000
L34	34.42 - 32.5 (34)	TP36.9387x36.5028x0.78 75	1974.8250	4922.6083	0.401	0.0000	4922.6083	0.000
L35	32.5 - 32.25 (35)	TP36.9954x36.9387x0.61 25	1981.8583	3896.8167	0.509	0.0000	3896.8167	0.000
L36	32.25 - 31.42 (36)	TP37.1839x36.9954x0.6	2005.2583	3861.2167	0.519	0.0000	3861.2167	0.000
L37	31.42 - 31.17 (37)	TP37.2406x37.1839x0.77 5	2012.3250	4931.6750	0.408	0.0000	4931.6750	0.000
L38	31.17 - 29 (38)	TP37.7333x37.2406x0.76 25	2073.9917	4990.5667	0.416	0.0000	4990.5667	0.000
L39	29 - 28.65 (39)	TP37.8127x37.7333x0.67 5	2083.9917	4468.5917	0.466	0.0000	4468.5917	0.000
L40	28.65 - 28.42 (40)	TP37.8649x37.8127x0.67 5	2090.5750	4481.2750	0.467	0.0000	4481.2750	0.000
L41	28.42 - 23.5 (41)	TP38.9819x37.8649x0.66 25	2232.6917	4673.4583	0.478	0.0000	4673.4583	0.000
L42	23.5 - 23.25 (42)	TP39.0387x38.9819x0.78 75	2239.9833	5517.5750	0.406	0.0000	5517.5750	0.000
L43	23.25 - 23 (43)	TP39.0954x39.0387x0.78 75	2247.2750	5534.1333	0.406	0.0000	5534.1333	0.000
L44	23 - 22.75 (44)	TP39.1522x39.0954x0.65	2254.5833	4630.9750	0.487	0.0000	4630.9750	0.000
L45	22.75 - 17.75 (45)	TP40.2873x39.1522x0.63 75	2402.0167	4820.5250	0.498	0.0000	4820.5250	0.000
L46	17.75 - 12.75	TP41.4224x40.2873x0.62	2552.0167	5007.2833	0.510	0.0000	5007.2833	0.000

Section No.	Elevation ft	Size	M_{ux} kip-ft	ϕM_{nx} kip-ft	Ratio $\frac{M_{ux}}{\phi M_{nx}}$	M_{uy} kip-ft	ϕM_{ny} kip-ft	Ratio $\frac{M_{uy}}{\phi M_{ny}}$
	(46)	5						
L47	12.75 - 7.75 (47)	TP42.5576x41.4224x0.6125	2704.5833	5190.7583	0.521	0.0000	5190.7583	0.000
L48	7.75 - 2.75 (48)	TP43.6927x42.5576x0.6	2859.7000	5370.4667	0.532	0.0000	5370.4667	0.000
L49	2.75 - 0 (49)	TP44.317x43.6927x0.6	2946.0833	5528.2917	0.533	0.0000	5528.2917	0.000

Pole Shear Design Data

Section No.	Elevation ft	Size	Actual V_u K	ϕV_n K	Ratio $\frac{V_u}{\phi V_n}$	Actual T_u kip-ft	ϕT_n kip-ft	Ratio $\frac{T_u}{\phi T_n}$
L1	140 - 135 (1)	TP14.296x13.161x0.1875	5.3982	147.3550	0.037	0.0000	182.0642	0.000
L2	135 - 130 (2)	TP15.4309x14.296x0.1875	5.6115	159.2090	0.035	0.0000	212.5350	0.000
L3	130 - 125 (3)	TP16.5659x15.4309x0.1875	10.8642	171.0630	0.064	0.0000	245.3617	0.000
L4	125 - 120 (4)	TP17.7008x16.5659x0.1875	11.0620	182.9170	0.060	0.0000	280.5450	0.000
L5	120 - 115 (5)	TP18.8358x17.7008x0.1875	14.5705	194.7710	0.075	0.0000	318.0850	0.000
L6	115 - 114.75 (6)	TP18.8925x18.8358x0.4625	14.5826	474.8120	0.031	0.0000	766.3508	0.000
L7	114.75 - 109.75 (7)	TP20.0275x18.8925x0.45	15.0258	490.7420	0.031	0.0000	841.3750	0.000
L8	109.75 - 104.75 (8)	TP21.1624x20.0275x0.425	16.0260	490.9400	0.033	0.1014	891.5833	0.000
L9	104.75 - 101.58 (9)	TP21.882x21.1624x0.4188	16.4198	500.6500	0.033	0.1480	941.0417	0.000
L10	101.58 - 101.33 (10)	TP21.9388x21.882x0.3125	16.4415	376.4570	0.044	0.1559	712.9783	0.000
L11	101.33 - 96.33 (11)	TP23.0738x21.9388x0.3125	16.9969	396.2140	0.043	0.3172	789.7800	0.000
L12	96.33 - 91.33 (12)	TP24.2088x23.0738x0.3125	17.5460	415.9720	0.042	0.4130	870.5083	0.000
L13	91.33 - 91 (13)	TP24.2837x24.2088x0.3125	17.5746	417.2760	0.042	0.4164	875.9750	0.000
L14	91 - 90.75 (14)	TP24.3404x24.2837x0.6	17.6042	793.4570	0.022	0.4191	1649.6500	0.000
L15	90.75 - 85.75 (15)	TP25.4754x24.3404x0.5875	18.2464	814.4800	0.022	0.4726	1775.2083	0.000
L16	85.75 - 80.75 (16)	TP26.6104x25.4754x0.5625	18.8821	816.1680	0.023	0.5272	1861.8000	0.000
L17	80.75 - 75.75 (17)	TP27.7454x26.6104x0.55	19.5157	833.1870	0.023	0.5828	1984.3500	0.000
L18	75.75 - 70.75 (18)	TP28.8804x27.7454x0.5438	22.7326	858.2860	0.026	0.6331	2129.9083	0.000
L19	70.75 - 69.98 (19)	TP29.0552x28.8804x0.5313	22.8367	844.0980	0.027	0.6391	2108.5417	0.000
L20	69.98 - 69.73 (20)	TP29.112x29.0552x0.5313	22.8654	845.7770	0.027	0.6410	2116.9417	0.000
L21	69.73 - 64.73 (21)	TP30.247x29.112x0.525	23.5400	869.2020	0.027	0.6935	2262.4417	0.000
L22	64.73 - 63 (22)	TP30.6397x30.247x0.5188	23.7848	870.3830	0.027	0.7072	2295.9250	0.000
L23	63 - 62.75 (23)	TP30.6964x30.6397x0.7	23.8019	1169.6400	0.020	0.7092	3072.5583	0.000
L24	62.75 - 59.08 (24)	TP31.5295x30.6964x0.6875	24.3466	1181.1300	0.021	0.7352	3190.2250	0.000
L25	59.08 - 58.82 (25)	TP31.5885x31.5295x0.625	24.3749	1077.9900	0.023	0.7367	2923.1083	0.000
L26	58.82 - 58.67 (26)	TP31.6226x31.5885x0.625	24.3957	1079.1700	0.023	0.7376	2929.5417	0.000
L27	58.67 - 53.67 (27)	TP32.7576x31.6226x0.6125	25.0713	1096.7400	0.023	0.7722	3087.4417	0.000

Section No.	Elevation ft	Size	Actual V_u K	ϕV_n K	Ratio $\frac{V_u}{\phi V_n}$	Actual T_u kip-ft	ϕT_n kip-ft	Ratio $\frac{T_u}{\phi T_n}$
L28 (28)	53.67 - 48.58	TP33.913x32.7576x0.6125	25.1537	1101.9300	0.023	0.7773	3116.7250	0.000
L29 (29)	48.58 - 47.58	TP33.5151x32.2847x0.6375	26.0083	1167.5200	0.022	0.7437	3361.5917	0.000
L30 (30)	47.58 - 42.58	TP34.6503x33.5151x0.625	26.6475	1184.5800	0.022	0.7869	3529.7750	0.000
L31 (31)	42.58 - 39.67	TP35.3109x34.6503x0.6125	27.1677	1183.8600	0.023	0.7740	3597.4000	0.000
L32 (32)	39.67 - 39.42	TP35.3677x35.3109x0.8125	27.1870	1563.9400	0.017	0.7754	4732.7500	0.000
L33 (33)	39.42 - 34.42	TP36.5028x35.3677x0.7875	27.8900	1566.7100	0.018	0.8049	4900.3000	0.000
L34 (34)	34.42 - 32.5	TP36.9387x36.5028x0.7875	28.1664	1585.8300	0.018	0.8149	5020.6417	0.000
L35 (35)	32.5 - 32.25	TP36.9954x36.9387x0.6125	28.1758	1241.3300	0.023	0.8148	3955.1750	0.000
L36 (36)	32.25 - 31.42	TP37.1839x36.9954x0.6	28.2699	1222.7100	0.023	0.8148	3917.3667	0.000
L37 (37)	31.42 - 31.17	TP37.2406x37.1839x0.775	28.2899	1574.2300	0.018	0.8147	5027.2833	0.000
L38 (38)	31.17 - 29	TP37.7333x37.2406x0.7625	28.5979	1570.3000	0.018	0.8232	5084.1750	0.000
L39 (39)	29 - 28.65	TP37.8127x37.7333x0.675	28.6276	1396.3800	0.021	0.8232	4541.4917	0.000
L40 (40)	28.65 - 28.42	TP37.8649x37.8127x0.675	28.6518	1398.3400	0.020	0.8232	4554.2667	0.000
L41 (41)	28.42 - 23.5	TP38.9819x37.8649x0.6625	29.1798	1414.1300	0.021	0.8231	4745.5583	0.000
L42 (42)	23.5 - 23.25	TP39.0387x38.9819x0.7875	29.1946	1677.9500	0.017	0.8231	5620.8747	0.000
L43 (43)	23.25 - 23	TP39.0954x39.0387x0.7875	29.2229	1680.4400	0.017	0.8230	5637.5667	0.000
L44 (44)	23 - 22.75	TP39.1522x39.0954x0.65	29.2505	1394.0600	0.021	0.8230	4700.5417	0.000
L45 (45)	22.75 - 17.75	TP40.2873x39.1522x0.6375	29.7810	1408.0100	0.021	0.8229	4889.0667	0.000
L46 (46)	17.75 - 12.75	TP41.4224x40.2873x0.625	30.2930	1420.3500	0.021	0.8229	5074.6917	0.000
L47 (47)	12.75 - 7.75	TP42.5576x41.4224x0.6125	30.8050	1431.1000	0.022	0.8228	5256.9250	0.000
L48 (48)	7.75 - 2.75	TP43.6927x42.5576x0.6	31.3170	1440.2500	0.022	0.8228	5435.2833	0.000
L49	2.75 - 0 (49)	TP44.317x43.6927x0.6	31.5949	1461.1200	0.022	0.8228	5593.9167	0.000

Pole Interaction Design Data

Section No.	Elevation ft	Ratio $\frac{P_u}{\phi P_n}$	Ratio $\frac{M_{ux}}{\phi M_{nx}}$	Ratio $\frac{M_{uy}}{\phi M_{ny}}$	Ratio $\frac{V_u}{\phi V_n}$	Ratio $\frac{T_u}{\phi T_n}$	Comb. Stress Ratio	Allow. Stress Ratio	Criteria
L1	140 - 135 (1)	0.006	0.136	0.000	0.037	0.000	0.143	1.050	4.8.2
L2	135 - 130 (2)	0.006	0.247	0.000	0.035	0.000	0.254	1.050	4.8.2
L3	130 - 125 (3)	0.011	0.414	0.000	0.064	0.000	0.429	1.050	4.8.2
L4	125 - 120 (4)	0.011	0.558	0.000	0.060	0.000	0.573	1.050	4.8.2
L5	120 - 115 (5)	0.016	0.729	0.000	0.075	0.000	0.751	1.050	4.8.2
L6	115 - 114.75 (6)	0.006	0.309	0.000	0.031	0.000	0.316	1.050	4.8.2
L7	114.75 - 109.75 (7)	0.007	0.370	0.000	0.031	0.000	0.378	1.050	4.8.2
L8	109.75 - 104.75 (8)	0.007	0.436	0.000	0.033	0.000	0.444	1.050	4.8.2
L9	104.75 - 101.58 (9)	0.007	0.468	0.000	0.033	0.000	0.477	1.050	4.8.2
L10	101.58 -	0.010	0.621	0.000	0.044	0.000	0.632	1.050	4.8.2

Section No.	Elevation ft	Ratio P_u / ϕP_n	Ratio M_{ux} / ϕM_{nx}	Ratio M_{uy} / ϕM_{ny}	Ratio V_u / ϕV_n	Ratio T_u / ϕT_n	Comb. Stress Ratio	Allow. Stress Ratio	Criteria
	101.33 (10)								
L11	101.33 - 96.33 (11)	0.010	0.667	0.000	0.043	0.000	0.679	1.050	4.8.2
L12	96.33 - 91.33 (12)	0.010	0.705	0.000	0.042	0.000	0.717	1.050	4.8.2
L13	91.33 - 91 (13)	0.010	0.707	0.000	0.042	0.000	0.719	1.050	4.8.2
L14	91 - 90.75 (14)	0.005	0.383	0.000	0.022	0.000	0.389	1.050	4.8.2
L15	90.75 - 85.75 (15)	0.005	0.407	0.000	0.022	0.000	0.413	1.050	4.8.2
L16	85.75 - 80.75 (16)	0.006	0.438	0.000	0.023	0.000	0.444	1.050	4.8.2
L17	80.75 - 75.75 (17)	0.006	0.460	0.000	0.023	0.000	0.466	1.050	4.8.2
L18	75.75 - 70.75 (18)	0.008	0.479	0.000	0.026	0.000	0.488	1.050	4.8.2
L19	70.75 - 69.98 (19)	0.008	0.492	0.000	0.027	0.000	0.501	1.050	4.8.2
L20	69.98 - 69.73 (20)	0.008	0.493	0.000	0.027	0.000	0.502	1.050	4.8.2
L21	69.73 - 64.73 (21)	0.008	0.513	0.000	0.027	0.000	0.522	1.050	4.8.2
L22	64.73 - 63 (22)	0.008	0.523	0.000	0.027	0.000	0.533	1.050	4.8.2
L23	63 - 62.75 (23)	0.006	0.395	0.000	0.020	0.000	0.402	1.050	4.8.2
L24	62.75 - 59.08 (24)	0.007	0.409	0.000	0.021	0.000	0.416	1.050	4.8.2
L25	59.08 - 58.82 (25)	0.007	0.447	0.000	0.023	0.000	0.455	1.050	4.8.2
L26	58.82 - 58.67 (26)	0.007	0.448	0.000	0.023	0.000	0.455	1.050	4.8.2
L27	58.67 - 53.67 (27)	0.008	0.465	0.000	0.023	0.000	0.473	1.050	4.8.2
L28	53.67 - 48.58 (28)	0.008	0.466	0.000	0.023	0.000	0.474	1.050	4.8.2
L29	48.58 - 47.58 (29)	0.008	0.474	0.000	0.022	0.000	0.483	1.050	4.8.2
L30	47.58 - 42.58 (30)	0.008	0.489	0.000	0.022	0.000	0.498	1.050	4.8.2
L31	42.58 - 39.67 (31)	0.008	0.502	0.000	0.023	0.000	0.511	1.050	4.8.2
L32	39.67 - 39.42 (32)	0.006	0.385	0.000	0.017	0.000	0.392	1.050	4.8.2
L33	39.42 - 34.42 (33)	0.007	0.400	0.000	0.018	0.000	0.407	1.050	4.8.2
L34	34.42 - 32.5 (34)	0.007	0.401	0.000	0.018	0.000	0.408	1.050	4.8.2
L35	32.5 - 32.25 (35)	0.009	0.509	0.000	0.023	0.000	0.518	1.050	4.8.2
L36	32.25 - 31.42 (36)	0.009	0.519	0.000	0.023	0.000	0.529	1.050	4.8.2
L37	31.42 - 31.17 (37)	0.007	0.408	0.000	0.018	0.000	0.415	1.050	4.8.2
L38	31.17 - 29 (38)	0.007	0.416	0.000	0.018	0.000	0.423	1.050	4.8.2
L39	29 - 28.65 (39)	0.008	0.466	0.000	0.021	0.000	0.475	1.050	4.8.2
L40	28.65 - 28.42 (40)	0.008	0.467	0.000	0.020	0.000	0.475	1.050	4.8.2
L41	28.42 - 23.5 (41)	0.008	0.478	0.000	0.021	0.000	0.487	1.050	4.8.2
L42	23.5 - 23.25 (42)	0.007	0.406	0.000	0.017	0.000	0.413	1.050	4.8.2
L43	23.25 - 23 (43)	0.007	0.406	0.000	0.017	0.000	0.413	1.050	4.8.2
L44	23 - 22.75 (44)	0.009	0.487	0.000	0.021	0.000	0.496	1.050	4.8.2

Section No.	Elevation ft	Ratio P_u / ϕP_n	Ratio M_{ux} / ϕM_{nx}	Ratio M_{uy} / ϕM_{ny}	Ratio V_u / ϕV_n	Ratio T_u / ϕT_n	Comb. Stress Ratio	Allow. Stress Ratio	Criteria
L45	22.75 - 17.75 (45)	0.009	0.498	0.000	0.021	0.000	0.508	1.050	4.8.2
L46	17.75 - 12.75 (46)	0.009	0.510	0.000	0.021	0.000	0.519	1.050	4.8.2
L47	12.75 - 7.75 (47)	0.010	0.521	0.000	0.022	0.000	0.531	1.050	4.8.2
L48	7.75 - 2.75 (48)	0.010	0.532	0.000	0.022	0.000	0.543	1.050	4.8.2
L49	2.75 - 0 (49)	0.010	0.533	0.000	0.022	0.000	0.544	1.050	4.8.2

Section Capacity Table

Section No.	Elevation ft	Component Type	Size	Critical Element	P K	ϕP_{allow} K	% Capacity	Pass Fail
L1	140 - 135	Pole	TP14.296x13.161x0.1875	1	-2.9227	515.7421	13.6	Pass
L2	135 - 130	Pole	TP15.4309x14.296x0.1875	2	-3.1713	557.2318	24.2	Pass
L3	130 - 125	Pole	TP16.5659x15.4309x0.1875	3	-6.4733	598.7205	40.9	Pass
L4	125 - 120	Pole	TP17.7008x16.5659x0.1875	4	-6.8574	640.2091	54.6	Pass
L5	120 - 115	Pole	TP18.8358x17.7008x0.1875	5	-10.1706	681.6978	71.5	Pass
L6	115 - 114.75	Pole	TP18.8925x18.8358x0.4625	6	-10.2221	1661.8454	30.1	Pass
L7	114.75 - 109.75	Pole	TP20.0275x18.8925x0.45	7	-10.9524	1717.6004	36.0	Pass
L8	109.75 - 104.75	Pole	TP21.1624x20.0275x0.425	8	-11.5917	1718.2934	42.3	Pass
L9	104.75 - 101.58	Pole	TP21.882x21.1624x0.4188	9	-12.0809	1752.2714	45.4	Pass
L10	101.58 - 101.33	Pole	TP21.9388x21.882x0.3125	10	-12.1247	1317.6029	60.2	Pass
L11	101.33 - 96.33	Pole	TP23.0738x21.9388x0.3125	11	-12.8547	1386.7454	64.6	Pass
L12	96.33 - 91.33	Pole	TP24.2088x23.0738x0.3125	12	-13.6298	1455.8984	68.3	Pass
L13	91.33 - 91	Pole	TP24.2837x24.2088x0.3125	13	-13.6925	1460.4659	68.5	Pass
L14	91 - 90.75	Pole	TP24.3404x24.2837x0.6	14	-13.7500	2777.1029	37.0	Pass
L15	90.75 - 85.75	Pole	TP25.4754x24.3404x0.5875	15	-14.8415	2850.6764	39.3	Pass
L16	85.75 - 80.75	Pole	TP26.6104x25.4754x0.5625	16	-15.9714	2856.5879	42.3	Pass
L17	80.75 - 75.75	Pole	TP27.7454x26.6104x0.55	17	-17.1319	2916.1544	44.4	Pass
L18	75.75 - 70.75	Pole	TP28.8804x27.7454x0.5438	18	-22.4286	3003.9974	46.4	Pass
L19	70.75 - 69.98	Pole	TP29.0552x28.8804x0.5313	19	-22.6259	2954.3429	47.7	Pass
L20	69.98 - 69.73	Pole	TP29.112x29.0552x0.5313	20	-22.6954	2960.2229	47.8	Pass
L21	69.73 - 64.73	Pole	TP30.247x29.112x0.525	21	-23.9674	3042.2069	49.7	Pass
L22	64.73 - 63	Pole	TP30.6397x30.247x0.5188	22	-24.4094	3046.3439	50.7	Pass
L23	63 - 62.75	Pole	TP30.6964x30.6397x0.7	23	-24.5106	4093.7293	38.3	Pass
L24	62.75 - 59.08	Pole	TP31.5295x30.6964x0.6875	24	-25.7143	4133.9653	39.6	Pass
L25	59.08 - 58.82	Pole	TP31.5885x31.5295x0.625	25	-25.8056	3772.9648	43.3	Pass
L26	58.82 - 58.67	Pole	TP31.6226x31.5885x0.625	26	-25.8542	3777.1123	43.4	Pass
L27	58.67 - 53.67	Pole	TP32.7576x31.6226x0.6125	27	-27.4362	3838.6003	45.1	Pass
L28	53.67 - 48.58	Pole	TP33.913x32.7576x0.6125	28	-27.6565	3856.7548	45.2	Pass
L29	48.58 - 47.58	Pole	TP33.5151x32.2847x0.6375	29	-30.5601	4086.3268	46.0	Pass
L30	47.58 - 42.58	Pole	TP34.6503x33.5151x0.625	30	-32.1881	4146.0403	47.4	Pass
L31	42.58 - 39.67	Pole	TP35.3109x34.6503x0.6125	31	-33.1410	4143.4993	48.6	Pass
L32	39.67 - 39.42	Pole	TP35.3677x35.3109x0.8125	32	-33.2563	5473.7968	37.3	Pass
L33	39.42 - 34.42	Pole	TP36.5028x35.3677x0.7875	33	-35.2597	5483.4883	38.8	Pass
L34	34.42 - 32.5	Pole	TP36.9387x36.5028x0.7875	34	-36.0334	5550.4152	38.9	Pass
L35	32.5 - 32.25	Pole	TP36.9954x36.9387x0.6125	35	-36.1343	4344.6583	49.3	Pass
L36	32.25 - 31.42	Pole	TP37.1839x36.9954x0.6	36	-36.4141	4279.4953	50.4	Pass
L37	31.42 - 31.17	Pole	TP37.2406x37.1839x0.775	37	-36.5246	5509.8222	39.6	Pass
L38	31.17 - 29	Pole	TP37.7333x37.2406x0.7625	38	-37.4095	5496.0463	40.3	Pass
L39	29 - 28.65	Pole	TP37.8127x37.7333x0.675	39	-37.5534	4887.3193	45.2	Pass
L40	28.65 - 28.42	Pole	TP37.8649x37.8127x0.675	40	-37.6450	4894.1968	45.2	Pass
L41	28.42 - 23.5	Pole	TP38.9819x37.8649x0.6625	41	-39.5689	4949.4478	46.3	Pass
L42	23.5 - 23.25	Pole	TP39.0387x38.9819x0.7875	42	-39.6970	5872.8282	39.4	Pass
L43	23.25 - 23	Pole	TP39.0954x39.0387x0.7875	43	-39.8141	5881.5432	39.4	Pass
L44	23 - 22.75	Pole	TP39.1522x39.0954x0.65	44	-39.9196	4879.2238	47.2	Pass
L45	22.75 - 17.75	Pole	TP40.2873x39.1522x0.6375	45	-42.0305	4928.0278	48.4	Pass
L46	17.75 - 12.75	Pole	TP41.4224x40.2873x0.625	46	-44.1771	4971.2458	49.5	Pass
L47	12.75 - 7.75	Pole	TP42.5576x41.4224x0.6125	47	-46.3507	5008.8568	50.6	Pass
L48	7.75 - 2.75	Pole	TP43.6927x42.5576x0.6	48	-48.5516	5040.8818	51.7	Pass

Section No.	Elevation ft	Component Type	Size	Critical Element	P K	$øP_{allow}$ K	% Capacity	Pass Fail
L49	2.75 - 0	Pole	TP44.317x43.6927x0.6	49	-49.7716	5113.9198	51.8	Pass
							Summary	
						Pole (L5)	71.5	Pass
						RATING =	**71.5**	**Pass**

***NOTE: Above stress ratios for reinforced sections are approximate. More exact calculations are presented in Appendix C.**

APPENDIX B

BASE LEVEL DRAWING

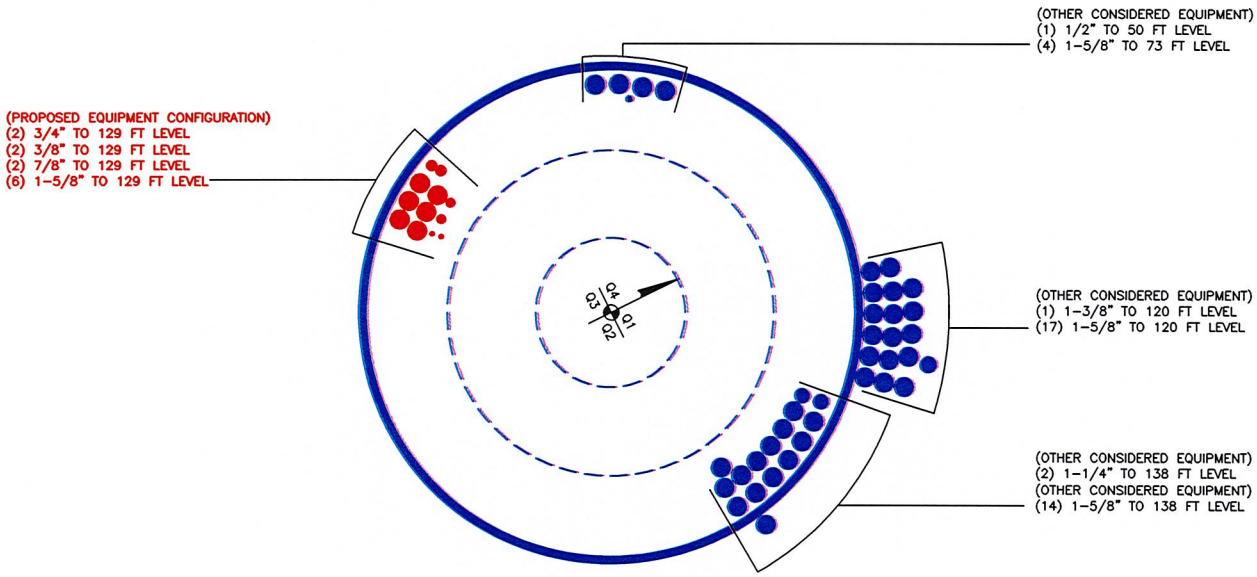
(OTHER CONSIDERED EQUIPMENT)
(1) 1/2" TO 50 FT LEVEL
(4) 1-5/8" TO 73 FT LEVEL
(PROPOSED EQUIPMENT CONFIGURATION)
(2) 3/4" TO 129 FT LEVEL
(2) 3/8" TO 129 FT LEVEL
(2) 7/8" TO 129 FT LEVEL
(6) 1-5/8" TO 129 FT LEVEL
Q4
Q1
Q3
Q2
(OTHER CONSIDERED EQUIPMENT)
(1) 1-3/8" TO 120 FT LEVEL
(17) 1-5/8" TO 120 FT LEVEL
(OTHER CONSIDERED EQUIPMENT)
(2) 1-1/4" TO 138 FT LEVEL
(OTHER CONSIDERED EQUIPMENT)
(14) 1-5/8" TO 138 FT LEVEL

APPENDIX C

ADDITIONAL CALCULATIONS

CCIpole

per TIA-222- H

Site BU: 842873

Work Order: 1800857

CROWN CASTLE

Copyright © 2019 Crown Castle

Pole Geometry

	Pole Height Above Base (ft)	Section Length (ft)	Lap Splice Length (ft)	Number of Sides	Top Diameter (in)	Bottom Diameter (in)	Wall Thickness (in)	Bend Radius (in)	Pole Material
1	140	38.42	0	18	13.161	21.882	0.1875	Auto	A572-65
2	101.58	53	4.42	18	21.88	33.913	0.3125	Auto	A572-65
3	53	53	0	18	32.28	44.317	0.3125	Auto	A572-65

Reinforcement Configuration

	Bottom Effective Elevation (ft)	Top Effective Elevation (ft)	Type	Model	Number	1	2	3	4	5	6	7	8	9	10	11	12	13	14	15	16	17	18
1	0	31.42	plate	PL 5.75" x 1"	3																		
2	32.5	48.67	plate	PL 5.75" x 1"	3																		
3	58.92	70.08	plate	PL 5.75" x 1" (Lu = 16"	3																		
4	0	59.08	channel	MP3-04 (1.25in)	3																		
5	28.67	39.67	plate	CCI-SFP-060100	3																		
6	0	23.5	plate	CCI-SFP-060100	3																		
7	52	63	plate	CCI-SFP-060100	3																		
8	70	91	plate	CCI-SFP-060100	3																		
9	101.58	115	plate	CCI-AFP-045100	3																		
10	23	29	plate	CCI-SFP-060100	2																		
11																							

Reinforcement Details

	B (in)	H (in)	Gross Area (in^2)	Pole Face to Centroid (in)	Bottom Termination Length (in)	Top Termination Length (in)	L_u (in)	Net Area (in^2)	Bolt Hole Size (in)	Reinforcement Material
1	5.75	1	5.75	0.5	23.000	23.000	14.000	4.438	1.2500	A572-65
2	5.75	1	5.75	0.5	23.000	23.000	14.000	4.438	1.2500	A572-65
3	5.75	1	5.75	0.5	23.000	23.000	16.000	4.438	1.2500	A572-65
4	4.78	1.61	4.13	0.61	17.000	17.000	18.000	3.566	1.2500	A572-65
5	6	1	6	0.5	24.000	24.000	16.000	4.750	1.1875	A572-65
6	6	1	6	0.5	24.000	24.000	16.000	4.750	1.1875	A572-65
7	6	1	6	0.5	24.000	24.000	16.000	4.750	1.1875	A572-65
8	6	1	6	0.5	24.000	24.000	16.000	4.750	1.1875	A572-65
9	4.5	1	4.5	0.5	24.000	24.000	20.000	3.250	1.1875	A572-65
10	6	1	6	0.5	24.000	24.000	16.000	4.750	1.1875	A572-65

TNX Geometry Input

Increment (ft): 5

	Section Height (ft)	Section Length (ft)	Lap Splice Length (ft)	Number of Sides	Top Diameter (in)	Bottom Diameter (in)	Wall Thickness (in)	Tapered Pole Grade	Weight Multiplier
1	140 - 135	5		18	13.161	14.296	0.1875	A572-65	1.000
2	135 - 130	5		18	14.296	15.431	0.1875	A572-65	1.000
3	130 - 125	5		18	15.431	16.566	0.1875	A572-65	1.000
4	125 - 120	5		18	16.566	17.701	0.1875	A572-65	1.000
5	120 - 115	5		18	17.701	18.836	0.1875	A572-65	1.000
6	115 - 114.75	0.25		18	18.836	18.893	0.4625	A572-65	0.910
7	114.75 - 109.75	5		18	18.893	20.027	0.45	A572-65	0.905
8	109.75 - 104.75	5		18	20.027	21.162	0.425	A572-65	0.929
9	104.75 - 101.58	3.17	0	18	21.162	21.882	0.41875	A572-65	0.926
10	101.58 - 101.33	0.25		18	21.882	21.939	0.3125	A572-65	1.000
11	101.33 - 96.33	5		18	21.939	23.074	0.3125	A572-65	1.000
12	96.33 - 91.33	5		18	23.074	24.209	0.3125	A572-65	1.000
13	91.33 - 91	0.33		18	24.209	24.284	0.3125	A572-65	1.000
14	91 - 90.75	0.25		18	24.284	24.340	0.6	A572-65	0.925
15	90.75 - 85.75	5		18	24.340	25.475	0.5875	A572-65	0.926
16	85.75 - 80.75	5		18	25.475	26.610	0.5625	A572-65	0.948
17	80.75 - 75.75	5		18	26.610	27.745	0.55	A572-65	0.952
18	75.75 - 70.75	5		18	27.745	28.880	0.54375	A572-65	0.947
19	70.75 - 69.98	0.77		18	28.880	29.055	0.53125	A572-65	0.951
20	69.98 - 69.73	0.25		18	29.055	29.112	0.53125	A572-65	0.951
21	69.73 - 64.73	5		18	29.112	30.247	0.525	A572-65	0.948
22	64.73 - 63	1.73		18	30.247	30.640	0.51875	A572-65	0.954
23	63 - 62.75	0.25		18	30.640	30.696	0.7	A572-65	0.981
24	62.75 - 59.08	3.67		18	30.696	31.530	0.6875	A572-65	0.984
25	59.08 - 58.82	0.26		18	31.530	31.589	0.625	A572-65	1.000
26	58.82 - 58.67	0.15		18	31.589	31.623	0.625	A572-65	0.999
27	58.67 - 53.67	5		18	31.623	32.758	0.6125	A572-65	1.001
28	53.67 - 53	5.09	4.42	18	32.758	33.913	0.6125	A572-65	0.999
29	53 - 47.58	5.42		18	32.285	33.515	0.6375	A572-65	0.941
30	47.58 - 42.58	5		18	33.515	34.650	0.625	A572-65	0.944
31	42.58 - 39.67	2.91		18	34.650	35.311	0.6125	A572-65	0.954
32	39.67 - 39.42	0.25		18	35.311	35.368	0.8125	A572-65	0.925
33	39.42 - 34.42	5		18	35.368	36.503	0.7875	A572-65	0.936
34	34.42 - 32.5	1.92		18	36.503	36.939	0.7875	A572-65	0.929
35	32.5 - 32.25	0.25		18	36.939	36.995	0.6125	A572-65	0.944
36	32.25 - 31.42	0.83		18	36.995	37.184	0.6	A572-65	0.961
37	31.42 - 31.17	0.25		18	37.184	37.241	0.775	A572-65	0.939
38	31.17 - 29	2.17		18	37.241	37.733	0.7625	A572-65	0.947
39	29 - 28.65	0.35		18	37.733	37.813	0.675	A572-65	0.991
40	28.65 - 28.42	0.23		18	37.813	37.865	0.675	A572-65	0.990
41	28.42 - 23.5	4.92		18	37.865	38.982	0.6625	A572-65	0.993
42	23.5 - 23.25	0.25		18	38.982	39.039	0.7875	A572-65	1.026
43	23.25 - 23	0.25		18	39.039	39.095	0.7875	A572-65	1.025
44	23 - 22.75	0.25		18	39.095	39.152	0.65	A572-65	1.085
45	22.75 - 17.75	5		18	39.152	40.287	0.6375	A572-65	1.088
46	17.75 - 12.75	5		18	40.287	41.422	0.625	A572-65	1.092
47	12.75 - 7.75	5		18	41.422	42.558	0.6125	A572-65	1.098
48	7.75 - 2.75	5		18	42.558	43.693	0.6	A572-65	1.105
49	2.75 - 0	2.75		18	43.693	44.317	0.6	A572-65	1.096

TNX Section Forces

Increment (ft): 5		TNX Output		
	Section Height (ft)	P_u (K)	M_{ux} (kip-ft)	V_u (K)
1	140 - 135	2.92	24.41	5.40
2	135 - 130	3.17	51.92	5.61
3	130 - 125	6.47	100.52	10.86
4	125 - 120	6.86	155.30	11.06
5	120 - 115	10.17	227.58	14.57
6	115 - 114.75	10.22	231.22	14.58
7	114.75 - 109.75	10.95	305.12	15.03
8	109.75 - 104.75	11.59	381.52	16.03
9	104.75 - 101.58	12.08	432.95	16.42
10	101.58 - 101.33	12.12	437.06	16.44
11	101.33 - 96.33	12.85	520.67	17.00
12	96.33 - 91.33	13.63	607.02	17.55
13	91.33 - 91	13.69	612.82	17.57
14	91 - 90.75	13.75	617.22	17.60
15	90.75 - 85.75	14.84	706.88	18.25
16	85.75 - 80.75	15.97	799.71	18.88
17	80.75 - 75.75	17.13	895.73	19.52
18	75.75 - 70.75	22.43	1003.18	22.73
19	70.75 - 69.98	22.63	1020.73	22.84
20	69.98 - 69.73	22.70	1026.44	22.87
21	69.73 - 64.73	23.97	1142.48	23.54
22	64.73 - 63	24.41	1183.41	23.78
23	63 - 62.75	24.51	1189.36	23.80
24	62.75 - 59.08	25.71	1277.74	24.35
25	59.08 - 58.82	25.81	1284.08	24.37
26	58.82 - 58.67	25.85	1287.74	24.40
27	58.67 - 53.67	27.44	1411.44	25.07
28	53.67 - 53	27.66	1428.27	25.15
29	53 - 47.58	30.56	1566.90	26.01
30	47.58 - 42.58	32.19	1698.55	26.65
31	42.58 - 39.67	33.14	1776.73	27.17
32	39.67 - 39.42	33.26	1783.51	27.19
33	39.42 - 34.42	35.26	1921.07	27.89
34	34.42 - 32.5	36.03	1974.82	28.17
35	32.5 - 32.25	36.13	1981.86	28.18
36	32.25 - 31.42	36.41	2005.26	28.27
37	31.42 - 31.17	36.52	2012.32	28.29
38	31.17 - 29	37.41	2073.99	28.60
39	29 - 28.65	37.55	2083.99	28.63
40	28.65 - 28.42	37.64	2090.58	28.65
41	28.42 - 23.5	39.57	2232.69	29.18
42	23.5 - 23.25	39.70	2239.98	29.19
43	23.25 - 23	39.81	2247.28	29.22
44	23 - 22.75	39.92	2254.58	29.25
45	22.75 - 17.75	42.03	2402.01	29.78
46	17.75 - 12.75	44.18	2552.02	30.29
47	12.75 - 7.75	46.35	2704.58	30.81
48	7.75 - 2.75	48.55	2859.70	31.32
49	2.75 - 0	49.77	2946.09	31.59

Analysis Results

Elevation (ft)	Component Type	Size	Critical Element	% Capacity	Pass / Fail
140 - 135	Pole	TP14.296x13.161x0.1875	Pole	13.4%	Pass
135 - 130	Pole	TP15.431x14.296x0.1875	Pole	24.0%	Pass
130 - 125	Pole	TP16.566x15.431x0.1875	Pole	40.3%	Pass
125 - 120	Pole	TP17.701x16.566x0.1875	Pole	54.1%	Pass
120 - 115	Pole	TP18.836x17.701x0.1875	Pole	70.8%	Pass
115 - 114.75	Pole + Reinf.	TP18.893x18.836x0.4625	Reinf. 9 Tension Rupture	52.5%	Pass
114.75 - 109.75	Pole + Reinf.	TP20.027x18.893x0.45	Reinf. 9 Tension Rupture	63.7%	Pass
109.75 - 104.75	Pole + Reinf.	TP21.162x20.027x0.425	Reinf. 9 Tension Rupture	73.4%	Pass
104.75 - 101.58	Pole + Reinf.	TP21.882x21.162x0.4188	Reinf. 9 Tension Rupture	79.4%	Pass
101.58 - 101.33	Pole	TP21.939x21.882x0.3125	Pole	59.8%	Pass
101.33 - 96.33	Pole	TP23.074x21.939x0.3125	Pole	64.3%	Pass
96.33 - 91.33	Pole	TP24.209x23.074x0.3125	Pole	67.9%	Pass
91.33 - 91	Pole	TP24.284x24.209x0.3125	Pole	68.1%	Pass
91 - 90.75	Pole + Reinf.	TP24.34x24.284x0.6	Reinf. 8 Tension Rupture	59.1%	Pass
90.75 - 85.75	Pole + Reinf.	TP25.475x24.34x0.5875	Reinf. 8 Tension Rupture	63.1%	Pass
85.75 - 80.75	Pole + Reinf.	TP26.61x25.475x0.5625	Reinf. 8 Tension Rupture	66.6%	Pass
80.75 - 75.75	Pole + Reinf.	TP27.745x26.61x0.55	Reinf. 8 Tension Rupture	69.8%	Pass
75.75 - 70.75	Pole + Reinf.	TP28.88x27.745x0.5438	Reinf. 8 Tension Rupture	73.5%	Pass
70.75 - 69.98	Pole + Reinf.	TP29.055x28.88x0.5313	Reinf. 3 Tension Rupture	77.3%	Pass
69.98 - 69.73	Pole + Reinf.	TP29.112x29.055x0.5313	Reinf. 3 Tension Rupture	77.5%	Pass
69.73 - 64.73	Pole + Reinf.	TP30.247x29.112x0.525	Reinf. 3 Tension Rupture	81.0%	Pass
64.73 - 63	Pole + Reinf.	TP30.64x30.247x0.5188	Reinf. 3 Tension Rupture	82.2%	Pass
63 - 62.75	Pole + Reinf.	TP30.696x30.64x0.7	Reinf. 3 Tension Rupture	63.4%	Pass
62.75 - 59.08	Pole + Reinf.	TP31.53x30.696x0.6875	Reinf. 3 Tension Rupture	65.5%	Pass
59.08 - 58.82	Pole + Reinf.	TP31.589x31.53x0.625	Reinf. 4 Tension Rupture	67.0%	Pass
58.82 - 58.67	Pole + Reinf.	TP31.623x31.589x0.625	Reinf. 4 Tension Rupture	67.1%	Pass
58.67 - 53.67	Pole + Reinf.	TP32.758x31.623x0.6125	Reinf. 4 Tension Rupture	69.7%	Pass
53.67 - 53	Pole + Reinf.	TP33.913x32.758x0.6125	Reinf. 4 Tension Rupture	70.0%	Pass
53 - 47.58	Pole + Reinf.	TP33.515x32.285x0.6375	Reinf. 2 Tension Rupture	74.5%	Pass
47.58 - 42.58	Pole + Reinf.	TP34.65x33.515x0.625	Reinf. 2 Tension Rupture	76.8%	Pass
42.58 - 39.67	Pole + Reinf.	TP35.311x34.65x0.6125	Reinf. 2 Tension Rupture	78.0%	Pass
39.67 - 39.42	Pole + Reinf.	TP35.368x35.311x0.8125	Reinf. 2 Tension Rupture	60.6%	Pass
39.42 - 34.42	Pole + Reinf.	TP36.503x35.368x0.7875	Reinf. 2 Tension Rupture	62.4%	Pass
34.42 - 32.5	Pole + Reinf.	TP36.939x36.503x0.7875	Reinf. 2 Tension Rupture	63.1%	Pass
32.5 - 32.25	Pole + Reinf.	TP36.995x36.939x0.6125	Reinf. 5 Tension Rupture	78.1%	Pass
32.25 - 31.42	Pole + Reinf.	TP37.184x36.995x0.6	Reinf. 5 Tension Rupture	78.4%	Pass
31.42 - 31.17	Pole + Reinf.	TP37.241x37.184x0.775	Reinf. 1 Tension Rupture	63.6%	Pass
31.17 - 29	Pole + Reinf.	TP37.733x37.241x0.7625	Reinf. 1 Tension Rupture	64.3%	Pass
29 - 28.65	Pole + Reinf.	TP37.813x37.733x0.675	Reinf. 1 Tension Rupture	76.6%	Pass
28.65 - 28.42	Pole + Reinf.	TP37.865x37.813x0.675	Reinf. 1 Tension Rupture	76.7%	Pass
28.42 - 23.5	Pole + Reinf.	TP38.982x37.865x0.6625	Reinf. 1 Tension Rupture	78.4%	Pass
23.5 - 23.25	Pole + Reinf.	TP39.039x38.982x0.7875	Reinf. 1 Tension Rupture	64.1%	Pass
23.25 - 23	Pole + Reinf.	TP39.095x39.039x0.7875	Reinf. 1 Tension Rupture	64.2%	Pass
23 - 22.75	Pole + Reinf.	TP39.152x39.095x0.65	Reinf. 1 Tension Rupture	77.9%	Pass
22.75 - 17.75	Pole + Reinf.	TP40.287x39.152x0.6375	Reinf. 1 Tension Rupture	79.5%	Pass
17.75 - 12.75	Pole + Reinf.	TP41.422x40.287x0.625	Reinf. 1 Tension Rupture	81.0%	Pass
12.75 - 7.75	Pole + Reinf.	TP42.558x41.422x0.6125	Reinf. 1 Tension Rupture	82.4%	Pass
7.75 - 2.75	Pole + Reinf.	TP43.693x42.558x0.6	Reinf. 1 Tension Rupture	83.7%	Pass
2.75 - 0	Pole + Reinf.	TP44.317x43.693x0.6	Reinf. 1 Tension Rupture	84.4%	Pass
				Summary	
			Pole	70.8%	Pass
			Reinforcement	84.4%	Pass
			Overall	84.4%	Pass

Additional Calculations

Section Elevation (ft)	Moment of Inertia (in^4)			Area (in^2)			% Capacity*										
	Pole	Reinf.	Total	Pole	Reinf.	Total	Pole	R1	R2	R3	R4	R5	R6	R7	R8	R9	R10
140 - 135	211	n/a	211	8.40	n/a	8.40	13.4%										
135 - 130	266	n/a	266	9.07	n/a	9.07	24.0%										
130 - 125	330	n/a	330	9.75	n/a	9.75	40.3%										
125 - 120	404	n/a	404	10.42	n/a	10.42	54.1%										
120 - 115	487	n/a	487	11.10	n/a	11.10	70.8%										
115 - 114.75	492	680	1172	11.13	13.50	24.63	29.8%									52.5%	
114.75 - 109.75	587	758	1345	11.81	13.50	25.31	36.7%									63.7%	
109.75 - 104.75	694	841	1534	12.48	13.50	25.98	43.1%									73.4%	
104.75 - 101.58	767	896	1663	12.91	13.50	26.41	47.0%									79.4%	
101.58 - 101.33	1267	n/a	1267	21.45	n/a	21.45	59.8%										
101.33 - 96.33	1477	n/a	1477	22.58	n/a	22.58	64.3%										
96.33 - 91.33	1709	n/a	1709	23.70	n/a	23.70	67.9%										
91.33 - 91	1726	n/a	1726	23.78	n/a	23.78	68.1%										
91 - 90.75	1738	1473	3210	23.83	18.00	41.83	36.5%								59.1%		
90.75 - 85.75	1996	1605	3601	24.96	18.00	42.96	39.0%								63.1%		
85.75 - 80.75	2278	1743	4021	26.08	18.00	44.08	41.3%								66.6%		
80.75 - 75.75	2586	1887	4473	27.21	18.00	45.21	43.3%								69.8%		
75.75 - 70.75	2921	2037	4957	28.33	18.00	46.33	45.7%								73.5%		
70.75 - 69.98	2975	1972	4947	28.51	17.25	45.76	46.9%			77.3%							
69.98 - 69.73	2992	1980	4972	28.56	17.25	45.81	47.0%			77.5%							
69.73 - 64.73	3360	2130	5490	29.69	17.25	46.94	49.3%			81.0%							
64.73 - 63	3494	2183	5677	30.08	17.25	47.33	50.2%			82.2%							
63 - 62.75	3520	4069	7589	30.14	35.25	65.39	39.4%			63.4%				58.4%			
62.75 - 59.08	3817	4283	8100	30.96	35.25	66.21	40.9%			65.5%				60.4%			
59.08 - 58.82	3836	3575	7411	31.02	30.39	61.41	44.7%				67.0%			65.5%			
58.82 - 58.67	3848	3583	7431	31.05	30.39	61.44	44.7%				67.1%			65.6%			
58.67 - 53.67	4282	3833	8115	32.18	30.39	62.57	46.9%				69.7%			68.2%			
53.67 - 53	4342	3867	8209	32.33	30.39	62.72	47.2%				70.0%			68.5%			
53 - 47.58	4585	4469	9054	32.93	29.64	62.57	46.7%		74.5%		69.9%						
47.58 - 42.58	5072	4764	9836	34.06	29.64	63.70	48.6%		76.8%		72.0%						
42.58 - 39.67	5370	4941	10311	34.71	29.64	64.35	49.7%		78.0%		73.2%						
39.67 - 39.42	5396	7960	13356	34.77	47.64	82.41	38.6%		60.6%		56.8%	59.1%					
39.42 - 34.42	5938	8460	14398	35.89	47.64	83.53	40.2%		62.4%		58.6%	60.9%					
34.42 - 32.5	6155	8656	14811	36.33	47.64	83.97	40.8%		63.1%		59.2%	61.6%					
32.5 - 32.25	6183	5544	11728	36.38	30.39	66.77	51.8%				75.1%	78.1%					
32.25 - 31.42	6279	5599	11878	36.57	30.39	66.96	52.1%				75.4%	78.4%					
31.42 - 31.17	6308	8793	15102	36.63	47.64	84.27	41.3%	63.6%			59.6%	62.0%					
31.17 - 29	6564	9019	15584	37.12	47.64	84.76	41.9%	64.3%			60.3%	62.7%					
29 - 28.65	6667	7167	13834	37.19	41.64	78.83	51.4%	76.6%			75.5%						63.2%
28.65 - 28.42	6695	7186	13881	37.25	41.64	78.89	51.5%	76.7%			75.5%						63.3%
28.42 - 23.5	7308	7603	14911	38.35	41.64	79.99	53.2%	78.4%			77.1%						64.8%
23.5 - 23.25	7299	10570	17870	38.41	59.64	98.05	43.5%	64.1%			60.1%		58.5%				59.7%
23.25 - 23	7331	10600	17931	38.47	59.64	98.11	43.6%	64.2%			60.2%		58.6%				59.7%
23 - 22.75	7349	7433	14783	38.52	47.64	86.16	52.2%	77.9%			69.5%		61.4%				
22.75 - 17.75	8012	7855	15867	39.65	47.64	87.29	53.8%	79.5%			71.0%		62.8%				
17.75 - 12.75	8714	8288	17002	40.77	47.64	88.41	55.4%	81.0%			72.4%		64.1%				
12.75 - 7.75	9456	8733	18189	41.90	47.64	89.54	57.0%	82.4%			73.6%		65.4%				
7.75 - 2.75	10238	9190	19428	43.03	47.64	90.67	58.5%	83.7%			74.8%		66.5%				
2.75 - 0	10687	9446	20132	43.65	47.64	91.29	59.3%	84.4%			75.4%		67.1%				

Note: Section capacity checked in 5 degree increments.
Rating per TIA-222-H Section 15.5.

Monopole Flange Plate Connection

Elevation = 101.58 ft.

BU #	842873
Site Name	SHELTON NE
Order #	492771 Rev. 0

TIA-222 Revision	H

Applied Loads	
Moment (kip-ft)	432.95
Axial Force (kips)	12.08
Shear Force (kips)	16.42

**TIA-222-H Section 15.5 Applied*

Top Plate - External

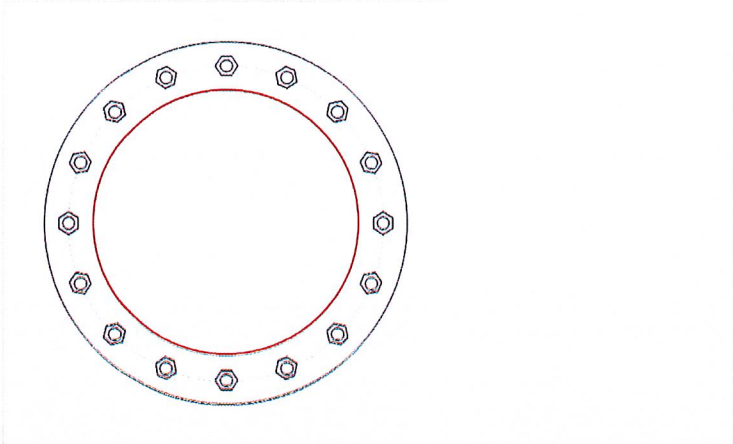

Bottom Plate - External

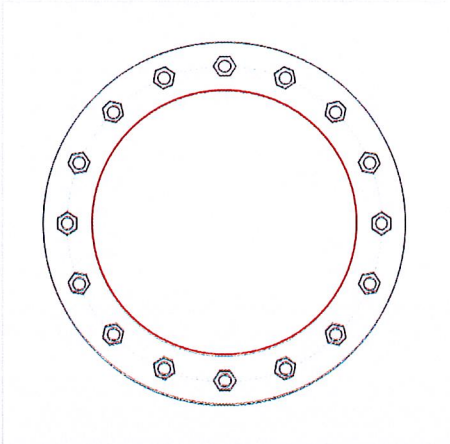

Connection Properties

Bolt Data

(16) 1" ø bolts (A325 N; Fy=92 ksi, Fu=120 ksi) on 26" BC

Top Plate Data

30" OD x 1.5" Plate (A572-50; Fy=50 ksi, Fu=65 ksi)

Bottom Plate Data

30" OD x 1.5" Plate (A572-50; Fy=50 ksi, Fu=65 ksi)

Top Stiffener Data

N/A

Bottom Stiffener Data

N/A

Top Pole Data

21.882" x 0.1875" 18-sided pole (A572-65; Fy=65 ksi, Fu=80 ksi)

Bottom Pole Data

21.882" x 0.3125" 18-sided pole (A572-65; Fy=65 ksi, Fu=80 ksi)

Analysis Results

Bolt Capacity

Max Load (kips)	49.17	
Allowable (kips)	54.52	
Stress Rating:	**85.9%**	**Pass**

Top Plate Capacity

Max Stress (ksi):	25.91	(Flexural)
Allowable Stress (ksi):	45.00	
Stress Rating:	**54.8%**	**Pass**
Tension Side Stress Rating:	**42.6%**	**Pass**

Bottom Plate Capacity

Max Stress (ksi):	25.91	(Flexural)
Allowable Stress (ksi):	45.00	
Stress Rating:	**54.8%**	**Pass**
Tension Side Stress Rating:	**42.6%**	**Pass**

Monopole Base Plate Connection

CROWN CASTLE

Site Info	
BU #	842873
Site Name	SHELTON NE
Order #	492771 Rev. 0

Analysis Considerations	
TIA-222 Revision	H
Grout Considered:	No
l_{ar} (in)	1.25

Applied Loads	
Moment (kip-ft)	2946.09
Axial Force (kips)	0.00
Shear Force (kips)	31.59

**TIA-222-H Section 15.5 Applied*

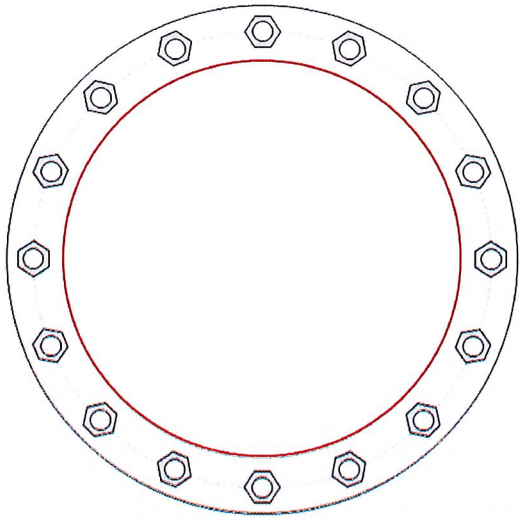

Connection Properties

Anchor Rod Data

GROUP 1: (8) 2-1/4" ø bolts (A615-75 N; Fy=75 ksi, Fu=100 ksi) on 51" BC
GROUP 2: (4) 2-1/4" ø bolts (A615-75 N; Fy=75 ksi, Fu=100 ksi) on 51" BC
GROUP 3: (4) 2-1/4" ø bolts (F1554-105 N; Fy=105 ksi, Fu=125 ksi) on 51" BC

Base Plate Data

57" OD x 2.25" Plate (A633 Grade E; Fy=60 ksi, Fu=70 ksi)

Stiffener Data

N/A

Pole Data

44.317" x 0.3125" 18-sided pole (A572-65; Fy=65 ksi, Fu=80 ksi)

Analysis Results

Anchor Rod Summary *(units of kips, kip-in)*

GROUP 1:		
Pu_c = 173.16	ϕPn_c = 243.75	**Stress Rating**
Vu = 3.95	ϕVn = 73.13	**67.9%**
Mu = n/a	ϕMn = n/a	**Pass**
GROUP 2:		
Pu_c = 173	ϕPn_c = 243.75	**Stress Rating**
Vu = 0	ϕVn = 73.13	**67.6%**
Mu = n/a	ϕMn = n/a	**Pass**
GROUP 3:		
Pu_c = 173	ϕPn_c = 341.25	**Stress Rating**
Vu = 0	ϕVn = 102.38	**48.3%**
Mu = n/a	ϕMn = n/a	**Pass**

Base Plate Summary

Max Stress (ksi):	32.14	(Flexural)
Allowable Stress (ksi):	54	
Stress Rating:	**56.7%**	**Pass**

Drilled Pier Foundation

BU # :	842873
Site Name:	SHELTON NE
Order Number:	492771 Rev. 0

TIA-222 Revison:	H
Tower Type:	Monopole

Applied Loads	Comp.	Uplift
Moment (kip-ft)	2946	
Axial Force (kips)	50	
Shear Force (kips)	32	

Material Properties		
Concrete Strength, f'c:	4	ksi
Rebar Strength, Fy:	60	ksi

Pier Design Data		
Depth	14	ft
Ext. Above Grade	0.5	ft
Pier Section 1		
From 0.5' above grade to 14' below grade		
Pier Diameter	6	ft
Rebar Quantity	26	
Rebar Size	11	
Clear Cover to Ties	3	in
Tie Size	5	

Analysis Results		
Soil Lateral Capacity	*Compression*	*Uplift*
$D_{v=0}$ (ft from TOC)	3.80	-
Soil Safety Factor	1.79	-
Max Moment (kip-ft)	3064.88	-
Rating*	*70.6%*	-
Soil Vertical Capacity	*Compression*	*Uplift*
Skin Friction (kips)	318.06	-
End Bearing (kips)	254.47	-
Weight of Concrete (kips)	73.80	-
Total Capacity (kips)	572.53	-
Axial (kips)	123.80	-
Rating*	*20.6%*	-
Reinforced Concrete Capacity	*Compression*	*Uplift*
Critical Depth (ft from TOC)	3.82	-
Critical Moment (kip-ft)	3064.86	-
Critical Moment Capacity	5362.96	-
Rating*	*54.4%*	-

Soil Interaction Rating*	**70.6%**
Structural Foundation Rating*	**54.4%**

*Rating per TIA-222-H Section 15.5

Check Limitation	
Apply TIA-222-H Section 15.5:	☑
N/A	☐

Soil Profile

Groundwater Depth	n/a	ft	# of Layers	2

Layer	Top (ft)	Bottom (ft)	Thickness (ft)	γ_{soil} (pcf)	$\gamma_{concrete}$ (pcf)	Cohesion (ksf)	Angle of Friction (degrees)	Calculated Ultimate Skin Friction Comp (ksf)	Calculated Ultimate Skin Friction Uplift (ksf)	Ultimate Skin Friction Comp Override (ksf)	Ultimate Skin Friction Uplift Override (ksf)	Ult. Gross Bearing Capacity (ksf)	SPT Blow Count	Soil Type
1	0	3.33	3	165	150	0	0	0.000	0.000					Cohesionless
2	3.33	14	11	165	150	4	0	2.045	2.045			12		Cohesive

Exhibit E

Mount Analysis

September 17, 2019

Kevin Morrow
Crown Castle
3530 Toringdon Way, Suite 300
Charlotte, NC 28277
(704) 405-6619

Tower Engineering Professionals
326 Tryon Road
Raleigh, NC 27603
(919) 661-6351
Structures@tepgroup.net

Subject:	**Mount Analysis**	
Carrier Designation:	***AT&T Mobility* Reconfiguration**	
	Client Site Number:	CTL05431
	Client Site Name:	SHELTON NE
Crown Castle Designation:	**Crown Castle BU Number:**	842873
	Crown Castle Site Name:	SHELTON NE
	Crown Castle JDE Job Number:	574647
	Crown Castle Order Number:	492771 Rev. 0
Engineering Firm Designation:	**TEP Project Number:**	63208.298276
Site Data:	**30 Oliver Terrace, Shelton, Fairfield County, CT 06484**	
	Latitude *41° 17' 38.21"*, Longitude *-73° 6' 25.83"*	
Structure Information:	**Tower Height & Type:**	140.0± ft Monopole
	Mount Elevation:	129.0 ft
	Mount Width & Type:	13 ft Sector

Dear Kevin Morrow,

Tower Engineering Professionals is pleased to submit this **"Mount Analysis"** to determine the structural integrity of AT&T Mobility's antenna mounting system with proposed appurtenance and equipment addition on the above mentioned supporting tower structure. Analysis of the existing supporting tower structure is to be completed by others and therefore is not part of this analysis. Analysis of the antenna mounting system as a tie-off point for fall protection or rigging is not part of this document.

The purpose of the analysis is to determine acceptability of the mount stress level. Based on our analysis, we have determined the mount stress level to be:

Sector Mount **Sufficient Capacity**

The analysis has been performed in accordance with the 2018 International Building Code based upon an ultimate 3-second gust wind speed of 119 mph. Applicable Standard references and design criteria are listed in Section 2 - Analysis Criteria.

Structural analysis prepared by: Shaun P. Donley / HBC

Respectfully submitted by:

Aaron T. Rucker, P.E.
Structural Division Manager

STATE OF CONNECTICUT
AARON THOMAS RUCKER
32608
LICENSED
PROFESSIONAL ENGINEER

Electronic Copy

09/17/2019

TABLE OF CONTENTS

1) INTRODUCTION

2) ANALYSIS CRITERIA
Table 1 - Proposed Equipment Configuration

3) ANALYSIS PROCEDURE
Table 2 - Documents Provided
3.1) Analysis Method
3.2) Assumptions

4) ANALYSIS RESULTS
Table 3 - Mount Component Stresses vs. Capacity
Table 4 - Tieback Connection Data Table
4.1) Recommendations

5) APPENDIX A
Wire Frame and Rendered Models

6) APPENDIX B
Software Input Calculations

7) APPENDIX C
Software Analysis Output

8) APPENDIX D
Additional Calculations

1) INTRODUCTION

The mount is an existing 13-ft Sector mount, designed by Sabre.

2) ANALYSIS CRITERIA

Building Code:	2018 IBC
TIA-222 Revision:	TIA-222-H
Risk Category:	II
Ultimate Wind Speed:	119 mph
Exposure Category:	B
Topographic Category at Base:	1.0
Topographic Category at Mount:	1.0
Ice Thickness:	1.0 in
Wind Speed with Ice:	50 mph
Seismic Design Category:	B
Seismic S_s:	0.204
Seismic S_1:	0.054
Live Loading Wind Speed:	30 mph
Live Loading at Mid/End-Points:	250 lb
Man Live Loading at Mount Pipes:	500 lb

Table 1 - Proposed Equipment Configuration

Mount Centerline (ft)	Antenna Centerline (ft)	Number of Antennas	Antenna Manufacturer	Antenna Model	Mount / Modification Details
129.0	129.0	3	CCI Antennas	DMP65R-BU6D	Sector Mount
		6	CCI Antennas	HPA-65R-BUU-H6	
		3	Ericsson	Radio 4415 B30	
		3	Ericsson	RRUS 32 B2[1]	
		3	Ericsson	RRUS 4449 B5/B12	
		2	Raycap	DC6-48-60-0-8C-EV	

Notes:
1) Equipment mounted directly to tower and not considered in this analysis

3) ANALYSIS PROCEDURE

Table 2 - Documents Provided

Document	Remarks	Reference	Source
Previous Mount Analysis	Trylon	23216-084	CCIsites
Loading Application	AT&T Mobility	Order 492771 Rev. 0	CCIsites

3.1) Analysis Method

RISA-3D (Version 17.0.1), a commercially available analysis software package, was used to create a three-dimensional model of the mount and calculate member stresses for various loading cases. Selected output from the analysis is included in Appendix A and Appendix C.

TEP Mount Analysis Tool, a tool internally developed by TEP using Microsoft Excel, was used to calculate member loading for various load cases. Selected output from the analysis is included in Appendix B.

This analysis was performed in accordance with Crown Castle's ENG-SOW-10208 *Tower Mount Analysis (Revision C)*. In addition, this analysis is in accordance with AT&T's *Mount Technical Directive – R14.1.*

3.2) Assumptions

1) The mount was built in accordance with the manufacturer's specifications.
2) The mount has been maintained in accordance with the manufacturer's specification.
3) The configuration of antennas, mounts and other appurtenances are as specified in Table 1. All mount components have been assumed to be in sufficient condition to carry their full design capacity for this analysis. Refer to the issued mapping for any structural and/or maintenance issues found during our site visit if applicable.
4) All mount components are in sufficient condition to carry their full design capacity.
5) TEP did not analyze the collar mount connection to the pole and assumes it to have sufficient structural capacity to transfer the applied forces from the mount to the tower.
6) All material grades used for this analysis, unless verified by mount manufacturer design, were assumed per AISC Table 2-4, 15th Edition. See RISA-3D output for confirmation on grades used in this analysis.

This analysis may be affected if any assumptions are not valid or have been made in error. Tower Engineering Professionals should be notified to determine the effect on the structural integrity of the antenna mounting system.

4) ANALYSIS RESULTS

Table 3 - Mount Component Stresses vs. Capacity (Sector Mount)

Notes	Component	Critical Member	Mount Centerline (ft)	% Capacity	Pass / Fail
1	Face Horizontals	FFTH2	129.0	21.1	Pass
1	Support Horizontals	SF3-TH	129.0	24.6	Pass
1	Mount Pipes	MP-6	129.0	31.1	Pass
2	Connection Bolts	-	129.0	10.0	Pass

Structure Rating (max from all components) =	31.1%

Notes:
1) See additional documentation in "Appendix C - Analysis Output" for calculations supporting the % capacity listed.
2) See additional documentation in "Appendix D - Additional Calculations" for calculations supporting the % capacity listed.

Table 4 - Tieback Connection Data Table

Tower Connection Node No.	Existing/ Proposed	Resultant End Reaction (lb)	Connected Member Type	Connected Member Size	Member Compressive Capacity (lb)[3]	Notes
-	-	-	-	-	-	-

Notes:
1) Tieback connection point is within 25% of either end of the connected tower member.
2) Tower connection point is NOT within 25% of either end of the connected tower member.
3) Reduced member compressive capacity according to CED-STD-10294 *Standard for Installation of Mounts and Appurtenances.*

4.1) Recommendations

1) If the load differs from that described in Table 1 of this report or the provisions of this analysis are found to be invalid, another structural analysis should be performed.
2) The mount and its connection have sufficient capacity to carry the proposed loading configuration. No modifications are required at this time.

APPENDIX A

WIRE FRAME AND RENDERED MODELS

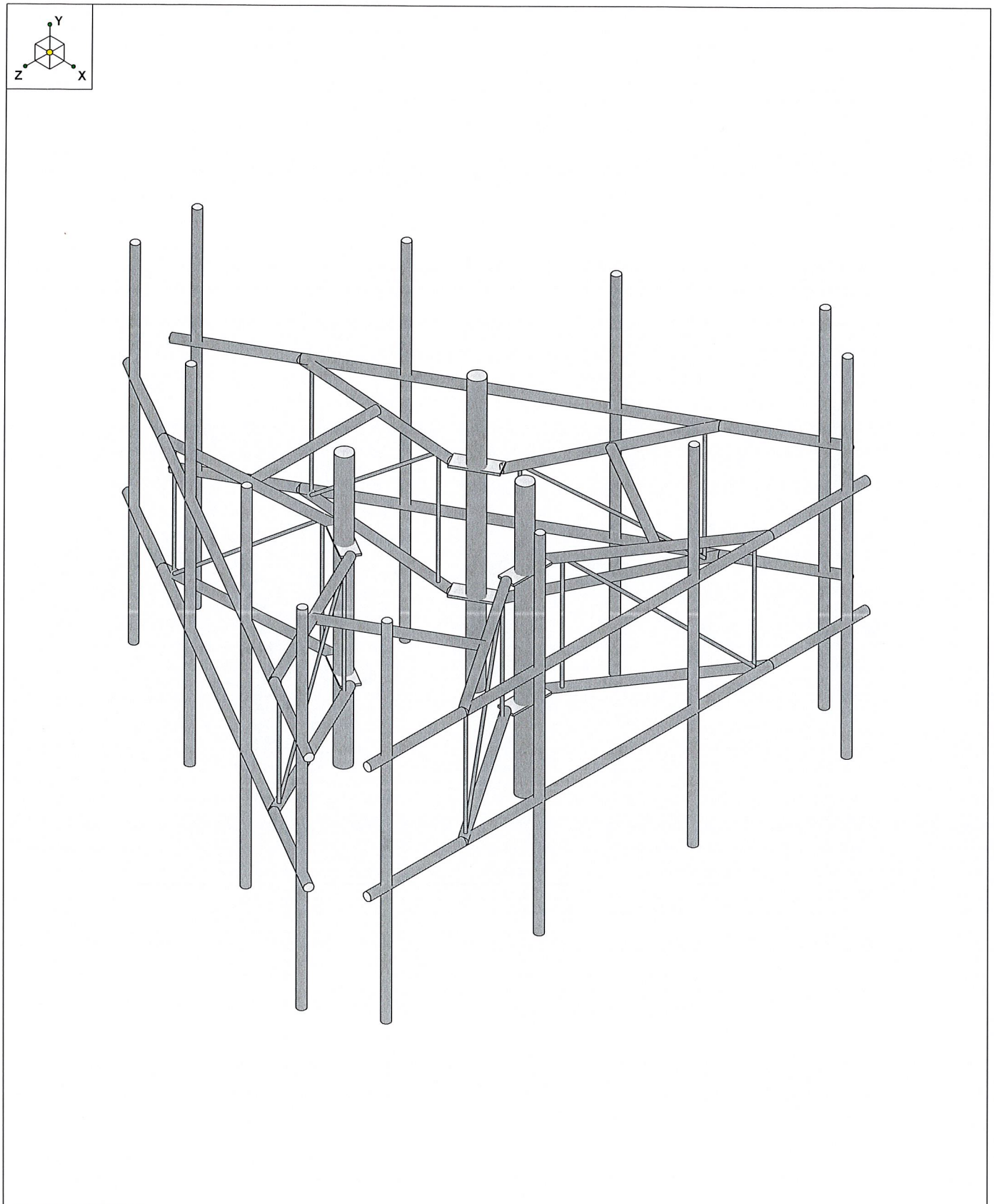

Envelope Only Solution

Tower Engineering Profes...	BU # 842873 - SHELTON NE	SK - 1
SPD		Sept 17, 2019 at 11:33 AM
63208.298276		Sabre C10857001 HD V-Boom.r3d

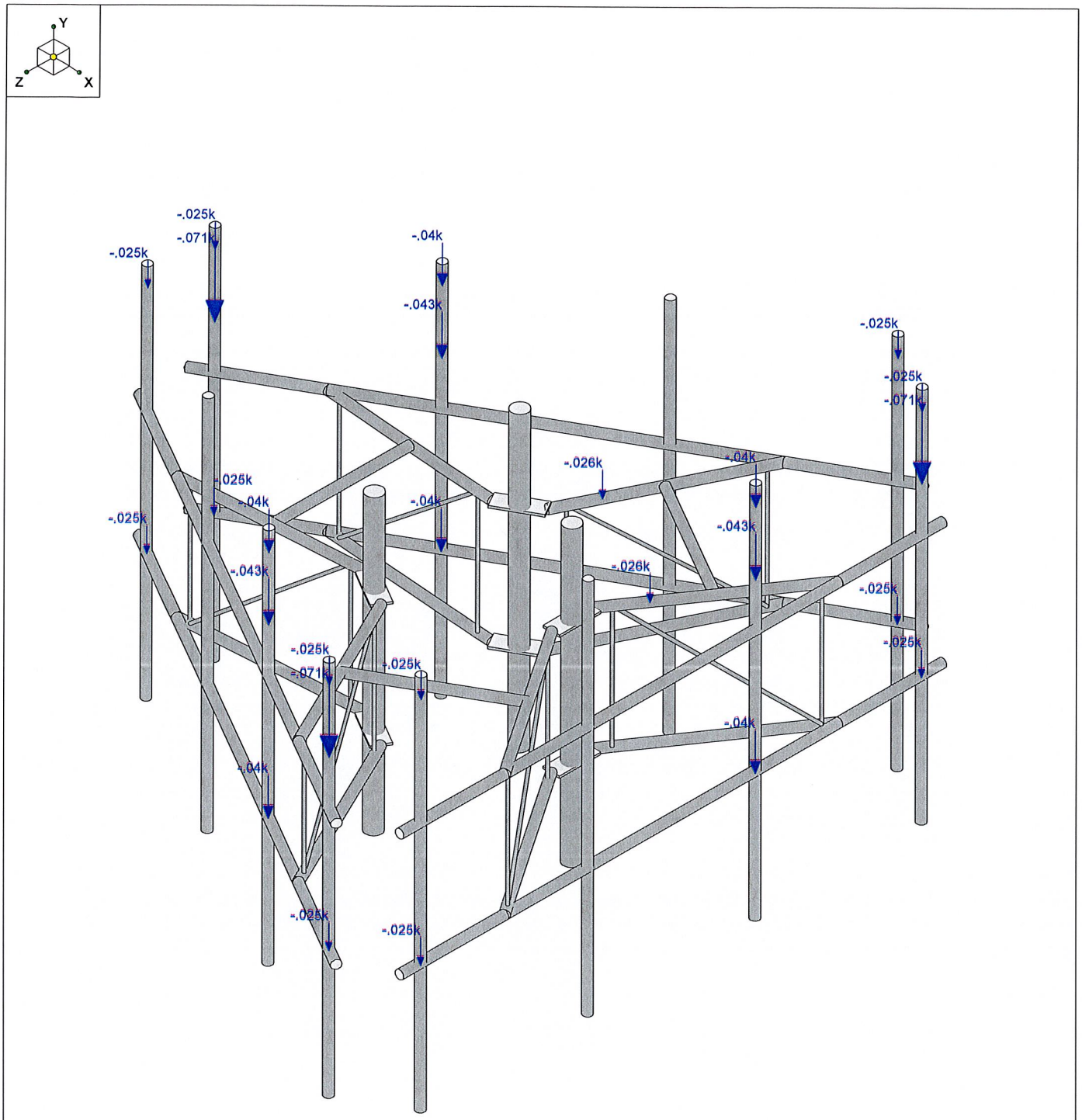

Loads: BLC 1, Dead
Envelope Only Solution

Tower Engineering Profes...	BU # 842873 - SHELTON NE	SK - 2
SPD		Sept 17, 2019 at 11:33 AM
63208.298276		Sabre C10857001 HD V-Boom.r3d

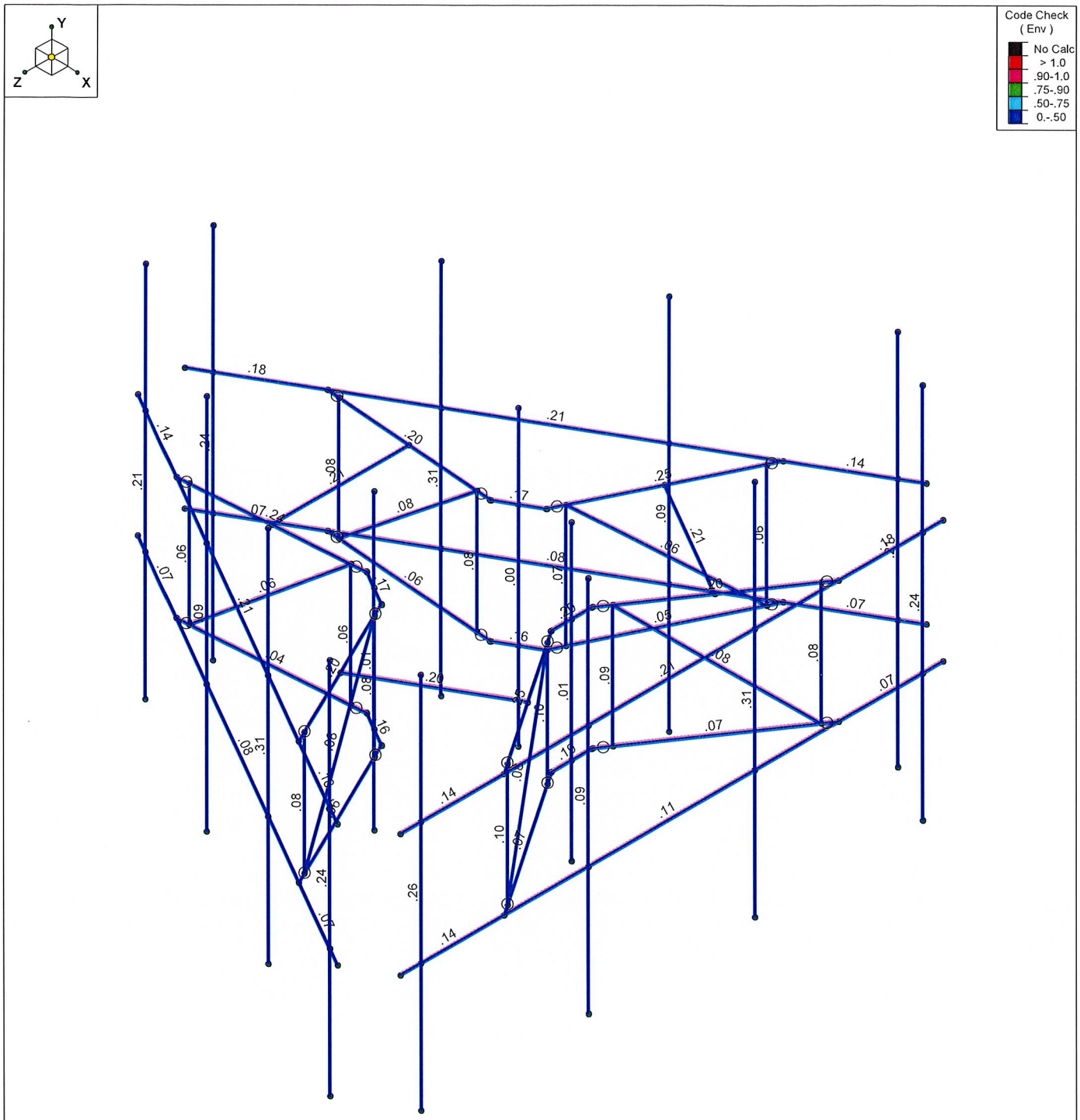

Member Code Checks Displayed (Enveloped)
Envelope Only Solution

Tower Engineering Profes...	BU # 842873 - SHELTON NE	SK - 3
SPD		Sept 17, 2019 at 11:33 AM
63208.298276		Sabre C10857001 HD V-Boom.r3d

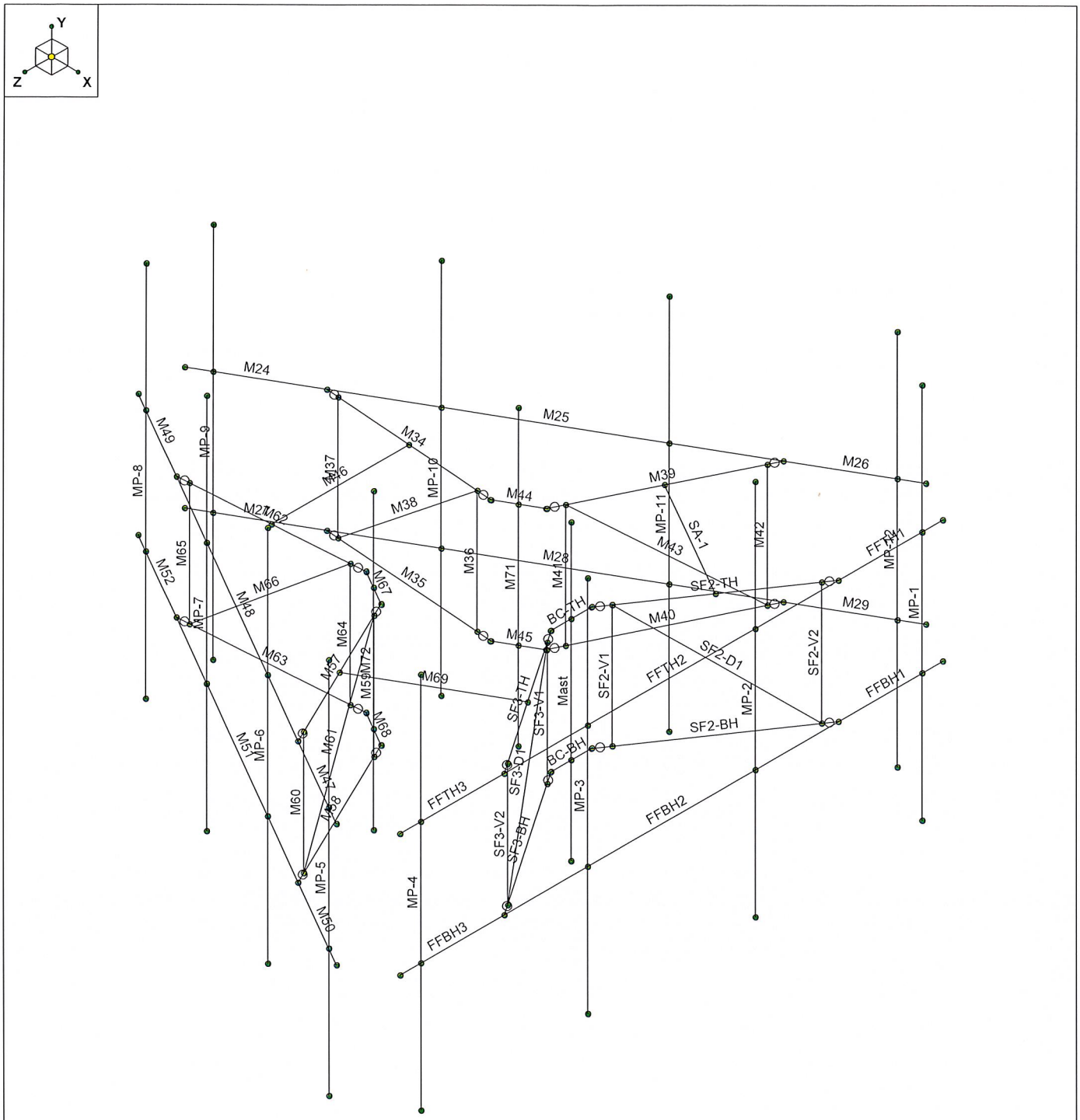

Envelope Only Solution

Tower Engineering Profes...	BU # 842873 - SHELTON NE	SK - 4
SPD		Sept 17, 2019 at 11:34 AM
63208.298276		Sabre C10857001 HD V-Boom.r3d

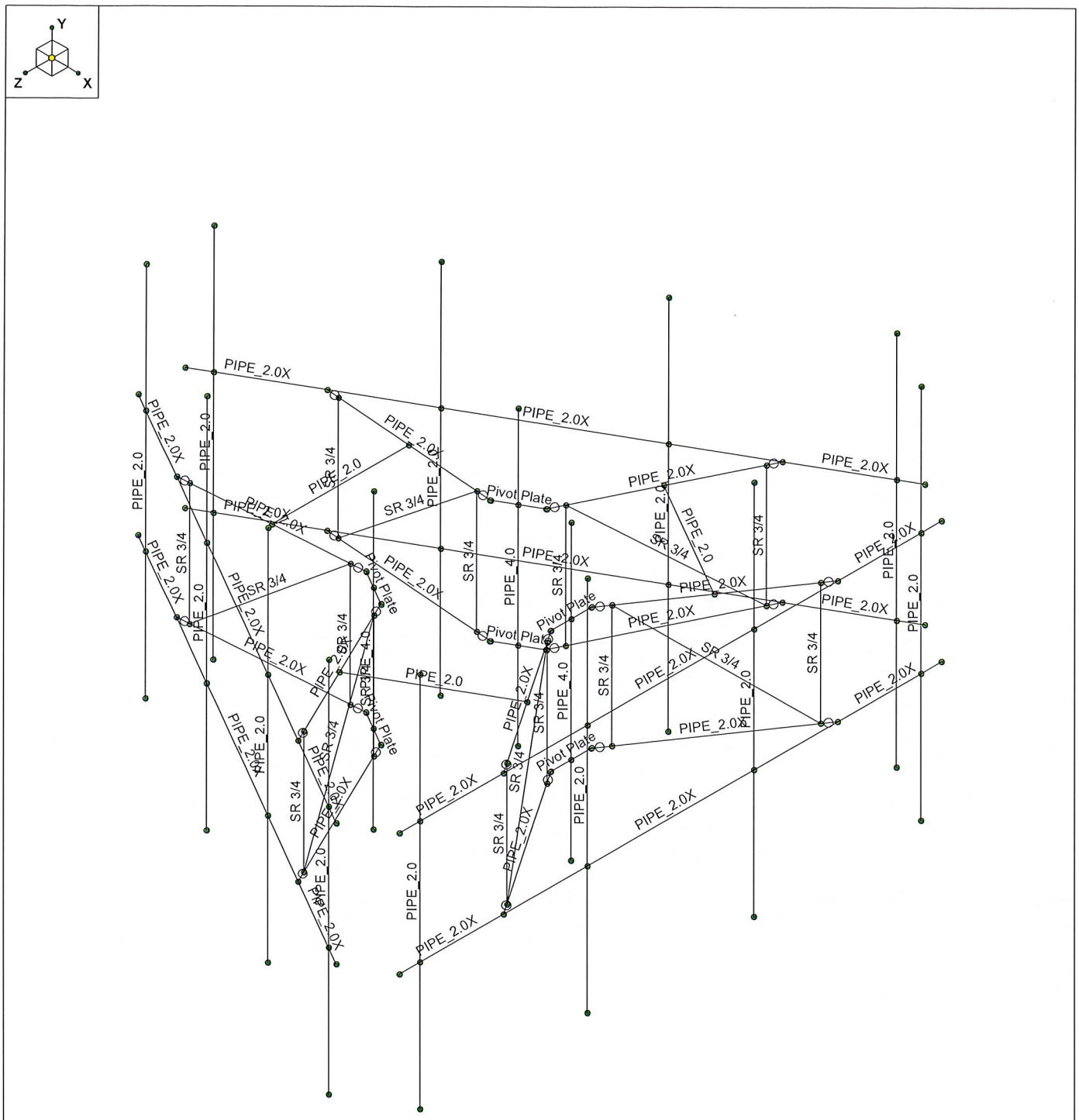

Envelope Only Solution

Tower Engineering Profes...	BU # 842873 - SHELTON NE	SK - 5
SPD		Sept 17, 2019 at 11:34 AM
63208.298276		Sabre C10857001 HD V-Boom.r3d

APPENDIX B

SOFTWARE INPUT CALCULATIONS

TOWER ENGINEERING PROFESSIONALS

BU # 842873 - SHELTON NE

TEP No.	63208.298276	
Analysis By:	SPD	9/17/2019
Checked By:	HBC	9/17/2019

Code Revisions:	TIA-222-H	IBC 2018
Tower Type:	Monopole	

Wind Inputs:

Ult. Wind Velocity:	119.0	mph
Live Load Velocity:	30.0	mph
Ice Wind Velocity:	50.0	mph
Base Ice Thickness:	1.00	inches
Mount Centerline:	129.0	ft
Antenna Centerline:	129.0	ft
Exposure Category:	B	
Topo Category:	1	
Risk Category:	II	
Ground Elevation:	311	ft

Wind Calculations:

K_{zt}:	1.000	Section 2.6.6
K_d:	0.950	
$K_{z\text{-Mount}}$:	1.063	Section 2.6.5.2
$K_{z\text{-Antenna}}$:	1.063	Section 2.6.5.2
K_{iz}:	1.146	Section 2.6.10
Ice Thickness:	0.974	inches - Section 2.6.10
$K_{es\text{-wind}}$:	0.95	Annex S (Table S-1)
$K_{es\text{-ice}}$:	0.85	Annex S (Table S-1)

Without Ice - (psf)		With Ice - (psf)	
$(q_zG_h)_{Mount}$:	34.38	$(q_zG_h)_{Mount}$:	6.39
$(q_zG_h)_{Antenna}$:	34.38	$(q_zG_h)_{Antenna}$:	6.39

Seismic Code Revisions:	TIA-222-H
Seismic Risk Category:	II

Seismic Input

S_{DS}:	0.217	Design Short Period Spectral Accel.
I_p:	1.0	Importance Factor
R_p:	2.0	Response Modification Factor
ρ:	1.0	
A_s:	1.0	Applification Factor - TIA-222-H Section 2.7.8.1
S_1:	0.054	Short Period Spectral Accel.

Seismic Design Force

Cs:	0.109	kips/kip	TIA-H Sec 2.7.7.1.1
Cs-min:	0.030	kips/kip	TIA-H Sec 2.7.7.1.1

TOWER ENGINEERING PROFESSIONALS

BU # 842873 - SHELTON NE

TEP No.	63208.298276	
Analysis By:	SPD	9/17/2019
Checked By:	HBC	9/17/2019

Antenna Loads are Calculated in Accordance with TIA-222-H

Azimuth is the absolute angle measured clockwise from RISA-3D global X-axis.

										Distance from start node of the member		
MFR	Model	Height (in)	Width (in)	Depth (in)	Wt. (lbs)	Azimuth°	Qty	Shape	Member Label	Location #1 (ft,%)	Location #2 (ft,%)	Location #3 (ft,%)
CCI Antennas	HPA-65R-BUU-H6	72.00	14.80	9.00	51.00	0.00	1	Flat	MP-1	0.50	6.00	
Ericsson	RRUS 4449 B5/B12	17.90	13.19	9.44	71.00	0.00	1	Flat	MP-1	2.00		
CCI Antennas	DMP65R-BU6D	71.20	20.70	7.70	79.40	0.00	1	Flat	MP-2	0.50	6.00	
Ericsson	Radio 4415 B30	14.96	13.18	5.04	42.90	0.00	1	Flat	MP-2	2.00		
CCI Antennas	HPA-65R-BUU-H6	72.00	14.80	9.00	51.00	0.00	1	Flat	MP-4	0.50	6.00	
CCI Antennas	HPA-65R-BUU-H6	72.00	14.80	9.00	51.00	120.00	1	Flat	MP-5	0.50	6.00	
Ericsson	RRUS 4449 B5/B12	17.90	13.19	9.44	71.00	120.00	1	Flat	MP-5	2.00		
CCI Antennas	DMP65R-BU6D	71.20	20.70	7.70	79.40	120.00	1	Flat	MP-6	0.50	6.00	
Ericsson	Radio 4415 B30	14.96	13.18	5.04	42.90	120.00	1	Flat	MP-6	2.00		
CCI Antennas	HPA-65R-BUU-H6	72.00	14.80	9.00	51.00	120.00	1	Flat	MP-8	0.50	6.00	
CCI Antennas	HPA-65R-BUU-H6	72.00	14.80	9.00	51.00	240.00	1	Flat	MP-9	0.50	6.00	
Ericsson	RRUS 4449 B5/B12	17.90	13.19	9.44	71.00	240.00	1	Flat	MP-9	2.00		
CCI Antennas	DMP65R-BU6D	71.20	20.70	7.70	79.40	240.00	1	Flat	MP-10	0.50	6.00	
Ericsson	Radio 4415 B30	14.96	13.18	5.04	42.90	240.00	1	Flat	MP-10	2.00		
CCI Antennas	HPA-65R-BUU-H6	72.00	14.80	9.00	51.00	240.00	1	Flat	MP-12	0.50	6.00	
Raycap	DC6-48-60-0-8C-EV	31.40	10.24	18.28	26.20	0.00	1	Round	SF2-TH	1.00		
Raycap	DC6-48-60-0-8C-EV	31.40	10.24	18.28	26.20	120.00	1	Round	M39	1.00		

TOWER ENGINEERING PROFESSIONALS

BU # 842873 - SHELTON NE

TEP No.	63208.298276	
Analysis By:	SPD	9/17/2019
Checked By:	HBC	9/17/2019

Member Forces are Calculated in Accordance with TIA-222-H

Member Name	Wind Proj. (in)	Length (in)	Shape	θ (°)	Perimeter (in)
FFTH1	2.375	30.00	Round	90.00	7.46
FFTH2	2.375	96.00	Round	90.00	7.46
FFTH3	2.375	30.00	Round	90.00	7.46
FFBH1	2.375	30.00	Round	90.00	7.46
FFBH2	2.375	96.00	Round	90.00	7.46
FFBH3	2.375	30.00	Round	90.00	7.46
MP-1	2.375	108.00	Round		7.46
MP-2	2.375	108.00	Round		7.46
MP-3	2.375	108.00	Round		7.46
MP-4	2.375	108.00	Round		7.46
SF2-TH	2.375	51.06	Round	55.77	7.46
SF2-BH	2.375	51.06	Round	55.77	7.46
SF2-V1	0.750	35.00	Round		2.36
SF2-V2	0.750	35.00	Round		2.36
SF2-D1	0.750	55.64	Round		2.36
SF3-TH	2.375	51.06	Round	-55.77	7.46
SF3-BH	2.375	51.06	Round	-55.77	7.46
SF3-V1	0.750	35.00	Round		2.36
SF3-V2	0.750	35.00	Round		2.36
SF3-D1	0.750	55.64	Round		2.36
BC-TH	0.625	12.00	Flat	90.00	10.80
BC-BH	0.625	12.00	Flat	90.00	10.80
SA-1	2.375	39.55	Round	-30.00	7.46
M24	2.375	30.00	Round	30.00	7.46
M25	2.375	96.00	Round	30.00	7.46
M26	2.375	30.00	Round	30.00	7.46
M27	2.375	30.00	Round	30.00	7.46
M28	2.375	96.00	Round	30.00	7.46
M29	2.375	30.00	Round	30.00	7.46
MP-9	2.375	108.00	Round		7.46
MP-10	2.375	108.00	Round		7.46
MP-11	2.375	108.00	Round		7.46
MP-12	2.375	108.00	Round		7.46
M34	2.375	51.06	Round	-4.23	7.46
M35	2.375	51.06	Round	-4.23	7.46
M36	0.750	35.00	Round		2.36
M37	0.750	35.00	Round		2.36
M38	0.750	55.64	Round		2.36

M39	2.375	51.06	Round	64.23	7.46
M40	2.375	51.06	Round	64.23	7.46
M41	0.750	35.00	Round		2.36
M42	0.750	35.00	Round		2.36
M43	0.750	55.64	Round		2.36
M44	0.625	12.00	Flat	30.00	10.80
M45	0.625	12.00	Flat	30.00	10.80
M46	2.375	39.55	Round	90.00	7.46
M47	2.375	30.00	Round	-30.00	7.46
M48	2.375	96.00	Round	-30.00	7.46
M49	2.375	30.00	Round	-30.00	7.46
M50	2.375	30.00	Round	-30.00	7.46
M51	2.375	96.00	Round	-30.00	7.46
M52	2.375	30.00	Round	-30.00	7.46
MP-5	2.375	108.00	Round		7.46
MP-6	2.375	108.00	Round		7.46
MP-7	2.375	108.00	Round		7.46
MP-8	2.375	108.00	Round		7.46
M57	2.375	51.06	Round	-64.23	7.46
M58	2.375	51.06	Round	-64.23	7.46
M59	0.750	35.00	Round		2.36
M60	0.750	35.00	Round		2.36
M61	0.750	55.64	Round		2.36
M62	2.375	51.06	Round	4.23	7.46
M63	2.375	51.06	Round	4.23	7.46
M64	0.750	35.00	Round		2.36
M65	0.750	35.00	Round		2.36
M66	0.750	55.64	Round		2.36
M67	0.625	12.00	Flat	-30.00	10.80
M68	0.625	12.00	Flat	-30.00	10.80
M69	2.375	39.55	Round	30.00	7.46
Mast	4.500	84.00	Round		14.14
M71	4.500	84.00	Round		14.14
M72	4.500	84.00	Round		14.14

APPENDIX C

SOFTWARE ANALYSIS OUTPUT

(Global) Model Settings

Display Sections for Member Calcs	5
Max Internal Sections for Member Calcs	97
Include Shear Deformation?	Yes
Increase Nailing Capacity for Wind?	Yes
Include Warping?	Yes
Trans Load Btwn Intersecting Wood Wall?	Yes
Area Load Mesh (in^2)	144
Merge Tolerance (in)	.12
P-Delta Analysis Tolerance	0.50%
Include P-Delta for Walls?	Yes
Automatically Iterate Stiffness for Walls?	Yes
Max Iterations for Wall Stiffness	3
Gravity Acceleration (ft/sec^2)	32.2
Wall Mesh Size (in)	12
Eigensolution Convergence Tol. (1.E-)	4
Vertical Axis	Y
Global Member Orientation Plane	XZ
Static Solver	Sparse Accelerated
Dynamic Solver	Accelerated Solver

Hot Rolled Steel Code	AISC 15th(360-16): LRFD
Adjust Stiffness?	No
RISAConnection Code	None
Cold Formed Steel Code	None
Wood Code	None
Wood Temperature	< 100F
Concrete Code	None
Masonry Code	None
Aluminum Code	None - Building
Stainless Steel Code	AISC 14th(360-10): ASD
Adjust Stiffness?	Yes(Iterative)

Number of Shear Regions	4
Region Spacing Increment (in)	4
Biaxial Column Method	Exact Integration
Parme Beta Factor (PCA)	.65
Concrete Stress Block	Rectangular
Use Cracked Sections?	Yes
Use Cracked Sections Slab?	Yes
Bad Framing Warnings?	No
Unused Force Warnings?	Yes
Min 1 Bar Diam. Spacing?	No
Concrete Rebar Set	REBAR_SET_ASTMA615
Min % Steel for Column	1
Max % Steel for Column	8

(Global) Model Settings, Continued

Seismic Code	ASCE 7-05
Seismic Base Elevation (ft)	Not Entered
Add Base Weight?	Yes
Ct X	.02
Ct Z	.02
T X (sec)	Not Entered
T Z (sec)	Not Entered
R X	3
R Z	3
Ct Exp. X	.75
Ct Exp. Z	.75
SD1	1
SDS	1
S1	1
TL (sec)	5
Occupancy Cat	I or II
Drift Cat	Other
Om Z	1
Om X	1
Cd Z	1
Cd X	1
Rho Z	1
Rho X	1

Hot Rolled Steel Properties

	Label	E [ksi]	G [ksi]	Nu	Therm (\1E...	Density[k/ft...	Yield[ksi]	Ry	Fu[ksi]	Rt
1	A36 Gr.36	29000	11154	.3	.65	.49	36	1.5	58	1.2
2	A572 Gr.50	29000	11154	.3	.65	.49	50	1.1	65	1.1
3	A992	29000	11154	.3	.65	.49	50	1.1	65	1.1
4	A500 Gr.42	29000	11154	.3	.65	.49	42	1.4	58	1.3
5	A500 Gr.46	29000	11154	.3	.65	.49	46	1.4	58	1.3
6	A53-B-35	29000	11154	.3	.65	.49	35	1.5	60	1.2
7	A500-50	29000	11154	.3	.65	.49	50	1.5	62	1.2

Hot Rolled Steel Section Sets

	Label	Shape	Type	Design List	Material	Design R...	A [in2]	Iyy [in4]	Izz [in4]	J [in4]
1	Mast	PIPE_4.0	None	None	A53-B-35	Typical	2.96	6.82	6.82	13.6
2	Face Horizontal	PIPE_2.0X	None	None	A500-50	Typical	1.4	.827	.827	1.65
3	Mount Pipes	PIPE_2.0	None	None	A53-B-35	Typical	1.02	.627	.627	1.25
4	Support Diagonal	SR 3/4	None	None	A572 Gr.50	Typical	.442	.016	.016	.031
5	Support Vertical	SR 3/4	None	None	A572 Gr.50	Typical	.442	.016	.016	.031
6	Support Horizontal	PIPE_2.0X	None	None	A500-50	Typical	1.4	.827	.827	1.65
7	Stabilzier Arm	PIPE_2.0	None	None	A500-50	Typical	1.02	.627	.627	1.25
8	Pivot Plate	Pivot Plate	None	None	A572 Gr.50	Typical	3.008	.098	5.805	.36

Cold Formed Steel Section Sets

	Label	Shape	Type	Design List	Material	Design Rul...	A [in2]	Iyy [in4]	Izz [in4]	J [in4]
1	CF1A	1.5CU1.25X035	Beam	None	A570 Gr.33	Typical	.131	.022	.052	5.4e-5

Material Takeoff

	Material	Size	Pieces	Length[ft]	Weight[K]
1	Hot Rolled Steel				
2	A500-50	PIPE_2.0	3	9.9	0
3	A500-50	PIPE_2.0X	30	129.1	.6
4	A53-B-35	PIPE_2.0	12	108	.4
5	A53-B-35	PIPE_4.0	3	21	.2
6	A572 Gr.50	Pivot Plate	6	6	0
7	A572 Gr.50	SR 3/4	18	62.8	0
8	Total HR Steel		72	336.8	1.4

Joint Boundary Conditions

	Joint Label	X [k/in]	Y [k/in]	Z [k/in]	X Rot.[k-ft/rad]	Y Rot.[k-ft/rad]	Z Rot.[k-ft/rad]
1	SF1-1	Reaction	Reaction	Reaction		Reaction	
2	SF1-2	Reaction	Reaction	Reaction		Reaction	
3	N73	Reaction	Reaction	Reaction		Reaction	
4	N74	Reaction	Reaction	Reaction		Reaction	
5	N117	Reaction	Reaction	Reaction		Reaction	
6	N118	Reaction	Reaction	Reaction		Reaction	
7	N133	Reaction	Reaction	Reaction		Reaction	
8	N134	Reaction	Reaction	Reaction		Reaction	
9	N135	Reaction	Reaction	Reaction		Reaction	
10	N136	Reaction	Reaction	Reaction		Reaction	
11	N137	Reaction	Reaction	Reaction		Reaction	
12	N138	Reaction	Reaction	Reaction		Reaction	

Member Primary Data

	Label	I Joint	J Joint	K Joint	Rotate(d...	Section/Shape	Type	Design List	Material	Design Ru...
1	FFTH1	FF1	SF2-3			Face Horizontal	None	None	A500-50	Typical
2	FFTH2	SF2-3	SF3-3			Face Horizontal	None	None	A500-50	Typical
3	FFTH3	SF3-3	FF2			Face Horizontal	None	None	A500-50	Typical
4	FFBH1	FF3	SF2-4			Face Horizontal	None	None	A500-50	Typical
5	FFBH2	SF2-4	SF3-4			Face Horizontal	None	None	A500-50	Typical
6	FFBH3	SF3-4	FF4			Face Horizontal	None	None	A500-50	Typical
7	MP-1	MP-1A	MP-1B			Mount Pipes	None	None	A53-B-35	Typical
8	MP-2	MP-2A	MP-2B			Mount Pipes	None	None	A53-B-35	Typical
9	MP-3	MP-3A	MP-3B			Mount Pipes	None	None	A53-B-35	Typical
10	MP-4	MP-4A	MP-4B			Mount Pipes	None	None	A53-B-35	Typical
11	SF2-TH	SF2-1	SF2-3			Support Horizontal	None	None	A500-50	Typical
12	SF2-BH	SF2-2	SF2-4			Support Horizontal	None	None	A500-50	Typical
13	SF2-V1	SF2-V1A	SF2-V1B			Support Vertical	None	None	A572 Gr.50	Typical
14	SF2-V2	SF2-V2A	SF2-V2B			Support Vertical	None	None	A572 Gr.50	Typical
15	SF2-D1	SF2-V1A	SF2-V2B			Support Diagonal	None	None	A572 Gr.50	Typical
16	SF3-TH	SF3-1	SF3-3			Support Horizontal	None	None	A500-50	Typical
17	SF3-BH	SF3-2	SF3-4			Support Horizontal	None	None	A500-50	Typical

Member Primary Data (Continued)

	Label	I Joint	J Joint	K Joint	Rotate(d...	Section/Shape	Type	Design List	Material	Design Ru...
18	SF3-V1	SF3-V1A	SF3-V1B			Support Vertical	None	None	A572 Gr.50	Typical
19	SF3-V2	SF3-V2A	SF3-V2B			Support Vertical	None	None	A572 Gr.50	Typical
20	SF3-D1	SF3-V1A	SF3-V2B			Support Diagonal	None	None	A572 Gr.50	Typical
21	BC-TH	PP1	PP2		90	Pivot Plate	None	None	A572 Gr.50	Typical
22	BC-BH	PP3	PP4		90	Pivot Plate	None	None	A572 Gr.50	Typical
23	SA-1	N43	N44			Stabilzier Arm	None	None	A500-50	Typical
24	M24	N45	N59			Face Horizontal	None	None	A500-50	Typical
25	M25	N59	N67			Face Horizontal	None	None	A500-50	Typical
26	M26	N67	N46			Face Horizontal	None	None	A500-50	Typical
27	M27	N47	N60			Face Horizontal	None	None	A500-50	Typical
28	M28	N60	N68			Face Horizontal	None	None	A500-50	Typical
29	M29	N68	N48			Face Horizontal	None	None	A500-50	Typical
30	MP-9	N49	N53			Mount Pipes	None	None	A53-B-35	Typical
31	MP-10	N50	N54			Mount Pipes	None	None	A53-B-35	Typical
32	MP-11	N51	N55			Mount Pipes	None	None	A53-B-35	Typical
33	MP-12	N52	N56			Mount Pipes	None	None	A53-B-35	Typical
34	M34	N57	N59			Support Horizontal	None	None	A500-50	Typical
35	M35	N58	N60			Support Horizontal	None	None	A500-50	Typical
36	M36	N61	N63			Support Vertical	None	None	A572 Gr.50	Typical
37	M37	N62	N64			Support Vertical	None	None	A572 Gr.50	Typical
38	M38	N61	N64			Support Diagonal	None	None	A572 Gr.50	Typical
39	M39	N65	N67			Support Horizontal	None	None	A500-50	Typical
40	M40	N66	N68			Support Horizontal	None	None	A500-50	Typical
41	M41	N69	N71			Support Vertical	None	None	A572 Gr.50	Typical
42	M42	N70	N72			Support Vertical	None	None	A572 Gr.50	Typical
43	M43	N69	N72			Support Diagonal	None	None	A572 Gr.50	Typical
44	M44	N75	N76		90	Pivot Plate	None	None	A572 Gr.50	Typical
45	M45	N77	N78		90	Pivot Plate	None	None	A572 Gr.50	Typical
46	M46	N87	N88			Stabilzier Arm	None	None	A500-50	Typical
47	M47	N89	N103			Face Horizontal	None	None	A500-50	Typical
48	M48	N103	N111			Face Horizontal	None	None	A500-50	Typical
49	M49	N111	N90			Face Horizontal	None	None	A500-50	Typical
50	M50	N91	N104			Face Horizontal	None	None	A500-50	Typical
51	M51	N104	N112			Face Horizontal	None	None	A500-50	Typical
52	M52	N112	N92			Face Horizontal	None	None	A500-50	Typical
53	MP-5	N93	N97			Mount Pipes	None	None	A53-B-35	Typical
54	MP-6	N94	N98			Mount Pipes	None	None	A53-B-35	Typical
55	MP-7	N95	N99			Mount Pipes	None	None	A53-B-35	Typical
56	MP-8	N96	N100			Mount Pipes	None	None	A53-B-35	Typical
57	M57	N101	N103			Support Horizontal	None	None	A500-50	Typical
58	M58	N102	N104			Support Horizontal	None	None	A500-50	Typical
59	M59	N105	N107			Support Vertical	None	None	A572 Gr.50	Typical
60	M60	N106	N108			Support Vertical	None	None	A572 Gr.50	Typical
61	M61	N105	N108			Support Diagonal	None	None	A572 Gr.50	Typical
62	M62	N109	N111			Support Horizontal	None	None	A500-50	Typical
63	M63	N110	N112			Support Horizontal	None	None	A500-50	Typical
64	M64	N113	N115			Support Vertical	None	None	A572 Gr.50	Typical
65	M65	N114	N116			Support Vertical	None	None	A572 Gr.50	Typical
66	M66	N113	N116			Support Diagonal	None	None	A572 Gr.50	Typical
67	M67	N119	N120		90	Pivot Plate	None	None	A572 Gr.50	Typical
68	M68	N121	N122		90	Pivot Plate	None	None	A572 Gr.50	Typical
69	M69	N131	N132			Stabilzier Arm	None	None	A500-50	Typical

Member Primary Data (Continued)

	Label	I Joint	J Joint	K Joint	Rotate(d...	Section/Shape	Type	Design List	Material	Design Ru...
70	Mast	N133	N134			Mast	None	None	A53-B-35	Typical
71	M71	N135	N136			Mast	None	None	A53-B-35	Typical
72	M72	N137	N138			Mast	None	None	A53-B-35	Typical

Member Advanced Data

	Label	I Release	J Release	I Offset[in]	J Offset[in]	T/C Only	Physical	Defl Rat...	Analysis ...	Inactive	Seismic...
1	FFTH1						Yes	** NA **			None
2	FFTH2						Yes	** NA **			None
3	FFTH3						Yes	** NA **			None
4	FFBH1						Yes	** NA **			None
5	FFBH2						Yes	** NA **			None
6	FFBH3						Yes	** NA **			None
7	MP-1						Yes	** NA **			None
8	MP-2						Yes	** NA **			None
9	MP-3						Yes	** NA **			None
10	MP-4						Yes	** NA **			None
11	SF2-TH	BenPIN	BenPIN				Yes	** NA **			None
12	SF2-BH	BenPIN	BenPIN				Yes	** NA **			None
13	SF2-V1						Yes	** NA **			None
14	SF2-V2						Yes	** NA **			None
15	SF2-D1						Yes	** NA **			None
16	SF3-TH	BenPIN	BenPIN				Yes	** NA **			None
17	SF3-BH	BenPIN	BenPIN				Yes	** NA **			None
18	SF3-V1						Yes	** NA **			None
19	SF3-V2						Yes	** NA **			None
20	SF3-D1						Yes	** NA **			None
21	BC-TH						Yes	** NA **			None
22	BC-BH						Yes	** NA **			None
23	SA-1						Yes	** NA **			None
24	M24						Yes	** NA **			None
25	M25						Yes	** NA **			None
26	M26						Yes	** NA **			None
27	M27						Yes	** NA **			None
28	M28						Yes	** NA **			None
29	M29						Yes	** NA **			None
30	MP-9						Yes	** NA **			None
31	MP-10						Yes	** NA **			None
32	MP-11						Yes	** NA **			None
33	MP-12						Yes	** NA **			None
34	M34	BenPIN	BenPIN				Yes	** NA **			None
35	M35	BenPIN	BenPIN				Yes	** NA **			None
36	M36						Yes	** NA **			None
37	M37						Yes	** NA **			None
38	M38						Yes	** NA **			None
39	M39	BenPIN	BenPIN				Yes	** NA **			None
40	M40	BenPIN	BenPIN				Yes	** NA **			None
41	M41						Yes	** NA **			None
42	M42						Yes	** NA **			None
43	M43						Yes	** NA **			None
44	M44						Yes	** NA **			None

Member Advanced Data (Continued)

	Label	I Release	J Release	I Offset[in]	J Offset[in]	T/C Only	Physical	Defl Rat...	Analysis ...	Inactive	Seismic...
45	M45						Yes	** NA **			None
46	M46						Yes	** NA **			None
47	M47						Yes	** NA **			None
48	M48						Yes	** NA **			None
49	M49						Yes	** NA **			None
50	M50						Yes	** NA **			None
51	M51						Yes	** NA **			None
52	M52						Yes	** NA **			None
53	MP-5						Yes	** NA **			None
54	MP-6						Yes	** NA **			None
55	MP-7						Yes	** NA **			None
56	MP-8						Yes	** NA **			None
57	M57	BenPIN	BenPIN				Yes	** NA **			None
58	M58	BenPIN	BenPIN				Yes	** NA **			None
59	M59						Yes	** NA **			None
60	M60						Yes	** NA **			None
61	M61						Yes	** NA **			None
62	M62	BenPIN	BenPIN				Yes	** NA **			None
63	M63	BenPIN	BenPIN				Yes	** NA **			None
64	M64						Yes	** NA **			None
65	M65						Yes	** NA **			None
66	M66						Yes	** NA **			None
67	M67						Yes	** NA **			None
68	M68						Yes	** NA **			None
69	M69						Yes	** NA **			None
70	Mast						Yes	** NA **			None
71	M71						Yes	** NA **			None
72	M72						Yes	** NA **			None

Hot Rolled Steel Design Parameters

	Label	Shape	Length[ft]	Lbyy[ft]	Lbzz[ft]	Lcomp top[...	Lcomp bot[...	L-torq...	Kyy	Kzz	Cb	Functi...
1	FFTH1	Face Horizontal	2.5						2.1	2.1		Lateral
2	FFTH2	Face Horizontal	8						1	1		Lateral
3	FFTH3	Face Horizontal	2.5						2.1	2.1		Lateral
4	FFBH1	Face Horizontal	2.5						2.1	2.1		Lateral
5	FFBH2	Face Horizontal	8						1	1		Lateral
6	FFBH3	Face Horizontal	2.5						2.1	2.1		Lateral
7	MP-1	Mount Pipes	9	Segment	Segment				2.1	2.1		Lateral
8	MP-2	Mount Pipes	9	Segment	Segment				2.1	2.1		Lateral
9	MP-3	Mount Pipes	9	Segment	Segment				2.1	2.1		Lateral
10	MP-4	Mount Pipes	9	Segment	Segment				2.1	2.1		Lateral
11	SF2-TH	Support Horizontal	4.255		3.604				1	1		Lateral
12	SF2-BH	Support Horizontal	4.255		3.604				1	1		Lateral
13	SF2-V1	Support Vertical	2.917						.65	.65		Lateral
14	SF2-V2	Support Vertical	2.917						.65	.65		Lateral
15	SF2-D1	Support Diagonal	4.636						.65	.65		Lateral
16	SF3-TH	Support Horizontal	4.255		3.604				1	1		Lateral
17	SF3-BH	Support Horizontal	4.255		3.604				1	1		Lateral
18	SF3-V1	Support Vertical	2.917						.65	.65		Lateral
19	SF3-V2	Support Vertical	2.917						.65	.65		Lateral

Hot Rolled Steel Design Parameters (Continued)

	Label	Shape	Length[ft]	Lbyy[ft]	Lbzz[ft]	Lcomp top[...	Lcomp bot[...	L-torq...	Kyy	Kzz	Cb	Functi...
20	SF3-D1	Support Diagonal	4.636						.65	.65		Lateral
21	BC-TH	Pivot Plate	1						1	1		Lateral
22	BC-BH	Pivot Plate	1						1	1		Lateral
23	SA-1	Stabilzier Arm	3.296						1	1		Lateral
24	M24	Face Horizontal	2.5						2.1	2.1		Lateral
25	M25	Face Horizontal	8						1	1		Lateral
26	M26	Face Horizontal	2.5						2.1	2.1		Lateral
27	M27	Face Horizontal	2.5						2.1	2.1		Lateral
28	M28	Face Horizontal	8						1	1		Lateral
29	M29	Face Horizontal	2.5						2.1	2.1		Lateral
30	MP-9	Mount Pipes	9	Segment	Segment				2.1	2.1		Lateral
31	MP-10	Mount Pipes	9	Segment	Segment				2.1	2.1		Lateral
32	MP-11	Mount Pipes	9	Segment	Segment				2.1	2.1		Lateral
33	MP-12	Mount Pipes	9	Segment	Segment				2.1	2.1		Lateral
34	M34	Support Horizontal	4.255		3.604				1	1		Lateral
35	M35	Support Horizontal	4.255		3.604				1	1		Lateral
36	M36	Support Vertical	2.917						.65	.65		Lateral
37	M37	Support Vertical	2.917						.65	.65		Lateral
38	M38	Support Diagonal	4.636						.65	.65		Lateral
39	M39	Support Horizontal	4.255		3.604				1	1		Lateral
40	M40	Support Horizontal	4.255		3.604				1	1		Lateral
41	M41	Support Vertical	2.917						.65	.65		Lateral
42	M42	Support Vertical	2.917						.65	.65		Lateral
43	M43	Support Diagonal	4.636						.65	.65		Lateral
44	M44	Pivot Plate	1						1	1		Lateral
45	M45	Pivot Plate	1						1	1		Lateral
46	M46	Stabilzier Arm	3.296						1	1		Lateral
47	M47	Face Horizontal	2.5						2.1	2.1		Lateral
48	M48	Face Horizontal	8						1	1		Lateral
49	M49	Face Horizontal	2.5						2.1	2.1		Lateral
50	M50	Face Horizontal	2.5						2.1	2.1		Lateral
51	M51	Face Horizontal	8						1	1		Lateral
52	M52	Face Horizontal	2.5						2.1	2.1		Lateral
53	MP-5	Mount Pipes	9	Segment	Segment				2.1	2.1		Lateral
54	MP-6	Mount Pipes	9	Segment	Segment				2.1	2.1		Lateral
55	MP-7	Mount Pipes	9	Segment	Segment				2.1	2.1		Lateral
56	MP-8	Mount Pipes	9	Segment	Segment				2.1	2.1		Lateral
57	M57	Support Horizontal	4.255		3.604				1	1		Lateral
58	M58	Support Horizontal	4.255		3.604				1	1		Lateral
59	M59	Support Vertical	2.917						.65	.65		Lateral
60	M60	Support Vertical	2.917						.65	.65		Lateral
61	M61	Support Diagonal	4.636						.65	.65		Lateral
62	M62	Support Horizontal	4.255		3.604				1	1		Lateral
63	M63	Support Horizontal	4.255		3.604				1	1		Lateral
64	M64	Support Vertical	2.917						.65	.65		Lateral
65	M65	Support Vertical	2.917						.65	.65		Lateral
66	M66	Support Diagonal	4.636						.65	.65		Lateral
67	M67	Pivot Plate	1						1	1		Lateral
68	M68	Pivot Plate	1						1	1		Lateral
69	M69	Stabilzier Arm	3.296						1	1		Lateral
70	Mast	Mast	7						2.1	2.1		Lateral
71	M71	Mast	7						2.1	2.1		Lateral

Hot Rolled Steel Design Parameters (Continued)

	Label	Shape	Length[ft]	Lbyy[ft]	Lbzz[ft]	Lcomp top[...	Lcomp bot[...	L-torq...	Kyy	Kzz	Cb	Functi...
72	M72	Mast	7						2.1	2.1		Lateral

Cold Formed Steel Design Parameters

Label	Shape	Length...	Lbyy[ft]	Lbzz[ft]	Lcomp to...	Lcomp bo...	Kyy	Kzz	Cm-yy	Cm-zz	Cb	R	y	sway	z	sway
No Data to Print ...																

Basic Load Cases

	BLC Description	Category	X Gravity	Y Gravity	Z Gravity	Joint	Point	Distributed	Area(Me...	Surface(P...
1	Dead	None		-1			26			
2	0 Wind - No Ice	None					26	72		
3	30 Wind - No Ice	None					52	144		
4	45 Wind - No Ice	None					52	144		
5	60 Wind - No Ice	None					52	144		
6	90 Wind - No Ice	None					26	72		
7	120 Wind - No Ice	None					52	144		
8	135 Wind - No Ice	None					52	144		
9	150 Wind - No Ice	None					52	144		
10	180 Wind - No Ice	None					26	72		
11	210 Wind - No Ice	None					52	144		
12	225 Wind - No Ice	None					52	144		
13	240 Wind - No Ice	None					52	144		
14	270 Wind - No Ice	None					26	72		
15	300 Wind - No Ice	None					52	144		
16	315 Wind - No Ice	None					52	144		
17	330 Wind - No Ice	None					52	144		
18	Ice Weight	None					26	72		
19	0 Wind - Ice	None					26	72		
20	30 Wind - Ice	None					52	144		
21	45 Wind - Ice	None					52	144		
22	60 Wind - Ice	None					52	144		
23	90 Wind - Ice	None					26	72		
24	120 Wind - Ice	None					52	144		
25	135 Wind - Ice	None					52	144		
26	150 Wind - Ice	None					52	144		
27	180 Wind - Ice	None					26	72		
28	210 Wind - Ice	None					52	144		
29	225 Wind - Ice	None					52	144		
30	240 Wind - Ice	None					52	144		
31	270 Wind - Ice	None					26	72		
32	300 Wind - Ice	None					52	144		
33	315 Wind - Ice	None					52	144		
34	330 Wind - Ice	None					52	144		
35	Lm	None				1				
36	Lw	None				1				
37	Seismic Load X	ELX	-1				26			
38	Seismic Load Z	ELZ			-1		26			

Load Combinations

	Description	So..	P...	S...	BLCFac..	BLCFac..	BLCFac..	BLCFac..	BLCFac..	BLCFac..	BLCFac..	BLCFac..	BLCFac..	BLCFac..	BLCFac..	BLCFac..	BLCFac..	BLCFac..
1	1.4D	Yes	Y		1	1.4												
2	0.9D+1.0 0-Wind	Yes	Y		1	.9	2	1										
3	0.9D+1.0 30-Wind	Yes	Y		1	.9	3	1										
4	0.9D+1.0 45-Wind	Yes	Y		1	.9	4	1										
5	0.9D+1.0 60-Wind	Yes	Y		1	.9	5	1										
6	0.9D+1.0 90-Wind	Yes	Y		1	.9	6	1										
7	0.9D+1.0 120-Wind	Yes	Y		1	.9	7	1										
8	0.9D+1.0 135-Wind	Yes	Y		1	.9	8	1										
9	0.9D+1.0 150-Wind	Yes	Y		1	.9	9	1										
10	0.9D+1.0 180-Wind	Yes	Y		1	.9	10	1										
11	0.9D+1.0 210-Wind	Yes	Y		1	.9	11	1										
12	0.9D+1.0 225-Wind	Yes	Y		1	.9	12	1										
13	0.9D+1.0 240-Wind	Yes	Y		1	.9	13	1										
14	0.9D+1.0 270-Wind	Yes	Y		1	.9	14	1										
15	0.9D+1.0 300-Wind	Yes	Y		1	.9	15	1										
16	0.9D+1.0 315-Wind	Yes	Y		1	.9	16	1										
17	0.9D+1.0 330-Wind	Yes	Y		1	.9	17	1										
18	1.2D+1.0 0-Wind	Yes	Y		1	1.2	2	1										
19	1.2D+1.0 30-Wind	Yes	Y		1	1.2	3	1										
20	1.2D+1.0 45-Wind	Yes	Y		1	1.2	4	1										
21	1.2D+1.0 60-Wind	Yes	Y		1	1.2	5	1										
22	1.2D+1.0 90-Wind	Yes	Y		1	1.2	6	1										
23	1.2D+1.0 120-Wind	Yes	Y		1	1.2	7	1										
24	1.2D+1.0 135-Wind	Yes	Y		1	1.2	8	1										
25	1.2D+1.0 150-Wind	Yes	Y		1	1.2	9	1										
26	1.2D+1.0 180-Wind	Yes	Y		1	1.2	10	1										
27	1.2D+1.0 210-Wind	Yes	Y		1	1.2	11	1										
28	1.2D+1.0 225-Wind	Yes	Y		1	1.2	12	1										
29	1.2D+1.0 240-Wind	Yes	Y		1	1.2	13	1										
30	1.2D+1.0 270-Wind	Yes	Y		1	1.2	14	1										
31	1.2D+1.0 300-Wind	Yes	Y		1	1.2	15	1										
32	1.2D+1.0 315-Wind	Yes	Y		1	1.2	16	1										
33	1.2D+1.0 330-Wind	Yes	Y		1	1.2	17	1										
34	1.2D+1.0Di+1.0 0-Wi...	Yes	Y		1	1.2	18	1	19	1								
35	1.2D+1.0Di+1.0 30-...	Yes	Y		1	1.2	18	1	20	1								
36	1.2D+1.0Di+1.0 45-...	Yes	Y		1	1.2	18	1	21	1								
37	1.2D+1.0Di+1.0 60-...	Yes	Y		1	1.2	18	1	22	1								
38	1.2D+1.0Di+1.0 90-...	Yes	Y		1	1.2	18	1	23	1								
39	1.2D+1.0Di+1.0 120-...	Yes	Y		1	1.2	18	1	24	1								
40	1.2D+1.0Di+1.0 135-...	Yes	Y		1	1.2	18	1	25	1								
41	1.2D+1.0Di+1.0 150-...	Yes	Y		1	1.2	18	1	26	1								
42	1.2D+1.0Di+1.0 180-...	Yes	Y		1	1.2	18	1	27	1								
43	1.2D+1.0Di+1.0 210-...	Yes	Y		1	1.2	18	1	28	1								
44	1.2D+1.0Di+1.0 225-...	Yes	Y		1	1.2	18	1	29	1								
45	1.2D+1.0Di+1.0 240-...	Yes	Y		1	1.2	18	1	30	1								
46	1.2D+1.0Di+1.0 270-...	Yes	Y		1	1.2	18	1	31	1								
47	1.2D+1.0Di+1.0 300-...	Yes	Y		1	1.2	18	1	32	1								
48	1.2D+1.0Di+1.0 315-...	Yes	Y		1	1.2	18	1	33	1								
49	1.2D+1.0Di+1.0 330-...	Yes	Y		1	1.2	18	1	34	1								
50	1.2D+1.5Lv	Yes	Y		36	1.5	1	1.2										
51	1.2D+1.5Lm+1.0 0-...	Yes	Y		1	1.2	2	.064	35	1.5								

Load Combinations (Continued)

	Description	So..	P...	S...	BLCFac..	BLCFac..	BLCFac..	BLCFac..	BLCFac..	BLCFac..	BLCFac..	BLCFac..	BLCFac..	BLCFac..	BLCFac..	BLCFac..	BLCFac..	BLCFac..
52	1.2D+1.5Lm+1.0 30-...	Yes	Y		1	1.2	3	.064	35	1.5								
53	1.2D+1.5Lm+1.0 45-...	Yes	Y		1	1.2	4	.064	35	1.5								
54	1.2D+1.5Lm+1.0 60-...	Yes	Y		1	1.2	5	.064	35	1.5								
55	1.2D+1.5Lm+1.0 90-...	Yes	Y		1	1.2	6	.064	35	1.5								
56	1.2D+1.5Lm+1.0 120...	Yes	Y		1	1.2	7	.064	35	1.5								
57	1.2D+1.5Lm+1.0 135...	Yes	Y		1	1.2	8	.064	35	1.5								
58	1.2D+1.5Lm+1.0 150...	Yes	Y		1	1.2	9	.064	35	1.5								
59	1.2D+1.5Lm+1.0 180...	Yes	Y		1	1.2	10	.064	35	1.5								
60	1.2D+1.5Lm+1.0 210...	Yes	Y		1	1.2	11	.064	35	1.5								
61	1.2D+1.5Lm+1.0 225...	Yes	Y		1	1.2	12	.064	35	1.5								
62	1.2D+1.5Lm+1.0 240...	Yes	Y		1	1.2	13	.064	35	1.5								
63	1.2D+1.5Lm+1.0 270...	Yes	Y		1	1.2	14	.064	35	1.5								
64	1.2D+1.5Lm+1.0 300...	Yes	Y		1	1.2	15	.064	35	1.5								
65	1.2D+1.5Lm+1.0 315...	Yes	Y		1	1.2	16	.064	35	1.5								
66	1.2D+1.5Lm+1.0 330...	Yes	Y		1	1.2	17	.064	35	1.5								
67	(1.2+0.2Sds)D+1.0 0...	Yes	Y		1	1.2...	ELX	.108	0									
68	(1.2+0.2Sds)D+1.0 3...	Yes	Y		1	1.2...	ELX	.094	ELZ	.054								
69	(1.2+0.2Sds)D+1.0 4...	Yes	Y		1	1.2...	ELX	.077	ELZ	.077								
70	(1.2+0.2Sds)D+1.0 6...	Yes	Y		1	1.2...	ELX	.054	ELZ	.094								
71	(1.2+0.2Sds)D+1.0 9...	Yes	Y		1	1.2...	0		ELZ	.108								
72	(1.2+0.2Sds)D+1.0 1...	Yes	Y		1	1.2...	ELX	-.054	ELZ	.094								
73	(1.2+0.2Sds)D+1.0 1...	Yes	Y		1	1.2...	ELX	-.077	ELZ	.077								
74	(1.2+0.2Sds)D+1.0 1...	Yes	Y		1	1.2...	ELX	-.094	ELZ	.054								
75	(1.2+0.2Sds)D+1.0 1...	Yes	Y		1	1.2...	ELX	-.108	0									
76	(1.2+0.2Sds)D+1.0 2...	Yes	Y		1	1.2...	ELX	-.094	ELZ	-.054								
77	(1.2+0.2Sds)D+1.0 2...	Yes	Y		1	1.2...	ELX	-.077	ELZ	-.077								
78	(1.2+0.2Sds)D+1.0 2...	Yes	Y		1	1.2...	ELX	-.054	ELZ	-.094								
79	(1.2+0.2Sds)D+1.0 2...	Yes	Y		1	1.2...	0		ELZ	-.108								
80	(1.2+0.2Sds)D+1.0 3...	Yes	Y		1	1.2...	ELX	.054	ELZ	-.094								
81	(1.2+0.2Sds)D+1.0 3...	Yes	Y		1	1.2...	ELX	.077	ELZ	-.077								
82	(1.2+0.2Sds)D+1.0 3...	Yes	Y		1	1.2...	ELX	.094	ELZ	-.054								
83	(0.9-0.2Sds)*DL+1.0...	Yes	Y		1	.857	ELX	.108	0									
84	(0.9-0.2Sds)*DL+1.0...	Yes	Y		1	.857	ELX	.094	ELZ	.054								
85	(0.9-0.2Sds)*DL+1.0...	Yes	Y		1	.857	ELX	.077	ELZ	.077								
86	(0.9-0.2Sds)*DL+1.0...	Yes	Y		1	.857	ELX	.054	ELZ	.094								
87	(0.9-0.2Sds)*DL+1.0...	Yes	Y		1	.857	0		ELZ	.108								
88	(0.9-0.2Sds)*DL+1.0...	Yes	Y		1	.857	ELX	-.054	ELZ	.094								
89	(0.9-0.2Sds)*DL+1.0...	Yes	Y		1	.857	ELX	-.077	ELZ	.077								
90	(0.9-0.2Sds)*DL+1.0...	Yes	Y		1	.857	ELX	-.094	ELZ	.054								
91	(0.9-0.2Sds)*DL+1.0...	Yes	Y		1	.857	ELX	-.108	0									
92	(0.9-0.2Sds)*DL+1.0...	Yes	Y		1	.857	ELX	-.094	ELZ	-.054								
93	(0.9-0.2Sds)*DL+1.0...	Yes	Y		1	.857	ELX	-.077	ELZ	-.077								
94	(0.9-0.2Sds)*DL+1.0...	Yes	Y		1	.857	ELX	-.054	ELZ	-.094								
95	(0.9-0.2Sds)*DL+1.0...	Yes	Y		1	.857	0		ELZ	-.108								
96	(0.9-0.2Sds)*DL+1.0...	Yes	Y		1	.857	ELX	.054	ELZ	-.094								
97	(0.9-0.2Sds)*DL+1.0...	Yes	Y		1	.857	ELX	.077	ELZ	-.077								
98	(0.9-0.2Sds)*DL+1.0...	Yes	Y		1	.857	ELX	.094	ELZ	-.054								

Joint Coordinates and Temperatures

	Label	X [ft]	Y [ft]	Z [ft]	Temp [F]	Detach From Diap...
1	FF1	2.393504	1.458333	-6.5	0	
2	FF2	2.393504	1.458333	6.5	0	
3	FF3	2.393504	-1.458333	-6.5	0	
4	FF4	2.393504	-1.458333	6.5	0	
5	MP-1A	2.393504	4.5	-6	0	
6	MP-2A	2.393504	4.5	-2	0	
7	MP-3A	2.393504	4.5	2	0	
8	MP-4A	2.393504	4.5	6	0	
9	MP-1B	2.393504	-4.5	-6	0	
10	MP-2B	2.393504	-4.5	-2	0	
11	MP-3B	2.393504	-4.5	2	0	
12	MP-4B	2.393504	-4.5	6	0	
13	SF2-1	0	1.458333	-0.481771	0	
14	SF2-2	0	-1.458333	-0.481771	0	
15	SF2-3	2.393504	1.458333	-4	0	
16	SF2-4	2.393504	-1.458333	-4	0	
17	SF2-V1A	0.202144	1.458333	-0.778904	0	
18	SF2-V2A	2.229445	1.458333	-3.758848	0	
19	SF2-V1B	0.202144	-1.458333	-0.778904	0	
20	SF2-V2B	2.229445	-1.458333	-3.758848	0	
21	SF3-1	0	1.458333	0.481771	0	
22	SF3-2	0	-1.458333	0.481771	0	
23	SF3-3	2.393504	1.458333	4	0	
24	SF3-4	2.393504	-1.458333	4	0	
25	SF3-V1A	0.202144	1.458333	0.778904	0	
26	SF3-V2A	2.229445	1.458333	3.758848	0	
27	SF3-V1B	0.202144	-1.458333	0.778904	0	
28	SF3-V2B	2.229445	-1.458333	3.758848	0	
29	SF1-1	0	1.458333	0	0	
30	SF1-2	0	-1.458333	0	0	
31	PP1	0	1.458333	.5	0	
32	PP2	0	1.458333	-.5	0	
33	PP3	0	-1.458333	.5	0	
34	PP4	0	-1.458333	-.5	0	
35	X1	2.393504	1.458333	-6	0	
36	X2	2.393504	1.458333	-2	0	
37	X3	2.393504	1.458333	2	0	
38	X4	2.393504	1.458333	6	0	
39	X5	2.393504	-1.458333	-6	0	
40	X6	2.393504	-1.458333	-2	0	
41	X7	2.393504	-1.458333	2	0	
42	X8	2.393504	-1.458333	6	0	
43	N43	1.196752	1.458333	-2.240885	0	
44	N44	-1.657712	1.458333	-3.888911	0	
45	N45	-9.825917	1.458333	-0.554886	0	
46	N46	1.432413	1.458333	-7.054886	0	
47	N47	-9.825917	-1.458333	-0.554886	0	
48	N48	1.432413	-1.458333	-7.054886	0	
49	N49	-9.392904	4.5	-0.804886	0	
50	N50	-5.928803	4.5	-2.804886	0	
51	N51	-2.464701	4.5	-4.804886	0	

Joint Coordinates and Temperatures (Continued)

	Label	X [ft]	Y [ft]	Z [ft]	Temp [F]	Detach From Diap...
52	N52	0.9994	4.5	-6.804886	0	
53	N53	-9.392904	-4.5	-0.804886	0	
54	N54	-5.928803	-4.5	-2.804886	0	
55	N55	-2.464701	-4.5	-4.804886	0	
56	N56	0.9994	-4.5	-6.804886	0	
57	N57	-3.417226	1.458333	-1.491165	0	
58	N58	-3.417226	-1.458333	-1.491165	0	
59	N59	-7.660854	1.458333	-1.804886	0	
60	N60	-7.660854	-1.458333	-1.804886	0	
61	N61	-3.775623	1.458333	-1.517661	0	
62	N62	-7.369981	1.458333	-1.783383	0	
63	N63	-3.775623	-1.458333	-1.517661	0	
64	N64	-7.369981	-1.458333	-1.783383	0	
65	N65	-2.582774	1.458333	-1.972936	0	
66	N66	-2.582774	-1.458333	-1.972936	0	
67	N67	-0.73265	1.458333	-5.804886	0	
68	N68	-0.73265	-1.458333	-5.804886	0	
69	N69	-2.426521	1.458333	-2.296565	0	
70	N70	-0.859464	1.458333	-5.542231	0	
71	N71	-2.426521	-1.458333	-2.296565	0	
72	N72	-0.859464	-1.458333	-5.542231	0	
73	N73	-3	1.458333	-1.732051	0	
74	N74	-3	-1.458333	-1.732051	0	
75	N75	-2.566987	1.458333	-1.982051	0	
76	N76	-3.433013	1.458333	-1.482051	0	
77	N77	-2.566987	-1.458333	-1.982051	0	
78	N78	-3.433013	-1.458333	-1.482051	0	
79	N79	-9.392904	1.458333	-0.804886	0	
80	N80	-5.928803	1.458333	-2.804886	0	
81	N81	-2.464701	1.458333	-4.804886	0	
82	N82	0.9994	1.458333	-6.804886	0	
83	N83	-9.392904	-1.458333	-0.804886	0	
84	N84	-5.928803	-1.458333	-2.804886	0	
85	N85	-2.464701	-1.458333	-4.804886	0	
86	N86	0.9994	-1.458333	-6.804886	0	
87	N87	-5.53904	1.458333	-1.648026	0	
88	N88	-5.53904	1.458333	1.648026	0	
89	N89	1.432413	1.458333	7.054886	0	
90	N90	-9.825917	1.458333	0.554886	0	
91	N91	1.432413	-1.458333	7.054886	0	
92	N92	-9.825917	-1.458333	0.554886	0	
93	N93	0.9994	4.5	6.804886	0	
94	N94	-2.464701	4.5	4.804886	0	
95	N95	-5.928803	4.5	2.804886	0	
96	N96	-9.392904	4.5	0.804886	0	
97	N97	0.9994	-4.5	6.804886	0	
98	N98	-2.464701	-4.5	4.804886	0	
99	N99	-5.928803	-4.5	2.804886	0	
100	N100	-9.392904	-4.5	0.804886	0	
101	N101	-2.582774	1.458333	1.972936	0	
102	N102	-2.582774	-1.458333	1.972936	0	
103	N103	-0.73265	1.458333	5.804886	0	

Joint Coordinates and Temperatures (Continued)

	Label	X [ft]	Y [ft]	Z [ft]	Temp [F]	Detach From Diap...
104	N104	-0.73265	-1.458333	5.804886	0	
105	N105	-2.426521	1.458333	2.296565	0	
106	N106	-0.859464	1.458333	5.542231	0	
107	N107	-2.426521	-1.458333	2.296565	0	
108	N108	-0.859464	-1.458333	5.542231	0	
109	N109	-3.417226	1.458333	1.491165	0	
110	N110	-3.417226	-1.458333	1.491165	0	
111	N111	-7.660854	1.458333	1.804886	0	
112	N112	-7.660854	-1.458333	1.804886	0	
113	N113	-3.775623	1.458333	1.517661	0	
114	N114	-7.369981	1.458333	1.783383	0	
115	N115	-3.775623	-1.458333	1.517661	0	
116	N116	-7.369981	-1.458333	1.783383	0	
117	N117	-3	1.458333	1.732051	0	
118	N118	-3	-1.458333	1.732051	0	
119	N119	-3.433013	1.458333	1.482051	0	
120	N120	-2.566987	1.458333	1.982051	0	
121	N121	-3.433013	-1.458333	1.482051	0	
122	N122	-2.566987	-1.458333	1.982051	0	
123	N123	0.9994	1.458333	6.804886	0	
124	N124	-2.464701	1.458333	4.804886	0	
125	N125	-5.928803	1.458333	2.804886	0	
126	N126	-9.392904	1.458333	0.804886	0	
127	N127	0.9994	-1.458333	6.804886	0	
128	N128	-2.464701	-1.458333	4.804886	0	
129	N129	-5.928803	-1.458333	2.804886	0	
130	N130	-9.392904	-1.458333	0.804886	0	
131	N131	-1.657712	1.458333	3.888911	0	
132	N132	1.196752	1.458333	2.240885	0	
133	N133	0	3.458333	0	0	
134	N134	0	-3.541667	0	0	
135	N135	-3	3.458333	-1.732051	0	
136	N136	-3	-3.541667	-1.732051	0	
137	N137	-3	3.458333	1.732051	0	
138	N138	-3	-3.541667	1.732051	0	

Joint Loads and Enforced Displacements (BLC 35 : Lm)

	Joint Label	L,D,M	Direction	Magnitude[(k,k-ft), (in,rad), (k*s^2/ft...
1	X8	L	Y	-.5

Joint Loads and Enforced Displacements (BLC 36 : Lv)

	Joint Label	L,D,M	Direction	Magnitude[(k,k-ft), (in,rad), (k*s^2/ft...
1	FF4	L	Y	-.25

Member Point Loads (BLC 1 : Dead)

	Member Label	Direction	Magnitude[k,k-ft]	Location[ft,%]
1	MP-1	Y	-.025	.5
2	MP-1	Y	-.071	2

Member Point Loads (BLC 1 : Dead) (Continued)

	Member Label	Direction	Magnitude[k,k-ft]	Location[ft,%]
3	MP-2	Y	-.04	.5
4	MP-2	Y	-.043	2
5	MP-4	Y	-.025	.5
6	MP-5	Y	-.025	.5
7	MP-5	Y	-.071	2
8	MP-6	Y	-.04	.5
9	MP-6	Y	-.043	2
10	MP-8	Y	-.025	.5
11	MP-9	Y	-.025	.5
12	MP-9	Y	-.071	2
13	MP-10	Y	-.04	.5
14	MP-10	Y	-.043	2
15	MP-12	Y	-.025	.5
16	SF2-TH	Y	-.026	1
17	M39	Y	-.026	1
18	MP-1	Y	-.025	6
19	MP-2	Y	-.04	6
20	MP-4	Y	-.025	6
21	MP-5	Y	-.025	6
22	MP-6	Y	-.04	6
23	MP-8	Y	-.025	6
24	MP-9	Y	-.025	6
25	MP-10	Y	-.04	6
26	MP-12	Y	-.025	6

Member Point Loads (BLC 2 : 0 Wind - No Ice)

	Member Label	Direction	Magnitude[k,k-ft]	Location[ft,%]
1	MP-1	X	-.143	.5
2	MP-1	X	-.061	2
3	MP-2	X	-.197	.5
4	MP-2	X	-.051	2
5	MP-4	X	-.143	.5
6	MP-5	X	-.09	.5
7	MP-5	X	-.048	2
8	MP-6	X	-.114	.5
9	MP-6	X	-.028	2
10	MP-8	X	-.09	.5
11	MP-9	X	-.09	.5
12	MP-9	X	-.048	2
13	MP-10	X	-.114	.5
14	MP-10	X	-.028	2
15	MP-12	X	-.09	.5
16	SF2-TH	X	-.035	1
17	M39	X	-.055	1
18	MP-1	X	-.143	6
19	MP-2	X	-.197	6
20	MP-4	X	-.143	6
21	MP-5	X	-.09	6
22	MP-6	X	-.114	6
23	MP-8	X	-.09	6
24	MP-9	X	-.09	6

Member Point Loads (BLC 2 : 0 Wind - No Ice) (Continued)

	Member Label	Direction	Magnitude[k,k-ft]	Location[ft,%]
25	MP-10	X	-.114	6
26	MP-12	X	-.09	6

Member Point Loads (BLC 3 : 30 Wind - No Ice)

	Member Label	Direction	Magnitude[k,k-ft]	Location[ft,%]
1	MP-1	X	-.108	.5
2	MP-1	X	-.049	2
3	MP-2	X	-.147	.5
4	MP-2	X	-.037	2
5	MP-4	X	-.108	.5
6	MP-5	X	-.062	.5
7	MP-5	X	-.038	2
8	MP-6	X	-.075	.5
9	MP-6	X	-.017	2
10	MP-8	X	-.062	.5
11	MP-9	X	-.108	.5
12	MP-9	X	-.049	2
13	MP-10	X	-.147	.5
14	MP-10	X	-.037	2
15	MP-12	X	-.108	.5
16	SF2-TH	X	-.036	1
17	M39	X	-.053	1
18	MP-1	X	-.108	6
19	MP-2	X	-.147	6
20	MP-4	X	-.108	6
21	MP-5	X	-.062	6
22	MP-6	X	-.075	6
23	MP-8	X	-.062	6
24	MP-9	X	-.108	6
25	MP-10	X	-.147	6
26	MP-12	X	-.108	6
27	MP-1	Z	-.063	.5
28	MP-1	Z	-.028	2
29	MP-2	Z	-.085	.5
30	MP-2	Z	-.022	2
31	MP-4	Z	-.063	.5
32	MP-5	Z	-.036	.5
33	MP-5	Z	-.022	2
34	MP-6	Z	-.043	.5
35	MP-6	Z	-.01	2
36	MP-8	Z	-.036	.5
37	MP-9	Z	-.063	.5
38	MP-9	Z	-.028	2
39	MP-10	Z	-.085	.5
40	MP-10	Z	-.022	2
41	MP-12	Z	-.063	.5
42	SF2-TH	Z	-.021	1
43	M39	Z	-.031	1
44	MP-1	Z	-.063	6
45	MP-2	Z	-.085	6
46	MP-4	Z	-.063	6

Member Point Loads (BLC 3 : 30 Wind - No Ice) (Continued)

	Member Label	Direction	Magnitude[k,k-ft]	Location[ft,%]
47	MP-5	Z	-.036	6
48	MP-6	Z	-.043	6
49	MP-8	Z	-.036	6
50	MP-9	Z	-.063	6
51	MP-10	Z	-.085	6
52	MP-12	Z	-.063	6

Member Point Loads (BLC 4 : 45 Wind - No Ice)

	Member Label	Direction	Magnitude[k,k-ft]	Location[ft,%]
1	MP-1	X	-.076	.5
2	MP-1	X	-.037	2
3	MP-2	X	-.1	.5
4	MP-2	X	-.025	2
5	MP-4	X	-.076	.5
6	MP-5	X	-.054	.5
7	MP-5	X	-.032	2
8	MP-6	X	-.067	.5
9	MP-6	X	-.015	2
10	MP-8	X	-.054	.5
11	MP-9	X	-.098	.5
12	MP-9	X	-.042	2
13	MP-10	X	-.134	.5
14	MP-10	X	-.034	2
15	MP-12	X	-.098	.5
16	SF2-TH	X	-.034	1
17	M39	X	-.042	1
18	MP-1	X	-.076	6
19	MP-2	X	-.1	6
20	MP-4	X	-.076	6
21	MP-5	X	-.054	6
22	MP-6	X	-.067	6
23	MP-8	X	-.054	6
24	MP-9	X	-.098	6
25	MP-10	X	-.134	6
26	MP-12	X	-.098	6
27	MP-1	Z	-.076	.5
28	MP-1	Z	-.037	2
29	MP-2	Z	-.1	.5
30	MP-2	Z	-.025	2
31	MP-4	Z	-.076	.5
32	MP-5	Z	-.054	.5
33	MP-5	Z	-.032	2
34	MP-6	Z	-.067	.5
35	MP-6	Z	-.015	2
36	MP-8	Z	-.054	.5
37	MP-9	Z	-.098	.5
38	MP-9	Z	-.042	2
39	MP-10	Z	-.134	.5
40	MP-10	Z	-.034	2
41	MP-12	Z	-.098	.5
42	SF2-TH	Z	-.034	1

Member Point Loads (BLC 4 : 45 Wind - No Ice) (Continued)

	Member Label	Direction	Magnitude[k,k-ft]	Location[ft,%]
43	M39	Z	-.042	1
44	MP-1	Z	-.076	6
45	MP-2	Z	-.1	6
46	MP-4	Z	-.076	6
47	MP-5	Z	-.054	6
48	MP-6	Z	-.067	6
49	MP-8	Z	-.054	6
50	MP-9	Z	-.098	6
51	MP-10	Z	-.134	6
52	MP-12	Z	-.098	6

Member Point Loads (BLC 5 : 60 Wind - No Ice)

	Member Label	Direction	Magnitude[k,k-ft]	Location[ft,%]
1	MP-1	X	-.045	.5
2	MP-1	X	-.024	2
3	MP-2	X	-.057	.5
4	MP-2	X	-.014	2
5	MP-4	X	-.045	.5
6	MP-5	X	-.045	.5
7	MP-5	X	-.024	2
8	MP-6	X	-.057	.5
9	MP-6	X	-.014	2
10	MP-8	X	-.045	.5
11	MP-9	X	-.071	.5
12	MP-9	X	-.03	2
13	MP-10	X	-.098	.5
14	MP-10	X	-.025	2
15	MP-12	X	-.071	.5
16	SF2-TH	X	-.028	1
17	M39	X	-.028	1
18	MP-1	X	-.045	6
19	MP-2	X	-.057	6
20	MP-4	X	-.045	6
21	MP-5	X	-.045	6
22	MP-6	X	-.057	6
23	MP-8	X	-.045	6
24	MP-9	X	-.071	6
25	MP-10	X	-.098	6
26	MP-12	X	-.071	6
27	MP-1	Z	-.078	.5
28	MP-1	Z	-.041	2
29	MP-2	Z	-.099	.5
30	MP-2	Z	-.024	2
31	MP-4	Z	-.078	.5
32	MP-5	Z	-.078	.5
33	MP-5	Z	-.041	2
34	MP-6	Z	-.099	.5
35	MP-6	Z	-.024	2
36	MP-8	Z	-.078	.5
37	MP-9	Z	-.124	.5
38	MP-9	Z	-.053	2

Member Point Loads (BLC 5 : 60 Wind - No Ice) (Continued)

	Member Label	Direction	Magnitude[k,k-ft]	Location[ft,%]
39	MP-10	Z	-.17	.5
40	MP-10	Z	-.044	2
41	MP-12	Z	-.124	.5
42	SF2-TH	Z	-.048	1
43	M39	Z	-.048	1
44	MP-1	Z	-.078	6
45	MP-2	Z	-.099	6
46	MP-4	Z	-.078	6
47	MP-5	Z	-.078	6
48	MP-6	Z	-.099	6
49	MP-8	Z	-.078	6
50	MP-9	Z	-.124	6
51	MP-10	Z	-.17	6
52	MP-12	Z	-.124	6

Member Point Loads (BLC 6 : 90 Wind - No Ice)

	Member Label	Direction	Magnitude[k,k-ft]	Location[ft,%]
1	MP-1	Z	-.072	.5
2	MP-1	Z	-.044	2
3	MP-2	Z	-.087	.5
4	MP-2	Z	-.02	2
5	MP-4	Z	-.072	.5
6	MP-5	Z	-.125	.5
7	MP-5	Z	-.057	2
8	MP-6	Z	-.169	.5
9	MP-6	Z	-.043	2
10	MP-8	Z	-.125	.5
11	MP-9	Z	-.125	.5
12	MP-9	Z	-.057	2
13	MP-10	Z	-.169	.5
14	MP-10	Z	-.043	2
15	MP-12	Z	-.125	.5
16	SF2-TH	Z	-.062	1
17	M39	Z	-.042	1
18	MP-1	Z	-.072	6
19	MP-2	Z	-.087	6
20	MP-4	Z	-.072	6
21	MP-5	Z	-.125	6
22	MP-6	Z	-.169	6
23	MP-8	Z	-.125	6
24	MP-9	Z	-.125	6
25	MP-10	Z	-.169	6
26	MP-12	Z	-.125	6

Member Point Loads (BLC 7 : 120 Wind - No Ice)

	Member Label	Direction	Magnitude[k,k-ft]	Location[ft,%]
1	MP-1	X	.045	.5
2	MP-1	X	.024	2
3	MP-2	X	.057	.5
4	MP-2	X	.014	2
5	MP-4	X	.045	.5

Member Point Loads (BLC 7 : 120 Wind - No Ice) (Continued)

	Member Label	Direction	Magnitude[k,k-ft]	Location[ft,%]
6	MP-5	X	.071	.5
7	MP-5	X	.03	2
8	MP-6	X	.098	.5
9	MP-6	X	.025	2
10	MP-8	X	.071	.5
11	MP-9	X	.045	.5
12	MP-9	X	.024	2
13	MP-10	X	.057	.5
14	MP-10	X	.014	2
15	MP-12	X	.045	.5
16	SF2-TH	X	.028	1
17	M39	X	.018	1
18	MP-1	X	.045	6
19	MP-2	X	.057	6
20	MP-4	X	.045	6
21	MP-5	X	.071	6
22	MP-6	X	.098	6
23	MP-8	X	.071	6
24	MP-9	X	.045	6
25	MP-10	X	.057	6
26	MP-12	X	.045	6
27	MP-1	Z	-.078	.5
28	MP-1	Z	-.041	2
29	MP-2	Z	-.099	.5
30	MP-2	Z	-.024	2
31	MP-4	Z	-.078	.5
32	MP-5	Z	-.124	.5
33	MP-5	Z	-.053	2
34	MP-6	Z	-.17	.5
35	MP-6	Z	-.044	2
36	MP-8	Z	-.124	.5
37	MP-9	Z	-.078	.5
38	MP-9	Z	-.041	2
39	MP-10	Z	-.099	.5
40	MP-10	Z	-.024	2
41	MP-12	Z	-.078	.5
42	SF2-TH	Z	-.048	1
43	M39	Z	-.031	1
44	MP-1	Z	-.078	6
45	MP-2	Z	-.099	6
46	MP-4	Z	-.078	6
47	MP-5	Z	-.124	6
48	MP-6	Z	-.17	6
49	MP-8	Z	-.124	6
50	MP-9	Z	-.078	6
51	MP-10	Z	-.099	6
52	MP-12	Z	-.078	6

Member Point Loads (BLC 8 : 135 Wind - No Ice)

	Member Label	Direction	Magnitude[k,k-ft]	Location[ft,%]
1	MP-1	X	.076	.5

Member Point Loads (BLC 8 : 135 Wind - No Ice) (Continued)

	Member Label	Direction	Magnitude[k,k-ft]	Location[ft,%]
2	MP-1	X	.037	2
3	MP-2	X	.1	.5
4	MP-2	X	.025	2
5	MP-4	X	.076	.5
6	MP-5	X	.098	.5
7	MP-5	X	.042	2
8	MP-6	X	.134	.5
9	MP-6	X	.034	2
10	MP-8	X	.098	.5
11	MP-9	X	.054	.5
12	MP-9	X	.032	2
13	MP-10	X	.067	.5
14	MP-10	X	.015	2
15	MP-12	X	.054	.5
16	SF2-TH	X	.034	1
17	M39	X	.026	1
18	MP-1	X	.076	6
19	MP-2	X	.1	6
20	MP-4	X	.076	6
21	MP-5	X	.098	6
22	MP-6	X	.134	6
23	MP-8	X	.098	6
24	MP-9	X	.054	6
25	MP-10	X	.067	6
26	MP-12	X	.054	6
27	MP-1	Z	-.076	.5
28	MP-1	Z	-.037	2
29	MP-2	Z	-.1	.5
30	MP-2	Z	-.025	2
31	MP-4	Z	-.076	.5
32	MP-5	Z	-.098	.5
33	MP-5	Z	-.042	2
34	MP-6	Z	-.134	.5
35	MP-6	Z	-.034	2
36	MP-8	Z	-.098	.5
37	MP-9	Z	-.054	.5
38	MP-9	Z	-.032	2
39	MP-10	Z	-.067	.5
40	MP-10	Z	-.015	2
41	MP-12	Z	-.054	.5
42	SF2-TH	Z	-.034	1
43	M39	Z	-.026	1
44	MP-1	Z	-.076	6
45	MP-2	Z	-.1	6
46	MP-4	Z	-.076	6
47	MP-5	Z	-.098	6
48	MP-6	Z	-.134	6
49	MP-8	Z	-.098	6
50	MP-9	Z	-.054	6
51	MP-10	Z	-.067	6
52	MP-12	Z	-.054	6

Member Point Loads (BLC 9 : 150 Wind - No Ice)

	Member Label	Direction	Magnitude[k,k-ft]	Location[ft,%]
1	MP-1	X	.108	.5
2	MP-1	X	.049	2
3	MP-2	X	.147	.5
4	MP-2	X	.037	2
5	MP-4	X	.108	.5
6	MP-5	X	.108	.5
7	MP-5	X	.049	2
8	MP-6	X	.147	.5
9	MP-6	X	.037	2
10	MP-8	X	.108	.5
11	MP-9	X	.062	.5
12	MP-9	X	.038	2
13	MP-10	X	.075	.5
14	MP-10	X	.017	2
15	MP-12	X	.062	.5
16	SF2-TH	X	.036	1
17	M39	X	.036	1
18	MP-1	X	.108	6
19	MP-2	X	.147	6
20	MP-4	X	.108	6
21	MP-5	X	.108	6
22	MP-6	X	.147	6
23	MP-8	X	.108	6
24	MP-9	X	.062	6
25	MP-10	X	.075	6
26	MP-12	X	.062	6
27	MP-1	Z	-.063	.5
28	MP-1	Z	-.028	2
29	MP-2	Z	-.085	.5
30	MP-2	Z	-.022	2
31	MP-4	Z	-.063	.5
32	MP-5	Z	-.063	.5
33	MP-5	Z	-.028	2
34	MP-6	Z	-.085	.5
35	MP-6	Z	-.022	2
36	MP-8	Z	-.063	.5
37	MP-9	Z	-.036	.5
38	MP-9	Z	-.022	2
39	MP-10	Z	-.043	.5
40	MP-10	Z	-.01	2
41	MP-12	Z	-.036	.5
42	SF2-TH	Z	-.021	1
43	M39	Z	-.021	1
44	MP-1	Z	-.063	6
45	MP-2	Z	-.085	6
46	MP-4	Z	-.063	6
47	MP-5	Z	-.063	6
48	MP-6	Z	-.085	6
49	MP-8	Z	-.063	6
50	MP-9	Z	-.036	6
51	MP-10	Z	-.043	6
52	MP-12	Z	-.036	6

Member Point Loads (BLC 10 : 180 Wind - No Ice)

	Member Label	Direction	Magnitude[k,k-ft]	Location[ft,%]
1	MP-1	X	.143	.5
2	MP-1	X	.061	2
3	MP-2	X	.197	.5
4	MP-2	X	.051	2
5	MP-4	X	.143	.5
6	MP-5	X	.09	.5
7	MP-5	X	.048	2
8	MP-6	X	.114	.5
9	MP-6	X	.028	2
10	MP-8	X	.09	.5
11	MP-9	X	.09	.5
12	MP-9	X	.048	2
13	MP-10	X	.114	.5
14	MP-10	X	.028	2
15	MP-12	X	.09	.5
16	SF2-TH	X	.035	1
17	M39	X	.055	1
18	MP-1	X	.143	6
19	MP-2	X	.197	6
20	MP-4	X	.143	6
21	MP-5	X	.09	6
22	MP-6	X	.114	6
23	MP-8	X	.09	6
24	MP-9	X	.09	6
25	MP-10	X	.114	6
26	MP-12	X	.09	6

Member Point Loads (BLC 11 : 210 Wind - No Ice)

	Member Label	Direction	Magnitude[k,k-ft]	Location[ft,%]
1	MP-1	X	.108	.5
2	MP-1	X	.049	2
3	MP-2	X	.147	.5
4	MP-2	X	.037	2
5	MP-4	X	.108	.5
6	MP-5	X	.062	.5
7	MP-5	X	.038	2
8	MP-6	X	.075	.5
9	MP-6	X	.017	2
10	MP-8	X	.062	.5
11	MP-9	X	.108	.5
12	MP-9	X	.049	2
13	MP-10	X	.147	.5
14	MP-10	X	.037	2
15	MP-12	X	.108	.5
16	SF2-TH	X	.036	1
17	M39	X	.053	1
18	MP-1	X	.108	6
19	MP-2	X	.147	6
20	MP-4	X	.108	6
21	MP-5	X	.062	6
22	MP-6	X	.075	6

Member Point Loads (BLC 11 : 210 Wind - No Ice) (Continued)

	Member Label	Direction	Magnitude[k,k-ft]	Location[ft,%]
23	MP-8	X	.062	6
24	MP-9	X	.108	6
25	MP-10	X	.147	6
26	MP-12	X	.108	6
27	MP-1	Z	.063	.5
28	MP-1	Z	.028	2
29	MP-2	Z	.085	.5
30	MP-2	Z	.022	2
31	MP-4	Z	.063	.5
32	MP-5	Z	.036	.5
33	MP-5	Z	.022	2
34	MP-6	Z	.043	.5
35	MP-6	Z	.01	2
36	MP-8	Z	.036	.5
37	MP-9	Z	.063	.5
38	MP-9	Z	.028	2
39	MP-10	Z	.085	.5
40	MP-10	Z	.022	2
41	MP-12	Z	.063	.5
42	SF2-TH	Z	.021	1
43	M39	Z	.031	1
44	MP-1	Z	.063	6
45	MP-2	Z	.085	6
46	MP-4	Z	.063	6
47	MP-5	Z	.036	6
48	MP-6	Z	.043	6
49	MP-8	Z	.036	6
50	MP-9	Z	.063	6
51	MP-10	Z	.085	6
52	MP-12	Z	.063	6

Member Point Loads (BLC 12 : 225 Wind - No Ice)

	Member Label	Direction	Magnitude[k,k-ft]	Location[ft,%]
1	MP-1	X	.076	.5
2	MP-1	X	.037	2
3	MP-2	X	.1	.5
4	MP-2	X	.025	2
5	MP-4	X	.076	.5
6	MP-5	X	.054	.5
7	MP-5	X	.032	2
8	MP-6	X	.067	.5
9	MP-6	X	.015	2
10	MP-8	X	.054	.5
11	MP-9	X	.098	.5
12	MP-9	X	.042	2
13	MP-10	X	.134	.5
14	MP-10	X	.034	2
15	MP-12	X	.098	.5
16	SF2-TH	X	.034	1
17	M39	X	.042	1
18	MP-1	X	.076	6

Member Point Loads (BLC 12 : 225 Wind - No Ice) (Continued)

	Member Label	Direction	Magnitude[k,k-ft]	Location[ft,%]
19	MP-2	X	.1	6
20	MP-4	X	.076	6
21	MP-5	X	.054	6
22	MP-6	X	.067	6
23	MP-8	X	.054	6
24	MP-9	X	.098	6
25	MP-10	X	.134	6
26	MP-12	X	.098	6
27	MP-1	Z	.076	.5
28	MP-1	Z	.037	2
29	MP-2	Z	.1	.5
30	MP-2	Z	.025	2
31	MP-4	Z	.076	.5
32	MP-5	Z	.054	.5
33	MP-5	Z	.032	2
34	MP-6	Z	.067	.5
35	MP-6	Z	.015	2
36	MP-8	Z	.054	.5
37	MP-9	Z	.098	.5
38	MP-9	Z	.042	2
39	MP-10	Z	.134	.5
40	MP-10	Z	.034	2
41	MP-12	Z	.098	.5
42	SF2-TH	Z	.034	1
43	M39	Z	.042	1
44	MP-1	Z	.076	6
45	MP-2	Z	.1	6
46	MP-4	Z	.076	6
47	MP-5	Z	.054	6
48	MP-6	Z	.067	6
49	MP-8	Z	.054	6
50	MP-9	Z	.098	6
51	MP-10	Z	.134	6
52	MP-12	Z	.098	6

Member Point Loads (BLC 13 : 240 Wind - No Ice)

	Member Label	Direction	Magnitude[k,k-ft]	Location[ft,%]
1	MP-1	X	.045	.5
2	MP-1	X	.024	2
3	MP-2	X	.057	.5
4	MP-2	X	.014	2
5	MP-4	X	.045	.5
6	MP-5	X	.045	.5
7	MP-5	X	.024	2
8	MP-6	X	.057	.5
9	MP-6	X	.014	2
10	MP-8	X	.045	.5
11	MP-9	X	.071	.5
12	MP-9	X	.03	2
13	MP-10	X	.098	.5
14	MP-10	X	.025	2

Member Point Loads (BLC 13 : 240 Wind - No Ice) (Continued)

	Member Label	Direction	Magnitude[k,k-ft]	Location[ft,%]
15	MP-12	X	.071	.5
16	SF2-TH	X	.028	1
17	M39	X	.028	1
18	MP-1	X	.045	6
19	MP-2	X	.057	6
20	MP-4	X	.045	6
21	MP-5	X	.045	6
22	MP-6	X	.057	6
23	MP-8	X	.045	6
24	MP-9	X	.071	6
25	MP-10	X	.098	6
26	MP-12	X	.071	6
27	MP-1	Z	.078	.5
28	MP-1	Z	.041	2
29	MP-2	Z	.099	.5
30	MP-2	Z	.024	2
31	MP-4	Z	.078	.5
32	MP-5	Z	.078	.5
33	MP-5	Z	.041	2
34	MP-6	Z	.099	.5
35	MP-6	Z	.024	2
36	MP-8	Z	.078	.5
37	MP-9	Z	.124	.5
38	MP-9	Z	.053	2
39	MP-10	Z	.17	.5
40	MP-10	Z	.044	2
41	MP-12	Z	.124	.5
42	SF2-TH	Z	.048	1
43	M39	Z	.048	1
44	MP-1	Z	.078	6
45	MP-2	Z	.099	6
46	MP-4	Z	.078	6
47	MP-5	Z	.078	6
48	MP-6	Z	.099	6
49	MP-8	Z	.078	6
50	MP-9	Z	.124	6
51	MP-10	Z	.17	6
52	MP-12	Z	.124	6

Member Point Loads (BLC 14 : 270 Wind - No Ice)

	Member Label	Direction	Magnitude[k,k-ft]	Location[ft,%]
1	MP-1	Z	.072	.5
2	MP-1	Z	.044	2
3	MP-2	Z	.087	.5
4	MP-2	Z	.02	2
5	MP-4	Z	.072	.5
6	MP-5	Z	.125	.5
7	MP-5	Z	.057	2
8	MP-6	Z	.169	.5
9	MP-6	Z	.043	2
10	MP-8	Z	.125	.5

Member Point Loads (BLC 14 : 270 Wind - No Ice) (Continued)

	Member Label	Direction	Magnitude[k,k-ft]	Location[ft,%]
11	MP-9	Z	.125	.5
12	MP-9	Z	.057	2
13	MP-10	Z	.169	.5
14	MP-10	Z	.043	2
15	MP-12	Z	.125	.5
16	SF2-TH	Z	.062	1
17	M39	Z	.042	1
18	MP-1	Z	.072	6
19	MP-2	Z	.087	6
20	MP-4	Z	.072	6
21	MP-5	Z	.125	6
22	MP-6	Z	.169	6
23	MP-8	Z	.125	6
24	MP-9	Z	.125	6
25	MP-10	Z	.169	6
26	MP-12	Z	.125	6

Member Point Loads (BLC 15 : 300 Wind - No Ice)

	Member Label	Direction	Magnitude[k,k-ft]	Location[ft,%]
1	MP-1	X	-.045	.5
2	MP-1	X	-.024	2
3	MP-2	X	-.057	.5
4	MP-2	X	-.014	2
5	MP-4	X	-.045	.5
6	MP-5	X	-.071	.5
7	MP-5	X	-.03	2
8	MP-6	X	-.098	.5
9	MP-6	X	-.025	2
10	MP-8	X	-.071	.5
11	MP-9	X	-.045	.5
12	MP-9	X	-.024	2
13	MP-10	X	-.057	.5
14	MP-10	X	-.014	2
15	MP-12	X	-.045	.5
16	SF2-TH	X	-.028	1
17	M39	X	-.018	1
18	MP-1	X	-.045	6
19	MP-2	X	-.057	6
20	MP-4	X	-.045	6
21	MP-5	X	-.071	6
22	MP-6	X	-.098	6
23	MP-8	X	-.071	6
24	MP-9	X	-.045	6
25	MP-10	X	-.057	6
26	MP-12	X	-.045	6
27	MP-1	Z	.078	.5
28	MP-1	Z	.041	2
29	MP-2	Z	.099	.5
30	MP-2	Z	.024	2
31	MP-4	Z	.078	.5
32	MP-5	Z	.124	.5

Member Point Loads (BLC 15 : 300 Wind - No Ice) (Continued)

	Member Label	Direction	Magnitude[k,k-ft]	Location[ft,%]
33	MP-5	Z	.053	2
34	MP-6	Z	.17	.5
35	MP-6	Z	.044	2
36	MP-8	Z	.124	.5
37	MP-9	Z	.078	.5
38	MP-9	Z	.041	2
39	MP-10	Z	.099	.5
40	MP-10	Z	.024	2
41	MP-12	Z	.078	.5
42	SF2-TH	Z	.048	1
43	M39	Z	.031	1
44	MP-1	Z	.078	6
45	MP-2	Z	.099	6
46	MP-4	Z	.078	6
47	MP-5	Z	.124	6
48	MP-6	Z	.17	6
49	MP-8	Z	.124	6
50	MP-9	Z	.078	6
51	MP-10	Z	.099	6
52	MP-12	Z	.078	6

Member Point Loads (BLC 16 : 315 Wind - No Ice)

	Member Label	Direction	Magnitude[k,k-ft]	Location[ft,%]
1	MP-1	X	-.076	.5
2	MP-1	X	-.037	2
3	MP-2	X	-.1	.5
4	MP-2	X	-.025	2
5	MP-4	X	-.076	.5
6	MP-5	X	-.098	.5
7	MP-5	X	-.042	2
8	MP-6	X	-.134	.5
9	MP-6	X	-.034	2
10	MP-8	X	-.098	.5
11	MP-9	X	-.054	.5
12	MP-9	X	-.032	2
13	MP-10	X	-.067	.5
14	MP-10	X	-.015	2
15	MP-12	X	-.054	.5
16	SF2-TH	X	-.034	1
17	M39	X	-.026	1
18	MP-1	X	-.076	6
19	MP-2	X	-.1	6
20	MP-4	X	-.076	6
21	MP-5	X	-.098	6
22	MP-6	X	-.134	6
23	MP-8	X	-.098	6
24	MP-9	X	-.054	6
25	MP-10	X	-.067	6
26	MP-12	X	-.054	6
27	MP-1	Z	.076	.5
28	MP-1	Z	.037	2

Member Point Loads (BLC 16 : 315 Wind - No Ice) (Continued)

	Member Label	Direction	Magnitude[k,k-ft]	Location[ft,%]
29	MP-2	Z	.1	.5
30	MP-2	Z	.025	2
31	MP-4	Z	.076	.5
32	MP-5	Z	.098	.5
33	MP-5	Z	.042	2
34	MP-6	Z	.134	.5
35	MP-6	Z	.034	2
36	MP-8	Z	.098	.5
37	MP-9	Z	.054	.5
38	MP-9	Z	.032	2
39	MP-10	Z	.067	.5
40	MP-10	Z	.015	2
41	MP-12	Z	.054	.5
42	SF2-TH	Z	.034	1
43	M39	Z	.026	1
44	MP-1	Z	.076	6
45	MP-2	Z	.1	6
46	MP-4	Z	.076	6
47	MP-5	Z	.098	6
48	MP-6	Z	.134	6
49	MP-8	Z	.098	6
50	MP-9	Z	.054	6
51	MP-10	Z	.067	6
52	MP-12	Z	.054	6

Member Point Loads (BLC 17 : 330 Wind - No Ice)

	Member Label	Direction	Magnitude[k,k-ft]	Location[ft,%]
1	MP-1	X	-.108	.5
2	MP-1	X	-.049	2
3	MP-2	X	-.147	.5
4	MP-2	X	-.037	2
5	MP-4	X	-.108	.5
6	MP-5	X	-.108	.5
7	MP-5	X	-.049	2
8	MP-6	X	-.147	.5
9	MP-6	X	-.037	2
10	MP-8	X	-.108	.5
11	MP-9	X	-.062	.5
12	MP-9	X	-.038	2
13	MP-10	X	-.075	.5
14	MP-10	X	-.017	2
15	MP-12	X	-.062	.5
16	SF2-TH	X	-.036	1
17	M39	X	-.036	1
18	MP-1	X	-.108	6
19	MP-2	X	-.147	6
20	MP-4	X	-.108	6
21	MP-5	X	-.108	6
22	MP-6	X	-.147	6
23	MP-8	X	-.108	6
24	MP-9	X	-.062	6

Member Point Loads (BLC 17 : 330 Wind - No Ice) (Continued)

	Member Label	Direction	Magnitude[k,k-ft]	Location[ft,%]
25	MP-10	X	-.075	6
26	MP-12	X	-.062	6
27	MP-1	Z	.063	.5
28	MP-1	Z	.028	2
29	MP-2	Z	.085	.5
30	MP-2	Z	.022	2
31	MP-4	Z	.063	.5
32	MP-5	Z	.063	.5
33	MP-5	Z	.028	2
34	MP-6	Z	.085	.5
35	MP-6	Z	.022	2
36	MP-8	Z	.063	.5
37	MP-9	Z	.036	.5
38	MP-9	Z	.022	2
39	MP-10	Z	.043	.5
40	MP-10	Z	.01	2
41	MP-12	Z	.036	.5
42	SF2-TH	Z	.021	1
43	M39	Z	.021	1
44	MP-1	Z	.063	6
45	MP-2	Z	.085	6
46	MP-4	Z	.063	6
47	MP-5	Z	.063	6
48	MP-6	Z	.085	6
49	MP-8	Z	.063	6
50	MP-9	Z	.036	6
51	MP-10	Z	.043	6
52	MP-12	Z	.036	6

Member Point Loads (BLC 18 : Ice Weight)

	Member Label	Direction	Magnitude[k,k-ft]	Location[ft,%]
1	MP-1	Y	-.064	.5
2	MP-1	Y	-.039	2
3	MP-2	Y	-.075	.5
4	MP-2	Y	-.026	2
5	MP-4	Y	-.064	.5
6	MP-5	Y	-.064	.5
7	MP-5	Y	-.039	2
8	MP-6	Y	-.075	.5
9	MP-6	Y	-.026	2
10	MP-8	Y	-.064	.5
11	MP-9	Y	-.064	.5
12	MP-9	Y	-.039	2
13	MP-10	Y	-.075	.5
14	MP-10	Y	-.026	2
15	MP-12	Y	-.064	.5
16	SF2-TH	Y	-.037	1
17	M39	Y	-.037	1
18	MP-1	Y	-.064	6
19	MP-2	Y	-.075	6
20	MP-4	Y	-.064	6

Member Point Loads (BLC 18 : Ice Weight) (Continued)

	Member Label	Direction	Magnitude[k,k-ft]	Location[ft,%]
21	MP-5	Y	-.064	6
22	MP-6	Y	-.075	6
23	MP-8	Y	-.064	6
24	MP-9	Y	-.064	6
25	MP-10	Y	-.075	6
26	MP-12	Y	-.064	6

Member Point Loads (BLC 19 : 0 Wind - Ice)

	Member Label	Direction	Magnitude[k,k-ft]	Location[ft,%]
1	MP-1	X	-.031	.5
2	MP-1	X	-.014	2
3	MP-2	X	-.041	.5
4	MP-2	X	-.012	2
5	MP-4	X	-.031	.5
6	MP-5	X	-.031	.5
7	MP-5	X	-.014	2
8	MP-6	X	-.041	.5
9	MP-6	X	-.012	2
10	MP-8	X	-.031	.5
11	MP-9	X	-.031	.5
12	MP-9	X	-.014	2
13	MP-10	X	-.041	.5
14	MP-10	X	-.012	2
15	MP-12	X	-.031	.5
16	SF2-TH	X	-.008	1
17	M39	X	-.008	1
18	MP-1	X	-.031	6
19	MP-2	X	-.041	6
20	MP-4	X	-.031	6
21	MP-5	X	-.031	6
22	MP-6	X	-.041	6
23	MP-8	X	-.031	6
24	MP-9	X	-.031	6
25	MP-10	X	-.041	6
26	MP-12	X	-.031	6

Member Point Loads (BLC 20 : 30 Wind - Ice)

	Member Label	Direction	Magnitude[k,k-ft]	Location[ft,%]
1	MP-1	X	-.024	.5
2	MP-1	X	-.012	2
3	MP-2	X	-.031	.5
4	MP-2	X	-.009	2
5	MP-4	X	-.024	.5
6	MP-5	X	-.015	.5
7	MP-5	X	-.009	2
8	MP-6	X	-.017	.5
9	MP-6	X	-.005	2
10	MP-8	X	-.015	.5
11	MP-9	X	-.024	.5
12	MP-9	X	-.012	2
13	MP-10	X	-.031	.5

Member Point Loads (BLC 20 : 30 Wind - Ice) (Continued)

	Member Label	Direction	Magnitude[k,k-ft]	Location[ft,%]
14	MP-10	X	-.009	2
15	MP-12	X	-.024	.5
16	SF2-TH	X	-.008	1
17	M39	X	-.012	1
18	MP-1	X	-.024	6
19	MP-2	X	-.031	6
20	MP-4	X	-.024	6
21	MP-5	X	-.015	6
22	MP-6	X	-.017	6
23	MP-8	X	-.015	6
24	MP-9	X	-.024	6
25	MP-10	X	-.031	6
26	MP-12	X	-.024	6
27	MP-1	Z	-.014	.5
28	MP-1	Z	-.007	2
29	MP-2	Z	-.018	.5
30	MP-2	Z	-.005	2
31	MP-4	Z	-.014	.5
32	MP-5	Z	-.009	.5
33	MP-5	Z	-.005	2
34	MP-6	Z	-.01	.5
35	MP-6	Z	-.003	2
36	MP-8	Z	-.009	.5
37	MP-9	Z	-.014	.5
38	MP-9	Z	-.007	2
39	MP-10	Z	-.018	.5
40	MP-10	Z	-.005	2
41	MP-12	Z	-.014	.5
42	SF2-TH	Z	-.005	1
43	M39	Z	-.007	1
44	MP-1	Z	-.014	6
45	MP-2	Z	-.018	6
46	MP-4	Z	-.014	6
47	MP-5	Z	-.009	6
48	MP-6	Z	-.01	6
49	MP-8	Z	-.009	6
50	MP-9	Z	-.014	6
51	MP-10	Z	-.018	6
52	MP-12	Z	-.014	6

Member Point Loads (BLC 21 : 45 Wind - Ice)

	Member Label	Direction	Magnitude[k,k-ft]	Location[ft,%]
1	MP-1	X	-.017	.5
2	MP-1	X	-.009	2
3	MP-2	X	-.021	.5
4	MP-2	X	-.006	2
5	MP-4	X	-.017	.5
6	MP-5	X	-.013	.5
7	MP-5	X	-.008	2
8	MP-6	X	-.015	.5
9	MP-6	X	-.004	2

Member Point Loads (BLC 21 : 45 Wind - Ice) (Continued)

	Member Label	Direction	Magnitude[k,k-ft]	Location[ft,%]
10	MP-8	X	-.013	.5
11	MP-9	X	-.021	.5
12	MP-9	X	-.01	2
13	MP-10	X	-.028	.5
14	MP-10	X	-.008	2
15	MP-12	X	-.021	.5
16	SF2-TH	X	-.008	1
17	M39	X	-.009	1
18	MP-1	X	-.017	6
19	MP-2	X	-.021	6
20	MP-4	X	-.017	6
21	MP-5	X	-.013	6
22	MP-6	X	-.015	6
23	MP-8	X	-.013	6
24	MP-9	X	-.021	6
25	MP-10	X	-.028	6
26	MP-12	X	-.021	6
27	MP-1	Z	-.017	.5
28	MP-1	Z	-.009	2
29	MP-2	Z	-.021	.5
30	MP-2	Z	-.006	2
31	MP-4	Z	-.017	.5
32	MP-5	Z	-.013	.5
33	MP-5	Z	-.008	2
34	MP-6	Z	-.015	.5
35	MP-6	Z	-.004	2
36	MP-8	Z	-.013	.5
37	MP-9	Z	-.021	.5
38	MP-9	Z	-.01	2
39	MP-10	Z	-.028	.5
40	MP-10	Z	-.008	2
41	MP-12	Z	-.021	.5
42	SF2-TH	Z	-.008	1
43	M39	Z	-.009	1
44	MP-1	Z	-.017	6
45	MP-2	Z	-.021	6
46	MP-4	Z	-.017	6
47	MP-5	Z	-.013	6
48	MP-6	Z	-.015	6
49	MP-8	Z	-.013	6
50	MP-9	Z	-.021	6
51	MP-10	Z	-.028	6
52	MP-12	Z	-.021	6

Member Point Loads (BLC 22 : 60 Wind - Ice)

	Member Label	Direction	Magnitude[k,k-ft]	Location[ft,%]
1	MP-1	X	-.01	.5
2	MP-1	X	-.006	2
3	MP-2	X	-.013	.5
4	MP-2	X	-.004	2
5	MP-4	X	-.01	.5

Member Point Loads (BLC 22 : 60 Wind - Ice) (Continued)

	Member Label	Direction	Magnitude[k,k-ft]	Location[ft,%]
6	MP-5	X	-.01	.5
7	MP-5	X	-.006	2
8	MP-6	X	-.013	.5
9	MP-6	X	-.004	2
10	MP-8	X	-.01	.5
11	MP-9	X	-.016	.5
12	MP-9	X	-.007	2
13	MP-10	X	-.02	.5
14	MP-10	X	-.006	2
15	MP-12	X	-.016	.5
16	SF2-TH	X	-.006	1
17	M39	X	-.006	1
18	MP-1	X	-.01	6
19	MP-2	X	-.013	6
20	MP-4	X	-.01	6
21	MP-5	X	-.01	6
22	MP-6	X	-.013	6
23	MP-8	X	-.01	6
24	MP-9	X	-.016	6
25	MP-10	X	-.02	6
26	MP-12	X	-.016	6
27	MP-1	Z	-.018	.5
28	MP-1	Z	-.01	2
29	MP-2	Z	-.022	.5
30	MP-2	Z	-.006	2
31	MP-4	Z	-.018	.5
32	MP-5	Z	-.018	.5
33	MP-5	Z	-.01	2
34	MP-6	Z	-.022	.5
35	MP-6	Z	-.006	2
36	MP-8	Z	-.018	.5
37	MP-9	Z	-.027	.5
38	MP-9	Z	-.012	2
39	MP-10	Z	-.035	.5
40	MP-10	Z	-.011	2
41	MP-12	Z	-.027	.5
42	SF2-TH	Z	-.011	1
43	M39	Z	-.011	1
44	MP-1	Z	-.018	6
45	MP-2	Z	-.022	6
46	MP-4	Z	-.018	6
47	MP-5	Z	-.018	6
48	MP-6	Z	-.022	6
49	MP-8	Z	-.018	6
50	MP-9	Z	-.027	6
51	MP-10	Z	-.035	6
52	MP-12	Z	-.027	6

Member Point Loads (BLC 23 : 90 Wind - Ice)

	Member Label	Direction	Magnitude[k,k-ft]	Location[ft,%]
1	MP-1	Z	-.018	.5

Member Point Loads (BLC 23 : 90 Wind - Ice) (Continued)

	Member Label	Direction	Magnitude[k,k-ft]	Location[ft,%]
2	MP-1	Z	-.011	2
3	MP-2	Z	-.02	.5
4	MP-2	Z	-.006	2
5	MP-4	Z	-.018	.5
6	MP-5	Z	-.018	.5
7	MP-5	Z	-.011	2
8	MP-6	Z	-.02	.5
9	MP-6	Z	-.006	2
10	MP-8	Z	-.018	.5
11	MP-9	Z	-.018	.5
12	MP-9	Z	-.011	2
13	MP-10	Z	-.02	.5
14	MP-10	Z	-.006	2
15	MP-12	Z	-.018	.5
16	SF2-TH	Z	-.013	1
17	M39	Z	-.013	1
18	MP-1	Z	-.018	6
19	MP-2	Z	-.02	6
20	MP-4	Z	-.018	6
21	MP-5	Z	-.018	6
22	MP-6	Z	-.02	6
23	MP-8	Z	-.018	6
24	MP-9	Z	-.018	6
25	MP-10	Z	-.02	6
26	MP-12	Z	-.018	6

Member Point Loads (BLC 24 : 120 Wind - Ice)

	Member Label	Direction	Magnitude[k,k-ft]	Location[ft,%]
1	MP-1	X	.01	.5
2	MP-1	X	.006	2
3	MP-2	X	.013	.5
4	MP-2	X	.004	2
5	MP-4	X	.01	.5
6	MP-5	X	.016	.5
7	MP-5	X	.007	2
8	MP-6	X	.02	.5
9	MP-6	X	.006	2
10	MP-8	X	.016	.5
11	MP-9	X	.01	.5
12	MP-9	X	.006	2
13	MP-10	X	.013	.5
14	MP-10	X	.004	2
15	MP-12	X	.01	.5
16	SF2-TH	X	.006	1
17	M39	X	.004	1
18	MP-1	X	.01	6
19	MP-2	X	.013	6
20	MP-4	X	.01	6
21	MP-5	X	.016	6
22	MP-6	X	.02	6
23	MP-8	X	.016	6

Member Point Loads (BLC 24 : 120 Wind - Ice) (Continued)

	Member Label	Direction	Magnitude[k,k-ft]	Location[ft,%]
24	MP-9	X	.01	6
25	MP-10	X	.013	6
26	MP-12	X	.01	6
27	MP-1	Z	-.018	.5
28	MP-1	Z	-.01	2
29	MP-2	Z	-.022	.5
30	MP-2	Z	-.006	2
31	MP-4	Z	-.018	.5
32	MP-5	Z	-.027	.5
33	MP-5	Z	-.012	2
34	MP-6	Z	-.035	.5
35	MP-6	Z	-.011	2
36	MP-8	Z	-.027	.5
37	MP-9	Z	-.018	.5
38	MP-9	Z	-.01	2
39	MP-10	Z	-.022	.5
40	MP-10	Z	-.006	2
41	MP-12	Z	-.018	.5
42	SF2-TH	Z	-.011	1
43	M39	Z	-.007	1
44	MP-1	Z	-.018	6
45	MP-2	Z	-.022	6
46	MP-4	Z	-.018	6
47	MP-5	Z	-.027	6
48	MP-6	Z	-.035	6
49	MP-8	Z	-.027	6
50	MP-9	Z	-.018	6
51	MP-10	Z	-.022	6
52	MP-12	Z	-.018	6

Member Point Loads (BLC 25 : 135 Wind - Ice)

	Member Label	Direction	Magnitude[k,k-ft]	Location[ft,%]
1	MP-1	X	.017	.5
2	MP-1	X	.009	2
3	MP-2	X	.021	.5
4	MP-2	X	.006	2
5	MP-4	X	.017	.5
6	MP-5	X	.021	.5
7	MP-5	X	.01	2
8	MP-6	X	.028	.5
9	MP-6	X	.008	2
10	MP-8	X	.021	.5
11	MP-9	X	.013	.5
12	MP-9	X	.008	2
13	MP-10	X	.015	.5
14	MP-10	X	.004	2
15	MP-12	X	.013	.5
16	SF2-TH	X	.008	1
17	M39	X	.006	1
18	MP-1	X	.017	6
19	MP-2	X	.021	6

Member Point Loads (BLC 25 : 135 Wind - Ice) (Continued)

	Member Label	Direction	Magnitude[k,k-ft]	Location[ft,%]
20	MP-4	X	.017	6
21	MP-5	X	.021	6
22	MP-6	X	.028	6
23	MP-8	X	.021	6
24	MP-9	X	.013	6
25	MP-10	X	.015	6
26	MP-12	X	.013	6
27	MP-1	Z	-.017	.5
28	MP-1	Z	-.009	2
29	MP-2	Z	-.021	.5
30	MP-2	Z	-.006	2
31	MP-4	Z	-.017	.5
32	MP-5	Z	-.021	.5
33	MP-5	Z	-.01	2
34	MP-6	Z	-.028	.5
35	MP-6	Z	-.008	2
36	MP-8	Z	-.021	.5
37	MP-9	Z	-.013	.5
38	MP-9	Z	-.008	2
39	MP-10	Z	-.015	.5
40	MP-10	Z	-.004	2
41	MP-12	Z	-.013	.5
42	SF2-TH	Z	-.008	1
43	M39	Z	-.006	1
44	MP-1	Z	-.017	6
45	MP-2	Z	-.021	6
46	MP-4	Z	-.017	6
47	MP-5	Z	-.021	6
48	MP-6	Z	-.028	6
49	MP-8	Z	-.021	6
50	MP-9	Z	-.013	6
51	MP-10	Z	-.015	6
52	MP-12	Z	-.013	6

Member Point Loads (BLC 26 : 150 Wind - Ice)

	Member Label	Direction	Magnitude[k,k-ft]	Location[ft,%]
1	MP-1	X	.024	.5
2	MP-1	X	.012	2
3	MP-2	X	.031	.5
4	MP-2	X	.009	2
5	MP-4	X	.024	.5
6	MP-5	X	.024	.5
7	MP-5	X	.012	2
8	MP-6	X	.031	.5
9	MP-6	X	.009	2
10	MP-8	X	.024	.5
11	MP-9	X	.015	.5
12	MP-9	X	.009	2
13	MP-10	X	.017	.5
14	MP-10	X	.005	2
15	MP-12	X	.015	.5

Member Point Loads (BLC 26 : 150 Wind - Ice) (Continued)

	Member Label	Direction	Magnitude[k,k-ft]	Location[ft,%]
16	SF2-TH	X	.008	1
17	M39	X	.008	1
18	MP-1	X	.024	6
19	MP-2	X	.031	6
20	MP-4	X	.024	6
21	MP-5	X	.024	6
22	MP-6	X	.031	6
23	MP-8	X	.024	6
24	MP-9	X	.015	6
25	MP-10	X	.017	6
26	MP-12	X	.015	6
27	MP-1	Z	-.014	.5
28	MP-1	Z	-.007	2
29	MP-2	Z	-.018	.5
30	MP-2	Z	-.005	2
31	MP-4	Z	-.014	.5
32	MP-5	Z	-.014	.5
33	MP-5	Z	-.007	2
34	MP-6	Z	-.018	.5
35	MP-6	Z	-.005	2
36	MP-8	Z	-.014	.5
37	MP-9	Z	-.009	.5
38	MP-9	Z	-.005	2
39	MP-10	Z	-.01	.5
40	MP-10	Z	-.003	2
41	MP-12	Z	-.009	.5
42	SF2-TH	Z	-.005	1
43	M39	Z	-.005	1
44	MP-1	Z	-.014	6
45	MP-2	Z	-.018	6
46	MP-4	Z	-.014	6
47	MP-5	Z	-.014	6
48	MP-6	Z	-.018	6
49	MP-8	Z	-.014	6
50	MP-9	Z	-.009	6
51	MP-10	Z	-.01	6
52	MP-12	Z	-.009	6

Member Point Loads (BLC 27 : 180 Wind - Ice)

	Member Label	Direction	Magnitude[k,k-ft]	Location[ft,%]
1	MP-1	X	.031	.5
2	MP-1	X	.014	2
3	MP-2	X	.041	.5
4	MP-2	X	.012	2
5	MP-4	X	.031	.5
6	MP-5	X	.031	.5
7	MP-5	X	.014	2
8	MP-6	X	.041	.5
9	MP-6	X	.012	2
10	MP-8	X	.031	.5
11	MP-9	X	.031	.5

Member Point Loads (BLC 27 : 180 Wind - Ice) (Continued)

	Member Label	Direction	Magnitude[k,k-ft]	Location[ft,%]
12	MP-9	X	.014	2
13	MP-10	X	.041	.5
14	MP-10	X	.012	2
15	MP-12	X	.031	.5
16	SF2-TH	X	.008	1
17	M39	X	.008	1
18	MP-1	X	.031	6
19	MP-2	X	.041	6
20	MP-4	X	.031	6
21	MP-5	X	.031	6
22	MP-6	X	.041	6
23	MP-8	X	.031	6
24	MP-9	X	.031	6
25	MP-10	X	.041	6
26	MP-12	X	.031	6

Member Point Loads (BLC 28 : 210 Wind - Ice)

	Member Label	Direction	Magnitude[k,k-ft]	Location[ft,%]
1	MP-1	X	.024	.5
2	MP-1	X	.012	2
3	MP-2	X	.031	.5
4	MP-2	X	.009	2
5	MP-4	X	.024	.5
6	MP-5	X	.015	.5
7	MP-5	X	.009	2
8	MP-6	X	.017	.5
9	MP-6	X	.005	2
10	MP-8	X	.015	.5
11	MP-9	X	.024	.5
12	MP-9	X	.012	2
13	MP-10	X	.031	.5
14	MP-10	X	.009	2
15	MP-12	X	.024	.5
16	SF2-TH	X	.008	1
17	M39	X	.012	1
18	MP-1	X	.024	6
19	MP-2	X	.031	6
20	MP-4	X	.024	6
21	MP-5	X	.015	6
22	MP-6	X	.017	6
23	MP-8	X	.015	6
24	MP-9	X	.024	6
25	MP-10	X	.031	6
26	MP-12	X	.024	6
27	MP-1	Z	.014	.5
28	MP-1	Z	.007	2
29	MP-2	Z	.018	.5
30	MP-2	Z	.005	2
31	MP-4	Z	.014	.5
32	MP-5	Z	.009	.5
33	MP-5	Z	.005	2

Member Point Loads (BLC 28 : 210 Wind - Ice) (Continued)

	Member Label	Direction	Magnitude[k,k-ft]	Location[ft,%]
34	MP-6	Z	.01	.5
35	MP-6	Z	.003	2
36	MP-8	Z	.009	.5
37	MP-9	Z	.014	.5
38	MP-9	Z	.007	2
39	MP-10	Z	.018	.5
40	MP-10	Z	.005	2
41	MP-12	Z	.014	.5
42	SF2-TH	Z	.005	1
43	M39	Z	.007	1
44	MP-1	Z	.014	6
45	MP-2	Z	.018	6
46	MP-4	Z	.014	6
47	MP-5	Z	.009	6
48	MP-6	Z	.01	6
49	MP-8	Z	.009	6
50	MP-9	Z	.014	6
51	MP-10	Z	.018	6
52	MP-12	Z	.014	6

Member Point Loads (BLC 29 : 225 Wind - Ice)

	Member Label	Direction	Magnitude[k,k-ft]	Location[ft,%]
1	MP-1	X	.017	.5
2	MP-1	X	.009	2
3	MP-2	X	.021	.5
4	MP-2	X	.006	2
5	MP-4	X	.017	.5
6	MP-5	X	.013	.5
7	MP-5	X	.008	2
8	MP-6	X	.015	.5
9	MP-6	X	.004	2
10	MP-8	X	.013	.5
11	MP-9	X	.021	.5
12	MP-9	X	.01	2
13	MP-10	X	.028	.5
14	MP-10	X	.008	2
15	MP-12	X	.021	.5
16	SF2-TH	X	.008	1
17	M39	X	.009	1
18	MP-1	X	.017	6
19	MP-2	X	.021	6
20	MP-4	X	.017	6
21	MP-5	X	.013	6
22	MP-6	X	.015	6
23	MP-8	X	.013	6
24	MP-9	X	.021	6
25	MP-10	X	.028	6
26	MP-12	X	.021	6
27	MP-1	Z	.017	.5
28	MP-1	Z	.009	2
29	MP-2	Z	.021	.5

Member Point Loads (BLC 29 : 225 Wind - Ice) (Continued)

	Member Label	Direction	Magnitude[k,k-ft]	Location[ft,%]
30	MP-2	Z	.006	2
31	MP-4	Z	.017	.5
32	MP-5	Z	.013	.5
33	MP-5	Z	.008	2
34	MP-6	Z	.015	.5
35	MP-6	Z	.004	2
36	MP-8	Z	.013	.5
37	MP-9	Z	.021	.5
38	MP-9	Z	.01	2
39	MP-10	Z	.028	.5
40	MP-10	Z	.008	2
41	MP-12	Z	.021	.5
42	SF2-TH	Z	.008	1
43	M39	Z	.009	1
44	MP-1	Z	.017	6
45	MP-2	Z	.021	6
46	MP-4	Z	.017	6
47	MP-5	Z	.013	6
48	MP-6	Z	.015	6
49	MP-8	Z	.013	6
50	MP-9	Z	.021	6
51	MP-10	Z	.028	6
52	MP-12	Z	.021	6

Member Point Loads (BLC 30 : 240 Wind - Ice)

	Member Label	Direction	Magnitude[k,k-ft]	Location[ft,%]
1	MP-1	X	.01	.5
2	MP-1	X	.006	2
3	MP-2	X	.013	.5
4	MP-2	X	.004	2
5	MP-4	X	.01	.5
6	MP-5	X	.01	.5
7	MP-5	X	.006	2
8	MP-6	X	.013	.5
9	MP-6	X	.004	2
10	MP-8	X	.01	.5
11	MP-9	X	.016	.5
12	MP-9	X	.007	2
13	MP-10	X	.02	.5
14	MP-10	X	.006	2
15	MP-12	X	.016	.5
16	SF2-TH	X	.006	1
17	M39	X	.006	1
18	MP-1	X	.01	6
19	MP-2	X	.013	6
20	MP-4	X	.01	6
21	MP-5	X	.01	6
22	MP-6	X	.013	6
23	MP-8	X	.01	6
24	MP-9	X	.016	6
25	MP-10	X	.02	6

Member Point Loads (BLC 30 : 240 Wind - Ice) (Continued)

	Member Label	Direction	Magnitude[k,k-ft]	Location[ft,%]
26	MP-12	X	.016	6
27	MP-1	Z	.018	.5
28	MP-1	Z	.01	2
29	MP-2	Z	.022	.5
30	MP-2	Z	.006	2
31	MP-4	Z	.018	.5
32	MP-5	Z	.018	.5
33	MP-5	Z	.01	2
34	MP-6	Z	.022	.5
35	MP-6	Z	.006	2
36	MP-8	Z	.018	.5
37	MP-9	Z	.027	.5
38	MP-9	Z	.012	2
39	MP-10	Z	.035	.5
40	MP-10	Z	.011	2
41	MP-12	Z	.027	.5
42	SF2-TH	Z	.011	1
43	M39	Z	.011	1
44	MP-1	Z	.018	6
45	MP-2	Z	.022	6
46	MP-4	Z	.018	6
47	MP-5	Z	.018	6
48	MP-6	Z	.022	6
49	MP-8	Z	.018	6
50	MP-9	Z	.027	6
51	MP-10	Z	.035	6
52	MP-12	Z	.027	6

Member Point Loads (BLC 31 : 270 Wind - Ice)

	Member Label	Direction	Magnitude[k,k-ft]	Location[ft,%]
1	MP-1	Z	.018	.5
2	MP-1	Z	.011	2
3	MP-2	Z	.02	.5
4	MP-2	Z	.006	2
5	MP-4	Z	.018	.5
6	MP-5	Z	.018	.5
7	MP-5	Z	.011	2
8	MP-6	Z	.02	.5
9	MP-6	Z	.006	2
10	MP-8	Z	.018	.5
11	MP-9	Z	.018	.5
12	MP-9	Z	.011	2
13	MP-10	Z	.02	.5
14	MP-10	Z	.006	2
15	MP-12	Z	.018	.5
16	SF2-TH	Z	.013	1
17	M39	Z	.013	1
18	MP-1	Z	.018	6
19	MP-2	Z	.02	6
20	MP-4	Z	.018	6
21	MP-5	Z	.018	6

Member Point Loads (BLC 31 : 270 Wind - Ice) (Continued)

	Member Label	Direction	Magnitude[k,k-ft]	Location[ft,%]
22	MP-6	Z	.02	6
23	MP-8	Z	.018	6
24	MP-9	Z	.018	6
25	MP-10	Z	.02	6
26	MP-12	Z	.018	6

Member Point Loads (BLC 32 : 300 Wind - Ice)

	Member Label	Direction	Magnitude[k,k-ft]	Location[ft,%]
1	MP-1	X	-.01	.5
2	MP-1	X	-.006	2
3	MP-2	X	-.013	.5
4	MP-2	X	-.004	2
5	MP-4	X	-.01	.5
6	MP-5	X	-.016	.5
7	MP-5	X	-.007	2
8	MP-6	X	-.02	.5
9	MP-6	X	-.006	2
10	MP-8	X	-.016	.5
11	MP-9	X	-.01	.5
12	MP-9	X	-.006	2
13	MP-10	X	-.013	.5
14	MP-10	X	-.004	2
15	MP-12	X	-.01	.5
16	SF2-TH	X	-.006	1
17	M39	X	-.004	1
18	MP-1	X	-.01	6
19	MP-2	X	-.013	6
20	MP-4	X	-.01	6
21	MP-5	X	-.016	6
22	MP-6	X	-.02	6
23	MP-8	X	-.016	6
24	MP-9	X	-.01	6
25	MP-10	X	-.013	6
26	MP-12	X	-.01	6
27	MP-1	Z	.018	.5
28	MP-1	Z	.01	2
29	MP-2	Z	.022	.5
30	MP-2	Z	.006	2
31	MP-4	Z	.018	.5
32	MP-5	Z	.027	.5
33	MP-5	Z	.012	2
34	MP-6	Z	.035	.5
35	MP-6	Z	.011	2
36	MP-8	Z	.027	.5
37	MP-9	Z	.018	.5
38	MP-9	Z	.01	2
39	MP-10	Z	.022	.5
40	MP-10	Z	.006	2
41	MP-12	Z	.018	.5
42	SF2-TH	Z	.011	1
43	M39	Z	.007	1

Member Point Loads (BLC 32 : 300 Wind - Ice) (Continued)

	Member Label	Direction	Magnitude[k,k-ft]	Location[ft,%]
44	MP-1	Z	.018	6
45	MP-2	Z	.022	6
46	MP-4	Z	.018	6
47	MP-5	Z	.027	6
48	MP-6	Z	.035	6
49	MP-8	Z	.027	6
50	MP-9	Z	.018	6
51	MP-10	Z	.022	6
52	MP-12	Z	.018	6

Member Point Loads (BLC 33 : 315 Wind - Ice)

	Member Label	Direction	Magnitude[k,k-ft]	Location[ft,%]
1	MP-1	X	-.017	.5
2	MP-1	X	-.009	2
3	MP-2	X	-.021	.5
4	MP-2	X	-.006	2
5	MP-4	X	-.017	.5
6	MP-5	X	-.021	.5
7	MP-5	X	-.01	2
8	MP-6	X	-.028	.5
9	MP-6	X	-.008	2
10	MP-8	X	-.021	.5
11	MP-9	X	-.013	.5
12	MP-9	X	-.008	2
13	MP-10	X	-.015	.5
14	MP-10	X	-.004	2
15	MP-12	X	-.013	.5
16	SF2-TH	X	-.008	1
17	M39	X	-.006	1
18	MP-1	X	-.017	6
19	MP-2	X	-.021	6
20	MP-4	X	-.017	6
21	MP-5	X	-.021	6
22	MP-6	X	-.028	6
23	MP-8	X	-.021	6
24	MP-9	X	-.013	6
25	MP-10	X	-.015	6
26	MP-12	X	-.013	6
27	MP-1	Z	.017	.5
28	MP-1	Z	.009	2
29	MP-2	Z	.021	.5
30	MP-2	Z	.006	2
31	MP-4	Z	.017	.5
32	MP-5	Z	.021	.5
33	MP-5	Z	.01	2
34	MP-6	Z	.028	.5
35	MP-6	Z	.008	2
36	MP-8	Z	.021	.5
37	MP-9	Z	.013	.5
38	MP-9	Z	.008	2
39	MP-10	Z	.015	.5

Member Point Loads (BLC 33 : 315 Wind - Ice) (Continued)

	Member Label	Direction	Magnitude[k,k-ft]	Location[ft,%]
40	MP-10	Z	.004	2
41	MP-12	Z	.013	.5
42	SF2-TH	Z	.008	1
43	M39	Z	.006	1
44	MP-1	Z	.017	6
45	MP-2	Z	.021	6
46	MP-4	Z	.017	6
47	MP-5	Z	.021	6
48	MP-6	Z	.028	6
49	MP-8	Z	.021	6
50	MP-9	Z	.013	6
51	MP-10	Z	.015	6
52	MP-12	Z	.013	6

Member Point Loads (BLC 34 : 330 Wind - Ice)

	Member Label	Direction	Magnitude[k,k-ft]	Location[ft,%]
1	MP-1	X	-.024	.5
2	MP-1	X	-.012	2
3	MP-2	X	-.031	.5
4	MP-2	X	-.009	2
5	MP-4	X	-.024	.5
6	MP-5	X	-.024	.5
7	MP-5	X	-.012	2
8	MP-6	X	-.031	.5
9	MP-6	X	-.009	2
10	MP-8	X	-.024	.5
11	MP-9	X	-.015	.5
12	MP-9	X	-.009	2
13	MP-10	X	-.017	.5
14	MP-10	X	-.005	2
15	MP-12	X	-.015	.5
16	SF2-TH	X	-.008	1
17	M39	X	-.008	1
18	MP-1	X	-.024	6
19	MP-2	X	-.031	6
20	MP-4	X	-.024	6
21	MP-5	X	-.024	6
22	MP-6	X	-.031	6
23	MP-8	X	-.024	6
24	MP-9	X	-.015	6
25	MP-10	X	-.017	6
26	MP-12	X	-.015	6
27	MP-1	Z	.014	.5
28	MP-1	Z	.007	2
29	MP-2	Z	.018	.5
30	MP-2	Z	.005	2
31	MP-4	Z	.014	.5
32	MP-5	Z	.014	.5
33	MP-5	Z	.007	2
34	MP-6	Z	.018	.5
35	MP-6	Z	.005	2

Member Point Loads (BLC 34 : 330 Wind - Ice) (Continued)

	Member Label	Direction	Magnitude[k,k-ft]	Location[ft,%]
36	MP-8	Z	.014	.5
37	MP-9	Z	.009	.5
38	MP-9	Z	.005	2
39	MP-10	Z	.01	.5
40	MP-10	Z	.003	2
41	MP-12	Z	.009	.5
42	SF2-TH	Z	.005	1
43	M39	Z	.005	1
44	MP-1	Z	.014	6
45	MP-2	Z	.018	6
46	MP-4	Z	.014	6
47	MP-5	Z	.014	6
48	MP-6	Z	.018	6
49	MP-8	Z	.014	6
50	MP-9	Z	.009	6
51	MP-10	Z	.01	6
52	MP-12	Z	.009	6

Member Point Loads (BLC 37 : Seismic Load X)

	Member Label	Direction	Magnitude[k,k-ft]	Location[ft,%]
1	MP-1	X	-.025	.5
2	MP-1	X	-.071	2
3	MP-2	X	-.04	.5
4	MP-2	X	-.043	2
5	MP-4	X	-.025	.5
6	MP-5	X	-.025	.5
7	MP-5	X	-.071	2
8	MP-6	X	-.04	.5
9	MP-6	X	-.043	2
10	MP-8	X	-.025	.5
11	MP-9	X	-.025	.5
12	MP-9	X	-.071	2
13	MP-10	X	-.04	.5
14	MP-10	X	-.043	2
15	MP-12	X	-.025	.5
16	SF2-TH	X	-.026	1
17	M39	X	-.026	1
18	MP-1	X	-.025	6
19	MP-2	X	-.04	6
20	MP-4	X	-.025	6
21	MP-5	X	-.025	6
22	MP-6	X	-.04	6
23	MP-8	X	-.025	6
24	MP-9	X	-.025	6
25	MP-10	X	-.04	6
26	MP-12	X	-.025	6

Member Point Loads (BLC 38 : Seismic Load Z)

	Member Label	Direction	Magnitude[k,k-ft]	Location[ft,%]
1	MP-1	Z	-.025	.5
2	MP-1	Z	-.071	2

Member Point Loads (BLC 38 : Seismic Load Z) (Continued)

	Member Label	Direction	Magnitude[k,k-ft]	Location[ft,%]
3	MP-2	Z	-.04	.5
4	MP-2	Z	-.043	2
5	MP-4	Z	-.025	.5
6	MP-5	Z	-.025	.5
7	MP-5	Z	-.071	2
8	MP-6	Z	-.04	.5
9	MP-6	Z	-.043	2
10	MP-8	Z	-.025	.5
11	MP-9	Z	-.025	.5
12	MP-9	Z	-.071	2
13	MP-10	Z	-.04	.5
14	MP-10	Z	-.043	2
15	MP-12	Z	-.025	.5
16	SF2-TH	Z	-.026	1
17	M39	Z	-.026	1
18	MP-1	Z	-.025	6
19	MP-2	Z	-.04	6
20	MP-4	Z	-.025	6
21	MP-5	Z	-.025	6
22	MP-6	Z	-.04	6
23	MP-8	Z	-.025	6
24	MP-9	Z	-.025	6
25	MP-10	Z	-.04	6
26	MP-12	Z	-.025	6

Member Distributed Loads (BLC 2 : 0 Wind - No Ice)

	Member Label	Direction	Start Magnitude[k/ft,...	End Magnitude[k/ft,F...	Start Location[ft,%]	End Location[ft,%]
1	FFTH1	X	-.006	-.006	0	%100
2	FFTH2	X	-.007	-.007	0	%100
3	FFTH3	X	-.006	-.006	0	%100
4	FFBH1	X	-.006	-.006	0	%100
5	FFBH2	X	-.007	-.007	0	%100
6	FFBH3	X	-.006	-.006	0	%100
7	MP-1	X	-.007	-.007	0	%100
8	MP-2	X	-.007	-.007	0	%100
9	MP-3	X	-.007	-.007	0	%100
10	MP-4	X	-.007	-.007	0	%100
11	SF2-TH	X	-.005	-.005	0	%100
12	SF2-BH	X	-.005	-.005	0	%100
13	SF2-V1	X	-.002	-.002	0	%100
14	SF2-V2	X	-.002	-.002	0	%100
15	SF2-D1	X	-.002	-.002	0	%100
16	SF3-TH	X	-.005	-.005	0	%100
17	SF3-BH	X	-.005	-.005	0	%100
18	SF3-V1	X	-.002	-.002	0	%100
19	SF3-V2	X	-.002	-.002	0	%100
20	SF3-D1	X	-.002	-.002	0	%100
21	BC-TH	X	-.003	-.003	0	%100
22	BC-BH	X	-.003	-.003	0	%100
23	SA-1	X	-.003	-.003	0	%100

Member Distributed Loads (BLC 2 : 0 Wind - No Ice) (Continued)

	Member Label	Direction	Start Magnitude[k/ft,...	End Magnitude[k/ft,F...	Start Location[ft,%]	End Location[ft,%]
24	M24	X	-.002	-.002	0	%100
25	M25	X	-.003	-.003	0	%100
26	M26	X	-.002	-.002	0	%100
27	M27	X	-.002	-.002	0	%100
28	M28	X	-.003	-.003	0	%100
29	M29	X	-.002	-.002	0	%100
30	MP-9	X	-.007	-.007	0	%100
31	MP-10	X	-.007	-.007	0	%100
32	MP-11	X	-.007	-.007	0	%100
33	MP-12	X	-.007	-.007	0	%100
34	M34	X	-.000316	-.000316	0	%100
35	M35	X	-.000316	-.000316	0	%100
36	M36	X	-.002	-.002	0	%100
37	M37	X	-.002	-.002	0	%100
38	M38	X	-.002	-.002	0	%100
39	M39	X	-.006	-.006	0	%100
40	M40	X	-.006	-.006	0	%100
41	M41	X	-.002	-.002	0	%100
42	M42	X	-.002	-.002	0	%100
43	M43	X	-.002	-.002	0	%100
44	M44	X	-.001	-.001	0	%100
45	M45	X	-.001	-.001	0	%100
46	M46	X	-.006	-.006	0	%100
47	M47	X	-.002	-.002	0	%100
48	M48	X	-.003	-.003	0	%100
49	M49	X	-.002	-.002	0	%100
50	M50	X	-.002	-.002	0	%100
51	M51	X	-.003	-.003	0	%100
52	M52	X	-.002	-.002	0	%100
53	MP-5	X	-.007	-.007	0	%100
54	MP-6	X	-.007	-.007	0	%100
55	MP-7	X	-.007	-.007	0	%100
56	MP-8	X	-.007	-.007	0	%100
57	M57	X	-.006	-.006	0	%100
58	M58	X	-.006	-.006	0	%100
59	M59	X	-.002	-.002	0	%100
60	M60	X	-.002	-.002	0	%100
61	M61	X	-.002	-.002	0	%100
62	M62	X	-.000316	-.000316	0	%100
63	M63	X	-.000316	-.000316	0	%100
64	M64	X	-.002	-.002	0	%100
65	M65	X	-.002	-.002	0	%100
66	M66	X	-.002	-.002	0	%100
67	M67	X	-.001	-.001	0	%100
68	M68	X	-.001	-.001	0	%100
69	M69	X	-.003	-.003	0	%100
70	Mast	X	-.008	-.008	0	%100
71	M71	X	-.008	-.008	0	%100
72	M72	X	-.008	-.008	0	%100

Member Distributed Loads (BLC 3 : 30 Wind - No Ice)

Member Label	Direction	Start Magnitude[k/ft	End Magnitude[k/ft,F	Start Location[ft,%]	End Location[ft,%]

Member Distributed Loads (BLC 3 : 30 Wind - No Ice) (Continued)

	Member Label	Direction	Start Magnitude[k/ft,...	End Magnitude[k/ft,F...	Start Location[ft,%]	End Location[ft,%]
1	FFTH1	X	-.004	-.004	0	%100
2	FFTH2	X	-.006	-.006	0	%100
3	FFTH3	X	-.004	-.004	0	%100
4	FFBH1	X	-.004	-.004	0	%100
5	FFBH2	X	-.006	-.006	0	%100
6	FFBH3	X	-.004	-.004	0	%100
7	MP-1	X	-.006	-.006	0	%100
8	MP-2	X	-.006	-.006	0	%100
9	MP-3	X	-.006	-.006	0	%100
10	MP-4	X	-.006	-.006	0	%100
11	SF2-TH	X	-.005	-.005	0	%100
12	SF2-BH	X	-.005	-.005	0	%100
13	SF2-V1	X	-.002	-.002	0	%100
14	SF2-V2	X	-.002	-.002	0	%100
15	SF2-D1	X	-.002	-.002	0	%100
16	SF3-TH	X	-.002	-.002	0	%100
17	SF3-BH	X	-.002	-.002	0	%100
18	SF3-V1	X	-.002	-.002	0	%100
19	SF3-V2	X	-.002	-.002	0	%100
20	SF3-D1	X	-.002	-.002	0	%100
21	BC-TH	X	-.002	-.002	0	%100
22	BC-BH	X	-.002	-.002	0	%100
23	SA-1	X	0	0	0	%100
24	M24	X	-.004	-.004	0	%100
25	M25	X	-.005	-.005	0	%100
26	M26	X	-.004	-.004	0	%100
27	M27	X	-.004	-.004	0	%100
28	M28	X	-.005	-.005	0	%100
29	M29	X	-.004	-.004	0	%100
30	MP-9	X	-.006	-.006	0	%100
31	MP-10	X	-.006	-.006	0	%100
32	MP-11	X	-.006	-.006	0	%100
33	MP-12	X	-.006	-.006	0	%100
34	M34	X	-.002	-.002	0	%100
35	M35	X	-.002	-.002	0	%100
36	M36	X	-.002	-.002	0	%100
37	M37	X	-.002	-.002	0	%100
38	M38	X	-.002	-.002	0	%100
39	M39	X	-.006	-.006	0	%100
40	M40	X	-.006	-.006	0	%100
41	M41	X	-.002	-.002	0	%100
42	M42	X	-.002	-.002	0	%100
43	M43	X	-.002	-.002	0	%100
44	M44	X	-.002	-.002	0	%100
45	M45	X	-.002	-.002	0	%100
46	M46	X	-.005	-.005	0	%100
47	M47	X	0	0	0	%100
48	M48	X	0	0	0	%100
49	M49	X	0	0	0	%100
50	M50	X	0	0	0	%100
51	M51	X	0	0	0	%100
52	M52	X	0	0	0	%100

Member Distributed Loads (BLC 3 : 30 Wind - No Ice) (Continued)

	Member Label	Direction	Start Magnitude[k/ft,...	End Magnitude[k/ft,F...	Start Location[ft,%]	End Location[ft,%]
53	MP-5	X	-.006	-.006	0	%100
54	MP-6	X	-.006	-.006	0	%100
55	MP-7	X	-.006	-.006	0	%100
56	MP-8	X	-.006	-.006	0	%100
57	M57	X	-.003	-.003	0	%100
58	M58	X	-.003	-.003	0	%100
59	M59	X	-.002	-.002	0	%100
60	M60	X	-.002	-.002	0	%100
61	M61	X	-.002	-.002	0	%100
62	M62	X	-.002	-.002	0	%100
63	M63	X	-.002	-.002	0	%100
64	M64	X	-.002	-.002	0	%100
65	M65	X	-.002	-.002	0	%100
66	M66	X	-.002	-.002	0	%100
67	M67	X	0	0	0	%100
68	M68	X	0	0	0	%100
69	M69	X	-.004	-.004	0	%100
70	Mast	X	-.007	-.007	0	%100
71	M71	X	-.007	-.007	0	%100
72	M72	X	-.007	-.007	0	%100
73	FFTH1	Z	-.002	-.002	0	%100
74	FFTH2	Z	-.003	-.003	0	%100
75	FFTH3	Z	-.002	-.002	0	%100
76	FFBH1	Z	-.002	-.002	0	%100
77	FFBH2	Z	-.003	-.003	0	%100
78	FFBH3	Z	-.002	-.002	0	%100
79	MP-1	Z	-.004	-.004	0	%100
80	MP-2	Z	-.004	-.004	0	%100
81	MP-3	Z	-.004	-.004	0	%100
82	MP-4	Z	-.004	-.004	0	%100
83	SF2-TH	Z	-.003	-.003	0	%100
84	SF2-BH	Z	-.003	-.003	0	%100
85	SF2-V1	Z	-.001	-.001	0	%100
86	SF2-V2	Z	-.001	-.001	0	%100
87	SF2-D1	Z	-.001	-.001	0	%100
88	SF3-TH	Z	-.001	-.001	0	%100
89	SF3-BH	Z	-.001	-.001	0	%100
90	SF3-V1	Z	-.001	-.001	0	%100
91	SF3-V2	Z	-.001	-.001	0	%100
92	SF3-D1	Z	-.001	-.001	0	%100
93	BC-TH	Z	-.001	-.001	0	%100
94	BC-BH	Z	-.001	-.001	0	%100
95	SA-1	Z	0	0	0	%100
96	M24	Z	-.002	-.002	0	%100
97	M25	Z	-.003	-.003	0	%100
98	M26	Z	-.002	-.002	0	%100
99	M27	Z	-.002	-.002	0	%100
100	M28	Z	-.003	-.003	0	%100
101	M29	Z	-.002	-.002	0	%100
102	MP-9	Z	-.004	-.004	0	%100
103	MP-10	Z	-.004	-.004	0	%100
104	MP-11	Z	-.004	-.004	0	%100

Member Distributed Loads (BLC 3 : 30 Wind - No Ice) (Continued)

	Member Label	Direction	Start Magnitude[k/ft,...	End Magnitude[k/ft,F...	Start Location[ft,%]	End Location[ft,%]
105	MP-12	Z	-.004	-.004	0	%100
106	M34	Z	-.001	-.001	0	%100
107	M35	Z	-.001	-.001	0	%100
108	M36	Z	-.001	-.001	0	%100
109	M37	Z	-.001	-.001	0	%100
110	M38	Z	-.001	-.001	0	%100
111	M39	Z	-.003	-.003	0	%100
112	M40	Z	-.003	-.003	0	%100
113	M41	Z	-.001	-.001	0	%100
114	M42	Z	-.001	-.001	0	%100
115	M43	Z	-.001	-.001	0	%100
116	M44	Z	-.001	-.001	0	%100
117	M45	Z	-.001	-.001	0	%100
118	M46	Z	-.003	-.003	0	%100
119	M47	Z	0	0	0	%100
120	M48	Z	0	0	0	%100
121	M49	Z	0	0	0	%100
122	M50	Z	0	0	0	%100
123	M51	Z	0	0	0	%100
124	M52	Z	0	0	0	%100
125	MP-5	Z	-.004	-.004	0	%100
126	MP-6	Z	-.004	-.004	0	%100
127	MP-7	Z	-.004	-.004	0	%100
128	MP-8	Z	-.004	-.004	0	%100
129	M57	Z	-.001	-.001	0	%100
130	M58	Z	-.001	-.001	0	%100
131	M59	Z	-.001	-.001	0	%100
132	M60	Z	-.001	-.001	0	%100
133	M61	Z	-.001	-.001	0	%100
134	M62	Z	-.002	-.002	0	%100
135	M63	Z	-.002	-.002	0	%100
136	M64	Z	-.001	-.001	0	%100
137	M65	Z	-.001	-.001	0	%100
138	M66	Z	-.001	-.001	0	%100
139	M67	Z	0	0	0	%100
140	M68	Z	0	0	0	%100
141	M69	Z	-.003	-.003	0	%100
142	Mast	Z	-.004	-.004	0	%100
143	M71	Z	-.004	-.004	0	%100
144	M72	Z	-.004	-.004	0	%100

Member Distributed Loads (BLC 4 : 45 Wind - No Ice)

	Member Label	Direction	Start Magnitude[k/ft,...	End Magnitude[k/ft,F...	Start Location[ft,%]	End Location[ft,%]
1	FFTH1	X	-.003	-.003	0	%100
2	FFTH2	X	-.004	-.004	0	%100
3	FFTH3	X	-.003	-.003	0	%100
4	FFBH1	X	-.003	-.003	0	%100
5	FFBH2	X	-.004	-.004	0	%100
6	FFBH3	X	-.003	-.003	0	%100
7	MP-1	X	-.005	-.005	0	%100
8	MP-2	X	-.005	-.005	0	%100

Member Distributed Loads (BLC 4 : 45 Wind - No Ice) (Continued)

	Member Label	Direction	Start Magnitude[k/ft,...	End Magnitude[k/ft,F...	Start Location[ft,%]	End Location[ft,%]
9	MP-3	X	-.005	-.005	0	%100
10	MP-4	X	-.005	-.005	0	%100
11	SF2-TH	X	-.004	-.004	0	%100
12	SF2-BH	X	-.004	-.004	0	%100
13	SF2-V1	X	-.002	-.002	0	%100
14	SF2-V2	X	-.002	-.002	0	%100
15	SF2-D1	X	-.002	-.002	0	%100
16	SF3-TH	X	-.000841	-.000841	0	%100
17	SF3-BH	X	-.000841	-.000841	0	%100
18	SF3-V1	X	-.002	-.002	0	%100
19	SF3-V2	X	-.002	-.002	0	%100
20	SF3-D1	X	-.002	-.002	0	%100
21	BC-TH	X	-.001	-.001	0	%100
22	BC-BH	X	-.001	-.001	0	%100
23	SA-1	X	-.00093	-.00093	0	%100
24	M24	X	-.003	-.003	0	%100
25	M25	X	-.005	-.005	0	%100
26	M26	X	-.003	-.003	0	%100
27	M27	X	-.003	-.003	0	%100
28	M28	X	-.005	-.005	0	%100
29	M29	X	-.003	-.003	0	%100
30	MP-9	X	-.005	-.005	0	%100
31	MP-10	X	-.005	-.005	0	%100
32	MP-11	X	-.005	-.005	0	%100
33	MP-12	X	-.005	-.005	0	%100
34	M34	X	-.002	-.002	0	%100
35	M35	X	-.002	-.002	0	%100
36	M36	X	-.002	-.002	0	%100
37	M37	X	-.002	-.002	0	%100
38	M38	X	-.002	-.002	0	%100
39	M39	X	-.004	-.004	0	%100
40	M40	X	-.004	-.004	0	%100
41	M41	X	-.002	-.002	0	%100
42	M42	X	-.002	-.002	0	%100
43	M43	X	-.002	-.002	0	%100
44	M44	X	-.002	-.002	0	%100
45	M45	X	-.002	-.002	0	%100
46	M46	X	-.003	-.003	0	%100
47	M47	X	-.00088	-.00088	0	%100
48	M48	X	-.001	-.001	0	%100
49	M49	X	-.00088	-.00088	0	%100
50	M50	X	-.00088	-.00088	0	%100
51	M51	X	-.001	-.001	0	%100
52	M52	X	-.00088	-.00088	0	%100
53	MP-5	X	-.005	-.005	0	%100
54	MP-6	X	-.005	-.005	0	%100
55	MP-7	X	-.005	-.005	0	%100
56	MP-8	X	-.005	-.005	0	%100
57	M57	X	-.002	-.002	0	%100
58	M58	X	-.002	-.002	0	%100
59	M59	X	-.002	-.002	0	%100
60	M60	X	-.002	-.002	0	%100

Member Distributed Loads (BLC 4 : 45 Wind - No Ice) (Continued)

	Member Label	Direction	Start Magnitude[k/ft,...	End Magnitude[k/ft,F...	Start Location[ft,%]	End Location[ft,%]
61	M61	X	-.002	-.002	0	%100
62	M62	X	-.002	-.002	0	%100
63	M63	X	-.002	-.002	0	%100
64	M64	X	-.002	-.002	0	%100
65	M65	X	-.002	-.002	0	%100
66	M66	X	-.002	-.002	0	%100
67	M67	X	-.000439	-.000439	0	%100
68	M68	X	-.000439	-.000439	0	%100
69	M69	X	-.003	-.003	0	%100
70	Mast	X	-.006	-.006	0	%100
71	M71	X	-.006	-.006	0	%100
72	M72	X	-.006	-.006	0	%100
73	FFTH1	Z	-.003	-.003	0	%100
74	FFTH2	Z	-.004	-.004	0	%100
75	FFTH3	Z	-.003	-.003	0	%100
76	FFBH1	Z	-.003	-.003	0	%100
77	FFBH2	Z	-.004	-.004	0	%100
78	FFBH3	Z	-.003	-.003	0	%100
79	MP-1	Z	-.005	-.005	0	%100
80	MP-2	Z	-.005	-.005	0	%100
81	MP-3	Z	-.005	-.005	0	%100
82	MP-4	Z	-.005	-.005	0	%100
83	SF2-TH	Z	-.004	-.004	0	%100
84	SF2-BH	Z	-.004	-.004	0	%100
85	SF2-V1	Z	-.002	-.002	0	%100
86	SF2-V2	Z	-.002	-.002	0	%100
87	SF2-D1	Z	-.002	-.002	0	%100
88	SF3-TH	Z	-.000739	-.000739	0	%100
89	SF3-BH	Z	-.000739	-.000739	0	%100
90	SF3-V1	Z	-.002	-.002	0	%100
91	SF3-V2	Z	-.002	-.002	0	%100
92	SF3-D1	Z	-.002	-.002	0	%100
93	BC-TH	Z	-.001	-.001	0	%100
94	BC-BH	Z	-.001	-.001	0	%100
95	SA-1	Z	-.001	-.001	0	%100
96	M24	Z	-.004	-.004	0	%100
97	M25	Z	-.005	-.005	0	%100
98	M26	Z	-.004	-.004	0	%100
99	M27	Z	-.004	-.004	0	%100
100	M28	Z	-.005	-.005	0	%100
101	M29	Z	-.004	-.004	0	%100
102	MP-9	Z	-.005	-.005	0	%100
103	MP-10	Z	-.005	-.005	0	%100
104	MP-11	Z	-.005	-.005	0	%100
105	MP-12	Z	-.005	-.005	0	%100
106	M34	Z	-.003	-.003	0	%100
107	M35	Z	-.003	-.003	0	%100
108	M36	Z	-.002	-.002	0	%100
109	M37	Z	-.002	-.002	0	%100
110	M38	Z	-.002	-.002	0	%100
111	M39	Z	-.003	-.003	0	%100
112	M40	Z	-.003	-.003	0	%100

Member Distributed Loads (BLC 4 : 45 Wind - No Ice) (Continued)

	Member Label	Direction	Start Magnitude[k/ft,...	End Magnitude[k/ft,F...	Start Location[ft,%]	End Location[ft,%]
113	M41	Z	-.002	-.002	0	%100
114	M42	Z	-.002	-.002	0	%100
115	M43	Z	-.002	-.002	0	%100
116	M44	Z	-.002	-.002	0	%100
117	M45	Z	-.002	-.002	0	%100
118	M46	Z	-.003	-.003	0	%100
119	M47	Z	-.000995	-.000995	0	%100
120	M48	Z	-.001	-.001	0	%100
121	M49	Z	-.000995	-.000995	0	%100
122	M50	Z	-.000995	-.000995	0	%100
123	M51	Z	-.001	-.001	0	%100
124	M52	Z	-.000995	-.000995	0	%100
125	MP-5	Z	-.005	-.005	0	%100
126	MP-6	Z	-.005	-.005	0	%100
127	MP-7	Z	-.005	-.005	0	%100
128	MP-8	Z	-.005	-.005	0	%100
129	M57	Z	-.001	-.001	0	%100
130	M58	Z	-.001	-.001	0	%100
131	M59	Z	-.002	-.002	0	%100
132	M60	Z	-.002	-.002	0	%100
133	M61	Z	-.002	-.002	0	%100
134	M62	Z	-.004	-.004	0	%100
135	M63	Z	-.004	-.004	0	%100
136	M64	Z	-.002	-.002	0	%100
137	M65	Z	-.002	-.002	0	%100
138	M66	Z	-.002	-.002	0	%100
139	M67	Z	-.000508	-.000508	0	%100
140	M68	Z	-.000508	-.000508	0	%100
141	M69	Z	-.004	-.004	0	%100
142	Mast	Z	-.006	-.006	0	%100
143	M71	Z	-.006	-.006	0	%100
144	M72	Z	-.006	-.006	0	%100

Member Distributed Loads (BLC 5 : 60 Wind - No Ice)

	Member Label	Direction	Start Magnitude[k/ft,...	End Magnitude[k/ft,F...	Start Location[ft,%]	End Location[ft,%]
1	FFTH1	X	-.001	-.001	0	%100
2	FFTH2	X	-.002	-.002	0	%100
3	FFTH3	X	-.001	-.001	0	%100
4	FFBH1	X	-.001	-.001	0	%100
5	FFBH2	X	-.002	-.002	0	%100
6	FFBH3	X	-.001	-.001	0	%100
7	MP-1	X	-.004	-.004	0	%100
8	MP-2	X	-.004	-.004	0	%100
9	MP-3	X	-.004	-.004	0	%100
10	MP-4	X	-.004	-.004	0	%100
11	SF2-TH	X	-.003	-.003	0	%100
12	SF2-BH	X	-.003	-.003	0	%100
13	SF2-V1	X	-.001	-.001	0	%100
14	SF2-V2	X	-.001	-.001	0	%100
15	SF2-D1	X	-.001	-.001	0	%100
16	SF3-TH	X	-.000235	-.000235	0	%100

Member Distributed Loads (BLC 5 : 60 Wind - No Ice) (Continued)

	Member Label	Direction	Start Magnitude[k/ft,...	End Magnitude[k/ft,F...	Start Location[ft,%]	End Location[ft,%]
17	SF3-BH	X	-.000235	-.000235	0	%100
18	SF3-V1	X	-.001	-.001	0	%100
19	SF3-V2	X	-.001	-.001	0	%100
20	SF3-D1	X	-.001	-.001	0	%100
21	BC-TH	X	-.000728	-.000728	0	%100
22	BC-BH	X	-.000728	-.000728	0	%100
23	SA-1	X	-.001	-.001	0	%100
24	M24	X	-.002	-.002	0	%100
25	M25	X	-.003	-.003	0	%100
26	M26	X	-.002	-.002	0	%100
27	M27	X	-.002	-.002	0	%100
28	M28	X	-.003	-.003	0	%100
29	M29	X	-.002	-.002	0	%100
30	MP-9	X	-.004	-.004	0	%100
31	MP-10	X	-.004	-.004	0	%100
32	MP-11	X	-.004	-.004	0	%100
33	MP-12	X	-.004	-.004	0	%100
34	M34	X	-.002	-.002	0	%100
35	M35	X	-.002	-.002	0	%100
36	M36	X	-.001	-.001	0	%100
37	M37	X	-.001	-.001	0	%100
38	M38	X	-.001	-.001	0	%100
39	M39	X	-.003	-.003	0	%100
40	M40	X	-.003	-.003	0	%100
41	M41	X	-.001	-.001	0	%100
42	M42	X	-.001	-.001	0	%100
43	M43	X	-.001	-.001	0	%100
44	M44	X	-.001	-.001	0	%100
45	M45	X	-.001	-.001	0	%100
46	M46	X	-.002	-.002	0	%100
47	M47	X	-.001	-.001	0	%100
48	M48	X	-.002	-.002	0	%100
49	M49	X	-.001	-.001	0	%100
50	M50	X	-.001	-.001	0	%100
51	M51	X	-.002	-.002	0	%100
52	M52	X	-.001	-.001	0	%100
53	MP-5	X	-.004	-.004	0	%100
54	MP-6	X	-.004	-.004	0	%100
55	MP-7	X	-.004	-.004	0	%100
56	MP-8	X	-.004	-.004	0	%100
57	M57	X	-.000243	-.000243	0	%100
58	M58	X	-.000243	-.000243	0	%100
59	M59	X	-.001	-.001	0	%100
60	M60	X	-.001	-.001	0	%100
61	M61	X	-.001	-.001	0	%100
62	M62	X	-.002	-.002	0	%100
63	M63	X	-.002	-.002	0	%100
64	M64	X	-.001	-.001	0	%100
65	M65	X	-.001	-.001	0	%100
66	M66	X	-.001	-.001	0	%100
67	M67	X	-.000599	-.000599	0	%100
68	M68	X	-.000599	-.000599	0	%100

Member Distributed Loads (BLC 5 : 60 Wind - No Ice) (Continued)

	Member Label	Direction	Start Magnitude[k/ft,...	End Magnitude[k/ft,F...	Start Location[ft,%]	End Location[ft,%]
69	M69	X	-.003	-.003	0	%100
70	Mast	X	-.004	-.004	0	%100
71	M71	X	-.004	-.004	0	%100
72	M72	X	-.004	-.004	0	%100
73	FFTH1	Z	-.002	-.002	0	%100
74	FFTH2	Z	-.003	-.003	0	%100
75	FFTH3	Z	-.002	-.002	0	%100
76	FFBH1	Z	-.002	-.002	0	%100
77	FFBH2	Z	-.003	-.003	0	%100
78	FFBH3	Z	-.002	-.002	0	%100
79	MP-1	Z	-.006	-.006	0	%100
80	MP-2	Z	-.006	-.006	0	%100
81	MP-3	Z	-.006	-.006	0	%100
82	MP-4	Z	-.006	-.006	0	%100
83	SF2-TH	Z	-.004	-.004	0	%100
84	SF2-BH	Z	-.004	-.004	0	%100
85	SF2-V1	Z	-.002	-.002	0	%100
86	SF2-V2	Z	-.002	-.002	0	%100
87	SF2-D1	Z	-.002	-.002	0	%100
88	SF3-TH	Z	-.000357	-.000357	0	%100
89	SF3-BH	Z	-.000357	-.000357	0	%100
90	SF3-V1	Z	-.002	-.002	0	%100
91	SF3-V2	Z	-.002	-.002	0	%100
92	SF3-D1	Z	-.002	-.002	0	%100
93	BC-TH	Z	-.001	-.001	0	%100
94	BC-BH	Z	-.001	-.001	0	%100
95	SA-1	Z	-.003	-.003	0	%100
96	M24	Z	-.005	-.005	0	%100
97	M25	Z	-.006	-.006	0	%100
98	M26	Z	-.005	-.005	0	%100
99	M27	Z	-.005	-.005	0	%100
100	M28	Z	-.006	-.006	0	%100
101	M29	Z	-.005	-.005	0	%100
102	MP-9	Z	-.006	-.006	0	%100
103	MP-10	Z	-.006	-.006	0	%100
104	MP-11	Z	-.006	-.006	0	%100
105	MP-12	Z	-.006	-.006	0	%100
106	M34	Z	-.005	-.005	0	%100
107	M35	Z	-.005	-.005	0	%100
108	M36	Z	-.002	-.002	0	%100
109	M37	Z	-.002	-.002	0	%100
110	M38	Z	-.002	-.002	0	%100
111	M39	Z	-.004	-.004	0	%100
112	M40	Z	-.004	-.004	0	%100
113	M41	Z	-.002	-.002	0	%100
114	M42	Z	-.002	-.002	0	%100
115	M43	Z	-.002	-.002	0	%100
116	M44	Z	-.002	-.002	0	%100
117	M45	Z	-.002	-.002	0	%100
118	M46	Z	-.003	-.003	0	%100
119	M47	Z	-.002	-.002	0	%100
120	M48	Z	-.003	-.003	0	%100

Member Distributed Loads (BLC 5 : 60 Wind - No Ice) (Continued)

	Member Label	Direction	Start Magnitude[k/ft,...	End Magnitude[k/ft,F...	Start Location[ft,%]	End Location[ft,%]
121	M49	Z	-.002	-.002	0	%100
122	M50	Z	-.002	-.002	0	%100
123	M51	Z	-.003	-.003	0	%100
124	M52	Z	-.002	-.002	0	%100
125	MP-5	Z	-.006	-.006	0	%100
126	MP-6	Z	-.006	-.006	0	%100
127	MP-7	Z	-.006	-.006	0	%100
128	MP-8	Z	-.006	-.006	0	%100
129	M57	Z	-.000333	-.000333	0	%100
130	M58	Z	-.000333	-.000333	0	%100
131	M59	Z	-.002	-.002	0	%100
132	M60	Z	-.002	-.002	0	%100
133	M61	Z	-.002	-.002	0	%100
134	M62	Z	-.005	-.005	0	%100
135	M63	Z	-.005	-.005	0	%100
136	M64	Z	-.002	-.002	0	%100
137	M65	Z	-.002	-.002	0	%100
138	M66	Z	-.002	-.002	0	%100
139	M67	Z	-.001	-.001	0	%100
140	M68	Z	-.001	-.001	0	%100
141	M69	Z	-.005	-.005	0	%100
142	Mast	Z	-.007	-.007	0	%100
143	M71	Z	-.007	-.007	0	%100
144	M72	Z	-.007	-.007	0	%100

Member Distributed Loads (BLC 6 : 90 Wind - No Ice)

	Member Label	Direction	Start Magnitude[k/ft,...	End Magnitude[k/ft,F...	Start Location[ft,%]	End Location[ft,%]
1	FFTH1	Z	0	0	0	%100
2	FFTH2	Z	0	0	0	%100
3	FFTH3	Z	0	0	0	%100
4	FFBH1	Z	0	0	0	%100
5	FFBH2	Z	0	0	0	%100
6	FFBH3	Z	0	0	0	%100
7	MP-1	Z	-.007	-.007	0	%100
8	MP-2	Z	-.007	-.007	0	%100
9	MP-3	Z	-.007	-.007	0	%100
10	MP-4	Z	-.007	-.007	0	%100
11	SF2-TH	Z	-.003	-.003	0	%100
12	SF2-BH	Z	-.003	-.003	0	%100
13	SF2-V1	Z	-.002	-.002	0	%100
14	SF2-V2	Z	-.002	-.002	0	%100
15	SF2-D1	Z	-.002	-.002	0	%100
16	SF3-TH	Z	-.003	-.003	0	%100
17	SF3-BH	Z	-.003	-.003	0	%100
18	SF3-V1	Z	-.002	-.002	0	%100
19	SF3-V2	Z	-.002	-.002	0	%100
20	SF3-D1	Z	-.002	-.002	0	%100
21	BC-TH	Z	0	0	0	%100
22	BC-BH	Z	0	0	0	%100
23	SA-1	Z	-.005	-.005	0	%100
24	M24	Z	-.005	-.005	0	%100

Member Distributed Loads (BLC 6 : 90 Wind - No Ice) (Continued)

	Member Label	Direction	Start Magnitude[k/ft,...	End Magnitude[k/ft,F...	Start Location[ft,%]	End Location[ft,%]
25	M25	Z	-.006	-.006	0	%100
26	M26	Z	-.005	-.005	0	%100
27	M27	Z	-.005	-.005	0	%100
28	M28	Z	-.006	-.006	0	%100
29	M29	Z	-.005	-.005	0	%100
30	MP-9	Z	-.007	-.007	0	%100
31	MP-10	Z	-.007	-.007	0	%100
32	MP-11	Z	-.007	-.007	0	%100
33	MP-12	Z	-.007	-.007	0	%100
34	M34	Z	-.007	-.007	0	%100
35	M35	Z	-.007	-.007	0	%100
36	M36	Z	-.002	-.002	0	%100
37	M37	Z	-.002	-.002	0	%100
38	M38	Z	-.002	-.002	0	%100
39	M39	Z	-.002	-.002	0	%100
40	M40	Z	-.002	-.002	0	%100
41	M41	Z	-.002	-.002	0	%100
42	M42	Z	-.002	-.002	0	%100
43	M43	Z	-.002	-.002	0	%100
44	M44	Z	-.002	-.002	0	%100
45	M45	Z	-.002	-.002	0	%100
46	M46	Z	0	0	0	%100
47	M47	Z	-.005	-.005	0	%100
48	M48	Z	-.006	-.006	0	%100
49	M49	Z	-.005	-.005	0	%100
50	M50	Z	-.005	-.005	0	%100
51	M51	Z	-.006	-.006	0	%100
52	M52	Z	-.005	-.005	0	%100
53	MP-5	Z	-.007	-.007	0	%100
54	MP-6	Z	-.007	-.007	0	%100
55	MP-7	Z	-.007	-.007	0	%100
56	MP-8	Z	-.007	-.007	0	%100
57	M57	Z	-.002	-.002	0	%100
58	M58	Z	-.002	-.002	0	%100
59	M59	Z	-.002	-.002	0	%100
60	M60	Z	-.002	-.002	0	%100
61	M61	Z	-.002	-.002	0	%100
62	M62	Z	-.007	-.007	0	%100
63	M63	Z	-.007	-.007	0	%100
64	M64	Z	-.002	-.002	0	%100
65	M65	Z	-.002	-.002	0	%100
66	M66	Z	-.002	-.002	0	%100
67	M67	Z	-.002	-.002	0	%100
68	M68	Z	-.002	-.002	0	%100
69	M69	Z	-.005	-.005	0	%100
70	Mast	Z	-.008	-.008	0	%100
71	M71	Z	-.008	-.008	0	%100
72	M72	Z	-.008	-.008	0	%100

Member Distributed Loads (BLC 7 : 120 Wind - No Ice)

Member Label	Direction	Start Magnitude[k/ft,...	End Magnitude[k/ft,F...	Start Location[ft,%]	End Location[ft,%]

Member Distributed Loads (BLC 7 : 120 Wind - No Ice) (Continued)

	Member Label	Direction	Start Magnitude[k/ft,...	End Magnitude[k/ft,F...	Start Location[ft,%]	End Location[ft,%]
1	FFTH1	X	.001	.001	0	%100
2	FFTH2	X	.002	.002	0	%100
3	FFTH3	X	.001	.001	0	%100
4	FFBH1	X	.001	.001	0	%100
5	FFBH2	X	.002	.002	0	%100
6	FFBH3	X	.001	.001	0	%100
7	MP-1	X	.004	.004	0	%100
8	MP-2	X	.004	.004	0	%100
9	MP-3	X	.004	.004	0	%100
10	MP-4	X	.004	.004	0	%100
11	SF2-TH	X	.000235	.000235	0	%100
12	SF2-BH	X	.000235	.000235	0	%100
13	SF2-V1	X	.001	.001	0	%100
14	SF2-V2	X	.001	.001	0	%100
15	SF2-D1	X	.001	.001	0	%100
16	SF3-TH	X	.003	.003	0	%100
17	SF3-BH	X	.003	.003	0	%100
18	SF3-V1	X	.001	.001	0	%100
19	SF3-V2	X	.001	.001	0	%100
20	SF3-D1	X	.001	.001	0	%100
21	BC-TH	X	.000728	.000728	0	%100
22	BC-BH	X	.000728	.000728	0	%100
23	SA-1	X	.003	.003	0	%100
24	M24	X	.001	.001	0	%100
25	M25	X	.002	.002	0	%100
26	M26	X	.001	.001	0	%100
27	M27	X	.001	.001	0	%100
28	M28	X	.002	.002	0	%100
29	M29	X	.001	.001	0	%100
30	MP-9	X	.004	.004	0	%100
31	MP-10	X	.004	.004	0	%100
32	MP-11	X	.004	.004	0	%100
33	MP-12	X	.004	.004	0	%100
34	M34	X	.002	.002	0	%100
35	M35	X	.002	.002	0	%100
36	M36	X	.001	.001	0	%100
37	M37	X	.001	.001	0	%100
38	M38	X	.001	.001	0	%100
39	M39	X	.000243	.000243	0	%100
40	M40	X	.000243	.000243	0	%100
41	M41	X	.001	.001	0	%100
42	M42	X	.001	.001	0	%100
43	M43	X	.001	.001	0	%100
44	M44	X	.000599	.000599	0	%100
45	M45	X	.000599	.000599	0	%100
46	M46	X	.002	.002	0	%100
47	M47	X	.002	.002	0	%100
48	M48	X	.003	.003	0	%100
49	M49	X	.002	.002	0	%100
50	M50	X	.002	.002	0	%100
51	M51	X	.003	.003	0	%100
52	M52	X	.002	.002	0	%100

Member Distributed Loads (BLC 7 : 120 Wind - No Ice) (Continued)

	Member Label	Direction	Start Magnitude[k/ft,...	End Magnitude[k/ft,F...	Start Location[ft,%]	End Location[ft,%]
53	MP-5	X	.004	.004	0	%100
54	MP-6	X	.004	.004	0	%100
55	MP-7	X	.004	.004	0	%100
56	MP-8	X	.004	.004	0	%100
57	M57	X	.003	.003	0	%100
58	M58	X	.003	.003	0	%100
59	M59	X	.001	.001	0	%100
60	M60	X	.001	.001	0	%100
61	M61	X	.001	.001	0	%100
62	M62	X	.002	.002	0	%100
63	M63	X	.002	.002	0	%100
64	M64	X	.001	.001	0	%100
65	M65	X	.001	.001	0	%100
66	M66	X	.001	.001	0	%100
67	M67	X	.001	.001	0	%100
68	M68	X	.001	.001	0	%100
69	M69	X	.001	.001	0	%100
70	Mast	X	.004	.004	0	%100
71	M71	X	.004	.004	0	%100
72	M72	X	.004	.004	0	%100
73	FFTH1	Z	-.002	-.002	0	%100
74	FFTH2	Z	-.003	-.003	0	%100
75	FFTH3	Z	-.002	-.002	0	%100
76	FFBH1	Z	-.002	-.002	0	%100
77	FFBH2	Z	-.003	-.003	0	%100
78	FFBH3	Z	-.002	-.002	0	%100
79	MP-1	Z	-.006	-.006	0	%100
80	MP-2	Z	-.006	-.006	0	%100
81	MP-3	Z	-.006	-.006	0	%100
82	MP-4	Z	-.006	-.006	0	%100
83	SF2-TH	Z	-.000357	-.000357	0	%100
84	SF2-BH	Z	-.000357	-.000357	0	%100
85	SF2-V1	Z	-.002	-.002	0	%100
86	SF2-V2	Z	-.002	-.002	0	%100
87	SF2-D1	Z	-.002	-.002	0	%100
88	SF3-TH	Z	-.004	-.004	0	%100
89	SF3-BH	Z	-.004	-.004	0	%100
90	SF3-V1	Z	-.002	-.002	0	%100
91	SF3-V2	Z	-.002	-.002	0	%100
92	SF3-D1	Z	-.002	-.002	0	%100
93	BC-TH	Z	-.001	-.001	0	%100
94	BC-BH	Z	-.001	-.001	0	%100
95	SA-1	Z	-.005	-.005	0	%100
96	M24	Z	-.002	-.002	0	%100
97	M25	Z	-.003	-.003	0	%100
98	M26	Z	-.002	-.002	0	%100
99	M27	Z	-.002	-.002	0	%100
100	M28	Z	-.003	-.003	0	%100
101	M29	Z	-.002	-.002	0	%100
102	MP-9	Z	-.006	-.006	0	%100
103	MP-10	Z	-.006	-.006	0	%100
104	MP-11	Z	-.006	-.006	0	%100

Member Distributed Loads (BLC 7 : 120 Wind - No Ice) (Continued)

	Member Label	Direction	Start Magnitude[k/ft,...	End Magnitude[k/ft,F...	Start Location[ft,%]	End Location[ft,%]
105	MP-12	Z	-.006	-.006	0	%100
106	M34	Z	-.005	-.005	0	%100
107	M35	Z	-.005	-.005	0	%100
108	M36	Z	-.002	-.002	0	%100
109	M37	Z	-.002	-.002	0	%100
110	M38	Z	-.002	-.002	0	%100
111	M39	Z	-.000333	-.000333	0	%100
112	M40	Z	-.000333	-.000333	0	%100
113	M41	Z	-.002	-.002	0	%100
114	M42	Z	-.002	-.002	0	%100
115	M43	Z	-.002	-.002	0	%100
116	M44	Z	-.001	-.001	0	%100
117	M45	Z	-.001	-.001	0	%100
118	M46	Z	-.003	-.003	0	%100
119	M47	Z	-.005	-.005	0	%100
120	M48	Z	-.006	-.006	0	%100
121	M49	Z	-.005	-.005	0	%100
122	M50	Z	-.005	-.005	0	%100
123	M51	Z	-.006	-.006	0	%100
124	M52	Z	-.005	-.005	0	%100
125	MP-5	Z	-.006	-.006	0	%100
126	MP-6	Z	-.006	-.006	0	%100
127	MP-7	Z	-.006	-.006	0	%100
128	MP-8	Z	-.006	-.006	0	%100
129	M57	Z	-.004	-.004	0	%100
130	M58	Z	-.004	-.004	0	%100
131	M59	Z	-.002	-.002	0	%100
132	M60	Z	-.002	-.002	0	%100
133	M61	Z	-.002	-.002	0	%100
134	M62	Z	-.005	-.005	0	%100
135	M63	Z	-.005	-.005	0	%100
136	M64	Z	-.002	-.002	0	%100
137	M65	Z	-.002	-.002	0	%100
138	M66	Z	-.002	-.002	0	%100
139	M67	Z	-.002	-.002	0	%100
140	M68	Z	-.002	-.002	0	%100
141	M69	Z	-.003	-.003	0	%100
142	Mast	Z	-.007	-.007	0	%100
143	M71	Z	-.007	-.007	0	%100
144	M72	Z	-.007	-.007	0	%100

Member Distributed Loads (BLC 8 : 135 Wind - No Ice)

	Member Label	Direction	Start Magnitude[k/ft,...	End Magnitude[k/ft,F...	Start Location[ft,%]	End Location[ft,%]
1	FFTH1	X	.003	.003	0	%100
2	FFTH2	X	.004	.004	0	%100
3	FFTH3	X	.003	.003	0	%100
4	FFBH1	X	.003	.003	0	%100
5	FFBH2	X	.004	.004	0	%100
6	FFBH3	X	.003	.003	0	%100
7	MP-1	X	.005	.005	0	%100
8	MP-2	X	.005	.005	0	%100

Member Distributed Loads (BLC 8 : 135 Wind - No Ice) (Continued)

	Member Label	Direction	Start Magnitude[k/ft,...	End Magnitude[k/ft,F...	Start Location[ft,%]	End Location[ft,%]
9	MP-3	X	.005	.005	0	%100
10	MP-4	X	.005	.005	0	%100
11	SF2-TH	X	.000841	.000841	0	%100
12	SF2-BH	X	.000841	.000841	0	%100
13	SF2-V1	X	.002	.002	0	%100
14	SF2-V2	X	.002	.002	0	%100
15	SF2-D1	X	.002	.002	0	%100
16	SF3-TH	X	.004	.004	0	%100
17	SF3-BH	X	.004	.004	0	%100
18	SF3-V1	X	.002	.002	0	%100
19	SF3-V2	X	.002	.002	0	%100
20	SF3-D1	X	.002	.002	0	%100
21	BC-TH	X	.001	.001	0	%100
22	BC-BH	X	.001	.001	0	%100
23	SA-1	X	.003	.003	0	%100
24	M24	X	.00088	.00088	0	%100
25	M25	X	.001	.001	0	%100
26	M26	X	.00088	.00088	0	%100
27	M27	X	.00088	.00088	0	%100
28	M28	X	.001	.001	0	%100
29	M29	X	.00088	.00088	0	%100
30	MP-9	X	.005	.005	0	%100
31	MP-10	X	.005	.005	0	%100
32	MP-11	X	.005	.005	0	%100
33	MP-12	X	.005	.005	0	%100
34	M34	X	.002	.002	0	%100
35	M35	X	.002	.002	0	%100
36	M36	X	.002	.002	0	%100
37	M37	X	.002	.002	0	%100
38	M38	X	.002	.002	0	%100
39	M39	X	.002	.002	0	%100
40	M40	X	.002	.002	0	%100
41	M41	X	.002	.002	0	%100
42	M42	X	.002	.002	0	%100
43	M43	X	.002	.002	0	%100
44	M44	X	.000439	.000439	0	%100
45	M45	X	.000439	.000439	0	%100
46	M46	X	.003	.003	0	%100
47	M47	X	.003	.003	0	%100
48	M48	X	.005	.005	0	%100
49	M49	X	.003	.003	0	%100
50	M50	X	.003	.003	0	%100
51	M51	X	.005	.005	0	%100
52	M52	X	.003	.003	0	%100
53	MP-5	X	.005	.005	0	%100
54	MP-6	X	.005	.005	0	%100
55	MP-7	X	.005	.005	0	%100
56	MP-8	X	.005	.005	0	%100
57	M57	X	.004	.004	0	%100
58	M58	X	.004	.004	0	%100
59	M59	X	.002	.002	0	%100
60	M60	X	.002	.002	0	%100

Member Distributed Loads (BLC 8 : 135 Wind - No Ice) (Continued)

	Member Label	Direction	Start Magnitude[k/ft,...	End Magnitude[k/ft,F...	Start Location[ft,%]	End Location[ft,%]
61	M61	X	.002	.002	0	%100
62	M62	X	.002	.002	0	%100
63	M63	X	.002	.002	0	%100
64	M64	X	.002	.002	0	%100
65	M65	X	.002	.002	0	%100
66	M66	X	.002	.002	0	%100
67	M67	X	.002	.002	0	%100
68	M68	X	.002	.002	0	%100
69	M69	X	.00093	.00093	0	%100
70	Mast	X	.006	.006	0	%100
71	M71	X	.006	.006	0	%100
72	M72	X	.006	.006	0	%100
73	FFTH1	Z	-.003	-.003	0	%100
74	FFTH2	Z	-.004	-.004	0	%100
75	FFTH3	Z	-.003	-.003	0	%100
76	FFBH1	Z	-.003	-.003	0	%100
77	FFBH2	Z	-.004	-.004	0	%100
78	FFBH3	Z	-.003	-.003	0	%100
79	MP-1	Z	-.005	-.005	0	%100
80	MP-2	Z	-.005	-.005	0	%100
81	MP-3	Z	-.005	-.005	0	%100
82	MP-4	Z	-.005	-.005	0	%100
83	SF2-TH	Z	-.000739	-.000739	0	%100
84	SF2-BH	Z	-.000739	-.000739	0	%100
85	SF2-V1	Z	-.002	-.002	0	%100
86	SF2-V2	Z	-.002	-.002	0	%100
87	SF2-D1	Z	-.002	-.002	0	%100
88	SF3-TH	Z	-.004	-.004	0	%100
89	SF3-BH	Z	-.004	-.004	0	%100
90	SF3-V1	Z	-.002	-.002	0	%100
91	SF3-V2	Z	-.002	-.002	0	%100
92	SF3-D1	Z	-.002	-.002	0	%100
93	BC-TH	Z	-.001	-.001	0	%100
94	BC-BH	Z	-.001	-.001	0	%100
95	SA-1	Z	-.004	-.004	0	%100
96	M24	Z	-.000995	-.000995	0	%100
97	M25	Z	-.001	-.001	0	%100
98	M26	Z	-.000995	-.000995	0	%100
99	M27	Z	-.000995	-.000995	0	%100
100	M28	Z	-.001	-.001	0	%100
101	M29	Z	-.000995	-.000995	0	%100
102	MP-9	Z	-.005	-.005	0	%100
103	MP-10	Z	-.005	-.005	0	%100
104	MP-11	Z	-.005	-.005	0	%100
105	MP-12	Z	-.005	-.005	0	%100
106	M34	Z	-.004	-.004	0	%100
107	M35	Z	-.004	-.004	0	%100
108	M36	Z	-.002	-.002	0	%100
109	M37	Z	-.002	-.002	0	%100
110	M38	Z	-.002	-.002	0	%100
111	M39	Z	-.001	-.001	0	%100
112	M40	Z	-.001	-.001	0	%100

Member Distributed Loads (BLC 8 : 135 Wind - No Ice) (Continued)

	Member Label	Direction	Start Magnitude[k/ft,...	End Magnitude[k/ft,F...	Start Location[ft,%]	End Location[ft,%]
113	M41	Z	-.002	-.002	0	%100
114	M42	Z	-.002	-.002	0	%100
115	M43	Z	-.002	-.002	0	%100
116	M44	Z	-.000508	-.000508	0	%100
117	M45	Z	-.000508	-.000508	0	%100
118	M46	Z	-.003	-.003	0	%100
119	M47	Z	-.004	-.004	0	%100
120	M48	Z	-.005	-.005	0	%100
121	M49	Z	-.004	-.004	0	%100
122	M50	Z	-.004	-.004	0	%100
123	M51	Z	-.005	-.005	0	%100
124	M52	Z	-.004	-.004	0	%100
125	MP-5	Z	-.005	-.005	0	%100
126	MP-6	Z	-.005	-.005	0	%100
127	MP-7	Z	-.005	-.005	0	%100
128	MP-8	Z	-.005	-.005	0	%100
129	M57	Z	-.003	-.003	0	%100
130	M58	Z	-.003	-.003	0	%100
131	M59	Z	-.002	-.002	0	%100
132	M60	Z	-.002	-.002	0	%100
133	M61	Z	-.002	-.002	0	%100
134	M62	Z	-.003	-.003	0	%100
135	M63	Z	-.003	-.003	0	%100
136	M64	Z	-.002	-.002	0	%100
137	M65	Z	-.002	-.002	0	%100
138	M66	Z	-.002	-.002	0	%100
139	M67	Z	-.002	-.002	0	%100
140	M68	Z	-.002	-.002	0	%100
141	M69	Z	-.001	-.001	0	%100
142	Mast	Z	-.006	-.006	0	%100
143	M71	Z	-.006	-.006	0	%100
144	M72	Z	-.006	-.006	0	%100

Member Distributed Loads (BLC 9 : 150 Wind - No Ice)

	Member Label	Direction	Start Magnitude[k/ft,...	End Magnitude[k/ft,F...	Start Location[ft,%]	End Location[ft,%]
1	FFTH1	X	.004	.004	0	%100
2	FFTH2	X	.006	.006	0	%100
3	FFTH3	X	.004	.004	0	%100
4	FFBH1	X	.004	.004	0	%100
5	FFBH2	X	.006	.006	0	%100
6	FFBH3	X	.004	.004	0	%100
7	MP-1	X	.006	.006	0	%100
8	MP-2	X	.006	.006	0	%100
9	MP-3	X	.006	.006	0	%100
10	MP-4	X	.006	.006	0	%100
11	SF2-TH	X	.002	.002	0	%100
12	SF2-BH	X	.002	.002	0	%100
13	SF2-V1	X	.002	.002	0	%100
14	SF2-V2	X	.002	.002	0	%100
15	SF2-D1	X	.002	.002	0	%100
16	SF3-TH	X	.005	.005	0	%100

Member Distributed Loads (BLC 9 : 150 Wind - No Ice) (Continued)

	Member Label	Direction	Start Magnitude[k/ft,...	End Magnitude[k/ft,F...	Start Location[ft,%]	End Location[ft,%]
17	SF3-BH	X	.005	.005	0	%100
18	SF3-V1	X	.002	.002	0	%100
19	SF3-V2	X	.002	.002	0	%100
20	SF3-D1	X	.002	.002	0	%100
21	BC-TH	X	.002	.002	0	%100
22	BC-BH	X	.002	.002	0	%100
23	SA-1	X	.004	.004	0	%100
24	M24	X	0	0	0	%100
25	M25	X	0	0	0	%100
26	M26	X	0	0	0	%100
27	M27	X	0	0	0	%100
28	M28	X	0	0	0	%100
29	M29	X	0	0	0	%100
30	MP-9	X	.006	.006	0	%100
31	MP-10	X	.006	.006	0	%100
32	MP-11	X	.006	.006	0	%100
33	MP-12	X	.006	.006	0	%100
34	M34	X	.002	.002	0	%100
35	M35	X	.002	.002	0	%100
36	M36	X	.002	.002	0	%100
37	M37	X	.002	.002	0	%100
38	M38	X	.002	.002	0	%100
39	M39	X	.003	.003	0	%100
40	M40	X	.003	.003	0	%100
41	M41	X	.002	.002	0	%100
42	M42	X	.002	.002	0	%100
43	M43	X	.002	.002	0	%100
44	M44	X	0	0	0	%100
45	M45	X	0	0	0	%100
46	M46	X	.005	.005	0	%100
47	M47	X	.004	.004	0	%100
48	M48	X	.005	.005	0	%100
49	M49	X	.004	.004	0	%100
50	M50	X	.004	.004	0	%100
51	M51	X	.005	.005	0	%100
52	M52	X	.004	.004	0	%100
53	MP-5	X	.006	.006	0	%100
54	MP-6	X	.006	.006	0	%100
55	MP-7	X	.006	.006	0	%100
56	MP-8	X	.006	.006	0	%100
57	M57	X	.006	.006	0	%100
58	M58	X	.006	.006	0	%100
59	M59	X	.002	.002	0	%100
60	M60	X	.002	.002	0	%100
61	M61	X	.002	.002	0	%100
62	M62	X	.002	.002	0	%100
63	M63	X	.002	.002	0	%100
64	M64	X	.002	.002	0	%100
65	M65	X	.002	.002	0	%100
66	M66	X	.002	.002	0	%100
67	M67	X	.002	.002	0	%100
68	M68	X	.002	.002	0	%100

Member Distributed Loads (BLC 9 : 150 Wind - No Ice) (Continued)

	Member Label	Direction	Start Magnitude[k/ft,...	End Magnitude[k/ft,F...	Start Location[ft,%]	End Location[ft,%]
69	M69	X	0	0	0	%100
70	Mast	X	.007	.007	0	%100
71	M71	X	.007	.007	0	%100
72	M72	X	.007	.007	0	%100
73	FFTH1	Z	-.002	-.002	0	%100
74	FFTH2	Z	-.003	-.003	0	%100
75	FFTH3	Z	-.002	-.002	0	%100
76	FFBH1	Z	-.002	-.002	0	%100
77	FFBH2	Z	-.003	-.003	0	%100
78	FFBH3	Z	-.002	-.002	0	%100
79	MP-1	Z	-.004	-.004	0	%100
80	MP-2	Z	-.004	-.004	0	%100
81	MP-3	Z	-.004	-.004	0	%100
82	MP-4	Z	-.004	-.004	0	%100
83	SF2-TH	Z	-.001	-.001	0	%100
84	SF2-BH	Z	-.001	-.001	0	%100
85	SF2-V1	Z	-.001	-.001	0	%100
86	SF2-V2	Z	-.001	-.001	0	%100
87	SF2-D1	Z	-.001	-.001	0	%100
88	SF3-TH	Z	-.003	-.003	0	%100
89	SF3-BH	Z	-.003	-.003	0	%100
90	SF3-V1	Z	-.001	-.001	0	%100
91	SF3-V2	Z	-.001	-.001	0	%100
92	SF3-D1	Z	-.001	-.001	0	%100
93	BC-TH	Z	-.001	-.001	0	%100
94	BC-BH	Z	-.001	-.001	0	%100
95	SA-1	Z	-.003	-.003	0	%100
96	M24	Z	0	0	0	%100
97	M25	Z	0	0	0	%100
98	M26	Z	0	0	0	%100
99	M27	Z	0	0	0	%100
100	M28	Z	0	0	0	%100
101	M29	Z	0	0	0	%100
102	MP-9	Z	-.004	-.004	0	%100
103	MP-10	Z	-.004	-.004	0	%100
104	MP-11	Z	-.004	-.004	0	%100
105	MP-12	Z	-.004	-.004	0	%100
106	M34	Z	-.002	-.002	0	%100
107	M35	Z	-.002	-.002	0	%100
108	M36	Z	-.001	-.001	0	%100
109	M37	Z	-.001	-.001	0	%100
110	M38	Z	-.001	-.001	0	%100
111	M39	Z	-.001	-.001	0	%100
112	M40	Z	-.001	-.001	0	%100
113	M41	Z	-.001	-.001	0	%100
114	M42	Z	-.001	-.001	0	%100
115	M43	Z	-.001	-.001	0	%100
116	M44	Z	0	0	0	%100
117	M45	Z	0	0	0	%100
118	M46	Z	-.003	-.003	0	%100
119	M47	Z	-.002	-.002	0	%100
120	M48	Z	-.003	-.003	0	%100

Member Distributed Loads (BLC 9 : 150 Wind - No Ice) (Continued)

	Member Label	Direction	Start Magnitude[k/ft,...	End Magnitude[k/ft,F...	Start Location[ft,%]	End Location[ft,%]
121	M49	Z	-.002	-.002	0	%100
122	M50	Z	-.002	-.002	0	%100
123	M51	Z	-.003	-.003	0	%100
124	M52	Z	-.002	-.002	0	%100
125	MP-5	Z	-.004	-.004	0	%100
126	MP-6	Z	-.004	-.004	0	%100
127	MP-7	Z	-.004	-.004	0	%100
128	MP-8	Z	-.004	-.004	0	%100
129	M57	Z	-.003	-.003	0	%100
130	M58	Z	-.003	-.003	0	%100
131	M59	Z	-.001	-.001	0	%100
132	M60	Z	-.001	-.001	0	%100
133	M61	Z	-.001	-.001	0	%100
134	M62	Z	-.001	-.001	0	%100
135	M63	Z	-.001	-.001	0	%100
136	M64	Z	-.001	-.001	0	%100
137	M65	Z	-.001	-.001	0	%100
138	M66	Z	-.001	-.001	0	%100
139	M67	Z	-.001	-.001	0	%100
140	M68	Z	-.001	-.001	0	%100
141	M69	Z	0	0	0	%100
142	Mast	Z	-.004	-.004	0	%100
143	M71	Z	-.004	-.004	0	%100
144	M72	Z	-.004	-.004	0	%100

Member Distributed Loads (BLC 10 : 180 Wind - No Ice)

	Member Label	Direction	Start Magnitude[k/ft,...	End Magnitude[k/ft,F...	Start Location[ft,%]	End Location[ft,%]
1	FFTH1	X	.006	.006	0	%100
2	FFTH2	X	.007	.007	0	%100
3	FFTH3	X	.006	.006	0	%100
4	FFBH1	X	.006	.006	0	%100
5	FFBH2	X	.007	.007	0	%100
6	FFBH3	X	.006	.006	0	%100
7	MP-1	X	.007	.007	0	%100
8	MP-2	X	.007	.007	0	%100
9	MP-3	X	.007	.007	0	%100
10	MP-4	X	.007	.007	0	%100
11	SF2-TH	X	.005	.005	0	%100
12	SF2-BH	X	.005	.005	0	%100
13	SF2-V1	X	.002	.002	0	%100
14	SF2-V2	X	.002	.002	0	%100
15	SF2-D1	X	.002	.002	0	%100
16	SF3-TH	X	.005	.005	0	%100
17	SF3-BH	X	.005	.005	0	%100
18	SF3-V1	X	.002	.002	0	%100
19	SF3-V2	X	.002	.002	0	%100
20	SF3-D1	X	.002	.002	0	%100
21	BC-TH	X	.003	.003	0	%100
22	BC-BH	X	.003	.003	0	%100
23	SA-1	X	.003	.003	0	%100
24	M24	X	.002	.002	0	%100

Member Distributed Loads (BLC 10 : 180 Wind - No Ice) (Continued)

	Member Label	Direction	Start Magnitude[k/ft,...	End Magnitude[k/ft,F...	Start Location[ft,%]	End Location[ft,%]
25	M25	X	.003	.003	0	%100
26	M26	X	.002	.002	0	%100
27	M27	X	.002	.002	0	%100
28	M28	X	.003	.003	0	%100
29	M29	X	.002	.002	0	%100
30	MP-9	X	.007	.007	0	%100
31	MP-10	X	.007	.007	0	%100
32	MP-11	X	.007	.007	0	%100
33	MP-12	X	.007	.007	0	%100
34	M34	X	.000316	.000316	0	%100
35	M35	X	.000316	.000316	0	%100
36	M36	X	.002	.002	0	%100
37	M37	X	.002	.002	0	%100
38	M38	X	.002	.002	0	%100
39	M39	X	.006	.006	0	%100
40	M40	X	.006	.006	0	%100
41	M41	X	.002	.002	0	%100
42	M42	X	.002	.002	0	%100
43	M43	X	.002	.002	0	%100
44	M44	X	.001	.001	0	%100
45	M45	X	.001	.001	0	%100
46	M46	X	.006	.006	0	%100
47	M47	X	.002	.002	0	%100
48	M48	X	.003	.003	0	%100
49	M49	X	.002	.002	0	%100
50	M50	X	.002	.002	0	%100
51	M51	X	.003	.003	0	%100
52	M52	X	.002	.002	0	%100
53	MP-5	X	.007	.007	0	%100
54	MP-6	X	.007	.007	0	%100
55	MP-7	X	.007	.007	0	%100
56	MP-8	X	.007	.007	0	%100
57	M57	X	.006	.006	0	%100
58	M58	X	.006	.006	0	%100
59	M59	X	.002	.002	0	%100
60	M60	X	.002	.002	0	%100
61	M61	X	.002	.002	0	%100
62	M62	X	.000316	.000316	0	%100
63	M63	X	.000316	.000316	0	%100
64	M64	X	.002	.002	0	%100
65	M65	X	.002	.002	0	%100
66	M66	X	.002	.002	0	%100
67	M67	X	.001	.001	0	%100
68	M68	X	.001	.001	0	%100
69	M69	X	.003	.003	0	%100
70	Mast	X	.008	.008	0	%100
71	M71	X	.008	.008	0	%100
72	M72	X	.008	.008	0	%100

Member Distributed Loads (BLC 11 : 210 Wind - No Ice)

	Member Label	Direction	Start Magnitude[k/ft,...	End Magnitude[k/ft,F...	Start Location[ft,%]	End Location[ft,%]

Member Distributed Loads (BLC 11 : 210 Wind - No Ice) (Continued)

	Member Label	Direction	Start Magnitude[k/ft,...	End Magnitude[k/ft,F...	Start Location[ft,%]	End Location[ft,%]
1	FFTH1	X	.004	.004	0	%100
2	FFTH2	X	.006	.006	0	%100
3	FFTH3	X	.004	.004	0	%100
4	FFBH1	X	.004	.004	0	%100
5	FFBH2	X	.006	.006	0	%100
6	FFBH3	X	.004	.004	0	%100
7	MP-1	X	.006	.006	0	%100
8	MP-2	X	.006	.006	0	%100
9	MP-3	X	.006	.006	0	%100
10	MP-4	X	.006	.006	0	%100
11	SF2-TH	X	.005	.005	0	%100
12	SF2-BH	X	.005	.005	0	%100
13	SF2-V1	X	.002	.002	0	%100
14	SF2-V2	X	.002	.002	0	%100
15	SF2-D1	X	.002	.002	0	%100
16	SF3-TH	X	.002	.002	0	%100
17	SF3-BH	X	.002	.002	0	%100
18	SF3-V1	X	.002	.002	0	%100
19	SF3-V2	X	.002	.002	0	%100
20	SF3-D1	X	.002	.002	0	%100
21	BC-TH	X	.002	.002	0	%100
22	BC-BH	X	.002	.002	0	%100
23	SA-1	X	0	0	0	%100
24	M24	X	.004	.004	0	%100
25	M25	X	.005	.005	0	%100
26	M26	X	.004	.004	0	%100
27	M27	X	.004	.004	0	%100
28	M28	X	.005	.005	0	%100
29	M29	X	.004	.004	0	%100
30	MP-9	X	.006	.006	0	%100
31	MP-10	X	.006	.006	0	%100
32	MP-11	X	.006	.006	0	%100
33	MP-12	X	.006	.006	0	%100
34	M34	X	.002	.002	0	%100
35	M35	X	.002	.002	0	%100
36	M36	X	.002	.002	0	%100
37	M37	X	.002	.002	0	%100
38	M38	X	.002	.002	0	%100
39	M39	X	.006	.006	0	%100
40	M40	X	.006	.006	0	%100
41	M41	X	.002	.002	0	%100
42	M42	X	.002	.002	0	%100
43	M43	X	.002	.002	0	%100
44	M44	X	.002	.002	0	%100
45	M45	X	.002	.002	0	%100
46	M46	X	.005	.005	0	%100
47	M47	X	0	0	0	%100
48	M48	X	0	0	0	%100
49	M49	X	0	0	0	%100
50	M50	X	0	0	0	%100
51	M51	X	0	0	0	%100
52	M52	X	0	0	0	%100

Member Distributed Loads (BLC 11 : 210 Wind - No Ice) (Continued)

	Member Label	Direction	Start Magnitude[k/ft,...	End Magnitude[k/ft,F...	Start Location[ft,%]	End Location[ft,%]
53	MP-5	X	.006	.006	0	%100
54	MP-6	X	.006	.006	0	%100
55	MP-7	X	.006	.006	0	%100
56	MP-8	X	.006	.006	0	%100
57	M57	X	.003	.003	0	%100
58	M58	X	.003	.003	0	%100
59	M59	X	.002	.002	0	%100
60	M60	X	.002	.002	0	%100
61	M61	X	.002	.002	0	%100
62	M62	X	.002	.002	0	%100
63	M63	X	.002	.002	0	%100
64	M64	X	.002	.002	0	%100
65	M65	X	.002	.002	0	%100
66	M66	X	.002	.002	0	%100
67	M67	X	0	0	0	%100
68	M68	X	0	0	0	%100
69	M69	X	.004	.004	0	%100
70	Mast	X	.007	.007	0	%100
71	M71	X	.007	.007	0	%100
72	M72	X	.007	.007	0	%100
73	FFTH1	Z	.002	.002	0	%100
74	FFTH2	Z	.003	.003	0	%100
75	FFTH3	Z	.002	.002	0	%100
76	FFBH1	Z	.002	.002	0	%100
77	FFBH2	Z	.003	.003	0	%100
78	FFBH3	Z	.002	.002	0	%100
79	MP-1	Z	.004	.004	0	%100
80	MP-2	Z	.004	.004	0	%100
81	MP-3	Z	.004	.004	0	%100
82	MP-4	Z	.004	.004	0	%100
83	SF2-TH	Z	.003	.003	0	%100
84	SF2-BH	Z	.003	.003	0	%100
85	SF2-V1	Z	.001	.001	0	%100
86	SF2-V2	Z	.001	.001	0	%100
87	SF2-D1	Z	.001	.001	0	%100
88	SF3-TH	Z	.001	.001	0	%100
89	SF3-BH	Z	.001	.001	0	%100
90	SF3-V1	Z	.001	.001	0	%100
91	SF3-V2	Z	.001	.001	0	%100
92	SF3-D1	Z	.001	.001	0	%100
93	BC-TH	Z	.001	.001	0	%100
94	BC-BH	Z	.001	.001	0	%100
95	SA-1	Z	0	0	0	%100
96	M24	Z	.002	.002	0	%100
97	M25	Z	.003	.003	0	%100
98	M26	Z	.002	.002	0	%100
99	M27	Z	.002	.002	0	%100
100	M28	Z	.003	.003	0	%100
101	M29	Z	.002	.002	0	%100
102	MP-9	Z	.004	.004	0	%100
103	MP-10	Z	.004	.004	0	%100
104	MP-11	Z	.004	.004	0	%100

Member Distributed Loads (BLC 11 : 210 Wind - No Ice) (Continued)

	Member Label	Direction	Start Magnitude[k/ft,...	End Magnitude[k/ft,F...	Start Location[ft,%]	End Location[ft,%]
105	MP-12	Z	.004	.004	0	%100
106	M34	Z	.001	.001	0	%100
107	M35	Z	.001	.001	0	%100
108	M36	Z	.001	.001	0	%100
109	M37	Z	.001	.001	0	%100
110	M38	Z	.001	.001	0	%100
111	M39	Z	.003	.003	0	%100
112	M40	Z	.003	.003	0	%100
113	M41	Z	.001	.001	0	%100
114	M42	Z	.001	.001	0	%100
115	M43	Z	.001	.001	0	%100
116	M44	Z	.001	.001	0	%100
117	M45	Z	.001	.001	0	%100
118	M46	Z	.003	.003	0	%100
119	M47	Z	0	0	0	%100
120	M48	Z	0	0	0	%100
121	M49	Z	0	0	0	%100
122	M50	Z	0	0	0	%100
123	M51	Z	0	0	0	%100
124	M52	Z	0	0	0	%100
125	MP-5	Z	.004	.004	0	%100
126	MP-6	Z	.004	.004	0	%100
127	MP-7	Z	.004	.004	0	%100
128	MP-8	Z	.004	.004	0	%100
129	M57	Z	.001	.001	0	%100
130	M58	Z	.001	.001	0	%100
131	M59	Z	.001	.001	0	%100
132	M60	Z	.001	.001	0	%100
133	M61	Z	.001	.001	0	%100
134	M62	Z	.002	.002	0	%100
135	M63	Z	.002	.002	0	%100
136	M64	Z	.001	.001	0	%100
137	M65	Z	.001	.001	0	%100
138	M66	Z	.001	.001	0	%100
139	M67	Z	0	0	0	%100
140	M68	Z	0	0	0	%100
141	M69	Z	.003	.003	0	%100
142	Mast	Z	.004	.004	0	%100
143	M71	Z	.004	.004	0	%100
144	M72	Z	.004	.004	0	%100

Member Distributed Loads (BLC 12 : 225 Wind - No Ice)

	Member Label	Direction	Start Magnitude[k/ft,...	End Magnitude[k/ft,F...	Start Location[ft,%]	End Location[ft,%]
1	FFTH1	X	.003	.003	0	%100
2	FFTH2	X	.004	.004	0	%100
3	FFTH3	X	.003	.003	0	%100
4	FFBH1	X	.003	.003	0	%100
5	FFBH2	X	.004	.004	0	%100
6	FFBH3	X	.003	.003	0	%100
7	MP-1	X	.005	.005	0	%100
8	MP-2	X	.005	.005	0	%100

Member Distributed Loads (BLC 12 : 225 Wind - No Ice) (Continued)

	Member Label	Direction	Start Magnitude[k/ft,...	End Magnitude[k/ft,F...	Start Location[ft,%]	End Location[ft,%]
9	MP-3	X	.005	.005	0	%100
10	MP-4	X	.005	.005	0	%100
11	SF2-TH	X	.004	.004	0	%100
12	SF2-BH	X	.004	.004	0	%100
13	SF2-V1	X	.002	.002	0	%100
14	SF2-V2	X	.002	.002	0	%100
15	SF2-D1	X	.002	.002	0	%100
16	SF3-TH	X	.000841	.000841	0	%100
17	SF3-BH	X	.000841	.000841	0	%100
18	SF3-V1	X	.002	.002	0	%100
19	SF3-V2	X	.002	.002	0	%100
20	SF3-D1	X	.002	.002	0	%100
21	BC-TH	X	.001	.001	0	%100
22	BC-BH	X	.001	.001	0	%100
23	SA-1	X	.00093	.00093	0	%100
24	M24	X	.003	.003	0	%100
25	M25	X	.005	.005	0	%100
26	M26	X	.003	.003	0	%100
27	M27	X	.003	.003	0	%100
28	M28	X	.005	.005	0	%100
29	M29	X	.003	.003	0	%100
30	MP-9	X	.005	.005	0	%100
31	MP-10	X	.005	.005	0	%100
32	MP-11	X	.005	.005	0	%100
33	MP-12	X	.005	.005	0	%100
34	M34	X	.002	.002	0	%100
35	M35	X	.002	.002	0	%100
36	M36	X	.002	.002	0	%100
37	M37	X	.002	.002	0	%100
38	M38	X	.002	.002	0	%100
39	M39	X	.004	.004	0	%100
40	M40	X	.004	.004	0	%100
41	M41	X	.002	.002	0	%100
42	M42	X	.002	.002	0	%100
43	M43	X	.002	.002	0	%100
44	M44	X	.002	.002	0	%100
45	M45	X	.002	.002	0	%100
46	M46	X	.003	.003	0	%100
47	M47	X	.00088	.00088	0	%100
48	M48	X	.001	.001	0	%100
49	M49	X	.00088	.00088	0	%100
50	M50	X	.00088	.00088	0	%100
51	M51	X	.001	.001	0	%100
52	M52	X	.00088	.00088	0	%100
53	MP-5	X	.005	.005	0	%100
54	MP-6	X	.005	.005	0	%100
55	MP-7	X	.005	.005	0	%100
56	MP-8	X	.005	.005	0	%100
57	M57	X	.002	.002	0	%100
58	M58	X	.002	.002	0	%100
59	M59	X	.002	.002	0	%100
60	M60	X	.002	.002	0	%100

Member Distributed Loads (BLC 12 : 225 Wind - No Ice) (Continued)

	Member Label	Direction	Start Magnitude[k/ft,...	End Magnitude[k/ft,F...	Start Location[ft,%]	End Location[ft,%]
61	M61	X	.002	.002	0	%100
62	M62	X	.002	.002	0	%100
63	M63	X	.002	.002	0	%100
64	M64	X	.002	.002	0	%100
65	M65	X	.002	.002	0	%100
66	M66	X	.002	.002	0	%100
67	M67	X	.000439	.000439	0	%100
68	M68	X	.000439	.000439	0	%100
69	M69	X	.003	.003	0	%100
70	Mast	X	.006	.006	0	%100
71	M71	X	.006	.006	0	%100
72	M72	X	.006	.006	0	%100
73	FFTH1	Z	.003	.003	0	%100
74	FFTH2	Z	.004	.004	0	%100
75	FFTH3	Z	.003	.003	0	%100
76	FFBH1	Z	.003	.003	0	%100
77	FFBH2	Z	.004	.004	0	%100
78	FFBH3	Z	.003	.003	0	%100
79	MP-1	Z	.005	.005	0	%100
80	MP-2	Z	.005	.005	0	%100
81	MP-3	Z	.005	.005	0	%100
82	MP-4	Z	.005	.005	0	%100
83	SF2-TH	Z	.004	.004	0	%100
84	SF2-BH	Z	.004	.004	0	%100
85	SF2-V1	Z	.002	.002	0	%100
86	SF2-V2	Z	.002	.002	0	%100
87	SF2-D1	Z	.002	.002	0	%100
88	SF3-TH	Z	.000739	.000739	0	%100
89	SF3-BH	Z	.000739	.000739	0	%100
90	SF3-V1	Z	.002	.002	0	%100
91	SF3-V2	Z	.002	.002	0	%100
92	SF3-D1	Z	.002	.002	0	%100
93	BC-TH	Z	.001	.001	0	%100
94	BC-BH	Z	.001	.001	0	%100
95	SA-1	Z	.001	.001	0	%100
96	M24	Z	.004	.004	0	%100
97	M25	Z	.005	.005	0	%100
98	M26	Z	.004	.004	0	%100
99	M27	Z	.004	.004	0	%100
100	M28	Z	.005	.005	0	%100
101	M29	Z	.004	.004	0	%100
102	MP-9	Z	.005	.005	0	%100
103	MP-10	Z	.005	.005	0	%100
104	MP-11	Z	.005	.005	0	%100
105	MP-12	Z	.005	.005	0	%100
106	M34	Z	.003	.003	0	%100
107	M35	Z	.003	.003	0	%100
108	M36	Z	.002	.002	0	%100
109	M37	Z	.002	.002	0	%100
110	M38	Z	.002	.002	0	%100
111	M39	Z	.003	.003	0	%100
112	M40	Z	.003	.003	0	%100

Member Distributed Loads (BLC 12 : 225 Wind - No Ice) (Continued)

	Member Label	Direction	Start Magnitude[k/ft,...	End Magnitude[k/ft,F...	Start Location[ft,%]	End Location[ft,%]
113	M41	Z	.002	.002	0	%100
114	M42	Z	.002	.002	0	%100
115	M43	Z	.002	.002	0	%100
116	M44	Z	.002	.002	0	%100
117	M45	Z	.002	.002	0	%100
118	M46	Z	.003	.003	0	%100
119	M47	Z	.000995	.000995	0	%100
120	M48	Z	.001	.001	0	%100
121	M49	Z	.000995	.000995	0	%100
122	M50	Z	.000995	.000995	0	%100
123	M51	Z	.001	.001	0	%100
124	M52	Z	.000995	.000995	0	%100
125	MP-5	Z	.005	.005	0	%100
126	MP-6	Z	.005	.005	0	%100
127	MP-7	Z	.005	.005	0	%100
128	MP-8	Z	.005	.005	0	%100
129	M57	Z	.001	.001	0	%100
130	M58	Z	.001	.001	0	%100
131	M59	Z	.002	.002	0	%100
132	M60	Z	.002	.002	0	%100
133	M61	Z	.002	.002	0	%100
134	M62	Z	.004	.004	0	%100
135	M63	Z	.004	.004	0	%100
136	M64	Z	.002	.002	0	%100
137	M65	Z	.002	.002	0	%100
138	M66	Z	.002	.002	0	%100
139	M67	Z	.000508	.000508	0	%100
140	M68	Z	.000508	.000508	0	%100
141	M69	Z	.004	.004	0	%100
142	Mast	Z	.006	.006	0	%100
143	M71	Z	.006	.006	0	%100
144	M72	Z	.006	.006	0	%100

Member Distributed Loads (BLC 13 : 240 Wind - No Ice)

	Member Label	Direction	Start Magnitude[k/ft,...	End Magnitude[k/ft,F...	Start Location[ft,%]	End Location[ft,%]
1	FFTH1	X	.001	.001	0	%100
2	FFTH2	X	.002	.002	0	%100
3	FFTH3	X	.001	.001	0	%100
4	FFBH1	X	.001	.001	0	%100
5	FFBH2	X	.002	.002	0	%100
6	FFBH3	X	.001	.001	0	%100
7	MP-1	X	.004	.004	0	%100
8	MP-2	X	.004	.004	0	%100
9	MP-3	X	.004	.004	0	%100
10	MP-4	X	.004	.004	0	%100
11	SF2-TH	X	.003	.003	0	%100
12	SF2-BH	X	.003	.003	0	%100
13	SF2-V1	X	.001	.001	0	%100
14	SF2-V2	X	.001	.001	0	%100
15	SF2-D1	X	.001	.001	0	%100
16	SF3-TH	X	.000235	.000235	0	%100

Member Distributed Loads (BLC 13 : 240 Wind - No Ice) (Continued)

	Member Label	Direction	Start Magnitude[k/ft,...	End Magnitude[k/ft,F...	Start Location[ft,%]	End Location[ft,%]
17	SF3-BH	X	.000235	.000235	0	%100
18	SF3-V1	X	.001	.001	0	%100
19	SF3-V2	X	.001	.001	0	%100
20	SF3-D1	X	.001	.001	0	%100
21	BC-TH	X	.000728	.000728	0	%100
22	BC-BH	X	.000728	.000728	0	%100
23	SA-1	X	.001	.001	0	%100
24	M24	X	.002	.002	0	%100
25	M25	X	.003	.003	0	%100
26	M26	X	.002	.002	0	%100
27	M27	X	.002	.002	0	%100
28	M28	X	.003	.003	0	%100
29	M29	X	.002	.002	0	%100
30	MP-9	X	.004	.004	0	%100
31	MP-10	X	.004	.004	0	%100
32	MP-11	X	.004	.004	0	%100
33	MP-12	X	.004	.004	0	%100
34	M34	X	.002	.002	0	%100
35	M35	X	.002	.002	0	%100
36	M36	X	.001	.001	0	%100
37	M37	X	.001	.001	0	%100
38	M38	X	.001	.001	0	%100
39	M39	X	.003	.003	0	%100
40	M40	X	.003	.003	0	%100
41	M41	X	.001	.001	0	%100
42	M42	X	.001	.001	0	%100
43	M43	X	.001	.001	0	%100
44	M44	X	.001	.001	0	%100
45	M45	X	.001	.001	0	%100
46	M46	X	.002	.002	0	%100
47	M47	X	.001	.001	0	%100
48	M48	X	.002	.002	0	%100
49	M49	X	.001	.001	0	%100
50	M50	X	.001	.001	0	%100
51	M51	X	.002	.002	0	%100
52	M52	X	.001	.001	0	%100
53	MP-5	X	.004	.004	0	%100
54	MP-6	X	.004	.004	0	%100
55	MP-7	X	.004	.004	0	%100
56	MP-8	X	.004	.004	0	%100
57	M57	X	.000243	.000243	0	%100
58	M58	X	.000243	.000243	0	%100
59	M59	X	.001	.001	0	%100
60	M60	X	.001	.001	0	%100
61	M61	X	.001	.001	0	%100
62	M62	X	.002	.002	0	%100
63	M63	X	.002	.002	0	%100
64	M64	X	.001	.001	0	%100
65	M65	X	.001	.001	0	%100
66	M66	X	.001	.001	0	%100
67	M67	X	.000599	.000599	0	%100
68	M68	X	.000599	.000599	0	%100

Member Distributed Loads (BLC 13 : 240 Wind - No Ice) (Continued)

	Member Label	Direction	Start Magnitude[k/ft,...	End Magnitude[k/ft,F...	Start Location[ft,%]	End Location[ft,%]
69	M69	X	.003	.003	0	%100
70	Mast	X	.004	.004	0	%100
71	M71	X	.004	.004	0	%100
72	M72	X	.004	.004	0	%100
73	FFTH1	Z	.002	.002	0	%100
74	FFTH2	Z	.003	.003	0	%100
75	FFTH3	Z	.002	.002	0	%100
76	FFBH1	Z	.002	.002	0	%100
77	FFBH2	Z	.003	.003	0	%100
78	FFBH3	Z	.002	.002	0	%100
79	MP-1	Z	.006	.006	0	%100
80	MP-2	Z	.006	.006	0	%100
81	MP-3	Z	.006	.006	0	%100
82	MP-4	Z	.006	.006	0	%100
83	SF2-TH	Z	.004	.004	0	%100
84	SF2-BH	Z	.004	.004	0	%100
85	SF2-V1	Z	.002	.002	0	%100
86	SF2-V2	Z	.002	.002	0	%100
87	SF2-D1	Z	.002	.002	0	%100
88	SF3-TH	Z	.000357	.000357	0	%100
89	SF3-BH	Z	.000357	.000357	0	%100
90	SF3-V1	Z	.002	.002	0	%100
91	SF3-V2	Z	.002	.002	0	%100
92	SF3-D1	Z	.002	.002	0	%100
93	BC-TH	Z	.001	.001	0	%100
94	BC-BH	Z	.001	.001	0	%100
95	SA-1	Z	.003	.003	0	%100
96	M24	Z	.005	.005	0	%100
97	M25	Z	.006	.006	0	%100
98	M26	Z	.005	.005	0	%100
99	M27	Z	.005	.005	0	%100
100	M28	Z	.006	.006	0	%100
101	M29	Z	.005	.005	0	%100
102	MP-9	Z	.006	.006	0	%100
103	MP-10	Z	.006	.006	0	%100
104	MP-11	Z	.006	.006	0	%100
105	MP-12	Z	.006	.006	0	%100
106	M34	Z	.005	.005	0	%100
107	M35	Z	.005	.005	0	%100
108	M36	Z	.002	.002	0	%100
109	M37	Z	.002	.002	0	%100
110	M38	Z	.002	.002	0	%100
111	M39	Z	.004	.004	0	%100
112	M40	Z	.004	.004	0	%100
113	M41	Z	.002	.002	0	%100
114	M42	Z	.002	.002	0	%100
115	M43	Z	.002	.002	0	%100
116	M44	Z	.002	.002	0	%100
117	M45	Z	.002	.002	0	%100
118	M46	Z	.003	.003	0	%100
119	M47	Z	.002	.002	0	%100
120	M48	Z	.003	.003	0	%100

Member Distributed Loads (BLC 13 : 240 Wind - No Ice) (Continued)

	Member Label	Direction	Start Magnitude[k/ft,...	End Magnitude[k/ft,F...	Start Location[ft,%]	End Location[ft,%]
121	M49	Z	.002	.002	0	%100
122	M50	Z	.002	.002	0	%100
123	M51	Z	.003	.003	0	%100
124	M52	Z	.002	.002	0	%100
125	MP-5	Z	.006	.006	0	%100
126	MP-6	Z	.006	.006	0	%100
127	MP-7	Z	.006	.006	0	%100
128	MP-8	Z	.006	.006	0	%100
129	M57	Z	.000333	.000333	0	%100
130	M58	Z	.000333	.000333	0	%100
131	M59	Z	.002	.002	0	%100
132	M60	Z	.002	.002	0	%100
133	M61	Z	.002	.002	0	%100
134	M62	Z	.005	.005	0	%100
135	M63	Z	.005	.005	0	%100
136	M64	Z	.002	.002	0	%100
137	M65	Z	.002	.002	0	%100
138	M66	Z	.002	.002	0	%100
139	M67	Z	.001	.001	0	%100
140	M68	Z	.001	.001	0	%100
141	M69	Z	.005	.005	0	%100
142	Mast	Z	.007	.007	0	%100
143	M71	Z	.007	.007	0	%100
144	M72	Z	.007	.007	0	%100

Member Distributed Loads (BLC 14 : 270 Wind - No Ice)

	Member Label	Direction	Start Magnitude[k/ft,...	End Magnitude[k/ft,F...	Start Location[ft,%]	End Location[ft,%]
1	FFTH1	Z	0	0	0	%100
2	FFTH2	Z	0	0	0	%100
3	FFTH3	Z	0	0	0	%100
4	FFBH1	Z	0	0	0	%100
5	FFBH2	Z	0	0	0	%100
6	FFBH3	Z	0	0	0	%100
7	MP-1	Z	.007	.007	0	%100
8	MP-2	Z	.007	.007	0	%100
9	MP-3	Z	.007	.007	0	%100
10	MP-4	Z	.007	.007	0	%100
11	SF2-TH	Z	.003	.003	0	%100
12	SF2-BH	Z	.003	.003	0	%100
13	SF2-V1	Z	.002	.002	0	%100
14	SF2-V2	Z	.002	.002	0	%100
15	SF2-D1	Z	.002	.002	0	%100
16	SF3-TH	Z	.003	.003	0	%100
17	SF3-BH	Z	.003	.003	0	%100
18	SF3-V1	Z	.002	.002	0	%100
19	SF3-V2	Z	.002	.002	0	%100
20	SF3-D1	Z	.002	.002	0	%100
21	BC-TH	Z	0	0	0	%100
22	BC-BH	Z	0	0	0	%100
23	SA-1	Z	.005	.005	0	%100
24	M24	Z	.005	.005	0	%100

Member Distributed Loads (BLC 14 : 270 Wind - No Ice) (Continued)

	Member Label	Direction	Start Magnitude[k/ft,...	End Magnitude[k/ft,F...	Start Location[ft,%]	End Location[ft,%]
25	M25	Z	.006	.006	0	%100
26	M26	Z	.005	.005	0	%100
27	M27	Z	.005	.005	0	%100
28	M28	Z	.006	.006	0	%100
29	M29	Z	.005	.005	0	%100
30	MP-9	Z	.007	.007	0	%100
31	MP-10	Z	.007	.007	0	%100
32	MP-11	Z	.007	.007	0	%100
33	MP-12	Z	.007	.007	0	%100
34	M34	Z	.007	.007	0	%100
35	M35	Z	.007	.007	0	%100
36	M36	Z	.002	.002	0	%100
37	M37	Z	.002	.002	0	%100
38	M38	Z	.002	.002	0	%100
39	M39	Z	.002	.002	0	%100
40	M40	Z	.002	.002	0	%100
41	M41	Z	.002	.002	0	%100
42	M42	Z	.002	.002	0	%100
43	M43	Z	.002	.002	0	%100
44	M44	Z	.002	.002	0	%100
45	M45	Z	.002	.002	0	%100
46	M46	Z	0	0	0	%100
47	M47	Z	.005	.005	0	%100
48	M48	Z	.006	.006	0	%100
49	M49	Z	.005	.005	0	%100
50	M50	Z	.005	.005	0	%100
51	M51	Z	.006	.006	0	%100
52	M52	Z	.005	.005	0	%100
53	MP-5	Z	.007	.007	0	%100
54	MP-6	Z	.007	.007	0	%100
55	MP-7	Z	.007	.007	0	%100
56	MP-8	Z	.007	.007	0	%100
57	M57	Z	.002	.002	0	%100
58	M58	Z	.002	.002	0	%100
59	M59	Z	.002	.002	0	%100
60	M60	Z	.002	.002	0	%100
61	M61	Z	.002	.002	0	%100
62	M62	Z	.007	.007	0	%100
63	M63	Z	.007	.007	0	%100
64	M64	Z	.002	.002	0	%100
65	M65	Z	.002	.002	0	%100
66	M66	Z	.002	.002	0	%100
67	M67	Z	.002	.002	0	%100
68	M68	Z	.002	.002	0	%100
69	M69	Z	.005	.005	0	%100
70	Mast	Z	.008	.008	0	%100
71	M71	Z	.008	.008	0	%100
72	M72	Z	.008	.008	0	%100

Member Distributed Loads (BLC 15 : 300 Wind - No Ice)

Member Label	Direction	Start Magnitude[k/ft,...	End Magnitude[k/ft,F...	Start Location[ft,%]	End Location[ft,%]

Member Distributed Loads (BLC 15 : 300 Wind - No Ice) (Continued)

	Member Label	Direction	Start Magnitude[k/ft,...	End Magnitude[k/ft,F...	Start Location[ft,%]	End Location[ft,%]
1	FFTH1	X	-.001	-.001	0	%100
2	FFTH2	X	-.002	-.002	0	%100
3	FFTH3	X	-.001	-.001	0	%100
4	FFBH1	X	-.001	-.001	0	%100
5	FFBH2	X	-.002	-.002	0	%100
6	FFBH3	X	-.001	-.001	0	%100
7	MP-1	X	-.004	-.004	0	%100
8	MP-2	X	-.004	-.004	0	%100
9	MP-3	X	-.004	-.004	0	%100
10	MP-4	X	-.004	-.004	0	%100
11	SF2-TH	X	-.000235	-.000235	0	%100
12	SF2-BH	X	-.000235	-.000235	0	%100
13	SF2-V1	X	-.001	-.001	0	%100
14	SF2-V2	X	-.001	-.001	0	%100
15	SF2-D1	X	-.001	-.001	0	%100
16	SF3-TH	X	-.003	-.003	0	%100
17	SF3-BH	X	-.003	-.003	0	%100
18	SF3-V1	X	-.001	-.001	0	%100
19	SF3-V2	X	-.001	-.001	0	%100
20	SF3-D1	X	-.001	-.001	0	%100
21	BC-TH	X	-.000728	-.000728	0	%100
22	BC-BH	X	-.000728	-.000728	0	%100
23	SA-1	X	-.003	-.003	0	%100
24	M24	X	-.001	-.001	0	%100
25	M25	X	-.002	-.002	0	%100
26	M26	X	-.001	-.001	0	%100
27	M27	X	-.001	-.001	0	%100
28	M28	X	-.002	-.002	0	%100
29	M29	X	-.001	-.001	0	%100
30	MP-9	X	-.004	-.004	0	%100
31	MP-10	X	-.004	-.004	0	%100
32	MP-11	X	-.004	-.004	0	%100
33	MP-12	X	-.004	-.004	0	%100
34	M34	X	-.002	-.002	0	%100
35	M35	X	-.002	-.002	0	%100
36	M36	X	-.001	-.001	0	%100
37	M37	X	-.001	-.001	0	%100
38	M38	X	-.001	-.001	0	%100
39	M39	X	-.000243	-.000243	0	%100
40	M40	X	-.000243	-.000243	0	%100
41	M41	X	-.001	-.001	0	%100
42	M42	X	-.001	-.001	0	%100
43	M43	X	-.001	-.001	0	%100
44	M44	X	-.000599	-.000599	0	%100
45	M45	X	-.000599	-.000599	0	%100
46	M46	X	-.002	-.002	0	%100
47	M47	X	-.002	-.002	0	%100
48	M48	X	-.003	-.003	0	%100
49	M49	X	-.002	-.002	0	%100
50	M50	X	-.002	-.002	0	%100
51	M51	X	-.003	-.003	0	%100
52	M52	X	-.002	-.002	0	%100

Member Distributed Loads (BLC 15 : 300 Wind - No Ice) (Continued)

	Member Label	Direction	Start Magnitude[k/ft,...	End Magnitude[k/ft,F...	Start Location[ft,%]	End Location[ft,%]
53	MP-5	X	-.004	-.004	0	%100
54	MP-6	X	-.004	-.004	0	%100
55	MP-7	X	-.004	-.004	0	%100
56	MP-8	X	-.004	-.004	0	%100
57	M57	X	-.003	-.003	0	%100
58	M58	X	-.003	-.003	0	%100
59	M59	X	-.001	-.001	0	%100
60	M60	X	-.001	-.001	0	%100
61	M61	X	-.001	-.001	0	%100
62	M62	X	-.002	-.002	0	%100
63	M63	X	-.002	-.002	0	%100
64	M64	X	-.001	-.001	0	%100
65	M65	X	-.001	-.001	0	%100
66	M66	X	-.001	-.001	0	%100
67	M67	X	-.001	-.001	0	%100
68	M68	X	-.001	-.001	0	%100
69	M69	X	-.001	-.001	0	%100
70	Mast	X	-.004	-.004	0	%100
71	M71	X	-.004	-.004	0	%100
72	M72	X	-.004	-.004	0	%100
73	FFTH1	Z	.002	.002	0	%100
74	FFTH2	Z	.003	.003	0	%100
75	FFTH3	Z	.002	.002	0	%100
76	FFBH1	Z	.002	.002	0	%100
77	FFBH2	Z	.003	.003	0	%100
78	FFBH3	Z	.002	.002	0	%100
79	MP-1	Z	.006	.006	0	%100
80	MP-2	Z	.006	.006	0	%100
81	MP-3	Z	.006	.006	0	%100
82	MP-4	Z	.006	.006	0	%100
83	SF2-TH	Z	.000357	.000357	0	%100
84	SF2-BH	Z	.000357	.000357	0	%100
85	SF2-V1	Z	.002	.002	0	%100
86	SF2-V2	Z	.002	.002	0	%100
87	SF2-D1	Z	.002	.002	0	%100
88	SF3-TH	Z	.004	.004	0	%100
89	SF3-BH	Z	.004	.004	0	%100
90	SF3-V1	Z	.002	.002	0	%100
91	SF3-V2	Z	.002	.002	0	%100
92	SF3-D1	Z	.002	.002	0	%100
93	BC-TH	Z	.001	.001	0	%100
94	BC-BH	Z	.001	.001	0	%100
95	SA-1	Z	.005	.005	0	%100
96	M24	Z	.002	.002	0	%100
97	M25	Z	.003	.003	0	%100
98	M26	Z	.002	.002	0	%100
99	M27	Z	.002	.002	0	%100
100	M28	Z	.003	.003	0	%100
101	M29	Z	.002	.002	0	%100
102	MP-9	Z	.006	.006	0	%100
103	MP-10	Z	.006	.006	0	%100
104	MP-11	Z	.006	.006	0	%100

Member Distributed Loads (BLC 15 : 300 Wind - No Ice) (Continued)

	Member Label	Direction	Start Magnitude[k/ft,...	End Magnitude[k/ft,F...	Start Location[ft,%]	End Location[ft,%]
105	MP-12	Z	.006	.006	0	%100
106	M34	Z	.005	.005	0	%100
107	M35	Z	.005	.005	0	%100
108	M36	Z	.002	.002	0	%100
109	M37	Z	.002	.002	0	%100
110	M38	Z	.002	.002	0	%100
111	M39	Z	.000333	.000333	0	%100
112	M40	Z	.000333	.000333	0	%100
113	M41	Z	.002	.002	0	%100
114	M42	Z	.002	.002	0	%100
115	M43	Z	.002	.002	0	%100
116	M44	Z	.001	.001	0	%100
117	M45	Z	.001	.001	0	%100
118	M46	Z	.003	.003	0	%100
119	M47	Z	.005	.005	0	%100
120	M48	Z	.006	.006	0	%100
121	M49	Z	.005	.005	0	%100
122	M50	Z	.005	.005	0	%100
123	M51	Z	.006	.006	0	%100
124	M52	Z	.005	.005	0	%100
125	MP-5	Z	.006	.006	0	%100
126	MP-6	Z	.006	.006	0	%100
127	MP-7	Z	.006	.006	0	%100
128	MP-8	Z	.006	.006	0	%100
129	M57	Z	.004	.004	0	%100
130	M58	Z	.004	.004	0	%100
131	M59	Z	.002	.002	0	%100
132	M60	Z	.002	.002	0	%100
133	M61	Z	.002	.002	0	%100
134	M62	Z	.005	.005	0	%100
135	M63	Z	.005	.005	0	%100
136	M64	Z	.002	.002	0	%100
137	M65	Z	.002	.002	0	%100
138	M66	Z	.002	.002	0	%100
139	M67	Z	.002	.002	0	%100
140	M68	Z	.002	.002	0	%100
141	M69	Z	.003	.003	0	%100
142	Mast	Z	.007	.007	0	%100
143	M71	Z	.007	.007	0	%100
144	M72	Z	.007	.007	0	%100

Member Distributed Loads (BLC 16 : 315 Wind - No Ice)

	Member Label	Direction	Start Magnitude[k/ft,...	End Magnitude[k/ft,F...	Start Location[ft,%]	End Location[ft,%]
1	FFTH1	X	-.003	-.003	0	%100
2	FFTH2	X	-.004	-.004	0	%100
3	FFTH3	X	-.003	-.003	0	%100
4	FFBH1	X	-.003	-.003	0	%100
5	FFBH2	X	-.004	-.004	0	%100
6	FFBH3	X	-.003	-.003	0	%100
7	MP-1	X	-.005	-.005	0	%100
8	MP-2	X	-.005	-.005	0	%100

Member Distributed Loads (BLC 16 : 315 Wind - No Ice) (Continued)

	Member Label	Direction	Start Magnitude[k/ft,...	End Magnitude[k/ft,F...	Start Location[ft,%]	End Location[ft,%]
9	MP-3	X	-.005	-.005	0	%100
10	MP-4	X	-.005	-.005	0	%100
11	SF2-TH	X	-.000841	-.000841	0	%100
12	SF2-BH	X	-.000841	-.000841	0	%100
13	SF2-V1	X	-.002	-.002	0	%100
14	SF2-V2	X	-.002	-.002	0	%100
15	SF2-D1	X	-.002	-.002	0	%100
16	SF3-TH	X	-.004	-.004	0	%100
17	SF3-BH	X	-.004	-.004	0	%100
18	SF3-V1	X	-.002	-.002	0	%100
19	SF3-V2	X	-.002	-.002	0	%100
20	SF3-D1	X	-.002	-.002	0	%100
21	BC-TH	X	-.001	-.001	0	%100
22	BC-BH	X	-.001	-.001	0	%100
23	SA-1	X	-.003	-.003	0	%100
24	M24	X	-.00088	-.00088	0	%100
25	M25	X	-.001	-.001	0	%100
26	M26	X	-.00088	-.00088	0	%100
27	M27	X	-.00088	-.00088	0	%100
28	M28	X	-.001	-.001	0	%100
29	M29	X	-.00088	-.00088	0	%100
30	MP-9	X	-.005	-.005	0	%100
31	MP-10	X	-.005	-.005	0	%100
32	MP-11	X	-.005	-.005	0	%100
33	MP-12	X	-.005	-.005	0	%100
34	M34	X	-.002	-.002	0	%100
35	M35	X	-.002	-.002	0	%100
36	M36	X	-.002	-.002	0	%100
37	M37	X	-.002	-.002	0	%100
38	M38	X	-.002	-.002	0	%100
39	M39	X	-.002	-.002	0	%100
40	M40	X	-.002	-.002	0	%100
41	M41	X	-.002	-.002	0	%100
42	M42	X	-.002	-.002	0	%100
43	M43	X	-.002	-.002	0	%100
44	M44	X	-.000439	-.000439	0	%100
45	M45	X	-.000439	-.000439	0	%100
46	M46	X	-.003	-.003	0	%100
47	M47	X	-.003	-.003	0	%100
48	M48	X	-.005	-.005	0	%100
49	M49	X	-.003	-.003	0	%100
50	M50	X	-.003	-.003	0	%100
51	M51	X	-.005	-.005	0	%100
52	M52	X	-.003	-.003	0	%100
53	MP-5	X	-.005	-.005	0	%100
54	MP-6	X	-.005	-.005	0	%100
55	MP-7	X	-.005	-.005	0	%100
56	MP-8	X	-.005	-.005	0	%100
57	M57	X	-.004	-.004	0	%100
58	M58	X	-.004	-.004	0	%100
59	M59	X	-.002	-.002	0	%100
60	M60	X	-.002	-.002	0	%100

Member Distributed Loads (BLC 16 : 315 Wind - No Ice) (Continued)

	Member Label	Direction	Start Magnitude[k/ft,...	End Magnitude[k/ft,F...	Start Location[ft,%]	End Location[ft,%]
61	M61	X	-.002	-.002	0	%100
62	M62	X	-.002	-.002	0	%100
63	M63	X	-.002	-.002	0	%100
64	M64	X	-.002	-.002	0	%100
65	M65	X	-.002	-.002	0	%100
66	M66	X	-.002	-.002	0	%100
67	M67	X	-.002	-.002	0	%100
68	M68	X	-.002	-.002	0	%100
69	M69	X	-.00093	-.00093	0	%100
70	Mast	X	-.006	-.006	0	%100
71	M71	X	-.006	-.006	0	%100
72	M72	X	-.006	-.006	0	%100
73	FFTH1	Z	.003	.003	0	%100
74	FFTH2	Z	.004	.004	0	%100
75	FFTH3	Z	.003	.003	0	%100
76	FFBH1	Z	.003	.003	0	%100
77	FFBH2	Z	.004	.004	0	%100
78	FFBH3	Z	.003	.003	0	%100
79	MP-1	Z	.005	.005	0	%100
80	MP-2	Z	.005	.005	0	%100
81	MP-3	Z	.005	.005	0	%100
82	MP-4	Z	.005	.005	0	%100
83	SF2-TH	Z	.000739	.000739	0	%100
84	SF2-BH	Z	.000739	.000739	0	%100
85	SF2-V1	Z	.002	.002	0	%100
86	SF2-V2	Z	.002	.002	0	%100
87	SF2-D1	Z	.002	.002	0	%100
88	SF3-TH	Z	.004	.004	0	%100
89	SF3-BH	Z	.004	.004	0	%100
90	SF3-V1	Z	.002	.002	0	%100
91	SF3-V2	Z	.002	.002	0	%100
92	SF3-D1	Z	.002	.002	0	%100
93	BC-TH	Z	.001	.001	0	%100
94	BC-BH	Z	.001	.001	0	%100
95	SA-1	Z	.004	.004	0	%100
96	M24	Z	.000995	.000995	0	%100
97	M25	Z	.001	.001	0	%100
98	M26	Z	.000995	.000995	0	%100
99	M27	Z	.000995	.000995	0	%100
100	M28	Z	.001	.001	0	%100
101	M29	Z	.000995	.000995	0	%100
102	MP-9	Z	.005	.005	0	%100
103	MP-10	Z	.005	.005	0	%100
104	MP-11	Z	.005	.005	0	%100
105	MP-12	Z	.005	.005	0	%100
106	M34	Z	.004	.004	0	%100
107	M35	Z	.004	.004	0	%100
108	M36	Z	.002	.002	0	%100
109	M37	Z	.002	.002	0	%100
110	M38	Z	.002	.002	0	%100
111	M39	Z	.001	.001	0	%100
112	M40	Z	.001	.001	0	%100

Member Distributed Loads (BLC 16 : 315 Wind - No Ice) (Continued)

	Member Label	Direction	Start Magnitude[k/ft,...	End Magnitude[k/ft,F...	Start Location[ft,%]	End Location[ft,%]
113	M41	Z	.002	.002	0	%100
114	M42	Z	.002	.002	0	%100
115	M43	Z	.002	.002	0	%100
116	M44	Z	.000508	.000508	0	%100
117	M45	Z	.000508	.000508	0	%100
118	M46	Z	.003	.003	0	%100
119	M47	Z	.004	.004	0	%100
120	M48	Z	.005	.005	0	%100
121	M49	Z	.004	.004	0	%100
122	M50	Z	.004	.004	0	%100
123	M51	Z	.005	.005	0	%100
124	M52	Z	.004	.004	0	%100
125	MP-5	Z	.005	.005	0	%100
126	MP-6	Z	.005	.005	0	%100
127	MP-7	Z	.005	.005	0	%100
128	MP-8	Z	.005	.005	0	%100
129	M57	Z	.003	.003	0	%100
130	M58	Z	.003	.003	0	%100
131	M59	Z	.002	.002	0	%100
132	M60	Z	.002	.002	0	%100
133	M61	Z	.002	.002	0	%100
134	M62	Z	.003	.003	0	%100
135	M63	Z	.003	.003	0	%100
136	M64	Z	.002	.002	0	%100
137	M65	Z	.002	.002	0	%100
138	M66	Z	.002	.002	0	%100
139	M67	Z	.002	.002	0	%100
140	M68	Z	.002	.002	0	%100
141	M69	Z	.001	.001	0	%100
142	Mast	Z	.006	.006	0	%100
143	M71	Z	.006	.006	0	%100
144	M72	Z	.006	.006	0	%100

Member Distributed Loads (BLC 17 : 330 Wind - No Ice)

	Member Label	Direction	Start Magnitude[k/ft,...	End Magnitude[k/ft,F...	Start Location[ft,%]	End Location[ft,%]
1	FFTH1	X	-.004	-.004	0	%100
2	FFTH2	X	-.006	-.006	0	%100
3	FFTH3	X	-.004	-.004	0	%100
4	FFBH1	X	-.004	-.004	0	%100
5	FFBH2	X	-.006	-.006	0	%100
6	FFBH3	X	-.004	-.004	0	%100
7	MP-1	X	-.006	-.006	0	%100
8	MP-2	X	-.006	-.006	0	%100
9	MP-3	X	-.006	-.006	0	%100
10	MP-4	X	-.006	-.006	0	%100
11	SF2-TH	X	-.002	-.002	0	%100
12	SF2-BH	X	-.002	-.002	0	%100
13	SF2-V1	X	-.002	-.002	0	%100
14	SF2-V2	X	-.002	-.002	0	%100
15	SF2-D1	X	-.002	-.002	0	%100
16	SF3-TH	X	-.005	-.005	0	%100

Member Distributed Loads (BLC 17 : 330 Wind - No Ice) (Continued)

	Member Label	Direction	Start Magnitude[k/ft,...	End Magnitude[k/ft,F...	Start Location[ft,%]	End Location[ft,%]
17	SF3-BH	X	-.005	-.005	0	%100
18	SF3-V1	X	-.002	-.002	0	%100
19	SF3-V2	X	-.002	-.002	0	%100
20	SF3-D1	X	-.002	-.002	0	%100
21	BC-TH	X	-.002	-.002	0	%100
22	BC-BH	X	-.002	-.002	0	%100
23	SA-1	X	-.004	-.004	0	%100
24	M24	X	0	0	0	%100
25	M25	X	0	0	0	%100
26	M26	X	0	0	0	%100
27	M27	X	0	0	0	%100
28	M28	X	0	0	0	%100
29	M29	X	0	0	0	%100
30	MP-9	X	-.006	-.006	0	%100
31	MP-10	X	-.006	-.006	0	%100
32	MP-11	X	-.006	-.006	0	%100
33	MP-12	X	-.006	-.006	0	%100
34	M34	X	-.002	-.002	0	%100
35	M35	X	-.002	-.002	0	%100
36	M36	X	-.002	-.002	0	%100
37	M37	X	-.002	-.002	0	%100
38	M38	X	-.002	-.002	0	%100
39	M39	X	-.003	-.003	0	%100
40	M40	X	-.003	-.003	0	%100
41	M41	X	-.002	-.002	0	%100
42	M42	X	-.002	-.002	0	%100
43	M43	X	-.002	-.002	0	%100
44	M44	X	0	0	0	%100
45	M45	X	0	0	0	%100
46	M46	X	-.005	-.005	0	%100
47	M47	X	-.004	-.004	0	%100
48	M48	X	-.005	-.005	0	%100
49	M49	X	-.004	-.004	0	%100
50	M50	X	-.004	-.004	0	%100
51	M51	X	-.005	-.005	0	%100
52	M52	X	-.004	-.004	0	%100
53	MP-5	X	-.006	-.006	0	%100
54	MP-6	X	-.006	-.006	0	%100
55	MP-7	X	-.006	-.006	0	%100
56	MP-8	X	-.006	-.006	0	%100
57	M57	X	-.006	-.006	0	%100
58	M58	X	-.006	-.006	0	%100
59	M59	X	-.002	-.002	0	%100
60	M60	X	-.002	-.002	0	%100
61	M61	X	-.002	-.002	0	%100
62	M62	X	-.002	-.002	0	%100
63	M63	X	-.002	-.002	0	%100
64	M64	X	-.002	-.002	0	%100
65	M65	X	-.002	-.002	0	%100
66	M66	X	-.002	-.002	0	%100
67	M67	X	-.002	-.002	0	%100
68	M68	X	-.002	-.002	0	%100

Member Distributed Loads (BLC 17 : 330 Wind - No Ice) (Continued)

	Member Label	Direction	Start Magnitude[k/ft,...	End Magnitude[k/ft,F...	Start Location[ft,%]	End Location[ft,%]
69	M69	X	0	0	0	%100
70	Mast	X	-.007	-.007	0	%100
71	M71	X	-.007	-.007	0	%100
72	M72	X	-.007	-.007	0	%100
73	FFTH1	Z	.002	.002	0	%100
74	FFTH2	Z	.003	.003	0	%100
75	FFTH3	Z	.002	.002	0	%100
76	FFBH1	Z	.002	.002	0	%100
77	FFBH2	Z	.003	.003	0	%100
78	FFBH3	Z	.002	.002	0	%100
79	MP-1	Z	.004	.004	0	%100
80	MP-2	Z	.004	.004	0	%100
81	MP-3	Z	.004	.004	0	%100
82	MP-4	Z	.004	.004	0	%100
83	SF2-TH	Z	.001	.001	0	%100
84	SF2-BH	Z	.001	.001	0	%100
85	SF2-V1	Z	.001	.001	0	%100
86	SF2-V2	Z	.001	.001	0	%100
87	SF2-D1	Z	.001	.001	0	%100
88	SF3-TH	Z	.003	.003	0	%100
89	SF3-BH	Z	.003	.003	0	%100
90	SF3-V1	Z	.001	.001	0	%100
91	SF3-V2	Z	.001	.001	0	%100
92	SF3-D1	Z	.001	.001	0	%100
93	BC-TH	Z	.001	.001	0	%100
94	BC-BH	Z	.001	.001	0	%100
95	SA-1	Z	.003	.003	0	%100
96	M24	Z	0	0	0	%100
97	M25	Z	0	0	0	%100
98	M26	Z	0	0	0	%100
99	M27	Z	0	0	0	%100
100	M28	Z	0	0	0	%100
101	M29	Z	0	0	0	%100
102	MP-9	Z	.004	.004	0	%100
103	MP-10	Z	.004	.004	0	%100
104	MP-11	Z	.004	.004	0	%100
105	MP-12	Z	.004	.004	0	%100
106	M34	Z	.002	.002	0	%100
107	M35	Z	.002	.002	0	%100
108	M36	Z	.001	.001	0	%100
109	M37	Z	.001	.001	0	%100
110	M38	Z	.001	.001	0	%100
111	M39	Z	.001	.001	0	%100
112	M40	Z	.001	.001	0	%100
113	M41	Z	.001	.001	0	%100
114	M42	Z	.001	.001	0	%100
115	M43	Z	.001	.001	0	%100
116	M44	Z	0	0	0	%100
117	M45	Z	0	0	0	%100
118	M46	Z	.003	.003	0	%100
119	M47	Z	.002	.002	0	%100
120	M48	Z	.003	.003	0	%100

Member Distributed Loads (BLC 17 : 330 Wind - No Ice) (Continued)

	Member Label	Direction	Start Magnitude[k/ft,...	End Magnitude[k/ft,F...	Start Location[ft,%]	End Location[ft,%]
121	M49	Z	.002	.002	0	%100
122	M50	Z	.002	.002	0	%100
123	M51	Z	.003	.003	0	%100
124	M52	Z	.002	.002	0	%100
125	MP-5	Z	.004	.004	0	%100
126	MP-6	Z	.004	.004	0	%100
127	MP-7	Z	.004	.004	0	%100
128	MP-8	Z	.004	.004	0	%100
129	M57	Z	.003	.003	0	%100
130	M58	Z	.003	.003	0	%100
131	M59	Z	.001	.001	0	%100
132	M60	Z	.001	.001	0	%100
133	M61	Z	.001	.001	0	%100
134	M62	Z	.001	.001	0	%100
135	M63	Z	.001	.001	0	%100
136	M64	Z	.001	.001	0	%100
137	M65	Z	.001	.001	0	%100
138	M66	Z	.001	.001	0	%100
139	M67	Z	.001	.001	0	%100
140	M68	Z	.001	.001	0	%100
141	M69	Z	0	0	0	%100
142	Mast	Z	.004	.004	0	%100
143	M71	Z	.004	.004	0	%100
144	M72	Z	.004	.004	0	%100

Member Distributed Loads (BLC 18 : Ice Weight)

	Member Label	Direction	Start Magnitude[k/ft,...	End Magnitude[k/ft,F...	Start Location[ft,%]	End Location[ft,%]
1	FFTH1	Y	-.004	-.004	0	%100
2	FFTH2	Y	-.004	-.004	0	%100
3	FFTH3	Y	-.004	-.004	0	%100
4	FFBH1	Y	-.004	-.004	0	%100
5	FFBH2	Y	-.004	-.004	0	%100
6	FFBH3	Y	-.004	-.004	0	%100
7	MP-1	Y	-.004	-.004	0	%100
8	MP-2	Y	-.004	-.004	0	%100
9	MP-3	Y	-.004	-.004	0	%100
10	MP-4	Y	-.004	-.004	0	%100
11	SF2-TH	Y	-.004	-.004	0	%100
12	SF2-BH	Y	-.004	-.004	0	%100
13	SF2-V1	Y	-.002	-.002	0	%100
14	SF2-V2	Y	-.002	-.002	0	%100
15	SF2-D1	Y	-.002	-.002	0	%100
16	SF3-TH	Y	-.004	-.004	0	%100
17	SF3-BH	Y	-.004	-.004	0	%100
18	SF3-V1	Y	-.002	-.002	0	%100
19	SF3-V2	Y	-.002	-.002	0	%100
20	SF3-D1	Y	-.002	-.002	0	%100
21	BC-TH	Y	-.005	-.005	0	%100
22	BC-BH	Y	-.005	-.005	0	%100
23	SA-1	Y	-.004	-.004	0	%100
24	M24	Y	-.004	-.004	0	%100

Member Distributed Loads (BLC 18 : Ice Weight) (Continued)

	Member Label	Direction	Start Magnitude[k/ft,...	End Magnitude[k/ft,F...	Start Location[ft,%]	End Location[ft,%]
25	M25	Y	-.004	-.004	0	%100
26	M26	Y	-.004	-.004	0	%100
27	M27	Y	-.004	-.004	0	%100
28	M28	Y	-.004	-.004	0	%100
29	M29	Y	-.004	-.004	0	%100
30	MP-9	Y	-.004	-.004	0	%100
31	MP-10	Y	-.004	-.004	0	%100
32	MP-11	Y	-.004	-.004	0	%100
33	MP-12	Y	-.004	-.004	0	%100
34	M34	Y	-.004	-.004	0	%100
35	M35	Y	-.004	-.004	0	%100
36	M36	Y	-.002	-.002	0	%100
37	M37	Y	-.002	-.002	0	%100
38	M38	Y	-.002	-.002	0	%100
39	M39	Y	-.004	-.004	0	%100
40	M40	Y	-.004	-.004	0	%100
41	M41	Y	-.002	-.002	0	%100
42	M42	Y	-.002	-.002	0	%100
43	M43	Y	-.002	-.002	0	%100
44	M44	Y	-.005	-.005	0	%100
45	M45	Y	-.005	-.005	0	%100
46	M46	Y	-.004	-.004	0	%100
47	M47	Y	-.004	-.004	0	%100
48	M48	Y	-.004	-.004	0	%100
49	M49	Y	-.004	-.004	0	%100
50	M50	Y	-.004	-.004	0	%100
51	M51	Y	-.004	-.004	0	%100
52	M52	Y	-.004	-.004	0	%100
53	MP-5	Y	-.004	-.004	0	%100
54	MP-6	Y	-.004	-.004	0	%100
55	MP-7	Y	-.004	-.004	0	%100
56	MP-8	Y	-.004	-.004	0	%100
57	M57	Y	-.004	-.004	0	%100
58	M58	Y	-.004	-.004	0	%100
59	M59	Y	-.002	-.002	0	%100
60	M60	Y	-.002	-.002	0	%100
61	M61	Y	-.002	-.002	0	%100
62	M62	Y	-.004	-.004	0	%100
63	M63	Y	-.004	-.004	0	%100
64	M64	Y	-.002	-.002	0	%100
65	M65	Y	-.002	-.002	0	%100
66	M66	Y	-.002	-.002	0	%100
67	M67	Y	-.005	-.005	0	%100
68	M68	Y	-.005	-.005	0	%100
69	M69	Y	-.004	-.004	0	%100
70	Mast	Y	-.007	-.007	0	%100
71	M71	Y	-.007	-.007	0	%100
72	M72	Y	-.007	-.007	0	%100

Member Distributed Loads (BLC 19 : 0 Wind - Ice)

	Member Label	Direction	Start Magnitude[k/ft,...	End Magnitude[k/ft,F...	Start Location[ft,%]	End Location[ft,%]

Member Distributed Loads (BLC 19 : 0 Wind - Ice) (Continued)

	Member Label	Direction	Start Magnitude[k/ft,...	End Magnitude[k/ft,F...	Start Location[ft,%]	End Location[ft,%]
1	FFTH1	X	-.002	-.002	0	%100
2	FFTH2	X	-.002	-.002	0	%100
3	FFTH3	X	-.002	-.002	0	%100
4	FFBH1	X	-.002	-.002	0	%100
5	FFBH2	X	-.002	-.002	0	%100
6	FFBH3	X	-.002	-.002	0	%100
7	MP-1	X	-.002	-.002	0	%100
8	MP-2	X	-.002	-.002	0	%100
9	MP-3	X	-.002	-.002	0	%100
10	MP-4	X	-.002	-.002	0	%100
11	SF2-TH	X	-.002	-.002	0	%100
12	SF2-BH	X	-.002	-.002	0	%100
13	SF2-V1	X	-.001	-.001	0	%100
14	SF2-V2	X	-.001	-.001	0	%100
15	SF2-D1	X	-.001	-.001	0	%100
16	SF3-TH	X	-.002	-.002	0	%100
17	SF3-BH	X	-.002	-.002	0	%100
18	SF3-V1	X	-.001	-.001	0	%100
19	SF3-V2	X	-.001	-.001	0	%100
20	SF3-D1	X	-.001	-.001	0	%100
21	BC-TH	X	-.002	-.002	0	%100
22	BC-BH	X	-.002	-.002	0	%100
23	SA-1	X	-.002	-.002	0	%100
24	M24	X	-.002	-.002	0	%100
25	M25	X	-.002	-.002	0	%100
26	M26	X	-.002	-.002	0	%100
27	M27	X	-.002	-.002	0	%100
28	M28	X	-.002	-.002	0	%100
29	M29	X	-.002	-.002	0	%100
30	MP-9	X	-.002	-.002	0	%100
31	MP-10	X	-.002	-.002	0	%100
32	MP-11	X	-.002	-.002	0	%100
33	MP-12	X	-.002	-.002	0	%100
34	M34	X	-.002	-.002	0	%100
35	M35	X	-.002	-.002	0	%100
36	M36	X	-.001	-.001	0	%100
37	M37	X	-.001	-.001	0	%100
38	M38	X	-.001	-.001	0	%100
39	M39	X	-.002	-.002	0	%100
40	M40	X	-.002	-.002	0	%100
41	M41	X	-.001	-.001	0	%100
42	M42	X	-.001	-.001	0	%100
43	M43	X	-.001	-.001	0	%100
44	M44	X	-.002	-.002	0	%100
45	M45	X	-.002	-.002	0	%100
46	M46	X	-.002	-.002	0	%100
47	M47	X	-.002	-.002	0	%100
48	M48	X	-.002	-.002	0	%100
49	M49	X	-.002	-.002	0	%100
50	M50	X	-.002	-.002	0	%100
51	M51	X	-.002	-.002	0	%100
52	M52	X	-.002	-.002	0	%100

Member Distributed Loads (BLC 19 : 0 Wind - Ice) (Continued)

	Member Label	Direction	Start Magnitude[k/ft,...	End Magnitude[k/ft,F...	Start Location[ft,%]	End Location[ft,%]
53	MP-5	X	-.002	-.002	0	%100
54	MP-6	X	-.002	-.002	0	%100
55	MP-7	X	-.002	-.002	0	%100
56	MP-8	X	-.002	-.002	0	%100
57	M57	X	-.002	-.002	0	%100
58	M58	X	-.002	-.002	0	%100
59	M59	X	-.001	-.001	0	%100
60	M60	X	-.001	-.001	0	%100
61	M61	X	-.001	-.001	0	%100
62	M62	X	-.002	-.002	0	%100
63	M63	X	-.002	-.002	0	%100
64	M64	X	-.001	-.001	0	%100
65	M65	X	-.001	-.001	0	%100
66	M66	X	-.001	-.001	0	%100
67	M67	X	-.002	-.002	0	%100
68	M68	X	-.002	-.002	0	%100
69	M69	X	-.002	-.002	0	%100
70	Mast	X	-.003	-.003	0	%100
71	M71	X	-.003	-.003	0	%100
72	M72	X	-.003	-.003	0	%100

Member Distributed Loads (BLC 20 : 30 Wind - Ice)

	Member Label	Direction	Start Magnitude[k/ft,...	End Magnitude[k/ft,F...	Start Location[ft,%]	End Location[ft,%]
1	FFTH1	X	-.001	-.001	0	%100
2	FFTH2	X	-.002	-.002	0	%100
3	FFTH3	X	-.001	-.001	0	%100
4	FFBH1	X	-.001	-.001	0	%100
5	FFBH2	X	-.002	-.002	0	%100
6	FFBH3	X	-.001	-.001	0	%100
7	MP-1	X	-.002	-.002	0	%100
8	MP-2	X	-.002	-.002	0	%100
9	MP-3	X	-.002	-.002	0	%100
10	MP-4	X	-.002	-.002	0	%100
11	SF2-TH	X	-.002	-.002	0	%100
12	SF2-BH	X	-.002	-.002	0	%100
13	SF2-V1	X	-.001	-.001	0	%100
14	SF2-V2	X	-.001	-.001	0	%100
15	SF2-D1	X	-.001	-.001	0	%100
16	SF3-TH	X	-.000706	-.000706	0	%100
17	SF3-BH	X	-.000706	-.000706	0	%100
18	SF3-V1	X	-.001	-.001	0	%100
19	SF3-V2	X	-.001	-.001	0	%100
20	SF3-D1	X	-.001	-.001	0	%100
21	BC-TH	X	-.001	-.001	0	%100
22	BC-BH	X	-.001	-.001	0	%100
23	SA-1	X	0	0	0	%100
24	M24	X	-.001	-.001	0	%100
25	M25	X	-.001	-.001	0	%100
26	M26	X	-.001	-.001	0	%100
27	M27	X	-.001	-.001	0	%100
28	M28	X	-.001	-.001	0	%100

Member Distributed Loads (BLC 20 : 30 Wind - Ice) (Continued)

	Member Label	Direction	Start Magnitude[k/ft,...	End Magnitude[k/ft,F...	Start Location[ft,%]	End Location[ft,%]
29	M29	X	-.001	-.001	0	%100
30	MP-9	X	-.002	-.002	0	%100
31	MP-10	X	-.002	-.002	0	%100
32	MP-11	X	-.002	-.002	0	%100
33	MP-12	X	-.002	-.002	0	%100
34	M34	X	-.000567	-.000567	0	%100
35	M35	X	-.000567	-.000567	0	%100
36	M36	X	-.001	-.001	0	%100
37	M37	X	-.001	-.001	0	%100
38	M38	X	-.001	-.001	0	%100
39	M39	X	-.002	-.002	0	%100
40	M40	X	-.002	-.002	0	%100
41	M41	X	-.001	-.001	0	%100
42	M42	X	-.001	-.001	0	%100
43	M43	X	-.001	-.001	0	%100
44	M44	X	-.001	-.001	0	%100
45	M45	X	-.001	-.001	0	%100
46	M46	X	-.001	-.001	0	%100
47	M47	X	0	0	0	%100
48	M48	X	0	0	0	%100
49	M49	X	0	0	0	%100
50	M50	X	0	0	0	%100
51	M51	X	0	0	0	%100
52	M52	X	0	0	0	%100
53	MP-5	X	-.002	-.002	0	%100
54	MP-6	X	-.002	-.002	0	%100
55	MP-7	X	-.002	-.002	0	%100
56	MP-8	X	-.002	-.002	0	%100
57	M57	X	-.000933	-.000933	0	%100
58	M58	X	-.000933	-.000933	0	%100
59	M59	X	-.001	-.001	0	%100
60	M60	X	-.001	-.001	0	%100
61	M61	X	-.001	-.001	0	%100
62	M62	X	-.000733	-.000733	0	%100
63	M63	X	-.000733	-.000733	0	%100
64	M64	X	-.001	-.001	0	%100
65	M65	X	-.001	-.001	0	%100
66	M66	X	-.001	-.001	0	%100
67	M67	X	0	0	0	%100
68	M68	X	0	0	0	%100
69	M69	X	-.001	-.001	0	%100
70	Mast	X	-.002	-.002	0	%100
71	M71	X	-.002	-.002	0	%100
72	M72	X	-.002	-.002	0	%100
73	FFTH1	Z	-.000695	-.000695	0	%100
74	FFTH2	Z	-.000946	-.000946	0	%100
75	FFTH3	Z	-.000695	-.000695	0	%100
76	FFBH1	Z	-.000695	-.000695	0	%100
77	FFBH2	Z	-.000946	-.000946	0	%100
78	FFBH3	Z	-.000695	-.000695	0	%100
79	MP-1	Z	-.001	-.001	0	%100
80	MP-2	Z	-.001	-.001	0	%100

Member Distributed Loads (BLC 20 : 30 Wind - Ice) (Continued)

	Member Label	Direction	Start Magnitude[k/ft,...	End Magnitude[k/ft,F...	Start Location[ft,%]	End Location[ft,%]
81	MP-3	Z	-.001	-.001	0	%100
82	MP-4	Z	-.001	-.001	0	%100
83	SF2-TH	Z	-.00086	-.00086	0	%100
84	SF2-BH	Z	-.00086	-.00086	0	%100
85	SF2-V1	Z	-.000648	-.000648	0	%100
86	SF2-V2	Z	-.000648	-.000648	0	%100
87	SF2-D1	Z	-.000749	-.000749	0	%100
88	SF3-TH	Z	-.000375	-.000375	0	%100
89	SF3-BH	Z	-.000375	-.000375	0	%100
90	SF3-V1	Z	-.000648	-.000648	0	%100
91	SF3-V2	Z	-.000648	-.000648	0	%100
92	SF3-D1	Z	-.000749	-.000749	0	%100
93	BC-TH	Z	-.000743	-.000743	0	%100
94	BC-BH	Z	-.000743	-.000743	0	%100
95	SA-1	Z	0	0	0	%100
96	M24	Z	-.000753	-.000753	0	%100
97	M25	Z	-.00099	-.00099	0	%100
98	M26	Z	-.000753	-.000753	0	%100
99	M27	Z	-.000753	-.000753	0	%100
100	M28	Z	-.00099	-.00099	0	%100
101	M29	Z	-.000753	-.000753	0	%100
102	MP-9	Z	-.001	-.001	0	%100
103	MP-10	Z	-.001	-.001	0	%100
104	MP-11	Z	-.001	-.001	0	%100
105	MP-12	Z	-.001	-.001	0	%100
106	M34	Z	-.000428	-.000428	0	%100
107	M35	Z	-.000428	-.000428	0	%100
108	M36	Z	-.000648	-.000648	0	%100
109	M37	Z	-.000648	-.000648	0	%100
110	M38	Z	-.000749	-.000749	0	%100
111	M39	Z	-.000824	-.000824	0	%100
112	M40	Z	-.000824	-.000824	0	%100
113	M41	Z	-.000648	-.000648	0	%100
114	M42	Z	-.000648	-.000648	0	%100
115	M43	Z	-.000749	-.000749	0	%100
116	M44	Z	-.000808	-.000808	0	%100
117	M45	Z	-.000808	-.000808	0	%100
118	M46	Z	-.000727	-.000727	0	%100
119	M47	Z	0	0	0	%100
120	M48	Z	0	0	0	%100
121	M49	Z	0	0	0	%100
122	M50	Z	0	0	0	%100
123	M51	Z	0	0	0	%100
124	M52	Z	0	0	0	%100
125	MP-5	Z	-.001	-.001	0	%100
126	MP-6	Z	-.001	-.001	0	%100
127	MP-7	Z	-.001	-.001	0	%100
128	MP-8	Z	-.001	-.001	0	%100
129	M57	Z	-.000465	-.000465	0	%100
130	M58	Z	-.000465	-.000465	0	%100
131	M59	Z	-.000648	-.000648	0	%100
132	M60	Z	-.000648	-.000648	0	%100

Member Distributed Loads (BLC 20 : 30 Wind - Ice) (Continued)

	Member Label	Direction	Start Magnitude[k/ft,...	End Magnitude[k/ft,F...	Start Location[ft,%]	End Location[ft,%]
133	M61	Z	-.000749	-.000749	0	%100
134	M62	Z	-.000554	-.000554	0	%100
135	M63	Z	-.000554	-.000554	0	%100
136	M64	Z	-.000648	-.000648	0	%100
137	M65	Z	-.000648	-.000648	0	%100
138	M66	Z	-.000749	-.000749	0	%100
139	M67	Z	0	0	0	%100
140	M68	Z	0	0	0	%100
141	M69	Z	-.000782	-.000782	0	%100
142	Mast	Z	-.001	-.001	0	%100
143	M71	Z	-.001	-.001	0	%100
144	M72	Z	-.001	-.001	0	%100

Member Distributed Loads (BLC 21 : 45 Wind - Ice)

	Member Label	Direction	Start Magnitude[k/ft,...	End Magnitude[k/ft,F...	Start Location[ft,%]	End Location[ft,%]
1	FFTH1	X	-.000892	-.000892	0	%100
2	FFTH2	X	-.001	-.001	0	%100
3	FFTH3	X	-.000892	-.000892	0	%100
4	FFBH1	X	-.000892	-.000892	0	%100
5	FFBH2	X	-.001	-.001	0	%100
6	FFBH3	X	-.000892	-.000892	0	%100
7	MP-1	X	-.002	-.002	0	%100
8	MP-2	X	-.002	-.002	0	%100
9	MP-3	X	-.002	-.002	0	%100
10	MP-4	X	-.002	-.002	0	%100
11	SF2-TH	X	-.001	-.001	0	%100
12	SF2-BH	X	-.001	-.001	0	%100
13	SF2-V1	X	-.000824	-.000824	0	%100
14	SF2-V2	X	-.000824	-.000824	0	%100
15	SF2-D1	X	-.000953	-.000953	0	%100
16	SF3-TH	X	-.000248	-.000248	0	%100
17	SF3-BH	X	-.000248	-.000248	0	%100
18	SF3-V1	X	-.000824	-.000824	0	%100
19	SF3-V2	X	-.000824	-.000824	0	%100
20	SF3-D1	X	-.000953	-.000953	0	%100
21	BC-TH	X	-.000953	-.000953	0	%100
22	BC-BH	X	-.000953	-.000953	0	%100
23	SA-1	X	-.000301	-.000301	0	%100
24	M24	X	-.001	-.001	0	%100
25	M25	X	-.001	-.001	0	%100
26	M26	X	-.001	-.001	0	%100
27	M27	X	-.001	-.001	0	%100
28	M28	X	-.001	-.001	0	%100
29	M29	X	-.001	-.001	0	%100
30	MP-9	X	-.002	-.002	0	%100
31	MP-10	X	-.002	-.002	0	%100
32	MP-11	X	-.002	-.002	0	%100
33	MP-12	X	-.002	-.002	0	%100
34	M34	X	-.000695	-.000695	0	%100
35	M35	X	-.000695	-.000695	0	%100
36	M36	X	-.000824	-.000824	0	%100

Member Distributed Loads (BLC 21 : 45 Wind - Ice) (Continued)

	Member Label	Direction	Start Magnitude[k/ft,...	End Magnitude[k/ft,F...	Start Location[ft,%]	End Location[ft,%]
37	M37	X	-.000824	-.000824	0	%100
38	M38	X	-.000953	-.000953	0	%100
39	M39	X	-.001	-.001	0	%100
40	M40	X	-.001	-.001	0	%100
41	M41	X	-.000824	-.000824	0	%100
42	M42	X	-.000824	-.000824	0	%100
43	M43	X	-.000953	-.000953	0	%100
44	M44	X	-.001	-.001	0	%100
45	M45	X	-.001	-.001	0	%100
46	M46	X	-.000932	-.000932	0	%100
47	M47	X	-.000295	-.000295	0	%100
48	M48	X	-.000349	-.000349	0	%100
49	M49	X	-.000295	-.000295	0	%100
50	M50	X	-.000295	-.000295	0	%100
51	M51	X	-.000349	-.000349	0	%100
52	M52	X	-.000295	-.000295	0	%100
53	MP-5	X	-.002	-.002	0	%100
54	MP-6	X	-.002	-.002	0	%100
55	MP-7	X	-.002	-.002	0	%100
56	MP-8	X	-.002	-.002	0	%100
57	M57	X	-.000446	-.000446	0	%100
58	M58	X	-.000446	-.000446	0	%100
59	M59	X	-.000824	-.000824	0	%100
60	M60	X	-.000824	-.000824	0	%100
61	M61	X	-.000953	-.000953	0	%100
62	M62	X	-.000806	-.000806	0	%100
63	M63	X	-.000806	-.000806	0	%100
64	M64	X	-.000824	-.000824	0	%100
65	M65	X	-.000824	-.000824	0	%100
66	M66	X	-.000953	-.000953	0	%100
67	M67	X	-.000322	-.000322	0	%100
68	M68	X	-.000322	-.000322	0	%100
69	M69	X	-.001	-.001	0	%100
70	Mast	X	-.002	-.002	0	%100
71	M71	X	-.002	-.002	0	%100
72	M72	X	-.002	-.002	0	%100
73	FFTH1	Z	-.000803	-.000803	0	%100
74	FFTH2	Z	-.001	-.001	0	%100
75	FFTH3	Z	-.000803	-.000803	0	%100
76	FFBH1	Z	-.000803	-.000803	0	%100
77	FFBH2	Z	-.001	-.001	0	%100
78	FFBH3	Z	-.000803	-.000803	0	%100
79	MP-1	Z	-.002	-.002	0	%100
80	MP-2	Z	-.002	-.002	0	%100
81	MP-3	Z	-.002	-.002	0	%100
82	MP-4	Z	-.002	-.002	0	%100
83	SF2-TH	Z	-.001	-.001	0	%100
84	SF2-BH	Z	-.001	-.001	0	%100
85	SF2-V1	Z	-.000916	-.000916	0	%100
86	SF2-V2	Z	-.000916	-.000916	0	%100
87	SF2-D1	Z	-.001	-.001	0	%100
88	SF3-TH	Z	-.000228	-.000228	0	%100

Member Distributed Loads (BLC 21 : 45 Wind - Ice) (Continued)

	Member Label	Direction	Start Magnitude[k/ft,...	End Magnitude[k/ft,F...	Start Location[ft,%]	End Location[ft,%]
89	SF3-BH	Z	-.000228	-.000228	0	%100
90	SF3-V1	Z	-.000916	-.000916	0	%100
91	SF3-V2	Z	-.000916	-.000916	0	%100
92	SF3-D1	Z	-.001	-.001	0	%100
93	BC-TH	Z	-.000858	-.000858	0	%100
94	BC-BH	Z	-.000858	-.000858	0	%100
95	SA-1	Z	-.00033	-.00033	0	%100
96	M24	Z	-.001	-.001	0	%100
97	M25	Z	-.002	-.002	0	%100
98	M26	Z	-.001	-.001	0	%100
99	M27	Z	-.001	-.001	0	%100
100	M28	Z	-.002	-.002	0	%100
101	M29	Z	-.001	-.001	0	%100
102	MP-9	Z	-.002	-.002	0	%100
103	MP-10	Z	-.002	-.002	0	%100
104	MP-11	Z	-.002	-.002	0	%100
105	MP-12	Z	-.002	-.002	0	%100
106	M34	Z	-.00091	-.00091	0	%100
107	M35	Z	-.00091	-.00091	0	%100
108	M36	Z	-.000916	-.000916	0	%100
109	M37	Z	-.000916	-.000916	0	%100
110	M38	Z	-.001	-.001	0	%100
111	M39	Z	-.001	-.001	0	%100
112	M40	Z	-.001	-.001	0	%100
113	M41	Z	-.000916	-.000916	0	%100
114	M42	Z	-.000916	-.000916	0	%100
115	M43	Z	-.001	-.001	0	%100
116	M44	Z	-.001	-.001	0	%100
117	M45	Z	-.001	-.001	0	%100
118	M46	Z	-.000839	-.000839	0	%100
119	M47	Z	-.000318	-.000318	0	%100
120	M48	Z	-.000419	-.000419	0	%100
121	M49	Z	-.000318	-.000318	0	%100
122	M50	Z	-.000318	-.000318	0	%100
123	M51	Z	-.000419	-.000419	0	%100
124	M52	Z	-.000318	-.000318	0	%100
125	MP-5	Z	-.002	-.002	0	%100
126	MP-6	Z	-.002	-.002	0	%100
127	MP-7	Z	-.002	-.002	0	%100
128	MP-8	Z	-.002	-.002	0	%100
129	M57	Z	-.000385	-.000385	0	%100
130	M58	Z	-.000385	-.000385	0	%100
131	M59	Z	-.000916	-.000916	0	%100
132	M60	Z	-.000916	-.000916	0	%100
133	M61	Z	-.001	-.001	0	%100
134	M62	Z	-.001	-.001	0	%100
135	M63	Z	-.001	-.001	0	%100
136	M64	Z	-.000916	-.000916	0	%100
137	M65	Z	-.000916	-.000916	0	%100
138	M66	Z	-.001	-.001	0	%100
139	M67	Z	-.000342	-.000342	0	%100
140	M68	Z	-.000342	-.000342	0	%100

Member Distributed Loads (BLC 21 : 45 Wind - Ice) (Continued)

	Member Label	Direction	Start Magnitude[k/ft,...	End Magnitude[k/ft,F...	Start Location[ft,%]	End Location[ft,%]
141	M69	Z	-.001	-.001	0	%100
142	Mast	Z	-.002	-.002	0	%100
143	M71	Z	-.002	-.002	0	%100
144	M72	Z	-.002	-.002	0	%100

Member Distributed Loads (BLC 22 : 60 Wind - Ice)

	Member Label	Direction	Start Magnitude[k/ft,...	End Magnitude[k/ft,F...	Start Location[ft,%]	End Location[ft,%]
1	FFTH1	X	-.000446	-.000446	0	%100
2	FFTH2	X	-.000607	-.000607	0	%100
3	FFTH3	X	-.000446	-.000446	0	%100
4	FFBH1	X	-.000446	-.000446	0	%100
5	FFBH2	X	-.000607	-.000607	0	%100
6	FFBH3	X	-.000446	-.000446	0	%100
7	MP-1	X	-.001	-.001	0	%100
8	MP-2	X	-.001	-.001	0	%100
9	MP-3	X	-.001	-.001	0	%100
10	MP-4	X	-.001	-.001	0	%100
11	SF2-TH	X	-.000844	-.000844	0	%100
12	SF2-BH	X	-.000844	-.000844	0	%100
13	SF2-V1	X	-.000583	-.000583	0	%100
14	SF2-V2	X	-.000583	-.000583	0	%100
15	SF2-D1	X	-.000674	-.000674	0	%100
16	SF3-TH	X	-6.9e-5	-6.9e-5	0	%100
17	SF3-BH	X	-6.9e-5	-6.9e-5	0	%100
18	SF3-V1	X	-.000583	-.000583	0	%100
19	SF3-V2	X	-.000583	-.000583	0	%100
20	SF3-D1	X	-.000674	-.000674	0	%100
21	BC-TH	X	-.000477	-.000477	0	%100
22	BC-BH	X	-.000477	-.000477	0	%100
23	SA-1	X	-.000411	-.000411	0	%100
24	M24	X	-.000807	-.000807	0	%100
25	M25	X	-.000952	-.000952	0	%100
26	M26	X	-.000807	-.000807	0	%100
27	M27	X	-.000807	-.000807	0	%100
28	M28	X	-.000952	-.000952	0	%100
29	M29	X	-.000807	-.000807	0	%100
30	MP-9	X	-.001	-.001	0	%100
31	MP-10	X	-.001	-.001	0	%100
32	MP-11	X	-.001	-.001	0	%100
33	MP-12	X	-.001	-.001	0	%100
34	M34	X	-.000622	-.000622	0	%100
35	M35	X	-.000622	-.000622	0	%100
36	M36	X	-.000583	-.000583	0	%100
37	M37	X	-.000583	-.000583	0	%100
38	M38	X	-.000674	-.000674	0	%100
39	M39	X	-.000792	-.000792	0	%100
40	M40	X	-.000792	-.000792	0	%100
41	M41	X	-.000583	-.000583	0	%100
42	M42	X	-.000583	-.000583	0	%100
43	M43	X	-.000674	-.000674	0	%100
44	M44	X	-.000879	-.000879	0	%100

Member Distributed Loads (BLC 22 : 60 Wind - Ice) (Continued)

	Member Label	Direction	Start Magnitude[k/ft,...	End Magnitude[k/ft,F...	Start Location[ft,%]	End Location[ft,%]
45	M45	X	-.000879	-.000879	0	%100
46	M46	X	-.000466	-.000466	0	%100
47	M47	X	-.000404	-.000404	0	%100
48	M48	X	-.000476	-.000476	0	%100
49	M49	X	-.000404	-.000404	0	%100
50	M50	X	-.000404	-.000404	0	%100
51	M51	X	-.000476	-.000476	0	%100
52	M52	X	-.000404	-.000404	0	%100
53	MP-5	X	-.001	-.001	0	%100
54	MP-6	X	-.001	-.001	0	%100
55	MP-7	X	-.001	-.001	0	%100
56	MP-8	X	-.001	-.001	0	%100
57	M57	X	-7.1e-5	-7.1e-5	0	%100
58	M58	X	-7.1e-5	-7.1e-5	0	%100
59	M59	X	-.000583	-.000583	0	%100
60	M60	X	-.000583	-.000583	0	%100
61	M61	X	-.000674	-.000674	0	%100
62	M62	X	-.000678	-.000678	0	%100
63	M63	X	-.000678	-.000678	0	%100
64	M64	X	-.000583	-.000583	0	%100
65	M65	X	-.000583	-.000583	0	%100
66	M66	X	-.000674	-.000674	0	%100
67	M67	X	-.000439	-.000439	0	%100
68	M68	X	-.000439	-.000439	0	%100
69	M69	X	-.000822	-.000822	0	%100
70	Mast	X	-.001	-.001	0	%100
71	M71	X	-.001	-.001	0	%100
72	M72	X	-.001	-.001	0	%100
73	FFTH1	Z	-.000695	-.000695	0	%100
74	FFTH2	Z	-.000946	-.000946	0	%100
75	FFTH3	Z	-.000695	-.000695	0	%100
76	FFBH1	Z	-.000695	-.000695	0	%100
77	FFBH2	Z	-.000946	-.000946	0	%100
78	FFBH3	Z	-.000695	-.000695	0	%100
79	MP-1	Z	-.002	-.002	0	%100
80	MP-2	Z	-.002	-.002	0	%100
81	MP-3	Z	-.002	-.002	0	%100
82	MP-4	Z	-.002	-.002	0	%100
83	SF2-TH	Z	-.001	-.001	0	%100
84	SF2-BH	Z	-.001	-.001	0	%100
85	SF2-V1	Z	-.001	-.001	0	%100
86	SF2-V2	Z	-.001	-.001	0	%100
87	SF2-D1	Z	-.001	-.001	0	%100
88	SF3-TH	Z	-.00011	-.00011	0	%100
89	SF3-BH	Z	-.00011	-.00011	0	%100
90	SF3-V1	Z	-.001	-.001	0	%100
91	SF3-V2	Z	-.001	-.001	0	%100
92	SF3-D1	Z	-.001	-.001	0	%100
93	BC-TH	Z	-.000743	-.000743	0	%100
94	BC-BH	Z	-.000743	-.000743	0	%100
95	SA-1	Z	-.000782	-.000782	0	%100
96	M24	Z	-.002	-.002	0	%100

Member Distributed Loads (BLC 22 : 60 Wind - Ice) (Continued)

	Member Label	Direction	Start Magnitude[k/ft,...	End Magnitude[k/ft,F...	Start Location[ft,%]	End Location[ft,%]
97	M25	Z	-.002	-.002	0	%100
98	M26	Z	-.002	-.002	0	%100
99	M27	Z	-.002	-.002	0	%100
100	M28	Z	-.002	-.002	0	%100
101	M29	Z	-.002	-.002	0	%100
102	MP-9	Z	-.002	-.002	0	%100
103	MP-10	Z	-.002	-.002	0	%100
104	MP-11	Z	-.002	-.002	0	%100
105	MP-12	Z	-.002	-.002	0	%100
106	M34	Z	-.001	-.001	0	%100
107	M35	Z	-.001	-.001	0	%100
108	M36	Z	-.001	-.001	0	%100
109	M37	Z	-.001	-.001	0	%100
110	M38	Z	-.001	-.001	0	%100
111	M39	Z	-.001	-.001	0	%100
112	M40	Z	-.001	-.001	0	%100
113	M41	Z	-.001	-.001	0	%100
114	M42	Z	-.001	-.001	0	%100
115	M43	Z	-.001	-.001	0	%100
116	M44	Z	-.002	-.002	0	%100
117	M45	Z	-.002	-.002	0	%100
118	M46	Z	-.000727	-.000727	0	%100
119	M47	Z	-.000753	-.000753	0	%100
120	M48	Z	-.00099	-.00099	0	%100
121	M49	Z	-.000753	-.000753	0	%100
122	M50	Z	-.000753	-.000753	0	%100
123	M51	Z	-.00099	-.00099	0	%100
124	M52	Z	-.000753	-.000753	0	%100
125	MP-5	Z	-.002	-.002	0	%100
126	MP-6	Z	-.002	-.002	0	%100
127	MP-7	Z	-.002	-.002	0	%100
128	MP-8	Z	-.002	-.002	0	%100
129	M57	Z	-.000106	-.000106	0	%100
130	M58	Z	-.000106	-.000106	0	%100
131	M59	Z	-.001	-.001	0	%100
132	M60	Z	-.001	-.001	0	%100
133	M61	Z	-.001	-.001	0	%100
134	M62	Z	-.002	-.002	0	%100
135	M63	Z	-.002	-.002	0	%100
136	M64	Z	-.001	-.001	0	%100
137	M65	Z	-.001	-.001	0	%100
138	M66	Z	-.001	-.001	0	%100
139	M67	Z	-.000808	-.000808	0	%100
140	M68	Z	-.000808	-.000808	0	%100
141	M69	Z	-.002	-.002	0	%100
142	Mast	Z	-.003	-.003	0	%100
143	M71	Z	-.003	-.003	0	%100
144	M72	Z	-.003	-.003	0	%100

Member Distributed Loads (BLC 23 : 90 Wind - Ice)

	Member Label	Direction	Start Magnitude[k/ft,...	End Magnitude[k/ft,F...	Start Location[ft,%]	End Location[ft,%]

Member Distributed Loads (BLC 23 : 90 Wind - Ice) (Continued)

	Member Label	Direction	Start Magnitude[k/ft,...	End Magnitude[k/ft,F...	Start Location[ft,%]	End Location[ft,%]
1	FFTH1	Z	0	0	0	%100
2	FFTH2	Z	0	0	0	%100
3	FFTH3	Z	0	0	0	%100
4	FFBH1	Z	0	0	0	%100
5	FFBH2	Z	0	0	0	%100
6	FFBH3	Z	0	0	0	%100
7	MP-1	Z	-.003	-.003	0	%100
8	MP-2	Z	-.003	-.003	0	%100
9	MP-3	Z	-.003	-.003	0	%100
10	MP-4	Z	-.003	-.003	0	%100
11	SF2-TH	Z	-.00097	-.00097	0	%100
12	SF2-BH	Z	-.00097	-.00097	0	%100
13	SF2-V1	Z	-.001	-.001	0	%100
14	SF2-V2	Z	-.001	-.001	0	%100
15	SF2-D1	Z	-.001	-.001	0	%100
16	SF3-TH	Z	-.00097	-.00097	0	%100
17	SF3-BH	Z	-.00097	-.00097	0	%100
18	SF3-V1	Z	-.001	-.001	0	%100
19	SF3-V2	Z	-.001	-.001	0	%100
20	SF3-D1	Z	-.001	-.001	0	%100
21	BC-TH	Z	0	0	0	%100
22	BC-BH	Z	0	0	0	%100
23	SA-1	Z	-.002	-.002	0	%100
24	M24	Z	-.002	-.002	0	%100
25	M25	Z	-.002	-.002	0	%100
26	M26	Z	-.002	-.002	0	%100
27	M27	Z	-.002	-.002	0	%100
28	M28	Z	-.002	-.002	0	%100
29	M29	Z	-.002	-.002	0	%100
30	MP-9	Z	-.003	-.003	0	%100
31	MP-10	Z	-.003	-.003	0	%100
32	MP-11	Z	-.003	-.003	0	%100
33	MP-12	Z	-.003	-.003	0	%100
34	M34	Z	-.002	-.002	0	%100
35	M35	Z	-.002	-.002	0	%100
36	M36	Z	-.001	-.001	0	%100
37	M37	Z	-.001	-.001	0	%100
38	M38	Z	-.001	-.001	0	%100
39	M39	Z	-.000719	-.000719	0	%100
40	M40	Z	-.000719	-.000719	0	%100
41	M41	Z	-.001	-.001	0	%100
42	M42	Z	-.001	-.001	0	%100
43	M43	Z	-.001	-.001	0	%100
44	M44	Z	-.002	-.002	0	%100
45	M45	Z	-.002	-.002	0	%100
46	M46	Z	0	0	0	%100
47	M47	Z	-.002	-.002	0	%100
48	M48	Z	-.002	-.002	0	%100
49	M49	Z	-.002	-.002	0	%100
50	M50	Z	-.002	-.002	0	%100
51	M51	Z	-.002	-.002	0	%100
52	M52	Z	-.002	-.002	0	%100

Member Distributed Loads (BLC 23 : 90 Wind - Ice) (Continued)

	Member Label	Direction	Start Magnitude[k/ft,...	End Magnitude[k/ft,F...	Start Location[ft,%]	End Location[ft,%]
53	MP-5	Z	-.003	-.003	0	%100
54	MP-6	Z	-.003	-.003	0	%100
55	MP-7	Z	-.003	-.003	0	%100
56	MP-8	Z	-.003	-.003	0	%100
57	M57	Z	-.000719	-.000719	0	%100
58	M58	Z	-.000719	-.000719	0	%100
59	M59	Z	-.001	-.001	0	%100
60	M60	Z	-.001	-.001	0	%100
61	M61	Z	-.001	-.001	0	%100
62	M62	Z	-.002	-.002	0	%100
63	M63	Z	-.002	-.002	0	%100
64	M64	Z	-.001	-.001	0	%100
65	M65	Z	-.001	-.001	0	%100
66	M66	Z	-.001	-.001	0	%100
67	M67	Z	-.002	-.002	0	%100
68	M68	Z	-.002	-.002	0	%100
69	M69	Z	-.002	-.002	0	%100
70	Mast	Z	-.003	-.003	0	%100
71	M71	Z	-.003	-.003	0	%100
72	M72	Z	-.003	-.003	0	%100

Member Distributed Loads (BLC 24 : 120 Wind - Ice)

	Member Label	Direction	Start Magnitude[k/ft,...	End Magnitude[k/ft,F...	Start Location[ft,%]	End Location[ft,%]
1	FFTH1	X	.000446	.000446	0	%100
2	FFTH2	X	.000607	.000607	0	%100
3	FFTH3	X	.000446	.000446	0	%100
4	FFBH1	X	.000446	.000446	0	%100
5	FFBH2	X	.000607	.000607	0	%100
6	FFBH3	X	.000446	.000446	0	%100
7	MP-1	X	.001	.001	0	%100
8	MP-2	X	.001	.001	0	%100
9	MP-3	X	.001	.001	0	%100
10	MP-4	X	.001	.001	0	%100
11	SF2-TH	X	6.9e-5	6.9e-5	0	%100
12	SF2-BH	X	6.9e-5	6.9e-5	0	%100
13	SF2-V1	X	.000583	.000583	0	%100
14	SF2-V2	X	.000583	.000583	0	%100
15	SF2-D1	X	.000674	.000674	0	%100
16	SF3-TH	X	.000844	.000844	0	%100
17	SF3-BH	X	.000844	.000844	0	%100
18	SF3-V1	X	.000583	.000583	0	%100
19	SF3-V2	X	.000583	.000583	0	%100
20	SF3-D1	X	.000674	.000674	0	%100
21	BC-TH	X	.000477	.000477	0	%100
22	BC-BH	X	.000477	.000477	0	%100
23	SA-1	X	.000822	.000822	0	%100
24	M24	X	.000404	.000404	0	%100
25	M25	X	.000476	.000476	0	%100
26	M26	X	.000404	.000404	0	%100
27	M27	X	.000404	.000404	0	%100
28	M28	X	.000476	.000476	0	%100

Member Distributed Loads (BLC 24 : 120 Wind - Ice) (Continued)

	Member Label	Direction	Start Magnitude[k/ft,...	End Magnitude[k/ft,F...	Start Location[ft,%]	End Location[ft,%]
29	M29	X	.000404	.000404	0	%100
30	MP-9	X	.001	.001	0	%100
31	MP-10	X	.001	.001	0	%100
32	MP-11	X	.001	.001	0	%100
33	MP-12	X	.001	.001	0	%100
34	M34	X	.000678	.000678	0	%100
35	M35	X	.000678	.000678	0	%100
36	M36	X	.000583	.000583	0	%100
37	M37	X	.000583	.000583	0	%100
38	M38	X	.000674	.000674	0	%100
39	M39	X	7.1e-5	7.1e-5	0	%100
40	M40	X	7.1e-5	7.1e-5	0	%100
41	M41	X	.000583	.000583	0	%100
42	M42	X	.000583	.000583	0	%100
43	M43	X	.000674	.000674	0	%100
44	M44	X	.000439	.000439	0	%100
45	M45	X	.000439	.000439	0	%100
46	M46	X	.000466	.000466	0	%100
47	M47	X	.000807	.000807	0	%100
48	M48	X	.000952	.000952	0	%100
49	M49	X	.000807	.000807	0	%100
50	M50	X	.000807	.000807	0	%100
51	M51	X	.000952	.000952	0	%100
52	M52	X	.000807	.000807	0	%100
53	MP-5	X	.001	.001	0	%100
54	MP-6	X	.001	.001	0	%100
55	MP-7	X	.001	.001	0	%100
56	MP-8	X	.001	.001	0	%100
57	M57	X	.000792	.000792	0	%100
58	M58	X	.000792	.000792	0	%100
59	M59	X	.000583	.000583	0	%100
60	M60	X	.000583	.000583	0	%100
61	M61	X	.000674	.000674	0	%100
62	M62	X	.000622	.000622	0	%100
63	M63	X	.000622	.000622	0	%100
64	M64	X	.000583	.000583	0	%100
65	M65	X	.000583	.000583	0	%100
66	M66	X	.000674	.000674	0	%100
67	M67	X	.000879	.000879	0	%100
68	M68	X	.000879	.000879	0	%100
69	M69	X	.000411	.000411	0	%100
70	Mast	X	.001	.001	0	%100
71	M71	X	.001	.001	0	%100
72	M72	X	.001	.001	0	%100
73	FFTH1	Z	-.000695	-.000695	0	%100
74	FFTH2	Z	-.000946	-.000946	0	%100
75	FFTH3	Z	-.000695	-.000695	0	%100
76	FFBH1	Z	-.000695	-.000695	0	%100
77	FFBH2	Z	-.000946	-.000946	0	%100
78	FFBH3	Z	-.000695	-.000695	0	%100
79	MP-1	Z	-.002	-.002	0	%100
80	MP-2	Z	-.002	-.002	0	%100

Member Distributed Loads (BLC 24 : 120 Wind - Ice) (Continued)

	Member Label	Direction	Start Magnitude[k/ft,...	End Magnitude[k/ft,F...	Start Location[ft,%]	End Location[ft,%]
81	MP-3	Z	-.002	-.002	0	%100
82	MP-4	Z	-.002	-.002	0	%100
83	SF2-TH	Z	-.00011	-.00011	0	%100
84	SF2-BH	Z	-.00011	-.00011	0	%100
85	SF2-V1	Z	-.001	-.001	0	%100
86	SF2-V2	Z	-.001	-.001	0	%100
87	SF2-D1	Z	-.001	-.001	0	%100
88	SF3-TH	Z	-.001	-.001	0	%100
89	SF3-BH	Z	-.001	-.001	0	%100
90	SF3-V1	Z	-.001	-.001	0	%100
91	SF3-V2	Z	-.001	-.001	0	%100
92	SF3-D1	Z	-.001	-.001	0	%100
93	BC-TH	Z	-.000743	-.000743	0	%100
94	BC-BH	Z	-.000743	-.000743	0	%100
95	SA-1	Z	-.002	-.002	0	%100
96	M24	Z	-.000753	-.000753	0	%100
97	M25	Z	-.00099	-.00099	0	%100
98	M26	Z	-.000753	-.000753	0	%100
99	M27	Z	-.000753	-.000753	0	%100
100	M28	Z	-.00099	-.00099	0	%100
101	M29	Z	-.000753	-.000753	0	%100
102	MP-9	Z	-.002	-.002	0	%100
103	MP-10	Z	-.002	-.002	0	%100
104	MP-11	Z	-.002	-.002	0	%100
105	MP-12	Z	-.002	-.002	0	%100
106	M34	Z	-.002	-.002	0	%100
107	M35	Z	-.002	-.002	0	%100
108	M36	Z	-.001	-.001	0	%100
109	M37	Z	-.001	-.001	0	%100
110	M38	Z	-.001	-.001	0	%100
111	M39	Z	-.000106	-.000106	0	%100
112	M40	Z	-.000106	-.000106	0	%100
113	M41	Z	-.001	-.001	0	%100
114	M42	Z	-.001	-.001	0	%100
115	M43	Z	-.001	-.001	0	%100
116	M44	Z	-.000808	-.000808	0	%100
117	M45	Z	-.000808	-.000808	0	%100
118	M46	Z	-.000727	-.000727	0	%100
119	M47	Z	-.002	-.002	0	%100
120	M48	Z	-.002	-.002	0	%100
121	M49	Z	-.002	-.002	0	%100
122	M50	Z	-.002	-.002	0	%100
123	M51	Z	-.002	-.002	0	%100
124	M52	Z	-.002	-.002	0	%100
125	MP-5	Z	-.002	-.002	0	%100
126	MP-6	Z	-.002	-.002	0	%100
127	MP-7	Z	-.002	-.002	0	%100
128	MP-8	Z	-.002	-.002	0	%100
129	M57	Z	-.001	-.001	0	%100
130	M58	Z	-.001	-.001	0	%100
131	M59	Z	-.001	-.001	0	%100
132	M60	Z	-.001	-.001	0	%100

Member Distributed Loads (BLC 24 : 120 Wind - Ice) (Continued)

	Member Label	Direction	Start Magnitude[k/ft,...	End Magnitude[k/ft,F...	Start Location[ft,%]	End Location[ft,%]
133	M61	Z	-.001	-.001	0	%100
134	M62	Z	-.001	-.001	0	%100
135	M63	Z	-.001	-.001	0	%100
136	M64	Z	-.001	-.001	0	%100
137	M65	Z	-.001	-.001	0	%100
138	M66	Z	-.001	-.001	0	%100
139	M67	Z	-.002	-.002	0	%100
140	M68	Z	-.002	-.002	0	%100
141	M69	Z	-.000782	-.000782	0	%100
142	Mast	Z	-.003	-.003	0	%100
143	M71	Z	-.003	-.003	0	%100
144	M72	Z	-.003	-.003	0	%100

Member Distributed Loads (BLC 25 : 135 Wind - Ice)

	Member Label	Direction	Start Magnitude[k/ft,...	End Magnitude[k/ft,F...	Start Location[ft,%]	End Location[ft,%]
1	FFTH1	X	.000892	.000892	0	%100
2	FFTH2	X	.001	.001	0	%100
3	FFTH3	X	.000892	.000892	0	%100
4	FFBH1	X	.000892	.000892	0	%100
5	FFBH2	X	.001	.001	0	%100
6	FFBH3	X	.000892	.000892	0	%100
7	MP-1	X	.002	.002	0	%100
8	MP-2	X	.002	.002	0	%100
9	MP-3	X	.002	.002	0	%100
10	MP-4	X	.002	.002	0	%100
11	SF2-TH	X	.000248	.000248	0	%100
12	SF2-BH	X	.000248	.000248	0	%100
13	SF2-V1	X	.000824	.000824	0	%100
14	SF2-V2	X	.000824	.000824	0	%100
15	SF2-D1	X	.000953	.000953	0	%100
16	SF3-TH	X	.001	.001	0	%100
17	SF3-BH	X	.001	.001	0	%100
18	SF3-V1	X	.000824	.000824	0	%100
19	SF3-V2	X	.000824	.000824	0	%100
20	SF3-D1	X	.000953	.000953	0	%100
21	BC-TH	X	.000953	.000953	0	%100
22	BC-BH	X	.000953	.000953	0	%100
23	SA-1	X	.001	.001	0	%100
24	M24	X	.000295	.000295	0	%100
25	M25	X	.000349	.000349	0	%100
26	M26	X	.000295	.000295	0	%100
27	M27	X	.000295	.000295	0	%100
28	M28	X	.000349	.000349	0	%100
29	M29	X	.000295	.000295	0	%100
30	MP-9	X	.002	.002	0	%100
31	MP-10	X	.002	.002	0	%100
32	MP-11	X	.002	.002	0	%100
33	MP-12	X	.002	.002	0	%100
34	M34	X	.000806	.000806	0	%100
35	M35	X	.000806	.000806	0	%100
36	M36	X	.000824	.000824	0	%100

Member Distributed Loads (BLC 25 : 135 Wind - Ice) (Continued)

	Member Label	Direction	Start Magnitude[k/ft,...	End Magnitude[k/ft,F...	Start Location[ft,%]	End Location[ft,%]
37	M37	X	.000824	.000824	0	%100
38	M38	X	.000953	.000953	0	%100
39	M39	X	.000446	.000446	0	%100
40	M40	X	.000446	.000446	0	%100
41	M41	X	.000824	.000824	0	%100
42	M42	X	.000824	.000824	0	%100
43	M43	X	.000953	.000953	0	%100
44	M44	X	.000322	.000322	0	%100
45	M45	X	.000322	.000322	0	%100
46	M46	X	.000932	.000932	0	%100
47	M47	X	.001	.001	0	%100
48	M48	X	.001	.001	0	%100
49	M49	X	.001	.001	0	%100
50	M50	X	.001	.001	0	%100
51	M51	X	.001	.001	0	%100
52	M52	X	.001	.001	0	%100
53	MP-5	X	.002	.002	0	%100
54	MP-6	X	.002	.002	0	%100
55	MP-7	X	.002	.002	0	%100
56	MP-8	X	.002	.002	0	%100
57	M57	X	.001	.001	0	%100
58	M58	X	.001	.001	0	%100
59	M59	X	.000824	.000824	0	%100
60	M60	X	.000824	.000824	0	%100
61	M61	X	.000953	.000953	0	%100
62	M62	X	.000695	.000695	0	%100
63	M63	X	.000695	.000695	0	%100
64	M64	X	.000824	.000824	0	%100
65	M65	X	.000824	.000824	0	%100
66	M66	X	.000953	.000953	0	%100
67	M67	X	.001	.001	0	%100
68	M68	X	.001	.001	0	%100
69	M69	X	.000301	.000301	0	%100
70	Mast	X	.002	.002	0	%100
71	M71	X	.002	.002	0	%100
72	M72	X	.002	.002	0	%100
73	FFTH1	Z	-.000803	-.000803	0	%100
74	FFTH2	Z	-.001	-.001	0	%100
75	FFTH3	Z	-.000803	-.000803	0	%100
76	FFBH1	Z	-.000803	-.000803	0	%100
77	FFBH2	Z	-.001	-.001	0	%100
78	FFBH3	Z	-.000803	-.000803	0	%100
79	MP-1	Z	-.002	-.002	0	%100
80	MP-2	Z	-.002	-.002	0	%100
81	MP-3	Z	-.002	-.002	0	%100
82	MP-4	Z	-.002	-.002	0	%100
83	SF2-TH	Z	-.000228	-.000228	0	%100
84	SF2-BH	Z	-.000228	-.000228	0	%100
85	SF2-V1	Z	-.000916	-.000916	0	%100
86	SF2-V2	Z	-.000916	-.000916	0	%100
87	SF2-D1	Z	-.001	-.001	0	%100
88	SF3-TH	Z	-.001	-.001	0	%100

Member Distributed Loads (BLC 25 : 135 Wind - Ice) (Continued)

	Member Label	Direction	Start Magnitude[k/ft,...	End Magnitude[k/ft,F...	Start Location[ft,%]	End Location[ft,%]
89	SF3-BH	Z	-.001	-.001	0	%100
90	SF3-V1	Z	-.000916	-.000916	0	%100
91	SF3-V2	Z	-.000916	-.000916	0	%100
92	SF3-D1	Z	-.001	-.001	0	%100
93	BC-TH	Z	-.000858	-.000858	0	%100
94	BC-BH	Z	-.000858	-.000858	0	%100
95	SA-1	Z	-.001	-.001	0	%100
96	M24	Z	-.000318	-.000318	0	%100
97	M25	Z	-.000419	-.000419	0	%100
98	M26	Z	-.000318	-.000318	0	%100
99	M27	Z	-.000318	-.000318	0	%100
100	M28	Z	-.000419	-.000419	0	%100
101	M29	Z	-.000318	-.000318	0	%100
102	MP-9	Z	-.002	-.002	0	%100
103	MP-10	Z	-.002	-.002	0	%100
104	MP-11	Z	-.002	-.002	0	%100
105	MP-12	Z	-.002	-.002	0	%100
106	M34	Z	-.001	-.001	0	%100
107	M35	Z	-.001	-.001	0	%100
108	M36	Z	-.000916	-.000916	0	%100
109	M37	Z	-.000916	-.000916	0	%100
110	M38	Z	-.001	-.001	0	%100
111	M39	Z	-.000385	-.000385	0	%100
112	M40	Z	-.000385	-.000385	0	%100
113	M41	Z	-.000916	-.000916	0	%100
114	M42	Z	-.000916	-.000916	0	%100
115	M43	Z	-.001	-.001	0	%100
116	M44	Z	-.000342	-.000342	0	%100
117	M45	Z	-.000342	-.000342	0	%100
118	M46	Z	-.000839	-.000839	0	%100
119	M47	Z	-.001	-.001	0	%100
120	M48	Z	-.002	-.002	0	%100
121	M49	Z	-.001	-.001	0	%100
122	M50	Z	-.001	-.001	0	%100
123	M51	Z	-.002	-.002	0	%100
124	M52	Z	-.001	-.001	0	%100
125	MP-5	Z	-.002	-.002	0	%100
126	MP-6	Z	-.002	-.002	0	%100
127	MP-7	Z	-.002	-.002	0	%100
128	MP-8	Z	-.002	-.002	0	%100
129	M57	Z	-.001	-.001	0	%100
130	M58	Z	-.001	-.001	0	%100
131	M59	Z	-.000916	-.000916	0	%100
132	M60	Z	-.000916	-.000916	0	%100
133	M61	Z	-.001	-.001	0	%100
134	M62	Z	-.00091	-.00091	0	%100
135	M63	Z	-.00091	-.00091	0	%100
136	M64	Z	-.000916	-.000916	0	%100
137	M65	Z	-.000916	-.000916	0	%100
138	M66	Z	-.001	-.001	0	%100
139	M67	Z	-.001	-.001	0	%100
140	M68	Z	-.001	-.001	0	%100

Member Distributed Loads (BLC 25 : 135 Wind - Ice) (Continued)

	Member Label	Direction	Start Magnitude[k/ft,...	End Magnitude[k/ft,F...	Start Location[ft,%]	End Location[ft,%]
141	M69	Z	-.00033	-.00033	0	%100
142	Mast	Z	-.002	-.002	0	%100
143	M71	Z	-.002	-.002	0	%100
144	M72	Z	-.002	-.002	0	%100

Member Distributed Loads (BLC 26 : 150 Wind - Ice)

	Member Label	Direction	Start Magnitude[k/ft,...	End Magnitude[k/ft,F...	Start Location[ft,%]	End Location[ft,%]
1	FFTH1	X	.001	.001	0	%100
2	FFTH2	X	.002	.002	0	%100
3	FFTH3	X	.001	.001	0	%100
4	FFBH1	X	.001	.001	0	%100
5	FFBH2	X	.002	.002	0	%100
6	FFBH3	X	.001	.001	0	%100
7	MP-1	X	.002	.002	0	%100
8	MP-2	X	.002	.002	0	%100
9	MP-3	X	.002	.002	0	%100
10	MP-4	X	.002	.002	0	%100
11	SF2-TH	X	.000706	.000706	0	%100
12	SF2-BH	X	.000706	.000706	0	%100
13	SF2-V1	X	.001	.001	0	%100
14	SF2-V2	X	.001	.001	0	%100
15	SF2-D1	X	.001	.001	0	%100
16	SF3-TH	X	.002	.002	0	%100
17	SF3-BH	X	.002	.002	0	%100
18	SF3-V1	X	.001	.001	0	%100
19	SF3-V2	X	.001	.001	0	%100
20	SF3-D1	X	.001	.001	0	%100
21	BC-TH	X	.001	.001	0	%100
22	BC-BH	X	.001	.001	0	%100
23	SA-1	X	.001	.001	0	%100
24	M24	X	0	0	0	%100
25	M25	X	0	0	0	%100
26	M26	X	0	0	0	%100
27	M27	X	0	0	0	%100
28	M28	X	0	0	0	%100
29	M29	X	0	0	0	%100
30	MP-9	X	.002	.002	0	%100
31	MP-10	X	.002	.002	0	%100
32	MP-11	X	.002	.002	0	%100
33	MP-12	X	.002	.002	0	%100
34	M34	X	.000733	.000733	0	%100
35	M35	X	.000733	.000733	0	%100
36	M36	X	.001	.001	0	%100
37	M37	X	.001	.001	0	%100
38	M38	X	.001	.001	0	%100
39	M39	X	.000933	.000933	0	%100
40	M40	X	.000933	.000933	0	%100
41	M41	X	.001	.001	0	%100
42	M42	X	.001	.001	0	%100
43	M43	X	.001	.001	0	%100
44	M44	X	0	0	0	%100

Member Distributed Loads (BLC 26 : 150 Wind - Ice) (Continued)

	Member Label	Direction	Start Magnitude[k/ft,...	End Magnitude[k/ft,F...	Start Location[ft,%]	End Location[ft,%]
45	M45	X	0	0	0	%100
46	M46	X	.001	.001	0	%100
47	M47	X	.001	.001	0	%100
48	M48	X	.001	.001	0	%100
49	M49	X	.001	.001	0	%100
50	M50	X	.001	.001	0	%100
51	M51	X	.001	.001	0	%100
52	M52	X	.001	.001	0	%100
53	MP-5	X	.002	.002	0	%100
54	MP-6	X	.002	.002	0	%100
55	MP-7	X	.002	.002	0	%100
56	MP-8	X	.002	.002	0	%100
57	M57	X	.002	.002	0	%100
58	M58	X	.002	.002	0	%100
59	M59	X	.001	.001	0	%100
60	M60	X	.001	.001	0	%100
61	M61	X	.001	.001	0	%100
62	M62	X	.000567	.000567	0	%100
63	M63	X	.000567	.000567	0	%100
64	M64	X	.001	.001	0	%100
65	M65	X	.001	.001	0	%100
66	M66	X	.001	.001	0	%100
67	M67	X	.001	.001	0	%100
68	M68	X	.001	.001	0	%100
69	M69	X	0	0	0	%100
70	Mast	X	.002	.002	0	%100
71	M71	X	.002	.002	0	%100
72	M72	X	.002	.002	0	%100
73	FFTH1	Z	-.000695	-.000695	0	%100
74	FFTH2	Z	-.000946	-.000946	0	%100
75	FFTH3	Z	-.000695	-.000695	0	%100
76	FFBH1	Z	-.000695	-.000695	0	%100
77	FFBH2	Z	-.000946	-.000946	0	%100
78	FFBH3	Z	-.000695	-.000695	0	%100
79	MP-1	Z	-.001	-.001	0	%100
80	MP-2	Z	-.001	-.001	0	%100
81	MP-3	Z	-.001	-.001	0	%100
82	MP-4	Z	-.001	-.001	0	%100
83	SF2-TH	Z	-.000375	-.000375	0	%100
84	SF2-BH	Z	-.000375	-.000375	0	%100
85	SF2-V1	Z	-.000648	-.000648	0	%100
86	SF2-V2	Z	-.000648	-.000648	0	%100
87	SF2-D1	Z	-.000749	-.000749	0	%100
88	SF3-TH	Z	-.00086	-.00086	0	%100
89	SF3-BH	Z	-.00086	-.00086	0	%100
90	SF3-V1	Z	-.000648	-.000648	0	%100
91	SF3-V2	Z	-.000648	-.000648	0	%100
92	SF3-D1	Z	-.000749	-.000749	0	%100
93	BC-TH	Z	-.000743	-.000743	0	%100
94	BC-BH	Z	-.000743	-.000743	0	%100
95	SA-1	Z	-.000782	-.000782	0	%100
96	M24	Z	0	0	0	%100

Member Distributed Loads (BLC 26 : 150 Wind - Ice) (Continued)

	Member Label	Direction	Start Magnitude[k/ft,...	End Magnitude[k/ft,F...	Start Location[ft,%]	End Location[ft,%]
97	M25	Z	0	0	0	%100
98	M26	Z	0	0	0	%100
99	M27	Z	0	0	0	%100
100	M28	Z	0	0	0	%100
101	M29	Z	0	0	0	%100
102	MP-9	Z	-.001	-.001	0	%100
103	MP-10	Z	-.001	-.001	0	%100
104	MP-11	Z	-.001	-.001	0	%100
105	MP-12	Z	-.001	-.001	0	%100
106	M34	Z	-.000554	-.000554	0	%100
107	M35	Z	-.000554	-.000554	0	%100
108	M36	Z	-.000648	-.000648	0	%100
109	M37	Z	-.000648	-.000648	0	%100
110	M38	Z	-.000749	-.000749	0	%100
111	M39	Z	-.000465	-.000465	0	%100
112	M40	Z	-.000465	-.000465	0	%100
113	M41	Z	-.000648	-.000648	0	%100
114	M42	Z	-.000648	-.000648	0	%100
115	M43	Z	-.000749	-.000749	0	%100
116	M44	Z	0	0	0	%100
117	M45	Z	0	0	0	%100
118	M46	Z	-.000727	-.000727	0	%100
119	M47	Z	-.000753	-.000753	0	%100
120	M48	Z	-.00099	-.00099	0	%100
121	M49	Z	-.000753	-.000753	0	%100
122	M50	Z	-.000753	-.000753	0	%100
123	M51	Z	-.00099	-.00099	0	%100
124	M52	Z	-.000753	-.000753	0	%100
125	MP-5	Z	-.001	-.001	0	%100
126	MP-6	Z	-.001	-.001	0	%100
127	MP-7	Z	-.001	-.001	0	%100
128	MP-8	Z	-.001	-.001	0	%100
129	M57	Z	-.000824	-.000824	0	%100
130	M58	Z	-.000824	-.000824	0	%100
131	M59	Z	-.000648	-.000648	0	%100
132	M60	Z	-.000648	-.000648	0	%100
133	M61	Z	-.000749	-.000749	0	%100
134	M62	Z	-.000428	-.000428	0	%100
135	M63	Z	-.000428	-.000428	0	%100
136	M64	Z	-.000648	-.000648	0	%100
137	M65	Z	-.000648	-.000648	0	%100
138	M66	Z	-.000749	-.000749	0	%100
139	M67	Z	-.000808	-.000808	0	%100
140	M68	Z	-.000808	-.000808	0	%100
141	M69	Z	0	0	0	%100
142	Mast	Z	-.001	-.001	0	%100
143	M71	Z	-.001	-.001	0	%100
144	M72	Z	-.001	-.001	0	%100

Member Distributed Loads (BLC 27 : 180 Wind - Ice)

	Member Label	Direction	Start Magnitude[k/ft,...	End Magnitude[k/ft,F...	Start Location[ft,%]	End Location[ft,%]

Member Distributed Loads (BLC 27 : 180 Wind - Ice) (Continued)

	Member Label	Direction	Start Magnitude[k/ft,...	End Magnitude[k/ft,F...	Start Location[ft,%]	End Location[ft,%]
1	FFTH1	X	.002	.002	0	%100
2	FFTH2	X	.002	.002	0	%100
3	FFTH3	X	.002	.002	0	%100
4	FFBH1	X	.002	.002	0	%100
5	FFBH2	X	.002	.002	0	%100
6	FFBH3	X	.002	.002	0	%100
7	MP-1	X	.002	.002	0	%100
8	MP-2	X	.002	.002	0	%100
9	MP-3	X	.002	.002	0	%100
10	MP-4	X	.002	.002	0	%100
11	SF2-TH	X	.002	.002	0	%100
12	SF2-BH	X	.002	.002	0	%100
13	SF2-V1	X	.001	.001	0	%100
14	SF2-V2	X	.001	.001	0	%100
15	SF2-D1	X	.001	.001	0	%100
16	SF3-TH	X	.002	.002	0	%100
17	SF3-BH	X	.002	.002	0	%100
18	SF3-V1	X	.001	.001	0	%100
19	SF3-V2	X	.001	.001	0	%100
20	SF3-D1	X	.001	.001	0	%100
21	BC-TH	X	.002	.002	0	%100
22	BC-BH	X	.002	.002	0	%100
23	SA-1	X	.002	.002	0	%100
24	M24	X	.002	.002	0	%100
25	M25	X	.002	.002	0	%100
26	M26	X	.002	.002	0	%100
27	M27	X	.002	.002	0	%100
28	M28	X	.002	.002	0	%100
29	M29	X	.002	.002	0	%100
30	MP-9	X	.002	.002	0	%100
31	MP-10	X	.002	.002	0	%100
32	MP-11	X	.002	.002	0	%100
33	MP-12	X	.002	.002	0	%100
34	M34	X	.002	.002	0	%100
35	M35	X	.002	.002	0	%100
36	M36	X	.001	.001	0	%100
37	M37	X	.001	.001	0	%100
38	M38	X	.001	.001	0	%100
39	M39	X	.002	.002	0	%100
40	M40	X	.002	.002	0	%100
41	M41	X	.001	.001	0	%100
42	M42	X	.001	.001	0	%100
43	M43	X	.001	.001	0	%100
44	M44	X	.002	.002	0	%100
45	M45	X	.002	.002	0	%100
46	M46	X	.002	.002	0	%100
47	M47	X	.002	.002	0	%100
48	M48	X	.002	.002	0	%100
49	M49	X	.002	.002	0	%100
50	M50	X	.002	.002	0	%100
51	M51	X	.002	.002	0	%100
52	M52	X	.002	.002	0	%100

Member Distributed Loads (BLC 27 : 180 Wind - Ice) (Continued)

	Member Label	Direction	Start Magnitude[k/ft,...	End Magnitude[k/ft,F...	Start Location[ft,%]	End Location[ft,%]
53	MP-5	X	.002	.002	0	%100
54	MP-6	X	.002	.002	0	%100
55	MP-7	X	.002	.002	0	%100
56	MP-8	X	.002	.002	0	%100
57	M57	X	.002	.002	0	%100
58	M58	X	.002	.002	0	%100
59	M59	X	.001	.001	0	%100
60	M60	X	.001	.001	0	%100
61	M61	X	.001	.001	0	%100
62	M62	X	.002	.002	0	%100
63	M63	X	.002	.002	0	%100
64	M64	X	.001	.001	0	%100
65	M65	X	.001	.001	0	%100
66	M66	X	.001	.001	0	%100
67	M67	X	.002	.002	0	%100
68	M68	X	.002	.002	0	%100
69	M69	X	.002	.002	0	%100
70	Mast	X	.003	.003	0	%100
71	M71	X	.003	.003	0	%100
72	M72	X	.003	.003	0	%100

Member Distributed Loads (BLC 28 : 210 Wind - Ice)

	Member Label	Direction	Start Magnitude[k/ft,...	End Magnitude[k/ft,F...	Start Location[ft,%]	End Location[ft,%]
1	FFTH1	X	.001	.001	0	%100
2	FFTH2	X	.002	.002	0	%100
3	FFTH3	X	.001	.001	0	%100
4	FFBH1	X	.001	.001	0	%100
5	FFBH2	X	.002	.002	0	%100
6	FFBH3	X	.001	.001	0	%100
7	MP-1	X	.002	.002	0	%100
8	MP-2	X	.002	.002	0	%100
9	MP-3	X	.002	.002	0	%100
10	MP-4	X	.002	.002	0	%100
11	SF2-TH	X	.002	.002	0	%100
12	SF2-BH	X	.002	.002	0	%100
13	SF2-V1	X	.001	.001	0	%100
14	SF2-V2	X	.001	.001	0	%100
15	SF2-D1	X	.001	.001	0	%100
16	SF3-TH	X	.000706	.000706	0	%100
17	SF3-BH	X	.000706	.000706	0	%100
18	SF3-V1	X	.001	.001	0	%100
19	SF3-V2	X	.001	.001	0	%100
20	SF3-D1	X	.001	.001	0	%100
21	BC-TH	X	.001	.001	0	%100
22	BC-BH	X	.001	.001	0	%100
23	SA-1	X	0	0	0	%100
24	M24	X	.001	.001	0	%100
25	M25	X	.001	.001	0	%100
26	M26	X	.001	.001	0	%100
27	M27	X	.001	.001	0	%100
28	M28	X	.001	.001	0	%100

Member Distributed Loads (BLC 28 : 210 Wind - Ice) (Continued)

	Member Label	Direction	Start Magnitude[k/ft,...	End Magnitude[k/ft,F...	Start Location[ft,%]	End Location[ft,%]
29	M29	X	.001	.001	0	%100
30	MP-9	X	.002	.002	0	%100
31	MP-10	X	.002	.002	0	%100
32	MP-11	X	.002	.002	0	%100
33	MP-12	X	.002	.002	0	%100
34	M34	X	.000567	.000567	0	%100
35	M35	X	.000567	.000567	0	%100
36	M36	X	.001	.001	0	%100
37	M37	X	.001	.001	0	%100
38	M38	X	.001	.001	0	%100
39	M39	X	.002	.002	0	%100
40	M40	X	.002	.002	0	%100
41	M41	X	.001	.001	0	%100
42	M42	X	.001	.001	0	%100
43	M43	X	.001	.001	0	%100
44	M44	X	.001	.001	0	%100
45	M45	X	.001	.001	0	%100
46	M46	X	.001	.001	0	%100
47	M47	X	0	0	0	%100
48	M48	X	0	0	0	%100
49	M49	X	0	0	0	%100
50	M50	X	0	0	0	%100
51	M51	X	0	0	0	%100
52	M52	X	0	0	0	%100
53	MP-5	X	.002	.002	0	%100
54	MP-6	X	.002	.002	0	%100
55	MP-7	X	.002	.002	0	%100
56	MP-8	X	.002	.002	0	%100
57	M57	X	.000933	.000933	0	%100
58	M58	X	.000933	.000933	0	%100
59	M59	X	.001	.001	0	%100
60	M60	X	.001	.001	0	%100
61	M61	X	.001	.001	0	%100
62	M62	X	.000733	.000733	0	%100
63	M63	X	.000733	.000733	0	%100
64	M64	X	.001	.001	0	%100
65	M65	X	.001	.001	0	%100
66	M66	X	.001	.001	0	%100
67	M67	X	0	0	0	%100
68	M68	X	0	0	0	%100
69	M69	X	.001	.001	0	%100
70	Mast	X	.002	.002	0	%100
71	M71	X	.002	.002	0	%100
72	M72	X	.002	.002	0	%100
73	FFTH1	Z	.000695	.000695	0	%100
74	FFTH2	Z	.000946	.000946	0	%100
75	FFTH3	Z	.000695	.000695	0	%100
76	FFBH1	Z	.000695	.000695	0	%100
77	FFBH2	Z	.000946	.000946	0	%100
78	FFBH3	Z	.000695	.000695	0	%100
79	MP-1	Z	.001	.001	0	%100
80	MP-2	Z	.001	.001	0	%100

Member Distributed Loads (BLC 28 : 210 Wind - Ice) (Continued)

	Member Label	Direction	Start Magnitude[k/ft,...	End Magnitude[k/ft,F...	Start Location[ft,%]	End Location[ft,%]
81	MP-3	Z	.001	.001	0	%100
82	MP-4	Z	.001	.001	0	%100
83	SF2-TH	Z	.00086	.00086	0	%100
84	SF2-BH	Z	.00086	.00086	0	%100
85	SF2-V1	Z	.000648	.000648	0	%100
86	SF2-V2	Z	.000648	.000648	0	%100
87	SF2-D1	Z	.000749	.000749	0	%100
88	SF3-TH	Z	.000375	.000375	0	%100
89	SF3-BH	Z	.000375	.000375	0	%100
90	SF3-V1	Z	.000648	.000648	0	%100
91	SF3-V2	Z	.000648	.000648	0	%100
92	SF3-D1	Z	.000749	.000749	0	%100
93	BC-TH	Z	.000743	.000743	0	%100
94	BC-BH	Z	.000743	.000743	0	%100
95	SA-1	Z	0	0	0	%100
96	M24	Z	.000753	.000753	0	%100
97	M25	Z	.00099	.00099	0	%100
98	M26	Z	.000753	.000753	0	%100
99	M27	Z	.000753	.000753	0	%100
100	M28	Z	.00099	.00099	0	%100
101	M29	Z	.000753	.000753	0	%100
102	MP-9	Z	.001	.001	0	%100
103	MP-10	Z	.001	.001	0	%100
104	MP-11	Z	.001	.001	0	%100
105	MP-12	Z	.001	.001	0	%100
106	M34	Z	.000428	.000428	0	%100
107	M35	Z	.000428	.000428	0	%100
108	M36	Z	.000648	.000648	0	%100
109	M37	Z	.000648	.000648	0	%100
110	M38	Z	.000749	.000749	0	%100
111	M39	Z	.000824	.000824	0	%100
112	M40	Z	.000824	.000824	0	%100
113	M41	Z	.000648	.000648	0	%100
114	M42	Z	.000648	.000648	0	%100
115	M43	Z	.000749	.000749	0	%100
116	M44	Z	.000808	.000808	0	%100
117	M45	Z	.000808	.000808	0	%100
118	M46	Z	.000727	.000727	0	%100
119	M47	Z	0	0	0	%100
120	M48	Z	0	0	0	%100
121	M49	Z	0	0	0	%100
122	M50	Z	0	0	0	%100
123	M51	Z	0	0	0	%100
124	M52	Z	0	0	0	%100
125	MP-5	Z	.001	.001	0	%100
126	MP-6	Z	.001	.001	0	%100
127	MP-7	Z	.001	.001	0	%100
128	MP-8	Z	.001	.001	0	%100
129	M57	Z	.000465	.000465	0	%100
130	M58	Z	.000465	.000465	0	%100
131	M59	Z	.000648	.000648	0	%100
132	M60	Z	.000648	.000648	0	%100

Member Distributed Loads (BLC 28 : 210 Wind - Ice) (Continued)

	Member Label	Direction	Start Magnitude[k/ft,...	End Magnitude[k/ft,F...	Start Location[ft,%]	End Location[ft,%]
133	M61	Z	.000749	.000749	0	%100
134	M62	Z	.000554	.000554	0	%100
135	M63	Z	.000554	.000554	0	%100
136	M64	Z	.000648	.000648	0	%100
137	M65	Z	.000648	.000648	0	%100
138	M66	Z	.000749	.000749	0	%100
139	M67	Z	0	0	0	%100
140	M68	Z	0	0	0	%100
141	M69	Z	.000782	.000782	0	%100
142	Mast	Z	.001	.001	0	%100
143	M71	Z	.001	.001	0	%100
144	M72	Z	.001	.001	0	%100

Member Distributed Loads (BLC 29 : 225 Wind - Ice)

	Member Label	Direction	Start Magnitude[k/ft,...	End Magnitude[k/ft,F...	Start Location[ft,%]	End Location[ft,%]
1	FFTH1	X	.000892	.000892	0	%100
2	FFTH2	X	.001	.001	0	%100
3	FFTH3	X	.000892	.000892	0	%100
4	FFBH1	X	.000892	.000892	0	%100
5	FFBH2	X	.001	.001	0	%100
6	FFBH3	X	.000892	.000892	0	%100
7	MP-1	X	.002	.002	0	%100
8	MP-2	X	.002	.002	0	%100
9	MP-3	X	.002	.002	0	%100
10	MP-4	X	.002	.002	0	%100
11	SF2-TH	X	.001	.001	0	%100
12	SF2-BH	X	.001	.001	0	%100
13	SF2-V1	X	.000824	.000824	0	%100
14	SF2-V2	X	.000824	.000824	0	%100
15	SF2-D1	X	.000953	.000953	0	%100
16	SF3-TH	X	.000248	.000248	0	%100
17	SF3-BH	X	.000248	.000248	0	%100
18	SF3-V1	X	.000824	.000824	0	%100
19	SF3-V2	X	.000824	.000824	0	%100
20	SF3-D1	X	.000953	.000953	0	%100
21	BC-TH	X	.000953	.000953	0	%100
22	BC-BH	X	.000953	.000953	0	%100
23	SA-1	X	.000301	.000301	0	%100
24	M24	X	.001	.001	0	%100
25	M25	X	.001	.001	0	%100
26	M26	X	.001	.001	0	%100
27	M27	X	.001	.001	0	%100
28	M28	X	.001	.001	0	%100
29	M29	X	.001	.001	0	%100
30	MP-9	X	.002	.002	0	%100
31	MP-10	X	.002	.002	0	%100
32	MP-11	X	.002	.002	0	%100
33	MP-12	X	.002	.002	0	%100
34	M34	X	.000695	.000695	0	%100
35	M35	X	.000695	.000695	0	%100
36	M36	X	.000824	.000824	0	%100

Member Distributed Loads (BLC 29 : 225 Wind - Ice) (Continued)

	Member Label	Direction	Start Magnitude[k/ft,...	End Magnitude[k/ft,F...	Start Location[ft,%]	End Location[ft,%]
37	M37	X	.000824	.000824	0	%100
38	M38	X	.000953	.000953	0	%100
39	M39	X	.001	.001	0	%100
40	M40	X	.001	.001	0	%100
41	M41	X	.000824	.000824	0	%100
42	M42	X	.000824	.000824	0	%100
43	M43	X	.000953	.000953	0	%100
44	M44	X	.001	.001	0	%100
45	M45	X	.001	.001	0	%100
46	M46	X	.000932	.000932	0	%100
47	M47	X	.000295	.000295	0	%100
48	M48	X	.000349	.000349	0	%100
49	M49	X	.000295	.000295	0	%100
50	M50	X	.000295	.000295	0	%100
51	M51	X	.000349	.000349	0	%100
52	M52	X	.000295	.000295	0	%100
53	MP-5	X	.002	.002	0	%100
54	MP-6	X	.002	.002	0	%100
55	MP-7	X	.002	.002	0	%100
56	MP-8	X	.002	.002	0	%100
57	M57	X	.000446	.000446	0	%100
58	M58	X	.000446	.000446	0	%100
59	M59	X	.000824	.000824	0	%100
60	M60	X	.000824	.000824	0	%100
61	M61	X	.000953	.000953	0	%100
62	M62	X	.000806	.000806	0	%100
63	M63	X	.000806	.000806	0	%100
64	M64	X	.000824	.000824	0	%100
65	M65	X	.000824	.000824	0	%100
66	M66	X	.000953	.000953	0	%100
67	M67	X	.000322	.000322	0	%100
68	M68	X	.000322	.000322	0	%100
69	M69	X	.001	.001	0	%100
70	Mast	X	.002	.002	0	%100
71	M71	X	.002	.002	0	%100
72	M72	X	.002	.002	0	%100
73	FFTH1	Z	.000803	.000803	0	%100
74	FFTH2	Z	.001	.001	0	%100
75	FFTH3	Z	.000803	.000803	0	%100
76	FFBH1	Z	.000803	.000803	0	%100
77	FFBH2	Z	.001	.001	0	%100
78	FFBH3	Z	.000803	.000803	0	%100
79	MP-1	Z	.002	.002	0	%100
80	MP-2	Z	.002	.002	0	%100
81	MP-3	Z	.002	.002	0	%100
82	MP-4	Z	.002	.002	0	%100
83	SF2-TH	Z	.001	.001	0	%100
84	SF2-BH	Z	.001	.001	0	%100
85	SF2-V1	Z	.000916	.000916	0	%100
86	SF2-V2	Z	.000916	.000916	0	%100
87	SF2-D1	Z	.001	.001	0	%100
88	SF3-TH	Z	.000228	.000228	0	%100

Member Distributed Loads (BLC 29 : 225 Wind - Ice) (Continued)

	Member Label	Direction	Start Magnitude[k/ft,...	End Magnitude[k/ft,F...	Start Location[ft,%]	End Location[ft,%]
89	SF3-BH	Z	.000228	.000228	0	%100
90	SF3-V1	Z	.000916	.000916	0	%100
91	SF3-V2	Z	.000916	.000916	0	%100
92	SF3-D1	Z	.001	.001	0	%100
93	BC-TH	Z	.000858	.000858	0	%100
94	BC-BH	Z	.000858	.000858	0	%100
95	SA-1	Z	.00033	.00033	0	%100
96	M24	Z	.001	.001	0	%100
97	M25	Z	.002	.002	0	%100
98	M26	Z	.001	.001	0	%100
99	M27	Z	.001	.001	0	%100
100	M28	Z	.002	.002	0	%100
101	M29	Z	.001	.001	0	%100
102	MP-9	Z	.002	.002	0	%100
103	MP-10	Z	.002	.002	0	%100
104	MP-11	Z	.002	.002	0	%100
105	MP-12	Z	.002	.002	0	%100
106	M34	Z	.00091	.00091	0	%100
107	M35	Z	.00091	.00091	0	%100
108	M36	Z	.000916	.000916	0	%100
109	M37	Z	.000916	.000916	0	%100
110	M38	Z	.001	.001	0	%100
111	M39	Z	.001	.001	0	%100
112	M40	Z	.001	.001	0	%100
113	M41	Z	.000916	.000916	0	%100
114	M42	Z	.000916	.000916	0	%100
115	M43	Z	.001	.001	0	%100
116	M44	Z	.001	.001	0	%100
117	M45	Z	.001	.001	0	%100
118	M46	Z	.000839	.000839	0	%100
119	M47	Z	.000318	.000318	0	%100
120	M48	Z	.000419	.000419	0	%100
121	M49	Z	.000318	.000318	0	%100
122	M50	Z	.000318	.000318	0	%100
123	M51	Z	.000419	.000419	0	%100
124	M52	Z	.000318	.000318	0	%100
125	MP-5	Z	.002	.002	0	%100
126	MP-6	Z	.002	.002	0	%100
127	MP-7	Z	.002	.002	0	%100
128	MP-8	Z	.002	.002	0	%100
129	M57	Z	.000385	.000385	0	%100
130	M58	Z	.000385	.000385	0	%100
131	M59	Z	.000916	.000916	0	%100
132	M60	Z	.000916	.000916	0	%100
133	M61	Z	.001	.001	0	%100
134	M62	Z	.001	.001	0	%100
135	M63	Z	.001	.001	0	%100
136	M64	Z	.000916	.000916	0	%100
137	M65	Z	.000916	.000916	0	%100
138	M66	Z	.001	.001	0	%100
139	M67	Z	.000342	.000342	0	%100
140	M68	Z	.000342	.000342	0	%100

Member Distributed Loads (BLC 29 : 225 Wind - Ice) (Continued)

	Member Label	Direction	Start Magnitude[k/ft,...	End Magnitude[k/ft,F...	Start Location[ft,%]	End Location[ft,%]
141	M69	Z	.001	.001	0	%100
142	Mast	Z	.002	.002	0	%100
143	M71	Z	.002	.002	0	%100
144	M72	Z	.002	.002	0	%100

Member Distributed Loads (BLC 30 : 240 Wind - Ice)

	Member Label	Direction	Start Magnitude[k/ft,...	End Magnitude[k/ft,F...	Start Location[ft,%]	End Location[ft,%]
1	FFTH1	X	.000446	.000446	0	%100
2	FFTH2	X	.000607	.000607	0	%100
3	FFTH3	X	.000446	.000446	0	%100
4	FFBH1	X	.000446	.000446	0	%100
5	FFBH2	X	.000607	.000607	0	%100
6	FFBH3	X	.000446	.000446	0	%100
7	MP-1	X	.001	.001	0	%100
8	MP-2	X	.001	.001	0	%100
9	MP-3	X	.001	.001	0	%100
10	MP-4	X	.001	.001	0	%100
11	SF2-TH	X	.000844	.000844	0	%100
12	SF2-BH	X	.000844	.000844	0	%100
13	SF2-V1	X	.000583	.000583	0	%100
14	SF2-V2	X	.000583	.000583	0	%100
15	SF2-D1	X	.000674	.000674	0	%100
16	SF3-TH	X	6.9e-5	6.9e-5	0	%100
17	SF3-BH	X	6.9e-5	6.9e-5	0	%100
18	SF3-V1	X	.000583	.000583	0	%100
19	SF3-V2	X	.000583	.000583	0	%100
20	SF3-D1	X	.000674	.000674	0	%100
21	BC-TH	X	.000477	.000477	0	%100
22	BC-BH	X	.000477	.000477	0	%100
23	SA-1	X	.000411	.000411	0	%100
24	M24	X	.000807	.000807	0	%100
25	M25	X	.000952	.000952	0	%100
26	M26	X	.000807	.000807	0	%100
27	M27	X	.000807	.000807	0	%100
28	M28	X	.000952	.000952	0	%100
29	M29	X	.000807	.000807	0	%100
30	MP-9	X	.001	.001	0	%100
31	MP-10	X	.001	.001	0	%100
32	MP-11	X	.001	.001	0	%100
33	MP-12	X	.001	.001	0	%100
34	M34	X	.000622	.000622	0	%100
35	M35	X	.000622	.000622	0	%100
36	M36	X	.000583	.000583	0	%100
37	M37	X	.000583	.000583	0	%100
38	M38	X	.000674	.000674	0	%100
39	M39	X	.000792	.000792	0	%100
40	M40	X	.000792	.000792	0	%100
41	M41	X	.000583	.000583	0	%100
42	M42	X	.000583	.000583	0	%100
43	M43	X	.000674	.000674	0	%100
44	M44	X	.000879	.000879	0	%100

Member Distributed Loads (BLC 30 : 240 Wind - Ice) (Continued)

	Member Label	Direction	Start Magnitude[k/ft,...	End Magnitude[k/ft,F...	Start Location[ft,%]	End Location[ft,%]
45	M45	X	.000879	.000879	0	%100
46	M46	X	.000466	.000466	0	%100
47	M47	X	.000404	.000404	0	%100
48	M48	X	.000476	.000476	0	%100
49	M49	X	.000404	.000404	0	%100
50	M50	X	.000404	.000404	0	%100
51	M51	X	.000476	.000476	0	%100
52	M52	X	.000404	.000404	0	%100
53	MP-5	X	.001	.001	0	%100
54	MP-6	X	.001	.001	0	%100
55	MP-7	X	.001	.001	0	%100
56	MP-8	X	.001	.001	0	%100
57	M57	X	7.1e-5	7.1e-5	0	%100
58	M58	X	7.1e-5	7.1e-5	0	%100
59	M59	X	.000583	.000583	0	%100
60	M60	X	.000583	.000583	0	%100
61	M61	X	.000674	.000674	0	%100
62	M62	X	.000678	.000678	0	%100
63	M63	X	.000678	.000678	0	%100
64	M64	X	.000583	.000583	0	%100
65	M65	X	.000583	.000583	0	%100
66	M66	X	.000674	.000674	0	%100
67	M67	X	.000439	.000439	0	%100
68	M68	X	.000439	.000439	0	%100
69	M69	X	.000822	.000822	0	%100
70	Mast	X	.001	.001	0	%100
71	M71	X	.001	.001	0	%100
72	M72	X	.001	.001	0	%100
73	FFTH1	Z	.000695	.000695	0	%100
74	FFTH2	Z	.000946	.000946	0	%100
75	FFTH3	Z	.000695	.000695	0	%100
76	FFBH1	Z	.000695	.000695	0	%100
77	FFBH2	Z	.000946	.000946	0	%100
78	FFBH3	Z	.000695	.000695	0	%100
79	MP-1	Z	.002	.002	0	%100
80	MP-2	Z	.002	.002	0	%100
81	MP-3	Z	.002	.002	0	%100
82	MP-4	Z	.002	.002	0	%100
83	SF2-TH	Z	.001	.001	0	%100
84	SF2-BH	Z	.001	.001	0	%100
85	SF2-V1	Z	.001	.001	0	%100
86	SF2-V2	Z	.001	.001	0	%100
87	SF2-D1	Z	.001	.001	0	%100
88	SF3-TH	Z	.00011	.00011	0	%100
89	SF3-BH	Z	.00011	.00011	0	%100
90	SF3-V1	Z	.001	.001	0	%100
91	SF3-V2	Z	.001	.001	0	%100
92	SF3-D1	Z	.001	.001	0	%100
93	BC-TH	Z	.000743	.000743	0	%100
94	BC-BH	Z	.000743	.000743	0	%100
95	SA-1	Z	.000782	.000782	0	%100
96	M24	Z	.002	.002	0	%100

Member Distributed Loads (BLC 30 : 240 Wind - Ice) (Continued)

	Member Label	Direction	Start Magnitude[k/ft,...	End Magnitude[k/ft,F...	Start Location[ft,%]	End Location[ft,%]
97	M25	Z	.002	.002	0	%100
98	M26	Z	.002	.002	0	%100
99	M27	Z	.002	.002	0	%100
100	M28	Z	.002	.002	0	%100
101	M29	Z	.002	.002	0	%100
102	MP-9	Z	.002	.002	0	%100
103	MP-10	Z	.002	.002	0	%100
104	MP-11	Z	.002	.002	0	%100
105	MP-12	Z	.002	.002	0	%100
106	M34	Z	.001	.001	0	%100
107	M35	Z	.001	.001	0	%100
108	M36	Z	.001	.001	0	%100
109	M37	Z	.001	.001	0	%100
110	M38	Z	.001	.001	0	%100
111	M39	Z	.001	.001	0	%100
112	M40	Z	.001	.001	0	%100
113	M41	Z	.001	.001	0	%100
114	M42	Z	.001	.001	0	%100
115	M43	Z	.001	.001	0	%100
116	M44	Z	.002	.002	0	%100
117	M45	Z	.002	.002	0	%100
118	M46	Z	.000727	.000727	0	%100
119	M47	Z	.000753	.000753	0	%100
120	M48	Z	.00099	.00099	0	%100
121	M49	Z	.000753	.000753	0	%100
122	M50	Z	.000753	.000753	0	%100
123	M51	Z	.00099	.00099	0	%100
124	M52	Z	.000753	.000753	0	%100
125	MP-5	Z	.002	.002	0	%100
126	MP-6	Z	.002	.002	0	%100
127	MP-7	Z	.002	.002	0	%100
128	MP-8	Z	.002	.002	0	%100
129	M57	Z	.000106	.000106	0	%100
130	M58	Z	.000106	.000106	0	%100
131	M59	Z	.001	.001	0	%100
132	M60	Z	.001	.001	0	%100
133	M61	Z	.001	.001	0	%100
134	M62	Z	.002	.002	0	%100
135	M63	Z	.002	.002	0	%100
136	M64	Z	.001	.001	0	%100
137	M65	Z	.001	.001	0	%100
138	M66	Z	.001	.001	0	%100
139	M67	Z	.000808	.000808	0	%100
140	M68	Z	.000808	.000808	0	%100
141	M69	Z	.002	.002	0	%100
142	Mast	Z	.003	.003	0	%100
143	M71	Z	.003	.003	0	%100
144	M72	Z	.003	.003	0	%100

Member Distributed Loads (BLC 31 : 270 Wind - Ice)

	Member Label	Direction	Start Magnitude[k/ft,...	End Magnitude[k/ft,F...	Start Location[ft,%]	End Location[ft,%]

Member Distributed Loads (BLC 31 : 270 Wind - Ice) (Continued)

	Member Label	Direction	Start Magnitude[k/ft,...	End Magnitude[k/ft,F...	Start Location[ft,%]	End Location[ft,%]
1	FFTH1	Z	0	0	0	%100
2	FFTH2	Z	0	0	0	%100
3	FFTH3	Z	0	0	0	%100
4	FFBH1	Z	0	0	0	%100
5	FFBH2	Z	0	0	0	%100
6	FFBH3	Z	0	0	0	%100
7	MP-1	Z	.003	.003	0	%100
8	MP-2	Z	.003	.003	0	%100
9	MP-3	Z	.003	.003	0	%100
10	MP-4	Z	.003	.003	0	%100
11	SF2-TH	Z	.00097	.00097	0	%100
12	SF2-BH	Z	.00097	.00097	0	%100
13	SF2-V1	Z	.001	.001	0	%100
14	SF2-V2	Z	.001	.001	0	%100
15	SF2-D1	Z	.001	.001	0	%100
16	SF3-TH	Z	.00097	.00097	0	%100
17	SF3-BH	Z	.00097	.00097	0	%100
18	SF3-V1	Z	.001	.001	0	%100
19	SF3-V2	Z	.001	.001	0	%100
20	SF3-D1	Z	.001	.001	0	%100
21	BC-TH	Z	0	0	0	%100
22	BC-BH	Z	0	0	0	%100
23	SA-1	Z	.002	.002	0	%100
24	M24	Z	.002	.002	0	%100
25	M25	Z	.002	.002	0	%100
26	M26	Z	.002	.002	0	%100
27	M27	Z	.002	.002	0	%100
28	M28	Z	.002	.002	0	%100
29	M29	Z	.002	.002	0	%100
30	MP-9	Z	.003	.003	0	%100
31	MP-10	Z	.003	.003	0	%100
32	MP-11	Z	.003	.003	0	%100
33	MP-12	Z	.003	.003	0	%100
34	M34	Z	.002	.002	0	%100
35	M35	Z	.002	.002	0	%100
36	M36	Z	.001	.001	0	%100
37	M37	Z	.001	.001	0	%100
38	M38	Z	.001	.001	0	%100
39	M39	Z	.000719	.000719	0	%100
40	M40	Z	.000719	.000719	0	%100
41	M41	Z	.001	.001	0	%100
42	M42	Z	.001	.001	0	%100
43	M43	Z	.001	.001	0	%100
44	M44	Z	.002	.002	0	%100
45	M45	Z	.002	.002	0	%100
46	M46	Z	0	0	0	%100
47	M47	Z	.002	.002	0	%100
48	M48	Z	.002	.002	0	%100
49	M49	Z	.002	.002	0	%100
50	M50	Z	.002	.002	0	%100
51	M51	Z	.002	.002	0	%100
52	M52	Z	.002	.002	0	%100

Member Distributed Loads (BLC 31 : 270 Wind - Ice) (Continued)

	Member Label	Direction	Start Magnitude[k/ft,...	End Magnitude[k/ft,F...	Start Location[ft,%]	End Location[ft,%]
53	MP-5	Z	.003	.003	0	%100
54	MP-6	Z	.003	.003	0	%100
55	MP-7	Z	.003	.003	0	%100
56	MP-8	Z	.003	.003	0	%100
57	M57	Z	.000719	.000719	0	%100
58	M58	Z	.000719	.000719	0	%100
59	M59	Z	.001	.001	0	%100
60	M60	Z	.001	.001	0	%100
61	M61	Z	.001	.001	0	%100
62	M62	Z	.002	.002	0	%100
63	M63	Z	.002	.002	0	%100
64	M64	Z	.001	.001	0	%100
65	M65	Z	.001	.001	0	%100
66	M66	Z	.001	.001	0	%100
67	M67	Z	.002	.002	0	%100
68	M68	Z	.002	.002	0	%100
69	M69	Z	.002	.002	0	%100
70	Mast	Z	.003	.003	0	%100
71	M71	Z	.003	.003	0	%100
72	M72	Z	.003	.003	0	%100

Member Distributed Loads (BLC 32 : 300 Wind - Ice)

	Member Label	Direction	Start Magnitude[k/ft,...	End Magnitude[k/ft,F...	Start Location[ft,%]	End Location[ft,%]
1	FFTH1	X	-.000446	-.000446	0	%100
2	FFTH2	X	-.000607	-.000607	0	%100
3	FFTH3	X	-.000446	-.000446	0	%100
4	FFBH1	X	-.000446	-.000446	0	%100
5	FFBH2	X	-.000607	-.000607	0	%100
6	FFBH3	X	-.000446	-.000446	0	%100
7	MP-1	X	-.001	-.001	0	%100
8	MP-2	X	-.001	-.001	0	%100
9	MP-3	X	-.001	-.001	0	%100
10	MP-4	X	-.001	-.001	0	%100
11	SF2-TH	X	-6.9e-5	-6.9e-5	0	%100
12	SF2-BH	X	-6.9e-5	-6.9e-5	0	%100
13	SF2-V1	X	-.000583	-.000583	0	%100
14	SF2-V2	X	-.000583	-.000583	0	%100
15	SF2-D1	X	-.000674	-.000674	0	%100
16	SF3-TH	X	-.000844	-.000844	0	%100
17	SF3-BH	X	-.000844	-.000844	0	%100
18	SF3-V1	X	-.000583	-.000583	0	%100
19	SF3-V2	X	-.000583	-.000583	0	%100
20	SF3-D1	X	-.000674	-.000674	0	%100
21	BC-TH	X	-.000477	-.000477	0	%100
22	BC-BH	X	-.000477	-.000477	0	%100
23	SA-1	X	-.000822	-.000822	0	%100
24	M24	X	-.000404	-.000404	0	%100
25	M25	X	-.000476	-.000476	0	%100
26	M26	X	-.000404	-.000404	0	%100
27	M27	X	-.000404	-.000404	0	%100
28	M28	X	-.000476	-.000476	0	%100

Member Distributed Loads (BLC 32 : 300 Wind - Ice) (Continued)

	Member Label	Direction	Start Magnitude[k/ft,...	End Magnitude[k/ft,F...	Start Location[ft,%]	End Location[ft,%]
29	M29	X	-.000404	-.000404	0	%100
30	MP-9	X	-.001	-.001	0	%100
31	MP-10	X	-.001	-.001	0	%100
32	MP-11	X	-.001	-.001	0	%100
33	MP-12	X	-.001	-.001	0	%100
34	M34	X	-.000678	-.000678	0	%100
35	M35	X	-.000678	-.000678	0	%100
36	M36	X	-.000583	-.000583	0	%100
37	M37	X	-.000583	-.000583	0	%100
38	M38	X	-.000674	-.000674	0	%100
39	M39	X	-7.1e-5	-7.1e-5	0	%100
40	M40	X	-7.1e-5	-7.1e-5	0	%100
41	M41	X	-.000583	-.000583	0	%100
42	M42	X	-.000583	-.000583	0	%100
43	M43	X	-.000674	-.000674	0	%100
44	M44	X	-.000439	-.000439	0	%100
45	M45	X	-.000439	-.000439	0	%100
46	M46	X	-.000466	-.000466	0	%100
47	M47	X	-.000807	-.000807	0	%100
48	M48	X	-.000952	-.000952	0	%100
49	M49	X	-.000807	-.000807	0	%100
50	M50	X	-.000807	-.000807	0	%100
51	M51	X	-.000952	-.000952	0	%100
52	M52	X	-.000807	-.000807	0	%100
53	MP-5	X	-.001	-.001	0	%100
54	MP-6	X	-.001	-.001	0	%100
55	MP-7	X	-.001	-.001	0	%100
56	MP-8	X	-.001	-.001	0	%100
57	M57	X	-.000792	-.000792	0	%100
58	M58	X	-.000792	-.000792	0	%100
59	M59	X	-.000583	-.000583	0	%100
60	M60	X	-.000583	-.000583	0	%100
61	M61	X	-.000674	-.000674	0	%100
62	M62	X	-.000622	-.000622	0	%100
63	M63	X	-.000622	-.000622	0	%100
64	M64	X	-.000583	-.000583	0	%100
65	M65	X	-.000583	-.000583	0	%100
66	M66	X	-.000674	-.000674	0	%100
67	M67	X	-.000879	-.000879	0	%100
68	M68	X	-.000879	-.000879	0	%100
69	M69	X	-.000411	-.000411	0	%100
70	Mast	X	-.001	-.001	0	%100
71	M71	X	-.001	-.001	0	%100
72	M72	X	-.001	-.001	0	%100
73	FFTH1	Z	.000695	.000695	0	%100
74	FFTH2	Z	.000946	.000946	0	%100
75	FFTH3	Z	.000695	.000695	0	%100
76	FFBH1	Z	.000695	.000695	0	%100
77	FFBH2	Z	.000946	.000946	0	%100
78	FFBH3	Z	.000695	.000695	0	%100
79	MP-1	Z	.002	.002	0	%100
80	MP-2	Z	.002	.002	0	%100

Member Distributed Loads (BLC 32 : 300 Wind - Ice) (Continued)

	Member Label	Direction	Start Magnitude[k/ft,...	End Magnitude[k/ft,F...	Start Location[ft,%]	End Location[ft,%]
81	MP-3	Z	.002	.002	0	%100
82	MP-4	Z	.002	.002	0	%100
83	SF2-TH	Z	.00011	.00011	0	%100
84	SF2-BH	Z	.00011	.00011	0	%100
85	SF2-V1	Z	.001	.001	0	%100
86	SF2-V2	Z	.001	.001	0	%100
87	SF2-D1	Z	.001	.001	0	%100
88	SF3-TH	Z	.001	.001	0	%100
89	SF3-BH	Z	.001	.001	0	%100
90	SF3-V1	Z	.001	.001	0	%100
91	SF3-V2	Z	.001	.001	0	%100
92	SF3-D1	Z	.001	.001	0	%100
93	BC-TH	Z	.000743	.000743	0	%100
94	BC-BH	Z	.000743	.000743	0	%100
95	SA-1	Z	.002	.002	0	%100
96	M24	Z	.000753	.000753	0	%100
97	M25	Z	.00099	.00099	0	%100
98	M26	Z	.000753	.000753	0	%100
99	M27	Z	.000753	.000753	0	%100
100	M28	Z	.00099	.00099	0	%100
101	M29	Z	.000753	.000753	0	%100
102	MP-9	Z	.002	.002	0	%100
103	MP-10	Z	.002	.002	0	%100
104	MP-11	Z	.002	.002	0	%100
105	MP-12	Z	.002	.002	0	%100
106	M34	Z	.002	.002	0	%100
107	M35	Z	.002	.002	0	%100
108	M36	Z	.001	.001	0	%100
109	M37	Z	.001	.001	0	%100
110	M38	Z	.001	.001	0	%100
111	M39	Z	.000106	.000106	0	%100
112	M40	Z	.000106	.000106	0	%100
113	M41	Z	.001	.001	0	%100
114	M42	Z	.001	.001	0	%100
115	M43	Z	.001	.001	0	%100
116	M44	Z	.000808	.000808	0	%100
117	M45	Z	.000808	.000808	0	%100
118	M46	Z	.000727	.000727	0	%100
119	M47	Z	.002	.002	0	%100
120	M48	Z	.002	.002	0	%100
121	M49	Z	.002	.002	0	%100
122	M50	Z	.002	.002	0	%100
123	M51	Z	.002	.002	0	%100
124	M52	Z	.002	.002	0	%100
125	MP-5	Z	.002	.002	0	%100
126	MP-6	Z	.002	.002	0	%100
127	MP-7	Z	.002	.002	0	%100
128	MP-8	Z	.002	.002	0	%100
129	M57	Z	.001	.001	0	%100
130	M58	Z	.001	.001	0	%100
131	M59	Z	.001	.001	0	%100
132	M60	Z	.001	.001	0	%100

Member Distributed Loads (BLC 32 : 300 Wind - Ice) (Continued)

	Member Label	Direction	Start Magnitude[k/ft,...	End Magnitude[k/ft,F...	Start Location[ft,%]	End Location[ft,%]
133	M61	Z	.001	.001	0	%100
134	M62	Z	.001	.001	0	%100
135	M63	Z	.001	.001	0	%100
136	M64	Z	.001	.001	0	%100
137	M65	Z	.001	.001	0	%100
138	M66	Z	.001	.001	0	%100
139	M67	Z	.002	.002	0	%100
140	M68	Z	.002	.002	0	%100
141	M69	Z	.000782	.000782	0	%100
142	Mast	Z	.003	.003	0	%100
143	M71	Z	.003	.003	0	%100
144	M72	Z	.003	.003	0	%100

Member Distributed Loads (BLC 33 : 315 Wind - Ice)

	Member Label	Direction	Start Magnitude[k/ft,...	End Magnitude[k/ft,F...	Start Location[ft,%]	End Location[ft,%]
1	FFTH1	X	-.000892	-.000892	0	%100
2	FFTH2	X	-.001	-.001	0	%100
3	FFTH3	X	-.000892	-.000892	0	%100
4	FFBH1	X	-.000892	-.000892	0	%100
5	FFBH2	X	-.001	-.001	0	%100
6	FFBH3	X	-.000892	-.000892	0	%100
7	MP-1	X	-.002	-.002	0	%100
8	MP-2	X	-.002	-.002	0	%100
9	MP-3	X	-.002	-.002	0	%100
10	MP-4	X	-.002	-.002	0	%100
11	SF2-TH	X	-.000248	-.000248	0	%100
12	SF2-BH	X	-.000248	-.000248	0	%100
13	SF2-V1	X	-.000824	-.000824	0	%100
14	SF2-V2	X	-.000824	-.000824	0	%100
15	SF2-D1	X	-.000953	-.000953	0	%100
16	SF3-TH	X	-.001	-.001	0	%100
17	SF3-BH	X	-.001	-.001	0	%100
18	SF3-V1	X	-.000824	-.000824	0	%100
19	SF3-V2	X	-.000824	-.000824	0	%100
20	SF3-D1	X	-.000953	-.000953	0	%100
21	BC-TH	X	-.000953	-.000953	0	%100
22	BC-BH	X	-.000953	-.000953	0	%100
23	SA-1	X	-.001	-.001	0	%100
24	M24	X	-.000295	-.000295	0	%100
25	M25	X	-.000349	-.000349	0	%100
26	M26	X	-.000295	-.000295	0	%100
27	M27	X	-.000295	-.000295	0	%100
28	M28	X	-.000349	-.000349	0	%100
29	M29	X	-.000295	-.000295	0	%100
30	MP-9	X	-.002	-.002	0	%100
31	MP-10	X	-.002	-.002	0	%100
32	MP-11	X	-.002	-.002	0	%100
33	MP-12	X	-.002	-.002	0	%100
34	M34	X	-.000806	-.000806	0	%100
35	M35	X	-.000806	-.000806	0	%100
36	M36	X	-.000824	-.000824	0	%100

Member Distributed Loads (BLC 33 : 315 Wind - Ice) (Continued)

	Member Label	Direction	Start Magnitude[k/ft,...	End Magnitude[k/ft,F...	Start Location[ft,%]	End Location[ft,%]
37	M37	X	-.000824	-.000824	0	%100
38	M38	X	-.000953	-.000953	0	%100
39	M39	X	-.000446	-.000446	0	%100
40	M40	X	-.000446	-.000446	0	%100
41	M41	X	-.000824	-.000824	0	%100
42	M42	X	-.000824	-.000824	0	%100
43	M43	X	-.000953	-.000953	0	%100
44	M44	X	-.000322	-.000322	0	%100
45	M45	X	-.000322	-.000322	0	%100
46	M46	X	-.000932	-.000932	0	%100
47	M47	X	-.001	-.001	0	%100
48	M48	X	-.001	-.001	0	%100
49	M49	X	-.001	-.001	0	%100
50	M50	X	-.001	-.001	0	%100
51	M51	X	-.001	-.001	0	%100
52	M52	X	-.001	-.001	0	%100
53	MP-5	X	-.002	-.002	0	%100
54	MP-6	X	-.002	-.002	0	%100
55	MP-7	X	-.002	-.002	0	%100
56	MP-8	X	-.002	-.002	0	%100
57	M57	X	-.001	-.001	0	%100
58	M58	X	-.001	-.001	0	%100
59	M59	X	-.000824	-.000824	0	%100
60	M60	X	-.000824	-.000824	0	%100
61	M61	X	-.000953	-.000953	0	%100
62	M62	X	-.000695	-.000695	0	%100
63	M63	X	-.000695	-.000695	0	%100
64	M64	X	-.000824	-.000824	0	%100
65	M65	X	-.000824	-.000824	0	%100
66	M66	X	-.000953	-.000953	0	%100
67	M67	X	-.001	-.001	0	%100
68	M68	X	-.001	-.001	0	%100
69	M69	X	-.000301	-.000301	0	%100
70	Mast	X	-.002	-.002	0	%100
71	M71	X	-.002	-.002	0	%100
72	M72	X	-.002	-.002	0	%100
73	FFTH1	Z	.000803	.000803	0	%100
74	FFTH2	Z	.001	.001	0	%100
75	FFTH3	Z	.000803	.000803	0	%100
76	FFBH1	Z	.000803	.000803	0	%100
77	FFBH2	Z	.001	.001	0	%100
78	FFBH3	Z	.000803	.000803	0	%100
79	MP-1	Z	.002	.002	0	%100
80	MP-2	Z	.002	.002	0	%100
81	MP-3	Z	.002	.002	0	%100
82	MP-4	Z	.002	.002	0	%100
83	SF2-TH	Z	.000228	.000228	0	%100
84	SF2-BH	Z	.000228	.000228	0	%100
85	SF2-V1	Z	.000916	.000916	0	%100
86	SF2-V2	Z	.000916	.000916	0	%100
87	SF2-D1	Z	.001	.001	0	%100
88	SF3-TH	Z	.001	.001	0	%100

Member Distributed Loads (BLC 33 : 315 Wind - Ice) (Continued)

	Member Label	Direction	Start Magnitude[k/ft,...	End Magnitude[k/ft,F...	Start Location[ft,%]	End Location[ft,%]
89	SF3-BH	Z	.001	.001	0	%100
90	SF3-V1	Z	.000916	.000916	0	%100
91	SF3-V2	Z	.000916	.000916	0	%100
92	SF3-D1	Z	.001	.001	0	%100
93	BC-TH	Z	.000858	.000858	0	%100
94	BC-BH	Z	.000858	.000858	0	%100
95	SA-1	Z	.001	.001	0	%100
96	M24	Z	.000318	.000318	0	%100
97	M25	Z	.000419	.000419	0	%100
98	M26	Z	.000318	.000318	0	%100
99	M27	Z	.000318	.000318	0	%100
100	M28	Z	.000419	.000419	0	%100
101	M29	Z	.000318	.000318	0	%100
102	MP-9	Z	.002	.002	0	%100
103	MP-10	Z	.002	.002	0	%100
104	MP-11	Z	.002	.002	0	%100
105	MP-12	Z	.002	.002	0	%100
106	M34	Z	.001	.001	0	%100
107	M35	Z	.001	.001	0	%100
108	M36	Z	.000916	.000916	0	%100
109	M37	Z	.000916	.000916	0	%100
110	M38	Z	.001	.001	0	%100
111	M39	Z	.000385	.000385	0	%100
112	M40	Z	.000385	.000385	0	%100
113	M41	Z	.000916	.000916	0	%100
114	M42	Z	.000916	.000916	0	%100
115	M43	Z	.001	.001	0	%100
116	M44	Z	.000342	.000342	0	%100
117	M45	Z	.000342	.000342	0	%100
118	M46	Z	.000839	.000839	0	%100
119	M47	Z	.001	.001	0	%100
120	M48	Z	.002	.002	0	%100
121	M49	Z	.001	.001	0	%100
122	M50	Z	.001	.001	0	%100
123	M51	Z	.002	.002	0	%100
124	M52	Z	.001	.001	0	%100
125	MP-5	Z	.002	.002	0	%100
126	MP-6	Z	.002	.002	0	%100
127	MP-7	Z	.002	.002	0	%100
128	MP-8	Z	.002	.002	0	%100
129	M57	Z	.001	.001	0	%100
130	M58	Z	.001	.001	0	%100
131	M59	Z	.000916	.000916	0	%100
132	M60	Z	.000916	.000916	0	%100
133	M61	Z	.001	.001	0	%100
134	M62	Z	.00091	.00091	0	%100
135	M63	Z	.00091	.00091	0	%100
136	M64	Z	.000916	.000916	0	%100
137	M65	Z	.000916	.000916	0	%100
138	M66	Z	.001	.001	0	%100
139	M67	Z	.001	.001	0	%100
140	M68	Z	.001	.001	0	%100

Member Distributed Loads (BLC 33 : 315 Wind - Ice) (Continued)

	Member Label	Direction	Start Magnitude[k/ft,...	End Magnitude[k/ft,F...	Start Location[ft,%]	End Location[ft,%]
141	M69	Z	.00033	.00033	0	%100
142	Mast	Z	.002	.002	0	%100
143	M71	Z	.002	.002	0	%100
144	M72	Z	.002	.002	0	%100

Member Distributed Loads (BLC 34 : 330 Wind - Ice)

	Member Label	Direction	Start Magnitude[k/ft,...	End Magnitude[k/ft,F...	Start Location[ft,%]	End Location[ft,%]
1	FFTH1	X	-.001	-.001	0	%100
2	FFTH2	X	-.002	-.002	0	%100
3	FFTH3	X	-.001	-.001	0	%100
4	FFBH1	X	-.001	-.001	0	%100
5	FFBH2	X	-.002	-.002	0	%100
6	FFBH3	X	-.001	-.001	0	%100
7	MP-1	X	-.002	-.002	0	%100
8	MP-2	X	-.002	-.002	0	%100
9	MP-3	X	-.002	-.002	0	%100
10	MP-4	X	-.002	-.002	0	%100
11	SF2-TH	X	-.000706	-.000706	0	%100
12	SF2-BH	X	-.000706	-.000706	0	%100
13	SF2-V1	X	-.001	-.001	0	%100
14	SF2-V2	X	-.001	-.001	0	%100
15	SF2-D1	X	-.001	-.001	0	%100
16	SF3-TH	X	-.002	-.002	0	%100
17	SF3-BH	X	-.002	-.002	0	%100
18	SF3-V1	X	-.001	-.001	0	%100
19	SF3-V2	X	-.001	-.001	0	%100
20	SF3-D1	X	-.001	-.001	0	%100
21	BC-TH	X	-.001	-.001	0	%100
22	BC-BH	X	-.001	-.001	0	%100
23	SA-1	X	-.001	-.001	0	%100
24	M24	X	0	0	0	%100
25	M25	X	0	0	0	%100
26	M26	X	0	0	0	%100
27	M27	X	0	0	0	%100
28	M28	X	0	0	0	%100
29	M29	X	0	0	0	%100
30	MP-9	X	-.002	-.002	0	%100
31	MP-10	X	-.002	-.002	0	%100
32	MP-11	X	-.002	-.002	0	%100
33	MP-12	X	-.002	-.002	0	%100
34	M34	X	-.000733	-.000733	0	%100
35	M35	X	-.000733	-.000733	0	%100
36	M36	X	-.001	-.001	0	%100
37	M37	X	-.001	-.001	0	%100
38	M38	X	-.001	-.001	0	%100
39	M39	X	-.000933	-.000933	0	%100
40	M40	X	-.000933	-.000933	0	%100
41	M41	X	-.001	-.001	0	%100
42	M42	X	-.001	-.001	0	%100
43	M43	X	-.001	-.001	0	%100
44	M44	X	0	0	0	%100

Member Distributed Loads (BLC 34 : 330 Wind - Ice) (Continued)

	Member Label	Direction	Start Magnitude[k/ft,...	End Magnitude[k/ft,F...	Start Location[ft,%]	End Location[ft,%]
45	M45	X	0	0	0	%100
46	M46	X	-.001	-.001	0	%100
47	M47	X	-.001	-.001	0	%100
48	M48	X	-.001	-.001	0	%100
49	M49	X	-.001	-.001	0	%100
50	M50	X	-.001	-.001	0	%100
51	M51	X	-.001	-.001	0	%100
52	M52	X	-.001	-.001	0	%100
53	MP-5	X	-.002	-.002	0	%100
54	MP-6	X	-.002	-.002	0	%100
55	MP-7	X	-.002	-.002	0	%100
56	MP-8	X	-.002	-.002	0	%100
57	M57	X	-.002	-.002	0	%100
58	M58	X	-.002	-.002	0	%100
59	M59	X	-.001	-.001	0	%100
60	M60	X	-.001	-.001	0	%100
61	M61	X	-.001	-.001	0	%100
62	M62	X	-.000567	-.000567	0	%100
63	M63	X	-.000567	-.000567	0	%100
64	M64	X	-.001	-.001	0	%100
65	M65	X	-.001	-.001	0	%100
66	M66	X	-.001	-.001	0	%100
67	M67	X	-.001	-.001	0	%100
68	M68	X	-.001	-.001	0	%100
69	M69	X	0	0	0	%100
70	Mast	X	-.002	-.002	0	%100
71	M71	X	-.002	-.002	0	%100
72	M72	X	-.002	-.002	0	%100
73	FFTH1	Z	.000695	.000695	0	%100
74	FFTH2	Z	.000946	.000946	0	%100
75	FFTH3	Z	.000695	.000695	0	%100
76	FFBH1	Z	.000695	.000695	0	%100
77	FFBH2	Z	.000946	.000946	0	%100
78	FFBH3	Z	.000695	.000695	0	%100
79	MP-1	Z	.001	.001	0	%100
80	MP-2	Z	.001	.001	0	%100
81	MP-3	Z	.001	.001	0	%100
82	MP-4	Z	.001	.001	0	%100
83	SF2-TH	Z	.000375	.000375	0	%100
84	SF2-BH	Z	.000375	.000375	0	%100
85	SF2-V1	Z	.000648	.000648	0	%100
86	SF2-V2	Z	.000648	.000648	0	%100
87	SF2-D1	Z	.000749	.000749	0	%100
88	SF3-TH	Z	.00086	.00086	0	%100
89	SF3-BH	Z	.00086	.00086	0	%100
90	SF3-V1	Z	.000648	.000648	0	%100
91	SF3-V2	Z	.000648	.000648	0	%100
92	SF3-D1	Z	.000749	.000749	0	%100
93	BC-TH	Z	.000743	.000743	0	%100
94	BC-BH	Z	.000743	.000743	0	%100
95	SA-1	Z	.000782	.000782	0	%100
96	M24	Z	0	0	0	%100

Member Distributed Loads (BLC 34 : 330 Wind - Ice) (Continued)

	Member Label	Direction	Start Magnitude[k/ft,...	End Magnitude[k/ft,F...	Start Location[ft,%]	End Location[ft,%]
97	M25	Z	0	0	0	%100
98	M26	Z	0	0	0	%100
99	M27	Z	0	0	0	%100
100	M28	Z	0	0	0	%100
101	M29	Z	0	0	0	%100
102	MP-9	Z	.001	.001	0	%100
103	MP-10	Z	.001	.001	0	%100
104	MP-11	Z	.001	.001	0	%100
105	MP-12	Z	.001	.001	0	%100
106	M34	Z	.000554	.000554	0	%100
107	M35	Z	.000554	.000554	0	%100
108	M36	Z	.000648	.000648	0	%100
109	M37	Z	.000648	.000648	0	%100
110	M38	Z	.000749	.000749	0	%100
111	M39	Z	.000465	.000465	0	%100
112	M40	Z	.000465	.000465	0	%100
113	M41	Z	.000648	.000648	0	%100
114	M42	Z	.000648	.000648	0	%100
115	M43	Z	.000749	.000749	0	%100
116	M44	Z	0	0	0	%100
117	M45	Z	0	0	0	%100
118	M46	Z	.000727	.000727	0	%100
119	M47	Z	.000753	.000753	0	%100
120	M48	Z	.00099	.00099	0	%100
121	M49	Z	.000753	.000753	0	%100
122	M50	Z	.000753	.000753	0	%100
123	M51	Z	.00099	.00099	0	%100
124	M52	Z	.000753	.000753	0	%100
125	MP-5	Z	.001	.001	0	%100
126	MP-6	Z	.001	.001	0	%100
127	MP-7	Z	.001	.001	0	%100
128	MP-8	Z	.001	.001	0	%100
129	M57	Z	.000824	.000824	0	%100
130	M58	Z	.000824	.000824	0	%100
131	M59	Z	.000648	.000648	0	%100
132	M60	Z	.000648	.000648	0	%100
133	M61	Z	.000749	.000749	0	%100
134	M62	Z	.000428	.000428	0	%100
135	M63	Z	.000428	.000428	0	%100
136	M64	Z	.000648	.000648	0	%100
137	M65	Z	.000648	.000648	0	%100
138	M66	Z	.000749	.000749	0	%100
139	M67	Z	.000808	.000808	0	%100
140	M68	Z	.000808	.000808	0	%100
141	M69	Z	0	0	0	%100
142	Mast	Z	.001	.001	0	%100
143	M71	Z	.001	.001	0	%100
144	M72	Z	.001	.001	0	%100

Member Area Loads

Joint A	Joint B	Joint C	Joint D	Direction	Distribution	Magnitude[ksf]
No Data to Print ...						

Envelope AISC 15th(360-16): LRFD Steel Code Checks

	Member	Shape	Code Check	Loc[ft]	LC	Shear ...	Loc[ft]	Dir	LC	phi*Pnc...	phi*Pnt...	phi*Mn ...	phi*Mn ...	Cb	Eqn
1	MP-6	PIPE_2.0	.311	3	23	.042	3.094		33	19.7	32.13	1.872	1.872	2...	H1-1b
2	MP-10	PIPE_2.0	.311	3	29	.042	3.094		22	19.7	32.13	1.872	1.872	2...	H1-1b
3	MP-2	PIPE_2.0	.311	3	18	.042	3.094		27	19.7	32.13	1.872	1.872	2...	H1-1b
4	MP-4	PIPE_2.0	.263	3.094	61	.043	3.094		18	20.491	32.13	1.872	1.872	2...	H1-1b
5	SF3-TH	PIPE_2.0X	.246	2.128	19	.054	3.989		52	45.622	63	3.615	3.615	1...	H1-1b
6	M39	PIPE_2.0X	.245	2.128	30	.046	3.945		22	45.622	63	3.615	3.615	1...	H1-1b
7	MP-5	PIPE_2.0	.245	3	23	.059	3.094		23	19.7	32.13	1.872	1.872	2...	H1-1b
8	MP-1	PIPE_2.0	.245	3	18	.059	3.094		18	19.7	32.13	1.872	1.872	1...	H1-1b
9	MP-9	PIPE_2.0	.245	3	29	.059	3.094		29	19.7	32.13	1.872	1.872	1...	H1-1b
10	M62	PIPE_2.0X	.239	2.128	25	.045	4.255		32	45.622	63	3.615	3.615	1...	H1-1b
11	FFTH2	PIPE_2.0X	.212	0	26	.049	2		18	20.272	63	3.615	3.615	2...	H1-1b
12	M25	PIPE_2.0X	.211	0	21	.049	2		28	20.272	63	3.615	3.615	2...	H1-1b
13	SA-1	PIPE_2.0	.211	0	19	.023	3.296		19	38.106	45.9	2.674	2.674	2...	H1-1b
14	M48	PIPE_2.0X	.211	0	31	.049	2		23	20.272	63	3.615	3.615	2...	H1-1b
15	MP-12	PIPE_2.0	.210	3	21	.043	3.094		29	19.7	32.13	1.872	1.872	1...	H1-1b
16	MP-8	PIPE_2.0	.210	3	31	.043	3.094		23	19.7	32.13	1.872	1.872	1...	H1-1b
17	M46	PIPE_2.0	.205	0	30	.022	3.296		30	38.106	45.9	2.674	2.674	2...	H1-1b
18	M34	PIPE_2.0X	.203	2.128	26	.053	3.989		28	45.622	63	3.615	3.615	1...	H1-1b
19	M57	PIPE_2.0X	.201	2.128	21	.052	3.989		22	45.622	63	3.615	3.615	1...	H1-1b
20	M69	PIPE_2.0	.201	0	25	.021	3.296		25	38.106	45.9	2.674	2.674	2...	H1-1b
21	BC-TH	Pivot Plate	.201	.5	59	.055	.5	y	25	97.947	135.352	1.762	13.57	1...	H1-1b
22	SF2-TH	PIPE_2.0X	.200	2.128	31	.052	3.989		33	45.622	63	3.615	3.615	1...	H1-1b
23	BC-BH	Pivot Plate	.186	.5	54	.034	.5	y	35	97.947	135.352	1.762	13.57	1...	H1-1b
24	FFTH1	PIPE_2.0X	.184	2.5	18	.042	2.5		18	38.546	63	3.615	3.615	2...	H1-1b
25	M24	PIPE_2.0X	.184	2.5	29	.043	2.5		28	38.546	63	3.615	3.615	2...	H1-1b
26	M47	PIPE_2.0X	.184	2.5	23	.043	2.5		23	38.546	63	3.615	3.615	2...	H1-1b
27	M44	Pivot Plate	.169	.5	36	.056	.5	y	20	97.947	135.352	1.762	13.57	1...	H1-1b
28	M67	Pivot Plate	.168	.5	47	.054	.5	y	30	97.947	135.352	1.762	13.57	1...	H1-1b
29	M45	Pivot Plate	.157	.5	42	.033	.5	y	45	97.947	135.352	1.762	13.57	1...	H1-1b
30	M68	Pivot Plate	.156	.5	37	.033	.5	y	42	97.947	135.352	1.762	13.57	1...	H1-1b
31	FFTH3	PIPE_2.0X	.140	0	18	.047	0		26	38.546	63	3.615	3.615	2...	H1-1b
32	M49	PIPE_2.0X	.140	0	23	.047	0		31	38.546	63	3.615	3.615	2...	H1-1b
33	FFBH3	PIPE_2.0X	.140	1.979	62	.032	0		53	38.546	63	3.615	3.615	1...	H1-1b
34	M26	PIPE_2.0X	.140	0	29	.047	0		21	38.546	63	3.615	3.615	2...	H1-1b
35	FFBH2	PIPE_2.0X	.109	8	66	.022	0		33	20.272	63	3.615	3.615	2...	H1-1b
36	SF3-V2	SR 3/4	.096	2.917	56	.017	2.917		19	6.78	19.88	.249	.249	2...	H1-1b*
37	SF3-V1	SR 3/4	.096	2.917	57	.020	0		28	6.78	19.88	.249	.249	2...	H1-1b
38	SF2-V1	SR 3/4	.090	2.917	46	.020	2.917		30	6.78	19.88	.249	.249	1...	H1-1b
39	MP-3	PIPE_2.0	.087	3.094	18	.027	3.094		33	20.491	32.13	1.872	1.872	2...	H1-1b
40	MP-11	PIPE_2.0	.087	3.094	29	.027	3.094		27	20.491	32.13	1.872	1.872	1...	H1-1b
41	MP-7	PIPE_2.0	.087	3.094	23	.027	3.094		22	20.491	32.13	1.872	1.872	2...	H1-1b
42	SF2-V2	SR 3/4	.084	2.917	45	.014	0		23	6.78	19.88	.249	.249	2...	H1-1b*
43	SF2-D1	SR 3/4	.083	4.636	47	.009	4.636		31	2.683	19.88	.249	.249	2...	H1-1b
44	M61	SR 3/4	.082	4.636	37	.009	0		20	2.683	19.88	.249	.249	2...	H1-1b
45	M36	SR 3/4	.082	2.917	39	.021	2.917		25	6.78	19.88	.249	.249	2...	H1-1b

Envelope AISC 15th(360-16): LRFD Steel Code Checks (Continued)

	Member	Shape	Code Check	Loc[ft]	LC	Shear ...	Loc[ft]	Dir	LC	phi*Pnc...	phi*Pnt...	phi*Mn ...	phi*Mn ...	Cb	Eqn
46	M38	SR 3/4	.081	4.636	42	.009	4.636		26	2.683	19.88	.249	.249	2...	H1-1b
47	M59	SR 3/4	.081	2.917	35	.022	2.917		20	6.78	19.88	.249	.249	2...	H1-1b
48	M37	SR 3/4	.081	2.917	40	.015	0		33	6.78	19.88	.249	.249	2...	H1-1b*
49	M60	SR 3/4	.081	2.917	34	.015	0		28	6.78	19.88	.249	.249	2...	H1-1b*
50	SF3-D1	SR 3/4	.081	4.636	58	.009	4.636		20	2.683	19.88	.249	.249	2...	H1-1b
51	M28	PIPE_2.0X	.079	8	21	.022	0		27	20.272	63	3.615	3.615	2...	H1-1b
52	M51	PIPE_2.0X	.079	8	31	.022	0		22	20.272	63	3.615	3.615	2...	H1-1b
53	M27	PIPE_2.0X	.073	2.5	37	.018	2.5		19	38.546	63	3.615	3.615	2...	H1-1b
54	M50	PIPE_2.0X	.073	2.5	48	.018	2.5		30	38.546	63	3.615	3.615	2...	H1-1b
55	FFBH1	PIPE_2.0X	.073	2.5	49	.018	2.5		24	38.546	63	3.615	3.615	2...	H1-1b
56	M29	PIPE_2.0X	.072	0	21	.015	0		23	38.546	63	3.615	3.615	1...	H1-1b
57	M52	PIPE_2.0X	.072	0	31	.015	0		18	38.546	63	3.615	3.615	1...	H1-1b
58	M41	SR 3/4	.070	2.917	34	.020	0		23	6.78	19.88	.249	.249	2...	H1-1b
59	SF3-BH	PIPE_2.0X	.070	.355	53	.038	3.989		59	45.622	63	3.615	3.615	2...	H1-1b
60	SF2-BH	PIPE_2.0X	.066	.355	48	.037	0		35	45.622	63	3.615	3.615	1...	H1-1b
61	M43	SR 3/4	.064	4.636	47	.009	4.636		30	2.683	19.88	.249	.249	2...	H1-1b
62	M66	SR 3/4	.062	4.636	42	.009	4.636		25	2.683	19.88	.249	.249	2...	H1-1b
63	M35	PIPE_2.0X	.062	.355	42	.033	0		45	45.622	63	3.615	3.615	1...	H1-1b
64	M58	PIPE_2.0X	.061	.355	38	.033	0		42	45.622	63	3.615	3.615	1...	H1-1b
65	M64	SR 3/4	.061	2.917	45	.020	0		18	6.78	19.88	.249	.249	2...	H1-1b
66	M42	SR 3/4	.060	2.917	34	.017	2.917		30	6.78	19.88	.249	.249	2...	H1-1b*
67	M65	SR 3/4	.057	2.917	42	.017	2.917		25	6.78	19.88	.249	.249	2...	H1-1b*
68	M40	PIPE_2.0X	.048	.355	46	.028	0		42	45.622	63	3.615	3.615	1...	H1-1b
69	M63	PIPE_2.0X	.043	.355	42	.025	0		34	45.622	63	3.615	3.615	1...	H1-1b
70	Mast	PIPE_4.0	.010	2.042	56	.003	4.885		55	46.709	93.24	10.631	10.631	2...	H1-1b
71	M72	PIPE_4.0	.005	2.042	34	.001	4.885		20	46.709	93.24	10.631	10.631	1...	H1-1b
72	M71	PIPE_4.0	.005	2.042	39	.001	4.885		25	46.709	93.24	10.631	10.631	1...	H1-1b

APPENDIX D

ADDITIONAL CALCULATIONS

Job Name: BU # 842873 - SHELTON NE
Job Number: TEP #63208.298276
Calc: SPD Check: HBC
Date: 9/17/2019

Moment Bolt Group - Support Arm

Bolt Size:	0.625	in
# Bolts:	4	
Plate Width:	9.75	in
Plate Height:	4	in
Bolt H Gap:	6.5	in
Bolt V Gap:	2	in
Plate T:	0.75	in
Tower Leg Ø:	N/A	in
Bolt Grade:	A307	
Fu_{bolt}	60	ksi
r:	3.4004	in
J:	10.4526	in^4
$Bolt_{Area}$:	0.307	in^2
$Bolt_{Area, Net Tensile}$:	0.226	in^2
Pretension:	9	kips
Slotted Holes:	No	

Code Checks Per ANSI/TIA-222-H-2017:		
Bolt Group Capacity =	7.9%	GOOD
Single Bolt Capacity =	6.7%	GOOD

Single Bolt Check

Bolt Size:	1	in
Bolt F_u:	120	ksi
$Bolt_{A, Net Tensile}$:	0.606	in^2
V_{max}=	2.376	kips
$ØR_{NV}$ =	35.343	kips
T_{max} =	0.962	kips
$ØR_{NT}$ =	54.540	kips

Job Name: BU # 842873 - SHELTON NE
Job Number: TEP #63208.298276
Calc: SPD Check: HBC
Date: 9/17/2019

Moment Bolt Group - Face Horizontal

Code Checks Per ANSI/TIA-222-H-2017:		
Single Bolt Capacity =	**10.0%**	**GOOD**

Single Bolt Check

Bolt Size:	0.625	in
Bolt F_u:	120	ksi
$Bolt_{A,\ Net\ Tensile}$:	0.226	in^2
V_{max}=	1.385	kips
$ØR_{NV}$ =	13.806	kips
T_{max} =	0.575	kips
$ØR_{NT}$ =	20.340	kips

Exhibit F

Power Density/RF Emissions Report

RF EMISSIONS COMPLIANCE REPORT

Crown Castle on behalf of AT&T Mobility, LLC

Crown Castle Site Name: SHELTON NE
Crown Castle Site BU: 842873
AT&T Mobility, LLC Site FA #:10071231
30 Oliver Terrace
Shelton, CT
10/4/2019

Report Status:

AT&T Mobility, LLC Is Compliant

STATE OF CONNECTICUT
MICHAEL FISCHER
33928
LICENSED
PROFESSIONAL ENGINEER

Michael Fischer, P.E.
Registered Professional Engineer (Electrical)
Connecticut License Number 33928
Expires January 31, 2020

Signed 04 October 2019

Prepared By:

Site Safe, LLC

8618 Westwood Center Drive
Suite 315

Vienna, VA 22182

Voice: 703-276-1100
Fax: 703-276-1169

Engineering Statement in Re:
Electromagnetic Energy Analysis
Crown Castle
SHELTON, CT

My signature on the cover of this document indicates:

That I am registered as a Professional Engineer in the jurisdiction indicated; and

That I have extensive professional experience in the wireless communications engineering industry; and

That I am an employee of Site Safe, LLC in Vienna, Virginia; and

That I am thoroughly familiar with the Rules and Regulations of the Federal Communications Commission ("the FCC" and "the FCC Rules") both in general and specifically as they apply to the FCC's Guidelines for Human Exposure to Radio Frequency Electromagnetic Fields; and

That the technical information serving as the basis for this report was supplied by Crown Castle (see attached Site Summary and Carrier documents) and that AT&T Mobility, LLC's installation involves communications equipment, antennas and associated technical equipment at a location referred to as "SHELTON NE" ("the site"); and

That AT&T Mobility, LLC proposes to operate at the site with transmit antennas listed in the carrier summary and with a maximum effective radiated power as specified by AT&T Mobility, LLC and shown on the worksheet and that worst-case 100% duty cycle has been assumed; and

That this analysis has been performed with the assumption that the ground immediately surrounding the tower is primarily flat or falling; and

That at this time, the FCC requires that certain licensees address specific levels of radio frequency energy to which workers or members of the public might possibly be exposed (at §1.1307(b) of the FCC Rules); and

That such consideration of possible exposure of humans to radio frequency energy must utilize the standards set by the FCC, which is the federal agency having jurisdiction over communications facilities; and

That the FCC rules define two tiers of permissible exposure guidelines: 1) "uncontrolled environments," which defines situations in which persons may not be aware of (the "general public"), or may not be able to control their exposure to a transmission facility; and 2) "controlled environments," which defines situations in which persons are aware of their potential for exposure (industry personnel); and

That this statement specifically addresses the uncontrolled environment (which is more conservative than the controlled environment) and the limit set forth in the FCC rules for licensees of AT&T Mobility, LLC's operating frequencies as shown on the attached antenna worksheet; and

That when applying the uncontrolled environment standards, the predicted Maximum Power Density at two meters above ground level from the proposed AT&T Mobility, LLC operation is

no more than 3.196% of the maximum permissible exposure limits in any accessible area on the ground; and

That it is understood per FCC Guidelines and OET 65 Appendix A, that regardless of the existent radio frequency environment, only those licensees whose contributions exceed 5% of the exposure limit pertinent to their operation(s) bear any responsibility for bringing any non-compliant area(s) into compliance; and

That when applying the uncontrolled environment standards, the cumulative predicted energy density from the proposed operation is no more than 11.369% of the maximum in any accessible area up to two meters above the ground per OET 65; and

That the calculations provided in this report are based on data provided by the client and antenna pattern data supplied by the antenna manufacturer, in accordance with FCC guidelines listed in OET 65. Horizontal and vertical antenna patterns are combined for modeling purposes to accurately reflect the energy two meters above ground level where on-axis energy refers to maximum energy two meters above the ground along the azimuth of the antenna and where area energy refers to the maximum energy anywhere two meters above the ground regardless of the antenna azimuth, accounting for cumulative energy from multiple antennas for the carrier(s) and frequency range(s) indicated; and

That the Occupational Safety and Health Administration has policies in place which address worker safety in and around communications sites, thus individual companies will be responsible for their employees' training regarding radio frequency safety; and

In summary, it is stated here that the proposed operation at the site will not result in exposure of the public to excessive levels of radio frequency energy as defined in the FCC Rules and Regulations, specifically 47 CFR 1.1307(b), and that AT&T Mobility, LLC's proposed operation is completely compliant.

Finally, it is stated that access to the tower should be restricted to communication industry professionals and approved contractor personnel trained in radio frequency safety and that this instant analysis addresses exposure levels at two meters above ground level and does not address exposure levels on the tower or in the immediate proximity of the antennas.

Crown Castle
SHELTON NE
Site Summary

Carrier	Area Maximum Percentage MPE
AT&T Mobility, LLC	0.708 %
AT&T Mobility, LLC	0.187 %
AT&T Mobility, LLC	0.708 %
AT&T Mobility, LLC	0.108 %
AT&T Mobility, LLC (Proposed)	0.74 %
AT&T Mobility, LLC (Proposed)	0.371 %
AT&T Mobility, LLC (Proposed)	0.374 %
Sprint	0.783 %
Sprint	0.783 %
Sprint	0.334 %
Sprint	1.65 %
Sprint	0.476 %
T-Mobile	0.552 %
T-Mobile	0.466 %
T-Mobile	0.983 %
T-Mobile	0.369 %
Unknown Carrier	0.131 %
Verizon Wireless	0.564 %
Verizon Wireless	0.305 %
Verizon Wireless	0.502 %
Verizon Wireless	0.275 %
Composite Site MPE:	11.369 %

AT&T Mobility, LLC
SHELTON NE
Carrier Summary

Frequency:	1900	MHz
Maximum Permissible Exposure (MPE):	1000	µW/cm^2
Maximum power density at ground level:	7.08374	µW/cm^2
Highest percentage of Maximum Permissible Exposure:	0.70837	%

					On Axis		Area	
Antenna Make	**Model**	**Height (feet)**	**Orientation (degrees true)**	**ERP (Watts)**	**Max Power Density (µW/cm^2)**	**Percent of MPE**	**Max Power Density (µW/cm^2)**	**Percent of MPE**
CCI Antennas	HPA-65R-BUU-H6	129	0	4530	5.636427	0.563643	6.90583	0.690583
CCI Antennas	HPA-65R-BUU-H6	129	150	4530	5.636427	0.563643	6.90583	0.690583
CCI Antennas	HPA-65R-BUU-H6	129	260	4530	5.636427	0.563643	6.90583	0.690583

AT&T Mobility, LLC
SHELTON NE
Carrier Summary

Frequency:	737	MHz
Maximum Permissible Exposure (MPE):	491.33	µW/cm^2
Maximum power density at ground level:	0.91859	µW/cm^2
Highest percentage of Maximum Permissible Exposure:	0.18696	%

					On Axis		Area	
Antenna Make	**Model**	**Height (feet)**	**Orientation (degrees true)**	**ERP (Watts)**	**Max Power Density (µW/cm^2)**	**Percent of MPE**	**Max Power Density (µW/cm^2)**	**Percent of MPE**
CCI Antennas	HPA-65R-BUU-H6	129	0	881	0.530183	0.107907	0.813455	0.165561
CCI Antennas	HPA-65R-BUU-H6	129	150	881	0.530183	0.107907	0.813455	0.165561
CCI Antennas	HPA-65R-BUU-H6	129	260	881	0.530183	0.107907	0.813455	0.165561

AT&T Mobility, LLC
SHELTON NE
Carrier Summary

Frequency:	2100	MHz
Maximum Permissible Exposure (MPE):	1000	µW/cm^2
Maximum power density at ground level:	7.08374	µW/cm^2
Highest percentage of Maximum Permissible Exposure:	0.70837	%

					On Axis		Area	
Antenna Make	**Model**	**Height (feet)**	**Orientation (degrees true)**	**ERP (Watts)**	**Max Power Density (µW/cm^2)**	**Percent of MPE**	**Max Power Density (µW/cm^2)**	**Percent of MPE**
CCI Antennas	HPA-65R-BUU-H6	129	0	4530	5.636427	0.563643	6.90583	0.690583
CCI Antennas	HPA-65R-BUU-H6	129	150	4530	5.636427	0.563643	6.90583	0.690583
CCI Antennas	HPA-65R-BUU-H6	129	260	4530	5.636427	0.563643	6.90583	0.690583

AT&T Mobility, LLC
SHELTON NE
Carrier Summary

Frequency:	850	MHz
Maximum Permissible Exposure (MPE):	566.67	µW/cm^2
Maximum power density at ground level:	0.6124	µW/cm^2
Highest percentage of Maximum Permissible Exposure:	0.10807	%

					On Axis		Area	
Antenna Make	**Model**	**Height (feet)**	**Orientation (degrees true)**	**ERP (Watts)**	**Max Power Density (µW/cm^2)**	**Percent of MPE**	**Max Power Density (µW/cm^2)**	**Percent of MPE**
CCI Antennas	HPA-65R-BUU-H6	129	0	588	0.35346	0.062375	0.54231	0.095702
CCI Antennas	HPA-65R-BUU-H6	129	150	588	0.35346	0.062375	0.54231	0.095702
CCI Antennas	HPA-65R-BUU-H6	129	260	588	0.35346	0.062375	0.54231	0.095702

AT&T Mobility, LLC (Proposed)
SHELTON NE
Carrier Summary

Frequency:	2300	MHz
Maximum Permissible Exposure (MPE):	1000	µW/cm^2
Maximum power density at ground level:	7.40366	µW/cm^2
Highest percentage of Maximum Permissible Exposure:	0.74037	%

					On Axis		Area	
Antenna Make	**Model**	**Height (feet)**	**Orientation (degrees true)**	**ERP (Watts)**	**Max Power Density (µW/cm^2)**	**Percent of MPE**	**Max Power Density (µW/cm^2)**	**Percent of MPE**
CCI Antennas	DMP65R-BU6D	129	0	2606	7.092687	0.709269	7.330486	0.733049
CCI Antennas	DMP65R-BU6D	129	150	2606	7.092687	0.709269	7.330486	0.733049
CCI Antennas	DMP65R-BU6D	129	260	2606	7.092687	0.709269	7.330486	0.733049

AT&T Mobility, LLC (Proposed)
SHELTON NE
Carrier Summary

Frequency:	850	MHz
Maximum Permissible Exposure (MPE):	566.67	µW/cm^2
Maximum power density at ground level:	2.10288	µW/cm^2
Highest percentage of Maximum Permissible Exposure:	0.3711	%

					On Axis		Area	
Antenna Make	**Model**	**Height (feet)**	**Orientation (degrees true)**	**ERP (Watts)**	**Max Power Density (µW/cm^2)**	**Percent of MPE**	**Max Power Density (µW/cm^2)**	**Percent of MPE**
CCI Antennas	DMP65R-BU6D	129	0	2239	1.053005	0.185824	1.935816	0.341615
CCI Antennas	DMP65R-BU6D	129	150	2239	1.053005	0.185824	1.935816	0.341615
CCI Antennas	DMP65R-BU6D	129	260	2239	1.053005	0.185824	1.935816	0.341615

AT&T Mobility, LLC (Proposed)
SHELTON NE
Carrier Summary

Frequency:	763	MHz
Maximum Permissible Exposure (MPE):	508.67	µW/cm^2
Maximum power density at ground level:	1.90272	µW/cm^2
Highest percentage of Maximum Permissible Exposure:	0.37406	%

					On Axis		Area	
Antenna Make	**Model**	**Height (feet)**	**Orientation (degrees true)**	**ERP (Watts)**	**Max Power Density (µW/cm^2)**	**Percent of MPE**	**Max Power Density (µW/cm^2)**	**Percent of MPE**
CCI Antennas	DMP65R-BU6D	129	0	2400	1.141499	0.22441	1.476154	0.290201
CCI Antennas	DMP65R-BU6D	129	150	2400	1.141499	0.22441	1.476154	0.290201
CCI Antennas	DMP65R-BU6D	129	260	2400	1.141499	0.22441	1.476154	0.290201

Sprint
SHELTON NE
Carrier Summary

Frequency:	1990	MHz
Maximum Permissible Exposure (MPE):	1000	µW/cm^2
Maximum power density at ground level:	7.83366	µW/cm^2
Highest percentage of Maximum Permissible Exposure:	0.78337	%

					On Axis		Area	
Antenna Make	**Model**	**Height (feet)**	**Orientation (degrees true)**	**ERP (Watts)**	**Max Power Density (µW/cm^2)**	**Percent of MPE**	**Max Power Density (µW/cm^2)**	**Percent of MPE**
RFS	APXVSPP18-C-A20	75	50	3804	2.22779	0.222779	6.50266	0.650266
RFS	APXVSPP18-C-A20	75	150	3804	2.22779	0.222779	6.50266	0.650266
RFS	APXVSPP18-C-A20	75	260	3804	2.22779	0.222779	6.50266	0.650266

Sprint
SHELTON NE
Carrier Summary

Frequency:	1900	MHz
Maximum Permissible Exposure (MPE):	1000	µW/cm^2
Maximum power density at ground level:	7.83366	µW/cm^2
Highest percentage of Maximum Permissible Exposure:	0.78337	%

					On Axis		Area	
Antenna Make	**Model**	**Height (feet)**	**Orientation (degrees true)**	**ERP (Watts)**	**Max Power Density (µW/cm^2)**	**Percent of MPE**	**Max Power Density (µW/cm^2)**	**Percent of MPE**
RFS	APXVSPP18-C-A20	75	50	3804	2.22779	0.222779	6.50266	0.650266
RFS	APXVSPP18-C-A20	75	150	3804	2.22779	0.222779	6.50266	0.650266
RFS	APXVSPP18-C-A20	75	260	3804	2.22779	0.222779	6.50266	0.650266

Sprint
SHELTON NE
Carrier Summary

Frequency:	862	MHz
Maximum Permissible Exposure (MPE):	574.67	µW/cm^2
Maximum power density at ground level:	1.92126	µW/cm^2
Highest percentage of Maximum Permissible Exposure:	0.33433	%

					On Axis		Area	
Antenna Make	**Model**	**Height (feet)**	**Orientation (degrees true)**	**ERP (Watts)**	**Max Power Density (µW/cm^2)**	**Percent of MPE**	**Max Power Density (µW/cm^2)**	**Percent of MPE**
RFS	APXVSPP18-C-A20	75	50	1084	1.347151	0.234423	1.414676	0.246173
RFS	APXVSPP18-C-A20	75	150	1084	1.347151	0.234423	1.414676	0.246173
RFS	APXVSPP18-C-A20	75	260	1084	1.347151	0.234423	1.414676	0.246173

Sprint
SHELTON NE
Carrier Summary

Frequency:	2500	MHz
Maximum Permissible Exposure (MPE):	1000	µW/cm^2
Maximum power density at ground level:	16.50457	µW/cm^2
Highest percentage of Maximum Permissible Exposure:	1.65046	%

					On Axis		Area	
Antenna Make	**Model**	**Height (feet)**	**Orientation (degrees true)**	**ERP (Watts)**	**Max Power Density (µW/cm^2)**	**Percent of MPE**	**Max Power Density (µW/cm^2)**	**Percent of MPE**
Commscope	DT465B-2XR	75	30	5836	4.428655	0.442865	12.325471	1.232547
Commscope	DT465B-2XR	75	170	5836	4.428655	0.442865	12.325471	1.232547
Commscope	DT465B-2XR	75	260	5836	4.428655	0.442865	12.325471	1.232547

Sprint
SHELTON NE
Carrier Summary

Frequency:	866	MHz
Maximum Permissible Exposure (MPE):	577.33	µW/cm^2
Maximum power density at ground level:	2.7504	µW/cm^2
Highest percentage of Maximum Permissible Exposure:	0.4764	%

					On Axis		Area	
Antenna Make	**Model**	**Height (feet)**	**Orientation (degrees true)**	**ERP (Watts)**	**Max Power Density (µW/cm^2)**	**Percent of MPE**	**Max Power Density (µW/cm^2)**	**Percent of MPE**
Commscope	DT465B-2XR	75	30	1236	1.338982	0.231925	2.048166	0.354763
Commscope	DT465B-2XR	75	170	1236	1.338982	0.231925	2.048166	0.354763
Commscope	DT465B-2XR	75	260	1236	1.338982	0.231925	2.048166	0.354763

T-Mobile
SHELTON NE
Carrier Summary

Frequency:	700	MHz
Maximum Permissible Exposure (MPE):	466.67	μW/cm^2
Maximum power density at ground level:	2.57586	μW/cm^2
Highest percentage of Maximum Permissible Exposure:	0.55197	%

					On Axis		Area	
Antenna Make	**Model**	**Height (feet)**	**Orientation (degrees true)**	**ERP (Watts)**	**Max Power Density (μW/cm^2)**	**Percent of MPE**	**Max Power Density (μW/cm^2)**	**Percent of MPE**
RFS	APXVAARR24_43-U-NA20	120	50	3484	1.540487	0.330104	1.664731	0.356728
RFS	APXVAARR24_43-U-NA20	120	200	3484	1.540487	0.330104	1.664731	0.356728
RFS	APXVAARR24_43-U-NA20	120	300	3484	1.540487	0.330104	1.664731	0.356728

T-Mobile
SHELTON NE
Carrier Summary

Frequency:	600	MHz
Maximum Permissible Exposure (MPE):	400	μW/cm^2
Maximum power density at ground level:	1.86498	μW/cm^2
Highest percentage of Maximum Permissible Exposure:	0.46624	%

					On Axis		Area	
Antenna Make	**Model**	**Height (feet)**	**Orientation (degrees true)**	**ERP (Watts)**	**Max Power Density (μW/cm^2)**	**Percent of MPE**	**Max Power Density (μW/cm^2)**	**Percent of MPE**
RFS	APXVAARR24_43-U-NA20	120	50	2501	1.229547	0.307387	1.26615	0.316537
RFS	APXVAARR24_43-U-NA20	120	200	2501	1.229547	0.307387	1.26615	0.316537
RFS	APXVAARR24_43-U-NA20	120	300	2501	1.229547	0.307387	1.26615	0.316537

T-Mobile
SHELTON NE
Carrier Summary

Frequency:	2100	MHz
Maximum Permissible Exposure (MPE):	1000	µW/cm^2
Maximum power density at ground level:	9.83086	µW/cm^2
Highest percentage of Maximum Permissible Exposure:	0.98309	%

					On Axis		Area	
Antenna Make	**Model**	**Height (feet)**	**Orientation (degrees true)**	**ERP (Watts)**	**Max Power Density (µW/cm^2)**	**Percent of MPE**	**Max Power Density (µW/cm^2)**	**Percent of MPE**
Ericsson	AIR32 DB B66AA B2A	120	50	4626	6.795398	0.67954	6.824733	0.682473
Ericsson	AIR32 DB B66AA B2A	120	200	4626	6.795398	0.67954	6.824733	0.682473
Ericsson	AIR32 DB B66AA B2A	120	300	4626	6.795398	0.67954	6.824733	0.682473

T-Mobile
SHELTON NE
Carrier Summary

Frequency:	1900	MHz
Maximum Permissible Exposure (MPE):	1000	µW/cm^2
Maximum power density at ground level:	3.69006	µW/cm^2
Highest percentage of Maximum Permissible Exposure:	0.36901	%

					On Axis		Area	
Antenna Make	**Model**	**Height (feet)**	**Orientation (degrees true)**	**ERP (Watts)**	**Max Power Density (µW/cm^2)**	**Percent of MPE**	**Max Power Density (µW/cm^2)**	**Percent of MPE**
Ericsson	AIR32 DB B66AA B2A	120	50	4626	1.579275	0.157927	1.814293	0.181429
RFS	APX16DWV-16DWVS-C-A20	120	50	1691	0.549448	0.054945	0.657107	0.065711
Ericsson	AIR32 DB B66AA B2A	120	200	4626	1.579275	0.157927	1.814293	0.181429
RFS	APX16DWV-16DWVS-C-A20	120	200	1691	0.549448	0.054945	0.657107	0.065711
Ericsson	AIR32 DB B66AA B2A	120	300	4626	1.579275	0.157927	1.814293	0.181429
RFS	APX16DWV-16DWVS-C-A20	120	300	1691	0.549448	0.054945	0.657107	0.065711

Unknown Carrier
SHELTON NE
Carrier Summary

Frequency:	450	MHz
Maximum Permissible Exposure (MPE):	300	µW/cm^2
Maximum power density at ground level:	0.39343	µW/cm^2
Highest percentage of Maximum Permissible Exposure:	0.13114	%

					On Axis		Area	
Antenna Make	**Model**	**Height (feet)**	**Orientation (degrees true)**	**ERP (Watts)**	**Max Power Density (µW/cm^2)**	**Percent of MPE**	**Max Power Density (µW/cm^2)**	**Percent of MPE**
ANDREW	DB636-C	145	0	100	0.393434	0.131145	0.393434	0.131145

Verizon Wireless
SHELTON NE
Carrier Summary

Frequency:	850	MHz
Maximum Permissible Exposure (MPE):	566.67	µW/cm^2
Maximum power density at ground level:	3.19482	µW/cm^2
Highest percentage of Maximum Permissible Exposure:	0.56379	%

					On Axis		Area	
Antenna Make	**Model**	**Height (feet)**	**Orientation (degrees true)**	**ERP (Watts)**	**Max Power Density (µW/cm^2)**	**Percent of MPE**	**Max Power Density (µW/cm^2)**	**Percent of MPE**
Antel	BXA-80063-6BF	140	30	4509	3.134091	0.553075	3.134091	0.553075
Antel	BXA-80063-6BF	140	120	4509	3.134091	0.553075	3.134091	0.553075
Antel	BXA-80063-6BF	140	220	4509	3.134091	0.553075	3.134091	0.553075

Verizon Wireless
SHELTON NE
Carrier Summary

Frequency:	751	MHz
Maximum Permissible Exposure (MPE):	500.67	µW/cm^2
Maximum power density at ground level:	1.52847	µW/cm^2
Highest percentage of Maximum Permissible Exposure:	0.30529	%

					On Axis		Area	
Antenna Make	**Model**	**Height (feet)**	**Orientation (degrees true)**	**ERP (Watts)**	**Max Power Density (µW/cm^2)**	**Percent of MPE**	**Max Power Density (µW/cm^2)**	**Percent of MPE**
CSS	X7C-FRO-660-VR0	140	30	4066	1.484679	0.29654	1.524199	0.304434
CSS	X7C-FRO-660-VR0	140	120	4066	1.484679	0.29654	1.524199	0.304434
CSS	X7C-FRO-660-VR0	140	220	4066	1.484679	0.29654	1.524199	0.304434

Verizon Wireless
SHELTON NE
Carrier Summary

Frequency:	2100	MHz
Maximum Permissible Exposure (MPE):	1000	µW/cm^2
Maximum power density at ground level:	5.01583	µW/cm^2
Highest percentage of Maximum Permissible Exposure:	0.50158	%

					On Axis		Area	
Antenna Make	**Model**	**Height (feet)**	**Orientation (degrees true)**	**ERP (Watts)**	**Max Power Density (µW/cm^2)**	**Percent of MPE**	**Max Power Density (µW/cm^2)**	**Percent of MPE**
ANDREW	HBXX-6516DS-VTM	140	30	6461	2.623129	0.262313	4.445151	0.444515
ANDREW	HBXX-6516DS-VTM	140	120	6461	2.623129	0.262313	4.445151	0.444515
ANDREW	HBXX-6516DS-VTM	140	220	6461	2.623129	0.262313	4.445151	0.444515

Verizon Wireless
SHELTON NE
Carrier Summary

Frequency:	1900	MHz
Maximum Permissible Exposure (MPE):	1000	µW/cm^2
Maximum power density at ground level:	2.74665	µW/cm^2
Highest percentage of Maximum Permissible Exposure:	0.27466	%

					On Axis		Area	
Antenna Make	**Model**	**Height (feet)**	**Orientation (degrees true)**	**ERP (Watts)**	**Max Power Density (µW/cm^2)**	**Percent of MPE**	**Max Power Density (µW/cm^2)**	**Percent of MPE**
ANDREW	HBXX-6516DS-VTM	140	30	3726	1.069496	0.10695	2.257778	0.225778
ANDREW	HBXX-6516DS-VTM	140	120	3726	1.069496	0.10695	2.257778	0.225778
ANDREW	HBXX-6516DS-VTM	140	220	3726	1.069496	0.10695	2.257778	0.225778