AMERICAN TOWER®
CORPORATION

This report was prepared for American Tower Corporation by

CLSGroup

Structural Analysis Report

Structure	:	**150 ft Monopole**
ATC Site Name	:	**Prospect CT, CT**
ATC Site Number	:	**282660**
Engineering Number	:	**64808021**
Proposed Carrier	:	**AT&T Mobility**
Carrier Site Name	:	**Prospect North**
Carrier Site Number	:	**CTL05626/FA#10071211**
Site Location	:	**151 Waterbury Prospect road** **Prospect, CT 06712-1228** **41.523700,-72.995500**
County	:	**New Haven**
Date	:	**January 18, 2016**
Max Usage	:	**61%**
Result	:	**Pass**

Reviewed by:
William Garrett, PE
Chief Engineer

STATE OF CONNECTICUT
WILLIAM GARRETT
No. 23235
LICENSED
PROFESSIONAL ENGINEER

Prepared By:
Zachary A. Medoff

Jan 19 2016 7:28 AM

COA: PEC.0001553

Table of Contents

Introduction 1

Supporting Documents 1

Analysis 1

Conclusion 1

Existing and Reserved Equipment 2

Equipment to be Removed 2

Proposed Equipment 2

Structure Usages 3

Foundations 3

Deflection, Twist, and Sway 3

Standard Conditions 4

Calculations ..... Attached

Introduction

The purpose of this report is to summarize results of a structural analysis performed on the 150 ft monopole to reflect the change in loading by AT&T Mobility.

Supporting Documents

Tower Drawings	ERI Project #25148/001, dated November 13, 2009
Foundation Drawing	ERI Project #25148/002, dated November 13, 2009
Geotechnical Report	FDH Project #09-10144E G1, dated November 9, 2009

Analysis

The tower was analyzed using American Tower Corporation's tower analysis software. This program considers an elastic three-dimensional model and second-order effects per ANSI/TIA-222.

Basic Wind Speed:	100 mph (3-Second Gust)
Basic Wind Speed w/ Ice:	50 mph (3-Second Gust) w/ 3/4" radial ice concurrent
Code:	ANSI/TIA-222-G / 2003 IBC w/ 2005 CT Supplement & 2009 CT Amendment
Structure Class:	II
Exposure Category:	B
Topographic Category:	1
Crest Height:	0 ft
Spectral Response:	Ss = 0.19, S_1 = 0.06
Site Class:	D - Stiff Soil

Conclusion

Based on the analysis results, the structure meets the requirements per the applicable codes listed above. The tower and foundation can support the equipment as described in this report.

If you have any questions or require additional information, please contact American Tower via email at Engineering@americantower.com. Please include the American Tower site name, site number, and engineering number in the subject line for any questions.

Existing and Reserved Equipment

Elevation[1] (ft)		Qty	Antenna	Mount Type	Lines	Carrier
Mount	RAD					
150.0	150.0	3	Raycap DC6-48-60-0-8F	Low Profile Platform	(6) 0.78" 8 AWG 6 (6) 1 5/8" Coax	AT&T Mobility
		3	Ericsson RRUS A2			
		3	Ericsson RRUS 12			
		1	Ericsson RRUS-32			
		3	Ericsson RRUS-11			
		3	CCI HPA-65R-BUU-H6			
		6	CCI HPA-65R-BUU-H8			
135.0	137.0	3	Ericsson KRY 112 144/1	Low Profile Platform	(12) 1 5/8" Coax (1) 1 1/4" Hybriflex	T-Mobile
		3	Ericsson RRUS 11 B12			
		3	Ericsson AIR 21, 1.3M, B2A B4P			
		3	Ericsson AIR 21, 1.3M, B4A B2P			
		3	Andrew LNX-6515DS-VTM			

Equipment to be Removed

Elevation[1] (ft)		Qty	Antenna	Mount Type	Lines	Carrier
Mount	RAD					
150.0	150.0	3	Ericsson RRUS-11	-	(6) 1 5/8" Coax	AT&T Mobility
		3	Ericsson RRUS 12			
		3	Ericsson RRUS A2			
		1	Ericsson RRUS E2 B29			

Proposed Equipment

Elevation[1] (ft)		Qty	Antenna	Mount Type	Lines	Carrier
Mount	RAD					
152.0	152.0	2	Ericsson RRUS-32	Low Profile Platform	(4) 0.76" 8 AWG 6 (2) 0.39" Fiber Trunk	AT&T Mobility

[1]Mount elevation is defined as height above bottom of steel structure to the bottom of mount, RAD elevation is defined as center of antenna above ground level (AGL).

Install proposed coax inside the pole shaft.

Structure Usages

Structural Component	Controlling Usage	Pass/Fail
Anchor Bolts	42%	Pass
Shaft	53%	Pass
Base Plate	53%	Pass
Flanges	61%	Pass

Foundations

Reaction Component	Analysis Reactions	% of Usage
Moment (Kips-Ft)	2,372.3	55%
Axial (Kips)	64.6	4%
Shear (Kips)	22.2	22%

The structure base reactions resulting from this analysis were found to be acceptable through analysis based on geotechnical and foundation information, therefore no modification or reinforcement of the foundation will be required.

Deflection and Sway*

Antenna Elevation (ft)	Antenna	Carrier	Deflection (ft)	Sway (Rotation) (°)
150.0	Ericsson RRUS-32	AT&T Mobility	0.674	0.484
135.0	Ericsson KRY 112 144/1	T-Mobile	0.550	0.453
	Ericsson RRUS 11 B12			
	Ericsson AIR 21, 1.3M, B2A B4P			
	Ericsson AIR 21, 1.3M, B4A B2P			
	Andrew LNX-6515DS-VTM			

***Deflection and Sway was evaluated considering a design wind speed of 60 mph (3-Second Gust) per ANSI/TIA-222-G**

AMERICAN TOWER®
CORPORATION

Standard Conditions

All engineering services are performed on the basis that the information used is current and correct. This information may consist of, but is not necessary limited, to:

-- Information supplied by the client regarding the structure itself, antenna, mounts and feed line loading on the structure and its components, or other relevant information.

-- Information from drawings in the possession of American Tower Corporation, or generated by field inspections or measurements of the structure.

It is the responsibility of the client to ensure that the information provided to A.T. Engineering Service, PLLC and used in the performance of our engineering services is correct and complete. In the absence of information to the contrary, we assume that all structures were constructed in accordance with the drawings and specifications and that their capacity has not significantly changed from the "as new" condition.

Unless explicitly agreed by both the client and American Tower Corporation, all services will be performed in accordance with the current revision of ANSI/TIA -222. The design basic wind speed will be determined based on the minimum basic wind speed as prescribed in ANSI/TIA-222. Although every effort is taken to ensure that the loading considered is adequate to meet the requirements of all applicable regulatory entities, we can provide no assurance to meet any other local and state codes or requirements. If wind and ice loads or other relevant parameters are to be different from the minimum values recommended by the codes, the client shall specify the exact requirement.

All services are performed, results obtained, and recommendations made in accordance with generally accepted engineering principles and practices. A.T. Engineering Service, PLLC is not responsible for the conclusions, opinions and recommendations made by others based on the information we supply.

© 2007 - 2016 by ATC IP LLC. All rights reserved.

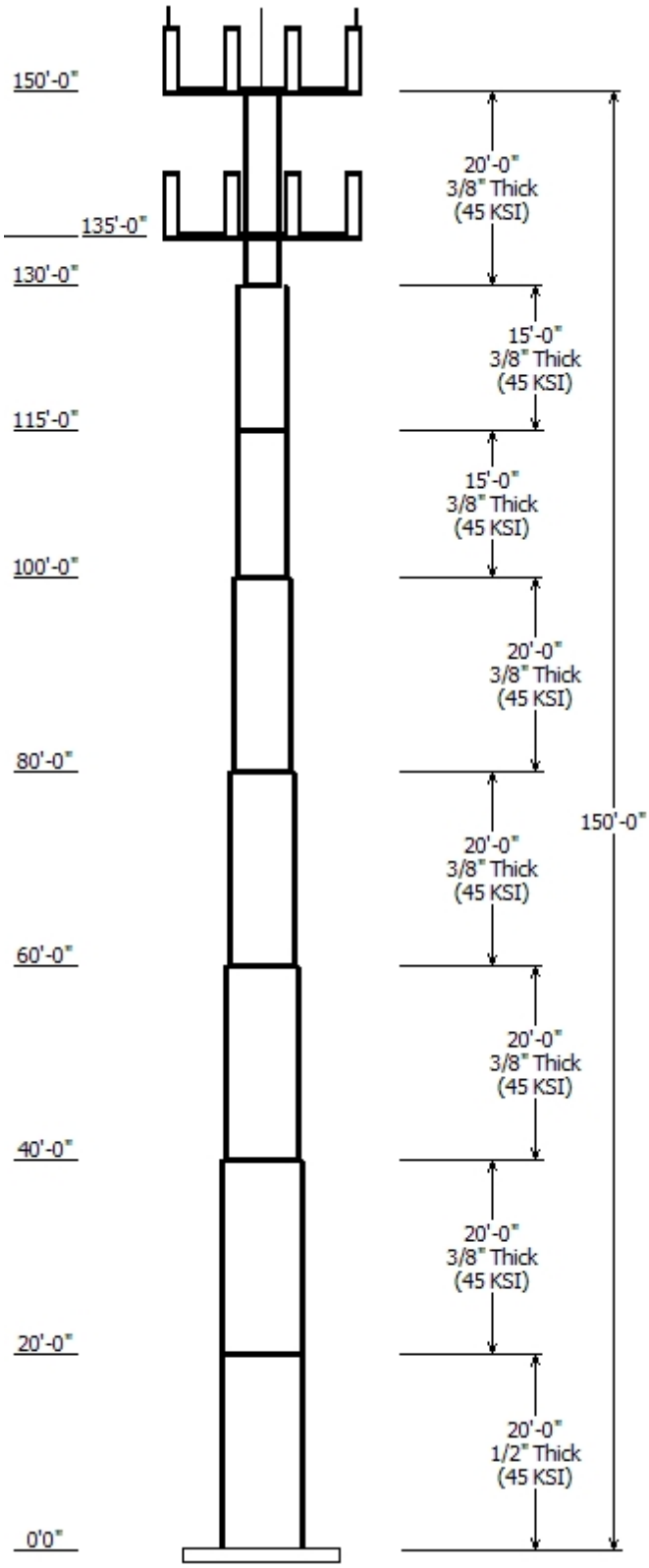

Job Information

Pole :	282660	Code:	ANSI/TIA-222-G
Description :			
Client :	AT&T Mobility	Struct Class :	II
Location :	Prospect CT, CT		
Shape :	Round	Exposure :	B
Height :	150.00 (ft)	Topo :	1
Base Elev (ft):	0.00		
Taper:	0.00000(in/ft)		

Sections Properties

Shaft Section	Length (ft)	Diameter (in) Accross Flats Top	Bottom	Thick (in)	Joint Type	Overlap Length (in)	Taper (in/ft)	Steel Grade (ksi)
1	20.000	60.00	60.00	0.500		0.000	0.000000	45
2	20.000	60.00	60.00	0.375	Butt Joint	0.000	0.000000	45
3	20.000	54.00	54.00	0.375	Butt Joint	0.000	0.000000	45
4	20.000	48.00	48.00	0.375	Butt Joint	0.000	0.000000	45
5	20.000	42.00	42.00	0.375	Butt Joint	0.000	0.000000	45
6	15.000	36.00	36.00	0.375	Butt Joint	0.000	0.000000	45
7	15.000	36.00	36.00	0.375	Butt Joint	0.000	0.000000	45
8	20.000	24.00	24.00	0.375	Butt Joint	0.000	0.000000	45

Discrete Appurtenance

Attach Elev (ft)	Force Elev (ft)	Qty	Description
150.000	152.000	2	Ericsson RRUS-32
150.000	150.000	1	Round Low Profile Platform
150.000	152.000	6	CCI HPA-65R-BUU-H8
150.000	152.000	3	CCI HPA-65R-BUU-H6
150.000	152.000	3	Ericsson RRUS-11
150.000	152.000	1	Ericsson RRUS-32
150.000	152.000	3	Ericsson RRUS 12
150.000	152.000	3	Ericsson RRUS A2
150.000	152.000	3	Raycap DC6-48-60-0-8F
135.000	137.000	3	Andrew LNX-6515DS-VTM
135.000	137.000	3	Ericsson AIR 21, 1.3M, B4A B2P
135.000	137.000	3	Ericsson AIR 21, 1.3M, B2A B4P
135.000	137.000	3	Ericsson RRUS 11 B12
135.000	135.000	1	Round Low Profile Platform
135.000	137.000	3	Ericsson KRY 112 144/1

Linear Appurtenance

Elev (ft) From	To	Description	Exposed To Wind
0.000	135.0	1 1/4" Hybriflex	No
0.000	135.0	1 5/8" Coax	No
0.000	150.0	0.39" Fiber Trunk	No
0.000	150.0	0.76" 8 AWG 6	No
0.000	150.0	0.78" 8 AWG 6	No
0.000	150.0	1 5/8" Coax	No

Load Cases

1.2D + 1.6W	100 mph with No Ice
0.9D + 1.6W	100 mph with No Ice (Reduced DL)
1.2D + 1.0Di + 1.0Wi	50 mph with 0.75 in Radial Ice
(1.2 + 0.2Sds) * DL + E	Seismic Equivalent Lateral Forces Method
(1.2 + 0.2Sds) * DL + E	Seismic Equivalent Modal Analysis Method
1.0D + 1.0W	Serviceability 60 mph

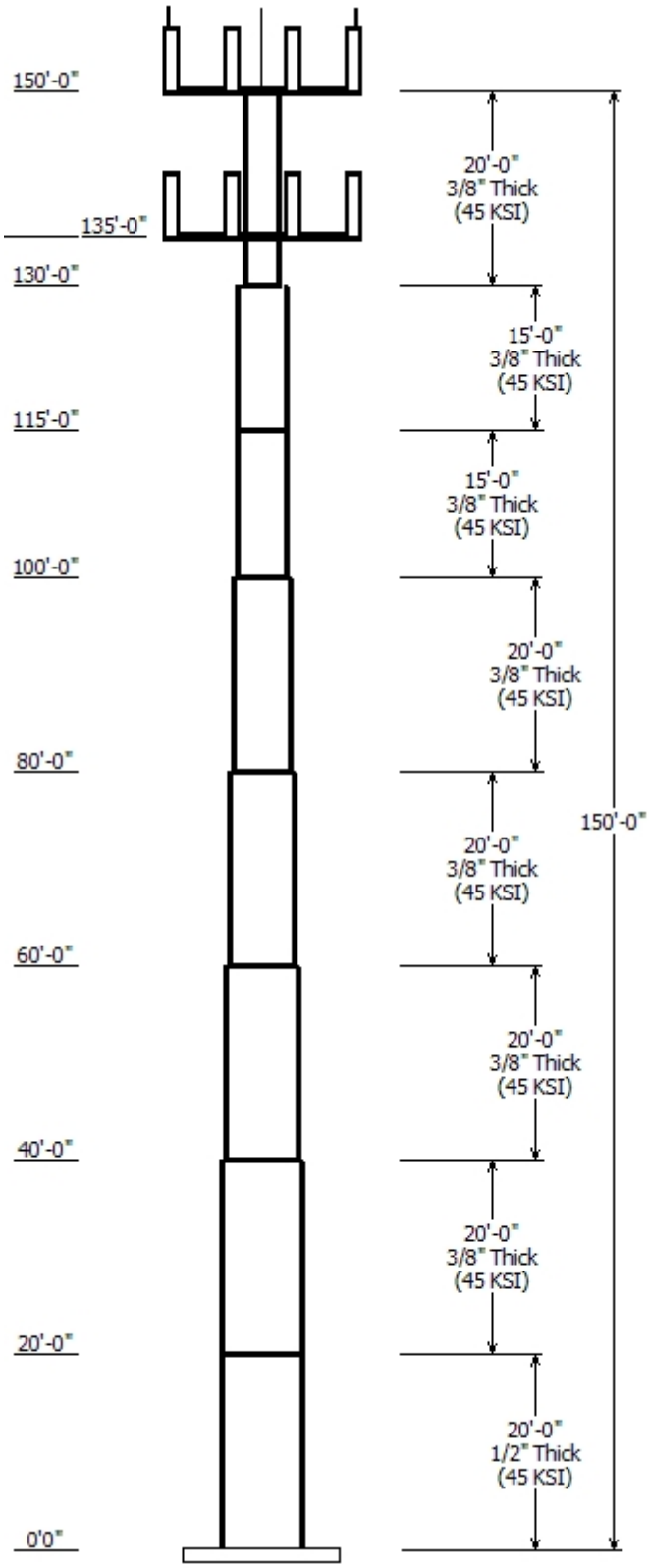

Reactions

Load Case	Moment (kip-ft)	Shear (kip)	Axial (kip)
1.2D + 1.6W	2372.29	22.24	44.30
0.9D + 1.6W	2360.40	22.23	33.22
1.2D + 1.0Di + 1.0Wi	614.92	6.18	64.58
(1.2 + 0.2Sds) * DL + E ELFM	241.23	2.12	43.69
(1.2 + 0.2Sds) * DL + E EMAM	299.62	2.53	43.69
1.0D + 1.0W	532.02	5.00	36.93

Dish Deflections

Load Case	Attach Elev (ft)	Deflection (in)	Rotation (deg)
	0.00	0.000	0.000

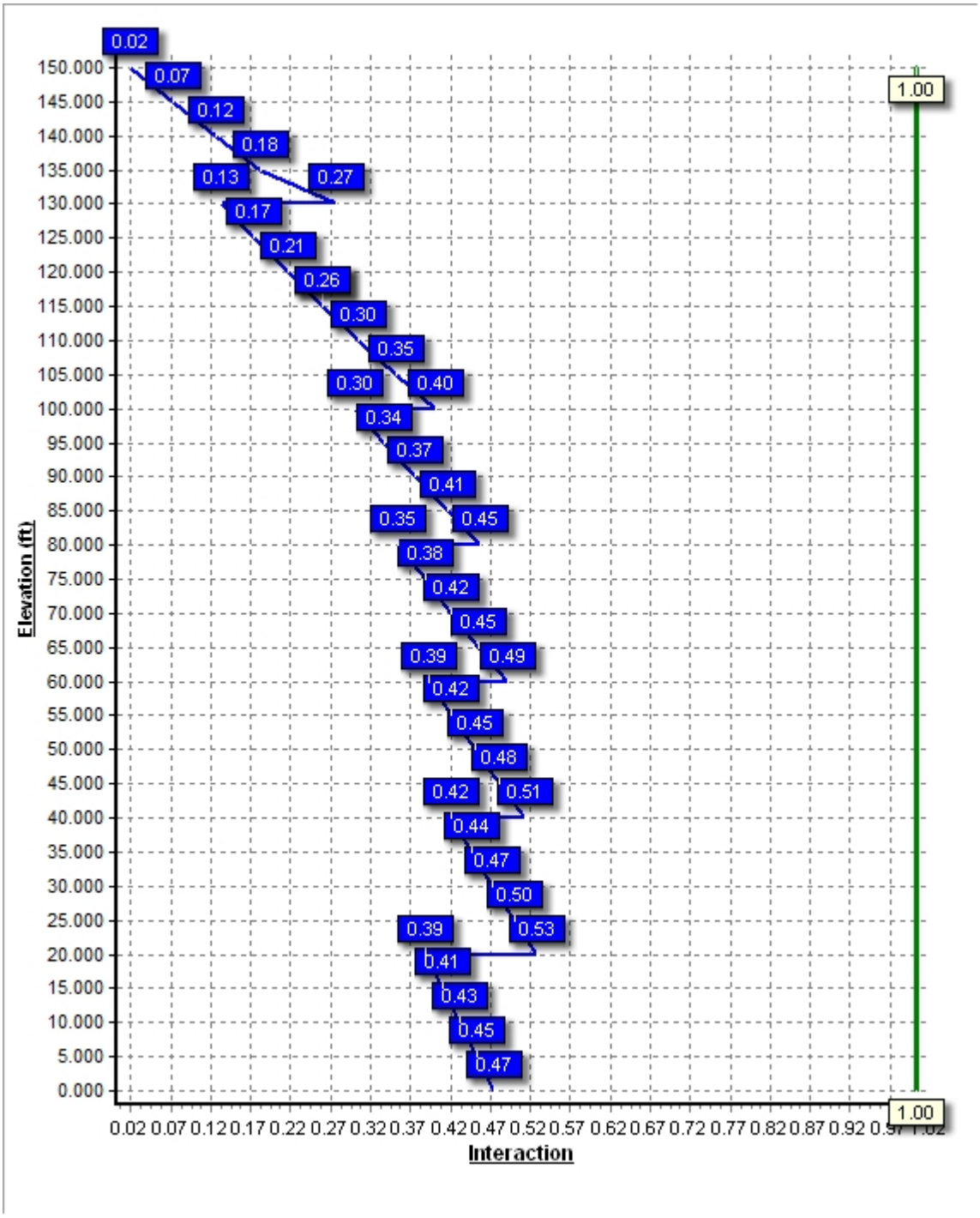
Elevation (ft)
150.000
145.000
140.000
135.000
130.000
125.000
120.000
115.000
110.000
105.000
100.000
95.000
90.000
85.000
80.000
75.000
70.000
65.000
60.000
55.000
50.000
45.000
40.000
35.000
30.000
25.000
20.000
15.000
10.000
5.000
0.000
0.02 0.07 0.12 0.17 0.22 0.27 0.32 0.37 0.42 0.47 0.52 0.57 0.62 0.67 0.72 0.77 0.82 0.87 0.92 0.97 1.02
Interaction
0.02
0.07
0.12
0.18
0.13
0.27
0.17
0.21
0.26
0.30
0.35
0.30
0.40
0.34
0.37
0.41
0.35
0.45
0.38
0.42
0.45
0.39
0.49
0.42
0.45
0.48
0.42
0.51
0.44
0.47
0.50
0.39
0.53
0.41
0.43
0.45
0.47
1.00
1.00

Site Number:	**282660**	**Code:**	**ANSI/TIA-222-G**	*© 2007 - 2016 by ATC IP LLC. All rights reserved.*
Site Name:	**Prospect CT, CT**	**Engineering Number:**	**64808021**	**1/18/2016 5:24:59 PM**
Customer:	**AT&T Mobility**			

Analysis Parameters

Location:	New Haven County, CT		
Code:	ANSI/TIA-222-G	**Height (ft):**	150
Shape:	Round	**Base Diameter (in):**	60.00
Pole Type:	Stepped	**Top Diameter (in):**	24.00
Pole Manfacturer:	ERI	**Taper (in/ft) :**	0.000

Ice & Wind Parameters

Structure Class:	II	**Design Wind Speed Without Ice:**	100 mph
Exposure Category:	B	**Design Wind Speed With Ice:**	50 mph
Topographic Category:	1	**Operational Wind Speed:**	60 mph
Crest Height:	0.0 ft	**Design Ice Thickness:**	0.75 in

Seismic Parameters

Analysis Method:	Equivalent Modal Analysis & Equivalent Lateral Force Methods
Site Class:	D - Stiff Soil
Period Based on Rayleigh Method (sec):	1.55

T_L (sec):	6	p:	1.3	C_s:	0.044
S_s:	0.188	S_1:	0.064	C_s Max:	0.044
F_a:	1.600	F_v:	2.400	C_s Min:	0.030
S_{ds}:	0.201	S_{d1}:	0.102		

Load Cases

1.2D + 1.6W	100 mph with No Ice
0.9D + 1.6W	100 mph with No Ice (Reduced DL)
1.2D + 1.0Di + 1.0Wi	50 mph with 0.75 in Radial Ice
(1.2 + 0.2Sds) * DL + E ELFM	Seismic Equivalent Lateral Forces Method
(1.2 + 0.2Sds) * DL + E EMAM	Seismic Equivalent Modal Analysis Method
1.0D + 1.0W	Serviceability 60 mph

© 2007 - 2016 by ATC IP LLC. All rights reserved.

Shaft Section Properties

Sect Info	Length (ft)	Thick (in)	Fy (ksi)	Joint Type	Slip Joint Len (in)	Weight (lb)	Bottom Dia (in)	Bottom Elev (ft)	Bottom Area (in²)	Bottom Ix (in⁴)	Bottom W/t Ratio	Bottom D/t Ratio	Top Dia (in)	Top Elev (ft)	Top Area (in²)	Top Ix (in⁴)	Top W/t Ratio	Top D/t Ratio	Taper (in/ft)
1-R	20.000	0.5000	45		0.00	6,361	60.00	0.00	93.46	41391.7	0.00	120.00	60.00	20.00	93.46	41391.7	0.00	120.00	0.000000
2-R	20.000	0.3750	45	Butt	0.00	4,780	60.00	20.00	70.24	31239.9	0.00	160.00	60.00	40.00	70.24	31239.9	0.00	160.00	0.000000
3-R	20.000	0.3750	45	Butt	0.00	4,299	54.00	40.00	63.18	22726.1	0.00	144.00	54.00	60.00	63.18	22726.1	0.00	144.00	0.000000
4-R	20.000	0.3750	45	Butt	0.00	3,818	48.00	60.00	56.11	15919.5	0.00	128.00	48.00	80.00	56.11	15919.5	0.00	128.00	0.000000
5-R	20.000	0.3750	45	Butt	0.00	3,337	42.00	80.00	49.04	10628.9	0.00	112.00	42.00	100.00	49.04	10628.9	0.00	112.00	0.000000
6-R	15.000	0.3750	45	Butt	0.00	2,142	36.00	100.00	41.97	6663.3	0.00	96.00	36.00	115.00	41.97	6663.3	0.00	96.00	0.000000
7-R	15.000	0.3750	45	Butt	0.00	2,142	36.00	115.00	41.97	6663.3	0.00	96.00	36.00	130.00	41.97	6663.3	0.00	96.00	0.000000
8-R	20.000	0.3750	45	Butt	0.00	1,894	24.00	130.00	27.83	1943.3	0.00	64.00	24.00	150.00	27.83	1943.3	0.00	64.00	0.000000
				Shaft Weight		28,775													

Discrete Appurtenance Properties

Attach Elev (ft)	Description	Qty	No Ice Weight (lb)	No Ice EPAa (sf)	No Ice Orientation Factor	Ice Weight (lb)	Ice EPAa (sf)	Ice Orientation Factor	Distance From Face (ft)	Vert Ecc (ft)
150.00	CCI HPA-65R-BUU-H6	3	51.00	9.660	0.83	298.62	11.024	0.83	0.000	2.000
150.00	CCI HPA-65R-BUU-H8	6	68.00	12.980	0.79	358.48	14.592	0.79	0.000	2.000
150.00	Ericsson RRUS 12	3	50.00	3.150	0.67	145.19	3.863	0.67	0.000	2.000
150.00	Ericsson RRUS A2	3	15.00	1.600	0.67	61.37	2.131	0.67	0.000	2.000
150.00	Ericsson RRUS-11	3	55.00	3.790	0.67	160.06	4.582	0.67	0.000	2.000
150.00	Ericsson RRUS-32	2	77.00	3.310	0.67	190.30	4.102	0.67	0.000	2.000
150.00	Ericsson RRUS-32	1	77.00	3.310	0.67	190.30	4.102	0.67	0.000	2.000
150.00	Raycap DC6-48-60-0-8F	3	32.80	1.190	1.00	120.73	1.817	1.00	0.000	2.000
150.00	Round Low Profile Platform	1	1500.00	21.700	1.00	2,148.13	40.906	1.00	0.000	0.000
135.00	Andrew LNX-6515DS-VTM	3	51.30	11.430	0.84	310.89	13.073	0.84	0.000	2.000
135.00	Ericsson AIR 21, 1.3M, B2A	3	83.00	6.050	0.86	249.56	7.134	0.86	0.000	2.000
135.00	Ericsson AIR 21, 1.3M, B4A	3	81.50	6.090	0.85	248.01	7.178	0.85	0.000	2.000
135.00	Ericsson KRY 112 144/1	3	11.00	0.410	0.67	27.08	0.630	0.67	0.000	2.000
135.00	Ericsson RRUS 11 B12	3	50.70	2.790	0.67	135.81	3.461	0.67	0.000	2.000
135.00	Round Low Profile Platform	1	1500.00	21.700	1.00	2,141.22	40.701	1.00	0.000	0.000
	Totals	41	5082.90			12,283.05			Number of Loadings :	15

Linear Appurtenance Properties

Elev From (ft)	Elev To (ft)	Qty	Description	Coax Diameter (in)	Coax Weight (lb/ft)	Flat	Projected Width (in)	Exposed To Wind	Carrier
0.00	150.00	2	0.39" Fiber Trunk	0.39	0.06	N	0.00	N	AT&T Mobility
0.00	150.00	4	0.76" 8 AWG 6	0.76	0.53	N	0.00	N	AT&T Mobility
0.00	150.00	6	0.78" 8 AWG 6	0.78	0.59	N	0.00	N	AT&T Mobility
0.00	150.00	6	1 5/8" Coax	1.98	0.82	N	0.00	N	AT&T Mobility
0.00	135.00	1	1 1/4" Hybriflex	1.54	1.00	N	0.00	N	T-Mobile
0.00	135.00	12	1 5/8" Coax	1.98	0.82	N	0.00	N	T-Mobile

© 2007 - 2016 by ATC IP LLC. All rights reserved.

Segment Properties (Max Len : 5. ft)

Seg Top Elev (ft)	Description	Thick (in)	Flat Dia (in)	Area (in^2)	Ix (in^4)	W/t Ratio	D/t Ratio	Fy (ksi)	S (in^3)	Z (in^3)	Weight (lb)
0.00		0.5000	60.000	93.462	41,391.7	0.00	120.00	39.2	1379.	1770.	0.0
5.00		0.5000	60.000	93.462	41,391.7	0.00	120.00	39.2	1379.	1770.	1,590.2
10.00		0.5000	60.000	93.462	41,391.7	0.00	120.00	39.2	1379.	1770.	1,590.2
15.00		0.5000	60.000	93.462	41,391.7	0.00	120.00	39.2	1379.	1770.	1,590.2
20.00	Top - Section 1	0.5000	60.000	93.462	41,391.7	0.00	120.00	39.2	1379.	1770.	1,590.2
20.00	Bot - Section 2	0.3750	60.000	70.244	31,239.9	0.00	160.00	36.9	1041.	1333.	
25.00		0.3750	60.000	70.244	31,239.9	0.00	160.00	36.9	1041.	1333.	1,195.1
30.00		0.3750	60.000	70.244	31,239.9	0.00	160.00	36.9	1041.	1333.	1,195.1
35.00		0.3750	60.000	70.244	31,239.9	0.00	160.00	36.9	1041.	1333.	1,195.1
40.00	Top - Section 2	0.3750	60.000	70.244	31,239.9	0.00	160.00	36.9	1041.	1333.	1,195.1
40.00	Bot - Section 3	0.3750	54.000	63.175	22,726.1	0.00	144.00	37.6	841.7	1078.	
45.00		0.3750	54.000	63.175	22,726.1	0.00	144.00	37.6	841.7	1078.	1,074.9
50.00		0.3750	54.000	63.175	22,726.1	0.00	144.00	37.6	841.7	1078.	1,074.9
55.00		0.3750	54.000	63.175	22,726.1	0.00	144.00	37.6	841.7	1078.	1,074.9
60.00	Top - Section 3	0.3750	54.000	63.175	22,726.1	0.00	144.00	37.6	841.7	1078.	1,074.9
60.00	Bot - Section 4	0.3750	48.000	56.107	15,919.5	0.00	128.00	38.6	663.3	850.6	
65.00		0.3750	48.000	56.107	15,919.5	0.00	128.00	38.6	663.3	850.6	954.6
70.00		0.3750	48.000	56.107	15,919.5	0.00	128.00	38.6	663.3	850.6	954.6
75.00		0.3750	48.000	56.107	15,919.5	0.00	128.00	38.6	663.3	850.6	954.6
80.00	Top - Section 4	0.3750	48.000	56.107	15,919.5	0.00	128.00	38.6	663.3	850.6	954.6
80.00	Bot - Section 5	0.3750	42.000	49.038	10,628.9	0.00	112.00	39.8	506.1	649.8	
85.00		0.3750	42.000	49.038	10,628.9	0.00	112.00	39.8	506.1	649.8	834.3
90.00		0.3750	42.000	49.038	10,628.9	0.00	112.00	39.8	506.1	649.8	834.3
95.00		0.3750	42.000	49.038	10,628.9	0.00	112.00	39.8	506.1	649.8	834.3
100.0	Top - Section 5	0.3750	42.000	49.038	10,628.9	0.00	112.00	39.8	506.1	649.8	834.3
100.0	Bot - Section 6	0.3750	36.000	41.970	6,663.3	0.00	96.00	41.4	370.2	475.9	
105.0		0.3750	36.000	41.970	6,663.3	0.00	96.00	41.4	370.2	475.9	714.1
110.0		0.3750	36.000	41.970	6,663.3	0.00	96.00	41.4	370.2	475.9	714.1
115.0	Top - Section 6	0.3750	36.000	41.970	6,663.3	0.00	96.00	41.4	370.2	475.9	714.1
115.0	Bot - Section 7	0.3750	36.000	41.970	6,663.3	0.00	96.00	41.4	370.2	475.9	
120.0		0.3750	36.000	41.970	6,663.3	0.00	96.00	41.4	370.2	475.9	714.1
125.0		0.3750	36.000	41.970	6,663.3	0.00	96.00	41.4	370.2	475.9	714.1
130.0	Top - Section 7	0.3750	36.000	41.970	6,663.3	0.00	96.00	41.4	370.2	475.9	714.1
130.0	Bot - Section 8	0.3750	24.000	27.833	1,943.3	0.00	64.00	45.0	161.9	209.3	
135.0		0.3750	24.000	27.833	1,943.3	0.00	64.00	45.0	161.9	209.3	473.5
140.0		0.3750	24.000	27.833	1,943.3	0.00	64.00	45.0	161.9	209.3	473.5
145.0		0.3750	24.000	27.833	1,943.3	0.00	64.00	45.0	161.9	209.3	473.5
150.0		0.3750	24.000	27.833	1,943.3	0.00	64.00	45.0	161.9	209.3	473.5
											28,774.9

© 2007 - 2016 by ATC IP LLC. All rights reserved.

Load Case: 1.2D + 1.6W 100 mph with No Ice 19 Iterations

Gust Response Factor : 1.10
Dead Load Factor : 1.20
Wind Load Factor : 1.60

Wind Importance Factor : 1.00

Applied Segment Forces Summary

		Shaft Forces		Discrete Forces				Linear Forces		Sum of Forces			
Seg Elev (ft)	Description	Wind FX (lb)	Dead Load (lb)	Wind FX (lb)	Torsion MY (lb-ft)	Moment MZ (lb-ft)	Dead Load (lb)	Wind FX (lb)	Dead Load (lb)	Wind FX (lb)	Dead Load (lb)	Torsion MY (lb-ft)	Moment MZ (lb)
0.00		224.7	0.0					0.0	0.0	224.7	0.0	0.0	0.0
5.00		449.4	1,908.2					0.0	129.2	449.4	2,037.4	0.0	0.0
10.00		449.4	1,908.2					0.0	129.2	449.4	2,037.4	0.0	0.0
15.00		449.4	1,908.2					0.0	129.2	449.4	2,037.4	0.0	0.0
20.00	Top - Section 1	449.4	1,908.2					0.0	129.2	449.4	2,037.4	0.0	0.0
25.00		449.4	1,434.1					0.0	129.2	449.4	1,563.4	0.0	0.0
30.00		454.8	1,434.1					0.0	129.2	454.8	1,563.4	0.0	0.0
35.00		469.8	1,434.1					0.0	129.2	469.8	1,563.4	0.0	0.0
40.00	Top - Section 2	463.3	1,434.1					0.0	129.2	463.3	1,563.4	0.0	0.0
45.00		454.4	1,289.8					0.0	129.2	454.4	1,419.1	0.0	0.0
50.00		468.3	1,289.8					0.0	129.2	468.3	1,419.1	0.0	0.0
55.00		481.3	1,289.8					0.0	129.2	481.3	1,419.1	0.0	0.0
60.00	Top - Section 3	465.7	1,289.8					0.0	129.2	465.7	1,419.1	0.0	0.0
65.00		448.7	1,145.5					0.0	129.2	448.7	1,274.8	0.0	0.0
70.00		458.4	1,145.5					0.0	129.2	458.4	1,274.8	0.0	0.0
75.00		467.5	1,145.5					0.0	129.2	467.5	1,274.8	0.0	0.0
80.00	Top - Section 4	446.2	1,145.5					0.0	129.2	446.2	1,274.8	0.0	0.0
85.00		424.0	1,001.2					0.0	129.2	424.0	1,130.4	0.0	0.0
90.00		430.9	1,001.2					0.0	129.2	430.9	1,130.4	0.0	0.0
95.00		437.7	1,001.2					0.0	129.2	437.7	1,130.4	0.0	0.0
100.00	Top - Section 5	412.2	1,001.2					0.0	129.2	412.2	1,130.4	0.0	0.0
105.00		386.0	856.9					0.0	129.2	386.0	986.1	0.0	0.0
110.00		391.2	856.9					0.0	129.2	391.2	986.1	0.0	0.0
115.00	Top - Section 6	396.2	856.9					0.0	129.2	396.2	986.1	0.0	0.0
120.00		401.0	856.9					0.0	129.2	401.0	986.1	0.0	0.0
125.00		405.7	856.9					0.0	129.2	405.7	986.1	0.0	0.0
130.00	Top - Section 7	341.6	856.9					0.0	129.2	341.6	986.1	0.0	0.0
135.00	Appertunance(s)	276.5	568.2	3,457.5	0.0	4,914.9	2,799.0	0.0	129.2	3,734.0	3,496.5	0.0	0.0
140.00		279.4	568.2					0.0	64.2	279.4	632.4	0.0	0.0
145.00		282.2	568.2					0.0	64.2	282.2	632.4	0.0	0.0
150.00	Appertunance(s)	141.8	568.2	6,416.3	0.0	10,771.4	3,300.5	0.0	64.2	6,558.1	3,932.9	0.0	0.0
									Totals:	22,430.4	44,311.3	0.00	0.00

© 2007 - 2016 by ATC IP LLC. All rights reserved.

Load Case: 1.2D + 1.6W 100 mph with No Ice 19 Iterations

Gust Response Factor : 1.10 Wind Importance Factor : 1.00
Dead Load Factor : 1.20
Wind Load Factor : 1.60

Calculated Forces

Seg Elev (ft)	Pu FY (-) (kips)	Vu FX (-) (kips)	Tu MY (ft-kips)	Mu MZ (ft-kips)	Mu MX (ft-kips)	Resultant Moment (ft-kips)	phi Pn (kips)	phi Vn (kips)	phi Tn (ft-kips)	phi Mn (ft-kips)	Total Deflect (in)	Rotation (deg)	Ratio
0.00	-44.30	-22.24	0.00	-2,372.29	0.00	2,372.29	3,293.92	1,646.96	8,093.29	5,174.22	0.00	0.00	0.472
5.00	-42.23	-21.84	0.00	-2,261.10	0.00	2,261.10	3,293.92	1,646.96	8,093.29	5,174.22	0.04	-0.08	0.450
10.00	-40.16	-21.44	0.00	-2,151.89	0.00	2,151.89	3,293.92	1,646.96	8,093.29	5,174.22	0.17	-0.16	0.428
15.00	-38.10	-21.03	0.00	-2,044.68	0.00	2,044.68	3,293.92	1,646.96	8,093.29	5,174.22	0.37	-0.23	0.407
20.00	-36.04	-20.62	0.00	-1,939.52	0.00	1,939.52	3,293.92	1,646.96	8,093.29	5,174.22	0.64	-0.30	0.386
20.00	-36.04	-20.62	0.00	-1,939.52	0.00	1,939.52	2,330.87	1,165.43	5,751.12	3,807.50	0.64	-0.30	0.525
25.00	-34.46	-20.20	0.00	-1,836.45	0.00	1,836.45	2,330.87	1,165.43	5,751.12	3,807.50	0.99	-0.36	0.497
30.00	-32.87	-19.78	0.00	-1,735.45	0.00	1,735.45	2,330.87	1,165.43	5,751.12	3,807.50	1.41	-0.44	0.470
35.00	-31.29	-19.34	0.00	-1,636.55	0.00	1,636.55	2,330.87	1,165.43	5,751.12	3,807.50	1.92	-0.52	0.444
40.00	-29.70	-18.90	0.00	-1,539.86	0.00	1,539.86	2,330.87	1,165.43	5,751.12	3,807.50	2.50	-0.59	0.417
40.00	-29.70	-18.90	0.00	-1,539.86	0.00	1,539.86	2,139.71	1,069.86	4,744.89	3,103.93	2.50	-0.59	0.510
45.00	-28.26	-18.46	0.00	-1,445.38	0.00	1,445.38	2,139.71	1,069.86	4,744.89	3,103.93	3.16	-0.66	0.479
50.00	-26.82	-18.02	0.00	-1,353.06	0.00	1,353.06	2,139.71	1,069.86	4,744.89	3,103.93	3.89	-0.75	0.449
55.00	-25.39	-17.55	0.00	-1,262.96	0.00	1,262.96	2,139.71	1,069.86	4,744.89	3,103.93	4.72	-0.83	0.419
60.00	-23.95	-17.10	0.00	-1,175.20	0.00	1,175.20	2,139.71	1,069.86	4,744.89	3,103.93	5.63	-0.91	0.390
60.00	-23.95	-17.10	0.00	-1,175.20	0.00	1,175.20	1,948.48	974.24	3,834.02	2,471.99	5.63	-0.91	0.488
65.00	-22.66	-16.66	0.00	-1,089.72	0.00	1,089.72	1,948.48	974.24	3,834.02	2,471.99	6.62	-0.98	0.453
70.00	-21.37	-16.21	0.00	-1,006.42	0.00	1,006.42	1,948.48	974.24	3,834.02	2,471.99	7.69	-1.07	0.418
75.00	-20.08	-15.75	0.00	-925.36	0.00	925.36	1,948.48	974.24	3,834.02	2,471.99	8.86	-1.16	0.385
80.00	-18.80	-15.30	0.00	-846.62	0.00	846.62	1,948.48	974.24	3,834.02	2,471.99	10.11	-1.24	0.352
80.00	-18.80	-15.30	0.00	-846.62	0.00	846.62	1,757.14	878.57	3,018.53	1,911.67	10.11	-1.24	0.454
85.00	-17.65	-14.88	0.00	-770.12	0.00	770.12	1,757.14	878.57	3,018.53	1,911.67	11.44	-1.31	0.413
90.00	-16.51	-14.45	0.00	-695.72	0.00	695.72	1,757.14	878.57	3,018.53	1,911.67	12.86	-1.41	0.374
95.00	-15.37	-14.00	0.00	-623.49	0.00	623.49	1,757.14	878.57	3,018.53	1,911.67	14.38	-1.49	0.335
100.00	-14.24	-13.58	0.00	-553.47	0.00	553.47	1,757.14	878.57	3,018.53	1,911.67	15.99	-1.57	0.298
100.00	-14.24	-13.58	0.00	-553.47	0.00	553.47	1,565.64	782.82	2,298.42	1,422.98	15.99	-1.57	0.398
105.00	-13.24	-13.19	0.00	-485.57	0.00	485.57	1,565.64	782.82	2,298.42	1,422.98	17.68	-1.64	0.350
110.00	-12.25	-12.79	0.00	-419.64	0.00	419.64	1,565.64	782.82	2,298.42	1,422.98	19.45	-1.74	0.303
115.00	-11.26	-12.37	0.00	-355.71	0.00	355.71	1,565.64	782.82	2,298.42	1,422.98	21.31	-1.82	0.257
115.00	-11.26	-12.37	0.00	-355.71	0.00	355.71	1,565.64	782.82	2,298.42	1,422.98	21.31	-1.82	0.257
120.00	-10.27	-11.95	0.00	-293.85	0.00	293.85	1,565.64	782.82	2,298.42	1,422.98	23.26	-1.89	0.213
125.00	-9.29	-11.52	0.00	-234.09	0.00	234.09	1,565.64	782.82	2,298.42	1,422.98	25.27	-1.95	0.171
130.00	-8.31	-11.15	0.00	-176.48	0.00	176.48	1,565.64	782.82	2,298.42	1,422.98	27.34	-1.99	0.130
130.00	-8.31	-11.15	0.00	-176.48	0.00	176.48	1,127.22	563.61	1,091.62	660.47	27.34	-1.99	0.275
135.00	-4.94	-7.30	0.00	-115.81	0.00	115.81	1,127.22	563.61	1,091.62	660.47	29.44	-2.02	0.180
140.00	-4.31	-7.00	0.00	-79.30	0.00	79.30	1,127.22	563.61	1,091.62	660.47	31.60	-2.09	0.124
145.00	-3.68	-6.70	0.00	-44.28	0.00	44.28	1,127.22	563.61	1,091.62	660.47	33.82	-2.14	0.070
150.00	0.00	-6.56	0.00	-10.77	0.00	10.77	1,127.22	563.61	1,091.62	660.47	36.07	-2.16	0.016

© 2007 - 2016 by ATC IP LLC. All rights reserved.

Load Case: 0.9D + 1.6W 100 mph with No Ice (Reduced DL) 19 Iterations

Gust Response Factor : 1.10
Dead Load Factor : 0.90
Wind Load Factor : 1.60

Wind Importance Factor : 1.00

Applied Segment Forces Summary

		Shaft Forces		Discrete Forces				Linear Forces		Sum of Forces			
Seg Elev (ft)	Description	Wind FX (lb)	Dead Load (lb)	Wind FX (lb)	Torsion MY (lb-ft)	Moment MZ (lb-ft)	Dead Load (lb)	Wind FX (lb)	Dead Load (lb)	Wind FX (lb)	Dead Load (lb)	Torsion MY (lb-ft)	Moment MZ (lb)
0.00		224.7	0.0					0.0	0.0	224.7	0.0	0.0	0.0
5.00		449.4	1,431.1					0.0	96.9	449.4	1,528.1	0.0	0.0
10.00		449.4	1,431.1					0.0	96.9	449.4	1,528.1	0.0	0.0
15.00		449.4	1,431.1					0.0	96.9	449.4	1,528.1	0.0	0.0
20.00	Top - Section 1	449.4	1,431.1					0.0	96.9	449.4	1,528.1	0.0	0.0
25.00		449.4	1,075.6					0.0	96.9	449.4	1,172.5	0.0	0.0
30.00		454.8	1,075.6					0.0	96.9	454.8	1,172.5	0.0	0.0
35.00		469.8	1,075.6					0.0	96.9	469.8	1,172.5	0.0	0.0
40.00	Top - Section 2	463.3	1,075.6					0.0	96.9	463.3	1,172.5	0.0	0.0
45.00		454.4	967.4					0.0	96.9	454.4	1,064.3	0.0	0.0
50.00		468.3	967.4					0.0	96.9	468.3	1,064.3	0.0	0.0
55.00		481.3	967.4					0.0	96.9	481.3	1,064.3	0.0	0.0
60.00	Top - Section 3	465.7	967.4					0.0	96.9	465.7	1,064.3	0.0	0.0
65.00		448.7	859.1					0.0	96.9	448.7	956.1	0.0	0.0
70.00		458.4	859.1					0.0	96.9	458.4	956.1	0.0	0.0
75.00		467.5	859.1					0.0	96.9	467.5	956.1	0.0	0.0
80.00	Top - Section 4	446.2	859.1					0.0	96.9	446.2	956.1	0.0	0.0
85.00		424.0	750.9					0.0	96.9	424.0	847.8	0.0	0.0
90.00		430.9	750.9					0.0	96.9	430.9	847.8	0.0	0.0
95.00		437.7	750.9					0.0	96.9	437.7	847.8	0.0	0.0
100.00	Top - Section 5	412.2	750.9					0.0	96.9	412.2	847.8	0.0	0.0
105.00		386.0	642.7					0.0	96.9	386.0	739.6	0.0	0.0
110.00		391.2	642.7					0.0	96.9	391.2	739.6	0.0	0.0
115.00	Top - Section 6	396.2	642.7					0.0	96.9	396.2	739.6	0.0	0.0
120.00		401.0	642.7					0.0	96.9	401.0	739.6	0.0	0.0
125.00		405.7	642.7					0.0	96.9	405.7	739.6	0.0	0.0
130.00	Top - Section 7	341.6	642.7					0.0	96.9	341.6	739.6	0.0	0.0
135.00	Appertunance(s)	276.5	426.2	3,457.5	0.0	4,914.9	2,099.2	0.0	96.9	3,734.0	2,622.4	0.0	0.0
140.00		279.4	426.2					0.0	48.1	279.4	474.3	0.0	0.0
145.00		282.2	426.2					0.0	48.1	282.2	474.3	0.0	0.0
150.00	Appertunance(s)	141.8	426.2	6,416.3	0.0	10,771.4	2,475.4	0.0	48.1	6,558.1	2,949.7	0.0	0.0
									Totals:	22,430.4	33,233.5	0.00	0.00

© 2007 - 2016 by ATC IP LLC. All rights reserved.

Load Case: 0.9D + 1.6W 100 mph with No Ice (Reduced DL) 19 Iterations

Gust Response Factor : 1.10
Dead Load Factor : 0.90
Wind Load Factor : 1.60

Wind Importance Factor : 1.00

Calculated Forces

Seg Elev (ft)	Pu FY (-) (kips)	Vu FX (-) (kips)	Tu MY (ft-kips)	Mu MZ (ft-kips)	Mu MX (ft-kips)	Resultant Moment (ft-kips)	phi Pn (kips)	phi Vn (kips)	phi Tn (ft-kips)	phi Mn (ft-kips)	Total Deflect (in)	Rotation (deg)	Ratio
0.00	-33.22	-22.23	0.00	-2,360.40	0.00	2,360.40	3,293.92	1,646.96	8,093.29	5,174.22	0.00	0.00	0.466
5.00	-31.66	-21.82	0.00	-2,249.26	0.00	2,249.26	3,293.92	1,646.96	8,093.29	5,174.22	0.04	-0.08	0.444
10.00	-30.11	-21.41	0.00	-2,140.15	0.00	2,140.15	3,293.92	1,646.96	8,093.29	5,174.22	0.17	-0.15	0.423
15.00	-28.55	-20.99	0.00	-2,033.12	0.00	2,033.12	3,293.92	1,646.96	8,093.29	5,174.22	0.37	-0.23	0.402
20.00	-27.00	-20.56	0.00	-1,928.18	0.00	1,928.18	3,293.92	1,646.96	8,093.29	5,174.22	0.64	-0.29	0.381
20.00	-27.00	-20.56	0.00	-1,928.18	0.00	1,928.18	2,330.87	1,165.43	5,751.12	3,807.50	0.64	-0.29	0.518
25.00	-25.81	-20.14	0.00	-1,825.37	0.00	1,825.37	2,330.87	1,165.43	5,751.12	3,807.50	0.98	-0.36	0.491
30.00	-24.61	-19.71	0.00	-1,724.68	0.00	1,724.68	2,330.87	1,165.43	5,751.12	3,807.50	1.40	-0.44	0.464
35.00	-23.42	-19.26	0.00	-1,626.13	0.00	1,626.13	2,330.87	1,165.43	5,751.12	3,807.50	1.91	-0.52	0.437
40.00	-22.23	-18.81	0.00	-1,529.83	0.00	1,529.83	2,330.87	1,165.43	5,751.12	3,807.50	2.49	-0.59	0.412
40.00	-22.23	-18.81	0.00	-1,529.83	0.00	1,529.83	2,139.71	1,069.86	4,744.89	3,103.93	2.49	-0.59	0.504
45.00	-21.14	-18.38	0.00	-1,435.77	0.00	1,435.77	2,139.71	1,069.86	4,744.89	3,103.93	3.14	-0.66	0.473
50.00	-20.06	-17.92	0.00	-1,343.89	0.00	1,343.89	2,139.71	1,069.86	4,744.89	3,103.93	3.87	-0.74	0.443
55.00	-18.98	-17.45	0.00	-1,254.27	0.00	1,254.27	2,139.71	1,069.86	4,744.89	3,103.93	4.69	-0.82	0.413
60.00	-17.90	-17.00	0.00	-1,167.00	0.00	1,167.00	2,139.71	1,069.86	4,744.89	3,103.93	5.60	-0.90	0.385
60.00	-17.90	-17.00	0.00	-1,167.00	0.00	1,167.00	1,948.48	974.24	3,834.02	2,471.99	5.60	-0.90	0.482
65.00	-16.93	-16.56	0.00	-1,082.03	0.00	1,082.03	1,948.48	974.24	3,834.02	2,471.99	6.58	-0.97	0.447
70.00	-15.95	-16.10	0.00	-999.25	0.00	999.25	1,948.48	974.24	3,834.02	2,471.99	7.64	-1.06	0.413
75.00	-14.98	-15.64	0.00	-918.73	0.00	918.73	1,948.48	974.24	3,834.02	2,471.99	8.80	-1.15	0.380
80.00	-14.02	-15.19	0.00	-840.53	0.00	840.53	1,948.48	974.24	3,834.02	2,471.99	10.05	-1.23	0.347
80.00	-14.02	-15.19	0.00	-840.53	0.00	840.53	1,757.14	878.57	3,018.53	1,911.67	10.05	-1.23	0.448
85.00	-13.16	-14.77	0.00	-764.57	0.00	764.57	1,757.14	878.57	3,018.53	1,911.67	11.37	-1.30	0.408
90.00	-12.30	-14.34	0.00	-690.72	0.00	690.72	1,757.14	878.57	3,018.53	1,911.67	12.79	-1.40	0.369
95.00	-11.44	-13.90	0.00	-619.03	0.00	619.03	1,757.14	878.57	3,018.53	1,911.67	14.30	-1.48	0.331
100.00	-10.59	-13.48	0.00	-549.54	0.00	549.54	1,757.14	878.57	3,018.53	1,911.67	15.89	-1.56	0.294
100.00	-10.59	-13.48	0.00	-549.54	0.00	549.54	1,565.64	782.82	2,298.42	1,422.98	15.89	-1.56	0.393
105.00	-9.84	-13.08	0.00	-482.16	0.00	482.16	1,565.64	782.82	2,298.42	1,422.98	17.57	-1.63	0.345
110.00	-9.09	-12.68	0.00	-416.75	0.00	416.75	1,565.64	782.82	2,298.42	1,422.98	19.33	-1.73	0.299
115.00	-8.35	-12.28	0.00	-353.32	0.00	353.32	1,565.64	782.82	2,298.42	1,422.98	21.18	-1.81	0.254
115.00	-8.35	-12.28	0.00	-353.32	0.00	353.32	1,565.64	782.82	2,298.42	1,422.98	21.18	-1.81	0.254
120.00	-7.61	-11.86	0.00	-291.94	0.00	291.94	1,565.64	782.82	2,298.42	1,422.98	23.11	-1.88	0.210
125.00	-6.87	-11.44	0.00	-232.64	0.00	232.64	1,565.64	782.82	2,298.42	1,422.98	25.11	-1.93	0.168
130.00	-6.14	-11.07	0.00	-175.45	0.00	175.45	1,565.64	782.82	2,298.42	1,422.98	27.16	-1.98	0.127
130.00	-6.14	-11.07	0.00	-175.45	0.00	175.45	1,127.22	563.61	1,091.62	660.47	27.16	-1.98	0.271
135.00	-3.64	-7.25	0.00	-115.17	0.00	115.17	1,127.22	563.61	1,091.62	660.47	29.25	-2.01	0.178
140.00	-3.17	-6.96	0.00	-78.90	0.00	78.90	1,127.22	563.61	1,091.62	660.47	31.40	-2.08	0.122
145.00	-2.70	-6.66	0.00	-44.09	0.00	44.09	1,127.22	563.61	1,091.62	660.47	33.60	-2.13	0.069
150.00	0.00	-6.56	0.00	-10.77	0.00	10.77	1,127.22	563.61	1,091.62	660.47	35.84	-2.15	0.016

© 2007 - 2016 by ATC IP LLC. All rights reserved.

Load Case: 1.2D + 1.0Di + 1.0Wi 50 mph with 0.75 in Radial Ice 18 Iterations

Gust Response Factor : 1.10
Dead Load Factor : 1.20
Wind Load Factor : 1.00

Ice Dead Load Factor : 1.00

Wind Importance Factor : 1.00
Ice Importance Factor : 1.00

Applied Segment Forces Summary

		Shaft Forces		Discrete Forces				Linear Forces		Sum of Forces			
Seg Elev (ft)	Description	Wind FX (lb)	Dead Load (lb)	Wind FX (lb)	Torsion MY (lb-ft)	Moment MZ (lb-ft)	Dead Load (lb)	Wind FX (lb)	Dead Load (lb)	Wind FX (lb)	Dead Load (lb)	Torsion MY (lb-ft)	Moment MZ (lb)
0.00		72.9	0.0					0.0	0.0	72.9	0.0	0.0	0.0
5.00		146.2	2,340.9					0.0	129.2	146.2	2,470.2	0.0	0.0
10.00		146.7	2,392.2					0.0	129.2	146.7	2,521.5	0.0	0.0
15.00		146.9	2,418.2					0.0	129.2	146.9	2,547.4	0.0	0.0
20.00	Top - Section 1	147.1	2,436.0					0.0	129.2	147.1	2,565.3	0.0	0.0
25.00		147.3	1,975.7					0.0	129.2	147.3	2,105.0	0.0	0.0
30.00		149.2	1,987.0					0.0	129.2	149.2	2,116.2	0.0	0.0
35.00		154.2	1,996.5					0.0	129.2	154.2	2,125.7	0.0	0.0
40.00	Top - Section 2	152.6	2,004.8					0.0	129.2	152.6	2,134.1	0.0	0.0
45.00		150.1	1,811.5					0.0	129.2	150.1	1,940.7	0.0	0.0
50.00		154.8	1,817.5					0.0	129.2	154.8	1,946.7	0.0	0.0
55.00		159.2	1,823.0					0.0	129.2	159.2	1,952.2	0.0	0.0
60.00	Top - Section 3	154.6	1,828.0					0.0	129.2	154.6	1,957.2	0.0	0.0
65.00		149.6	1,629.7					0.0	129.2	149.6	1,759.0	0.0	0.0
70.00		152.9	1,633.6					0.0	129.2	152.9	1,762.8	0.0	0.0
75.00		156.0	1,637.2					0.0	129.2	156.0	1,766.4	0.0	0.0
80.00	Top - Section 4	149.6	1,640.6					0.0	129.2	149.6	1,769.8	0.0	0.0
85.00		142.9	1,439.3					0.0	129.2	142.9	1,568.5	0.0	0.0
90.00		145.3	1,441.9					0.0	129.2	145.3	1,571.2	0.0	0.0
95.00		147.6	1,444.5					0.0	129.2	147.6	1,573.7	0.0	0.0
100.00	Top - Section 5	139.9	1,446.9					0.0	129.2	139.9	1,576.2	0.0	0.0
105.00		131.9	1,243.4					0.0	129.2	131.9	1,372.6	0.0	0.0
110.00		133.7	1,245.3					0.0	129.2	133.7	1,374.5	0.0	0.0
115.00	Top - Section 6	135.5	1,247.2					0.0	129.2	135.5	1,376.4	0.0	0.0
120.00		137.2	1,248.9					0.0	129.2	137.2	1,378.2	0.0	0.0
125.00		138.9	1,250.6					0.0	129.2	138.9	1,379.9	0.0	0.0
130.00	Top - Section 7	119.0	1,252.3					0.0	129.2	119.0	1,381.5	0.0	0.0
135.00	Appertunance(s)	98.8	839.0	743.6	0.0	901.0	5,321.8	0.0	129.2	842.5	6,290.0	0.0	0.0
140.00		99.9	840.0					0.0	64.2	99.9	904.2	0.0	0.0
145.00		101.0	841.1					0.0	64.2	101.0	905.3	0.0	0.0
150.00	Appertunance(s)	50.7	842.1	1,283.7	0.0	1,960.2	7,577.9	0.0	64.2	1,334.4	8,484.2	0.0	0.0
									Totals:	6,239.57	64,576.6	0.00	0.00

© 2007 - 2016 by ATC IP LLC. All rights reserved.

Load Case: 1.2D + 1.0Di + 1.0Wi 50 mph with 0.75 in Radial Ice 18 Iterations

Gust Response Factor : 1.10 Ice Dead Load Factor : 1.00 Wind Importance Factor : 1.00
Dead Load Factor : 1.20 Ice Importance Factor : 1.00
Wind Load Factor : 1.00

Calculated Forces

Seg Elev (ft)	Pu FY (-) (kips)	Vu FX (-) (kips)	Tu MY (ft-kips)	Mu MZ (ft-kips)	Mu MX (ft-kips)	Resultant Moment (ft-kips)	phi Pn (kips)	phi Vn (kips)	phi Tn (ft-kips)	phi Mn (ft-kips)	Total Deflect (in)	Rotation (deg)	Ratio
0.00	-64.58	-6.18	0.00	-614.92	0.00	614.92	3,293.92	1,646.96	8,093.29	5,174.22	0.00	0.00	0.138
5.00	-62.10	-6.05	0.00	-584.03	0.00	584.03	3,293.92	1,646.96	8,093.29	5,174.22	0.01	-0.02	0.132
10.00	-59.58	-5.92	0.00	-553.76	0.00	553.76	3,293.92	1,646.96	8,093.29	5,174.22	0.04	-0.04	0.125
15.00	-57.03	-5.79	0.00	-524.14	0.00	524.14	3,293.92	1,646.96	8,093.29	5,174.22	0.10	-0.06	0.119
20.00	-54.46	-5.66	0.00	-495.17	0.00	495.17	3,293.92	1,646.96	8,093.29	5,174.22	0.17	-0.08	0.112
20.00	-54.46	-5.66	0.00	-495.17	0.00	495.17	2,330.87	1,165.43	5,751.12	3,807.50	0.17	-0.08	0.153
25.00	-52.36	-5.53	0.00	-466.88	0.00	466.88	2,330.87	1,165.43	5,751.12	3,807.50	0.26	-0.09	0.145
30.00	-50.24	-5.39	0.00	-439.25	0.00	439.25	2,330.87	1,165.43	5,751.12	3,807.50	0.36	-0.11	0.137
35.00	-48.11	-5.25	0.00	-412.29	0.00	412.29	2,330.87	1,165.43	5,751.12	3,807.50	0.49	-0.13	0.129
40.00	-45.98	-5.10	0.00	-386.05	0.00	386.05	2,330.87	1,165.43	5,751.12	3,807.50	0.64	-0.15	0.121
40.00	-45.98	-5.10	0.00	-386.05	0.00	386.05	2,139.71	1,069.86	4,744.89	3,103.93	0.64	-0.15	0.146
45.00	-44.04	-4.96	0.00	-360.53	0.00	360.53	2,139.71	1,069.86	4,744.89	3,103.93	0.81	-0.17	0.137
50.00	-42.09	-4.82	0.00	-335.72	0.00	335.72	2,139.71	1,069.86	4,744.89	3,103.93	1.00	-0.19	0.128
55.00	-40.13	-4.67	0.00	-311.63	0.00	311.63	2,139.71	1,069.86	4,744.89	3,103.93	1.21	-0.21	0.119
60.00	-38.18	-4.52	0.00	-288.30	0.00	288.30	2,139.71	1,069.86	4,744.89	3,103.93	1.44	-0.23	0.111
60.00	-38.18	-4.52	0.00	-288.30	0.00	288.30	1,948.48	974.24	3,834.02	2,471.99	1.44	-0.23	0.136
65.00	-36.42	-4.37	0.00	-265.72	0.00	265.72	1,948.48	974.24	3,834.02	2,471.99	1.69	-0.25	0.126
70.00	-34.65	-4.22	0.00	-243.87	0.00	243.87	1,948.48	974.24	3,834.02	2,471.99	1.96	-0.27	0.116
75.00	-32.89	-4.07	0.00	-222.75	0.00	222.75	1,948.48	974.24	3,834.02	2,471.99	2.25	-0.29	0.107
80.00	-31.12	-3.92	0.00	-202.40	0.00	202.40	1,948.48	974.24	3,834.02	2,471.99	2.56	-0.31	0.098
80.00	-31.12	-3.92	0.00	-202.40	0.00	202.40	1,757.14	878.57	3,018.53	1,911.67	2.56	-0.31	0.124
85.00	-29.55	-3.78	0.00	-182.79	0.00	182.79	1,757.14	878.57	3,018.53	1,911.67	2.90	-0.33	0.112
90.00	-27.97	-3.64	0.00	-163.89	0.00	163.89	1,757.14	878.57	3,018.53	1,911.67	3.25	-0.35	0.102
95.00	-26.40	-3.49	0.00	-145.70	0.00	145.70	1,757.14	878.57	3,018.53	1,911.67	3.63	-0.37	0.091
100.00	-24.82	-3.35	0.00	-128.26	0.00	128.26	1,757.14	878.57	3,018.53	1,911.67	4.02	-0.39	0.081
100.00	-24.82	-3.35	0.00	-128.26	0.00	128.26	1,565.64	782.82	2,298.42	1,422.98	4.02	-0.39	0.106
105.00	-23.45	-3.21	0.00	-111.54	0.00	111.54	1,565.64	782.82	2,298.42	1,422.98	4.44	-0.40	0.093
110.00	-22.08	-3.08	0.00	-95.48	0.00	95.48	1,565.64	782.82	2,298.42	1,422.98	4.87	-0.43	0.081
115.00	-20.70	-2.94	0.00	-80.10	0.00	80.10	1,565.64	782.82	2,298.42	1,422.98	5.33	-0.45	0.070
115.00	-20.70	-2.94	0.00	-80.10	0.00	80.10	1,565.64	782.82	2,298.42	1,422.98	5.33	-0.45	0.070
120.00	-19.32	-2.79	0.00	-65.42	0.00	65.42	1,565.64	782.82	2,298.42	1,422.98	5.81	-0.46	0.058
125.00	-17.94	-2.65	0.00	-51.45	0.00	51.45	1,565.64	782.82	2,298.42	1,422.98	6.30	-0.47	0.048
130.00	-16.56	-2.52	0.00	-38.22	0.00	38.22	1,565.64	782.82	2,298.42	1,422.98	6.80	-0.48	0.037
130.00	-16.56	-2.52	0.00	-38.22	0.00	38.22	1,127.22	563.61	1,091.62	660.47	6.80	-0.48	0.073
135.00	-10.28	-1.62	0.00	-24.73	0.00	24.73	1,127.22	563.61	1,091.62	660.47	7.31	-0.49	0.047
140.00	-9.38	-1.52	0.00	-16.61	0.00	16.61	1,127.22	563.61	1,091.62	660.47	7.83	-0.50	0.033
145.00	-8.47	-1.41	0.00	-9.01	0.00	9.01	1,127.22	563.61	1,091.62	660.47	8.36	-0.51	0.021
150.00	0.00	-1.33	0.00	-1.96	0.00	1.96	1,127.22	563.61	1,091.62	660.47	8.90	-0.52	0.003

© 2007 - 2016 by ATC IP LLC. All rights reserved.

Load Case: 1.0D + 1.0W Serviceability 60 mph 18 Iterations

Gust Response Factor : 1.10 Wind Importance Factor : 1.00
Dead Load Factor : 1.00
Wind Load Factor : 1.00

Applied Segment Forces Summary

		Shaft Forces		Discrete Forces				Linear Forces		Sum of Forces			
Seg Elev (ft)	Description	Wind FX (lb)	Dead Load (lb)	Wind FX (lb)	Torsion MY (lb-ft)	Moment MZ (lb-ft)	Dead Load (lb)	Wind FX (lb)	Dead Load (lb)	Wind FX (lb)	Dead Load (lb)	Torsion MY (lb-ft)	Moment MZ (lb)
0.00		50.6	0.0					0.0	0.0	50.6	0.0	0.0	0.0
5.00		101.1	1,590.2					0.0	107.7	101.1	1,697.9	0.0	0.0
10.00		101.1	1,590.2					0.0	107.7	101.1	1,697.9	0.0	0.0
15.00		101.1	1,590.2					0.0	107.7	101.1	1,697.9	0.0	0.0
20.00	Top - Section 1	101.1	1,590.2					0.0	107.7	101.1	1,697.9	0.0	0.0
25.00		101.1	1,195.1					0.0	107.7	101.1	1,302.8	0.0	0.0
30.00		102.3	1,195.1					0.0	107.7	102.3	1,302.8	0.0	0.0
35.00		105.7	1,195.1					0.0	107.7	105.7	1,302.8	0.0	0.0
40.00	Top - Section 2	104.2	1,195.1					0.0	107.7	104.2	1,302.8	0.0	0.0
45.00		102.2	1,074.9					0.0	107.7	102.2	1,182.6	0.0	0.0
50.00		105.4	1,074.9					0.0	107.7	105.4	1,182.6	0.0	0.0
55.00		108.3	1,074.9					0.0	107.7	108.3	1,182.6	0.0	0.0
60.00	Top - Section 3	104.8	1,074.9					0.0	107.7	104.8	1,182.6	0.0	0.0
65.00		101.0	954.6					0.0	107.7	101.0	1,062.3	0.0	0.0
70.00		103.1	954.6					0.0	107.7	103.1	1,062.3	0.0	0.0
75.00		105.2	954.6					0.0	107.7	105.2	1,062.3	0.0	0.0
80.00	Top - Section 4	100.4	954.6					0.0	107.7	100.4	1,062.3	0.0	0.0
85.00		95.4	834.3					0.0	107.7	95.4	942.0	0.0	0.0
90.00		97.0	834.3					0.0	107.7	97.0	942.0	0.0	0.0
95.00		98.5	834.3					0.0	107.7	98.5	942.0	0.0	0.0
100.00	Top - Section 5	92.7	834.3					0.0	107.7	92.7	942.0	0.0	0.0
105.00		86.9	714.1					0.0	107.7	86.9	821.8	0.0	0.0
110.00		88.0	714.1					0.0	107.7	88.0	821.8	0.0	0.0
115.00	Top - Section 6	89.1	714.1					0.0	107.7	89.1	821.8	0.0	0.0
120.00		90.2	714.1					0.0	107.7	90.2	821.8	0.0	0.0
125.00		91.3	714.1					0.0	107.7	91.3	821.8	0.0	0.0
130.00	Top - Section 7	76.8	714.1					0.0	107.7	76.8	821.8	0.0	0.0
135.00	Appertunance(s)	62.2	473.5	777.9	0.0	1,105.9	2,332.5	0.0	107.7	840.2	2,913.7	0.0	0.0
140.00		62.9	473.5					0.0	53.5	62.9	527.0	0.0	0.0
145.00		63.5	473.5					0.0	53.5	63.5	527.0	0.0	0.0
150.00	Appertunance(s)	31.9	473.5	1,443.7	0.0	2,423.6	2,750.4	0.0	53.5	1,475.6	3,277.4	0.0	0.0
									Totals:	5,046.86	36,926.1	0.00	0.00

© 2007 - 2016 by ATC IP LLC. All rights reserved.

Load Case: 1.0D + 1.0W Serviceability 60 mph 18 Iterations

Gust Response Factor : 1.10 Wind Importance Factor : 1.00
Dead Load Factor : 1.00
Wind Load Factor : 1.00

Calculated Forces

Seg Elev (ft)	Pu FY (-) (kips)	Vu FX (-) (kips)	Tu MY (ft-kips)	Mu MZ (ft-kips)	Mu MX (ft-kips)	Resultant Moment (ft-kips)	phi Pn (kips)	phi Vn (kips)	phi Tn (ft-kips)	phi Mn (ft-kips)	Total Deflect (in)	Rotation (deg)	Ratio
0.00	-36.93	-5.00	0.00	-532.02	0.00	532.02	3,293.92	1,646.96	8,093.29	5,174.22	0.00	0.00	0.114
5.00	-35.23	-4.91	0.00	-507.01	0.00	507.01	3,293.92	1,646.96	8,093.29	5,174.22	0.01	-0.02	0.109
10.00	-33.53	-4.82	0.00	-482.46	0.00	482.46	3,293.92	1,646.96	8,093.29	5,174.22	0.04	-0.03	0.103
15.00	-31.83	-4.73	0.00	-458.37	0.00	458.37	3,293.92	1,646.96	8,093.29	5,174.22	0.08	-0.05	0.098
20.00	-30.13	-4.63	0.00	-434.74	0.00	434.74	3,293.92	1,646.96	8,093.29	5,174.22	0.14	-0.07	0.093
20.00	-30.13	-4.63	0.00	-434.74	0.00	434.74	2,330.87	1,165.43	5,751.12	3,807.50	0.14	-0.07	0.127
25.00	-28.82	-4.54	0.00	-411.59	0.00	411.59	2,330.87	1,165.43	5,751.12	3,807.50	0.22	-0.08	0.120
30.00	-27.52	-4.44	0.00	-388.91	0.00	388.91	2,330.87	1,165.43	5,751.12	3,807.50	0.32	-0.10	0.114
35.00	-26.22	-4.34	0.00	-366.72	0.00	366.72	2,330.87	1,165.43	5,751.12	3,807.50	0.43	-0.12	0.108
40.00	-24.91	-4.24	0.00	-345.02	0.00	345.02	2,330.87	1,165.43	5,751.12	3,807.50	0.56	-0.13	0.101
40.00	-24.91	-4.24	0.00	-345.02	0.00	345.02	2,139.71	1,069.86	4,744.89	3,103.93	0.56	-0.13	0.123
45.00	-23.73	-4.14	0.00	-323.83	0.00	323.83	2,139.71	1,069.86	4,744.89	3,103.93	0.71	-0.15	0.115
50.00	-22.55	-4.04	0.00	-303.12	0.00	303.12	2,139.71	1,069.86	4,744.89	3,103.93	0.87	-0.17	0.108
55.00	-21.36	-3.93	0.00	-282.92	0.00	282.92	2,139.71	1,069.86	4,744.89	3,103.93	1.06	-0.19	0.101
60.00	-20.18	-3.83	0.00	-263.25	0.00	263.25	2,139.71	1,069.86	4,744.89	3,103.93	1.26	-0.20	0.094
60.00	-20.18	-3.83	0.00	-263.25	0.00	263.25	1,948.48	974.24	3,834.02	2,471.99	1.26	-0.20	0.117
65.00	-19.12	-3.73	0.00	-244.09	0.00	244.09	1,948.48	974.24	3,834.02	2,471.99	1.48	-0.22	0.109
70.00	-18.05	-3.63	0.00	-225.43	0.00	225.43	1,948.48	974.24	3,834.02	2,471.99	1.72	-0.24	0.100
75.00	-16.99	-3.53	0.00	-207.27	0.00	207.27	1,948.48	974.24	3,834.02	2,471.99	1.99	-0.26	0.093
80.00	-15.93	-3.43	0.00	-189.64	0.00	189.64	1,948.48	974.24	3,834.02	2,471.99	2.27	-0.28	0.085
80.00	-15.93	-3.43	0.00	-189.64	0.00	189.64	1,757.14	878.57	3,018.53	1,911.67	2.27	-0.28	0.108
85.00	-14.98	-3.33	0.00	-172.50	0.00	172.50	1,757.14	878.57	3,018.53	1,911.67	2.56	-0.29	0.099
90.00	-14.04	-3.23	0.00	-155.84	0.00	155.84	1,757.14	878.57	3,018.53	1,911.67	2.88	-0.31	0.090
95.00	-13.10	-3.14	0.00	-139.67	0.00	139.67	1,757.14	878.57	3,018.53	1,911.67	3.22	-0.33	0.081
100.00	-12.16	-3.04	0.00	-123.99	0.00	123.99	1,757.14	878.57	3,018.53	1,911.67	3.58	-0.35	0.072
100.00	-12.16	-3.04	0.00	-123.99	0.00	123.99	1,565.64	782.82	2,298.42	1,422.98	3.58	-0.35	0.095
105.00	-11.33	-2.95	0.00	-108.79	0.00	108.79	1,565.64	782.82	2,298.42	1,422.98	3.96	-0.37	0.084
110.00	-10.51	-2.86	0.00	-94.03	0.00	94.03	1,565.64	782.82	2,298.42	1,422.98	4.36	-0.39	0.073
115.00	-9.69	-2.77	0.00	-79.71	0.00	79.71	1,565.64	782.82	2,298.42	1,422.98	4.78	-0.41	0.062
115.00	-9.69	-2.77	0.00	-79.71	0.00	79.71	1,565.64	782.82	2,298.42	1,422.98	4.78	-0.41	0.062
120.00	-8.87	-2.68	0.00	-65.86	0.00	65.86	1,565.64	782.82	2,298.42	1,422.98	5.21	-0.42	0.052
125.00	-8.05	-2.58	0.00	-52.48	0.00	52.48	1,565.64	782.82	2,298.42	1,422.98	5.66	-0.44	0.042
130.00	-7.23	-2.50	0.00	-39.57	0.00	39.57	1,565.64	782.82	2,298.42	1,422.98	6.13	-0.45	0.032
130.00	-7.23	-2.50	0.00	-39.57	0.00	39.57	1,127.22	563.61	1,091.62	660.47	6.13	-0.45	0.066
135.00	-4.32	-1.64	0.00	-25.97	0.00	25.97	1,127.22	563.61	1,091.62	660.47	6.60	-0.45	0.043
140.00	-3.79	-1.57	0.00	-17.79	0.00	17.79	1,127.22	563.61	1,091.62	660.47	7.08	-0.47	0.030
145.00	-3.26	-1.50	0.00	-9.94	0.00	9.94	1,127.22	563.61	1,091.62	660.47	7.58	-0.48	0.018
150.00	0.00	-1.48	0.00	-2.42	0.00	2.42	1,127.22	563.61	1,091.62	660.47	8.08	-0.48	0.004

© 2007 - 2016 by ATC IP LLC. All rights reserved.

Equivalent Lateral Forces Method Analysis

(Based on ASCE7-10 Chapters 11, 12, 15)

Spectral Response Acceleration for Short Period (S_s):	0.19	
Spectral Response Acceleration at 1.0 Second Period (S_1):	0.06	
Long-Period Transition Period (T_L):	6	
Importance Factor (I_E):	1.00	
Site Coefficient F_a:	1.60	
Site Coeffiecient F_v:	2.40	
Response Modification Coefficient (R):	1.50	
Design Spectral Response Acceleration at Short Period (S_{ds}):	0.20	
Design Spectral Response Acceleration at 1.0 Second Period (S_{d1}):	0.10	
Seismic Response Coefficient (C_s):	0.04	
Upper Limit C_s	0.04	
Lower Limit C_s	0.03	
Period based on Rayleigh Method (sec):	1.55	
Redundancy Factor (p):	1.30	
Seismic Force Distribution Exponent (k):	1.52	
Total Unfactored Dead Load:	36.93	k
Seismic Base Shear (E):	2.12	k

Load Case (1.2 + 0.2Sds) * DL + E ELFM

Seismic Equivalent Lateral Forces Method

Segment	Height Above Base (ft)	Weight (lb)	W_z (lb-ft)	C_{vx}	Horizontal Force (lb)	Vertical Force (lb)
30	147.50	527	1,065	0.035	75	654
29	142.50	527	1,011	0.034	71	654
28	137.50	527	957	0.032	67	654
27	132.50	581	998	0.033	70	721
26	127.50	822	1,330	0.044	94	1,019
25	122.50	822	1,252	0.042	88	1,019
24	117.50	822	1,175	0.039	83	1,019
23	112.50	822	1,099	0.037	77	1,019
22	107.50	822	1,026	0.034	72	1,019
21	102.50	822	954	0.032	67	1,019
20	97.50	942	1,013	0.034	71	1,168
19	92.50	942	935	0.031	66	1,168
18	87.50	942	859	0.029	60	1,168
17	82.50	942	786	0.026	55	1,168
16	77.50	1,062	805	0.027	57	1,317
15	72.50	1,062	727	0.024	51	1,317
14	67.50	1,062	652	0.022	46	1,317
13	62.50	1,062	580	0.019	41	1,317
12	57.50	1,183	569	0.019	40	1,467
11	52.50	1,183	495	0.016	35	1,467
10	47.50	1,183	425	0.014	30	1,467
9	42.50	1,183	359	0.012	25	1,467
8	37.50	1,303	327	0.011	23	1,616

© 2007 - 2016 by ATC IP LLC. All rights reserved.

7	32.50	1,303	263	0.009	18	1,616
6	27.50	1,303	204	0.007	14	1,616
5	22.50	1,303	150	0.005	11	1,616
4	17.50	1,698	133	0.004	9	2,106
3	12.50	1,698	80	0.003	6	2,106
2	7.50	1,698	37	0.001	3	2,106
1	2.50	1,698	7	0.000	0	2,106
Raycap DC6-48-60-0-8	150.00	98	204	0.007	14	122
Ericsson RRUS A2	150.00	45	93	0.003	7	56
Ericsson RRUS 12	150.00	150	311	0.010	22	186
Ericsson RRUS-32	150.00	77	160	0.005	11	95
Ericsson RRUS-32	150.00	154	319	0.011	22	191
Ericsson RRUS-11	150.00	165	342	0.011	24	205
CCI HPA-65R-BUU-H6	150.00	153	317	0.011	22	190
CCI HPA-65R-BUU-H8	150.00	408	846	0.028	60	506
Round Low Profile Pl	150.00	1,500	3,111	0.103	219	1,860
Ericsson KRY 112 144	135.00	33	58	0.002	4	41
Ericsson RRUS 11 B12	135.00	152	269	0.009	19	189
Ericsson AIR 21, 1.3	135.00	249	440	0.015	31	309
Ericsson AIR 21, 1.3	135.00	244	432	0.014	30	303
Andrew LNX-6515DS-VT	135.00	154	272	0.009	19	191
Round Low Profile Pl	135.00	1,500	2,650	0.088	186	1,860
		36,926	30,098	1.000	2,116	45,792

© 2007 - 2016 by ATC IP LLC. All rights reserved.

Load Case (1.2 + 0.2Sds) * DL + E ELFM **Seismic Equivalent Lateral Forces Method**

Calculated Forces

Seg Elev (ft)	Pu FY (-) (kips)	Vu FX (-) (kips)	Tu MY (ft-kips)	Mu MZ (ft-kips)	Mu MX (ft-kips)	Resultant Moment (ft-kips)	phi Pn (kips)	phi Vn (kips)	phi Tn (ft-kips)	phi Mn (ft-kips)	Total Deflect (in)	Rotation (deg)	Ratio
0.00	-43.69	-2.12	0.00	-241.23	0.00	241.23	3,293.92	1,646.96	8,093.29	5,174.22	0.00	0.00	0.060
5.00	-41.58	-2.12	0.00	-230.63	0.00	230.63	3,293.92	1,646.96	8,093.29	5,174.22	0.00	-0.01	0.057
10.00	-39.48	-2.12	0.00	-220.02	0.00	220.02	3,293.92	1,646.96	8,093.29	5,174.22	0.02	-0.02	0.055
15.00	-37.37	-2.12	0.00	-209.42	0.00	209.42	3,293.92	1,646.96	8,093.29	5,174.22	0.04	-0.02	0.052
20.00	-35.75	-2.11	0.00	-198.84	0.00	198.84	3,293.92	1,646.96	8,093.29	5,174.22	0.07	-0.03	0.049
20.00	-35.75	-2.11	0.00	-198.84	0.00	198.84	2,330.87	1,165.43	5,751.12	3,807.50	0.07	-0.03	0.068
25.00	-34.14	-2.10	0.00	-188.30	0.00	188.30	2,330.87	1,165.43	5,751.12	3,807.50	0.10	-0.04	0.064
30.00	-32.52	-2.08	0.00	-177.81	0.00	177.81	2,330.87	1,165.43	5,751.12	3,807.50	0.14	-0.05	0.061
35.00	-30.91	-2.06	0.00	-167.40	0.00	167.40	2,330.87	1,165.43	5,751.12	3,807.50	0.20	-0.05	0.057
40.00	-29.44	-2.04	0.00	-157.08	0.00	157.08	2,330.87	1,165.43	5,751.12	3,807.50	0.26	-0.06	0.054
40.00	-29.44	-2.04	0.00	-157.08	0.00	157.08	2,139.71	1,069.86	4,744.89	3,103.93	0.26	-0.06	0.064
45.00	-27.97	-2.01	0.00	-146.89	0.00	146.89	2,139.71	1,069.86	4,744.89	3,103.93	0.32	-0.07	0.060
50.00	-26.51	-1.98	0.00	-136.83	0.00	136.83	2,139.71	1,069.86	4,744.89	3,103.93	0.40	-0.08	0.056
55.00	-25.04	-1.94	0.00	-126.93	0.00	126.93	2,139.71	1,069.86	4,744.89	3,103.93	0.48	-0.08	0.053
60.00	-23.72	-1.90	0.00	-117.23	0.00	117.23	2,139.71	1,069.86	4,744.89	3,103.93	0.58	-0.09	0.049
60.00	-23.72	-1.90	0.00	-117.23	0.00	117.23	1,948.48	974.24	3,834.02	2,471.99	0.58	-0.09	0.060
65.00	-22.40	-1.86	0.00	-107.73	0.00	107.73	1,948.48	974.24	3,834.02	2,471.99	0.68	-0.10	0.055
70.00	-21.09	-1.81	0.00	-98.45	0.00	98.45	1,948.48	974.24	3,834.02	2,471.99	0.78	-0.11	0.051
75.00	-19.77	-1.75	0.00	-89.42	0.00	89.42	1,948.48	974.24	3,834.02	2,471.99	0.90	-0.12	0.046
80.00	-18.60	-1.69	0.00	-80.67	0.00	80.67	1,948.48	974.24	3,834.02	2,471.99	1.03	-0.12	0.042
80.00	-18.60	-1.69	0.00	-80.67	0.00	80.67	1,757.14	878.57	3,018.53	1,911.67	1.03	-0.12	0.053
85.00	-17.43	-1.63	0.00	-72.21	0.00	72.21	1,757.14	878.57	3,018.53	1,911.67	1.16	-0.13	0.048
90.00	-16.26	-1.57	0.00	-64.04	0.00	64.04	1,757.14	878.57	3,018.53	1,911.67	1.31	-0.14	0.043
95.00	-15.10	-1.49	0.00	-56.20	0.00	56.20	1,757.14	878.57	3,018.53	1,911.67	1.46	-0.15	0.038
100.00	-14.08	-1.43	0.00	-48.73	0.00	48.73	1,757.14	878.57	3,018.53	1,911.67	1.62	-0.16	0.034
100.00	-14.08	-1.43	0.00	-48.73	0.00	48.73	1,565.64	782.82	2,298.42	1,422.98	1.62	-0.16	0.043
105.00	-13.06	-1.35	0.00	-41.60	0.00	41.60	1,565.64	782.82	2,298.42	1,422.98	1.78	-0.16	0.038
110.00	-12.04	-1.27	0.00	-34.83	0.00	34.83	1,565.64	782.82	2,298.42	1,422.98	1.96	-0.17	0.032
115.00	-11.02	-1.19	0.00	-28.46	0.00	28.46	1,565.64	782.82	2,298.42	1,422.98	2.14	-0.18	0.027
115.00	-11.02	-1.19	0.00	-28.46	0.00	28.46	1,565.64	782.82	2,298.42	1,422.98	2.14	-0.18	0.027
120.00	-10.00	-1.10	0.00	-22.50	0.00	22.50	1,565.64	782.82	2,298.42	1,422.98	2.33	-0.18	0.022
125.00	-8.98	-1.00	0.00	-17.01	0.00	17.01	1,565.64	782.82	2,298.42	1,422.98	2.52	-0.19	0.018
130.00	-8.26	-0.93	0.00	-11.99	0.00	11.99	1,565.64	782.82	2,298.42	1,422.98	2.71	-0.19	0.014
130.00	-8.26	-0.93	0.00	-11.99	0.00	11.99	1,127.22	563.61	1,091.62	660.47	2.71	-0.19	0.025
135.00	-4.72	-0.56	0.00	-7.33	0.00	7.33	1,127.22	563.61	1,091.62	660.47	2.91	-0.19	0.015
140.00	-4.06	-0.49	0.00	-4.51	0.00	4.51	1,127.22	563.61	1,091.62	660.47	3.12	-0.20	0.010
145.00	-3.41	-0.41	0.00	-2.06	0.00	2.06	1,127.22	563.61	1,091.62	660.47	3.32	-0.20	0.006
150.00	0.00	-0.40	0.00	0.00	0.00	0.00	1,127.22	563.61	1,091.62	660.47	3.53	-0.20	0.000

© 2007 - 2016 by ATC IP LLC. All rights reserved.

Equivalent Modal Forces Analysis

(Based on ASCE7-10 Chapters 11, 12 & 15 and ANSI/TIA-G, section 2.7)

Spectral Response Acceleration for Short Period (S_s):	0.19
Spectral Response Acceleration at 1.0 Second Period (S_1):	0.06
Importance Factor (I_E):	1.00
Site Coefficient F_a:	1.60
Site Coefficient F_v	2.40
Response Modification Coefficient (R):	1.50
Design Spectral Response Acceleration at Short Period (S_{ds}):	0.20
Desing Spectral Response Acceleration at 1.0 Second Period (S_{d1}):	0.10
Period Based on Rayleigh Method (sec):	1.55
Redundancy Factor (p):	1.30

Load Case (1.2 + 0.2Sds) * DL + E EMAM **Seismic Equivalent Modal Analysis Method**

Segment	Height Above Base (ft)	Weight (lb)	a	b	c	Saz	Horizontal Force (lb)	Vertical Force (lb)
30	147.50	527	1.828	1.667	1.025	0.351	160	654
29	142.50	527	1.706	1.144	0.823	0.276	126	654
28	137.50	527	1.588	0.742	0.654	0.210	96	654
27	132.50	581	1.475	0.441	0.513	0.153	77	721
26	127.50	822	1.366	0.222	0.397	0.104	74	1,019
25	122.50	822	1.261	0.069	0.302	0.065	46	1,019
24	117.50	822	1.160	-0.030	0.226	0.033	24	1,019
23	112.50	822	1.063	-0.088	0.165	0.010	7	1,019
22	107.50	822	0.971	-0.116	0.117	-0.004	-3	1,019
21	102.50	822	0.883	-0.121	0.081	-0.012	-8	1,019
20	97.50	942	0.799	-0.112	0.053	-0.012	-10	1,168
19	92.50	942	0.719	-0.092	0.034	-0.008	-6	1,168
18	87.50	942	0.643	-0.068	0.020	0.001	1	1,168
17	82.50	942	0.572	-0.043	0.012	0.011	9	1,168
16	77.50	1,062	0.505	-0.018	0.007	0.022	20	1,317
15	72.50	1,062	0.442	0.005	0.006	0.031	29	1,317
14	67.50	1,062	0.383	0.023	0.007	0.038	35	1,317
13	62.50	1,062	0.328	0.039	0.010	0.043	40	1,317
12	57.50	1,183	0.278	0.050	0.014	0.046	47	1,467
11	52.50	1,183	0.232	0.058	0.019	0.047	48	1,467
10	47.50	1,183	0.190	0.064	0.025	0.046	48	1,467
9	42.50	1,183	0.152	0.068	0.030	0.045	47	1,467
8	37.50	1,303	0.118	0.070	0.035	0.044	50	1,616
7	32.50	1,303	0.089	0.071	0.039	0.042	48	1,616
6	27.50	1,303	0.064	0.072	0.041	0.041	46	1,616
5	22.50	1,303	0.043	0.070	0.042	0.039	44	1,616
4	17.50	1,698	0.026	0.067	0.040	0.036	53	2,106
3	12.50	1,698	0.013	0.059	0.034	0.032	47	2,106
2	7.50	1,698	0.005	0.044	0.025	0.024	36	2,106
1	2.50	1,698	0.001	0.018	0.010	0.011	16	2,106
Raycap DC6-48-60-0-8	150.00	98	1.890	1.980	1.140	0.392	33	122
Ericsson RRUS A2	150.00	45	1.890	1.980	1.140	0.392	15	56
Ericsson RRUS 12	150.00	150	1.890	1.980	1.140	0.392	51	186
Ericsson RRUS-32	150.00	77	1.890	1.980	1.140	0.392	26	95

© 2007 - 2016 by ATC IP LLC. All rights reserved.

Ericsson RRUS-32	150.00	154	1.890	1.980	1.140	0.392	52	191
Ericsson RRUS-11	150.00	165	1.890	1.980	1.140	0.392	56	205
CCI HPA-65R-BUU-H6	150.00	153	1.890	1.980	1.140	0.392	52	190
CCI HPA-65R-BUU-H8	150.00	408	1.890	1.980	1.140	0.392	139	506
Round Low Profile Pl	150.00	1,500	1.890	1.980	1.140	0.392	510	1,860
Ericsson KRY 112 144	135.00	33	1.531	0.580	0.580	0.180	5	41
Ericsson RRUS 11 B12	135.00	152	1.531	0.580	0.580	0.180	24	189
Ericsson AIR 21, 1.3	135.00	249	1.531	0.580	0.580	0.180	39	309
Ericsson AIR 21, 1.3	135.00	244	1.531	0.580	0.580	0.180	38	303
Andrew LNX-6515DS-VT	135.00	154	1.531	0.580	0.580	0.180	24	191
Round Low Profile Pl	135.00	1,500	1.531	0.580	0.580	0.180	234	1,860
		36,926	45.090	25.675	18.548	6.379	2,544	45,792

© 2007 - 2016 by ATC IP LLC. All rights reserved.

Load Case (1.2 + 0.2Sds) * DL + E EMAM **Seismic Equivalent Modal Analysis Method**

Calculated Forces

Seg Elev (ft)	Pu FY (-) (kips)	Vu FX (-) (kips)	Tu MY (ft-kips)	Mu MZ (ft-kips)	Mu MX (ft-kips)	Resultant Moment (ft-kips)	phi Pn (kips)	phi Vn (kips)	phi Tn (ft-kips)	phi Mn (ft-kips)	Total Deflect (in)	Rotation (deg)	Ratio
0.00	-43.69	-2.53	0.00	-299.62	0.00	299.62	3,293.92	1,646.96	8,093.29	5,174.22	0.00	0.00	0.071
5.00	-41.58	-2.50	0.00	-286.95	0.00	286.95	3,293.92	1,646.96	8,093.29	5,174.22	0.01	-0.01	0.068
10.00	-39.47	-2.46	0.00	-274.44	0.00	274.44	3,293.92	1,646.96	8,093.29	5,174.22	0.02	-0.02	0.065
15.00	-37.37	-2.41	0.00	-262.12	0.00	262.12	3,293.92	1,646.96	8,093.29	5,174.22	0.05	-0.03	0.062
20.00	-35.75	-2.37	0.00	-250.05	0.00	250.05	3,293.92	1,646.96	8,093.29	5,174.22	0.08	-0.04	0.059
20.00	-35.75	-2.37	0.00	-250.05	0.00	250.05	2,330.87	1,165.43	5,751.12	3,807.50	0.08	-0.04	0.081
25.00	-34.14	-2.33	0.00	-238.18	0.00	238.18	2,330.87	1,165.43	5,751.12	3,807.50	0.13	-0.05	0.077
30.00	-32.52	-2.29	0.00	-226.51	0.00	226.51	2,330.87	1,165.43	5,751.12	3,807.50	0.18	-0.06	0.073
35.00	-30.90	-2.24	0.00	-215.06	0.00	215.06	2,330.87	1,165.43	5,751.12	3,807.50	0.24	-0.07	0.070
40.00	-29.44	-2.20	0.00	-203.84	0.00	203.84	2,330.87	1,165.43	5,751.12	3,807.50	0.32	-0.08	0.066
40.00	-29.44	-2.20	0.00	-203.84	0.00	203.84	2,139.71	1,069.86	4,744.89	3,103.93	0.32	-0.08	0.079
45.00	-27.97	-2.16	0.00	-192.84	0.00	192.84	2,139.71	1,069.86	4,744.89	3,103.93	0.40	-0.09	0.075
50.00	-26.50	-2.11	0.00	-182.06	0.00	182.06	2,139.71	1,069.86	4,744.89	3,103.93	0.50	-0.10	0.071
55.00	-25.04	-2.07	0.00	-171.50	0.00	171.50	2,139.71	1,069.86	4,744.89	3,103.93	0.61	-0.11	0.067
60.00	-23.72	-2.03	0.00	-161.18	0.00	161.18	2,139.71	1,069.86	4,744.89	3,103.93	0.73	-0.12	0.063
60.00	-23.72	-2.03	0.00	-161.18	0.00	161.18	1,948.48	974.24	3,834.02	2,471.99	0.73	-0.12	0.077
65.00	-22.40	-1.99	0.00	-151.04	0.00	151.04	1,948.48	974.24	3,834.02	2,471.99	0.86	-0.13	0.073
70.00	-21.08	-1.97	0.00	-141.07	0.00	141.07	1,948.48	974.24	3,834.02	2,471.99	1.00	-0.14	0.068
75.00	-19.77	-1.95	0.00	-131.23	0.00	131.23	1,948.48	974.24	3,834.02	2,471.99	1.15	-0.15	0.063
80.00	-18.60	-1.94	0.00	-121.50	0.00	121.50	1,948.48	974.24	3,834.02	2,471.99	1.32	-0.16	0.059
80.00	-18.60	-1.94	0.00	-121.50	0.00	121.50	1,757.14	878.57	3,018.53	1,911.67	1.32	-0.16	0.074
85.00	-17.43	-1.94	0.00	-111.80	0.00	111.80	1,757.14	878.57	3,018.53	1,911.67	1.50	-0.18	0.068
90.00	-16.26	-1.94	0.00	-102.11	0.00	102.11	1,757.14	878.57	3,018.53	1,911.67	1.69	-0.19	0.063
95.00	-15.09	-1.95	0.00	-92.39	0.00	92.39	1,757.14	878.57	3,018.53	1,911.67	1.89	-0.20	0.057
100.00	-14.07	-1.96	0.00	-82.62	0.00	82.62	1,757.14	878.57	3,018.53	1,911.67	2.11	-0.21	0.051
100.00	-14.07	-1.96	0.00	-82.62	0.00	82.62	1,565.64	782.82	2,298.42	1,422.98	2.11	-0.21	0.067
105.00	-13.05	-1.96	0.00	-72.82	0.00	72.82	1,565.64	782.82	2,298.42	1,422.98	2.34	-0.22	0.060
110.00	-12.03	-1.95	0.00	-63.00	0.00	63.00	1,565.64	782.82	2,298.42	1,422.98	2.59	-0.24	0.052
115.00	-11.01	-1.93	0.00	-53.23	0.00	53.23	1,565.64	782.82	2,298.42	1,422.98	2.84	-0.25	0.044
115.00	-11.01	-1.93	0.00	-53.23	0.00	53.23	1,565.64	782.82	2,298.42	1,422.98	2.84	-0.25	0.044
120.00	-10.00	-1.88	0.00	-43.59	0.00	43.59	1,565.64	782.82	2,298.42	1,422.98	3.11	-0.26	0.037
125.00	-8.98	-1.80	0.00	-34.19	0.00	34.19	1,565.64	782.82	2,298.42	1,422.98	3.39	-0.27	0.030
130.00	-8.26	-1.72	0.00	-25.18	0.00	25.18	1,565.64	782.82	2,298.42	1,422.98	3.68	-0.28	0.023
130.00	-8.26	-1.72	0.00	-25.18	0.00	25.18	1,127.22	563.61	1,091.62	660.47	3.68	-0.28	0.045
135.00	-4.71	-1.24	0.00	-16.57	0.00	16.57	1,127.22	563.61	1,091.62	660.47	3.97	-0.28	0.029
140.00	-4.06	-1.12	0.00	-10.34	0.00	10.34	1,127.22	563.61	1,091.62	660.47	4.27	-0.29	0.019
145.00	-3.41	-0.95	0.00	-4.76	0.00	4.76	1,127.22	563.61	1,091.62	660.47	4.58	-0.30	0.010
150.00	0.00	-0.93	0.00	0.00	0.00	0.00	1,127.22	563.61	1,091.62	660.47	4.89	-0.30	0.000

© 2007 - 2016 by ATC IP LLC. All rights reserved.

Analysis Summary

Load Case	Reactions: Shear FX (kips)	Shear FZ (kips)	Axial FY (kips)	Moment MX (ft-kips)	Moment MY (ft-kips)	Moment MZ (ft-kips)	Max Usage: Elev (ft)	Interaction Ratio
1.2D + 1.6W	22.24	0.00	44.30	0.00	0.00	2372.29	20.00	0.53
0.9D + 1.6W	22.23	0.00	33.22	0.00	0.00	2360.40	20.00	0.52
1.2D + 1.0Di + 1.0Wi	6.18	0.00	64.58	0.00	0.00	614.92	20.00	0.15
(1.2 + 0.2Sds) * DL + E ELFM	2.12	0.00	43.69	0.00	0.00	241.23	20.00	0.07
(1.2 + 0.2Sds) * DL + E EMAM	2.53	0.00	43.69	0.00	0.00	299.62	20.00	0.08
1.0D + 1.0W	5.00	0.00	36.93	0.00	0.00	532.02	20.00	0.13

Base/Flange Plate	Plate Type	***Baseplate***	
	Pole Diameter	60	in
	Pole Thickness	0.5	in
	Plate Diameter	72	in
	Plate Thickness	1.5	in
	Plate Fy	50	ksi
	Weld Length	0.4375	in
	ϕ_s Resistance	132.54	k-in
	Applied	70.65	k-in
Stiffeners	#	***0***	

Bolts	#	***36***	
	Bolt Circle	66	in
	(R)adial / (S)quare	R	
	Diameter	1.5	in
	Hole Diameter	2.25	in
	Type	A449	
	Fy	81	ksi
	Fu	105	ksi
	ϕ_s Resistance	118.04	k
	Applied	49.15	k
Reinforcement ●	#	***0***	
Extra Bolts O	#	***0***	

Code Rev.	***G***	**Date**	1/18/2016
		Engineer	ZAM
		Site #	282660
Moment	2372.3 k-ft	**Carrier**	AT&T Mobility
Axial	44.3 k		

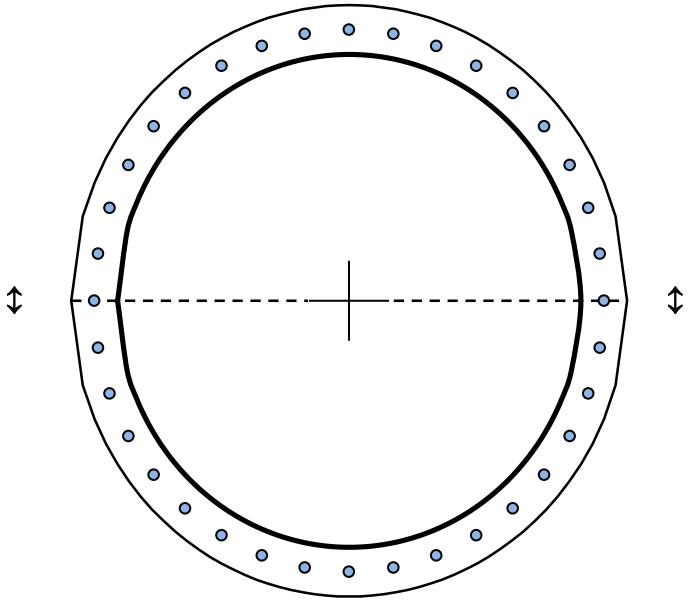

Plate Stress Ratio:

0.53 (Pass)

Bolt Stress Ratio:

0.42 (Pass)

Base/Flange Plate			
	Plate Type	***Flange***	***@ 20.0 ft***
	Pole Diameter	60	in
	Pole Thickness	0.375	in
	Plate Diameter	60	in
	Plate Thickness	1.5	in
	Plate Fy	50	ksi
	Weld Length	0.3125	in
	ϕ_s Resistance	134.19	k-in
	Applied	82.40	k-in

Stiffeners		
	#	***0***

Bolts			
	#	***32***	
	Bolt Circle	54	in
	(R)adial / (S)quare	R	
	Diameter	1.5	in
	Hole Diameter	2.25	in
	Type	A325	
	Fy	92	ksi
	Fu	120	ksi
	ϕ_s Resistance	126.47	k
	Applied	52.73	k

Reinforcement ●		
	#	***0***

Extra Bolts O		
	#	***0***

Code Rev.	***G***
Moment	1939.5 k-ft
Axial	36.0 k

Date	1/18/2016
Engineer	ZAM
Site #	282660
Carrier	T-Mobile

Required Flange Thickness:

1.18 in OK

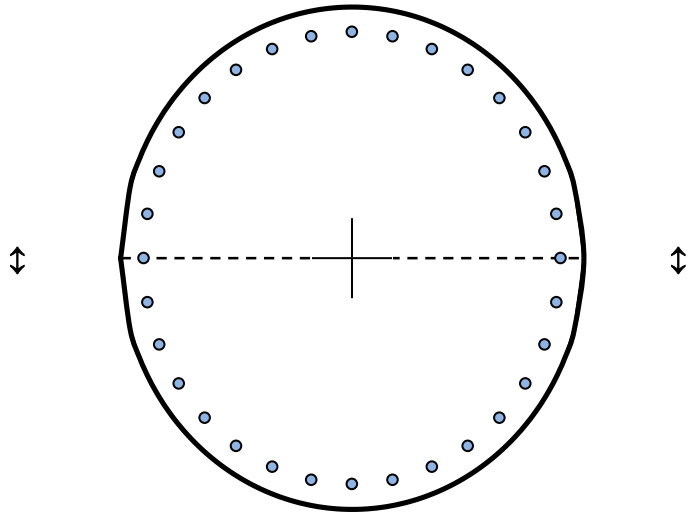

Plate Stress Ratio:

0.61 (Pass)

Bolt Stress Ratio:

0.42 (Pass)

Base/Flange Plate	Plate Type	***Flange***	***@ 40.0 ft***
	Pole Diameter	54	in
	Pole Thickness	0.375	in
	Plate Diameter	60	in
	Plate Thickness	1.5	in
	Plate Fy	50	ksi
	Weld Length	0.3125	in
	ϕ_s Resistance	89.46	k-in
	Applied	1.65	k-in
Stiffeners	#	***0***	

Bolts	#	***48***	
	Bolt Circle	57	in
	(R)adial / (S)quare	R	
	Diameter	1	in
	Hole Diameter	2.25	in
	Type	A325	
	Fy	92	ksi
	Fu	120	ksi
	ϕ_s Resistance	54.52	k
	Applied	26.39	k
Reinforcement ●	#	***0***	
Extra Bolts O	#	***0***	

Code Rev. ***G***

Moment 1539.9 k-ft

Axial 29.7 k

Date	1/18/2016
Engineer	ZAM
Site #	282660
Carrier	T-Mobile

Required Flange Thickness:

0.20 in OK

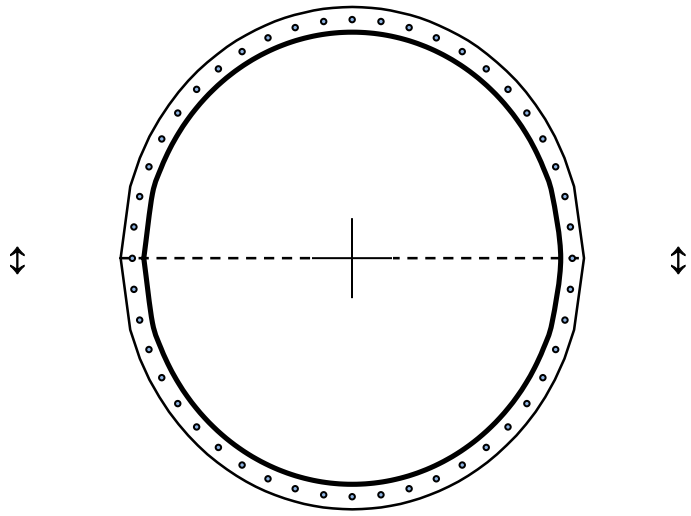

Plate Stress Ratio:

0.02 (Pass)

Bolt Stress Ratio:

0.48 (Pass)

Base/Flange Plate	Plate Type	***Flange***	***@ 60.0 ft***
	Pole Diameter	48	in
	Pole Thickness	0.375	in
	Plate Diameter	54	in
	Plate Thickness	1.5	in
	Plate Fy	50	ksi
	Weld Length	0.3125	in
	ϕ_s Resistance	95.43	k-in
	Applied	1.69	k-in
Stiffeners	#	***0***	

Bolts	#	***40***	
	Bolt Circle	51	in
	(R)adial / (S)quare	R	
	Diameter	1	in
	Hole Diameter	2.25	in
	Type	A325	
	Fy	92	ksi
	Fu	120	ksi
	ϕ_s Resistance	54.52	k
	Applied	27.05	k
Reinforcement ●	#	***0***	
Extra Bolts O	#	***0***	

Code Rev.	***G***
Moment	1175.2 k-ft
Axial	24.0 k

Date	1/18/2016
Engineer	ZAM
Site #	282660
Carrier	T-Mobile

Required Flange Thickness:

0.20 in OK

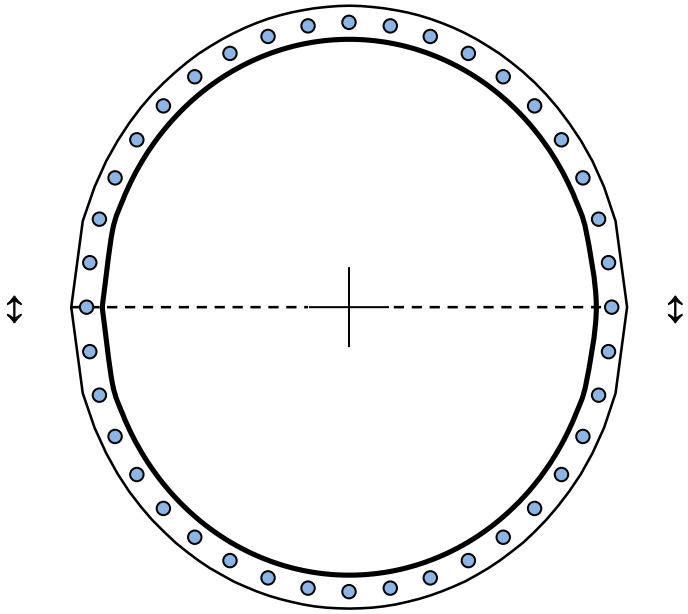

Plate Stress Ratio:

0.02 (Pass)

Bolt Stress Ratio:

0.50 (Pass)

Base/Flange Plate	Plate Type	***Flange***	***@ 80.0 ft***
	Pole Diameter	42	in
	Pole Thickness	0.375	in
	Plate Diameter	48	in
	Plate Thickness	1.5	in
	Plate Fy	50	ksi
	Weld Length	0.3125	in
	ϕ_s Resistance	104.13	k-in
	Applied	1.73	k-in
Stiffeners	#	***0***	

Bolts	#	***32***	
	Bolt Circle	45	in
	(R)adial / (S)quare	R	
	Diameter	1.5	in
	Hole Diameter	2.25	in
	Type	A325	
	Fy	92	ksi
	Fu	120	ksi
	ϕ_s Resistance	126.47	k
	Applied	27.62	k
Reinforcement ●	#	***0***	
Extra Bolts O	#	***0***	

Code Rev.	***G***
Moment	846.6 k-ft
Axial	18.8 k

Date	1/18/2016
Engineer	ZAM
Site #	282660
Carrier	T-Mobile

Required Flange Thickness:

0.19 in OK

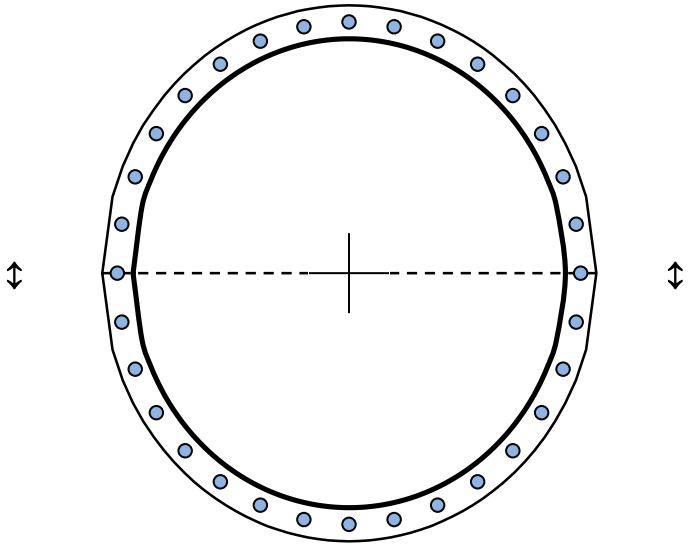

Plate Stress Ratio:

0.02 (Pass)

Bolt Stress Ratio:

0.22 (Pass)

Base/Flange Plate	Plate Type	***Flange***	***@ 100.0 ft***
	Pole Diameter	36	in
	Pole Thickness	0.375	in
	Plate Diameter	42	in
	Plate Thickness	1.5	in
	Plate Fy	50	ksi
	Weld Length	0.3125	in
	ϕ_s Resistance	104.13	k-in
	Applied	1.74	k-in
Stiffeners	#	***0***	

Bolts	#	***24***	
	Bolt Circle	39	in
	(R)adial / (S)quare	R	
	Diameter	1.5	in
	Hole Diameter	2.25	in
	Type	A325	
	Fy	92	ksi
	Fu	120	ksi
	ϕ_s Resistance	126.47	k
	Applied	27.78	k
Reinforcement ●	#	***0***	
Extra Bolts O	#	***0***	

Code Rev.	***G***
Moment	553.5 k-ft
Axial	14.2 k

Date	1/18/2016
Engineer	ZAM
Site #	282660
Carrier	T-Mobile

Required Flange Thickness:

0.19 in OK

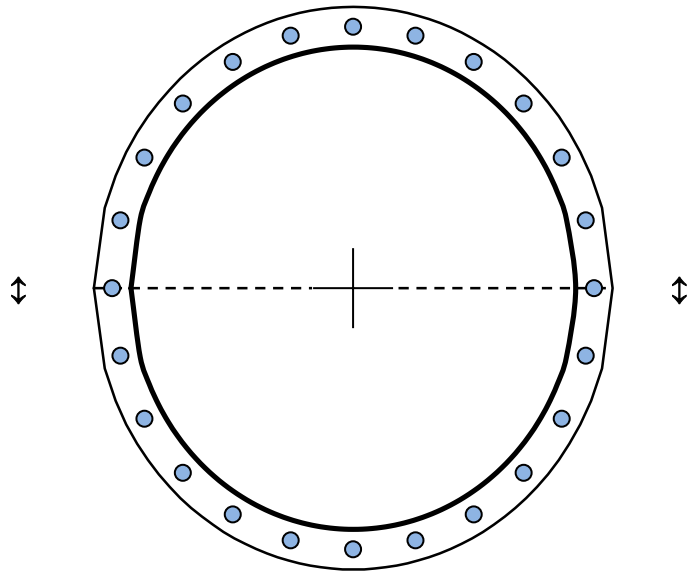

Plate Stress Ratio:

0.02 (Pass)

Bolt Stress Ratio:

0.22 (Pass)

Base/Flange Plate	Plate Type	***Flange***	***@ 115.0 ft***
	Pole Diameter	36	in
	Pole Thickness	0.375	in
	Plate Diameter	36	in
	Plate Thickness	1.5	in
	Plate Fy	50	ksi
	Weld Length	0.3125	in
	ϕ_s Resistance	99.40	k-in
	Applied	36.30	k-in
Stiffeners	#	***0***	

Bolts	#	***24***	
	Bolt Circle	30	in
	(R)adial / (S)quare	R	
	Diameter	1	in
	Hole Diameter	2.25	in
	Type	A325	
	Fy	92	ksi
	Fu	120	ksi
	ϕ_s Resistance	54.52	k
	Applied	23.23	k
Reinforcement ●	#	***0***	
Extra Bolts O	#	***0***	

Code Rev. ***G***

Moment 355.7 k-ft
Axial 11.3 k

Date	1/18/2016
Engineer	ZAM
Site #	282660
Carrier	T-Mobile

Required Flange Thickness:
0.91 in OK

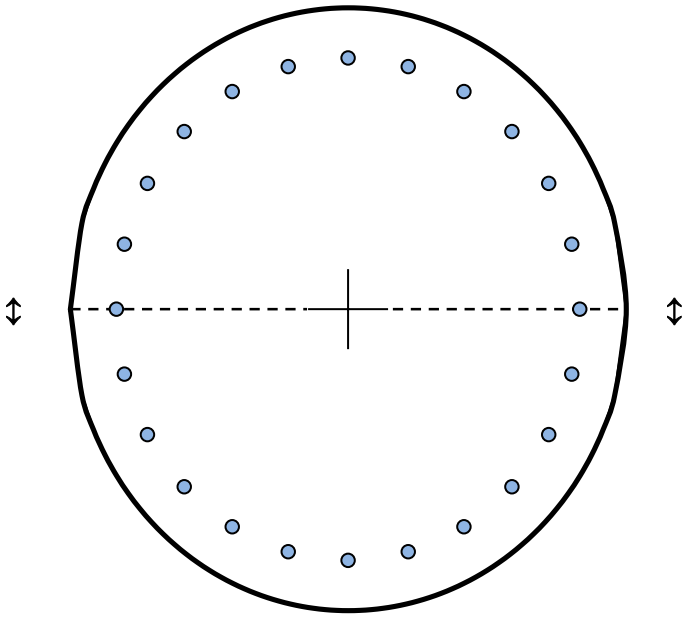

Plate Stress Ratio:
0.37 (Pass)

Bolt Stress Ratio:
0.43 (Pass)

Base/Flange Plate	Plate Type	***Flange***	***@ 130.0 ft***
	Pole Diameter	24	in
	Pole Thickness	0.375	in
	Plate Diameter	30	in
	Plate Thickness	1.5	in
	Plate Fy	50	ksi
	Weld Length	0.3125	in
	ϕ_s Resistance	95.43	k-in
	Applied	0.95	k-in
Stiffeners	#	***0***	

Bolts	#	***20***	
	Bolt Circle	27	in
	(R)adial / (S)quare	R	
	Diameter	1	in
	Hole Diameter	2.25	in
	Type	A325	
	Fy	92	ksi
	Fu	120	ksi
	ϕ_s Resistance	54.52	k
	Applied	15.27	k
Reinforcement ●	#	***0***	
Extra Bolts O	#	***0***	

Code Rev. ***G***

Moment 176.5 k-ft

Axial 8.3 k

Date	1/18/2016
Engineer	ZAM
Site #	282660
Carrier	T-Mobile

Required Flange Thickness:

0.15 in OK

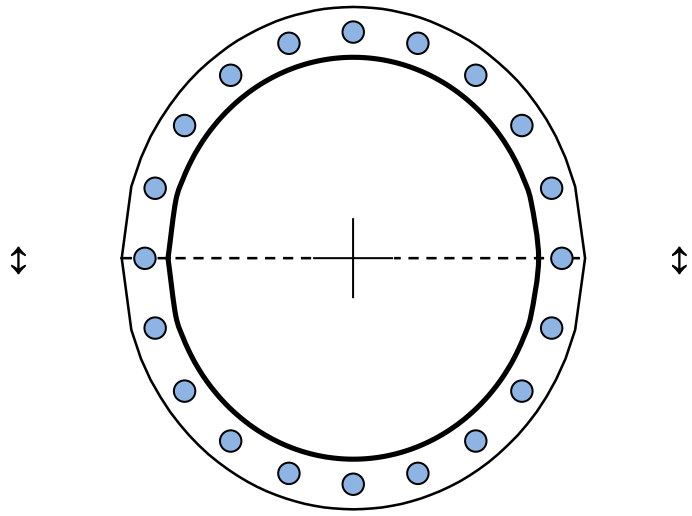

Plate Stress Ratio:

0.01 (Pass)

Bolt Stress Ratio:

0.28 (Pass)

Site Name:	Prospect CT, CT	*Program Last Updated:*	*5/13/2014*
Site Number:	282660		
Engineering Number:	64808021		
Engineer:	Z. Medoff		
Date:	01/18/16		
Tower Type:	MP		

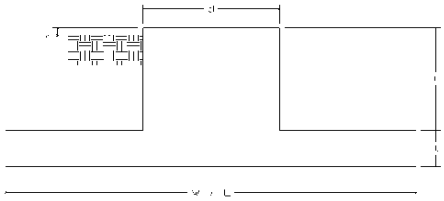

Design Loads (Factored) - Analysis per TIA-222-G Standards

Design / Analysis / Mapping:	Analysis				
Compression/Leg:	64.6	k	Concrete Strength (f'_c):	4000	psi
Uplift/Leg:		k	Pad Tension Steel Depth:	20.00	in
Total Shear:	22.2	k	ϕ_{Shear}:	0.75	
Moment:	2372.3	k-ft	$\phi_{Flexure\ /\ Tension}$:	0.90	
Tower + Appurtenance Weight:	36.9	k	$\phi_{Compression:}$	0.65	
Depth to Base of Foundation (l + t - h):	4.00	ft	β:	0.85	
Diameter of Pier (d):	7.00	ft	Bottom Pad Rebar Size #:	9	
Height of Pier above Ground (h):	1.00		# of Bottom Pad Rebar:	27	
Width of Pad (W):	25.00	ft	Pad Bottom Steel Area:	27.00	in^2
Length of Pad (L):	25.00	ft	Pad Steel F_y:	60000	psi
Thickness of Pad (t):	2.00	ft	Top Pad Rebar Size #:	9	
Tower Leg Center to Center:	0.00	ft	# of Top Pad Rebar:	27	
Number of Tower Legs:	1.0	(1 if MP or GT)	Pad Top Steel Area:	27.00	in^2
Tower Center from Mat Center:	0.00	ft	Pier Rebar Size #:	7	
Depth Below Ground Surface to Water Table:	99.00	ft	Pier Steel Area (Single Bar):	0.60	in^2
Unit Weight of Concrete:	150.0	pcf	# of Pier Rebar:	60	
Unit Weight of Soil Above Water Table:	130.0	pcf	Pier Steel F_y:	60000	psi
Unit Weight of Water:	62.4	pcf	Pier Cage Diameter:	76.0	in
Unit Weight of Soil Below Water Table:	60.0	pcf	Rebar Strain Limit:	0.008	
Friction Angle of Uplift:	15.0	Degrees	Steel Elastic Modulus:	29000	ksi
Ultimate Coefficient of Shear Friction:	0.35		Tie Rebar Size #:	4	
Ultimate Compressive Bearing Pressure:	50000.0	psf	Tie Steel Area (Single Bar):	0.20	in^2
Ultimate Passive Pressure on Pad Face:	0.0	psf	Tie Spacing:	6	in
$\phi_{Soil\ and\ Concrete\ Weight}$:	0.9		Tie Steel F_y:	60000	psi
ϕ_{Soil}:	0.75				

Overturning Moment Usage

Design OTM:	2483.3	k-ft
OTM Resistance:	4524.7	k-ft
Design OTM / OTM Resistance:	0.55	Result: OK

Soil Bearing Pressure Usage

Net Bearing Pressure:	1493	psf
Factored Nominal Bearing Pressure:	37500	psf
Net Bearing Pressure/Factored Nominal Bearing Pressure:	0.04	Result: OK
Load Direction Controling Design Bearing Pressure:	Diagonal to Pad Edge	

Sliding Factor of Safety

Total Factored Sliding Resistance:	101.9	k
Sliding Design / Sliding Resistance:	0.22	Result: OK

One Way Shear, Flexual Capacity, and Punching Shear

Factored One Way Shear (V_u):	149.2	k
One Way Shear Capacity (ϕV_c):	569.2	k - ACI11.3.1.1
V_u / ϕV_c:	0.26	Result: OK
Load Direction Controling Shear Capacity:	Parallel to Pad Edge	
Lower Steel Pad Factored Moment (M_u):	873.9	k-ft
Lower Steel Pad Moment Capacity (ϕM_n):	2348.0	k-ft - ACI10.3
M_u / ϕM_n:	0.37	Result: OK
Load Direction Controling Flexural Capacity:	Parallel to Pad Edge	
Upper Steel Pad Factored Moment (M_u):	611.8	k-ft
Upper Steel Pad Moment Capacity (ϕM_n):	2348.0	k-ft
M_u / ϕM_n:	0.26	Result: OK
Lower Pad Flexural Reinforcement Ratio:	0.0045	OK - Minimum Reinforcement Ratio Met - ACI10.5.1
Upper Pad Flexural Reinforcement Ratio:	0.0045	OK - Minimum Reinforcement Ratio Met - ACI10.5.1
Lower Pad Reinforcement Spacing:	11	in - Pad Reinforcing Spacing OK - ACI7.12.2.2 & 10.5.4
Upper Pad Reinforcement Spacing:	11	in - Pad Reinforcing Spacing OK - ACI7.12.2.2 & 10.5.4
Factored Punching Shear (V_u):	32.6	k
Nominal Punching Shear Capacity ($\phi_c V_n$):	1239.8	k - ACI11.12.2.1
V_u / ϕV_c:	0.03	Result: OK
Factored Moment in Pier (M_u):	2438.9	k-ft
Pier Moment Capacity (ϕM_n):	6019.8	k-ft
M_u / ϕM_n:	0.41	Result: OK
Factored Shear in Pier (V_u):	22.2	k
Pier Shear Capacity (ϕV_n):	528.8	k
V_u / ϕV_c:	0.04	Result: OK
Pier Shear Reinforcement Ratio:	0.0004	No Ties Necessary for Shear - ACI11.5.6.1
Factored Tension in Pier (T_u):	0.0	k
Pier Tension Capacity (ϕT_n):	1944.0	k
T_u / ϕT_n:	0.00	Result: OK
Factored Compression in Pier (P_u):	64.6	k
Pier Compression Capacity (ϕP_n):	9734.2	k - ACI10.3.6.2
P_u / ϕP_n:	0.01	Result: OK
Pier Compression Reinforcement Ratio:	0.006	OK - Reinforcement Ratio Met - ACI10.9.1 & 10.8.4
$M_u/\phi_B M_n + T_u/\phi_T T_n$:	0.41	Result: OK
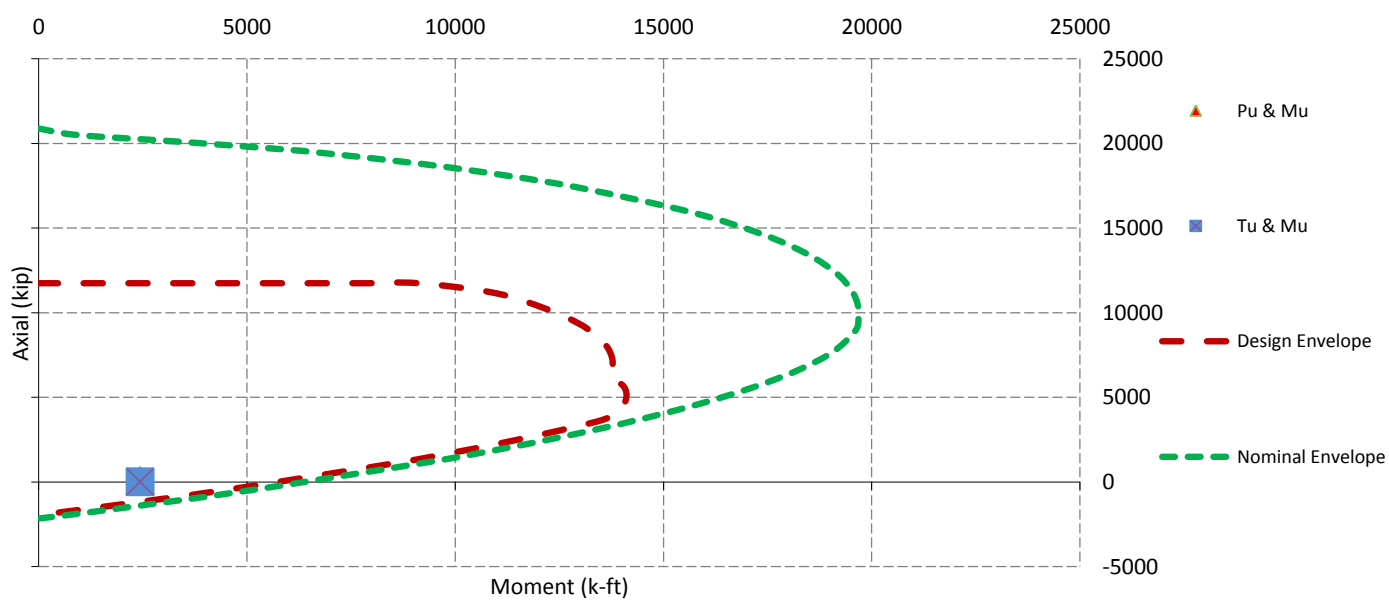
Nominal and Design Moment Capacity and Factored Design Loads