REVIEWED
By Stephen Higgins at 9:02 am, Aug 24, 2016

at&t

PROJECT:	LTE 2C
SITE NUMBER:	CTL01247
FA NUMBER:	10050957
PTN NUMBER:	2051A066GG
PACE NUMBER:	MRCTB018392
SBA#:	CT01364
SITE NAME:	POMFRET - BABBITT HILL ROAD
SITE ADDRESS:	62 BABBIT HILL ROAD POMFRET, CT 06259

PROJECT INFORMATION

SITE NAME:	POMFRET – BABBITT HILL ROAD
SITE NUMBER:	CTL01247
SITE ADDRESS:	62 BABBIT HILL ROAD POMFRET, CT 06259
FA NUMBER:	10050957
PTN NUMBER:	2051A066GG
PACE NUMBER:	MRCTB018392
USID NUMBER:	79194
SBA NUMBER:	CT01364
APPLICANT:	AT&T WIRELESS 550 COCHITUATE ROAD SUITE 550 13 AND 14 FRAMINGHAM, MA 01701
TOWER OWNER:	SBA COMMUNICATIONS CORPORATION 8051 CONGRESS AVENUE BOCA RATON, FL 33487
JURISDICTION:	TOWN OF POMFRET
COUNTY:	WINDHAM
SITE COORDINATES FROM	(RFDS)
LATITUDE:	41.870253°
LONGITUDE:	–71.988271°
GROUND ELEV.:	572'
PROPOSED USE:	TELECOMMUNICATIONS FACILITY
AT&T RF MANAGER:	CAMERON SYME
PHONE:	(508) 596–7146
EMAIL:	cs6970@att.com

PROJECT CONSULTANTS

PROJECT MANAGER:	SMARTLINK
ADDRESS:	85 RANGEWAY ROAD, SUITE 102 NORTH BILLERICA, MA 01862
CONTACT:	RYAN BURGDORFER (508) 665–8005
EMAIL:	Ryan.Burgdorfer@Smartlinkllc.com
SITE AQUISITION:	SMARTLINK
ADDRESS:	85 RANGEWAY ROAD, SUITE 102 NORTH BILLERICA, MA 01862
CONTACT:	SHARON KEEFE (978) 930–3918
EMAIL:	Sharon.Keefe@Smartlinkllc.com
ENGINEER/ARCHITECT:	FULLERTON ENGINEERING
ADDRESS:	1100 E. WOODFIELD ROAD, SUITE 500 SCHAUMBURG, IL 60173
CONTACT:	MILEN DIMITROV (847) 908–8439
EMAIL:	MDimitrov@fullertonengineering.com
CONSTRUCTION:	SMARTLINK
ADDRESS:	85 RANGEWAY ROAD, SUITE 102 NORTH BILLERICA, MA 01862
CONTACT:	MARK DONNELLY (617) 515–2080
EMAIL:	mark.donnelly@smartlinkllc.com

SCOPE OF WORK

LTE 1900 WILL BE 2C AT THE SITE, Q&D.
PROPOSED 2C PROJECT SCOPE HEREIN BASED ON RFDS ID # 1111520, VERSION 2.00 LAST UPDATED 05/18/16.

- (3) NEW RRUS–12
- (3) NEW 25A BREAKERS
- (1) NEW ARGUS MODULE
- (1) NEW LTE DUS

- CONTRACTOR SHALL FURNISH ALL MATERIAL WITH THE EXCEPTION OF AT&T SUPPLIED MATERIAL.
- ALL MATERIAL SHALL BE INSTALLED BY THE CONTRACTOR, UNLESS STATED OTHERWISE.

SITE LOCATION MAP

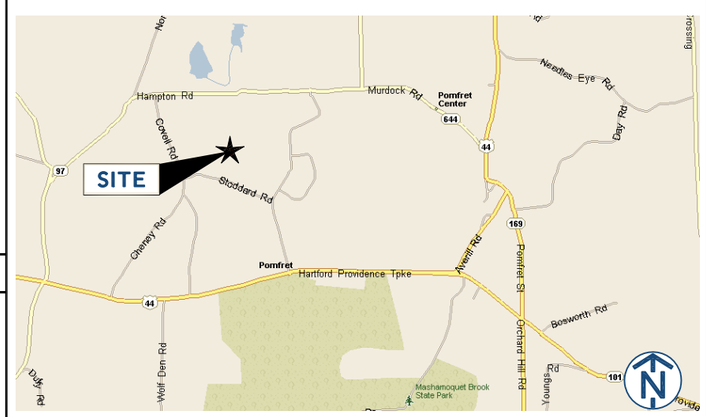

NO SCALE

DIRECTIONS

SCAN QR CODE FOR LINK TO SITE LOCATION MAP

APPLICABLE BUILDING CODES AND STANDARDS

ALL WORK AND MATERIALS SHALL BE PERFORMED AND INSTALLED IN ACCORDANCE WITH THE CURRENT EDITIONS OF THE FOLLOWING CODES AS ADOPTED BY THE LOCAL GOVERNING AUTHORITIES.

BUILDING CODE: 2003 INTERNATIONAL BUILDING CODE
ELECTRICAL CODE: 2011 NATIONAL ELECTRIC CODE

- FACILITY IS UNMANNED AND NOT FOR HUMAN HABITATION.
- ADA ACCESS REQUIREMENTS ARE NOT REQUIRED.
- THIS FACILITY DOES NOT REQUIRE POTABLE WATER AND WILL NOT PRODUCE ANY SEWAGE

DRAWING INDEX

T1	TITLE SHEET
SP1	NOTES AND SPECIFICATIONS
SP2	NOTES AND SPECIFICATIONS
A1	COMPOUND PLAN
A2	EQUIPMENT PLAN
A3	ELEVATIONS
A4	ANTENNA PLANS
A5	EQUIPMENT DETAILS
A6	ANTENNA & CABLE CONFIGURATION
A7	CABLE NOTES AND COLOR CODING
A8	GROUNDING DETAILS

NOTE: DRAWING SCALES ARE FOR 11"x17" SHEETS UNLESS OTHERWISE NOTED

at&t
550 COCHITUATE ROAD
SUITE 550 13 AND 14
FRAMINGHAM, MA 01701

smartlink
1362 MELLON ROAD
SUITE 140
HANOVER, MD 21076

FULLERTON
ENGINEERING · DESIGN
1100 E. WOODFIELD ROAD, SUITE 500
SCHAUMBURG, ILLINOIS 60173
TEL: 847-908-8400
COA# PEC.0001444
www.FullertonEngineering.com

REV	DATE	DESCRIPTION	BY
0	06/15/16	90% REVIEW	KC
1	08/18/16	FOR PERMIT	VV

I HEREBY CERTIFY THAT THESE DRAWING WERE PREPARED BY ME OR UNDER MY DIRECT SUPERVISION AND CONTROL, AND TO THE BEST OF MY KNOWLEDGE AND BELIEF COMPLY WITH THE REQUIREMENTS OF ALL APPLICABLE CODES.

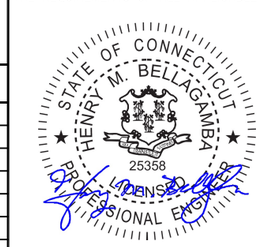

SITE NAME
POMFRET - BABBITT HILL ROAD

SITE NUMBER:
CTL01247

SITE ADDRESS
62 BABBIT HILL ROAD
POMFRET, CT 06259

SHEET NAME
TITLE SHEET

SHEET NUMBER
T1

THESE DRAWINGS ARE THE PROPERTY OF FULLERTON ENGINEERING CONSULTANTS, INC. IT IS FOR THE EXCLUSIVE USE OF THIS PROJECT. ANY RE-USE OF THIS DRAWING WITHOUT THE EXPRESSED WRITTEN CONSENT OF FULLERTON ENGINEERING CONSULTANTS, INC. IS PROHIBITED.

FEC# 2016.0200. 0013

GENERAL CONSTRUCTION

1. FOR THE PURPOSE OF CONSTRUCTION DRAWINGS, THE FOLLOWING DEFINITIONS SHALL APPLY:
   CONTRACTOR/CM – SMARTLINK
   OWNER – AT&T WIRELESS

2. ALL SITE WORK SHALL BE COMPLETED AS INDICATED ON THE DRAWINGS AND AT&T PROJECT SPECIFICATIONS.

3. GENERAL CONTRACTOR SHALL VISIT THE SITE AND SHALL FAMILIARIZE HIMSELF WITH ALL CONDITIONS AFFECTING THE PROPOSED WORK AND SHALL MAKE PROVISIONS. GENERAL CONTRACTOR SHALL BE RESPONSIBLE FOR FAMILIARIZING HIMSELF WITH ALL CONTRACT DOCUMENTS, FIELD CONDITIONS, DIMENSIONS, AND CONFIRMING THAT THE WORK MAY BE ACCOMPLISHED AS SHOWN PRIOR TO PROCEEDING WITH CONSTRUCTION. ANY DISCREPANCIES SHALL BE BROUGHT TO THE ATTENTION OF THE ENGINEER PRIOR TO THE COMMENCEMENT OF WORK.

4. ALL MATERIALS FURNISHED AND INSTALLED SHALL BE IN STRICT ACCORDANCE WITH ALL APPLICABLE CODES, REGULATIONS, AND ORDINANCES. GENERAL CONTRACTOR SHALL ISSUE ALL APPROPRIATE NOTICES AND COMPLY WITH ALL LAWS, ORDINANCES, RULES, REGULATIONS, AND LAWFUL ORDERS OF ANY PUBLIC AUTHORITY REGARDING THE PERFORMANCE OF WORK.

5. ALL WORK CARRIED OUT SHALL COMPLY WITH ALL APPLICABLE MUNICIPAL AND UTILITY COMPANY SPECIFICATIONS AND LOCAL JURISDICTIONAL CODES, ORDINANCES, AND APPLICABLE REGULATIONS.

6. UNLESS NOTED OTHERWISE, THE WORK SHALL INCLUDE FURNISHING MATERIALS, EQUIPMENT, APPURTENANCES, AND LABOR NECESSARY TO COMPLETE ALL INSTALLATIONS AS INDICATED ON THE DRAWINGS.

7. PLANS ARE NOT TO BE SCALED. THESE PLANS ARE INTENDED TO BE A DIAGRAMMATIC OUTLINE ONLY UNLESS OTHERWISE NOTED. DIMENSIONS SHOWN ARE TO FINISH SURFACES UNLESS OTHERWISE NOTED. SPACING BETWEEN EQUIPMENT IS THE MINIMUM REQUIRED CLEARANCE. THEREFORE, IT IS CRITICAL TO FIELD VERIFY DIMENSIONS, SHOULD THERE BE ANY QUESTIONS REGARDING THE CONTRACT DOCUMENTS, THE CONTRACTOR SHALL BE RESPONSIBLE FOR OBTAINING A CLARIFICATION FROM THE ENGINEER PRIOR TO PROCEEDING WITH THE WORK. DETAILS ARE INTENDED TO SHOW DESIGN INTENT. MODIFICATIONS MAY BE REQUIRED TO SUIT JOB DIMENSIONS OR CONDITIONS AND SUCH MODIFICATIONS SHALL BE INCLUDED AS PART OF WORK AND PREPARED BY THE ENGINEER PRIOR TO PROCEEDING WITH WORK.

8. THE CONTRACTOR SHALL INSTALL ALL EQUIPMENT AND MATERIALS IN ACCORDANCE WITH MANUFACTURER'S RECOMMENDATIONS UNLESS SPECIFICALLY STATED OTHERWISE.

9. IF THE SPECIFIED EQUIPMENT CANNOT BE INSTALLED AS SHOWN ON THESE DRAWINGS, THE CONTRACTOR SHALL PROPOSE AN ALTERNATIVE INSTALLATION SPACE FOR APPROVAL BY THE ENGINEER PRIOR TO PROCEEDING.

10. GENERAL CONTRACTOR SHALL BE RESPONSIBLE FOR THE SAFETY OF WORK AREA, ADJACENT AREAS AND BUILDING OCCUPANTS THAT ARE LIKELY TO BE AFFECTED BY THE WORK UNDER THIS CONTRACT. WORK SHALL CONFIRM TO ALL OSHA REQUIREMENTS AND THE LOCAL JURISDICTION.

11. GENERAL CONTRACTOR SHALL COORDINATE WORK AND SCHEDULE WORK ACTIVITIES WITH OTHER DISCIPLINES.

12. ERECTION SHALL BE DONE IN A WORKMANLIKE MANNER BY COMPETENT EXPERIENCED WORKMAN IN ACCORDANCE WITH APPLICABLE CODES AND THE BEST ACCEPTED PRACTICE. ALL MEMBERS SHALL BE LAID PLUMB AND TRUE AS INDICATED ON THE DRAWINGS.

13. SEAL PENETRATIONS THROUGH FIRE RATED AREAS WITH UL LISTED MATERIALS APPROVED BY LOCAL JURISDICTION. CONTRACTOR SHALL KEEP AREA CLEAN, HAZARD FREE, AND DISPOSE OF ALL DEBRIS.

14. WORK PREVIOUSLY COMPLETED IS REPRESENTED BY LIGHT SHADED LINES AND NOTES. THE SCOPE OF WORK FOR THIS PROJECT IS REPRESENTED BY DARK SHADED LINES AND NOTES. CONTRACTOR SHALL NOTIFY THE GENERAL CONTRACTOR OF ANY EXISTING CONDITIONS THAT DEVIATE FROM THE DRAWINGS PRIOR TO BEGINNING CONSTRUCTION.

15. CONTRACTOR SHALL PROVIDE WRITTEN NOTICE TO THE CONSTRUCTION MANAGER 48 HOURS PRIOR TO COMMENCEMENT OF WORK.

16. THE CONTRACTOR SHALL PROTECT EXISTING IMPROVEMENTS, PAVEMENTS, CURBS, LANDSCAPING AND STRUCTURES. ANY DAMAGED PART SHALL BE REPAIRED AT CONTRACTOR'S EXPENSE TO THE SATISFACTION OF THE OWNER.

17. THE CONTRACTOR SHALL CONTACT UTILITY LOCATING SERVICES PRIOR TO THE START OF CONSTRUCTION.

18. GENERAL CONTRACTOR SHALL COORDINATE AND MAINTAIN ACCESS FOR ALL TRADES AND CONTRACTORS TO THE SITE AND/OR BUILDING.

19. THE GENERAL CONTRACTOR SHALL BE RESPONSIBLE FOR SECURITY OF THE SITE FOR THE DURATION OF CONSTRUCTION UNTIL JOB COMPLETION.

20. THE GENERAL CONTRACTOR SHALL MAINTAIN IN GOOD CONDITION ONE COMPLETE SET OF PLANS WITH ALL REVISIONS, ADDENDA, AND CHANGE ORDERS ON THE PREMISES AT ALL TIMES.

21. THE GENERAL CONTRACTOR SHALL PROVIDE PORTABLE FIRE EXTINGUISHERS WITH A RATING OF NOT LESS THAN 2–A OT 2–A:10–B:C AND SHALL BE WITHIN 25 FEET OF TRAVEL DISTANCE TO ALL PORTIONS OF WHERE THE WORK IS BEING COMPLETED DURING CONSTRUCTION.

22. ALL EXISTING ACTIVE SEWER, WATER, GAS, ELECTRIC, AND OTHER UTILITIES SHALL BE PROTECTED AT ALL TIMES, AND WHERE REQUIRED FOR THE PROPER EXECUTION OF THE WORK, SHALL BE RELOCATED AS DIRECTED BY THE ENGINEER. EXTREME CAUTION SHOULD BE USED BY THE CONTRACTOR WHEN EXCAVATING OR DRILLING PIERS AROUND OR NEAR UTILITIES. CONTRACTOR SHALL PROVIDE SAFETY TRAINING FOR THE WORKING CREW. THIS SHALL INCLUDE BUT NOT BE LIMITED TO A) FALL PROTECTION, B) CONFINED SPACE, C) ELECTRICAL SAFETY, AND D) TRENCHING & EXCAVATION.

23. ALL EXISTING INACTIVE SEWER, WATER, GAS, ELECTRIC, AND OTHER UTILITIES, WHICH INTERFERE WITH THE EXECUTION OF THE WORK, SHALL BE REMOVED, CAPPED, PLUGGED OR OTHERWISE DISCONNECTED AT POINTS WHICH WILL NOT INTERFERE WITH THE EXECUTION OF THE WORK, AS DIRECTED BY THE RESPONSIBLE ENGINEER, AND SUBJECT TO THE APPROVAL OF THE OWNER AND/OR LOCAL UTILITIES.

24. THE AREAS OF THE OWNER'S PROPERTY DISTURBED BY THE WORK AND NOT COVERED BY THE TOWER, EQUIPMENT OR DRIVEWAY, SHALL BE GRADED TO A UNIFORM SLOPE, AND STABILIZED TO PREVENT EROSION.

25. CONTRACTOR SHALL MINIMIZE DISTURBANCE TO THE EXISTING SITE DURING CONSTRUCTION. EROSION CONTROL MEASURES, IF REQUIRED DURING CONSTRUCTION, SHALL BE IN CONFORMANCE WITH THE FEDERAL AND LOCAL JURISDICTION FOR EROSION AND SEDIMENT CONTROL.

26. NO FILL OR EMBANKMENT MATERIAL SHALL BE PLACED ON FROZEN GROUNDING. FROZEN MATERIALS, SNOW OR ICE SHALL NOT BE PLACED IN ANY FILL OR EMBANKMENT.

27. THE SUBGRADE SHALL BE BROUGHT TO A SMOOTH UNIFORM GRADE AND COMPACTED TO 95 PERCENT STANDARD PROCTOR DENSITY UNDER PAVEMENT AND STRUCTURES AND 80 PERCENT STANDARD PROCTOR DENSITY IN OPEN SPACE. ALL TRENCHES IN PUBLIC RIGHT OF WAY SHALL BE BACKFILLED WITH FLOWABLE FILL OR OTHER MATERIAL PRE–APPROVED BY THE LOCAL JURISDICTION.

28. ALL NECESSARY RUBBISH, STUMPS, DEBRIS, STICKS, STONES, AND OTHER REFUSE SHALL BE REMOVED FROM THE SITE AND DISPOSED OF IN A LAWFUL MANNER.

29. ALL BROCHURES, OPERATING AND MAINTENANCE MANUALS, CATALOGS, SHOP DRAWINGS, AND OTHER DOCUMENTS SHALL BE TURNED OVER TO THE GENERAL CONTRACTOR AT COMPLETION OF CONSTRUCTION AND PRIOR TO PAYMENT.

30. CONTRACTOR SHALL SUBMIT A COMPLETE SET OF AS–BUILT REDLINES TO THE GENERAL CONTRACTOR UPON COMPLETION OF PROJECT AND PRIOR TO FINAL PAYMENT.

31. CONTRACTOR SHALL LEAVE PREMISES IN A CLEAN CONDITION.

32. THE PROPOSED FACILITY WILL BE UNMANNED AND DOES NOT REQUIRE POTABLE WATER OR SEWER SERVICE, AND IS NOT FOR HUMAN HABITAT (NO HANDICAP ACCESS REQUIRED).

33. OCCUPANCY IS LIMITED TO PERIODIC MAINTENANCE AND INSPECTION, APPROXIMATELY 2 TIMES PER MONTH, BY AT&T TECHNICIANS.

34. NO OUTDOOR STORAGE OR SOLID WASTE CONTAINERS ARE PROPOSED.

35. ALL MATERIAL SHALL BE FURNISHED AND WORK SHALL BE PERFORMED IN ACCORDANCE WITH THE LATEST REVISION AT&T MOBILITY GROUNDING STANDARD "TECHNICAL SPECIFICATION FOR CONSTRUCTION OF GSM/GPRS WIRELESS SITES" AND "TECHNICAL SPECIFICATION FOR FACILITY GROUNDING". IN CASE OF A CONFLICT BETWEEN THE CONSTRUCTION SPECIFICATION AND THE DRAWINGS, THE DRAWINGS SHALL GOVERN.

36. CONTRACTORS SHALL BE RESPONSIBLE FOR OBTAINING ALL PERMITS AND INSPECTIONS REQUIRED FOR CONSTRUCTION. IF CONTRACTOR CANNOT OBTAIN A PERMIT, THEY MUST NOTIFY THE GENERAL CONTRACTOR IMMEDIATELY.

37. CONTRACTOR SHALL REMOVE ALL TRASH AND DEBRIS FROM THE SITE ON A DAILY BASIS.

38. INFORMATION SHOWN ON THESE DRAWINGS WAS OBTAINED FROM SITE VISITS AND/OR DRAWINGS PROVIDED BY THE SITE OWNER. CONTRACTORS SHALL NOTIFY THE ENGINEER OF ANY DISCREPANCIES PRIOR TO ORDERING MATERIAL OR PROCEEDING WITH CONSTRUCTION.

39. NO WHITE STROBE LIGHTS ARE PERMITTED. LIGHTING IF REQUIRED, WILL MEET FAA STANDARDS AND REQUIREMENTS.

ANTENNA MOUNTING

40. DESIGN AND CONSTRUCTION OF ANTENNA SUPPORTS SHALL CONFORM TO CURRENT ANSI/TIA–222 OR APPLICABLE LOCAL CODES.

41. ALL STEEL MATERIALS SHALL BE GALVANIZED AFTER FABRICATION IN ACCORDANCE WITH ASTM A123 "ZINC (HOT–DIP GALVANIZED) COATINGS ON IRON AND STEEL PRODUCTS", UNLESS NOTED OTHERWISE.

42. ALL BOLTS, ANCHORS AND MISCELLANEOUS HARDWARE SHALL BE GALVANIZED IN ACCORDANCE WITH ASTM A153 "ZINC–COATING (HOT–DIP) ON IRON AND STEEL HARDWARE", UNLESS NOTED OTHERWISE.

43. DAMAGED GALVANIZED SURFACES SHALL BE REPAIRED BY COLD GALVANIZING IN ACCORDANCE WITH ASTM A780.

44. ALL ANTENNA MOUNTS SHALL BE INSTALLED WITH LOCK NUTS, DOUBLE NUTS AND SHALL BE TORQUED TO MANUFACTURER'S RECOMMENDATIONS.

45. CONTRACTOR SHALL INSTALL ANTENNA PER MANUFACTURER'S RECOMMENDATION FOR INSTALLATION AND GROUNDING.

46. ALL UNUSED PORTS ON ANY ANTENNAS SHALL BE TERMINATED WITH A 50–OHM LOAD TO ENSURE ANTENNAS PERFORM AS DESIGNED.

47. PRIOR TO SETTING ANTENNA AZIMUTHS AND DOWNTILTS, ANTENNA CONTRACTOR SHALL CHECK THE ANTENNA MOUNT FOR TIGHTNESS AND ENSURE THAT THEY ARE PLUMB. ANTENNA AZIMUTHS SHALL BE SET FROM TRUE NORTH AND BE ORIENTED WITHIN +/– 5% AS DEFINED BY THE RFDS. ANTENNA DOWNTILTS SHALL BE WITHIN +/– 0.5% AS DEFINED BY THE RFDS. REFER TO ND–00246.

48. JUMPERS FROM THE TMA'S MUST TERMINATE TO OPPOSITE POLARIZATION'S IN EACH SECTOR.

49. CONTRACTOR SHALL RECORD THE SERIAL #, SECTOR, AND POSITION OF EACH ACTUATOR INSTALLED AT THE ANTENNAS AND PROVIDE THE INFORMATION TO AT&T.

50. TMA'S SHALL BE MOUNTED ON PIPE DIRECTLY BEHIND ANTENNAS AS CLOSE TO ANTENNA AS FEASIBLE IN A VERTICAL POSITION.

TORQUE REQUIREMENTS

51. ALL RF CONNECTIONS SHALL BE TIGHTENED BY A TORQUE WRENCH.

52. ALL RF CONNECTIONS, GROUNDING HARDWARE AND ANTENNA HARDWARE SHALL HAVE A TORQUE MARK INSTALLED IN A CONTINUOUS STRAIGHT LINE FROM BOTH SIDES OF THE CONNECTION.
    A. RF CONNECTION BOTH SIDES OF THE CONNECTOR.
    B. GROUNDING AND ANTENNA HARDWARE ON THE NUT SIDE STARTING FROM THE THREADS TO THE SOLID SURFACE. EXAMPLE OF SOLID SURFACE: GROUND BAR, ANTENNA BRACKET METAL.

FIBER & POWER CABLE MOUNTING

53. THE FIBER OPTIC TRUNK CABLES SHALL BE INSTALLED INTO CONDUITS, CHANNEL CABLE TRAYS, OR CABLE TRAY. WHEN INSTALLING FIBER OPTIC TRUNK CABLES INTO A CABLE TRAY SYSTEM, THEY SHALL BE INSTALLED INTO AN INTER DUCT AND A PARTITION BARRIER SHALL BE INSTALLED BETWEEN THE 600 VOLT CABLES AND THE INTER DUCT IN ORDER TO SEGREGATE CABLE TYPES. OPTIC FIBER TRUNK CABLES SHALL HAVE APPROVED CABLE RESTRAINTS EVERY (60) SIXTY FEET AND SECURELY FASTENED TO THE CABLE TRAY SYSTEM. NFPA 70 (NEC) ARTICLE 770 RULES SHALL APPLY.

54. THE TYPE TC–ER CABLES SHALL BE INSTALLED INTO CONDUITS, CHANNEL CABLE TRAYS, OR CABLE TRAY AND SHALL BE SECURED AT INTERVALS NOT EXCEEDING (6) SIX FEET. AN EXCEPTION; WHERE TYPE TC–ER CABLES ARE NOT SUBJECT TO PHYSICAL DAMAGE, CABLES SHALL BE PERMITTED TO MAKE A TRANSITION BETWEEN CONDUITS, CHANNEL CABLE TRAYS, OR CABLE TRAY WHICH ARE SERVING UTILIZATION EQUIPMENT OR DEVICES, A DISTANCE (6) SIX FEET SHALL NOT BE EXCEEDED WITHOUT CONTINUOUS SUPPORTING. NFPA 70 (NEC) ARTICLES 336 AND 392 RULES SHALL APPLY.

55. WHEN INSTALLING OPTIC FIBER TRUNK CABLES OR TYPE TC–ER CABLES INTO CONDUITS, NFPA 70 (NEC) ARTICLE 300 RULES SHALL APPLY.

COAXIAL CABLE NOTES

62. TYPES AND SIZES OF THE ANTENNA CABLE ARE BASED ON ESTIMATED LENGTHS. PRIOR TO

    ORDERING CABLE, CONTRACTOR SHALL VERIFY ACTUAL LENGTH BASED ON CONSTRUCTION LAYOUT AND NOTIFY THE PROJECT MANAGER IF ACTUAL LENGTHS EXCEED ESTIMATED LENGTHS.

63. CONTRACTOR SHALL VERIFY THE DOWN–TILT OF EACH ANTENNA WITH A DIGITAL LEVEL.

64. CONTRACTOR SHALL CONFIRM COAX COLOR CODING PRIOR TO CONSTRUCTION.

65. ALL JUMPERS TO THE ANTENNAS FROM THE MAIN TRANSMISSION LINE SHALL BE 1/2" DIA. LDF AND SHALL NOT EXCEED 6'–0".

66. ALL COAXIAL CABLE SHALL BE SECURED TO THE DESIGNED SUPPORT STRUCTURE, IN AN APPROVED MANNER, AT DISTANCES NOT TO EXCEED 4'–0" OC.

67. CONTRACTOR SHALL FOLLOW ALL MANUFACTURER'S RECOMMENDATIONS REGARDING BOTH THE INSTALLATION AND GROUNDING OF ALL COAXIAL CABLES, CONNECTORS, ANTENNAS, AND ALL OTHER EQUIPMENT.

68. CONTRACTOR SHALL GROUND ALL EQUIPMENT. INCLUDING ANTENNAS, RET MOTORS, TMA'S, COAX CABLES, AND RET CONTROL CABLES AS A COMPLETE SYSTEM. GROUNDING SHALL BE EXECUTED BY QUALIFIED WIREMEN IN COMPLIANCE WITH MANUFACTURER'S SPECIFICATION AND RECOMMENDATION.

69. CONTRACTOR SHALL PROVIDE STRAIN–RELIEF AND CABLE SUPPORTS FOR ALL CABLE ASSEMBLIES, COAX CABLES, AND RET CONTROL CABLES. CABLE STRAIN–RELIEFS AND CABLE SUPPORTS SHALL BE APPROVED FOR THE PURPOSE. INSTALLATION SHALL BE IN ACCORDANCE WITH MANUFACTURER'S SPECIFICATIONS AND RECOMMENDATIONS.

70. CONTRACTOR TO VERIFY THAT EXISTING COAX HANGERS ARE STACKABLE SNAP IN HANGERS. IF EXISTING HANGERS ARE NOT STACKABLE SNAP IN HANGERS THE CONTRACTOR SHALL REPLACE EXISTING HANGERS WITH NEW SNAP IN HANGERS IF APPLICABLE.

GENERAL CABLE AND EQUIPMENT NOTES

71. CONTRACTOR SHALL BE RESPONSIBLE TO VERIFY ANTENNA, TMAS, DIPLEXERS, AND COAX CONFIGURATION, MAKE AND MODELS PRIOR TO INSTALLATION.

72. ALL CONNECTIONS FOR HANGERS, SUPPORTS, BRACING, ETC. SHALL BE INSTALLED PER TOWER MANUFACTURER'S RECOMMENDATIONS.

73. CONTRACTOR SHALL REFERENCE THE TOWER STRUCTURAL ANALYSIS/DESIGN DRAWINGS FOR DIRECTIONS ON CABLE DISTRIBUTION/ROUTING.

74. ALL OUTDOOR RF CONNECTORS/CONNECTIONS SHALL BE WEATHERPROOFED, EXCEPT THE RET CONNECTORS, USING BUTYL TAPE AFTER INSTALLATION AND FINAL CONNECTIONS ARE MADE. BUTYL TAPE SHALL HAVE A MINIMUM OF ONE–HALF TAPE WIDTH OVERLAP ON EACH TURN AND EACH LAYER SHALL BE WRAPPED THREE TIMES. WEATHERPROOFING SHALL BE SMOOTH WITHOUT BUCKLING. BUTYL BLEEDING IS NOT ALLOWED.

75. IF REQUIRED TO PAINT ANTENNAS AND/OR COAX:
    A. TEMPERATURE SHALL BE ABOVE 50° F.
    B. PAINT COLOR MUST BE APPROVED BY BUILDING OWNER/LANDLORD.
    C. FOR REGULATED TOWERS, FAA/FCC APPROVED PAINT IS REQUIRED.
    D. DO NOT PAINT OVER COLOR CODING OR ON EQUIPMENT MODEL NUMBERS

76. ALL CABLES SHALL BE GROUNDED WITH COAXIAL CABLE GROUND KITS. FOLLOW THE MANUFACTURER'S RECOMMENDATIONS.
    A. GROUNDING AT THE ANTENNA LEVEL.
    B. GROUNDING AT MID LEVEL, TOWERS WHICH ARE OVER 200'–0", ADDITIONAL CABLE GROUNDING REQUIRED.
    C. GROUNDING AT BASE OF TOWER PRIOR TO TURNING HORIZONTAL.
    D. GROUNDING OUTSIDE THE EQUIPMENT SHELTER AT ENTRY PORT.
    E. GROUNDING INSIDE THE EQUIPMENT SHELTER AT THE ENTRY PORT.

77. ALL PROPOSED GROUND BAR DOWNLEADS ARE TO BE TERMINATED TO THE EXISTING ADJACENT GROUND BAR DOWNLEADS A MINIMUM DISTANCE OF 4'–0" BELOW GROUND BAR. TERMINATIONS MAY BE EXOTHERMIC OR COMPRESSION.

at&t
550 COCHITUATE ROAD
SUITE 550 13 AND 14
FRAMINGHAM, MA 01701

smartlink
1362 MELLON ROAD
SUITE 140
HANOVER, MD 21076

FULLERTON
ENGINEERING · DESIGN
1100 E. WOODFIELD ROAD, SUITE 500
SCHAUMBURG, ILLINOIS 60173
TEL: 847-908-8400
COA# PEC.0001444
www.FullertonEngineering.com

REV	DATE	DESCRIPTION	BY
0	06/15/16	90% REVIEW	KC
1	08/18/16	FOR PERMIT	VV

I HEREBY CERTIFY THAT THESE DRAWING WERE PREPARED BY ME OR UNDER MY DIRECT SUPERVISION AND CONTROL, AND TO THE BEST OF MY KNOWLEDGE AND BELIEF COMPLY WITH THE REQUIREMENTS OF ALL APPLICABLE CODES.

STATE OF CONNECTICUT · HENRY M. BELLAGAMBA · 25358 · LICENSED PROFESSIONAL ENGINEER

SITE NAME
POMFRET - BABBITT HILL ROAD

SITE NUMBER:
CTL01247

SITE ADDRESS
62 BABBIT HILL ROAD
POMFRET, CT 06259

SHEET NAME
NOTES AND SPECIFICATIONS

SHEET NUMBER
SP1

THESE DRAWINGS ARE THE PROPERTY OF FULLERTON ENGINEERING CONSULTANTS, INC. IT IS FOR THE EXCLUSIVE USE OF THIS PROJECT. ANY RE–USE OF THIS DRAWING WITHOUT THE EXPRESSED WRITTEN CONSENT OF FULLERTON ENGINEERING CONSULTANTS, INC. IS PROHIBITED.

NOTICE

Beyond This Point you are entering a controlled area where RF emissions *may exceed* the FCC General Population Exposure Limits.

Follow all posted signs and site guidelines for working in a RF environment.

at&t

Ref: 47CFR 1.1307(b)

CAUTION

Beyond This Point you are entering a controlled area where RF emissions *may exceed* the FCC Occupational Exposure Limits.

Obey all posted signs and site guidelines for working in a RF environment.

at&t

Ref: 47CFR 1.1307(b)

ALERTING SIGNS

WARNING!

DANGER DO NOT TOUCH TOWER!

SERIOUS "RF" BURN HAZARD!

MAINTAIN AN ADEQUATE CLEARANCE BETWEEN TOWER SUPPORTS AND GUY WIRES

FAILURE TO OBEY ALL POSTED SIGNS AND SITE GUIDELINES FOR WORKING IN A RADIO FREQUENCY ENVIRONMENT COULD RESULT IN SERIOUS INJURY. CONTACT CURRENT MAY EXCEED LIMITS PRESCRIBED IN ANSI/EEE C95.1-1992 FOR CONTROLLED ENVIRONMENTS.

at&t

ALERTING SIGN

PROPERTY OF AT&T

at&t

AUTHORIZED PERSONNEL ONLY

IN CASE OF EMERGENCY, OR PRIOR TO PERFORMING MAINTENANCE ON THIS SITE, CALL 800-638-2822 AND REFERENCE CELL SITE NUMBER_____

INFO SIGN #4

INFORMATION

AT&T operates telecommunications antennas at this location. Remain at least 3 feet away from any antenna and obey all posted signs.

Contact the owner(s) of the antenna(s) before working closer than 3 feet from the antenna.

Contact AT&T at _____ prior to performing any maintenance or repairs near AT&T antennas. This is Site#_____

Contact the management office if this door/hatch/gate is found unlocked.

INFORMACION

En esta propiedad se ubican antenas de teleconunicaciones operadas por AT&T. Favor mantener una distancia de no menos de 3 pies y obedecer todos los avisos.

Comuniquese con el propictario o los propicatarios de las antenas antes de trabajar o caminar a una distancia de menos de 3 pies de la antena.

Comuniquese con AT&T _____antes de realizar cualquier mantenimiento o reparaciones cerca de la antenas de AT&T.

Esta es la estacion base numero_____

Favor comunicarse con la oficina de la administracion del edificio si esta puerta o compuerta se encuentra sin candado.

at&t

INFO SIGN #1

INFORMATION

ACTIVE ANTENNAS ARE MOUNTED

- ☐ ON THE OUTSIDE OF THIS BUILDING
- ☐ BEHIND THIS PANEL
- ☐ ON THIS STRUCTURE

STAY BACK A MINIMUM OF 3 FEET FROM THESE ANTENNAS

Contact AT&T at _____ and follow their instructions prior to performing any maintenance or repairs closer than 3 feet from the antennas.

This is AT&T site# _____

at&t

INFO SIGN #2

S T A Y B A C K 3 F E E T F R O M A N T E N N A

at&t

INFO SIGN #3

ALERTING SIGN
(FOR CELL SITE BATTERIES)

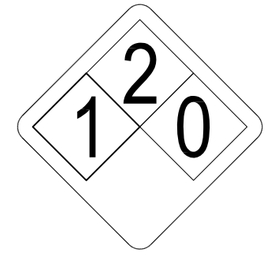

ALERTING SIGN
(FOR DIESEL FUEL)

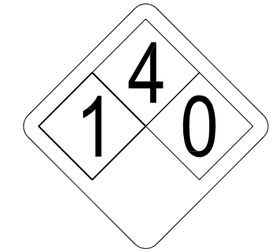

ALERTING SIGN
(FOR PROPANE)

GENERAL SIGNAGE GUIDELINES

STRUCURE TYPLE	INFO SIGN #1	INFO SIGN #2	INFO SIGN #3	INFO SIGN #4	STRIPING	NOTICE SIGN	CAUTION SIGN
TOWERS							
MONOPOLE/MONOPINE/MONOPALM	ENTRANCE GATES, SHELTER DOORS OR ON THE OUTDOOR CABINETS	CLIMBING SIDE OF THE TOWER	ON BACKSIDE OF ANTENNAS	ENTRANCE GATES, SHELTER DOORS OR ON THE OUTDOOR CABINETS			AT THE HEIGHT OF THE FIRST CLIMBING STEP, MIN 9 FT ABOVE GROUND
SEC TOWERS/TOWERS WITH HIGH VOLTAGE	ENTRANCE GATES, SHELTER DOORS OR ON THE OUTDOOR CABINETS	CLIMBING SIDE OF THE TOWER	ON BACKSIDE OF ANTENNAS	ENTRANCE GATES, SHELTER DOORS OR ON THE OUTDOOR CABINETS			
LIGHT POLES/FLAG POLES	ENTRANCE GATES, SHELTER DOORS OR ON THE OUTDOOR CABINETS	ON THE POLE, NO LESS THAN 3FT BELOW THE ANTENNA AND LESS THAN 9FT ABOVE GROUND	ON BACKSIDE OF ANTENNAS	ENTRANCE GATES, SHELTER DOORS OR ON THE OUTDOOR CABINETS			
UTILITY WOOD POLES (JPA)	ENTRANCE GATES, SHELTER DOORS OR ON THE OUTDOOR CABINETS	ON THE POLE, NO LESS THAN 3FT BELOW THE ANTENNA AND LESS THAN 9FT ABOVE GROUND	ON BACKSIDE OF ANTENNAS	ENTRANCE GATES, SHELTER DOORS OR ON THE OUTDOOR CABINETS		IF GP MAX VALUE OF MPE AT ANTENNA LEVEL IS: 0-99%; NOTICE SIGN; OVER 99%: CAUTION SIGN AT NO LESS THAN 3FT BELOW ANTENNA AND 9FT ABOVE GROUND	
MICROCELLS MOUNTED ON NON-JPA POLES	ENTRANCE GATES, SHELTER DOORS OR ON THE OUTDOOR CABINETS	ON THE POLE, NO LESS THAN 3FT BELOW THE ANTENNA AND LESS THAN 9FT ABOVE GROUND	ON BACKSIDE OF ANTENNAS	ENTRANCE GATES, SHELTER DOORS OR ON THE OUTDOOR CABINETS		NOTICE OR CAUTION SIGN AT NO LESS THAN 9FT ABOVE GROUND: ONLY IF THE EXPOSURE EXCEEDS 90% OF THE GENERAL PUBLIC EXPOSURE AT EXPOSURE AT 6FT ABOVE GROUND OR AT OUTSIDE OF SURFACE OF ADJACENT BUILDING	
TOWERS							
AT ALL ACCESS POINTS TO THE ROOF	X			X			
ON ANTENNAS	X		X	X			
CONCEALED ANTENNAS	X	X		X			
ANTENNAS MOUNTED FACING OUTSIDE THE BUILDING	X	X		X			
ANTENNAS ON SUPPORT STRUCTURE	X	X		X			
ROOFVIEW GRAPH						EITHER NOTICE OR CAUTION SIGN (BASED ON ROOFVIEW RESULTS) AT ANTENNA /BARRIER	
RADIATION AREA IS WITHIN 3FT FROM ANTENNA	X	ADJACENT TO EACH ANTENNA		X			
RADIATION AREA IS BEYOND 3FT FROM ANTENNA	X	ADJACENT TO EACH ANTENNA		X	DIAGONAL, YELLOW STRIPING AS TO ROOFVIEW GRAPH		
CHURCH STEEPLES	ACCESS TO STEEPLE	ADJACENT TO ANTENNAS IF ANTENNAS ARE CONCEALED	ON BACKSIDE OF ANTENNAS	ACCESS TO STEEPLE			CAUTION SIGN AT THE ANTENNAS
WATER STATIONS	ACCESS TO LADDER	ADJACENT TO ANTENNAS IF ANTENNAS ARE CONCEALED	ON BACKSIDE OF ANTENNAS	ACCESS TO LADDER			CAUTION SIGN BESIDE INFO SIGN #1, MIN. 9FT ABOVE GROUND

NOTES FOR ROOFTOP SITES:

1. EITHER NOTICE OR CAUTION SIGNS NEED TO BE POSTED AT EACH SECTOR AS CLOSE AS POSSIBLE TO: THE OUTER EDGE OF THE STRIPED OFF AREA OR THE OUTER ANTENNAS OF THE SECTOR
2. IF ROOFVIEWS SHOWS: ONLY BLUE = NOTICE SIGN, BLUE AND YELLOW = CAUTION SIGN, ONLY YELLOW = CAUTION SIGN TO BE INSTALLED
3. SHOULD THE REQUIRED STRIPING AREAS INTERFERE WITH ANY STRUCTURE OR EQUIPMENT (A/C, VENTS, ROOF HATCH, DOORS, OTHER ANTENNAS, DISHES, ETC.). PLEASE NOTIFY AT&T TO MODIFY THE STRIPING AREA, PRIOR TO STARTING THE WORK.

SIGNAGE GUIDELINES CHART

at&t
550 COCHITUATE ROAD
SUITE 550 13 AND 14
FRAMINGHAM, MA 01701

smartlink
1362 MELLON ROAD
SUITE 140
HANOVER, MD 21076

FULLERTON ENGINEERING · DESIGN
1100 E. WOODFIELD ROAD, SUITE 500
SCHAUMBURG, ILLINOIS 60173
TEL: 847-908-8400
COA# PEC.0001444
www.FullertonEngineering.com

REV	DATE	DESCRIPTION	BY
0	06/15/16	90% REVIEW	KC
1	08/18/16	FOR PERMIT	VV

I HEREBY CERTIFY THAT THESE DRAWING WERE PREPARED BY ME OR UNDER MY DIRECT SUPERVISION AND CONTROL, AND TO THE BEST OF MY KNOWLEDGE AND BELIEF COMPLY WITH THE REQUIREMENTS OF ALL APPLICABLE CODES.

STATE OF CONNECTICUT · HENRY M. BELLAGAMBA · 25358 · LICENSED PROFESSIONAL ENGINEER

SITE NAME
POMFRET - BABBITT HILL ROAD

SITE NUMBER:
CTL01247

SITE ADDRESS
62 BABBIT HILL ROAD
POMFRET, CT 06259

SHEET NAME
NOTES AND SPECIFICATIONS

SHEET NUMBER
SP2

THESE DRAWINGS ARE THE PROPERTY OF FULLERTON ENGINEERING CONSULTANTS, INC. IT IS FOR THE EXCLUSIVE USE OF THIS PROJECT. ANY RE-USE OF THIS DRAWING WITHOUT THE EXPRESSED WRITTEN CONSENT OF FULLERTON ENGINEERING CONSULTANTS, INC. IS PROHIBITED.

FEC# 2016.0200. 0013

ABBREVIATIONS

AFF	ABOVE FINISHED FLOOR
AGL	ABOVE GRADE LEVEL
AMSL	ABOVE MEAN SEA LEVEL
APPROX	APPROXIMATE
ATS	AUTOMATIC TRANSFER SWITCH
AWG	AMERICAN WIRE GAUGE
BLDG	BUILDING
BTS	BASE TRANSMISSION STATION
℄	CENTERLINE
CLR	CLEAR
COL	COLUMN
CONC	CONCRETE
CND	CONDUIT
DWG	DRAWING
FT	FOOT(FEET)
EGB	EQUIPMENT GROUND BAR
ELEC	ELECTRICAL
EMT	ELECTRICAL METALLIC TUBING
ELEV	ELEVATION
EQUIP	EQUIPMENT
(E)	EXISTING
EXT	EXTERIOR
FND	FOUNDATION
F	FIBER
FIF	FACILITY INTERFACE FRAME
GA	GAUGE
GALV	GALVANIZED
GPS	GLOBAL POSITIONING SYSTEM
GND	GROUND
GSM	GLOBAL SYSTEM FOR MOBILE COMMUNICATION
LTE	LONG TERM EVOLUTION
MAX	MAXIMUM
MCPA	MULTI-CARRIER POWER AMPLIFIER
MFR	MANUFACTURER
MGB	MASTER GROUND BAR
MIN	MINIMUM
MTS	MANUAL TRANSFER SWITCH
N.T.S.	NOT TO SCALE
O.C.	ON CENTER
OE/OT	OVERHEAD ELECTRIC/TELCO
PPC	POWER PROTECTION CABINET
PL	PROPERY LINE
RBS	RADIO BASED STATION
RET	REMOTE ELECTRIC TILT
RRU	REMOTE RADIO UNIT
RGS	RIGID GALVANIZED STEEL
IN	INCH(ES)
INT	INTERIOR
LB(S), #	POUND(S)
SF	SQUARE FOOT
STL	STEEL
TMA	TOWER MOUNTED AMPLIFIER
TYP	TYPICAL
UE/UT	UNDERGROUND ELECTRIC/TELCO
UNO	UNLESS NOTED OTHERWISE
UMTS	UNIVERSAL MOBILE TELE-COMMUNICATION SYSTEM
VIF	VERIFY IN FIELD
W/	WITH
XFMR	TRANSFORMER

SYMBOLS

- REVISION
- WORK POINT
- UTILITY POLE
- COMPRESSED STONE
- BRICK
- GRAVEL
- CONCRETE
- MASONRY
- EARTH
- STEEL
- CENTERLINE
- PROPERTY LINE
- LEASE LINE
- EASEMENT LINE
- CHAIN LINK FENCE
- WOOD FENCE
- UE — BELOW GRADE ELECTRIC
- UT — BELOW GRADE TELEPHONE
- OE/OT — OVERHEAD ELECTRIC/TELEPHONE
- SECTION REFERENCE (A / S-1)

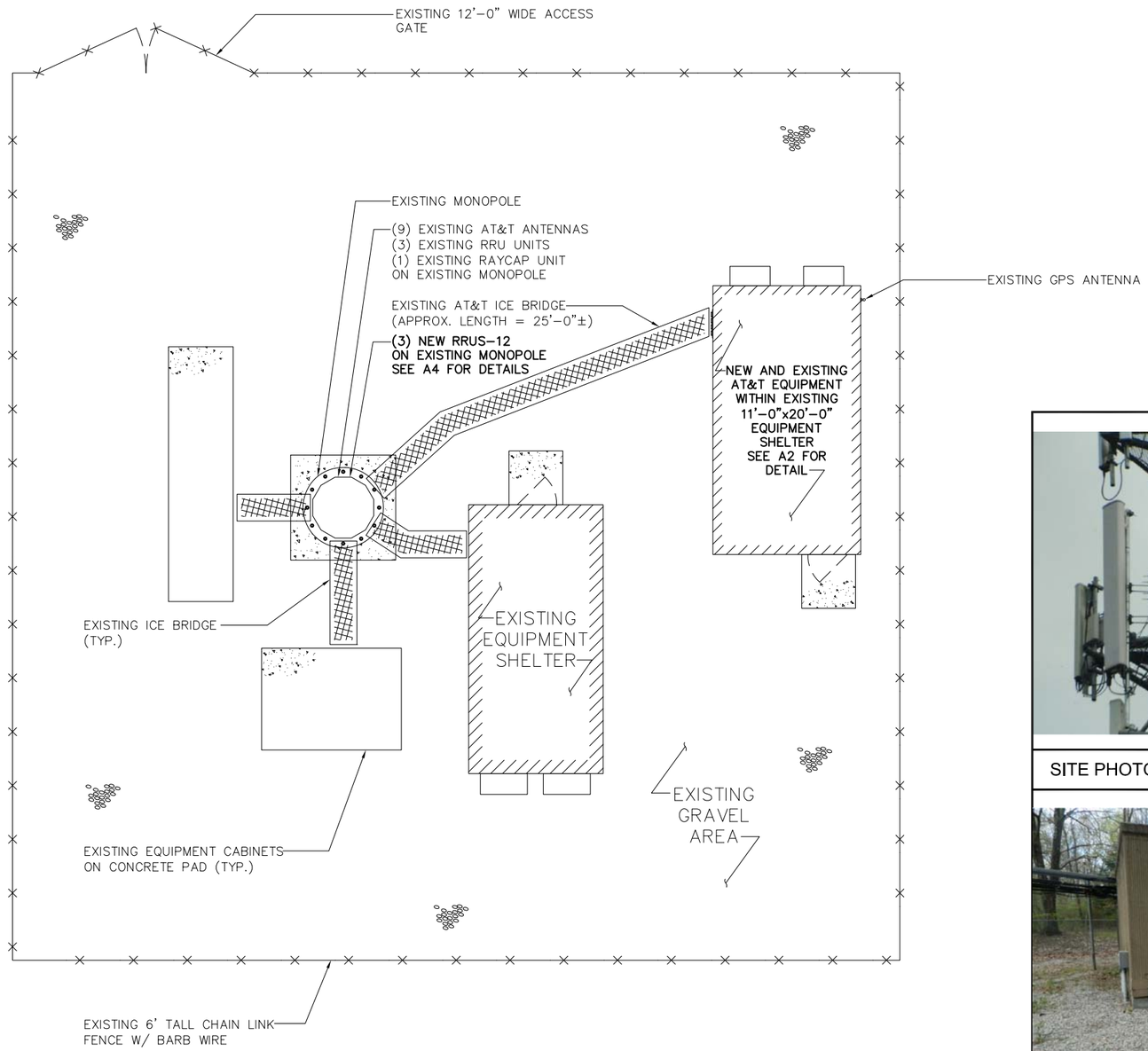

COMPOUND PLAN — SCALE 1" = 10'-0" — 1

SITE PHOTO 1 — SCALE: N.T.S. — 2

SITE PHOTO 2 — SCALE: N.T.S. — 3

at&t
550 COCHITUATE ROAD
SUITE 550 13 AND 14
FRAMINGHAM, MA 01701

smartlink
1362 MELLON ROAD
SUITE 140
HANOVER, MD 21076

FULLERTON ENGINEERING · DESIGN
1100 E. WOODFIELD ROAD, SUITE 500
SCHAUMBURG, ILLINOIS 60173
TEL: 847-908-8400
COA# PEC.0001444
www.FullertonEngineering.com

REV	DATE	DESCRIPTION	BY
0	06/15/16	90% REVIEW	KC
1	08/18/16	FOR PERMIT	VV

I HEREBY CERTIFY THAT THESE DRAWING WERE PREPARED BY ME OR UNDER MY DIRECT SUPERVISION AND CONTROL, AND TO THE BEST OF MY KNOWLEDGE AND BELIEF COMPLY WITH THE REQUIREMENTS OF ALL APPLICABLE CODES.

STATE OF CONNECTICUT — HENRY M. BELLAGAMBA — 25358 — LICENSED PROFESSIONAL ENGINEER

SITE NAME
POMFRET - BABBITT HILL ROAD

SITE NUMBER:
CTL01247

SITE ADDRESS
62 BABBIT HILL ROAD
POMFRET, CT 06259

SHEET NAME
COMPOUND PLAN

SHEET NUMBER
A1

THESE DRAWINGS ARE THE PROPERTY OF FULLERTON ENGINEERING CONSULTANTS, INC. IT IS FOR THE EXCLUSIVE USE OF THIS PROJECT. ANY RE-USE OF THIS DRAWING WITHOUT THE EXPRESSED WRITTEN CONSENT OF FULLERTON ENGINEERING CONSULTANTS, INC. IS PROHIBITED.

FEC# 2016.0200. 0013

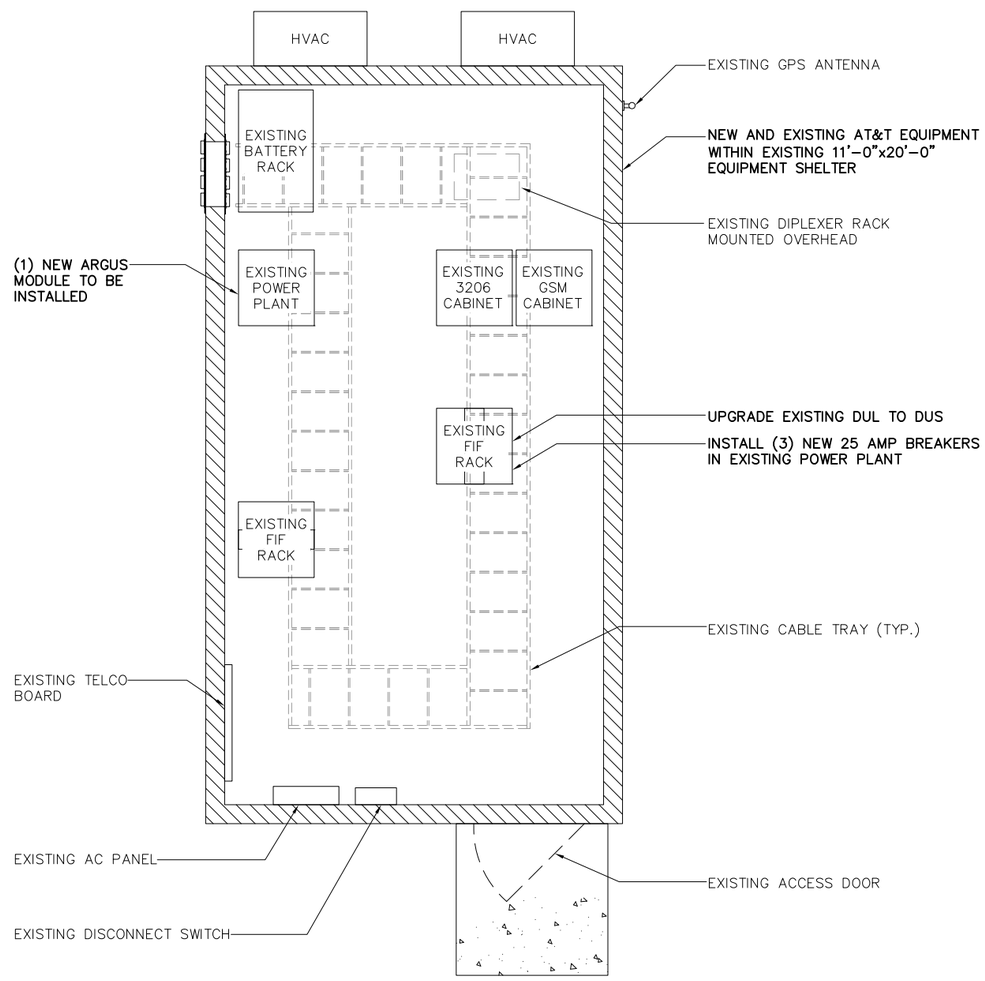

EQUIPMENT PLAN

SCALE: 1/4" = 1'-0"

1

at&t
550 COCHITUATE ROAD
SUITE 550 13 AND 14
FRAMINGHAM, MA 01701

smartlink
1362 MELLON ROAD
SUITE 140
HANOVER, MD 21076

FULLERTON
ENGINEERING · DESIGN
1100 E. WOODFIELD ROAD, SUITE 500
SCHAUMBURG, ILLINOIS 60173
TEL: 847-908-8400
COA# PEC.0001444
www.FullertonEngineering.com

REV	DATE	DESCRIPTION	BY
0	06/15/16	90% REVIEW	KC
1	08/18/16	FOR PERMIT	VV

I HEREBY CERTIFY THAT THESE DRAWING WERE PREPARED BY ME OR UNDER MY DIRECT SUPERVISION AND CONTROL, AND TO THE BEST OF MY KNOWLEDGE AND BELIEF COMPLY WITH THE REQUIREMENTS OF ALL APPLICABLE CODES.

STATE OF CONNECTICUT
HENRY M. BELLAGAMBA
25358
LICENSED
PROFESSIONAL ENGINEER

SITE NAME
POMFRET - BABBITT HILL ROAD

SITE NUMBER:
CTL01247

SITE ADDRESS
62 BABBIT HILL ROAD
POMFRET, CT 06259

SHEET NAME
EQUIPMENT PLAN

SHEET NUMBER
A2

THESE DRAWINGS ARE THE PROPERTY OF FULLERTON ENGINEERING CONSULTANTS, INC. IT IS FOR THE EXCLUSIVE USE OF THIS PROJECT. ANY RE-USE OF THIS DRAWING WITHOUT THE EXPRESSED WRITTEN CONSENT OF FULLERTON ENGINEERING CONSULTANTS, INC. IS PROHIBITED.

NOTES:

1. CALCULATIONS FOR THE STRUCTURE WERE PREPARED BY OTHERS AND THOSE CALCULATIONS CERTIFY THE CAPACITY OF THE STRUCTURE TO SUPPORT THE NEW EQUIPMENT
2. CALCULATIONS FOR THE ANTENNA MOUNTS WERE PREPARED BY FULLERTON AND THOSE CALCULATIONS CERTIFY THE CAPACITY OF THE STRUCTURE TO SUPPORT THE NEW EQUIPMENT
3. CABLES NOT SHOWN FOR CLARITY

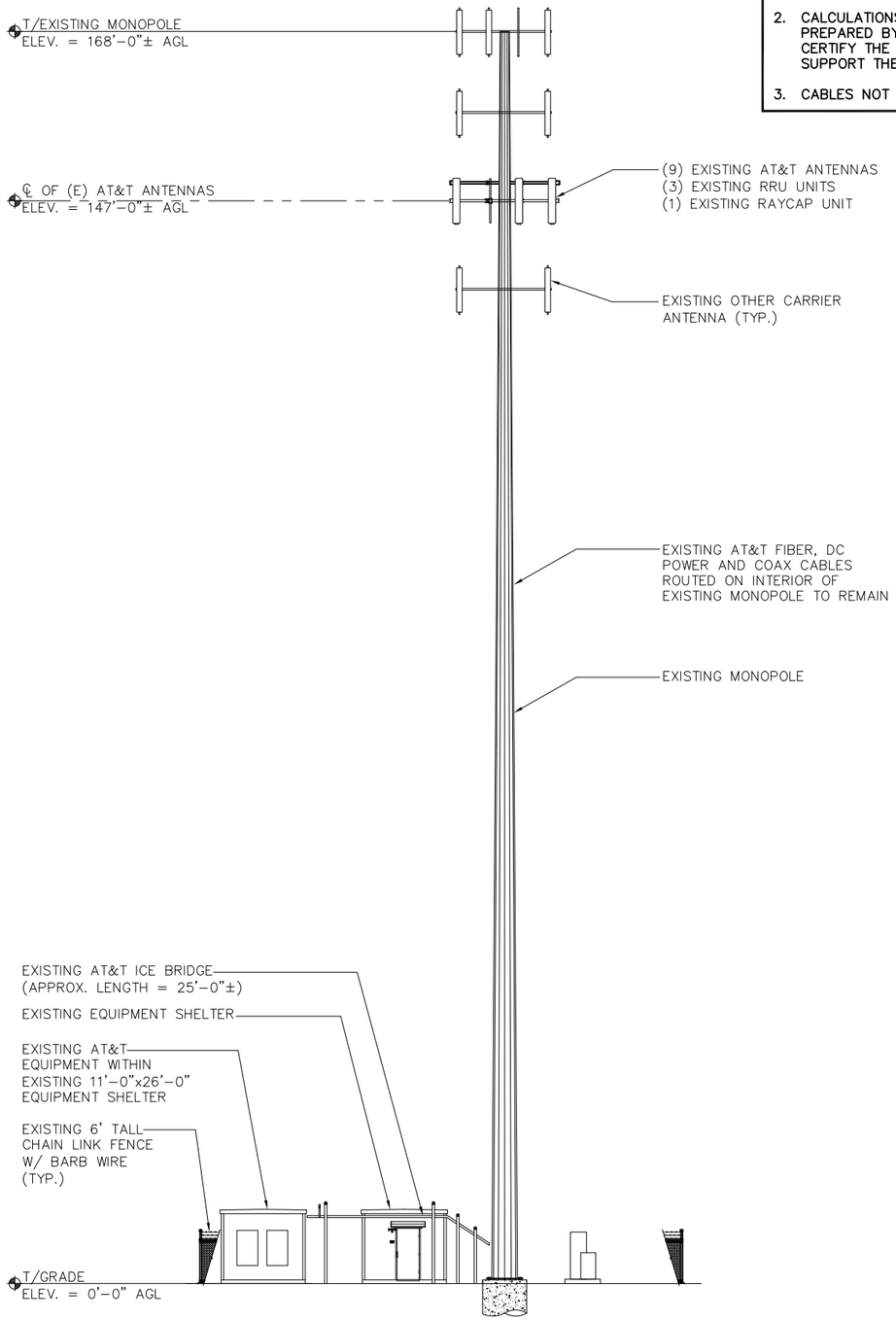

EXISTING ELEVATION SCALE: 1" = 20'-0" 1

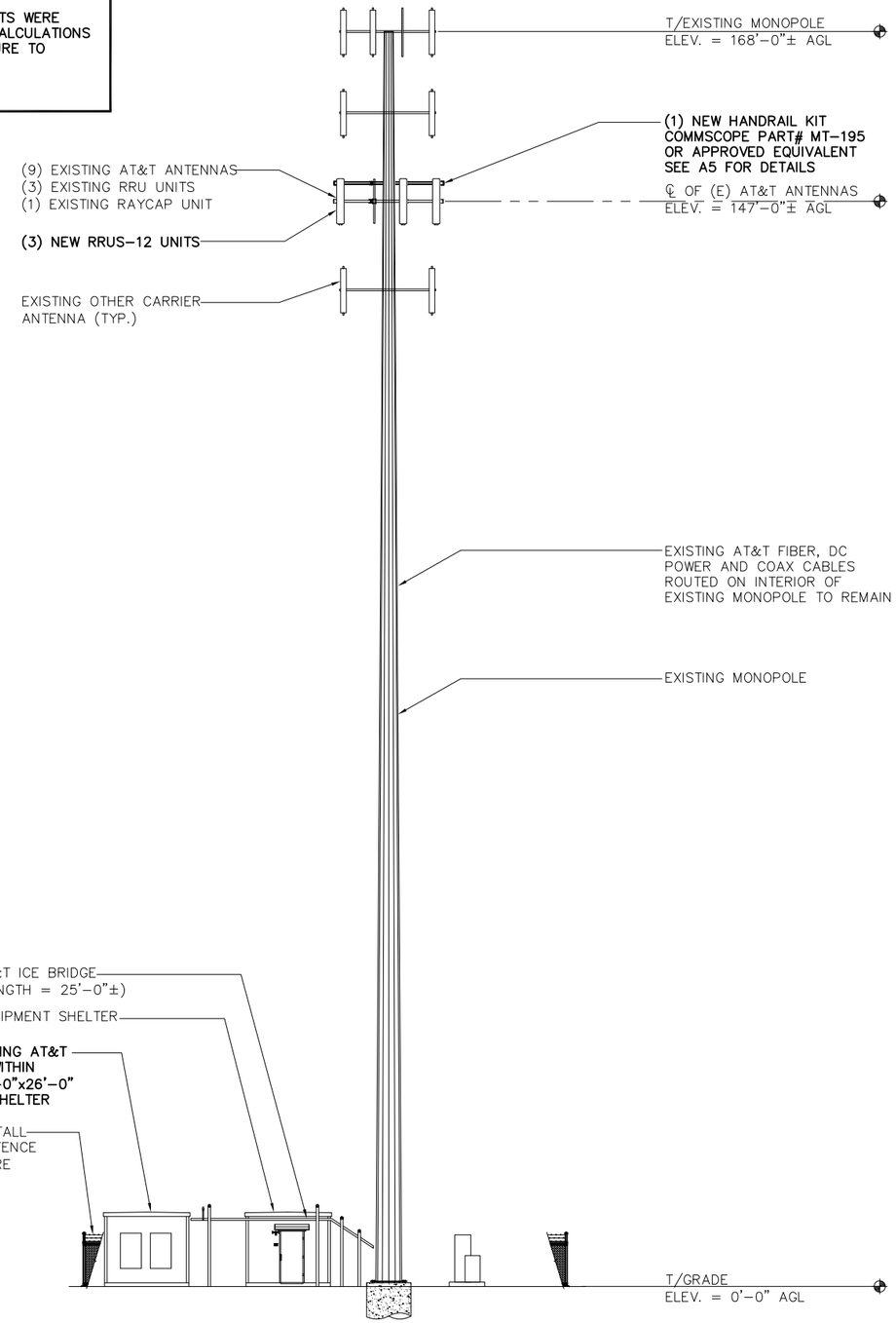

NEW ELEVATION SCALE: 1" = 20'-0" 2

at&t
550 COCHITUATE ROAD
SUITE 550 13 AND 14
FRAMINGHAM, MA 01701

smartlink
1362 MELLON ROAD
SUITE 140
HANOVER, MD 21076

FULLERTON
ENGINEERING · DESIGN
1100 E. WOODFIELD ROAD, SUITE 500
SCHAUMBURG, ILLINOIS 60173
TEL: 847-908-8400
COA# PEC.0001444
www.FullertonEngineering.com

REV	DATE	DESCRIPTION	BY
0	06/15/16	90% REVIEW	KC
1	08/18/16	FOR PERMIT	VV

I HEREBY CERTIFY THAT THESE DRAWING WERE PREPARED BY ME OR UNDER MY DIRECT SUPERVISION AND CONTROL, AND TO THE BEST OF MY KNOWLEDGE AND BELIEF COMPLY WITH THE REQUIREMENTS OF ALL APPLICABLE CODES.

STATE OF CONNECTICUT · HENRY M. BELLAGAMBA · 25358 · LICENSED PROFESSIONAL ENGINEER

SITE NAME
POMFRET - BABBITT HILL ROAD

SITE NUMBER:
CTL01247

SITE ADDRESS
62 BABBIT HILL ROAD
POMFRET, CT 06259

SHEET NAME
ELEVATIONS

SHEET NUMBER
A3

THESE DRAWINGS ARE THE PROPERTY OF FULLERTON ENGINEERING CONSULTANTS, INC. IT IS FOR THE EXCLUSIVE USE OF THIS PROJECT. ANY RE-USE OF THIS DRAWING WITHOUT THE EXPRESSED WRITTEN CONSENT OF FULLERTON ENGINEERING CONSULTANTS, INC. IS PROHIBITED.

FEC# 2016.0200. 0013

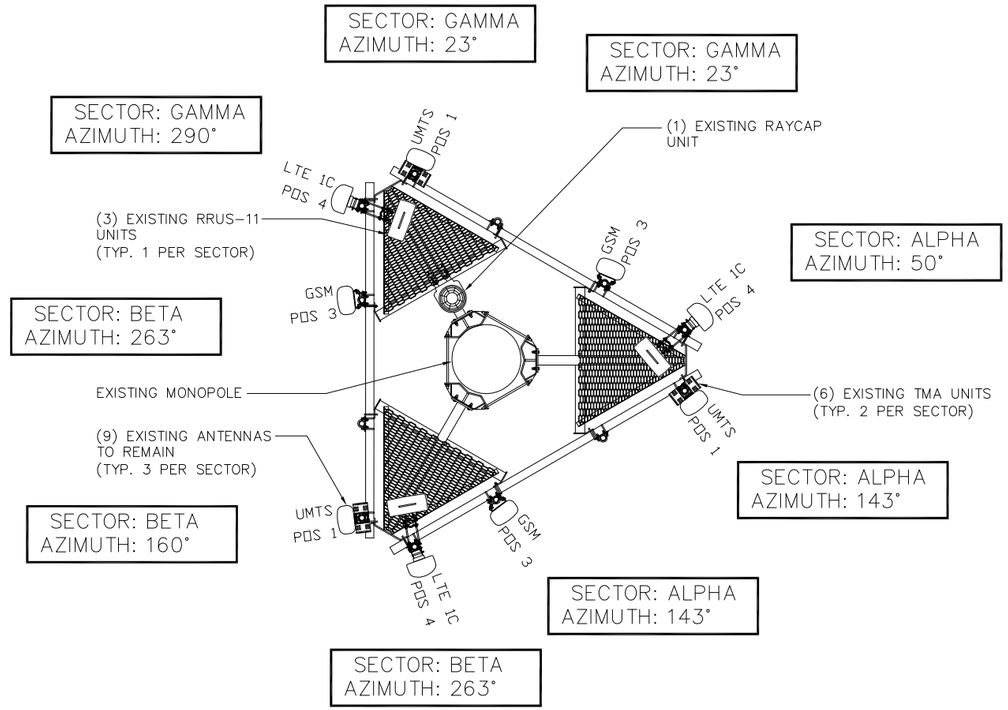

EXISTING ANTENNA PLAN

SCALE: 3/16" = 1'-0" | 1

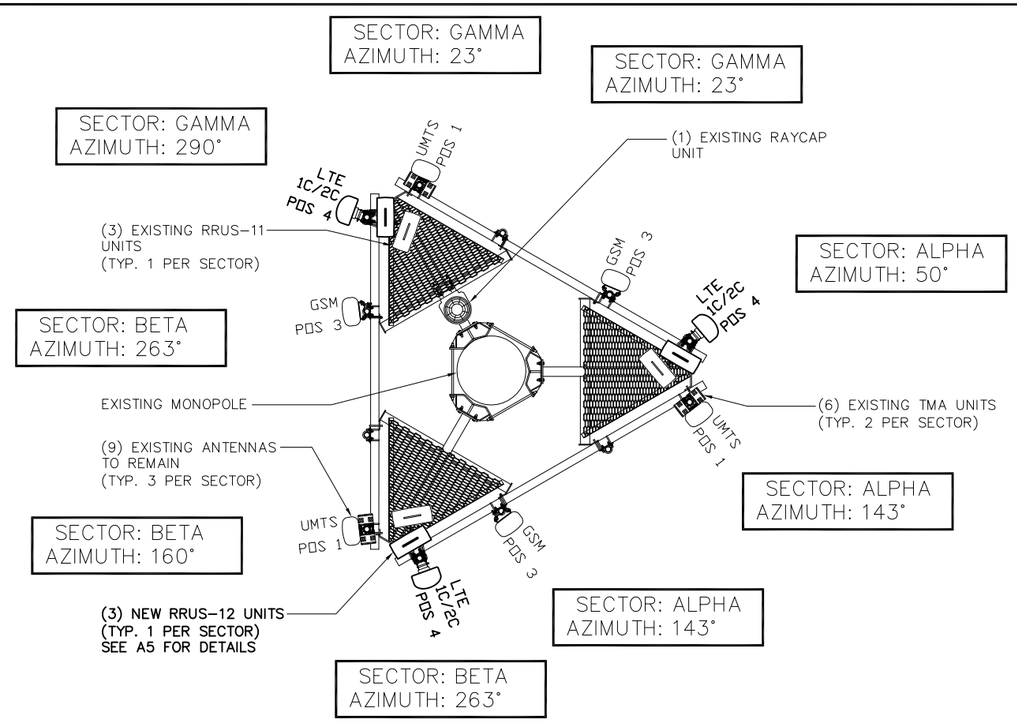

FINAL ANTENNA PLAN

SCALE: 3/16" = 1'-0" | 2

at&t
550 COCHITUATE ROAD
SUITE 550 13 AND 14
FRAMINGHAM, MA 01701

smartlink
1362 MELLON ROAD
SUITE 140
HANOVER, MD 21076

FULLERTON
ENGINEERING · DESIGN
1100 E. WOODFIELD ROAD, SUITE 500
SCHAUMBURG, ILLINOIS 60173
TEL: 847-908-8400
COA# PEC.0001444
www.FullertonEngineering.com

REV	DATE	DESCRIPTION	BY
0	06/15/16	90% REVIEW	KC
1	08/18/16	FOR PERMIT	VV

I HEREBY CERTIFY THAT THESE DRAWING WERE PREPARED BY ME OR UNDER MY DIRECT SUPERVISION AND CONTROL, AND TO THE BEST OF MY KNOWLEDGE AND BELIEF COMPLY WITH THE REQUIREMENTS OF ALL APPLICABLE CODES.

STATE OF CONNECTICUT · HENRY M. BELLAGAMBA · 25358 · LICENSED PROFESSIONAL ENGINEER

SITE NAME
POMFRET - BABBITT HILL ROAD

SITE NUMBER:
CTL01247

SITE ADDRESS
62 BABBIT HILL ROAD
POMFRET, CT 06259

SHEET NAME
ANTENNA PLANS

SHEET NUMBER
A4

THESE DRAWINGS ARE THE PROPERTY OF FULLERTON ENGINEERING CONSULTANTS, INC. IT IS FOR THE EXCLUSIVE USE OF THIS PROJECT. ANY RE-USE OF THIS DRAWING WITHOUT THE EXPRESSED WRITTEN CONSENT OF FULLERTON ENGINEERING CONSULTANTS, INC. IS PROHIBITED.

FEC# 2016.0200. 0013

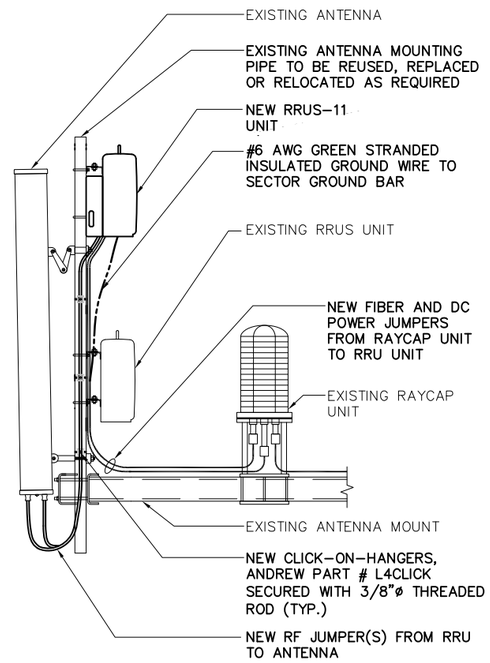

ANTENNA SCHEMATIC SCALE: N.T.S. 3

ANTENNA SPEC SCALE: N.T.S. 1

NOT USED SCALE: N.T.S. 2

NOT USED SCALE: N.T.S. 4

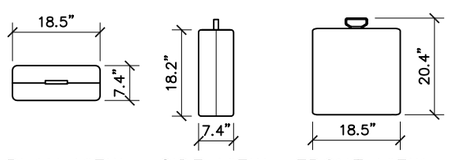

ERICSSON – RRUS 12
WITH SOLAR SHIELD

UNIT WEIGHT 52.2 Lbs

RRU SPEC SCALE: N.T.S. 5

NOT USED SCALE: N.T.S. 6

PRODUCT INFORMATION:

MFR: COMMSCOPE
P/N: MT–195 SERIES OR APPROVED EQUIVALENT
PRODUCT:
1. MT195 12
   – PIPE # MT 651 150: 2–3/8" O.D. X 150" STIFF ARM PIPE
2. MT195 14
   – PIPE # MT 537 174: 2–3/8" O.D. X 174" STIFF ARM PIPE

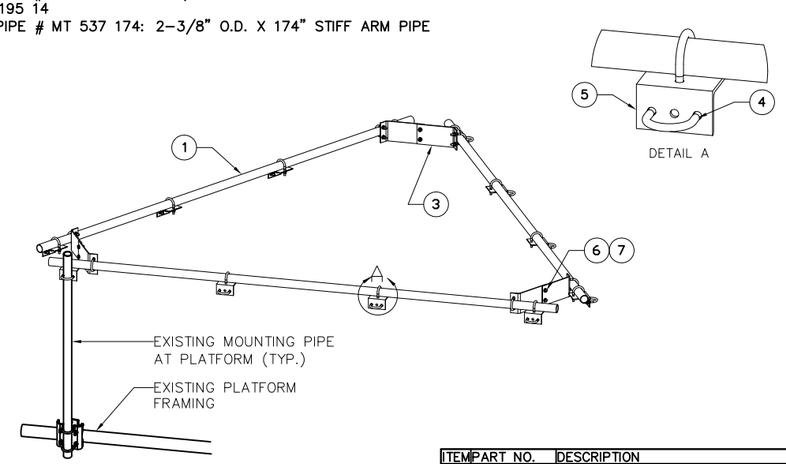

ITEM	PART NO.	DESCRIPTION	QTY.	WEIGHT
1	MT–XXX	ø 2–3/8" O.D. PIPE (SEE TABLE)	3	–
2	MT195HK	HARDWARE KIT (ITEMS 3–7)	1	–
3	MT195.03	END PLATE	6	5.63 LBS
4	GUB–4240	1/2" X 2–1/2" X 4" GALV U–BOLT KIT	30	0.56 LBS
5	XA2020.01	CROSS OVER ANGLE	12	2.66 LBS
6	GB–04145	1/2" X 1–1/2" GALV BOLT KIT	6	0.13 LBS
7	GWF–04	1/2" GALV FLAT WASHER	12	0.02 LBS

HANDRAIL DETAIL SCALE: N.T.S. 7

at&t
550 COCHITUATE ROAD
SUITE 550 13 AND 14
FRAMINGHAM, MA 01701

smartlink
1362 MELLON ROAD
SUITE 140
HANOVER, MD 21076

FULLERTON
ENGINEERING · DESIGN
1100 E. WOODFIELD ROAD, SUITE 500
SCHAUMBURG, ILLINOIS 60173
TEL: 847-908-8400
COA# PEC.0001444
www.FullertonEngineering.com

REV	DATE	DESCRIPTION	BY
0	06/15/16	90% REVIEW	KC
1	08/18/16	FOR PERMIT	VV

I HEREBY CERTIFY THAT THESE DRAWING WERE PREPARED BY ME OR UNDER MY DIRECT SUPERVISION AND CONTROL, AND TO THE BEST OF MY KNOWLEDGE AND BELIEF COMPLY WITH THE REQUIREMENTS OF ALL APPLICABLE CODES.

STATE OF CONNECTICUT · HENRY M. BELLAGAMBA · 25358 · LICENSED PROFESSIONAL ENGINEER

SITE NAME
POMFRET - BABBITT HILL ROAD

SITE NUMBER:
CTL01247

SITE ADDRESS
62 BABBIT HILL ROAD
POMFRET, CT 06259

SHEET NAME
EQUIPMENT DETAILS

SHEET NUMBER
A5

THESE DRAWINGS ARE THE PROPERTY OF FULLERTON ENGINEERING CONSULTANTS, INC. IT IS FOR THE EXCLUSIVE USE OF THIS PROJECT. ANY RE-USE OF THIS DRAWING WITHOUT THE EXPRESSED WRITTEN CONSENT OF FULLERTON ENGINEERING CONSULTANTS, INC. IS PROHIBITED.

FINAL ANTENNA CONFIGURATION AND CABLE SCHEDULE
SUPPLIED BY AT&T WIRELESS, FROM RF CONFIG. DATED (05/18/16)

SECTOR	ANTENNA NUMBER	ANTENNA STATUS & TYPE	ANTENNA MODEL NUMBER	ANTENNA VENDOR	TMA/RRU UNIT	AZIMUTH	ANTENNA CL FROM GROUND	CABLE FEEDER TYPE	CABLE FEEDER LENGTH	RAYCAP UNIT
ALPHA	A-1	(E) UMTS ANTENNA	7770	POWERWAVE	(2) EXISTING TMA UNIT(S)	143°	147'-0"	1-5/8"ø LDF7-50A	210'-0"	(1) (E) DC6-48-60-18-8F UNIT
								1-5/8"ø LDF7-50A	210'-0"	
	A-2	-	-	-	-	-	-	-		
	A-3	(E) GSM ANTENNA	7770	POWERWAVE	-	143°	147'-0"	1-5/8"ø LDF7-50A	210'-0"	
	A-4	**(E) LTE1C/2C ANTENNA**	AM-X-CD-17 -65-00T-RET	KMW	(1) EXISTING RRUS-11 UNIT **AND (1) NEW RRUS-12 UNIT**	50°	147'-0"	(1) EXISTING FIBER CABLE	210'-0"	
								(2) EXISTING DC POWER CABLES	210'-0"	
BETA	B-1	(E) UMTS ANTENNA	7770	POWERWAVE	(2) EXISTING TMA UNIT(S)	263°	147'-0"	1-5/8"ø LDF7-50A	210'-0"	
								1-5/8"ø LDF7-50A	210'-0"	
	B-2	-	-	-	-	-	-	-		
	B-3	(E) GSM ANTENNA	7770	POWERWAVE	-	263°	147'-0"	1-5/8"ø LDF7-50A	210'-0"	
	B-4	**(E) LTE1C/2C ANTENNA**	AM-X-CD-17 -65-00T-RET	KMW	(1) EXISTING RRUS-11 UNIT **AND (1) NEW RRUS-12 UNIT**	160°	147'-0"	SEE ANTENNA A-4 FOR CABLE TYPE AND LENGTH		
GAMMA	C-1	(E) UMTS ANTENNA	7770	POWERWAVE	(2) EXISTING TMA UNIT(S)	23°	147'-0"	1-5/8"ø LDF7-50A	210'-0"	
								1-5/8"ø LDF7-50A	210'-0"	
	C-2	-	-	-	-	-	-	-		
	C-3	(E) GSM ANTENNA	7770	POWERWAVE	-	23°	147'-0"	1-5/8"ø LDF7-50A	210'-0"	
	C-4	**(E) LTE1C/2C ANTENNA**	AM-X-CD-17 -65-00T-RET	KMW	(1) EXISTING RRUS-11 UNIT **AND (1) NEW RRUS-12 UNIT**	290°	290'-0"	SEE ANTENNA A-4 FOR CABLE TYPE AND LENGTH		

ANTENNA & CABLE CONFIGURATION

SCALE: N.T.S. | 1

at&t
550 COCHITUATE ROAD
SUITE 550 13 AND 14
FRAMINGHAM, MA 01701

smartlink
1362 MELLON ROAD
SUITE 140
HANOVER, MD 21076

FULLERTON ENGINEERING · DESIGN
1100 E. WOODFIELD ROAD, SUITE 500
SCHAUMBURG, ILLINOIS 60173
TEL: 847-908-8400
COA# PEC.0001444
www.FullertonEngineering.com

REV	DATE	DESCRIPTION	BY
0	06/15/16	90% REVIEW	KC
1	08/18/16	FOR PERMIT	VV

I HEREBY CERTIFY THAT THESE DRAWING WERE PREPARED BY ME OR UNDER MY DIRECT SUPERVISION AND CONTROL, AND TO THE BEST OF MY KNOWLEDGE AND BELIEF COMPLY WITH THE REQUIREMENTS OF ALL APPLICABLE CODES.

STATE OF CONNECTICUT · HENRY M. BELLAGAMBA · 25358 · LICENSED PROFESSIONAL ENGINEER

SITE NAME
POMFRET - BABBITT HILL ROAD

SITE NUMBER:
CTL01247

SITE ADDRESS
62 BABBIT HILL ROAD
POMFRET, CT 06259

SHEET NAME
ANTENNA & CABLE CONFIGURATION

SHEET NUMBER
A6

THESE DRAWINGS ARE THE PROPERTY OF FULLERTON ENGINEERING CONSULTANTS, INC. IT IS FOR THE EXCLUSIVE USE OF THIS PROJECT. ANY RE-USE OF THIS DRAWING WITHOUT THE EXPRESSED WRITTEN CONSENT OF FULLERTON ENGINEERING CONSULTANTS, INC. IS PROHIBITED.

1. CONTRACTOR IS TO REFER TO AT&T'S MOST CURRENT RADIO FREQUENCY DATA SHEET (RFDS) PRIOR TO CONSTRUCTION.
2. THE SIZE, HEIGHT, AND DIRECTION OF THE ANTENNAS SHALL BE ADJUSTED TO ACHIEVE THE AZIMUTHS SPECIFIED AND LIMIT SHADOWING AND TO MEET THE SYSTEM REQUIREMENTS.
3. CONTRACTOR SHALL VERIFY THE HEIGHT OF THE ANTENNA WITH THE AT&T WIRELESS PROJECT MANAGER.
4. VERIFY TYPE AND SIZE OF TOWER LEG PRIOR TO ORDERING ANY ANTENNA MOUNT.
5. UNLESS NOTED OTHERWISE THE CONTRACTOR MUST PROVIDE ALL MATERIAL NECESSARY.
6. ANTENNA AZIMUTHS ARE DEGREES OFF OF TRUE NORTH, BEARING CLOCKWISE, IN WHICH ANTENNA FACE IS DIRECTED. ALL ANTENNAS (AND SUPPORTING STRUCTURES AS PRACTICAL) SHALL BE ACCURATELY ORIENTED IN THE SPECIFIED DIRECTION.
7. CONTRACTOR SHALL VERIFY ALL RF INFORMATION PRIOR TO CONSTRUCTION.
8. SWEEP TEST SHALL BE PERFORMED BY GENERAL CONTRACTOR AND SUBMITTED TO AT&T WIRELESS CONSTRUCTION SPECIALIST. TEST SHALL BE PERFORMED PER AT&T WIRELESS STANDARDS.
9. CABLE LENGTHS WERE DETERMINED BASED ON THE DESIGN DRAWING. CONTRACTOR TO VERIFY ACTUAL LENGTH DURING PRE-CONSTRUCTION WALK.
10. CONTRACTOR TO USE ROSENBERGER FIBER LINE HANGER COMPONENTS (OR ENGINEER APPROVED EQUAL).

ANTENNA AND CABLING NOTES

SCALE: N.T.S. | 1

RF, DC, & COAX CABLE MARKING LOCATIONS TABLE

NO	LOCATIONS
1	EACH TOP-JUMPER SHALL BE COLOR CODED WITH (1) SET OF 3" WIDE BANDS.
2	EACH MAIN COAX SHALL BE COLOR CODED WITH (1) SET OF 3" WIDE BANDS NEAR THE TOP-JUMPER CONNECTION AND WITH (1) SET OF 3/4" WIDE COLOR BANDS JUST PRIOR TO ENTERING THE BTS OR TRANSMITTER BUILDING.
3	CABLE ENTRY PORT ON THE INTERIOR OF THE SHELTER.
4	ALL BOTTOM JUMPERS SHALL BE COLOR CODED WITH (1) SET OF 3/4" WIDE BANDS ON EACH END OF THE BOTTOM JUMPER.
5	ALL BOTTOM JUMPERS SHALL BE COLOR CODED WITH (1) SET OF 3/4" WIDE BANDS ON EACH END OF THE BOTTOM JUMPER.

CABLE MARKING DIAGRAM

SCALE: N.T.S. | 2

1. THE ANTENNA SYSTEM COAX SHALL BE LABELED WITH VINYL TAPE.
2. THE STANDARD IS BASED ON EIGHT COLORED TAPES-RED, BLUE, GREEN, YELLOW, ORANGE, BROWN, WHITE, AND VIOLET. THESE TAPES MUST BE 3/4" WIDE & UV RESISTANT SUCH AS SCOTCH 35 VINYL ELECTRICAL COLOR CODING TAPE AND SHOULD BE READILY AVAILABLE TO THE ELECTRICIAN OR CONTRACTOR ON SITE.
3. USING COLOR BANDS ON THE CABLES, MARK ALL RF CABLE BY SECTOR AND CABLE NUMBER AS SHOWN ON "CABLE COLOR CHART".
4. WHEN AN EXISTING COAXIAL LINE THAT IS INTENDED TO BE A SHARED LINE BETWEEN TECHNOLOGIES IS ENCOUNTERED, THE CONTRACTOR SHALL REMOVE THE EXISTING COLOR CODING SCHEME AND REPLACE IT WITH THE COLOR CODING STANDARD. IN THE ABSENCE OF AN EXISTING COLOR CODING AND TAGGING SCHEME, OR WHEN INSTALLING PROPOSED COAXIAL CABLES, THIS GUIDELINE SHALL BE IMPLEMENTED AT THAT SITE REGARDLESS OF TECHNOLOGY.
5. ALL COLOR CODE TAPE SHALL BE 3M-35 AND SHALL BE INSTALLED USING A MINIMUM OF (3) THREE WRAPS OF TAPE AND SHALL BE NEATLY TRIMMED AND SMOOTHED OUT SO AS TO AVOID UNRAVELING.
6. ALL COLOR BANDS INSTALLED AT THE TOP OF THE TOWER SHALL BE A MINIMUM OF 3" WIDE, AND SHALL HAVE A MINIMUM OF 3/4" OF SPACE BETWEEN EACH COLOR.
7. ALL COLOR CODES SHALL BE INSTALLED SO AS TO ALIGN NEATLY WITH ONE ANOTHER FROM SIDE-TO-SIDE.
8. IF EXISTING CABLES AT THE SITE ALREADY HAVE A COLOR CODING SCHEME AND THEY ARE NOT INTENDED TO BE REUSED OR SHARED WITH THE NEW TECHNOLOGY, THE EXISTING COLOR CODING SCHEME SHALL REMAIN UNTOUCHED.

CABLE MARKING NOTES

SCALE: N.T.S. | 3

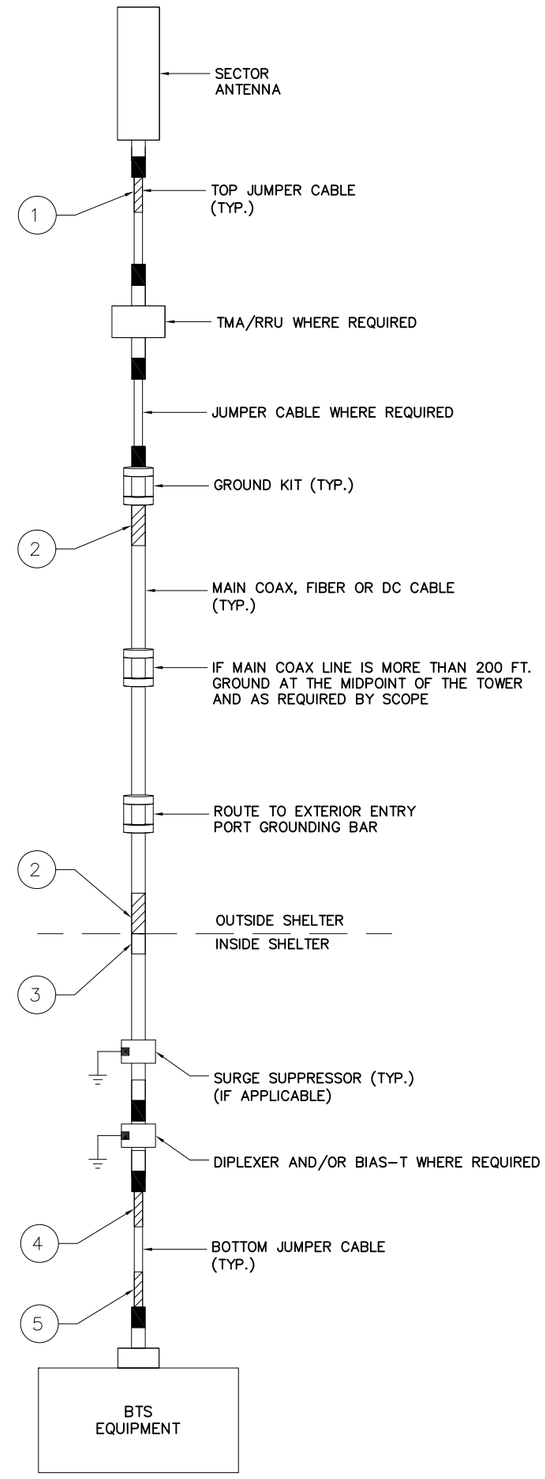

CABLE COLOR CODING DIAGRAM

SCALE: N.T.S. | 4

at&t
550 COCHITUATE ROAD
SUITE 550 13 AND 14
FRAMINGHAM, MA 01701

smartlink
1362 MELLON ROAD
SUITE 140
HANOVER, MD 21076

FULLERTON ENGINEERING · DESIGN
1100 E. WOODFIELD ROAD, SUITE 500
SCHAUMBURG, ILLINOIS 60173
TEL: 847-908-8400
COA# PEC.0001444
www.FullertonEngineering.com

REV	DATE	DESCRIPTION	BY
0	06/15/16	90% REVIEW	KC
1	08/18/16	FOR PERMIT	VV

I HEREBY CERTIFY THAT THESE DRAWING WERE PREPARED BY ME OR UNDER MY DIRECT SUPERVISION AND CONTROL, AND TO THE BEST OF MY KNOWLEDGE AND BELIEF COMPLY WITH THE REQUIREMENTS OF ALL APPLICABLE CODES.

STATE OF CONNECTICUT · HENRY M. BELLAGAMBA · 25358 · LICENSED PROFESSIONAL ENGINEER

SITE NAME
POMFRET - BABBITT HILL ROAD

SITE NUMBER:
CTL01247

SITE ADDRESS
62 BABBIT HILL ROAD
POMFRET, CT 06259

SHEET NAME
CABLE NOTES AND COLOR CODING

SHEET NUMBER
A7

THESE DRAWINGS ARE THE PROPERTY OF FULLERTON ENGINEERING CONSULTANTS, INC. IT IS FOR THE EXCLUSIVE USE OF THIS PROJECT. ANY RE-USE OF THIS DRAWING WITHOUT THE EXPRESSED WRITTEN CONSENT OF FULLERTON ENGINEERING CONSULTANTS, INC. IS PROHIBITED.

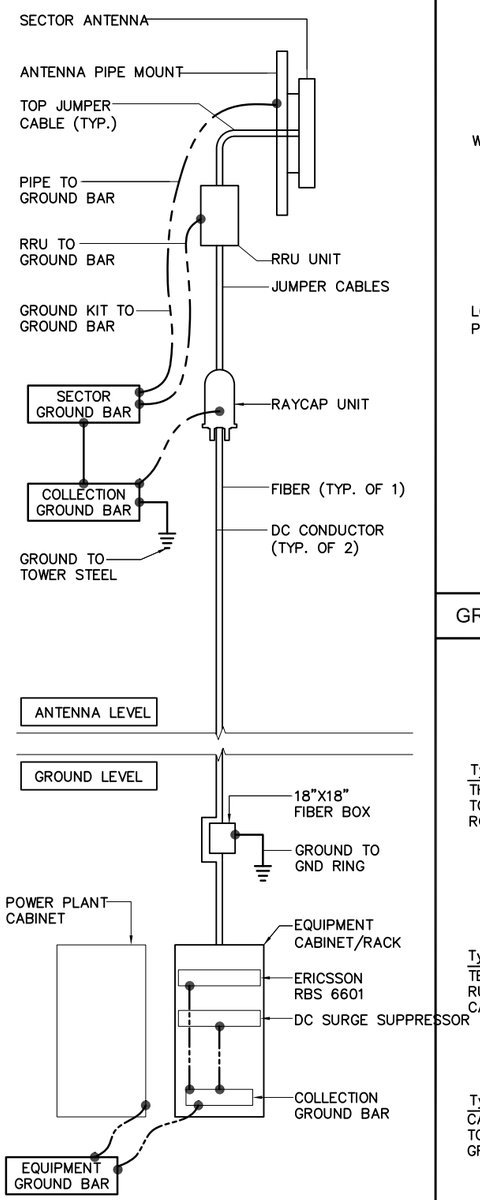

GROUNDING SCHEMATIC SCALE: N.T.S. 1

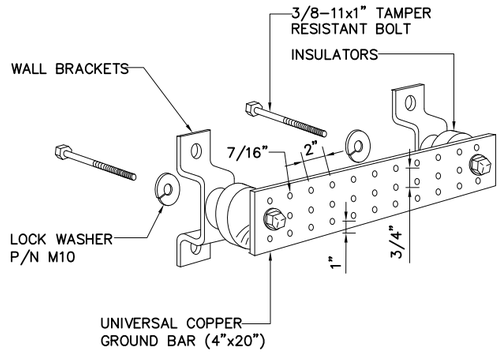

GROUND BAR DETAIL SCALE: N.T.S. 2

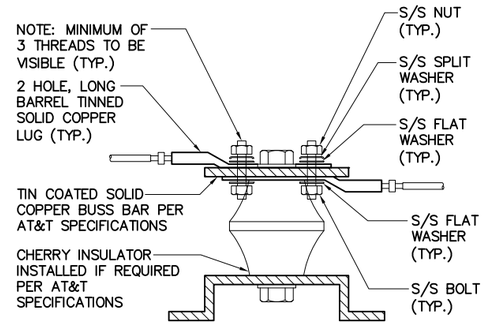

NOTES:

1. ALL HARDWARE 18-8 STAINLESS STEEL INCLUDING SPLIT WASHERS.
2. COAT WIRE END WITH ANTI-OXIDATION COMPOUND PRIOR TO INSERTION INTO LUG BARREL AND CRIMPING.
3. APPLY ANTI-OXIDATION COMPOUND BETWEEN ALL LUGS AND BUSS BARS PRIOR TO MATING AND BOLTING.

LUG DETAIL SCALE: N.T.S. 3

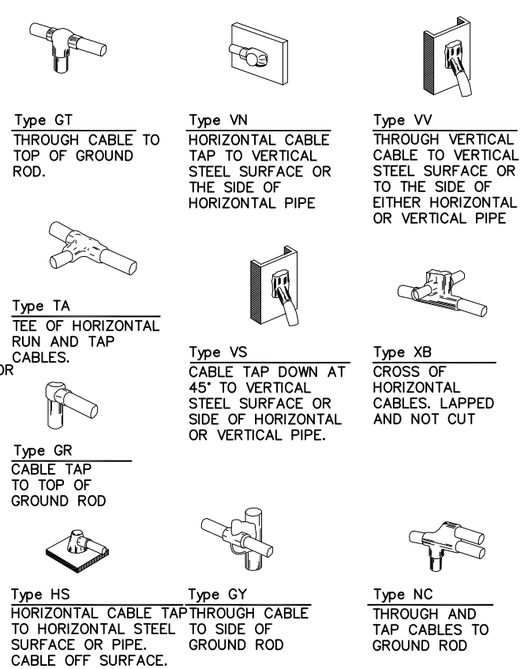

EXOTHERMIC WELD DETAILS SCALE: N.T.S. 4

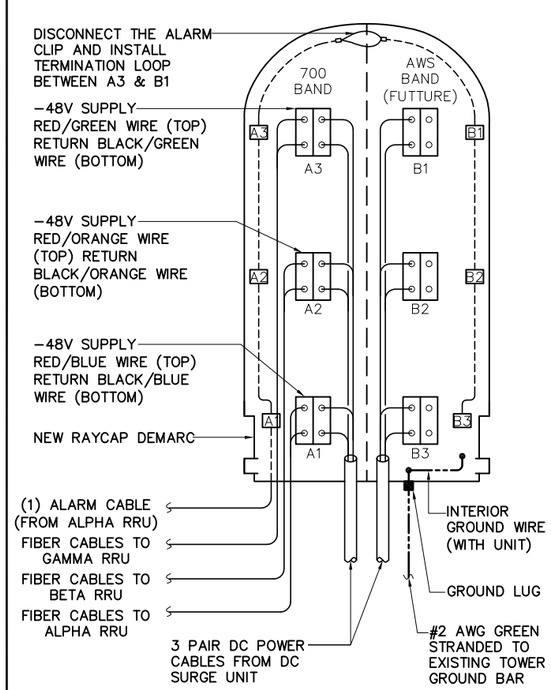

RAYCAP DC POWER AND ALARM DET. SCALE: N.T.S. 5

NOT USED SCALE: N.T.S. 6

at&t
550 COCHITUATE ROAD
SUITE 550 13 AND 14
FRAMINGHAM, MA 01701

smartlink
1362 MELLON ROAD
SUITE 140
HANOVER, MD 21076

FULLERTON
ENGINEERING · DESIGN
1100 E. WOODFIELD ROAD, SUITE 500
SCHAUMBURG, ILLINOIS 60173
TEL: 847-908-8400
COA# PEC.0001444
www.FullertonEngineering.com

REV	DATE	DESCRIPTION	BY
0	06/15/16	90% REVIEW	KC
1	08/18/16	FOR PERMIT	VV

I HEREBY CERTIFY THAT THESE DRAWING WERE PREPARED BY ME OR UNDER MY DIRECT SUPERVISION AND CONTROL, AND TO THE BEST OF MY KNOWLEDGE AND BELIEF COMPLY WITH THE REQUIREMENTS OF ALL APPLICABLE CODES.

STATE OF CONNECTICUT · HENRY M. BELLAGAMBA · 25358 · LICENSED PROFESSIONAL ENGINEER

SITE NAME
POMFRET - BABBITT HILL ROAD

SITE NUMBER:
CTL01247

SITE ADDRESS
62 BABBIT HILL ROAD
POMFRET, CT 06259

SHEET NAME
GROUNDING DETAILS

SHEET NUMBER
A8

THESE DRAWINGS ARE THE PROPERTY OF FULLERTON ENGINEERING CONSULTANTS, INC. IT IS FOR THE EXCLUSIVE USE OF THIS PROJECT. ANY RE-USE OF THIS DRAWING WITHOUT THE EXPRESSED WRITTEN CONSENT OF FULLERTON ENGINEERING CONSULTANTS, INC. IS PROHIBITED.

FEC# 2016.0200. 0013