SITE NAME: PLAINVILLE - SPARKS ST.
FA NUMBER: 10035333
SITE NUMBER: CTL01054

10 SPARKS STREET
PLAINVILLE, CT 06062
COUNTY: HARTFORD

CROWN CASTLE SITE NAME: CREATIVE DIMENSIONS
CROWN CASTLE SITE NUMBER: 876333

PROJECT TEAM

CLIENT REPRESENTATIVE

COMPANY: SMARTLINK, LLC
ADDRESS: 1362 MELLON ROAD, SUITE 140
CITY, STATE, ZIP: HANOVER, MD 21076
CONTACT: RICH WAGNER
E-MAIL: RWAGNER@SMARTLINKLLC.COM

SITE ACQUISITION

COMPANY: SMARTLINK, LLC
ADDRESS: 33 BOSTON POST ROAD WEST, SUITE 210
CITY, STATE, ZIP: MARLBOROUGH, MA 01752
CONTACT: TODD OLIVER
PHONE: (774) 369-3618
E-MAIL: TODD.OLIVER@SMARTLINKLLC.COM

ENGINEER

COMPANY: MASER CONSULTING P.A.
ADDRESS: 331 NEWMAN SPRINGS RD., SUITE 203
CITY, STATE, ZIP: RED BANK, NJ 07701-5699
CONTACT: FRANK PAZDEN
PHONE: (973) 398-3110 x4505
E-MAIL: FPAZDEN@MASERCONSULTING.COM

RF ENGINEER

COMPANY: NEW CINGULAR WIRELESS PCS, LLC
ADDRESS: 550 COCHITUATE RD.
CITY, STATE, ZIP: FRAMINGHAM, MA 01701
CONTACT: CAMERON SYME
E-MAIL: CS6970@ATT.COM

CONSTRUCTION MANAGER

COMPANY: SMARTLINK, LLC.
ADDRESS: 33 BOSTON POST ROAD WEST, SUITE 210
CITY, STATE, ZIP: MARLBOROUGH, MA 01752
CONTACT: MARK DONNELLY
PHONE: (617) 515-2080
E-MAIL: MARK.DONNELLY@SMARTLINKLLC.COM

SITE INFORMATION

APPLICANT/LESSEE

at&t

NEW CINGULAR WIRELESS PCS, LLC
550 COCHITUATE RD.
FRAMINGHAM, MA 01701

PROPERTY/TOWER OWNER:

NAME:	CROWN CASTLE
ADDRESS:	12 GILL STREET, SUITE # 5800
CITY, STATE, ZIP:	WOBURN, MA 01801
SITE ID#:	876333
LATITUDE:	41.673461° N
LONGITUDE:	72.854503° W
LAT./LONG. TYPE:	NAD 83
AREA OF CONSTRUCTION:	EXISTING EQUIPMENT SHELTER AND TOWER
ZONING/JURISDICTION:	CITY OF PLAINVILLE
CURRENT USE/PROPOSED USE:	UNMANNED TELECOMMUNICATIONS FACILITY
HANDICAP REQUIREMENTS:	FACILITY IS UNMANNED AND NOT FOR HUMAN HABITATION. HANDICAPPED ACCESS NOT REQUIRED.
CONSTRUCTION TYPE:	IIB
USE GROUP:	U

VICINITY MAP

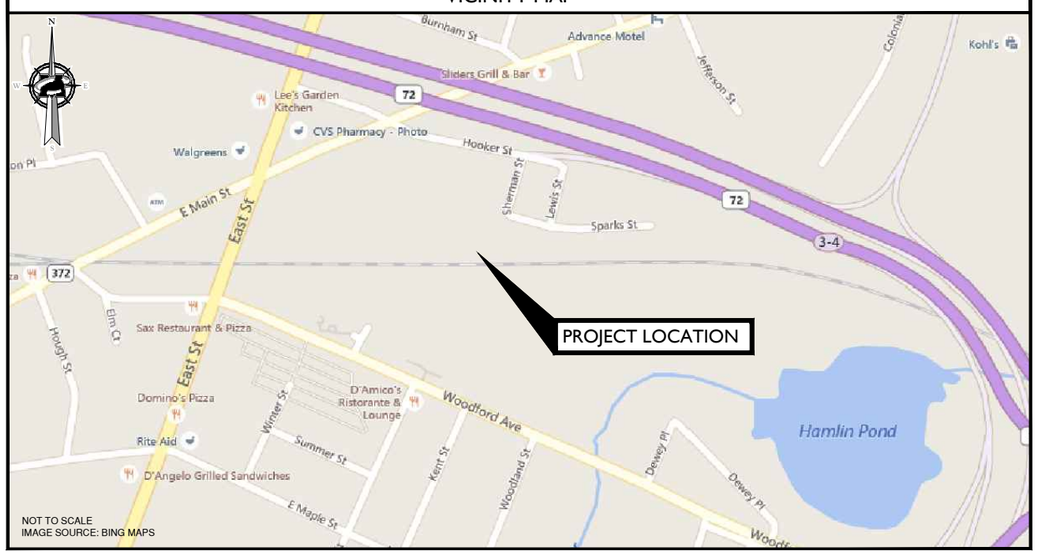

NOT TO SCALE
IMAGE SOURCE: BING MAPS

CODE COMPLIANCE

ALL WORK AND MATERIALS SHALL BE PERFORMED AND INSTALLED IN ACCORDANCE WITH THE CURRENT EDITIONS OF THE FOLLOWING CODES AS ADOPTED BY THE LOCAL GOVERNING AUTHORITIES. NOTHING IN THESE PLANS IS TO BE CONSTRUED TO PERMIT WORK NOT CONFORMING TO THE LATEST EDITIONS OF THE FOLLOWING CODES.

1. CONNECTICUT STATE BUILDING CODE (2005) & ALL SUBSEQUENT AMENDMENTS
2. NATIONAL ELECTRIC CODE 2011
3. NATIONAL FIRE PROTECTION ASSOCIATION 70 - 2011
4. LIGHTNING PROTECTION CODE 201
5. AMERICAN CONCRETE INSTITUTE 318
6. AMERICAN INSTITUTE OF STEEL CONSTRICTION 14 ED.
7. EIA/TIA-222 REVISION F
8. TIA 607 FOR GROUNDING
9. INSTITUTE FOR ELECTRICAL AND ELECTRONICS ENGINEERS 81
10. IEEE C2 LATEST EDITION
11. TELCORDIA GR-1275 12. ANSI T1.311

GENERAL CONTRACTOR NOTES

DO NOT SCALE DRAWINGS

CONTRACTOR SHALL VERIFY ALL PLANS AND EXISTING DIMENSIONS AND CONDITIONS ON THE JOB SITE AND SHALL IMMEDIATELY NOTIFY THE ARCHITECT/ENGINEER IN WRITING OF ANY DISCREPANCIES BEFORE PROCEEDING WITH THE WORK OR BE RESPONSIBLE FOR SAME.

GENERAL NOTES

THE FACILITY IS UNMANNED AND NOT FOR HUMAN HABITATION. A TECHNICIAN WILL VISIT THE SITE AS REQUIRED FOR ROUTINE MAINTENANCE. THE PROJECT WILL NOT RESULT IN ANY SIGNIFICANT DISTURBANCE OR EFFECT ON DRAINAGE; NO SANITARY SEWER SERVICE, POTABLE WATER, OR TRASH DISPOSAL IS REQUIRED AND NO COMMERCIAL SIGNAGE IS PROPOSED.

SHEET / DESCRIPTION

SHEET	DESCRIPTION
T-1	TITLE SHEET
GN-1	GENERAL NOTES
A-1	COMPOUND PLAN AND EQUIPMENT PLAN
A-2	ELEVATION VIEW AND ANTENNA SCHEDULE
A-3	ANTENNA LAYOUTS
A-4	DETAILS
A-5	RF PLUMBING DIAGRAMS
G-1	GROUNDING DETAILS

PROJECT DESCRIPTION/SCOPE OF WORK

LTE WCS IS 3C WITH BRONZE STANDARD CONFIGURATION.

PROPOSED PROJECT SCOPE HEREIN BASED ON RFDS ID# 709257, VERSION 1.00, LAST UPDATED 07/06/15.

THIS PROJECT WILL BE COMPRISED OF:

- (3) NEW ANTENNAS TO REPLACE (3) EXISTING ANTENNAS, (1) PER SECTOR
- (3) NEW LTE RRH'S, (1) PER SECTOR
- (3) NEW TECHNOLOGY ADDED TO EXISTING UMTS ANTENNAS, (1) PER SECTOR
- DUL TO DUS UPGRADE (ADD 2ND DUS)
- ADD (1) RxAIT CABINET
- ADD (1) LLC 1900 BAND

MASER CONSULTING CONNECTICUT

Customer Loyalty *through* Client Satisfaction
www.maserconsulting.com
Engineers ■ Planners ■ Surveyors
Landscape Architects ■ Environmental Scientists

Copyright © 2016. Maser Consulting Connecticut All Rights Reserved. This drawing and all the information contained herein is authorized for use only by the party for whom the services were contracted or to whom it is certified. This drawing may not be copied, reused, disclosed, distributed or relied upon for any other purpose without the express written consent of Maser Consulting Connecticut.

smartlink
1362 MELLON ROAD
SUITE 140
HANOVER, MD 21076
TEL: (410) 582-8043 FAX: (443) 221-2962

at&t
NEW CINGULAR WIRELESS PCS, LLC
550 COCHITUATE ROAD
FRAMINGHAM, MA 01701

811 Know what's below. Call before you dig.

PROTECT YOURSELF
ALL STATES REQUIRE NOTIFICATION OF EXCAVATORS, DESIGNERS, OR ANY PERSON PREPARING TO DISTURB THE EARTH'S SURFACE ANYWHERE IN ANY STATE

FOR STATE SPECIFIC DIRECT PHONE NUMBERS VISIT: WWW.CALL811.COM

SCALE: AS SHOWN
JOB NUMBER: 15946039A

REV	DATE	DESCRIPTION	DRAWN BY	CHECKED BY
.	.	.	.	.
.	.	.	.	.
.	.	.	.	.
.	.	.	.	.
.	.	.	.	.
2	01/06/16	REVISED PER SMARTLINK'S COMMENTS	SMG	FEP
1	12/18/15	REVISED PER SMARTLINK'S COMMENTS	SMG	FEP
0	11/03/15	ISSUED FOR REVIEW	RAP	FEP

STATE OF CONNECTICUT
FRANK E. PAZDEN
CONSULTING ENGINEER
LICENSED PROFESSIONAL ENGINEER
LICENSE NO. 28188

FRANK E. PAZDEN
CONSULTING ENGINEER
ENGINEER LICENSE NO. 28188

IT IS A VIOLATION OF LAW FOR ANY PERSON, UNLESS THEY ARE ACTING UNDER THE DIRECTION OF THE RESPONSIBLE LICENSED PROFFESIONAL ENGINEER, TO ALTER THIS DOCUMENT.

SITE NAME:
PLAINVILLE - SPARKS ST.
FA# 10035333
SITE # CTL01054
CROWN SITE # 876333

10 SPARKS STREET
PLAINVILLE, CT 06062
COUNTY OF HARTFORD

RED BANK OFFICE
331 Newman Springs Road
Suite 203
Red Bank, NJ 07701-5699
Phone: 732.383.1950
Fax: 732.383.1984
email: solutions @maserconsulting.com

SHEET TITLE: TITLE SHEET

SHEET NUMBER: T-1

1. THE SUBCONTRACTOR SHALL REVIEW AND INSPECT THE EXISTING FACILITY GROUNDING SYSTEM (AS DESIGNED AND INSTALLED) FOR STRICT COMPLIANCE WITH THE NEC (AS ADOPTED BY THE AHJ), THE SITE–SPECIFIC (UL, LPI, OR NFPA) LIGHTING PROTECTION CODE, AND GENERAL COMPLIANCE WITH TELCORDIA AND TIA GROUNDING STANDARDS. THE SUBCONTRACTOR SHALL REPORT ANY VIOLATIONS OR ADVERSE FINDINGS TO THE CONTRACTOR FOR RESOLUTION.
2. ALL GROUND ELECTRODE SYSTEMS (INCLUDING TELECOMMUNICATION, RADIO, LIGHTNING PROTECTION, AND AC POWER GES'S) SHALL BE BONDED TOGETHER, AT OR BELOW GRADE, BY TWO OR MORE COPPER BONDING CONDUCTORS IN ACCORDANCE WITH THE NEC.
3. THE SUBCONTRACTOR SHALL PERFORM IEEE FALL–OF–POTENTIAL RESISTANCE TO EARTH TESTING (PER IEEE 1100 AND 81) FOR GROUND ELECTRODE SYSTEMS. THE SUBCONTRACTOR SHALL FURNISH AND INSTALL SUPPLEMENTAL GROUND ELECTRODES AS NEEDED TO ACHIEVE A TEST RESULT OF 50 HMS OR LESS.
4. THE SUBCONTRACTOR IS RESPONSIBLE FOR PROPERLY SEQUENCING GROUNDING AND UNDERGROUND CONDUIT INSTALLATION AS TO PREVENT ANY LOSS OF CONTINUITY IN THE GROUNDING SYSTEM OR DAMAGE TO THE CONDUIT.
5. METAL CONDUIT AND TRAY SHALL BE GROUNDED AND MADE ELECTRICALLY CONTINUOUS WITH LISTED BONDING FITTINGS OR BY BONDING ACROSS THE DISCONTINUITY WITH #6 AWG COPPER WIRE UL APPROVED GROUNDING TYPE CONDUIT CLAMPS.
6. METAL RACEWAY SHALL NOT BE USED AS THE NEC REQUIRED EQUIPMENT GROUND CONDUCTOR. STRANDED COPPER CONDUCTORS WITH GREEN INSULATION, SIZED IN ACCORDANCE WITH THE NEC, SHALL BE FURNISHED AND INSTALLED WITH THE POWER CIRCUITS TO BTS EQUIPMENT.
7. EACH BTS CABINET FRAME SHALL BE DIRECTLY CONNECTED TO THE EQUIPMENT GROUND RING WITH GREEN INSULATED SUPPLEMENTAL EQUIPMENT GROUND WIRES, 6 AWG STRANDED COPPER OR LARGER FOR INDOOR BTS; 2 AWG STRANDED COPPER FOR OUTDOOR BTS.
8. CONNECTIONS TO THE GROUND BUS SHALL NOT BE DOUBLED UP OR STACKED. BACK TO BACK CONNECTIONS ON OPPOSITE SIDES OF THE GROUND BUS ARE PERMITTED.
9. ALL EXTERIOR GROUND CONDUCTORS BETWEEN EQUIPMENT/GROUND BARS AND THE GROUND RING, SHALL BE #2 AWG SOLID TINNED COPPER UNLESS OTHERWISE INDICATED.
10. ALUMINUM CONDUCTOR OR COPPER CLAD STEEL CONDUCTOR SHALL NOT BE USED FOR GROUNDING CONNECTIONS.
11. USE OF 90° BENDS IN THE PROTECTION GROUNDING CONDUCTORS SHALL BE AVOIDED WHEN 45° BENDS CAN BE ADEQUATELY SUPPORTED. ALL BENDS SHALL BE MADE WITH 12" RADIUS OR LARGER.
12. EXOTHERMIC WELDS SHALL BE USED FOR ALL GROUNDING CONNECTIONS BELOW GRADE.
13. ALL GROUND CONNECTIONS ABOVE GRADE (INTERIOR) SHALL BE FORMED USING HIGH PRESS CRIMPS EXCEPT FOR GROUND BAR CONNECTION FROM MGB TO OUTSIDE EXTERIOR GROUND SHALL ALL BE CADWELD CONNECTIONS.
14. COMPRESSION GROUND CONNECTIONS MAY BE REPLACED BY EXOTHERMIC WELD CONNECTIONS.
15. ICE BRIDGE BONDING CONDUCTORS SHALL BE EXOTHERMICALLY BONDED TO THE TOWER GROUND BAR.
16. APPROVED ANTIOXIDANT COATINGS (I.E. CONDUCTIVE GEL OR PASTE) SHALL BE USED ON ALL COMPRESSION AND BOLTED GROUND CONNECTIONS.
17. ALL EXTERIOR AND INTERIOR GROUND CONNECTIONS SHALL BE COATED WITH A CORROSION RESISTANT MATERIAL.
18. MISCELLANEOUS ELECTRICAL AND NON–ELECTRICAL METAL BOXES, FRAMES AND SUPPORTS SHALL BE BONDED TO THE GROUND RING, IN ACCORDANCE WITH THE NEC.
19. BOND ALL METALLIC OBJECTS WITHIN 6 FT OF MAIN GROUND WIRES WITH 1–#2 AWG TIN–PLATED COPPER GROUND CONDUCTOR.
20. GROUND CONDUCTORS USED IN THE FACILITY GROUND AND LIGHTNING PROTECTION SYSTEMS SHALL NOT BE ROUTED THROUGH METALLIC OBJECTS THAT FORM A RING AROUND THE CONDUCTOR, SUCH AS METALLIC CONDUITS, METAL SUPPORT CLIPS OR SLEEVES THROUGH WALLS OR FLOORS. WHEN IT IS REQUIRED TO BE HOUSED IN CONDUIT TO MEET CODE REQUIREMENTS OR LOCAL CONDITIONS, NON–METALLIC MATERIAL SUCH AS PVC PLASTIC CONDUIT SHALL BE USED. WHERE USE OF METAL CONDUIT IS UNAVOIDABLE (E.G. NON–METALLIC CONDUIT PROHIBITED BY LOCAL CODE) THE GROUND CONDUCTOR SHALL BE BONDED TO EACH END OF THE METAL CONDUIT.
21. ALL NEW STRUCTURES WITH A FOUNDATION AND/OR FOOTING HAVING 20 FT. OR MORE OF 1/4" IN. OR GREATER ELECTRICALLY CONDUCTIVE REINFORCING STEEL MUST HAVE IT BONDED TO THE GROUND RING USING AN EXOTHERMIC WELD CONNECTION USING #2 AWG SOLID BARE TINNED COPPER GROUND WIRE, PER NEC 250.50.

1. FOR THE PURPOSE OF CONSTRUCTION DRAWING, THE FOLLOWING DEFINITIONS SHALL APPLY:

   CONTRACTOR – SMARTLINK
   SUBCONTRACTOR – GENERAL CONTRACTOR (CONSTRUCTION)
   OWNER – AT&T (NEW CINGULAR WIRELESS PCS, LLC)

2. ALL SITE WORK SHALL BE COMPLETED AS INDICATED ON THE DRAWINGS AND PROJECT SPECIFICATIONS.
3. DRAWINGS PROVIDED HERE ARE NOT TO BE SCALED AND ARE INTENDED TO SHOW OUTLINE ONLY.
4. ALL MATERIALS FURNISHED AND INSTALLED SHALL BE IN STRICT ACCORDANCE WITH ALL APPLICABLE CODES, REGULATIONS, AND ORDINANCES. SUBCONTRACTOR SHALL ISSUE ALL APPROPRIATE NOTICES AND COMPLY WITH ALL LAWS, ORDINANCES, RULES, REGULATIONS, AND LAWFUL ORDERS OF ANY PUBLIC AUTHORITY REGARDING THE PERFORMANCE OF THE WORK.
5. ALL WORK CARRIED OUT SHALL COMPLY WITH ALL APPLICABLE MUNICIPAL AND UTILITY COMPANY SPECIFICATIONS AND LOCAL JURISDICTIONAL CODES, ORDINANCES AND APPLICABLE REGULATIONS.
6. UNLESS NOTED OTHERWISE, THE WORK SHALL INCLUDE FURNISHING MATERIALS, EQUIPMENT, APPURTENANCES, AND LABOR NECESSARY TO COMPLETE ALL INSTALLATIONS AS INDICATED ON THE DRAWINGS.
7. THE SUBCONTRACTOR SHALL INSTALL ALL EQUIPMENT AND MATERIALS IN ACCORDANCE WITH MANUFACTURER'S RECOMMENDATIONS UNLESS SPECIFICALLY STATED OTHERWISE.
8. IF THE SPECIFIED EQUIPMENT CANNOT BE INSTALLED AS SHOWN ON THESE DRAWINGS, THE SUBCONTRACTOR SHALL PROPOSE AN ALTERNATIVE INSTALLATION SPACE FOR APPROVAL BY THE CONTRACTOR.
9. THE SUBCONTRACTOR SHALL PROTECT EXISTING IMPROVEMENTS, PAVEMENTS, CURBS, LANDSCAPING AND STRUCTURES. ANY DAMAGED PART SHALL BE REPAIRED AT SUBCONTRACTOR'S EXPENSE TO THE SATISFACTION OF OWNER.
10. THE SUBCONTRACTOR SHALL CONTACT UTILITY LOCATING SERVICES PRIOR TO THE START OF CONSTRUCTION.
11. ALL EXISTING ACTIVE SEWER, WATER, GAS, ELECTRIC, AND OTHER UTILITIES WHERE ENCOUNTERED IN THE WORK, SHALL BE PROTECTED AT ALL TIMES, AND WHERE REQUIRED FOR THE PROPER EXECUTION OF THE WORK, SHALL BE RELOCATED AS DIRECTED BY THE RESPONSIBLE ENGINEER. EXTREME CAUTION SHOULD BE USED BY THE SUBCONTRACTOR WHEN EXCAVATING OR DRILLING PIERS AROUND OR NEAR UTILITIES. SUBCONTRACTOR SHALL PROVIDE SAFETY TRAINING FOR THE WORKING CREW. THIS WILL INCLUDE BUT NOT BE LIMITED TO A) FALL PROTECTION B) CONFINED SPACE C) ELECTRICAL SAFETY D) TRENCHING & EXCAVATION.
12. ALL EXISTING INACTIVE SEWER, WATER, GAS, ELECTRIC AND OTHER UTILITIES, WHICH INTERFERE WITH THE EXECUTION OF THE WORK, SHALL BE REMOVED AND/OR CAPPED, PLUGGED OR OTHERWISE DISCONTINUED AT POINTS WHICH WILL NOT INTERFERE WITH THE EXECUTION OF THE WORK, AS DIRECTED BY THE RESPONSIBLE ENGINEER, AND SUBJECT TO THE APPROVAL OF THE OWNER AND/OR LOCAL UTILITIES.
13. THE AREAS OF THE OWNER'S PROPERTY DISTURBED BY THE WORK AND NOT COVERED BY THE TOWER, EQUIPMENT OR DRIVEWAY SHALL BE GRADED TO A UNIFORM SLOPE AND STABILIZED TO PREVENT EROSION.
14. SUBCONTRACTOR SHALL MINIMIZE DISTURBANCE TO EXISTING SITE DURING CONSTRUCTION. EROSION CONTROL MEASURES, IF REQUIRED DURING CONSTRUCTION, SHALL BE IN CONFORMANCE WITH THE LOCAL GUIDELINES FOR EROSION AND SEDIMENT CONTROL.
15. NO FILL OR EMBANKMENT MATERIAL SHALL BE PLACED ON FROZEN GROUND. FROZEN MATERIALS, SNOW OR ICE SHALL NOT BE PLACED IN ANY FILL OR EMBANKMENT.
16. THE SUBGRADE SHALL BE COMPACTED AND BROUGHT TO A SMOOTH UNIFORM GRADE PRIOR TO FINISHED SURFACE APPLICATION.
17. THE SITE SHALL BE GRADED TO CAUSE SURFACE WATER TO FLOW AWAY FROM THE BTS EQUIPMENT AND TOWER AREAS.
18. IF NECESSARY, RUBBISH, STUMPS, DEBRIS, STICKS, STONES AND OTHER REFUSE SHALL BE REMOVED FROM THE SITE AND DISPOSED OF LEGALLY.
19. THE SUBCONTRACTOR SHALL PROVIDE SITE SIGNAGE IN ACCORDANCE WITH THE TECHNICAL SPECIFICATION FOR SITE SIGNAGE.
20. SUBCONTRACTOR SHALL LEAVE PREMISES IN CLEAN CONDITION.
21. PRIOR TO THE SUBMISSION OF BIDS, THE BIDDING SUBCONTRACTOR SHALL VISIT THE CELL SITE TO FAMILIARIZE WITH THE EXISTING CONDITIONS AND TO CONSTRUCTION DRAWINGS. ANY DISCREPANCY FOUND SHALL BE BROUGHT TO THE ATTENTION OF THE CONTRACTOR.
22. SUBCONTRACTOR SHALL DETERMINE ACTUAL ROUTING OF CONDUIT, POWER AND T1 CABLES, GROUNDING CABLES AS SHOWN ON THE POWER, GROUNDING AND TELCO PLAN DRAWING. SUBCONTRACTOR SHALL UTILIZE EXISTING TRAYS AND/OR SHALL ADD NEW TRAYS AS NECESSARY. SUBCONTRACTOR SHALL CONFIRM THE ACTUAL ROUTING WITH THE CONTRACTOR.
23. ALL CONCRETE REPAIR WORK SHALL BE DONE IN ACCORDANCE WITH AMERICAN CONCRETE INSTITUTE (ACI) 301.
24. ANY NEW CONCRETE NEEDED FOR THE CONSTRUCTION SHALL BE AIR–ENTRAINED AND SHALL HAVE 4000 PSI STRENGTH AT 28 DAYS.
25. ALL STRUCTUAL STEEL WORK SHALL BE DETAILED, FABRICATED AND ERECTED IN ACCORDANCE WITH AISC SPECIFICATIONS. ALL STRUCTURAL STEEL SHALL BE ASTM A36 (F_y = 36 ksi) UNLESS OTHERWISE NOTED. PIPES SHALL BE ASTM A53 TYPE E (F_y = 36 ksi). ALL STEEL EXPOSED TO WEATHER SHALL BE HOT DIPPED GALVANIZED. TOUCHUP ALL SCRATCHES AND OTHER MARKS IN THE FIELD AFTER STEEL IS ERECTED USING A COMPATIBLE ZINC RICH PAINT.
26. CONSTRUCTION SHALL COMPLY WITH SPECIFICATIONS AND "GENERAL CONSTRUCTION SERVICES FOR CONSTRUCTION OF AT&T MOBILITY SITES."
27. SUBCONTRACTOR SHALL VERIFY ALL EXISTING DIMENSIONS AND CONDITIONS PRIOR TO COMMENCING ANY WORK. ALL DIMENSIONS OF EXISTING CONSTRUCTION SHOWN ON THE DRAWINGS MUST BE VERIFIED. SUBCONTRACTOR SHALL NOTIFY THE CONTRACTOR OF ANY DESCREPANCIES PRIOR TO ORDERING MATERIAL OR PROCEEDING WITH CONSTRUCTION.
28. THE EXISTING CELL SITE IS IN FULL COMMERCIAL OPERATION, ANY CONSTRUCTION WORK BY SUBCONTRACTOR SHALL NOT DISRUPT THE EXISTING NORMAL OPERATION. ANY WORK ON EXISTING EQUIPMENT MUST BE COORDINATED WITH CONTRACTOR. ALSO, WORK SHOULD BE SCHEDULED FOR AN APPROPRIATE MAINTENANCE WINDOW USUALLY IN LOW TRAFFIC PERIODS AFTER MIDNIGHT.
29. SINCE THE CELL SITE IS ACTIVE, ALL SAFETY PRECAUTIONS MUST BE TAKEN WHEN WORKING AROUND HIGH LEVELS OF ELECTROMAGNETIC RADIATION. EQUIPMENT SHOULD BE SHUTDOWN PRIOR TO PERFORMING ANY WORK THAT COULD EXPOSE THE WORKERS TO DANGER. PERSONAL RF EXPOSURE MONITORS ARE ADVISED TO BE WORN ALERT OF DANGEROUS EXOPOSURE LEVELS.

MASER CONSULTING — CONNECTICUT —
Customer Loyalty *through* Client Satisfaction
www.maserconsulting.com
Engineers ■ Planners ■ Surveyors
Landscape Architects ■ Environmental Scientists

Copyright © 2016. Maser Consulting Connecticut All Rights Reserved. This drawing and all the information contained herein is authorized for use only by the party for whom the services were contracted or to whom it is certified. This drawing may not be copied, reused, disclosed, distributed or relied upon for any other purpose without the express written consent of Maser Consulting Connecticut.

smartlink
1362 MELLON ROAD
SUITE 140
HANOVER, MD 21076
TEL: (410) 582-8043 FAX: (443) 221-2962

at&t
NEW CINGULAR WIRELESS PCS, LLC
550 COCHITUATE ROAD
FRAMINGHAM, MA 01701

811 Know what's below. Call before you dig.
PROTECT YOURSELF
ALL STATES REQUIRE NOTIFICATION OF EXCAVATORS, DESIGNERS, OR ANY PERSON PREPARING TO DISTURB THE EARTH'S SURFACE ANYWHERE IN ANY STATE
FOR STATE SPECIFIC DIRECT PHONE NUMBERS VISIT: WWW.CALL811.COM

SCALE :	JOB NUMBER :
AS SHOWN	15946039A

REV	DATE	DESCRIPTION	DRAWN BY	CHECKED BY
.	.	.	.	.
.	.	.	.	.
.	.	.	.	.
.	.	.	.	.
.	.	.	.	.
2	01/06/16	REVISED PER SMARTLINK'S COMMENTS	SMG	FEP
1	12/18/15	REVISED PER SMARTLINK'S COMMENTS	SMG	FEP
0	11/03/15	ISSUED FOR REVIEW	RAP	FEP

FRANK E. PAZDEN
CONNECTICUT PROFESSIONAL ENGINEER - LICENSE NUMBER: PEN.28188

IT IS A VIOLATION OF LAW FOR ANY PERSON, UNLESS THEY ARE ACTING UNDER THE DIRECTION OF THE RESPONSIBLE LICENSED PROFFESIONAL ENGINEER, TO ALTER THIS DOCUMENT.

SITE NAME:
PLAINVILLE - SPARKS ST.
FA# 10035333
SITE # CTL01054
CROWN SITE # 876333
10 SPARKS STREET
PLAINVILLE, CT 06062
COUNTY OF HARTFORD

RED BANK OFFICE
331 Newman Springs Road
Suite 203
Red Bank, NJ 07701-5699
Phone: 732.383.1950
Fax: 732.383.1984
email: solutions @maserconsulting.com

SHEET TITLE : GENERAL NOTES

SHEET NUMBER : GN-1

NOTES:

1. THE CONDUIT ROUTING IS DIAGRAMMATICALLY SHOWN ON THE PLANS AND ARE ONLY APPROXIMATIONS. THE EXACT LOCATION AND ROUTING SHALL BE FIELD VERIFIED.
2. ALL DISCONNECTS AND CONTROLLING DEVICES SHALL BE PROVIDED WITH ENGRAVED LAMICOID NAMEPLATES, INDICATING THE CIRCUITS ORIGINATION AND ALL EQUIPMENT TERMINATIONS.
3. SUBCONTRACTOR SHALL PROVIDE ALL CONDUITS AND CIRCUITS AS REQUIRED FOR A COMPLETED SYSTEM AND SHALL BE IN COMPLIANCE WITH THE MANUFACTURER'S SPECIFICATIONS.
4. ALL NEW CABLING TO BE ROUTED ON EXISTING CABLE RACKS.
5. ALL INSTALLED GROUND LUGS MUST BE INSPECTION HOLE LUGS.
6. INSTALLED GROUND LEADS MUST TERMINATE AT MGB, NOT HALO.
7. NO OVERLAPPING GROUND HARDWARE.

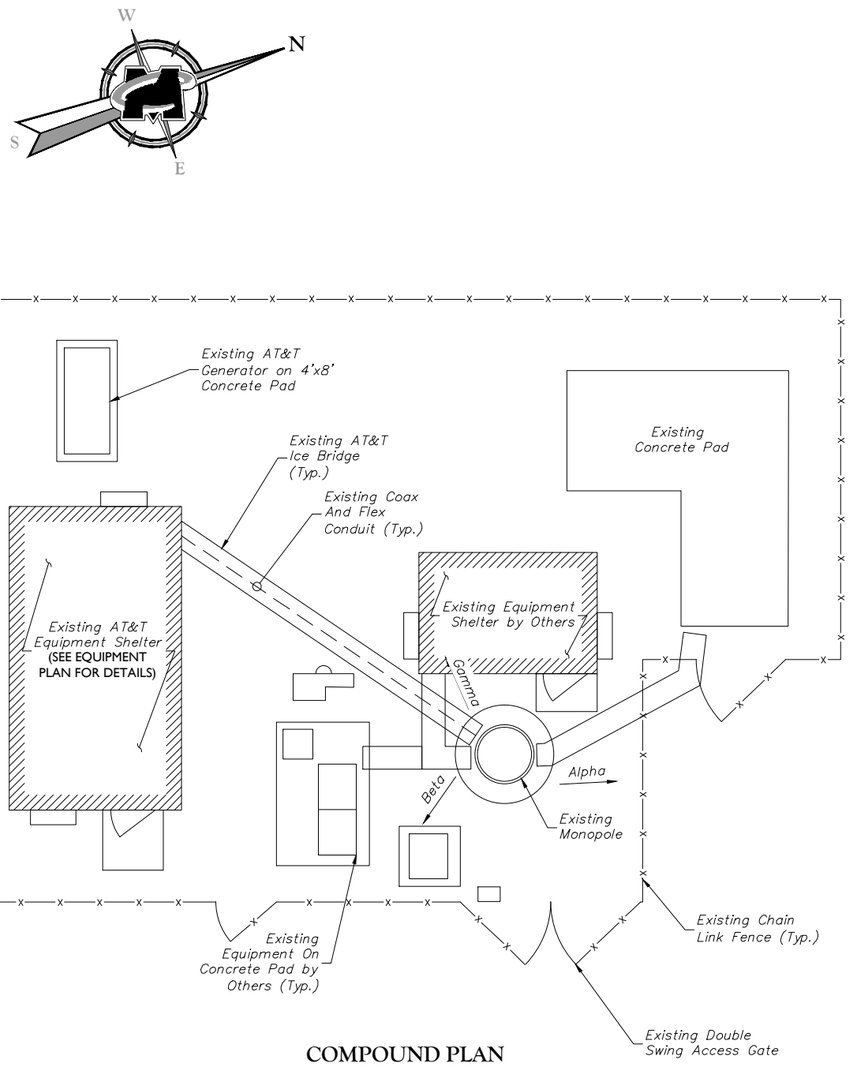

COMPOUND PLAN

GRAPHIC SCALE

5 0 2.5 5 10

(IN FEET)

SCALE: 1" = 5' FOR 24"X36" DRAWINGS
(DO NOT SCALE 11"X17" DRAWINGS)

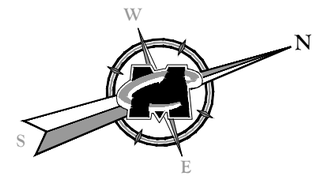

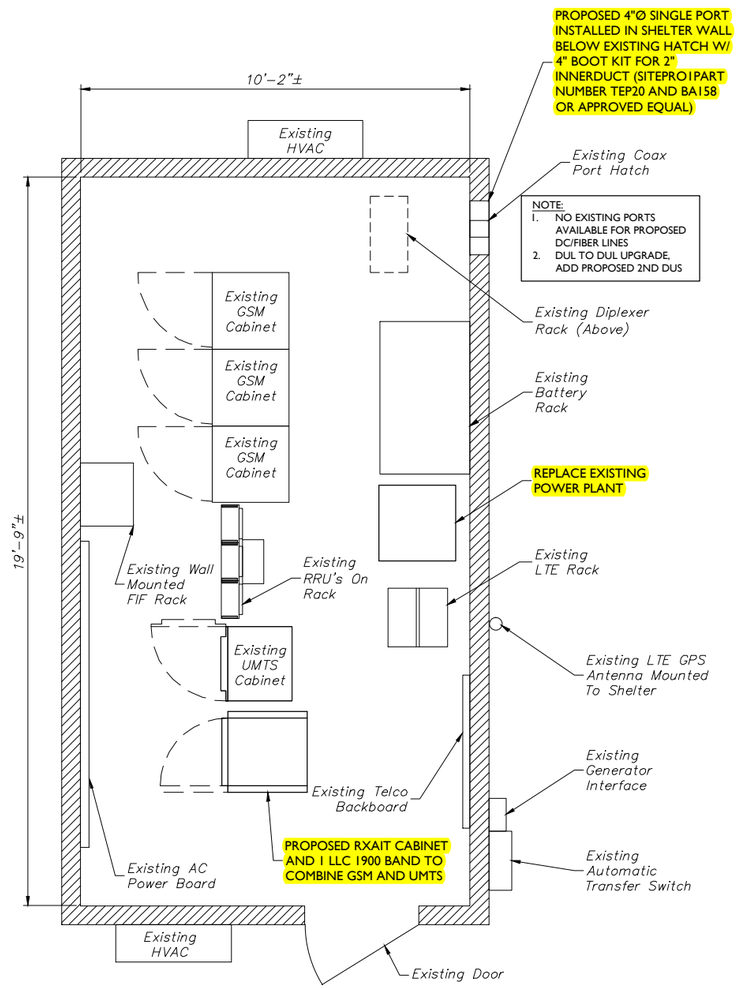

EQUIPMENT PLAN

GRAPHIC SCALE

2 0 1 2 4

(IN FEET)

SCALE: 1" = 2' FOR 24"X36" DRAWINGS
(DO NOT SCALE 11"X17" DRAWINGS)

MASER CONSULTING
CONNECTICUT

Customer Loyalty *through* Client Satisfaction
www.maserconsulting.com
Engineers ■ Planners ■ Surveyors
Landscape Architects ■ Environmental Scientists

Copyright © 2016. Maser Consulting Connecticut All Rights Reserved. This drawing and all the information contained herein is authorized for use only by the party for whom the services were contracted or to whom it is certified. This drawing may not be copied, reused, disclosed, distributed or relied upon for any other purpose without the express written consent of Maser Consulting Connecticut.

smartlink
1362 MELLON ROAD
SUITE 140
HANOVER, MD 21076
TEL: (410) 582-8043 FAX: (443) 221-2962

at&t
NEW CINGULAR WIRELESS PCS, LLC
550 COCHITUATE ROAD
FRAMINGHAM, MA 01701

811 Know what's below. Call before you dig.

PROTECT YOURSELF
ALL STATES REQUIRE NOTIFICATION OF EXCAVATORS, DESIGNERS, OR ANY PERSON PREPARING TO DISTURB THE EARTH'S SURFACE ANYWHERE IN ANY STATE

FOR STATE SPECIFIC DIRECT PHONE NUMBERS VISIT:
WWW.CALL811.COM

SCALE :	JOB NUMBER :
AS SHOWN	15946039A

REV	DATE	DESCRIPTION	DRAWN BY	CHECKED BY
2	01/06/16	REVISED PER SMARTLINK'S COMMENTS	SMG	FEP
1	12/18/15	REVISED PER SMARTLINK'S COMMENTS	SMG	FEP
0	11/03/15	ISSUED FOR REVIEW	RAP	FEP

STATE OF CONNECTICUT
FRANK E. PAZDEN
No. 28188
LICENSED PROFESSIONAL ENGINEER

FRANK E. PAZDEN
CONSULTING ENGINEER, INC.
ENGINEERING DEPARTMENT CT LICENSE NO. 28188

IT IS A VIOLATION OF LAW FOR ANY PERSON, UNLESS THEY ARE ACTING UNDER THE DIRECTION OF THE RESPONSIBLE LICENSED PROFFESIONAL ENGINEER, TO ALTER THIS DOCUMENT.

SITE NAME:

PLAINVILLE - SPARKS ST.
FA# 10035333
SITE # CTL01054
CROWN SITE # 876333

10 SPARKS STREET
PLAINVILLE, CT 06062
COUNTY OF HARTFORD

RED BANK OFFICE
331 Newman Springs Road
Suite 203
Red Bank, NJ 07701-5699
Phone: 732.383.1950
Fax: 732.383.1984
email: solutions @maserconsulting.com

SHEET TITLE :
COMPOUND PLAN AND EQUIPMENT PLAN

SHEET NUMBER :
A-1

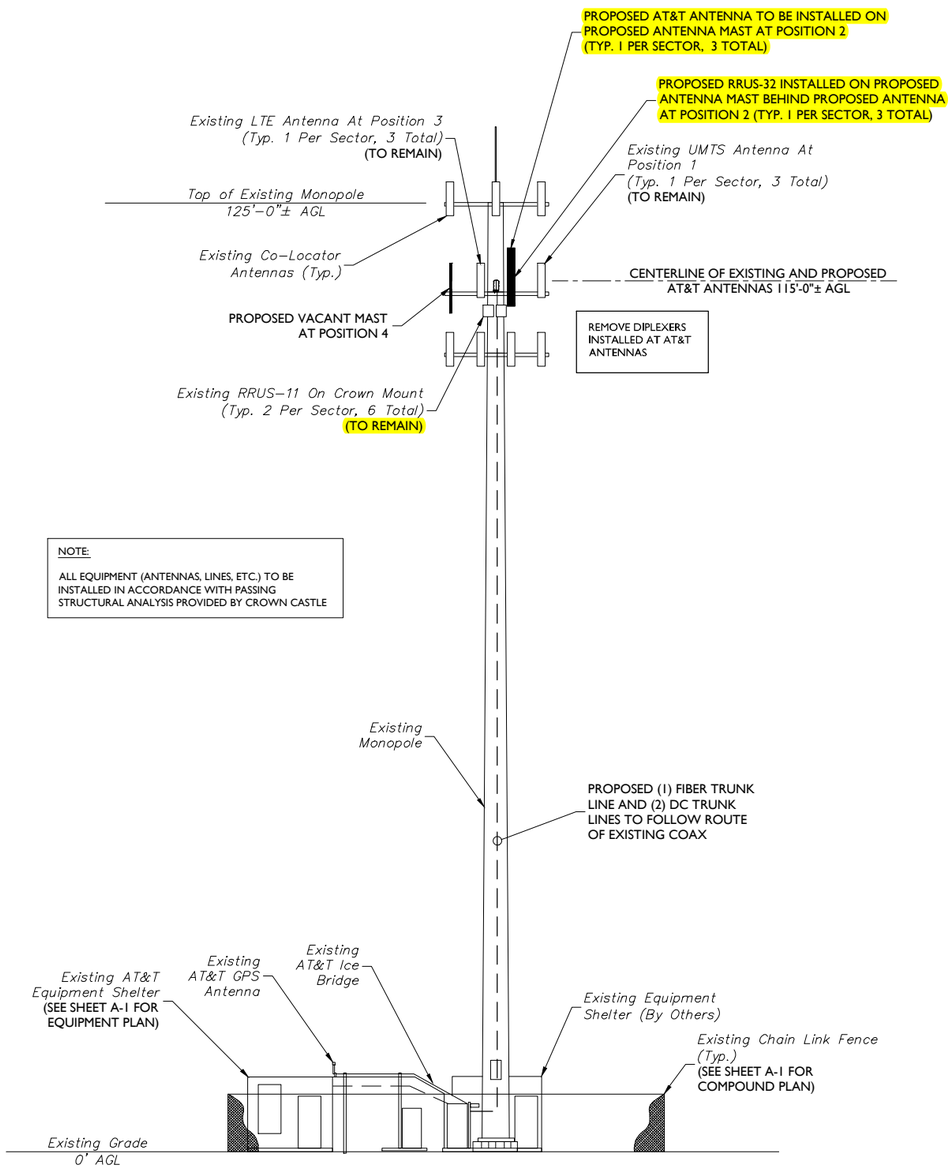

NOTE:

ALL EQUIPMENT (ANTENNAS, LINES, ETC.) TO BE INSTALLED IN ACCORDANCE WITH PASSING STRUCTURAL ANALYSIS PROVIDED BY CROWN CASTLE

ELEVATION VIEW

GRAPHIC SCALE

20 0 10 20 40

(IN FEET)

SCALE: 1" = 20' FOR 24"X36" DRAWINGS
(DO NOT SCALE 11"X17" DRAWINGS)

PROPOSED ANTENNA AND RRUS CONFIGURATION

SECTOR		EXISTING ANTENNA CONFIGURATION	PROPOSED ANTENNA CONFIGURATION	TECHNOLOGY	ANTENNA STATUS	HEIGHT (in)	WIDTH (in)	DEPTH (in)	WEIGHT (lbs)	ANTENNA AZIMUTH	ANT. CL. ELEV (ft.)	RRUS CONFIGURATION	STATUS
ALPHA	C1	Powerwave 7770	Powerwave 7770	UMTS/GSM	REMAIN (TECH CHANGE)	55.00	11.00	5.00	35.00	13°	115'	-	-
	A2	-	CCI OPA-65R-LCUU-H8	WCS LTE/GSM	NEW	92.70	14.40	7.00	88.00	13°	115'	RRUS 32	NEW
	A3	KMW AM-X-CD-16-65-00T-RET	KMW AM-X-CD-16-65-00T-RET	LTE	REMAIN	72.00	11.80	5.90	48.50	13°	115'	(2) RRUS 11	REMAIN
	C4	Powerwave 7770	VACANT MAST	-	REMOVE	-	-	-	-	-	-	-	-
BETA	A1	Powerwave 7770	Powerwave 7770	UMTS/GSM	REMAIN (TECH CHANGE)	48.00	11.80	5.90	36.40	143°	115'	-	-
	B2	-	CCI OPA-65R-LCUU-H8	WCS LTE/GSM	NEW	92.70	14.40	7.00	88.00	143°	115'	RRUS 32	NEW
	B3	KMW AM-X-CD-16-65-00T-RET	KMW AM-X-CD-16-65-00T-RET	LTE	REMAIN	48.00	14.40	7.30	57.00	143°	115'	(2) RRUS 11	REMAIN
	A4	Powerwave 7770	VACANT MAST	-	REMOVE	-	-	-	-	-	-	-	-
GAMMA	B1	Powerwave 7770	Powerwave 7770	UMTS/GSM	REMAIN (TECH CHANGE)	48.00	11.80	5.90	36.40	263°	115'	-	-
	C2	-	CCI OPA-65R-LCUU-H8	WCS LTE/GSM	NEW	92.70	14.40	7.00	88.00	263°	115'	RRUS 32	NEW
	C3	KMW AM-X-CD-16-65-00T-RET	KMW AM-X-CD-16-65-00T-RET	LTE	REMAIN	48.00	14.40	7.30	57.00	263°	115'	(2) RRUS 11	REMAIN
	B4	Powerwave 7770	VACANT MAST	-	REMOVE	-	-	-	-	-	-	-	-

ANTENNA SCHEDULE

STRUCTURAL NOTES:

1. A STRUCTURAL ANALYSIS TO DETERMINE IF THE EXISTING STRUCTURE AND FOUNDATION CAN ADEQUATELY SUPPORT THE PROPOSED LOADING HAS NOT BEEN PREPARED/ANALYZED BY MASER AND IS TO BE PERFORMED BY OTHERS.
2. NO CONSTRUCTION OF THE PROPOSED LOADING SHOWN SHALL PROCEED UNTIL ADEQUACY OF EXISTING STRUCTURE AND FOUNDATION, INCLUDING THE PROPOSED AT&T ANTENNA MOUNTING CONFIGURATION SHOWN HEREIN, HAS BEEN CONFIRMED BY SMARTLINK.
3. THE STRUCTURE ELEVATION IS SHOWN FOR INFORMATIONAL PURPOSES ONLY AND MAY NOT REFLECT AS-BUILT FIELD CONDITIONS FOR ALL EXISTING INVENTORY LOADING/ANTENNAS/APPURTANENCES ON STRUCTURE. REFER TO THE LATEST STRUCTURAL ANALYSIS FOR EXISTING STRUCTURE LOADING AND THE PROPOSED METHOD OF ATTACHMENT OF THE PROPOSED ANTENNAS/CABLES.
4. THE CONTRACTOR IS RESPONSIBLE TO CONFIRM THAT ANY IMPROVEMENTS AND REINFORCEMENTS REQUIRED BY THE STRUCTURAL ANALYSIS CERTIFICATION ARE PROPERLY INSTALLED PRIOR TO THE ADDITION OF ANTENNAS, CABLES, SUPPORTS AND APPURTENANCES PROPOSED ON THESE DRAWINGS OR OTHERWISE NOTED IN THE STRUCTURAL ANALYSIS.

MASER CONSULTING CONNECTICUT

Customer Loyalty through Client Satisfaction
www.maserconsulting.com
Engineers ■ Planners ■ Surveyors
Landscape Architects ■ Environmental Scientists

Copyright © 2016. Maser Consulting Connecticut All Rights Reserved. This drawing and all the information contained herein is authorized for use only by the party for whom the services were contracted or to whom it is certified. This drawing may not be copied, reused, disclosed, distributed or relied upon for any other purpose without the express written consent of Maser Consulting Connecticut.

smartlink
1362 MELLON ROAD
SUITE 140
HANOVER, MD 21076
TEL: (410) 582-8043 FAX: (443) 221-2962

at&t
NEW CINGULAR WIRELESS PCS, LLC
550 COCHITUATE ROAD
FRAMINGHAM, MA 01701

811 Know what's below. Call before you dig

PROTECT YOURSELF
ALL STATES REQUIRE NOTIFICATION OF EXCAVATORS, DESIGNERS, OR ANY PERSON PREPARING TO DISTURB THE EARTH'S SURFACE ANYWHERE IN ANY STATE

FOR STATE SPECIFIC DIRECT PHONE NUMBERS VISIT: WWW.CALL811.COM

SCALE : AS SHOWN

JOB NUMBER : 15946039A

REV	DATE	DESCRIPTION	DRAWN BY	CHECKED BY
.	.	.	.	.
.	.	.	.	.
.	.	.	.	.
.	.	.	.	.
.	.	.	.	.
2	01/06/16	REVISED PER SMARTLINK'S COMMENTS	SMG	FEP
1	12/18/15	REVISED PER SMARTLINK'S COMMENTS	SMG	FEP
0	11/03/15	ISSUED FOR REVIEW	RAP	FEP

STATE OF CONNECTICUT FRANK E. PAZDEN No. 28188 LICENSED PROFESSIONAL ENGINEER

FRANK E. PAZDEN
CONNECTICUT LICENSED PROFESSIONAL ENGINEER No. 28188

IT IS A VIOLATION OF LAW FOR ANY PERSON, UNLESS THEY ARE ACTING UNDER THE DIRECTION OF THE RESPONSIBLE LICENSED PROFFESIONAL ENGINEER, TO ALTER THIS DOCUMENT.

SITE NAME:

PLAINVILLE - SPARKS ST.
FA# 10035333
SITE # CTL01054
CROWN SITE # 876333

10 SPARKS STREET
PLAINVILLE, CT 06062
COUNTY OF HARTFORD

RED BANK OFFICE
331 Newman Springs Road
Suite 203
Red Bank, NJ 07701-5699
Phone: 732.383.1950
Fax: 732.383.1984
email: solutions @maserconsulting.com

SHEET TITLE : ELEVATION VIEW AND ANTENNA SCHEDULE

SHEET NUMBER : A-2

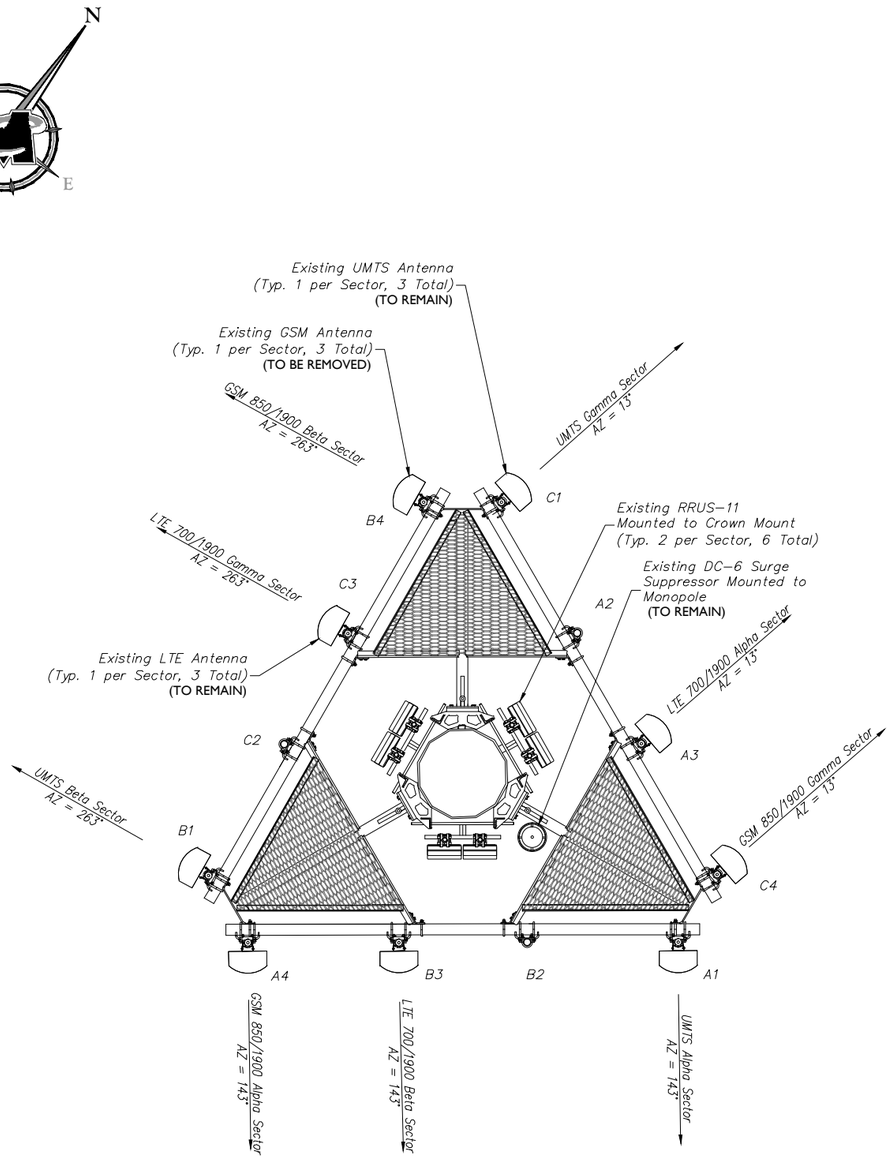

EXISTING - ANTENNA LAYOUT

NOT TO SCALE

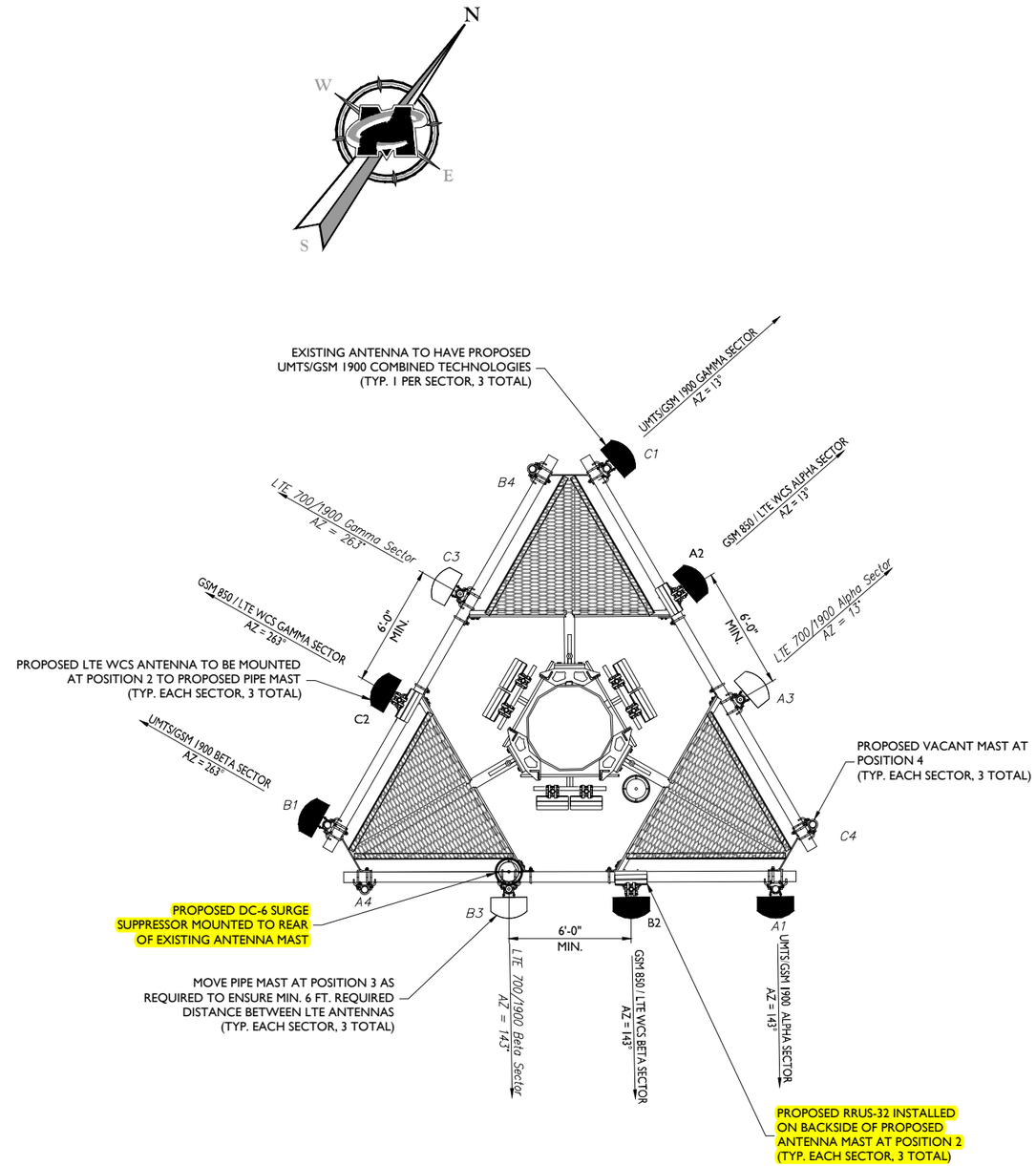

PROPOSED - ANTENNA LAYOUT

NOT TO SCALE

MASER CONSULTING
CONNECTICUT

Customer Loyalty *through* Client Satisfaction
www.maserconsulting.com
Engineers ■ Planners ■ Surveyors
Landscape Architects ■ Environmental Scientists

Copyright © 2016. Maser Consulting Connecticut All Rights Reserved. This drawing and all the information contained herein is authorized for use only by the party for whom the services were contracted or to whom it is certified. This drawing may not be copied, reused, disclosed, distributed or relied upon for any other purpose without the express written consent of Maser Consulting Connecticut.

smartlink
1362 MELLON ROAD
SUITE 140
HANOVER, MD 21076
TEL: (410) 582-8043 FAX: (443) 221-2962

at&t
NEW CINGULAR WIRELESS PCS, LLC
550 COCHITUATE ROAD
FRAMINGHAM, MA 01701

811 Know what's below. Call before you dig.

PROTECT YOURSELF
ALL STATES REQUIRE NOTIFICATION OF EXCAVATORS, DESIGNERS, OR ANY PERSON PREPARING TO DISTURB THE EARTH'S SURFACE ANYWHERE IN ANY STATE

FOR STATE SPECIFIC DIRECT PHONE NUMBERS VISIT:
WWW.CALL811.COM

SCALE :	JOB NUMBER :
AS SHOWN	15946039A

REV	DATE	DESCRIPTION	DRAWN BY	CHECKED BY
.	.	.	.	.
.	.	.	.	.
.	.	.	.	.
.	.	.	.	.
.	.	.	.	.
2	01/06/16	REVISED PER SMARTLINK'S COMMENTS	SMG	FEP
1	12/18/15	REVISED PER SMARTLINK'S COMMENTS	SMG	FEP
0	11/03/15	ISSUED FOR REVIEW	RAP	FEP

STATE OF CONNECTICUT
FRANK E. PAZDEN
LICENSED PROFESSIONAL ENGINEER
No. 28188

FRANK E. PAZDEN
CONNECTICUT LICENSED
PROFESSIONAL ENGINEER
LICENSE NO. 28188

IT IS A VIOLATION OF LAW FOR ANY PERSON, UNLESS THEY ARE ACTING UNDER THE DIRECTION OF THE RESPONSIBLE LICENSED PROFFESIONAL ENGINEER, TO ALTER THIS DOCUMENT.

SITE NAME:

PLAINVILLE - SPARKS ST.
FA# 10035333
SITE # CTL01054
CROWN SITE # 876333

10 SPARKS STREET
PLAINVILLE, CT 06062
COUNTY OF HARTFORD

RED BANK OFFICE
331 Newman Springs Road
Suite 203
Red Bank, NJ 07701-5699
Phone: 732.383.1950
Fax: 732.383.1984
email: solutions @maserconsulting.com

SHEET TITLE :

ANTENNA LAYOUTS

SHEET NUMBER :

A-3

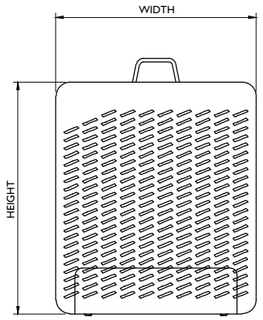

RRUS FRONT VIEW

SIZE AND WEIGHT TABLE

RRUS	WIDTH	DEPTH	HEIGHT	WEIGHT W/O BRACKET
RRUS-32 4X40-1900 (WITH SOLAR SHIELD)	-	-	-	-
RRUS-32 4X40-1900 (WITHOUT SOLAR SHIELD)	17"	7.2"	19.7"	50.7

MINIMUM CLEARANCE TABLE

RRUS CABINET	CLEARANCES (INCHES)	COMMENTS
FRONT	-	INSTALLATION ACCESS
REAR	-	ZERO REAR CLEARANCE IS ALLOWED USING SUPPLIED MOUNTING BRACKETS
RIGHT	-	AIR FLOW
LEFT	-	AIR FLOW
TOP	-	AIR FLOW
BOTTOM	-	CONDUIT ROUTING

NOTE:

USE 1/2" COAXIAL CABLE W/7/16 DIN MALE CONNECTORS ON BOTH ENDS.

RRUS DETAIL
NOT TO SCALE

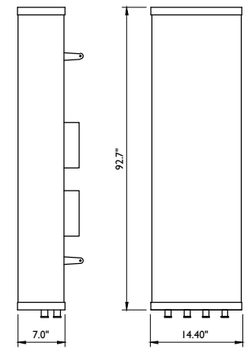

WEIGHT = 88 LBS

CCI OPA-65R-LCUU-H8

ANTENNA DETAIL
NOT TO SCALE

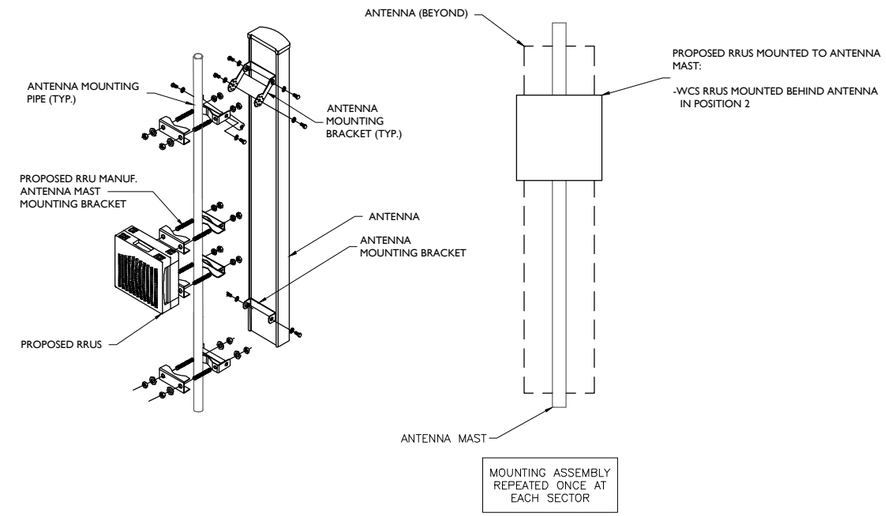

ANTENNA AND RRUS MOUNTING DETAILS
NOT TO SCALE

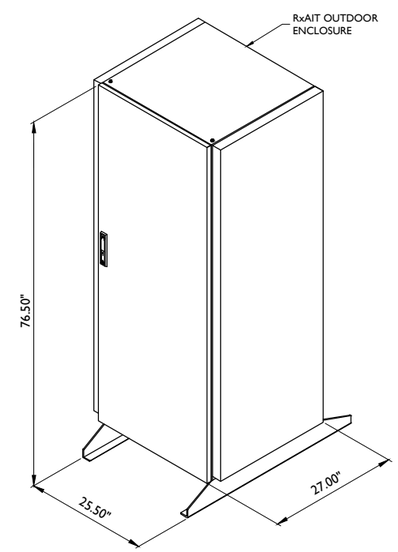

WEIGHT: 760lbs FULLY EQUIPPED

RXAIT OUTDOOR ENCLOSURE
NOT TO SCALE

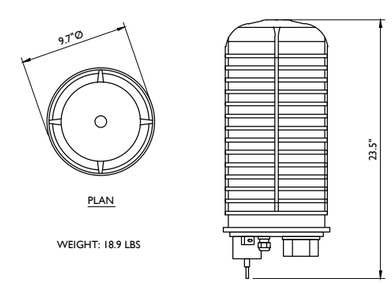

PLAN

WEIGHT: 18.9 LBS

ELEVATION

RAYCAP DC6-48-60-18-8F SURGE SUPPRESSOR
NOT TO SCALE

MASER CONSULTING
CONNECTICUT

Customer Loyalty *through* Client Satisfaction
www.maserconsulting.com
Engineers ■ Planners ■ Surveyors
Landscape Architects ■ Environmental Scientists

Copyright © 2016. Maser Consulting Connecticut All Rights Reserved. This drawing and all the information contained herein is authorized for use only by the party for whom the services were contracted or to whom it is certified. This drawing may not be copied, reused, disclosed, distributed or relied upon for any other purpose without the express written consent of Maser Consulting Connecticut.

smartlink
1362 MELLON ROAD
SUITE 140
HANOVER, MD 21076
TEL: (410) 582-8043 FAX: (443) 221-2962

at&t
NEW CINGULAR WIRELESS PCS, LLC
550 COCHITUATE ROAD
FRAMINGHAM, MA 01701

811 Know what's below. Call before you dig.
PROTECT YOURSELF
ALL STATES REQUIRE NOTIFICATION OF EXCAVATORS, DESIGNERS, OR ANY PERSON PREPARING TO DISTURB THE EARTH'S SURFACE ANYWHERE IN ANY STATE
FOR STATE SPECIFIC DIRECT PHONE NUMBERS VISIT: WWW.CALL811.COM

SCALE : AS SHOWN

JOB NUMBER : 15946039A

REV	DATE	DESCRIPTION	DRAWN BY	CHECKED BY
.	.	.	.	.
.	.	.	.	.
.	.	.	.	.
.	.	.	.	.
.	.	.	.	.
2	01/06/16	REVISED PER SMARTLINK'S COMMENTS	SMG	FEP
1	12/18/15	REVISED PER SMARTLINK'S COMMENTS	SMG	FEP
0	11/03/15	ISSUED FOR REVIEW	RAP	FEP

STATE OF CONNECTICUT
FRANK E. PAZDEN
No. 28188
LICENSED PROFESSIONAL ENGINEER
FRANK E. PAZDEN
CONNECTICUT LICENSED PROFESSIONAL ENGINEER
ENGINEER: MASER CONSULTING, INC. LICENSE: CEN.28188

IT IS A VIOLATION OF LAW FOR ANY PERSON, UNLESS THEY ARE ACTING UNDER THE DIRECTION OF THE RESPONSIBLE LICENSED PROFFESIONAL ENGINEER, TO ALTER THIS DOCUMENT.

SITE NAME:

PLAINVILLE - SPARKS ST.
FA# 10035333
SITE # CTL01054
CROWN SITE # 876333

10 SPARKS STREET
PLAINVILLE, CT 06062
COUNTY OF HARTFORD

RED BANK OFFICE
331 Newman Springs Road
Suite 203
Red Bank, NJ 07701-5699
Phone: 732.383.1950
Fax: 732.383.1984
email: solutions @maserconsulting.com

SHEET TITLE : DETAILS

SHEET NUMBER : A-4

Diagram - Sector	A	Diagram File Name - CT1054_BrnzStand_LTE3C_A_B_Rev2.vsd					
Atoll Site Name -	CTV1054	Location Name -	PLAINVILLE CENTER	Market -	CONNECTICUT	Market Cluster -	NEW ENGLAND
Comments:							

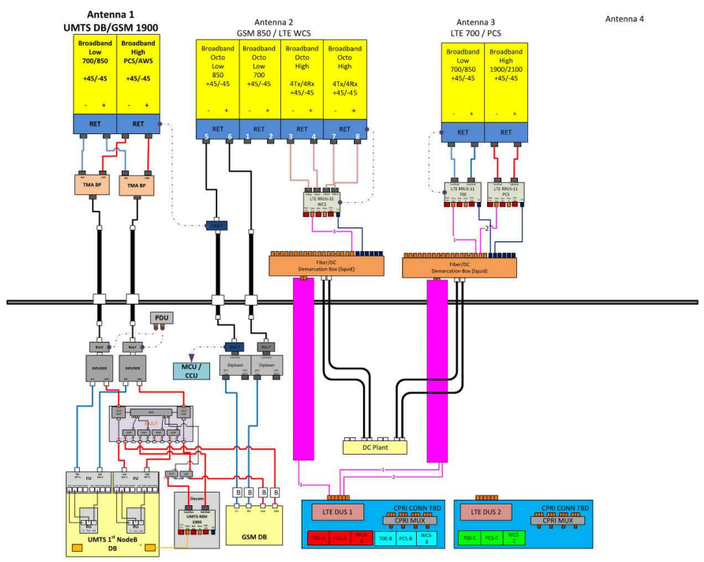

ALPHA SECTOR

Diagram - Sector	B	Diagram File Name - CT1054_BrnzStand_LTE3C_A_B_Rev2.vsd					
Atoll Site Name -	CTV1054	Location Name -	PLAINVILLE CENTER	Market -	CONNECTICUT	Market Cluster -	NEW ENGLAND
Comments:							

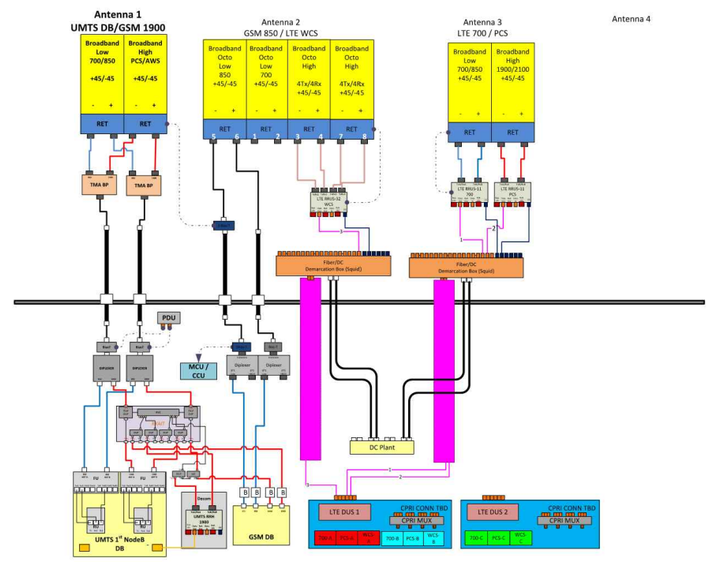

BETA SECTOR

Diagram - Sector	C	Diagram File Name - CT1054_BrnzStand_LTE3C_C_Rev2.vsd					
Atoll Site Name -	CTV1054	Location Name -	PLAINVILLE CENTER	Market -	CONNECTICUT	Market Cluster -	NEW ENGLAND
Comments:							

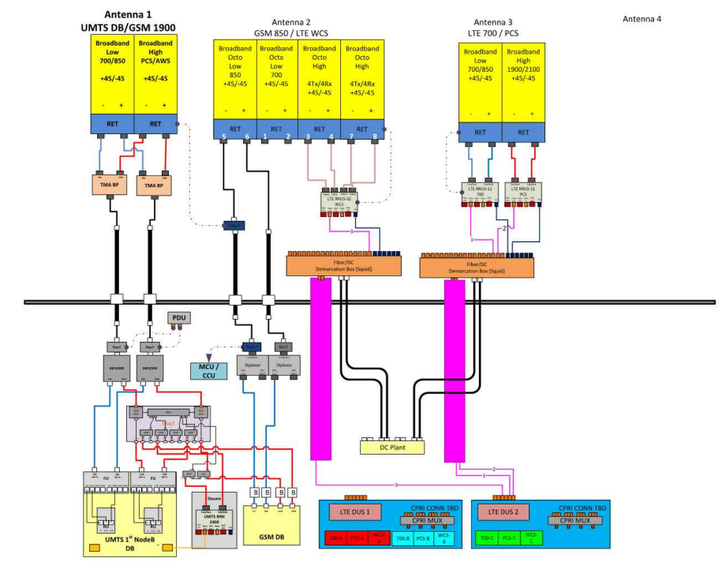

GAMMA SECTOR

BASED ON RF ENGINEERING DESIGN ENTITLED "NEW-ENGLAND_CONNECTICUT_CTV1054_2016-LTE-Next-Carrier_LTE-3C_mm093q_PTN_10035333_16334_06-01-2015_Preliminary-Approved_v1.00"

RF PLUMBING DIAGRAMS

MASER CONSULTING
CONNECTICUT

Customer Loyalty *through* Client Satisfaction
www.maserconsulting.com
Engineers ■ Planners ■ Surveyors
Landscape Architects ■ Environmental Scientists

Copyright © 2016. Maser Consulting Connecticut All Rights Reserved. This drawing and all the information contained herein is authorized for use only by the party for whom the services were contracted or to whom it is certified. This drawing may not be copied, reused, disclosed, distributed or relied upon for any other purpose without the express written consent of Maser Consulting Connecticut.

smartlink
1362 MELLON ROAD
SUITE 140
HANOVER, MD 21076
TEL: (410) 582-8043 FAX: (443) 221-2962

at&t
NEW CINGULAR WIRELESS PCS, LLC
550 COCHITUATE ROAD
FRAMINGHAM, MA 01701

811 Know what's below. Call before you dig.

PROTECT YOURSELF
ALL STATES REQUIRE NOTIFICATION OF EXCAVATORS, DESIGNERS, OR ANY PERSON PREPARING TO DISTURB THE EARTH'S SURFACE ANYWHERE IN ANY STATE

FOR STATE SPECIFIC DIRECT PHONE NUMBERS VISIT:
WWW.CALL811.COM

SCALE :	JOB NUMBER :
AS SHOWN	15946039A

REV	DATE	DESCRIPTION	DRAWN BY	CHECKED BY
.	.	.	.	.
.	.	.	.	.
.	.	.	.	.
.	.	.	.	.
.	.	.	.	.
2	01/06/16	REVISED PER SMARTLINK'S COMMENTS	SMG	FEP
1	12/18/15	REVISED PER SMARTLINK'S COMMENTS	SMG	FEP
0	11/03/15	ISSUED FOR REVIEW	RAP	FEP

STATE OF CONNECTICUT
FRANK E. PAZDEN
28188
LICENSED PROFESSIONAL ENGINEER
FRANK E. PAZDEN
CONNECTICUT LICENSED PROFESSIONAL
ENGINEER LICENSE NO. 28188

IT IS A VIOLATION OF LAW FOR ANY PERSON, UNLESS THEY ARE ACTING UNDER THE DIRECTION OF THE RESPONSIBLE LICENSED PROFFESIONAL ENGINEER, TO ALTER THIS DOCUMENT.

SITE NAME:

PLAINVILLE - SPARKS ST.
FA# 10035333
SITE # CTL01054
CROWN SITE # 876333

10 SPARKS STREET
PLAINVILLE, CT 06062
COUNTY OF HARTFORD

RED BANK OFFICE
331 Newman Springs Road
Suite 203
Red Bank, NJ 07701-5699
Phone: 732.383.1950
Fax: 732.383.1984

email: solutions @maserconsulting.com

SHEET TITLE :
RF PLUMBING DIAGRAMS

SHEET NUMBER :
A-5

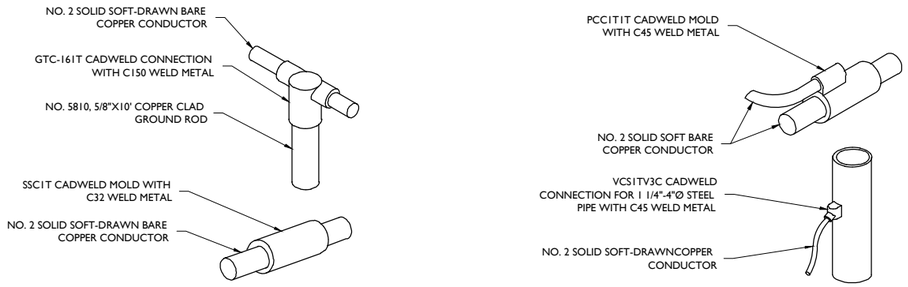

CADWELD DETAILS

NOT TO SCALE

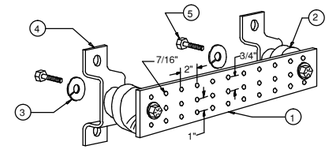

LEGEND

1- TINNED COPPER GROUND BAR, 1/4"x4"x20", NEWTON INSTRUMENT CO. CAT. NO. B-6142 OR EQUAL. HOLE CENTERS TO MATCH NEMA DOUBLE LUG CONFIGURATION.

2- INSULATORS, NEWTON INSTRUMENT CAT. NO. 3061-4

3- 5/8" LOCKWASHERS, NEWTON INSTRUMENT CO. CAT. NO. 3015-8

4- WALL MOUNTING BRACKET, NEWTON INSTRUMENT CO. CAT NO. A-5056

5- 5/8-11 X 1" HHCS BOLTS, NEWTON INSTRUMENT CO. CAT NO. 3012-1

6- EACH GROUND CONDUCTOR TERMINATING ON ANY GROUND BAR HAVE AN IDENTIFICATION TAG ATTACHED AT EACH END THAT WILL IDENTIFY ITS ORIGIN AND DESTINATION.

SECTION "P" - SURGE PRODUCERS

CABLE ENTRY PORTS (HATCH PLATES) (#2)
GENERATOR FRAMEWORK (IF AVAILABLE) (#2)
TELCO GROUND BAR
COMMERCIAL POWER COMMON NEUTRAL/GROUND BOND (#2)
+24V POWER SUPPLY RETURN BAR (#2)
-48V POWER SUPPLT RETURN BAR (#2)
RECTIFIER FRAMES.

SECTION "A" - SURGE ABSORBERS

INTERIOR GROUND RING (#2)
EXTERNAL EARTH GROUND FIELD (BURIED GROUND RING) (#2)
METALLIC COLD WATER PIPE (IF AVAILABLE) (#2)
BUILDING STEEL (IF AVAILABLE) (#2)

MASTER GROUND BAR

NOT TO SCALE

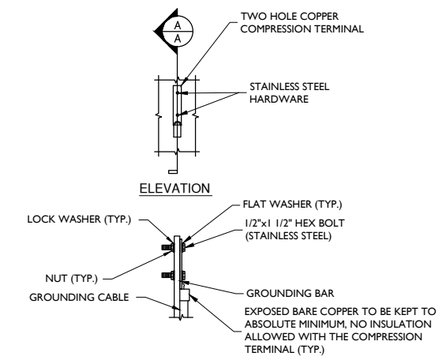

TYPICAL GROUND BAR CONNECTION DETAIL

NOT TO SCALE

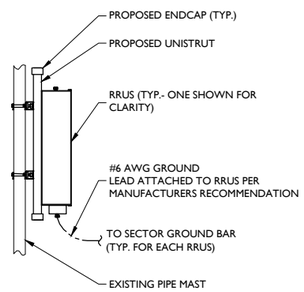

RRH GROUNDING

NOT TO SCALE

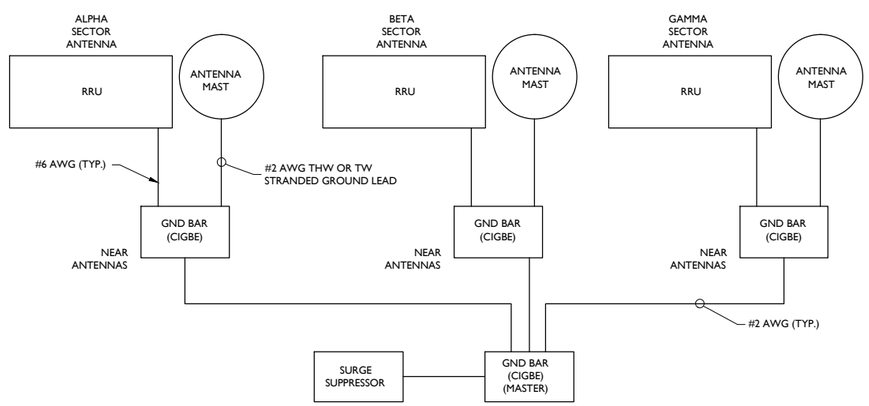

SCHEMATIC DIAGRAM GROUNDING SYSTEM

NOT TO SCALE

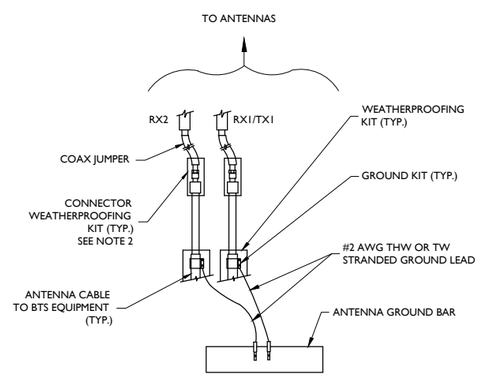

NOTES:

1. DO NOT INSTALL CABLE GROUND KIT AT A BEND AND ALWAYS DIRECT GROUND WIRE DOWN TO ANTENNA GROUND BAR.
2. WEATHER PROOFING SHALL BE TWO-PART TAPE KIT, COLD SHRINK SHALL NOT BE USED.

TYPICAL GROUND WIRE TO GROUNDING BAR

NOT TO SCALE

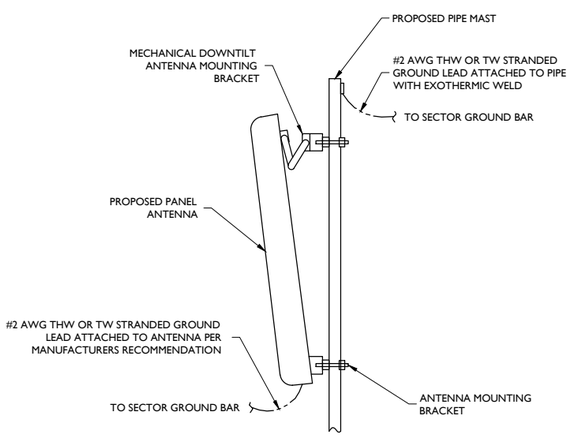

ANTENNA GROUNDING

NOT TO SCALE

MASER CONSULTING CONNECTICUT

Customer Loyalty *through* Client Satisfaction
www.maserconsulting.com
Engineers ■ Planners ■ Surveyors
Landscape Architects ■ Environmental Scientists

Copyright © 2016. Maser Consulting Connecticut All Rights Reserved. This drawing and all the information contained herein is authorized for use only by the party for whom the services were contracted or to whom it is certified. This drawing may not be copied, reused, disclosed, distributed or relied upon for any other purpose without the express written consent of Maser Consulting Connecticut.

smartlink
1362 MELLON ROAD
SUITE 140
HANOVER, MD 21076
TEL: (410) 582-8043 FAX: (443) 221-2962

at&t
NEW CINGULAR WIRELESS PCS, LLC
550 COCHITUATE ROAD
FRAMINGHAM, MA 01701

811 Know what's below. Call before you dig.

PROTECT YOURSELF
ALL STATES REQUIRE NOTIFICATION OF EXCAVATORS, DESIGNERS, OR ANY PERSON PREPARING TO DISTURB THE EARTH'S SURFACE ANYWHERE IN ANY STATE

FOR STATE SPECIFIC DIRECT PHONE NUMBERS VISIT: WWW.CALL811.COM

SCALE :	JOB NUMBER :
AS SHOWN	15946039A

REV	DATE	DESCRIPTION	DRAWN BY	CHECKED BY
.	.	.	.	.
.	.	.	.	.
.	.	.	.	.
.	.	.	.	.
.	.	.	.	.
2	01/06/16	REVISED PER SMARTLINK'S COMMENTS	SMG	FEP
1	12/18/15	REVISED PER SMARTLINK'S COMMENTS	SMG	FEP
0	11/03/15	ISSUED FOR REVIEW	RAP	FEP

STATE OF CONNECTICUT · FRANK E. PAZDEN · 28188 · LICENSED PROFESSIONAL ENGINEER

FRANK E. PAZDEN
CONNECTICUT LICENSE NO.
ENGINEER PROFESSIONAL ENGINEER LICENSE NO. 28188

IT IS A VIOLATION OF LAW FOR ANY PERSON, UNLESS THEY ARE ACTING UNDER THE DIRECTION OF THE RESPONSIBLE LICENSED PROFFESIONAL ENGINEER, TO ALTER THIS DOCUMENT.

SITE NAME:

PLAINVILLE - SPARKS ST.
FA# 10035333
SITE # CTL01054
CROWN SITE # 876333

10 SPARKS STREET
PLAINVILLE, CT 06062
COUNTY OF HARTFORD

RED BANK OFFICE
331 Newman Springs Road
Suite 203
Red Bank, NJ 07701-5699
Phone: 732.383.1950
Fax: 732.383.1984
email: solutions @maserconsulting.com

SHEET TITLE :

GROUNDING DETAILS

SHEET NUMBER :

G-1