April 19, 2017

Melanie A. Bachman
Executive Director
Connecticut Siting Council
10 Franklin Street
New Britain, CT 06051

Regarding:	Notice of Exempt Modification – RRUs Swap
Property Address:	50 Devine Street, North Haven, CT 06473
AT&T Site:	CT3506

Dear Ms. Bachman:

AT&T currently maintains a wireless telecommunications facility on an existing 129 foot monopole at the above-referenced address, latitude 41.377800, longitude-72.876200. Said monopole is owned by American Tower Corporation. The existing equipment shelter is 24' by 12', totaling 288 square feet.

AT&T desires to modify its existing telecommunications facility by swapping six remote radio heads ("RRUs"). The centerline height of said antennas is and will remain at 107 feet. Antennas are mounted utilizing a platform with handrails.

Please accept this application as notification pursuant to R.C.S.A. §16-50j-73, for construction that constitutes an exempt modification pursuant to R.C.S.A. §16-50j-72 (b)(2). In accordance with R.C.S.A. §16-50j-73, a copy of this letter is being sent to the First Selectman of the Town of North Haven, Michael J. Freda. A copy of this letter is also being sent to the Land Use Administrator Alan Fredricksen, as well as to the property owner 424 Chapel Street, LLC and the tower owner American Tower Corporation.

The planned modifications to AT&T's facility fall squarely within those activities explicitly provided for in R.C.S.A. §16-50j-72 (b)(2). Specifically:

1. The planned modification will not result in an increase in the height of the existing structure. The antennas to be swapped will be installed at the existing height of 107 feet on the 129-foot monopole.

2. The proposed modifications will not involve any changes to ground-mounted equipment, and therefore will not require an extension of the site boundary.

3. The proposed modification will not increase the noise level at the facility by six decibel or more, or to levels that exceed state and local criteria.

Sarah Snell • Empire Telecom USA, LLC • 16 Esquire Road Billerica, MA 01862 • 978-608-8416 • ssnell@empiretelecomm.com

4. The operation of the modified facility will not increase radio frequency (RF) emissions at the facility to a level at or above Federal Communications Commission (FCC) safety standard. An RF emissions calculation (attached) for AT&T's modified facility is herein provided.

5. The proposed modifications will not case a change or alteration in the physical or environmental characteristics of the site.

6. The monopole and its foundation can support AT&T's proposed modifications (please see attached structural analysis completed by American Tower dated February 24, 2017).

For the foregoing reasons, AT&T respectfully requests that the proposed diplexer swap be allowed within the exempt modifications under R.C.S.A. §16-50j-72 (b)(2).

Sincerely,

Sarah Snell

Sarah Snell
Site Acquisition Specialist

cc: Michael J. Freda, First Selectman of the Town of North Haven (municipality)
Alan Fredricksen, Land Use Administrator Town of North Haven
424 Chapel Street, LLC (land owner)
American Tower Corporation (tower owner)

CT3506

Property Information

Property ID	51/21
Location	50 DEVINE ST
Owner	424 CHAPEL STREET LLC

MAP FOR REFERENCE ONLY
NOT A LEGAL DOCUMENT

Town of North Haven, CT makes no claims and no warranties, expressed or implied, concerning the validity or accuracy of the GIS data presented on this map.

Properties updated 11/14/2016

50 DEVINE ST

Location	50 DEVINE ST	**Mblu**	051/ / 021/ /
Acct#	256482	**Owner**	424 CHAPEL STREET LLC
Assessment	$1,287,160	**Appraisal**	$1,838,800
PID	8849	**Building Count**	2

Current Value

Appraisal			
Valuation Year	**Improvements**	**Land**	**Total**
2014	$1,255,400	$583,400	$1,838,800
Assessment			
Valuation Year	**Improvements**	**Land**	**Total**
2014	$878,780	$408,380	$1,287,160

Owner of Record

Owner	424 CHAPEL STREET LLC	**Sale Price**	$0
Co-Owner		**Certificate**	
Address	50 DEVINE ST NORTH HAVEN, CT 06473	**Book & Page**	832/ 52
		Sale Date	08/02/2010

Ownership History

Ownership History				
Owner	**Sale Price**	**Certificate**	**Book & Page**	**Sale Date**
424 CHAPEL STREET LLC	$0		832/ 52	08/02/2010
424 CHAPEL STREET LLC	$0	1	772/ 943	08/02/2007
PAPA ANTHONY S (RET ANN TRUST 1,2,3) &	$0	2	427/ 372	02/11/1992
PAPA ANTHONY S	$0	3	410/ 102	07/24/1990
PAPA ANTHONY S	$0	4	410/ 87	07/24/1990

Building Information

Building 1 : Section 1

Year Built:	1949
Living Area:	24,300

Replacement Cost: $807,225
Building Percent Good: 80
Replacement Cost Less Depreciation: $645,800

Building Attributes	
Field	**Description**
STYLE	Lt. Industrial
MODEL	Ind/Comm
Grade	C
Stories:	1
Occupancy	1
Exterior Wall 1	Brick
Exterior Wall 2	Metal
Roof Structure	Gable/Hip
Roof Cover	Asphalt
Interior Wall 1	Drywall
Interior Wall 2	Minim/Masonry
Interior Floor 1	Concr-Finished
Interior Floor 2	Carpet
Heating Fuel	Gas
Heating Type	Unit Heat
AC Type	Central
Bldg Use	MANUFAC M96
Total Rooms	
Total Bedrms	
Total Baths	
1st Floor Use:	
Heat/AC	HEAT/AC PKGS
Frame Type	WOOD FRAME
Baths/Plumbing	AVERAGE
Ceiling/Wall	SUS-CEIL/MN WL
Rooms/Prtns	AVERAGE
Wall Height	10
% Comn Wall	

Building Photo

(http://images.vgsi.com/photos/NorthHavenCTPhotos//\00\01\5

Building Layout

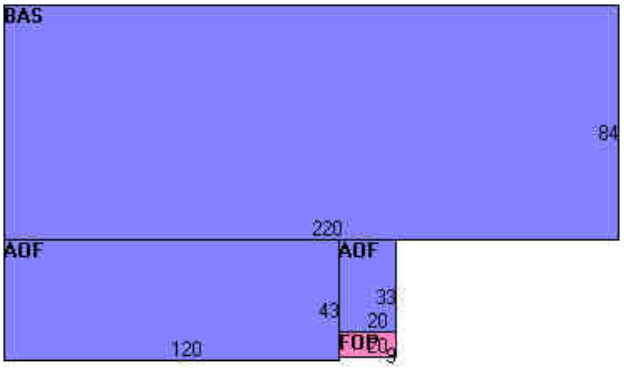

Building Sub-Areas (sq ft)			Legend
Code	**Description**	**Gross Area**	**Living Area**
BAS	First Floor	18,480	18,480
AOF	Office	5,820	5,820
FOP	Porch, Open	180	0
		24,480	24,300

Building 2 : Section 1

Year Built: 1984
Living Area: 18,228
Replacement Cost: $671,884
Building Percent Good: 80

Replacement Cost
Less Depreciation: $537,500

Building Attributes : Bldg 2 of 2	
Field	**Description**
STYLE	Lt. Industrial
MODEL	Ind/Comm
Grade	C
Stories:	1
Occupancy	1
Exterior Wall 1	Metal
Exterior Wall 2	
Roof Structure	Gable/Hip
Roof Cover	Metal/Tin
Interior Wall 1	Drywall
Interior Wall 2	
Interior Floor 1	Concr-Finished
Interior Floor 2	Carpet
Heating Fuel	Gas
Heating Type	Unit Heat
AC Type	Partial
Bldg Use	MANUFAC M96
Total Rooms	
Total Bedrms	
Total Baths	
1st Floor Use:	
Heat/AC	HEAT/AC PKGS
Frame Type	STEEL
Baths/Plumbing	AVERAGE
Ceiling/Wall	SUS-CEIL/MN WL
Rooms/Prtns	AVERAGE
Wall Height	22
% Comn Wall	

Building Photo

(http://images.vgsi.com/photos/NorthHavenCTPhotos//\00\01\5

Building Layout

Building Sub-Areas (sq ft)			Legend
Code	**Description**	**Gross Area**	**Living Area**
BAS	First Floor	11,772	11,772
AOF	Office	6,456	6,456
		18,228	18,228

Extra Features

Extra Features				Legend
Code	**Description**	**Size**	**Value**	**Bldg #**
A/C	AIR CONDITION	52800 S.F.	$82,400	2
SPR1	SPRINKLERS-WET	0 S.F.	$0	2
SPR1	SPRINKLERS-WET	19202 S.F.	$13,800	1

LDL1	LOAD LEVELERS	3 UNITS	$7,000	1
MEZ1	MEZZANINE-UNF	2959 S.F.	$21,300	1

Land

Land Use

Use Code	4000
Description	MANUFAC M96
Zone	IG80
Neighborhood	305
Alt Land Appr	No
Category	

Land Line Valuation

Size (Acres)	5.97
Frontage	
Depth	
Assessed Value	$408,380
Appraised Value	$583,400

Outbuildings

Outbuildings						Legend
Code	**Description**	**Sub Code**	**Sub Description**	**Size**	**Value**	**Bldg #**
PAV1	PAVING-ASPHALT			45000 S.F.	$6,100	1
TWR1	COMMU-TOWER			1 UNITS	$112,500	1

Valuation History

Appraisal			
Valuation Year	**Improvements**	**Land**	**Total**
2013	$1,332,500	$657,800	$1,990,300
2008	$733,200	$688,200	$1,421,400
2007		$481,740	$994,980

Assessment			
Valuation Year	**Improvements**	**Land**	**Total**
2013	$932,750	$460,460	$1,393,210
2008	$526,390	$481,740	$1,008,130
2007		$481,740	$994,980

WIRELESS COMMUNICATIONS FACILITY
CT3506 - LTE 3C
NORTH HAVEN DEVINE STREET
AMERICAN TOWER NO.: 283418
50 DEVINE STREET
NORTH HAVEN, CT 06473

GENERAL NOTES

1. ALL WORK SHALL BE IN ACCORDANCE WITH THE 2012 INTERNATIONAL BUILDING CODE AS MODIFIED BY THE 2016 CONNECTICUT STATE BUILDING CODE, INCLUDING THE TIA-222 REVISION "G" STRUCTURAL STANDARDS FOR STEEL ANTENNA TOWERS AND SUPPORTING STRUCTURES, 2016 CONNECTICUT FIRE SAFETY CODE AND, NATIONAL ELECTRICAL CODE AND LOCAL CODES.
2. THE COMPOUND, TOWER, PRIMARY GROUND RING, ELECTRICAL SERVICE TO THE METER BANK AND TELEPHONE SERVICE TO THE DEMARCATION POINT ARE PROVIDED BY SITE OWNER. AS BUILT FIELD CONDITIONS REGARDING THESE ITEMS SHALL BE CONFIRMED BY THE CONTRACTOR. SHOULD ANY FIELD CONDITIONS PRECLUDE COMPLIANCE WITH THE DRAWINGS, THE CONTRACTOR SHALL IMMEDIATELY NOTIFY THE ENGINEER AND SHALL NOT PROCEED WITH ANY AFFECTED WORK.
3. CONTRACTOR SHALL REVIEW ALL DRAWINGS AND SPECIFICATIONS IN THE CONTRACT DOCUMENT SET. CONTRACTOR SHALL COORDINATE ALL WORK SHOWN IN THE SET OF DRAWINGS. THE CONTRACTOR SHALL PROVIDE A COMPLETE SET OF DRAWINGS TO ALL SUBCONTRACTORS AND ALL RELATED PARTIES. THE SUBCONTRACTORS SHALL EXAMINE ALL THE DRAWINGS AND SPECIFICATIONS FOR THE INFORMATION THAT AFFECTS THEIR WORK.
4. CONTRACTOR SHALL PROVIDE A COMPLETE BUILD-OUT WITH ALL FINISHES, STRUCTURAL, MECHANICAL, AND ELECTRICAL COMPONENTS AND PROVIDE ALL ITEMS AS SHOWN OR INDICATED ON THE DRAWINGS OR IN THE WRITTEN SPECIFICATIONS.
5. CONTRACTOR SHALL FURNISH ALL MATERIAL, LABOR AND EQUIPMENT TO COMPLETE THE WORK AND FURNISH A COMPLETED JOB ALL IN ACCORDANCE WITH LOCAL AND STATE GOVERNING AUTHORITIES AND OTHER AUTHORITIES HAVING LAWFUL JURISDICTION OVER THE WORK.
6. CONTRACTOR SHALL SECURE AND PAY FOR ALL PERMITS AND ALL INSPECTIONS REQUIRED AND SHALL ALSO PAY FEES REQUIRED FOR THE GENERAL CONSTRUCTION, PLUMBING, ELECTRICAL AND HVAC. PERMITS SHALL BE PAID FOR BY THE RESPECTIVE SUBCONTRACTORS.
7. CONTRACTOR SHALL MAINTAIN A CURRENT SET OF DRAWINGS AND SPECIFICATIONS ON SITE AT ALL TIMES AND INSURE DISTRIBUTION OF NEW DRAWINGS TO SUBCONTRACTORS AND OTHER RELEVANT PARTIES AS SOON AS THEY ARE MADE AVAILABLE. ALL OLD DRAWINGS SHALL BE MARKED VOID AND REMOVED FROM THE CONTRACT AREA. THE CONTRACTOR SHALL FURNISH AN "AS-BUILT" SET OF DRAWINGS TO OWNER UPON COMPLETION OF PROJECT.
8. LOCATION OF EQUIPMENT, AND WORK SUPPLIED BY OTHERS THAT IS DIAGRAMMATICALLY INDICATED ON THE DRAWINGS SHALL BE DETERMINED BY THE CONTRACTOR. THE CONTRACTOR SHALL DETERMINE LOCATIONS AND DIMENSIONS SUBJECT TO STRUCTURAL CONDITIONS AND WORK OF THE SUBCONTRACTORS.
9. THE CONTRACTOR IS SOLELY RESPONSIBLE TO DETERMINE CONSTRUCTION PROCEDURE AND SEQUENCE, AND TO ENSURE THE SAFETY OF THE EXISTING STRUCTURES AND ITS COMPONENT PARTS DURING CONSTRUCTION. THIS INCLUDES THE ADDITION OF WHATEVER SHORING, BRACING, UNDERPINNING, ETC. THAT MAY BE NECESSARY. MAINTAIN EXISTING BUILDING'S/PROPERTY'S OPERATIONS, COORDINATE WORK WITH BUILDING/PROPERTY OWNER.
10. DRAWINGS INDICATE THE MINIMUM STANDARDS, BUT IF ANY WORK SHOULD BE INDICATED TO BE SUBSTANDARD TO ANY ORDINANCES, LAWS, CODES, RULES, OR REGULATIONS BEARING ON THE WORK, THE CONTRACTOR SHALL INCLUDE IN HIS WORK AND SHALL EXECUTE THE WORK CORRECTLY IN ACCORDANCE WITH SUCH ORDINANCES, LAWS, CODES, RULES OR REGULATIONS WITH NO INCREASE IN COSTS.
11. ALL UTILITY WORK SHALL BE IN ACCORDANCE WITH LOCAL UTILITY COMPANY REQUIREMENTS AND SPECIFICATIONS.
12. ALL EQUIPMENT AND PRODUCTS PURCHASED ARE TO BE REVIEWED BY CONTRACTOR AND ALL APPLICABLE SUBCONTRACTORS FOR ANY CONDITION PER MFR.'S RECOMMENDATIONS. CONTRACTOR TO SUPPLY THESE ITEMS AT NO COST TO OWNER OR CONSTRUCTION MANAGER.
13. ANY AND ALL ERRORS, DISCREPANCIES, AND 'MISSED" ITEMS ARE TO BE BROUGHT TO THE ATTENTION OF THE AT&T CONSTRUCTION MANAGER DURING THE BIDDING PROCESS BY THE CONTRACTOR. ALL THESE ITEMS ARE TO BE INCLUDED IN THE BID. NO 'EXTRA' WILL BE ALLOWED FOR MISSED ITEMS.
14. CONTRACTOR SHALL BE RESPONSIBLE FOR ALL ON-SITE SAFETY FROM THE TIME THE JOB IS AWARDED UNTIL ALL WORK IS COMPLETE AND ACCEPTED BY THE OWNER.
15. CONTRACTOR TO REVIEW ALL SHOP DRAWINGS AND SUBMIT COPY TO ENGINEER FOR APPROVAL. DRAWINGS MUST BEAR THE CHECKER'S INITIALS BEFORE SUBMITTING TO THE CONSTRUCTION MANAGER FOR REVIEW.
16. THE CONTRACTOR SHALL FIELD VERIFY ALL DIMENSIONS, ELEVATIONS, ANGLES, AND EXISTING CONDITIONS AT THE SITE, PRIOR TO FABRICATION AND/OR INSTALLATION OF ANY WORK IN THE CONTRACT AREA.
17. COORDINATION, LAYOUT, FURNISHING AND INSTALLATION OF CONDUIT AND ALL APPURTENANCES REQUIRED FOR PROPER INSTALLATION OF ELECTRICAL AND TELECOMMUNICATION SERVICE SHALL BE THE SOLE RESPONSIBILITY OF THE CONTRACTOR.
18. ALL EQUIPMENT AND PRODUCTS PURCHASED ARE TO BE REVIEWED BY CONTRACTOR AND ALL APPLICABLE SUB-CONTRACTORS FOR ANY CONDITION PER THE MANUFACTURER'S RECOMMENDATIONS. CONTRACTOR TO SUPPLY THESE ITEMS AT NO COST TO OWNER OR CONSTRUCTION MANAGER.
19. ALL DAMAGE CAUSED TO ANY EXISTING STRUCTURE SHALL BE THE SOLE RESPONSIBILITY OF THE CONTRACTOR. THE CONTRACTOR WILL BE HELD LIABLE FOR ALL REPAIRS REQUIRED FOR EXISTING STRUCTURES IF DAMAGED DURING CONSTRUCTION ACTIVITIES.
20. THE CONTRACTOR SHALL CONTACT "CALL BEFORE YOU DIG" AT LEAST 48 HOURS PRIOR TO ANY EXCAVATIONS AT 1-800-922-4455. ALL UTILITIES SHALL BE IDENTIFIED AND CLEARLY MARKED PRIOR TO ANY EXCAVATION WORK. CONTRACTOR SHALL MAINTAIN AND PROTECT MARKED UTILITIES THROUGHOUT PROJECT COMPLETION.
21. CONTRACTOR SHALL COMPLY WITH OWNERS ENVIRONMENTAL ENGINEER ON ALL METHODS AND PROVISIONS FOR ALL EXCAVATION ACTIVITIES INCLUDING SOIL DISPOSAL. ALL BACKFILL MATERIALS TO BE PROVIDED BY THE CONTRACTOR.

SITE DIRECTIONS

FROM: 500 ENTERPRISE DRIVE, ROCKY HILL, CONNECTICUT

TO: 50 DEVINE STREET, NORTH HAVEN, CONNECTICUT

1. HEAD NORTHEAST ON ENTERPRISE DR TOWARD CAPITAL BLVD	0.27 MI
2. TURN LEFT ONTO CAPITAL BLVD	0.30 MI
3. TURN LEFT ONTO WEST ST	0.30 MI
4. TURN LEFT TO MERGE ONTO I-91 S TOWARD NEW HAVEN	9.59 MI
5. TAKE EXIT 17 FOR CT-15 S/W CROSS PKWY	11.40 MI
6. TAKE EXIT 63 TOWARD CT-22/NORTH HAVEN	0.14 MI
7. TURN LEFT ONTO HARTFORD TURNPIKE	0.91 MI
8. TURN LEFT ONTO DEVINE ST	0.39 MI
9. 50 DEVINE STREET IS ON THE LEFT	

VICINITY MAP

SCALE: 1" = 1000'

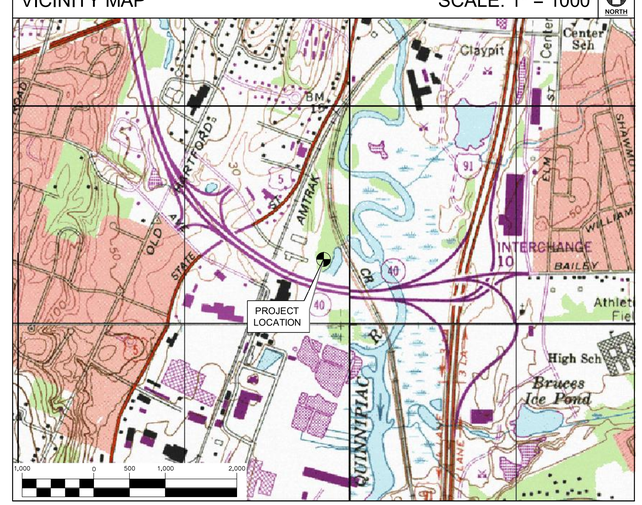

PROJECT SUMMARY

1. THE PROPOSED SCOPE OF WORK CONSISTS OF A MODIFICATION TO THE EXISTING UNMANNED TELECOMMUNICATIONS FACILITY INCLUDING THE FOLLOWING:
   - A. INSTALL (3) NEW RRUS-32 BEHIND EXISTING POSITION 2 ANTENNAS
   - B. REMOVE (3) RRUS-12s AND (3) RRUS-A2s WITH (3) PROPOSED RRUS-32 B2s MOUNTED ON TOWER.
   - C. REMOVE EXISTING DUS41 UNIT WITHIN EXISTING EQUIPMENT SHELTER FOR PROPOSED 5216 AND XMU UNIT.

PROJECT INFORMATION

AT&T SITE NUMBER:	CT3506
AT&T SITE NAME:	NORTH HAVEN DEVINE STREET
SITE ADDRESS:	AMERICAN TOWER SITE NO.: 283418 50 DEVINE STREET NORTH HAVEN, CT 06473
LESSEE/APPLICANT:	AT&T MOBILITY 500 ENTERPRISE DRIVE, SUITE 3A ROCKY HILL, CT 06067
ENGINEER:	CENTEK ENGINEERING, INC. 63-2 NORTH BRANFORD RD. BRANFORD, CT 06405
PROJECT COORDINATES:	LATITUDE: 41°-22'-40.03" N LONGITUDE: 72°-52'-34.19" W GROUND ELEVATION: ±4' AMSL SITE COORDINATES AND GROUND ELEVATION REFERENCED FROM GOOGLE EARTH.

SHEET INDEX

REV.	DATE	DRAWN BY	CHK'D BY	DESCRIPTION
0	04/03/17	KAWJR	CAG	CONSTRUCTION DRAWINGS – ISSUED FOR CONSTRUCTION

PROFESSIONAL ENGINEER SEAL

CENTEK engineering
Centered on Solutions™
(203) 488-0580
(203) 488-8587 Fax
63-2 North Branford Road
Branford, CT 06405
www.CentekEng.com

AT&T MOBILITY
WIRELESS COMMUNICATIONS FACILITY
NORTH HAVEN DEVINE STREET
CT3506 - LTE 3C
50 DEVINE STREET
NORTH HAVEN, CT 06473

DATE: 02/14/17
SCALE: AS NOTED
JOB NO. 17004.09

TITLE SHEET

T-1

Sheet No. 1 of 7

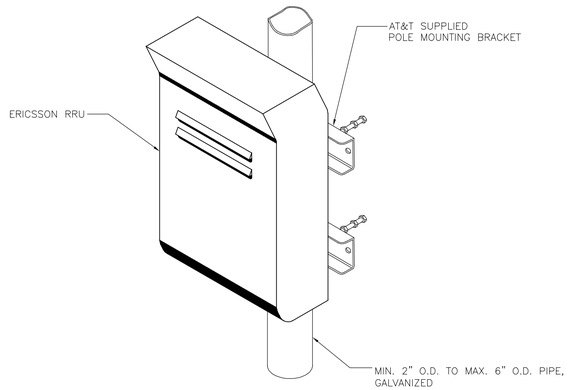

ISOMETRIC VIEW

NOTES:

1. AT&T SHALL SUPPLY RRU, AND RRU POLE-MOUNTING BRACKET. CONTRACTOR SHALL SUPPLY POLE/PIPE AND INSTALL ALL MOUNTING HARDWARE INCLUDING ERICSSON RRU POLE-MOUNTING BRACKET. CONTRACTOR SHALL INSTALLS RRU AND MAKES CABLE TERMINATIONS.
2. NO PAINTING OF THE RRU OR SOLAR SHIELD IS ALLOWED.

1 / N-1 **TYPICAL RRUS MOUNTING DETAILS**

SCALE: NTS

NOTES AND SPECIFICATIONS

DESIGN BASIS:

GOVERNING CODE: 2012 INTERNATIONAL BUILDING (IBC) AS MODIFIED BY THE 2016 CT STATE BUILDING CODE AND AMENDMENTS.

1. DESIGN CRITERIA:

- WIND LOAD: PER TIA 222 G (ANTENNA MOUNTS): 95-115 MPH (3 SECOND GUST)
- RISK CATEGORY: II (BASED ON IBC TABLE 1604.5)
- NOMINAL DESIGN SPEED (OTHER STRUCTURE): 97 MPH (Vasd) (EXPOSURE B/IMPORTANCE FACTOR 1.0 BASED ON ASCE 7-10) PER 2012 INTERNATIONAL BUILDING CODE (IBC) AS MODIFIED BY THE 2016 CONNECTICUT STATE BUILDING CODE.
- SEISMIC LOAD (DOES NOT CONTROL): PER ASCE 7-10 MINIMUM DESIGN LOADS FOR BUILDING AND OTHER STRUCTURES.

GENERAL NOTES:

1. ALL CONSTRUCTION SHALL BE IN COMPLIANCE WITH THE GOVERNING BUILDING CODE.
2. DRAWINGS INDICATE THE MINIMUM STANDARDS, BUT IF ANY WORK SHOULD BE INDICATED TO BE SUBSTANDARD TO ANY ORDINANCES, LAWS, CODES, RULES, OR REGULATIONS BEARING ON THE WORK, THE CONTRACTOR SHALL INCLUDE IN HIS WORK AND SHALL EXECUTE THE WORK CORRECTLY IN ACCORDANCE WITH SUCH ORDINANCES, LAWS, CODES, RULES OR REGULATIONS WITH NO INCREASE IN COSTS.
3. BEFORE BEGINNING THE WORK, THE CONTRACTOR IS RESPONSIBLE FOR MAKING SUCH INVESTIGATIONS CONCERNING PHYSICAL CONDITIONS (SURFACE AND SUBSURFACE) AT OR CONTIGUOUS TO THE SITE WHICH MAY AFFECT PERFORMANCE AND COST OF THE WORK.
4. DIMENSIONS AND DETAILS SHALL BE CHECKED AGAINST EXISTING FIELD CONDITIONS.
5. THE CONTRACTOR SHALL VERIFY AND COORDINATE THE SIZE AND LOCATION OF ALL OPENINGS, SLEEVES AND ANCHOR BOLTS AS REQUIRED BY ALL TRADES.
6. ALL DIMENSIONS, ELEVATIONS, AND OTHER REFERENCES TO EXISTING STRUCTURES, SURFACE, AND SUBSURFACE CONDITIONS ARE APPROXIMATE. NO GUARANTEE IS MADE FOR THE ACCURACY OR COMPLETENESS OF THE INFORMATION SHOWN. THE CONTRACTOR SHALL VERIFY AND COORDINATE ALL DIMENSIONS, ELEVATIONS, ANGLES WITH EXISTING CONDITIONS AND WITH ARCHITECTURAL AND SITE DRAWINGS BEFORE PROCEEDING WITH ANY WORK.
7. AS THE WORK PROGRESSES, THE CONTRACTOR SHALL NOTIFY THE OWNER OF ANY CONDITIONS WHICH ARE IN CONFLICT OR OTHERWISE NOT CONSISTENT WITH THE CONSTRUCTION DOCUMENTS AND SHALL NOT PROCEED WITH SUCH WORK UNTIL THE CONFLICT IS SATISFACTORILY RESOLVED.
8. THE CONTRACTOR SHALL COMPLY WITH ALL APPLICABLE SAFETY CODES AND REGULATIONS DURING ALL PHASES OF CONSTRUCTION. THE CONTRACTOR IS SOLELY RESPONSIBLE FOR PROVIDING AND MAINTAINING ADEQUATE SHORING, BRACING, AND BARRICADES AS MAY BE REQUIRED FOR THE PROTECTION OF EXISTING PROPERTY, CONSTRUCTION WORKERS, AND FOR PUBLIC SAFETY.
9. THE CONTRACTOR IS SOLELY RESPONSIBLE TO DETERMINE CONSTRUCTION PROCEDURE AND SEQUENCE, AND TO ENSURE THE SAFETY OF THE EXISTING STRUCTURES AND ITS COMPONENT PARTS DURING CONSTRUCTION. THIS INCLUDES THE ADDITION OF WHATEVER SHORING, BRACING, UNDERPINNING, ETC. THAT MAY BE NECESSARY. MAINTAIN EXISTING SITE OPERATIONS, COORDINATE WORK WITH NORTHEAST UTILITIES
10. THE STRUCTURE IS DESIGNED TO BE SELF-SUPPORTING AND STABLE AFTER FOUNDATION REMEDIATION WORK IS COMPLETE. IT IS THE CONTRACTOR'S SOLE RESPONSIBILITY TO DETERMINE ERECTION PROCEDURE AND SEQUENCE AND TO ENSURE THE SAFETY OF THE STRUCTURE AND ITS COMPONENT PARTS DURING ERECTION. THIS INCLUDES THE ADDITION OF WHATEVER SHORING, TEMPORARY BRACING, GUYS OR TIEDOWNS, WHICH MIGHT BE NECESSARY.
11. ALL DAMAGE CAUSED TO ANY EXISTING STRUCTURE SHALL BE THE SOLE RESPONSIBILITY OF THE CONTRACTOR. THE CONTRACTOR WILL BE HELD LIABLE FOR ALL REPAIRS REQUIRED FOR EXISTING STRUCTURES IF DAMAGED DURING CONSTRUCTION ACTIVITIES.
12. SHOP DRAWINGS, CONCRETE MIX DESIGNS, TEST REPORTS, AND OTHER SUBMITTALS PERTAINING TO STRUCTURAL WORK SHALL BE FORWARDED TO THE OWNER FOR REVIEW BEFORE FABRICATION AND/OR INSTALLATION IS MADE. SHOP DRAWINGS SHALL INCLUDE ERECTION DRAWINGS AND COMPLETE DETAILS OF CONNECTIONS AS WELL AS MANUFACTURER'S SPECIFICATION DATA WHERE APPROPRIATE. SHOP DRAWINGS SHALL BE CHECKED BY THE CONTRACTOR AND BEAR THE CHECKER'S INITIALS BEFORE BEING SUBMITTED FOR REVIEW.
13. NO DRILLING WELDING OR TAPING ON EVERSOURCE OWNED EQUIPMENT.
14. REFER TO DRAWING T1 FOR ADDITIONAL NOTES AND REQUIREMENTS.

STRUCTURAL STEEL

1. ALL STRUCTURAL STEEL IS DESIGNED BY ALLOWABLE STRESS DESIGN (ASD)

   A. STRUCTURAL STEEL (W SHAPES)---ASTM A992 (FY = 50 KSI)
   B. STRUCTURAL STEEL (OTHER SHAPES)---ASTM A36 (FY = 36 KSI)
   C. STRUCTURAL HSS (RECTANGULAR SHAPES)---ASTM A500 GRADE B, (FY = 46 KSI)
   D. STRUCTURAL HSS (ROUND SHAPES)---ASTM A500 GRADE B, (FY = 42 KSI)
   E. PIPE---ASTM A53 (FY = 35 KSI)
   F. CONNECTION BOLTS---ASTM A325-N
   G. U-BOLTS---ASTM A36
   H. ANCHOR RODS---ASTM F 1554
   I. WELDING ELECTRODE---ASTM E 70XX

2. CONTRACTOR TO REVIEW ALL SHOP DRAWINGS AND SUBMIT COPY TO ENGINEER FOR APPROVAL. DRAWINGS MUST BEAR THE CHECKER'S INITIALS BEFORE SUBMITTING TO THE ENGINEER FOR REVIEW. SHOP DRAWINGS SHALL INCLUDE THE FOLLOWING: SECTION PROFILES, SIZES, CONNECTION ATTACHMENTS, REINFORCING, ANCHORAGE, SIZE AND TYPE OF FASTENERS AND ACCESSORIES. INCLUDE ERECTION DRAWINGS, ELEVATIONS AND DETAILS.
3. STRUCTURAL STEEL SHALL BE DETAILED, FABRICATED AND ERECTED IN ACCORDANCE WITH THE LATEST PROVISIONS OF AISC MANUAL OF STEEL CONSTRUCTION.
4. PROVIDE ALL PLATES, CLIP ANGLES, CLOSURE PIECES, STRAP ANCHORS, MISCELLANEOUS PIECES AND HOLES REQUIRED TO COMPLETE THE STRUCTURE.
5. FIT AND SHOP ASSEMBLE FABRICATIONS IN THE LARGEST PRACTICAL SECTIONS FOR DELIVERY TO SITE.
6. INSTALL FABRICATIONS PLUMB AND LEVEL, ACCURATELY FITTED, AND FREE FROM DISTORTIONS OR DEFECTS.
7. AFTER ERECTION OF STRUCTURES, TOUCHUP ALL WELDS, ABRASIONS AND NON-GALVANIZED SURFACES WITH A 95% ORGANIC ZINC RICH PAINT IN ACCORDANCE WITH ASTM 780.
8. ALL STEEL MATERIAL (EXPOSED TO WEATHER) SHALL BE GALVANIZED AFTER FABRICATION IN ACCORDANCE WITH ASTM A123 "ZINC (HOT DIPPED GALVANIZED) COATINGS" ON IRONS AND STEEL PRODUCTS.
9. ALL BOLTS, ANCHORS AND MISCELLANEOUS HARDWARE SHALL BE GALVANIZED IN ACCORDANCE WITH ASTM A153 "ZINC COATING (HOT-DIP) ON IRON AND STEEL HARDWARE".
10. THE ENGINEER SHALL BE NOTIFIED OF ANY INCORRECTLY FABRICATED, DAMAGED OR OTHERWISE MISFITTING OR NON CONFORMING MATERIALS OR CONDITIONS TO REMEDIAL OR CORRECTIVE ACTION. ANY SUCH ACTION SHALL REQUIRE ENGINEER REVIEW.
11. CONNECTION ANGLES SHALL HAVE A MINIMUM THICKNESS OF 1/4 INCHES.
12. STRUCTURAL CONNECTION BOLTS SHALL CONFORM TO ASTM A325. ALL BOLTS SHALL BE 3/4" DIAMETER MINIMUM AND SHALL HAVE A MINIMUM OF TWO BOLTS, UNLESS OTHERWISE ON THE DRAWINGS.
13. LOCK WASHER ARE NOT PERMITTED FOR A325 STEEL ASSEMBLIES.
14. SHOP CONNECTIONS SHALL BE WELDED OR HIGH STRENGTH BOLTED.
15. MILL BEARING ENDS OF COLUMNS, STIFFENERS, AND OTHER BEARING SURFACES TO TRANSFER LOAD OVER ENTIRE CROSS SECTION.
16. FABRICATE BEAMS WITH MILL CAMBER UP.
17. LEVEL AND PLUMB INDIVIDUAL MEMBERS OF THE STRUCTURE TO AN ACCURACY OF 1:500, BUT NOT TO EXCEED 1/4" IN THE FULL HEIGHT OF THE COLUMN.
18. COMMENCEMENT OF STRUCTURAL STEEL WORK WITHOUT NOTIFYING THE ENGINEER OF ANY DISCREPANCIES WILL BE CONSIDERED ACCEPTANCE OF PRECEDING WORK.
19. INSPECTION AND TESTING OF ALL WELDING AND HIGH STRENGTH BOLTING SHALL BE PERFORMED BY AN INDEPENDENT TESTING LABORATORY.
20. FOUR COPIES OF ALL INSPECTION TEST REPORTS SHALL BE SUBMITTED TO THE ENGINEER WITHIN TEN (10) WORKING DAYS OF THE DATE OF INSPECTION.

PAINT NOTES

PAINTING SCHEDULE:

1. ANTENNA PANELS:

   A. SHERWIN WILLIAMS POLANE-B
   B. COLOR TO BE MATCHED WITH EXISTING TOWER STRUCTURE.

2. COAXIAL CABLES:

   A. ONE COAT OF DTM BONDING PRIMER (2-5 MILS. DRY FINISH)
   B. TWO COATS OF DTM ACRYLIC PRIMER/FINISH (2.5-5 MILS. DRY FINISH)
   C. COLOR TO BE FIELD MATCHED WITH EXISTING STRUCTURE.

EXAMINATION AND PREPARATION:

1. DO NOT APPLY PAINT IN SNOW, RAIN, FOG OR MIST OR WHEN RELATIVE HUMIDITY EXCEEDS 85%. DO NOT APPLY PAINT TO DAMP OR WET SURFACES.
2. VERIFY THAT SUBSTRATE CONDITIONS ARE READY TO RECEIVE WORK. EXAMINE SURFACE SCHEDULED TO BE FINISHED PRIOR TO COMMENCEMENT OF WORK. REPORT ANY CONDITION THAT MAY POTENTIALLY AFFECT PROPER APPLICATION.
3. TEST SHOP APPLIED PRIMER FOR COMPATIBILITY WITH SUBSEQUENT COVER MATERIALS.
4. PERFORM PREPARATION AND CLEANING PROCEDURE IN STRICT ACCORDANCE WITH COATING MANUFACTURER'S INSTRUCTIONS FOR EACH SUBSTRATE CONDITION.
5. CORRECT DEFECTS AND CLEAN SURFACES WHICH AFFECT WORK OF THIS SECTION. REMOVE EXISTING COATINGS THAT EXHIBIT LOOSE SURFACE DEFECTS.
6. IMPERVIOUS SURFACE: REMOVE MILDEW BY SCRUBBING WITH SOLUTION OF TRI-SODIUM PHOSPHATE AND BLEACH. RINSE WITH CLEAN WATER AND ALLOW SURFACE TO DRY.
7. ALUMINUM SURFACE SCHEDULED FOR PAINT FINISH: REMOVE SURFACE CONTAMINATION BY STEAM OR HIGH-PRESSURE WATER. REMOVE OXIDATION WITH ACID ETCH AND SOLVENT WASHING. APPLY ETCHING PRIMER IMMEDIATELY FOLLOWING CLEANING.
8. FERROUS METALS: CLEAN UNGALVANIZED FERROUS METAL SURFACES THAT HAVE NOT BEEN SHOP COATED; REMOVE OIL, GREASE, DIRT, LOOSE MILL SCALE, AND OTHER FOREIGN SUBSTANCES. USE SOLVENT OR MECHANICAL CLEANING METHODS THAT COMPLY WITH THE STEEL STRUCTURES PAINTING COUNCIL'S (SSPC) RECOMMENDATIONS. TOUCH UP BARE AREAS AND SHOP APPLIED PRIME COATS THAT HAVE BEEN DAMAGED. WIRE BRUSH, CLEAN WITH SOLVENTS RECOMMENDED BY PAINT MANUFACTURER, AND TOUCH UP WITH THE SAME PRIMER AS THE SHOP COAT.
9. GALVANIZED SURFACES: CLEAN GALVANIZED SURFACES WITH NON-PETROLEUM-BASED SOLVENTS SO SURFACE IS FREE OF OIL AND SURFACE CONTAMINANTS. REMOVE PRETREATMENT FROM GALVANIZED SHEET METAL FABRICATED FROM COIL STOCK BY MECHANICAL METHODS.
10. ANTENNA PANELS: REMOVE ALL OIL, DUST, GREASE, DIRT, AND OTHER FOREIGN MATERIAL TO ENSURE ADEQUATE ADHESION. PANELS MUST BE WIPED WITH METHYL ETHYL KETONE (MEK).
11. COAXIAL CABLES: REMOVE ALL OIL, DUST, GREASE. DIRT, AND OTHER FOREIGN MATERIAL TO ENSURE ADEQUATE ADHESION.

CLEANING:

1. COLLECT WASTE MATERIAL, WHICH MAY CONSTITUTE A FIRE HAZARD, PLACE IN CLOSED METAL CONTAINERS AND REMOVE DAILY FROM SITE.

APPLICATION:

1. APPLY PRODUCTS IN ACCORDANCE WITH MANUFACTURER'S INSTRUCTIONS.
2. DO NOT APPLY FINISHES TO SURFACES THAT ARE NOT DRY.
3. APPLY EACH COAT TO UNIFORM FINISH.
4. APPLY EACH COAT OF PAINT SLIGHTLY DARKER THAN PRECEDING COAT UNLESS OTHERWISE APPROVED.
5. SAND METAL LIGHTLY BETWEEN COATS TO ACHIEVE REQUIRED FINISH.
6. VACUUM CLEAN SURFACES FREE OF LOOSE PARTICLES. USE TACK CLOTH JUST PRIOR TO APPLYING NEXT COAT.
7. ALLOW APPLIED COAT TO DRY BEFORE NEXT COAT IS APPLIED.

COMPLETED WORK:

1. SAMPLES: PREPARE 24" X 24" SAMPLE AREA FOR REVIEW.
2. MATCH APPROVED SAMPLES FOR COLOR, TEXTURE AND COVERAGE. REMOVE REFINISH OR REPAINT WORK NOT IN COMPLIANCE WITH SPECIFIED REQUIREMENTS.

REV.	DATE	DRAWN BY	CHK'D BY	DESCRIPTION
0	04/03/17	KAWJR	CAG	CONSTRUCTION DRAWINGS - ISSUED FOR CONSTRUCTION

PROFESSIONAL ENGINEER SEAL

at&t

EMPIRE telecom

CENTEK engineering
Centered on Solutions™
(203) 488-0580
(203) 488-8587 Fax
63-2 North Branford Road
Branford, CT 06405
www.CentekEng.com

AT&T MOBILITY
WIRELESS COMMUNICATIONS FACILITY
NORTH HAVEN DEVINE STREET
CT3506 - LTE 3C
50 DEVINE STREET
NORTH HAVEN, CT 06473

DATE: 02/14/17
SCALE: AS NOTED
JOB NO. 17004.09

NOTES, SPECIFICATIONS AND DETAILS

N-1

Sheet No. 2 of 7

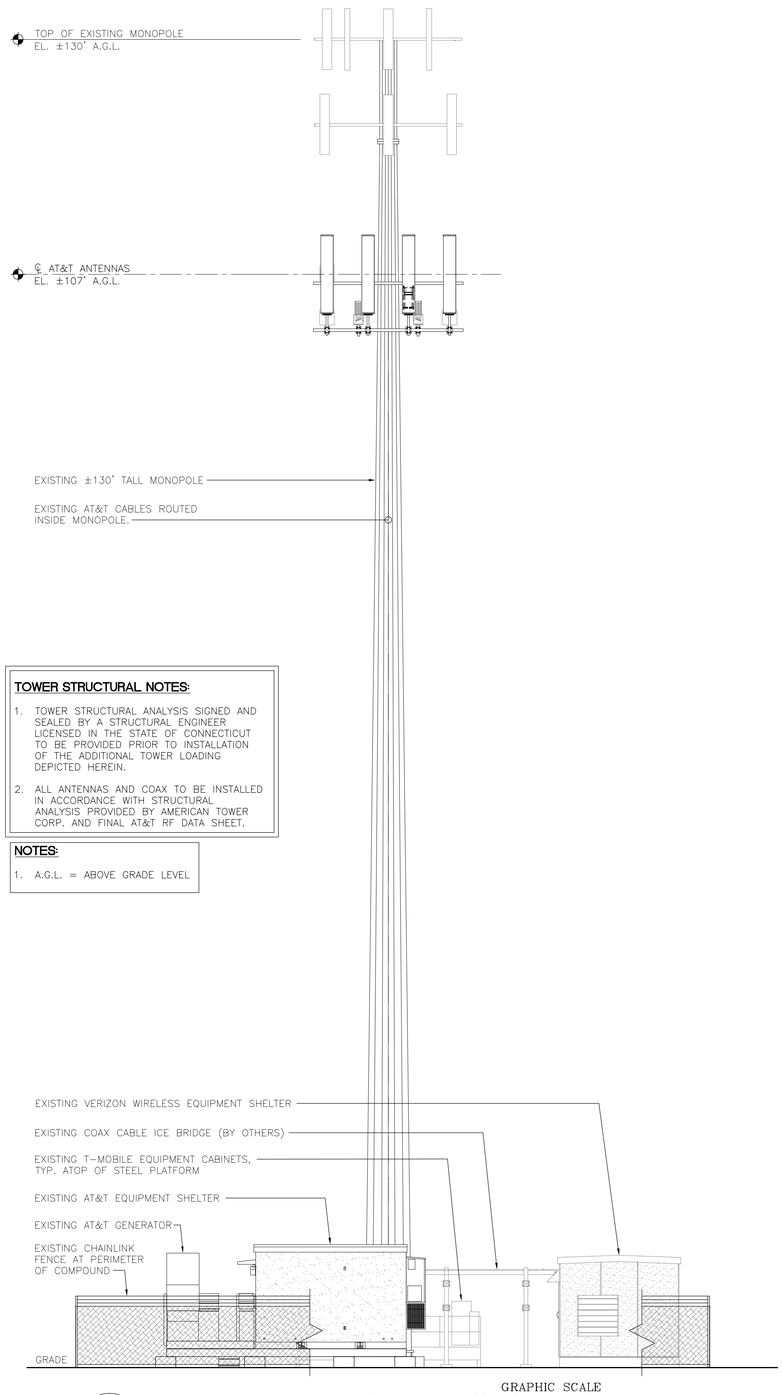

TOWER STRUCTURAL NOTES:

1. TOWER STRUCTURAL ANALYSIS SIGNED AND SEALED BY A STRUCTURAL ENGINEER LICENSED IN THE STATE OF CONNECTICUT TO BE PROVIDED PRIOR TO INSTALLATION OF THE ADDITIONAL TOWER LOADING DEPICTED HEREIN.
2. ALL ANTENNAS AND COAX TO BE INSTALLED IN ACCORDANCE WITH STRUCTURAL ANALYSIS PROVIDED BY AMERICAN TOWER CORP. AND FINAL AT&T RF DATA SHEET.

NOTES:

1. A.G.L. = ABOVE GRADE LEVEL

3 / C-1 **NORTH ELEVATION**
SCALE: 1" = 7'

GRAPHIC SCALE
7 0 3.5 7 14 28
(IN FEET)
1 inch = 7 ft.

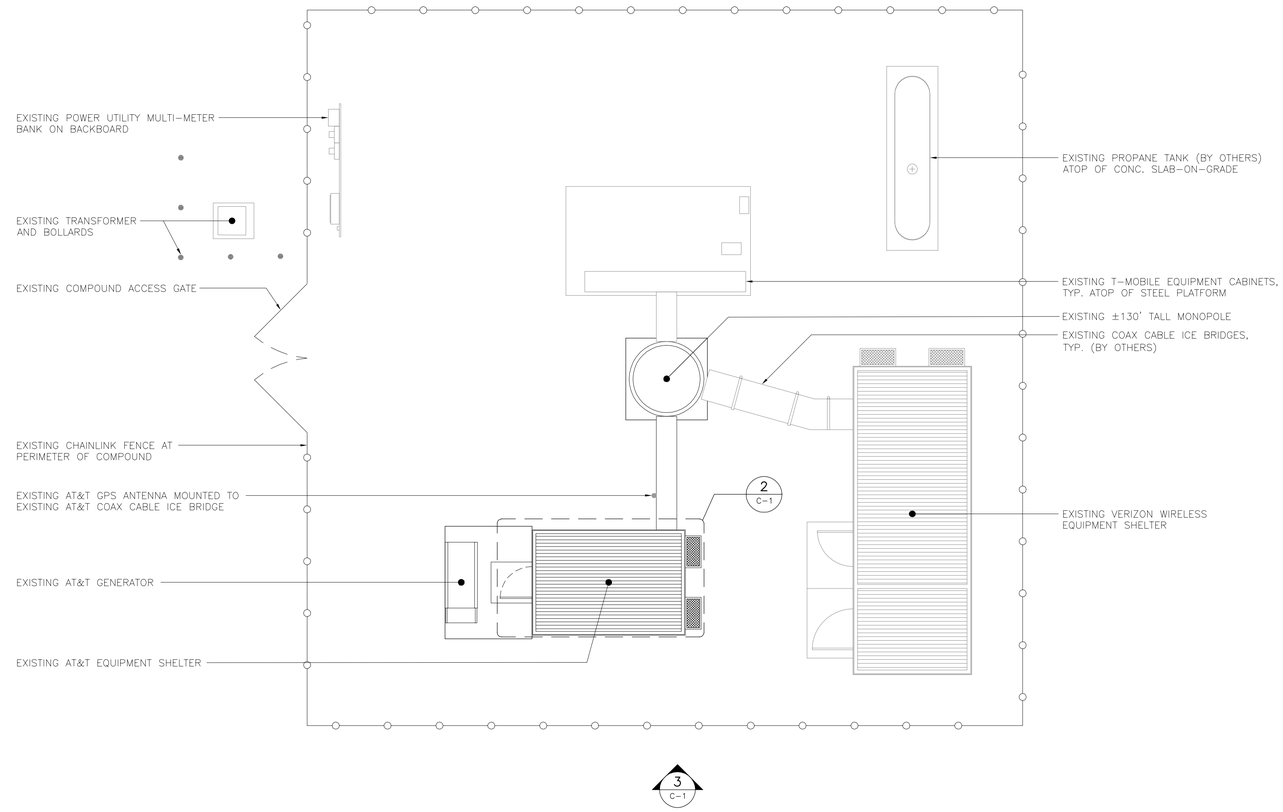

1 / C-1 **COMPOUND PLAN**
SCALE: 1" = 7'

TRUE NORTH

GRAPHIC SCALE
7 0 3.5 7 14 28
(IN FEET)
1 inch = 7 ft.

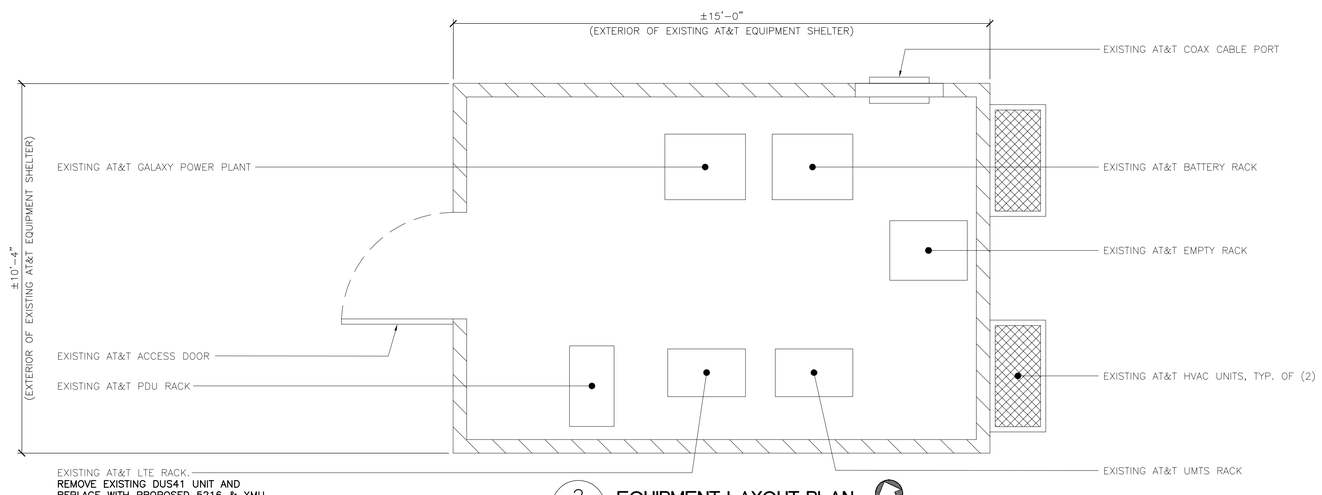

2 / C-1 **EQUIPMENT LAYOUT PLAN**
SCALE: 1/2" = 1'-0"

TRUE NORTH

REV.	DATE	DRAWN BY	CHK'D BY	DESCRIPTION
0	04/03/17	KAWJR	CAG	CONSTRUCTION DRAWINGS – ISSUED FOR CONSTRUCTION

PROFESSIONAL ENGINEER SEAL

at&t

EMPIRE telecom

CENTEK engineering
Centered on Solutions™
(203) 488-0580
(203) 488-8587 Fax
63-2 North Branford Road
Branford, CT 06405
www.CentekEng.com

AT&T MOBILITY
WIRELESS COMMUNICATIONS FACILITY

NORTH HAVEN DEVINE STREET
CT3506 - LTE 3C
50 DEVINE STREET
NORTH HAVEN, CT 06473

DATE: 02/14/17
SCALE: AS NOTED
JOB NO. 17004.09

PLANS AND ELEVATION

C-1

Sheet No. 3 of 7

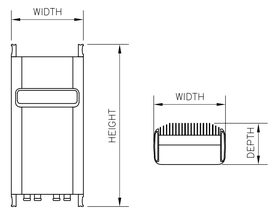

FRONT VIEW TOP VIEW

RRU (REMOTE RADIO UNIT)			
EQUIPMENT	DIMENSIONS	WEIGHT	CLEARANCES
MAKE: ERICSSON MODEL: RRUS-32	27.17"H x 12.05"W x 7.01"D	52.91 LBS.	ABOVE: 16" MIN. BELOW: 12" MIN. FRONT: 36" MIN.

NOTES:
1. CONTRACTOR TO COORDINATE FINAL EQUIPMENT MODEL SELECTION WITH AT&T CONSTRUCTION MANAGER PRIOR TO ORDERING.

5 / C-2 ERICSSON RRUS 32 DETAIL
SCALE: 1" = 1'-0"

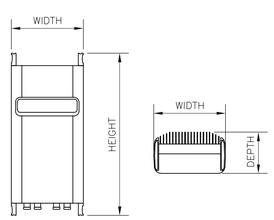

FRONT VIEW TOP VIEW

RRU (REMOTE RADIO UNIT)			
EQUIPMENT	DIMENSIONS	WEIGHT	CLEARANCES
MAKE: ERICSSON MODEL: RRUS-32 B2	27.17"H x 12.05"W x 7.01"D	52.91 LBS.	ABOVE: 16" MIN. BELOW: 12" MIN. FRONT: 36" MIN.

NOTES:
1. CONTRACTOR TO COORDINATE FINAL EQUIPMENT MODEL SELECTION WITH AT&T CONSTRUCTION MANAGER PRIOR TO ORDERING.

6 / C-2 ERICSSON RRUS 32 B2 DETAIL
SCALE: 1" = 1'-0"

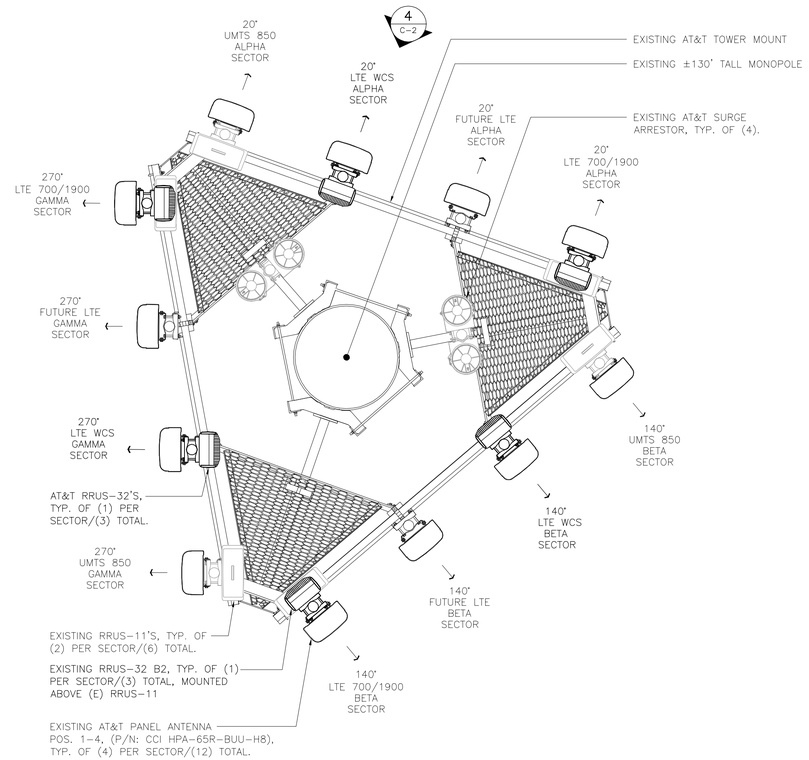

2 / C-2 PROPOSED ANTENNA PLAN
SCALE: 1/2" = 1'-0"
NORTH

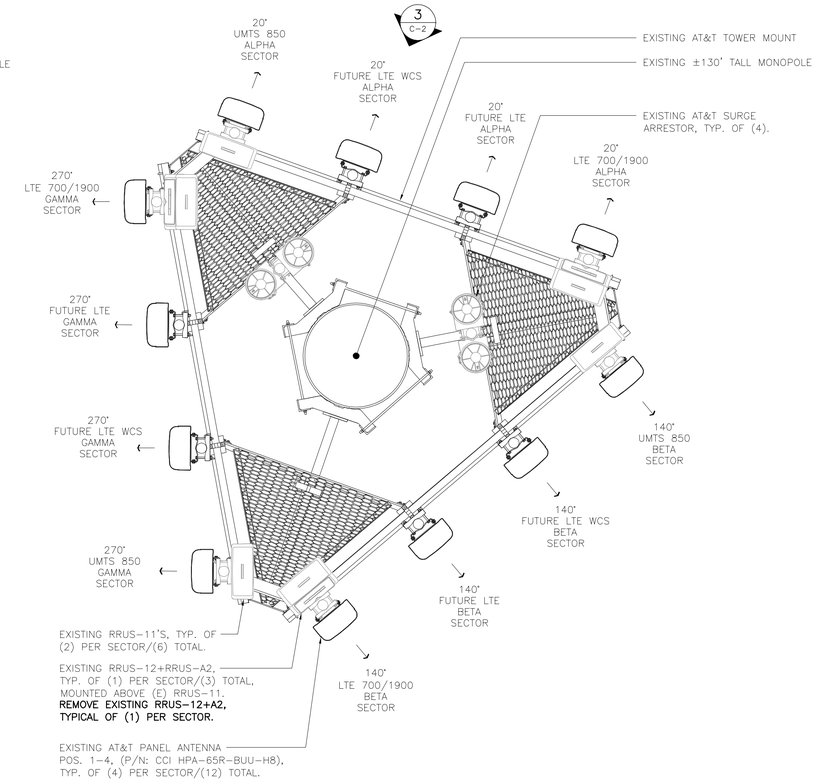

1 / C-2 EXISTING ANTENNA PLAN
SCALE: 1/2" = 1'-0"
NORTH

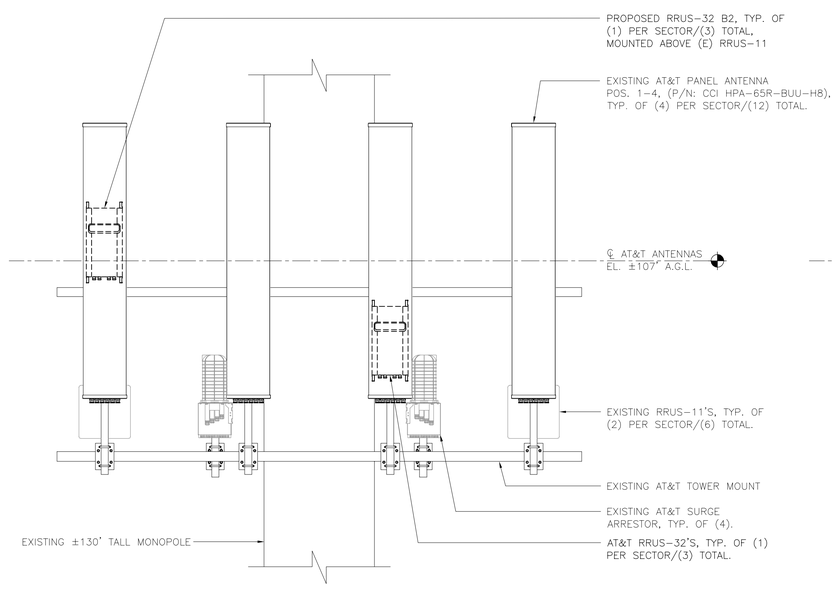

4 / C-2 PROPOSED ANTENNA ELEVATION
SCALE: 1/2" = 1'-0"

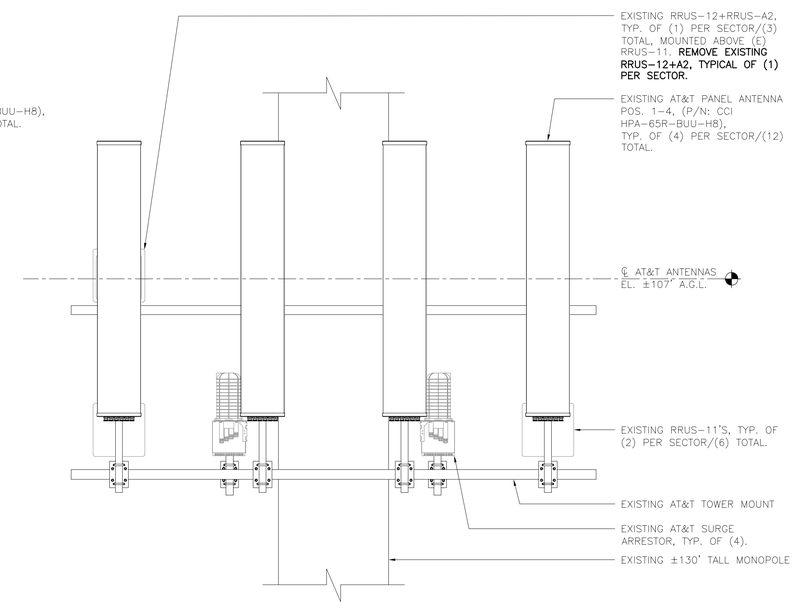

3 / C-2 EXISTING ANTENNA ELEVATION
SCALE: 1/2" = 1'-0"

REV.	DATE	DRAWN BY	CHK'D BY	DESCRIPTION
0	04/03/17	KAWJR	CAG	CONSTRUCTION DRAWINGS - ISSUED FOR CONSTRUCTION

PROFESSIONAL ENGINEER SEAL

at&t

EMPIRE telecom

CENTEK engineering
Centered on Solutions
(203) 488-0580
(203) 488-8587 Fax
63-2 North Branford Road
Branford, CT 06405
www.CentekEng.com

AT&T MOBILITY
WIRELESS COMMUNICATIONS FACILITY

NORTH HAVEN DEVINE STREET
CT3506 - LTE 3C
50 DEVINE STREET
NORTH HAVEN, CT 06473

DATE: 02/14/17
SCALE: AS NOTED
JOB NO. 17004.09

LTE 3C EQUIPMENT DETAILS

C-2

Sheet No. 4 of 7

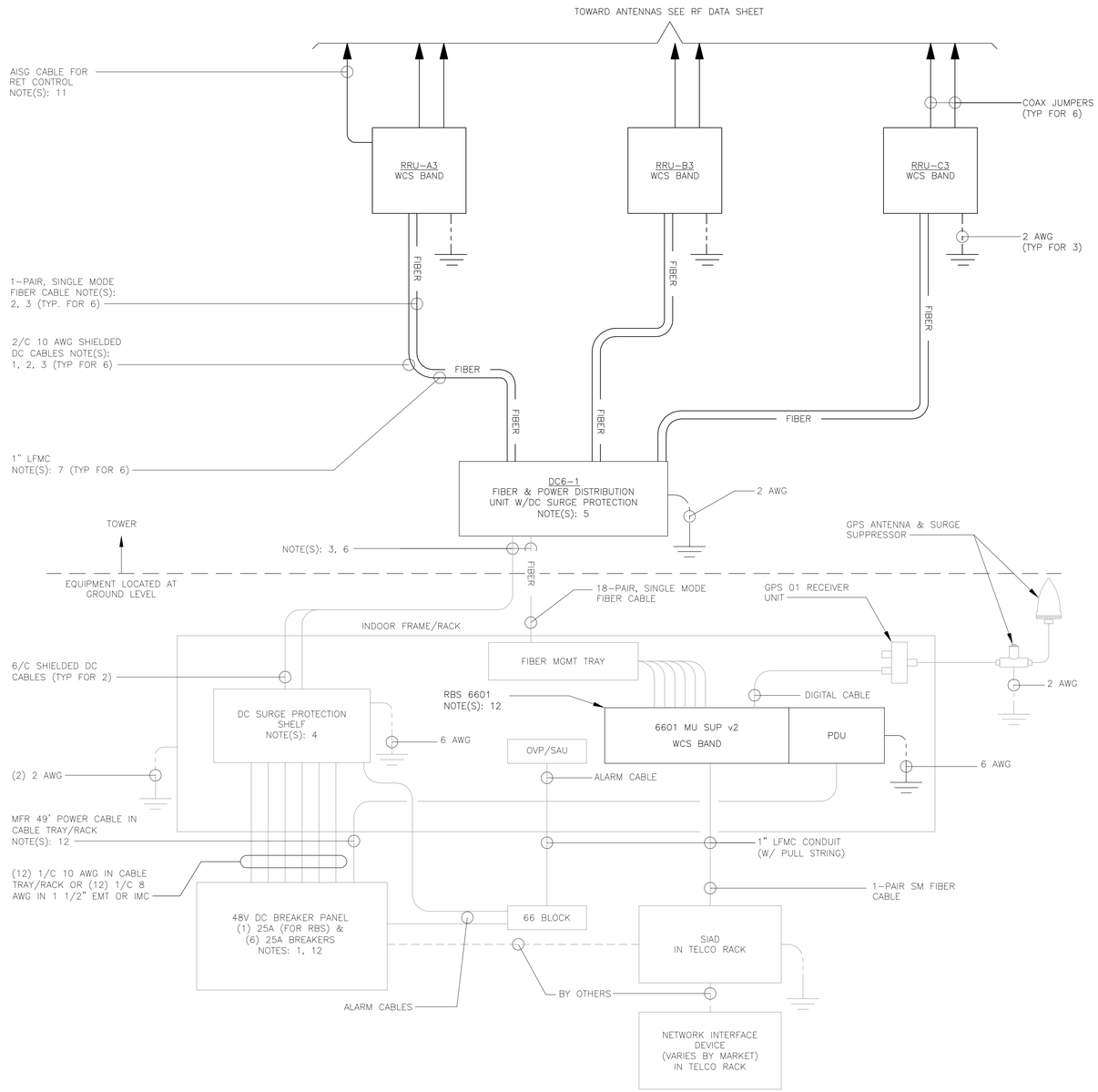

1 / E–1

LTE SCHEMATIC DIAGRAM

NOT TO SCALE

LTE SCHEMATIC DIAGRAM NOTES:

1. BREAKERS TO BE TAGGED AND LOCKED OUT. A 20A (MIN.) OR 30A (MAX.) BREAKER FOR RRUs MAY BE SUBSTITUTED FOR THE RECOMMENDED 25A BREAKER. SIZE 12 CONDUCTORS MAY BE USED ONLY WITH 20A BREAKERS.
2. LEAVE COILED AND PROTECTED UNTIL TERMINATED.
3. DC AND FIBER CABLE SHALL BE ROUTED WITH THE EXISTING COAX CABLE.
4. DC SURGE PROTECTION SHELF SHALL BE RAYCAP DCx–48–60–RM.
5. FIBER & DC DISTRIBUTION BOX W/DC SURGE PROTECTION SHALL BE RAYCAP DC6–48–60–18–8F.
6. SUPPORT FIBER & DC POWER CABLES WITH SNAP–IN HANGERS SPACED NO GREATER THAN 3 FEET APART ON TOWER. SUPPORT FIBER AND DC POWER CABLES INSIDE MONOPOLE WITH CABLE HOISTING GRIPS AT 250 FT MAXIMUM INTERVALS. DRESS CABLES TO PREVENT CONTACT WITH ENTRANCE AND EXIT OPENINGS.
7. CONDUIT TO BE USED ON A TOWER IF THE RRU IS MORE THAN 10' FROM THE DISTRIBUTION UNITS. MAX CABLE LENGTH IS 16 FEET.
8. SINGLE–CONDUCTOR DC POWER CABLES SHALL BE TELCOFLEX® OR KS24194™, COPPER, UL LISTED RHH NON–HALOGEN, LOW SMOKE WITH BRAIDED COVER, TYPE TC (1/0 AND LARGER). UNLESS OTHERWISE NOTED, STRANDING SHALL BE CLASS B (TYPE III) FOR CABLES SIZES 14, 12 & 10 AWG AND CLASS I (TYPE IV) FOR SIZES 8 AWG AND LARGER. CABLES SHALL BE COLOR CODED RED FOR +24V, BLUE FOR –48V AND GRAY FOR 24V AND 48V RETURN CONDUCTORS. MULTI–CONDUCTOR DC POWER CABLES SHALL BE COPPER, CLASS B STRANDING WITH FLAME RETARDANT PVC JACKET, TYPE TC, UL LISTED FOR 90°C DRY/ 75°C WET INSTALLATION.
9. GROUNDING WIRES SHALL BE COPPER, GREEN THHN/THWN UL LISTED FOR 90°C DRY/75°C WET INSTALLATION. MINIMUM SIZE IS 6 AWG UNLESS NOTED OTHERWISE.
10. FIBER OPTIC CABLES SHALL BE INSTALLED IN FLEXIBLE CONDUIT AS SCOPED BY MARKET.
11. RET CONTROL FROM THE RRU IS AN OPTIONAL METHOD OF CONNECTION. REFER TO RF DATA SHEET FOR APPLICABILITY.
12. RBS 6601 VARIANT 2 REQUIRES A 25A BREAKER AND 10 AWG (MIN.) CONDUCTORS. REPLACE EXISTING 15A OR 20A BREAKERS AND 12 AWG CONDUCTORS WHEN UPGRADING AN EXISTING RBS 6601 VARIANT 1.

ELECTRICAL NOTES

1. PRIOR TO START OF CONSTRUCTION CONTRACTOR SHALL COORDINATE WITH OWNER FOR ALL CONSTRUCTION STANDARDS AND SPECIFICATIONS, AND ALL MANUFACTURER DOCUMENTATION FOR ALL EQUIPMENT TO BE INSTALLED.
2. INSTALL ALL EQUIPMENT IN ACCORDANCE WITH LOCAL BUILDING CODE, NATIONAL ELECTRIC CODE, OWNER AND MANUFACTURER'S SPECIFICATIONS.
3. CONNECT ALL NEW EQUIPMENT TO EXISTING TELCO AS REQUIRED BY MANUFACTURER.
4. MAINTAIN ALL CLEARANCES REQUIRED BY NEC AND EQUIPMENT MANUFACTURER.
5. PRIOR TO INSTALLATION CONTRACTOR SHALL MEASURE EXISTING ELECTRICAL LOAD AND VERIFY EXISTING AVAILABLE CAPACITY FOR PROPOSED INSTALLATION. IF INADEQUATE CAPACITY IS AVAILABLE, CONTRACTOR SHALL COORDINATE WITH LOCAL ELECTRIC UTILITY COMPANY TO UPGRADE EXISTING ELECTRIC SERVICE.
6. CONTRACTOR SHALL INSPECT EXISTING GROUNDING AND LIGHTNING PROTECTION SYSTEM AND ENSURE THAT IT IS IN COMPLIANCE WITH NEC, AND SITE OWNER'S SPECIFICATIONS. THE RESULTS OF THIS INSPECTION SHALL BE PRESENTED TO OWNERS REPRESENTATIVE, AND ANY DEFICIENCIES SHALL BE CORRECTED.
7. ALL TRANSMISSION TOWER SITES CONTAIN AN EXTENSIVE BURIED GROUNDING SYSTEM. ALL GROUNDING WORK MUST BE COORDINATED WITH, AND APPROVED BY, THE TOWER OWNER'S SITE REPRESENTATIVE. ALL OF THE TOWER OWNER'S SPECIFICATIONS MUST BE STRICTLY FOLLOWED.
8. PROVIDE AND INSTALL GROUND KITS FOR ALL NEW COAXIAL CABLES AND BOND TO EXISTING OWNERS GROUNDING SYSTEM PER OWNERS SPECIFICATIONS AND NEC.
9. ALL CONDUCTORS SHALL BE TYPE THWN (INT. APPLICATION) AND XHHW (EXT. APPLICATION), 75 DEGREE C, 600 VOLT INSULATION, SOFT ANNEALED STRANDED COPPER. #10 AWG AND SMALLER SHALL BE SPLICED USING ACCEPTABLE SOLDERLESS PRESSURE CONNECTORS. #8 AWG AND LARGER SHALL BE SPLICED USING COMPRESSION SPLIT–BOLT TYPE CONNECTORS, #12 AWG SHALL BE THE MINIMUM SIZE CONDUCTOR FOR LINE VOLTAGE BRANCH CIRCUITS. REFER TO PANEL SCHEDULE FOR BRANCH CIRCUIT CONDUCTOR SIZE(S). CONDUCTORS SHALL BE COLOR CODED FOR CONSISTENT PHASE IDENTIFICATION:
10. MINIMUM BENDING RADIUS FOR CONDUCTORS SHALL BE 12 TIMES THE LARGEST DIAMETER OF BRANCH CIRCUIT CONDUCTOR.
11. THE ENTIRE ELECTRICAL INSTALLATION SHALL BE MADE IN STRICT ACCORDANCE WITH ALL LOCAL, STATE AND NATIONAL CODES AND REGULATIONS WHICH MAY APPLY AND NOTHING IN THE DRAWINGS OR SPECIFICATIONS SHALL BE INTERPRETED AS AN INFRINGEMENT OF SUCH CODES OR REGULATIONS.
12. THE ELECTRICAL CONTRACTOR IS TO BE RESPONSIBLE FOR THE COMPLETE INSTALLATION AND COORDINATION OF THE ENTIRE ELECTRICAL SERVICE. ALL ACTIVITIES TO BE COORDINATED THROUGH OWNER'S REPRESENTATIVE, DESIGN ENGINEER AND OTHER AUTHORITIES HAVING JURISDICTION OF TRADES.
13. THE CONTRACTOR SHALL BE RESPONSIBLE FOR OBTAINING ALL PERMITS AND PAY ALL FEES AS MAY BE REQUIRED FOR THE ELECTRICAL WORK AND FOR SCHEDULING OF ALL INSPECTIONS AS MAY BE REQUIRED BY THE LOCAL AUTHORITY.
14. THE CONTRACTOR SHALL BE RESPONSIBLE FOR COORDINATION WITH THE SITE AND/OR BUILDING OWNER FOR NEW AND/OR DEMOLITION WORK INVOLVED.
15. THE CONTRACTOR SHALL GUARANTEE ALL NEW WORK FOR A PERIOD OF ONE YEAR FROM THE ACCEPTANCE DATE BY THE OWNER. THE CONTRACTOR SHALL BE RESPONSIBLE FOR OBTAINING WARRANTIES FROM ALL EQUIPMENT MANUFACTURERS FOR SUBMISSION TO THE OWNER.
16. DRAWINGS INDICATE GENERAL ARRANGEMENT OF WORK INCLUDED IN CONTRACT. CONTRACTOR SHALL WITHOUT EXTRA CHARGE, MAKE MODIFICATIONS TO THE LAYOUT OF THE WORK TO PREVENT CONFLICT WITH WORK OF OTHER TRADES AND FOR THE PROPER INSTALLATION OF WORK. CHECK ALL DRAWINGS AND VISIT JOB SITE TO VERIFY SPACE AND TYPE OF EXISTING CONDITIONS IN WHICH WORK WILL BE DONE, PRIOR TO SUBMITTAL OF BID.
17. ALL NON–CURRENT CARRYING PARTS OF THE ELECTRICAL AND TELEPHONE CONDUIT SYSTEMS SHALL BE MECHANICALLY AND ELECTRICALLY CONNECTED TO PROVIDE AN INDEPENDENT RETURN PATH TO THE EQUIPMENT GROUNDING SOURCES.
18. GROUNDING SYSTEM WILL BE IN ACCORDANCE WITH THE LATEST ACCEPTABLE EDITION OF THE NATIONAL ELECTRICAL CODE AND REQUIREMENTS PER LOCAL INSPECTOR HAVING JURISDICTION.
19. EACH EQUIPMENT GROUND CONDUCTOR SHALL BE SIZED IN ACCORDANCE WITH THE N.E.C. ARTICLE 250–122. (MIN. #12 AWG).
20. CONTRACTOR SHALL PROVIDE A CELLULAR GROUNDING SYSTEM WITH THE MAXIMUM AC RESISTANCE TO GROUND OF 5 OHM BETWEEN ANY POINT ON THE GROUNDING SYSTEM AS MEASURED BY 3–POINT GROUNDING TEST. (REFER TO SECTION 16960).

TESTS BY INDEPENDENT ELECTRICAL TESTING FIRM

A. CONTRACTOR SHALL RETAIN THE SERVICES OF A LOCAL INDEPENDENT ELECTRICAL TESTING FIRM (WITH MINIMUM 5 YEARS COMMERCIAL EXPERIENCE IN THE ELECTRICAL TESTING INDUSTRY) AS SPECIFIED BY OWNER TO PERFORM:

TEST 1: RESISTANCE TO GROUND TEST ON THE CELLULAR GROUNDING SYSTEM.

THE TESTING FIRM SHALL INCLUDE THE FOLLOWING INFORMATION WITH THE REPORT:

1. TESTING PROCEDURE INCLUDING THE MAKE AND MODEL OF TEST EQUIPMENT.
2. CERTIFICATION OF TESTING EQUIPMENT CALIBRATION WITHIN SIX (6) MONTHS OF DATE OF TESTING. INCLUDE CERTIFICATION LAB ADDRESS AND TELEPHONE NUMBER.
3. GRAPHICAL DESCRIPTION OF TESTING METHOD ACTUALLY IMPLEMENTED.

B. TESTING SHALL BE PERFORMED IN THE PRESENCE AND TO THE SATISFACTION OF OWNERS CONSTRUCTION REPRESENTATIVE. TESTING DATA SHALL BE INITIALED AND DATED BY THE CONSTRUCTION AND INCLUDED WITH THE WRITTEN REPORT/ANALYSIS.

C. THE CONTRACTOR SHALL FORWARD SIX (6) COPIES OF THE INDEPENDENT ELECTRICAL TESTING FIRM REPORT/ANALYSIS TO ENGINEER A MINIMUM OF TEN (10) WORKING DAYS PRIOR TO THE JOB TURNOVER.

D. CONTRACTOR TO PROVIDE A MINIMUM OF ONE (1) WEEK NOTICE TO OWNER AND ENGINEER FOR ALL TESTS REQUIRING WITNESSING.

REV.	DATE	DRAWN BY	CHK'D BY	DESCRIPTION
0	04/03/17	KAWJR	CAG	CONSTRUCTION DRAWINGS – ISSUED FOR CONSTRUCTION

PROFESSIONAL ENGINEER SEAL

CENTEK engineering
Centered on Solutions™
(203) 488-0580
(203) 488-8587 Fax
63-2 North Branford Road
Branford, CT 06405
www.CentekEng.com

AT&T MOBILITY
WIRELESS COMMUNICATIONS FACILITY
NORTH HAVEN DEVINE STREET
CT3506 – LTE 3C
50 DEVINE STREET
NORTH HAVEN, CT 06473

DATE: 02/14/17
SCALE: AS NOTED
JOB NO. 17004.09

LTE SCHEMATIC DIAGRAM AND NOTES

E–1

Sheet No. 5 of 7

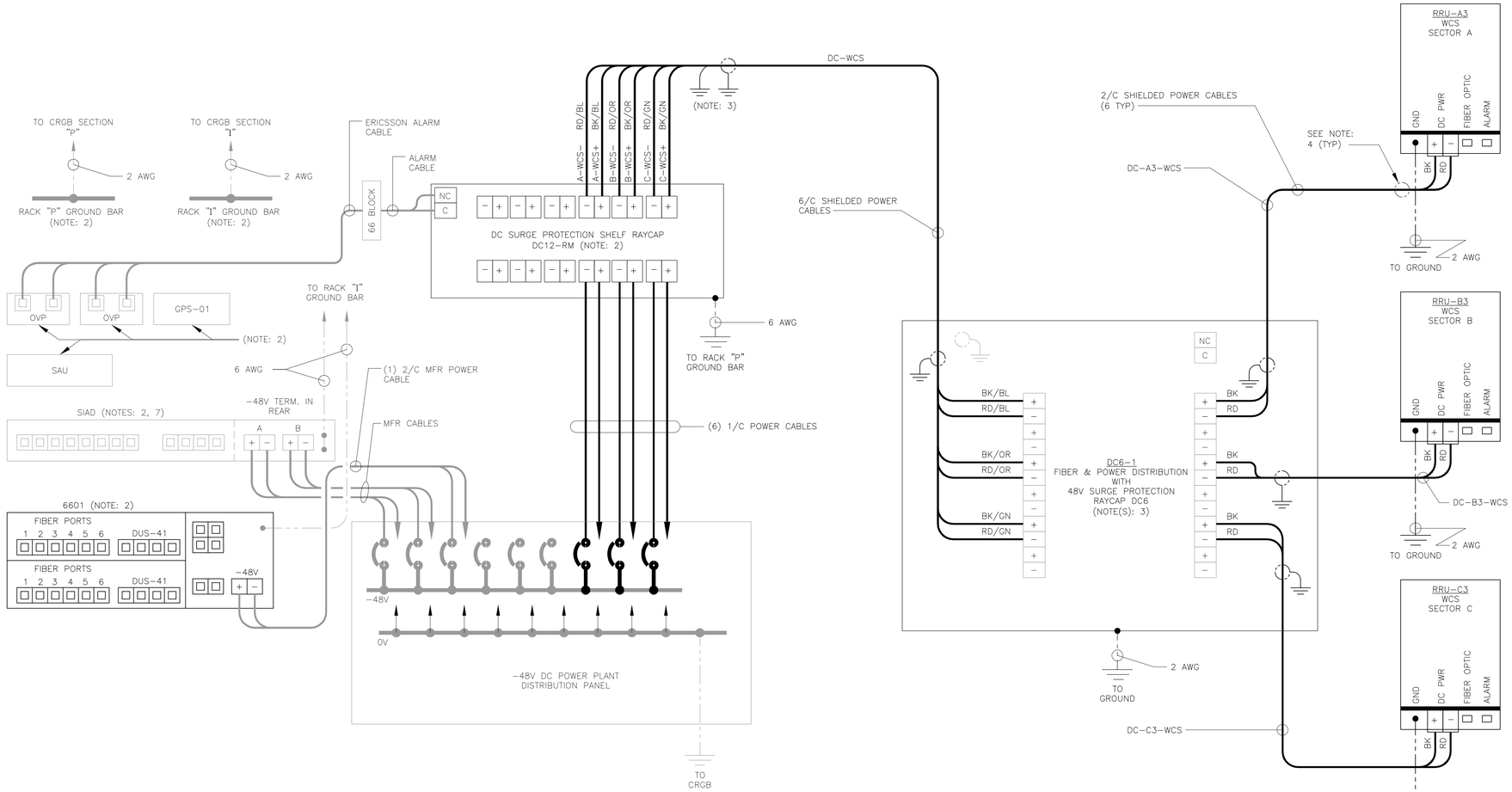

1
E-2

LTE WIRING DIAGRAM

NOT TO SCALE

LTE WIRING DIAGRAM NOTES:

1. LABEL THE DC POWER CABLES AT BOTH ENDS OF EVERY WIRE AND IN ANY PULL BOX IF USED. LABEL SHALL BE DURABLE, SELF ADHESIVE, WRAPPED LONGITUDINALLY ALONG THE CABLE AND STATE THE SECTOR, FREQUENCY BAND AND POLARITY; I.E. "A-1900+". CABLE AND WIRE LABELS SHOWN ARE REPRESENTATIVE AND MAY BE MODIFIED AS DIRECTED BY AT&T.
2. INSTALL ON BASEBAND EQUIPMENT RACK.
3. THE BARE GROUND WIRE OF EACH MULTI-CONDUCTOR CABLE SHALL BE CONNECTED TO THE "P" GROUND BAR ON THE RACK. WHEN A SHIELDED CABLE IS USED, THE DRAIN WIRE ALSO SHALL BE CONNECTED TO THE "P" GROUND BAR.
4. CABLE GROUND WIRE AND SHIELD DRAIN WIRE TO BE LEFT UN-TERMINATED AT RRU AND DC POWER PLANT.
5. SEE LTE SCHEMATIC DIAGRAM DETAIL 1/E-1 FOR BREAKER RATING.

REV.	DATE	DRAWN BY	CHK'D BY	DESCRIPTION
0	04/03/17	KAWJR	CAG	CONSTRUCTION DRAWINGS - ISSUED FOR CONSTRUCTION

PROFESSIONAL ENGINEER SEAL

at&t

EMPIRE telecom

CENTEK engineering
Centered on Solutions™
(203) 488-0580
(203) 488-8587 Fax
63-2 North Branford Road
Branford, CT 06405
www.CentekEng.com

AT&T MOBILITY
WIRELESS COMMUNICATIONS FACILITY

NORTH HAVEN DEVINE STREET
CT3506 - LTE 3C
50 DEVINE STREET
NORTH HAVEN, CT 06473

DATE: 02/14/17
SCALE: AS NOTED
JOB NO. 17004.09

LTE WIRING DIAGRAM

E-2

Sheet No. 6 of 7

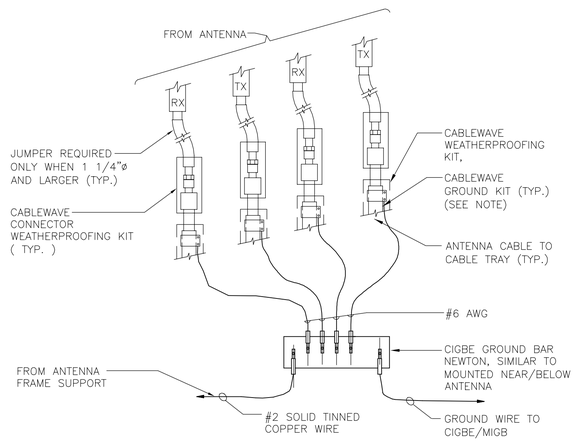

NOTE:

1. DO NOT INSTALL CABLE GROUND KIT AT A BEND AND ALWAYS DIRECT GROUND WIRE DOWN TO CIGBE

2 / E-3 CONNECTION OF GROUND WIRES TO GROUND BAR

NOT TO SCALE

EACH RRH CABINET SHALL BE GROUNDED IN THE FOLLOWING MANNER:

1. AT TOP OF THE CABINET
2. AT RIGHT SIDE OF THE CABINET.

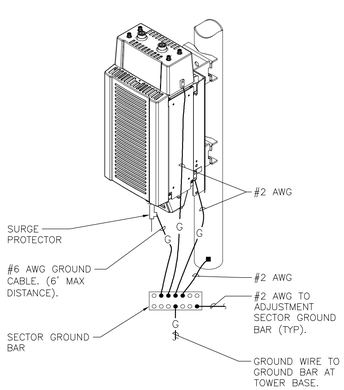

1 / E-1 RRU POLE MOUNT GROUNDING

NOT TO SCALE

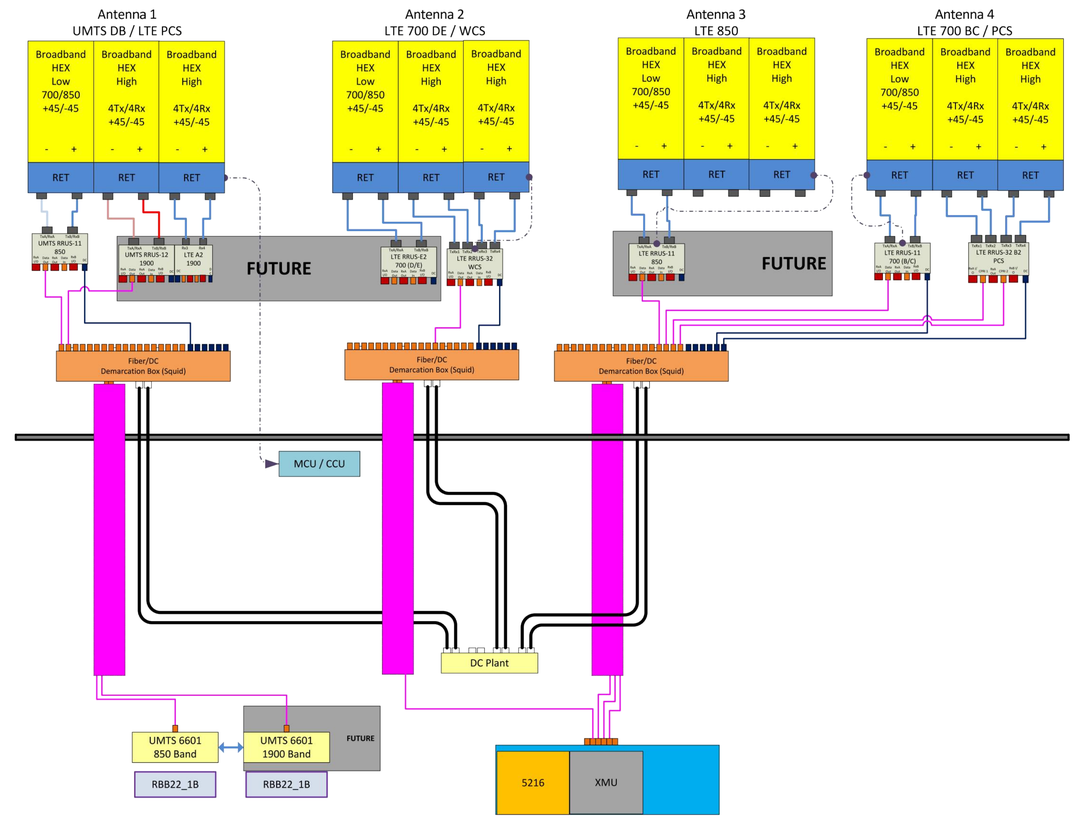

1 / E-3 RF PLUMBING DIAGRAM

NOT TO SCALE

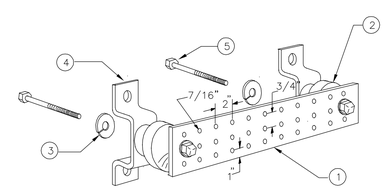

LEGEND

1. TINNED COPPER GROUND BAR, 1/4"x 4"x 20", NEWTON INSTRUMENT CO. HOLE CENTERS TO MATCH NEMA DOUBLE LUG .
2. INSULATORS, NEWTON INSTRUMENT CAT. NO. 2. 3061-4.
3. 3. 5/8" LOCK WASHERS, NEWTON INSTRUMENT CO. CAT. NO. 3015-8.
4. WALL MOUNTING BRACKET, NEWTON INSTRUMENT CO. 4. CAT NO. A-6056.
5. STAINLESS STEEL SECURITY SCREWS.

3 / E-3 GROUND BAR DETAIL

NOT TO SCALE

REV.	DATE	DRAWN BY	CHK'D BY	DESCRIPTION
0	04/03/17	KAWJR	CAG	CONSTRUCTION DRAWINGS – ISSUED FOR CONSTRUCTION

PROFESSIONAL ENGINEER SEAL

at&t

EMPIRE telecom

CENTEK engineering
Centered on Solutions™
(203) 488-0580
(203) 488-8587 Fax
63-2 North Branford Road
Branford, CT 06405
www.CentekEng.com

AT&T MOBILITY
WIRELESS COMMUNICATIONS FACILITY
NORTH HAVEN DEVINE STREET
CT3506 - LTE 3C
50 DEVINE STREET
NORTH HAVEN, CT 06473

DATE: 02/14/17
SCALE: AS NOTED
JOB NO. 17004.09

TYPICAL ELECTRICAL DETAILS

E-3

Sheet No. 7 of 7

AMERICAN TOWER®
CORPORATION

Structural Analysis Report

Structure	:	**129 ft Monopole**
ATC Site Name	:	**North Haven CT, CT**
ATC Site Number	:	**283418**
Engineering Number	:	**OAA695546_C3_01**
Proposed Carrier	:	**AT&T Mobility**
Carrier Site Name	:	**North Devine Street**
Carrier Site Number	:	**CT3506**
Site Location	:	**50 Devine Street** **North Haven, CT 06473-2204** **41.377800,-72.876200**
County	:	**New Haven**
Date	:	**February 24, 2017**
Max Usage	:	**59%**
Result	:	**Pass**

Prepared By:
Vivian Chung, E.I.
Structural Engineer I

Reviewed By:

COA: PEC.0001553

Table of Contents

Introduction

The purpose of this report is to summarize results of a structural analysis performed on the 129 ft monopole to reflect the change in loading by AT&T Mobility.

Supporting Documents

Tower Drawings	Florida Tower Partners Job #40913-015, dated January 31, 2014
Foundation Drawing	Sabre Job #11-05062, dated May 12, 2010
Geotechnical Report	Terracon Project #J2105136, deated April 20, 2010

Analysis

The tower was analyzed using American Tower Corporation's tower analysis software. This program considers an elastic three-dimensional model and second-order effects per ANSI/TIA-222.

Basic Wind Speed:	97 mph (3-Second Gust, V_{asd}) / 125 mph (3-Second Gust, V_{ult})
Basic Wind Speed w/ Ice:	50 mph (3-Second Gust) w/ 3/4" radial ice concurrent
Code:	ANSI/TIA-222-G / 2012 IBC / 2016 Connecticut State Building Code
Structure Class:	II
Exposure Category:	C
Topographic Category:	1
Crest Height:	0 ft
Spectral Response:	Ss = 0.18, S_1 = 0.06
Site Class:	D - Stiff Soil

Conclusion

Based on the analysis results, the structure meets the requirements per the applicable codes listed above. The tower and foundation can support the equipment as described in this report.

If you have any questions or require additional information, please contact American Tower via email at Engineering@americantower.com. Please include the American Tower site name, site number, and engineering number in the subject line for any questions.

Existing and Reserved Equipment

Elevation[1] (ft)		Qty	Antenna	Mount Type	Lines	Carrier
Mount	RAD					
129.0	133.0	3	Antel BXA-171063-12CF	Low Profile Platform	(8) 1 5/8" Coax (4) 1 5/8" Hybriflex	Verizon
		2	RFS DB-T1-6Z-8AB-0Z			
		1	Antel BXA-80080-6CF-EDIN-X			
		2	Antel BXA-70063-6BF-EDIN-X			
		6	Commscope SBNHH-1D65B			
	130.0	3	Alcatel-Lucent RRH2x60 700			
		3	Alcatel-Lucent PCS B25 RRH2x60/4x30			
		3	Alcatel-Lucent B66A RRH 4x45			
121.0	121.0	9	Ericsson AIR 21	T-Arms	(11) 1 5/8" Coax (1) 1 5/8" Hybriflex	Metro PCS
107.0	107.0	4	Raycap DC6-48-60-18-8F	Platform w/ Handrails	(8) 0.78" 8 AWG 6 (3) 3/8" RET Control Cable	AT&T Mobility
		6	Ericsson RRUS-11 (50 lbs.)			
		12	CCI CCI-HPA-65R-BUU-H8			

Equipment to be Removed

Elevation[1] (ft)		Qty	Antenna	Mount Type	Lines	Carrier
Mount	RAD					
107.0	107.0	6	Ericsson RRUS-12 B2	-	(2) 0.51" Hybrid	AT&T Mobility
		6	Ericsson mRRUS			
		6	Ericsson RRUS-32 (77 lbs)			

Proposed Equipment

Elevation[1] (ft)		Qty	Antenna	Mount Type	Lines	Carrier
Mount	RAD					
107.0	107.0	6	Ericsson RRUS 32 (50.8 lbs)	Platform w/ Handrails	(6) 3" Conduit (2) 0.39" Fiber Trunk	AT&T Mobility
		6	Ericsson RRUS12 w/ RRUS A2			

[1]Mount elevation is defined as height above bottom of steel structure to the bottom of mount, RAD elevation is defined as center of antenna above ground level (AGL).

Install proposed coax inside the pole shaft.

Structure Usages

Structural Component	Controlling Usage	Pass/Fail
Anchor Bolts	45%	Pass
Shaft	54%	Pass
Base Plate	30%	Pass

Foundations

Reaction Component	Original Design Reactions	Analysis Reactions	% of Design
Moment (Kips-Ft)	4,535.0	2,572.5	57%
Shear (Kips)	44.0	26.1	59%

The structure base reactions resulting from this analysis are acceptable when compared to those shown on the original structure drawings, therefore no modification or reinforcement of the foundation will be required.

Deflection and Sway*

Antenna Elevation (ft)	Antenna	Carrier	Deflection (ft)	Sway (Rotation) (°)
107.0	Ericsson RRUS 32 (50.8 lbs)	AT&T Mobility	0.942	1.023
	Ericsson RRUS12 w/ RRUS A2			

***Deflection and Sway was evaluated considering a design wind speed of 60 mph (3-Second Gust) per ANSI/TIA-222-G**

AMERICAN TOWER®
CORPORATION

Standard Conditions

All engineering services are performed on the basis that the information used is current and correct. This information may consist of, but is not necessary limited, to:

-- Information supplied by the client regarding the structure itself, antenna, mounts and feed line loading on the structure and its components, or other relevant information.

-- Information from drawings in the possession of American Tower Corporation, or generated by field inspections or measurements of the structure.

It is the responsibility of the client to ensure that the information provided to A.T. Engineering Service, PLLC and used in the performance of our engineering services is correct and complete. In the absence of information to the contrary, we assume that all structures were constructed in accordance with the drawings and specifications and that their capacity has not significantly changed from the "as new" condition.

Unless explicitly agreed by both the client and American Tower Corporation, all services will be performed in accordance with the current revision of ANSI/TIA -222. The design basic wind speed will be determined based on the minimum basic wind speed as prescribed in ANSI/TIA-222. Although every effort is taken to ensure that the loading considered is adequate to meet the requirements of all applicable regulatory entities, we can provide no assurance to meet any other local and state codes or requirements. If wind and ice loads or other relevant parameters are to be different from the minimum values recommended by the codes, the client shall specify the exact requirement.

All services are performed, results obtained, and recommendations made in accordance with generally accepted engineering principles and practices. A.T. Engineering Service, PLLC is not responsible for the conclusions, opinions and recommendations made by others based on the information we supply.

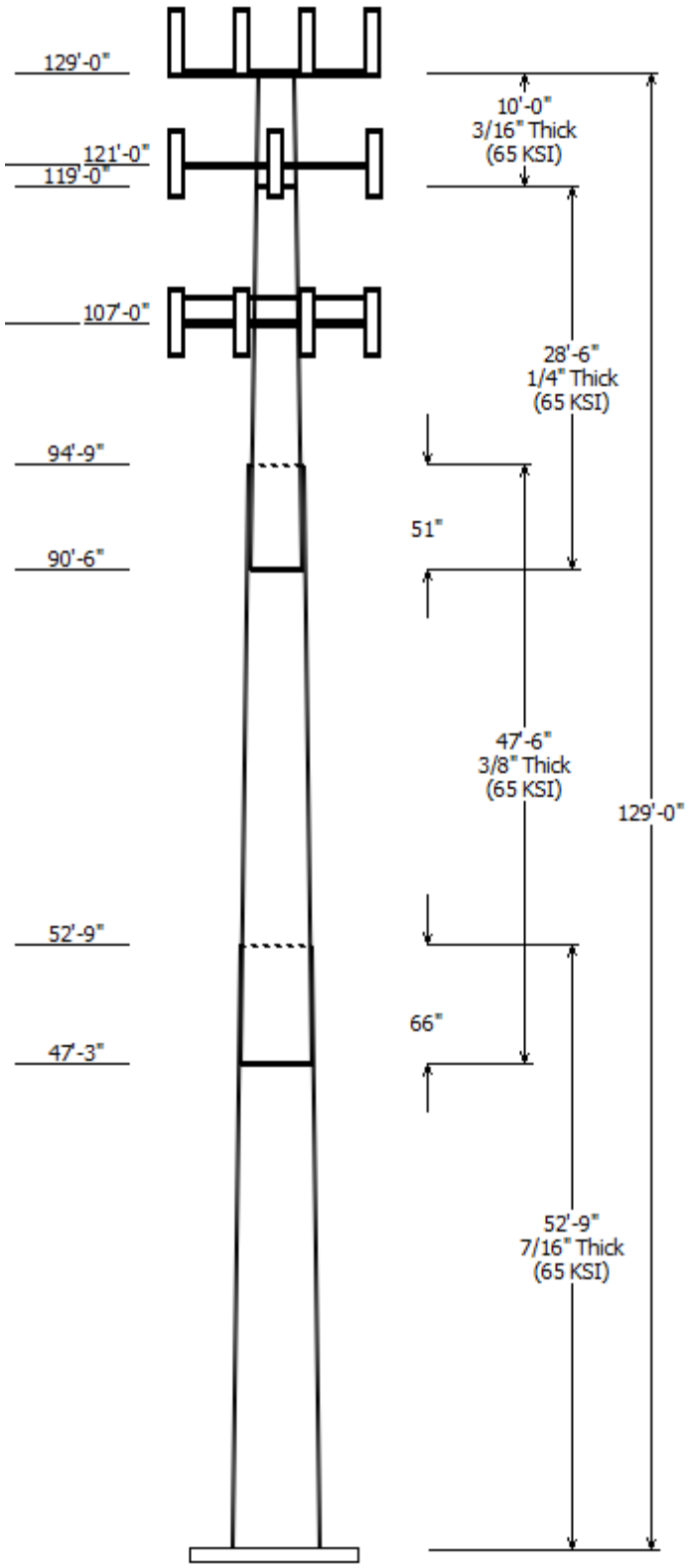

Job Information

Pole :	283418	Code:	ANSI/TIA-222-G
Description :			
Client :	AT&T Mobility	Struct Class :	II
Location :	North Haven CT, CT		
Shape :	18 Sides	Exposure :	C
Height :	129.00 (ft)	Topo :	1
Base Elev (ft):	0.00		
Taper:	0.225969 (in/ft)		

Sections Properties

Shaft Section	Length (ft)	Diameter (in) Accross Flats Top	Bottom	Thick (in)	Joint Type	Overlap Length (in)	Taper (in/ft)	Steel Grade (ksi)
1	52.750	36.88	48.80	0.438		0.000	0.226000	65
2	47.500	28.13	38.87	0.375	Slip Joint	66.000	0.226000	65
3	28.500	23.16	29.60	0.250	Slip Joint	51.000	0.226000	65
4	10.000	20.90	23.16	0.188	Butt Joint	0.000	0.226000	65

Discrete Appurtenance

Attach Elev (ft)	Force Elev (ft)	Qty	Description
129.000	133.000	1	RFS DB-T1-6Z-8AB-0Z
129.000	133.000	3	Amphenol Antel BXA-171063-
129.000	129.000	1	Round Low Profile Platform
129.000	130.000	3	Alcatel-Lucent B66A RRH 4x45
129.000	130.000	3	Alcatel-Lucent PCS B25
129.000	130.000	3	Alcatel-Lucent RRH2x60 700
129.000	133.000	6	Commscope SBNHH-1D65B
129.000	133.000	2	Amphenol Antel BXA-70063-
129.000	133.000	1	Amphenol Antel BXA-80080-
129.000	133.000	1	RFS DB-T1-6Z-8AB-0Z
121.000	121.000	3	Round T-Arm
121.000	121.000	9	Ericsson AIR 21
107.000	107.000	6	Ericsson RRUS 32 (50.8 lbs)
107.000	107.000	1	Round Platform w/ Handrails
107.000	107.000	12	CCI CCI-HPA-65R-BUU-H8
107.000	107.000	6	Ericsson RRUS12 w/ RRUS A2
107.000	107.000	6	Ericsson RRUS-11 (50 lbs.)
107.000	107.000	4	Raycap DC6-48-60-18-8F

Linear Appurtenance

Elev (ft) From	To	Description	Exposed To Wind
0.000	107.0	0.39" (10mm)	No
0.000	107.0	0.78" 8 AWG 6	No
0.000	107.0	3" Conduit	No
0.000	107.0	3/8" RET Control	No
0.000	121.0	1 5/8" Coax	No
0.000	121.0	1 5/8" Hybriflex	No
0.000	129.0	1 5/8" Coax	No
0.000	129.0	1 5/8" Hybriflex	No

Load Cases

1.2D + 1.6W	97 mph with No Ice
0.9D + 1.6W	97 mph with No Ice (Reduced DL)
1.2D + 1.0Di + 1.0Wi	50 mph with 0.75 in Radial Ice
(1.2 + 0.2Sds) * DL + E	Seismic Equivalent Lateral Forces Method
(1.2 + 0.2Sds) * DL + E	Seismic Equivalent Modal Analysis Method
(0.9 - 0.2Sds) * DL + E	Seismic (Reduced DL) Equivalent Lateral
(0.9 - 0.2Sds) * DL + E	Seismic (Reduced DL) Equivalent Modal

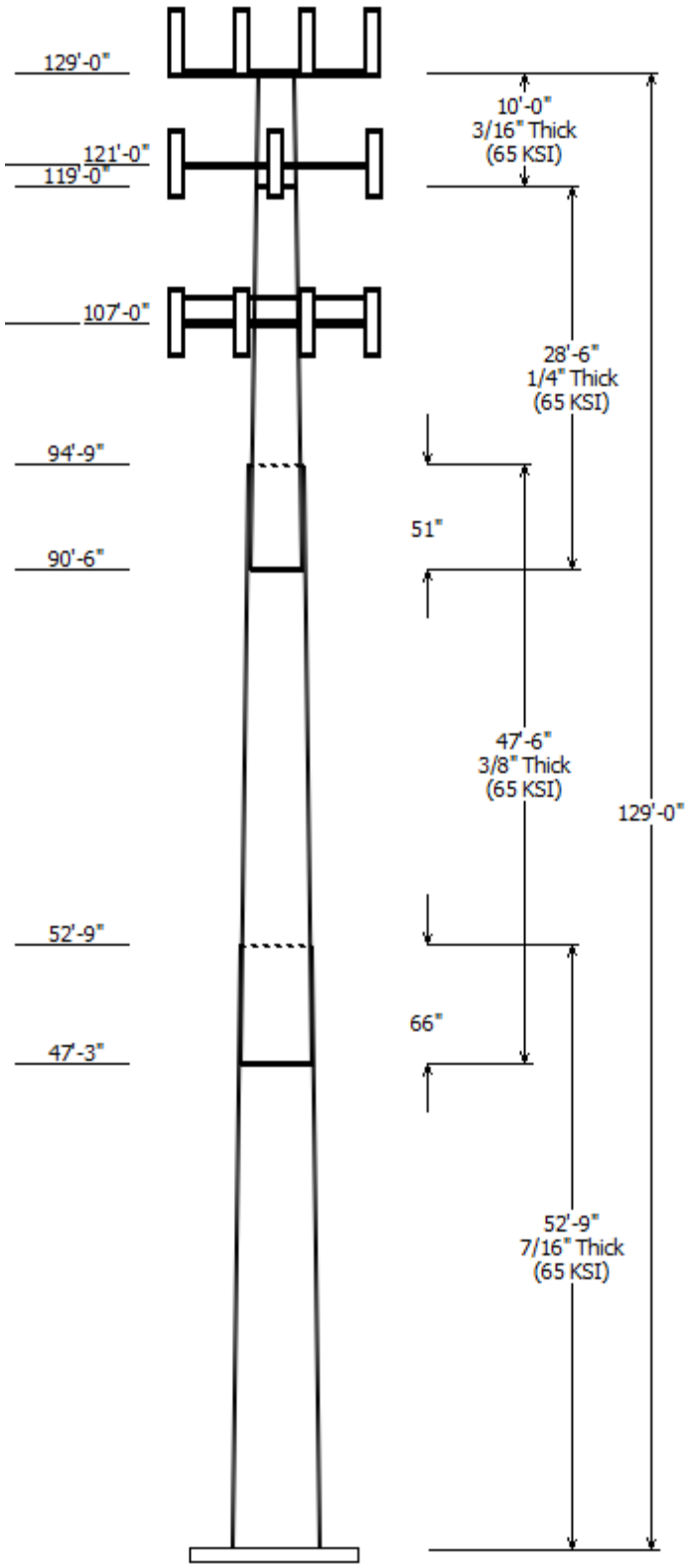

1.0D + 1.0W	Serviceability 60 mph

Reactions

Load Case	Moment (kip-ft)	Shear (kip)	Axial (kip)
1.2D + 1.6W	2572.50	26.15	42.73
0.9D + 1.6W	2549.00	26.13	32.04
1.2D + 1.0Di + 1.0Wi	673.94	7.04	63.47
(1.2 + 0.2Sds) * DL + E ELFM	163.61	1.61	42.32
(1.2 + 0.2Sds) * DL + E EMAM	223.15	2.18	42.32
(0.9 - 0.2Sds) * DL + E ELFM	161.88	1.61	29.39
(0.9 - 0.2Sds) * DL + E EMAM	220.60	2.18	29.39
1.0D + 1.0W	611.93	6.25	35.64

Dish Deflections

Load Case	Attach Elev (ft)	Deflection (in)	Rotation (deg)
	0.00	0.000	0.000

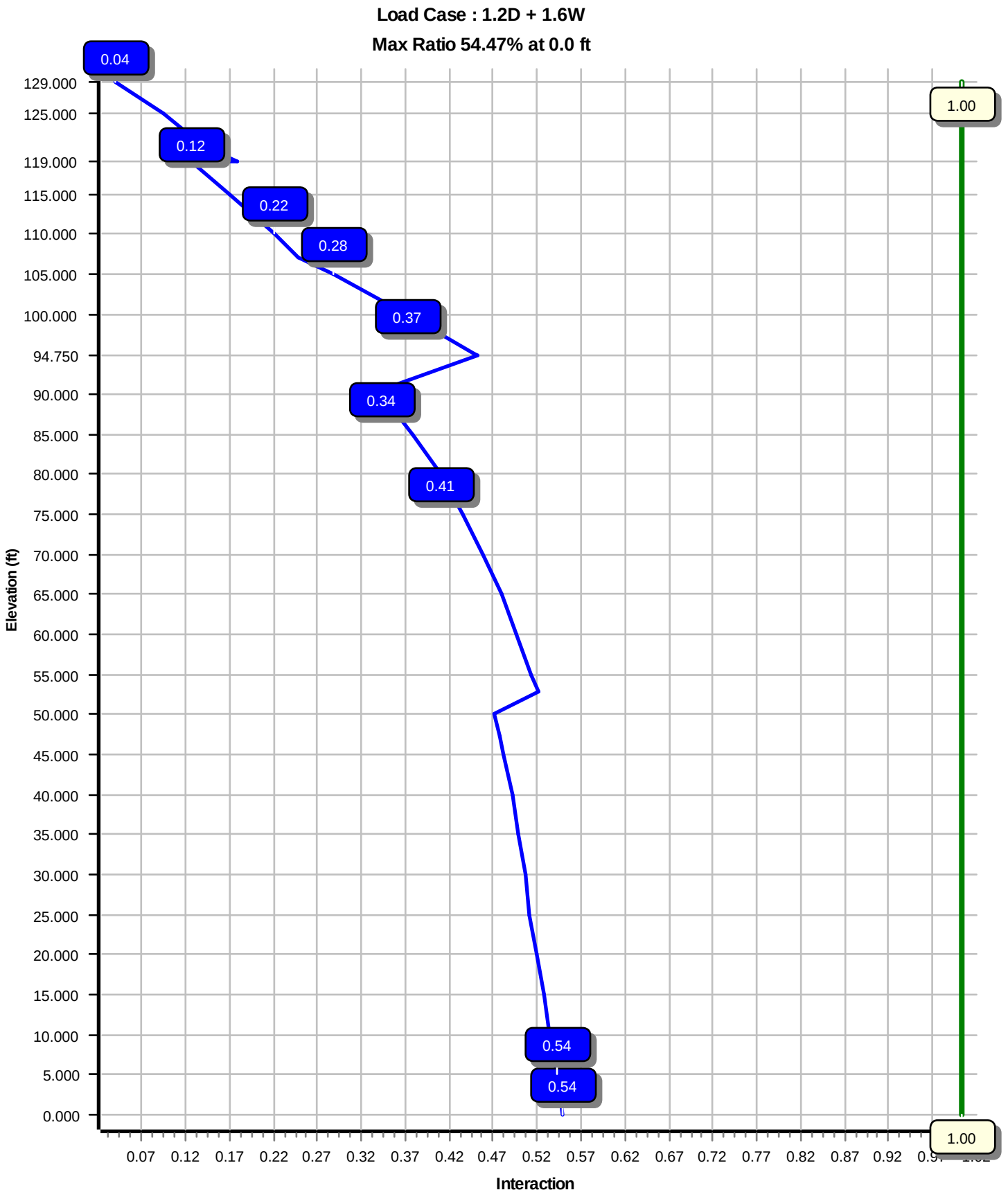
Load Case : 1.2D + 1.6W
Max Ratio 54.47% at 0.0 ft
0.04
0.12
0.22
0.28
0.37
0.34
0.41
0.54
0.54
1.00
1.00
Elevation (ft)
129.000
125.000
119.000
115.000
110.000
105.000
100.000
94.750
90.000
85.000
80.000
75.000
70.000
65.000
60.000
55.000
50.000
45.000
40.000
35.000
30.000
25.000
20.000
15.000
10.000
5.000
0.000
0.07 0.12 0.17 0.22 0.27 0.32 0.37 0.42 0.47 0.52 0.57 0.62 0.67 0.72 0.77 0.82 0.87 0.92
Interaction

Site Number:	283418	Code: ANSI/TIA-222-G	
Site Name:	North Haven CT, CT	Engineering Number:OAA695546_C3_01	2/24/2017 4:58:03 PM
Customer:	AT&T Mobility		

Analysis Parameters

Location:	New Haven County, CT	Height (ft):	129
Code:	ANSI/TIA-222-G	Base Diameter (in):	48.80
Shape:	18 Sides	Top Diameter (in):	20.90
Pole Type:	Taper	Taper (in/ft) :	0.226
Pole Manfacturer:		Rotation (deg) :	0.00

Ice & Wind Parameters

Structure Class:	II	Design Wind Speed Without Ice:	97 mph
Exposure Category:	C	Design Wind Speed With Ice:	50 mph
Topographic Category:	1	Operational Wind Speed:	60 mph
Crest Height:	0.0 ft	Design Ice Thickness:	0.75 in

Seismic Parameters

Analysis Method:	Equivalent Modal Analysis & Equivalent Lateral Force Methods
Site Class:	D - Stiff Soil
Period Based on Rayleigh Method (sec):	1.90

T_L (sec):	6	p:	1.3	C_s:	0.035
S_s:	0.184	S_1:	0.062	C_s Max:	0.035
F_a:	1.600	F_v :	2.400	C_s Min:	0.030
S_{ds}:	0.196	S_{d1}:	0.099		

Load Cases

1.2D + 1.6W	97 mph with No Ice
0.9D + 1.6W	97 mph with No Ice (Reduced DL)
1.2D + 1.0Di + 1.0Wi	50 mph with 0.75 in Radial Ice
(1.2 + 0.2Sds) * DL + E ELFM	Seismic Equivalent Lateral Forces Method
(1.2 + 0.2Sds) * DL + E EMAM	Seismic Equivalent Modal Analysis Method
(0.9 - 0.2Sds) * DL + E ELFM	Seismic (Reduced DL) Equivalent Lateral Forces Method
(0.9 - 0.2Sds) * DL + E EMAM	Seismic (Reduced DL) Equivalent Modal Analysis Method
1.0D + 1.0W	Serviceability 60 mph

Shaft Section Properties

Sect Info	Length (ft)	Thick (in)	Fy (ksi)	Joint Type	Slip Joint Len (in)	Weight (lb)	Bottom Dia (in)	Bottom Elev (ft)	Bottom Area (in 2)	Bottom Ix (in4)	Bottom W/t Ratio	Bottom D/t Ratio	Top Dia (in)	Top Elev (ft)	Top Area (in2)	Top Ix (in4)	Top W/t Ratio	Top D/t Ratio	Taper (in/ft)
1-18	52.750	0.4375	65		0.00	10,569	48.80	0.00	67.15	19844.9	18.26	111.54	36.88	52.75	50.60	8490.9	13.45	84.30	0.225969
2-18	47.500	0.3750	65	Slip	66.00	6,374	38.87	47.25	45.82	8580.0	16.87	103.66	28.13	94.75	33.05	3218.4	11.82	75.04	0.225969
3-18	28.500	0.2500	65	Slip	51.00	2,011	29.60	90.50	23.29	2534.5	19.47	118.40	23.16	119.00	18.18	1205.4	14.92	92.64	0.225969
4-18	10.000	0.1875	65	Butt	0.00	442	23.16	119.00	13.67	911.5	20.37	123.52	20.90	129.00	12.33	668.1	18.24	111.47	0.225969
				Shaft Weight		19,395													

Discrete Appurtenance Properties

Attach Elev (ft)	Description	Qty	No Ice Weight (lb)	No Ice EPAa (sf)	No Ice Orientation Factor	Ice Weight (lb)	Ice EPAa (sf)	Ice Orientation Factor	Distance From Face (ft)	Vert Ecc (ft)
129.00	Alcatel-Lucent B66A RRH	3	67.00	2.580	0.67	150.68	3.268	0.67	0.000	1.000
129.00	Alcatel-Lucent PCS B25	3	55.00	2.200	0.67	124.86	3.201	0.67	0.000	1.000
129.00	Alcatel-Lucent RRH2x60 700	3	56.70	2.150	0.67	136.43	2.764	0.67	0.000	1.000
129.00	Amphenol Antel BXA-171063-	3	12.80	4.800	0.88	130.63	5.978	0.88	0.000	4.000
129.00	Amphenol Antel BXA-70063-	2	19.20	7.260	0.78	202.41	8.183	0.78	0.000	4.000
129.00	Amphenol Antel BXA-80080-	1	18.00	5.770	0.90	166.77	6.987	0.90	0.000	4.000
129.00	Commscope SBNHH-1D65B	6	50.70	8.170	0.83	250.15	9.455	0.83	0.000	4.000
129.00	RFS DB-T1-6Z-8AB-0Z	1	44.00	4.800	0.67	179.22	5.658	0.67	0.000	4.000
129.00	RFS DB-T1-6Z-8AB-0Z	1	44.00	4.800	0.67	179.22	5.658	0.67	0.000	4.000
129.00	Round Low Profile Platform	1	1500.00	21.700	1.00	2,138.50	40.621	1.00	0.000	0.000
121.00	Ericsson AIR 21	9	91.00	6.050	0.86	255.68	7.123	0.86	0.000	0.000
121.00	Round T-Arm	3	250.00	9.700	0.67	454.89	17.782	0.67	0.000	0.000
107.00	Ericsson RRUS-11 (50 lbs.)	6	50.00	2.570	0.67	128.08	3.197	0.67	0.000	0.000
107.00	CCI CCI-HPA-65R-BUU-H8	12	68.00	12.980	0.79	367.84	14.887	0.79	0.000	0.000
107.00	Ericsson RRUS 32 (50.8 lbs)	6	50.80	2.690	0.67	119.99	3.807	0.67	0.000	0.000
107.00	Ericsson RRUS12 w/ RRUS A2	6	71.50	3.150	0.67	168.02	4.274	0.67	0.000	0.000
107.00	Raycap DC6-48-60-18-8F	4	20.00	1.110	1.00	97.12	2.499	1.00	0.000	0.000
107.00	Round Platform w/ Handrails	1	2000.00	27.200	1.00	3,254.13	50.858	1.00	0.000	0.000
	Totals	71	8021.90			20,416.25			Number of Loadings :	18

Linear Appurtenance Properties

Elev From (ft)	Elev To (ft)	Qty	Description	Coax Diameter (in)	Coax Weight (lb/ft)	Flat	Projected Width (in)	Exposed To Wind	Carrier
0.00	129.00	8	1 5/8" Coax	1.98	0.82	N	0.00	N	Verizon Wireless
0.00	129.00	4	1 5/8" Hybriflex Cable	1.98	1.30	N	0.00	N	Verizon Wireless
0.00	121.00	11	1 5/8" Coax	1.98	0.82	N	0.00	N	Metro PCS
0.00	121.00	1	1 5/8" Hybriflex Cable	1.98	1.30	N	0.00	N	Metro PCS
0.00	107.00	2	0.39" (10mm) Fiber	0.39	0.06	N	0.00	N	AT&T Mobility
0.00	107.00	8	0.78" 8 AWG 6	0.78	0.59	N	0.00	N	AT&T Mobility
0.00	107.00	6	3" Conduit	3.50	7.58	N	0.00	N	AT&T Mobility
0.00	107.00	3	3/8" RET Control Cable	0.38	0.23	N	0.00	N	AT&T Mobility

Segment Properties (Max Len : 5. ft)

Seg Top Elev (ft)	Description	Thick (in)	Flat Dia (in)	Area (in^2)	Ix (in^4)	W/t Ratio	D/t Ratio	F'y (ksi)	S (in^3)	Z (in^3)	Weight (lb)
0.00		0.4375	48.800	67.155	19,844.9	18.26	111.54	79.9	801.0	0.0	0.0
5.00		0.4375	47.670	65.586	18,486.3	17.80	108.96	80.5	763.8	0.0	1,129.2
10.00		0.4375	46.540	64.017	17,191.1	17.35	106.38	81.0	727.5	0.0	1,102.5
15.00		0.4375	45.410	62.448	15,957.9	16.89	103.80	81.5	692.2	0.0	1,075.8
20.00		0.4375	44.281	60.879	14,785.2	16.44	101.21	82.1	657.6	0.0	1,049.1
25.00		0.4375	43.151	59.311	13,671.3	15.98	98.63	82.6	624.0	0.0	1,022.5
30.00		0.4375	42.021	57.742	12,614.9	15.53	96.05	82.6	591.3	0.0	995.8
35.00		0.4375	40.891	56.173	11,614.3	15.07	93.47	82.6	559.4	0.0	969.1
40.00		0.4375	39.761	54.604	10,668.1	14.61	90.88	82.6	528.5	0.0	942.4
45.00		0.4375	38.631	53.035	9,774.7	14.16	88.30	82.6	498.4	0.0	915.7
47.25	Bot - Section 2	0.4375	38.123	52.329	9,389.5	13.95	87.14	82.6	485.1	0.0	403.3
50.00		0.4375	37.502	51.466	8,932.7	13.70	85.72	82.6	469.2	0.0	911.0
52.75	Top - Section 1	0.3750	37.630	44.341	7,775.6	16.28	100.35	82.2	407.0	0.0	896.0
55.00		0.3750	37.122	43.736	7,461.6	16.04	98.99	82.5	395.9	0.0	337.2
60.00		0.3750	35.992	42.391	6,794.3	15.51	95.98	82.6	371.8	0.0	732.7
65.00		0.3750	34.862	41.047	6,168.0	14.98	92.97	82.6	348.5	0.0	709.8
70.00		0.3750	33.732	39.702	5,581.4	14.45	89.95	82.6	325.9	0.0	686.9
75.00		0.3750	32.602	38.357	5,033.2	13.92	86.94	82.6	304.1	0.0	664.0
80.00		0.3750	31.472	37.012	4,522.2	13.39	83.93	82.6	283.0	0.0	641.2
85.00		0.3750	30.343	35.668	4,047.0	12.86	80.91	82.6	262.7	0.0	618.3
90.00		0.3750	29.213	34.323	3,606.3	12.33	77.90	82.6	243.1	0.0	595.4
90.50	Bot - Section 3	0.3750	29.100	34.188	3,564.1	12.27	77.60	82.6	241.2	0.0	58.3
94.75	Top - Section 2	0.2500	28.639	22.526	2,293.8	18.79	114.56	79.3	157.8	0.0	817.4
95.00		0.2500	28.583	22.481	2,280.1	18.75	114.33	79.3	157.1	0.0	19.1
100.0		0.2500	27.453	21.585	2,018.1	17.95	109.81	80.3	144.8	0.0	374.9
105.0		0.2500	26.323	20.688	1,776.9	17.16	105.29	81.2	133.0	0.0	359.6
107.0		0.2500	25.871	20.330	1,686.1	16.84	103.49	81.6	128.4	0.0	139.6
110.0		0.2500	25.193	19.792	1,555.8	16.36	100.77	82.2	121.6	0.0	204.8
115.0		0.2500	24.064	18.895	1,353.8	15.56	96.25	82.6	110.8	0.0	329.1
119.0	Top - Section 3	0.2500	23.160	18.178	1,205.4	14.92	92.64	82.6	102.5	0.0	252.3
119.0	Bot - Section 4	0.1875	23.160	13.671	911.5	20.37	123.52	77.4	77.5	0.0	
120.0		0.1875	22.934	13.536	884.9	20.16	122.31	77.7	76.0	0.0	46.3
121.0		0.1875	22.708	13.402	858.7	19.94	121.11	77.9	74.5	0.0	45.8
125.0		0.1875	21.804	12.864	759.4	19.09	116.29	78.9	68.6	0.0	178.8
129.0		0.1875	20.900	12.326	668.1	18.24	111.47	79.9	63.0	0.0	171.4
											19,395.2

Load Case: 1.2D + 1.6W 97 mph with No Ice 22 Iterations

Gust Response Factor :1.10 Wind Importance Factor 1.00
Dead Load Factor :1.20
Wind Load Factor :1.60

Applied Segment Forces Summary

Seg Elev (ft)	Description	Shaft Forces Wind FX (lb)	Shaft Forces Dead Load (lb)	Discrete Forces Wind FX (lb)	Discrete Forces Torsion MY (lb-ft)	Discrete Forces Moment MZ (lb-ft)	Discrete Forces Dead Load (lb)	Linear Forces Wind FX (lb)	Linear Forces Dead Load (lb)	Sum of Forces Wind FX (lb)	Sum of Forces Dead Load (lb)	Sum of Forces Torsion MY (lb-ft)	Sum of Forces Moment MZ (lb)
0.00		227.1	0.0					0.0	0.0	227.1	0.0	0.0	0.0
5.00		448.8	1,355.1					0.0	438.5	448.8	1,793.6	0.0	0.0
10.00		438.1	1,323.0					0.0	438.5	438.1	1,761.6	0.0	0.0
15.00		434.2	1,291.0					0.0	438.5	434.2	1,729.5	0.0	0.0
20.00		441.6	1,259.0					0.0	438.5	441.6	1,697.5	0.0	0.0
25.00		451.3	1,226.9					0.0	438.5	451.3	1,665.5	0.0	0.0
30.00		456.8	1,194.9					0.0	438.5	456.8	1,633.4	0.0	0.0
35.00		459.2	1,162.9					0.0	438.5	459.2	1,601.4	0.0	0.0
40.00		459.3	1,130.8					0.0	438.5	459.3	1,569.4	0.0	0.0
45.00		332.3	1,098.8					0.0	438.5	332.3	1,537.4	0.0	0.0
47.25	Bot - Section 2	230.6	484.0					0.0	197.3	230.6	681.4	0.0	0.0
50.00		254.8	1,093.1					0.0	241.2	254.8	1,334.3	0.0	0.0
52.75	Top - Section 1	230.6	1,075.1					0.0	241.2	230.6	1,316.3	0.0	0.0
55.00		331.5	404.6					0.0	197.3	331.5	601.9	0.0	0.0
60.00		452.9	879.2					0.0	438.5	452.9	1,317.8	0.0	0.0
65.00		446.2	851.8					0.0	438.5	446.2	1,290.3	0.0	0.0
70.00		438.5	824.3					0.0	438.5	438.5	1,262.8	0.0	0.0
75.00		430.1	796.9					0.0	438.5	430.1	1,235.4	0.0	0.0
80.00		420.8	769.4					0.0	438.5	420.8	1,207.9	0.0	0.0
85.00		410.9	741.9					0.0	438.5	410.9	1,180.5	0.0	0.0
90.00		222.9	714.5					0.0	438.5	222.9	1,153.0	0.0	0.0
90.50	Bot - Section 3	190.7	69.9					0.0	43.9	190.7	113.8	0.0	0.0
94.75	Top - Section 2	180.6	980.9					0.0	372.8	180.6	1,353.7	0.0	0.0
95.00		205.2	23.0					0.0	21.9	205.2	44.9	0.0	0.0
100.00		384.8	449.8					0.0	438.5	384.8	888.4	0.0	0.0
105.00		263.5	431.5					0.0	438.5	263.5	870.1	0.0	0.0
107.00	Appertunance(s)	183.3	167.5	7,660.9	0.0	0.0	4,715.8	0.0	175.4	7,844.2	5,058.7	0.0	0.0
110.00		286.2	245.7					0.0	79.5	286.2	325.2	0.0	0.0
115.00		313.8	394.9					0.0	132.5	313.8	527.4	0.0	0.0
119.00	Top - Section 3	170.4	302.8					0.0	106.0	170.4	408.8	0.0	0.0
120.00		66.8	55.5					0.0	26.5	66.8	82.0	0.0	0.0
121.00	Appertunance(s)	163.6	55.0	2,763.5	0.0	0.0	1,882.8	0.0	26.5	2,927.1	1,964.3	0.0	0.0
125.00		256.2	214.5					0.0	56.4	256.2	271.0	0.0	0.0
129.00	Appertunance(s)	125.9	205.7	5,071.4	0.0	13,817.0	3,027.7	0.0	56.4	5,197.3	3,289.9	0.0	0.0
									Totals:	26,305.5	42,769.1	0.00	0.00

Load Case: 1.2D + 1.6W 97 mph with No Ice 22 Iterations

Gust Response Factor :1.10 Wind Importance Factor 1.00
Dead Load Factor :1.20
Wind Load Factor :1.60

Calculated Forces

Seg Elev (ft)	Pu FY (-) (kips)	Vu FX (-) (kips)	Tu MY (ft-kips)	Mu MZ (ft-kips)	Mu MX (ft-kips)	Resultant Moment (ft-kips)	phi Pn (kips)	phi Vn (kips)	phi Tn (ft-kips)	phi Mn (ft-kips)	Total Deflect (in)	Rotation (deg)	Ratio
0.00	-42.73	-26.15	0.00	-2,572.50	0.00	2,572.50	4,830.72	2,415.36	9,588.44	4,801.34	0.00	0.00	0.545
5.00	-40.85	-25.82	0.00	-2,441.77	0.00	2,441.77	4,749.48	2,374.74	9,204.97	4,609.33	0.10	-0.18	0.538
10.00	-39.01	-25.50	0.00	-2,312.65	0.00	2,312.65	4,666.73	2,333.36	8,826.25	4,419.68	0.38	-0.36	0.532
15.00	-37.20	-25.18	0.00	-2,185.13	0.00	2,185.13	4,582.46	2,291.23	8,452.48	4,232.52	0.86	-0.55	0.525
20.00	-35.43	-24.83	0.00	-2,059.25	0.00	2,059.25	4,496.68	2,248.34	8,083.87	4,047.94	1.54	-0.74	0.517
25.00	-33.69	-24.47	0.00	-1,935.08	0.00	1,935.08	4,406.48	2,203.24	7,715.56	3,863.51	2.42	-0.93	0.509
30.00	-31.98	-24.10	0.00	-1,812.71	0.00	1,812.71	4,289.92	2,144.96	7,310.76	3,660.81	3.49	-1.13	0.503
35.00	-30.31	-23.71	0.00	-1,692.23	0.00	1,692.23	4,173.36	2,086.68	6,916.87	3,463.58	4.78	-1.32	0.496
40.00	-28.67	-23.31	0.00	-1,573.69	0.00	1,573.69	4,056.80	2,028.40	6,533.89	3,271.80	6.27	-1.52	0.488
45.00	-27.08	-23.01	0.00	-1,457.13	0.00	1,457.13	3,940.24	1,970.12	6,161.81	3,085.49	7.97	-1.72	0.479
47.25	-26.37	-22.80	0.00	-1,405.37	0.00	1,405.37	3,887.79	1,943.89	5,997.94	3,003.43	8.81	-1.82	0.475
50.00	-25.00	-22.55	0.00	-1,342.67	0.00	1,342.67	3,823.68	1,911.84	5,800.65	2,904.64	9.89	-1.93	0.469
52.75	-23.65	-22.32	0.00	-1,280.65	0.00	1,280.65	3,282.31	1,641.15	5,013.65	2,510.55	11.04	-2.05	0.517
55.00	-23.00	-22.03	0.00	-1,230.43	0.00	1,230.43	3,248.58	1,624.29	4,893.74	2,450.51	12.03	-2.14	0.509
60.00	-21.61	-21.61	0.00	-1,120.27	0.00	1,120.27	3,149.47	1,574.74	4,597.09	2,301.96	14.39	-2.37	0.494
65.00	-20.26	-21.19	0.00	-1,012.21	0.00	1,012.21	3,049.56	1,524.78	4,308.58	2,157.49	16.99	-2.59	0.476
70.00	-18.94	-20.76	0.00	-906.27	0.00	906.27	2,949.66	1,474.83	4,029.43	2,017.71	19.82	-2.81	0.456
75.00	-17.65	-20.34	0.00	-802.45	0.00	802.45	2,849.75	1,424.87	3,759.63	1,882.61	22.88	-3.03	0.433
80.00	-16.40	-19.91	0.00	-700.76	0.00	700.76	2,749.84	1,374.92	3,499.17	1,752.19	26.17	-3.24	0.406
85.00	-15.17	-19.49	0.00	-601.20	0.00	601.20	2,649.93	1,324.97	3,248.06	1,626.45	29.67	-3.45	0.376
90.00	-14.00	-19.22	0.00	-503.77	0.00	503.77	2,550.02	1,275.01	3,006.31	1,505.39	33.38	-3.64	0.340
90.50	-13.87	-19.04	0.00	-494.17	0.00	494.17	2,540.03	1,270.02	2,982.64	1,493.54	33.77	-3.66	0.337
94.75	-12.51	-18.79	0.00	-413.24	0.00	413.24	1,607.72	803.86	1,873.69	938.24	37.09	-3.81	0.449
95.00	-12.44	-18.61	0.00	-408.54	0.00	408.54	1,605.47	802.74	1,867.31	935.04	37.29	-3.82	0.445
100.00	-11.51	-18.21	0.00	-315.50	0.00	315.50	1,559.66	779.83	1,741.06	871.82	41.42	-4.05	0.370
105.00	-10.62	-17.90	0.00	-224.47	0.00	224.47	1,512.33	756.17	1,617.47	809.94	45.77	-4.24	0.285
107.00	-6.15	-9.71	0.00	-188.66	0.00	188.66	1,492.98	746.49	1,568.83	785.58	47.56	-4.31	0.244
110.00	-5.83	-9.41	0.00	-159.53	0.00	159.53	1,463.49	731.75	1,496.76	749.49	50.29	-4.39	0.217
115.00	-5.31	-9.07	0.00	-112.46	0.00	112.46	1,403.83	701.92	1,370.07	686.05	54.95	-4.52	0.168
119.00	-4.91	-8.87	0.00	-76.19	0.00	76.19	1,350.55	675.27	1,267.52	634.70	58.77	-4.60	0.124
119.00	-4.91	-8.87	0.00	-76.19	0.00	76.19	952.84	476.42	899.15	450.24	58.77	-4.60	0.175
120.00	-4.83	-8.80	0.00	-67.32	0.00	67.32	946.51	473.26	884.32	442.82	59.74	-4.61	0.157
121.00	-3.11	-5.73	0.00	-58.52	0.00	58.52	940.12	470.06	869.55	435.42	60.70	-4.63	0.138
125.00	-2.85	-5.45	0.00	-35.62	0.00	35.62	913.97	456.98	811.15	406.18	64.61	-4.70	0.091
129.00	0.00	-5.20	0.00	-13.82	0.00	13.82	886.84	443.42	753.88	377.50	68.56	-4.73	0.037

Load Case: 0.9D + 1.6W — 97 mph with No Ice (Reduced DL) — 22 Iterations

Gust Response Factor :1.10
Dead Load Factor :0.90
Wind Load Factor :1.60

Wind Importance Factor 1.00

Applied Segment Forces Summary

Seg Elev (ft)	Description	Shaft Forces Wind FX (lb)	Shaft Forces Dead Load (lb)	Discrete Forces Wind FX (lb)	Discrete Forces Torsion MY (lb-ft)	Discrete Forces Moment MZ (lb-ft)	Discrete Forces Dead Load (lb)	Linear Forces Wind FX (lb)	Linear Forces Dead Load (lb)	Sum of Forces Wind FX (lb)	Sum of Forces Dead Load (lb)	Sum of Forces Torsion MY (lb-ft)	Sum of Forces Moment MZ (lb)
0.00		227.1	0.0					0.0	0.0	227.1	0.0	0.0	0.0
5.00		448.8	1,016.3					0.0	328.9	448.8	1,345.2	0.0	0.0
10.00		438.1	992.3					0.0	328.9	438.1	1,321.2	0.0	0.0
15.00		434.2	968.3					0.0	328.9	434.2	1,297.2	0.0	0.0
20.00		441.6	944.2					0.0	328.9	441.6	1,273.1	0.0	0.0
25.00		451.3	920.2					0.0	328.9	451.3	1,249.1	0.0	0.0
30.00		456.8	896.2					0.0	328.9	456.8	1,225.1	0.0	0.0
35.00		459.2	872.2					0.0	328.9	459.2	1,201.1	0.0	0.0
40.00		459.3	848.1					0.0	328.9	459.3	1,177.0	0.0	0.0
45.00		332.3	824.1					0.0	328.9	332.3	1,153.0	0.0	0.0
47.25	Bot - Section 2	230.6	363.0					0.0	148.0	230.6	511.0	0.0	0.0
50.00		254.8	819.9					0.0	180.9	254.8	1,000.8	0.0	0.0
52.75	Top - Section 1	230.6	806.4					0.0	180.9	230.6	987.3	0.0	0.0
55.00		331.5	303.5					0.0	148.0	331.5	451.5	0.0	0.0
60.00		452.9	659.4					0.0	328.9	452.9	988.3	0.0	0.0
65.00		446.2	638.8					0.0	328.9	446.2	967.7	0.0	0.0
70.00		438.5	618.2					0.0	328.9	438.5	947.1	0.0	0.0
75.00		430.1	597.6					0.0	328.9	430.1	926.5	0.0	0.0
80.00		420.8	577.0					0.0	328.9	420.8	906.0	0.0	0.0
85.00		410.9	556.5					0.0	328.9	410.9	885.4	0.0	0.0
90.00		222.9	535.9					0.0	328.9	222.9	864.8	0.0	0.0
90.50	Bot - Section 3	190.7	52.5					0.0	32.9	190.7	85.3	0.0	0.0
94.75	Top - Section 2	180.6	735.7					0.0	279.6	180.6	1,015.3	0.0	0.0
95.00		205.2	17.2					0.0	16.4	205.2	33.7	0.0	0.0
100.00		384.8	337.4					0.0	328.9	384.8	666.3	0.0	0.0
105.00		263.5	323.7					0.0	328.9	263.5	652.6	0.0	0.0
107.00	Appertunance(s)	183.3	125.6	7,660.9	0.0	0.0	3,536.8	0.0	131.6	7,844.2	3,794.0	0.0	0.0
110.00		286.2	184.3					0.0	59.6	286.2	243.9	0.0	0.0
115.00		313.8	296.2					0.0	99.4	313.8	395.6	0.0	0.0
119.00	Top - Section 3	170.4	227.1					0.0	79.5	170.4	306.6	0.0	0.0
120.00		66.8	41.7					0.0	19.9	66.8	61.5	0.0	0.0
121.00	Appertunance(s)	163.6	41.2	2,763.5	0.0	0.0	1,412.1	0.0	19.9	2,927.1	1,473.2	0.0	0.0
125.00		256.2	160.9					0.0	42.3	256.2	203.2	0.0	0.0
129.00	Appertunance(s)	125.9	154.3	5,071.4	0.0	13,817.0	2,270.8	0.0	42.3	5,197.3	2,467.4	0.0	0.0
									Totals:	26,305.5	32,076.8	0.00	0.00

Load Case: 0.9D + 1.6W 97 mph with No Ice (Reduced DL) 22 Iterations

Gust Response Factor :1.10 Wind Importance Factor 1.00
Dead Load Factor :0.90
Wind Load Factor :1.60

Calculated Forces

Seg Elev (ft)	Pu FY (-) (kips)	Vu FX (-) (kips)	Tu MY (ft-kips)	Mu MZ (ft-kips)	Mu MX (ft-kips)	Resultant Moment (ft-kips)	phi Pn (kips)	phi Vn (kips)	phi Tn (ft-kips)	phi Mn (ft-kips)	Total Deflect (in)	Rotation (deg)	Ratio
0.00	-32.04	-26.13	0.00	-2,549.00	0.00	2,549.00	4,830.72	2,415.36	9,588.44	4,801.34	0.00	0.00	0.538
5.00	-30.61	-25.77	0.00	-2,418.36	0.00	2,418.36	4,749.48	2,374.74	9,204.97	4,609.33	0.10	-0.18	0.531
10.00	-29.21	-25.42	0.00	-2,289.49	0.00	2,289.49	4,666.73	2,333.36	8,826.25	4,419.68	0.38	-0.36	0.524
15.00	-27.84	-25.07	0.00	-2,162.38	0.00	2,162.38	4,582.46	2,291.23	8,452.48	4,232.52	0.85	-0.54	0.517
20.00	-26.49	-24.70	0.00	-2,037.04	0.00	2,037.04	4,496.68	2,248.34	8,083.87	4,047.94	1.52	-0.73	0.509
25.00	-25.16	-24.32	0.00	-1,913.54	0.00	1,913.54	4,406.48	2,203.24	7,715.56	3,863.51	2.39	-0.92	0.501
30.00	-23.86	-23.92	0.00	-1,791.96	0.00	1,791.96	4,289.92	2,144.96	7,310.76	3,660.81	3.46	-1.11	0.495
35.00	-22.59	-23.51	0.00	-1,672.37	0.00	1,672.37	4,173.36	2,086.68	6,916.87	3,463.58	4.73	-1.31	0.488
40.00	-21.35	-23.10	0.00	-1,554.82	0.00	1,554.82	4,056.80	2,028.40	6,533.89	3,271.80	6.21	-1.51	0.481
45.00	-20.15	-22.78	0.00	-1,439.34	0.00	1,439.34	3,940.24	1,970.12	6,161.81	3,085.49	7.89	-1.71	0.472
47.25	-19.60	-22.57	0.00	-1,388.07	0.00	1,388.07	3,887.79	1,943.89	5,997.94	3,003.43	8.72	-1.80	0.467
50.00	-18.57	-22.32	0.00	-1,326.00	0.00	1,326.00	3,823.68	1,911.84	5,800.65	2,904.64	9.79	-1.91	0.462
52.75	-17.55	-22.09	0.00	-1,264.61	0.00	1,264.61	3,282.31	1,641.15	5,013.65	2,510.55	10.92	-2.03	0.509
55.00	-17.05	-21.79	0.00	-1,214.91	0.00	1,214.91	3,248.58	1,624.29	4,893.74	2,450.51	11.90	-2.12	0.501
60.00	-16.00	-21.36	0.00	-1,105.97	0.00	1,105.97	3,149.47	1,574.74	4,597.09	2,301.96	14.24	-2.34	0.486
65.00	-14.97	-20.93	0.00	-999.17	0.00	999.17	3,049.56	1,524.78	4,308.58	2,157.49	16.81	-2.56	0.468
70.00	-13.97	-20.50	0.00	-894.52	0.00	894.52	2,949.66	1,474.83	4,029.43	2,017.71	19.60	-2.78	0.448
75.00	-12.99	-20.07	0.00	-792.01	0.00	792.01	2,849.75	1,424.87	3,759.63	1,882.61	22.63	-2.99	0.425
80.00	-12.03	-19.65	0.00	-691.65	0.00	691.65	2,749.84	1,374.92	3,499.17	1,752.19	25.88	-3.20	0.399
85.00	-11.11	-19.22	0.00	-593.41	0.00	593.41	2,649.93	1,324.97	3,248.06	1,626.45	29.34	-3.41	0.369
90.00	-10.22	-18.97	0.00	-497.29	0.00	497.29	2,550.02	1,275.01	3,006.31	1,505.39	33.01	-3.60	0.335
90.50	-10.12	-18.79	0.00	-487.80	0.00	487.80	2,540.03	1,270.02	2,982.64	1,493.54	33.39	-3.62	0.331
94.75	-9.10	-18.55	0.00	-407.96	0.00	407.96	1,607.72	803.86	1,873.69	938.24	36.67	-3.77	0.441
95.00	-9.04	-18.37	0.00	-403.32	0.00	403.32	1,605.47	802.74	1,867.31	935.04	36.87	-3.78	0.437
100.00	-8.33	-17.97	0.00	-311.49	0.00	311.49	1,559.66	779.83	1,741.06	871.82	40.95	-4.00	0.363
105.00	-7.66	-17.67	0.00	-221.65	0.00	221.65	1,512.33	756.17	1,617.47	809.94	45.24	-4.19	0.279
107.00	-4.45	-9.58	0.00	-186.30	0.00	186.30	1,492.98	746.49	1,568.83	785.58	47.01	-4.25	0.240
110.00	-4.21	-9.28	0.00	-157.57	0.00	157.57	1,463.49	731.75	1,496.76	749.49	49.71	-4.34	0.213
115.00	-3.82	-8.95	0.00	-111.16	0.00	111.16	1,403.83	701.92	1,370.07	686.05	54.32	-4.46	0.165
119.00	-3.52	-8.75	0.00	-75.38	0.00	75.38	1,350.55	675.27	1,267.52	634.70	58.09	-4.54	0.122
119.00	-3.52	-8.75	0.00	-75.38	0.00	75.38	952.84	476.42	899.15	450.24	58.09	-4.54	0.171
120.00	-3.46	-8.68	0.00	-66.63	0.00	66.63	946.51	473.26	884.32	442.82	59.04	-4.56	0.154
121.00	-2.22	-5.65	0.00	-57.94	0.00	57.94	940.12	470.06	869.55	435.42	60.00	-4.58	0.136
125.00	-2.04	-5.38	0.00	-35.34	0.00	35.34	913.97	456.98	811.15	406.18	63.86	-4.64	0.089
129.00	0.00	-5.20	0.00	-13.82	0.00	13.82	886.84	443.42	753.88	377.50	67.76	-4.68	0.037

Load Case: 1.2D + 1.0Di + 1.0Wi 50 mph with 0.75 in Radial Ice 21 Iterations

Gust Response Factor :1.10 Ice Dead Load Factor :1.00 Wind Importance Factor :1.00
Dead Load Factor :1.20 Ice Importance Factor :1.00
Wind Load Factor :1.00

Applied Segment Forces Summary

		Shaft Forces		Discrete Forces				Linear Forces		Sum of Forces			
Seg Elev (ft)	Description	Wind FX (lb)	Dead Load (lb)	Wind FX (lb)	Torsion MY (lb-ft)	Moment MZ (lb-ft)	Dead Load (lb)	Wind FX (lb)	Dead Load (lb)	Wind FX (lb)	Dead Load (lb)	Torsion MY (lb-ft)	Moment MZ (lb)
0.00		72.9	0.0					0.0	0.0	72.9	0.0	0.0	0.0
5.00		144.6	1,709.5					0.0	438.5	144.6	2,148.1	0.0	0.0
10.00		141.9	1,710.6					0.0	438.5	141.9	2,149.1	0.0	0.0
15.00		141.1	1,689.8					0.0	438.5	141.1	2,128.3	0.0	0.0
20.00		144.0	1,661.9					0.0	438.5	144.0	2,100.4	0.0	0.0
25.00		147.6	1,630.2					0.0	438.5	147.6	2,068.7	0.0	0.0
30.00		149.8	1,596.2					0.0	438.5	149.8	2,034.7	0.0	0.0
35.00		151.0	1,560.5					0.0	438.5	151.0	1,999.0	0.0	0.0
40.00		151.5	1,523.7					0.0	438.5	151.5	1,962.2	0.0	0.0
45.00		109.8	1,485.9					0.0	438.5	109.8	1,924.4	0.0	0.0
47.25	Bot - Section 2	76.3	657.4					0.0	197.3	76.3	854.8	0.0	0.0
50.00		84.4	1,307.0					0.0	241.2	84.4	1,548.2	0.0	0.0
52.75	Top - Section 1	76.5	1,286.8					0.0	241.2	76.5	1,528.0	0.0	0.0
55.00		110.2	576.4					0.0	197.3	110.2	773.8	0.0	0.0
60.00		151.0	1,252.4					0.0	438.5	151.0	1,690.9	0.0	0.0
65.00		149.2	1,216.9					0.0	438.5	149.2	1,655.4	0.0	0.0
70.00		147.1	1,180.9					0.0	438.5	147.1	1,619.5	0.0	0.0
75.00		144.8	1,144.7					0.0	438.5	144.8	1,583.2	0.0	0.0
80.00		142.3	1,108.1					0.0	438.5	142.3	1,546.6	0.0	0.0
85.00		139.5	1,071.2					0.0	438.5	139.5	1,509.8	0.0	0.0
90.00		75.8	1,034.1					0.0	438.5	75.8	1,472.6	0.0	0.0
90.50	Bot - Section 3	65.0	101.9					0.0	43.9	65.0	145.7	0.0	0.0
94.75	Top - Section 2	61.6	1,249.1					0.0	372.8	61.6	1,621.9	0.0	0.0
95.00		70.3	38.8					0.0	21.9	70.3	60.7	0.0	0.0
100.00		132.1	754.7					0.0	438.5	132.1	1,193.2	0.0	0.0
105.00		90.8	726.1					0.0	438.5	90.8	1,164.6	0.0	0.0
107.00	Appertunance(s)	63.4	283.8	1,701.7	0.0	0.0	11,185.8	0.0	175.4	1,765.2	11,645.0	0.0	0.0
110.00		99.5	416.4					0.0	79.5	99.5	495.9	0.0	0.0
115.00		109.5	668.4					0.0	132.5	109.5	800.9	0.0	0.0
119.00	Top - Section 3	59.7	514.7					0.0	106.0	59.7	620.7	0.0	0.0
120.00		23.5	108.2					0.0	26.5	23.5	134.7	0.0	0.0
121.00	Appertunance(s)	57.7	107.2	624.8	0.0	0.0	3,787.6	0.0	26.5	682.5	3,921.3	0.0	0.0
125.00		90.7	416.0					0.0	56.4	90.7	472.4	0.0	0.0
129.00	Appertunance(s)	44.7	400.1	1,139.2	0.0	2,707.1	6,440.9	0.0	56.4	1,183.9	6,897.5	0.0	0.0
									Totals:	7,085.65	63,472.2	0.00	0.00

Load Case: 1.2D + 1.0Di + 1.0Wi 50 mph with 0.75 in Radial Ice 21 Iterations

Gust Response Factor :1.10 Ice Dead Load Factor 1.00 Wind Importance Factor 1.00
Dead Load Factor :1.20 Ice Importance Factor :1.00
Wind Load Factor :1.00

Calculated Forces

Seg Elev (ft)	Pu FY (-) (kips)	Vu FX (-) (kips)	Tu MY (ft-kips)	Mu MZ (ft-kips)	Mu MX (ft-kips)	Resultant Moment (ft-kips)	phi Pn (kips)	phi Vn (kips)	phi Tn (ft-kips)	phi Mn (ft-kips)	Total Deflect (in)	Rotation (deg)	Ratio
0.00	-63.47	-7.04	0.00	-673.94	0.00	673.94	4,830.72	2,415.36	9,588.44	4,801.34	0.00	0.00	0.154
5.00	-61.32	-6.94	0.00	-638.74	0.00	638.74	4,749.48	2,374.74	9,204.97	4,609.33	0.03	-0.05	0.151
10.00	-59.16	-6.85	0.00	-604.03	0.00	604.03	4,666.73	2,333.36	8,826.25	4,419.68	0.10	-0.09	0.149
15.00	-57.03	-6.75	0.00	-569.78	0.00	569.78	4,582.46	2,291.23	8,452.48	4,232.52	0.23	-0.14	0.147
20.00	-54.92	-6.65	0.00	-536.02	0.00	536.02	4,496.68	2,248.34	8,083.87	4,047.94	0.40	-0.19	0.145
25.00	-52.85	-6.54	0.00	-502.77	0.00	502.77	4,406.48	2,203.24	7,715.56	3,863.51	0.63	-0.24	0.142
30.00	-50.81	-6.43	0.00	-470.07	0.00	470.07	4,289.92	2,144.96	7,310.76	3,660.81	0.91	-0.29	0.140
35.00	-48.80	-6.31	0.00	-437.94	0.00	437.94	4,173.36	2,086.68	6,916.87	3,463.58	1.25	-0.34	0.138
40.00	-46.84	-6.19	0.00	-406.40	0.00	406.40	4,056.80	2,028.40	6,533.89	3,271.80	1.64	-0.40	0.136
45.00	-44.91	-6.09	0.00	-375.47	0.00	375.47	3,940.24	1,970.12	6,161.81	3,085.49	2.08	-0.45	0.133
47.25	-44.05	-6.03	0.00	-361.76	0.00	361.76	3,887.79	1,943.89	5,997.94	3,003.43	2.30	-0.47	0.132
50.00	-42.50	-5.95	0.00	-345.18	0.00	345.18	3,823.68	1,911.84	5,800.65	2,904.64	2.58	-0.50	0.130
52.75	-40.97	-5.88	0.00	-328.81	0.00	328.81	3,282.31	1,641.15	5,013.65	2,510.55	2.87	-0.53	0.143
55.00	-40.20	-5.79	0.00	-315.57	0.00	315.57	3,248.58	1,624.29	4,893.74	2,450.51	3.13	-0.56	0.141
60.00	-38.50	-5.66	0.00	-286.60	0.00	286.60	3,149.47	1,574.74	4,597.09	2,301.96	3.74	-0.61	0.137
65.00	-36.84	-5.53	0.00	-258.28	0.00	258.28	3,049.56	1,524.78	4,308.58	2,157.49	4.42	-0.67	0.132
70.00	-35.22	-5.40	0.00	-230.61	0.00	230.61	2,949.66	1,474.83	4,029.43	2,017.71	5.15	-0.73	0.126
75.00	-33.63	-5.27	0.00	-203.61	0.00	203.61	2,849.75	1,424.87	3,759.63	1,882.61	5.94	-0.78	0.120
80.00	-32.08	-5.13	0.00	-177.28	0.00	177.28	2,749.84	1,374.92	3,499.17	1,752.19	6.79	-0.84	0.113
85.00	-30.57	-5.00	0.00	-151.61	0.00	151.61	2,649.93	1,324.97	3,248.06	1,626.45	7.69	-0.89	0.105
90.00	-29.10	-4.91	0.00	-126.63	0.00	126.63	2,550.02	1,275.01	3,006.31	1,505.39	8.65	-0.94	0.096
90.50	-28.95	-4.86	0.00	-124.17	0.00	124.17	2,540.03	1,270.02	2,982.64	1,493.54	8.75	-0.94	0.095
94.75	-27.33	-4.78	0.00	-103.54	0.00	103.54	1,607.72	803.86	1,873.69	938.24	9.60	-0.98	0.127
95.00	-27.27	-4.72	0.00	-102.34	0.00	102.34	1,605.47	802.74	1,867.31	935.04	9.65	-0.98	0.126
100.00	-26.07	-4.59	0.00	-78.75	0.00	78.75	1,559.66	779.83	1,741.06	871.82	10.71	-1.04	0.107
105.00	-24.91	-4.49	0.00	-55.80	0.00	55.80	1,512.33	756.17	1,617.47	809.94	11.83	-1.09	0.085
107.00	-13.30	-2.51	0.00	-46.82	0.00	46.82	1,492.98	746.49	1,568.83	785.58	12.29	-1.10	0.069
110.00	-12.80	-2.40	0.00	-39.29	0.00	39.29	1,463.49	731.75	1,496.76	749.49	12.99	-1.12	0.061
115.00	-12.00	-2.28	0.00	-27.27	0.00	27.27	1,403.83	701.92	1,370.07	686.05	14.18	-1.15	0.048
119.00	-11.38	-2.21	0.00	-18.13	0.00	18.13	1,350.55	675.27	1,267.52	634.70	15.16	-1.17	0.037
119.00	-11.38	-2.21	0.00	-18.13	0.00	18.13	952.84	476.42	899.15	450.24	15.16	-1.17	0.052
120.00	-11.25	-2.19	0.00	-15.92	0.00	15.92	946.51	473.26	884.32	442.82	15.41	-1.18	0.048
121.00	-7.34	-1.43	0.00	-13.73	0.00	13.73	940.12	470.06	869.55	435.42	15.65	-1.18	0.039
125.00	-6.87	-1.33	0.00	-8.02	0.00	8.02	913.97	456.98	811.15	406.18	16.65	-1.20	0.027
129.00	0.00	-1.18	0.00	-2.71	0.00	2.71	886.84	443.42	753.88	377.50	17.66	-1.21	0.007

Load Case: 1.0D + 1.0W Serviceability 60 mph 21 Iterations

Gust Response Factor :1.10 Wind Importance Factor 1.00
Dead Load Factor :1.00
Wind Load Factor :1.00

Applied Segment Forces Summary

Seg Elev (ft)	Description	Shaft Forces Wind FX (lb)	Shaft Forces Dead Load (lb)	Discrete Forces Wind FX (lb)	Discrete Forces Torsion MY (lb-ft)	Discrete Forces Moment MZ (lb-ft)	Discrete Forces Dead Load (lb)	Linear Forces Wind FX (lb)	Linear Forces Dead Load (lb)	Sum of Forces Wind FX (lb)	Sum of Forces Dead Load (lb)	Sum of Forces Torsion MY (lb-ft)	Sum of Forces Moment MZ (lb)
0.00		54.3	0.0					0.0	0.0	54.3	0.0	0.0	0.0
5.00		107.3	1,129.2					0.0	365.4	107.3	1,494.7	0.0	0.0
10.00		104.8	1,102.5					0.0	365.4	104.8	1,468.0	0.0	0.0
15.00		103.8	1,075.8					0.0	365.4	103.8	1,441.3	0.0	0.0
20.00		105.6	1,049.1					0.0	365.4	105.6	1,414.6	0.0	0.0
25.00		107.9	1,022.5					0.0	365.4	107.9	1,387.9	0.0	0.0
30.00		109.2	995.8					0.0	365.4	109.2	1,361.2	0.0	0.0
35.00		109.8	969.1					0.0	365.4	109.8	1,334.5	0.0	0.0
40.00		109.8	942.4					0.0	365.4	109.8	1,307.8	0.0	0.0
45.00		79.5	915.7					0.0	365.4	79.5	1,281.1	0.0	0.0
47.25	Bot - Section 2	55.1	403.3					0.0	164.5	55.1	567.8	0.0	0.0
50.00		60.9	911.0					0.0	201.0	60.9	1,111.9	0.0	0.0
52.75	Top - Section 1	55.1	896.0					0.0	201.0	55.1	1,097.0	0.0	0.0
55.00		79.3	337.2					0.0	164.5	79.3	501.6	0.0	0.0
60.00		108.3	732.7					0.0	365.4	108.3	1,098.1	0.0	0.0
65.00		106.7	709.8					0.0	365.4	106.7	1,075.3	0.0	0.0
70.00		104.9	686.9					0.0	365.4	104.9	1,052.4	0.0	0.0
75.00		102.8	664.0					0.0	365.4	102.8	1,029.5	0.0	0.0
80.00		100.6	641.2					0.0	365.4	100.6	1,006.6	0.0	0.0
85.00		98.3	618.3					0.0	365.4	98.3	983.7	0.0	0.0
90.00		53.3	595.4					0.0	365.4	53.3	960.9	0.0	0.0
90.50	Bot - Section 3	45.6	58.3					0.0	36.5	45.6	94.8	0.0	0.0
94.75	Top - Section 2	43.2	817.4					0.0	310.6	43.2	1,128.1	0.0	0.0
95.00		49.1	19.1					0.0	18.3	49.1	37.4	0.0	0.0
100.00		92.0	374.9					0.0	365.4	92.0	740.3	0.0	0.0
105.00		63.0	359.6					0.0	365.4	63.0	725.1	0.0	0.0
107.00	Appertunance(s)	43.8	139.6	1,832.0	0.0	0.0	3,929.8	0.0	146.2	1,875.8	4,215.6	0.0	0.0
110.00		68.4	204.8					0.0	66.2	68.4	271.0	0.0	0.0
115.00		75.0	329.1					0.0	110.4	75.0	439.5	0.0	0.0
119.00	Top - Section 3	40.7	252.3					0.0	88.3	40.7	340.6	0.0	0.0
120.00		16.0	46.3					0.0	22.1	16.0	68.4	0.0	0.0
121.00	Appertunance(s)	39.1	45.8	660.8	0.0	0.0	1,569.0	0.0	22.1	700.0	1,636.9	0.0	0.0
125.00		61.3	178.8					0.0	47.0	61.3	225.8	0.0	0.0
129.00	Appertunance(s)	30.1	171.4	1,212.7	0.0	3,304.1	2,523.1	0.0	47.0	1,242.8	2,741.6	0.0	0.0
									Totals:	6,290.51	35,640.9	0.00	0.00

Load Case: 1.0D + 1.0W Serviceability 60 mph 21 Iterations

Gust Response Factor :1.10 Wind Importance Factor 1.00
Dead Load Factor :1.00
Wind Load Factor :1.00

Calculated Forces

Seg Elev (ft)	Pu FY (-) (kips)	Vu FX (-) (kips)	Tu MY (ft-kips)	Mu MZ (ft-kips)	Mu MX (ft-kips)	Resultant Moment (ft-kips)	phi Pn (kips)	phi Vn (kips)	phi Tn (ft-kips)	phi Mn (ft-kips)	Total Deflect (in)	Rotation (deg)	Ratio
0.00	-35.64	-6.25	0.00	-611.93	0.00	611.93	4,830.72	2,415.36	9,588.44	4,801.34	0.00	0.00	0.135
5.00	-34.14	-6.17	0.00	-580.69	0.00	580.69	4,749.48	2,374.74	9,204.97	4,609.33	0.02	-0.04	0.133
10.00	-32.67	-6.09	0.00	-549.85	0.00	549.85	4,666.73	2,333.36	8,826.25	4,419.68	0.09	-0.09	0.131
15.00	-31.22	-6.00	0.00	-519.42	0.00	519.42	4,582.46	2,291.23	8,452.48	4,232.52	0.21	-0.13	0.130
20.00	-29.80	-5.92	0.00	-489.41	0.00	489.41	4,496.68	2,248.34	8,083.87	4,047.94	0.37	-0.18	0.128
25.00	-28.41	-5.83	0.00	-459.82	0.00	459.82	4,406.48	2,203.24	7,715.56	3,863.51	0.57	-0.22	0.125
30.00	-27.04	-5.73	0.00	-430.68	0.00	430.68	4,289.92	2,144.96	7,310.76	3,660.81	0.83	-0.27	0.124
35.00	-25.71	-5.64	0.00	-402.01	0.00	402.01	4,173.36	2,086.68	6,916.87	3,463.58	1.14	-0.31	0.122
40.00	-24.39	-5.54	0.00	-373.82	0.00	373.82	4,056.80	2,028.40	6,533.89	3,271.80	1.49	-0.36	0.120
45.00	-23.11	-5.47	0.00	-346.11	0.00	346.11	3,940.24	1,970.12	6,161.81	3,085.49	1.90	-0.41	0.118
47.25	-22.54	-5.42	0.00	-333.80	0.00	333.80	3,887.79	1,943.89	5,997.94	3,003.43	2.09	-0.43	0.117
50.00	-21.43	-5.36	0.00	-318.90	0.00	318.90	3,823.68	1,911.84	5,800.65	2,904.64	2.35	-0.46	0.115
52.75	-20.33	-5.30	0.00	-304.17	0.00	304.17	3,282.31	1,641.15	5,013.65	2,510.55	2.62	-0.49	0.127
55.00	-19.82	-5.23	0.00	-292.23	0.00	292.23	3,248.58	1,624.29	4,893.74	2,450.51	2.86	-0.51	0.125
60.00	-18.72	-5.13	0.00	-266.07	0.00	266.07	3,149.47	1,574.74	4,597.09	2,301.96	3.42	-0.56	0.122
65.00	-17.64	-5.03	0.00	-240.41	0.00	240.41	3,049.56	1,524.78	4,308.58	2,157.49	4.04	-0.62	0.117
70.00	-16.59	-4.93	0.00	-215.25	0.00	215.25	2,949.66	1,474.83	4,029.43	2,017.71	4.71	-0.67	0.112
75.00	-15.55	-4.83	0.00	-190.61	0.00	190.61	2,849.75	1,424.87	3,759.63	1,882.61	5.44	-0.72	0.107
80.00	-14.55	-4.73	0.00	-166.47	0.00	166.47	2,749.84	1,374.92	3,499.17	1,752.19	6.22	-0.77	0.100
85.00	-13.56	-4.63	0.00	-142.84	0.00	142.84	2,649.93	1,324.97	3,248.06	1,626.45	7.05	-0.82	0.093
90.00	-12.60	-4.56	0.00	-119.71	0.00	119.71	2,550.02	1,275.01	3,006.31	1,505.39	7.94	-0.86	0.084
90.50	-12.50	-4.52	0.00	-117.43	0.00	117.43	2,540.03	1,270.02	2,982.64	1,493.54	8.03	-0.87	0.084
94.75	-11.37	-4.46	0.00	-98.21	0.00	98.21	1,607.72	803.86	1,873.69	938.24	8.82	-0.91	0.112
95.00	-11.33	-4.42	0.00	-97.10	0.00	97.10	1,605.47	802.74	1,867.31	935.04	8.87	-0.91	0.111
100.00	-10.59	-4.33	0.00	-75.00	0.00	75.00	1,559.66	779.83	1,741.06	871.82	9.85	-0.96	0.093
105.00	-9.87	-4.26	0.00	-53.37	0.00	53.37	1,512.33	756.17	1,617.47	809.94	10.88	-1.01	0.072
107.00	-5.68	-2.31	0.00	-44.86	0.00	44.86	1,492.98	746.49	1,568.83	785.58	11.31	-1.02	0.061
110.00	-5.41	-2.24	0.00	-37.94	0.00	37.94	1,463.49	731.75	1,496.76	749.49	11.96	-1.04	0.054
115.00	-4.97	-2.16	0.00	-26.75	0.00	26.75	1,403.83	701.92	1,370.07	686.05	13.07	-1.07	0.043
119.00	-4.63	-2.11	0.00	-18.13	0.00	18.13	1,350.55	675.27	1,267.52	634.70	13.97	-1.09	0.032
119.00	-4.63	-2.11	0.00	-18.13	0.00	18.13	952.84	476.42	899.15	450.24	13.97	-1.09	0.045
120.00	-4.56	-2.09	0.00	-16.03	0.00	16.03	946.51	473.26	884.32	442.82	14.20	-1.10	0.041
121.00	-2.94	-1.36	0.00	-13.93	0.00	13.93	940.12	470.06	869.55	435.42	14.43	-1.10	0.035
125.00	-2.72	-1.30	0.00	-8.49	0.00	8.49	913.97	456.98	811.15	406.18	15.36	-1.12	0.024
129.00	0.00	-1.24	0.00	-3.30	0.00	3.30	886.84	443.42	753.88	377.50	16.30	-1.12	0.009

Equivalent Lateral Forces Method Analysis

(Based on ASCE7-10 Chapters 11, 12, 15)

Spectral Response Acceleration for Short Period (S_s):	0.18	
Spectral Response Acceleration at 1.0 Second Period (S_1):	0.06	
Long-Period Transition Period (T_L):	6	
Importance Factor (I_E):	1.00	
Site Coefficient F_a:	1.60	
Site Coeffiecient F_v:	2.40	
Response Modification Coefficient (R):	1.50	
Design Spectral Response Acceleration at Short Period (S_{ds}):	0.20	
Design Spectral Response Acceleration at 1.0 Second Period (S_{d1}):	0.10	
Seismic Response Coefficient (C_s):	0.03	
Upper Limit C_s	0.03	
Lower Limit C_s	0.03	
Period based on Rayleigh Method (sec):	1.90	
Redundancy Factor (p):	1.30	
Seismic Force Distribution Exponent (k):	1.70	
Total Unfactored Dead Load:	35.64	k
Seismic Base Shear (E):	1.61	k

Load Case (1.2 + 0.2Sds) * DL + E ELFM Seismic Equivalent Lateral Forces Method

Segment	Height Above Base (ft)	Weight (lb)	W_z (lb-ft)	C_{vx}	Horizontal Force (lb)	Vertical Force (lb)
33	127.00	218	830	0.015	24	271
32	123.00	226	812	0.015	24	280
31	120.50	68	236	0.004	7	84
30	119.50	68	234	0.004	7	85
29	117.00	341	1,125	0.020	33	422
28	112.50	440	1,358	0.025	40	545
27	108.50	271	788	0.014	23	336
26	106.00	286	798	0.014	23	354
25	102.50	725	1,912	0.035	56	899
24	97.50	740	1,793	0.033	52	917
23	94.88	37	87	0.002	3	46
22	92.63	1,128	2,504	0.045	73	1,398
21	90.25	95	201	0.004	6	118
20	87.50	961	1,936	0.035	57	1,191
19	82.50	984	1,793	0.033	52	1,219
18	77.50	1,007	1,650	0.030	48	1,247
17	72.50	1,029	1,506	0.027	44	1,276
16	67.50	1,052	1,364	0.025	40	1,304
15	62.50	1,075	1,222	0.022	36	1,333
14	57.50	1,098	1,083	0.020	32	1,361
13	53.88	502	443	0.008	13	622
12	51.38	1,097	893	0.016	26	1,359
11	48.63	1,112	825	0.015	24	1,378

10	46.13	568	385	0.007	11	704
9	42.50	1,281	756	0.014	22	1,588
8	37.50	1,308	623	0.011	18	1,621
7	32.50	1,335	499	0.009	15	1,654
6	27.50	1,361	383	0.007	11	1,687
5	22.50	1,388	277	0.005	8	1,720
4	17.50	1,415	184	0.003	5	1,753
3	12.50	1,441	106	0.002	3	1,786
2	7.50	1,468	45	0.001	1	1,819
1	2.50	1,495	7	0.000	0	1,852
Alcatel-Lucent RRH2x	129.00	170	663	0.012	19	211
Alcatel-Lucent PCS B	129.00	165	644	0.012	19	204
Alcatel-Lucent B66A	129.00	201	784	0.014	23	249
RFS DB-T1-6Z-8AB-0Z	129.00	44	172	0.003	5	55
Amphenol Antel BXA-1	129.00	38	150	0.003	4	48
RFS DB-T1-6Z-8AB-0Z	129.00	44	172	0.003	5	55
Amphenol Antel BXA-8	129.00	18	70	0.001	2	22
Amphenol Antel BXA-7	129.00	38	150	0.003	4	48
Commscope SBNHH-1D65	129.00	304	1,187	0.022	35	377
Round Low Profile Pl	129.00	1,500	5,851	0.106	171	1,859
Ericsson AIR 21	121.00	819	2,865	0.052	84	1,015
Round T-Arm	121.00	750	2,624	0.048	77	929
Raycap DC6-48-60-18-	107.00	80	227	0.004	7	99
Ericsson RRUS-11 (5	107.00	300	851	0.015	25	372
Ericsson RRUS 32 (50	107.00	305	865	0.016	25	378
Ericsson RRUS12 w/ R	107.00	429	1,217	0.022	36	532
CCI CCI-HPA-65R-BUU-	107.00	816	2,316	0.042	68	1,011
Round Platform w/ Ha	107.00	2,000	5,675	0.103	166	2,479
		35,641	55,142	1.000	1,610	44,168

Load Case (0.9 - 0.2Sds) * DL + E ELFM Seismic (Reduced DL) Equivalent Lateral Forces Method

Segment	Height Above Base (ft)	Weight (lb)	W_z (lb-ft)	C_{vx}	Horizontal Force (lb)	Vertical Force (lb)
33	127.00	218	830	0.015	24	188
32	123.00	226	812	0.015	24	194
31	120.50	68	236	0.004	7	58
30	119.50	68	234	0.004	7	59
29	117.00	341	1,125	0.020	33	293
28	112.50	440	1,358	0.025	40	378
27	108.50	271	788	0.014	23	233
26	106.00	286	798	0.014	23	246
25	102.50	725	1,912	0.035	56	624
24	97.50	740	1,793	0.033	52	637
23	94.88	37	87	0.002	3	32
22	92.63	1,128	2,504	0.045	73	971
21	90.25	95	201	0.004	6	82
20	87.50	961	1,936	0.035	57	827
19	82.50	984	1,793	0.033	52	847
18	77.50	1,007	1,650	0.030	48	866
17	72.50	1,029	1,506	0.027	44	886
16	67.50	1,052	1,364	0.025	40	906
15	62.50	1,075	1,222	0.022	36	926
14	57.50	1,098	1,083	0.020	32	945
13	53.88	502	443	0.008	13	432
12	51.38	1,097	893	0.016	26	944
11	48.63	1,112	825	0.015	24	957
10	46.13	568	385	0.007	11	489
9	42.50	1,281	756	0.014	22	1,103
8	37.50	1,308	623	0.011	18	1,126

7	32.50	1,335	499	0.009	15	1,149
6	27.50	1,361	383	0.007	11	1,172
5	22.50	1,388	277	0.005	8	1,195
4	17.50	1,415	184	0.003	5	1,218
3	12.50	1,441	106	0.002	3	1,241
2	7.50	1,468	45	0.001	1	1,264
1	2.50	1,495	7	0.000	0	1,287
Alcatel-Lucent RRH2x	129.00	170	663	0.012	19	146
Alcatel-Lucent PCS B	129.00	165	644	0.012	19	142
Alcatel-Lucent B66A	129.00	201	784	0.014	23	173
RFS DB-T1-6Z-8AB-0Z	129.00	44	172	0.003	5	38
Amphenol Antel BXA-1	129.00	38	150	0.003	4	33
RFS DB-T1-6Z-8AB-0Z	129.00	44	172	0.003	5	38
Amphenol Antel BXA-8	129.00	18	70	0.001	2	15
Amphenol Antel BXA-7	129.00	38	150	0.003	4	33
Commscope SBNHH-1D65	129.00	304	1,187	0.022	35	262
Round Low Profile Pl	129.00	1,500	5,851	0.106	171	1,291
Ericsson AIR 21	121.00	819	2,865	0.052	84	705
Round T-Arm	121.00	750	2,624	0.048	77	646
Raycap DC6-48-60-18-	107.00	80	227	0.004	7	69
Ericsson RRUS-11 (5	107.00	300	851	0.015	25	258
Ericsson RRUS 32 (50	107.00	305	865	0.016	25	262
Ericsson RRUS12 w/ R	107.00	429	1,217	0.022	36	369
CCI CCI-HPA-65R-BUU-	107.00	816	2,316	0.042	68	702
Round Platform w/ Ha	107.00	2,000	5,675	0.103	166	1,721
		35,641	55,142	1.000	1,610	30,678

Load Case (1.2 + 0.2Sds) * DL + E ELFM Seismic Equivalent Lateral Forces Method

Calculated Forces

Seg Elev (ft)	Pu FY (-) (kips)	Vu FX (-) (kips)	Tu MY (ft-kips)	Mu MZ (ft-kips)	Mu MX (ft-kips)	Resultant Moment (ft-kips)	phi Pn (kips)	phi Vn (kips)	phi Tn (ft-kips)	phi Mn (ft-kips)	Total Deflect (in)	Rotation (deg)	Ratio
0.00	-42.32	-1.61	0.00	-163.61	0.00	163.61	4,830.72	2,415.36	9,588.44	4,801.34	0.00	0.00	0.043
5.00	-40.50	-1.62	0.00	-155.55	0.00	155.55	4,749.48	2,374.74	9,204.97	4,609.33	0.01	-0.01	0.042
10.00	-38.71	-1.62	0.00	-147.44	0.00	147.44	4,666.73	2,333.36	8,826.25	4,419.68	0.02	-0.02	0.042
15.00	-36.96	-1.63	0.00	-139.32	0.00	139.32	4,582.46	2,291.23	8,452.48	4,232.52	0.05	-0.03	0.041
20.00	-35.24	-1.62	0.00	-131.19	0.00	131.19	4,496.68	2,248.34	8,083.87	4,047.94	0.10	-0.05	0.040
25.00	-33.55	-1.62	0.00	-123.07	0.00	123.07	4,406.48	2,203.24	7,715.56	3,863.51	0.15	-0.06	0.039
30.00	-31.89	-1.61	0.00	-114.98	0.00	114.98	4,289.92	2,144.96	7,310.76	3,660.81	0.22	-0.07	0.039
35.00	-30.27	-1.60	0.00	-106.93	0.00	106.93	4,173.36	2,086.68	6,916.87	3,463.58	0.30	-0.08	0.038
40.00	-28.69	-1.58	0.00	-98.95	0.00	98.95	4,056.80	2,028.40	6,533.89	3,271.80	0.40	-0.10	0.037
45.00	-27.98	-1.57	0.00	-91.07	0.00	91.07	3,940.24	1,970.12	6,161.81	3,085.49	0.51	-0.11	0.037
47.25	-26.60	-1.55	0.00	-87.54	0.00	87.54	3,887.79	1,943.89	5,997.94	3,003.43	0.56	-0.12	0.036
50.00	-25.24	-1.52	0.00	-83.29	0.00	83.29	3,823.68	1,911.84	5,800.65	2,904.64	0.63	-0.12	0.035
52.75	-24.62	-1.51	0.00	-79.11	0.00	79.11	3,282.31	1,641.15	5,013.65	2,510.55	0.70	-0.13	0.039
55.00	-23.26	-1.48	0.00	-75.72	0.00	75.72	3,248.58	1,624.29	4,893.74	2,450.51	0.76	-0.14	0.038
60.00	-21.93	-1.44	0.00	-68.33	0.00	68.33	3,149.47	1,574.74	4,597.09	2,301.96	0.91	-0.15	0.037
65.00	-20.62	-1.41	0.00	-61.11	0.00	61.11	3,049.56	1,524.78	4,308.58	2,157.49	1.08	-0.16	0.035
70.00	-19.35	-1.36	0.00	-54.09	0.00	54.09	2,949.66	1,474.83	4,029.43	2,017.71	1.25	-0.18	0.033
75.00	-18.10	-1.31	0.00	-47.28	0.00	47.28	2,849.75	1,424.87	3,759.63	1,882.61	1.45	-0.19	0.031
80.00	-16.88	-1.26	0.00	-40.71	0.00	40.71	2,749.84	1,374.92	3,499.17	1,752.19	1.65	-0.20	0.029
85.00	-15.69	-1.20	0.00	-34.41	0.00	34.41	2,649.93	1,324.97	3,248.06	1,626.45	1.87	-0.21	0.027
90.00	-15.57	-1.20	0.00	-28.39	0.00	28.39	2,550.02	1,275.01	3,006.31	1,505.39	2.10	-0.22	0.025
90.50	-14.18	-1.12	0.00	-27.79	0.00	27.79	2,540.03	1,270.02	2,982.64	1,493.54	2.12	-0.23	0.024
94.75	-14.13	-1.12	0.00	-23.03	0.00	23.03	1,607.72	803.86	1,873.69	938.24	2.32	-0.23	0.033
95.00	-13.21	-1.06	0.00	-22.75	0.00	22.75	1,605.47	802.74	1,867.31	935.04	2.34	-0.23	0.033
100.00	-12.31	-1.01	0.00	-17.42	0.00	17.42	1,559.66	779.83	1,741.06	871.82	2.59	-0.25	0.028
105.00	-11.96	-0.98	0.00	-12.39	0.00	12.39	1,512.33	756.17	1,617.47	809.94	2.85	-0.26	0.023
107.00	-6.75	-0.61	0.00	-10.42	0.00	10.42	1,492.98	746.49	1,568.83	785.58	2.96	-0.26	0.018
110.00	-6.21	-0.57	0.00	-8.58	0.00	8.58	1,463.49	731.75	1,496.76	749.49	3.13	-0.27	0.016
115.00	-5.79	-0.54	0.00	-5.72	0.00	5.72	1,403.83	701.92	1,370.07	686.05	3.41	-0.27	0.012
119.00	-5.70	-0.53	0.00	-3.58	0.00	3.58	1,350.55	675.27	1,267.52	634.70	3.64	-0.28	0.010
119.00	-5.70	-0.53	0.00	-3.58	0.00	3.58	952.84	476.42	899.15	450.24	3.64	-0.28	0.014
120.00	-5.62	-0.52	0.00	-3.05	0.00	3.05	946.51	473.26	884.32	442.82	3.70	-0.28	0.013
121.00	-3.40	-0.33	0.00	-2.52	0.00	2.52	940.12	470.06	869.55	435.42	3.76	-0.28	0.009
125.00	-3.13	-0.30	0.00	-1.21	0.00	1.21	913.97	456.98	811.15	406.18	3.99	-0.28	0.006
129.00	0.00	-0.29	0.00	0.00	0.00	0.00	886.84	443.42	753.88	377.50	4.23	-0.28	0.000

Load Case (0.9 - 0.2Sds) * DL + E ELFM Seismic (Reduced DL) Equivalent Lateral Forces Method

Calculated Forces

Seg Elev (ft)	Pu FY (-) (kips)	Vu FX (-) (kips)	Tu MY (ft-kips)	Mu MZ (ft-kips)	Mu MX (ft-kips)	Resultant Moment (ft-kips)	phi Pn (kips)	phi Vn (kips)	phi Tn (ft-kips)	phi Mn (ft-kips)	Total Deflect (in)	Rotation (deg)	Ratio
0.00	-29.39	-1.61	0.00	-161.88	0.00	161.88	4,830.72	2,415.36	9,588.44	4,801.34	0.00	0.00	0.040
5.00	-28.13	-1.62	0.00	-153.82	0.00	153.82	4,749.48	2,374.74	9,204.97	4,609.33	0.01	-0.01	0.039
10.00	-26.89	-1.62	0.00	-145.73	0.00	145.73	4,666.73	2,333.36	8,826.25	4,419.68	0.02	-0.02	0.039
15.00	-25.67	-1.62	0.00	-137.64	0.00	137.64	4,582.46	2,291.23	8,452.48	4,232.52	0.05	-0.03	0.038
20.00	-24.47	-1.61	0.00	-129.55	0.00	129.55	4,496.68	2,248.34	8,083.87	4,047.94	0.10	-0.05	0.037
25.00	-23.30	-1.61	0.00	-121.48	0.00	121.48	4,406.48	2,203.24	7,715.56	3,863.51	0.15	-0.06	0.037
30.00	-22.15	-1.60	0.00	-113.45	0.00	113.45	4,289.92	2,144.96	7,310.76	3,660.81	0.22	-0.07	0.036
35.00	-21.03	-1.58	0.00	-105.47	0.00	105.47	4,173.36	2,086.68	6,916.87	3,463.58	0.30	-0.08	0.035
40.00	-19.92	-1.56	0.00	-97.57	0.00	97.57	4,056.80	2,028.40	6,533.89	3,271.80	0.39	-0.10	0.035
45.00	-19.43	-1.55	0.00	-89.76	0.00	89.76	3,940.24	1,970.12	6,161.81	3,085.49	0.50	-0.11	0.034
47.25	-18.48	-1.53	0.00	-86.27	0.00	86.27	3,887.79	1,943.89	5,997.94	3,003.43	0.55	-0.11	0.033
50.00	-17.53	-1.50	0.00	-82.07	0.00	82.07	3,823.68	1,911.84	5,800.65	2,904.64	0.62	-0.12	0.033
52.75	-17.10	-1.49	0.00	-77.94	0.00	77.94	3,282.31	1,641.15	5,013.65	2,510.55	0.69	-0.13	0.036
55.00	-16.16	-1.46	0.00	-74.59	0.00	74.59	3,248.58	1,624.29	4,893.74	2,450.51	0.75	-0.13	0.035
60.00	-15.23	-1.42	0.00	-67.29	0.00	67.29	3,149.47	1,574.74	4,597.09	2,301.96	0.90	-0.15	0.034
65.00	-14.32	-1.39	0.00	-60.17	0.00	60.17	3,049.56	1,524.78	4,308.58	2,157.49	1.06	-0.16	0.033
70.00	-13.44	-1.34	0.00	-53.24	0.00	53.24	2,949.66	1,474.83	4,029.43	2,017.71	1.24	-0.17	0.031
75.00	-12.57	-1.29	0.00	-46.52	0.00	46.52	2,849.75	1,424.87	3,759.63	1,882.61	1.43	-0.19	0.029
80.00	-11.72	-1.24	0.00	-40.05	0.00	40.05	2,749.84	1,374.92	3,499.17	1,752.19	1.63	-0.20	0.027
85.00	-10.90	-1.18	0.00	-33.85	0.00	33.85	2,649.93	1,324.97	3,248.06	1,626.45	1.84	-0.21	0.025
90.00	-10.82	-1.18	0.00	-27.93	0.00	27.93	2,550.02	1,275.01	3,006.31	1,505.39	2.07	-0.22	0.023
90.50	-9.84	-1.10	0.00	-27.34	0.00	27.34	2,540.03	1,270.02	2,982.64	1,493.54	2.09	-0.22	0.022
94.75	-9.81	-1.10	0.00	-22.65	0.00	22.65	1,607.72	803.86	1,873.69	938.24	2.29	-0.23	0.030
95.00	-9.18	-1.05	0.00	-22.37	0.00	22.37	1,605.47	802.74	1,867.31	935.04	2.31	-0.23	0.030
100.00	-8.55	-0.99	0.00	-17.14	0.00	17.14	1,559.66	779.83	1,741.06	871.82	2.55	-0.24	0.025
105.00	-8.31	-0.97	0.00	-12.18	0.00	12.18	1,512.33	756.17	1,617.47	809.94	2.82	-0.25	0.021
107.00	-4.69	-0.60	0.00	-10.25	0.00	10.25	1,492.98	746.49	1,568.83	785.58	2.92	-0.26	0.016
110.00	-4.31	-0.56	0.00	-8.44	0.00	8.44	1,463.49	731.75	1,496.76	749.49	3.09	-0.26	0.014
115.00	-4.02	-0.53	0.00	-5.63	0.00	5.63	1,403.83	701.92	1,370.07	686.05	3.36	-0.27	0.011
119.00	-3.96	-0.52	0.00	-3.52	0.00	3.52	1,350.55	675.27	1,267.52	634.70	3.59	-0.27	0.008
119.00	-3.96	-0.52	0.00	-3.52	0.00	3.52	952.84	476.42	899.15	450.24	3.59	-0.27	0.012
120.00	-3.90	-0.51	0.00	-3.00	0.00	3.00	946.51	473.26	884.32	442.82	3.65	-0.27	0.011
121.00	-2.36	-0.32	0.00	-2.48	0.00	2.48	940.12	470.06	869.55	435.42	3.70	-0.27	0.008
125.00	-2.17	-0.30	0.00	-1.19	0.00	1.19	913.97	456.98	811.15	406.18	3.94	-0.28	0.005
129.00	0.00	-0.29	0.00	0.00	0.00	0.00	886.84	443.42	753.88	377.50	4.17	-0.28	0.000

Equivalent Modal Forces Analysis

(Based on ASCE7-10 Chapters 11, 12 & 15 and ANSI/TIA-G, section 2.7)

Spectral Response Acceleration for Short Period (S_s):	0.18
Spectral Response Acceleration at 1.0 Second Period (S_1):	0.06
Importance Factor (I_E):	1.00
Site Coefficient F_a:	1.60
Site Coefficient F_v	2.40
Response Modification Coefficient (R):	1.50
Design Spectral Response Acceleration at Short Period (S_{ds}):	0.20
Desing Spectral Response Acceleration at 1.0 Second Period (S_{d1}):	0.10
Period Based on Rayleigh Method (sec):	1.90
Redundancy Factor (p):	1.30

Load Case (1.2 + 0.2Sds) * DL + E EMAM Seismic Equivalent Modal Analysis Method

Segment	Height Above Base (ft)	Weight (lb)	a	b	c	Saz	Horizontal Force (lb)	Vertical Force (lb)
33	127.00	218	1.832	1.687	1.033	0.339	64	271
32	123.00	226	1.718	1.193	0.843	0.270	53	280
31	120.50	68	1.649	0.939	0.739	0.230	14	84
30	119.50	68	1.622	0.848	0.700	0.215	13	85
29	117.00	341	1.555	0.645	0.610	0.180	53	422
28	112.50	440	1.437	0.359	0.471	0.123	47	545
27	108.50	271	1.337	0.175	0.370	0.080	19	336
26	106.00	286	1.276	0.089	0.315	0.056	14	354
25	102.50	725	1.193	-0.002	0.250	0.029	18	899
24	97.50	740	1.080	-0.081	0.175	-0.002	-1	917
23	94.88	37	1.022	-0.104	0.143	-0.013	0	46
22	92.63	1,128	0.974	-0.115	0.119	-0.021	-21	1,398
21	90.25	95	0.925	-0.121	0.097	-0.027	-2	118
20	87.50	961	0.870	-0.121	0.076	-0.030	-25	1,191
19	82.50	984	0.773	-0.106	0.046	-0.030	-25	1,219
18	77.50	1,007	0.682	-0.081	0.027	-0.021	-18	1,247
17	72.50	1,029	0.597	-0.052	0.014	-0.007	-6	1,276
16	67.50	1,052	0.517	-0.023	0.008	0.010	9	1,304
15	62.50	1,075	0.444	0.004	0.006	0.025	23	1,333
14	57.50	1,098	0.376	0.026	0.007	0.037	35	1,361
13	53.88	502	0.330	0.038	0.010	0.042	18	622
12	51.38	1,097	0.300	0.045	0.012	0.045	43	1,359
11	48.63	1,112	0.269	0.052	0.015	0.047	46	1,378
10	46.13	568	0.242	0.057	0.018	0.049	24	704
9	42.50	1,281	0.205	0.062	0.023	0.049	55	1,588
8	37.50	1,308	0.160	0.067	0.029	0.049	55	1,621
7	32.50	1,335	0.120	0.070	0.034	0.048	55	1,654
6	27.50	1,361	0.086	0.071	0.039	0.046	54	1,687
5	22.50	1,388	0.057	0.071	0.041	0.044	53	1,720
4	17.50	1,415	0.035	0.069	0.041	0.042	52	1,753
3	12.50	1,441	0.018	0.063	0.037	0.038	48	1,786
2	7.50	1,468	0.006	0.048	0.027	0.031	39	1,819
1	2.50	1,495	0.001	0.021	0.011	0.014	19	1,852
Alcatel-Lucent RRH2x	129.00	170	1.890	1.980	1.140	0.377	56	211

Alcatel-Lucent PCS B	129.00	165	1.890	1.980	1.140	0.377	54	204
Alcatel-Lucent B66A	129.00	201	1.890	1.980	1.140	0.377	66	249
RFS DB-T1-6Z-8AB-0Z	129.00	44	1.890	1.980	1.140	0.377	14	55
Amphenol Antel BXA-1	129.00	38	1.890	1.980	1.140	0.377	13	48
RFS DB-T1-6Z-8AB-0Z	129.00	44	1.890	1.980	1.140	0.377	14	55
Amphenol Antel BXA-8	129.00	18	1.890	1.980	1.140	0.377	6	22
Amphenol Antel BXA-7	129.00	38	1.890	1.980	1.140	0.377	13	48
Commscope SBNHH-	129.00	304	1.890	1.980	1.140	0.377	99	377
Round Low Profile Pl	129.00	1,500	1.890	1.980	1.140	0.377	490	1,859
Ericsson AIR 21	121.00	819	1.663	0.986	0.759	0.238	169	1,015
Round T-Arm	121.00	750	1.663	0.986	0.759	0.238	155	929
Raycap DC6-48-60-18-	107.00	80	1.300	0.121	0.336	0.065	5	99
Ericsson RRUS-11 (5	107.00	300	1.300	0.121	0.336	0.065	17	372
Ericsson RRUS 32 (50	107.00	305	1.300	0.121	0.336	0.065	17	378
Ericsson RRUS12 w/ R	107.00	429	1.300	0.121	0.336	0.065	24	532
CCI CCI-HPA-65R-BUU-	107.00	816	1.300	0.121	0.336	0.065	46	1,011
Round Platform w/ Ha	107.00	2,000	1.300	0.121	0.336	0.065	113	2,479
		35,641	53.735	28.392	21.324	6.625	2,193	44,168

Load Case (0.9 - 0.2Sds) * DL + E EMAM Seismic (Reduced DL) Equivalent Modal Analysis Method

Segment	Height Above Base (ft)	Weight (lb)	a	b	c	Saz	Horizontal Force (lb)	Vertical Force (lb)
33	127.00	218	1.832	1.687	1.033	0.339	64	188
32	123.00	226	1.718	1.193	0.843	0.270	53	194
31	120.50	68	1.649	0.939	0.739	0.230	14	58
30	119.50	68	1.622	0.848	0.700	0.215	13	59
29	117.00	341	1.555	0.645	0.610	0.180	53	293
28	112.50	440	1.437	0.359	0.471	0.123	47	378
27	108.50	271	1.337	0.175	0.370	0.080	19	233
26	106.00	286	1.276	0.089	0.315	0.056	14	246
25	102.50	725	1.193	-0.002	0.250	0.029	18	624
24	97.50	740	1.080	-0.081	0.175	-0.002	-1	637
23	94.88	37	1.022	-0.104	0.143	-0.013	0	32
22	92.63	1,128	0.974	-0.115	0.119	-0.021	-21	971
21	90.25	95	0.925	-0.121	0.097	-0.027	-2	82
20	87.50	961	0.870	-0.121	0.076	-0.030	-25	827
19	82.50	984	0.773	-0.106	0.046	-0.030	-25	847
18	77.50	1,007	0.682	-0.081	0.027	-0.021	-18	866
17	72.50	1,029	0.597	-0.052	0.014	-0.007	-6	886
16	67.50	1,052	0.517	-0.023	0.008	0.010	9	906
15	62.50	1,075	0.444	0.004	0.006	0.025	23	926
14	57.50	1,098	0.376	0.026	0.007	0.037	35	945
13	53.88	502	0.330	0.038	0.010	0.042	18	432
12	51.38	1,097	0.300	0.045	0.012	0.045	43	944
11	48.63	1,112	0.269	0.052	0.015	0.047	46	957
10	46.13	568	0.242	0.057	0.018	0.049	24	489
9	42.50	1,281	0.205	0.062	0.023	0.049	55	1,103
8	37.50	1,308	0.160	0.067	0.029	0.049	55	1,126
7	32.50	1,335	0.120	0.070	0.034	0.048	55	1,149
6	27.50	1,361	0.086	0.071	0.039	0.046	54	1,172
5	22.50	1,388	0.057	0.071	0.041	0.044	53	1,195
4	17.50	1,415	0.035	0.069	0.041	0.042	52	1,218
3	12.50	1,441	0.018	0.063	0.037	0.038	48	1,241
2	7.50	1,468	0.006	0.048	0.027	0.031	39	1,264
1	2.50	1,495	0.001	0.021	0.011	0.014	19	1,287
Alcatel-Lucent RRH2x	129.00	170	1.890	1.980	1.140	0.377	56	146
Alcatel-Lucent PCS B	129.00	165	1.890	1.980	1.140	0.377	54	142
Alcatel-Lucent B66A	129.00	201	1.890	1.980	1.140	0.377	66	173

RFS DB-T1-6Z-8AB-0Z	129.00	44	1.890	1.980	1.140	0.377	14	38
Amphenol Antel BXA-1	129.00	38	1.890	1.980	1.140	0.377	13	33
RFS DB-T1-6Z-8AB-0Z	129.00	44	1.890	1.980	1.140	0.377	14	38
Amphenol Antel BXA-8	129.00	18	1.890	1.980	1.140	0.377	6	15
Amphenol Antel BXA-7	129.00	38	1.890	1.980	1.140	0.377	13	33
Commscope SBNHH-	129.00	304	1.890	1.980	1.140	0.377	99	262
Round Low Profile Pl	129.00	1,500	1.890	1.980	1.140	0.377	490	1,291
Ericsson AIR 21	121.00	819	1.663	0.986	0.759	0.238	169	705
Round T-Arm	121.00	750	1.663	0.986	0.759	0.238	155	646
Raycap DC6-48-60-18-	107.00	80	1.300	0.121	0.336	0.065	5	69
Ericsson RRUS-11 (5	107.00	300	1.300	0.121	0.336	0.065	17	258
Ericsson RRUS 32 (50	107.00	305	1.300	0.121	0.336	0.065	17	262
Ericsson RRUS12 w/ R	107.00	429	1.300	0.121	0.336	0.065	24	369
CCI CCI-HPA-65R-BUU-	107.00	816	1.300	0.121	0.336	0.065	46	702
Round Platform w/ Ha	107.00	2,000	1.300	0.121	0.336	0.065	113	1,721
		35,641	53.735	28.392	21.324	6.625	2,193	30,678

Load Case (1.2 + 0.2Sds) * DL + E EMAM Seismic Equivalent Modal Analysis Method

Calculated Forces

Seg Elev (ft)	Pu FY (-) (kips)	Vu FX (-) (kips)	Tu MY (ft-kips)	Mu MZ (ft-kips)	Mu MX (ft-kips)	Resultant Moment (ft-kips)	phi Pn (kips)	phi Vn (kips)	phi Tn (ft-kips)	phi Mn (ft-kips)	Total Deflect (in)	Rotation (deg)	Ratio
0.00	-42.32	-2.18	0.00	-223.15	0.00	223.15	4,830.72	2,415.36	9,588.44	4,801.34	0.00	0.00	0.055
5.00	-40.50	-2.15	0.00	-212.26	0.00	212.26	4,749.48	2,374.74	9,204.97	4,609.33	0.01	-0.02	0.055
10.00	-38.71	-2.11	0.00	-201.50	0.00	201.50	4,666.73	2,333.36	8,826.25	4,419.68	0.03	-0.03	0.054
15.00	-36.96	-2.07	0.00	-190.93	0.00	190.93	4,582.46	2,291.23	8,452.48	4,232.52	0.07	-0.05	0.053
20.00	-35.23	-2.03	0.00	-180.58	0.00	180.58	4,496.68	2,248.34	8,083.87	4,047.94	0.13	-0.06	0.052
25.00	-33.55	-1.98	0.00	-170.44	0.00	170.44	4,406.48	2,203.24	7,715.56	3,863.51	0.21	-0.08	0.052
30.00	-31.89	-1.93	0.00	-160.54	0.00	160.54	4,289.92	2,144.96	7,310.76	3,660.81	0.30	-0.10	0.051
35.00	-30.27	-1.88	0.00	-150.88	0.00	150.88	4,173.36	2,086.68	6,916.87	3,463.58	0.42	-0.12	0.051
40.00	-28.68	-1.83	0.00	-141.46	0.00	141.46	4,056.80	2,028.40	6,533.89	3,271.80	0.55	-0.13	0.050
45.00	-27.98	-1.82	0.00	-132.29	0.00	132.29	3,940.24	1,970.12	6,161.81	3,085.49	0.70	-0.15	0.050
47.25	-26.60	-1.77	0.00	-128.21	0.00	128.21	3,887.79	1,943.89	5,997.94	3,003.43	0.77	-0.16	0.050
50.00	-25.24	-1.73	0.00	-123.34	0.00	123.34	3,823.68	1,911.84	5,800.65	2,904.64	0.87	-0.17	0.049
52.75	-24.62	-1.71	0.00	-118.59	0.00	118.59	3,282.31	1,641.15	5,013.65	2,510.55	0.97	-0.18	0.055
55.00	-23.26	-1.68	0.00	-114.74	0.00	114.74	3,248.58	1,624.29	4,893.74	2,450.51	1.06	-0.19	0.054
60.00	-21.93	-1.66	0.00	-106.35	0.00	106.35	3,149.47	1,574.74	4,597.09	2,301.96	1.27	-0.21	0.053
65.00	-20.62	-1.65	0.00	-98.06	0.00	98.06	3,049.56	1,524.78	4,308.58	2,157.49	1.50	-0.23	0.052
70.00	-19.34	-1.66	0.00	-89.79	0.00	89.79	2,949.66	1,474.83	4,029.43	2,017.71	1.76	-0.25	0.051
75.00	-18.10	-1.68	0.00	-81.49	0.00	81.49	2,849.75	1,424.87	3,759.63	1,882.61	2.04	-0.28	0.050
80.00	-16.88	-1.71	0.00	-73.10	0.00	73.10	2,749.84	1,374.92	3,499.17	1,752.19	2.34	-0.30	0.048
85.00	-15.69	-1.73	0.00	-64.57	0.00	64.57	2,649.93	1,324.97	3,248.06	1,626.45	2.66	-0.32	0.046
90.00	-15.57	-1.73	0.00	-55.92	0.00	55.92	2,550.02	1,275.01	3,006.31	1,505.39	3.01	-0.34	0.043
90.50	-14.17	-1.75	0.00	-55.05	0.00	55.05	2,540.03	1,270.02	2,982.64	1,493.54	3.04	-0.34	0.042
94.75	-14.12	-1.75	0.00	-47.62	0.00	47.62	1,607.72	803.86	1,873.69	938.24	3.36	-0.36	0.060
95.00	-13.20	-1.75	0.00	-47.18	0.00	47.18	1,605.47	802.74	1,867.31	935.04	3.38	-0.36	0.059
100.00	-12.31	-1.73	0.00	-38.43	0.00	38.43	1,559.66	779.83	1,741.06	871.82	3.77	-0.39	0.052
105.00	-11.95	-1.72	0.00	-29.77	0.00	29.77	1,512.33	756.17	1,617.47	809.94	4.19	-0.41	0.045
107.00	-6.75	-1.44	0.00	-26.33	0.00	26.33	1,492.98	746.49	1,568.83	785.58	4.36	-0.42	0.038
110.00	-6.20	-1.39	0.00	-22.01	0.00	22.01	1,463.49	731.75	1,496.76	749.49	4.63	-0.43	0.034
115.00	-5.78	-1.34	0.00	-15.05	0.00	15.05	1,403.83	701.92	1,370.07	686.05	5.10	-0.45	0.026
119.00	-5.70	-1.32	0.00	-9.70	0.00	9.70	1,350.55	675.27	1,267.52	634.70	5.48	-0.46	0.020
119.00	-5.70	-1.32	0.00	-9.70	0.00	9.70	952.84	476.42	899.15	450.24	5.48	-0.46	0.028
120.00	-5.61	-1.31	0.00	-8.38	0.00	8.38	946.51	473.26	884.32	442.82	5.58	-0.46	0.025
121.00	-3.39	-0.92	0.00	-7.07	0.00	7.07	940.12	470.06	869.55	435.42	5.67	-0.47	0.020
125.00	-3.12	-0.85	0.00	-3.40	0.00	3.40	913.97	456.98	811.15	406.18	6.07	-0.47	0.012
129.00	0.00	-0.82	0.00	0.00	0.00	0.00	886.84	443.42	753.88	377.50	6.47	-0.48	0.000

Load Case (0.9 - 0.2Sds) * DL + E EMAM Seismic (Reduced DL) Equivalent Modal Analysis Method

Calculated Forces

Seg Elev (ft)	Pu FY (-) (kips)	Vu FX (-) (kips)	Tu MY (ft-kips)	Mu MZ (ft-kips)	Mu MX (ft-kips)	Resultant Moment (ft-kips)	phi Pn (kips)	phi Vn (kips)	phi Tn (ft-kips)	phi Mn (ft-kips)	Total Deflect (in)	Rotation (deg)	Ratio
0.00	-29.39	-2.18	0.00	-220.60	0.00	220.60	4,830.72	2,415.36	9,588.44	4,801.34	0.00	0.00	0.052
5.00	-28.13	-2.15	0.00	-209.71	0.00	209.71	4,749.48	2,374.74	9,204.97	4,609.33	0.01	-0.02	0.051
10.00	-26.89	-2.11	0.00	-198.98	0.00	198.98	4,666.73	2,333.36	8,826.25	4,419.68	0.03	-0.03	0.051
15.00	-25.67	-2.06	0.00	-188.46	0.00	188.46	4,582.46	2,291.23	8,452.48	4,232.52	0.07	-0.05	0.050
20.00	-24.47	-2.01	0.00	-178.16	0.00	178.16	4,496.68	2,248.34	8,083.87	4,047.94	0.13	-0.06	0.049
25.00	-23.30	-1.96	0.00	-168.09	0.00	168.09	4,406.48	2,203.24	7,715.56	3,863.51	0.21	-0.08	0.049
30.00	-22.15	-1.91	0.00	-158.28	0.00	158.28	4,289.92	2,144.96	7,310.76	3,660.81	0.30	-0.10	0.048
35.00	-21.02	-1.86	0.00	-148.71	0.00	148.71	4,173.36	2,086.68	6,916.87	3,463.58	0.41	-0.11	0.048
40.00	-19.92	-1.81	0.00	-139.39	0.00	139.39	4,056.80	2,028.40	6,533.89	3,271.80	0.54	-0.13	0.048
45.00	-19.43	-1.79	0.00	-130.33	0.00	130.33	3,940.24	1,970.12	6,161.81	3,085.49	0.69	-0.15	0.047
47.25	-18.48	-1.75	0.00	-126.30	0.00	126.30	3,887.79	1,943.89	5,997.94	3,003.43	0.76	-0.16	0.047
50.00	-17.53	-1.70	0.00	-121.50	0.00	121.50	3,823.68	1,911.84	5,800.65	2,904.64	0.86	-0.17	0.046
52.75	-17.10	-1.69	0.00	-116.82	0.00	116.82	3,282.31	1,641.15	5,013.65	2,510.55	0.96	-0.18	0.052
55.00	-16.15	-1.65	0.00	-113.03	0.00	113.03	3,248.58	1,624.29	4,893.74	2,450.51	1.04	-0.19	0.051
60.00	-15.23	-1.63	0.00	-104.76	0.00	104.76	3,149.47	1,574.74	4,597.09	2,301.96	1.25	-0.21	0.050
65.00	-14.32	-1.62	0.00	-96.60	0.00	96.60	3,049.56	1,524.78	4,308.58	2,157.49	1.48	-0.23	0.049
70.00	-13.43	-1.63	0.00	-88.48	0.00	88.48	2,949.66	1,474.83	4,029.43	2,017.71	1.73	-0.25	0.048
75.00	-12.57	-1.65	0.00	-80.32	0.00	80.32	2,849.75	1,424.87	3,759.63	1,882.61	2.01	-0.27	0.047
80.00	-11.72	-1.68	0.00	-72.07	0.00	72.07	2,749.84	1,374.92	3,499.17	1,752.19	2.30	-0.29	0.045
85.00	-10.89	-1.70	0.00	-63.68	0.00	63.68	2,649.93	1,324.97	3,248.06	1,626.45	2.62	-0.32	0.043
90.00	-10.81	-1.71	0.00	-55.18	0.00	55.18	2,550.02	1,275.01	3,006.31	1,505.39	2.97	-0.34	0.041
90.50	-9.84	-1.72	0.00	-54.32	0.00	54.32	2,540.03	1,270.02	2,982.64	1,493.54	3.00	-0.34	0.040
94.75	-9.81	-1.72	0.00	-47.01	0.00	47.01	1,607.72	803.86	1,873.69	938.24	3.31	-0.36	0.056
95.00	-9.17	-1.72	0.00	-46.58	0.00	46.58	1,605.47	802.74	1,867.31	935.04	3.33	-0.36	0.056
100.00	-8.54	-1.70	0.00	-37.96	0.00	37.96	1,559.66	779.83	1,741.06	871.82	3.72	-0.38	0.049
105.00	-8.30	-1.69	0.00	-29.43	0.00	29.43	1,512.33	756.17	1,617.47	809.94	4.13	-0.41	0.042
107.00	-4.68	-1.43	0.00	-26.05	0.00	26.05	1,492.98	746.49	1,568.83	785.58	4.30	-0.42	0.036
110.00	-4.30	-1.38	0.00	-21.78	0.00	21.78	1,463.49	731.75	1,496.76	749.49	4.57	-0.43	0.032
115.00	-4.01	-1.32	0.00	-14.89	0.00	14.89	1,403.83	701.92	1,370.07	686.05	5.03	-0.44	0.025
119.00	-3.95	-1.31	0.00	-9.60	0.00	9.60	1,350.55	675.27	1,267.52	634.70	5.41	-0.45	0.018
119.00	-3.95	-1.31	0.00	-9.60	0.00	9.60	952.84	476.42	899.15	450.24	5.41	-0.45	0.025
120.00	-3.89	-1.30	0.00	-8.29	0.00	8.29	946.51	473.26	884.32	442.82	5.50	-0.46	0.023
121.00	-2.35	-0.91	0.00	-7.00	0.00	7.00	940.12	470.06	869.55	435.42	5.60	-0.46	0.019
125.00	-2.16	-0.84	0.00	-3.37	0.00	3.37	913.97	456.98	811.15	406.18	5.99	-0.47	0.011
129.00	0.00	-0.82	0.00	0.00	0.00	0.00	886.84	443.42	753.88	377.50	6.38	-0.47	0.000

Analysis Summary

Load Case	Reactions Shear FX (kips)	Shear FZ (kips)	Axial FY (kips)	Moment MX (ft-kips)	Moment MY (ft-kips)	Moment MZ (ft-kips)	Max Usage Elev (ft)	Interaction Ratio
1.2D + 1.6W	26.15	0.00	42.73	0.00	0.00	2572.50	0.00	0.54
0.9D + 1.6W	26.13	0.00	32.04	0.00	0.00	2549.00	0.00	0.54
1.2D + 1.0Di + 1.0Wi	7.04	0.00	63.47	0.00	0.00	673.94	0.00	0.15
(1.2 + 0.2Sds) * DL + E ELFM	1.61	0.00	42.32	0.00	0.00	163.61	0.00	0.04
(1.2 + 0.2Sds) * DL + E EMAM	2.18	0.00	42.32	0.00	0.00	223.15	94.75	0.06
(0.9 - 0.2Sds) * DL + E ELFM	1.61	0.00	29.39	0.00	0.00	161.88	0.00	0.04
(0.9 - 0.2Sds) * DL + E EMAM	2.18	0.00	29.39	0.00	0.00	220.60	94.75	0.06
1.0D + 1.0W	6.25	0.00	35.64	0.00	0.00	611.93	0.00	0.13

Base Summary

Reactions

Original Design			Analysis			
Moment (kip-ft)	Axial (kip)	Shear (kip)	Moment (kip-ft)	Axial (kip)	Shear (kip)	Moment Design %
4,535.00	47.03	44.01	2,572.50	63.47	26.15	56.73

Base Plate

Yield (ksi)	Thick (in)	Width (in)	Style	Poly Sides	Clip Len (in)	Effective Len (in)	Mu (kip-in)	Phi Mn (kip-in)	Ratio
50.0	2.750	58.000	Clipped	0	14.00	7.744	198.24	658.87	0.30

Anchor Bolts

Bolt Circle	Num Bolts	Bolt Type	Bolt Dia (in)	Yield (ksi)	Ultimate (ksi)	Arrange	Cluster Dist (in)	Start Angle (deg)	Compression Force (kip)	Compression Allow (kip)	Compression Ratio	Tension Force (kip)	Tension Allow (kip)	Tension Ratio
55.25	20	2.25" 18J	2.25	75.00	100.00	Clustered	6.00	45.0	114.92	260.00	0.45	108.57	260.00	0.43

Radio Frequency Emissions Analysis Report

AT&T Existing Facility

Site ID: CT3506

North Haven Devine Street
50 Devine Street
North Haven, CT 6473

April 17, 2017

Centerline Communications Project Number: 950006-050

Site Compliance Summary	
Compliance Status:	**COMPLIANT**
Site total MPE% of FCC general population allowable limit:	**10.33 %**

April 17, 2017

AT&T Mobility – New England
Attn: John Benedetto, RF Manager
550 Cochituate Road
Suite 550 – 13&14
Framingham, MA 06040

Emissions Analysis for Site: **CT3506 – North Haven Devine Street**

Centerline Communications, LLC ("Centerline") was directed to analyze the proposed AT&T facility located at **50 Devine Street, North Haven, CT**, for the purpose of determining whether the emissions from the Proposed AT&T Antenna Installation located on this property are within specified federal limits.

All information used in this report was analyzed as a percentage of current Maximum Permissible Exposure (% MPE) as listed in the FCC OET Bulletin 65 Edition 97-01and ANSI/IEEE Std C95.1. The FCC regulates Maximum Permissible Exposure in units of microwatts per square centimeter (μW/cm2). The number of $\mu W/cm^2$ calculated at each sample point is called the power density. The exposure limit for power density varies depending upon the frequencies being utilized. Wireless Carriers and Paging Services use different frequency bands each with different exposure limits, therefore it is necessary to report results and limits in terms of percent MPE rather than power density.

All results were compared to the FCC (Federal Communications Commission) radio frequency exposure rules, 47 CFR 1.1307(b)(1) – (b)(3), to determine compliance with the Maximum Permissible Exposure (MPE) limits for General Population/Uncontrolled environments as defined below.

General population/uncontrolled exposure limits apply to situations in which the general population may be exposed or in which persons who are exposed as a consequence of their employment may not be made fully aware of the potential for exposure or cannot exercise control over their exposure. Therefore, members of the general population would always be considered under this category when exposure is not employment related, for example, in the case of a telecommunications tower that exposes persons in a nearby residential area.

Population exposure to radio frequencies is regulated and enforced in units of microwatts per square centimeter ($\mu W/cm^2$). The general population exposure limits for the 700 and 850 MHz Bands are approximately 467 $\mu W/cm^2$ and 567 $\mu W/cm^2$ respectively. The general population exposure limit for the 1900 MHz (PCS), 2100 MHz (AWS) and 2300 MHz (WCS) bands is 1000 $\mu W/cm^2$. Because each carrier will be using different frequency bands, and each frequency band has different exposure limits, it is necessary to report percent of MPE rather than power density.

Occupational/controlled exposure limits apply to situations in which persons are exposed as a consequence of their employment and in which those persons who are exposed have been made fully aware of the potential for exposure and can exercise control over their exposure. Occupational/controlled exposure limits also apply where exposure is of a transient nature as a result of incidental passage through a location where exposure levels may be above general population/uncontrolled limits (see below), as long as the exposed person has been made fully aware of the potential for exposure and can exercise control over his or her exposure by leaving the area or by some other appropriate means.

Additional details can be found in FCC OET 65.

CALCULATIONS

Calculations were performed for the proposed AT&T Wireless antenna facility located at **50 Devine Street, North Haven, CT**, using the equipment information listed below. All calculations were performed per the specifications under FCC OET 65. Since AT&T is proposing highly focused directional panel antennas, which project most of the emitted energy out toward the horizon, all calculations were performed assuming a lobe representing the maximum gain of the antenna per the antenna manufactures supplied specifications, minus 10 dB, was focused at the base of the tower. For this report the sample point is the top of a 6-foot person standing at the base of the tower.

Per FCC OET Bulletin No. 65 - Edition 97-01 recommendations to achieve the maximum anticipated value at each sample point, all power levels emitting from the proposed antenna installation are increased by a factor of 2.56 to account for possible in-phase reflections from the surrounding environment. All power values expressed and analyzed are maximum power levels expected to be used on all radios.

All emissions values for additional carriers were taken from the Connecticut Siting Council (CSC) active MPE database. Values in this database are provided by the individual carriers themselves

For each sector the following channel counts, frequency bands and power levels were utilized as shown in *Table 1*:

Technology	Frequency Band	Channel Count	Transmit Power per Channel (W)
UMTS	850 MHz	2	30
LTE	2300 MHz (WCS)	2	60
LTE	700 MHz	2	60
LTE	1900 MHz (PCS)	2	60

Table 1: Channel Data Table

The following antennas listed in *Table 2* were used in the modeling for transmission in the 700 MHz, 850 MHz, 1900 MHz (PCS) and 2300 MHz (WCS) frequency bands. This is based on feedback from the carrier with regards to anticipated antenna selection. Maximum gain values for all antennas are listed in the Inventory and Power Data table below. The maximum gain of the antenna per the antenna manufactures supplied specifications, minus 10 dB, was used for all calculations. This value is a very conservative estimate as gain reductions for these particular antennas are typically much higher in this direction.

Sector	Antenna Number	Antenna Make / Model	Antenna Centerline (ft)
A	1	CCI HPA-65R-BUU-H8	107
A	2	CCI HPA-65R-BUU-H8	107
A	3	CCI HPA-65R-BUU-H8 (future)	107
A	4	CCI HPA-65R-BUU-H8	107
B	1	CCI HPA-65R-BUU-H8	107
B	2	CCI HPA-65R-BUU-H8	107
B	3	CCI HPA-65R-BUU-H8 (future)	107
B	4	CCI HPA-65R-BUU-H8	107
C	1	CCI HPA-65R-BUU-H8	107
C	2	CCI HPA-65R-BUU-H8	107
C	3	CCI HPA-65R-BUU-H8 (future)	107
C	4	CCI HPA-65R-BUU-H8	107

Table 2: Antenna Data

All calculations were done with respect to uncontrolled / general population threshold limits.

RESULTS

Per the calculations completed for the proposed AT&T configurations *Table 3* shows resulting emissions power levels and percentages of the FCC's allowable general population limit.

Antenna ID	Antenna Make / Model	Frequency Bands	Antenna Gain (dBd)	Channel Count	Total TX Power (W)	ERP (W)	MPE %
Antenna A1	CCI HPA-65R-BUU-H8	850 MHz	14.05	2	60	1,524.58	0.95
Antenna A2	CCI HPA-65R-BUU-H8	2300 MHz (WCS)	15.55	2	120	4,307.06	1.52
Antenna A3	CCI HPA-65R-BUU-H8	Future Use	Future Use	Future Use	0	0.00	0.00
Antenna A4	CCI HPA-65R-BUU-H8	700 MHz / 1900 MHz (PCS)	13.15 / 14.95	4	240	6,229.75	3.19
						Sector A Composite MPE%	**5.66**
Antenna B1	CCI HPA-65R-BUU-H8	850 MHz	14.05	2	60	1,524.58	0.95
Antenna B2	CCI HPA-65R-BUU-H8	2300 MHz (WCS)	15.55	2	120	4,307.06	1.52
Antenna B3	CCI HPA-65R-BUU-H8	Future Use	Future Use	Future Use	0	0.00	0.00
Antenna B4	CCI HPA-65R-BUU-H8	700 MHz / 1900 MHz (PCS)	13.15 / 14.95	4	240	6,229.75	3.19
						Sector B Composite MPE%	**5.66**
Antenna C1	CCI HPA-65R-BUU-H8	850 MHz	14.05	2	60	1,524.58	0.95
Antenna C2	CCI HPA-65R-BUU-H8	2300 MHz (WCS)	15.55	2	120	4,307.06	1.52
Antenna C3	CCI HPA-65R-BUU-H8	Future Use	Future Use	Future Use	0	0.00	0.00
Antenna C4	CCI HPA-65R-BUU-H8	700 MHz / 1900 MHz (PCS)	13.15 / 14.95	4	240	6,229.75	3.19
						Sector C Composite MPE%	**5.66**

Table 3: AT&T Emissions Levels

The Following table (*table 4*) shows all additional carriers on site and their MPE% as recorded in the CSC active MPE database for this facility along with the newly calculated maximum AT&T MPE contributions per this report. FCC OET 65 specifies that for carriers utilizing directional antennas that the highest recorded sector value be used for composite site MPE values due to their greatly reduced emissions contributions in the directions of the adjacent sectors. For this site, all three sectors have the same configuration yielding the same results on all three sectors. *Table 5* below shows a summary for each AT&T Sector as well as the composite MPE value for the site.

Site Composite MPE%	
Carrier	**MPE%**
AT&T – Max Sector Value	**5.66 %**
T-Mobile	1.39 %
Verizon Wireless	3.28 %
Site Total MPE %:	**10.33 %**

Table 4: All Carrier MPE Contributions

AT&T Sector A Total:	5.66 %
AT&T Sector B Total:	5.66 %
AT&T Sector C Total:	5.66 %
Site Total:	10.33 %

Table 5: Site MPE Summary

FCC OET 65 specifies that for carriers utilizing directional antennas that the highest recorded sector value be used for composite site MPE values due to their greatly reduced emissions contributions in the directions of the adjacent sectors. *Table 6* below details a breakdown by frequency band and technology for the MPE power values for the maximum calculated AT&T sector(s). For this site, all three sectors have the same configuration yielding the same results on all three sectors.

AT&T _ Frequency Band / Technology (All Sectors)	# Channels	Watts ERP (Per Channel)	Height (feet)	Total Power Density ($\mu W/cm^2$)	Frequency (MHz)	Allowable MPE ($\mu W/cm^2$)	Calculated % MPE
AT&T 850 MHz UMTS	2	762.29	107	5.37	850 MHz	567	0.95%
AT&T 2300 MHz (WCS) LTE	2	2,153.53	107	15.18	2300 MHz (WCS)	1000	1.52%
AT&T 700 MHz LTE	2	1,239.23	107	8.73	700 MHz	467	1.87%
AT&T 1900 MHz (PCS) LTE	2	1,875.65	107	13.22	1900 MHz (PCS)	1000	1.32%
						Total:	5.66%

Table 6: AT&T Maximum Sector MPE Power Values

Summary

All calculations performed for this analysis yielded results that were **within** the allowable limits for general population exposure to RF Emissions.

The anticipated maximum composite contributions from the AT&T facility as well as the site composite emissions value with regards to compliance with FCC's allowable limits for general population exposure to RF Emissions are shown here:

AT&T Sector	Power Density Value (%)
Sector A:	5.66 %
Sector B:	5.66 %
Sector C:	5.66 %
AT&T Maximum Total (per sector):	5.66 %
Site Total:	10.33 %
Site Compliance Status:	**COMPLIANT**

The anticipated composite MPE value for this site assuming all carriers present is **10.33 %** of the allowable FCC established general population limit sampled at the ground level. This is based upon values listed in the Connecticut Siting Council database for existing carrier emissions.

FCC guidelines state that if a site is found to be out of compliance (over allowable thresholds), that carriers over a 5% contribution to the composite value will require measures to bring the site into compliance. For this facility, the composite values calculated were well within the allowable 100% threshold standard per the federal government.

Scott Heffernan
RF Engineering Director
Centerline Communications, LLC
95 Ryan Drive, Suite 1
Raynham, MA 02767