PROJECT INFORMATION

SCOPE OF WORK	UNMANNED COMMUNICATIONS FACILITY MODIFICATIONS INCLUDING THE REPLACEMENT OF EXISTING TOP MOUNTED (3) RRUS12+A2 WITH NEW (3) RRUS-32B2 UNITS, RE-USE EXISTING (1) FIBER TRUNK, EXISTING (2) DC TRUNKS, EXISTING (1) RAYCAP SURGE ARRESTOR AND ASSOCIATED JUMPER CABLES.
SITE NUMBER:	CT2070
SITE NAME:	NEW FAIRFIELD CTR
SITE ADDRESS:	302 BALL POND ROAD NEW FAIRFIELD, CT 06812
TOWER OWNER:	TOWN OF NEW FAIRFIELD 4 BRUSH HILL ROAD NEW FAIRFIELD, CT 06812
APPLICANT:	AT&T MOBILITY 550 COCHITUATE RD SUITES 13 & 14 FRAMINGHAM, MA 01701
NOC CONTACT:	TEL 866-915-5600
COORDINATES	LAT. N41°27'52.9" LONG. W73°29'49.0"
GROUND LEVEL:	±825'
DEED REFERENCE:	N/A
SITE PARCEL NO.:	N/A
CURRENT ZONING:	N/A
HORIZONTAL DATUM:	(NAD) 1983

SITE NUMBER: CT2070
SITE NAME: NEW FAIRFIELD CTR
PROJECT: LTE BWE Expansion

DRAWING INDEX

		REV
01	TITLE SHEET	2
02	NOTES	2
03	SITE PLAN & EQUIPMENT PLAN	2
04	ELEVATION VIEW & ANTENNA LAYOUT	2
05	GROUNDING DETAILS	2

ONE CALL 1-800-922-4455

AT LEAST 2 WORKING DAYS PRIOR TO DIGGING, THE CONTRACTOR IS REQUIRED TO CONNECTICUT ONE CALL SYSTEM AT 1-800-922-4455

CONTACT & UTILITY INFORMATION

CONTACT	CONTACT	COMPANY	PHONE NO.
ENGINEERING:	MIGUEL NOBRE	VRG	(508) 981-9590
SITE ACQUISITION:	DAVID COOPER	EMPIRE	(484) 683-5349
CONSTRUCTION:	BILL DANIELS	EMPIRE	(484) 683-5349
UTILITIES			
POWER:	WORK REQUEST GROUP	NATIONAL GRID	(800) 375-7405
TELCO:	.	VERIZON	(800) 941-9900

LOCATION MAP

DIRECTIONS: FROM ROCKY HILL, TAKE I-91 SOUTH. TAKE EXIT 18, PROCEED WEST ON I-691. CONTINUE ON I-84 WEST. TAKE I-84 WEST EXIT 6. PROCEED NORTH ON CT RT-37 NORTH (PADANARAM RD). CONTINUE ON PEMBROKE RD (RT-37). TURN LEFT ON BUSH HILL RD (RT-39). TURN RIGHT ON BALL POND RD. SITE WILL BE ON LEFT

SITE ACCESS: LOCKED GATE

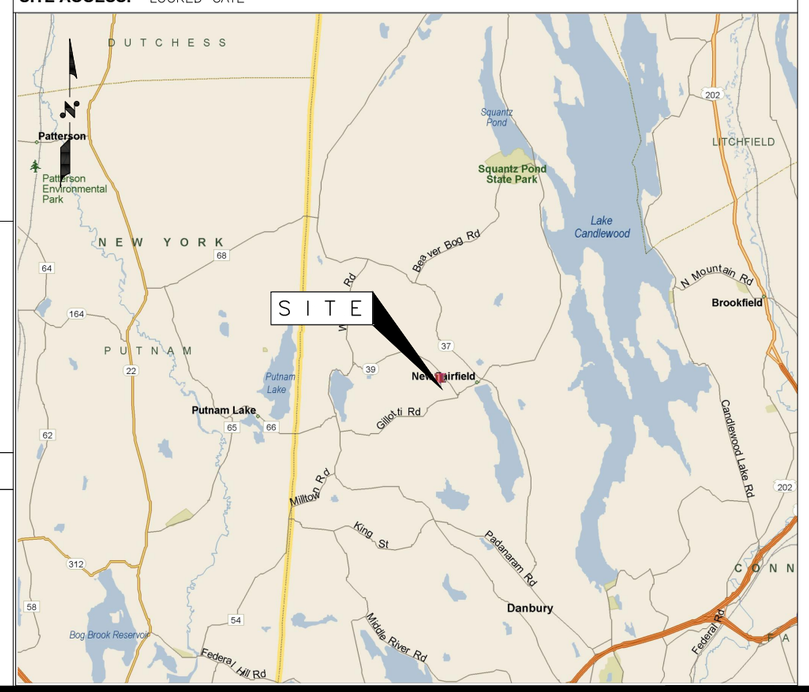

APPLICABLE BUILDING CODES AND STANDARDS

SUBCONTRACTOR'S WORK SHALL COMPLY WITH PROJECT STANDARDS AND SPECIFICATIONS. SUBCONTRACTOR WORK SHALL COMPLY WITH ALL APPLICABLE NATIONAL, STATE, AND LOCAL CODES AS ADOPTED BY THE LOCAL AUTHORITY HAVING JURISDICTION (AHJ) FOR THE LOCATION. THE EDITION OF THE AHJ ADOPTED CODES AND STANDARDS IN EFFECT ON THE DATE OF CONTRACT AWARD SHALL GOVERN THE DESIGN.

BUILDING CODE:
CONNECTICUT STATE BUILDING CODE

ELECTRICAL CODE:
NATIONAL ELECTRICAL CODE LATEST EDITION
SUBCONTRACTOR'S WORK SHALL COMPLY WITH THE LATEST EDITION OF THE FOLLOWING STANDARDS.
AMERICAN CONCRETE INSTITUTE (ACI) 318, BUILDING CODE REQUIREMENTS FOR STRUCTURAL CONCRETE
AMERICAN INSTITUTE OF STEEL CONSTRUCTION (AISC), MANUAL OF STEEL CONSTRUCTION, ASD, NINTH EDITION
AMERICAN NATIONAL STANDARDS INSTITUTE/TELECOMMUNICATIONS INDUSTRY ASSOCIATION (ANSI/TIA) 222-F OR G AS APPLICABLE, STRUCTURAL STANDARDS FOR STEEL ANTENNA TOWER AND ANTENNA SUPPORTING STRUCTURES:
TIA 607, COMMERCIAL BUILDING GROUNDING AND BONDING REQUIREMENTS FOR TELECOMMUNICATIONS

INSTITUTE FOR ELECTRICAL AND ELECTRONICS ENGINEERS (IEEE) 81, GUIDE FOR MEASURING EARTH RESISTIVITY, GROUND IMPEDANCE, AND EARTH SURFACE POTENTIALS OF A GROUND SYSTEM
IEEE 1100 (1999) RECOMMENDED PRACTICE FOR POWERING AND GROUNDING OF ELECTRONIC EQUIPMENT

IEEE C62.41, RECOMMENDED PRACTICES ON SURGE VOLTAGES IN LOW VOLTAGE AC POWER CIRCUITS (FOR LOCATION CATEGORY "C3" AND "HIGH SYSTEM EXPOSURE")

TELCORDIA GR-1503, COAXIAL CABLE CONNECTIONS

ANSI T1.311, FOR TELECOM – DC POWER SYSTEMS – TELECOM, ENVIRONMENTAL PROTECTION

FOR ANY CONFLICTS BETWEEN SECTIONS OF LISTED CODES AND STANDARDS REGARDING MATERIAL, METHODS OF CONSTRUCTION, OR OTHER REQUIREMENTS, THE MOST RESTRICTIVE REQUIREMENT SHALL GOVERN. WHERE THERE IS CONFLICT BETWEEN A GENERAL REQUIREMENT AND A SPECIFIC REQUIREMENT, THE SPECIFIC REQUIREMENT SHALL GOVERN.

VRG
VERTICAL RESOURCES GRP.
489 Washington Street
Auburn, MA 01501
Tel. (508) 981- 9590
Fax (508) 519 – 8939
mnobre@verticalresourcesgrp.com

EMPIRE telecom
EMPIRE TELECOM USA, LLC
16 ESQUIRE ROAD
BILLERICA, MA 01821

SITE NUMBER: CT2070
SITE NAME: NEW FAIRFIELD CENTER
302 BALL POND ROAD
NEW FAIRFIELD, CT 06812
FAIRFIELD COUNTY

at&t Mobility
550 COCHITUATE RD
SUITES 13 & 14
FRAMINGHAM, MA 01701

NO.	DATE	REVISION	BY	CHK	APP'D
2	10/31/16	GENERAL REVISIONS	E.L.P.	G.A.M.	
1	10/20/16	FOR CONSTRUCTION	E.L.P.	G.A.M.	
0	10/17/16	FOR REVIEW	E.L.P.	G.A.M.	

SCALE | DESIGNED BY: M.N. | DRAWN BY: G.A.M.

STATE OF CONNECTICUT JAMES P. STROHE No. 8657 REGISTERED PROFESSIONAL ENGINEER

AT&T MOBILITY

TITLE SHEET

JOB NUMBER	DRAWING NUMBER	REV
50-145	01	2

GENERAL NOTES

1. FOR THE PURPOSE OF CONSTRUCTION DRAWING, THE FOLLOWING DEFINITIONS SHALL APPLY:
   - CONTRACTOR – PRIME CONTRACTOR
   - SUBCONTRACTOR – GENERAL CONTRACTOR (CONSTRUCTION)
   - OWNER – AT&T WIRELESS
   - OEM – ORIGINAL EQUIPMENT MANUFACTURER

2. PRIOR TO THE SUBMISSION OF BIDS, THE BIDDING SUBCONTRACTOR SHALL VISIT THE CELL SITE TO FAMILIARIZE WITH THE EXISTING CONDITIONS AND TO CONFIRM THAT THE WORK CAN BE ACCOMPLISHED AS SHOWN ON THE CONSTRUCTION DRAWINGS. ANY DISCREPANCY FOUND SHALL BE BROUGHT TO THE ATTENTION OF CONTRACTOR.

3. ALL MATERIALS FURNISHED AND INSTALLED SHALL BE IN STRICT ACCORDANCE WITH ALL APPLICABLE CODES, REGULATIONS, AND ORDINANCES. SUBCONTRACTOR SHALL ISSUE ALL APPROPRIATE NOTICES AND COMPLY WITH ALL LAWS, ORDINANCES, RULES, REGULATIONS, AND LAWFUL ORDERS OF ANY PUBLIC AUTHORITY REGARDING THE PERFORMANCE OF THE WORK.

ALL WORK CARRIED OUT SHALL COMPLY WITH ALL APPLICABLE MUNICIPAL AND UTILITY COMPANY SPECIFICATIONS AND LOCAL JURISDICTIONAL CODES, ORDINANCES AND APPLICABLE REGULATIONS.

4. DRAWINGS PROVIDED HERE ARE NOT TO SCALE UNLESS OTHERWISE NOTED AND ARE INTENDED TO SHOW OUTLINE ONLY.

5. UNLESS NOTED OTHERWISE, THE WORK SHALL INCLUDE FURNISHING MATERIALS, EQUIPMENT, APPURTENANCES, AND LABOR NECESSARY TO COMPLETE ALL INSTALLATIONS AS INDICATED ON THE DRAWINGS.

6. THE SUBCONTRACTOR SHALL INSTALL ALL EQUIPMENT AND MATERIALS IN ACCORDANCE WITH MANUFACTURER'S RECOMMENDATIONS UNLESS SPECIFICALLY STATED OTHERWISE.

7. IF THE SPECIFIED EQUIPMENT CANNOT BE INSTALLED AS SHOWN ON THESE DRAWINGS, THE SUBCONTRACTOR SHALL PROPOSE AN ALTERNATIVE INSTALLATION FOR APPROVAL BY THE CONTRACTOR.

8. SUBCONTRACTOR SHALL DETERMINE ACTUAL ROUTING OF CONDUIT, POWER AND T1 CABLES, GROUNDING CABLES AS SHOWN ON THE POWER, GROUNDING AND TELCO PLAN DRAWING. ROUTING OF CONDUIT FOR POWER AND TELCO SHALL BE APPROVED BY OWNER OF SITE.

9. THE SUBCONTRACTOR SHALL PROTECT EXISTING IMPROVEMENTS, PAVEMENTS, CURBS, LANDSCAPING AND STRUCTURES. ANY DAMAGED PART SHALL BE REPAIRED AT SUBCONTRACTOR'S EXPENSE TO THE SATISFACTION OF OWNER.

10. SUBCONTRACTOR SHALL LEGALLY AND PROPERLY DISPOSE OF ALL SCRAP MATERIALS SUCH AS COAXIAL CABLES AND OTHER ITEMS REMOVED FROM THE EXISTING FACILITY. ANTENNAS REMOVED SHALL BE RETURNED TO THE OWNER'S DESIGNATED LOCATION.

11. SUBCONTRACTOR SHALL LEAVE PREMISES IN CLEAN CONDITION.

SITE WORK GENERAL NOTES

1. THE SUBCONTRACTOR SHALL CONTACT UTILITY LOCATING SERVICES PRIOR TO THE START OF CONSTRUCTION.

2. ALL EXISTING ACTIVE SEWER, WATER, GAS, ELECTRIC, AND OTHER UTILITIES WHERE ENCOUNTERED IN THE WORK, SHALL BE PROTECTED AT ALL TIMES, AND WHERE REQUIRED FOR THE PROPER EXECUTION OF THE WORK, SHALL BE RELOCATED AS DIRECTED BY CONTRACTOR. EXTREME CAUTION SHOULD BE USED BY THE SUBCONTRACTOR WHEN EXCAVATING OR DRILLING PIERS AROUND OR NEAR UTILITIES. SUBCONTRACTOR SHALL PROVIDE SAFETY TRAINING FOR THE WORKING CREW. THIS WILL INCLUDE BUT NOT BE LIMITED TO A) FALL PROTECTION B) CONFINED SPACE C) ELECTRICAL SAFETY D) TRENCHING & EXCAVATION.

3. ALL SITE WORK SHALL BE AS INDICATED ON THE DRAWINGS AND PROJECT SPECIFICATIONS.

4. IF NECESSARY, RUBBISH, STUMPS, DEBRIS, STICKS, STONES, TOP SOIL AND OTHER REFUSE SHALL BE REMOVED FROM THE SITE AND DISPOSED OF LEGALLY.

5. ALL EXISTING INACTIVE SEWER, WATER, GAS, ELECTRIC AND OTHER UTILITIES, WHICH INTERFERE WITH THE EXECUTION OF THE WORK, SHALL BE REMOVED AND/OR CAPPED, PLUGGED OR OTHERWISE DISCONTINUED AT POINTS WHICH WILL NOT INTERFERE WITH THE EXECUTION OF THE WORK, SUBJECT TO THE APPROVAL OF CONTRACTOR, OWNER AND/OR LOCAL UTILITIES.

6. SUBCONTRACTOR SHALL MINIMIZE DISTURBANCE TO EXISTING SITE DURING CONSTRUCTION.

7. THE SUBCONTRACTOR SHALL PROVIDE SITE SIGNAGE IN ACCORDANCE WITH THE OWNER SPECIFICATION FOR SITE SIGNAGE.

8. THE SITE SHALL BE GRADED TO CAUSE SURFACE WATER TO FLOW AWAY FROM THE TRANSMISSION EQUIPMENT AND TOWER AREAS.

9. NO FILL OR EMBANKMENT MATERIAL SHALL BE PLACED ON FROZEN GROUND. FROZEN MATERIALS, SNOW OR ICE SHALL NOT BE PLACED IN ANY FILL OR EMBANKMENT.

10. THE SUB GRADE SHALL BE COMPACTED AND BROUGHT TO A SMOOTH UNIFORM GRADE PRIOR TO FINISHED SURFACE APPLICATION, SEE DETAIL 303.

11. THE AREAS OF THE OWNERS PROPERTY DISTURBED BY THE WORK AND NOT COVERED BY THE TOWER, EQUIPMENT OR DRIVEWAY, SHALL BE GRADED TO A UNIFORM SLOPE, AND STABILIZED TO PREVENT EROSION.

12. EROSION CONTROL MEASURES, IF REQUIRED DURING CONSTRUCTION, SHALL BE IN CONFORMANCE WITH THE LOCAL JURISDICTION'S GUIDELINES FOR EROSION AND SEDIMENT CONTROL.

13. ALL EARTH WORK SHALL BE PERFORMED IN ACCORDANCE WITH TECHNICAL SPECIFICATION FOR CONSTRUCTION OF RADIO ACCESS NETWORK SITES.

STRUCTURAL STEEL NOTES:

1. ALL STEEL WORK SHALL BE GALVANIZED IN ACCORDANCE WITH ASTM A123 (HOT–DIP) UNLESS NOTED OTHERWISE. STRUCTURAL STEEL SHALL BE ASTM–A–36 UNLESS OTHERWISE NOTED ON THE SITE SPECIFIC DRAWINGS. STEEL DESIGN, INSTALLATION AND BOLTING SHALL BE PERFORMED IN ACCORDANCE WITH THE AMERICAN INSTITUTE OF STEEL CONSTRUCTION (AISC) "MANUAL OF STEEL CONSTRUCTION".

2. ALL WELDING SHALL BE PERFORMED USING E70XX ELECTRODES AND WELDING SHALL CONFORM TO AISC. WHERE FILLET WELD SIZES ARE NOT SHOWN, PROVIDE THE MINIMUM SIZE PER TABLE J2.4 IN THE AISC "MANUAL OF STEEL CONSTRUCTION". PAINTED SURFACES SHALL BE TOUCHED UP.

3. BOLTED CONNECTIONS SHALL BE ASTM A325 BEARING TYPE (3/4"ø) CONNECTIONS AND SHALL HAVE MINIMUM OF TWO BOLTS UNLESS NOTED OTHERWISE. STEEL FASTENER HARDWARE SHALL BE GALVANIZED IN ACCORDANCE WITH ASTM A153 (HOT–DIP)

4. NON–STRUCTURAL CONNECTIONS FOR STEEL GRATING MAY USE 5/8" DIA. ASTM A 307 BOLTS UNLESS NOTED OTHERWISE.

5. INSTALLATION OF CONCRETE EXPANSION/WEDGE ANCHOR, SHALL BE PER MANUFACTURER'S WRITTEN RECOMMENDED PROCEDURE. THE ANCHOR BOLT, DOWEL OR ROD SHALL CONFORM TO MANUFACTURER'S RECOMMENDATION FOR EMBEDMENT DEPTH OR AS SHOWN ON THE DRAWINGS. NO REBAR SHALL BE CUT WITHOUT PRIOR CONTRACTOR APPROVAL WHEN DRILLING HOLES IN CONCRETE. SPECIAL INSPECTIONS, REQUIRED BY GOVERNING CODES, SHALL BE PERFORMED IN ORDER TO MAINTAIN MANUFACTURER'S MAXIMUM ALLOWABLE LOADS. ALL EXPANSION/WEDGE ANCHORS SHALL BE STAINLESS STEEL OR HOT DIPPED GALVANIZED. EXPANSION BOLTS SHALL BE PROVIDED BY RAMSET/REDHEAD, HILTI OR APPROVED EQUAL.

6. ALL STRUCTURAL STEEL SHALL BE SUPPLIED IN ACCORDANCE WITH TECHNICAL SPECIFICATION FOR CONSTRUCTION OF RADIO ACCESS NETWORK SITES.

CONCRETE AND REINFORCING STEEL NOTES:

1. ALL CONCRETE WORK SHALL BE IN ACCORDANCE WITH THE ACI 301, ACI 318, ACI 336, ASTM A184, ASTM A185 AND THE DESIGN AND CONSTRUCTION SPECIFICATION FOR CAST–IN–PLACE CONCRETE.
2. ALL CONCRETE SHALL HAVE A MINIMUM COMPRESSIVE STRENGTH OF 4000 PSI AT 28 DAYS, UNLESS NOTED OTHERWISE. A HIGHER STRENGTH (4000 PSI) MAY BE USED.
3. REINFORCING STEEL SHALL CONFORM TO ASTM A 615, GRADE 60, DEFORMED UNLESS NOTED OTHERWISE. WELDED WIRE FABRIC SHALL CONFORM TO ASTM A 185 WELDED STEEL WIRE FABRIC UNLESS NOTED OTHERWISE. SPLICES SHALL BE CLASS "B" AND ALL HOOKS SHALL BE STANDARD, UNO.
4. THE FOLLOWING MINIMUM CONCRETE COVER SHALL BE PROVIDED FOR REINFORCING STEEL UNLESS SHOWN OTHERWISE ON DRAWINGS:

   CONCRETE CAST AGAINST EARTH........3 IN.
   CONCRETE EXPOSED TO EARTH OR WEATHER:

   #6 AND LARGER ....2 INCH
   #5 AND SMALLER & WWF............1 1/2 INCH

   CONCRETE NOT EXPOSED TO EARTH OR WEATHER OR NOT CAST AGAINST THE GROUND:

   SLAB AND WALL ....3/4 INCH
   BEAMS AND COLUMNS....................1 1/2 INCH

5. A 3/4" CHAMFER SHALL BE PROVIDED AT ALL EXPOSED EDGES OF CONCRETE, UNO, IN ACCORDANCE WITH ACI 301 SECTION 4.2.4.
6. INSTALLATION OF CONCRETE EXPANSION/WEDGE ANCHOR, SHALL BE PER MANUFACTURER'S WRITTEN RECOMMENDED PROCEDURE. THE ANCHOR BOLT, DOWEL OR ROD SHALL CONFORM TO MANUFACTURER'S RECOMMENDATION FOR EMBEDMENT DEPTH OR AS SHOWN ON THE DRAWINGS. NO REBAR SHALL BE CUT WITHOUT PRIOR CONTRACTOR APPROVAL WHEN DRILLING HOLES IN CONCRETE. SPECIAL INSPECTIONS, REQUIRED BY GOVERNING CODES, SHALL BE PERFORMED IN ORDER TO MAINTAIN MANUFACTURER'S MAXIMUM ALLOWABLE LOADS. ALL EXPANSION/WEDGE ANCHORS SHALL BE STAINLESS STEEL OR HOT DIPPED GALVANIZED. EXPANSION BOLTS SHALL BE PROVIDED BY RAMSET/REDHEAD HILTI OR APPROVED EQUAL.
7. CONCRETE CYLINDER TEST IS NOT REQUIRED FOR SLAB ON GRADE WHEN CONCRETE IS LESS THAN 50 CUBIC YARDS (IBC 1905.6.2.3) IN THAT EVENT THE FOLLOWING RECORDS SHALL BE PROVIDED BY THE CONCRETE SUPPLIER;
   (A) RESULTS OF CONCRETE CYLINDER TESTS PERFORMED AT THE SUPPLIER'S PLANT,

   (B) CERTIFICATION OF MINIMUM COMPRESSIVE STRENGTH FOR THE CONCRETE GRADE SUPPLIED.

   FOR GREATER THAN 50 CUBIC YARDS THE GC SHALL PERFORM THE CONCRETE CYLINDER TEST.
8. AS AN ALTERNATIVE TO ITEM 7, TEST CYLINDERS SHALL BE TAKEN INITIALLY AND THEREAFTER FOR EVERY 50 YARDS OF CONCRETE FROM EACH DIFFERENT BATCH PLANT.
9. EQUIPMENT SHALL NOT BE PLACED ON NEW PADS FOR SEVEN DAYS AFTER PAD IS POURED, UNLESS IT IS VERIFIED BY TESTS THAT COMPRESSIVE STRENGTH HAS BEEN ATTAINED.
10. ALL CONCRETE SHALL BE SUPPLIED IN ACCORDANCE WITH TECHNICAL SPECIFICATION FOR CONSTRUCTION OF RADIO ACCESS NETWORK SITES.

SOIL COMPACTION NOTES FOR SLAB ON GRADE:

1. EXCAVATE AS REQUIRED TO REMOVE VEGETATION AND TOPSOIL, EXPOSE UNDISTURBED NATURAL SUBGRADE AND PLACE CRUSHED STONE AS REQUIRED.
2. COMPACTION CERTIFICATION: AN INSPECTION AND WRITTEN CERTIFICATION BY A QUALIFIED GEOTECHNICAL TECHNICIAN OR ENGINEER IS ACCEPTABLE.
3. AS AN ALTERNATIVE TO INSPECTION AND WRITTEN CERTIFICATION, THE "UNDISTURBED SOIL" BASE SHALL BE COMPACTED WITH "COMPACTION EQUIPMENT", LISTED BELOW, TO AT LEAST 90% MODIFIED PROCTOR MAXIMUM DENSITY PER ASTM D 1557 METHOD C.
4. COMPACTED SUBBASE SHALL BE UNIFORM AND LEVELED. PROVIDE 6" MINIMUM CRUSHED STONE OR GRAVEL COMPACTED IN 3" LIFTS ABOVE COMPACTED SOIL. GRAVEL SHALL BE NATURAL OR CRUSHED WITH 100% PASSING 1" SIEVE.
5. AS AN ALTERNATIVE TO ITEMS 2 AND 3 PROOF ROLL THE SUBGRADE SOILS WITH 5 PASSES OF A MEDIUM SIZED VIBRATORY PLATE COMPACTOR (SUCH AS BOMAG BPR 30/38) OR HAND–OPERATED SINGLE DRUM VIBRATORY ROLLER (SUCH AS BOMAG BW 55E). ANY SOFT AREAS THAT ARE ENCOUNTERED SHOULD BE REMOVED AND REPLACED WITH A WELL–GRADED GRANULAR FILL, AND COMPACTED AS STATED ABOVE.
6. COMPACTION CRITERIA FOR OTHER FILL AREAS ON SITE SHALL MEET THE SAME REQUIREMENTS AS NOTED ABOVE.
7. SOIL COMPACTION SHALL BE PERFORMED IN ACCORDANCE WITH TECHNICAL SPECIFICATION FOR CONSTRUCTION OF RADIO ACCESS NETWORK SITES.

COMPACTION EQUIPMENT:

HAND OPERATED DOUBLE DRUM, VIBRATORY ROLLER, VIBRATORY PLATE COMPACTOR OR JUMPING JACK COMPACTOR.

ELECTRICAL INSTALLATION NOTES

1. ALL ELECTRICAL WORK SHALL BE PERFORMED IN ACCORDANCE WITH THE PROJECT SPECIFICATIONS, NEC AND ALL APPLICABLE LOCAL CODES.

2. CONDUIT ROUTINGS ARE SCHEMATIC. SUBCONTRACTOR SHALL INSTALL CONDUITS SO THAT ACCESS TO EQUIPMENT IS NOT BLOCKED.

3. WIRING, RACEWAY AND SUPPORT METHODS AND MATERIALS SHALL COMPLY WITH THE REQUIREMENTS OF THE NEC AND TELCORDIA.

4. ALL CIRCUITS SHALL BE SEGREGATED AND MAINTAIN MINIMUM CABLE SEPARATION AS REQUIRED BY THE NEC AND TELCORDIA.

5. CABLES SHALL NOT BE ROUTED THROUGH LADDER–STYLE CABLE TRAY RUNGS.

6. EACH END OF EVERY POWER, POWER PHASE CONDUCTOR (I.E., HOTS), GROUNDING, AND T1 CONDUCTOR AND CABLE SHALL BE LABELED WITH COLOR–CODED INSULATION OR ELECTRICAL TAPE (3M BRAND, 1/2 INCH PLASTIC ELECTRICAL TAPE WITH UV PROTECTION, OR EQUAL). THE IDENTIFICATION METHOD SHALL CONFORM WITH NEC & OSHA.

7. ALL ELECTRICAL COMPONENTS SHALL BE CLEARLY LABELED WITH PERMANENT LABELS. ALL EQUIPMENT SHALL BE LABELED WITH THEIR VOLTAGE RATING, PHASE CONFIGURATION, WIRE CONFIGURATION, POWER OR AMPACITY RATING, AND BRANCH CIRCUIT ID NUMBERS (I.E., PANELBOARD AND CIRCUIT ID'S). NO HAND WRITTEN LABELS ALLOWED.

8. PANELBOARDS (ID NUMBERS) AND INTERNAL CIRCUIT BREAKERS (CIRCUIT ID NUMBERS) SHALL BE CLEARLY LABELED. NO HAND WRITTEN LABELS ALLOWED.

9. ALL TIE WRAPS SHALL BE CUT FLUSH WITH APPROVED CUTTING TOOL TO REMOVE SHARP EDGES.

10. POWER, CONTROL, AND EQUIPMENT GROUND WIRING IN TUBING OR CONDUIT SHALL BE SINGLE CONDUCTOR (SIZE 14 AWG OR LARGER), 600V, OIL RESISTANT THHN OR THWN–2, CLASS B STRANDED COPPER CABLE RATED FOR 90 °C (WET AND DRY) OPERATION; LISTED OR LABELED FOR THE LOCATION AND RACEWAY SYSTEM USED, UNLESS OTHERWISE SPECIFIED.

11. SUPPLEMENTAL EQUIPMENT GROUND WIRING LOCATED INDOORS SHALL BE SINGLE CONDUCTOR (SIZE 6 AWG OR LARGER), 600V, OIL RESISTANT THHN OR THWN–2 GREEN INSULATION, CLASS B STRANDED COPPER CABLE RATED FOR 90 °C (WET AND DRY) OPERATION; LISTED OR LABELED FOR THE LOCATION AND RACEWAY SYSTEM USED, UNLESS OTHERWISE SPECIFIED.

12. POWER AND CONTROL WIRING, NOT IN TUBING OR CONDUIT, SHALL BE MULTI–CONDUCTOR, TYPE TC CABLE (SIZE 14 AWG OR LARGER), 600V, OIL RESISTANT THHN OR THWN–2, CLASS B STRANDED COPPER CABLE RATED FOR 90 °C (WET AND DRY) OPERATION; WITH OUTER JACKET; LISTED OR LABELED FOR THE LOCATION USED, UNLESS OTHERWISE SPECIFIED.

13. ALL POWER AND POWER GROUNDING CONNECTIONS SHALL BE CRIMP–STYLE, COMPRESSION WIRE LUGS AND WIRENUTS BY THOMAS AND BETTS (OR EQUAL). LUGS AND WIRENUTS SHALL BE RATED FOR OPERATION AT NO LESS THAN 75°C (90°C IF AVAILABLE).

14. RACEWAY AND CABLE TRAY SHALL BE LISTED OR LABELED FOR ELECTRICAL USE IN ACCORDANCE WITH NEMA, UL, ANSI/IEEE, AND NEC.

ELECTRICAL INSTALLATION NOTES (cont.)

15. ELECTRICAL METALLIC TUBING (EMT) OR RIGID NONMETALLIC CONDUIT (I.E., RIGID PVC SCHEDULE 40, OR RIGID PVC SCHEDULE 80 FOR LOCATIONS SUBJECT TO PHYSICAL DAMAGE) SHALL BE USED FOR EXPOSED INDOOR LOCATIONS.

16. ELECTRICAL METALLIC TUBING (EMT), ELECTRICAL NONMETALLIC TUBING (ENT), OR RIGID NONMETALLIC CONDUIT (RIGID PVC, SCHEDULE 40) SHALL BE USED FOR CONCEALED INDOOR LOCATIONS.

17. GALVANIZED STEEL INTERMEDIATE METALLIC CONDUIT (IMC) SHALL BE USED FOR OUTDOOR LOCATIONS ABOVE GRADE.

18. RIGID NONMETALLIC CONDUIT (I.E., RIGID PVC SCHEDULE 40 OR RIGID PVC SCHEDULE 80) SHALL BE USED UNDERGROUND; DIRECT BURIED, IN AREAS OF OCCASIONAL LIGHT VEHICLE TRAFFIC OR ENCASED IN REINFORCED CONCRETE IN AREAS OF HEAVY VEHICLE TRAFFIC.

19. LIQUID–TIGHT FLEXIBLE METALLIC CONDUIT (LIQUID–TITE FLEX) SHALL BE USED INDOORS AND OUTDOORS, WHERE VIBRATION OCCURS OR FLEXIBILITY IS NEEDED.

20. CONDUIT AND TUBING FITTINGS SHALL BE THREADED OR COMPRESSION–TYPE AND APPROVED FOR THE LOCATION USED. SETSCREW FITTINGS ARE NOT ACCEPTABLE.

21. CABINETS, BOXES, AND WIREWAYS SHALL BE LISTED OR LABELED FOR ELECTRICAL USE IN ACCORDANCE WITH NEMA, UL, ANSI/IEEE, AND NEC.

22. WIREWAYS SHALL BE EPOXY–COATED (GRAY) AND INCLUDE A HINGED COVER, DESIGNED TO SWING OPEN DOWNWARD; SHALL BE PANDUIT TYPE E (OR EQUAL); AND RATED NEMA 1 (OR BETTER) INDOORS, OR NEMA 3R (OR BETTER) OUTDOORS.

23. EQUIPMENT CABINETS, TERMINAL BOXES, JUNCTION BOXES, AND PULL BOXES SHALL BE GALVANIZED OR EPOXY–COATED SHEET STEEL, SHALL MEET OR EXCEED UL 50, AND RATED NEMA 1 (OR BETTER) INDOORS, OR NEMA 3R (OR BETTER) OUTDOORS

24. METAL RECEPTACLE, SWITCH, AND DEVICE BOXES SHALL BE GALVANIZED, EPOXY–COATED, OR NON–CORRODING; SHALL MEET OR EXCEED UL 514A AND NEMA OS 1; AND RATED NEMA 1 (OR BETTER) INDOORS, OR WEATHER PROTECTED (WP OR BETTER) OUTDOORS.

25. NONMETALLIC RECEPTACLE, SWITCH, AND DEVICE BOXES SHALL MEET OR EXCEED NEMA OS 2; AND RATED NEMA 1 (OR BETTER) INDOORS, OR WEATHER PROTECTED (WP OR BETTER) OUTDOORS.

26. THE SUBCONTRACTOR SHALL NOTIFY AND OBTAIN NECESSARY AUTHORIZATION FROM THE CONTRACTOR BEFORE COMMENCING WORK ON THE AC POWER DISTRIBUTION PANELS.

27. THE SUBCONTRACTOR SHALL PROVIDE NECESSARY TAGGING ON THE BREAKERS, CABLES AND DISTRIBUTION PANELS IN ACCORDANCE WITH THE APPLICABLE CODES AND STANDARDS TO SAFEGUARD AGAINST LIFE AND PROPERTY.

VRG
VERTICAL RESOURCES GRP.
489 Washington Street
Auburn, MA 01501
Tel. (508) 981– 9590
Fax (508) 519 – 8939
mnobre@verticalresourcesgrp.com

EMPIRE telecom
EMPIRE TELECOM USA, LLC
16 ESQUIRE ROAD
BILLERICA, MA 01821

SITE NUMBER: CT2070
SITE NAME: NEW FAIRFIELD CENTER
302 BALL POND ROAD
NEW FAIRFIELD, CT 06812
FAIRFIELD COUNTY

at&t Mobility
550 COCHITUATE RD
SUITES 13 & 14
FRAMINGHAM, MA 01701

NO.	DATE	REVISION	BY	CHK	APP'D
2	10/31/16	GENERAL REVISIONS	E.L.P.	G.A.M.	
1	10/20/16	FOR CONSTRUCTION	E.L.P.	G.A.M.	
0	10/17/16	FOR REVIEW	E.L.P.	G.A.M.	

SCALE | DESIGNED BY: M.N. | DRAWN BY: G.A.M.

STATE OF CONNECTICUT · JAMES P. STROKE · No. 8657 · REGISTERED PROFESSIONAL ENGINEER

AT&T MOBILITY

NOTES

JOB NUMBER	DRAWING NUMBER	REV
50–145	02	2

GENERAL NOTES

1. THE TYPE, DIMENSIONS, MOUNTING HARDWARE, AND THE POSITIONS OF ALL EQUIPMENT IN THE COMPOUND ARE SHOWN IN ILLUSTRATIVE FASHION. THESE DRAWINGS ARE NOT INTENDED FOR CONSTRUCTION. ACTUAL HARDWARE DETAILS AND FINAL LOCATIONS MAY DIFFER SLIGHTLY FROM WHAT IS SHOWN.
2. THE CELLULAR INSTALLATION IS AN UNMANNED PRIVATE AND SECURED COMPOUND. IT IS ONLY ACCESSED BY TRAINED TECHNICIANS FOR PERIODIC ROUTINE MAINTENANCE AND THEREFORE DOES NOT REQUIRE ANY WATER OR SANITARY SEWER SERVICE. THE FACILITY IS NOT GOVERNED BY REGULATIONS REQUIRING PUBLIC ACCESS PER ADA REQUIREMENTS.
3. CONSTRUCTION, MAINTENANCE & OPERATION OF PROPOSED TOWER FACILITY WILL BE HELD IN ACCORDANCE WITH ALL APPLICABLE LOCAL, STATE & FEDERAL REGULATIONS AND GUIDELINES.

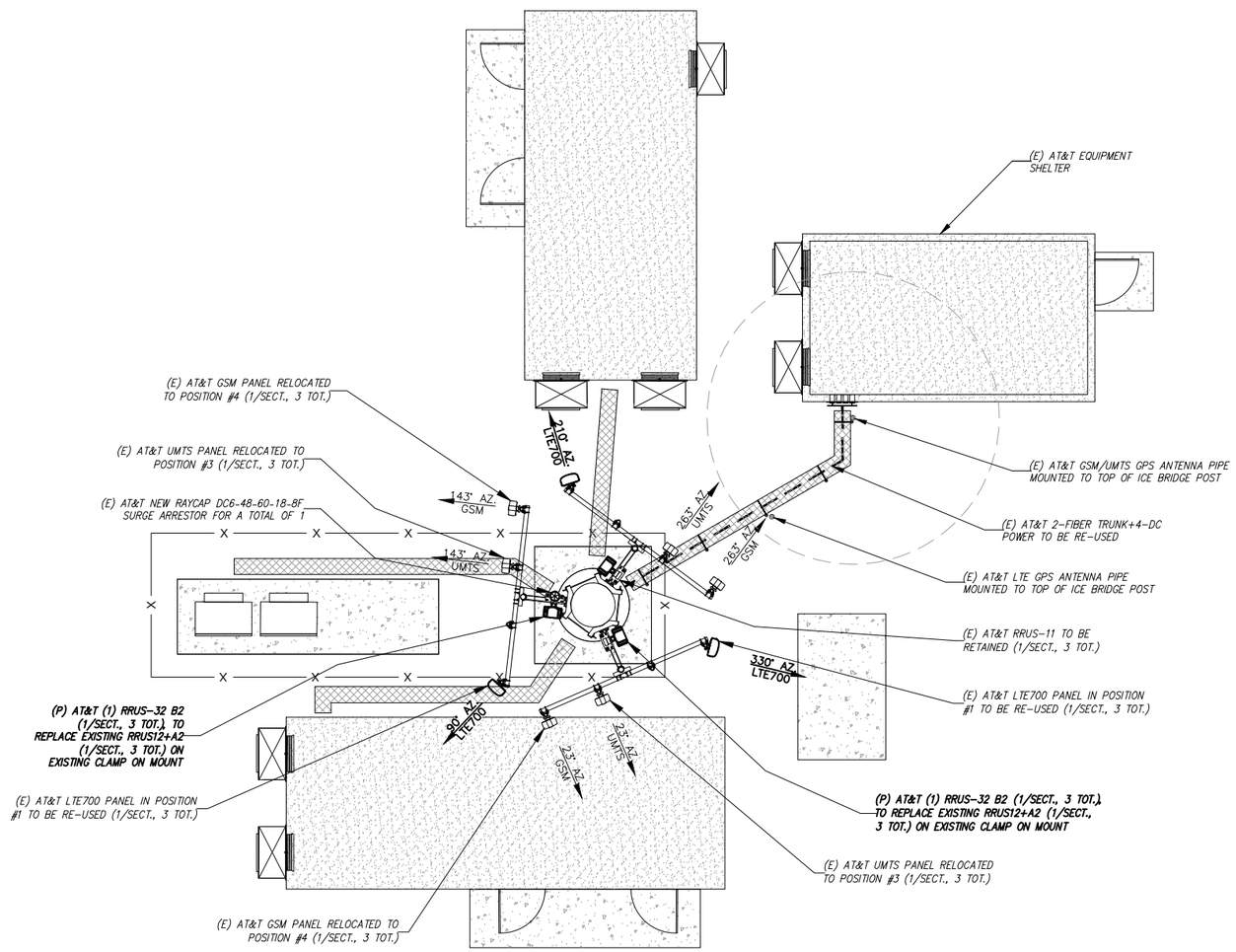

COMPOUND PLAN 1/03
SCALE: 1" = 8'

GRAPHIC SCALE
8 0 4 8 16 32
(IN FEET)
1 inch = 8 ft.

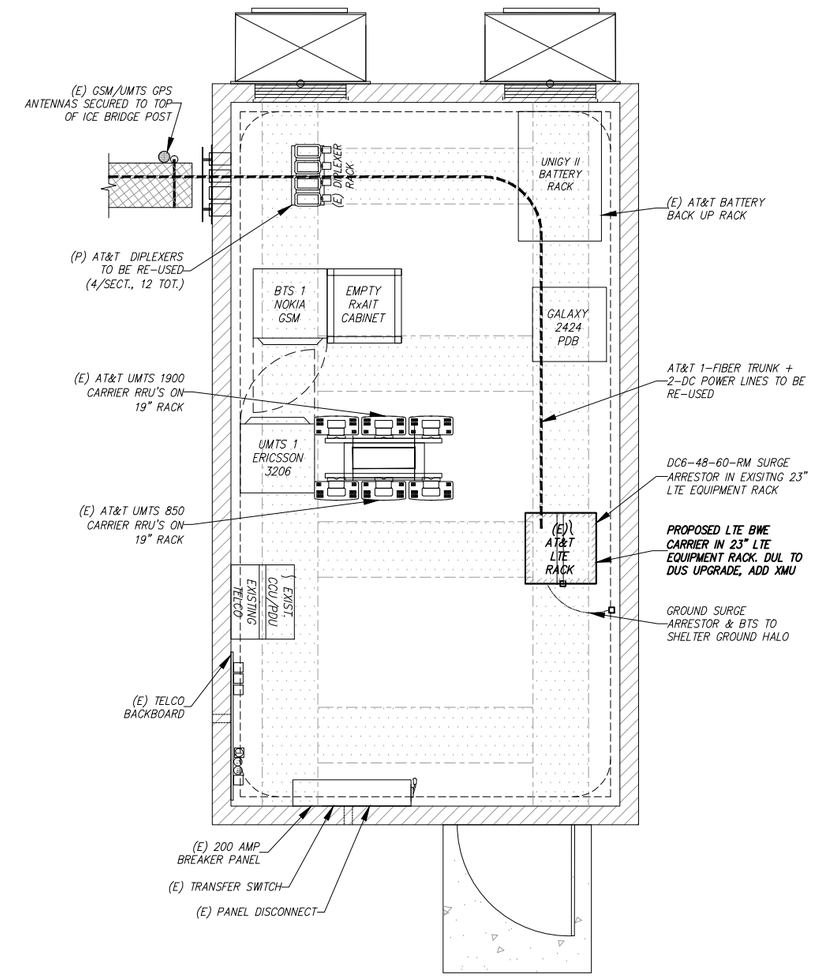

EQUIPMENT PLAN 2/03
SCALE: 1" = 2'

VRG
VERTICAL RESOURCES GRP.
489 Washington Street
Auburn, MA 01501
Tel. (508) 981- 9590
Fax (508) 519 - 8939
mnobre@verticalresourcesgrp.com

EMPIRE telecom
EMPIRE TELECOM USA, LLC
16 ESQUIRE ROAD
BILLERICA, MA 01821

SITE NUMBER: CT2070
SITE NAME: NEW FAIRFIELD CENTER
302 BALL POND ROAD
NEW FAIRFIELD, CT 06812
FAIRFIELD COUNTY

at&t Mobility
550 COCHITUATE RD
SUITES 13 & 14
FRAMINGHAM, MA 01701

NO.	DATE	REVISION	BY	CHK	APP'D
2	10/31/16	GENERAL REVISIONS	E.L.P.	G.A.M.	
1	10/20/16	FOR CONSTRUCTION	E.L.P.	G.A.M.	
0	10/17/16	FOR REVIEW	E.L.P.	G.A.M.	

SCALE | DESIGNED BY: M.N. | DRAWN BY: G.A.M.

STATE OF CONNECTICUT JAMES P. SCHOLE No. 8657 REGISTERED PROFESSIONAL ENGINEER

AT&T MOBILITY

SITE PLAN & EQUIPMENT PLAN

JOB NUMBER	DRAWING NUMBER	REV
50-145	03	2

NOTES:
STRUCTURAL ANALYSIS TO DETERMINE TOWERS CAPACITY TO SUPPORT PROPOSED ANTENNAS SHALL BE DONE BY OTHERS

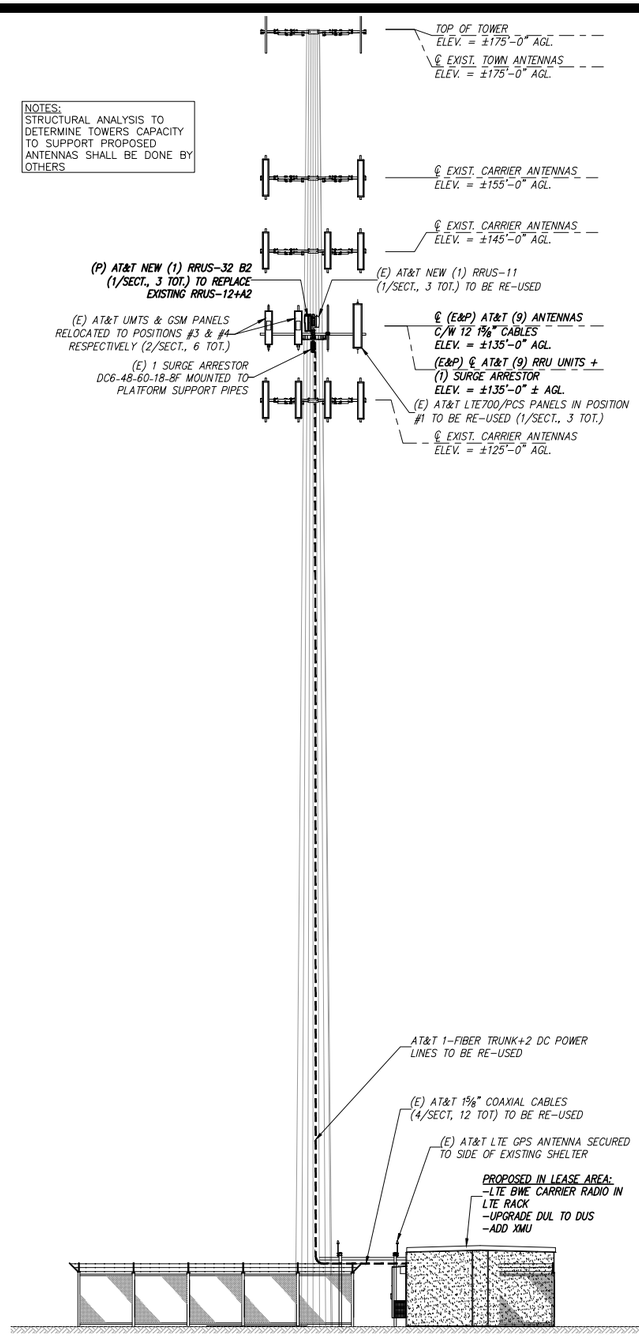

ELEVATION VIEW 1/04
SCALE: 1" = 10'

GRAPHIC SCALE
10 0 5 10 20 40
(IN FEET)
1 inch = 10 ft.

NOTES:
REFER TO FINAL RF DATA SHEET FOR FINAL ANTENNA SETTINGS AND CONFIGURATIONS

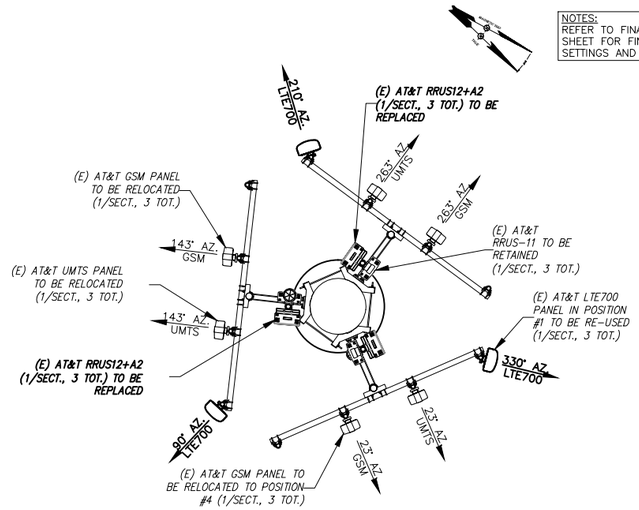

EXISTING

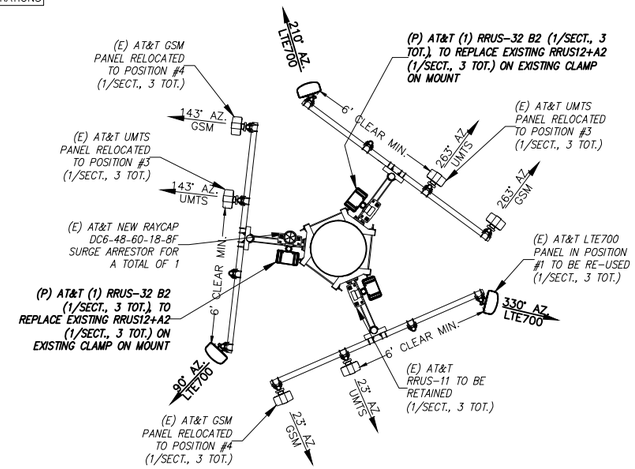

PROPOSED

ANTENNA MOUNTING PLAN VIEW 2/04
SCALE: N.T.S.

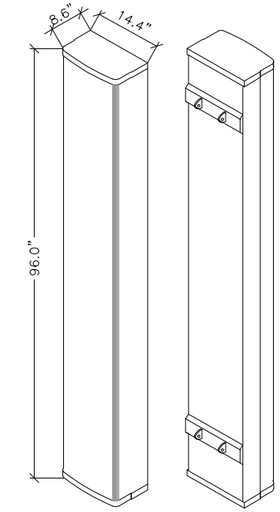

ISOMETRIC FRONT VIEW

ISOMETRIC REAR VIEW

LTE CCI HEXPORT PANEL ANTENNA 3/04
SCALE: N.T.S.

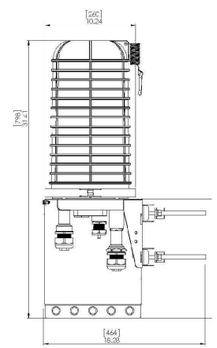

RAYCAP SURGE SUPPRESSOR DC64860188F 5/04
SCALE: N.T.S.

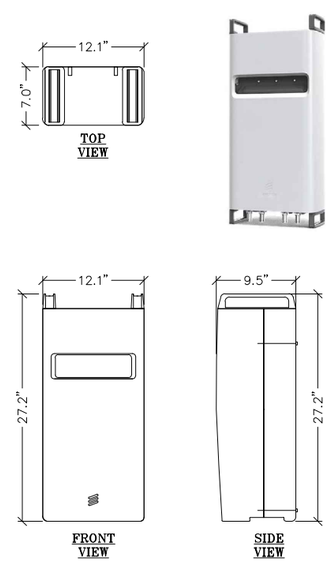

PROPOSED ERICSSON DUAL PA RRH 6/04
SCALE: N.T.S.

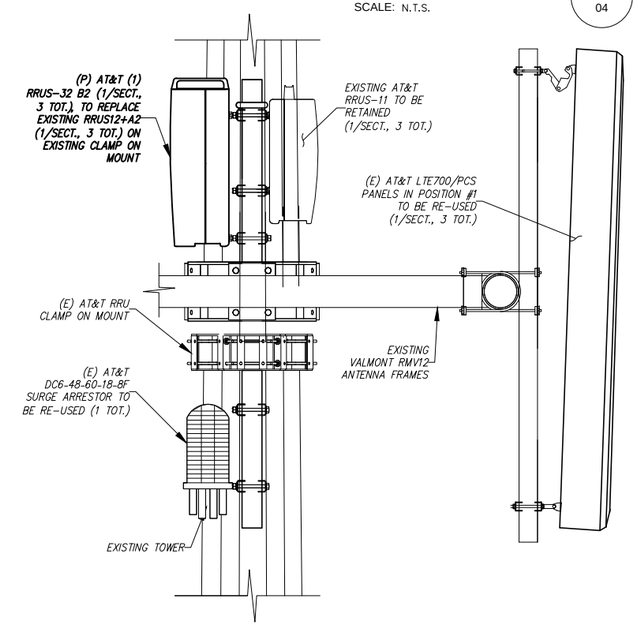

PROPOSED RRU'S & SURGE ARRESTOR MOUNTING DETAIL 7/04
SCALE: N.T.S.

VRG
VERTICAL RESOURCES GRP.
489 Washington Street
Auburn, MA 01501
Tel. (508) 981- 9590
Fax (508) 519 - 8939
mnobre@verticalresourcesgrp.com

EMPIRE telecom
EMPIRE TELECOM USA, LLC
16 ESQUIRE ROAD
BILLERICA, MA 01821

SITE NUMBER: CT2070
SITE NAME: NEW FAIRFIELD CENTER
302 BALL POND ROAD
NEW FAIRFIELD, CT 06812
FAIRFIELD COUNTY

at&t Mobility
550 COCHITUATE RD
SUITES 13 & 14
FRAMINGHAM, MA 01701

NO.	DATE	REVISION	BY	CHK	APP'D
2	10/31/16	GENERAL REVISIONS	E.L.P.	G.A.M.	
1	10/20/16	FOR CONSTRUCTION	E.L.P.	G.A.M.	
0	10/17/16	FOR REVIEW	E.L.P.	G.A.M.	

SCALE | DESIGNED BY: M.N. | DRAWN BY: G.A.M.

STATE OF CONNECTICUT JAMES P. STROHE No. 8657 LICENSED PROFESSIONAL ENGINEER

AT&T MOBILITY

ELEVATION VIEW & ANTENNA LAYOUT

JOB NUMBER	DRAWING NUMBER	REV
50-145	04	2

NOTE:
DO NOT INSTALL CABLE GROUND KIT AT A BEND AND ALWAYS DIRECT GROUND WIRE DOWN TO CIGBE

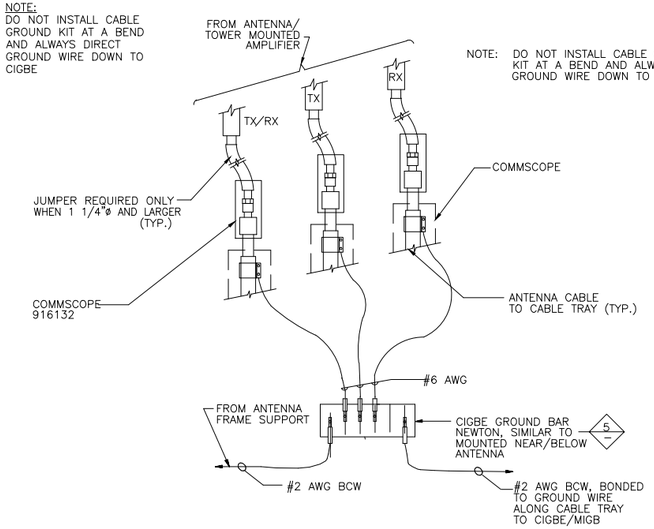

NOTE: DO NOT INSTALL CABLE GROUND KIT AT A BEND AND ALWAYS DIRECT GROUND WIRE DOWN TO CIGBE

CONNECTION OF GROUND WIRES TO GROUNDING BAR (CIGBE) 1/05

SCALE: N.T.S.

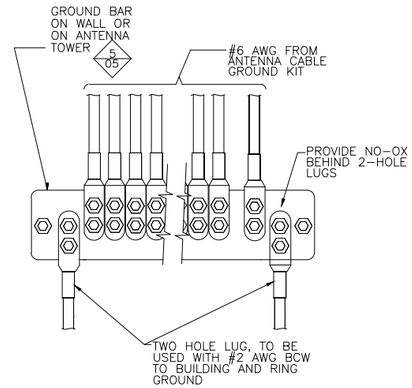

INSTALLATION OF GROUND WIRE TO GROUND BAR 2/05

SCALE: N.T.S.

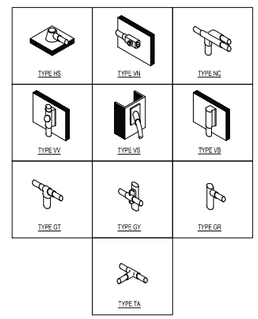

GROUNDING CONNECTION DETAIL 5/05

SCALE: N.T.S.

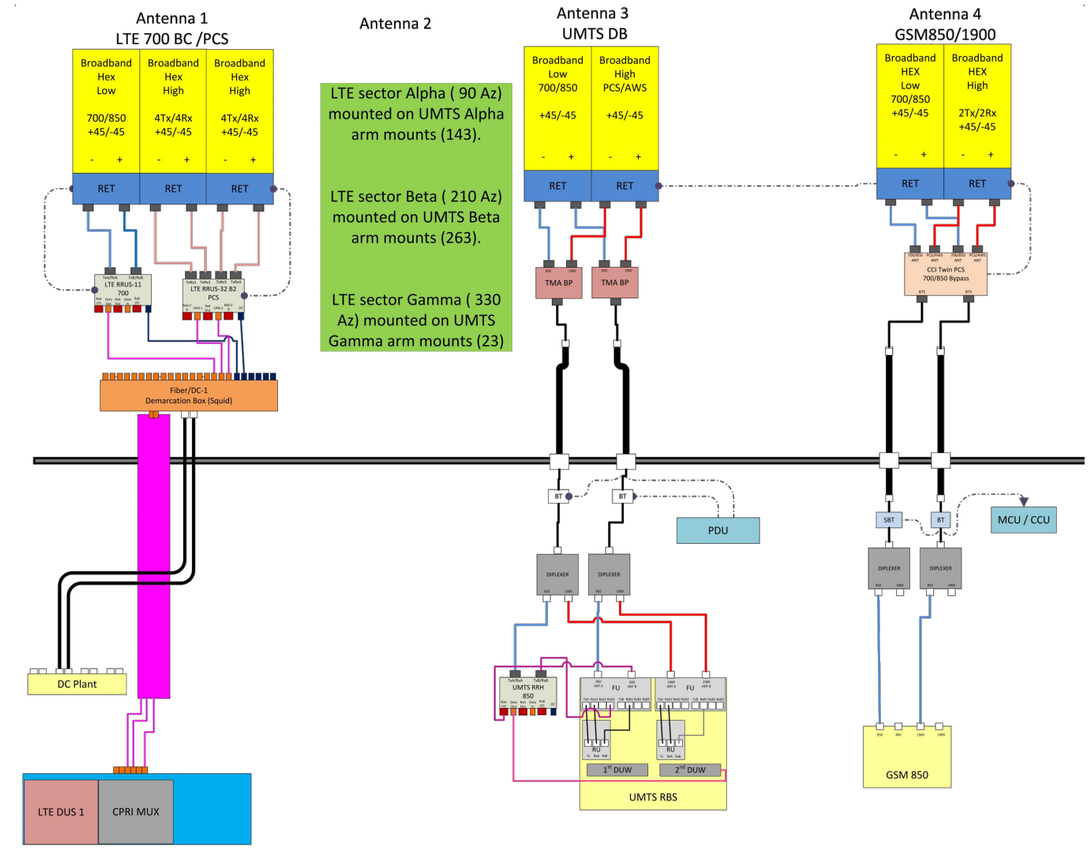

NOTE:
1. CONTRACTOR TO CONFIRM ALL PARTS
2. INSTALL ALL EQUIPMENT PER MANUFACTURERS RECOMMENDATIONS

PLUMBING DIAGRAM FACE 3/05

SCALE: N.T.S.

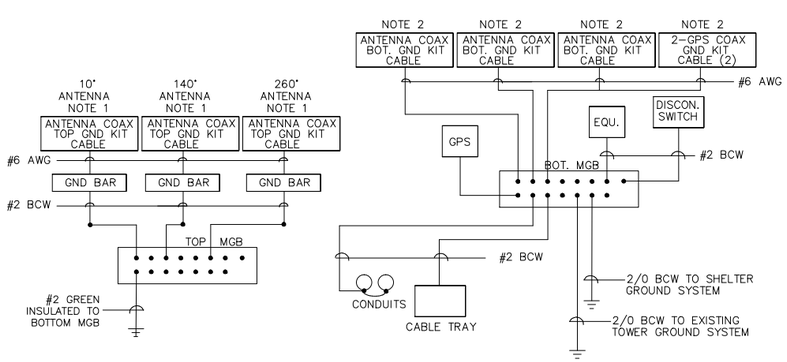

NOTE:
1. BOND ANTENNA GROUNDING KIT CABLE TO TOP CIGBE
2. BOND ANTENNA GROUNDING KIT CABLE TO BOTTOM CIGBE

SCHEMATIC GROUNDING DIAGRAM 4/05

SCALE: N.T.S.

NEWTON INSTRUMENT COMPANY, INC.
BUTNER, N.C. OR APPROVED EQUAL

ITEM	REQ.	PART NO.	DESCRIPTION
1	1	1/4"x4"x12"	PRE DRILLED GND. BAR
2	2	A-6056	WALL MTG. BRKT.
3	2	3061-4	INSULATORS
4	2	3012-13	5/8"-11x4" H.H.C.S.
5	4	3015-8	5/8 LOCKWASHER
6	2	3014-8	5/8"-11 HEX NUT

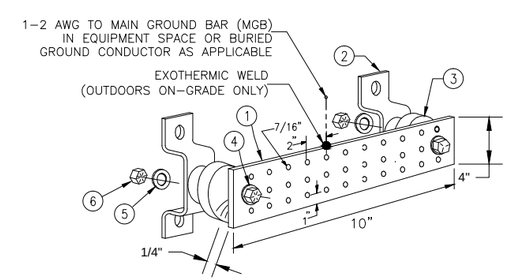

GROUND BAR DETAIL 6/05

SCALE: N.T.S.

VRG
VERTICAL RESOURCES GRP.
489 Washington Street
Auburn, MA 01501
Tel. (508) 981- 9590
Fax (508) 519 - 8939
mnobre@verticalresourcesgrp.com

EMPIRE telecom
EMPIRE TELECOM USA, LLC
16 ESQUIRE ROAD
BILLERICA, MA 01821

SITE NUMBER: CT2070
SITE NAME: NEW FAIRFIELD CENTER
302 BALL POND ROAD
NEW FAIRFIELD, CT 06812
FAIRFIELD COUNTY

at&t Mobility
550 COCHITUATE RD
SUITES 13 & 14
FRAMINGHAM, MA 01701

NO.	DATE	REVISION	BY	CHK	APP'D
2	10/31/16	GENERAL REVISIONS	E.L.P.	G.A.M.	
1	10/20/16	FOR CONSTRUCTION	E.L.P.	G.A.M.	
0	10/17/16	FOR REVIEW	E.L.P.	G.A.M.	

SCALE | DESIGNED BY: M.N. | DRAWN BY: G.A.M.

STATE OF CONNECTICUT JAMES P. STRODE No. 8657 PROFESSIONAL ENGINEER

AT&T MOBILITY

GROUNDING DETAILS

JOB NUMBER	DRAWING NUMBER	REV.
50-145	05	2