Rigorous Structural Analysis Report

AT&T - New Fairfield Center #CT2070 / FA #10035312

Owner: Town of New Fairfield

New Fairfield, Connecticut

November 02, 2016

MEI PROJECT ID: CT01113M-16V0

MALOUF ENGINEERING INTL., INC.

STRUCTURAL CONSULTANTS

17950 PRESTON ROAD, SUITE 720 ▪ DALLAS, TEXAS 75252 ▪ TEL. 972-783-2578 FAX 972-783-2583

www.maloufengineering.com

PROFESSIONAL MEMBER

ACEC MEMBER

MALOUF ENGINEERING INTL., INC.

STRUCTURAL CONSULTANTS

November 02, 2016

Mr. Miguel Nobre
Vertical Resources Group
Auburn, MA 01501

RIGOROUS STRUCTURAL ANALYSIS

Structure/Make/Model:	175 ft **Monopole**		Fredd A. Nudd / MJ-180	
Client/Site Name/#:	**Vertical Resources Group / AT&T**		**New Fairfield Center #CT2070 / FA #10035312**	
Owner/Site Name/#:	Town of Fairfield		New Fairfield Center	
MEI Project ID:	**CT01113M-16V0**			
Location:	302 Ball Pond Rd New Fairfield, CT 06812		Fairfield County FCC #N/A	
	LAT	41-27-52.98 N	LON	73-29-49.03 W

EXECUTIVE SUMMARY:

Malouf Engineering Int'l (MEI), as requested, has performed a rigorous structural analysis of the above mentioned structure to assess the impact of the changed condition as noted in Table 1.

Based on the stress analysis performed, the existing structure **is in conformance** with the Connecticut Building Code / Int'l Building Code (IBC) / ANSI/TIA-**222-G** Standard for the loading considered under the criteria listed and referenced in the report sections – tower rated at 73.7% - Pole.

The installation of the proposed changed condition as noted in Table 1 is structurally acceptable. Please refer to Appendix 1 for Schematic Lines Layout.

MEI appreciates the opportunity of providing our continuing professional services to you. If you have any questions or need further assistance on this or other projects please contact us.

Respectfully submitted,

MALOUF ENGINEERING INT'L, INC.

Analysis performed by:

Helder Lopez, PE
Sr. Project Engineer

Reviewed & Approved by:

STATE OF CONNECTICUT
MARK MALOUF
No. 17715
LICENSED
PROFESSIONAL ENGINEER

E. Mark Malouf, PE
Connecticut #17715
972-783-2578 ext. 106
mmalouf@maloufengineering.com

11/2/2016

TABLE OF CONTENTS

1. INTRODUCTION & SCOPE ____ 4

2. SOURCE OF DATA ____ 4

Background Information: ---------- 4

3. ANALYSIS CRITERIA ____ 5

Appurtenances Configuration ---------- 5

4. ANALYSIS PROCEDURE ____ 7

Analysis Program ---------- 7

Assumptions ---------- 7

5. ANALYSIS RESULTS ____ 8

6. FINDINGS & RECOMMENDATIONS ____ 9

7. REPORT DISCLAIMER ____ 10

APPENDIX 1 - ANALYSIS PRINTOUT & GRAPHICS ____ 11

APPENDIX 2 – SOURCE / CHANGED CONDITION ____ 12

This report is not to be reproduced or copied in whole or in part without MEI's written consent. **2016, MEI, Inc. ©**

1. INTRODUCTION & SCOPE

A rigorous structural analysis was performed by Malouf Engineering Int'l (MEI), as requested and authorized by Mr. Miguel Nobre, Vertical Resources Group, on behalf of AT&T, to determine the acceptance of the proposed changed conditions in conformance with the CT BC / IBC / ANSI/TIA-222-G Standard, "*Structural Standard for Antenna Supporting Structures and Antennas*". The scope of this independent analysis is to determine the overall stability and the adequacy of structural members, foundations, and member connections, as available and stated. This analysis considers the structure to have been properly installed and maintained with no structural defects. Installation procedures and related loading are not within the scope of this analysis and should be performed and evaluated by a competent person of the erection contractor.

The different report sections detail the applicable information used in this evaluation, relating to the tower data, the appurtenances configuration and the wind and ice loading considered.

2. SOURCE OF DATA

The following information has been used in this evaluation as source data that accurately represent the existing structure and the related appurtenances:

	Source	Information	Reference
STRUCTURE			
Tower	MEI Records	Previous Structural Analysis	ID CT01113M-08V0 Dated 05/09/2008
		Fredd A. Nudd Tower Design Drawing	Dated 03/19/2003 Rev. C
	Vertical Resources / Mr. Miguel Nobre	Infinigy Structural Analysis	Job #158-093 Dated 02/16/2016
Foundation	MEI Records	Previous Structural Analysis	ID CT01113M-08V0 Dated 05/09/2008
	MEI Records	Fredd A. Nudd Foundation Design Dwg	Dated 03/19/2003 Rev. C
	No geotechnical report provided – soil parameters as per URS analysis report.		
Material Grade	Available from supplied documents noted above-refer to Appendix		
CURRENT APPURTENANCES			
	Vertical Resources / Mr. Miguel Nobre	Infinigy Structural Analysis	Job #158-093 Dated 02/16/2016
		Tower Photos	Dated 10/15/2016
CHANGED CONDITION			
	Vertical Resources / Mr. Miguel Nobre	E-mail Instructions	Dated 10/31/2016
		AT&T RF Data Sheet	Dated 06/10/2016
		AT&T CDs	Dated 10/17/2016

Background Information:

Based on available information, the following is known regarding this structure:

DESIGNER / FABRICATOR	Fredd A. Nudd / MJ-180
ORIGINAL DESIGN CRITERIA	TIA/EIA 222-F– 85 Mph + 0.50" Ice
PRIOR STRUCTURAL MODIFICATIONS	As per Infinigy modification design Project #379-016 dated 04/24/2015 – considered properly installed.

This report is not to be reproduced or copied in whole or in part without MEI's written consent. **2016, MEI, Inc. ©**

3. ANALYSIS CRITERIA

The structural analysis performed used the following criteria:

CODE / STANDARD	2016 Connecticut Building Code / 2012 Int'l Bldg Code / ANSI/TIA-222-G-2 Standard	
LOADING CASES	*Full Wind*:	115 Mph ultimate gust [equiv. 90 Mph (3-sec gust)] w/No Radial Ice**
	Iced Case:	50 Mph + 3/4" Radial Ice
	Service:	60 Mph
STRUCTURE CRITERIA	*Structure Classification*: Class II	
	Exposure Category: 'C' – *Topographic Category:* 1	

Appurtenances Configuration

The following appurtenances configuration is denoted by the *summation of Tables 1 & 2*:

Table 1: Tenant with Changed Condition Appurtenances Configuration

Elev (ft)	Tenant	Ants Qty	Appurtenance Model / Description	Mount Description	Lines Qty	Line size & Location
135	*AT&T*	*3*	*RRUS-32 B2 Boxes*	*[Onto Close Contact Mount]*		
Current Appurtenances To Remain						
135	AT&T	6	7770.00 Panel Antennas	(3) LP T-Arm Mounts	12 2 1	1-5/8" 5/8" DC Power 3/8" Fiber-(I)
		1	HPA-65R-BUU-H8 Panel Antenna			
		2	HPA-65R-BUU-H6 Panel Antennas			
		6	LGP21401 TMAs			
		3	DTMABP7819VG12A Twin TMAs			
		3	RRUS-11 Boxes	Close Contact Mount		
		1	Raycap DC6-48-60-18-8F Suppressor			
Current Appurtenances To Be Removed						
135	AT&T	3	RRUS-12 w/ A2 Backpack			

Table 2: Remaining Tenants Current and Reserved/Future Appurtenances

Elev (ft)	Tenant	Ants Qty	Appurtenance Model / Description	Mount Description	Lines Qty	Line size & Location
175	Town	1	Lightning Rod	LP Platform Mount (w/ Empty Pipes)		
		4	PD220 Omni Antennas		4	1-5/8" -(I)
		1	1ft Square Panel Antenna		1	1/2" -(I)
		1	2ft Dia. Dish w/ Radome		1	1/2" -(I)
155	Sprint	2	RR65-18-02DP Panel Antennas	LP Platform Mount	4	Hybrid Cables-(I)
		1	RR45-19-02DPL4 Panel Antenna			
		1	APXVSPP18-C-A20 Panel Antenna			
		2	P40-16-XLPP-RR Panel Antennas			
		3	APXVTM14-C-120 Panel Antennas			
		3	ALU-RRH 8x20 Boxes	Close Contact Mount		
		3	1900 Mhz – RRH Boxes			
		3	800 Mhz – RRH Boxes			
145	T-Mobile	3	LNX-6515DS-VTM Panel Antennas	(3) LP T-Arm Mounts	18 1	1-5/8" HiCap Hybrid Cable-(I)
		3	AIR21 B2A B4P Panel Antennas			
		3	RRUS-11 Boxes			
		3	AIR21 B4A B2P Panel Antennas			
		3	TMAs			
125	VzW	6	BXA-171085-12CF-EDIN-X Panel Ants.	(3) LP T-Arm Mounts	18 1	1-5/8" 1-1/4" (6x12) Hybrid (HFT1206-24S49-xxx) or Equiv. -(I)
		6	LPA-80080-6CF-x Panel Antennas			
		3	BXA-70063-6CF Panel Antennas			
		3	ALU-RRH 2x60 Boxes			
		1	RxxDC-3315-PF-48 OVP Box			
100	Town	1	PD220 Omni Antenna	Standoff Arm w/ Collar Mount	1	1-5/8" -(I)
85	Sprint	3	GPS Antenna	Chain Collar Mount	3	1/2"-(I)

This report is not to be reproduced or copied in whole or in part without MEI's written consent. 2016, MEI, Inc. ©

Notes:

1. **As per 2012 IBC for ultimate 3-sec gust wind speed converted to nominal 3-sec gust wind speed as per Sect. 1609.3.1 as required to be used in ANSI/TIA-222-G Standard per exception 5 of Sect. 1609.1.1.
2. All elevations are measured from tower base.
3. Please note appurtenances not listed above are to be removed/not present as per data supplied.
4. (I) = Internal; (E) = External; (FZ) = Within Face Zone; (OFZ) = Outside Face Zone - as per TIA-222-G.
5. The above appurtenances represent MEI's understanding of the appurtenances configuration. If different than above, the analysis is invalid. Please contact MEI if any discrepancies are found.

This report is not to be reproduced or copied in whole or in part without MEI's written consent. 2016, MEI, Inc. ©

4. ANALYSIS PROCEDURE

The subject structure is analyzed for feasibility of the installation of the proposed changed condition previously noted. The data records furnished were reviewed and a computer stress analysis was performed in accordance with the TIA-222 Standard provisions and with the agreed scope of work terms and the results of this analysis are reported.

Analysis Program

The computer program used to model the structure is a rigorous Finite Element Analysis program, tnxTower (ver. 7.07), a commercially available program by Tower Numerics Inc. The latticed structures members are modeled using beam/truss and cable members and the pole members using tubular beam elements. The structural parameters and geometry of the members are included in the model. The dead and temperature loads and the wind loads are internally calculated by the program for the different wind directions and then applied as external loads on the structure. Any applicable exemptions, as per Section 15.6 of the TIA-222-G Standard for existing structures originally designed in accordance with a previous revision of the TIA-222 Standard, have been taken.

Assumptions

This engineering study is based on the theoretical capacity of the members and is not a condition assessment of the structure. This analysis is based on information supplied, and therefore, its results are based on and as accurate as that supplied data. MEI has made no independent determination, nor is it required to, of its accuracy. The following assumptions were made for this structural stress analysis:

- This existing tower is assumed, for the purpose of this analysis, to have been properly maintained and to be in good condition with no structural defects and with no deterioration to its member capacities ('as-new' condition).
- The tower member sizes and configuration are considered accurate as supplied. The material grade is as per data supplied and/or as assumed and as stated.
- The appurtenances configuration is as supplied and/or as stated in the report. It is assumed to be complete and accurate. All antennas, mounts, coax and waveguides are assumed to be properly installed and supported as per manufacturer requirements.
- Some assumptions are made regarding antennas and mounts sizes and their projected areas based on best interpretation of data supplied and of best knowledge of antenna type & industry practice.
- Mounts/Platforms are considered adequate to support the loading. No actual analysis of the platform/mount itself is performed, with the analysis being limited to analyzing the structure.
- The soil parameters are as per data supplied or as assumed and stated in the calculations. Refer to the Appendix. If no data is available, the foundation system is assumed to support the structure with its new reactions.
- All welds and connections are assumed to develop at least the member capacity, unless determined otherwise and explicitly stated in this report.
- All prior structural modifications, if any, are assumed to be as per data supplied/available, and to have been properly installed and to be fully effective.

If any of the above assumptions are not valid or have been made in error, this analysis results may be invalided, MEI should be contacted to review any contradictory information to determine its effect.

This report is not to be reproduced or copied in whole or in part without MEI's written consent. 2016, MEI, Inc. ©

5. ANALYSIS RESULTS

The results of the structural stress analysis based on data available and with the previous listed criteria, indicated the following:

Table 3: Stress Analysis Results

Component Type	Maximum Stress Ratio	Controlling Elev. (ft) / Component	Pass/Fail	Comment
POLE	**73.7%**	**41 - 0**	**Pass**	
REINFORCING	68.9%	5 – 0	**Pass**	
BASE PLATE	71.5%	Bending	**Pass**	For effective Moment After reinforcement
ANCHOR RODS	52.8%	Combined	**Pass**	
FOUNDATION	56.3%	Overturning Moment	**Pass**	No geotechnical report provided – soil parameters as per URS 02/16/2004 analysis report.

Table 4: Serviceability Requirements

	Maximum Value	TIA Requirement (10dB)	Pass/Fail	Comment
TWIST/SWAY	1.1838 Deg.	1.8568 Deg.	**Pass**	2' Dia. Dish w/ Radome Elev. 175.00ft
	1.1838 Deg.	4 Deg. from Vert. or Horiz. Axis	**Pass**	
HORIZONTAL DISPLACEMENT	25.028 In./ 1.19% of Ht.	3.0% of Height	**Pass**	

Notes:

1. The Maximum Stress Ratio is the percentage that the maximum load in the member is relative to the allowable load as determined by Code requirements.
2. Refer to the Appendix 1 for more details on the member loads.
3. A maximum stress ratio between 100% and 105% may be considered as *Acceptable* according to industry standard practice.

This report is not to be reproduced or copied in whole or in part without MEI's written consent. **2016, MEI, Inc. ©**

6. FINDINGS & RECOMMENDATIONS

- Based on the rigorous stress analysis results, the subject structure is **rated at 73.7%** of its support capacity (controlling component: Pole) with the proposed changed condition considered. Please refer to Table 3 and to Appendix 1 for more details of the analysis results.
- Based on the stress analysis performed, the existing structure **is in conformance** with the IBC / ANSI/TIA **222-G** Standard for the loading considered under the criteria listed and referenced in the report sections.
- Please note that no geotechnical data is available. However based on soil parameters obtained from URS analysis report dated 02/16/2004 and comparison of new reactions with the design reactions, the foundation is considered acceptable.
- ***The installation of the proposed changed condition as noted in Table 1 is structurally acceptable***. Please refer to Appendix 1 for Schematic Lines Layout.
- This structure has limited additional support capacity for the appurtenances and loading criteria considered. However, no changes to the configuration considered should be made without performing a new proper evaluation.

Rigging and temporary supports required for the erection/modification shall be determined, documented, furnished and installed by the erector/contractor accounting for the loads imposed on the structure due to the proposed construction method.

This report is not to be reproduced or copied in whole or in part without MEI's written consent. **2016, MEI, Inc. ©**

7. REPORT DISCLAIMER

The engineering services rendered by **M**alouf **E**ngineering **I**nternational, Inc. *('MEI') in connection with this Structural Analysis are limited to a computer analysis of the tower structure, size and capacity of its members. MEI does not analyze the fabrication, including welding and connection capacities, except as included in this Report.*

The analysis performed and the conclusions contained herein are based on the assumption that the tower has been properly installed and maintained, including, but not limited to the following:

1. Proper alignment and plumbness.
2. Correct guy tensions, as applicable.
3. Correct bolt tightness or slip jacking of sleeved connections.
4. No significant deterioration or damage to any structural component.

Furthermore, the information and conclusions contained in this Report were determined by application of the current "state-of-the-art" engineering and analysis procedures and formulae. MALOUF ENGINEERING INTERNATIONAL, INC. assumes no obligation to revise any of the information or conclusions contained in this Report in the event that such engineering and analysis procedures and formulae are hereafter modified or revised. In addition, under no circumstances will MALOUF ENGINEERING INTERNATIONAL, INC. have any obligation or responsibility whatsoever for or on account of consequential or incidental damages sustained by any person, firm or organization as a result of any information or conclusions contained in the Report, and the maximum liability of MALOUF ENGINEERING INTERNATIONAL, INC., if any, pursuant to this Report shall be limited to the total funds actually received by MALOUF ENGINEERING INTERNATIONAL, INC. for preparation of this Report.

Customer has requested MALOUF ENGINEERING INTERNATIONAL, INC. to prepare and submit to Customer an engineering analysis with respect to the Subject Tower and has further requested MALOUF ENGINEERING INTERNATIONAL, INC. to make appropriate recommendations regarding suggested structural modifications and changes to the Subject Tower. In making such request of MALOUF ENGINEERING INTERNATIONAL, INC., Customer has informed MALOUF ENGINEERING INTERNATIONAL, INC. that Customer will make a determination as to whether or not to implement any of the changes or modifications which may be suggested by MALOUF ENGINEERING INTERNATIONAL, INC. and that Customer will have any such changes or modifications made by riggers, erectors and other subcontractors of Customer's choice. MALOUF ENGINEERING INTERNATIONAL, INC. shall have the right to rely upon the accuracy of the information supplied by the customer and shall not be held responsible for the Customer's misrepresentation or omission of relevant fact whether intentional or otherwise.

Customer hereby agrees and acknowledges that MALOUF ENGINEERING INTERNATIONAL, INC. shall have no liability whatsoever to Customer or to others for any work or services performed by any persons other than MALOUF ENGINEERING INTERNATIONAL, INC. in connection with the implementation of services including but not limited to any services rendered for Customer or for others by riggers, erectors or other subcontractors. Customer acknowledges and agrees that any riggers, erectors or subcontractors retained or employed by Customer shall be solely responsible to Customer and to others for the quality of work performed by them and that MALOUF ENGINEERING INTERNATIONAL, INC. shall have no liability or responsibility whatsoever as a result of any negligence or breach of contract by any such rigger, erector or subcontractor and that Customer and rigger, erector, or subcontractor will provide MALOUF ENGINEERING INTERNATIONAL, INC. with a Certificate of Insurance naming MALOUF ENGINEERING INTERNATIONAL, INC. as additional insured.

This report is not to be reproduced or copied in whole or in part without MEI's written consent. **2016, MEI, Inc. ©**

APPENDIX 1 - ANALYSIS PRINTOUT & GRAPHICS

This report is not to be reproduced or copied in whole or in part without MEI's written consent. 2016, MEI, Inc. ©

Section	1	2	3	4
Length (ft)	45.00	50.00	50.00	48.00
Number of Sides	18	18	18	18
Thickness (in)	0.2500	0.3125	0.3750	0.3750
Socket Length (ft)	5.00	6.00	7.00	
Top Dia (in)	24.0000	33.0004	42.6605	52.0925
Bot Dia (in)	34.6880	44.6880	54.5000	64.5000
Grade	A572-65			
Tube Length (ft)	5.00			
Reinf Size	1 3/4			
Reinf Grade	A			
Weight (lb)	3535.1	6502.5	9762.0	11260.4

31059.9

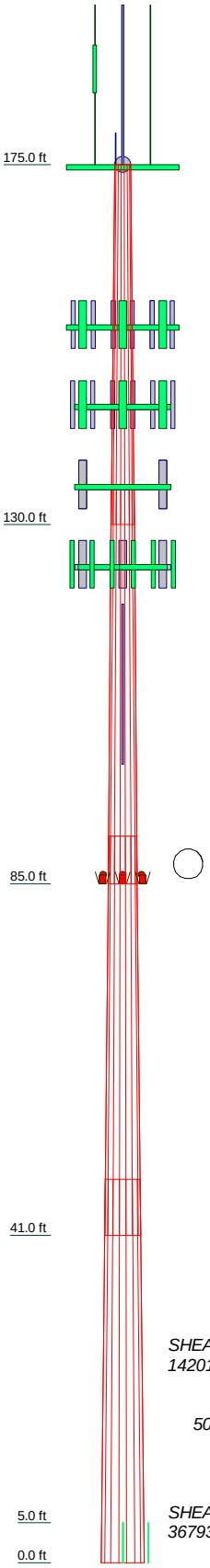

ALL REACTIONS ARE FACTORED

AXIAL 104315 lb

SHEAR 14201 lb

M(177

TORQUE 3117 lb-ft

50 mph WIND - 0.7500 in IC

AXIAL 61762 lb

SHEAR 36793 lb

M(439

TORQUE 6604 lb-ft

REACTIONS - 90 mph WIN

DESIGNED APPURTENANCE LOADING

TYPE	ELEVATION
Lightning Rod (E)	175
PD220 (Town / E)	175
PD220 (Town / E)	175
PD220 (Town / E)	175
PD220 (Town / E)	175
1' Square Panel w / Pipe Mount (Town / E/F)	175
L.P. Platform Mount (w/ Empty Pipes) (E)	175
2' Dia. Dish w/ Radome (Town / E/F)	175
RR45-19-02DPL4 w/Mount Pipe (Sprint / E)	155
APXVSPP18-C-A20 w / Pipe Mount (Sprint / E)	155
(2) P40-16-XLPP-RR w/ Pipe Mount (Sprint / E)	155
APXVTM14-C-120 w/ Pipe Mount (Sprint / E)	155
APXVTM14-C-120 w/ Pipe Mount (Sprint / E)	155
APXVTM14-C-120 w/ Pipe Mount (Sprint / E)	155
ALU-RRH 8x20 (Sprint / E)	155
ALU-RRH 8x20 (Sprint / E)	155
ALU-RRH 8x20 (Sprint / E)	155
1900 Mhz - RRH (Sprint / E)	155
1900 Mhz - RRH (Sprint / E)	155
1900 Mhz - RRH (Sprint / E)	155
800 Mhz - RRH (Sprint / E)	155
800 Mhz - RRH (Sprint / E)	155
800 Mhz - RRH (Sprint / E)	155
Close Contact Mount (E)	155
L.P. Platform Mount (E)	155
(2) RR65-18-02DP w/Mount Pipe (Sprint / E)	155
LNX-6515DS-VTM w/ Pipe Mnt. (T-Mobile / E)	145
LNX-6515DS-VTM w/ Pipe Mnt. (T-Mobile / E)	145
AIR21 B2A B4P w/ pipe Mount (T-Mobile / E)	145
AIR21 B2A B4P w/ pipe Mount (T-Mobile / E)	145
AIR21 B2A B4P w/ pipe Mount (T-Mobile / E)	145
RRUS-11 (T-Mobile / E)	145
RRUS-11 (T-Mobile / E)	145
RRUS-11 (T-Mobile / E)	145
AIR21 B4A B2P w/ pipe Mount (T-Mobile / E)	145
AIR21 B4A B2P w/ pipe Mount (T-Mobile / E)	145
AIR21 B4A B2P w/ pipe Mount (T-Mobile / E)	145
TMA's (T-Mobile / E)	145
TMA's (T-Mobile / E)	145
TMA's (T-Mobile / E)	145
L.P. T-Arm Mount (E)	145
L.P. T-Arm Mount (E)	145
L.P. T-Arm Mount (E)	145
LNX-6515DS-VTM w/ Pipe Mnt. (T-Mobile / E)	145
(2) 7770.00 Panels w/ Pipe Mount (ATI / E)	135

TYPE	ELEVATION
(2) 7770.00 Panels w/ Pipe Mount (ATI / E)	135
HPA-65R-BUU-H8 w/ Pipe Mounts (ATI / E)	135
HPA-65R-BUU-H6 w/ Pipe Mounts (ATI / E)	135
HPA-65R-BUU-H6 w/ Pipe Mounts (ATI / E)	135
(2) LGP21401 TMA'S (ATI / E)	135
(2) LGP21401 TMA'S (ATI / E)	135
(2) LGP21401 TMA'S (ATI / E)	135
DTMABP7819VG12A Twin TMA (ATI / E)	135
DTMABP7819VG12A Twin TMA (ATI / E)	135
DTMABP7819VG12A Twin TMA (ATI / E)	135
RRUS-11 (ATI / E)	135
RRUS-11 (ATI / E)	135
RRUS-11 (ATI / E)	135
Raycap DC6-48-60-18-8F SUPRESSOR (ATI / E)	135
RRUS-32 B2 (ATI / P)	135
RRUS-32 B2 (ATI / P)	135
RRUS-32 B2 (ATI / P)	135
Close Contact Mount (E)	135
L.P. T-Arm Mount (E)	135
L.P. T-Arm Mount (E)	135
L.P. T-Arm Mount (E)	135
(2) 7770.00 Panels w/ Pipe Mount (ATI / E)	135
(2) BXA-171085-12CF-EDIN-X w/ Pipe Mount (VzW / E)	125
(2) BXA-171085-12CF-EDIN-X w/ Pipe Mount (VzW / E)	125
(2) LPA-80080-6CF-2 w / Pipe Mount (VzW / E)	125
(2) LPA-80080-6CF-2 w / Pipe Mount (VzW / E)	125
(2) LPA-80080-6CF-2 w / Pipe Mount (VzW / E)	125
BXA-70063-6CF w/ Pipe Mount (VzW / E)	125
BXA-70063-6CF w/ Pipe Mount (VzW / E)	125
BXA-70063-6CF w/ Pipe Mount (VzW / E)	125
ALU-RRH 2x60 (VzW / E)	125
ALU-RRH 2x60 (VzW / E)	125
ALU-RRH 2x60 (VzW / E)	125
Raycap RxxDC-3315-PF-48 (VzW / E)	125
L.P. T-Arm Mount (E)	125
L.P. T-Arm Mount (E)	125
L.P. T-Arm Mount (E)	125
(2) BXA-171085-12CF-EDIN-X w/ Pipe Mount (VzW / E)	125
Standoff Arm w/ Collar Mount (E)	100
PD220 (Town / E)	100
GPS (Sprint / E/F)	85
GPS (Sprint / E/F)	85
Chain Collar Mount (E)	85
GPS (Sprint / E/F)	85

MATERIAL STRENGTH

GRADE	Fy	Fu	GRADE	Fy	Fu
A572-65	65 ksi	80 ksi	R7S - 150 ksi	120 ksi	150 ksi

TOWER DESIGN NOTES

1. Tower is located in Fairfield County, Connecticut.
2. Tower designed for Exposure C to the TIA-222-G Standard.
3. Tower designed for a 90 mph basic wind in accordance with the TIA-222-G Standard.
4. Tower is also designed for a 50 mph basic wind with 0.75 in ice. Ice is considered to increase in thickness with height.
5. Deflections are based upon a 60 mph wind.
6. Tower Structure Class II.
7. Topographic Category 1 with Crest Height of 0.00 ft
8. IBC 2012 / 115 Mph (Ult.) = 90 Mph (3-Sec) as per CT Builidng Code
9. TOWER RATING: 73.7%

MALOUF ENGINEERING INTL., INC.
STRUCTURAL CONSULTANTS
maloufengineering.com

MALOUF ENGINEERING INT'L. INC.
17950 PRESTON RD. SUITE 720
DALLAS, TEXAS - 75252
Phone: (972) 783-2578
FAX: (972) 783-2583

Job: ***175 ft. MNP. / New Fairfield Center Site #CT2070 (FA 10035312)***			
Project: ***CT01113M-16V0***			
Client: Vertical Resources Group / AT&T	Drawn by: HLopez	App'd:	
Code: TIA-222-G	Date: 11/02/16	Scale: NTS	
Path: C:\MEIProjects\16files\MNP\CT01113M-16V0\CT01113M-16V0_w-Anchor.eri		Dwg No. E-1	

No.	QTY.	DESCRIPTION	ELEV.	TENANT
1	4	1 5/8	175'	Town / E
2	2	1/2	175'	Town / E
3	4	Hybrid Cable	155'	Sprint / E
4	18	1 5/8	145'	T-Mobile / E
5	1	HiCap Hybrid Cable	145'	T-Mobile / E
6	12	1 5/8	135'	AT&T / E
7	1	3/8 Fiber Cable	135'	AT&T / E
8	2	7/8" DC Power Cable	135'	AT&T / E
9	18	1 5/8	125'	VzW / E
10	1	1-1/4" (6x12) Hybrid or Equiv.	125'	VzW / E
11	1	1 5/8	100'	E
12	3	1/2	85'	Sprint / E

NOTE: LINE LAYOUT IS SCHEMATIC AND FOR ILLUSTRATION PURPOSES ONLY. ACTUAL LINE LOCATIONS WILL VARY WITHIN POLE SHAFT.

LEGEND:

E = EXISTING — #X

P = PROPOSED — #X

F = FUTURE — #X

R = REMOVE — #X

TO RELOCATE

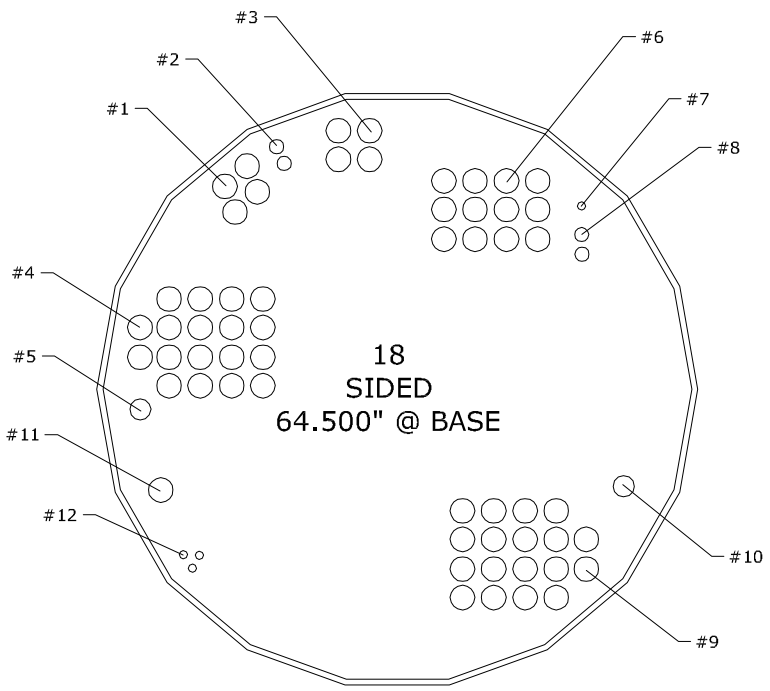

101 PLAN: SCHEMATIC Tx-LINE LAYOUT

SCALE: NOT TO SCALE

NOTES:

1. Tx LINE LAYOUT IS SCHEMATIC ONLY, BASED UPON LIMITED DATA PROVIDED.
2. NEW BRACKET SUPPORT SPECIFICATION BY OTHERS.

NOV 02, 2016

ALL RIGHTS RESERVED. THIS DRAWING SHALL REMAIN THE PROPERTY OF MALOUF ENGINEERING INTERNATIONAL, INC. NO PART THEREOF SHALL BE REPRODUCED, COPIED, ADAPTED, DISCLOSED, OR DISTRIBUTED TO OTHERS WITHOUT WRITTEN PERMISSION OF MEI, INC.

MALOUF ENGINEERING INTERNATIONAL, INC.
STRUCTURAL CONSULTANTS
17950 PRESTON ROAD SUITE 720
DALLAS, TEXAS 75252-5635
972-783-2578 (fax: 2583)
www.maloufengineering.com

© MEI, INC. 2016

at&t

175 ft. MNP. / New Fairfield Center Site #CT2070 (FA 10035312)

MONOPOLE TxLINE LAYOUT

MEI PROJECT ID	SHEET NUMBER	REV.
CT01113M-16V0	L01	0

TIA-222-G - Service - 60 mph

Maximum Values

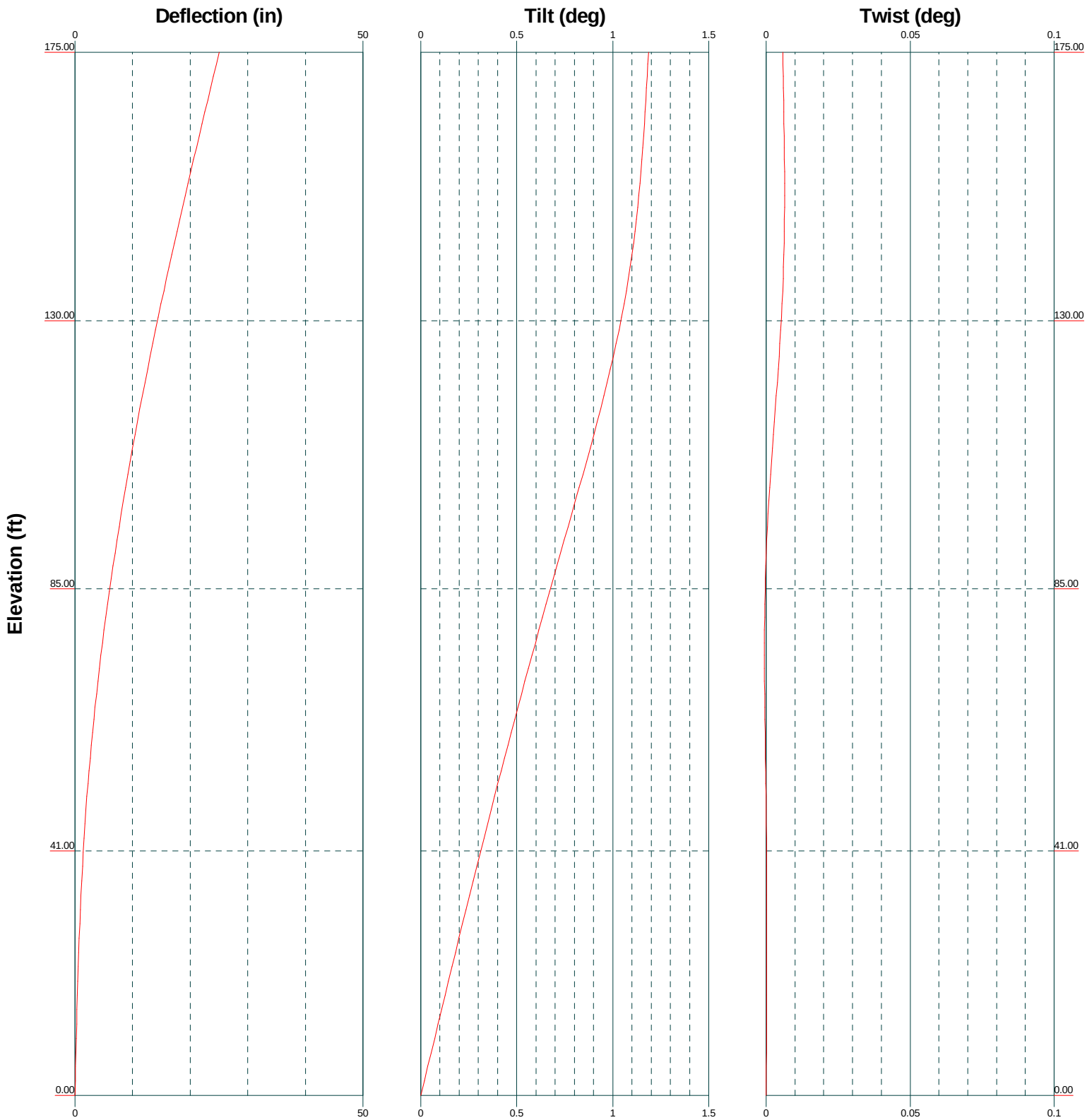

MALOUF ENGINEERING INTL., INC.
STRUCTURAL CONSULTANTS
maloufengineering.com

MALOUF ENGINEERING INT'L. INC.
17950 PRESTON RD. SUITE 720
DALLAS, TEXAS - 75252
Phone: (972) 783-2578
FAX: (972) 783-2583

Job: ***175 ft. MNP. / New Fairfield Center Site #CT2070 (FA 10035312)***			
Project: ***CT01113M-16V0***			
Client: Vertical Resources Group / AT&T	Drawn by: HLopez	App'd:	
Code: TIA-222-G	Date: 11/02/16	Scale: NTS	
Path: C:\MEIProjects\16files\MNP\CT01113M-16V0\CT01113M-16V0_w-Anchor.eri		Dwg No. E-5	

Tower Input Data

There is a pole section.
This tower is designed using the TIA-222-G standard.
The following design criteria apply:

Tower is located in Fairfield County, Connecticut.
Basic wind speed of 90 mph.
Structure Class II.
Exposure Category C.
Topographic Category 1.
Crest Height 0.00 ft.
Nominal ice thickness of 0.7500 in.
Ice thickness is considered to increase with height.
Ice density of 56 pcf.
A wind speed of 50 mph is used in combination with ice.
Temperature drop of 50 °F.
Deflections calculated using a wind speed of 60 mph.
IBC 2012 / 115 Mph (Ult.) = 90 Mph (3-Sec) as per CT Builidng Code.
A non-linear (P-delta) analysis was used.
Pressures are calculated at each section.
Stress ratio used in pole design is 1.
Local bending stresses due to climbing loads, feed line supports, and appurtenance mounts are not considered.

Pole Reinforcing Data

Height Above Base ft	*Segment Length ft*	*No. of Segments*	*Offset in*	*Grade*	*Type*	*Size*	*Unbraced Length ft*	*K*	*Bolt Hole Dia. in*	*Bolts per Row*	*Shear Lag Factor U*
0.00	5.00	4	6.0000	R7S - 150 ksi (120 ksi)	Solid Round	1 3/4	2.50	0.80	0.0000	0	0.000

Feed Line/Linear Appurtenances - Entered As Area

Description	*Component Type*	*Placement* *ft*	*Total Number*
Safety Line 3/8 (E)	CaAa (Out Of Face)	175.00 - 0.00	1
Step Bolts (E)	CaAa (Out Of Face)	175.00 - 0.00	1
1 5/8 (Town / E)	Inside Pole	175.00 - 0.00	4
1/2 (Town / E)	Inside Pole	175.00 - 0.00	2
Hybrid Cable (Sprint / E)	Inside Pole	155.00 - 0.00	4
1 5/8 (T-Mobile / E)	Inside Pole	145.00 - 0.00	18
HiCap Hybrid Cable (T-Mobile / E)	Inside Pole	145.00 - 0.00	1
1 5/8 (AT&T / E)	Inside Pole	135.00 - 0.00	12
3/8 Fiber Cable (AT&T / E)	Inside Pole	135.00 - 0.00	1
7/8" DC Power Cable (AT&T / E)	Inside Pole	135.00 - 0.00	2
1 5/8 (VzW / E)	Inside Pole	125.00 - 0.00	18
1-1/4" (6x12) Hybrid (HFT1206-24S49-xxx) or Equiv. (VzW / E)	Inside Pole	125.00 - 0.00	1
1 5/8 (E)	Inside Pole	100.00 - 0.00	1
1/2 (Sprint / E)	Inside Pole	85.00 - 0.00	3

Discrete Tower Loads

Description	Face or Leg	Offset Type	Placement ft
Lightning Rod (E)	A	From Face	175.00
PD220 (Town / E)	A	From Leg	175.00
PD220 (Town / E)	A	From Leg	175.00
PD220 (Town / E)	B	From Leg	175.00
PD220 (Town / E)	C	From Leg	175.00
1' Square Panel w / Pipe Mount (Town / E/F)	C	From Leg	175.00
L.P. Platform Mount (w/ Empty Pipes) (E)	A	None	175.00
***** Blank Line *****			
(2) RR65-18-02DP w/Mount Pipe (Sprint / E)	A	From Face	155.00
RR45-19-02DPL4 w/Mount Pipe (Sprint / E)	B	From Face	155.00
APXVSPP18-C-A20 w / Pipe Mount (Sprint / E)	B	From Face	155.00
(2) P40-16-XLPP-RR w/ Pipe Mount (Sprint / E)	C	From Face	155.00
APXVTM14-C-120 w/ Pipe Mount (Sprint / E)	A	From Face	155.00
APXVTM14-C-120 w/ Pipe Mount (Sprint / E)	B	From Face	155.00
APXVTM14-C-120 w/ Pipe Mount (Sprint / E)	C	From Face	155.00
ALU-RRH 8x20 (Sprint / E)	A	From Face	155.00
ALU-RRH 8x20 (Sprint / E)	B	From Face	155.00
ALU-RRH 8x20 (Sprint / E)	C	From Face	155.00
1900 Mhz - RRH (Sprint / E)	A	From Face	155.00
1900 Mhz - RRH (Sprint / E)	B	From Face	155.00
1900 Mhz - RRH (Sprint / E)	C	From Face	155.00
800 Mhz - RRH (Sprint / E)	A	From Face	155.00
800 Mhz - RRH (Sprint / E)	B	From Face	155.00
800 Mhz - RRH (Sprint / E)	C	From Face	155.00
Close Contact Mount (E)	A	None	155.00

Description	Face or Leg	Offset Type	Placement ft
L.P. Platform Mount (E)	A	None	155.00
***** Blank Line *****			
LNX-6515DS-VTM w/ Pipe Mnt. (T-Mobile / E)	A	From Face	145.00
LNX-6515DS-VTM w/ Pipe Mnt. (T-Mobile / E)	B	From Face	145.00
LNX-6515DS-VTM w/ Pipe Mnt. (T-Mobile / E)	C	From Face	145.00
AIR21 B2A B4P w/ pipe Mount (T-Mobile / E)	A	From Face	145.00
AIR21 B2A B4P w/ pipe Mount (T-Mobile / E)	B	From Face	145.00
AIR21 B2A B4P w/ pipe Mount (T-Mobile / E)	C	From Face	145.00
RRUS-11 (T-Mobile / E)	A	From Face	145.00
RRUS-11 (T-Mobile / E)	B	From Face	145.00
RRUS-11 (T-Mobile / E)	C	From Face	145.00
AIR21 B4A B2P w/ pipe Mount (T-Mobile / E)	A	From Face	145.00
AIR21 B4A B2P w/ pipe Mount (T-Mobile / E)	B	From Face	145.00
AIR21 B4A B2P w/ pipe Mount (T-Mobile / E)	C	From Face	145.00
TMA's (T-Mobile / E)	A	From Face	145.00
TMA's (T-Mobile / E)	B	From Face	145.00
TMA's (T-Mobile / E)	C	From Face	145.00
L.P. T-Arm Mount (E)	A	From Face	145.00
L.P. T-Arm Mount (E)	B	From Face	145.00
L.P. T-Arm Mount (E)	C	From Face	145.00
***** Blank Line *****			
(2) 7770.00 Panels w/ Pipe Mount (AT&T / E)	A	From Leg	135.00
(2) 7770.00 Panels w/ Pipe Mount (AT&T / E)	A	From Leg	135.00
(2) 7770.00 Panels w/ Pipe Mount (AT&T / E)	A	From Leg	135.00

Description	Face or Leg	Offset Type	Placement ft
HPA-65R-BUU-H8 w/ Pipe Mounts (AT&T / E)	A	From Leg	135.00
HPA-65R-BUU-H6 w/ Pipe Mounts (AT&T / E)	B	From Leg	135.00
HPA-65R-BUU-H6 w/ Pipe Mounts (AT&T / E)	C	From Leg	135.00
(2) LGP21401 TMA'S (AT&T / E)	A	From Leg	135.00
(2) LGP21401 TMA'S (AT&T / E)	B	From Leg	135.00
(2) LGP21401 TMA'S (AT&T / E)	C	From Leg	135.00
DTMABP7819VG12A Twin TMA (AT&T / E)	A	From Leg	135.00
DTMABP7819VG12A Twin TMA (AT&T / E)	B	From Leg	135.00
DTMABP7819VG12A Twin TMA (AT&T / E)	C	From Leg	135.00
RRUS-11 (AT&T / E)	A	From Face	135.00
RRUS-11 (AT&T / E)	B	From Face	135.00
RRUS-11 (AT&T / E)	C	From Face	135.00
Raycap DC6-48-60-18-8F SUPRESSOR (AT&T / E)	B	From Face	135.00
RRUS-32 B2 (AT&T / P)	A	From Face	135.00
RRUS-32 B2 (AT&T / P)	B	From Face	135.00
RRUS-32 B2 (AT&T / P)	C	From Face	135.00
Close Contact Mount (E)	A	None	135.00
L.P. T-Arm Mount (E)	A	From Face	135.00
L.P. T-Arm Mount (E)	B	From Face	135.00
L.P. T-Arm Mount (E)	C	From Face	135.00
***** Blank Line *****			
(2) BXA-171085-12CF-EDIN-X w/ Pipe Mount (VzW / E)	A	From Leg	125.00
(2) BXA-171085-12CF-EDIN-X w/ Pipe Mount (VzW / E)	B	From Leg	125.00
(2) BXA-171085-12CF-EDIN-X w/ Pipe Mount (VzW / E)	C	From Leg	125.00
(2) LPA-80080-6CF-2 w / Pipe Mount (VzW / E)	A	From Leg	125.00
(2) LPA-80080-6CF-2 w / Pipe Mount (VzW / E)	B	From Leg	125.00
(2) LPA-80080-6CF-2 w / Pipe Mount (VzW / E)	C	From Leg	125.00
BXA-70063-6CF w/ Pipe Mount (VzW / E)	A	From Leg	125.00
BXA-70063-6CF w/ Pipe Mount (VzW / E)	B	From Leg	125.00
BXA-70063-6CF w/ Pipe Mount (VzW / E)	C	From Leg	125.00
ALU-RRH 2x60 (VzW / E)	A	From Leg	125.00
ALU-RRH 2x60 (VzW / E)	B	From Leg	125.00
ALU-RRH 2x60 (VzW / E)	C	From Leg	125.00
Raycap RxxDC-3315-PF-48 (VzW / E)	A	From Leg	125.00
L.P. T-Arm Mount (E)	A	From Leg	125.00
L.P. T-Arm Mount (E)	B	From Leg	125.00
L.P. T-Arm Mount (E)	C	From Leg	125.00
***** Blank Line *****			
PD220 (Town / E)	A	From Leg	100.00
Standoff Arm w/ Collar Mount (E)	A	None	100.00
GPS (Sprint / E/F)	A	From Leg	85.00
GPS (Sprint / E/F)	B	From Leg	85.00
GPS (Sprint / E/F)	C	From Leg	85.00
Chain Collar Mount (E)	B	None	85.00

Dishes

Description	Dish Type	Elevation	Outside Diameter
		ft	ft
2' Dia. Dish w/ Radome (Town / E/F)	Paraboloid w/Radome	175.00	2.00

Tower Mast Reaction Summary

Load Combination	Vertical	$Shear_x$	$Shear_z$	Overturning Moment, M_x	Overturning Moment, M_z	Torque
	lb	lb	lb	lb-ft	lb-ft	lb-ft
Dead Only	51467.98	0.00	-0.00	-1340.41	-134.19	0.00
1.2 Dead+1.6 Wind 0 deg - No Ice	61761.34	32.76	-36764.90	-4393737.98	-6156.19	398.64
0.9 Dead+1.6 Wind 0 deg - No Ice	46321.03	32.77	-36766.42	-4348360.90	-6035.95	402.08
1.2 Dead+1.6 Wind 30 deg - No Ice	61761.57	18121.37	-31847.36	-3806669.44	-2159473.66	-2974.85
0.9 Dead+1.6 Wind 30 deg - No Ice	46321.18	18121.42	-31847.44	-3767104.97	-2137235.74	-2954.91
1.2 Dead+1.6 Wind 60 deg - No Ice	61761.58	31334.98	-18385.02	-2198136.21	-3730712.29	-5512.94
0.9 Dead+1.6 Wind 60 deg - No Ice	46321.18	31334.92	-18384.99	-2175098.97	-3692328.13	-5481.57
1.2 Dead+1.6 Wind 90 deg - No Ice	61761.55	36163.75	-12.19	-3889.10	-4304452.12	-6604.35
0.9 Dead+1.6 Wind 90 deg - No Ice	46321.13	36163.22	-12.19	-3418.18	-4260117.88	-6569.91
1.2 Dead+1.6 Wind 120 deg - No Ice	61761.57	31325.69	18367.54	2191601.06	-3729011.88	-5967.35
0.9 Dead+1.6 Wind 120 deg - No Ice	46321.18	31325.76	18367.59	2169508.09	-3690679.31	-5939.20
1.2 Dead+1.6 Wind 150 deg - No Ice	61761.58	18085.89	31852.27	3804177.11	-2152973.39	-3697.62
0.9 Dead+1.6 Wind 150 deg - No Ice	46321.18	18085.85	31852.21	3765483.73	-2130815.96	-3683.62
1.2 Dead+1.6 Wind 180 deg - No Ice	61761.34	-32.76	36791.54	4395169.19	5816.71	-362.41
0.9 Dead+1.6 Wind 180 deg - No Ice	46321.03	-32.76	36793.06	4350640.68	5786.09	-366.37
1.2 Dead+1.6 Wind 210 deg - No Ice	61761.58	-18142.65	31885.05	3810138.41	2162990.21	3056.66
0.9 Dead+1.6 Wind 210 deg - No Ice	46321.18	-18142.61	31884.98	3771370.83	2140791.94	3035.99
1.2 Dead+1.6 Wind 240 deg - No Ice	61761.57	-31358.46	18424.30	2201956.32	3734632.98	5568.94
0.9 Dead+1.6 Wind 240 deg - No Ice	46321.18	-31358.54	18424.35	2179733.15	3696316.28	5537.37
1.2 Dead+1.6 Wind 270 deg - No Ice	61761.49	-36162.62	53.34	8085.28	4303937.92	6569.10
0.9 Dead+1.6 Wind 270 deg - No Ice	46321.13	-36163.22	53.35	8405.54	4259864.70	6535.13
1.2 Dead+1.6 Wind 300 deg - No Ice	61761.58	-31302.21	-18328.26	-2187776.98	3724405.42	5876.43
0.9 Dead+1.6 Wind 300 deg -	46321.18	-31302.15	-18328.23	-2164870.96	3686186.54	5849.01

Load Combination	Vertical lb	$Shear_x$ lb	$Shear_z$ lb	Overturning Moment, M_x lb-ft	Overturning Moment, M_z lb-ft	Torque lb-ft
No Ice						
1.2 Dead+1.6 Wind 330 deg - No Ice	61761.57	-18064.61	-31814.59	-3800704.28	2148776.15	3652.47
0.9 Dead+1.6 Wind 330 deg - No Ice	46321.18	-18064.66	-31814.67	-3761214.93	2126758.82	3638.67
1.2 Dead+1.0 Ice+1.0 Temp	104314.65	-0.05	0.65	-9363.17	-650.33	-0.48
1.2 Dead+1.0 Wind 0 deg+1.0 Ice+1.0 Temp	104314.63	5.44	-14194.55	-1772727.70	-1749.43	46.69
1.2 Dead+1.0 Wind 30 deg+1.0 Ice+1.0 Temp	104314.63	7069.29	-12292.47	-1536459.62	-877961.24	-1525.38
1.2 Dead+1.0 Wind 60 deg+1.0 Ice+1.0 Temp	104314.65	12234.50	-7095.19	-890814.20	-1518240.59	-2676.03
1.2 Dead+1.0 Wind 90 deg+1.0 Ice+1.0 Temp	104314.63	14123.69	-0.26	-9754.81	-1752305.67	-3117.05
1.2 Dead+1.0 Wind 120 deg+1.0 Ice+1.0 Temp	104314.63	12234.53	7095.39	871439.01	-1518212.96	-2736.20
1.2 Dead+1.0 Wind 150 deg+1.0 Ice+1.0 Temp	104314.63	7065.20	12296.48	1517824.92	-877124.33	-1616.52
1.2 Dead+1.0 Wind 180 deg+1.0 Ice+1.0 Temp	104314.63	-5.44	14201.26	1754625.77	401.91	-44.93
1.2 Dead+1.0 Wind 210 deg+1.0 Ice+1.0 Temp	104314.63	-7074.62	12301.92	1518900.01	877639.57	1537.59
1.2 Dead+1.0 Wind 240 deg+1.0 Ice+1.0 Temp	104314.63	-12239.97	7104.81	873301.90	1517940.63	2688.08
1.2 Dead+1.0 Wind 270 deg+1.0 Ice+1.0 Temp	104314.63	-14123.69	10.62	-7603.46	1750958.57	3113.44
1.2 Dead+1.0 Wind 300 deg+1.0 Ice+1.0 Temp	104314.65	-12229.07	-7085.77	-888951.63	1515818.25	2719.60
1.2 Dead+1.0 Wind 330 deg+1.0 Ice+1.0 Temp	104314.63	-7059.88	-12287.03	-1535385.00	874751.16	1605.16
Dead+Wind 0 deg - Service	51467.97	8.14	-9137.70	-1086565.34	-1619.92	97.01
Dead+Wind 30 deg - Service	51467.97	4503.41	-7914.50	-941365.89	-533555.24	-745.55
Dead+Wind 60 deg - Service	51467.97	7787.13	-4568.90	-543997.57	-921678.55	-1375.26
Dead+Wind 90 deg - Service	51467.97	8987.29	-3.03	-1966.42	-1063421.32	-1643.35
Dead+Wind 120 deg - Service	51467.97	7784.86	4564.58	540377.33	-921270.26	-1484.24
Dead+Wind 150 deg - Service	51467.97	4494.57	7915.69	938742.81	-531955.68	-922.23
Dead+Wind 180 deg - Service	51467.97	-8.14	9144.32	1084924.11	1334.47	-94.82
Dead+Wind 210 deg - Service	51467.97	-4508.67	7923.83	940219.56	534228.55	757.19
Dead+Wind 240 deg - Service	51467.97	-7793.00	4578.69	542935.62	922461.49	1387.21
Dead+Wind 270 deg - Service	51467.97	-8987.29	13.26	987.98	1063135.65	1641.15
Dead+Wind 300 deg - Service	51467.97	-7778.99	-4554.80	-541439.10	919916.09	1470.09
Dead+Wind 330 deg - Service	51467.97	-4489.30	-7906.35	-939888.97	530711.36	912.78

Maximum Tower Deflections - Service Wind

Section No.	Elevation ft	Horz. Deflection in	Gov. Load Comb.	Tilt °	Twist °
L1	175 - 130	25.028	39	1.1838	0.0072
L2	135 - 85	15.441	39	1.0692	0.0058
L3	91 - 41	6.948	39	0.7270	0.0024
L4	48 - 0	1.914	39	0.3694	0.0009

Critical Deflections and Radius of Curvature - Service Wind

Elevation ft	Appurtenance	Gov. Load Comb.	Deflection in	Tilt °	Twist °	Radius of Curvature ft
175.00	2' Dia. Dish w/ Radome	39	25.028	1.1838 (3 dB) 1.8568	0.0072 (3 dB) 1.8568	80278
155.00	(2) RR65-18-02DP w/Mount Pipe	39	20.115	1.1446	0.0067	20069
145.00	LNX-6515DS-VTM w/ Pipe Mnt.	39	17.733	1.1137	0.0063	13379
135.00	(2) 7770.00 Panels w/ Pipe Mount	39	15.441	1.0692	0.0058	10149
125.00	(2) BXA-171085-12CF-EDIN-X w/ Pipe Mount	39	13.266	1.0080	0.0051	9015
100.00	PD220	39	8.441	0.8062	0.0031	7189
85.00	GPS	39	6.033	0.6748	0.0021	6532

Compression Checks

Pole Design Data

Section No.	Elevation ft	Size	L ft	L_u ft	Kl/r	A in^2	P_u lb	ϕP_n lb	Ratio $\frac{P_u}{\phi P_n}$
L1	175 - 130 (1)	TP34.688x24x0.25	45.00	175.00	177.9	26.3842	-11667.00	188320.00	0.062
L2	130 - 85 (2)	TP44.688x33.0004x0.3125	50.00	175.00	137.7	42.6238	-26516.80	508161.00	0.052
L3	85 - 41 (3)	TP54.5x42.6605x0.375	50.00	175.00	112.7	62.4494	-41553.40	1109860.00	0.037
L4	41 - 0 (4)	TP64.5x52.0925x0.375	48.00	175.00	94.1	74.7864	-59523.20	1897630.00	0.031

Pole Bending Design Data

Section No.	Elevation ft	Size	M_{ux} lb-ft	ϕM_{nx} lb-ft	Ratio $\frac{M_{ux}}{\phi M_{nx}}$	M_{uy} lb-ft	ϕM_{ny} lb-ft	Ratio $\frac{M_{uy}}{\phi M_{ny}}$
L1	175 - 130 (1)	TP34.688x24x0.25	314904.17	1229983.33	0.256	0.00	1229983.33	0.000
L2	130 - 85 (2)	TP44.688x33.0004x0.3125	1403516.67	2537016.67	0.553	0.00	2537016.67	0.000
L3	85 - 41 (3)	TP54.5x42.6605x0.375	2718825.00	4508725.00	0.603	0.00	4508725.00	0.000
L4	41 - 0 (4)	TP64.5x52.0925x0.375	4212158.33	5975166.67	0.705	0.00	5975166.67	0.000

Pole Shear Design Data

Section No.	Elevation ft	Size	Actual V_u lb	ϕV_n lb	Ratio $\frac{V_u}{\phi V_n}$	Actual T_u lb-ft	ϕT_n lb-ft	Ratio $\frac{T_u}{\phi T_n}$
L1	175 - 130 (1)	TP34.688x24x0.25	14530.00	899151.00	0.016	225.15	2462975.00	0.000
L2	130 - 85 (2)	TP44.688x33.0004x0.3125	28269.10	1434670.00	0.020	399.71	5080233.33	0.000
L3	85 - 41 (3)	TP54.5x42.6605x0.375	32777.70	2088020.00	0.016	362.73	9028500.00	0.000
L4	41 - 0 (4)	TP64.5x52.0925x0.375	36438.90	2307960.00	0.016	362.42	11964916.00	0.000

Pole Interaction Design Data

Section No.	Elevation ft	Ratio $\frac{P_u}{\phi P_n}$	Ratio $\frac{M_{ux}}{\phi M_{nx}}$	Ratio $\frac{M_{uy}}{\phi M_{ny}}$	Ratio $\frac{V_u}{\phi V_n}$	Ratio $\frac{T_u}{\phi T_n}$	Comb. Stress Ratio	Allow. Stress Ratio	Criteria
L1	175 - 130 (1)	0.062	0.256	0.000	0.016	0.000	0.318 ✔	1.000	4.8.2 ✔
L2	130 - 85 (2)	0.052	0.553	0.000	0.020	0.000	0.606 ✔	1.000	4.8.2 ✔
L3	85 - 41 (3)	0.037	0.603	0.000	0.016	0.000	0.641 ✔	1.000	4.8.2 ✔
L4	41 - 0 (4)	0.031	0.705	0.000	0.016	0.000	0.737 ✔	1.000	4.8.2 ✔

Reinforcing Design Data (Compression)

Section No.	Elevation ft	Size	L ft	L_u ft	Kl/r	A in^2	P_u lb	ϕP_n lb	Ratio $\frac{P_u}{\phi P_n}$
L4	5 - 0	1 3/4	5.00	2.50	54.9 K=0.80	2.4053	-105532.00	153196.00	0.689 [1]

[1] P_u / ϕP_n controls

Reinforcing Bending Design Data

Section No.	Elevation ft	Size	M_{ux} lb-ft	ϕM_{nx} lb-ft	Ratio $\frac{M_{ux}}{\phi M_{nx}}$	M_{uy} lb-ft	ϕM_{ny} lb-ft	Ratio $\frac{M_{uy}}{\phi M_{ny}}$
L4	5 - 0	1 3/4	0.00	8039.07	0.000	0.00	8039.07	0.000

Reinforcing Interaction Design Data

Section No.	Elevation ft	Size	Ratio $\frac{P_u}{\phi P_n}$	Ratio $\frac{M_{ux}}{\phi M_{nx}}$	Ratio $\frac{M_{uy}}{\phi M_{ny}}$	Comb. Stress Ratio	Allow. Stress Ratio	Criteria
L4	5 - 0	1 3/4	0.689	0.000	0.000	0.689 [1] ✔	1.000	4.8.1 ✔

[1] P_u / ϕP_n controls

Tension Checks

Reinforcing Design Data (Tension)

Section No.	Elevation (ft)	Size	L (ft)	L_u (ft)	Kl/r	A (in^2)	P_u (lb)	ϕP_n (lb)	Ratio $\frac{P_u}{\phi P_n}$
L4	5 - 0	1 3/4	5.00	2.50	68.6	2.4053	102083.00	259770.00	0.393 [1]

[1] P_u / ϕP_n controls

Reinforcing Bending Design Data

Section No.	Elevation (ft)	Size	M_{ux} (lb-ft)	ϕM_{nx} (lb-ft)	Ratio $\frac{M_{ux}}{\phi M_{nx}}$	M_{uy} (lb-ft)	ϕM_{ny} (lb-ft)	Ratio $\frac{M_{uy}}{\phi M_{ny}}$
L4	5 - 0	1 3/4	66.72	8039.07	0.008	0.00	8039.07	0.000

Reinforcing Interaction Design Data

Section No.	Elevation (ft)	Size	Ratio $\frac{P_u}{\phi P_n}$	Ratio $\frac{M_{ux}}{\phi M_{nx}}$	Ratio $\frac{M_{uy}}{\phi M_{ny}}$	Comb. Stress Ratio	Allow. Stress Ratio	Criteria
L4	5 - 0	1 3/4	0.393	0.008	0.000	0.393 [1] ✔	1.000	4.8.1 ✔

[1] P_u / ϕP_n controls

Anchor Design Data

Plate Thickness (in)	Number of Anchor Bolts	Anchor Bolt Size (in)	Controlling Condition	Ratio
1.500	24	2.000	Bolt T	0.53 ✔

Section Capacity Table

Section No.	Elevation ft	Component Type	Size	Critical Element	P lb	$øP_{allow}$ lb	% Capacity	Pass Fail
L1	175 - 130	Pole	TP34.688x24x0.25	1	-11667.00	188320.00	31.8	Pass
L2	130 - 85	Pole	TP44.688x33.0004x0.3125	2	-26516.80	508161.00	60.6	Pass
L3	85 - 41	Pole	TP54.5x42.6605x0.375	3	-41553.40	1109860.00	64.1	Pass
L4	41 - 0	Pole	TP64.5x52.0925x0.375	4	-59523.20	1897630.00	73.7	Pass
L4	5 - 0	Reinforcing	1 3/4	8	-105532.00	153196.00	68.9	Pass
							Summary	
						Pole (L4)	73.7	Pass
						Base Plate	71.5	Pass
						Reinforcing (L4)	68.9	Pass
						RATING =	**73.7**	**Pass**

FOUNDATION DESIGN CALCULATIONS

Input:

$Twr := 1$ Tower Type, 1 = Monopole, 2 = SST, 3 = GT

$Fdn := 1$ Foundation Type, 1 = Spf, 2 = Mat, 3 = Caisson, 4 = Deadman Anchor, 5 = Pile Group w/ Head 6 = Single Pile or Anchoring Device, 7 = Non Battered Piles With Tapered Cross-Section

$Class := 2$ Structure Class, 1, 2, 3, Table 2-1

$SoilReport := 1$ Soil Report, 0 = Not Available, 1 = Available

$SiteClass := "D"$ Seismic Site class

Geotechnical Report Source: No Geotechnical Report / Assumed soil parameters

Foundation Source: Foundation Specs as per URS analysis Proj. #CW1021 dated 2/16/04.

Wind / Seismic: DESIGN BASE SHEAR IS GOVERNED BY WIND LOADING

Foundation Loads / Tower Base Reactions

Load Case I: 1.2D+1.0Dg+1.6Wo ; Load Case II: 0.9D+1.0Dg+1.6Wo ; Load Case III: 1.2D+1.0Dg+1.0Di+1.0Wi+1.0Ti

$n := 3$ Number of load cases $k := 1..n$

	Download $P_k :=$	Uplift $U_k :=$	Shear $Sh_k :=$	Moment $M_k :=$	Total Shear $TSh_k :=$	Tower Weight $TWt_k :=$	Dead Load Factors $DL_k :=$
Case I	$61.761 \cdot kip$	$0.0 \cdot kip$	$36.793 \cdot kip$	$4395.17 \cdot kip \cdot ft$	$0.0 \cdot kip$	$31.06 \cdot kip$	1.2
Case II	$46.321 \cdot kip$	$0.0 \cdot kip$	$36.793 \cdot kip$	$4350.64 \cdot kip \cdot ft$	$0.0 \cdot kip$	$31.06 \cdot kip$	0.9
Case III	$0.00 \cdot kip$	$0.0 \cdot kip$	$0.00 \cdot kip$	$0.00 \cdot kip \cdot ft$	$0.0 \cdot kip$	$0.00 \cdot kip$	1.2

Anchor Bolt Details (Verify details with tower manufacturer)

$n_{bolt} := 0$ No. of anchor bolts

$L_{bolt} := 0.00 \cdot in$ Anchor Bolt Length-Total

$L_{proj} := 0.00 \cdot in$ Projected length of anchor bolt

$dia_{ancb} := 2.00 \cdot in$ Anchor bolt dia.

$area_{ancb} := 3.1416 \cdot in^2$ Anchor bolt - Tensile Area

$BC_{anc} := 0.00 \cdot in$ Pole bolt circle

$f_{yancbolt} := 75 \cdot ksi$ Anchor bolt, Yield Strength, A615-75

$f_{uancbolt} := 100 \cdot ksi$ Anchor bolt, Ultimate Tensile Strength, A615-75

Foundation Dimensions

$n_{ped} := 1$ Number of pedestals, 1, 3 or 4, Use 1 for isolated spread footings, 3 or 4 for mat

$TW := 0 \cdot ft$ Tower Face Width, ft - enter 0ft for Monopole, Guyed Tower, Isolated Footings

$col_t := 0$ Pedestal, 0=Round, 1=Square

$Ped_s := 7.00 \cdot ft$ Ped diameter / side

$E_g := 0.250 \cdot ft$ Ped Extension above soil grade

$D_f := 6.00 \cdot ft$ Fdn Depth, grade to pad bottom

$L := 27.50 \cdot ft$ Length of pad

$B := L$ Width of pad

$T_f := 4.00 \cdot ft$ Thickness of pad

$toe := 0$ Has Toe =1, No Toe = 0

$ecc := 0 \cdot ft$ Eccentricity, load & pad centroid

$cc := 3.0 \cdot in$ Concrete Cover

$n_{vbars} := 50$ No. vert. bars in pedestal

$vbar := 11$ Vert. Bar Size

$tbar := 4$ Tie Bar Size

$Sp_{tie} := 12 \cdot in$ Tie Bar Spacing

$n_{hbars} := 32$ No. Horiz bars in pad

$hbar := 10$ Horiz. Bar Size

Material Parameters

$\gamma_c := 0.145 \cdot \frac{kip}{ft^3}$ Unit Wt. of Concrete

$f_c := 3000 \cdot psi$ Concrete Compressive Strength

$f_y := 60000 \cdot psi$ Rebar yield strength

$\phi_{cshear} := 0.75$ as per ACI-05, 9.3.2.3

$\phi_{ccompr} := 0.65$ as per ACI-05, 9.3.2.2

$\phi_{caxten} := 0.9$ as per ACI-05, 9.3.2.1

Soil Properties

$\phi := 30 \cdot deg$ Internal angle of friction

$c_u := 0.0 \cdot ksf$ Cohesion

$\sigma_{adh} := 0.0 \cdot ksf$ Adhesion

$\sigma_p := 0.100 \cdot \frac{kip}{ft^3}$ Passive Pressure, -1 auto calculate

$\gamma_s := 0.100 \cdot \frac{kip}{ft^3}$ Unit weight of soil

$Brg_{ult} := 8.0 \cdot ksf$ Ultimate Bearing Capacity

$\mu_{soil} := 0.20$ Coefficient of friction Concrete to Soil

$L_{neg} := 2.00 \cdot ft$ Depth of soil neglected for lateral resistance

$L_{water} := -1 \cdot ft$ Water Table, -1 No Water

$red_{up} := 1.0$ Uplift Reduction Factor

$flag_{up} := 0$ Flag to include Uplift reduction factor in the stability checks, 0 = No, 1 = Yes To Be Used When Ground Sloping

$\phi_{bg} := 0.6$ as per Rev. G, bearing, GT

$\phi_{bs} := 0.75$ as per Rev. G, bearing, SS, MP

$\phi_{up1} := 0.75$ as per Rev. G, uplift

$\phi_{up2} := 0.5$ as per Rev. G, uplift Single Rock/Soil Bolt or anchor

$\phi_{up3} := 0.4$ as per Rev. G, uplift Non-battered piles with tapered cross-section

$\phi_{sh} := 0.75$ as per Rev. G, Shear, Friction

$\phi_{lateral} := 0.75$ as per Rev. G, Lateral Resistance

$\gamma_w := 0.062428 \cdot \frac{kip}{ft^3}$ Unit Weight of Water

Re-bar Properties

$No := ((0\ \ 1\ \ 2\ \ 3\ \ 4\ \ 5\ \ 6\ \ 7\ \ 8\ \ 9\ \ 10\ \ 11\ \ 12\ \ 13\ \ 14\ \ 15\ \ 16\ \ 17\ \ 18))^T$

$d_b := ((0\ \ 0\ \ 0\ \ 0.375\ \ 0.5\ \ 0.625\ \ 0.75\ \ 0.875\ \ 1.00\ \ 1.128\ \ 1.27\ \ 1.41\ \ 0\ \ 0\ \ 1.693\ \ 0\ \ 0\ \ 0\ \ 2.257))^T \cdot in$

$A_b := ((0\ \ 0\ \ 0\ \ 0.11\ \ 0.20\ \ 0.31\ \ 0.44\ \ 0.60\ \ 0.79\ \ 1.00\ \ 1.27\ \ 1.56\ \ 0\ \ 0\ \ 2.25\ \ 0\ \ 0\ \ 0\ \ 4.00))^T \cdot in^2$

Total Resisting Moment - Alternate Way

$q_k := \frac{Tw_k}{B \cdot L}$ $\qquad q_c := Brg_{ult} \cdot \phi_{brg}$ $\qquad q_c = 6 \cdot ksf$

$Mralt_k := \frac{L \cdot Tw_k}{2} \cdot \left(1 - \frac{q_k}{q_c}\right)$

Overturning Moment

$L_{hs} := D_f + E_g$ Lever Arm

$Mo_k := M_k + Sh_k \cdot L_{hs} + P_k \cdot ecc$

Eccentricity

$ec_k := \frac{Mo_k}{Tw_k}$

Bearing - Combined Compression and Moment

$qmax_k := if\left[ec_k \le \frac{L}{6}, \left[\frac{Tw_k}{B \cdot L} \cdot \left(1 + \frac{6 \cdot ec_k}{L}\right)\right], \left[\frac{Tw_k}{B \cdot (L - 2 \cdot ec_k)}\right]\right]$

$qmin_k := if\left[ec_k \le \frac{L}{6}, \left[\frac{Tw_k}{B \cdot L} \cdot \left(1 - \frac{6\, ec_k}{L}\right)\right], 0 \cdot ksf\right]$

$qmaxalt_k := \frac{(Tw_k)^2}{Tw_k \cdot L^2 - 2 \cdot Mo_k \cdot B}$

$Lp_k := if\left[ec_k \le \frac{L}{6}, L, (L - 2 \cdot ec_k)\right]$

Overturning Moment $Mo_k =$		Resisting Moment $Mr_k =$		Alternate Resisting Moment $Mralt_k =$		Total Download $Tw_k =$		Eccentricity $ec_k =$		Contact Length $Lp_k =$	
$4.625 \cdot 10^3$	$\cdot kip$	$1.08 \cdot 10^4$	$\cdot kip \cdot ft$	$8.84 \cdot 10^3$	$\cdot kip \cdot ft$	775.441	$\cdot kip$	5.965	$\cdot ft$	15.571	$\cdot ft$
$4.581 \cdot 10^3$		$8.134 \cdot 10^3$		$6.972 \cdot 10^3$		581.581		7.876		11.748	
0		$9.951 \cdot 10^3$		$8.27 \cdot 10^3$		713.68		0		27.5	

Max Bearing $qmax_k =$		Min Bearing $qmin_k =$		Max Bearing-Alternative $qmaxalt_k =$	
1.811	$\cdot ksf$	0	$\cdot ksf$	1.811	$\cdot ksf$
1.8		0		1.8	
0.944		0.944		0.944	

Bearing Ratios

$$Rbr_k := \frac{qmax_k}{Brg_{ult} \cdot \phi_{brg}}$$

OTM - Stability Ratios

$$Rmom_k := \frac{Mo_k}{Mr_k} \qquad Rmomalt_k := \frac{Mo_k}{Mralt_k}$$

Shear Check

Total Resisting Shear

$$Shr_k := \phi_{sh} \cdot \left(Tw_k \cdot \mu_{soil} + Pe_p\right)$$

$$Rsh_k := \frac{Sh_k}{Shr_k}$$

Combined Bearing and Moment - Ratios

Bearing Ratio	Overturning Ratio	Contact Length
$Rbr_k =$	$Rmom_k =$	$Lp_k =$
30.182 ·%	42.826 ·%	15.571 ·ft
30.003	56.312	11.748
15.728	0	27.5

Shear Ratio

Total Shear	Shear Resistance	Shear Ratio
$Sh_k =$	$Shr_k =$	$Rsh_k =$
36.793 ·kip	132.816 ·kip	27.702 ·%
36.793	103.737	35.468
0	123.552	0

APPENDIX 2 – SOURCE / CHANGED CONDITION

This report is not to be reproduced or copied in whole or in part without MEI's written consent. 2016, MEI, Inc. ©

From: Vertical Resources Group <mnobre@verticalresourcesgrp.com>
Sent: Monday, October 31, 2016 9:19 AM
To: 'Malouf Engr - Liz Adkins'
Cc: 'Mark Malouf'
Subject: RE: AT&T Site CT2070 FA10035312 175' Pole

AT&T coax is RFS 1.625" (4/sec, 12 tot.) existing to remain in place, (2) 5/8" DC power, (1) 3/8" fiber.
…
Miguel Nobre
Vertical Resources Group
489 Washington Street
Auburn, MA 01501
P: 508-981-9590
F: 508-519-8939

From: Vertical Resources Group [mailto:mnobre@verticalresourcesgrp.com]
Sent: Sunday, October 30, 2016 10:16 AM
To: Mark Malouf
Subject: RE: AT&T Site CT2070 FA10035312 175' Pole

…
AT&T Existing Loading:
(6) Powerwave 7770 (UMTS & GSM existing to remain)
(1) CCI HPA65RBUUH8 (LTE to remain)
(2) CCI HPA65RBUUH6 (LTE to remain)
(6) CCI LGP21401 (UMTS TMA to remain)
(3) CCI DTMABP7819VG12A (GSM to remain)
(3) Ericsson RRUS-11 (LTE700 to remain)
(3) Ericsson RRUS-12+A2 (LTE PCS TO BE REPLACED)
(1) Raycap Surge arrestor DC6-48-60-18-8F (to remain)
Mount Valmont RMV12

AT&T Existing Loading:
(6) Powerwave 7770 (UMTS & GSM existing to remain)
(1) CCI HPA65RBUUH8 (LTE to remain)
(2) CCI HPA65RBUUH6 (LTE to remain)
(6) CCI LGP21401 (UMTS TMA to remain)
(3) CCI DTMABP7819VG12A (GSM to remain)
(3) Ericsson RRUS-11 (LTE700 to remain)
(3) Ericsson RRUS-32 B2 (LTE PCS NEW)
(1) Raycap Surge arrestor DC6-48-60-18-8F (to remain)
Mount Valmont RMV12

Miguel Nobre
Vertical Resources Group
489 Washington Street
Auburn, MA 01501
P: 508-981-9590
F: 508-519-8939

Section 17A - FINAL SECTOR/CELL INFORMATION - SECTOR A (OR OMNI)

ANTENNA COMMON FIELDS	ANTENNA POSITION 1		ANTENNA POSITION 2		ANTENNA POSITION 3		ANTENNA POSITION 4		ANTENNA POSITION 5		ANTENNA POSITION 6		ANTENNA POSITION 7	
ANTENNA MAKE - MODEL	HPA-65R-BUU-H8				7770		7770							
ANTENNA VENDOR	CCI Antennas				Powerwave		Powerwave							
ANTENNA SIZE (H x W x D)	92.4X14.8X7				55X11X5		55X11X5							
ANTENNA WEIGHT	68				35		35							
AZIMUTH	90				143		143							
MAGNETIC DECLINATION														
RADIATION CENTER (feet)	135				135		135							
ANTENNA TIP HEIGHT														
MECHANICAL DOWNTILT	0				0		0							
FEEDER AMOUNT					2		2							
VERTICAL SEPARATION from ANTENNA ABOVE (TIP to TIP)														
VERTICAL SEPARATION from ANTENNA BELOW (TIP to TIP)														
HORIZONTAL SEPARATION from CLOSEST ANTENNA to LEFT (CENTERLINE to CENTERLINE)														
HORIZONTAL SEPARATION from CLOSEST ANTENNA to RIGHT (CENTERLINE to CENTERLINE)														
HORIZONTAL SEPARATION from ANOTHER ANTENNA (which antenna # / # of inches)														
Antenna RET Motor (QTY/MODEL)		Bulit in			2	Powerwave 7020	2	Powerwave 7020						
SURGE ARRESTOR (QTY/MODEL)	1	DC/Fiber Squid					1	POLYPHASER 1000860						
DIPLEXER (QTY/MODEL)					2	Powerwave / LGP 21901	2	Powerwave / LGP 21901						
DUPLEXER (QTY/MODEL)														
Antenna RET CONTROL UNIT (QTY/MODEL)		LTE RRH					1	Powerwave7070						
DC BLOCK (QTY/MODEL)														
TMA/LNA (QTY/MODEL)					2	Powerwave / LGP 21401 (Dual Band - 850 Bypass)	1	DTMABP7819VG12A (Twin 700/850 Bypass)						
CURRENT INJECTORS FOR TMA (QTY/MODEL)					2	POLYPHASER 1000860	1	Kathrein 782-10253BTS						
PDU FOR TMAS (QTY/MODEL)					1	LGP 12104 (1900 AND 850 Bypass TMA)								
FILTER (QTY/MODEL)														
SQUID (QTY/MODEL)														
FIBER TRUNK (QTY/MODEL)														
DC TRUNK (QTY/MODEL)														
RRH - 700 band (QTY/MODEL)	1	RRUS-11												
RRH - 850 band (QTY/MODEL)														
RRH - 1900 band (QTY/MODEL)	1	RRUS-32 B2												
RRH - AWS band (QTY/MODEL)														
RRH - WCS band (QTY/MODEL)														
Additional RRH #1 - any band (QTY/MODEL)														
Additional RRH #2 - any band (QTY/MODEL)														
Additional Component 1 (QTY/MODEL)							2	Pwav 1001983 (1) & 1001940 (1)						
Additional Component 2 (QTY/MODEL)														
Additional Component 3 (QTY/MODEL)														
Local Market Note 1	LTE BWE 1900 A3-A4 & E // Replace existing LTE 1900 radio with RRUS-32 B2 on existing LTE Antenna // Add XMU.													
Local Market Note 2	LTE alpha is with UMTS Gamma Face // LTE Beta is with UMTS Alpha Face // LTE Gamma is with UMTS Beta Face													
Local Market Note 3	Baseband Config - 1 DUS + XMU DUS-1 - 7A:7B:7C:X1P1:X1P2:_ XMU-1 - PA:PA2A:PB:PA2B:PC:PA2C:_:_:_:_:_:_:_:_:D1E:D1													

PORT SPECIFIC FIELDS	PORT NUMBER	USEID (CSSng)	USEID (Atoll)	ATOLL TXID	ATOLL CELL ID	TX/RX ?	TECHNOLOGY/FREQUENCY	ANTENNA ATOLL	ANTENNA GAIN	ELECTRICAL AZIMUTH	ELECTRICAL TILT	RRH LOCATION (Top/Bottom/Integrated/None)	FEEDERS TYPE	FEEDER LENGTH (feet)	RXAIT KIT MODULE?	TRIPLEXER or LLC (QTY)	TRIPLEXER or LLC (MODEL)	SCPA/MCPA MODULE?	HATCHPLATE POWER (Watts)	ERP (Watts)	Antenna RET Name	CABLE NUMBER	CABLE ID (CSSNG)
ANTENNA POSITION 1	PORT 1	27009.A.700.4G.1	27009.A.700.4G.1	CTL02070_7A_1	CTL02070_7A_1		LTE 700	HPA-65R-BUU-H8_719MHz_03DT	15.3	90	3	Top	FIBER	0						1044.72		1	
	PORT 3	27009.A.1900.4G.1	27009.A.1900.4G.111	CTL02070_9A_1	CTL02070_9A_1		LTE 1900	HPA-65R-BUU-H8_1948MHz_07DT	17.4	90	7	Top	FIBER	0						3380.67		1	
ANTENNA POSITION 3	PORT 1	27009.A.850.3G.1	27009.A.850.3G.1	CTV20701	CTV20701		UMTS 850	7770.00.850.00	13	143	0	None	RFS 1-5/8	155						264.85		5	
	PORT 2	27009.A.850.3G.2	27009.A.850.3G.2	CTV20701	CTV2070A		UMTS 850	7770.00.850.00	13	143	0	BOTTOM	RFS 1-5/8	155						264.85		6	
	PORT 3	27009.A.1900.3G.1,27009.A.1900.3G.2	27009.A.1900.3G.2	CTU20707	CTU20707		UMTS 1900	7770.00.1900.00	15	143	0	None	RFS 1-5/8	155						592.93		5	
ANTENNA POSITION 4	PORT 1	27009.A.850.25G.1	27009.A.850.25G.1	321G20701	321G20701		GSM 850	7770.00.850.00	13	143	0	None	RFS 1-5/8	155						155		7	

Section 17B - FINAL SECTOR/CELL INFORMATION - SECTOR B

ANTENNA COMMON FIELDS	ANTENNA POSITION 1		ANTENNA POSITION 2		ANTENNA POSITION 3		ANTENNA POSITION 4		ANTENNA POSITION 5		ANTENNA POSITION 6		ANTENNA POSITION 7	
ANTENNA MAKE - MODEL	HPA-65R-BUU-H6				7770		7770							
ANTENNA VENDOR	CCI Antennas				Powerwave		Powerwave							
ANTENNA SIZE (H x W x D)	72X14.8X7.4				55X11X5		55X11X5							
ANTENNA WEIGHT	51				35		35							
AZIMUTH	210				263		263							
MAGNETIC DECLINATION														
RADIATION CENTER (feet)	135				135		135							
ANTENNA TIP HEIGHT														
MECHANICAL DOWNTILT	0				0		0							
FEEDER AMOUNT					2		2							
VERTICAL SEPARATION from ANTENNA ABOVE (TIP to TIP)														
VERTICAL SEPARATION from ANTENNA BELOW (TIP to TIP)														
HORIZONTAL SEPARATION from CLOSEST ANTENNA to LEFT (CENTERLINE to CENTERLINE)														
HORIZONTAL SEPARATION from CLOSEST ANTENNA to RIGHT (CENTERLINE to CENTERLINE)														
HORIZONTAL SEPARATION from ANOTHER ANTENNA (which antenna # / # of inches)														
Antenna RET Motor (QTY/MODEL)		Bulit in			2	Powerwave 7020	2	Powerwave 7020						
SURGE ARRESTOR (QTY/MODEL)							1	POLYPHASER 1000860						
DIPLEXER (QTY/MODEL)					2	Powerwave / LGP 21901	2	Powerwave / LGP 21901						
DUPLEXER (QTY/MODEL)														
Antenna RET CONTROL UNIT (QTY/MODEL)		LTE RRH												
DC BLOCK (QTY/MODEL)														
TMA/LNA (QTY/MODEL)					2	Powerwave / LGP 21401 (Dual Band - 850 Bypass)	1	DTMABP7819VG12A (Twin 700/850 Bypass)						
CURRENT INJECTORS FOR TMA (QTY/MODEL)					2	POLYPHASER 1000860	1	Kathrein 782-10253BTS						
PDU FOR TMAS (QTY/MODEL)														
FILTER (QTY/MODEL)														
SQUID (QTY/MODEL)														
FIBER TRUNK (QTY/MODEL)														
DC TRUNK (QTY/MODEL)														
RRH - 700 band (QTY/MODEL)	1	RRUS-11												
RRH - 850 band (QTY/MODEL)														
RRH - 1900 band (QTY/MODEL)	1	RRUS-32 B2												
RRH - AWS band (QTY/MODEL)														
RRH - WCS band (QTY/MODEL)														
Additional RRH #1 - any band (QTY/MODEL)														
Additional RRH #2 - any band (QTY/MODEL)														
Additional Component 1 (QTY/MODEL)							2	Pwav 1001983 (1) & 1001940 (1)						
Additional Component 2 (QTY/MODEL)														
Additional Component 3 (QTY/MODEL)														
Local Market Note 1	LTE BWE 1900 A3-A4 & E // Replace existing LTE 1900 radio with RRUS-32 B2 on existing LTE Antenna // Add XMU.													
Local Market Note 2	LTE alpha is with UMTS Gamma Face // LTE Beta is with UMTS Alpha Face // LTE Gamma is with UMTS Beta Face													
Local Market Note 3	Baseband Config - 1 DUS + XMU DUS-1 - 7A:7B:7C:X1P1:X1P2:_ XMU-1 - PA:PA2A:PB:PA2B:PC:PA2C:_:_:_:_:_:_:_:_:D1E:D1													

PORT SPECIFIC FIELDS	PORT NUMBER	USEID (CSSng)	USEID (Atoll)	ATOLL TXID	ATOLL CELL ID	TX/RX ?	TECHNOLOGY/FREQUENCY	ANTENNA ATOLL	ANTENNA GAIN	ELECTRICAL AZIMUTH	ELECTRICAL TILT	RRH LOCATION (Top/Bottom/Integrated/None)	FEEDERS TYPE	FEEDER LENGTH (feet)	RXAIT KIT MODULE?	TRIPLEXER or LLC (QTY)	TRIPLEXER or LLC (MODEL)	SCPA/MCPA MODULE?	HATCHPLATE POWER (Watts)	ERP (Watts)	Antenna RET Name	CABLE NUMBER	CABLE ID (CSSNG)
ANTENNA POSITION 1	PORT 1	27009.B.700.4G.1	27009.B.700.4G.1	CTL02070_7B_1	CTL02070_7B_1		LTE 700	HPA-65R-BUU-H6_719MHz_03DT	14.22	210	3	Top	FIBER	0						827.94		9	
	PORT 3	27009.B.1900.4G.1	27009.B.1900.4G.111	CTL02070_9B_1	CTL02070_9B_1		LTE 1900	HPA-65R-BUU-H6_1930MHz_07DT	17.21	210	7	Top	FIBER	0						3258.37		9	
ANTENNA POSITION 3	PORT 1	27009.B.850.3G.1	27009.B.850.3G.1	CTV20702	CTV20702		UMTS 850	7770.00.850.00	13	263	0	None	RFS 1-5/8	155						264.85		13	
	PORT 2	27009.B.850.3G.2	27009.B.850.3G.2	CTV20702	CTV2070B		UMTS 850	7770.00.850.00	13	263	0	BOTTOM	RFS 1-5/8	155						264.85		14	
	PORT 3	27009.B.1900.3G.1,27009.B.1900.3G.2	27009.B.1900.3G.2	CTU20708	CTU20708		UMTS 1900	7770.00.1900.00	15	263	0	None	RFS 1-5/8	155						592.93		13	
ANTENNA POSITION 4	PORT 1	27009.B.850.25G.1	27009.B.850.25G.1	321G20702	321G20702		GSM 850	7770.00.850.00	13	263	0	None	RFS 1-5/8	155						347		15	

Section 17C - FINAL SECTOR/CELL INFORMATION - SECTOR C

ANTENNA COMMON FIELDS	ANTENNA POSITION 1		ANTENNA POSITION 2		ANTENNA POSITION 3		ANTENNA POSITION 4		ANTENNA POSITION 5		ANTENNA POSITION 6		ANTENNA POSITION 7	
ANTENNA MAKE - MODEL	HPA-65R-BUU-H6				7770		7770							
ANTENNA VENDOR	CCI Antennas				Powerwave		Powerwave							
ANTENNA SIZE (H x W x D)	72X14.8X7.4				55X11X5		55X11X5							
ANTENNA WEIGHT	51				35		35							
AZIMUTH	330				23		23							
MAGNETIC DECLINATION														
RADIATION CENTER (feet)	135				135		135							
ANTENNA TIP HEIGHT														
MECHANICAL DOWNTILT	0				0		0							
FEEDER AMOUNT					2		2							
VERTICAL SEPARATION from ANTENNA ABOVE (TIP to TIP)														
VERTICAL SEPARATION from ANTENNA BELOW (TIP to TIP)														
HORIZONTAL SEPARATION from CLOSEST ANTENNA to LEFT (CENTERLINE to CENTERLINE)														
HORIZONTAL SEPARATION from CLOSEST ANTENNA to RIGHT (CENTERLINE to CENTERLINE)														
HORIZONTAL SEPARATION from ANOTHER ANTENNA (which antenna # / # of inches)														
Antenna RET Motor (QTY/MODEL)		Bulit in			2	Powerwave 7020	2	Powerwave 7020						
SURGE ARRESTOR (QTY/MODEL)							1	POLYPHASER 1000860						
DIPLEXER (QTY/MODEL)					2	Powerwave / LGP 21901	2	Powerwave / LGP 21901						
DUPLEXER (QTY/MODEL)														
Antenna RET CONTROL UNIT (QTY/MODEL)		LTE RRH												
DC BLOCK (QTY/MODEL)														
TMA/LNA (QTY/MODEL)					2	Powerwave / LGP 21401 (Dual Band - 850 Bypass)	1	DTMABP7819VG12A (Twin 700/850 Bypass)						
CURRENT INJECTORS FOR TMA (QTY/MODEL)					2	POLYPHASER 1000860	1	Kathrein 782-10253BTS						
PDU FOR TMAS (QTY/MODEL)														
FILTER (QTY/MODEL)														
SQUID (QTY/MODEL)														
FIBER TRUNK (QTY/MODEL)														
DC TRUNK (QTY/MODEL)														
RRH - 700 band (QTY/MODEL)	1	RRUS-11												
RRH - 850 band (QTY/MODEL)														
RRH - 1900 band (QTY/MODEL)	1	RRUS-32 B2												
RRH - AWS band (QTY/MODEL)														
RRH - WCS band (QTY/MODEL)														
Additional RRH #1 - any band (QTY/MODEL)														
Additional RRH #2 - any band (QTY/MODEL)														
Additional Component 1 (QTY/MODEL)							2	Pwav 1001983 (1) & 1001940 (1)						
Additional Component 2 (QTY/MODEL)														
Additional Component 3 (QTY/MODEL)														
Local Market Note 1	LTE BWE 1900 A3-A4 & E // Replace existing LTE 1900 radio with RRUS-32 B2 on existing LTE Antenna // Add XMU.													
Local Market Note 2	LTE alpha is with UMTS Gamma Face // LTE Beta is with UMTS Alpha Face // LTE Gamma is with UMTS Beta Face													
Local Market Note 3	Baseband Config - 1 DUS + XMU DUS-1 - 7A:7B:7C:X1P1:X1P2:_ XMU-1 - PA:PA2A:PB:PA2B:PC:PA2C:_:_:_:_:_:_:_:_:D1E:D1													

PORT SPECIFIC FIELDS	PORT NUMBER	USEID (CSSng)	USEID (Atoll)	ATOLL TXID	ATOLL CELL ID	TX/RX ?	TECHNOLOGY/FREQUENCY	ANTENNA ATOLL	ANTENNA GAIN	ELECTRICAL AZIMUTH	ELECTRICAL TILT	RRH LOCATION (Top/Bottom/Integrated/None)	FEEDERS TYPE	FEEDER LENGTH (feet)	RXAIT KIT MODULE?	TRIPLEXER or LLC (QTY)	TRIPLEXER or LLC (MODEL)	SCPA/MCPA MODULE?	HATCHPLATE POWER (Watts)	ERP (Watts)	Antenna RET Name	CABLE NUMBER	CABLE ID (CSSNG)
ANTENNA POSITION 1	PORT 1	27009.C.700.4G.1	27009.C.700.4G.1	CTL02070_7C_1	CTL02070_7C_1		LTE 700	HPA-65R-BUU-H6_719MHz_03DT	14.22	330	0	Top	FIBER	0						827.94		17	
	PORT 3	27009.C.1900.4G.1	27009.C.1900.4G.111	CTL02070_9C_1	CTL02070_9C_1		LTE 1900	HPA-65R-BUU-H6_1930MHz_03DT	17	330	3	Top	FIBER	0						3258.37		17	
ANTENNA POSITION 3	PORT 1	27009.C.850.3G.1	27009.C.850.3G.1	CTV20703	CTV20703		UMTS 850	7770.00.850.00	13	23	0	None	RFS 1-5/8	155						264.85		21	
	PORT 2	27009.C.850.3G.2	27009.C.850.3G.2	CTV20703	CTV2070C		UMTS 850	7770.00.850.00	13	23	0	BOTTOM	RFS 1-5/8	155						264.85		22	
	PORT 3	27009.C.1900.3G.1,27009.C.1900.3G.2	27009.C.1900.3G.2	CTU20709	CTU20709		UMTS 1900	7770.00.1900.00	15	23	0	None	RFS 1-5/8	155						592.93		21	
ANTENNA POSITION 4	PORT 1	27009.C.850.25G.1	27009.C.850.25G.1	321G20703	321G20703		GSM 850	7770.00.850.00	13	23	0	None	RFS 1-5/8	155						155		23	
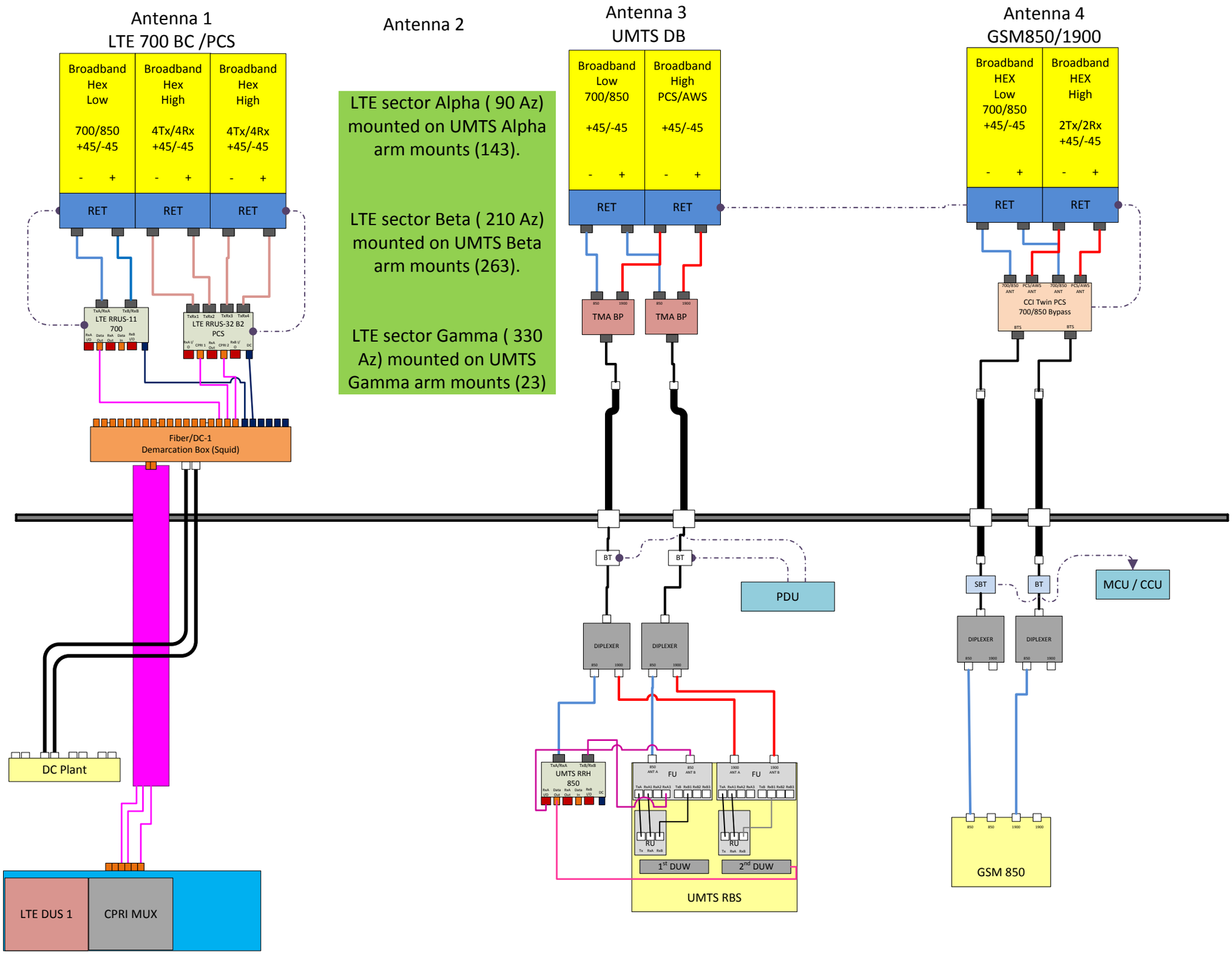
Diagram - Sector	A	Diagram File Name - CT2070_A_B_C_BWE1900_Rev2.vsd					
Atoll Site Name -	CT2070	Location Name -	NEW FAIFIELD SR37-SR39	Market -	CONNECTICUT	Market Cluster -	NEW ENGLAND
Comments: