AMERICAN TOWER®
CORPORATION

This report was prepared for American Tower Corporation by

CLSGroup

Structural Analysis Report

Structure	:	**100.5 ft Monopole**
ATC Site Name	:	**Mlfd - Milford, CT**
ATC Site Number	:	**302516**
Engineering Number	:	**OAA681725_C3_01**
Proposed Carrier	:	**AT&T Mobility**
Carrier Site Name	:	**Milford-Bridgeport Ave**
Carrier Site Number	:	**CTL02111 / 10034978**
Site Location	:	**438 Bridgeport Ave** **Milford, CT 06460-4105** **41.206611,-73.093400**
County	:	**New Haven**
Date	:	**August 3, 2016**
Max Usage	:	**75%**
Result	:	**Pass**

Reviewed by:
Scott Wirgau, PE
Structural Team Leader

STATE OF CONNECTICUT
SCOTT A. WIRGAU
30575
LICENSED
PROFESSIONAL ENGINEER

Prepared By:
Jeff Sparks
CLS

Aug 4 2016 5:42 PM

cosign

COA: PEC.0001553

Table of Contents

Introduction 1

Supporting Documents 1

Analysis 1

Conclusion 1

Existing and Reserved Equipment 2

Equipment to be Removed 2

Proposed Equipment 2

Structure Usages 3

Foundations 3

Deflection, Twist, and Sway 3

Standard Conditions 4

Calculations ..... Attached

Introduction

The purpose of this report is to summarize results of a structural analysis performed on the 100.5 ft monopole to reflect the change in loading by AT&T Mobility.

Supporting Documents

Tower Drawings	Spectra Site #CT-0052, dated May 31, 2002
Foundation Drawing	Spectra Site #CT-0052, dated January, 2003
Geotechnical Report	AET Job #002GT03, dated January 7, 2003
Modifications	Spectra Site #CT-0052, dated January 14, 2003

Analysis

The tower was analyzed using American Tower Corporation's tower analysis software. This program considers an elastic three-dimensional model and second-order effects per ANSI/TIA-222.

Basic Wind Speed:	110 mph (3-Second Gust)
Basic Wind Speed w/ Ice:	50 mph (3-Second Gust) w/ 3/4" radial ice concurrent
Code:	ANSI/TIA-222-G / 2003 IBC w/ 2005 CT Supplement & 2009 CT Amendment
Structure Class:	II
Exposure Category:	B
Topographic Category:	1
Crest Height:	0 ft
Spectral Response:	$Ss = 0.20$, $S_1 = 0.06$
Site Class:	D - Stiff Soil

Conclusion

Based on the analysis results, the structure meets the requirements per the applicable codes listed above. The tower and foundation can support the equipment as described in this report.

If you have any questions or require additional information, please contact American Tower via email at Engineering@americantower.com. Please include the American Tower site name, site number, and engineering number in the subject line for any questions.

Existing and Reserved Equipment

Elevation[1] (ft)		Qty	Antenna	Mount Type	Lines	Carrier
Mount	RAD					
100.0	108.0	1	15' Omni	Platform w/ Handrails	(1) 1 5/8" Coax	Unknown
	102.0	6	Powerwave LGP21401		(12) 1 5/8" Coax (4) 0.78" 8 AWG 6 (2) 0.39" Fiber Trunk (2) 3" Conduit	AT&T Mobility
		2	Raycap DC6-48-60-18-8F			
		6	Ericsson RRUS 11 (Band 12)			
		3	Ericsson RRUS 32			
		3	KMW AM-X-CD-14-65-00T-RET			
		3	Powerwave 7770.00			
		3	CCI OPA-65R-LCUU-H4			
93.0	93.0	3	Decibel 932LG65T2A-M	Flush	(6) 7/8" Coax	Sprint Nextel
80.0	80.0	6	RFS APX86-909014L-CT0-00	Flush	(9) 7/8" Coax	
73.0	73.0	3	Kathrein Smart Bias Tee	T-Arms	(18) 7/8" Coax	T-Mobile
		3	Ericsson KRY 112 489/2			
		3	RFS ATMAA1412D-1A20			
		3	RFS APX16PV-16PVL-A			
		3	Commscope LNX-6515DS-VTM			

Equipment to be Removed

Elevation[1] (ft)		Qty	Antenna	Mount Type	Lines	Carrier
Mount	RAD					
No loading considered as to be removed						

Proposed Equipment

Elevation[1] (ft)		Qty	Antenna	Mount Type	Lines	Carrier
Mount	RAD					
100.0	102.0	2	Commscope WCS-IMFQ-AMT	Platform w/ Handrails	-	AT&T Mobility

[1]Mount elevation is defined as height above bottom of steel structure to the bottom of mount, RAD elevation is defined as center of antenna above ground level (AGL).

Structure Usages

Structural Component	Controlling Usage	Pass/Fail
Anchor Bolts	40%	Pass
Shaft	69%	Pass
Base Plate	43%	Pass
Reinforcement	75%	Pass

Foundations

Reaction Component	Analysis Reactions	% of Usage
Moment (Kips-Ft)	1,498.4	64%
Axial (Kips)	39.7	
Shear (Kips)	22.2	

The structure base reactions resulting from this analysis were found to be acceptable through analysis based on geotechnical and foundation information, therefore no modification or reinforcement of the foundation will be required.

Deflection and Sway*

Antenna Elevation (ft)	Antenna	Carrier	Deflection (ft)	Sway (Rotation) (°)
100.0	Commscope WCS-IMFQ-AMT	AT&T Mobility	0.773	0.751

***Deflection and Sway was evaluated considering a design wind speed of 60 mph (3-Second Gust) per ANSI/TIA-222-G**

AMERICAN TOWER®
CORPORATION

Standard Conditions

All engineering services are performed on the basis that the information used is current and correct. This information may consist of, but is not necessary limited, to:

-- Information supplied by the client regarding the structure itself, antenna, mounts and feed line loading on the structure and its components, or other relevant information.

-- Information from drawings in the possession of American Tower Corporation, or generated by field inspections or measurements of the structure.

It is the responsibility of the client to ensure that the information provided to A.T. Engineering Service, PLLC and used in the performance of our engineering services is correct and complete. In the absence of information to the contrary, we assume that all structures were constructed in accordance with the drawings and specifications and that their capacity has not significantly changed from the "as new" condition.

Unless explicitly agreed by both the client and American Tower Corporation, all services will be performed in accordance with the current revision of ANSI/TIA -222. The design basic wind speed will be determined based on the minimum basic wind speed as prescribed in ANSI/TIA-222. Although every effort is taken to ensure that the loading considered is adequate to meet the requirements of all applicable regulatory entities, we can provide no assurance to meet any other local and state codes or requirements. If wind and ice loads or other relevant parameters are to be different from the minimum values recommended by the codes, the client shall specify the exact requirement.

All services are performed, results obtained, and recommendations made in accordance with generally accepted engineering principles and practices. A.T. Engineering Service, PLLC is not responsible for the conclusions, opinions and recommendations made by others based on the information we supply.

© 2007 - 2016 by ATC IP LLC. All rights reserved.

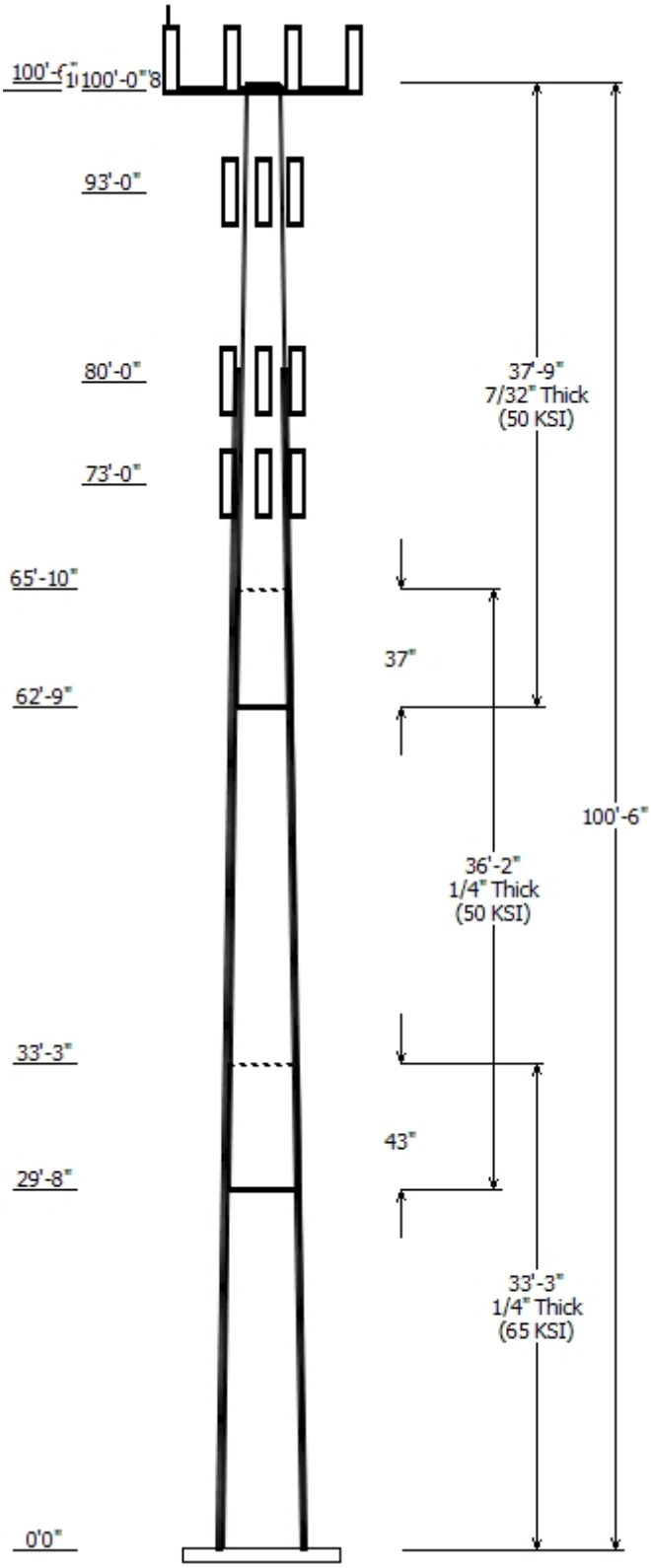

Job Information

Pole :	302516	Code:	ANSI/TIA-222-G
Description :	100 ft ITT Meyer Type "D" Monopole		
Client :	AT&T Mobility	Struct Class :	II
Location :	Mlfd - Milford, CT		
Shape :	12 Sides	Exposure :	B
Height :	100.50 (ft)	Topo :	1
Base Elev (ft):	0.00		
Taper:	0.17848 (in/ft)		

Sections Properties

Shaft Section	Length (ft)	Diameter (in) Accross Flats Top	Bottom	Thick (in)	Joint Type	Overlap Length (in)	Taper (in/ft)	Steel Grade (ksi)
1	33.250	26.06	32.00	0.250		0.000	0.178500	65
2	36.167	20.75	27.20	0.250	Slip Joint	43.000	0.178500	50
3	37.750	15.00	21.73	0.219	Slip Joint	37.000	0.178500	50

Discrete Appurtenance

Attach Elev (ft)	Force Elev (ft)	Qty	Description
100.010	108.010	1	15' Omni
100.000	102.000	2	Commscope WCS-IMFQ-AMT
100.000	102.000	3	CCI OPA-65R-LCUU-H4
100.000	102.000	3	Ericsson RRUS 32
100.000	102.000	3	Powerwave 7770.00
100.000	102.000	3	KMW AM-X-CD-14-65-00T-RET
100.000	102.000	6	Powerwave LGP21401
100.000	102.000	2	Raycap DC6-48-60-18-8F
100.000	102.000	6	Ericsson RRUS 11 (Band 12)
100.000	100.000	1	Flat Platform w/ Handrails
93.000	93.000	3	Decibel 932LG65T2A-M
80.000	80.000	6	RFS APX86-909014L-CT0-00
73.000	73.000	3	Commscope LNX-6515DS-VTM
73.000	73.000	3	RFS ATMAA1412D-1A20
73.000	73.000	3	Ericsson KRY 112 489/2
73.000	73.000	3	Kathrein Scala Smart Bias Tee
73.000	73.000	3	RFS APX16PV-16PVL-A

Linear Appurtenance

Elev (ft) From	To	Description	Exposed To Wind
0.000	73.000	7/8" Coax	Yes
0.000	80.000	7/8" Coax	Yes
0.000	85.000	#20 DYWIDAG	Yes
0.000	93.000	7/8" Coax	Yes
0.000	100.0	0.39" Fiber Trunk	No
0.000	100.0	0.78" 8 AWG 6	No
0.000	100.0	1 5/8" Coax	No
0.000	100.0	3" Conduit	No
0.000	100.0	1 5/8" Coax	No

Load Cases

1.2D + 1.6W	110 mph with No Ice
0.9D + 1.6W	110 mph with No Ice (Reduced DL)
1.2D + 1.0Di + 1.0Wi	50 mph with 0.75 in Radial Ice
(1.2 + 0.2Sds) * DL + E	Seismic Equivalent Lateral Forces Method
(1.2 + 0.2Sds) * DL + E	Seismic Equivalent Modal Analysis Method
(0.9 - 0.2Sds) * DL + E	Seismic (Reduced DL) Equivalent Lateral
(0.9 - 0.2Sds) * DL + E	Seismic (Reduced DL) Equivalent Modal

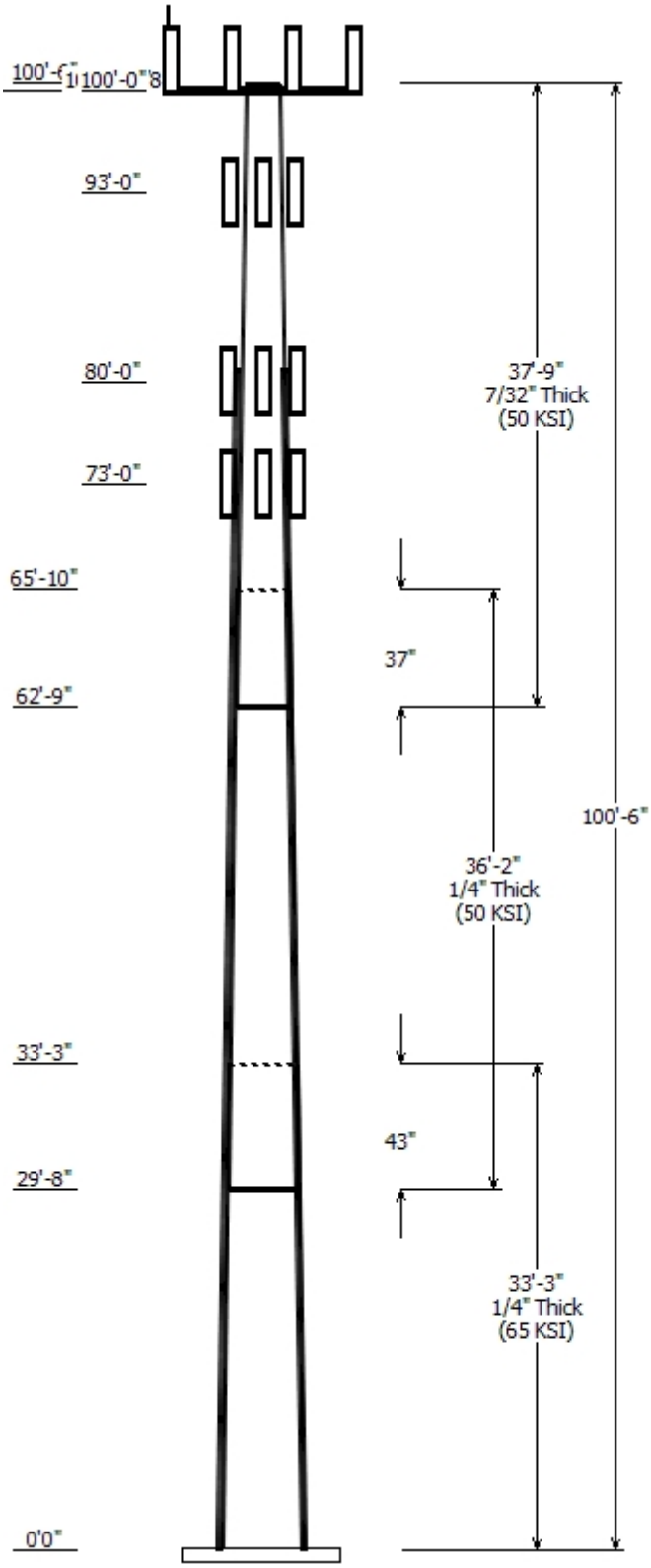

1.0D + 1.0W	Serviceability 60 mph

Reactions

Load Case	Moment (kip-ft)	Shear (kip)	Axial (kip)
1.2D + 1.6W	1498.37	22.23	23.13
0.9D + 1.6W	1474.38	22.06	17.33
1.2D + 1.0Di + 1.0Wi	266.01	3.83	39.75
(1.2 + 0.2Sds) * DL + E ELFM	86.44	1.10	22.81
(1.2 + 0.2Sds) * DL + E EMAM	139.49	1.62	22.81
(0.9 - 0.2Sds) * DL + E ELFM	85.69	1.10	15.75
(0.9 - 0.2Sds) * DL + E EMAM	138.19	1.61	15.75
1.0D + 1.0W	277.81	4.16	19.32

Dish Deflections

Load Case	Attach Elev (ft)	Deflection (in)	Rotation (deg)
	0.00	0.000	0.000

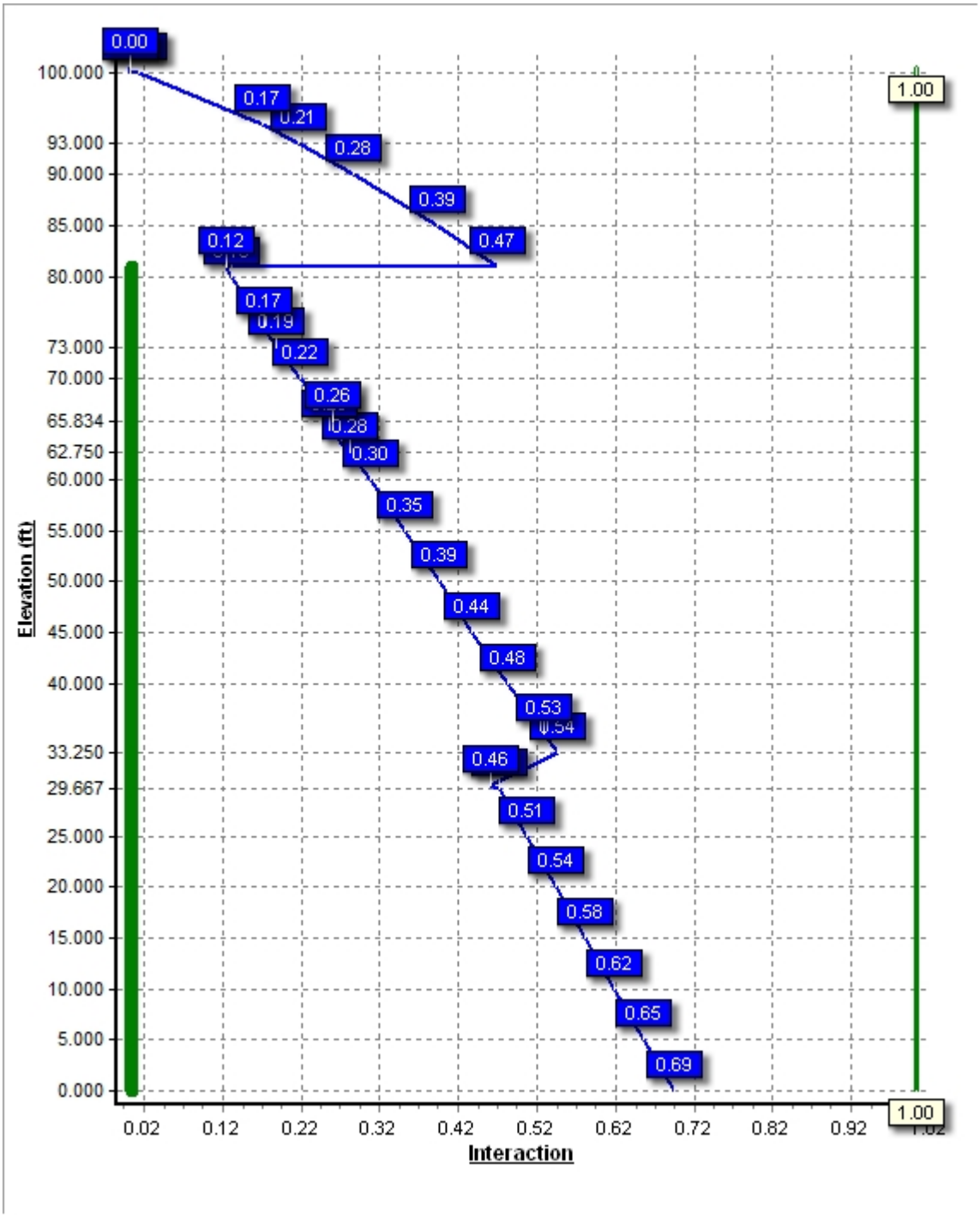
0.00
0.17
0.21
0.28
0.39
0.47
0.12
0.17
0.19
0.22
0.26
0.28
0.30
0.35
0.39
0.44
0.48
0.53
0.54
0.46
0.51
0.54
0.58
0.62
0.65
0.69
1.00
1.00
100.000
93.000
90.000
85.000
80.000
73.000
70.000
65.834
62.750
60.000
55.000
50.000
45.000
40.000
33.250
29.667
25.000
20.000
15.000
10.000
5.000
0.000
Elevation (ft)
0.02
0.12
0.22
0.32
0.42
0.52
0.62
0.72
0.82
0.92
Interaction

Site Number:	**302516**	**Code:**	**ANSI/TIA-222-G**	*© 2007 - 2016 by ATC IP LLC. All rights reserved.*
Site Name:	**Mlfd - Milford, CT**	**Engineering Number:**	**OAA681725_C3_01**	**8/3/2016 8:44:38 PM**
Customer:	**AT&T Mobility**			

Analysis Parameters

Location:	**New Haven County, CT**		
Code:	**ANSI/TIA-222-G**	**Height (ft):**	**100.**
Shape:	**12 Sides**	**Base Diameter (in):**	**32.00**
Pole Type:	**Taper**	**Top Diameter (in):**	**15.00**
Pole Manfacturer:	**ITT Meyer**	**Taper (in/ft) :**	**0.178**

Ice & Wind Parameters

Structure Class:	**II**	**Design Wind Speed Without Ice:**	**110 mph**
Exposure Category:	**B**	**Design Wind Speed With Ice:**	**50 mph**
Topographic Category:	**1**	**Operational Wind Speed:**	**60 mph**
Crest Height:	**0.0 ft**	**Design Ice Thickness:**	**0.75 in**

Seismic Parameters

Analysis Method:	**Equivalent Modal Analysis & Equivalent Lateral Force Methods**
Site Class:	**D - Stiff Soil**
Period Based on Rayleigh Method (sec):	**1.54**

T_L (sec):	**6**	**p:**	**1.3**	**C_s:**	**0.044**
S_s:	**0.198**	**S_1:**	**0.063**	**C_s Max:**	**0.044**
F_a:	**1.600**	**F_v:**	**2.400**	**C_s Min:**	**0.030**
S_{ds}:	**0.211**	**S_{d1}:**	**0.101**		

Load Cases

1.2D + 1.6W	**110 mph with No Ice**
0.9D + 1.6W	**110 mph with No Ice (Reduced DL)**
1.2D + 1.0Di + 1.0Wi	**50 mph with 0.75 in Radial Ice**
(1.2 + 0.2Sds) * DL + E ELFM	**Seismic Equivalent Lateral Forces Method**
(1.2 + 0.2Sds) * DL + E EMAM	**Seismic Equivalent Modal Analysis Method**
(0.9 - 0.2Sds) * DL + E ELFM	**Seismic (Reduced DL) Equivalent Lateral Forces Method**
(0.9 - 0.2Sds) * DL + E EMAM	**Seismic (Reduced DL) Equivalent Modal Analysis Method**
1.0D + 1.0W	**Serviceability 60 mph**

© 2007 - 2016 by ATC IP LLC. All rights reserved.

Shaft Section Properties

Sect Info	Length (ft)	Thick (in)	Fy (ksi)	Joint Type	Slip Joint Len (in)	Weight (lb)	Bottom Dia (in)	Bottom Elev (ft)	Bottom Area (in²)	Bottom Ix (in⁴)	Bottom W/t Ratio	Bottom D/t Ratio	Top Dia (in)	Top Elev (ft)	Top Area (in²)	Top Ix (in⁴)	Top W/t Ratio	Top D/t Ratio	Taper (in/ft)
1-12	33.250	0.2500	65		0.00	2,622	32.00	0.00	25.56	3288.6	32.15	128.00	26.06	33.25	20.78	1767.8	25.79	104.26	0.178483
2-12	36.167	0.2500	50	Slip	43.00	2,351	27.20	29.67	21.70	2012.3	27.01	108.82	20.75	65.83	16.50	885.2	20.10	83.00	0.178483
3-12	37.750	0.2188	50	Slip	37.00	1,642	21.73	62.75	15.16	895.9	24.48	99.37	15.00	100.50	10.41	290.4	16.23	68.57	0.178483
				Shaft Weight		6,614													

Discrete Appurtenance Properties

Attach Elev (ft)	Description	Qty	No Ice Weight (lb)	No Ice EPAa (sf)	No Ice Orientation Factor	Ice Weight (lb)	Ice EPAa (sf)	Ice Orientation Factor	Distance From Face (ft)	Vert Ecc (ft)
100.01	15' Omni	1	40.00	4.500	1.00	227.23	9.705	1.00	0.000	8.000
100.00	CCI OPA-65R-LCUU-H4	3	57.00	6.080	0.78	210.96	7.078	0.78	0.000	2.000
100.00	Commscope WCS-IMFQ-AMT	2	29.50	0.990	0.50	70.18	1.394	0.50	0.000	2.000
100.00	Ericsson RRUS 11 (Band 12)	6	50.00	2.570	0.67	127.28	3.191	0.67	0.000	2.000
100.00	Ericsson RRUS 32	3	50.80	2.690	0.67	131.81	3.384	0.67	0.000	2.000
100.00	Flat Platform w/ Handrails	1	2000.00	42.400	1.00	3,364.04	62.529	1.00	0.000	0.000
100.00	KMW AM-X-CD-14-65-00T-	3	36.40	4.990	0.78	161.00	5.931	0.78	0.000	2.000
100.00	Powerwave 7770.00	3	35.00	5.510	0.77	163.23	6.517	0.77	0.000	2.000
100.00	Powerwave LGP21401	6	14.10	1.100	0.50	45.80	1.542	0.50	0.000	2.000
100.00	Raycap DC6-48-60-18-8F	2	20.00	1.110	1.00	96.39	2.495	1.00	0.000	2.000
93.00	Decibel 932LG65T2A-M	3	13.00	4.080	0.90	126.10	4.975	0.90	0.000	0.000
80.00	RFS APX86-909014L-CT0-00	6	24.20	8.470	0.81	203.31	9.790	0.81	0.000	0.000
73.00	Commscope LNX-6515DS-	3	50.30	11.440	0.84	291.86	12.983	0.84	0.000	0.000
73.00	Ericsson KRY 112 489/2	3	15.40	0.650	0.50	37.70	0.880	0.50	0.000	0.000
73.00	Kathrein Scala Smart Bias	3	3.30	0.090	0.50	9.21	0.229	0.50	0.000	0.000
73.00	RFS APX16PV-16PVL-A	3	39.60	6.040	0.66	157.47	7.029	0.66	0.000	0.000
73.00	RFS ATMAA1412D-1A20	3	13.00	1.000	0.50	44.80	1.398	0.50	0.000	0.000
	Totals	54	3610.20			10,185.20			Number of Loadings :	17

Linear Appurtenance Properties

Elev From (ft)	Elev To (ft)	Qty	Description	Coax Diameter (in)	Coax Weight (lb/ft)	Flat	Projected Width (in)	Exposed To Wind	Carrier
0.00	100.01	1	1 5/8" Coax	1.98	0.82	N	0.00	N	Abandoned
0.00	100.00	2	0.39" Fiber Trunk	0.39	0.06	N	0.00	N	AT&T Mobility
0.00	100.00	4	0.78" 8 AWG 6	0.78	0.59	N	0.00	N	AT&T Mobility
0.00	100.00	12	1 5/8" Coax	1.98	0.82	N	0.00	N	AT&T Mobility
0.00	100.00	2	3" Conduit	3.50	7.58	N	0.00	N	AT&T Mobility
0.00	93.00	6	7/8" Coax	1.09	0.33	N	3.27	Y	Sprint Nextel
0.00	85.00	4	#20 DYWIDAG	2.50	0.00	N	4.73	Y	--
0.00	80.00	9	7/8" Coax	1.09	0.33	N	1.94	Y	Sprint Nextel
0.00	73.00	18	7/8" Coax	1.09	0.33	N	0.00	Y	T-Mobile

Additional Steel

Elev From (ft)	Elev To (ft)	Qty	Description	Fy (ksi)	Offset (in)	Intermediate Connections Description	Spacing (in)	Len (in)	Connectors	Continuation?
0.00	81.00	4	SOL #20 All Thread	80	2.08	6" Angle Bracket	30.0	3.31	5/8" A36 U-Bolt	Yes

 © 2007 - 2016 by ATC IP LLC. All rights reserved.

Segment Properties (Max Len : 5. ft)

Seg Top Elev (ft)	Description	Thick (in)	Flat Dia (in)	Area (in^2)	Ix (in^4)	W/t Ratio	D/t Ratio	Fy (ksi)	S (in^3)	Z (in^3)	Weight (lb)	Additional Reinforcing Area (in^2)	Additional Reinforcing Ix (in^4)	Additional Reinforcing Weight (lb)
0.00		0.2500	32.000	25.559	3,288.6	32.15	128.00	69.6	198.5	0.0	0.0	19.64	3,676	0.0
5.00		0.2500	31.108	24.840	3,019.0	31.20	124.43	70.7	187.5	0.0	428.7	19.64	3,509	334.0
10.00		0.2500	30.215	24.122	2,764.6	30.24	120.86	71.7	176.8	0.0	416.5	19.64	3,345	334.0
15.00		0.2500	29.323	23.404	2,524.9	29.28	117.29	72.8	166.3	0.0	404.3	19.64	3,186	334.0
20.00		0.2500	28.430	22.685	2,299.4	28.33	113.72	73.8	156.2	0.0	392.1	19.64	3,030	334.0
25.00		0.2500	27.538	21.967	2,087.8	27.37	110.15	74.9	146.5	0.0	379.9	19.64	2,878	334.0
29.67	Bot - Section 2	0.2500	26.705	21.296	1,902.4	26.48	106.82	75.8	137.6	0.0	343.5	19.64	2,740	311.7
30.00		0.2500	26.646	21.248	1,889.6	26.41	106.58	75.9	137.0	0.0	48.7	19.64	2,813	22.3
33.25	Top - Section 1	0.2500	26.565	21.184	1,872.5	26.33	106.26	61.2	136.2	0.0	469.3	19.64	2,717	217.1
35.00		0.2500	26.253	20.933	1,806.6	25.99	105.01	61.4	132.9	0.0	125.4	19.64	2,667	116.9
40.00		0.2500	25.361	20.214	1,626.9	25.04	101.44	62.1	123.9	0.0	350.0	19.64	2,524	334.0
45.00		0.2500	24.468	19.496	1,459.5	24.08	97.87	62.8	115.2	0.0	337.8	19.64	2,386	334.0
50.00		0.2500	23.576	18.777	1,304.1	23.12	94.30	63.0	106.9	0.0	325.6	19.64	2,252	334.0
55.00		0.2500	22.683	18.059	1,160.0	22.17	90.73	63.0	98.8	0.0	313.4	19.64	2,121	334.0
60.00		0.2500	21.791	17.341	1,027.0	21.21	87.16	63.0	91.0	0.0	301.1	19.64	1,994	334.0
62.75	Bot - Section 3	0.2500	21.300	16.945	958.4	20.69	85.20	63.0	86.9	0.0	160.4	19.64	1,926	183.7
65.00		0.2500	20.899	16.622	904.6	20.26	83.59	63.0	83.6	0.0	243.4	19.64	1,931	150.3
65.83	Top - Section 2	0.2188	21.187	14.770	828.9	23.81	96.86	63.0	75.6	0.0	89.0	19.64	1,911	55.7
70.00		0.2188	20.444	14.246	743.8	22.90	93.46	63.0	70.3	0.0	205.7	19.64	1,811	278.3
73.00		0.2188	19.908	13.869	686.3	22.24	91.01	63.0	66.6	0.0	143.5	19.64	1,740	200.4
75.00		0.2188	19.551	13.617	649.6	21.81	89.38	63.0	64.2	0.0	93.5	19.64	1,694	133.6
80.00		0.2188	18.659	12.989	563.7	20.71	85.30	63.0	58.4	0.0	226.3	19.64	1,581	334.0
81.00	Reinf. Top	0.2188	18.480	12.863	547.5	20.49	84.48	63.0	57.2	0.0	44.0	19.64	1,559	66.8
85.00		0.2188	17.766	12.360	485.8	19.62	81.22	63.0	52.8	0.0	171.7			
90.00		0.2188	16.874	11.732	415.4	18.53	77.14	63.0	47.6	0.0	204.9			
93.00		0.2188	16.339	11.354	376.6	17.87	74.69	63.0	44.5	0.0	117.8			
95.00		0.2188	15.982	11.103	352.1	17.43	73.06	63.0	42.6	0.0	76.4			
100.0		0.2188	15.089	10.474	295.6	16.34	68.98	63.0	37.9	0.0	183.6			
100.0		0.2188	15.087	10.473	295.5	16.34	68.97	63.0	37.8	0.0	0.4			
100.5		0.2188	15.000	10.412	290.4	16.23	68.57	63.0	37.4	0.0	17.4			
											6,614.4			5,410.8

© 2007 - 2016 by ATC IP LLC. All rights reserved.

Load Case: 1.2D + 1.6W 110 mph with No Ice 22 Iterations

Gust Response Factor : 1.10
Dead Load Factor : 1.20
Wind Load Factor : 1.60

Wind Importance Factor : 1.00

Applied Segment Forces Summary

		Shaft Forces		Discrete Forces				Linear Forces		Sum of Forces			
Seg Elev (ft)	Description	Wind FX (lb)	Dead Load (lb)	Wind FX (lb)	Torsion MY (lb-ft)	Moment MZ (lb-ft)	Dead Load (lb)	Wind FX (lb)	Dead Load (lb)	Wind FX (lb)	Dead Load (lb)	Torsion MY (lb-ft)	Moment MZ (lb)
0.00		296.1	0.0					0.0	0.0	296.1	0.0	0.0	0.0
5.00		583.8	514.5					170.1	635.9	753.9	1,150.4	0.0	0.0
10.00		567.0	499.8					170.1	635.9	737.1	1,135.8	0.0	0.0
15.00		550.3	485.2					170.1	635.9	720.4	1,121.1	0.0	0.0
20.00		533.5	470.5					170.1	635.9	703.6	1,106.4	0.0	0.0
25.00		500.1	455.8					170.1	635.9	670.2	1,091.8	0.0	0.0
29.67	Bot - Section 2	254.5	412.2					158.7	593.5	413.3	1,005.7	0.0	0.0
30.00		183.4	58.5					11.3	42.4	194.8	100.9	0.0	0.0
33.25	Top - Section 1	256.5	563.1					111.9	413.4	368.4	976.5	0.0	0.0
35.00		348.4	150.5					61.3	222.6	409.7	373.1	0.0	0.0
40.00		516.8	420.0					178.9	635.9	695.6	1,056.0	0.0	0.0
45.00		515.7	405.4					183.9	635.9	699.6	1,041.3	0.0	0.0
50.00		512.1	390.7					188.6	635.9	700.7	1,026.6	0.0	0.0
55.00		506.4	376.0					192.9	635.9	699.2	1,012.0	0.0	0.0
60.00		388.1	361.4					196.9	635.9	584.9	997.3	0.0	0.0
62.75	Bot - Section 3	249.5	192.5					109.9	349.8	359.4	542.3	0.0	0.0
65.00		154.5	292.1					90.7	286.1	245.2	578.2	0.0	0.0
65.83	Top - Section 2	247.3	106.8					33.8	106.0	281.1	212.9	0.0	0.0
70.00		351.4	246.8					170.3	529.9	521.8	776.7	0.0	0.0
73.00	Appertunance(s)	241.6	172.2	2,030.2	0.0	0.0	437.8	124.1	381.6	2,395.9	991.5	0.0	0.0
75.00		331.2	112.2					83.4	240.1	414.6	352.4	0.0	0.0
80.00	Appertunance(s)	281.6	271.6	1,976.7	0.0	0.0	174.2	210.6	600.3	2,468.9	1,046.1	0.0	0.0
81.00	Reinf. Top	228.3	52.8					33.2	116.5	261.5	169.3	0.0	0.0
85.00		411.6	206.0					133.5	145.3	545.1	351.3	0.0	0.0
90.00		365.8	245.9					0.0	181.7	365.8	427.6	0.0	0.0
93.00	Appertunance(s)	206.4	141.4	552.3	0.0	0.0	46.8	0.0	109.0	758.6	297.2	0.0	0.0
95.00		240.4	91.7					0.0	67.9	240.4	159.6	0.0	0.0
100.00	Appertunance(s)	170.6	220.3	4,520.4	0.0	4,700.5	3,625.4	0.0	169.8	4,691.0	4,015.5	0.0	0.0
100.01		16.6	0.4					0.0	0.0	16.6	0.4	0.0	0.0
100.50		16.3	20.9					0.0	0.0	16.3	20.9	0.0	0.0
								Totals:		22,229.6	23,136.8	0.00	0.00

© 2007 - 2016 by ATC IP LLC. All rights reserved.

Load Case: 1.2D + 1.6W 110 mph with No Ice 22 Iterations

Gust Response Factor : 1.10
Dead Load Factor : 1.20
Wind Load Factor : 1.60

Wind Importance Factor : 1.00

Calculated Forces

Seg Elev (ft)	Pu FY (-) (kips)	Vu FX (-) (kips)	Tu MY (ft-kips)	Mu MZ (ft-kips)	Mu MX (ft-kips)	Resultant Moment (ft-kips)	phi Pn (kips)	phi Vn (kips)	phi Tn (ft-kips)	phi Mn (ft-kips)	Total Deflect (in)	Rotation (deg)	Ratio
0.00	-23.13	-22.23	0.00	-1,498.37	0.00	1,498.37	1,602.06	801.03	2,099.85	1,037.04	0.00	0.00	0.691
5.00	-21.87	-21.59	0.00	-1,387.22	0.00	1,387.22	1,580.35	790.18	2,012.72	994.01	0.16	-0.29	0.654
10.00	-20.63	-20.94	0.00	-1,279.30	0.00	1,279.30	1,557.29	778.65	1,925.54	950.95	0.63	-0.59	0.617
15.00	-19.42	-20.30	0.00	-1,174.58	0.00	1,174.58	1,532.89	766.44	1,838.45	907.94	1.39	-0.87	0.580
20.00	-18.23	-19.67	0.00	-1,073.06	0.00	1,073.06	1,507.13	753.57	1,751.60	865.05	2.46	-1.15	0.542
25.00	-17.07	-19.05	0.00	-974.71	0.00	974.71	1,480.03	740.02	1,665.15	822.35	3.81	-1.42	0.505
29.67	-16.03	-18.65	0.00	-885.80	0.00	885.80	1,453.52	726.76	1,584.95	782.75	5.33	-1.67	0.470
30.00	-15.91	-18.48	0.00	-879.58	0.00	879.58	1,451.58	725.79	1,579.24	779.93	5.45	-1.69	0.459
33.25	-14.90	-18.11	0.00	-819.53	0.00	819.53	1,166.36	583.18	1,265.06	624.76	6.66	-1.86	0.543
35.00	-14.49	-17.73	0.00	-787.83	0.00	787.83	1,157.16	578.58	1,240.04	612.41	7.36	-1.95	0.527
40.00	-13.39	-17.05	0.00	-699.17	0.00	699.17	1,130.25	565.12	1,169.24	577.44	9.53	-2.18	0.481
45.00	-12.32	-16.36	0.00	-613.91	0.00	613.91	1,102.43	551.21	1,099.53	543.02	11.93	-2.41	0.435
50.00	-11.27	-15.65	0.00	-532.11	0.00	532.11	1,064.67	532.34	1,022.34	504.90	14.57	-2.62	0.393
55.00	-10.24	-14.94	0.00	-453.84	0.00	453.84	1,023.94	511.97	945.22	466.81	17.43	-2.82	0.349
60.00	-9.24	-14.33	0.00	-379.13	0.00	379.13	983.21	491.60	871.11	430.21	20.47	-3.00	0.305
62.75	-8.70	-13.95	0.00	-339.72	0.00	339.72	960.80	480.40	831.64	410.72	22.23	-3.09	0.280
65.00	-8.12	-13.68	0.00	-308.33	0.00	308.33	942.48	471.24	800.03	395.11	23.70	-3.16	0.254
65.83	-7.91	-13.40	0.00	-296.93	0.00	296.93	837.44	418.72	723.09	357.11	24.26	-3.19	0.257
70.00	-7.14	-12.85	0.00	-241.09	0.00	241.09	807.75	403.87	672.45	332.10	27.09	-3.30	0.216
73.00	-6.28	-10.40	0.00	-202.55	0.00	202.55	786.36	393.18	637.13	314.66	29.19	-3.38	0.186
75.00	-5.94	-9.98	0.00	-181.74	0.00	181.74	772.10	386.05	614.12	303.29	30.62	-3.42	0.170
80.00	-5.04	-7.45	0.00	-131.85	0.00	131.85	736.46	368.23	558.43	275.79	34.25	-3.52	0.129
81.00	-4.88	-7.19	0.00	-124.40	0.00	124.40	729.34	364.67	547.61	270.44	34.99	-3.53	0.123
81.00	-4.88	-7.19	0.00	-124.40	0.00	124.40	729.34	364.67	547.61	270.44	34.99	-3.53	0.467
85.00	-4.55	-6.63	0.00	-95.65	0.00	95.65	700.82	350.41	505.38	249.59	37.98	-3.59	0.390
90.00	-4.13	-6.25	0.00	-62.49	0.00	62.49	665.18	332.59	454.99	224.70	41.87	-3.82	0.285
93.00	-3.87	-5.48	0.00	-43.73	0.00	43.73	643.80	321.90	426.02	210.39	44.31	-3.93	0.214
95.00	-3.73	-5.23	0.00	-32.77	0.00	32.77	629.54	314.77	407.24	201.12	45.97	-3.99	0.169
100.00	-0.05	-0.27	0.00	-1.89	0.00	1.89	593.90	296.95	362.13	178.84	50.20	-4.07	0.011
100.01	-0.02	-0.02	0.00	-0.01	0.00	0.01	593.83	296.91	362.05	178.80	50.21	-4.07	0.000
100.50	0.00	-0.02	0.00	0.00	0.00	0.00	590.33	295.17	357.77	176.69	50.62	-4.07	0.000

© 2007 - 2016 by ATC IP LLC. All rights reserved.

Load Case: 0.9D + 1.6W — 110 mph with No Ice (Reduced DL) — 22 Iterations

Gust Response Factor : 1.10
Dead Load Factor : 0.90
Wind Load Factor : 1.60

Wind Importance Factor : 1.00

Applied Segment Forces Summary

		Shaft Forces		Discrete Forces				Linear Forces		Sum of Forces			
Seg Elev (ft)	Description	Wind FX (lb)	Dead Load (lb)	Wind FX (lb)	Torsion MY (lb-ft)	Moment MZ (lb-ft)	Dead Load (lb)	Wind FX (lb)	Dead Load (lb)	Wind FX (lb)	Dead Load (lb)	Torsion MY (lb-ft)	Moment MZ (lb)
0.00		296.1	0.0					0.0	0.0	296.1	0.0	0.0	0.0
5.00		583.8	385.9					170.1	477.0	753.9	862.8	0.0	0.0
10.00		567.0	374.9					170.1	477.0	737.1	851.8	0.0	0.0
15.00		550.3	363.9					170.1	477.0	720.4	840.8	0.0	0.0
20.00		533.5	352.9					170.1	477.0	703.6	829.8	0.0	0.0
25.00		500.1	341.9					170.1	477.0	670.2	818.8	0.0	0.0
29.67	Bot - Section 2	254.5	309.2					158.7	445.2	413.3	754.3	0.0	0.0
30.00		183.4	43.8					11.3	31.8	194.8	75.6	0.0	0.0
33.25	Top - Section 1	256.5	422.3					111.9	310.0	368.4	732.4	0.0	0.0
35.00		348.4	112.9					61.3	166.9	409.7	279.8	0.0	0.0
40.00		516.8	315.0					178.9	477.0	695.6	792.0	0.0	0.0
45.00		515.7	304.0					183.9	477.0	699.6	781.0	0.0	0.0
50.00		512.1	293.0					188.6	477.0	700.7	770.0	0.0	0.0
55.00		506.4	282.0					192.9	477.0	699.2	759.0	0.0	0.0
60.00		388.1	271.0					196.9	477.0	584.9	748.0	0.0	0.0
62.75	Bot - Section 3	249.5	144.4					109.9	262.4	359.4	406.7	0.0	0.0
65.00		154.5	219.1					90.7	214.6	245.2	433.7	0.0	0.0
65.83	Top - Section 2	247.3	80.1					33.8	79.5	281.1	159.7	0.0	0.0
70.00		351.4	185.1					170.3	397.4	521.8	582.5	0.0	0.0
73.00	Appertunance(s)	241.6	129.2	2,030.2	0.0	0.0	328.3	124.1	286.2	2,395.9	743.6	0.0	0.0
75.00		331.2	84.2					83.4	180.1	414.6	264.3	0.0	0.0
80.00	Appertunance(s)	281.6	203.7	1,976.7	0.0	0.0	130.7	210.6	450.2	2,468.9	784.6	0.0	0.0
81.00	Reinf. Top	228.3	39.6					33.2	87.4	261.5	127.0	0.0	0.0
85.00		366.2	154.5					133.5	109.0	499.6	263.5	0.0	0.0
90.00		291.3	184.5					0.0	136.3	291.3	320.7	0.0	0.0
93.00	Appertunance(s)	177.3	106.1	552.3	0.0	0.0	35.1	0.0	81.8	729.6	222.9	0.0	0.0
95.00		240.4	68.8					0.0	50.9	240.4	119.7	0.0	0.0
100.00	Appertunance(s)	170.6	165.2	4,520.4	0.0	4,700.5	2,719.1	0.0	127.3	4,691.0	3,011.6	0.0	0.0
100.01		16.6	0.3					0.0	0.0	16.6	0.3	0.0	0.0
100.50		16.3	15.7					0.0	0.0	16.3	15.7	0.0	0.0
									Totals:	22,080.6	17,352.6	0.00	0.00

© 2007 - 2016 by ATC IP LLC. All rights reserved.

Load Case: 0.9D + 1.6W 110 mph with No Ice (Reduced DL) 22 Iterations

Gust Response Factor : 1.10
Dead Load Factor : 0.90
Wind Load Factor : 1.60

Wind Importance Factor : 1.00

Calculated Forces

Seg Elev (ft)	Pu FY (-) (kips)	Vu FX (-) (kips)	Tu MY (ft-kips)	Mu MZ (ft-kips)	Mu MX (ft-kips)	Resultant Moment (ft-kips)	phi Pn (kips)	phi Vn (kips)	phi Tn (ft-kips)	phi Mn (ft-kips)	Total Deflect (in)	Rotation (deg)	Ratio
0.00	-17.33	-22.06	0.00	-1,474.38	0.00	1,474.38	1,602.06	801.03	2,099.85	1,037.04	0.00	0.00	0.678
5.00	-16.36	-21.39	0.00	-1,364.06	0.00	1,364.06	1,580.35	790.18	2,012.72	994.01	0.16	-0.29	0.641
10.00	-15.41	-20.72	0.00	-1,257.10	0.00	1,257.10	1,557.29	778.65	1,925.54	950.95	0.62	-0.58	0.604
15.00	-14.49	-20.06	0.00	-1,153.48	0.00	1,153.48	1,532.89	766.44	1,838.45	907.94	1.37	-0.86	0.567
20.00	-13.58	-19.41	0.00	-1,053.16	0.00	1,053.16	1,507.13	753.57	1,751.60	865.05	2.42	-1.13	0.531
25.00	-12.69	-18.78	0.00	-956.11	0.00	956.11	1,480.03	740.02	1,665.15	822.35	3.75	-1.40	0.494
29.67	-11.90	-18.37	0.00	-868.48	0.00	868.48	1,453.52	726.76	1,584.95	782.75	5.24	-1.64	0.460
30.00	-11.81	-18.19	0.00	-862.36	0.00	862.36	1,451.58	725.79	1,579.24	779.93	5.35	-1.66	0.449
33.25	-11.05	-17.83	0.00	-803.23	0.00	803.23	1,166.36	583.18	1,265.06	624.76	6.54	-1.82	0.530
35.00	-10.73	-17.44	0.00	-772.03	0.00	772.03	1,157.16	578.58	1,240.04	612.41	7.23	-1.91	0.515
40.00	-9.90	-16.76	0.00	-684.83	0.00	684.83	1,130.25	565.12	1,169.24	577.44	9.36	-2.14	0.470
45.00	-9.09	-16.06	0.00	-601.05	0.00	601.05	1,102.43	551.21	1,099.53	543.02	11.72	-2.36	0.425
50.00	-8.29	-15.36	0.00	-520.75	0.00	520.75	1,064.67	532.34	1,022.34	504.90	14.31	-2.57	0.383
55.00	-7.52	-14.65	0.00	-443.97	0.00	443.97	1,023.94	511.97	945.22	466.81	17.11	-2.76	0.341
60.00	-6.77	-14.04	0.00	-370.74	0.00	370.74	983.21	491.60	871.11	430.21	20.10	-2.94	0.297
62.75	-6.36	-13.67	0.00	-332.13	0.00	332.13	960.80	480.40	831.64	410.72	21.82	-3.03	0.272
65.00	-5.93	-13.41	0.00	-301.38	0.00	301.38	942.48	471.24	800.03	395.11	23.27	-3.10	0.247
65.83	-5.77	-13.12	0.00	-290.20	0.00	290.20	837.44	418.72	723.09	357.11	23.81	-3.13	0.250
70.00	-5.20	-12.58	0.00	-235.52	0.00	235.52	807.75	403.87	672.45	332.10	26.59	-3.24	0.210
73.00	-4.58	-10.15	0.00	-197.79	0.00	197.79	786.36	393.18	637.13	314.66	28.65	-3.31	0.181
75.00	-4.33	-9.72	0.00	-177.49	0.00	177.49	772.10	386.05	614.12	303.29	30.05	-3.35	0.165
80.00	-3.69	-7.22	0.00	-128.87	0.00	128.87	736.46	368.23	558.43	275.79	33.61	-3.45	0.125
81.00	-3.57	-6.95	0.00	-121.65	0.00	121.65	729.34	364.67	547.61	270.44	34.34	-3.46	0.119
81.00	-3.57	-6.95	0.00	-121.65	0.00	121.65	729.34	364.67	547.61	270.44	34.34	-3.46	0.455
85.00	-3.32	-6.44	0.00	-93.85	0.00	93.85	700.82	350.41	505.38	249.59	37.26	-3.52	0.381
90.00	-3.00	-6.14	0.00	-61.62	0.00	61.62	665.18	332.59	454.99	224.70	41.08	-3.75	0.279
93.00	-2.82	-5.40	0.00	-43.20	0.00	43.20	643.80	321.90	426.02	210.39	43.47	-3.86	0.210
95.00	-2.71	-5.16	0.00	-32.39	0.00	32.39	629.54	314.77	407.24	201.12	45.10	-3.91	0.166
100.00	-0.03	-0.27	0.00	-1.89	0.00	1.89	593.90	296.95	362.13	178.84	49.25	-3.99	0.011
100.01	-0.01	-0.02	0.00	-0.01	0.00	0.01	593.83	296.91	362.05	178.80	49.26	-3.99	0.000
100.50	0.00	-0.02	0.00	0.00	0.00	0.00	590.33	295.17	357.77	176.69	49.66	-3.99	0.000

© 2007 - 2016 by ATC IP LLC. All rights reserved.

Load Case: 1.2D + 1.0Di + 1.0Wi 50 mph with 0.75 in Radial Ice 21 Iterations

Gust Response Factor : 1.10
Dead Load Factor : 1.20
Wind Load Factor : 1.00

Ice Dead Load Factor : 1.00

Wind Importance Factor : 1.00
Ice Importance Factor : 1.00

Applied Segment Forces Summary

		Shaft Forces		Discrete Forces				Linear Forces		Sum of Forces			
Seg Elev (ft)	Description	Wind FX (lb)	Dead Load (lb)	Wind FX (lb)	Torsion MY (lb-ft)	Moment MZ (lb-ft)	Dead Load (lb)	Wind FX (lb)	Dead Load (lb)	Wind FX (lb)	Dead Load (lb)	Torsion MY (lb-ft)	Moment MZ (lb)
0.00		40.9	0.0					0.0	0.0	40.9	0.0	0.0	0.0
5.00		81.1	756.6					39.5	902.7	120.7	1,659.3	0.0	0.0
10.00		79.4	763.6					41.4	934.8	120.9	1,698.5	0.0	0.0
15.00		77.5	755.5					42.4	951.4	119.9	1,706.8	0.0	0.0
20.00		75.6	742.3					43.0	962.8	118.6	1,705.2	0.0	0.0
25.00		71.2	726.6					43.5	971.7	114.7	1,698.3	0.0	0.0
29.67	Bot - Section 2	36.3	662.7					41.0	913.6	77.3	1,576.3	0.0	0.0
30.00		26.2	76.8					2.9	65.5	29.2	142.3	0.0	0.0
33.25	Top - Section 1	36.7	739.4					29.2	639.8	65.9	1,379.1	0.0	0.0
35.00		50.1	245.1					16.1	345.5	66.2	590.6	0.0	0.0
40.00		74.5	684.2					47.6	990.7	122.1	1,675.0	0.0	0.0
45.00		74.7	664.2					49.6	995.6	124.3	1,659.8	0.0	0.0
50.00		74.6	643.6					51.5	1,000.0	126.1	1,643.6	0.0	0.0
55.00		74.2	622.5					53.2	1,004.0	127.4	1,626.5	0.0	0.0
60.00		57.1	601.1					54.9	1,007.6	112.0	1,608.7	0.0	0.0
62.75	Bot - Section 3	36.8	322.5					30.9	555.7	67.7	878.2	0.0	0.0
65.00		22.8	399.1					25.6	455.3	48.4	854.4	0.0	0.0
65.83	Top - Section 2	36.7	146.3					9.6	168.9	46.3	315.2	0.0	0.0
70.00		52.3	438.4					48.4	845.3	100.6	1,283.7	0.0	0.0
73.00	Appertunance(s)	36.1	307.5	304.4	0.0	0.0	1,696.1	35.4	610.0	375.9	2,613.6	0.0	0.0
75.00		49.8	201.3					23.9	333.3	73.7	534.6	0.0	0.0
80.00	Appertunance(s)	42.4	485.9	295.1	0.0	0.0	1,248.9	60.7	834.5	398.1	2,569.3	0.0	0.0
81.00	Reinf. Top	34.6	95.4					9.0	146.8	43.7	242.3	0.0	0.0
85.00		61.4	371.1					36.5	267.2	98.0	638.2	0.0	0.0
90.00		53.6	443.9					0.0	243.4	53.6	687.3	0.0	0.0
93.00	Appertunance(s)	32.9	257.3	87.0	0.0	0.0	386.1	0.0	146.3	119.8	789.7	0.0	0.0
95.00		44.9	167.7					0.0	67.9	44.9	235.6	0.0	0.0
100.00	Appertunance(s)	31.9	401.3	792.8	0.0	759.1	6,890.9	0.0	169.8	824.8	7,462.0	0.0	0.0
100.01		3.1	0.8					0.0	0.0	3.1	0.8	0.0	0.0
100.50		3.1	38.6					0.0	0.0	3.1	38.6	0.0	0.0
									Totals:	3,787.92	39,513.3	0.00	0.00

© 2007 - 2016 by ATC IP LLC. All rights reserved.

Load Case: 1.2D + 1.0Di + 1.0Wi 50 mph with 0.75 in Radial Ice 21 Iterations

Gust Response Factor : 1.10 Ice Dead Load Factor : 1.00 Wind Importance Factor : 1.00
Dead Load Factor : 1.20 Ice Importance Factor : 1.00
Wind Load Factor : 1.00

Calculated Forces

Seg Elev (ft)	Pu FY (-) (kips)	Vu FX (-) (kips)	Tu MY (ft-kips)	Mu MZ (ft-kips)	Mu MX (ft-kips)	Resultant Moment (ft-kips)	phi Pn (kips)	phi Vn (kips)	phi Tn (ft-kips)	phi Mn (ft-kips)	Total Deflect (in)	Rotation (deg)	Ratio
0.00	-39.75	-3.83	0.00	-266.01	0.00	266.01	1,602.06	801.03	2,099.85	1,037.04	0.00	0.00	0.135
5.00	-38.08	-3.74	0.00	-246.86	0.00	246.86	1,580.35	790.18	2,012.72	994.01	0.03	-0.05	0.128
10.00	-36.38	-3.65	0.00	-228.14	0.00	228.14	1,557.29	778.65	1,925.54	950.95	0.11	-0.10	0.121
15.00	-34.67	-3.56	0.00	-209.87	0.00	209.87	1,532.89	766.44	1,838.45	907.94	0.25	-0.16	0.115
20.00	-32.97	-3.46	0.00	-192.07	0.00	192.07	1,507.13	753.57	1,751.60	865.05	0.44	-0.21	0.108
25.00	-31.26	-3.37	0.00	-174.75	0.00	174.75	1,480.03	740.02	1,665.15	822.35	0.68	-0.25	0.101
29.67	-29.69	-3.30	0.00	-159.03	0.00	159.03	1,453.52	726.76	1,584.95	782.75	0.95	-0.30	0.094
30.00	-29.54	-3.27	0.00	-157.93	0.00	157.93	1,451.58	725.79	1,579.24	779.93	0.97	-0.30	0.092
33.25	-28.16	-3.21	0.00	-147.29	0.00	147.29	1,166.36	583.18	1,265.06	624.76	1.19	-0.33	0.109
35.00	-27.57	-3.16	0.00	-141.67	0.00	141.67	1,157.16	578.58	1,240.04	612.41	1.31	-0.35	0.106
40.00	-25.90	-3.04	0.00	-125.89	0.00	125.89	1,130.25	565.12	1,169.24	577.44	1.70	-0.39	0.097
45.00	-24.24	-2.92	0.00	-110.67	0.00	110.67	1,102.43	551.21	1,099.53	543.02	2.13	-0.43	0.088
50.00	-22.59	-2.80	0.00	-96.06	0.00	96.06	1,064.67	532.34	1,022.34	504.90	2.60	-0.47	0.080
55.00	-20.96	-2.67	0.00	-82.07	0.00	82.07	1,023.94	511.97	945.22	466.81	3.12	-0.50	0.072
60.00	-19.36	-2.55	0.00	-68.72	0.00	68.72	983.21	491.60	871.11	430.21	3.66	-0.54	0.064
62.75	-18.48	-2.48	0.00	-61.70	0.00	61.70	960.80	480.40	831.64	410.72	3.98	-0.55	0.059
65.00	-17.62	-2.43	0.00	-56.12	0.00	56.12	942.48	471.24	800.03	395.11	4.24	-0.57	0.054
65.83	-17.31	-2.38	0.00	-54.10	0.00	54.10	837.44	418.72	723.09	357.11	4.34	-0.57	0.055
70.00	-16.02	-2.27	0.00	-44.18	0.00	44.18	807.75	403.87	672.45	332.10	4.85	-0.59	0.047
73.00	-13.41	-1.87	0.00	-37.36	0.00	37.36	786.36	393.18	637.13	314.66	5.23	-0.61	0.041
75.00	-12.88	-1.79	0.00	-33.62	0.00	33.62	772.10	386.05	614.12	303.29	5.48	-0.61	0.038
80.00	-10.32	-1.37	0.00	-24.65	0.00	24.65	736.46	368.23	558.43	275.79	6.14	-0.63	0.029
81.00	-10.07	-1.33	0.00	-23.28	0.00	23.28	729.34	364.67	547.61	270.44	6.27	-0.64	0.028
81.00	-10.07	-1.33	0.00	-23.28	0.00	23.28	729.34	364.67	547.61	270.44	6.27	-0.64	0.100
85.00	-9.44	-1.23	0.00	-17.97	0.00	17.97	700.82	350.41	505.38	249.59	6.81	-0.65	0.085
90.00	-8.75	-1.17	0.00	-11.85	0.00	11.85	665.18	332.59	454.99	224.70	7.51	-0.69	0.066
93.00	-7.96	-1.04	0.00	-8.34	0.00	8.34	643.80	321.90	426.02	210.39	7.95	-0.71	0.052
95.00	-7.72	-1.00	0.00	-6.26	0.00	6.26	629.54	314.77	407.24	201.12	8.25	-0.72	0.043
100.00	-0.27	-0.08	0.00	-0.53	0.00	0.53	593.90	296.95	362.13	178.84	9.02	-0.74	0.003
100.01	-0.04	0.00	0.00	0.00	0.00	0.00	593.83	296.91	362.05	178.80	9.02	-0.74	0.000
100.50	0.00	0.00	0.00	0.00	0.00	0.00	590.33	295.17	357.77	176.69	9.10	-0.74	0.000

© 2007 - 2016 by ATC IP LLC. All rights reserved.

Load Case: 1.0D + 1.0W Serviceability 60 mph 21 Iterations

Gust Response Factor : 1.10
Dead Load Factor : 1.00
Wind Load Factor : 1.00

Wind Importance Factor : 1.00

Applied Segment Forces Summary

		Shaft Forces		Discrete Forces				Linear Forces		Sum of Forces			
Seg Elev (ft)	Description	Wind FX (lb)	Dead Load (lb)	Wind FX (lb)	Torsion MY (lb-ft)	Moment MZ (lb-ft)	Dead Load (lb)	Wind FX (lb)	Dead Load (lb)	Wind FX (lb)	Dead Load (lb)	Torsion MY (lb-ft)	Moment MZ (lb)
0.00		55.1	0.0					0.0	0.0	55.1	0.0	0.0	0.0
5.00		108.6	428.7					33.5	529.9	142.1	958.7	0.0	0.0
10.00		105.4	416.5					33.5	529.9	138.9	946.5	0.0	0.0
15.00		102.3	404.3					33.5	529.9	135.8	934.2	0.0	0.0
20.00		99.2	392.1					33.5	529.9	132.7	922.0	0.0	0.0
25.00		93.0	379.9					33.5	529.9	126.5	909.8	0.0	0.0
29.67	Bot - Section 2	47.3	343.5					31.3	494.6	78.6	838.1	0.0	0.0
30.00		34.1	48.7					2.2	35.3	36.3	84.0	0.0	0.0
33.25	Top - Section 1	47.7	469.3					22.1	344.5	69.8	813.7	0.0	0.0
35.00		64.8	125.4					12.2	185.5	77.0	310.9	0.0	0.0
40.00		96.1	350.0					35.7	529.9	131.8	880.0	0.0	0.0
45.00		95.9	337.8					37.0	529.9	132.9	867.8	0.0	0.0
50.00		95.2	325.6					38.2	529.9	133.5	855.5	0.0	0.0
55.00		94.2	313.4					39.3	529.9	133.5	843.3	0.0	0.0
60.00		72.2	301.1					40.4	529.9	112.5	831.1	0.0	0.0
62.75	Bot - Section 3	46.4	160.4					22.6	291.5	69.0	451.9	0.0	0.0
65.00		28.7	243.4					18.7	238.4	47.5	481.9	0.0	0.0
65.83	Top - Section 2	46.0	89.0					7.0	88.4	53.0	177.4	0.0	0.0
70.00		65.3	205.7					35.3	441.6	100.6	647.3	0.0	0.0
73.00	Appertunance(s)	44.9	143.5	377.5	0.0	0.0	364.8	25.8	318.0	448.2	826.3	0.0	0.0
75.00		61.6	93.5					17.4	200.1	79.0	293.6	0.0	0.0
80.00	Appertunance(s)	52.4	226.3	367.6	0.0	0.0	145.2	44.0	500.2	463.9	871.8	0.0	0.0
81.00	Reinf. Top	42.5	44.0					7.2	97.1	49.6	141.1	0.0	0.0
85.00		68.1	171.7					28.9	121.1	97.0	292.8	0.0	0.0
90.00		54.2	204.9					0.0	151.4	54.2	356.3	0.0	0.0
93.00	Appertunance(s)	33.0	117.8	102.7	0.0	0.0	39.0	0.0	90.8	135.7	247.7	0.0	0.0
95.00		44.7	76.4					0.0	56.6	44.7	133.0	0.0	0.0
100.00	Appertunance(s)	31.7	183.6	840.6	0.0	874.1	3,021.2	0.0	141.5	872.3	3,346.3	0.0	0.0
100.01		3.1	0.4					0.0	0.0	3.1	0.4	0.0	0.0
100.50		3.0	17.4					0.0	0.0	3.0	17.4	0.0	0.0
								Totals:		4,157.84	19,280.7	0.00	0.00

© 2007 - 2016 by ATC IP LLC. All rights reserved.

Load Case: 1.0D + 1.0W Serviceability 60 mph 21 Iterations

Gust Response Factor : 1.10
Dead Load Factor : 1.00
Wind Load Factor : 1.00

Wind Importance Factor : 1.00

Calculated Forces

Seg Elev (ft)	Pu FY (-) (kips)	Vu FX (-) (kips)	Tu MY (ft-kips)	Mu MZ (ft-kips)	Mu MX (ft-kips)	Resultant Moment (ft-kips)	phi Pn (kips)	phi Vn (kips)	phi Tn (ft-kips)	phi Mn (ft-kips)	Total Deflect (in)	Rotation (deg)	Ratio
0.00	-19.32	-4.16	0.00	-277.81	0.00	277.81	1,602.06	801.03	2,099.85	1,037.04	0.00	0.00	0.133
5.00	-18.36	-4.03	0.00	-257.03	0.00	257.03	1,580.35	790.18	2,012.72	994.01	0.03	-0.05	0.126
10.00	-17.41	-3.91	0.00	-236.88	0.00	236.88	1,557.29	778.65	1,925.54	950.95	0.12	-0.11	0.119
15.00	-16.47	-3.78	0.00	-217.35	0.00	217.35	1,532.89	766.44	1,838.45	907.94	0.26	-0.16	0.112
20.00	-15.54	-3.66	0.00	-198.43	0.00	198.43	1,507.13	753.57	1,751.60	865.05	0.46	-0.21	0.105
25.00	-14.63	-3.54	0.00	-180.13	0.00	180.13	1,480.03	740.02	1,665.15	822.35	0.71	-0.26	0.097
29.67	-13.79	-3.47	0.00	-163.59	0.00	163.59	1,453.52	726.76	1,584.95	782.75	0.99	-0.31	0.091
30.00	-13.71	-3.43	0.00	-162.43	0.00	162.43	1,451.58	725.79	1,579.24	779.93	1.01	-0.31	0.089
33.25	-12.89	-3.36	0.00	-151.27	0.00	151.27	1,166.36	583.18	1,265.06	624.76	1.23	-0.34	0.105
35.00	-12.58	-3.29	0.00	-145.39	0.00	145.39	1,157.16	578.58	1,240.04	612.41	1.36	-0.36	0.102
40.00	-11.70	-3.16	0.00	-128.92	0.00	128.92	1,130.25	565.12	1,169.24	577.44	1.76	-0.40	0.093
45.00	-10.83	-3.03	0.00	-113.11	0.00	113.11	1,102.43	551.21	1,099.53	543.02	2.21	-0.45	0.084
50.00	-9.97	-2.90	0.00	-97.95	0.00	97.95	1,064.67	532.34	1,022.34	504.90	2.70	-0.48	0.076
55.00	-9.13	-2.76	0.00	-83.46	0.00	83.46	1,023.94	511.97	945.22	466.81	3.22	-0.52	0.068
60.00	-8.30	-2.65	0.00	-69.65	0.00	69.65	983.21	491.60	871.11	430.21	3.79	-0.55	0.059
62.75	-7.85	-2.57	0.00	-62.37	0.00	62.37	960.80	480.40	831.64	410.72	4.11	-0.57	0.054
65.00	-7.37	-2.52	0.00	-56.58	0.00	56.58	942.48	471.24	800.03	395.11	4.38	-0.58	0.049
65.83	-7.19	-2.47	0.00	-54.47	0.00	54.47	837.44	418.72	723.09	357.11	4.49	-0.59	0.050
70.00	-6.54	-2.36	0.00	-44.18	0.00	44.18	807.75	403.87	672.45	332.10	5.01	-0.61	0.042
73.00	-5.72	-1.91	0.00	-37.09	0.00	37.09	786.36	393.18	637.13	314.66	5.40	-0.62	0.036
75.00	-5.43	-1.83	0.00	-33.27	0.00	33.27	772.10	386.05	614.12	303.29	5.66	-0.63	0.033
80.00	-4.56	-1.35	0.00	-24.13	0.00	24.13	736.46	368.23	558.43	275.79	6.33	-0.65	0.025
81.00	-4.42	-1.30	0.00	-22.78	0.00	22.78	729.34	364.67	547.61	270.44	6.47	-0.65	0.024
81.00	-4.42	-1.30	0.00	-22.78	0.00	22.78	729.34	364.67	547.61	270.44	6.47	-0.65	0.090
85.00	-4.13	-1.21	0.00	-17.56	0.00	17.56	700.82	350.41	505.38	249.59	7.02	-0.66	0.076
90.00	-3.77	-1.15	0.00	-11.53	0.00	11.53	665.18	332.59	454.99	224.70	7.74	-0.71	0.057
93.00	-3.52	-1.01	0.00	-8.08	0.00	8.08	643.80	321.90	426.02	210.39	8.19	-0.73	0.044
95.00	-3.39	-0.97	0.00	-6.06	0.00	6.06	629.54	314.77	407.24	201.12	8.50	-0.74	0.036
100.00	-0.06	-0.05	0.00	-0.35	0.00	0.35	593.90	296.95	362.13	178.84	9.28	-0.75	0.002
100.01	-0.02	0.00	0.00	0.00	0.00	0.00	593.83	296.91	362.05	178.80	9.28	-0.75	0.000
100.50	0.00	0.00	0.00	0.00	0.00	0.00	590.33	295.17	357.77	176.69	9.35	-0.75	0.000

© 2007 - 2016 by ATC IP LLC. All rights reserved.

Equivalent Lateral Forces Method Analysis

(Based on ASCE7-10 Chapters 11, 12, 15)

Spectral Response Acceleration for Short Period (S_s):	0.20	
Spectral Response Acceleration at 1.0 Second Period (S_1):	0.06	
Long-Period Transition Period (T_L):	6	
Importance Factor (I_E):	1.00	
Site Coefficient F_a:	1.60	
Site Coeffiecient F_v:	2.40	
Response Modification Coefficient (R):	1.50	
Design Spectral Response Acceleration at Short Period (S_{ds}):	0.21	
Design Spectral Response Acceleration at 1.0 Second Period (S_{d1}):	0.10	
Seismic Response Coefficient (C_s):	0.04	
Upper Limit C_s	0.04	
Lower Limit C_s	0.03	
Period based on Rayleigh Method (sec):	1.54	
Redundancy Factor (p):	1.30	
Seismic Force Distribution Exponent (k):	1.52	
Total Unfactored Dead Load:	19.32	k
Seismic Base Shear (E):	1.10	k

Load Case (1.2 + 0.2Sds) * DL + E ELFM — **Seismic Equivalent Lateral Forces Method**

Segment	Height Above Base (ft)	Weight (lb)	W_z (lb-ft)	C_{vx}	Horizontal Force (lb)	Vertical Force (lb)
29	100.26	17	19	0.002	2	22
28	100.01	0	0	0.000	0	0
27	97.50	325	340	0.037	41	404
26	94.00	133	132	0.014	16	165
25	91.50	209	198	0.021	24	259
24	87.50	356	316	0.034	38	443
23	83.00	293	240	0.026	29	364
22	80.50	141	110	0.012	13	175
21	77.50	727	536	0.058	64	903
20	74.00	294	202	0.022	24	365
19	71.50	461	301	0.033	36	573
18	67.92	647	391	0.042	47	804
17	65.42	177	101	0.011	12	220
16	63.88	482	265	0.029	32	599
15	61.38	452	234	0.025	28	561
14	57.50	831	390	0.042	46	1,032
13	52.50	843	344	0.037	41	1,048
12	47.50	856	300	0.033	36	1,063
11	42.50	868	257	0.028	31	1,078
10	37.50	880	216	0.023	26	1,093
9	34.13	311	66	0.007	8	386
8	31.62	814	154	0.017	18	1,011
7	29.83	84	15	0.002	2	104

 © 2007 - 2016 by ATC IP LLC. All rights reserved.

6	27.33	838	127	0.014	15	1,041
5	22.50	910	103	0.011	12	1,130
4	17.50	922	71	0.008	8	1,145
3	12.50	934	43	0.005	5	1,161
2	7.50	946	20	0.002	2	1,176
1	2.50	959	4	0.000	0	1,191
15' Omni	100.01	40	43	0.005	5	50
Commscope WCS-IMFQ-A	100.00	59	64	0.007	8	73
Powerwave LGP21401	100.00	85	92	0.010	11	105
Raycap DC6-48-60-18-	100.00	40	43	0.005	5	50
Ericsson RRUS 11 (Ba	100.00	300	326	0.035	39	373
Ericsson RRUS 32	100.00	152	166	0.018	20	189
KMW AM-X-CD-14-65-00	100.00	109	119	0.013	14	136
Powerwave 7770.00	100.00	105	114	0.012	14	130
CCI OPA-65R-LCUU-H4	100.00	171	186	0.020	22	212
Flat Platform w/ Han	100.00	2,000	2,172	0.236	259	2,484
Decibel 932LG65T2A-M	93.00	39	38	0.004	5	48
RFS APX86-909014L-CT	80.00	145	112	0.012	13	180
Kathrein Scala Smart	73.00	10	7	0.001	1	12
Ericsson KRY 112 489	73.00	46	31	0.003	4	57
RFS ATMAA1412D-1A20	73.00	39	26	0.003	3	48
RFS APX16PV-16PVL-A	73.00	119	80	0.009	10	148
Commscope LNX-6515DS	73.00	151	102	0.011	12	187
		19,321	9,215	1.000	1,099	24,001

Load Case (0.9 - 0.2Sds) * DL + E ELFM **Seismic (Reduced DL) Equivalent Lateral Forces Method**

Segment	Height Above Base (ft)	Weight (lb)	W_z (lb-ft)	C_{vx}	Horizontal Force (lb)	Vertical Force (lb)
29	100.26	17	19	0.002	2	15
28	100.01	0	0	0.000	0	0
27	97.50	325	340	0.037	41	279
26	94.00	133	132	0.014	16	114
25	91.50	209	198	0.021	24	179
24	87.50	356	316	0.034	38	306
23	83.00	293	240	0.026	29	251
22	80.50	141	110	0.012	13	121
21	77.50	727	536	0.058	64	623
20	74.00	294	202	0.022	24	252
19	71.50	461	301	0.033	36	396
18	67.92	647	391	0.042	47	555
17	65.42	177	101	0.011	12	152
16	63.88	482	265	0.029	32	413
15	61.38	452	234	0.025	28	388
14	57.50	831	390	0.042	46	713
13	52.50	843	344	0.037	41	723
12	47.50	856	300	0.033	36	734
11	42.50	868	257	0.028	31	744
10	37.50	880	216	0.023	26	755
9	34.13	311	66	0.007	8	267
8	31.62	814	154	0.017	18	698
7	29.83	84	15	0.002	2	72
6	27.33	838	127	0.014	15	719
5	22.50	910	103	0.011	12	780
4	17.50	922	71	0.008	8	791
3	12.50	934	43	0.005	5	801
2	7.50	946	20	0.002	2	812
1	2.50	959	4	0.000	0	822
15' Omni	100.01	40	43	0.005	5	34
Commscope WCS-IMFQ-A	100.00	59	64	0.007	8	51

© 2007 - 2016 by ATC IP LLC. All rights reserved.

Powerwave LGP21401	100.00	85	92	0.010	11	73
Raycap DC6-48-60-18-	100.00	40	43	0.005	5	34
Ericsson RRUS 11 (Ba	100.00	300	326	0.035	39	257
Ericsson RRUS 32	100.00	152	166	0.018	20	131
KMW AM-X-CD-14-65-00	100.00	109	119	0.013	14	94
Powerwave 7770.00	100.00	105	114	0.012	14	90
CCI OPA-65R-LCUU-H4	100.00	171	186	0.020	22	147
Flat Platform w/ Han	100.00	2,000	2,172	0.236	259	1,716
Decibel 932LG65T2A-M	93.00	39	38	0.004	5	33
RFS APX86-909014L-CT	80.00	145	112	0.012	13	125
Kathrein Scala Smart	73.00	10	7	0.001	1	8
Ericsson KRY 112 489	73.00	46	31	0.003	4	40
RFS ATMAA1412D-1A20	73.00	39	26	0.003	3	33
RFS APX16PV-16PVL-A	73.00	119	80	0.009	10	102
Commscope LNX-6515DS	73.00	151	102	0.011	12	129
		19,321	9,215	1.000	1,099	16,573

© 2007 - 2016 by ATC IP LLC. All rights reserved.

Load Case (1.2 + 0.2Sds) * DL + E ELFM **Seismic Equivalent Lateral Forces Method**

Calculated Forces

Seg Elev (ft)	Pu FY (-) (kips)	Vu FX (-) (kips)	Tu MY (ft-kips)	Mu MZ (ft-kips)	Mu MX (ft-kips)	Resultant Moment (ft-kips)	phi Pn (kips)	phi Vn (kips)	phi Tn (ft-kips)	phi Mn (ft-kips)	Total Deflect (in)	Rotation (deg)	Ratio
0.00	-22.81	-1.10	0.00	-86.44	0.00	86.44	1,602.06	801.03	2,099.85	1,037.04	0.00	0.00	0.047
5.00	-21.63	-1.11	0.00	-80.93	0.00	80.93	1,580.35	790.18	2,012.72	994.01	0.01	-0.02	0.045
10.00	-20.47	-1.11	0.00	-75.41	0.00	75.41	1,557.29	778.65	1,925.54	950.95	0.04	-0.03	0.043
15.00	-19.33	-1.10	0.00	-69.88	0.00	69.88	1,532.89	766.44	1,838.45	907.94	0.08	-0.05	0.041
20.00	-18.20	-1.09	0.00	-64.37	0.00	64.37	1,507.13	753.57	1,751.60	865.05	0.14	-0.07	0.039
25.00	-17.16	-1.08	0.00	-58.90	0.00	58.90	1,480.03	740.02	1,665.15	822.35	0.22	-0.08	0.036
29.67	-17.05	-1.08	0.00	-53.85	0.00	53.85	1,453.52	726.76	1,584.95	782.75	0.31	-0.10	0.034
30.00	-16.04	-1.06	0.00	-53.49	0.00	53.49	1,451.58	725.79	1,579.24	779.93	0.32	-0.10	0.033
33.25	-15.65	-1.06	0.00	-50.03	0.00	50.03	1,166.36	583.18	1,265.06	624.76	0.39	-0.11	0.040
35.00	-14.56	-1.03	0.00	-48.18	0.00	48.18	1,157.16	578.58	1,240.04	612.41	0.43	-0.12	0.038
40.00	-13.48	-1.00	0.00	-43.02	0.00	43.02	1,130.25	565.12	1,169.24	577.44	0.56	-0.13	0.035
45.00	-12.42	-0.97	0.00	-38.00	0.00	38.00	1,102.43	551.21	1,099.53	543.02	0.71	-0.14	0.032
50.00	-11.37	-0.93	0.00	-33.17	0.00	33.17	1,064.67	532.34	1,022.34	504.90	0.87	-0.16	0.029
55.00	-10.34	-0.88	0.00	-28.54	0.00	28.54	1,023.94	511.97	945.22	466.81	1.04	-0.17	0.026
60.00	-9.78	-0.85	0.00	-24.15	0.00	24.15	983.21	491.60	871.11	430.21	1.22	-0.18	0.024
62.75	-9.18	-0.82	0.00	-21.81	0.00	21.81	960.80	480.40	831.64	410.72	1.33	-0.19	0.022
65.00	-8.96	-0.81	0.00	-19.97	0.00	19.97	942.48	471.24	800.03	395.11	1.42	-0.19	0.020
65.83	-8.15	-0.76	0.00	-19.30	0.00	19.30	837.44	418.72	723.09	357.11	1.45	-0.19	0.021
70.00	-7.58	-0.72	0.00	-16.14	0.00	16.14	807.75	403.87	672.45	332.10	1.62	-0.20	0.018
73.00	-6.76	-0.66	0.00	-13.98	0.00	13.98	786.36	393.18	637.13	314.66	1.75	-0.21	0.016
75.00	-5.86	-0.60	0.00	-12.65	0.00	12.65	772.10	386.05	614.12	303.29	1.84	-0.21	0.015
80.00	-5.51	-0.57	0.00	-9.67	0.00	9.67	736.46	368.23	558.43	275.79	2.06	-0.22	0.012
81.00	-5.14	-0.54	0.00	-9.10	0.00	9.10	729.34	364.67	547.61	270.44	2.11	-0.22	0.012
81.00	-5.14	-0.54	0.00	-9.10	0.00	9.10	729.34	364.67	547.61	270.44	2.11	-0.22	0.041
85.00	-4.70	-0.50	0.00	-6.94	0.00	6.94	700.82	350.41	505.38	249.59	2.29	-0.22	0.034
90.00	-4.44	-0.48	0.00	-4.43	0.00	4.43	665.18	332.59	454.99	224.70	2.53	-0.24	0.026
93.00	-4.23	-0.46	0.00	-2.99	0.00	2.99	643.80	321.90	426.02	210.39	2.69	-0.25	0.021
95.00	-3.82	-0.42	0.00	-2.08	0.00	2.08	629.54	314.77	407.24	201.12	2.79	-0.25	0.016
100.00	-0.02	0.00	0.00	0.00	0.00	0.00	593.90	296.95	362.13	178.84	3.05	-0.25	0.000
100.01	0.00	0.00	0.00	0.00	0.00	0.00	593.83	296.91	362.05	178.80	3.05	-0.25	0.000
100.50	0.00	0.00	0.00	0.00	0.00	0.00	590.33	295.17	357.77	176.69	3.08	-0.25	0.000

© 2007 - 2016 by ATC IP LLC. All rights reserved.

Load Case (0.9 - 0.2Sds) * DL + E ELFM **Seismic (Reduced DL) Equivalent Lateral Forces Method**

Calculated Forces

Seg Elev (ft)	Pu FY (-) (kips)	Vu FX (-) (kips)	Tu MY (ft-kips)	Mu MZ (ft-kips)	Mu MX (ft-kips)	Resultant Moment (ft-kips)	phi Pn (kips)	phi Vn (kips)	phi Tn (ft-kips)	phi Mn (ft-kips)	Total Deflect (in)	Rotation (deg)	Ratio
0.00	-15.75	-1.10	0.00	-85.69	0.00	85.69	1,602.06	801.03	2,099.85	1,037.04	0.00	0.00	0.045
5.00	-14.94	-1.10	0.00	-80.19	0.00	80.19	1,580.35	790.18	2,012.72	994.01	0.01	-0.02	0.043
10.00	-14.14	-1.10	0.00	-74.68	0.00	74.68	1,557.29	778.65	1,925.54	950.95	0.04	-0.03	0.041
15.00	-13.35	-1.10	0.00	-69.17	0.00	69.17	1,532.89	766.44	1,838.45	907.94	0.08	-0.05	0.038
20.00	-12.56	-1.09	0.00	-63.70	0.00	63.70	1,507.13	753.57	1,751.60	865.05	0.14	-0.07	0.036
25.00	-11.85	-1.07	0.00	-58.27	0.00	58.27	1,480.03	740.02	1,665.15	822.35	0.22	-0.08	0.034
29.67	-11.77	-1.07	0.00	-53.26	0.00	53.26	1,453.52	726.76	1,584.95	782.75	0.31	-0.10	0.032
30.00	-11.07	-1.05	0.00	-52.90	0.00	52.90	1,451.58	725.79	1,579.24	779.93	0.32	-0.10	0.031
33.25	-10.81	-1.05	0.00	-49.47	0.00	49.47	1,166.36	583.18	1,265.06	624.76	0.39	-0.11	0.037
35.00	-10.05	-1.02	0.00	-47.64	0.00	47.64	1,157.16	578.58	1,240.04	612.41	0.43	-0.11	0.036
40.00	-9.31	-0.99	0.00	-42.53	0.00	42.53	1,130.25	565.12	1,169.24	577.44	0.56	-0.13	0.033
45.00	-8.57	-0.96	0.00	-37.56	0.00	37.56	1,102.43	551.21	1,099.53	543.02	0.70	-0.14	0.030
50.00	-7.85	-0.92	0.00	-32.78	0.00	32.78	1,064.67	532.34	1,022.34	504.90	0.86	-0.16	0.027
55.00	-7.14	-0.87	0.00	-28.20	0.00	28.20	1,023.94	511.97	945.22	466.81	1.03	-0.17	0.025
60.00	-6.75	-0.84	0.00	-23.86	0.00	23.86	983.21	491.60	871.11	430.21	1.21	-0.18	0.022
62.75	-6.34	-0.81	0.00	-21.55	0.00	21.55	960.80	480.40	831.64	410.72	1.31	-0.19	0.020
65.00	-6.19	-0.80	0.00	-19.73	0.00	19.73	942.48	471.24	800.03	395.11	1.40	-0.19	0.019
65.83	-5.63	-0.75	0.00	-19.07	0.00	19.07	837.44	418.72	723.09	357.11	1.44	-0.19	0.019
70.00	-5.23	-0.71	0.00	-15.95	0.00	15.95	807.75	403.87	672.45	332.10	1.61	-0.20	0.017
73.00	-4.67	-0.66	0.00	-13.81	0.00	13.81	786.36	393.18	637.13	314.66	1.73	-0.20	0.015
75.00	-4.05	-0.59	0.00	-12.50	0.00	12.50	772.10	386.05	614.12	303.29	1.82	-0.21	0.014
80.00	-3.80	-0.56	0.00	-9.55	0.00	9.55	736.46	368.23	558.43	275.79	2.04	-0.21	0.011
81.00	-3.55	-0.53	0.00	-8.99	0.00	8.99	729.34	364.67	547.61	270.44	2.09	-0.21	0.011
81.00	-3.55	-0.53	0.00	-8.99	0.00	8.99	729.34	364.67	547.61	270.44	2.09	-0.21	0.038
85.00	-3.24	-0.50	0.00	-6.85	0.00	6.85	700.82	350.41	505.38	249.59	2.27	-0.22	0.032
90.00	-3.07	-0.47	0.00	-4.37	0.00	4.37	665.18	332.59	454.99	224.70	2.51	-0.24	0.024
93.00	-2.92	-0.45	0.00	-2.95	0.00	2.95	643.80	321.90	426.02	210.39	2.66	-0.24	0.019
95.00	-2.64	-0.41	0.00	-2.05	0.00	2.05	629.54	314.77	407.24	201.12	2.76	-0.25	0.014
100.00	-0.01	0.00	0.00	0.00	0.00	0.00	593.90	296.95	362.13	178.84	3.02	-0.25	0.000
100.01	0.00	0.00	0.00	0.00	0.00	0.00	593.83	296.91	362.05	178.80	3.02	-0.25	0.000
100.50	0.00	0.00	0.00	0.00	0.00	0.00	590.33	295.17	357.77	176.69	3.05	-0.25	0.000

 © 2007 - 2016 by ATC IP LLC. All rights reserved.

Equivalent Modal Forces Analysis

(Based on ASCE7-10 Chapters 11, 12 & 15 and ANSI/TIA-G, section 2.7)

Spectral Response Acceleration for Short Period (S_s):	0.20
Spectral Response Acceleration at 1.0 Second Period (S_1):	0.06
Importance Factor (I_E):	1.00
Site Coefficient F_a:	1.60
Site Coefficient F_v	2.40
Response Modification Coefficient (R):	1.50
Design Spectral Response Acceleration at Short Period (S_{ds}):	0.21
Desing Spectral Response Acceleration at 1.0 Second Period (S_{d1}):	0.10
Period Based on Rayleigh Method (sec):	1.54
Redundancy Factor (p):	1.30

Load Case (1.2 + 0.2Sds) * DL + E EMAM **Seismic Equivalent Modal Analysis Method**

Segment	Height Above Base (ft)	Weight (lb)	a	b	c	Saz	Horizontal Force (lb)	Vertical Force (lb)
29	100.26	17	1.881	1.932	1.123	0.404	6	22
28	100.01	0	1.871	1.883	1.105	0.398	0	0
27	97.50	325	1.779	1.444	0.941	0.335	94	404
26	94.00	133	1.653	0.954	0.745	0.256	30	165
25	91.50	209	1.567	0.679	0.626	0.206	37	259
24	87.50	356	1.433	0.349	0.466	0.137	42	443
23	83.00	293	1.289	0.106	0.327	0.075	19	364
22	80.50	141	1.213	0.017	0.264	0.047	6	175
21	77.50	727	1.124	-0.055	0.202	0.021	13	903
20	74.00	294	1.025	-0.103	0.144	-0.002	0	365
19	71.50	461	0.957	-0.118	0.111	-0.012	-5	573
18	67.92	647	0.863	-0.120	0.074	-0.019	-11	804
17	65.42	177	0.801	-0.112	0.054	-0.019	-3	220
16	63.88	482	0.763	-0.104	0.044	-0.017	-7	599
15	61.38	452	0.705	-0.088	0.031	-0.012	-5	561
14	57.50	831	0.619	-0.060	0.017	0.000	0	1,032
13	52.50	843	0.516	-0.022	0.008	0.018	13	1,048
12	47.50	856	0.422	0.011	0.006	0.034	25	1,063
11	42.50	868	0.338	0.036	0.009	0.045	33	1,078
10	37.50	880	0.263	0.053	0.016	0.049	38	1,093
9	34.13	311	0.218	0.060	0.021	0.050	14	386
8	31.62	814	0.187	0.064	0.025	0.050	35	1,011
7	29.83	84	0.167	0.066	0.028	0.049	4	104
6	27.33	838	0.140	0.069	0.032	0.048	35	1,041
5	22.50	910	0.095	0.071	0.038	0.046	36	1,130
4	17.50	922	0.057	0.071	0.041	0.044	35	1,145
3	12.50	934	0.029	0.068	0.040	0.040	33	1,161
2	7.50	946	0.011	0.056	0.032	0.033	27	1,176
1	2.50	959	0.001	0.026	0.014	0.016	14	1,191
15' Omni	100.01	40	1.872	1.884	1.105	0.398	14	50
Commscope WCS-	100.00	59	1.871	1.883	1.105	0.398	20	73
Powerwave LGP21401	100.00	85	1.871	1.883	1.105	0.398	29	105
Raycap DC6-48-60-18-	100.00	40	1.871	1.883	1.105	0.398	14	50
Ericsson RRUS 11 (Ba	100.00	300	1.871	1.883	1.105	0.398	103	373

 © 2007 - 2016 by ATC IP LLC. All rights reserved.

Ericsson RRUS 32	100.00	152	1.871	1.883	1.105	0.398	53	189
KMW AM-X-CD-14-65-00	100.00	109	1.871	1.883	1.105	0.398	38	136
Powerwave 7770.00	100.00	105	1.871	1.883	1.105	0.398	36	130
CCI OPA-65R-LCUU-H4	100.00	171	1.871	1.883	1.105	0.398	59	212
Flat Platform w/ Han	100.00	2,000	1.871	1.883	1.105	0.398	689	2,484
Decibel 932LG65T2A-M	93.00	39	1.618	0.837	0.695	0.236	8	48
RFS APX86-909014L-CT	80.00	145	1.198	0.002	0.253	0.042	5	180
Kathrein Scala Smart	73.00	10	0.997	-0.111	0.130	-0.006	0	12
Ericsson KRY 112 489	73.00	46	0.997	-0.111	0.130	-0.006	0	57
RFS ATMAA1412D-1A20	73.00	39	0.997	-0.111	0.130	-0.006	0	48
RFS APX16PV-16PVL-A	73.00	119	0.997	-0.111	0.130	-0.006	-1	148
Commscope LNX-	73.00	151	0.997	-0.111	0.130	-0.006	-1	187
		19,321	48.500	26.345	19.230	6.545	1,625	24,001

Load Case (0.9 - 0.2Sds) * DL + E EMAM **Seismic (Reduced DL) Equivalent Modal Analysis Method**

Segment	Height Above Base (ft)	Weight (lb)	a	b	c	Saz	Horizontal Force (lb)	Vertical Force (lb)
29	100.26	17	1.881	1.932	1.123	0.404	6	15
28	100.01	0	1.871	1.883	1.105	0.398	0	0
27	97.50	325	1.779	1.444	0.941	0.335	94	279
26	94.00	133	1.653	0.954	0.745	0.256	30	114
25	91.50	209	1.567	0.679	0.626	0.206	37	179
24	87.50	356	1.433	0.349	0.466	0.137	42	306
23	83.00	293	1.289	0.106	0.327	0.075	19	251
22	80.50	141	1.213	0.017	0.264	0.047	6	121
21	77.50	727	1.124	-0.055	0.202	0.021	13	623
20	74.00	294	1.025	-0.103	0.144	-0.002	0	252
19	71.50	461	0.957	-0.118	0.111	-0.012	-5	396
18	67.92	647	0.863	-0.120	0.074	-0.019	-11	555
17	65.42	177	0.801	-0.112	0.054	-0.019	-3	152
16	63.88	482	0.763	-0.104	0.044	-0.017	-7	413
15	61.38	452	0.705	-0.088	0.031	-0.012	-5	388
14	57.50	831	0.619	-0.060	0.017	0.000	0	713
13	52.50	843	0.516	-0.022	0.008	0.018	13	723
12	47.50	856	0.422	0.011	0.006	0.034	25	734
11	42.50	868	0.338	0.036	0.009	0.045	33	744
10	37.50	880	0.263	0.053	0.016	0.049	38	755
9	34.13	311	0.218	0.060	0.021	0.050	14	267
8	31.62	814	0.187	0.064	0.025	0.050	35	698
7	29.83	84	0.167	0.066	0.028	0.049	4	72
6	27.33	838	0.140	0.069	0.032	0.048	35	719
5	22.50	910	0.095	0.071	0.038	0.046	36	780
4	17.50	922	0.057	0.071	0.041	0.044	35	791
3	12.50	934	0.029	0.068	0.040	0.040	33	801
2	7.50	946	0.011	0.056	0.032	0.033	27	812
1	2.50	959	0.001	0.026	0.014	0.016	14	822
15' Omni	100.01	40	1.872	1.884	1.105	0.398	14	34
Commscope WCS-	100.00	59	1.871	1.883	1.105	0.398	20	51
Powerwave LGP21401	100.00	85	1.871	1.883	1.105	0.398	29	73
Raycap DC6-48-60-18-	100.00	40	1.871	1.883	1.105	0.398	14	34
Ericsson RRUS 11 (Ba	100.00	300	1.871	1.883	1.105	0.398	103	257
Ericsson RRUS 32	100.00	152	1.871	1.883	1.105	0.398	53	131
KMW AM-X-CD-14-65-00	100.00	109	1.871	1.883	1.105	0.398	38	94
Powerwave 7770.00	100.00	105	1.871	1.883	1.105	0.398	36	90
CCI OPA-65R-LCUU-H4	100.00	171	1.871	1.883	1.105	0.398	59	147
Flat Platform w/ Han	100.00	2,000	1.871	1.883	1.105	0.398	689	1,716
Decibel 932LG65T2A-M	93.00	39	1.618	0.837	0.695	0.236	8	33
RFS APX86-909014L-CT	80.00	145	1.198	0.002	0.253	0.042	5	125

© 2007 - 2016 by ATC IP LLC. All rights reserved.

Kathrein Scala Smart	73.00	10	0.997	-0.111	0.130	-0.006	0	8
Ericsson KRY 112 489	73.00	46	0.997	-0.111	0.130	-0.006	0	40
RFS ATMAA1412D-1A20	73.00	39	0.997	-0.111	0.130	-0.006	0	33
RFS APX16PV-16PVL-A	73.00	119	0.997	-0.111	0.130	-0.006	-1	102
Commscope LNX-	73.00	151	0.997	-0.111	0.130	-0.006	-1	129
		19,321	48.500	26.345	19.230	6.545	1,625	16,573

© 2007 - 2016 by ATC IP LLC. All rights reserved.

Load Case (1.2 + 0.2Sds) * DL + E EMAM **Seismic Equivalent Modal Analysis Method**

Calculated Forces

Seg Elev (ft)	Pu FY (-) (kips)	Vu FX (-) (kips)	Tu MY (ft-kips)	Mu MZ (ft-kips)	Mu MX (ft-kips)	Resultant Moment (ft-kips)	phi Pn (kips)	phi Vn (kips)	phi Tn (ft-kips)	phi Mn (ft-kips)	Total Deflect (in)	Rotation (deg)	Ratio
0.00	-22.81	-1.62	0.00	-139.49	0.00	139.49	1,602.06	801.03	2,099.85	1,037.04	0.00	0.00	0.072
5.00	-21.63	-1.60	0.00	-131.41	0.00	131.41	1,580.35	790.18	2,012.72	994.01	0.01	-0.03	0.069
10.00	-20.47	-1.58	0.00	-123.41	0.00	123.41	1,557.29	778.65	1,925.54	950.95	0.06	-0.06	0.066
15.00	-19.33	-1.55	0.00	-115.54	0.00	115.54	1,532.89	766.44	1,838.45	907.94	0.13	-0.08	0.063
20.00	-18.19	-1.52	0.00	-107.79	0.00	107.79	1,507.13	753.57	1,751.60	865.05	0.23	-0.11	0.060
25.00	-17.15	-1.49	0.00	-100.20	0.00	100.20	1,480.03	740.02	1,665.15	822.35	0.37	-0.14	0.057
29.67	-17.05	-1.49	0.00	-93.25	0.00	93.25	1,453.52	726.76	1,584.95	782.75	0.51	-0.16	0.055
30.00	-16.04	-1.45	0.00	-92.75	0.00	92.75	1,451.58	725.79	1,579.24	779.93	0.53	-0.17	0.054
33.25	-15.65	-1.44	0.00	-88.02	0.00	88.02	1,166.36	583.18	1,265.06	624.76	0.65	-0.18	0.064
35.00	-14.56	-1.41	0.00	-85.50	0.00	85.50	1,157.16	578.58	1,240.04	612.41	0.71	-0.19	0.063
40.00	-13.48	-1.38	0.00	-78.46	0.00	78.46	1,130.25	565.12	1,169.24	577.44	0.93	-0.22	0.059
45.00	-12.42	-1.35	0.00	-71.59	0.00	71.59	1,102.43	551.21	1,099.53	543.02	1.18	-0.25	0.056
50.00	-11.37	-1.34	0.00	-64.83	0.00	64.83	1,064.67	532.34	1,022.34	504.90	1.45	-0.27	0.052
55.00	-10.33	-1.34	0.00	-58.14	0.00	58.14	1,023.94	511.97	945.22	466.81	1.74	-0.30	0.049
60.00	-9.77	-1.34	0.00	-51.45	0.00	51.45	983.21	491.60	871.11	430.21	2.07	-0.32	0.045
62.75	-9.17	-1.35	0.00	-47.76	0.00	47.76	960.80	480.40	831.64	410.72	2.25	-0.33	0.043
65.00	-8.95	-1.35	0.00	-44.73	0.00	44.73	942.48	471.24	800.03	395.11	2.41	-0.34	0.040
65.83	-8.15	-1.36	0.00	-43.60	0.00	43.60	837.44	418.72	723.09	357.11	2.47	-0.35	0.041
70.00	-7.58	-1.36	0.00	-37.94	0.00	37.94	807.75	403.87	672.45	332.10	2.78	-0.36	0.037
73.00	-6.76	-1.36	0.00	-33.86	0.00	33.86	786.36	393.18	637.13	314.66	3.02	-0.38	0.034
75.00	-5.85	-1.34	0.00	-31.14	0.00	31.14	772.10	386.05	614.12	303.29	3.18	-0.38	0.032
80.00	-5.50	-1.33	0.00	-24.43	0.00	24.43	736.46	368.23	558.43	275.79	3.59	-0.40	0.026
81.00	-5.13	-1.31	0.00	-23.10	0.00	23.10	729.34	364.67	547.61	270.44	3.67	-0.40	0.025
81.00	-5.13	-1.31	0.00	-23.10	0.00	23.10	729.34	364.67	547.61	270.44	3.67	-0.40	0.092
85.00	-4.69	-1.27	0.00	-17.86	0.00	17.86	700.82	350.41	505.38	249.59	4.01	-0.41	0.078
90.00	-4.43	-1.23	0.00	-11.54	0.00	11.54	665.18	332.59	454.99	224.70	4.47	-0.46	0.058
93.00	-4.22	-1.19	0.00	-7.85	0.00	7.85	643.80	321.90	426.02	210.39	4.77	-0.48	0.044
95.00	-3.82	-1.09	0.00	-5.47	0.00	5.47	629.54	314.77	407.24	201.12	4.97	-0.49	0.033
100.00	-0.02	-0.01	0.00	0.00	0.00	0.00	593.90	296.95	362.13	178.84	5.49	-0.50	0.000
100.01	0.00	0.00	0.00	0.00	0.00	0.00	593.83	296.91	362.05	178.80	5.49	-0.50	0.000
100.50	0.00	0.00	0.00	0.00	0.00	0.00	590.33	295.17	357.77	176.69	5.54	-0.50	0.000

© 2007 - 2016 by ATC IP LLC. All rights reserved.

Load Case (0.9 - 0.2Sds) * DL + E EMAM **Seismic (Reduced DL) Equivalent Modal Analysis Method**

Calculated Forces

Seg Elev (ft)	Pu FY (-) (kips)	Vu FX (-) (kips)	Tu MY (ft-kips)	Mu MZ (ft-kips)	Mu MX (ft-kips)	Resultant Moment (ft-kips)	phi Pn (kips)	phi Vn (kips)	phi Tn (ft-kips)	phi Mn (ft-kips)	Total Deflect (in)	Rotation (deg)	Ratio
0.00	-15.75	-1.61	0.00	-138.19	0.00	138.19	1,602.06	801.03	2,099.85	1,037.04	0.00	0.00	0.068
5.00	-14.94	-1.59	0.00	-130.12	0.00	130.12	1,580.35	790.18	2,012.72	994.01	0.01	-0.03	0.066
10.00	-14.14	-1.57	0.00	-122.14	0.00	122.14	1,557.29	778.65	1,925.54	950.95	0.06	-0.05	0.063
15.00	-13.34	-1.54	0.00	-114.31	0.00	114.31	1,532.89	766.44	1,838.45	907.94	0.13	-0.08	0.060
20.00	-12.56	-1.51	0.00	-106.61	0.00	106.61	1,507.13	753.57	1,751.60	865.05	0.23	-0.11	0.058
25.00	-11.84	-1.48	0.00	-99.08	0.00	99.08	1,480.03	740.02	1,665.15	822.35	0.36	-0.14	0.055
29.67	-11.77	-1.47	0.00	-92.20	0.00	92.20	1,453.52	726.76	1,584.95	782.75	0.51	-0.16	0.052
30.00	-11.07	-1.44	0.00	-91.71	0.00	91.71	1,451.58	725.79	1,579.24	779.93	0.52	-0.16	0.051
33.25	-10.81	-1.43	0.00	-87.03	0.00	87.03	1,166.36	583.18	1,265.06	624.76	0.64	-0.18	0.062
35.00	-10.05	-1.39	0.00	-84.53	0.00	84.53	1,157.16	578.58	1,240.04	612.41	0.71	-0.19	0.060
40.00	-9.31	-1.36	0.00	-77.58	0.00	77.58	1,130.25	565.12	1,169.24	577.44	0.92	-0.22	0.057
45.00	-8.57	-1.33	0.00	-70.79	0.00	70.79	1,102.43	551.21	1,099.53	543.02	1.16	-0.24	0.053
50.00	-7.85	-1.32	0.00	-64.12	0.00	64.12	1,064.67	532.34	1,022.34	504.90	1.43	-0.27	0.050
55.00	-7.13	-1.32	0.00	-57.52	0.00	57.52	1,023.94	511.97	945.22	466.81	1.73	-0.29	0.047
60.00	-6.75	-1.32	0.00	-50.92	0.00	50.92	983.21	491.60	871.11	430.21	2.05	-0.32	0.043
62.75	-6.33	-1.33	0.00	-47.28	0.00	47.28	960.80	480.40	831.64	410.72	2.23	-0.33	0.041
65.00	-6.18	-1.33	0.00	-44.28	0.00	44.28	942.48	471.24	800.03	395.11	2.39	-0.34	0.039
65.83	-5.62	-1.34	0.00	-43.17	0.00	43.17	837.44	418.72	723.09	357.11	2.45	-0.34	0.039
70.00	-5.23	-1.35	0.00	-37.58	0.00	37.58	807.75	403.87	672.45	332.10	2.75	-0.36	0.036
73.00	-4.66	-1.35	0.00	-33.54	0.00	33.54	786.36	393.18	637.13	314.66	2.98	-0.37	0.033
75.00	-4.04	-1.33	0.00	-30.85	0.00	30.85	772.10	386.05	614.12	303.29	3.14	-0.38	0.030
80.00	-3.79	-1.32	0.00	-24.20	0.00	24.20	736.46	368.23	558.43	275.79	3.55	-0.40	0.025
81.00	-3.54	-1.30	0.00	-22.89	0.00	22.89	729.34	364.67	547.61	270.44	3.63	-0.40	0.024
81.00	-3.54	-1.30	0.00	-22.89	0.00	22.89	729.34	364.67	547.61	270.44	3.63	-0.40	0.089
85.00	-3.24	-1.25	0.00	-17.70	0.00	17.70	700.82	350.41	505.38	249.59	3.97	-0.41	0.076
90.00	-3.06	-1.22	0.00	-11.43	0.00	11.43	665.18	332.59	454.99	224.70	4.42	-0.45	0.055
93.00	-2.91	-1.18	0.00	-7.78	0.00	7.78	643.80	321.90	426.02	210.39	4.72	-0.47	0.041
95.00	-2.63	-1.08	0.00	-5.42	0.00	5.42	629.54	314.77	407.24	201.12	4.92	-0.48	0.031
100.00	-0.01	-0.01	0.00	0.00	0.00	0.00	593.90	296.95	362.13	178.84	5.43	-0.49	0.000
100.01	0.00	0.00	0.00	0.00	0.00	0.00	593.83	296.91	362.05	178.80	5.43	-0.49	0.000
100.50	0.00	0.00	0.00	0.00	0.00	0.00	590.33	295.17	357.77	176.69	5.48	-0.49	0.000

© 2007 - 2016 by ATC IP LLC. All rights reserved.

Analysis Summary

Load Case	Reactions Shear FX (kips)	Shear FZ (kips)	Axial FY (kips)	Moment MX (ft-kips)	Moment MY (ft-kips)	Moment MZ (ft-kips)	Max Usage Elev (ft)	Interaction Ratio
1.2D + 1.6W	22.23	0.00	23.13	0.00	0.00	1498.37	0.00	0.69
0.9D + 1.6W	22.06	0.00	17.33	0.00	0.00	1474.38	0.00	0.68
1.2D + 1.0Di + 1.0Wi	3.83	0.00	39.75	0.00	0.00	266.01	0.00	0.14
(1.2 + 0.2Sds) * DL + E ELFM	1.10	0.00	22.81	0.00	0.00	86.44	0.00	0.05
(1.2 + 0.2Sds) * DL + E EMAM	1.62	0.00	22.81	0.00	0.00	139.49	81.00	0.09
(0.9 - 0.2Sds) * DL + E ELFM	1.10	0.00	15.75	0.00	0.00	85.69	0.00	0.04
(0.9 - 0.2Sds) * DL + E EMAM	1.61	0.00	15.75	0.00	0.00	138.19	81.00	0.09
1.0D + 1.0W	4.16	0.00	19.32	0.00	0.00	277.81	0.00	0.13

Additional Steel Summary

Elev From (ft)	Elev To (ft)	Member	Intermediate Connectors VQ/I (lb/in)	Shear Applied (kips)	Shear phiVn (kips)	Upper Termination Connectors MQ/I (kips)	phiVn (kips)	Num Reqd	Num Actual	Lower Termination Connectors MQ/I (kips)	phiVn (kips)	Num Reqd	Num Actual	Max Member Pu (kip)	phiPn (kip)	Ratio
0.00	81.0	(4) SOL-#20 All Thre	334.6	10.0	16.8	43.7	12.0	4	7	0.0	12.0	0	0	247.5	330.5	0.749

Rock Anchor Foundation Calc

Rev. G

Anchor bolt diameter	2.25	in
Pull-out capacity	60	kips
x ϕ_s = 0.75	45	
Offset from edge	0.5	ft
# Rows (along length)	5	
# Cols (along width)	5	
Foundation length	8	ft
Design Moment	1498.4	ft-kips

Bolt Distance	0.5	2.25	4	5.75	7.5	
Num	5	2	2	2	5	
Force Capacity	3	13.5	24	34.5	45	TOTAL
Moment Capacity	7.5	60.75	192	396.75	1687.5	2344.5

Ratio	**0.64**
	OK

Base/Flange Plate	Plate Type	***Baseplate***	
	Pole Diameter	32	in
	Pole Thickness	0.25	in
	Plate Length	44	in
	Plate Thickness	2	in
	Plate Fy	60	ksi
	Weld Length	0.3125	in
	ϕ_s Resistance	2087.53	k-in
	Applied	900.39	k-in
Stiffeners	#	***12***	***Show***
	Thickness	0.5	in
	Length	5.5	in
	Height	10	in
	Chamfer	1	in
	Offset Angle	0	°
	Fy	36	ksi

Bolts	#	***8***	
	Bolt Circle	44	in
	(R)adial / (S)quare	S	
	Bolt Gap	6	in
	Diameter	2.25	in
	Hole Diameter	2.625	in
	Type	A615-75	
	Fy	75	ksi
	Fu	100	ksi
	ϕ_s Resistance	259.82	k
	Applied	102.90	k
Reinforcement ●	#	***4***	
	DYW. Circle	36.88	in
	Offset Angle	0	°
	Type	#20	
	Diameter	2.5	in
	Fu	100	ksi
Extra Bolts O	#	***0***	

Code Rev.	***G***
Moment	1498.4 k-ft
Axial	39.8 k

Date	8/3/2016
Engineer	J.Sparks
Site #	302516
Carrier	AT&T Mobility

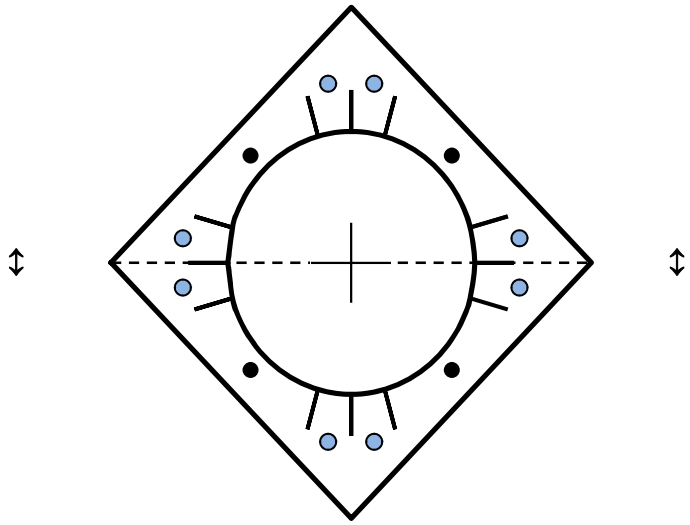

Plate Stress Ratio:

0.43 (Pass)

Bolt Stress Ratio:

0.40 (Pass)