SITE NAME: MILFORD-BRIDGEPORT AVE
FA NUMBER: 10034978
SITE NUMBER: CTL02111
RETROFIT-MRCTB019165
438 BRIDGEPORT AVENUE
MILFORD, CT 06460
NEW HAVEN COUNTY

AMERICAN TOWER SITE NAME: MLFD - MILFORD, CT
AMERICAN TOWER SITE NUMBER: 302516

PROJECT TEAM

CLIENT REPRESENTATIVE

COMPANY: SMARTLINK, LLC
ADDRESS: 85 RANGEWAY ROAD, BUILDING 3, SUITE 102
CITY, STATE, ZIP: NORTH BILLERICA, MA 01862-2105
CONTACT: TODD OLIVER
PHONE: (774) 369-3618
E-MAIL: TODD.OLIVER@SMARTLINKLLC.COM

SITE ACQUISITION

COMPANY: SMARTLINK, LLC
ADDRESS: 85 RANGEWAY ROAD, BUILDING 3, SUITE 102
CITY, STATE, ZIP: NORTH BILLERICA, MA 01862-2105
CONTACT: TODD OLIVER
PHONE: (774) 369-3618
E-MAIL: TODD.OLIVER@SMARTLINKLLC.COM

ENGINEER

COMPANY: MASER CONSULTING CONNECTICUT
ADDRESS: 331 NEWMAN SPRINGS ROAD
CITY, STATE, ZIP: RED BANK, NJ 07701-5699
CONTACT: FRANK PAZDEN
PHONE: (732) 383-1950
E-MAIL: FPAZDEN@MASERCONSULTING.COM

RF ENGINEER

COMPANY: NEW CINGULAR WIRELESS PCS, LLC
ADDRESS: 550 COCHITUATE ROAD
CITY, STATE, ZIP: FRAMINGHAM, MA 01701
CONTACT: SAJJAD SALAHUDDIN
E-MAIL: SS315Y@ATT.COM

CONSTRUCTION MANAGER

COMPANY: SMARTLINK, LLC.
ADDRESS: 85 RANGEWAY ROAD, BUILDING 3, SUITE 102
CITY, STATE, ZIP: NORTH BILLERICA, MA 01862-2105
CONTACT: MARK DONNELLY
PHONE: (617) 515-2080
E-MAIL: MARK.DONNELLY@SMARTLINKLLC.COM

SITE INFORMATION

APPLICANT/LESSEE

at&t

NEW CINGULAR WIRELESS PCS, LLC
550 COCHITUATE ROAD
FRAMINGHAM, MA 01701

PROPERTY/TOWER OWNER:

NAME: AMERICAN TOWER
ADDRESS: 116 HUNTINGTON AVE., 11TH FLOOR
CITY, STATE, ZIP: BOSTON, MA 02116
SITE #: 302516

LATITUDE: 41.2066031° N

LONGITUDE: 73.0933881° W

LAT./LONG. TYPE: NAD 83

AREA OF CONSTRUCTION: EXISTING EQUIPMENT SHELTER AND MONOPOLE

ZONING/JURISDICTION: CITY OF MILFORD

CURRENT USE/PROPOSED USE: UNMANNED TELECOMMUNICATIONS FACILITY

HANDICAP REQUIREMENTS: FACILITY IS UNMANNED AND NOT FOR HUMAN HABITATION. HANDICAPPED ACCESS NOT REQUIRED.

CONSTRUCTION TYPE: IIB

USE GROUP: U

VICINITY MAP

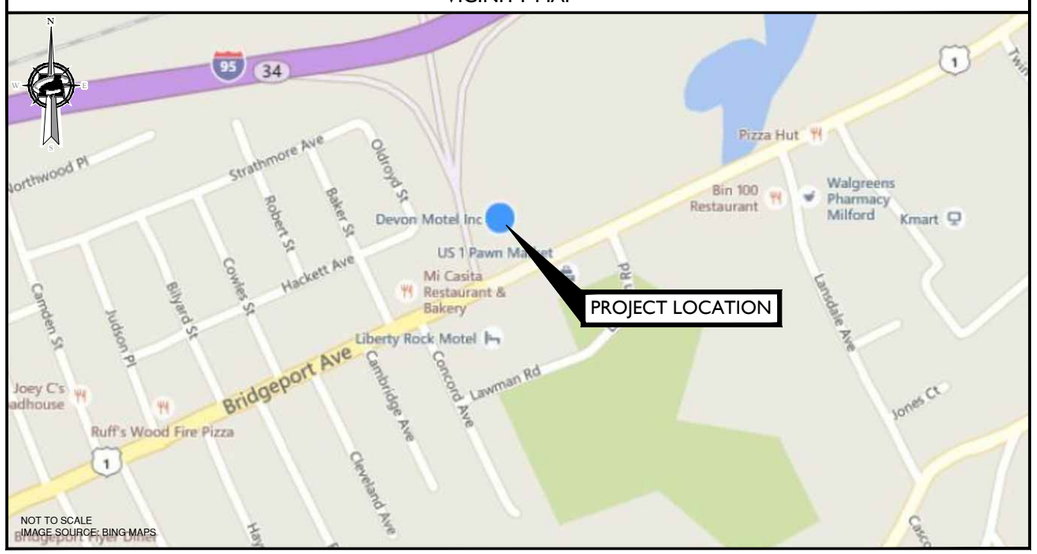

NOT TO SCALE
IMAGE SOURCE: BING MAPS

CODE COMPLIANCE

ALL WORK AND MATERIALS SHALL BE PERFORMED AND INSTALLED IN ACCORDANCE WITH THE CURRENT EDITIONS OF THE FOLLOWING CODES AS ADOPTED BY THE LOCAL GOVERNING AUTHORITIES. NOTHING IN THESE PLANS IS TO BE CONSTRUED TO PERMIT WORK NOT CONFORMING TO THE LATEST EDITIONS OF THE FOLLOWING CODES.

1. 2016 CONNECTICUT STATE BUILDING CODE INCORPORATING THE 2012 IBC
2. NATIONAL ELECTRIC CODE 2014
3. NATIONAL FIRE PROTECTION ASSOCIATION 70 - 2015
4. LIGHTNING PROTECTION CODE 201
5. AMERICAN CONCRETE INSTITUTE 318
6. AMERICAN INSTITUTE OF STEEL CONSTRICTION 360-10.
7. EIA/TIA-222 REVISION G
8. TIA 607 FOR GROUNDING
9. INSTITUTE FOR ELECTRICAL AND ELECTRONICS ENGINEERS 81
10. IEEE C2 LATEST EDITION
11. TELCORDIA GR-1275 12. ANSI T1.311

GENERAL CONTRACTOR NOTES

DO NOT SCALE DRAWINGS

CONTRACTOR SHALL VERIFY ALL PLANS AND EXISTING DIMENSIONS AND CONDITIONS ON THE JOB SITE AND SHALL IMMEDIATELY NOTIFY THE ARCHITECT/ENGINEER IN WRITING OF ANY DISCREPANCIES BEFORE PROCEEDING WITH THE WORK OR BE RESPONSIBLE FOR SAME.

GENERAL NOTES

THE FACILITY IS UNMANNED AND NOT FOR HUMAN HABITATION. A TECHNICIAN WILL VISIT THE SITE AS REQUIRED FOR ROUTINE MAINTENANCE. THE PROJECT WILL NOT RESULT IN ANY SIGNIFICANT DISTURBANCE OR EFFECT ON DRAINAGE; NO SANITARY SEWER SERVICE, POTABLE WATER, OR TRASH DISPOSAL IS REQUIRED AND NO COMMERCIAL SIGNAGE IS PROPOSED.

SHEET	DESCRIPTION
T-1	TITLE SHEET
GN-1	GENERAL NOTES
A-1	COMPOUND AND EQUIPMENT PLAN
A-2	ELEVATION VIEW AND ANTENNA SCHEDULE
A-3	ANTENNA LAYOUTS
A-4	DETAILS
A-5	RF PLUMBING DIAGRAMS
G-1	GROUNDING DETAILS

PROJECT DESCRIPTION/SCOPE OF WORK

THIS PROJECT WILL BE COMPRISED OF
- ADD (2) WCS FILTERS (TYP. OF ALPHA AND BETA SECTORS)

PROPOSED PROJECT SCOPE BASED ON RFDS ID# 751620, VERSION 3.0, LAST UPDATED 05/20/16

MASER CONSULTING CONNECTICUT

Customer Loyalty *through* Client Satisfaction
www.maserconsulting.com
Engineers ■ Planners ■ Surveyors
Landscape Architects ■ Environmental Scientists

Copyright © 2016. Maser Consulting Connecticut All Rights Reserved. This drawing and all the information contained herein is authorized for use only by the party for whom the services were contracted or to whom it is certified. This drawing may not be copied, reused, disclosed, distributed or relied upon for any other purpose without the express written consent of Maser Consulting Connecticut.

smartlink
85 RANGEWAY ROAD
BUILDING 3, SUITE 102
NORTH BILLERICA, MA 01862
TEL: (774) 369-3613

at&t
NEW CINGULAR WIRELESS PCS, LLC
550 COCHITUATE ROAD
FRAMINGHAM, MA 01701

811 PROTECT YOURSELF
ALL STATES REQUIRE NOTIFICATION OF EXCAVATORS, DESIGNERS, OR ANY PERSON PREPARING TO DISTURB THE EARTH'S SURFACE ANYWHERE IN ANY STATE
Know what's below. Call before you dig.
FOR STATE SPECIFIC DIRECT PHONE NUMBERS VISIT: WWW.CALL811.COM

SCALE: AS SHOWN
JOB NUMBER: 16946017A

REV	DATE	DESCRIPTION	DRAWN BY	CHECKED BY
1	12/19/16	FOR CONSTRUCTION	AJC	FEP
0	12/09/16	ISSUED FOR REVIEW	AJC	FEP

STATE OF CONNECTICUT
FRANK E. PAZDEN
No. 28188
PROFESSIONAL ENGINEER

FRANK E. PAZDEN
CONNECTICUT PROFESSIONAL ENGINEER LICENSE NUMBER: PEN.28188

IT IS A VIOLATION OF LAW FOR ANY PERSON, UNLESS THEY ARE ACTING UNDER THE DIRECTION OF THE PROFESSIONAL LICENSED ENGINEER, TO ALTER THIS DOCUMENT.

SITE NAME:
MILFORD-BRIDGEPORT AVE
FA# 10034978
SITE # CTL02111
438 BRIDGEPORT AVENUE
MILFORD, CT 06460
NEW HAVEN COUNTY

RED BANK OFFICE
331 Newman Springs Road
Suite 203
Red Bank, NJ 07701
Phone: 732.383.1950
Fax: 732.383.1984
email: solutions@maserconsulting.com

SHEET TITLE: TITLE SHEET

SHEET NUMBER: T-1

OWNERSHIP OF DOCUMENTS:
OTHER PROJECTS WITHOUT THE WRITTEN AUTHORIZATION OF SMARTLINK, LLC. . IT IS UNLAWFUL FOR ANY PERSON TO AMEND ANY ASPECT OF THESE DRAWINGS UNLESS THEY HAVE THE APPROVAL OF THE LICENSED PROFESSIONAL IN WRITING.

1. THE SUBCONTRACTOR SHALL REVIEW AND INSPECT THE EXISTING FACILITY GROUNDING SYSTEM (AS DESIGNED AND INSTALLED) FOR STRICT COMPLIANCE WITH THE NEC (AS ADOPTED BY THE AHJ), THE SITE-SPECIFIC (UL, LPI, OR NFPA) LIGHTING PROTECTION CODE, AND GENERAL COMPLIANCE WITH TELCORDIA AND TIA GROUNDING STANDARDS. THE SUBCONTRACTOR SHALL REPORT ANY VIOLATIONS OR ADVERSE FINDINGS TO THE CONTRACTOR FOR RESOLUTION.
2. ALL GROUND ELECTRODE SYSTEMS (INCLUDING TELECOMMUNICATION, RADIO, LIGHTNING PROTECTION, AND AC POWER GES'S) SHALL BE BONDED TOGETHER, AT OR BELOW GRADE, BY TWO OR MORE COPPER BONDING CONDUCTORS IN ACCORDANCE WITH THE NEC.
3. THE SUBCONTRACTOR SHALL PERFORM IEEE FALL-OF-POTENTIAL RESISTANCE TO EARTH TESTING (PER IEEE 1100 AND 81) FOR GROUND ELECTRODE SYSTEMS. THE SUBCONTRACTOR SHALL FURNISH AND INSTALL SUPPLEMENTAL GROUND ELECTRODES AS NEEDED TO ACHIEVE A TEST RESULT OF 5O HMS OR LESS.
4. THE SUBCONTRACTOR IS RESPONSIBLE FOR PROPERLY SEQUENCING GROUNDING AND UNDERGROUND CONDUIT INSTALLATION AS TO PREVENT ANY LOSS OF CONTINUITY IN THE GROUNDING SYSTEM OR DAMAGE TO THE CONDUIT.
5. METAL CONDUIT AND TRAY SHALL BE GROUNDED AND MADE ELECTRICALLY CONTINUOUS WITH LISTED BONDING FITTINGS OR BY BONDING ACROSS THE DISCONTINUITY WITH #6 AWG COPPER WIRE UL APPROVED GROUNDING TYPE CONDUIT CLAMPS.
6. METAL RACEWAY SHALL NOT BE USED AS THE NEC REQUIRED EQUIPMENT GROUND CONDUCTOR. STRANDED COPPER CONDUCTORS WITH GREEN INSULATION, SIZED IN ACCORDANCE WITH THE NEC, SHALL BE FURNISHED AND INSTALLED WITH THE POWER CIRCUITS TO BTS EQUIPMENT.
7. EACH BTS CABINET FRAME SHALL BE DIRECTLY CONNECTED TO THE EQUIPMENT GROUND RING WITH GREEN INSULATED SUPPLEMENTAL EQUIPMENT GROUND WIRES, 6 AWG STRANDED COPPER OR LARGER FOR INDOOR BTS; 2 AWG STRANDED COPPER FOR OUTDOOR BTS.
8. CONNECTIONS TO THE GROUND BUS SHALL NOT BE DOUBLED UP OR STACKED. BACK TO BACK CONNECTIONS ON OPPOSITE SIDES OF THE GROUND BUS ARE PERMITTED.
9. ALL EXTERIOR GROUND CONDUCTORS BETWEEN EQUIPMENT/GROUND BARS AND THE GROUND RING, SHALL BE #2 AWG SOLID TINNED COPPER UNLESS OTHERWISE INDICATED.
10. ALUMINUM CONDUCTOR OR COPPER CLAD STEEL CONDUCTOR SHALL NOT BE USED FOR GROUNDING CONNECTIONS.
11. USE OF 90° BENDS IN THE PROTECTION GROUNDING CONDUCTORS SHALL BE AVOIDED WHEN 45° BENDS CAN BE ADEQUATELY SUPPORTED. ALL BENDS SHALL BE MADE WITH 12" RADIUS OR LARGER.
12. EXOTHERMIC WELDS SHALL BE USED FOR ALL GROUNDING CONNECTIONS BELOW GRADE.
13. ALL GROUND CONNECTIONS ABOVE GRADE (INTERIOR) SHALL BE FORMED USING HIGH PRESS CRIMPS EXCEPT FOR GROUND BAR CONNECTION FROM MGB TO OUTSIDE EXTERIOR GROUND SHALL ALL BE CADWELD CONNECTIONS.
14. COMPRESSION GROUND CONNECTIONS MAY BE REPLACED BY EXOTHERMIC WELD CONNECTIONS.
15. ICE BRIDGE BONDING CONDUCTORS SHALL BE EXOTHERMICALLY BONDED TO THE TOWER GROUND BAR.
16. APPROVED ANTIOXIDANT COATINGS (I.E. CONDUCTIVE GEL OR PASTE) SHALL BE USED ON ALL COMPRESSION AND BOLTED GROUND CONNECTIONS.
17. ALL EXTERIOR AND INTERIOR GROUND CONNECTIONS SHALL BE COATED WITH A CORROSION RESISTANT MATERIAL.
18. MISCELLANEOUS ELECTRICAL AND NON-ELECTRICAL METAL BOXES, FRAMES AND SUPPORTS SHALL BE BONDED TO THE GROUND RING, IN ACCORDANCE WITH THE NEC.
19. BOND ALL METALLIC OBJECTS WITHIN 6 FT OF MAIN GROUND WIRES WITH 1-#2 AWG TIN-PLATED COPPER GROUND CONDUCTOR.
20. GROUND CONDUCTORS USED IN THE FACILITY GROUND AND LIGHTNING PROTECTION SYSTEMS SHALL NOT BE ROUTED THROUGH METALLIC OBJECTS THAT FORM A RING AROUND THE CONDUCTOR, SUCH AS METALLIC CONDUITS, METAL SUPPORT CLIPS OR SLEEVES THROUGH WALLS OR FLOORS. WHEN IT IS REQUIRED TO BE HOUSED IN CONDUIT TO MEET CODE REQUIREMENTS OR LOCAL CONDITIONS, NON-METALLIC MATERIAL SUCH AS PVC PLASTIC CONDUIT SHALL BE USED. WHERE USE OF METAL CONDUIT IS UNAVOIDABLE (E.G. NON-METALLIC CONDUIT PROHIBITED BY LOCAL CODE) THE GROUND CONDUCTOR SHALL BE BONDED TO EACH END OF THE METAL CONDUIT.
21. ALL NEW STRUCTURES WITH A FOUNDATION AND/OR FOOTING HAVING 20 FT. OR MORE OF 1/4" IN. OR GREATER ELECTRICALLY CONDUCTIVE REINFORCING STEEL MUST HAVE IT BONDED TO THE GROUND RING USING AN EXOTHERMIC WELD CONNECTION USING #2 AWG SOLID BARE TINNED COPPER GROUND WIRE, PER NEC 250.50.

1. FOR THE PURPOSE OF CONSTRUCTION DRAWING, THE FOLLOWING DEFINITIONS SHALL APPLY:

   CONTRACTOR - SMARTLINK
   SUBCONTRACTOR - GENERAL CONTRACTOR (CONSTRUCTION)
   OWNER - AT&T (NEW CINGULAR WIRELESS PCS, LLC)

2. ALL SITE WORK SHALL BE COMPLETED AS INDICATED ON THE DRAWINGS AND PROJECT SPECIFICATIONS.
3. DRAWINGS PROVIDED HERE ARE NOT TO BE SCALED AND ARE INTENDED TO SHOW OUTLINE ONLY.
4. ALL MATERIALS FURNISHED AND INSTALLED SHALL BE IN STRICT ACCORDANCE WITH ALL APPLICABLE CODES, REGULATIONS, AND ORDINANCES. SUBCONTRACTOR SHALL ISSUE ALL APPROPRIATE NOTICES AND COMPLY WITH ALL LAWS, ORDINANCES, RULES, REGULATIONS, AND LAWFUL ORDERS OF ANY PUBLIC AUTHORITY REGARDING THE PERFORMANCE OF THE WORK.
5. ALL WORK CARRIED OUT SHALL COMPLY WITH ALL APPLICABLE MUNICIPAL AND UTILITY COMPANY SPECIFICATIONS AND LOCAL JURISDICTIONAL CODES, ORDINANCES AND APPLICABLE REGULATIONS.
6. UNLESS NOTED OTHERWISE, THE WORK SHALL INCLUDE FURNISHING MATERIALS, EQUIPMENT, APPURTENANCES, AND LABOR NECESSARY TO COMPLETE ALL INSTALLATIONS AS INDICATED ON THE DRAWINGS.
7. THE SUBCONTRACTOR SHALL INSTALL ALL EQUIPMENT AND MATERIALS IN ACCORDANCE WITH MANUFACTURER'S RECOMMENDATIONS UNLESS SPECIFICALLY STATED OTHERWISE.
8. IF THE SPECIFIED EQUIPMENT CANNOT BE INSTALLED AS SHOWN ON THESE DRAWINGS, THE SUBCONTRACTOR SHALL PROPOSE AN ALTERNATIVE INSTALLATION SPACE FOR APPROVAL BY THE CONTRACTOR.
9. THE SUBCONTRACTOR SHALL PROTECT EXISTING IMPROVEMENTS, PAVEMENTS, CURBS, LANDSCAPING AND STRUCTURES. ANY DAMAGED PART SHALL BE REPAIRED AT SUBCONTRACTOR'S EXPENSE TO THE SATISFACTION OF OWNER.
10. THE SUBCONTRACTOR SHALL CONTACT UTILITY LOCATING SERVICES PRIOR TO THE START OF CONSTRUCTION.
11. ALL EXISTING ACTIVE SEWER, WATER, GAS, ELECTRIC, AND OTHER UTILITIES WHERE ENCOUNTERED IN THE WORK, SHALL BE PROTECTED AT ALL TIMES, AND WHERE REQUIRED FOR THE PROPER EXECUTION OF THE WORK, SHALL BE RELOCATED AS DIRECTED BY THE RESPONSIBLE ENGINEER. EXTREME CAUTION SHOULD BE USED BY THE SUBCONTRACTOR WHEN EXCAVATING OR DRILLING PIERS AROUND OR NEAR UTILITIES. SUBCONTRACTOR SHALL PROVIDE SAFETY TRAINING FOR THE WORKING CREW. THIS WILL INCLUDE BUT NOT BE LIMITED TO A) FALL PROTECTION B) CONFINED SPACE C) ELECTRICAL SAFETY D) TRENCHING & EXCAVATION.
12. ALL EXISTING INACTIVE SEWER, WATER, GAS, ELECTRIC AND OTHER UTILITIES, WHICH INTERFERE WITH THE EXECUTION OF THE WORK, SHALL BE REMOVED AND/OR CAPPED, PLUGGED OR OTHERWISE DISCONTINUED AT POINTS WHICH WILL NOT INTERFERE WITH THE EXECUTION OF THE WORK, AS DIRECTED BY THE RESPONSIBLE ENGINEER, AND SUBJECT TO THE APPROVAL OF THE OWNER AND/OR LOCAL UTILITIES.
13. THE AREAS OF THE OWNER'S PROPERTY DISTURBED BY THE WORK AND NOT COVERED BY THE TOWER, EQUIPMENT OR DRIVEWAY SHALL BE GRADED TO A UNIFORM SLOPE AND STABILIZED TO PREVENT EROSION.
14. SUBCONTRACTOR SHALL MINIMIZE DISTURBANCE TO EXISTING SITE DURING CONSTRUCTION. EROSION CONTROL MEASURES, IF REQUIRED DURING CONSTRUCTION, SHALL BE IN CONFORMANCE WITH THE LOCAL GUIDELINES FOR EROSION AND SEDIMENT CONTROL.
15. NO FILL OR EMBANKMENT MATERIAL SHALL BE PLACED ON FROZEN GROUND. FROZEN MATERIALS, SNOW OR ICE SHALL NOT BE PLACED IN ANY FILL OR EMBANKMENT.
16. THE SUBGRADE SHALL BE COMPACTED AND BROUGHT TO A SMOOTH UNIFORM GRADE PRIOR TO FINISHED SURFACE APPLICATION.
17. THE SITE SHALL BE GRADED TO CAUSE SURFACE WATER TO FLOW AWAY FROM THE BTS EQUIPMENT AND TOWER AREAS.
18. IF NECESSARY, RUBBISH, STUMPS, DEBRIS, STICKS, STONES AND OTHER REFUSE SHALL BE REMOVED FROM THE SITE AND DISPOSED OF LEGALLY.
19. THE SUBCONTRACTOR SHALL PROVIDE SITE SIGNAGE IN ACCORDANCE WITH THE TECHNICAL SPECIFICATION FOR SITE SIGNAGE.
20. SUBCONTRACTOR SHALL LEAVE PREMISES IN CLEAN CONDITION.
21. PRIOR TO THE SUBMISSION OF BIDS, THE BIDDING SUBCONTRACTOR SHALL VISIT THE CELL SITE TO FAMILIARIZE WITH THE EXISTING CONDITIONS AND TO CONSTRUCTION DRAWINGS. ANY DISCREPANCY FOUND SHALL BE BROUGHT TO THE ATTENTION OF THE CONTRACTOR.
22. SUBCONTRACTOR SHALL DETERMINE ACTUAL ROUTING OF CONDUIT, POWER AND T1 CABLES, GROUNDING CABLES AS SHOWN ON THE POWER, GROUNDING AND TELCO PLAN DRAWING. SUBCONTRACTOR SHALL UTILIZE EXISTING TRAYS AND/OR SHALL ADD NEW TRAYS AS NECESSARY. SUBCONTRACTOR SHALL CONFIRM THE ACTUAL ROUTING WITH THE CONTRACTOR.
23. ALL CONCRETE REPAIR WORK SHALL BE DONE IN ACCORDANCE WITH AMERICAN CONCRETE INSTITUTE (ACI) 301.
24. ANY NEW CONCRETE NEEDED FOR THE CONSTRUCTION SHALL BE AIR-ENTRAINED AND SHALL HAVE 4000 PSI STRENGTH AT 28 DAYS.
25. ALL STRUCTURAL STEEL WORK SHALL BE DETAILED, FABRICATED AND ERECTED IN ACCORDANCE WITH AISC SPECIFICATIONS. ALL STRUCTURAL STEEL SHALL BE ASTM A36 (Fy = 36 ksi) UNLESS OTHERWISE NOTED. PIPES SHALL BE ASTM A53 TYPE E (Fy = 36 ksi). ALL STEEL EXPOSED TO WEATHER SHALL BE HOT DIPPED GALVANIZED. TOUCHUP ALL SCRATCHES AND OTHER MARKS IN THE FIELD AFTER STEEL IS ERECTED USING A COMPATIBLE ZINC RICH PAINT.
26. CONSTRUCTION SHALL COMPLY WITH SPECIFICATIONS AND "GENERAL CONSTRUCTION SERVICES FOR CONSTRUCTION OF AT&T MOBILITY SITES."
27. SUBCONTRACTOR SHALL VERIFY ALL EXISTING DIMENSIONS AND CONDITIONS PRIOR TO COMMENCING ANY WORK. ALL DIMENSIONS OF EXISTING CONSTRUCTION SHOWN ON THE DRAWINGS MUST BE VERIFIED. SUBCONTRACTOR SHALL NOTIFY THE CONTRACTOR OF ANY DISCREPANCIES PRIOR TO ORDERING MATERIAL OR PROCEEDING WITH CONSTRUCTION.
28. THE EXISTING CELL SITE IS IN FULL COMMERCIAL OPERATION, ANY CONSTRUCTION WORK BY SUBCONTRACTOR SHALL NOT DISRUPT THE EXISTING NORMAL OPERATION. ANY WORK ON EXISTING EQUIPMENT MUST BE COORDINATED WITH CONTRACTOR. ALSO, WORK SHOULD BE SCHEDULED FOR AN APPROPRIATE MAINTENANCE WINDOW USUALLY IN LOW TRAFFIC PERIODS AFTER MIDNIGHT.
29. SINCE THE CELL SITE IS ACTIVE, ALL SAFETY PRECAUTIONS MUST BE TAKEN WHEN WORKING AROUND HIGH LEVELS OF ELECTROMAGNETIC RADIATION. EQUIPMENT SHOULD BE SHUTDOWN PRIOR TO PERFORMING ANY WORK THAT COULD EXPOSE THE WORKERS TO DANGER. PERSONAL RF EXPOSURE MONITORS ARE ADVISED TO BE WORN ALERT OF DANGEROUS EXPOSURE LEVELS.

MASER CONSULTING
CONNECTICUT

Customer Loyalty *through* Client Satisfaction
www.maserconsulting.com
Engineers ■ Planners ■ Surveyors
Landscape Architects ■ Environmental Scientists

Copyright © 2016. Maser Consulting Connecticut All Rights Reserved. This drawing and all the information contained herein is authorized for use only by the party for whom the services were contracted or to whom it is certified. This drawing may not be copied, reused, disclosed, distributed or relied upon for any other purpose without the express written consent of Maser Consulting Connecticut.

smartlink
85 RANGEWAY ROAD
BUILDING 3, SUITE 102
NORTH BILLERICA, MA 01862
TEL: (774) 369-3613

at&t
NEW CINGULAR WIRELESS PCS, LLC
550 COCHITUATE ROAD
FRAMINGHAM, MA 01701

811 Know what's below. Call before you dig.

PROTECT YOURSELF
ALL STATES REQUIRE NOTIFICATION OF EXCAVATORS, DESIGNERS, OR ANY PERSON PREPARING TO DISTURB THE EARTH'S SURFACE ANYWHERE IN ANY STATE

FOR STATE SPECIFIC DIRECT PHONE NUMBERS VISIT: WWW.CALL811.COM

SCALE :	JOB NUMBER :
AS SHOWN	16946017A

REV	DATE	DESCRIPTION	DRAWN BY	CHECKED BY
1	12/19/16	FOR CONSTRUCTION	AJC	FEP
0	12/09/16	ISSUED FOR REVIEW	AJC	FEP

STATE OF CONNECTICUT
FRANK E. PAZDEN
No. 28188
PROFESSIONAL ENGINEER

FRANK E. PAZDEN
CONNECTICUT PROFESSIONAL ENGINEER LICENSE NUMBER: PEN.28188

IT IS A VIOLATION OF LAW FOR ANY PERSON, UNLESS THEY ARE ACTING UNDER THE DIRECTION OF THE RESPONSIBLE LICENSED PROFESSIONAL ENGINEER, TO ALTER THIS DOCUMENT.

SITE NAME:
MILFORD-BRIDGEPORT AVE
FA# 10034978
SITE # CTL02111

438 BRIDGEPORT AVENUE
MILFORD, CT 06460
NEW HAVEN COUNTY

RED BANK OFFICE
331 Newman Springs Road
Suite 203
Red Bank, NJ 07701
Phone: 732.383.1950
Fax: 732.383.1984
email: solutions@maserconsulting.com

SHEET TITLE :
GENERAL NOTES

SHEET NUMBER :
GN-1

10034978 MILFORD-BRIDGEPORT AVE CD's Rev 1 161031.dwg/GN-1 By: ACOA

OWNERSHIP OF DOCUMENTS:
OTHER PROJECTS WITHOUT THE WRITTEN AUTHORIZATION OF SMARTLINK, LLC. . IT IS UNLAWFUL FOR ANY PERSON TO AMEND ANY ASPECT OF THESE DRAWINGS UNLESS THEY HAVE THE APPROVAL OF THE LICENSED PROFESSIONAL IN WRITING.

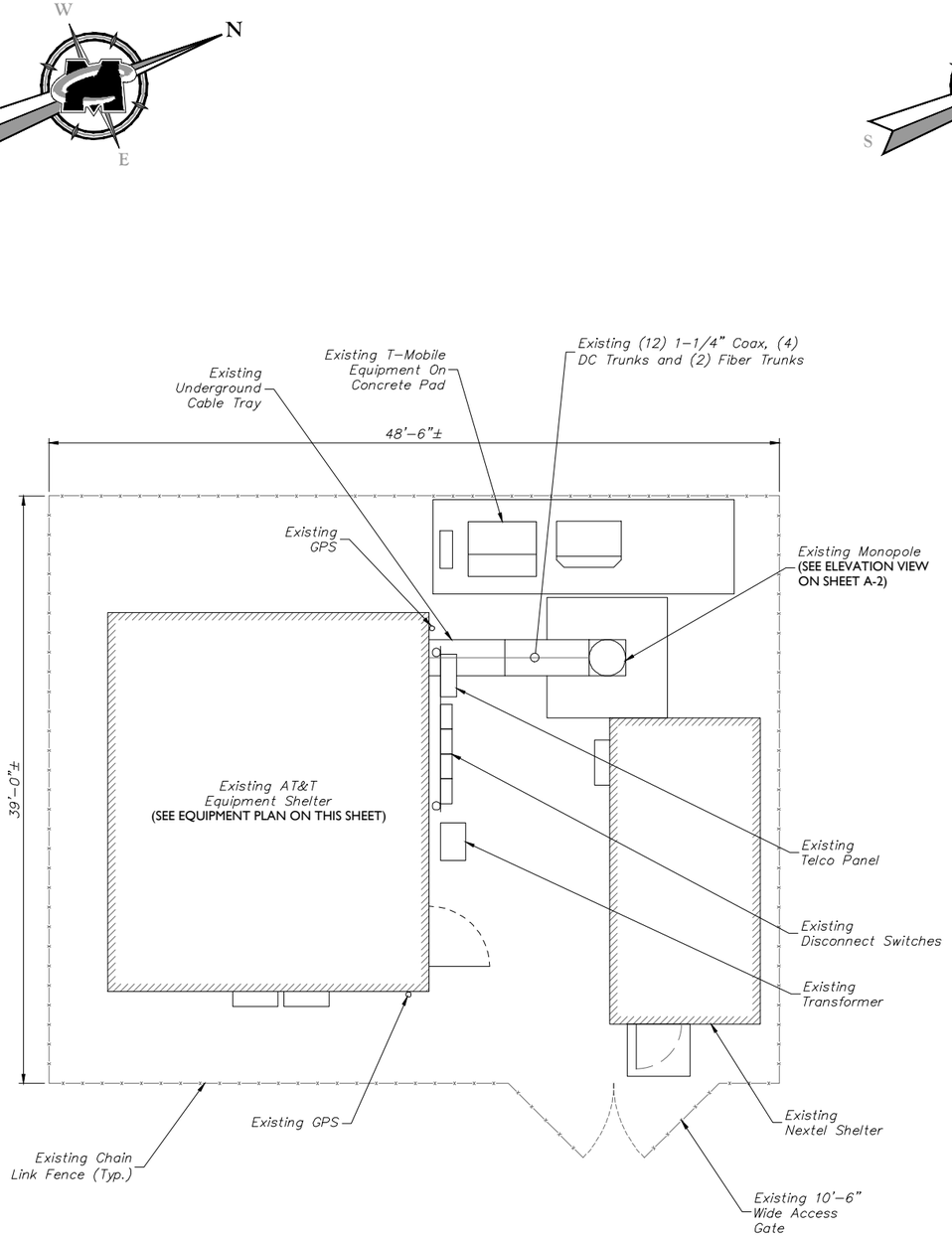

COMPOUND PLAN

GRAPHIC SCALE

5 0 2.5 5 10

(IN FEET)

SCALE: 1" = 5' FOR 24"X36" DRAWINGS

(DO NOT SCALE 11"X17" DRAWINGS)

NOTE:

THESE PLANS WERE DESIGNED WITH THE ASSUMPTION THAT THE PREVIOUS PLANS PREPARED BY MASER CONSULTING P.A. OF RED BANK, NJ DATED 02/25/16 WILL BE COMPLETED PRIOR TO THE CURRENT SCOPE OF WORK BEING INSTALLED. ANY CHANGES IN PREVIOUS DESIGN SHALL BE BROUGHT TO THE ATTENTION OF THE ENGINEER IMMEDIATELY.

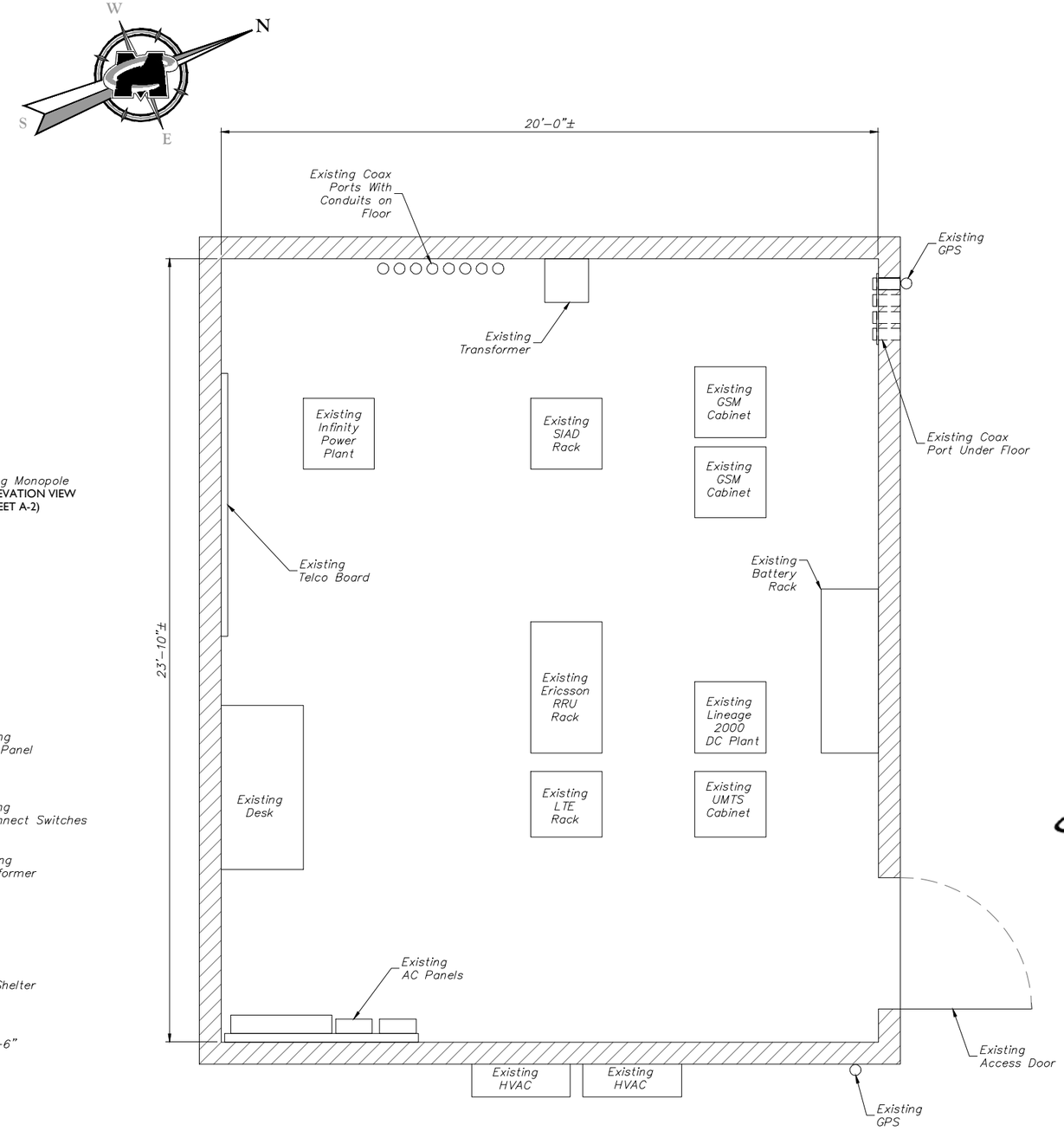

EQUIPMENT PLAN

GRAPHIC SCALE

2 0 1 2 4

(IN FEET)

SCALE: 1" = 2' FOR 24"X36" DRAWINGS

(DO NOT SCALE 11"X17" DRAWINGS)

MASER CONSULTING
CONNECTICUT

Customer Loyalty *through* Client Satisfaction
www.maserconsulting.com
Engineers ■ Planners ■ Surveyors
Landscape Architects ■ Environmental Scientists

Copyright © 2016. Maser Consulting Connecticut All Rights Reserved. This drawing and all the information contained herein is authorized for use only by the party for whom the services were contracted or to whom it is certified. This drawing may not be copied, reused, disclosed, distributed or relied upon for any other purpose without the express written consent of Maser Consulting Connecticut.

smartlink
85 RANGEWAY ROAD
BUILDING 3, SUITE 102
NORTH BILLERICA, MA 01862
TEL: (774) 369-3613

at&t
NEW CINGULAR WIRELESS PCS, LLC
550 COCHITUATE ROAD
FRAMINGHAM, MA 01701

811 Know what's below. Call before you dig.

PROTECT YOURSELF
ALL STATES REQUIRE NOTIFICATION OF EXCAVATORS, DESIGNERS, OR ANY PERSON PREPARING TO DISTURB THE EARTH'S SURFACE ANYWHERE IN ANY STATE

FOR STATE SPECIFIC DIRECT PHONE NUMBERS VISIT: WWW.CALL811.COM

SCALE :	JOB NUMBER :
AS SHOWN	16946017A

REV	DATE	DESCRIPTION	DRAWN BY	CHECKED BY
1	12/19/16	FOR CONSTRUCTION	AJC	FEP
0	12/09/16	ISSUED FOR REVIEW	AJC	FEP

STATE OF CONNECTICUT
FRANK E. PAZDEN
PROFESSIONAL ENGINEER
No. 28188

FRANK E. PAZDEN
CONNECTICUT PROFESSIONAL
ENGINEER LICENSE NUMBER: 28188

IT IS A VIOLATION OF LAW FOR ANY PERSON, UNLESS THEY ARE ACTING UNDER THE DIRECTION OF THE RESPONSIBLE LICENSED PROFESSIONAL ENGINEER, TO ALTER THIS DOCUMENT.

SITE NAME:
MILFORD-BRIDGEPORT AVE
FA# 10034978
SITE # CTL02111

438 BRIDGEPORT AVENUE
MILFORD, CT 06460
NEW HAVEN COUNTY

RED BANK OFFICE
331 Newman Springs Road
Suite 203
Red Bank, NJ 07701
Phone: 732.383.1950
Fax: 732.383.1984
email: solutions@maserconsulting.com

SHEET TITLE :
COMPOUND PLAN AND EQUIPMENT PLAN

SHEET NUMBER :
A-1

OWNERSHIP OF DOCUMENTS:
OTHER PROJECTS WITHOUT THE WRITTEN AUTHORIZATION OF SMARTLINK, LLC. . IT IS UNLAWFUL FOR ANY PERSON TO AMEND ANY ASPECT OF THESE DRAWINGS UNLESS THEY HAVE THE APPROVAL OF THE LICENSED PROFESSIONAL IN WRITING.

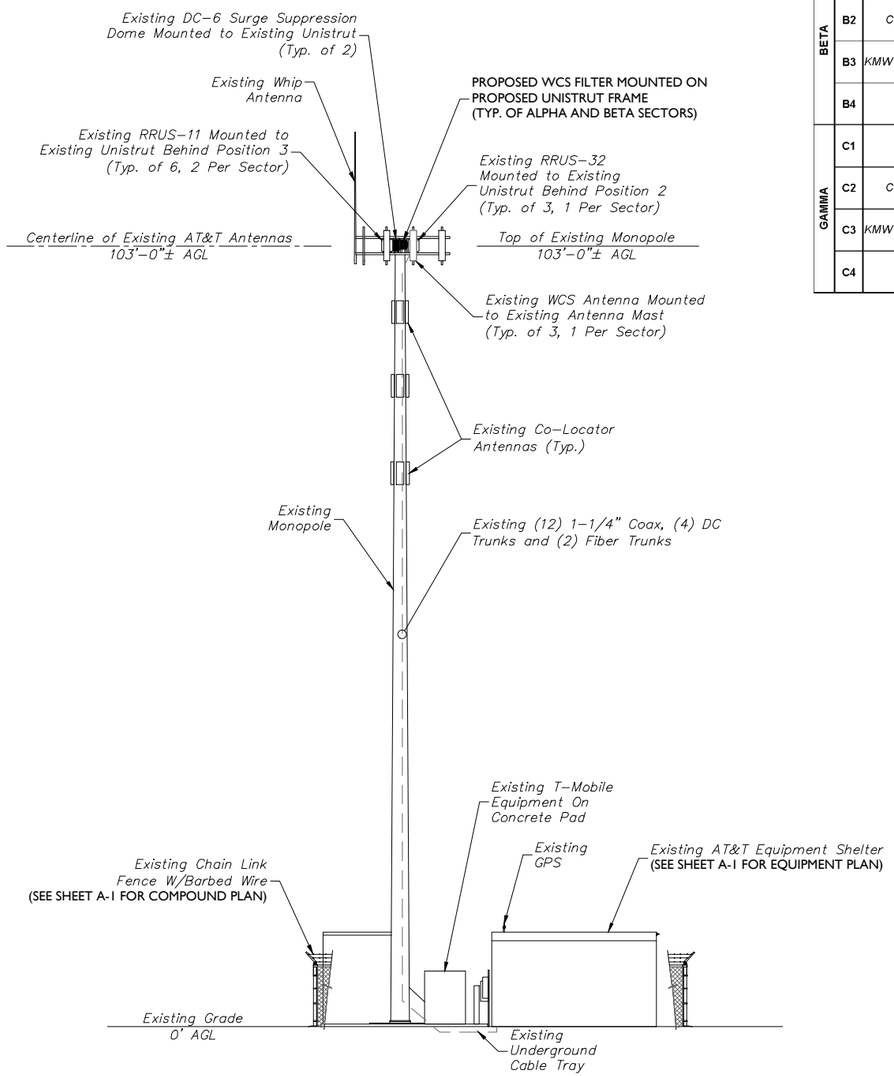

ELEVATION VIEW

GRAPHIC SCALE

10 0 5 10 20

(IN FEET)

SCALE: 1" = 10' FOR 24"X36" DRAWINGS

(DO NOT SCALE 11"X17" DRAWINGS)

PROPOSED ANTENNA AND RRUS CONFIGURATION

SECTOR		EXISTING ANTENNA CONFIGURATION	PROPOSED ANTENNA CONFIGURATION	TECHNOLOGY	ANTENNA STATUS	HEIGHT (in)	WIDTH (in)	DEPTH (in)	WEIGHT (lbs)	ANTENNA AZIMUTH	ANT. CL. ELEV (ft.)	RRUS CONFIGURATION	STATUS
ALPHA	A1	Powerwave 7770	Powerwave 7770	UMTS 850/1900	REMAIN	55.00	11.00	5.00	35.00	140°	103'	-	-
	A2	CCI OPA-65R-LCUU-H4	CCI OPA-65R-LCUU-H4	GSM 850	REMAIN	48.00	14.40	7.30	57.00	19°	103'	(1) RRUS 32 **(1) WCS FILTER**	REMAIN **NEW**
	A3	KMW AM-X-CD-14-65-00T-RET	KMW AM-X-CD-14-65-00T-RET	LTE 700/1900	REMAIN	48.00	11.80	5.90	36.40	19°	103'	(2) RRUS 11	REMAIN
	A4	VACANT MAST	VACANT MAST	-	-	-	-	-	-	-	-	-	-
BETA	B1	Powerwave 7770	Powerwave 7770	UMTS 850/1900	REMAIN	55.00	11.00	5.00	35.00	262°	103'	-	-
	B2	CCI OPA-65R-LCUU-H4	CCI OPA-65R-LCUU-H4	GSM 850	REMAIN	48.00	14.40	7.30	57.00	140°	103'	(1) RRUS 32 **(1) WCS FILTER**	REMAIN **NEW**
	B3	KMW AM-X-CD-14-65-00T-RET	KMW AM-X-CD-14-65-00T-RET	LTE 700/1900	REMAIN	48.00	11.80	5.90	36.40	140°	103'	(2) RRUS 11	REMAIN
	B4	VACANT MAST	VACANT MAST	-	-	-	-	-	-	-	-	-	-
GAMMA	C1	Powerwave 7770	Powerwave 7770	UMTS 850/1900	REMAIN	55.00	11.00	5.00	35.00	19°	103'	-	-
	C2	CCI OPA-65R-LCUU-H4	CCI OPA-65R-LCUU-H4	GSM 850	REMAIN	48.00	14.40	7.30	57.00	262°	103'	(1) RRUS 32	REMAIN
	C3	KMW AM-X-CD-14-65-00T-RET	KMW AM-X-CD-14-65-00T-RET	LTE 700/1900	REMAIN	48.00	11.80	5.90	36.40	262°	103'	(2) RRUS 11	REMAIN
	C4	VACANT MAST	VACANT MAST	-	-	-	-	-	-	-	-	-	-

ANTENNA SCHEDULE

NOTE:

THESE PLANS WERE DESIGNED WITH THE ASSUMPTION THAT THE PREVIOUS PLANS PREPARED BY MASER CONSULTING P.A. OF RED BANK, NJ DATED 02/25/16 WILL BE COMPLETED PRIOR TO THE CURRENT SCOPE OF WORK BEING INSTALLED. ANY CHANGES IN PREVIOUS DESIGN SHALL BE BROUGHT TO THE ATTENTION OF THE ENGINEER IMMEDIATELY.

STRUCTURAL NOTES:

1. A STRUCTURAL ANALYSIS TO DETERMINE IF THE EXISTING STRUCTURE AND FOUNDATION CAN ADEQUATELY SUPPORT THE PROPOSED LOADING HAS NOT BEEN PREPARED/ANALYZED BY MASER AND IS TO BE PERFORMED BY OTHERS.
2. NO CONSTRUCTION OF THE PROPOSED LOADING SHOWN SHALL PROCEED UNTIL ADEQUACY OF EXISTING STRUCTURE AND FOUNDATION, INCLUDING THE PROPOSED AT&T ANTENNA MOUNTING CONFIGURATION SHOWN HEREIN, HAS BEEN CONFIRMED BY SMARTLINK.
3. THE STRUCTURE ELEVATION IS SHOWN FOR INFORMATIONAL PURPOSES ONLY AND MAY NOT REFLECT AS-BUILT FIELD CONDITIONS FOR ALL EXISTING INVENTORY LOADING/ANTENNAS/APPURTANENCES ON STRUCTURE. REFER TO THE LATEST STRUCTURAL ANALYSIS FOR EXISTING STRUCTURE LOADING AND THE PROPOSED METHOD OF ATTACHMENT OF THE PROPOSED ANTENNAS/CABLES.
4. THE CONTRACTOR IS RESPONSIBLE TO CONFIRM THAT ANY IMPROVEMENTS AND REINFORCEMENTS REQUIRED BY THE STRUCTURAL ANALYSIS CERTIFICATION ARE PROPERLY INSTALLED PRIOR TO THE ADDITION OF ANTENNAS, CABLES, SUPPORTS AND APPURTENANCES PROPOSED ON THESE DRAWINGS OR OTHERWISE NOTED IN THE STRUCTURAL ANALYSIS.

MASER CONSULTING
CONNECTICUT

Customer Loyalty *through* Client Satisfaction
www.maserconsulting.com
Engineers ■ Planners ■ Surveyors
Landscape Architects ■ Environmental Scientists

Copyright © 2016. Maser Consulting Connecticut All Rights Reserved. This drawing and all the information contained herein is authorized for use only by the party for whom the services were contracted or to whom it is certified. This drawing may not be copied, reused, disclosed, distributed or relied upon for any other purpose without the express written consent of Maser Consulting Connecticut.

smartlink
85 RANGEWAY ROAD
BUILDING 3, SUITE 102
NORTH BILLERICA, MA 01862
TEL: (774) 369-3613

at&t
NEW CINGULAR WIRELESS PCS, LLC
550 COCHITUATE ROAD
FRAMINGHAM, MA 01701

811 Know what's below. Call before you dig.

PROTECT YOURSELF
ALL STATES REQUIRE NOTIFICATION OF EXCAVATORS, DESIGNERS, OR ANY PERSON PREPARING TO DISTURB THE EARTH'S SURFACE ANYWHERE IN ANY STATE

FOR STATE SPECIFIC DIRECT PHONE NUMBERS VISIT: WWW.CALL811.COM

SCALE : AS SHOWN

JOB NUMBER : 16946017A

REV	DATE	DESCRIPTION	DRAWN BY	CHECKED BY
1	12/19/16	FOR CONSTRUCTION	AJC	FEP
0	12/09/16	ISSUED FOR REVIEW	AJC	FEP

STATE OF CONNECTICUT
FRANK E. PATZEN
CONNECTICUT PROFESSIONAL ENGINEER LICENSE NUMBER: PEN.28188
No. 28188
PROFESSIONAL ENGINEER

IT IS A VIOLATION OF LAW FOR ANY PERSON, UNLESS THEY ARE ACTING UNDER THE DIRECTION OF THE RESPONSIBLE LICENSED PROFESSIONAL ENGINEER, TO ALTER THIS DOCUMENT.

SITE NAME:
MILFORD-BRIDGEPORT AVE
FA# 10034978
SITE # CTL02111

438 BRIDGEPORT AVENUE
MILFORD, CT 06460
NEW HAVEN COUNTY

RED BANK OFFICE
331 Newman Springs Road
Suite 203
Red Bank, NJ 07701
Phone: 732.383.1950
Fax: 732.383.1984
email: solutions@maserconsulting.com

SHEET TITLE :
ELEVATION VIEW AND ANTENNA SCHEDULE

SHEET NUMBER :
A-2

2009\09718\MILFORD-BRIDGEPORT AVE\CD's\Rev 1\16031-Ant\A-2 By:AJCOA

OWNERSHIP OF DOCUMENTS:
OTHER PROJECTS WITHOUT THE WRITTEN AUTHORIZATION OF SMARTLINK, LLC. . IT IS UNLAWFUL FOR ANY PERSON TO AMEND ANY ASPECT OF THESE DRAWINGS UNLESS THEY HAVE THE APPROVAL OF THE LICENSED PROFESSIONAL IN WRITING.

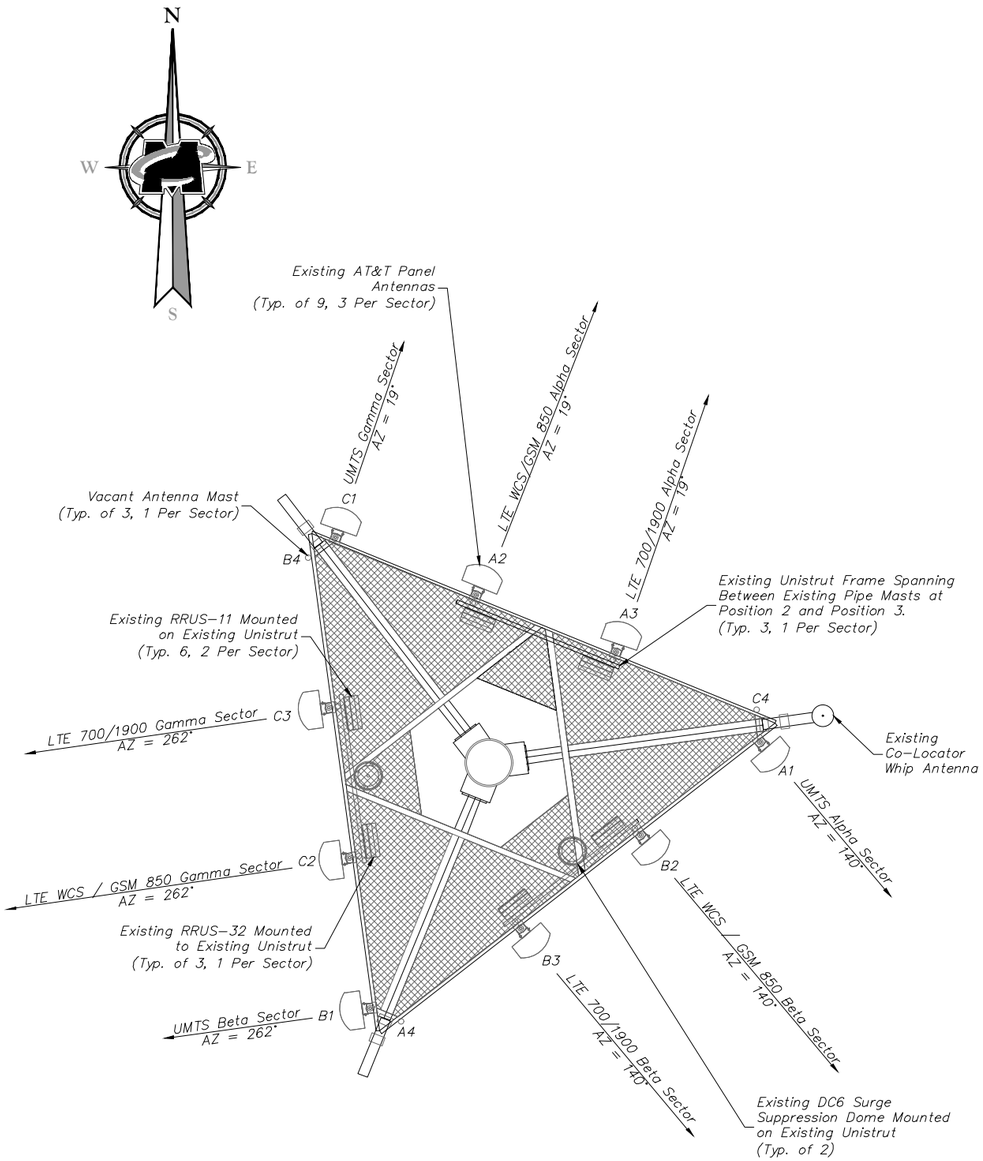

EXISTING - ANTENNA LAYOUT

NOT TO SCALE

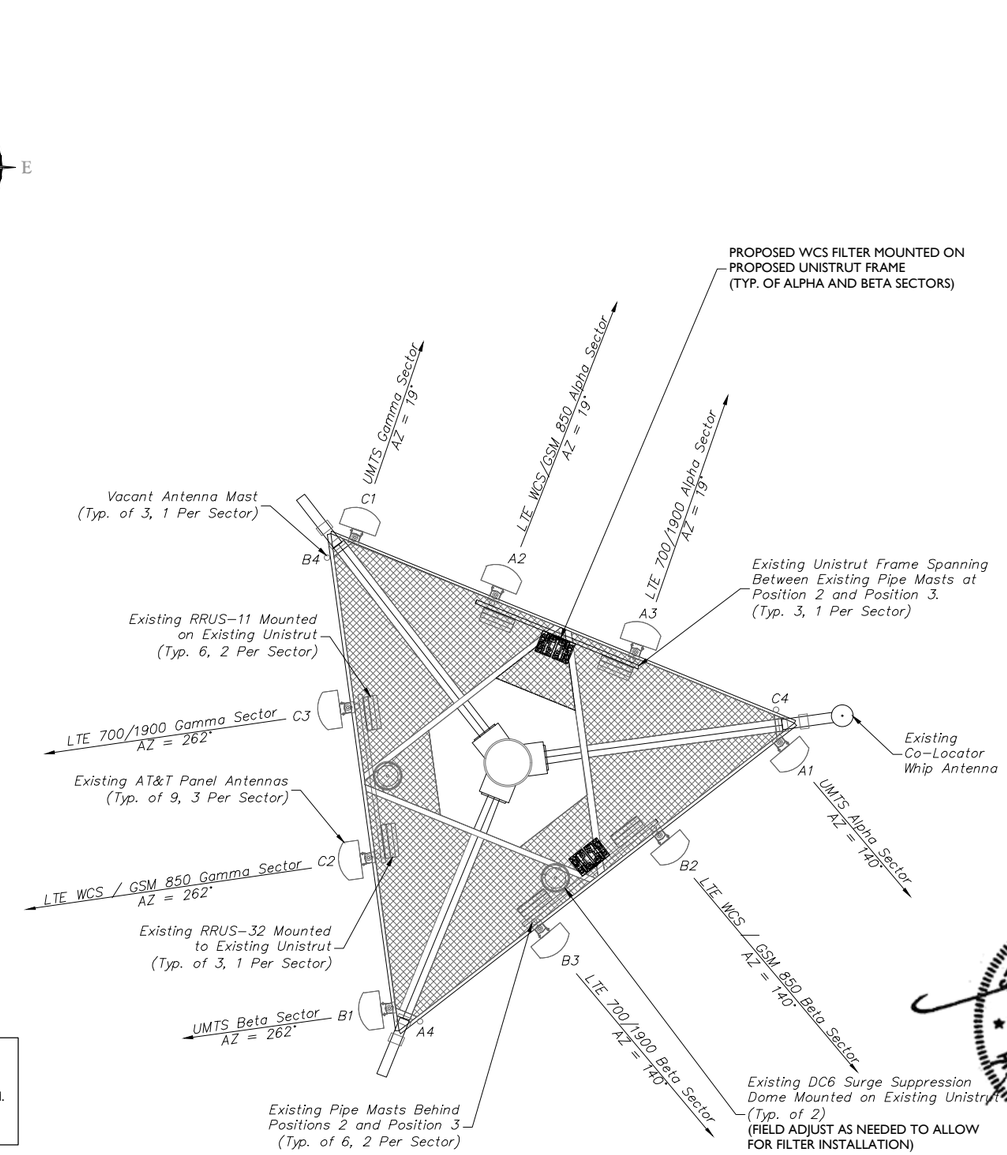

PROPOSED - ANTENNA LAYOUT

NOT TO SCALE

NOTE:

BIRDS NEST ON MONOPOLE PLATFORM. OSPREY NEST (PROTECTED SPECIES).

NOTE:

THESE PLANS WERE DESIGNED WITH THE ASSUMPTION THAT THE PREVIOUS PLANS PREPARED BY MASER CONSULTING P.A. OF RED BANK, NJ DATED 02/25/16 WILL BE COMPLETED PRIOR TO THE CURRENT SCOPE OF WORK BEING INSTALLED. ANY CHANGES IN PREVIOUS DESIGN SHALL BE BROUGHT TO THE ATTENTION OF THE ENGINEER IMMEDIATELY.

MASER CONSULTING
CONNECTICUT

Customer Loyalty *through* Client Satisfaction
www.maserconsulting.com
Engineers ■ Planners ■ Surveyors
Landscape Architects ■ Environmental Scientists

Copyright © 2016. Maser Consulting Connecticut All Rights Reserved. This drawing and all the information contained herein is authorized for use only by the party for whom the services were contracted or to whom it is certified. This drawing may not be copied, reused, disclosed, distributed or relied upon for any other purpose without the express written consent of Maser Consulting Connecticut.

smartlink
85 RANGEWAY ROAD
BUILDING 3, SUITE 102
NORTH BILLERICA, MA 01862
TEL: (774) 369-3613

at&t
NEW CINGULAR WIRELESS PCS, LLC
550 COCHITUATE ROAD
FRAMINGHAM, MA 01701

811 Know what's below. Call before you dig.

PROTECT YOURSELF
ALL STATES REQUIRE NOTIFICATION OF EXCAVATORS, DESIGNERS, OR ANY PERSON PREPARING TO DISTURB THE EARTH'S SURFACE ANYWHERE IN ANY STATE

FOR STATE SPECIFIC DIRECT PHONE NUMBERS VISIT: WWW.CALL811.COM

SCALE :	JOB NUMBER :
AS SHOWN	16946017A

REV	DATE	DESCRIPTION	DRAWN BY	CHECKED BY
1	12/19/16	FOR CONSTRUCTION	AJC	FEP
0	12/09/16	ISSUED FOR REVIEW	AJC	FEP

STATE OF CONNECTICUT
FRANK E. PAZDEN
LICENSED PROFESSIONAL ENGINEER
No. 28188

FRANK E. PAZDEN
CONNECTICUT PROFESSIONAL ENGINEER LICENSE NUMBER: PEN.28188

No. 28188

IT IS A VIOLATION OF LAW FOR ANY PERSON, UNLESS THEY ARE ACTING UNDER THE DIRECTION OF THE PROFESSIONAL LICENSED ENGINEER, TO ALTER THIS DOCUMENT.

SITE NAME:
MILFORD-BRIDGEPORT AVE
FA# 10034978
SITE # CTL02111

438 BRIDGEPORT AVENUE
MILFORD, CT 06460
NEW HAVEN COUNTY

RED BANK OFFICE
331 Newman Springs Road
Suite 203
Red Bank, NJ 07701
Phone: 732.383.1950
Fax: 732.383.1984
email: solutions@maserconsulting.com

SHEET TITLE :

ANTENNA LAYOUTS

SHEET NUMBER :

A-3

10034978 MILFORD-BRIDGEPORT AVE CD's Rev 1 16931.dwg A-3 By: AJCOA

OWNERSHIP OF DOCUMENTS:
OTHER PROJECTS WITHOUT THE WRITTEN AUTHORIZATION OF SMARTLINK, LLC. . IT IS UNLAWFUL FOR ANY PERSON TO AMEND ANY ASPECT OF THESE DRAWINGS UNLESS THEY HAVE THE APPROVAL OF THE LICENSED PROFESSIONAL IN WRITING.

NOTES:

1. ALL UNISTRUT CHANNELS SHALL BE P1000 UNLESS OTHERWISE NOTED.
2. ALL FIELD CUT ENDS SHALL BE FIELD GALVANIZED ACCORDING TO ATSM-A780.
3. ALL FASTENERS BETWEEN UNISTRUT CONNECTIONS ARE 1/2" Ø. ALL DRILLED HOLES SHALL BE 9/16" Ø.
4. MOUNT WCS FILTER TO UNISTRUT WITH 3/8" Ø UNISTRUT BOLTING HARDWARE AND SPRING NUTS. TYPICAL FOUR (4) PER DEVICE, THROUGH MANUFACTURER'S MOUNTING HOLES, SUBCONTRACTOR SHALL SUPPLY. REFER TO THE MANUFACTURER'S WRITTEN SPECIFICATIONS FOR STEP-BY-STEP INSTRUCTIONS FOR SECURING FILTER TO UNISTRUT FRAMES.
5. PART NUMBERS SHOWN ARE UNISTRUT MANUFACTURER OR APPROVED EQUAL.

Electrical

WCS PATH (BTS0 - ANT0 & BTS1 - ANT1)

Passband frequency range, MHz	2305 – 2359.14
Insertion Loss for 2305.0 – 2315.0 MHz, dB	0.3 max, 0.2 typ.
Insertion Loss for 2350.0 - 2357.0 MHz, dB	0.9 max, 0.5 typ.
Insertion Loss for 2357.0 – 2358.6 MHz, dB	1.6 max, 1.0 typ.
Insertion Loss for 2358.6 – 2358.96 MHz, dB	2.2 max, 1.5 typ.
Insertion Loss for 2358.96 - 2359.14 MHz, dB	2.0 typical
Group Delay for 2305.0 – 2315.0 MHz	10 ns max
Group Delay for 2350.0 - 2358.6 MHz	250 ns max
Group Delay for 2358.6 - 2359.0 MHz	400 ns max
Return loss, dB	18 min, 20dB typ.
Rejection 2360–2395 MHz	30dB min, 35 typ.
IMD (two +43 dBm carriers)	–110 dBm max
Input power rating per port – RMS	100 W
Input power rating per port– PEP	1000 W

DC/AISG TRANSPARENCY

AISG Frequency	2.176 MHz
Insertion Loss (@2.176 MHz)	0.2dB max
DC Bypass Path 1 (twin & quad)	BTS1 to ANT1
DC Bypass Path 2 (twin & quad)	BTS2 to ANT2
DC Bypass Path 3 (quad)	BTS3 to ANT3
DC Bypass Path 4 (quad)	BTS4 to ANT4
DC Voltage Bypass	7 – 30 V
DC Current Single Path	3 A max

Mechanical (Quad Version)

Dimensions, mm	285x269x175 mm
Dimensions, in	11.2x 10.6 x 6.9 in
Weight, (without mounting brackets) Kg (lb)	13.4kg (29.5 lbs)
Weight, (with mounting brackets) Kg (lb)	15.7kg (34.5 lbs)
Finish	Gray paint
Connectors, RF	7-16 DIN female
Ground terminal diameter, mm (in)	5 (0.20)

Block Diagram (Quad Version)

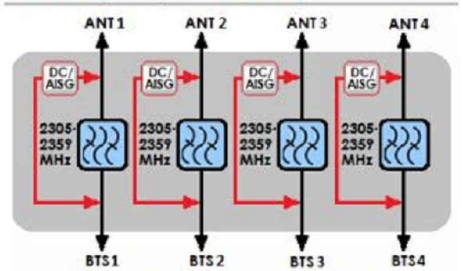

Quad WCS IMF for AMT Band Co-Location

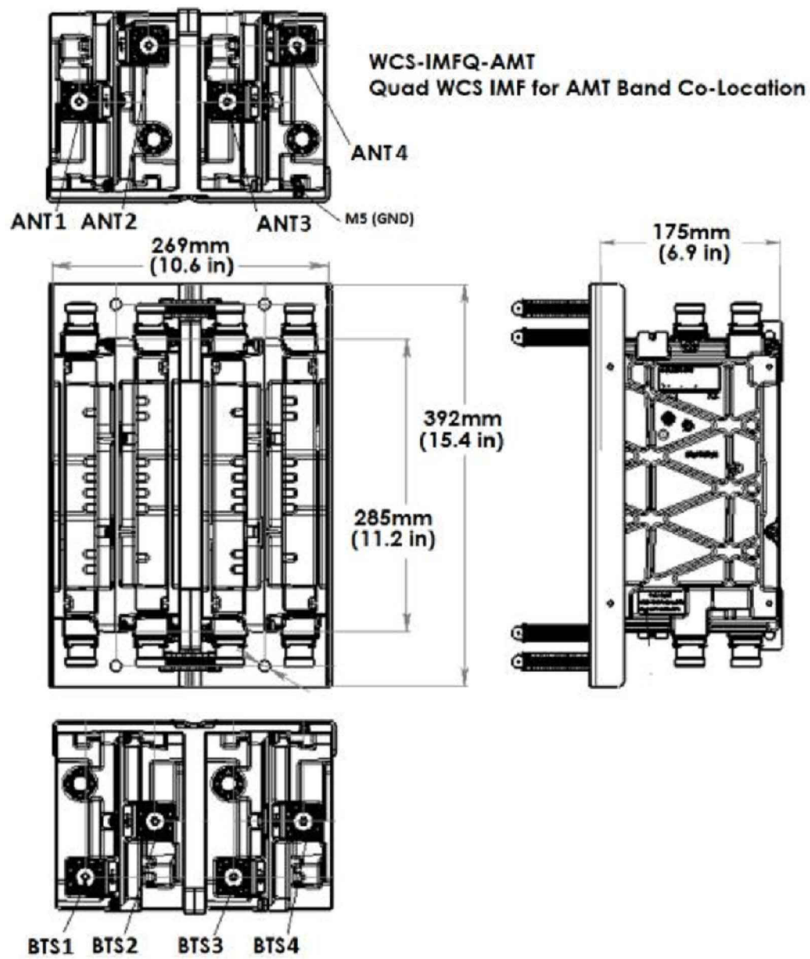

WCS - IMFQ - AMT FILTER DETAILS

NOT TO SCALE

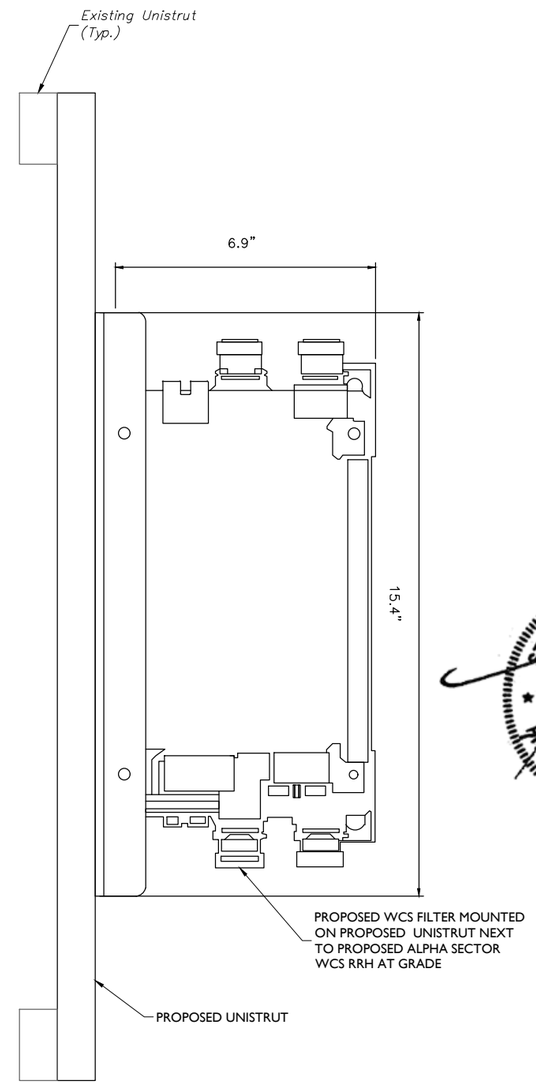

WCS - IMFQ - AMT FILTER MOUNTING DETAIL

NOT TO SCALE

MASER CONSULTING
CONNECTICUT

Customer Loyalty *through* Client Satisfaction
www.maserconsulting.com
Engineers ■ Planners ■ Surveyors
Landscape Architects ■ Environmental Scientists

Copyright © 2016. Maser Consulting Connecticut All Rights Reserved. This drawing and all the information contained herein is authorized for use only by the party for whom the services were contracted or to whom it is certified. This drawing may not be copied, reused, disclosed, distributed or relied upon for any other purpose without the express written consent of Maser Consulting Connecticut.

smartlink
85 RANGEWAY ROAD
BUILDING 3, SUITE 102
NORTH BILLERICA, MA 01862
TEL: (774) 369-3613

at&t

NEW CINGULAR WIRELESS PCS, LLC
550 COCHITUATE ROAD
FRAMINGHAM, MA 01701

811 Know what's below. Call before you dig.

PROTECT YOURSELF
ALL STATES REQUIRE NOTIFICATION OF EXCAVATORS, DESIGNERS, OR ANY PERSON PREPARING TO DISTURB THE EARTH'S SURFACE ANYWHERE IN ANY STATE

FOR STATE SPECIFIC DIRECT PHONE NUMBERS VISIT: WWW.CALL811.COM

SCALE : AS SHOWN

JOB NUMBER : 16946017A

REV	DATE	DESCRIPTION	DRAWN BY	CHECKED BY
1	12/19/16	FOR CONSTRUCTION	AJC	FEP
0	12/09/16	ISSUED FOR REVIEW	AJC	FEP

STATE OF CONNECTICUT
FRANK E. PAZDEN
No. 28188
PROFESSIONAL ENGINEER

FRANK E. PAZDEN
CONNECTICUT PROFESSIONAL ENGINEER LICENSE NUMBER: PEN.28188

IT IS A VIOLATION OF LAW FOR ANY PERSON, UNLESS THEY ARE ACTING UNDER THE DIRECTION OF THE RESPONSIBLE LICENSED PROFESSIONAL ENGINEER, TO ALTER THIS DOCUMENT.

SITE NAME:
MILFORD-BRIDGEPORT AVE
FA# 10034978
SITE # CTL02111

438 BRIDGEPORT AVENUE
MILFORD, CT 06460
NEW HAVEN COUNTY

RED BANK OFFICE
331 Newman Springs Road
Suite 203
Red Bank, NJ 07701
Phone: 732.383.1950
Fax: 732.383.1984
email: solutions@maserconsulting.com

SHEET TITLE : DETAILS

SHEET NUMBER : A-4

OWNERSHIP OF DOCUMENTS:
OTHER PROJECTS WITHOUT THE WRITTEN AUTHORIZATION OF SMARTLINK, LLC. . IT IS UNLAWFUL FOR ANY PERSON TO AMEND ANY ASPECT OF THESE DRAWINGS UNLESS THEY HAVE THE APPROVAL OF THE LICENSED PROFESSIONAL IN WRITING.

Diagram - Sector	A	Diagram File Name - CT2111_BrnzStand_A_wcs_wFilter_Rev1.vsd					
Atoll Site Name -	CTU2111	Location Name -	MILFORD-BRIDGEPORT AVE	Market -	CONNECTICUT	Market Cluster -	NEW ENGLAND
Comments:							

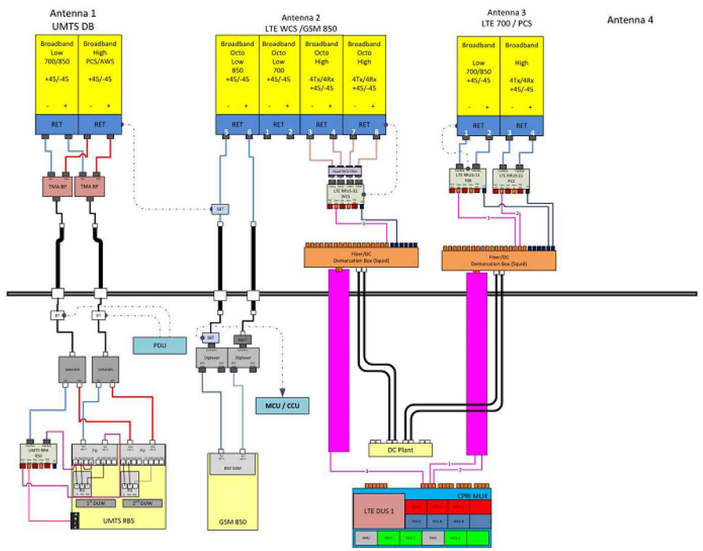

ALPHA SECTOR

Diagram - Sector	B	Diagram File Name - CT2111_BrnzStand_B_wcs_wFilter_Rev1.vsd					
Atoll Site Name -	CTU2111	Location Name -	MILFORD-BRIDGEPORT AVE	Market -	CONNECTICUT	Market Cluster -	NEW ENGLAND
Comments:							

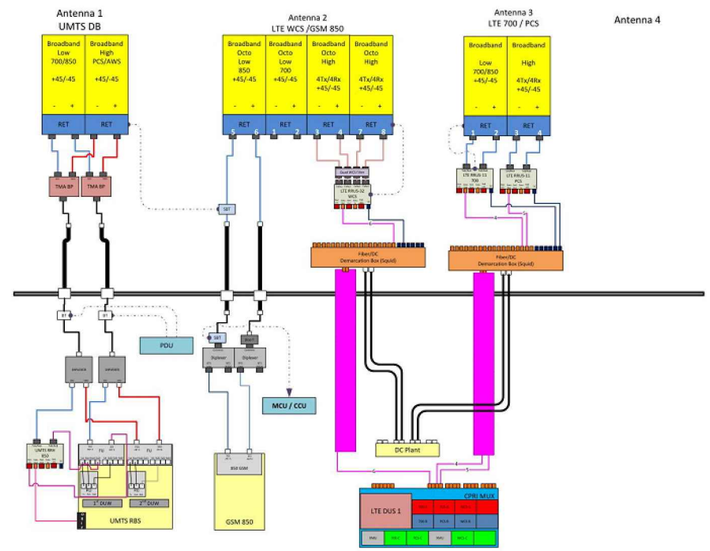

BETA SECTOR

Diagram - Sector	C	Diagram File Name - CT2111_BrnzStand_C_wcs_Rev1.vsd					
Atoll Site Name -	CTU2111	Location Name -	MILFORD-BRIDGEPORT AVE	Market -	CONNECTICUT	Market Cluster -	NEW ENGLAND
Comments:							

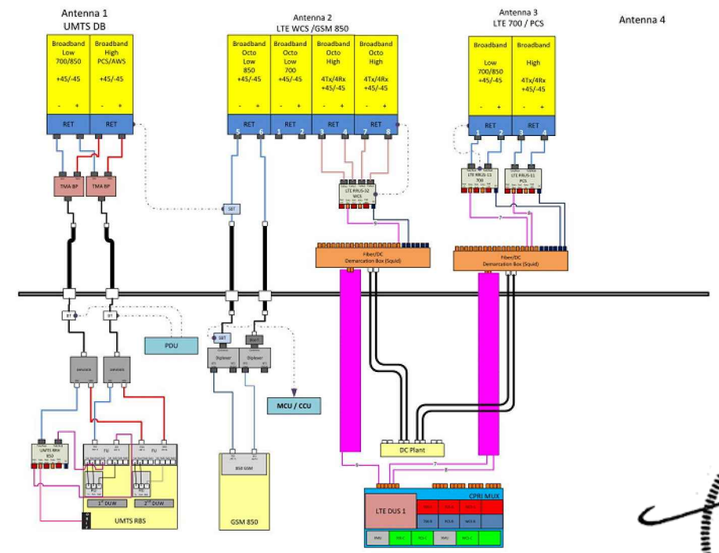

GAMMA SECTOR

BASED ON RF ENGINEERING DESIGN ENTITLED "NEW-ENGLAND_CONNECTICUT_CTU2111_2016-LTE-Next-Carrier_LTE-3C_mm093q_2051A02ITE_10034978_61179_06-29-2015_Final-Approved_v3.00"

RF PLUMBING DIAGRAMS

MASER CONSULTING
CONNECTICUT

Customer Loyalty *through* Client Satisfaction
www.maserconsulting.com
Engineers ■ Planners ■ Surveyors
Landscape Architects ■ Environmental Scientists

Copyright © 2016. Maser Consulting Connecticut All Rights Reserved. This drawing and all the information contained herein is authorized for use only by the party for whom the services were contracted or to whom it is certified. This drawing may not be copied, reused, disclosed, distributed or relied upon for any other purpose without the express written consent of Maser Consulting Connecticut.

smartlink
85 RANGEWAY ROAD
BUILDING 3, SUITE 102
NORTH BILLERICA, MA 01862
TEL: (774) 369-3613

at&t
NEW CINGULAR WIRELESS PCS, LLC
550 COCHITUATE ROAD
FRAMINGHAM, MA 01701

811 Know what's below. Call before you dig.

PROTECT YOURSELF
ALL STATES REQUIRE NOTIFICATION OF EXCAVATORS, DESIGNERS, OR ANY PERSON PREPARING TO DISTURB THE EARTH'S SURFACE ANYWHERE IN ANY STATE

FOR STATE SPECIFIC DIRECT PHONE NUMBERS VISIT: WWW.CALL811.COM

SCALE : AS SHOWN

JOB NUMBER : 16946017A

REV	DATE	DESCRIPTION	DRAWN BY	CHECKED BY
1	12/19/16	FOR CONSTRUCTION	AJC	FEP
0	12/09/16	ISSUED FOR REVIEW	AJC	FEP

STATE OF CONNECTICUT
FRANK E. PAZDEN
No. 28188
LICENSED PROFESSIONAL ENGINEER

FRANK E. PAZDEN
CONNECTICUT PROFESSIONAL ENGINEER LICENSE NUMBER: PEN.28188

IT IS A VIOLATION OF LAW FOR ANY PERSON, UNLESS THEY ARE ACTING UNDER THE DIRECTION OF THE RESPONSIBLE LICENSED PROFESSIONAL ENGINEER, TO ALTER THIS DOCUMENT.

SITE NAME:
MILFORD-BRIDGEPORT AVE
FA# 10034978
SITE # CTL02111

438 BRIDGEPORT AVENUE
MILFORD, CT 06460
NEW HAVEN COUNTY

RED BANK OFFICE
331 Newman Springs Road
Suite 203
Red Bank, NJ 07701
Phone: 732.383.1950
Fax: 732.383.1984
email: solutions@maserconsulting.com

SHEET TITLE : RF PLUMBING DIAGRAM

SHEET NUMBER : A-5

OWNERSHIP OF DOCUMENTS:
OTHER PROJECTS WITHOUT THE WRITTEN AUTHORIZATION OF SMARTLINK, LLC. . IT IS UNLAWFUL FOR ANY PERSON TO AMEND ANY ASPECT OF THESE DRAWINGS UNLESS THEY HAVE THE APPROVAL OF THE LICENSED PROFESSIONAL IN WRITING.

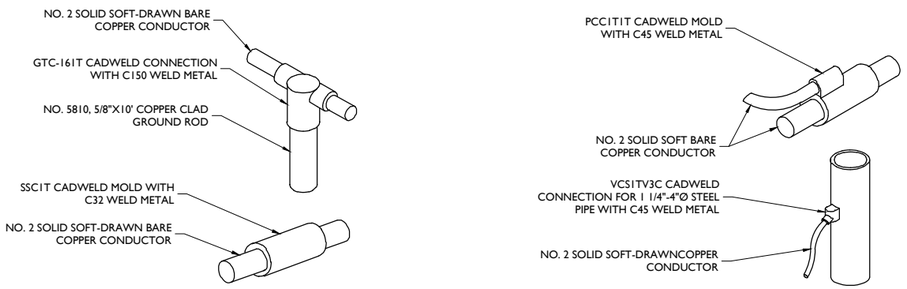

CADWELD DETAILS

NOT TO SCALE

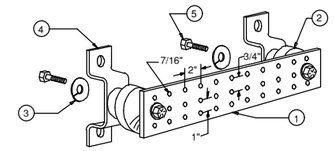

LEGEND

1- TINNED COPPER GROUND BAR, 1/4"x4"x20", NEWTON INSTRUMENT CO. CAT. NO. B-6142 OR EQUAL. HOLE CENTERS TO MATCH NEMA DOUBLE LUG CONFIGURATION.

2- INSULATORS, NEWTON INSTRUMENT CAT. NO. 3061-4

3- 5/8" LOCKWASHERS, NEWTON INSTRUMENT CO. CAT. NO. 3015-8

4- WALL MOUNTING BRACKET, NEWTON INSTRUMENT CO. CAT NO. A-5056

5- 5/8-11 X 1" HHCS BOLTS, NEWTON INSTRUMENT CO. CAT NO. 3012-1

6- EACH GROUND CONDUCTOR TERMINATING ON ANY GROUND BAR HAVE AN IDENTIFICATION TAG ATTACHED AT EACH END THAT WILL IDENTIFY ITS ORIGIN AND DESTINATION.

SECTION "P" - SURGE PRODUCERS

CABLE ENTRY PORTS (HATCH PLATES) (#2)
GENERATOR FRAMEWORK (IF AVAILABLE) (#2)
TELCO GROUND BAR
COMMERCIAL POWER COMMON NEUTRAL/GROUND BOND (#2)
+24V POWER SUPPLY RETURN BAR (#2)
-48V POWER SUPPLY RETURN BAR (#2)
RECTIFIER FRAMES.

SECTION "A" - SURGE ABSORBERS

INTERIOR GROUND RING (#2)
EXTERNAL EARTH GROUND FIELD (BURIED GROUND RING) (#2)
METALLIC COLD WATER PIPE (IF AVAILABLE) (#2)
BUILDING STEEL (IF AVAILABLE) (#2)

MASTER GROUND BAR

NOT TO SCALE

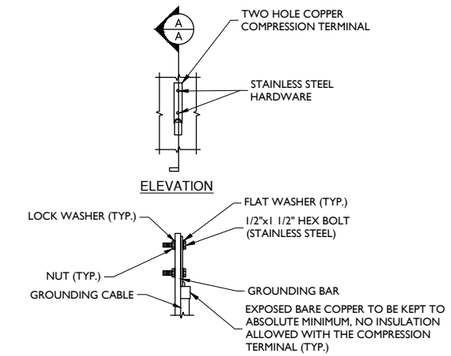

TYPICAL GROUND BAR CONNECTION DETAIL

NOT TO SCALE

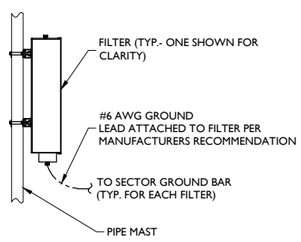

FILTER GROUNDING

NOT TO SCALE

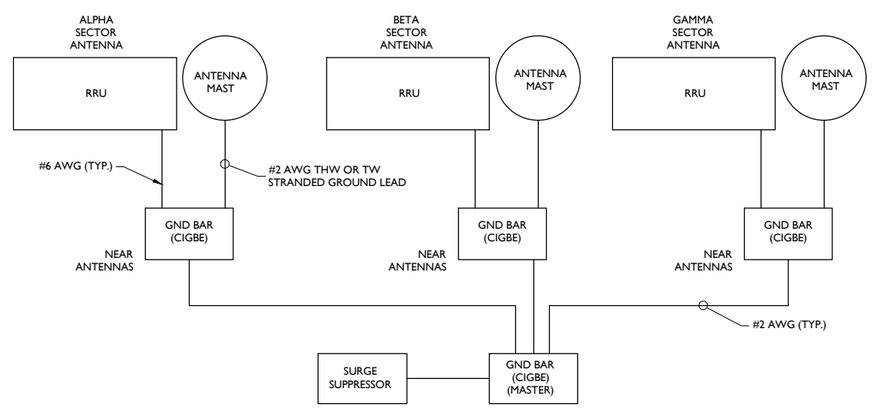

SCHEMATIC DIAGRAM GROUNDING SYSTEM

NOT TO SCALE

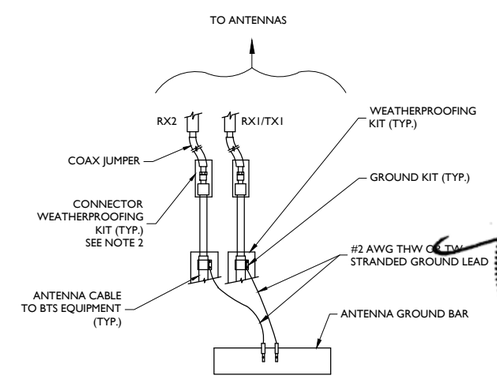

NOTES:

1. DO NOT INSTALL CABLE GROUND KIT AT A BEND AND ALWAYS DIRECT GROUND WIRE DOWN TO ANTENNA GROUND BAR.
2. WEATHER PROOFING SHALL BE TWO-PART TAPE KIT, COLD SHRINK SHALL NOT BE USED.

TYPICAL GROUND WIRE TO GROUNDING BAR

NOT TO SCALE

MASER CONSULTING
CONNECTICUT
Customer Loyalty *through* Client Satisfaction
www.maserconsulting.com
Engineers ■ Planners ■ Surveyors
Landscape Architects ■ Environmental Scientists

Copyright © 2016. Maser Consulting Connecticut All Rights Reserved. This drawing and all the information contained herein is authorized for use only by the party for whom the services were contracted or to whom it is certified. This drawing may not be copied, reused, disclosed, distributed or relied upon for any other purpose without the express written consent of Maser Consulting Connecticut.

smartlink
85 RANGEWAY ROAD
BUILDING 3, SUITE 102
NORTH BILLERICA, MA 01862
TEL: (774) 369-3613

at&t
NEW CINGULAR WIRELESS PCS, LLC
550 COCHITUATE ROAD
FRAMINGHAM, MA 01701

811 Know what's below. Call before you dig.
PROTECT YOURSELF
ALL STATES REQUIRE NOTIFICATION OF EXCAVATORS, DESIGNERS, OR ANY PERSON PREPARING TO DISTURB THE EARTH'S SURFACE ANYWHERE IN ANY STATE
FOR STATE SPECIFIC DIRECT PHONE NUMBERS VISIT: WWW.CALL811.COM

SCALE :	JOB NUMBER :
AS SHOWN	16946017A

REV	DATE	DESCRIPTION	DRAWN BY	CHECKED BY
1	12/19/16	FOR CONSTRUCTION	AJC	FEP
0	12/09/16	ISSUED FOR REVIEW	AJC	FEP

STATE OF CONNECTICUT
FRANK E. PAZDEN
No. 28188
PROFESSIONAL ENGINEER

FRANK E. PAZDEN
CONNECTICUT PROFESSIONAL ENGINEER LICENSE NUMBER: PEN.28188

IT IS A VIOLATION OF LAW FOR ANY PERSON, UNLESS THEY ARE ACTING UNDER THE DIRECTION OF THE RESPONSIBLE LICENSED PROFESSIONAL ENGINEER, TO ALTER THIS DOCUMENT.

SITE NAME:
MILFORD-BRIDGEPORT AVE
FA# 10034978
SITE # CTL02111

438 BRIDGEPORT AVENUE
MILFORD, CT 06460
NEW HAVEN COUNTY

RED BANK OFFICE
331 Newman Springs Road
Suite 203
Red Bank, NJ 07701
Phone: 732.383.1950
Fax: 732.383.1984
email: solutions@maserconsulting.com

SHEET TITLE :
GROUNDING DETAILS

SHEET NUMBER :
G-1

OWNERSHIP OF DOCUMENTS:
OTHER PROJECTS WITHOUT THE WRITTEN AUTHORIZATION OF SMARTLINK, LLC. . IT IS UNLAWFUL FOR ANY PERSON TO AMEND ANY ASPECT OF THESE DRAWINGS UNLESS THEY HAVE THE APPROVAL OF THE LICENSED PROFESSIONAL IN WRITING.