Date: **August 24, 2016**

David C. Rodriguez
Phoenix Tower International
1001 Yamato Road, Suite 105
Boca Raton, FL 33431
(561) 257-0557

Tower Engineering Professionals
326 Tryon Road
Raleigh, NC 27603
(919) 661-6351
sjarzombek@tepgroup.net

Subject: Structural Modification Analysis Report - Revision 1

Carrier Designation:	***AT&T Mobility Reconfiguration***	
	Carrier Site Number:	CTL01129
	Carrier Site Name:	Middlebury Straits TPKE
	FA Location Code:	10035253
Phoenix Tower Designation:	**PTI Site Number:**	US-CT-1003
	PTI Site Name:	Straits Turnpike
Engineering Firm Designation:	**TEP Project Number:**	25628.93911
Site Data:	**1021 Straits Turnpike, Middlebury, New Haven County, CT 06762** **Latitude *41° 32' 8.78"*, Longitude *-73° 05' 21.27"*** **195 Foot - Self Support Tower**	

Dear David Rodriguez,

Tower Engineering Professionals is pleased to submit this **"Structural Modification Analysis Report"** to determine the structural integrity of the above mentioned tower.

The purpose of the analysis is to determine acceptability of the tower stress level. Based on our analysis we have determined the tower stress level for the structure and foundation, under the following load case, to be:

LC2: Existing + Proposed Equipment with Proposed Modifications **Sufficient Capacity**
Note: See Table 1 for the existing and proposed loading

Structure Capacity	Controlling Component
95.5%	Diagonal Bolts (T9): 120' – 126.7'

The analysis has been performed in accordance with the ANSI/TIA/EIA-222-F Structural Standards for Steel Antenna Towers and Antenna Supporting Structures, ASCE 7-05 Minimum Design Loads for Buildings and Other Structures and the 2005 Connecticut State Building Code based upon a wind speed of 85 mph fastest mile.

All modifications and equipment proposed in this report shall be installed in accordance with the appurtenances listed in Table 1 and the attached drawings for the determined available structural capacity to be effective.

We at *Tower Engineering Professionals* appreciate the opportunity of providing our continuing professional services to you and *Phoenix Tower International*. If you have any questions or need further assistance on this or any other projects please give us a call.

Structural analysis prepared by: Jordan A. Russ, E.I. / SJJ

Respectfully submitted by:

STATE OF CONNECTICUT
GRAHAM M. ANDRES
29538
LICENSED
PROFESSIONAL ENGINEER

8/24/16

Graham M. Andres, P.E.

Revision #	Date Issued	Description
0	April 19, 2016	Original structural modification analysis (TEP No.25628.47301)
1	August 24, 2016	Revised AT&T loading

TABLE OF CONTENTS

1) INTRODUCTION

2) ANALYSIS CRITERIA
- Table 1 - Existing and Proposed Antenna and Cable Information
- Table 2 - Design Antenna and Cable Information

3) ANALYSIS PROCEDURE
- Table 3 - Documents Provided
- 3.1) Analysis Method
- 3.2) Assumptions

4) ANALYSIS RESULTS
- Table 4 - Section Capacity (Summary)
- Table 5 - Tower Component Stresses vs. Capacity
- 4.1) Recommendations

5) APPENDIX A
- tnxTower Output

6) APPENDIX B
- Coax Configuration

7) APPENDIX C
- Additional Calculations

8) APPENDIX D
- Structural Design Drawings

1) INTRODUCTION

This tower is a 195-ft self support tower designed by Fred A. Nudd Corporation in May of 1998. The tower was originally designed for a fastest mile wind speed of 85 mph per ANSI/EIA/TIA-222-F for the appurtenances listed in Table 2. TEP visited the site in June of 2010 to gather existing steel and appurtenance information. This tower has been modified multiple times in the past to accommodate additional loading. All information provided to TEP was assumed to be accurate and complete.

2) ANALYSIS CRITERIA

The analysis has been performed in accordance with the ANSI/TIA/EIA-222-F Structural Standards for Steel Antenna Towers and Antenna Supporting Structures and ASCE 7-05 Minimum Design Loads for Buildings and Other Structures using a fastest mile wind speed of 85 mph with no ice, 38 mph with 0.75 inch escalating ice thickness, and 50 mph under service loads.

Table 1 - Existing and Proposed Antenna and Cable Information

Existing/ Proposed	Elevation (ft)	Qty	Antenna Model	Mount Type	Qty Coax	Coax Size	Coax[1] Location	Owner/ Tenant
Existing	195.0	3	RFS APX16DWV-16DWVS	(3) 12.5' Sector Frames	18	1-5/8	AB Face	T-Mobile
		6	Ericsson KRY-112-71					
Existing	193.0	3	Commscope LNX-6515DS-VTM					
Proposed	***188.0***	***3***	***Andrew SBNHH-1D65A***	(3) 15.0' T-Frames with Catwalk and MT195-14 Handrail Kit	***1***	***7/16"Ø Fiber***	***CA Face***	***AT&T***
		2	***KMW AM-X-CD-16-65-00T-RET***		***2***	***3/8"Ø Power***		
		3	***Ericsson RRUS-32***					
		1	***Raycap DC6-48-60-18-8F***					
Existing	188.0	3	Powerwave 7770		12 1 2	1-5/8 7/16"Ø Fiber 3/8"Ø Power	CA Face	AT&T
		1	Andrew SBNH-1D6565C					
		6	Powerwave LGP 13519 Diplexers					
		6	Powerwave LGP 21401 TMA					
		6	Ericsson RRUS-11					
		1	Raycap DC6-48-60-18-8F					
To Be Removed	*188.0*	*3*	*Powerwave 7770*	-	-	-	-	*AT&T*
		2	*Powerwave P65-17-XLH-RR*					
Existing	169.0	2	Antel BXA-70063-6CF	(3) 15.0' T-Frames with Catwalk	12 1	1-5/8 Fiber	AB Face	Verizon
		4	Decibel DB844G65ZAXY					
		1	Antel BXA 70080/6CF					
		2	Decibel DB846F65ZAXY					
		6	RFS FD9R6004/2C-3L					
		3	Alcatel Lucent RRH2x60-AWS					
		3	Alcatel Lucent RRH2x60-PCS					
		1	RFS DB-T1-6Z-8AB-0Z					
		6	HBXX-6517DS-A2M					

Table 1- Existing and Proposed Antenna and Cable Information (Continued)

Existing/ Proposed	Elevation (ft)	Qty	Antenna Model	Mount Type	Qty Coax	Coax Size (in)	Coax[1] Location	Owner/ Tenant
Existing	152.0	3	RFS APXVTM14-C-120	(3) 12.0' Sector Frames	7	1-1/4"Ø Fiber	BC Face	Sprint
		3	Decibel DB980H90T3E-M					
		3	RFS APXVSPP18-C-A20					
		3	RFS RRU 800MHz 2x50W					
		3	Alcatel-Lucent TD-RRH 8x20-25					
		3	RFS RRU 1900MHz 2x40W					
Existing	75.5	1	GPS Antenna	4.5' Standoff	1	5/8"Ø	BC Face	Unknown

Notes:
1) See "Appendix B – Coax Configuration" for assumed coax configuration.

Table 2 - Design Antenna and Cable Information

Mounting Level (ft)	Center Line Elevation (ft)	Number of Antennas	Antenna Manufacturer	Antenna Model	Qty Coax	Coax Size (in)	Coax Location
195.0	195.0	12	Swedcom	ALP 9011	12	1-5/8	Unknown
185.0	185.0	12	Swedcom	ALP 9011	12	1-5/8	Unknown
175.0	175.0	12	Swedcom	ALP 9011	12	1-5/8	Unknown
165.0	165.0	12	Swedcom	ALP 9011	12	1-5/8	Unknown
155.0	155.0	12	Swedcom	ALP 9011	12	1-5/8	Unknown

3) ANALYSIS PROCEDURE

Table 3 - Documents Provided

Document	Remarks	Reference	Source
Tower and Foundation Drawings	Fred A. Nudd Corporation, dated May 5, 1998 Drawing No. 98-5974-1	25628	TEP
Structural Modification Drawings	Fred A. Nudd Corporation, dated April 30, 1999 Drawing No. 99-6726-1	25628	TEP
Steel and Appurtenance Mapping	Tower Engineering Professionals, Inc. dated June 3, 2010	102056	TEP
Post-Modification Inspection	Tower Engineering Professionals, Inc. dated April 21, 2011	102056	TEP
Geotechnical Report	Dr. Clarence Welti, P.E., P.C., dated April 17, 1998	25628	TEP
Structural Modification Drawings	Tower Engineering Professionals, Inc. dated August 29, 2011	102056	TEP
Structural Modification Drawings	Tower Engineering Professionals, Inc. dated July 26, 2012	102056	TEP
Structural Modification Analysis	Tower Engineering Professionals, Inc. dated August 1, 2013	25628_4865	TEP
Previous Structural Analysis	Tower Engineering Professionals, Inc. dated February 26, 2016	25628_44243	TEP
Correspondence	Correspondence with Phoenix Tower International with regards to the existing and proposed loading.	-	PTI

3.1) Analysis Method

tnxTower (version 7.0.5.1), a commercially available analysis software package, was used to create a three-dimensional model of the tower and calculate member stresses for various loading cases. Selected output from the analysis is included in Appendix A.

3.2) Assumptions

1) The tower and foundation were built in accordance with the manufacturer's specifications.
2) The tower and foundation have been maintained in accordance with the manufacturer's specification.
3) The configuration of antennas, transmission cables, mounts and other appurtenances are as specified in Table 1 and "Appendix B – Coax Configuration".
4) When applicable, transmission cables are considered as structural components for calculating wind loads as allowed by the standard.
5) All tower components are in sufficient condition to carry their full design capacity.
6) Serviceability with respect to antenna twist, tilt, roll, or lateral translation, is not checked and is left to the carrier or tower owner to ensure conformance.
7) All antenna mounts and mounting hardware are structurally sufficient to carry the full design capacity requirements of appurtenance wind area and weight as provided by the original manufacturer specifications. It is the carrier's responsibility to ensure compliance to the structural limitations of the existing and/or proposed antenna mounts. TEP did not verify the size, condition or capacity of the antenna mounts and did not analyze antennas supporting mounts as part of this structural analysis report.

This analysis may be affected if any assumptions are not valid or have been made in error. Tower Engineering Professionals should be notified to determine the effect on the structural integrity of the tower.

4) ANALYSIS RESULTS

Table 4 - Section Capacity (Summary)

Section No.	Elevation (ft)	Component Type	Size	Critical Element	P (lb)	SF*P_{allow} (lb)	% Capacity	Pass / Fail
T1	195 - 180	Leg	PIPE 2.5 STD (SCH 40)	3	-31693.30	61065.26	51.9	Pass
T2	180 - 175	Leg	PIPE 2.5 STD (SCH 40)	45	-35202.30	66232.77	53.1	Pass
T3	175 - 170	Leg	PIPE 2.5 STD (SCH 40)	57	-43795.30	66319.28	66.0	Pass
T4	170 - 160	Leg	2.5SCH40 w/ 3SCH80 Half Sleeve	Note 1	Note 1	Note 1	73.5	Pass
T5	160 - 150	Leg	Pipe 3.5 Std (SCH40)	90	-87823.00	109240.81	80.4	Pass
T6	150 - 140	Leg	3.5SCH40 w/ 4SCH40 Half Sleeve	Note 1	Note 1	Note 1	69.1	Pass
T7	140 - 133.333	Leg	5 STD w/ 6 XH Half Sleeve	Note 1	Note 1	Note 1	54.8	Pass
T8	133.333 - 126.667	Leg	5 STD w/ 6 XH Half Sleeve	Note 1	Note 1	Note 1	54.8	Pass
T9	126.667 - 120	Leg	5 STD w/ 6 XH Half Sleeve	Note 1	Note 1	Note 1	54.8	Pass
T10	120 - 113.333	Leg	PIPE 6 STD (SCH40)	159	-165751.00	232356.55	71.3	Pass
T11	113.333 - 106.667	Leg	PIPE 6 STD (SCH40)	171	-178506.00	232391.21	76.8	Pass
T12	106.667 - 100	Leg	PIPE 6 STD (SCH40)	183	-190352.00	232421.87	81.9	Pass
T13	100 - 80	Leg	6 STD w/ 7 XH Half Sleeve	Note 1	Note 1	Note 1	59.0	Pass
T14	80 - 60	Leg	PIPE 8 STD (SCH40)	225	-260458.00	336506.51	77.4	Pass
T15	60 - 50	Leg	PIPE 8 STD (SCH40)	246	-272338.00	345717.53	78.8	Pass

Section No.	Elevation (ft)	Component Type	Size	Critical Element	P (lb)	SF*P_{allow} (lb)	% Capacity	Pass / Fail
T16	50 - 40	Leg	PIPE 8 STD (SCH40)	258	-288911.00	345770.85	83.6	Pass
T17	40 - 20	Leg	PIPE 8 X-STR (SCH80)	270	-321628.00	473586.89	67.9	Pass
T18	20 - 0	Leg	PIPE 8 X-STR (SCH80)	285	-351655.00	474086.76	74.2 87.0 (b)	Pass
T1	195 - 180	Diagonal	5/8	22	8039.40	8833.52	91.0	Pass
T2	180 - 175	Diagonal	L1 1/2x1 1/2x3/16	48	-3819.81	6824.77	56.0 77.4 (b)	Pass
T3	175 - 170	Diagonal	L2x2x3/16	60	-2983.91	11225.29	26.6 49.6 (b)	Pass
T4	170 - 160	Diagonal	2L1 1/2x1 1/2x3/16x1/4	83	-5576.33	17593.07	31.7 72.3 (b)	Pass
T5	160 - 150	Diagonal	2L2x2x3/16x1/4	93	-6326.15	25694.51	24.6 84.9 (b)	Pass
T6	150 - 140	Diagonal	2L2x2x3/16x1/4	114	-6354.51	24089.31	26.4 87.3 (b)	Pass
T7	140 - 133.333	Diagonal	L2 1/2x2 1/2x1/4	135	-6598.54	16236.74	40.6 59.8 (b)	Pass
T8	133.333 - 126.667	Diagonal	L2 1/2x2 1/2x1/4	144	-6784.27	14756.18	46.0 61.2 (b)	Pass
T9	126.667 - 120	Diagonal	L2 1/2x2 1/2x3/16	153	-6567.25	10218.36	64.3 95.5 (b)	Pass
T10	120 - 113.333	Diagonal	L3x3x1/4	162	-7842.05	20757.87	37.8 66.4 (b)	Pass
T11	113.333 - 106.667	Diagonal	L3x3x1/4	174	-7719.36	19469.00	39.6 67.5 (b)	Pass
T12	106.667 - 100	Diagonal	L2 1/2x2 1/2x1/4	186	-7982.84	10183.75	78.4	Pass
T13	100 - 80	Diagonal	L3 1/2x3 1/2x1/4	207	-8110.35	28761.47	28.2 47.2 (b)	Pass
T14	80 - 60	Diagonal	L3 1/2x3 1/2x1/4	228	-8205.81	23594.23	34.8 47.8 (b)	Pass
T15	60 - 50	Diagonal	L3x3x5/16	249	-10579.50	12260.08	86.3	Pass
T16	50 - 40	Diagonal	L3x3x5/16	261	-10304.00	11351.93	90.8	Pass
T17	40 - 20	Diagonal	L4x4x3/8	273	-9920.62	25488.16	38.9 57.8 (b)	Pass
T18	20 - 0	Diagonal	L5x5x5/16	288	-11143.10	34335.95	32.5 64.9 (b)	Pass
T1	195 - 180	Horizontal	L1 1/2x1 1/2x3/16	17	-5454.59	6723.25	81.1	Pass
T2	180 - 175	Secondary Horizontal	L2x2x3/16	54	-610.48	14120.47	4.3 10.1 (b)	Pass
T3	175 - 170	Secondary Horizontal	L2x2x3/16	65	-759.50	16534.80	4.6 12.5 (b)	Pass
T4	170 - 160	Secondary Horizontal	L2x2x3/16	77	-1142.41	15123.02	7.6 18.8 (b)	Pass
T5	160 - 150	Secondary Horizontal	L2x2x3/16	98	-1600.75	13544.21	11.8 26.4 (b)	Pass
T6	150 - 140	Secondary Horizontal	L2x2x3/16	119	-1958.52	11810.53	16.6 32.3 (b)	Pass
T10	120 - 113.333	Secondary Horizontal	L3x3x3/16	168	-2874.71	17561.61	16.4 42.3 (b)	Pass
T11	113.333 - 106.667	Secondary Horizontal	L3x3x3/16	180	-3096.90	18513.50	16.7 45.6 (b)	Pass
T12	106.667 - 100	Secondary Horizontal	L3x3x3/16	191	-3301.94	16336.31	20.2 48.6 (b)	Pass
T13	100 - 80	Secondary Horizontal	L3x3x1/4	204	-3927.19	17795.55	22.1 32.5 (b)	Pass
T15	60 - 50	Secondary Horizontal	L4x4x3/8	254	-4722.92	40714.08	11.6 55.0 (b)	Pass

Section No.	Elevation (ft)	Component Type	Size	Critical Element	P (lb)	SF*P_{allow} (lb)	% Capacity	Pass / Fail
T16	50 - 40	Secondary Horizontal	L4x4x1/4	266	-5010.34	26222.64	19.1 41.5 (b)	Pass
T1	195 - 180	Top Girt	L1 1/2x1 1/2x3/16	5	-868.03	6723.25	12.9	Pass
T1	195 - 180	Bottom Girt	L1 1/2x1 1/2x3/16	8	-2666.14	6723.25	39.7	Pass
							Summary	
						Leg (T18)	87.0	Pass
						Diagonal (T9)	95.5	Pass
						Horizontal (T1)	81.1	Pass
						Secondary Horizontal (T15)	55.0	Pass
						Top Girt (T1)	12.9	Pass
						Bottom Girt (T1)	39.7	Pass
						Bolt Checks	95.5	Pass
						RATING =	**95.5**	**Pass**

Table 5 - Tower Component Stresses vs. Capacity

Notes	Component	Elevation (ft)	% Capacity	Pass / Fail
-	Anchor Rods	-	86.9	Pass
1	Base Foundation - Soil Interaction	-	43.3	Pass
1	Base Foundation - Structural	-	67.6	Pass

Structure Rating (max from all components) =	95.5%

Note:
1) See additional documentation in "Appendix C - Additional Calculations" for calculations supporting the % capacity listed.

4.1) Recommendations

1) If the load differs from that described in Table 1 of this report, "Appendix B – Coax Configuration" or the provisions of this analysis are found to be invalid, another structural analysis should be performed.
2) The modifications depicted in "Appendix D – Structural Design Drawings" shall be installed and, upon completion, inspected. The tower and its foundation have sufficient capacity to carry the existing and proposed loads once the proposed modifications are installed.

APPENDIX A

TNXTOWER OUTPUT

Section	T1	T2	T3	T4	T5	T6	T7	T8	T9	T10	T11	T12	T13	T14	T15	T16	T17	T18
Legs	P1PE 2.5 STD (SCH 40)			A	B	C	5 STD w/ 6 XH Half Sleeve			P1PE 6 STD (SCH40)			6 STD w/ 7 XH Half Sleeve		P1PE 8 STD (SCH40)			P1PE 8 X-STR (SCH80)
Leg Grade	A572-55			A53-B-35	A572-55	A500-50	A500-46			A572-55			A53-B-42				A572-55	
Diagonals	SR 5/8	D	E	F	2L2x2x3/16x1/4		L2 1/2x2 1/2x1/4		G	L3x3x1/4		H	L3 1/2x3 1/2x1/4		L3x3x5/16		L4x4x3/8	L5x5x5/16
Diagonal Grade	A36																	
Top Girts	L1 1/2x1 1/2x3/16												N.A.					
Bottom Girts	L1 1/2x1 1/2x3/16												N.A.					
Horizontals	L1 1/2x1 1/2x3/16												N.A.					
Sec. Horizontals	N.A.				L2x2x3/16				N.A.			L3x3x3/16	L3x3x1/4	N.A.		L4x4x1/4	L4x4x3/8	N.A.
Face Width (ft) 21.5	3.5		4	4.5	5.5	6.5	7.5	8.16667	8.83333	9.5	10.1667	10.8333	11.5	13.5		16.5	15.5	17.5	19.5
# Panels @ (ft)	4 @ 3.75			8 @ 5								12 @ 6.66667				4 @ 10		2 @ 9.95833
Weight (lb) 30524.4	484.2	181.8	214.0	705.9	817.8	1040.7	829.5	842.1	788.4	839.4	863.2	820.9	4304.0	3370.0	2011.3	1912.1	5098.0	5431.4

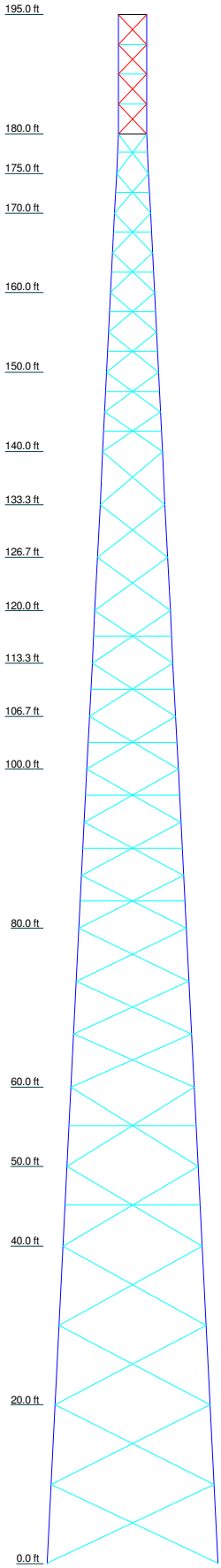

MAX. CORNER REACTIONS AT BASE:
DOWN: 359495 lb
SHEAR: 35155 lb

UPLIFT: -312429 lb
SHEAR: 30918 lb

AXIAL
101908 lb

SHEAR
16729 lb

MOMENT
2052966 lb-ft

TORQUE 13146 lb-ft
38 mph WIND - 0.7500 in ICE

AXIAL
50841 lb

SHEAR
55134 lb

MOMENT
6378093 lb-ft

TORQUE 49095 lb-ft
REACTIONS - 85 mph WIND

DESIGNED APPURTENANCE LOADING

TYPE	ELEVATION	TYPE	ELEVATION
Sector Mount [SM 802-3]	195	(2) FD9R6004	169
HSS Top Mount	195	(2) FD9R6004	169
APX16DWV-16DWVS-A	195	(3) Sector Mounts 169-ft	169
APX16DWV-16DWVS-A	195	(2) BXA-70063/6CF w/ Mount Pipe	169
APX16DWV-16DWVS-A	195	(2) DB844G65ZAXY w/Mount Pipe	169
(2) KRY 112 71	195	(2) DB844G65ZAXY w/Mount Pipe	169
(2) KRY 112 71	195	DB-B1/T1 w/ Mount Pipe	169
(2) KRY 112 71	195	(2) HBXX-6517DS-A2M w/ Mount Pipe	169
LNX-6515DS-VTM w/ Mount Pipe	193	(2) HBXX-6517DS-A2M w/ Mount Pipe	169
LNX-6515DS-VTM w/ Mount Pipe	193	(2) HBXX-6517DS-A2M w/ Mount Pipe	169
LNX-6515DS-VTM w/ Mount Pipe	193	RRH2x60-AWS	169
(3) Sector Mounts 188-ft	188	RRH2x60-AWS	169
Miscellaneous [NA 510-1]	188	RRH2x60-AWS	169
7770.00 w/ Mount Pipe	188	RRH2X60-PCS	169
7770.00 w/ Mount Pipe	188	RRH2X60-PCS	169
7770.00 w/ Mount Pipe	188	RRH2X60-PCS	169
SBNH-1D6565C w/ Mount Pipe	188	BXA-70080/6CF w/ Mount Pipe	169
AM-X-CD-16-65-00T-RET w/ Mount Pipe	188	APXVTM14-C-120 w/ Mount Pipe	152
AM-X-CD-16-65-00T-RET w/ Mount Pipe	188	APXVTM14-C-120 w/ Mount Pipe	152
SBNHH-1D65A w/ Mount Pipe	188	TD-RRH8x20-25	152
SBNHH-1D65A w/ Mount Pipe	188	TD-RRH8x20-25	152
SBNHH-1D65A w/ Mount Pipe	188	TD-RRH8x20-25	152
(2) LGP13519	188	1900MHz 2X40W RRH	152
(2) LGP13519	188	DB980H90T2E-M w/ Mount Pipe	152
(2) LGP13519	188	DB980H90T2E-M w/ Mount Pipe	152
(2) LGP21401	188	DB980H90T2E-M w/ Mount Pipe	152
(2) LGP21401	188	APXVTM14-C-120 w/ Mount Pipe	152
(2) LGP21401	188	800MHZ 2X50W RRH	152
(2) RRUS-11	188	1900MHz 2X40W RRH	152
(2) RRUS-11	188	1900MHz 2X40W RRH	152
(2) RRUS-11	188	Sector Mount [SM 502-3]	152
RRUS-32 B30	188	APXVSPP18-C-A20 w/ Mount Pipe	152
RRUS-32 B30	188	APXVSPP18-C-A20 w/ Mount Pipe	152
RRUS-32 B30	188	APXVSPP18-C-A20 w/ Mount Pipe	152
DC6-48-60-18-8F	188	800MHZ 2X50W RRH	152
DC6-48-60-18-8F	188	800MHZ 2X50W RRH	152
DB846F65ZAXY w/Mount Pipe	169	GPS0015	75.5
DB846F65ZAXY w/Mount Pipe	169	1.75" Dia x 5-ft Pipe	75.5
(2) FD9R6004	169		

SYMBOL LIST

MARK	SIZE	MARK	SIZE
A	2.5SCH40 w/ 3SCH80 Half Sleeve	E	L2x2x3/16
B	Pipe 3.5 Std (SCH40)	F	2L1 1/2x1 1/2x3/16x1/4
C	3.5SCH40 w/ 4SCH40 Half Sleeve	G	L2 1/2x2 1/2x3/16
D	L1 1/2x1 1/2x3/16	H	L2 1/2x2 1/2x1/4

MATERIAL STRENGTH

GRADE	Fy	Fu	GRADE	Fy	Fu
A572-55	55 ksi	70 ksi	A500-50	50 ksi	62 ksi
A36	36 ksi	58 ksi	A500-46	46 ksi	62 ksi
A53-B-35	35 ksi	60 ksi	A53-B-42	42 ksi	63 ksi

TOWER DESIGN NOTES

1. Tower is located in New Haven County, Connecticut.
2. Tower designed for a 85 mph basic wind in accordance with the TIA/EIA-222-F Standard.
3. Tower is also designed for a 38 mph basic wind with 0.75 in ice. Ice is considered to increase in thickness with height.
4. Deflections are based upon a 50 mph wind.
5. TOWER RATING: 95.5%

Tower Engineering Professionals
326 Tryon Road
Raleigh, NC 27603
Phone: (919) 661-6351
FAX: (919) 661-6350

Job: **US-CT-1003 - Straits Turnpike**			
Project: **TEP #25628.93911**			
Client: Phoenix Tower International	Drawn by: JAR	App'd:	
Code: TIA/EIA-222-F	Date: 08/24/16	Scale: NTS	
Path: \\tep-netapp-01\Towers\25628\56360_US-CT-1003\93911_SDD\Rev 1\3 - trns\US-CT-1003.eri		Dwg No. E-1	

Tower Input Data

The main tower is a 3x free standing tower with an overall height of 195.00 ft above the ground line.
The base of the tower is set at an elevation of 0.00 ft above the ground line.
The face width of the tower is 3.50 ft at the top and 21.50 ft at the base.
This tower is designed using the TIA/EIA-222-F standard.
The following design criteria apply:

Tower is located in New Haven County, Connecticut.
Basic wind speed of 85 mph.
Nominal ice thickness of 0.7500 in.
Ice thickness is considered to increase with height.
Ice density of 56 pcf.
A wind speed of 38 mph is used in combination with ice.
Temperature drop of 50 °F.
Deflections calculated using a wind speed of 50 mph.
A non-linear (P-delta) analysis was used.
Pressures are calculated at each section.
Stress ratio used in tower member design is 1.333.
Local bending stresses due to climbing loads, feed line supports, and appurtenance mounts are not considered.

Options

Consider Moments - Legs
Consider Moments - Horizontals
Consider Moments - Diagonals
Use Moment Magnification
√ Use Code Stress Ratios
√ Use Code Safety Factors - Guys
√ Escalate Ice
Always Use Max Kz
Use Special Wind Profile
√ Include Bolts In Member Capacity
Leg Bolts Are At Top Of Section
√ Secondary Horizontal Braces Leg
Use Diamond Inner Bracing (4 Sided)
√ SR Members Have Cut Ends
SR Members Are Concentric

Distribute Leg Loads As Uniform
Assume Legs Pinned
√ Assume Rigid Index Plate
√ Use Clear Spans For Wind Area
√ Use Clear Spans For KL/r
Retension Guys To Initial Tension
√ Bypass Mast Stability Checks
√ Use Azimuth Dish Coefficients
√ Project Wind Area of Appurt.
Autocalc Torque Arm Areas
Add IBC .6D+W Combination
√ Sort Capacity Reports By Component
Triangulate Diamond Inner Bracing
Treat Feed Line Bundles As Cylinder

Use ASCE 10 X-Brace Ly Rules
√ Calculate Redundant Bracing Forces
Ignore Redundant Members in FEA
√ SR Leg Bolts Resist Compression
All Leg Panels Have Same Allowable
√ Offset Girt At Foundation
√ Consider Feed Line Torque
√ Include Angle Block Shear Check
Use TIA-222-G Bracing Resist. Exemption
Use TIA-222-G Tension Splice Exemption

Poles

Include Shear-Torsion Interaction
Always Use Sub-Critical Flow
Use Top Mounted Sockets

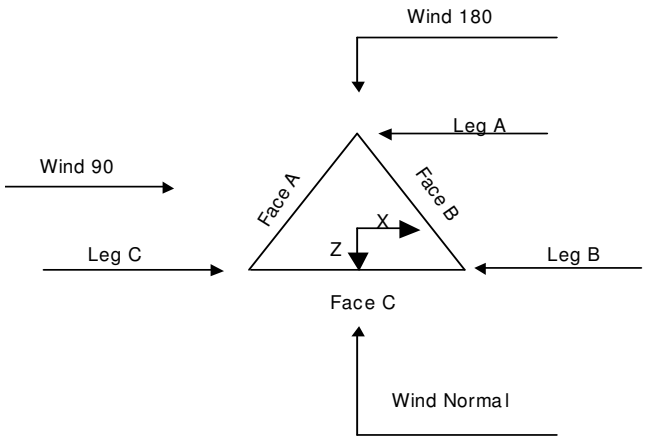

Triangular Tower

Tower Section Geometry

Tower Section	Tower Elevation ft	Assembly Database	Description	Section Width ft	Number of Sections	Section Length ft
T1	195.00-180.00			3.50	1	15.00
T2	180.00-175.00			3.50	1	5.00
T3	175.00-170.00			4.00	1	5.00
T4	170.00-160.00			4.50	1	10.00
T5	160.00-150.00			5.50	1	10.00
T6	150.00-140.00			6.50	1	10.00
T7	140.00-133.33			7.50	1	6.67
T8	133.33-126.67			8.17	1	6.67
T9	126.67-120.00			8.83	1	6.67
T10	120.00-113.33			9.50	1	6.67
T11	113.33-106.67			10.17	1	6.67
T12	106.67-100.00			10.83	1	6.67
T13	100.00-80.00			11.50	1	20.00
T14	80.00-60.00			13.50	1	20.00
T15	60.00-50.00			15.50	1	10.00
T16	50.00-40.00			16.50	1	10.00
T17	40.00-20.00			17.50	1	20.00
T18	20.00-0.00			19.50	1	20.00

Tower Section Geometry *(cont'd)*

Tower Section	Tower Elevation ft	Diagonal Spacing ft	Bracing Type	Has K Brace End Panels	Has Horizontals	Top Girt Offset in	Bottom Girt Offset in
T1	195.00-180.00	3.75	TX Brace	No	Yes	0.0000	0.0000
T2	180.00-175.00	5.00	X Brace	No	Yes	0.0000	0.0000
T3	175.00-170.00	5.00	X Brace	No	Yes	0.0000	0.0000
T4	170.00-160.00	5.00	X Brace	No	Yes	0.0000	0.0000
T5	160.00-150.00	5.00	X Brace	No	Yes	0.0000	0.0000
T6	150.00-140.00	5.00	X Brace	No	Yes	0.0000	0.0000
T7	140.00-133.33	6.67	X Brace	No	No	0.0000	0.0000
T8	133.33-126.67	6.67	X Brace	No	No	0.0000	0.0000
T9	126.67-120.00	6.67	X Brace	No	No	0.0000	0.0000
T10	120.00-113.33	6.67	X Brace	No	Yes	0.0000	0.0000
T11	113.33-106.67	6.67	X Brace	No	Yes	0.0000	0.0000
T12	106.67-100.00	6.67	X Brace	No	Yes	0.0000	0.0000
T13	100.00-80.00	6.67	X Brace	No	Yes	0.0000	0.0000
T14	80.00-60.00	6.67	X Brace	No	No	0.0000	0.0000
T15	60.00-50.00	10.00	X Brace	No	Yes	0.0000	0.0000
T16	50.00-40.00	10.00	X Brace	No	Yes	0.0000	0.0000
T17	40.00-20.00	10.00	X Brace	No	No	0.0000	0.0000
T18	20.00-0.00	9.96	X Brace	No	No	0.0000	1.0000

Tower Section Geometry *(cont'd)*

Tower Elevation ft	Leg Type	Leg Size	Leg Grade	Diagonal Type	Diagonal Size	Diagonal Grade
T1 195.00-180.00	Pipe	PIPE 2.5 STD (SCH 40)	A572-55 (55 ksi)	Solid Round	5/8	A36 (36 ksi)
T2 180.00-175.00	Pipe	PIPE 2.5 STD (SCH 40)	A572-55 (55 ksi)	Equal Angle	L1 1/2x1 1/2x3/16	A36 (36 ksi)
T3 175.00-170.00	Pipe	PIPE 2.5 STD (SCH 40)	A572-55 (55 ksi)	Equal Angle	L2x2x3/16	A36 (36 ksi)
T4 170.00-160.00	Arbitrary Shape	2.5SCH40 w/ 3SCH80 Half Sleeve	A53-B-35 (35 ksi)	Double Equal Angle	2L1 1/2x1 1/2x3/16x1/4	A36 (36 ksi)
T5 160.00-150.00	Pipe	Pipe 3.5 Std (SCH40)	A572-55 (55 ksi)	Double Angle	2L2x2x3/16x1/4	A36 (36 ksi)
T6 150.00-140.00	Arbitrary Shape	3.5SCH40 w/ 4SCH40 Half Sleeve	A500-50 (50 ksi)	Double Angle	2L2x2x3/16x1/4	A36 (36 ksi)
T7 140.00-133.33	Arbitrary Shape	5 STD w/ 6 XH Half Sleeve	A500-46 (46 ksi)	Equal Angle	L2 1/2x2 1/2x1/4	A36 (36 ksi)
T8 133.33-126.67	Arbitrary Shape	5 STD w/ 6 XH Half Sleeve	A500-46 (46 ksi)	Equal Angle	L2 1/2x2 1/2x1/4	A36 (36 ksi)
T9 126.67-120.00	Arbitrary Shape	5 STD w/ 6 XH Half Sleeve	A500-46 (46 ksi)	Equal Angle	L2 1/2x2 1/2x3/16	A36 (36 ksi)
T10 120.00-113.33	Pipe	PIPE 6 STD (SCH40)	A572-55 (55 ksi)	Equal Angle	L3x3x1/4	A36 (36 ksi)
T11 113.33-106.67	Pipe	PIPE 6 STD (SCH40)	A572-55 (55 ksi)	Equal Angle	L3x3x1/4	A36 (36 ksi)
T12 106.67-100.00	Pipe	PIPE 6 STD (SCH40)	A572-55 (55 ksi)	Equal Angle	L2 1/2x2 1/2x1/4	A36 (36 ksi)
T13 100.00-80.00	Arbitrary Shape	6 STD w/ 7 XH Half Sleeve	A53-B-42 (42 ksi)	Equal Angle	L3 1/2x3 1/2x1/4	A36 (36 ksi)
T14 80.00-60.00	Pipe	PIPE 8 STD (SCH40)	A572-55 (55 ksi)	Equal Angle	L3 1/2x3 1/2x1/4	A36 (36 ksi)
T15 60.00-50.00	Pipe	PIPE 8 STD (SCH40)	A572-55 (55 ksi)	Equal Angle	L3x3x5/16	A36 (36 ksi)
T16 50.00-40.00	Pipe	PIPE 8 STD (SCH40)	A572-55 (55 ksi)	Equal Angle	L3x3x5/16	A36 (36 ksi)
T17 40.00-20.00	Pipe	PIPE 8 X-STR (SCH80)	A572-55	Equal Angle	L4x4x3/8	A36

Tower Elevation ft	Leg Type	Leg Size	Leg Grade	Diagonal Type	Diagonal Size	Diagonal Grade
T18 20.00-0.00	Pipe	PIPE 8 X-STR (SCH80)	(55 ksi) A572-55 (55 ksi)	Equal Angle	L5x5x5/16	(36 ksi) A36 (36 ksi)

Tower Section Geometry *(cont'd)*

Tower Elevation ft	Top Girt Type	Top Girt Size	Top Girt Grade	Bottom Girt Type	Bottom Girt Size	Bottom Girt Grade
T1 195.00-180.00	Equal Angle	L1 1/2x1 1/2x3/16	A36 (36 ksi)	Equal Angle	L1 1/2x1 1/2x3/16	A36 (36 ksi)

Tower Section Geometry *(cont'd)*

Tower Elevation ft	No. of Mid Girts	Mid Girt Type	Mid Girt Size	Mid Girt Grade	Horizontal Type	Horizontal Size	Horizontal Grade
T1 195.00-180.00	None	Flat Bar		A36 (36 ksi)	Equal Angle	L1 1/2x1 1/2x3/16	A36 (36 ksi)

Tower Section Geometry *(cont'd)*

Tower Elevation ft	Secondary Horizontal Type	Secondary Horizontal Size	Secondary Horizontal Grade	Inner Bracing Type	Inner Bracing Size	Inner Bracing Grade
T2 180.00-175.00	Equal Angle	L2x2x3/16	A36 (36 ksi)	Solid Round		A36 (36 ksi)
T3 175.00-170.00	Equal Angle	L2x2x3/16	A36 (36 ksi)	Solid Round		A36 (36 ksi)
T4 170.00-160.00	Equal Angle	L2x2x3/16	A36 (36 ksi)	Solid Round		A36 (36 ksi)
T5 160.00-150.00	Equal Angle	L2x2x3/16	A36 (36 ksi)	Solid Round		A36 (36 ksi)
T6 150.00-140.00	Equal Angle	L2x2x3/16	A36 (36 ksi)	Solid Round		A36 (36 ksi)
T10 120.00-113.33	Equal Angle	L3x3x3/16	A36 (36 ksi)	Solid Round		A36 (36 ksi)
T11 113.33-106.67	Equal Angle	L3x3x3/16	A36 (36 ksi)	Solid Round		A36 (36 ksi)
T12 106.67-100.00	Equal Angle	L3x3x3/16	A36 (36 ksi)	Solid Round		A36 (36 ksi)
T13 100.00-80.00	Equal Angle	L3x3x1/4	A36 (36 ksi)	Solid Round		A36 (36 ksi)
T15 60.00-50.00	Equal Angle	L4x4x3/8	A36 (36 ksi)	Solid Round		A36 (36 ksi)

Tower Elevation ft	Secondary Horizontal Type	Secondary Horizontal Size	Secondary Horizontal Grade	Inner Bracing Type	Inner Bracing Size	Inner Bracing Grade
T16 50.00-40.00	Equal Angle	L4x4x1/4	A36 (36 ksi)	Solid Round		A36 (36 ksi)

Tower Section Geometry *(cont'd)*

Tower Elevation ft	Gusset Area (per face) ft^2	Gusset Thickness in	Gusset Grade	Adjust. Factor A_f	Adjust. Factor A_r	Weight Mult.	Double Angle Stitch Bolt Spacing Diagonals in	Double Angle Stitch Bolt Spacing Horizontals in	Double Angle Stitch Bolt Spacing Redundants in
T1 195.00-180.00	0.00	0.0000	A36 (36 ksi)	1	1	1	0.0000	0.0000	36.0000
T2 180.00-175.00	0.00	0.2500	A36 (36 ksi)	1	1	1	0.0000	0.0000	36.0000
T3 175.00-170.00	0.00	0.2500	A36 (36 ksi)	1	1	1	0.0000	0.0000	36.0000
T4 170.00-160.00	0.00	0.2500	A36 (36 ksi)	1	1	1	Mid-Pt	0.0000	36.0000
T5 160.00-150.00	0.00	0.2500	A36 (36 ksi)	1	1	1	Mid-Pt	0.0000	36.0000
T6 150.00-140.00	0.00	0.2500	A36 (36 ksi)	1	1	1	Mid-Pt	0.0000	36.0000
T7 140.00-133.33	0.00	0.3750	A36 (36 ksi)	1	1	1	0.0000	0.0000	36.0000
T8 133.33-126.67	0.00	0.3750	A36 (36 ksi)	1	1	1	0.0000	0.0000	36.0000
T9 126.67-120.00	0.00	0.3750	A36 (36 ksi)	1	1	1	0.0000	0.0000	36.0000
T10 120.00-113.33	0.00	0.3750	A36 (36 ksi)	1	1	1	0.0000	0.0000	36.0000
T11 113.33-106.67	0.00	0.3750	A36 (36 ksi)	1	1	1	0.0000	0.0000	36.0000
T12 106.67-100.00	0.00	0.3750	A36 (36 ksi)	1	1	1	0.0000	0.0000	36.0000
T13 100.00-80.00	0.00	0.3750	A36 (36 ksi)	1	1	1	0.0000	0.0000	36.0000
T14 80.00-60.00	0.00	0.3750	A36 (36 ksi)	1	1	1	0.0000	0.0000	36.0000
T15 60.00-50.00	0.00	0.3750	A36 (36 ksi)	1	1	1	0.0000	0.0000	36.0000
T16 50.00-40.00	0.00	0.3750	A36 (36 ksi)	1	1	1	0.0000	0.0000	36.0000
T17 40.00-20.00	0.00	0.4375	A36 (36 ksi)	1	1	1	0.0000	0.0000	36.0000
T18 20.00-0.00	0.00	0.4375	A36 (36 ksi)	1	1	1	0.0000	0.0000	36.0000

Tower Section Geometry *(cont'd)*

K Factors[1]

Tower Elevation ft	Calc K Single Angles	Calc K Solid Rounds	Legs	X Brace Diags X Y	K Brace Diags X Y	Single Diags X Y	Girts X Y	Horiz. X Y	Sec. Horiz. X Y	Inner Brace X Y
T1	Yes	Yes	1	1	1	1	0.96	0.96	1	1
195.00-180.00				1	1	1	0.96	0.96	1	1
T2	Yes	Yes	1	1	1	1	1	1	1	1
180.00-175.00				1	1	1	1	1	0.5	1
T3	No	Yes	1	1.09	1	1	1	1	1	1
175.00-170.00				1.09	1	1	1	1	0.5	1
T4	No	Yes	1	1.15	1	1	1	1	1	1
170.00-160.00				1.15	1	1	1	1	0.5	1
T5	No	Yes	1	1.25	1	1	1	1	1	1
160.00-150.00				1.25	1	1	1	1	0.5	1
T6	No	Yes	1	1.22	1	1	1	1	1	1
150.00-140.00				1.22	1	1	1	1	0.5	1
T7	Yes	Yes	1	1	1	1	1	1	1	1
140.00-133.33				1	1	1	1	1	1	1
T8	Yes	Yes	1	1	1	1	1	1	1	1
133.33-126.67				1	1	1	1	1	1	1
T9	Yes	Yes	1	1	1	1	1	1	1	1
126.67-120.00				1	1	1	1	1	1	1
T10	Yes	Yes	1	1	1	1	1	1	1	1
120.00-113.33				1	1	1	1	1	0.5	1
T11	No	Yes	1	0.98	1	1	1	1	1	1
113.33-106.67				0.98	1	1	1	1	0.5	1
T12	Yes	Yes	1	1	1	1	1	1	1	1
106.67-100.00				1	1	1	1	1	0.5	1
T13	No	Yes	1	0.85	1	1	1	1	1	1
100.00-80.00				0.85	1	1	1	1	0.5	1
T14	No	Yes	1	0.85	1	1	1	1	1	1
80.00-60.00				0.85	1	1	1	1	1	1
T15	Yes	Yes	1	1	1	1	1	1	1	1
60.00-50.00				1	1	1	1	1	0.5	1
T16	Yes	Yes	1	1	1	1	1	1	1	1
50.00-40.00				1	1	1	1	1	0.5	1
T17	Yes	Yes	1	1	1	1	1	1	1	1
40.00-20.00				1	1	1	1	1	1	1
T18	Yes	Yes	1	1	1	1	1	1	1	1
20.00-0.00				1	1	1	1	1	1	1

[1]*Note: K factors are applied to member segment lengths. K-braces without inner supporting members will have the K factor in the out-of-plane direction applied to the overall length.*

Tower Section Geometry *(cont'd)*

Tower Elevation ft	Leg		Diagonal		Top Girt		Bottom Girt		Mid Girt		Long Horizontal		Short Horizontal	
	Net Width Deduct in	U	Net Width Deduct in	U	Net Width Deduct in	U	Net Width Deduct in	U	Net Width Deduct in	U	Net Width Deduct in	U	Net Width Deduct in	U
T1	0.0000	1	0.0000	1	0.0000	1	0.0000	1	0.0000	0.75	0.0000	1	0.0000	1
195.00-180.00														
T2	0.0000	1	0.0000	0.75	0.0000	0.75	0.0000	0.75	0.0000	0.75	0.0000	0.75	0.0000	0.75
180.00-175.00														
T3	0.0000	1	0.0000	0.75	0.0000	0.75	0.0000	0.75	0.0000	0.75	0.0000	0.75	0.0000	0.75
175.00-170.00														

Tower Elevation ft	Leg		Diagonal		Top Girt		Bottom Girt		Mid Girt		Long Horizontal		Short Horizontal	
	Net Width Deduct in	U	Net Width Deduct in	U	Net Width Deduct in	U	Net Width Deduct in	U	Net Width Deduct in	U	Net Width Deduct in	U	Net Width Deduct in	U
T4 170.00-160.00	0.0000	1	0.0000	0.75	0.0000	0.75	0.0000	0.75	0.0000	0.75	0.0000	0.75	0.0000	0.75
T5 160.00-150.00	0.0000	1	0.0000	0.75	0.0000	0.75	0.0000	0.75	0.0000	0.75	0.0000	0.75	0.0000	0.75
T6 150.00-140.00	0.0000	1	0.0000	0.75	0.0000	0.75	0.0000	0.75	0.0000	0.75	0.0000	0.75	0.0000	0.75
T7 140.00-133.33	0.0000	1	0.0000	0.75	0.0000	0.75	0.0000	0.75	0.0000	0.75	0.0000	0.75	0.0000	0.75
T8 133.33-126.67	0.0000	1	0.0000	0.75	0.0000	0.75	0.0000	0.75	0.0000	0.75	0.0000	0.75	0.0000	0.75
T9 126.67-120.00	0.0000	1	0.0000	0.75	0.0000	0.75	0.0000	0.75	0.0000	0.75	0.0000	0.75	0.0000	0.75
T10 120.00-113.33	0.0000	1	0.0000	0.75	0.0000	0.75	0.0000	0.75	0.0000	0.75	0.0000	0.75	0.0000	0.75
T11 113.33-106.67	0.0000	1	0.0000	0.75	0.0000	0.75	0.0000	0.75	0.0000	0.75	0.0000	0.75	0.0000	0.75
T12 106.67-100.00	0.0000	1	0.0000	0.75	0.0000	0.75	0.0000	0.75	0.0000	0.75	0.0000	0.75	0.0000	0.75
T13 100.00-80.00	0.0000	1	0.0000	0.75	0.0000	0.75	0.0000	0.75	0.0000	0.75	0.0000	0.75	0.0000	0.75
T14 80.00-60.00	0.0000	1	0.0000	0.75	0.0000	0.75	0.0000	0.75	0.0000	0.75	0.0000	0.75	0.0000	0.75
T15 60.00-50.00	0.0000	1	0.0000	0.75	0.0000	0.75	0.0000	0.75	0.0000	0.75	0.0000	0.75	0.0000	0.75
T16 50.00-40.00	0.0000	1	0.0000	0.75	0.0000	0.75	0.0000	0.75	0.0000	0.75	0.0000	0.75	0.0000	0.75
T17 40.00-20.00	0.0000	1	0.0000	0.75	0.0000	0.75	0.0000	0.75	0.0000	0.75	0.0000	0.75	0.0000	0.75
T18 20.00-0.00	0.0000	1	0.0000	0.75	0.0000	0.75	0.0000	0.75	0.0000	0.75	0.0000	0.75	0.0000	0.75

Tower Section Geometry *(cont'd)*

Tower Elevation ft	Leg Connection Type	Leg		Diagonal		Top Girt		Bottom Girt		Mid Girt		Long Horizontal		Short Horizontal	
		Bolt Size in	No.	Bolt Size in	No.	Bolt Size in	No.	Bolt Size in	No.	Bolt Size in	No.	Bolt Size in	No.	Bolt Size in	No.
T1 195.00-180.00	Flange	0.7500 A325N	4	0.0000 A325N	0	0.0000 A325N	0	0.0000 A325N	0	0.6250 A325N	0	0.0000 A325N	0	0.6250 A325N	0
T2 180.00-175.00	Flange	0.7500 A325N	0	0.5000 A325N	1	0.0000 A325N	0	0.0000 A325N	0	0.6250 A325N	0	0.0000 A325N	0	0.6250 A325N	1
T3 175.00-170.00	Flange	0.7500 A325N	0	0.5000 A325X	1	0.0000 A325N	0	0.0000 A325N	0	0.6250 A325N	0	0.0000 A325N	0	0.6250 A325N	1
T4 170.00-160.00	Flange	0.7500 A325N	6	0.5000 A325N	1	0.0000 A325N	0	0.0000 A325N	0	0.6250 A325N	0	0.0000 A325N	0	0.6250 A325N	1
T5 160.00-150.00	Flange	1.0000 A325N	0	0.5000 A325X	1	0.0000 A325N	0	0.0000 A325N	0	0.6250 A325N	0	0.0000 A325N	0	0.6250 A325N	1
T6 150.00-140.00	Flange	1.0000 A325N	6	0.5000 A325N	1	0.0000 A325N	0	0.0000 A325N	0	0.6250 A325N	0	0.0000 A325N	0	0.6250 A325N	1
T7 140.00-133.33	Flange	1.0000 A325N	0	0.6250 A325X	1	0.0000 A325N	0	0.0000 A325N	0	0.6250 A325N	0	0.0000 A325N	0	0.6250 A325N	0

Tower Elevation ft	Leg Connection Type	Leg Bolt Size in	Leg No.	Diagonal Bolt Size in	Diagonal No.	Top Girt Bolt Size in	Top Girt No.	Bottom Girt Bolt Size in	Bottom Girt No.	Mid Girt Bolt Size in	Mid Girt No.	Long Horizontal Bolt Size in	Long Horizontal No.	Short Horizontal Bolt Size in	Short Horizontal No.
T8 133.33-126.67	Flange	1.0000 A325N	0	0.6250 A325X	1	0.0000 A325N	0	0.0000 A325N	0	0.6250 A325N	0	0.0000 A325N	0	0.6250 A325N	0
T9 126.67-120.00	Flange	1.0000 A325N	8	0.6250 A325N	1	0.0000 A325N	0	0.0000 A325N	0	0.6250 A325N	0	0.0000 A325N	0	0.6250 A325N	0
T10 120.00-113.33	Flange	1.0000 A325N	0	0.6250 A325X	1	0.0000 A325N	0	0.0000 A325N	0	0.6250 A325N	0	0.0000 A325N	0	0.6250 A325N	1
T11 113.33-106.67	Flange	1.0000 A325N	0	0.6250 A325X	1	0.0000 A325N	0	0.0000 A325N	0	0.6250 A325N	0	0.0000 A325N	0	0.6250 A325N	1
T12 106.67-100.00	Flange	1.0000 A325N	8	0.6250 A325X	1	0.0000 A325N	0	0.0000 A325N	0	0.6250 A325N	0	0.0000 A325N	0	0.6250 A325N	1
T13 100.00-80.00	Flange	1.2500 A325N	8	0.6250 A325N	2	0.0000 A325N	0	0.0000 A325N	0	0.6250 A325N	0	0.0000 A325N	0	0.7500 A325N	1
T14 80.00-60.00	Flange	1.2500 A325N	8	0.6250 A325N	2	0.0000 A325N	0	0.0000 A325N	0	0.6250 A325N	0	0.0000 A325N	0	0.7500 A325X	0
T15 60.00-50.00	Flange	1.2500 A325N	0	0.6250 A325N	2	0.0000 A325N	0	0.0000 A325N	0	0.6250 A325N	0	0.0000 A325N	0	0.6250 A325N	1
T16 50.00-40.00	Flange	1.2500 A325N	8	0.6250 A325N	2	0.0000 A325N	0	0.0000 A325N	0	0.6250 A325N	0	0.0000 A325N	0	0.7500 A325X	1
T17 40.00-20.00	Flange	1.2500 A325N	8	0.6250 A325N	2	0.0000 A325N	0	0.0000 A325N	0	0.6250 A325N	0	0.0000 A325N	0	0.6250 A325N	0
T18 20.00-0.00	Flange	1.5000 A36	8	0.6250 A325N	2	0.0000 A325N	0	0.0000 A325N	0	0.6250 A325N	0	0.0000 A325N	0	0.6250 A325N	0

Feed Line/Linear Appurtenances - Entered As Round Or Flat

Description	Face or Leg	Allow Shield	Component Type	Placement ft	Face Offset in	Lateral Offset (Frac FW)	#	# Per Row	Clear Spacing in	Width or Diameter in	Perimeter in	Weight plf
LDF7-50A (1-5/8 FOAM)	B	Yes	Ar (CfAe)	169.00 - 8.00	-2.0000	-0.35	12	12	0.5000	1.9800		0.82
HB158-1-08U 8-S8J18(1-5/8)	B	Yes	Ar (CfAe)	169.00 - 8.00	-4.0000	-0.29	1	1	0.5000	0.0001		1.30
WG Rail 1.5x1.5x1/4 **** ****	B	Yes	Af (CfAe)	170.00 - 8.00	-2.0000	-0.35	2	2	36.5000	1.5000	6.0000	2.40
LDF7-50A (1-5/8 FOAM)	B	Yes	Ar (CfAe)	195.00 - 8.00	0.0000	0	18	6	0.5000	1.9800		0.82
WG Rail 1.5x1.5x3/16 ****	B	Yes	Af (CfAe)	181.00 - 0.00	0.0000	0	2	2	36.0000	1.5000	6.0000	1.81
5/8" dia. coax	C	Yes	Ar (CfAe)	75.50 - 10.00	0.0000	0	1	1	0.5000	0.6250		0.15
1 1/4" Fiber	C	Yes	Ar (CfAe)	152.00 - 10.00	0.0000	0.04	7	4	0.5000	1.2500		0.38
WG Rail 1.5x1.5x3/16 **** ****	C	Yes	Af (CfAe)	160.00 - 0.00	0.0000	0.1	2	2	35.0000	1.5000	6.0000	1.81
LDF7-50A (1-5/8 FOAM)	A	Yes	Ar (CfAe)	188.00 - 8.00	0.0000	0.3	12	6	0.5000	1.9800		0.82
7/16" Fiber Cable (24 fibers Max)	A	Yes	Ar (CfAe)	188.00 - 8.00	0.0000	0.375	2	1	0.5000	0.4375		0.03
8AWG7	A	Yes	Ar (CfAe)	188.00 - 8.00	0.0000	0.35	4	2	0.5000	0.3750		0.15

Description	Face or Leg	Allow Shield	Component Type	Placement ft	Face Offset in	Lateral Offset (Frac FW)	#	# Per Row	Clear Spacing in	Width or Diameter in	Perimeter in	Weight plf
WG Rail 1.5x1.5x1/8	A	Yes	Af (CfAe)	180.00 - 2.00	0.0000	0.3	2	2	36.0000	1.5000	6.0000	1.23
****												
****												
***												
Safety Line 3/8	A	No	Ar (Leg)	195.00 - 0.00	0.0000	0	1	1	0.3750	0.3750		0.22
Step Pegs (5/8" SR) 7-in. w/30" step	A	No	Ar (Leg)	195.00 - 0.00	0.0000	0	1	1	0.3500	0.3500		0.49
Step Pegs (5/8" SR) 7-in. w/30" step	B	No	Ar (Leg)	60.00 - 0.00	0.0000	0	1	1	0.3500	0.3500		0.49
Step Pegs (5/8" SR) 7-in. w/30" step	C	No	Ar (Leg)	60.00 - 0.00	0.0000	0	1	1	0.3500	0.3500		0.49
****												
***												
*****												
Rung L1.5x1.5x1/8 (36.25"w, 34"s)	B	Yes	Ar (CfAe)	170.00 - 8.00	-2.0000	-0.35	1	1	0.5000	0.0001		1.31
Rung L1.5x1.5x1/8 (36"w, 34"s)	B	Yes	Ar (CfAe)	181.00 - 0.00	0.0000	0	1	1	0.5000	0.0001		1.29
Rung L2x1.5x1/8 (35"w, 48"s)	C	Yes	Ar (CfAe)	160.00 - 0.00	0.0000	0.1	1	1	0.5000	0.0001		1.05
Rung L1.5x1.5x1/8 (36"w, 34"s)	A	Yes	Ar (CfAe)	180.00 - 2.00	0.0000	0.3	1	1	0.5000	0.0001		1.29
****												

Feed Line/Linear Appurtenances - Entered As Area

Description	Face or Leg	Allow Shield	Component Type	Placement ft	Total Number	C_AA_A ft^2/ft	Weight plf
****							

Feed Line/Linear Appurtenances Section Areas

Tower Section	Tower Elevation ft	Face	A_R ft^2	A_F ft^2	C_AA_A In Face ft^2	C_AA_A Out Face ft^2	Weight lb
T1	195.00-180.00	A	9.618	0.000	0.000	0.000	94.61
		B	15.756	0.250	0.000	0.000	226.32
		C	0.000	0.000	0.000	0.000	0.00
T2	180.00-175.00	A	5.747	1.250	0.000	0.000	74.81
		B	5.252	1.250	0.000	0.000	98.38
		C	0.000	0.000	0.000	0.000	0.00
T3	175.00-170.00	A	5.747	1.250	0.000	0.000	74.81
		B	5.252	1.250	0.000	0.000	98.38

Tower Section	Tower Elevation ft	Face	A_R ft^2	A_F ft^2	C_AA_A In Face ft^2	C_AA_A Out Face ft^2	Weight lb
		C	0.000	0.000	0.000	0.000	0.00
T4	170.00-160.00	A	11.494	2.500	0.000	0.000	149.62
		B	28.324	5.000	0.000	0.000	358.14
		C	0.000	0.000	0.000	0.000	0.00
T5	160.00-150.00	A	11.494	2.500	0.000	0.000	149.62
		B	30.304	5.000	0.000	0.000	369.28
		C	0.833	2.500	0.000	0.000	51.97
T6	150.00-140.00	A	11.494	2.500	0.000	0.000	149.62
		B	30.304	5.000	0.000	0.000	369.28
		C	4.167	2.500	0.000	0.000	73.16
T7	140.00-133.33	A	7.663	1.667	0.000	0.000	99.75
		B	20.203	3.333	0.000	0.000	246.19
		C	2.778	1.667	0.000	0.000	48.77
T8	133.33-126.67	A	7.663	1.667	0.000	0.000	99.75
		B	20.203	3.333	0.000	0.000	246.19
		C	2.778	1.667	0.000	0.000	48.77
T9	126.67-120.00	A	7.663	1.667	0.000	0.000	99.75
		B	20.203	3.333	0.000	0.000	246.19
		C	2.778	1.667	0.000	0.000	48.77
T10	120.00-113.33	A	7.663	1.667	0.000	0.000	99.75
		B	20.203	3.333	0.000	0.000	246.19
		C	2.778	1.667	0.000	0.000	48.77
T11	113.33-106.67	A	7.663	1.667	0.000	0.000	99.75
		B	20.203	3.333	0.000	0.000	246.19
		C	2.778	1.667	0.000	0.000	48.77
T12	106.67-100.00	A	7.663	1.667	0.000	0.000	99.75
		B	20.203	3.333	0.000	0.000	246.19
		C	2.778	1.667	0.000	0.000	48.77
T13	100.00-80.00	A	22.988	5.000	0.000	0.000	299.24
		B	60.609	10.000	0.000	0.000	738.56
		C	8.334	5.000	0.000	0.000	146.32
T14	80.00-60.00	A	22.988	5.000	0.000	0.000	299.24
		B	60.609	10.000	0.000	0.000	738.56
		C	9.141	5.000	0.000	0.000	148.65
T15	60.00-50.00	A	11.786	2.500	0.000	0.000	149.62
		B	30.596	5.000	0.000	0.000	374.15
		C	5.271	2.500	0.000	0.000	79.53
T16	50.00-40.00	A	11.786	2.500	0.000	0.000	149.62
		B	30.596	5.000	0.000	0.000	374.15
		C	5.271	2.500	0.000	0.000	79.53
T17	40.00-20.00	A	23.571	5.000	0.000	0.000	299.24
		B	61.192	10.000	0.000	0.000	748.30
		C	10.542	5.000	0.000	0.000	159.06
T18	20.00-0.00	A	14.859	4.500	0.000	0.000	207.73
		B	37.432	8.000	0.000	0.000	492.20
		C	5.854	5.000	0.000	0.000	131.07

Feed Line/Linear Appurtenances Section Areas - With Ice

Tower Section	Tower Elevation ft	Face or Leg	Ice Thickness in	A_R ft^2	A_F ft^2	C_AA_A In Face ft^2	C_AA_A Out Face ft^2	Weight lb
T1	195.00-180.00	A	0.924	11.083	8.850	0.000	0.000	381.64
		B		10.464	15.955	0.000	0.000	724.39
		C		0.000	0.000	0.000	0.000	0.00
T2	180.00-175.00	A	0.918	6.055	7.801	0.000	0.000	279.52
		B		4.186	7.436	0.000	0.000	300.19
		C		0.000	0.000	0.000	0.000	0.00

Tower Section	Tower Elevation ft	Face or Leg	Ice Thickness in	A_R ft^2	A_F ft^2	C_AA_A In Face ft^2	C_AA_A Out Face ft^2	Weight lb
T3	175.00-170.00	A	0.915	6.039	7.798	0.000	0.000	278.84
		B		4.176	7.433	0.000	0.000	299.71
		C		0.000	0.000	0.000	0.000	0.00
T4	170.00-160.00	A	0.910	12.029	15.584	0.000	0.000	555.56
		B		14.050	39.837	0.000	0.000	1118.52
		C		0.000	0.000	0.000	0.000	0.00
T5	160.00-150.00	A	0.903	11.961	15.569	0.000	0.000	552.62
		B		14.439	42.080	0.000	0.000	1156.22
		C		2.014	5.382	0.000	0.000	148.11
T6	150.00-140.00	A	0.896	11.889	15.553	0.000	0.000	549.52
		B		14.355	42.048	0.000	0.000	1151.15
		C		4.028	8.866	0.000	0.000	247.93
T7	140.00-133.33	A	0.889	7.884	10.359	0.000	0.000	364.53
		B		9.521	28.013	0.000	0.000	764.46
		C		2.671	5.901	0.000	0.000	164.40
T8	133.33-126.67	A	0.884	7.848	10.351	0.000	0.000	363.01
		B		9.479	27.997	0.000	0.000	761.97
		C		2.659	5.893	0.000	0.000	163.66
T9	126.67-120.00	A	0.879	7.811	10.343	0.000	0.000	361.42
		B		9.436	27.981	0.000	0.000	759.37
		C		2.647	5.885	0.000	0.000	162.88
T10	120.00-113.33	A	0.873	7.772	10.335	0.000	0.000	359.77
		B		9.391	27.964	0.000	0.000	756.65
		C		2.634	5.876	0.000	0.000	162.07
T11	113.33-106.67	A	0.867	7.731	10.325	0.000	0.000	358.03
		B		9.343	27.945	0.000	0.000	753.79
		C		2.620	5.867	0.000	0.000	161.22
T12	106.67-100.00	A	0.860	7.688	10.316	0.000	0.000	356.20
		B		9.293	27.926	0.000	0.000	750.79
		C		2.606	5.858	0.000	0.000	160.33
T13	100.00-80.00	A	0.846	22.782	30.885	0.000	0.000	1056.72
		B		27.548	83.653	0.000	0.000	2232.75
		C		7.723	17.510	0.000	0.000	475.16
T14	80.00-60.00	A	0.821	22.279	30.773	0.000	0.000	1035.81
		B		26.961	83.430	0.000	0.000	2198.12
		C		10.483	17.398	0.000	0.000	489.72
T15	60.00-50.00	A	0.797	12.526	15.335	0.000	0.000	508.30
		B		14.828	41.611	0.000	0.000	1099.12
		C		8.791	8.647	0.000	0.000	259.16
T16	50.00-40.00	A	0.778	12.305	15.292	0.000	0.000	500.60
		B		14.575	41.526	0.000	0.000	1085.81
		C		8.633	8.605	0.000	0.000	254.42
T17	40.00-20.00	A	0.750	23.946	30.458	0.000	0.000	978.46
		B		28.392	82.800	0.000	0.000	2132.07
		C		16.792	17.083	0.000	0.000	494.88
T18	20.00-0.00	A	0.750	18.834	20.775	0.000	0.000	666.63
		B		21.752	53.013	0.000	0.000	1377.27
		C		12.729	12.708	0.000	0.000	367.49

Feed Line Shielding

Section	Elevation ft	Face	A_R ft^2	A_R Ice ft^2	A_F ft^2	A_F Ice ft^2
T1	195.00-180.00	A	0.355	3.060	0.363	0.600
		B	0.615	4.459	0.629	0.875
		C	0.000	0.000	0.000	0.000

Section	Elevation ft	Face	A_R ft^2	A_R Ice ft^2	A_F ft^2	A_F Ice ft^2
T2	180.00-175.00	A	0.000	1.661	0.781	1.462
		B	0.000	1.365	0.723	1.201
		C	0.000	0.000	0.000	0.000
T3	175.00-170.00	A	0.000	1.560	0.912	1.705
		B	0.000	1.282	0.845	1.402
		C	0.000	0.000	0.000	0.000
T4	170.00-160.00	A	0.000	2.904	1.394	2.602
		B	0.000	6.075	3.407	5.444
		C	0.000	0.000	0.000	0.000
T5	160.00-150.00	A	0.000	2.704	1.609	2.995
		B	0.000	5.959	4.170	6.599
		C	0.000	0.912	0.401	1.009
T6	150.00-140.00	A	0.000	2.566	1.544	2.865
		B	0.000	5.660	4.001	6.319
		C	0.000	1.434	0.769	1.601
T7	140.00-133.33	A	0.000	0.965	0.733	1.356
		B	0.000	2.130	1.898	2.993
		C	0.000	0.539	0.365	0.757
T8	133.33-126.67	A	0.000	0.926	0.709	1.309
		B	0.000	2.046	1.837	2.893
		C	0.000	0.517	0.353	0.731
T9	126.67-120.00	A	0.000	0.893	0.690	1.271
		B	0.000	1.975	1.788	2.810
		C	0.000	0.499	0.343	0.710
T10	120.00-113.33	A	0.000	1.223	1.144	2.102
		B	0.000	2.706	2.964	4.651
		C	0.000	0.682	0.569	1.173
T11	113.33-106.67	A	0.000	1.195	1.128	2.068
		B	0.000	2.645	2.923	4.579
		C	0.000	0.666	0.561	1.153
T12	106.67-100.00	A	0.000	1.169	0.984	1.801
		B	0.000	2.590	2.551	3.990
		C	0.000	0.651	0.490	1.004
T13	100.00-80.00	A	0.000	3.366	3.661	6.658
		B	0.000	7.472	9.489	14.781
		C	0.000	1.874	1.823	3.707
T14	80.00-60.00	A	0.000	2.178	2.580	4.643
		B	0.000	4.851	6.686	10.343
		C	0.000	1.342	1.362	2.862
T15	60.00-50.00	A	0.000	1.065	1.236	2.202
		B	0.000	2.380	3.203	4.922
		C	0.000	0.673	0.663	1.392
T16	50.00-40.00	A	0.000	1.020	1.223	2.162
		B	0.000	2.285	3.170	4.845
		C	0.000	0.643	0.657	1.363
T17	40.00-20.00	A	0.000	1.330	2.030	3.546
		B	0.000	2.991	5.260	7.977
		C	0.000	0.835	1.090	2.227
T18	20.00-0.00	A	0.000	0.884	1.628	2.948
		B	0.000	1.894	4.044	6.314
		C	0.000	0.582	0.898	1.940

Feed Line Center of Pressure

Section	Elevation ft	CP_X in	CP_Z in	CP_X Ice in	CP_Z Ice in

Section	Elevation ft	CP_X in	CP_Z in	CP_X Ice in	CP_Z Ice in
T1	195.00-180.00	2.4321	-4.8005	0.9695	-3.0985
T2	180.00-175.00	1.5798	-6.5273	0.8763	-4.7853
T3	175.00-170.00	1.6130	-6.6958	0.9164	-5.0335
T4	170.00-160.00	1.8890	-12.0922	1.2632	-9.3614
T5	160.00-150.00	1.8382	-12.0740	1.1351	-9.0770
T6	150.00-140.00	1.9414	-12.1660	1.2446	-9.5062
T7	140.00-133.33	2.1336	-13.0558	1.5505	-11.3966
T8	133.33-126.67	2.3341	-14.0726	1.7055	-12.3021
T9	126.67-120.00	2.5280	-15.0526	1.8554	-13.1724
T10	120.00-113.33	2.3088	-13.6214	1.6590	-11.7231
T11	113.33-106.67	2.4522	-14.3348	1.7696	-12.3538
T12	106.67-100.00	2.7166	-15.7467	1.9512	-13.4517
T13	100.00-80.00	2.6131	-14.9582	1.9458	-13.2200
T14	80.00-60.00	3.2537	-18.1849	2.5623	-16.5794
T15	60.00-50.00	3.5357	-19.3120	2.7185	-16.3737
T16	50.00-40.00	3.7166	-20.1999	2.8771	-17.2019
T17	40.00-20.00	4.2404	-22.8960	3.4162	-20.2099
T18	20.00-0.00	2.9798	-15.7867	2.5476	-14.8254

Discrete Tower Loads

Description	Face or Leg	Offset Type	Offsets: Horz Lateral Vert ft ft ft	Azimuth Adjustment °	Placement ft		C_AA_A Front ft^2	C_AA_A Side ft^2	Weight lb
1.75" Dia x 5-ft Pipe	C	From Leg	2.25 0.00 0.00	-30.0000	75.50	No Ice 1/2" Ice 1" Ice 2" Ice 4" Ice	0.88 1.32 1.63 2.28 3.68	0.88 1.32 1.63 2.28 3.68	12.00 19.06 29.51 61.18 171.86
GPS0015	C	From Leg	4.50 0.00 0.75	-30.0000	75.50	No Ice 1/2" Ice 1" Ice 2" Ice 4" Ice	0.10 0.15 0.22 0.38 0.83	0.10 0.15 0.22 0.38 0.83	0.50 2.29 4.89 13.15 46.16
**** **** Sector Mount [SM 502-3]	C	None		0.0000	152.00	No Ice 1/2" Ice 1" Ice 2" Ice 4" Ice	33.02 47.36 61.70 90.38 147.74	33.02 47.36 61.70 90.38 147.74	1673.10 2223.90 2774.70 3876.30 6079.50
APXVSPP18-C-A20 w/ Mount Pipe	A	From Leg	5.00 0.00 0.00	0.0000	152.00	No Ice 1/2" Ice 1" Ice 2" Ice 4" Ice	8.26 8.81 9.36 10.50 12.88	6.71 7.66 8.49 10.20 13.98	78.90 144.31 217.47 390.34 872.84
APXVSPP18-C-A20 w/ Mount Pipe	B	From Leg	5.00 0.00 0.00	0.0000	152.00	No Ice 1/2" Ice 1" Ice 2" Ice 4" Ice	8.26 8.81 9.36 10.50 12.88	6.71 7.66 8.49 10.20 13.98	78.90 144.31 217.47 390.34 872.84
APXVSPP18-C-A20 w/	C	From Leg	5.00	0.0000	152.00	No Ice	8.26	6.71	78.90

Description	Face or Leg	Offset Type	Offsets: Horz Lateral Vert ft ft ft	Azimuth Adjustment °	Placement ft		C_AA_A Front ft^2	C_AA_A Side ft^2	Weight lb
Mount Pipe			0.00			1/2" Ice	8.81	7.66	144.31
			0.00			1" Ice	9.36	8.49	217.47
						2" Ice	10.50	10.20	390.34
						4" Ice	12.88	13.98	872.84
800MHZ 2X50W RRH	A	From Leg	5.00	0.0000	152.00	No Ice	2.49	2.07	53.00
			0.00			1/2" Ice	2.71	2.27	74.19
			0.00			1" Ice	2.93	2.48	98.39
						2" Ice	3.41	2.93	156.61
						4" Ice	4.46	3.93	317.77
800MHZ 2X50W RRH	B	From Leg	5.00	0.0000	152.00	No Ice	2.49	2.07	53.00
			0.00			1/2" Ice	2.71	2.27	74.19
			0.00			1" Ice	2.93	2.48	98.39
						2" Ice	3.41	2.93	156.61
						4" Ice	4.46	3.93	317.77
800MHZ 2X50W RRH	C	From Leg	5.00	0.0000	152.00	No Ice	2.49	2.07	53.00
			0.00			1/2" Ice	2.71	2.27	74.19
			0.00			1" Ice	2.93	2.48	98.39
						2" Ice	3.41	2.93	156.61
						4" Ice	4.46	3.93	317.77
1900MHz 2X40W RRH	A	From Leg	5.00	0.0000	152.00	No Ice	2.71	2.61	59.50
			0.00			1/2" Ice	2.95	2.84	82.62
			0.00			1" Ice	3.20	3.09	108.98
						2" Ice	3.72	3.61	172.17
						4" Ice	4.86	4.74	345.91
1900MHz 2X40W RRH	B	From Leg	5.00	0.0000	152.00	No Ice	2.71	2.61	59.50
			0.00			1/2" Ice	2.95	2.84	82.62
			0.00			1" Ice	3.20	3.09	108.98
						2" Ice	3.72	3.61	172.17
						4" Ice	4.86	4.74	345.91
1900MHz 2X40W RRH	C	From Leg	5.00	0.0000	152.00	No Ice	2.71	2.61	59.50
			0.00			1/2" Ice	2.95	2.84	82.62
			0.00			1" Ice	3.20	3.09	108.98
						2" Ice	3.72	3.61	172.17
						4" Ice	4.86	4.74	345.91
DB980H90T2E-M w/ Mount Pipe	A	From Leg	5.00	0.0000	152.00	No Ice	4.04	3.62	30.40
			0.00			1/2" Ice	4.50	4.48	66.41
			0.00			1" Ice	4.95	5.22	108.76
						2" Ice	5.87	6.74	215.74
						4" Ice	8.05	10.00	549.44
DB980H90T2E-M w/ Mount Pipe	B	From Leg	5.00	0.0000	152.00	No Ice	4.04	3.62	30.40
			0.00			1/2" Ice	4.50	4.48	66.41
			0.00			1" Ice	4.95	5.22	108.76
						2" Ice	5.87	6.74	215.74
						4" Ice	8.05	10.00	549.44
DB980H90T2E-M w/ Mount Pipe	C	From Leg	5.00	0.0000	152.00	No Ice	4.04	3.62	30.40
			0.00			1/2" Ice	4.50	4.48	66.41
			0.00			1" Ice	4.95	5.22	108.76
						2" Ice	5.87	6.74	215.74
						4" Ice	8.05	10.00	549.44
APXVTM14-C-120 w/ Mount Pipe	A	From Leg	5.00	0.0000	152.00	No Ice	6.90	3.61	56.20
			0.00			1/2" Ice	7.35	3.97	95.73
			0.00			1" Ice	7.81	4.33	140.32
						2" Ice	8.75	5.14	245.49
						4" Ice	10.75	6.97	525.21
APXVTM14-C-120 w/ Mount Pipe	B	From Leg	5.00	0.0000	152.00	No Ice	6.90	3.61	56.20
			0.00			1/2" Ice	7.35	3.97	95.73
			0.00			1" Ice	7.81	4.33	140.32

Description	Face or Leg	Offset Type	Offsets: Horz Lateral Vert ft ft ft	Azimuth Adjustment °	Placement ft		C_AA_A Front ft^2	C_AA_A Side ft^2	Weight lb
						2" Ice	8.75	5.14	245.49
						4" Ice	10.75	6.97	525.21
APXVTM14-C-120 w/ Mount Pipe	C	From Leg	5.00 0.00 0.00	0.0000	152.00	No Ice	6.90	3.61	56.20
						1/2" Ice	7.35	3.97	95.73
						1" Ice	7.81	4.33	140.32
						2" Ice	8.75	5.14	245.49
						4" Ice	10.75	6.97	525.21
TD-RRH8x20-25	A	From Leg	5.00 0.00 0.00	0.0000	152.00	No Ice	4.72	1.70	70.00
						1/2" Ice	5.01	1.92	97.15
						1" Ice	5.32	2.15	127.83
						2" Ice	5.95	2.62	200.54
						4" Ice	7.31	3.68	396.84
TD-RRH8x20-25	B	From Leg	5.00 0.00 0.00	0.0000	152.00	No Ice	4.72	1.70	70.00
						1/2" Ice	5.01	1.92	97.15
						1" Ice	5.32	2.15	127.83
						2" Ice	5.95	2.62	200.54
						4" Ice	7.31	3.68	396.84
TD-RRH8x20-25	C	From Leg	5.00 0.00 0.00	0.0000	152.00	No Ice	4.72	1.70	70.00
						1/2" Ice	5.01	1.92	97.15
						1" Ice	5.32	2.15	127.83
						2" Ice	5.95	2.62	200.54
						4" Ice	7.31	3.68	396.84
****									
(3) Sector Mounts 169-ft	C	None		0.0000	169.00	No Ice	21.56	21.56	1395.40
						1/2" Ice	29.77	29.77	2140.10
						1" Ice	37.98	37.98	2884.80
						2" Ice	54.40	54.40	4374.20
						4" Ice	87.24	87.24	7353.00
(2) BXA-70063/6CF w/ Mount Pipe	A	From Leg	5.00 0.00 0.00	0.0000	169.00	No Ice	7.75	5.18	38.90
						1/2" Ice	8.29	6.11	95.39
						1" Ice	8.85	6.92	159.37
						2" Ice	9.97	8.59	313.07
						4" Ice	12.34	12.13	754.05
(2) DB844G65ZAXY w/Mount Pipe	B	From Leg	5.00 0.00 0.00	0.0000	169.00	No Ice	5.38	5.40	41.55
						1/2" Ice	6.07	6.49	92.81
						1" Ice	6.65	7.30	150.42
						2" Ice	7.83	8.96	288.32
						4" Ice	10.34	12.49	688.90
(2) DB844G65ZAXY w/Mount Pipe	C	From Leg	5.00 0.00 0.00	0.0000	169.00	No Ice	5.38	5.40	41.55
						1/2" Ice	6.07	6.49	92.81
						1" Ice	6.65	7.30	150.42
						2" Ice	7.83	8.96	288.32
						4" Ice	10.34	12.49	688.90
DB-B1/T1 w/ Mount Pipe	C	From Leg	5.00 0.00 0.00	0.0000	169.00	No Ice	5.51	4.56	57.55
						1/2" Ice	6.29	5.55	107.53
						1" Ice	6.87	6.25	163.14
						2" Ice	8.08	7.69	294.91
						4" Ice	10.67	10.79	674.64
(2) HBXX-6517DS-A2M w/ Mount Pipe	A	From Leg	5.00 0.00 0.00	0.0000	169.00	No Ice	8.98	6.96	67.23
						1/2" Ice	9.65	8.18	136.85
						1" Ice	10.29	9.14	214.64
						2" Ice	11.59	11.02	398.47
						4" Ice	14.32	15.03	913.98
(2) HBXX-6517DS-A2M w/ Mount Pipe	B	From Leg	5.00 0.00 0.00	0.0000	169.00	No Ice	8.98	6.96	67.23
						1/2" Ice	9.65	8.18	136.85
						1" Ice	10.29	9.14	214.64
						2" Ice	11.59	11.02	398.47

Description	Face or Leg	Offset Type	Offsets: Horz Lateral Vert ft ft ft	Azimuth Adjustment °	Placement ft		C_AA_A Front ft^2	C_AA_A Side ft^2	Weight lb
						4" Ice	14.32	15.03	913.98
(2) HBXX-6517DS-A2M w/ Mount Pipe	C	From Leg	5.00 0.00 0.00	0.0000	169.00	No Ice	8.98	6.96	67.23
						1/2" Ice	9.65	8.18	136.85
						1" Ice	10.29	9.14	214.64
						2" Ice	11.59	11.02	398.47
						4" Ice	14.32	15.03	913.98
RRH2x60-AWS	A	From Leg	5.00 0.00 0.00	0.0000	169.00	No Ice	3.96	1.82	60.00
						1/2" Ice	4.27	2.08	82.72
						1" Ice	4.60	2.36	109.06
						2" Ice	5.27	2.96	173.43
						4" Ice	6.72	4.25	354.26
RRH2x60-AWS	B	From Leg	5.00 0.00 0.00	0.0000	169.00	No Ice	3.96	1.82	60.00
						1/2" Ice	4.27	2.08	82.72
						1" Ice	4.60	2.36	109.06
						2" Ice	5.27	2.96	173.43
						4" Ice	6.72	4.25	354.26
RRH2x60-AWS	C	From Leg	5.00 0.00 0.00	0.0000	169.00	No Ice	3.96	1.82	60.00
						1/2" Ice	4.27	2.08	82.72
						1" Ice	4.60	2.36	109.06
						2" Ice	5.27	2.96	173.43
						4" Ice	6.72	4.25	354.26
RRH2X60-PCS	A	From Leg	5.00 0.00 0.00	0.0000	169.00	No Ice	2.57	2.01	55.00
						1/2" Ice	2.79	2.22	75.35
						1" Ice	3.02	2.43	98.71
						2" Ice	3.52	2.89	155.23
						4" Ice	4.61	3.92	312.91
RRH2X60-PCS	B	From Leg	5.00 0.00 0.00	0.0000	169.00	No Ice	2.57	2.01	55.00
						1/2" Ice	2.79	2.22	75.35
						1" Ice	3.02	2.43	98.71
						2" Ice	3.52	2.89	155.23
						4" Ice	4.61	3.92	312.91
RRH2X60-PCS	C	From Leg	5.00 0.00 0.00	0.0000	169.00	No Ice	2.57	2.01	55.00
						1/2" Ice	2.79	2.22	75.35
						1" Ice	3.02	2.43	98.71
						2" Ice	3.52	2.89	155.23
						4" Ice	4.61	3.92	312.91
BXA-70080/6CF w/ Mount Pipe	A	From Leg	5.00 0.00 0.00	0.0000	169.00	No Ice	7.70	5.54	42.90
						1/2" Ice	8.24	6.48	100.79
						1" Ice	8.79	7.30	166.25
						2" Ice	9.92	8.99	323.17
						4" Ice	12.28	12.56	771.61
DB846F65ZAXY w/Mount Pipe	B	From Leg	5.00 0.00 0.00	0.0000	169.00	No Ice	7.27	7.82	46.55
						1/2" Ice	7.88	9.01	113.93
						1" Ice	8.48	9.91	189.25
						2" Ice	9.72	11.81	367.34
						4" Ice	12.33	15.98	867.35
DB846F65ZAXY w/Mount Pipe	C	From Leg	5.00 0.00 0.00	0.0000	169.00	No Ice	7.27	7.82	46.55
						1/2" Ice	7.88	9.01	113.93
						1" Ice	8.48	9.91	189.25
						2" Ice	9.72	11.81	367.34
						4" Ice	12.33	15.98	867.35
(2) FD9R6004	A	From Leg	5.00 0.00 0.00	0.0000	169.00	No Ice	0.37	0.08	3.10
						1/2" Ice	0.45	0.14	5.40
						1" Ice	0.54	0.20	8.79
						2" Ice	0.75	0.34	19.61
						4" Ice	1.28	0.74	62.87
(2) FD9R6004	B	From Leg	5.00	0.0000	169.00	No Ice	0.37	0.08	3.10

Description	Face or Leg	Offset Type	Offsets: Horz Lateral Vert ft ft ft	Azimuth Adjustment °	Placement ft		C_AA_A Front ft^2	C_AA_A Side ft^2	Weight lb
			0.00			1/2" Ice	0.45	0.14	5.40
			0.00			1" Ice	0.54	0.20	8.79
						2" Ice	0.75	0.34	19.61
						4" Ice	1.28	0.74	62.87
(2) FD9R6004	C	From Leg	5.00	0.0000	169.00	No Ice	0.37	0.08	3.10
			0.00			1/2" Ice	0.45	0.14	5.40
			0.00			1" Ice	0.54	0.20	8.79
						2" Ice	0.75	0.34	19.61
						4" Ice	1.28	0.74	62.87
****									
****									
(3) Sector Mounts 188-ft	C	None		0.0000	188.00	No Ice	21.56	21.56	1395.40
						1/2" Ice	29.77	29.77	2140.10
						1" Ice	37.98	37.98	2884.80
						2" Ice	54.40	54.40	4374.20
						4" Ice	87.24	87.24	7353.00
Miscellaneous [NA 510-1]	C	None		0.0000	188.00	No Ice	6.00	6.00	255.70
						1/2" Ice	8.50	8.50	339.50
						1" Ice	11.00	11.00	409.12
						2" Ice	16.00	16.00	562.54
						4" Ice	26.00	26.00	869.38
7770.00 w/ Mount Pipe	A	From Leg	5.00	23.0000	188.00	No Ice	6.22	4.35	56.90
			0.00			1/2" Ice	6.77	5.20	105.42
			3.00			1" Ice	7.30	5.92	160.42
						2" Ice	8.38	7.41	293.10
						4" Ice	10.69	10.76	679.83
7770.00 w/ Mount Pipe	B	From Leg	5.00	23.0000	188.00	No Ice	6.22	4.35	56.90
			0.00			1/2" Ice	6.77	5.20	105.42
			3.00			1" Ice	7.30	5.92	160.42
						2" Ice	8.38	7.41	293.10
						4" Ice	10.69	10.76	679.83
7770.00 w/ Mount Pipe	C	From Leg	5.00	23.0000	188.00	No Ice	6.22	4.35	56.90
			0.00			1/2" Ice	6.77	5.20	105.42
			3.00			1" Ice	7.30	5.92	160.42
						2" Ice	8.38	7.41	293.10
						4" Ice	10.69	10.76	679.83
SBNH-1D6565C w/ Mount Pipe	A	From Leg	5.00	23.0000	188.00	No Ice	11.69	9.85	99.25
			0.00			1/2" Ice	12.42	11.38	189.04
			3.00			1" Ice	13.16	12.94	288.81
						2" Ice	14.63	15.31	522.64
						4" Ice	17.92	20.19	1168.71
AM-X-CD-16-65-00T-RET w/ Mount Pipe	B	From Leg	5.00	23.0000	188.00	No Ice	8.50	6.30	74.05
			0.00			1/2" Ice	9.15	7.48	139.04
			3.00			1" Ice	9.77	8.37	211.91
						2" Ice	11.03	10.18	384.96
						4" Ice	13.68	14.02	874.27
AM-X-CD-16-65-00T-RET w/ Mount Pipe	C	From Leg	5.00	23.0000	188.00	No Ice	8.50	6.30	74.05
			0.00			1/2" Ice	9.15	7.48	139.04
			3.00			1" Ice	9.77	8.37	211.91
						2" Ice	11.03	10.18	384.96
						4" Ice	13.68	14.02	874.27
SBNHH-1D65A w/ Mount Pipe	A	From Leg	5.00	23.0000	188.00	No Ice	6.77	5.59	68.24
			0.00			1/2" Ice	7.29	6.31	126.00
			3.00			1" Ice	7.83	7.08	191.24
						2" Ice	8.93	8.71	342.55
						4" Ice	11.26	12.17	767.98
SBNHH-1D65A w/ Mount	B	From Leg	5.00	23.0000	188.00	No Ice	6.77	5.59	68.24

Description	Face or Leg	Offset Type	Offsets: Horz Lateral Vert ft ft ft	Azimuth Adjustment °	Placement ft		C_AA_A Front ft^2	C_AA_A Side ft^2	Weight lb
Pipe			0.00			1/2" Ice	7.29	6.31	126.00
			3.00			1" Ice	7.83	7.08	191.24
						2" Ice	8.93	8.71	342.55
						4" Ice	11.26	12.17	767.98
SBNHH-1D65A w/ Mount Pipe	C	From Leg	5.00	23.0000	188.00	No Ice	6.77	5.59	68.24
			0.00			1/2" Ice	7.29	6.31	126.00
			3.00			1" Ice	7.83	7.08	191.24
						2" Ice	8.93	8.71	342.55
						4" Ice	11.26	12.17	767.98
(2) LGP13519	A	From Leg	5.00	23.0000	188.00	No Ice	0.35	0.33	8.04
			0.00			1/2" Ice	0.44	0.47	12.97
			3.00			1" Ice	0.55	0.63	19.68
						2" Ice	0.78	1.01	39.83
						4" Ice	1.37	2.01	119.63
(2) LGP13519	B	From Leg	5.00	23.0000	188.00	No Ice	0.35	0.33	8.04
			0.00			1/2" Ice	0.44	0.47	12.97
			3.00			1" Ice	0.55	0.63	19.68
						2" Ice	0.78	1.01	39.83
						4" Ice	1.37	2.01	119.63
(2) LGP13519	C	From Leg	5.00	23.0000	188.00	No Ice	0.35	0.33	8.04
			0.00			1/2" Ice	0.44	0.47	12.97
			3.00			1" Ice	0.55	0.63	19.68
						2" Ice	0.78	1.01	39.83
						4" Ice	1.37	2.01	119.63
(2) LGP21401	A	From Leg	5.00	23.0000	188.00	No Ice	0.00	0.36	10.00
			0.00			1/2" Ice	0.00	0.48	21.26
			3.00			1" Ice	0.00	0.60	30.32
						2" Ice	0.00	0.87	54.89
						4" Ice	0.00	1.52	135.29
(2) LGP21401	B	From Leg	5.00	23.0000	188.00	No Ice	0.00	0.36	10.00
			0.00			1/2" Ice	0.00	0.48	21.26
			3.00			1" Ice	0.00	0.60	30.32
						2" Ice	0.00	0.87	54.89
						4" Ice	0.00	1.52	135.29
(2) LGP21401	C	From Leg	5.00	23.0000	188.00	No Ice	0.00	0.36	10.00
			0.00			1/2" Ice	0.00	0.48	21.26
			3.00			1" Ice	0.00	0.60	30.32
						2" Ice	0.00	0.87	54.89
						4" Ice	0.00	1.52	135.29
(2) RRUS-11	A	From Leg	5.00	23.0000	188.00	No Ice	3.26	1.38	50.00
			0.00			1/2" Ice	3.50	1.56	70.87
			3.00			1" Ice	3.75	1.74	94.78
						2" Ice	4.28	2.15	152.50
						4" Ice	5.44	3.05	312.98
(2) RRUS-11	B	From Leg	5.00	23.0000	188.00	No Ice	3.26	1.38	50.00
			0.00			1/2" Ice	3.50	1.56	70.87
			3.00			1" Ice	3.75	1.74	94.78
						2" Ice	4.28	2.15	152.50
						4" Ice	5.44	3.05	312.98
(2) RRUS-11	C	From Leg	5.00	23.0000	188.00	No Ice	3.26	1.38	50.00
			0.00			1/2" Ice	3.50	1.56	70.87
			3.00			1" Ice	3.75	1.74	94.78
						2" Ice	4.28	2.15	152.50
						4" Ice	5.44	3.05	312.98
RRUS-32 B30	A	From Leg	5.00	23.0000	188.00	No Ice	3.87	2.76	77.00
			0.00			1/2" Ice	4.15	3.02	104.93
			3.00			1" Ice	4.44	3.29	136.47

Description	Face or Leg	Offset Type	Offsets: Horz Lateral Vert ft ft ft	Azimuth Adjustment °	Placement ft		C_AA_A Front ft^2	C_AA_A Side ft^2	Weight lb
						2" Ice	5.06	3.85	211.15
						4" Ice	6.38	5.08	412.40
RRUS-32 B30	B	From Leg	5.00	23.0000	188.00	No Ice	3.87	2.76	77.00
			0.00			1/2" Ice	4.15	3.02	104.93
			3.00			1" Ice	4.44	3.29	136.47
						2" Ice	5.06	3.85	211.15
						4" Ice	6.38	5.08	412.40
RRUS-32 B30	C	From Leg	5.00	23.0000	188.00	No Ice	3.87	2.76	77.00
			0.00			1/2" Ice	4.15	3.02	104.93
			3.00			1" Ice	4.44	3.29	136.47
						2" Ice	5.06	3.85	211.15
						4" Ice	6.38	5.08	412.40
DC6-48-60-18-8F	A	From Leg	0.50	0.0000	188.00	No Ice	1.47	1.47	18.90
			0.00			1/2" Ice	1.67	1.67	36.62
			3.00			1" Ice	1.88	1.88	56.82
						2" Ice	2.33	2.33	105.34
						4" Ice	3.38	3.38	239.02
DC6-48-60-18-8F	B	From Leg	0.50	0.0000	188.00	No Ice	1.47	1.47	18.90
			0.00			1/2" Ice	1.67	1.67	36.62
			3.00			1" Ice	1.88	1.88	56.82
						2" Ice	2.33	2.33	105.34
						4" Ice	3.38	3.38	239.02
****									
Sector Mount [SM 802-3]	C	None		0.0000	195.00	No Ice	24.41	24.41	930.00
						1/2" Ice	31.39	31.39	1362.00
						1" Ice	38.37	38.37	1794.00
						2" Ice	52.33	52.33	2658.00
						4" Ice	80.25	80.25	4386.00
HSS Top Mount	C	None		0.0000	195.00	No Ice	8.08	8.08	328.90
						1/2" Ice	9.70	9.70	415.20
						1" Ice	11.32	11.32	501.50
						2" Ice	14.56	14.56	674.10
						4" Ice	21.04	21.04	1019.30
LNX-6515DS-VTM w/ Mount Pipe	A	From Leg	3.00	25.0000	193.00	No Ice	11.21	9.36	75.35
			0.00			1/2" Ice	11.83	10.68	158.69
			0.00			1" Ice	12.45	11.71	251.57
						2" Ice	13.74	13.82	469.57
						4" Ice	16.75	18.22	1068.51
LNX-6515DS-VTM w/ Mount Pipe	B	From Leg	3.00	25.0000	193.00	No Ice	11.21	9.36	75.35
			0.00			1/2" Ice	11.83	10.68	158.69
			0.00			1" Ice	12.45	11.71	251.57
						2" Ice	13.74	13.82	469.57
						4" Ice	16.75	18.22	1068.51
LNX-6515DS-VTM w/ Mount Pipe	C	From Leg	3.00	25.0000	193.00	No Ice	11.21	9.36	75.35
			0.00			1/2" Ice	11.83	10.68	158.69
			0.00			1" Ice	12.45	11.71	251.57
						2" Ice	13.74	13.82	469.57
						4" Ice	16.75	18.22	1068.51
APX16DWV-16DWVS-A	A	From Leg	3.00	25.0000	195.00	No Ice	7.07	2.15	40.70
			0.00			1/2" Ice	7.52	2.49	73.65
			0.00			1" Ice	7.98	2.84	111.47
						2" Ice	8.92	3.55	202.47
						4" Ice	10.91	5.08	451.40
APX16DWV-16DWVS-A	B	From Leg	3.00	25.0000	195.00	No Ice	7.07	2.15	40.70
			0.00			1/2" Ice	7.52	2.49	73.65
			0.00			1" Ice	7.98	2.84	111.47
						2" Ice	8.92	3.55	202.47

Description	Face or Leg	Offset Type	Offsets: Horz Lateral Vert ft ft ft	Azimuth Adjustment °	Placement ft		C_AA_A Front ft^2	C_AA_A Side ft^2	Weight lb
						4" Ice	10.91	5.08	451.40
APX16DWV-16DWVS-A	C	From Leg	3.00	25.0000	195.00	No Ice	7.07	2.15	40.70
			0.00			1/2" Ice	7.52	2.49	73.65
			0.00			1" Ice	7.98	2.84	111.47
						2" Ice	8.92	3.55	202.47
						4" Ice	10.91	5.08	451.40
(2) KRY 112 71	A	From Leg	3.00	25.0000	195.00	No Ice	0.73	0.66	18.07
			0.00			1/2" Ice	0.87	0.88	26.97
			0.00			1" Ice	1.03	1.11	38.22
						2" Ice	1.37	1.65	69.33
						4" Ice	2.20	2.95	180.58
(2) KRY 112 71	B	From Leg	3.00	25.0000	195.00	No Ice	0.73	0.66	18.07
			0.00			1/2" Ice	0.87	0.88	26.97
			0.00			1" Ice	1.03	1.11	38.22
						2" Ice	1.37	1.65	69.33
						4" Ice	2.20	2.95	180.58
(2) KRY 112 71	C	From Leg	3.00	25.0000	195.00	No Ice	0.73	0.66	18.07
			0.00			1/2" Ice	0.87	0.88	26.97
			0.00			1" Ice	1.03	1.11	38.22
						2" Ice	1.37	1.65	69.33
						4" Ice	2.20	2.95	180.58
****									
****									
****									
****									
****									

Load Combinations

Comb. No.	Description
1	Dead Only
2	Dead+Wind 0 deg - No Ice
3	Dead+Wind 30 deg - No Ice
4	Dead+Wind 60 deg - No Ice
5	Dead+Wind 90 deg - No Ice
6	Dead+Wind 120 deg - No Ice
7	Dead+Wind 150 deg - No Ice
8	Dead+Wind 180 deg - No Ice
9	Dead+Wind 210 deg - No Ice
10	Dead+Wind 240 deg - No Ice
11	Dead+Wind 270 deg - No Ice
12	Dead+Wind 300 deg - No Ice
13	Dead+Wind 330 deg - No Ice
14	Dead+Ice+Temp
15	Dead+Wind 0 deg+Ice+Temp
16	Dead+Wind 30 deg+Ice+Temp
17	Dead+Wind 60 deg+Ice+Temp
18	Dead+Wind 90 deg+Ice+Temp
19	Dead+Wind 120 deg+Ice+Temp
20	Dead+Wind 150 deg+Ice+Temp

Comb. No.	Description
21	Dead+Wind 180 deg+Ice+Temp
22	Dead+Wind 210 deg+Ice+Temp
23	Dead+Wind 240 deg+Ice+Temp
24	Dead+Wind 270 deg+Ice+Temp
25	Dead+Wind 300 deg+Ice+Temp
26	Dead+Wind 330 deg+Ice+Temp
27	Dead+Wind 0 deg - Service
28	Dead+Wind 30 deg - Service
29	Dead+Wind 60 deg - Service
30	Dead+Wind 90 deg - Service
31	Dead+Wind 120 deg - Service
32	Dead+Wind 150 deg - Service
33	Dead+Wind 180 deg - Service
34	Dead+Wind 210 deg - Service
35	Dead+Wind 240 deg - Service
36	Dead+Wind 270 deg - Service
37	Dead+Wind 300 deg - Service
38	Dead+Wind 330 deg - Service

Maximum Member Forces

Section No.	Elevation ft	Component Type	Condition	Gov. Load Comb.	Force lb	Major Axis Moment lb-ft	Minor Axis Moment lb-ft
T1	195 - 180	Leg	Max Tension	4	18637.22	-183.24	157.45
			Max. Compression	2	-31693.29	15.13	294.60
			Max. Mx	11	-2178.57	-508.53	3.22
			Max. My	8	-4481.15	12.70	475.14
			Max. Vy	11	-1306.84	143.28	3.94
			Max. Vx	2	-1248.21	2.44	148.70
		Diagonal	Max Tension	7	8039.40	0.00	0.00
		Horizontal	Max Tension	2	548.94	0.00	0.00
			Max. Compression	7	-5454.59	0.00	0.00
			Max. Mx	15	46.89	-8.04	0.00
			Max. My	5	476.06	0.00	0.00
			Max. Vy	15	9.19	0.00	0.00
			Max. Vx	5	-0.00	0.00	0.00
		Top Girt	Max Tension	10	411.14	0.00	0.00
			Max. Compression	6	-868.03	0.00	0.00
			Max. Mx	14	0.04	-8.04	0.00
			Max. My	5	-737.82	0.00	0.00
			Max. Vy	14	9.19	0.00	0.00
			Max. Vx	5	-0.00	0.00	0.00
		Bottom Girt	Max Tension	15	26.01	0.00	0.00
			Max. Compression	13	-2666.14	0.00	0.00
			Max. Mx	15	26.01	-8.04	0.00
			Max. My	5	-2330.03	0.00	0.00
			Max. Vy	15	9.19	0.00	0.00
			Max. Vx	5	-0.00	0.00	0.00
T2	180 - 175	Leg	Max Tension	4	32229.64	-376.24	-8.88
			Max. Compression	2	-35202.34	-416.30	-1.81
			Max. Mx	2	-35202.34	-416.30	-1.81
			Max. My	5	-1856.35	-72.94	604.19
			Max. Vy	2	318.58	409.08	3.32
			Max. Vx	5	-311.68	-72.94	604.19
		Diagonal	Max Tension	12	3225.25	0.00	0.00
			Max. Compression	6	-3819.81	-19.40	7.58
			Max. Mx	13	-3719.56	-22.17	-4.11
			Max. My	6	-3662.51	-18.76	14.80

Section No.	Elevation ft	Component Type	Condition	Gov. Load Comb.	Force lb	Major Axis Moment lb-ft	Minor Axis Moment lb-ft
			Max. Vy	13	9.12	0.00	0.00
			Max. Vx	6	4.50	0.00	0.00
		Secondary Horizontal	Max Tension	2	610.48	0.00	0.00
			Max. Compression	2	-610.48	-30.70	-4.84
			Max. Mx	5	528.71	-36.75	-5.27
			Max. My	11	-396.55	24.67	11.54
			Max. Vy	5	-21.96	0.00	0.00
			Max. Vx	11	6.25	0.00	0.00
T3	175 - 170	Leg	Max Tension	4	39456.09	-452.20	-3.35
			Max. Compression	2	-43795.33	-62.48	8.62
			Max. Mx	6	-43613.01	548.51	3.33
			Max. My	5	-2296.40	-73.03	604.18
			Max. Vy	2	-417.83	548.27	-2.39
			Max. Vx	5	351.56	-73.03	604.18
		Diagonal	Max Tension	7	3145.22	41.53	-1.10
			Max. Compression	6	-2983.91	0.00	0.00
			Max. Mx	2	2259.40	69.26	25.70
			Max. My	6	1776.44	68.62	28.76
			Max. Vy	2	-24.91	69.26	25.70
			Max. Vx	6	-9.39	0.00	0.00
		Secondary Horizontal	Max Tension	2	759.50	0.00	0.00
			Max. Compression	2	-759.50	17.15	-20.28
			Max. Mx	3	545.26	36.55	-4.46
			Max. My	2	759.50	16.90	-20.48
			Max. Vy	3	19.83	36.55	-4.46
			Max. Vx	2	-9.75	16.90	-20.48
T4	170 - 160	Leg	Max Tension	4	58724.79	-620.50	-4.37
			Max. Compression	2	-65874.79	-501.27	-2.06
			Max. Mx	2	-52540.26	818.43	12.37
			Max. My	7	-1661.29	-10.80	807.09
			Max. Vy	2	-1070.12	818.43	12.37
			Max. Vx	13	1152.14	-22.73	350.38
		Diagonal	Max Tension	9	5241.85	-15.97	15.30
			Max. Compression	3	-5576.33	0.00	0.00
			Max. Mx	2	3999.34	-32.23	12.58
			Max. My	10	-5427.87	16.58	19.87
			Max. Vy	15	16.79	-21.37	5.53
			Max. Vx	10	5.62	0.00	0.00
		Secondary Horizontal	Max Tension	2	1142.41	0.00	0.00
			Max. Compression	2	-1142.41	2.78	-13.17
			Max. Mx	7	619.05	11.67	-2.67
			Max. My	2	-1142.41	2.78	-13.17
			Max. Vy	23	12.40	10.10	0.76
			Max. Vx	6	-5.10	2.50	-13.13
T5	160 - 150	Leg	Max Tension	4	78445.46	-1430.02	-6.55
			Max. Compression	2	-87822.96	-679.52	-1.82
			Max. Mx	2	-86954.39	1640.37	-0.55
			Max. My	5	-3781.99	-121.33	1070.96
			Max. Vy	2	1751.47	1640.36	-0.56
			Max. Vx	5	-708.45	-76.67	863.78
		Diagonal	Max Tension	7	6153.15	-62.46	4.66
			Max. Compression	7	-6326.15	0.00	0.00
			Max. Mx	2	3113.26	-87.14	21.25
			Max. My	10	-5297.34	65.84	32.63
			Max. Vy	2	30.07	-87.14	21.25
			Max. Vx	10	8.44	0.00	0.00
		Secondary Horizontal	Max Tension	6	1604.83	4.61	-14.38

Section No.	Elevation ft	Component Type	Condition	Gov. Load Comb.	Force lb	Major Axis Moment lb-ft	Minor Axis Moment lb-ft
			Max. Compression	12	-1600.75	4.49	13.39
			Max. Mx	13	-65.76	13.40	-1.49
			Max. My	11	-1166.35	9.08	17.04
			Max. Vy	18	-14.24	12.86	-1.39
			Max. Vx	5	-6.05	0.00	0.00
T6	150 - 140	Leg	Max Tension	4	100919.19	624.71	23.50
			Max. Compression	2	-112934.49	-381.15	-1.49
			Max. Mx	2	-100597.44	1399.23	0.64
			Max. My	5	-5213.07	-76.72	863.78
			Max. Vy	2	-935.12	1385.23	0.72
			Max. Vx	5	444.46	-76.72	863.78
		Diagonal	Max Tension	7	6328.20	-42.05	-5.34
			Max. Compression	7	-6566.97	0.00	0.00
			Max. Mx	2	4294.49	-55.77	4.38
			Max. My	6	-6206.01	31.76	-13.94
			Max. Vy	15	27.89	-38.69	4.10
			Max. Vx	6	-3.34	0.00	0.00
		Secondary Horizontal	Max Tension	2	1958.52	0.00	0.00
			Max. Compression	2	-1958.52	1.40	-7.55
			Max. Mx	22	25.63	11.74	1.60
			Max. My	11	-1104.61	5.36	9.31
			Max. Vy	22	14.91	11.74	1.60
			Max. Vx	5	-2.91	0.00	0.00
T7	140 - 133.333	Leg	Max Tension	4	113456.93	260.80	14.09
			Max. Compression	2	-126645.52	871.10	-9.22
			Max. Mx	2	-126645.52	871.10	-9.22
			Max. My	5	-6308.15	-4.53	913.83
			Max. Vy	10	-237.90	866.98	-58.49
			Max. Vx	11	137.62	-4.92	-911.95
		Diagonal	Max Tension	7	6498.97	0.00	0.00
			Max. Compression	7	-6598.54	0.00	0.00
			Max. Mx	2	5177.20	44.18	-1.44
			Max. My	5	-3623.52	11.09	7.29
			Max. Vy	17	23.50	30.36	4.56
			Max. Vx	5	-1.74	0.00	0.00
T8	133.333 - 126.667	Leg	Max Tension	4	126405.41	-852.60	58.37
			Max. Compression	2	-140810.99	586.61	2.14
			Max. Mx	2	-140500.66	871.10	-9.23
			Max. My	5	-6496.78	-4.71	913.83
			Max. Vy	8	-108.36	-859.15	10.35
			Max. Vx	5	194.89	-4.71	913.83
		Diagonal	Max Tension	7	6656.64	0.00	0.00
			Max. Compression	7	-6784.27	0.00	0.00
			Max. Mx	4	4666.44	44.12	4.09
			Max. My	12	-6005.52	-4.04	-8.38
			Max. Vy	17	25.25	33.86	4.67
			Max. Vx	12	1.92	0.00	0.00
T9	126.667 - 120	Leg	Max Tension	4	138845.87	-546.49	-17.62
			Max. Compression	2	-154539.50	30.91	-16.14
			Max. Mx	2	-154229.22	586.61	2.13
			Max. My	5	-7302.60	-83.85	1859.07
			Max. Vy	10	131.04	580.57	31.09
			Max. Vx	5	-334.71	-83.85	1859.07
		Diagonal	Max Tension	7	6487.51	0.00	0.00
			Max. Compression	7	-6567.25	0.00	0.00
			Max. Mx	4	4341.68	34.58	3.26
			Max. My	12	-5986.19	-1.44	-8.65
			Max. Vy	17	23.61	31.52	4.48
			Max. Vx	12	1.82	0.00	0.00

Section No.	Elevation ft	Component Type	Condition	Gov. Load Comb.	Force lb	Major Axis Moment lb-ft	Minor Axis Moment lb-ft
T10	120 - 113.333	Leg	Max Tension	4	149255.41	-189.24	120.28
			Max. Compression	2	-165764.66	3766.17	3.33
			Max. Mx	2	-165624.76	3766.18	3.34
			Max. My	5	-7593.76	-193.56	1885.07
			Max. Vy	2	1738.26	3766.18	3.34
			Max. Vx	5	604.10	-84.04	1859.06
		Diagonal	Max Tension	12	7216.01	90.17	-10.61
			Max. Compression	6	-7842.05	0.00	0.00
			Max. Mx	2	4292.55	103.95	9.10
			Max. My	11	-5760.89	-43.69	-19.10
			Max. Vy	15	-36.15	69.05	6.59
			Max. Vx	11	-3.48	0.00	0.00
		Secondary Horizontal	Max Tension	2	2874.71	0.00	0.00
			Max. Compression	2	-2874.71	4.25	-12.20
			Max. Mx	19	273.42	30.03	3.73
			Max. My	11	-1721.01	15.85	20.13
			Max. Vy	19	-28.07	30.03	3.73
			Max. Vx	5	-4.42	0.00	0.00
T11	113.333 - 106.667	Leg	Max Tension	4	160631.58	1650.90	38.64
			Max. Compression	2	-178576.76	4220.13	3.05
			Max. Mx	2	-178379.55	4220.13	3.06
			Max. My	3	-6068.68	-205.38	-2045.03
			Max. Vy	2	-1993.08	4220.13	3.05
			Max. Vx	5	666.51	-193.58	1885.07
		Diagonal	Max Tension	7	7343.72	80.11	6.25
			Max. Compression	6	-7719.36	0.00	0.00
			Max. Mx	2	4328.81	101.86	7.27
			Max. My	6	-7702.28	-54.72	18.50
			Max. Vy	15	-37.42	70.65	6.28
			Max. Vx	6	3.30	0.00	0.00
		Secondary Horizontal	Max Tension	2	3096.90	0.00	0.00
			Max. Compression	2	-3096.90	5.46	-9.71
			Max. Mx	20	-37.85	32.20	6.66
			Max. My	11	-2281.74	17.93	18.20
			Max. Vy	20	-29.47	32.20	6.66
			Max. Vx	5	-3.80	0.00	0.00
T12	106.667 - 100	Leg	Max Tension	4	171277.08	1852.63	6.42
			Max. Compression	2	-190400.00	3874.65	4.58
			Max. Mx	2	-190400.00	3874.65	4.58
			Max. My	3	-6296.63	-205.40	-2045.02
			Max. Vy	2	-1965.74	3874.65	4.58
			Max. Vx	5	606.98	-234.06	1995.99
		Diagonal	Max Tension	12	7300.84	53.63	-3.83
			Max. Compression	6	-7982.84	0.00	0.00
			Max. Mx	2	4139.57	66.71	7.09
			Max. My	11	-5871.97	-8.89	-10.98
			Max. Vy	15	-32.05	56.33	5.23
			Max. Vx	11	-1.99	0.00	0.00
		Secondary Horizontal	Max Tension	2	3301.94	0.00	0.00
			Max. Compression	2	-3301.94	13.45	-5.49
			Max. Mx	18	-342.82	39.26	4.61
			Max. My	11	-1987.81	12.48	15.77
			Max. Vy	18	-31.72	39.26	4.61
			Max. Vx	5	-3.19	0.00	0.00
T13	100 - 80	Leg	Max Tension	4	202162.02	1007.08	27.52
			Max. Compression	2	-226453.51	298.85	2.34
			Max. Mx	2	-202897.54	3197.20	4.88

Section No.	Elevation ft	Component Type	Condition	Gov. Load Comb.	Force lb	Major Axis Moment lb-ft	Minor Axis Moment lb-ft
			Max. My	5	-8888.50	-146.27	1940.69
			Max. Vy	2	-1443.65	3197.20	4.88
			Max. Vx	5	587.37	-146.27	1940.69
		Diagonal	Max Tension	7	7562.20	74.27	1.54
			Max. Compression	6	-8110.35	0.00	0.00
			Max. Mx	2	5034.20	92.44	6.81
			Max. My	6	-7633.81	-18.03	19.02
			Max. Vy	17	49.57	82.55	9.00
			Max. Vx	6	3.12	0.00	0.00
		Secondary Horizontal	Max Tension	2	3927.19	0.00	0.00
			Max. Compression	2	-3927.19	18.81	-2.41
			Max. Mx	25	-172.48	54.24	8.52
			Max. My	11	-1587.45	22.66	11.83
			Max. Vy	25	40.93	54.24	8.52
			Max. Vx	5	-2.50	0.00	0.00
T14	80 - 60	Leg	Max Tension	4	231266.78	-2211.87	12.29
			Max. Compression	2	-260458.48	-712.77	-14.44
			Max. Mx	2	-249213.05	2331.55	0.38
			Max. My	5	-12346.21	-136.47	2767.18
			Max. Vy	2	510.66	2331.55	0.38
			Max. Vx	5	-358.33	-136.47	2767.18
		Diagonal	Max Tension	7	8032.49	0.00	0.00
			Max. Compression	7	-8205.81	0.00	0.00
			Max. Mx	2	6094.40	111.12	-4.89
			Max. My	12	-7516.13	14.48	-18.56
			Max. Vy	17	55.41	99.98	12.05
			Max. Vx	18	-3.07	0.00	0.00
T15	60 - 50	Leg	Max Tension	4	241477.69	394.16	102.54
			Max. Compression	2	-272338.25	-4691.99	1.03
			Max. Mx	2	-272100.93	7222.74	6.35
			Max. My	5	-13074.88	-541.92	4378.62
			Max. Vy	2	2346.90	7222.74	6.35
			Max. Vx	5	-977.00	-541.92	4378.62
		Diagonal	Max Tension	12	9500.92	112.94	-13.38
			Max. Compression	6	-10579.50	0.00	0.00
			Max. Mx	15	1245.07	123.88	8.01
			Max. My	6	-10548.10	-0.25	25.73
			Max. Vy	17	57.00	123.07	2.29
			Max. Vx	6	3.47	0.00	0.00
		Secondary Horizontal	Max Tension	2	4722.92	0.00	0.00
			Max. Compression	2	-4722.92	52.76	1.49
			Max. Mx	18	-519.59	138.53	36.88
			Max. My	11	-2409.84	94.96	46.49
			Max. Vy	18	-79.90	138.53	36.88
			Max. Vx	5	-7.06	0.00	0.00
T16	50 - 40	Leg	Max Tension	4	255410.36	3402.35	69.23
			Max. Compression	2	-288911.43	-164.37	-36.82
			Max. Mx	2	-288830.80	6919.17	8.55
			Max. My	5	-13548.67	-541.94	4378.61
			Max. Vy	2	-2424.54	6919.17	8.55
			Max. Vx	5	1010.80	-541.94	4378.61
		Diagonal	Max Tension	7	9331.13	110.81	1.71
			Max. Compression	6	-10304.01	0.00	0.00
			Max. Mx	2	6093.77	130.63	13.88
			Max. My	5	-7312.33	24.62	19.15
			Max. Vy	17	58.44	121.76	6.60
			Max. Vx	5	2.75	0.00	0.00
		Secondary Horizontal	Max Tension	2	5010.34	0.00	0.00

Section No.	Elevation ft	Component Type	Condition	Gov. Load Comb.	Force lb	Major Axis Moment lb-ft	Minor Axis Moment lb-ft
			Max. Compression	2	-5010.34	59.81	-1.40
			Max. Mx	18	-545.73	101.96	21.36
			Max. My	11	-2277.48	55.96	36.04
			Max. Vy	18	-64.51	101.96	21.36
			Max. Vx	5	-5.12	0.00	0.00
T17	40 - 20	Leg	Max Tension	4	282136.52	-1974.03	50.90
			Max. Compression	2	-321627.95	1999.59	-14.54
			Max. Mx	17	60574.81	-4357.77	20.87
			Max. My	5	-14624.89	-70.83	2545.45
			Max. Vy	21	694.89	-4342.84	5.04
			Max. Vx	5	297.31	-114.06	2128.69
		Diagonal	Max Tension	7	9617.99	0.00	0.00
			Max. Compression	7	-9920.62	0.00	0.00
			Max. Mx	15	1318.66	244.91	-23.39
			Max. My	12	-8626.07	59.26	-31.16
			Max. Vy	17	93.48	242.64	25.81
			Max. Vx	18	-5.02	0.00	0.00
T18	20 - 0	Leg	Max Tension	4	313702.36	1053.85	-82.38
			Max. Compression	2	-360912.03	-0.00	0.03
			Max. Mx	15	-143358.13	4694.15	10.03
			Max. My	5	-17426.72	-170.65	3711.46
			Max. Vy	10	-14744.82	-0.00	0.12
			Max. Vx	11	4101.22	-0.01	1.40
		Diagonal	Max Tension	7	10214.79	0.00	0.00
			Max. Compression	6	-11143.07	0.00	0.00
			Max. Mx	17	-1099.05	429.52	31.37
			Max. My	12	-9113.29	69.01	-53.08
			Max. Vy	17	124.59	429.52	31.37
			Max. Vx	12	6.49	0.00	0.00

Maximum Reactions

Location	Condition	Gov. Load Comb.	Vertical lb	Horizontal, X lb	Horizontal, Z lb
Leg C	Max. Vert	10	355104.92	29753.59	-18443.25
	Max. H_x	10	355104.92	29753.59	-18443.25
	Max. H_z	4	-312428.86	-26256.73	16325.67
	Min. Vert	4	-312428.86	-26256.73	16325.67
	Min. H_x	4	-312428.86	-26256.73	16325.67
	Min. H_z	10	355104.92	29753.59	-18443.25
Leg B	Max. Vert	6	355764.18	-29643.30	-18643.06
	Max. H_x	12	-311496.26	26134.59	16486.67
	Max. H_z	12	-311496.26	26134.59	16486.67
	Min. Vert	12	-311496.26	26134.59	16486.67
	Min. H_x	6	355764.18	-29643.30	-18643.06
	Min. H_z	6	355764.18	-29643.30	-18643.06
Leg A	Max. Vert	2	359494.92	227.97	35154.07
	Max. H_x	11	18514.02	4096.51	1319.77
	Max. H_z	2	359494.92	227.97	35154.07
	Min. Vert	8	-311109.38	-200.10	-30961.91
	Min. H_x	5	18671.66	-4079.41	1331.39
	Min. H_z	8	-311109.38	-200.10	-30961.91

Tower Mast Reaction Summary

Load Combination	Vertical lb	$Shear_x$ lb	$Shear_z$ lb	Overturning Moment, M_x lb-ft	Overturning Moment, M_z lb-ft	Torque lb-ft
Dead Only	50841.34	0.00	-0.00	-30375.05	-8523.37	0.03
Dead+Wind 0 deg - No Ice	50841.34	9.24	-55133.54	-6378084.75	-10050.45	8318.10
Dead+Wind 30 deg - No Ice	50841.33	26479.35	-46060.94	-5392805.07	-3085336.09	-17762.65
Dead+Wind 60 deg - No Ice	50841.33	45293.53	-26271.77	-3101229.79	-5291087.48	-37901.68
Dead+Wind 90 deg - No Ice	50841.33	52945.05	-8.30	-32110.30	-6159707.13	-49094.19
Dead+Wind 120 deg - No Ice	50841.34	47538.58	27558.80	3141888.23	-5470596.92	-48975.53
Dead+Wind 150 deg - No Ice	50841.33	26465.62	46050.41	5330244.61	-3082962.29	-31360.25
Dead+Wind 180 deg - No Ice	50841.34	-9.91	52529.75	6108263.02	-7074.02	-7678.84
Dead+Wind 210 deg - No Ice	50841.33	-26481.76	46059.57	5331731.68	3068363.14	17765.30
Dead+Wind 240 deg - No Ice	50841.34	-47547.83	27574.80	3144450.00	5454943.81	40649.52
Dead+Wind 270 deg - No Ice	50841.33	-52945.05	10.19	-29175.20	6142594.96	49095.39
Dead+Wind 300 deg - No Ice	50841.33	-45284.70	-26255.05	-3098706.80	5272493.30	45598.39
Dead+Wind 330 deg - No Ice	50841.33	-26463.47	-46051.63	-5391357.17	3065647.70	31357.30
Dead+Ice+Temp	101907.93	0.02	0.02	-98440.77	-24044.51	-0.43
Dead+Wind 0 deg+Ice+Temp	101907.93	-0.13	-16729.19	-2052827.79	-23863.71	1902.62
Dead+Wind 30 deg+Ice+Temp	101907.93	7792.67	-13537.01	-1708296.66	-949567.18	-4908.51
Dead+Wind 60 deg+Ice+Temp	101907.93	13158.39	-7618.28	-1009763.38	-1596037.81	-9880.31
Dead+Wind 90 deg+Ice+Temp	101907.93	15586.80	0.84	-98309.26	-1875444.98	-12790.38
Dead+Wind 120 deg+Ice+Temp	101907.93	14449.51	8365.24	878811.43	-1710123.57	-13146.14
Dead+Wind 150 deg+Ice+Temp	101907.93	7794.12	13537.85	1511467.19	-949946.04	-7886.26
Dead+Wind 180 deg+Ice+Temp	101907.93	0.73	15238.98	1724320.96	-24267.11	-1654.49
Dead+Wind 210 deg+Ice+Temp	101907.93	-7792.68	13537.01	1511259.49	901456.28	4908.22
Dead+Wind 240 deg+Ice+Temp	101907.93	-14448.69	8363.76	878448.78	1661786.62	11225.26
Dead+Wind 270 deg+Ice+Temp	101907.93	-15586.80	-0.83	-98728.94	1827314.80	12790.89
Dead+Wind 300 deg+Ice+Temp	101907.93	-13158.96	-7620.20	-1010132.67	1548109.44	11515.16
Dead+Wind 330 deg+Ice+Temp	101907.93	-7794.12	-13537.84	-1708506.83	901789.69	7885.85
Dead+Wind 0 deg - Service	50841.34	3.20	-19077.37	-2226995.42	-9068.57	2879.72
Dead+Wind 30 deg - Service	50841.34	9162.86	-15937.88	-1886040.20	-1073244.46	-6153.92
Dead+Wind 60 deg - Service	50841.34	15672.31	-9090.90	-1093059.52	-1836506.83	-13121.36
Dead+Wind 90 deg - Service	50841.34	18320.19	-3.20	-31024.04	-2137073.56	-16987.38
Dead+Wind 120 deg - Service	50841.34	16449.36	9535.93	1067291.62	-1898600.48	-16947.93
Dead+Wind 150 deg - Service	50841.34	9157.33	15934.67	1824516.91	-1072387.91	-10858.00
Dead+Wind 180 deg - Service	50841.34	-3.24	18176.38	2093722.75	-8044.99	-2660.33
Dead+Wind 210 deg - Service	50841.34	-9162.87	15937.87	1825026.79	1056151.21	6154.38
Dead+Wind 240 deg - Service	50841.34	-16452.56	9541.46	1068173.10	1881993.75	14068.38
Dead+Wind 270 deg - Service	50841.34	-18320.19	3.20	-30008.64	2119959.28	16987.51
Dead+Wind 300 deg - Service	50841.34	-15669.13	-9085.33	-1092182.38	1818882.37	15782.84
Dead+Wind 330 deg - Service	50841.34	-9157.31	-15934.68	-1885534.63	1055244.98	10857.41

Solution Summary

	Sum of Applied Forces			Sum of Reactions			
Load Comb.	PX lb	PY lb	PZ lb	PX lb	PY lb	PZ lb	% Error
1	0.00	-50841.34	-0.00	-0.00	50841.34	0.00	0.000%
2	9.24	-50841.34	-55133.61	-9.24	50841.34	55133.54	0.000%
3	26480.68	-50841.34	-46060.47	-26479.35	50841.33	46060.94	0.002%
4	45292.89	-50841.34	-26272.88	-45293.53	50841.33	26271.77	0.002%
5	52945.35	-50841.34	-9.24	-52945.05	50841.33	8.30	0.001%
6	47538.66	-50841.34	27558.80	-47538.58	50841.34	-27558.80	0.000%
7	26464.67	-50841.34	46051.22	-26465.62	50841.33	-46050.41	0.002%
8	-9.24	-50841.34	52529.74	9.91	50841.34	-52529.75	0.001%
9	-26480.68	-50841.34	46060.47	26481.76	50841.33	-46059.57	0.002%
10	-47547.90	-50841.34	27574.81	47547.83	50841.34	-27574.80	0.000%
11	-52945.35	-50841.34	9.24	52945.05	50841.33	-10.19	0.001%

	Sum of Applied Forces			Sum of Reactions			
Load Comb.	PX lb	PY lb	PZ lb	PX lb	PY lb	PZ lb	% Error
12	-45283.64	-50841.34	-26256.87	45284.70	50841.33	26255.05	0.003%
13	-26464.67	-50841.34	-46051.22	26463.47	50841.33	46051.63	0.002%
14	0.00	-101907.93	-0.00	-0.02	101907.93	-0.02	0.000%
15	-0.84	-101907.93	-16729.19	0.13	101907.93	16729.19	0.001%
16	7792.69	-101907.93	-13537.03	-7792.67	101907.93	13537.01	0.000%
17	13158.10	-101907.93	-7618.78	-13158.39	101907.93	7618.28	0.001%
18	15586.83	-101907.93	0.84	-15586.80	101907.93	-0.84	0.000%
19	14449.47	-101907.93	8365.32	-14449.51	101907.93	-8365.24	0.000%
20	7794.14	-101907.93	13537.87	-7794.12	101907.93	-13537.85	0.000%
21	0.84	-101907.93	15239.02	-0.73	101907.93	-15238.98	0.000%
22	-7792.69	-101907.93	13537.03	7792.68	101907.93	-13537.01	0.000%
23	-14448.63	-101907.93	8363.87	14448.69	101907.93	-8363.76	0.000%
24	-15586.83	-101907.93	-0.84	15586.80	101907.93	0.83	0.000%
25	-13158.94	-101907.93	-7620.23	13158.96	101907.93	7620.20	0.000%
26	-7794.14	-101907.93	-13537.87	7794.12	101907.93	13537.84	0.000%
27	3.20	-50841.34	-19077.37	-3.20	50841.34	19077.37	0.000%
28	9162.86	-50841.34	-15937.88	-9162.86	50841.34	15937.88	0.000%
29	15672.28	-50841.34	-9090.96	-15672.31	50841.34	9090.90	0.000%
30	18320.19	-50841.34	-3.20	-18320.19	50841.34	3.20	0.000%
31	16449.36	-50841.34	9535.92	-16449.36	50841.34	-9535.93	0.000%
32	9157.33	-50841.34	15934.68	-9157.33	50841.34	-15934.67	0.000%
33	-3.20	-50841.34	18176.38	3.24	50841.34	-18176.38	0.000%
34	-9162.86	-50841.34	15937.88	9162.87	50841.34	-15937.87	0.000%
35	-16452.56	-50841.34	9541.46	16452.56	50841.34	-9541.46	0.000%
36	-18320.19	-50841.34	3.20	18320.19	50841.34	-3.20	0.000%
37	-15669.08	-50841.34	-9085.42	15669.13	50841.34	9085.33	0.000%
38	-9157.33	-50841.34	-15934.68	9157.31	50841.34	15934.68	0.000%

Non-Linear Convergence Results

Load Combination	Converged?	Number of Cycles	Displacement Tolerance	Force Tolerance
1	Yes	4	0.00000001	0.00000824
2	Yes	4	0.00000001	0.00002001
3	Yes	4	0.00000001	0.00003474
4	Yes	8	0.00000001	0.00006462
5	Yes	4	0.00000001	0.00002918
6	Yes	4	0.00000001	0.00002028
7	Yes	4	0.00000001	0.00003054
8	Yes	6	0.00000001	0.00041547
9	Yes	4	0.00000001	0.00003535
10	Yes	4	0.00000001	0.00002024
11	Yes	4	0.00000001	0.00002940
12	Yes	8	0.00000001	0.00017090
13	Yes	4	0.00000001	0.00003031
14	Yes	4	0.00000001	0.00012465
15	Yes	5	0.00000001	0.00091632
16	Yes	4	0.00000001	0.00001071
17	Yes	4	0.00000001	0.00063609
18	Yes	4	0.00000001	0.00001014
19	Yes	5	0.00000001	0.00006258
20	Yes	4	0.00000001	0.00001015
21	Yes	4	0.00000001	0.00023005
22	Yes	4	0.00000001	0.00001012
23	Yes	5	0.00000001	0.00005581
24	Yes	4	0.00000001	0.00001018

25	Yes	5	0.00000001	0.00000768
26	Yes	4	0.00000001	0.00001072
27	Yes	4	0.00000001	0.00021585
28	Yes	4	0.00000001	0.00000198
29	Yes	5	0.00000001	0.00002696
30	Yes	4	0.00000001	0.00000338
31	Yes	4	0.00000001	0.00044752
32	Yes	4	0.00000001	0.00000198
33	Yes	5	0.00000001	0.00001652
34	Yes	4	0.00000001	0.00000204
35	Yes	4	0.00000001	0.00014963
36	Yes	4	0.00000001	0.00000340
37	Yes	5	0.00000001	0.00006280
38	Yes	4	0.00000001	0.00000429

Maximum Tower Deflections - Service Wind

Section No.	*Elevation* *ft*	*Horz. Deflection* *in*	*Gov. Load Comb.*	*Tilt* °	*Twist* °
T1	195 - 180	9.190	27	0.5392	0.1026
T2	180 - 175	7.431	27	0.5001	0.0544
T3	175 - 170	6.911	27	0.4689	0.0494
T4	170 - 160	6.437	27	0.4355	0.0464
T5	160 - 150	5.553	27	0.3947	0.0438
T6	150 - 140	4.777	27	0.3372	0.0411
T7	140 - 133.333	4.100	27	0.2971	0.0381
T8	133.333 - 126.667	3.686	27	0.2831	0.0356
T9	126.667 - 120	3.290	27	0.2688	0.0329
T10	120 - 113.333	2.912	27	0.2542	0.0295
T11	113.333 - 106.667	2.564	27	0.2315	0.0273
T12	106.667 - 100	2.248	27	0.2085	0.0251
T13	100 - 80	1.963	27	0.1855	0.0225
T14	80 - 60	1.231	27	0.1512	0.0168
T15	60 - 50	0.662	27	0.1052	0.0109
T16	50 - 40	0.449	27	0.0823	0.0084
T17	40 - 20	0.287	27	0.0595	0.0060
T18	20 - 0	0.081	27	0.0296	0.0029

Critical Deflections and Radius of Curvature - Service Wind

Elevation *ft*	*Appurtenance*	*Gov. Load Comb.*	*Deflection* *in*	*Tilt* °	*Twist* °	*Radius of Curvature* *ft*
195.00	Sector Mount [SM 802-3]	27	9.190	0.5392	0.1026	21245
193.00	LNX-6515DS-VTM w/ Mount Pipe	27	8.947	0.5366	0.0938	21245
188.00	(3) Sector Mounts 188-ft	27	8.346	0.5281	0.0730	15175
169.00	(3) Sector Mounts 169-ft	27	6.345	0.4302	0.0460	15565
152.00	Sector Mount [SM 502-3]	27	4.923	0.3488	0.0417	11185
75.50	1.75" Dia x 5-ft Pipe	27	1.088	0.1426	0.0155	29986

Maximum Tower Deflections - Design Wind

Section No.	Elevation ft	Horz. Deflection in	Gov. Load Comb.	Tilt °	Twist °
T1	195 - 180	26.300	2	1.5422	0.2821
T2	180 - 175	21.277	2	1.4312	0.1570
T3	175 - 170	19.788	2	1.3421	0.1425
T4	170 - 160	18.431	2	1.2463	0.1339
T5	160 - 150	15.902	2	1.1296	0.1264
T6	150 - 140	13.680	2	0.9649	0.1188
T7	140 - 133.333	11.744	2	0.8501	0.1101
T8	133.333 - 126.667	10.557	2	0.8102	0.1027
T9	126.667 - 120	9.425	2	0.7691	0.0950
T10	120 - 113.333	8.341	2	0.7275	0.0854
T11	113.333 - 106.667	7.345	2	0.6624	0.0789
T12	106.667 - 100	6.440	2	0.5965	0.0726
T13	100 - 80	5.623	2	0.5309	0.0650
T14	80 - 60	3.528	2	0.4326	0.0484
T15	60 - 50	1.897	2	0.3009	0.0315
T16	50 - 40	1.289	2	0.2354	0.0243
T17	40 - 20	0.825	2	0.1702	0.0172
T18	20 - 0	0.234	2	0.0846	0.0083

Critical Deflections and Radius of Curvature - Design Wind

Elevation ft	Appurtenance	Gov. Load Comb.	Deflection in	Tilt °	Twist °	Radius of Curvature ft
195.00	Sector Mount [SM 802-3]	2	26.300	1.5422	0.2821	7584
193.00	LNX-6515DS-VTM w/ Mount Pipe	2	25.606	1.5348	0.2592	7584
188.00	(3) Sector Mounts 188-ft	2	23.891	1.5109	0.2052	5417
169.00	(3) Sector Mounts 169-ft	2	18.168	1.2312	0.1327	5455
152.00	Sector Mount [SM 502-3]	2	14.099	0.9981	0.1204	3910
75.50	1.75" Dia x 5-ft Pipe	2	3.118	0.4080	0.0447	10496

Bolt Design Data

Section No.	Elevation ft	Component Type	Bolt Grade	Bolt Size in	Number Of Bolts	Maximum Load per Bolt lb	Allowable Load lb	Ratio Load / Allowable	Allowable Ratio	Criteria
T1	195	Leg	A325N	0.7500	4	4659.31	19438.60	0.240	1.333	Bolt Tension
T2	180	Diagonal	A325N	0.5000	1	3225.25	3126.56	1.032	1.333	Member Block Shear
		Secondary Horizontal	A325N	0.6250	1	610.48	4553.91	0.134	1.333	Member Block Shear
T3	175	Diagonal	A325X	0.5000	1	3145.22	4757.81	0.661	1.333	Member Bearing
		Secondary Horizontal	A325N	0.6250	1	759.50	4553.91	0.167	1.333	Member Block Shear
T4	170	Leg	A325N	0.7500	6	9779.90	19438.10	0.503	1.333	Bolt Tension
		Diagonal	A325N	0.5000	1	5241.85	5437.50	0.964	1.333	Gusset Bearing
		Secondary Horizontal	A325N	0.6250	1	1142.41	4553.91	0.251	1.333	Member Block Shear
T5	160	Diagonal	A325X	0.5000	1	6153.15	5437.50	1.132	1.333	Gusset Bearing
		Secondary	A325N	0.6250	1	1604.83	4553.91	0.352	1.333	Member Block

Section No.	Elevation ft	Component Type	Bolt Grade	Bolt Size in	Number Of Bolts	Maximum Load per Bolt lb	Allowable Load lb	Ratio Load / Allowable	Allowable Ratio	Criteria
		Horizontal								Shear
T6	150	Leg	A325N	1.0000	6	16804.60	34556.90	0.486	1.333	Bolt Tension
		Diagonal	A325N	0.5000	1	6328.20	5437.50	1.164	1.333	Gusset Bearing
		Secondary	A325N	0.6250	1	1958.52	4553.91	0.430	1.333	Member Block Shear
		Horizontal								
T7	140	Diagonal	A325X	0.6250	1	6498.97	8156.25	0.797	1.333	Member Bearing
T8	133.333	Diagonal	A325X	0.6250	1	6656.64	8156.25	0.816	1.333	Member Bearing
T9	126.667	Leg	A325N	1.0000	8	17355.70	34557.50	0.502	1.333	Bolt Tension
		Diagonal	A325N	0.6250	1	6487.51	5097.66	1.273	1.333	Member Bearing
T10	120	Diagonal	A325X	0.6250	1	7216.01	8156.25	0.885	1.333	Member Bearing
		Secondary	A325N	0.6250	1	2874.71	5097.66	0.564	1.333	Member Bearing
		Horizontal								
T11	113.333	Diagonal	A325X	0.6250	1	7343.72	8156.25	0.900	1.333	Member Bearing
		Secondary	A325N	0.6250	1	3096.90	5097.66	0.608	1.333	Member Bearing
		Horizontal								
T12	106.667	Leg	A325N	1.0000	8	21382.80	34555.80	0.619	1.333	Bolt Tension
		Diagonal	A325X	0.6250	1	7300.84	8156.25	0.895	1.333	Member Bearing
		Secondary	A325N	0.6250	1	3301.94	5097.66	0.648	1.333	Member Bearing
		Horizontal								
T13	100	Leg	A325N	1.2500	8	25244.00	53995.90	0.468	1.333	Bolt Tension
		Diagonal	A325N	0.6250	2	4055.18	6442.72	0.629	1.333	Bolt Shear
		Secondary	A325N	0.7500	1	3927.19	9062.50	0.433	1.333	Member Bearing
		Horizontal								
T14	80	Leg	A325N	1.2500	8	28908.30	53996.00	0.535	1.333	Bolt Tension
		Diagonal	A325N	0.6250	2	4102.90	6442.72	0.637	1.333	Bolt Shear
T15	60	Diagonal	A325N	0.6250	2	5289.75	6442.72	0.821	1.333	Bolt Shear
		Secondary	A325N	0.6250	1	4722.92	6442.72	0.733	1.333	Bolt Shear
		Horizontal								
T16	50	Leg	A325N	1.2500	8	31887.00	53995.20	0.591	1.333	Bolt Tension
		Diagonal	A325N	0.6250	2	5152.01	6442.72	0.800	1.333	Bolt Shear
		Secondary	A325X	0.7500	1	5010.34	9062.50	0.553	1.333	Member Bearing
		Horizontal								
T17	40	Leg	A325N	1.2500	8	35267.10	53996.10	0.653	1.333	Bolt Tension
		Diagonal	A325N	0.6250	2	4960.31	6442.72	0.770	1.333	Bolt Shear
T18	20	Leg	A36	1.5000	8	39212.80	33823.20	1.159	1.333	Bolt Tension
		Diagonal	A325N	0.6250	2	5571.54	6442.72	0.865	1.333	Bolt Shear

Compression Checks

Leg Design Data (Compression)

Section No.	Elevation ft	Size	L ft	L_u ft	Kl/r	F_a psi	A in^2	Actual P lb	Allow. P_a lb	Ratio $\frac{P}{P_a}$
T1	195 - 180	PIPE 2.5 STD (SCH 40)	15.00	3.75	47.4 K=1.00	26833.100	1.7072	-31693.30	45810.40	0.692
T2	180 - 175	PIPE 2.5 STD (SCH 40)	5.01	2.67	33.8 K=1.00	29103.699	1.7072	-35202.30	49687.00	0.708
T3	175 - 170	PIPE 2.5 STD (SCH 40)	5.01	2.65	33.5 K=1.00	29141.699	1.7072	-43795.30	49751.90	0.880
T4	170 - 160	2.5SCH40 w/ 3SCH80 Half Sleeve	10.02	2.62	34.2 K=1.00	19124.000	3.2120	-65874.80	61426.70	1.072

Section No.	Elevation ft	Size	L ft	L_u ft	Kl/r	F_a psi	A in^2	Actual P lb	Allow. P_a lb	Ratio $\frac{P}{P_a}$
T5	160 - 150	Pipe 3.5 Std (SCH40)	10.02	2.60	23.4 K=1.00	30584.000	2.6795	-87823.00	81951.10	1.072
T6	150 - 140	3.5SCH40 w/ 4SCH40 Half Sleeve	10.02	2.59	23.8 K=1.00	27885.500	4.2666	-112934.00	118976.00	0.949
T7	140 - 133.333	5 STD w/ 6 XH Half Sleeve	6.68	6.68	45.4 K=1.00	23299.900	8.5023	-126646.00	198103.00	0.639
T8	133.333 - 126.667	5 STD w/ 6 XH Half Sleeve	6.68	6.68	45.4 K=1.00	23299.900	8.5023	-140811.00	198103.00	0.711
T9	126.667 - 120	5 STD w/ 6 XH Half Sleeve	6.68	6.68	45.4 K=1.00	23299.900	8.5023	-154540.00	198103.00	0.780
T10	120 - 113.333	PIPE 6 STD (SCH40)	6.68	3.45	18.4 K=1.00	31206.400	5.5858	-165751.00	174311.00	0.951
T11	113.333 - 106.667	PIPE 6 STD (SCH40)	6.68	3.44	18.4 K=1.00	31211.000	5.5858	-178506.00	174337.00	1.024
T12	106.667 - 100	PIPE 6 STD (SCH40)	6.68	3.44	18.4 K=1.00	31215.100	5.5858	-190352.00	174360.00	1.092
T13	100 - 80	6 STD w/ 7 XH Half Sleeve	20.03	3.42	19.5 K=1.00	23952.699	11.1800	-226454.00	267791.00	0.846
T14	80 - 60	PIPE 8 STD (SCH40)	20.03	6.68	27.3 K=1.00	30055.500	8.3993	-260458.00	252443.00	1.032
T15	60 - 50	PIPE 8 STD (SCH40)	10.02	5.16	21.1 K=1.00	30878.199	8.3993	-272338.00	259353.00	1.050
T16	50 - 40	PIPE 8 STD (SCH40)	10.02	5.16	21.1 K=1.00	30882.900	8.3993	-288911.00	259393.00	1.114
T17	40 - 20	PIPE 8 X-STR (SCH80)	20.03	10.02	41.7 K=1.00	27820.100	12.7706	-321628.00	355279.00	0.905
T18	20 - 0	PIPE 8 X-STR (SCH80)	20.03	9.97	41.6 K=1.00	27849.500	12.7706	-351655.00	355654.00	0.989

Diagonal Design Data (Compression)

Section No.	Elevation ft	Size	L ft	L_u ft	Kl/r	F_a psi	A in^2	Actual P lb	Allow. P_a lb	Ratio $\frac{P}{P_a}$
T2	180 - 175	L1 1/2x1 1/2x3/16	6.25	3.03	124.0 K=1.00	9708.780	0.5273	-3819.81	5119.86	0.746
T3	175 - 170	L2x2x3/16	6.56	3.29	109.2 K=1.09	11777.700	0.7150	-2983.91	8421.07	0.354
T4	170 - 160	2L1 1/2x1 1/2x3/16x1/4	6.90	3.43	103.6 K=1.15	12513.800	1.0547	-5576.33	13198.10	0.423
T5	160 - 150	2L2x2x3/16x1/4	8.01	3.95	96.0 K=1.25	13482.500	1.4297	-6326.15	19275.70	0.328
T6	150 - 140	2L2x2x3/16x1/4	8.81	4.33	102.6 K=1.22	12640.200	1.4297	-6354.51	18071.50	0.352
T7	140 - 133.333	L2 1/2x2 1/2x1/4	10.29	4.92	120.3 K=1.00	10235.800	1.1900	-6598.54	12180.60	0.542
T8	133.333 - 126.667	L2 1/2x2 1/2x1/4	10.80	5.18	126.7 K=1.00	9302.410	1.1900	-6784.27	11069.90	0.613
T9	126.667 - 120	L2 1/2x2 1/2x3/16	11.34	5.47	132.6 K=1.00	8498.540	0.9020	-6567.25	7665.69	0.857
T10	120 - 113.333	L3x3x1/4	11.88	5.67	116.2 K=1.01	10814.100	1.4400	-7842.05	15572.30	0.504
T11	113.333 - 106.667	L3x3x1/4	12.44	6.09	121.0 K=0.98	10142.600	1.4400	-7719.36	14605.40	0.529
T12	106.667 - 100	L2 1/2x2 1/2x1/4	13.01	6.24	152.5 K=1.00	6419.940	1.1900	-7982.84	7639.72	1.045

Section No.	Elevation ft	Size	L ft	L_u ft	Kl/r	F_a psi	A in^2	Actual P lb	Allow. P_a lb	Ratio $\frac{P}{P_a}$
T13	100 - 80	L3 1/2x3 1/2x1/4	14.17	6.92	101.7 K=0.85	12767.100	1.6900	-8110.35	21576.50	0.376
T14	80 - 60	L3 1/2x3 1/2x1/4	16.57	8.07	118.7 K=0.85	10473.400	1.6900	-8205.81	17700.10	0.464
T15	60 - 50	L3x3x5/16	18.87	9.11	170.0 K=0.92	5167.060	1.7800	-10579.50	9197.36	1.150
T16	50 - 40	L3x3x5/16	19.73	9.54	176.7 K=0.91	4784.310	1.7800	-10304.00	8516.08	1.210
T17	40 - 20	L4x4x3/8	21.47	10.41	149.5 K=0.94	6685.630	2.8600	-9920.62	19120.90	0.519
T18	20 - 0	L5x5x5/16	23.24	11.30	132.5 K=0.97	8501.120	3.0300	-11143.10	25758.40	0.433

Horizontal Design Data (Compression)

Section No.	Elevation ft	Size	L ft	L_u ft	Kl/r	F_a psi	A in^2	Actual P lb	Allow. P_a lb	Ratio $\frac{P}{P_a}$
T1	195 - 180	L1 1/2x1 1/2x3/16	3.50	3.26	124.9 K=0.94	9564.350	0.5273	-5454.59	5043.70	1.081

Secondary Horizontal Design Data (Compression)

Section No.	Elevation ft	Size	L ft	L_u ft	Kl/r	F_a psi	A in^2	Actual P lb	Allow. P_a lb	Ratio $\frac{P}{P_a}$
T2	180 - 175	L2x2x3/16	3.73	1.63	84.8 K=1.71	14815.300	0.7150	-610.48	10593.00	0.058
T3	175 - 170	L2x2x3/16	4.24	2.00	60.8 K=1.00	17348.500	0.7150	-759.50	12404.20	0.061
T4	170 - 160	L2x2x3/16	5.24	2.47	75.3 K=1.00	15867.200	0.7150	-1142.41	11345.10	0.101
T5	160 - 150	L2x2x3/16	6.24	2.95	89.9 K=1.00	14210.700	0.7150	-1600.75	10160.70	0.158
T6	150 - 140	L2x2x3/16	7.24	3.43	104.6 K=1.00	12391.800	0.7150	-1958.52	8860.11	0.221
T10	120 - 113.333	L3x3x3/16	9.82	4.51	105.5 K=1.16	12086.700	1.0900	-2874.71	13174.50	0.218
T11	113.333 - 106.667	L3x3x3/16	10.49	4.97	100.0 K=1.00	12741.900	1.0900	-3096.90	13888.60	0.223
T12	106.667 - 100	L3x3x3/16	11.16	5.18	112.2 K=1.08	11243.400	1.0900	-3301.94	12255.30	0.269
T13	100 - 80	L3x3x1/4	13.16	6.26	126.9 K=1.00	9270.800	1.4400	-3927.19	13350.00	0.294
T15	60 - 50	L4x4x3/8	15.98	7.51	117.2 K=1.02	10679.400	2.8600	-4722.92	30543.20	0.155
T16	50 - 40	L4x4x1/4	16.99	7.99	120.6 K=1.00	10140.200	1.9400	-5010.34	19671.90	0.255

Top Girt Design Data (Compression)

Section No.	Elevation ft	Size	L ft	L_u ft	Kl/r	F_a psi	A in^2	Actual P lb	Allow. P_a lb	Ratio $\frac{P}{P_a}$
T1	195 - 180	L1 1/2x1 1/2x3/16	3.50	3.26	124.9 K=0.94	9564.350	0.5273	-868.03	5043.70	0.172

Bottom Girt Design Data (Compression)

Section No.	Elevation ft	Size	L ft	L_u ft	Kl/r	F_a psi	A in^2	Actual P lb	Allow. P_a lb	Ratio $\frac{P}{P_a}$
T1	195 - 180	L1 1/2x1 1/2x3/16	3.50	3.26	124.9 K=0.94	9564.350	0.5273	-2666.14	5043.70	0.529

Tension Checks

Leg Design Data (Tension)

Section No.	Elevation ft	Size	L ft	L_u ft	Kl/r	F_a psi	A in^2	Actual P lb	Allow. P_a lb	Ratio $\frac{P}{P_a}$
T1	195 - 180	PIPE 2.5 STD (SCH 40)	15.00	3.75	47.4	33000.000	1.7072	18637.20	56338.90	0.331
T2	180 - 175	PIPE 2.5 STD (SCH 40)	5.01	2.34	29.5	33000.000	1.7072	32229.60	56338.90	0.572
T3	175 - 170	PIPE 2.5 STD (SCH 40)	5.01	2.36	29.8	33000.000	1.7072	39456.10	56338.90	0.700
T4	170 - 160	2.5SCH40 w/ 3SCH80 Half Sleeve	10.02	2.38	31.1	21000.000	3.2120	58724.80	67452.30	0.871
T5	160 - 150	Pipe 3.5 Std (SCH40)	10.02	2.40	21.6	33000.000	2.6795	78445.50	88424.80	0.887
T6	150 - 140	3.5SCH40 w/ 4SCH40 Half Sleeve	10.02	2.42	22.2	30000.000	4.2666	100919.00	127998.00	0.788
T7	140 - 133.333	5 STD w/ 6 XH Half Sleeve	6.68	6.68	45.4	27600.000	8.5023	113457.00	234663.00	0.483
T8	133.333 - 126.667	5 STD w/ 6 XH Half Sleeve	6.68	6.68	45.4	27600.000	8.5023	126405.00	234663.00	0.539
T9	126.667 - 120	5 STD w/ 6 XH Half Sleeve	6.68	6.68	45.4	27600.000	8.5023	138846.00	234663.00	0.592
T10	120 - 113.333	PIPE 6 STD (SCH40)	6.68	3.23	17.2	33000.000	5.5858	149255.00	184330.00	0.810
T11	113.333 - 106.667	PIPE 6 STD (SCH40)	6.68	3.23	17.3	33000.000	5.5858	160632.00	184330.00	0.871
T12	106.667 - 100	PIPE 6 STD (SCH40)	6.68	3.24	17.3	33000.000	5.5858	171277.00	184330.00	0.929
T13	100 - 80	6 STD w/ 7 XH Half Sleeve	20.03	3.25	18.6	25200.000	11.1800	202162.00	281736.00	0.718
T14	80 - 60	PIPE 8 STD (SCH40)	20.03	6.68	27.3	33000.000	8.3993	231267.00	277175.00	0.834
T15	60 - 50	PIPE 8 STD (SCH40)	10.02	4.85	19.8	33000.000	8.3993	241478.00	277175.00	0.871
T16	50 - 40	PIPE 8 STD (SCH40)	10.02	4.86	19.9	33000.000	8.3993	255410.00	277175.00	0.921
T17	40 - 20	PIPE 8 X-STR (SCH80)	20.03	10.02	41.7	33000.000	12.7706	282137.00	421429.00	0.669
T18	20 - 0	PIPE 8 X-STR (SCH80)	20.03	0.08	0.3	33000.000	12.7706	313702.00	421429.00	0.744

Diagonal Design Data (Tension)

Section No.	Elevation ft	Size	L ft	L_u ft	Kl/r	F_a psi	A in^2	Actual P lb	Allow. P_a lb	Ratio $\frac{P}{P_a}$
T1	195 - 180	5/8	5.13	4.78	366.9	21600.000	0.3068	8039.40	6626.80	1.213
T2	180 - 175	L1 1/2x1 1/2x3/16	6.25	3.03	82.4	29000.000	0.3076	3225.25	8920.90	0.362
T3	175 - 170	L2x2x3/16	6.56	3.29	64.0	29000.000	0.4484	3145.22	13002.40	0.242
T4	170 - 160	2L1 1/2x1 1/2x3/16x1/4	6.90	3.43	90.1	29000.000	0.6152	5241.85	17841.80	0.294
T5	160 - 150	2L2x2x3/16x1/4	8.01	3.95	76.8	29000.000	0.8965	6153.15	25998.00	0.237
T6	150 - 140	2L2x2x3/16x1/4	8.40	4.13	80.3	29000.000	0.8965	6328.20	25998.00	0.243
T7	140 - 133.333	L2 1/2x2 1/2x1/4	10.29	4.92	78.9	29000.000	0.7519	6498.97	21804.40	0.298
T8	133.333 - 126.667	L2 1/2x2 1/2x1/4	10.80	5.18	83.0	29000.000	0.7519	6656.64	21804.40	0.305
T9	126.667 - 120	L2 1/2x2 1/2x3/16	11.34	5.47	86.2	29000.000	0.5710	6487.51	16559.90	0.392
T10	120 - 113.333	L3x3x1/4	11.88	5.67	74.9	29000.000	0.9394	7216.01	27241.90	0.265
T11	113.333 - 106.667	L3x3x1/4	12.44	6.09	78.6	29000.000	0.9394	7343.72	27241.90	0.270
T12	106.667 - 100	L2 1/2x2 1/2x1/4	13.01	6.24	99.5	29000.000	0.7519	7300.84	21804.40	0.335
T13	100 - 80	L3 1/2x3 1/2x1/4	14.17	6.92	76.1	29000.000	1.1269	7562.20	32679.40	0.231
T14	80 - 60	L3 1/2x3 1/2x1/4	16.57	8.07	88.9	29000.000	1.1269	8032.49	32679.40	0.246
T15	60 - 50	L3x3x5/16	18.87	9.11	121.1	29000.000	1.1592	9500.92	33617.30	0.283
T16	50 - 40	L3x3x5/16	19.73	9.54	126.7	29000.000	1.1592	9331.13	33617.30	0.278
T17	40 - 20	L4x4x3/8	21.47	10.41	103.5	29000.000	1.9341	9617.99	56087.80	0.171
T18	20 - 0	L5x5x5/16	23.24	11.30	87.9	29000.000	2.0967	10214.80	60804.80	0.168

Horizontal Design Data (Tension)

Section No.	Elevation ft	Size	L ft	L_u ft	Kl/r	F_a psi	A in^2	Actual P lb	Allow. P_a lb	Ratio $\frac{P}{P_a}$
T1	195 - 180	L1 1/2x1 1/2x3/16	3.50	3.26	85.7	21600.000	0.5273	548.94	11390.60	0.048

Secondary Horizontal Design Data (Tension)

Section No.	Elevation ft	Size	L ft	L_u ft	Kl/r	F_a psi	A in^2	Actual P lb	Allow. P_a lb	Ratio $\frac{P}{P_a}$
T2	180 - 175	L2x2x3/16	3.73	1.63	67.9	29000.000	0.4308	610.48	12492.70	0.049
T3	175 - 170	L2x2x3/16	4.24	2.00	77.7	29000.000	0.4308	759.50	12492.70	0.061
T4	170 - 160	L2x2x3/16	5.24	2.47	96.2	29000.000	0.4308	1142.41	12492.70	0.091
T5	160 - 150	L2x2x3/16	6.24	2.95	114.9	29000.000	0.4308	1604.83	12492.70	0.128
T6	150 - 140	L2x2x3/16	7.24	3.43	133.5	29000.000	0.4308	1958.52	12492.70	0.157
T10	120 - 113.333	L3x3x3/16	9.82	4.51	118.5	29000.000	0.7120	2874.71	20648.90	0.139
T11	113.333 - 106.667	L3x3x3/16	10.49	4.97	127.0	29000.000	0.7120	3096.90	20648.90	0.150
T12	106.667 - 100	L3x3x3/16	11.16	5.18	135.5	29000.000	0.7120	3301.94	20648.90	0.160
T13	100 - 80	L3x3x1/4	13.16	6.26	161.6	29000.000	0.9159	3927.19	26562.20	0.148
T15	60 - 50	L4x4x3/8	15.98	7.51	148.9	29000.000	1.9341	4722.92	56087.80	0.084
T16	50 - 40	L4x4x1/4	16.99	7.99	156.2	29000.000	1.2909	5010.34	37437.20	0.134

Top Girt Design Data (Tension)

Section No.	Elevation ft	Size	L ft	L_u ft	Kl/r	F_a psi	A in^2	Actual P lb	Allow. P_a lb	Ratio $\frac{P}{P_a}$
T1	195 - 180	L1 1/2x1 1/2x3/16	3.50	3.26	85.7	21600.000	0.5273	411.14	11390.60	0.036

Bottom Girt Design Data (Tension)

Section No.	Elevation ft	Size	L ft	L_u ft	Kl/r	F_a psi	A in^2	Actual P lb	Allow. P_a lb	Ratio $\frac{P}{P_a}$
T1	195 - 180	L1 1/2x1 1/2x3/16	3.50	3.26	85.7	21600.000	0.5273	26.01	11390.60	0.002

Section Capacity Table

Section No.	Elevation ft	Component Type	Size	Critical Element	P lb	$SF*P_{allow}$ lb	% Capacity	Pass Fail
T1	195 - 180	Leg	PIPE 2.5 STD (SCH 40)	3	-31693.30	61065.26	51.9	Pass
T2	180 - 175	Leg	PIPE 2.5 STD (SCH 40)	45	-35202.30	66232.77	53.1	Pass
T3	175 - 170	Leg	PIPE 2.5 STD (SCH 40)	57	-43795.30	66319.28	66.0	Pass
T4	170 - 160	Leg	2.5SCH40 w/ 3SCH80 Half Sleeve	Note 1	Note 1	Note 1	73.5	Pass
T5	160 - 150	Leg	Pipe 3.5 Std (SCH40)	90	-87823.00	109240.81	80.4	Pass
T6	150 - 140	Leg	3.5SCH40 w/ 4SCH40 Half Sleeve	Note 1	Note 1	Note 1	69.1	Pass
T7	140 - 133.333	Leg	5 STD w/ 6 XH Half Sleeve	Note 1	Note 1	Note 1	54.8	Pass
T8	133.333 - 126.667	Leg	5 STD w/ 6 XH Half Sleeve	Note 1	Note 1	Note 1	54.8	Pass
T9	126.667 - 120	Leg	5 STD w/ 6 XH Half Sleeve	Note 1	Note 1	Note 1	54.8	Pass
T10	120 - 113.333	Leg	PIPE 6 STD (SCH40)	159	-165751.00	232356.55	71.3	Pass
T11	113.333 - 106.667	Leg	PIPE 6 STD (SCH40)	171	-178506.00	232391.21	76.8	Pass
T12	106.667 - 100	Leg	PIPE 6 STD (SCH40)	183	-190352.00	232421.87	81.9	Pass
T13	100 - 80	Leg	6 STD w/ 7 XH Half Sleeve	Note 1	Note 1	Note 1	59.0	Pass
T14	80 - 60	Leg	PIPE 8 STD (SCH40)	225	-260458.00	336506.51	77.4	Pass
T15	60 - 50	Leg	PIPE 8 STD (SCH40)	246	-272338.00	345717.53	78.8	Pass
T16	50 - 40	Leg	PIPE 8 STD (SCH40)	258	-288911.00	345770.85	83.6	Pass
T17	40 - 20	Leg	PIPE 8 X-STR (SCH80)	270	-321628.00	473586.89	67.9	Pass
T18	20 - 0	Leg	PIPE 8 X-STR (SCH80)	285	-351655.00	474086.76	74.2 87.0 (b)	Pass
T1	195 - 180	Diagonal	5/8	22	8039.40	8833.52	91.0	Pass
T2	180 - 175	Diagonal	L1 1/2x1 1/2x3/16	48	-3819.81	6824.77	56.0 77.4 (b)	Pass
T3	175 - 170	Diagonal	L2x2x3/16	60	-2983.91	11225.29	26.6 49.6 (b)	Pass
T4	170 - 160	Diagonal	2L1 1/2x1 1/2x3/16x1/4	83	-5576.33	17593.07	31.7 72.3 (b)	Pass
T5	160 - 150	Diagonal	2L2x2x3/16x1/4	93	-6326.15	25694.51	24.6 84.9 (b)	Pass
T6	150 - 140	Diagonal	2L2x2x3/16x1/4	114	-6354.51	24089.31	26.4 87.3 (b)	Pass
T7	140 - 133.333	Diagonal	L2 1/2x2 1/2x1/4	135	-6598.54	16236.74	40.6 59.8 (b)	Pass
T8	133.333 - 126.667	Diagonal	L2 1/2x2 1/2x1/4	144	-6784.27	14756.18	46.0 61.2 (b)	Pass
T9	126.667 - 120	Diagonal	L2 1/2x2 1/2x3/16	153	-6567.25	10218.36	64.3	Pass

Section No.	Elevation ft	Component Type	Size	Critical Element	P lb	SF*P_{allow} lb	% Capacity	Pass Fail
							95.5 (b)	
T10	120 - 113.333	Diagonal	L3x3x1/4	162	-7842.05	20757.87	37.8	Pass
							66.4 (b)	
T11	113.333 - 106.667	Diagonal	L3x3x1/4	174	-7719.36	19469.00	39.6	Pass
							67.5 (b)	
T12	106.667 - 100	Diagonal	L2 1/2x2 1/2x1/4	186	-7982.84	10183.75	78.4	Pass
T13	100 - 80	Diagonal	L3 1/2x3 1/2x1/4	207	-8110.35	28761.47	28.2	Pass
							47.2 (b)	
T14	80 - 60	Diagonal	L3 1/2x3 1/2x1/4	228	-8205.81	23594.23	34.8	Pass
							47.8 (b)	
T15	60 - 50	Diagonal	L3x3x5/16	249	-10579.50	12260.08	86.3	Pass
T16	50 - 40	Diagonal	L3x3x5/16	261	-10304.00	11351.93	90.8	Pass
T17	40 - 20	Diagonal	L4x4x3/8	273	-9920.62	25488.16	38.9	Pass
							57.8 (b)	
T18	20 - 0	Diagonal	L5x5x5/16	288	-11143.10	34335.95	32.5	Pass
							64.9 (b)	
T1	195 - 180	Horizontal	L1 1/2x1 1/2x3/16	17	-5454.59	6723.25	81.1	Pass
T2	180 - 175	Secondary Horizontal	L2x2x3/16	54	-610.48	14120.47	4.3	Pass
							10.1 (b)	
T3	175 - 170	Secondary Horizontal	L2x2x3/16	65	-759.50	16534.80	4.6	Pass
							12.5 (b)	
T4	170 - 160	Secondary Horizontal	L2x2x3/16	77	-1142.41	15123.02	7.6	Pass
							18.8 (b)	
T5	160 - 150	Secondary Horizontal	L2x2x3/16	98	-1600.75	13544.21	11.8	Pass
							26.4 (b)	
T6	150 - 140	Secondary Horizontal	L2x2x3/16	119	-1958.52	11810.53	16.6	Pass
							32.3 (b)	
T10	120 - 113.333	Secondary Horizontal	L3x3x3/16	168	-2874.71	17561.61	16.4	Pass
							42.3 (b)	
T11	113.333 - 106.667	Secondary Horizontal	L3x3x3/16	180	-3096.90	18513.50	16.7	Pass
							45.6 (b)	
T12	106.667 - 100	Secondary Horizontal	L3x3x3/16	191	-3301.94	16336.31	20.2	Pass
							48.6 (b)	
T13	100 - 80	Secondary Horizontal	L3x3x1/4	204	-3927.19	17795.55	22.1	Pass
							32.5 (b)	
T15	60 - 50	Secondary Horizontal	L4x4x3/8	254	-4722.92	40714.08	11.6	Pass
							55.0 (b)	
T16	50 - 40	Secondary Horizontal	L4x4x1/4	266	-5010.34	26222.64	19.1	Pass
							41.5 (b)	
T1	195 - 180	Top Girt	L1 1/2x1 1/2x3/16	5	-868.03	6723.25	12.9	Pass
T1	195 - 180	Bottom Girt	L1 1/2x1 1/2x3/16	8	-2666.14	6723.25	39.7	Pass
							Summary	
						Leg (T18)	87.0	Pass
						Diagonal (T9)	95.5	Pass
						Horizontal (T1)	81.1	Pass
						Secondary Horizontal (T15)	55.0	Pass
						Top Girt (T1)	12.9	Pass
						Bottom Girt (T1)	39.7	Pass
						Bolt Checks	95.5	Pass
						RATING =	**95.5**	**Pass**

APPENDIX B

COAX CONFIGURATION

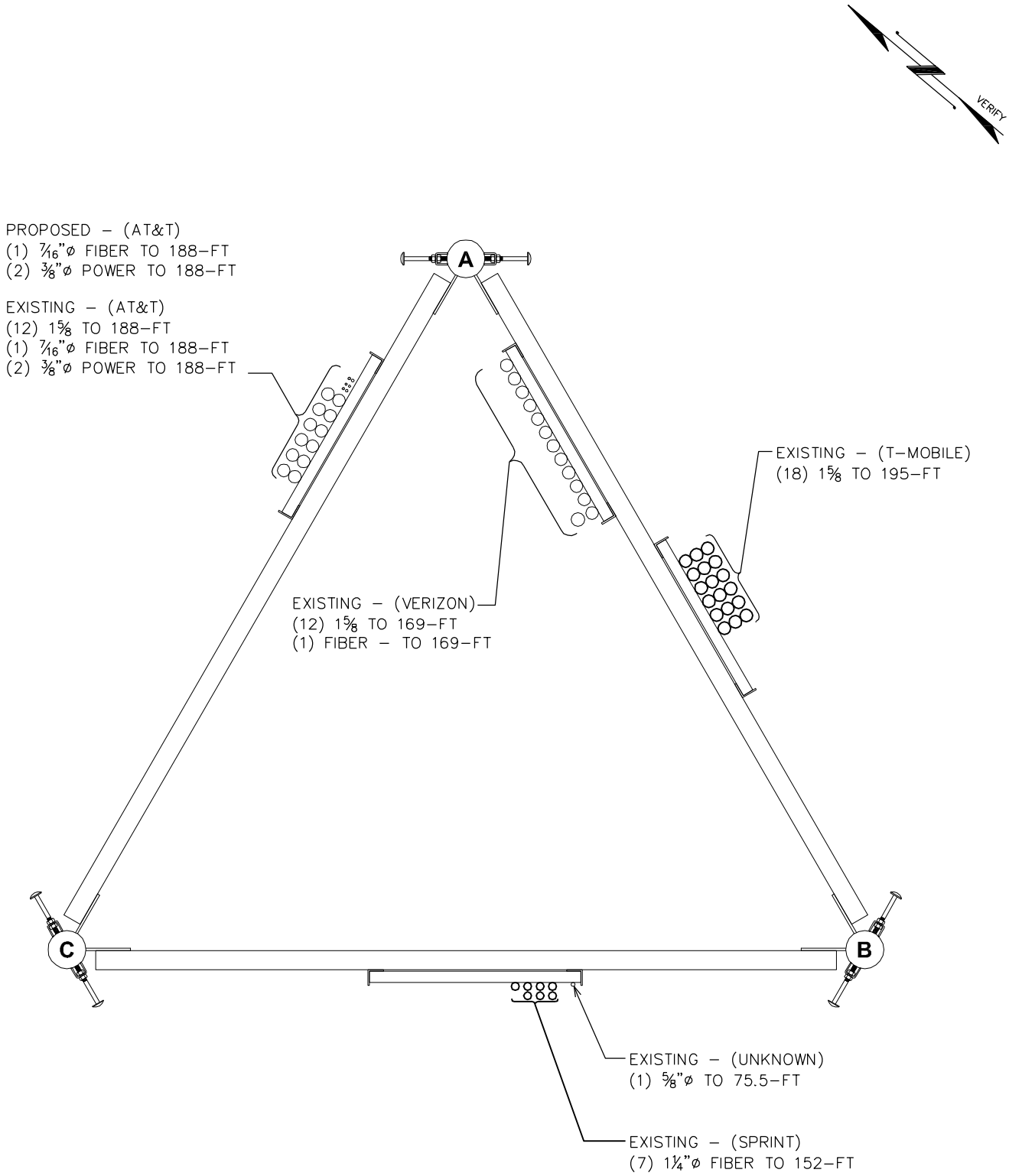

COAX CONFIGURATION - N.T.S.

PREPARED BY:	PREPARED FOR:	PROJECT INFORMATION:	
TOWER ENGINEERING PROFESSIONALS 326 TRYON RD RALEIGH, NC 27603 (919) 661-6351 www.tepgroup.net	PHOENIX TOWER INTERNATIONAL 1001 YAMATO ROAD, SUITE 105 BOCA RATON, FL 33431	**STRAITS TURNPIKE** **SITE #: US-CT-1003** 1021 STRAITS TURNPIKE MIDDLEBURY, CT 06762 (NEW HAVEN COUNTY)	REVISION: 1 TEP JOB #: 25628.939111 SHEET NUMBER: **C-1**

APPENDIX C

ADDITIONAL CALCULATIONS

Project Name:	Straits Turnpike	**Engineer:**	JAR
Project Number:	TEP#25628.93911	**Check:**	SJJ
Client Site Number:	US-CT-1003	**Date:**	8/24/2016
Elevation:	160 - 170ft	**CODE:**	TIA-F

Grouted/Un-Grouted Pipe Leg + Half Sleeve R/F

ASIF: 1.33 - allowable stress increase factor (typically 1.33)
Mast St.: 1.00 - from tnxTower

Input - Loads

$P_{initial}$: 3.57812 kips - force from initial load (no wind)
P_{wind}: 65.8748 kips - force due to final loading including reinforcement
T_u: 58.7248 kips - maximum load on leg

Quick Check

Weld Size:	OK
Weld Connection:	26.7%
Crushing Check:	48.9%
Leg Comp. Check:	50.6%
Sleeve Check:	73.5%
Built-up Check:	65.3%
Slenderness Check:	OK
Leg Tension Check:	50.1%

Input - Tower Leg

2.5 STD

K: 1.00 - effective length factor for leg
L_u: 2.64 ft - unbraced length of tower leg
F_{y_leg}: 55.00 ksi - minimum specified yield strength of tower leg
F_{u_leg}: 70.00 ksi - minimum specified ultimate strength of tower leg
r: 0.95 in - minimum radius of gyration of tower leg
A_{leg}: 1.70 in^2 - area of tower leg
Di: 2.47 in - inside diameter of tower leg
t_{leg}: 0.20 in - thickness of tower leg
$f`_c$: 0.00 ksi - minimum specified compressive strength of grout (If ungrouted enter 0)

Input - Sleeve R/F

3 XS Gap Check: OK

F_{y_sleeve}: 35.00 ksi - minimum specified yield strength of sleeve r/f
F_{u_sleeve}: 60.00 ksi - minimum specified ultimate strength of sleeve r/f
r_{x_sleeve}: 0.50 in - minimum radius of gyration of sleeve r/f about the x-axis
r_{y_sleeve}: 1.14 in - minimum radius of gyration of sleeve r/f about the y-axis
A_{sleeve}: 1.51 in^2 - area of sleeve r/f
t_{sleeve}: 0.30 in - thickness of tower leg
Termination: Connected to Flange

Input - Sleeve Connection to Leg

a: 12.00 in - spacing of connectors connecting the sleeve to the leg
D: 3.00 - weld size for the weld connecting the sleeve to the leg (unit = # of 16ths)
Length //: 12.00 in - length of weld on each side of the leg at the termination
Length ⊥: 5.50 in - length of weld at the bottom/top of the leg sleeve at termination ($\pi D/2$)
No: 2.00 - number of longitudinal welds per end of the leg (typically near side & far side, so 2)
F_{EXX}: 70.00 ksi - weld electrode classification
Width: 3.50 in - maximum width of the built-up leg
Gap: 0.00 in - length of leg considered for crushing

Input - Built-up Leg Section

2.5 STD w/3 XS Half Sleeve

r_{x_bu}: 0.92 in - minimum radius of gyration of the built-up section about the x-axis
r_{y_bu}: 1.04 in - minimum radius of gyration of the built-up section about the y-axis

Project Name:	Straits Turnpike	**Engineer:**	JAR
Project Number:	TEP#25628.93911	**Check:**	SJJ
Client Site Number:	US-CT-1003	**Date:**	8/24/2016
Elevation:	140 - 150ft	**CODE:**	TIA-F

Grouted/Un-Grouted Pipe Leg + Half Sleeve R/F

ASIF: 1.33 - allowable stress increase factor (typically 1.33)
Mast St.: 1.00 - from tnxTower

Input - Loads

$P_{initial}$: 5.64951 kips - force from initial load (no wind)
P_{wind}: 112.934 kips - force due to final loading including reinforcement
T_u: 100.919 kips - maximum load on leg

Quick Check

Weld Size:	OK
Weld Connection:	34.6%
Crushing Check:	61.9%
Leg Comp. Check:	63.4%
Sleeve Check:	66.2%
Built-up Check:	69.1%
Slenderness Check:	OK
Leg Tension Check:	55.6%

Input - Tower Leg

3.5 STD

K: 1.00 - effective length factor for leg
L_u: 2.60 ft - unbraced length of tower leg
F_{y_leg}: 55.00 ksi - minimum specified yield strength of tower leg
F_{u_leg}: 70.00 ksi - minimum specified ultimate strength of tower leg
r: 1.34 in - minimum radius of gyration of tower leg
A_{leg}: 2.68 in^2 - area of tower leg
Di: 3.55 in - inside diameter of tower leg
t_{leg}: 0.23 in - thickness of tower leg
$f`_c$: 0.00 ksi - minimum specified compressive strength of grout (If ungrouted enter 0)

Input - Sleeve R/F

4 STD Gap Check: OK

F_{y_sleeve}: 50.00 ksi - minimum specified yield strength of sleeve r/f
F_{u_sleeve}: 62.00 ksi - minimum specified ultimate strength of sleeve r/f
r_{x_sleeve}: 0.66 in - minimum radius of gyration of sleeve r/f about the x-axis
r_{y_sleeve}: 1.51 in - minimum radius of gyration of sleeve r/f about the y-axis
A_{sleeve}: 1.59 in^2 - area of sleeve r/f
t_{sleeve}: 0.24 in - thickness of tower leg
Termination: Connected to Flange

Input - Sleeve Connection to Leg

a: 12.00 in - spacing of connectors connecting the sleeve to the leg
D: 3.00 - weld size for the weld connecting the sleeve to the leg (unit = # of 16ths)
Length //: 12.00 in - length of weld on each side of the leg at the termination
Length ⊥: 7.07 in - length of weld at the bottom/top of the leg sleeve at termination ($\pi D/2$)
No: 2.00 - number of longitudinal welds per end of the leg (typically near side & far side, so 2)
F_{EXX}: 70.00 ksi - weld electrode classification
Width: 4.50 in - maximum width of the built-up leg
Gap: 0.00 in - length of leg considered for crushing

Input - Built-up Leg Section

3.5 STD w/4 STD Half Sleeve

r_{x_bu}: 1.31 in - minimum radius of gyration of the built-up section about the x-axis
r_{y_bu}: 1.40 in - minimum radius of gyration of the built-up section about the y-axis

Project Name:	Straits Turnpike	**Engineer:**	JAR
Project Number:	TEP#25628.93911	**Check:**	SJJ
Client Site Number:	US-CT-1003	**Date:**	8/24/2016
Elevation:	120 - 140ft	**CODE:**	TIA-F

Grouted/Un-Grouted Pipe Leg + Half Sleeve R/F

ASIF: 1.33 - allowable stress increase factor (typically 1.33)
Mast St.: 1.00 - from tnxTower

Input - Loads

$P_{initial}$: 7.13439 kips - force from initial load (no wind)
P_{wind}: 154.54 kips - force due to final loading including reinforcement
T_u: 138.846 kips - maximum load on leg

Quick Check

Weld Size:	OK
Weld Connection:	34.2%
Crushing Check:	43.2%
Leg Comp. Check:	44.1%
Sleeve Check:	49.2%
Built-up Check:	54.8%
Slenderness Check:	OK
Leg Tension Check:	40.4%

Input - Tower Leg

5 STD

K: 1.00 - effective length factor for leg
L_u: 6.68 ft - unbraced length of tower leg
F_{y_leg}: 55.00 ksi - minimum specified yield strength of tower leg
F_{u_leg}: 70.00 ksi - minimum specified ultimate strength of tower leg
r: 1.88 in - minimum radius of gyration of tower leg
A_{leg}: 4.30 in^2 - area of tower leg
Di: 5.05 in - inside diameter of tower leg
t_{leg}: 0.26 in - thickness of tower leg
$f`_c$: 0.00 ksi - minimum specified compressive strength of grout (If ungrouted enter 0)

Input - Sleeve R/F

6 XH Gap Check: OK

F_{y_sleeve}: 46.00 ksi - minimum specified yield strength of sleeve r/f
F_{u_sleeve}: 62.00 ksi - minimum specified ultimate strength of sleeve r/f
r_{x_sleeve}: 0.96 in - minimum radius of gyration of sleeve r/f about the x-axis
r_{y_sleeve}: 2.19 in - minimum radius of gyration of sleeve r/f about the y-axis
A_{sleeve}: 4.20 in^2 - area of sleeve r/f
t_{sleeve}: 0.43 in - thickness of tower leg
Termination: Connected to Flange

Input - Sleeve Connection to Leg

a: 15.50 in - spacing of connectors connecting the sleeve to the leg *MI Discrepancy, approved by EOR
D: 5.00 - weld size for the weld connecting the sleeve to the leg (unit = # of 16ths)
Length //: 12.00 in - length of weld on each side of the leg at the termination
Length ⊥: 10.41 in - length of weld at the bottom/top of the leg sleeve at termination ($\pi D/2$)
No: 2.00 - number of longitudinal welds per end of the leg (typically near side & far side, so 2)
F_{EXX}: 70.00 ksi - weld electrode classification
Width: 6.63 in - maximum width of the built-up leg
Gap: 0.00 in - length of leg considered for crushing

Input - Built-up Leg Section

5 STD w/6 XH Half Sleeve

r_{x_bu}: 1.77 in - minimum radius of gyration of the built-up section about the x-axis
r_{y_bu}: 2.04 in - minimum radius of gyration of the built-up section about the y-axis

Project Name:	Straits Turnpike	**Engineer:**	JAR
Project Number:	TEP#25628.93911	**Check:**	SJJ
Client Site Number:	US-CT-1003	**Date:**	8/24/2016
Elevation:	80 - 100ft	**CODE:**	TIA-F

Grouted/Un-Grouted Pipe Leg + Half Sleeve R/F

ASIF: 1.33 - allowable stress increase factor (typically 1.33)
Mast St.: 1.00 - from tnxTower

Input - Loads

$P_{initial}$: 10.4482 kips - force from initial load (no wind)
P_{wind}: 226.454 kips - force due to final loading including reinforcement
T_u: 202.162 kips - maximum load on leg

Quick Check

Weld Size:	OK
Weld Connection:	48.6%
Crushing Check:	48.2%
Leg Comp. Check:	48.8%
Sleeve Check:	59.0%
Built-up Check:	55.8%
Slenderness Check:	OK
Leg Tension Check:	46.6%

Input - Tower Leg

6 STD

K: 1.00 - effective length factor for leg
L_u: 3.43 ft - unbraced length of tower leg
F_{y_leg}: 55.00 ksi - minimum specified yield strength of tower leg
F_{u_leg}: 70.00 ksi - minimum specified ultimate strength of tower leg
r: 2.25 in - minimum radius of gyration of tower leg
A_{leg}: 5.58 in^2 - area of tower leg
Di: 6.07 in - inside diameter of tower leg
t_{leg}: 0.28 in - thickness of tower leg
$f`_c$: 0.00 ksi - minimum specified compressive strength of grout (If ungrouted enter 0)

Input - Sleeve R/F

7 XH Gap Check: OK

F_{y_sleeve}: 42.00 ksi - minimum specified yield strength of sleeve r/f
F_{u_sleeve}: 63.00 ksi - minimum specified ultimate strength of sleeve r/f
r_{x_sleeve}: 1.10 in - minimum radius of gyration of sleeve r/f about the x-axis
r_{y_sleeve}: 2.53 in - minimum radius of gyration of sleeve r/f about the y-axis
A_{sleeve}: 5.60 in^2 - area of sleeve r/f
t_{sleeve}: 0.50 in - thickness of tower leg
Termination: Connected to Flange

Input - Sleeve Connection to Leg

a: 12.00 in - spacing of connectors connecting the sleeve to the leg
D: 5.00 - weld size for the weld connecting the sleeve to the leg (unit = # of 16ths)
Length //: 12.00 in - length of weld on each side of the leg at the termination
Length ⊥: 11.98 in - length of weld at the bottom/top of the leg sleeve at termination ($\pi D/2$)
No: 2.00 - number of longitudinal welds per end of the leg (typically near side & far side, so 2)
F_{EXX}: 70.00 ksi - weld electrode classification
Width: 7.63 in - maximum width of the built-up leg
Gap: 0.00 in - length of leg considered for crushing

Input - Built-up Leg Section

6 STD w/7 XH Half Sleeve

r_{x_bu}: 2.10 in - minimum radius of gyration of the built-up section about the x-axis
r_{y_bu}: 2.39 in - minimum radius of gyration of the built-up section about the y-axis

TOWER ENGINEERING PROFESSIONALS

JOB:	Straits Turnpike (US-CT-1003); TEP No. 25628.93911		
SHEET #:	1	OF	2
CALCULATED BY:	JAR	DATE	8/24/2016
CHECKED BY:	SJJ	DATE	8/24/2016

Mat Foundation Design for Self Supporting Tower -TIA-222-F

Q_a, ALLOWABLE SOIL PRESS. (ksf)	6	F'c (ksi)	3
NET OR GROSS BEARING?	NET	F'y (ksi)	60
SOIL DENSITY (pcf)	125		
TOWER FACE WIDTH (ft.)	21.5		
Tower Eccentricity (ft)	0.00	Distance between tower centroid and the foundation centroid	

Base Reactions LC1: Maximum Wind		Base Reactions LC 2: Ice + Ice Wind	
M_u, MOMENT (k-ft)	6378.1	M, MOMENT (k-ft)	2040.2
P_t, AXIAL (k)	50.8	P_t, AXIAL (k)	101.2
H, SHEAR (k)	55.1	H, SHEAR (k)	16.7

Try:	L (ft.)	B (ft.)	t (ft.)	Soil depth to TOP of mat (ft.)	Soil depth to BOT. of mat (ft.)	Pier dia./width (ft.)	Pier Height, h (ft.)	Pier Shape
	33	33	4	5.416	9.416	4.00	5.67	Square

Wf, WEIGHT OF FOUNDATION (k) =	694.2	Concrete Volume (cu yd)	171.4
Ws, WEIGHT OF SOIL (k) =	704.8		

CHECK BEARING CAPACITY:	LC1	LC2
$P = P_t + Wf + Ws =$	1449.8 k	1500.2 k
$e = (M_{ot} + P_t{*}e_t)/P =$	4.77 ft	1.52 ft
L/6 =	5.50 ft	5.50 ft
90 Axis: $q_{max} =$	1.31 ksf	0.58 ksf
Diag. Axis: $q_{max} =$	1.79 ksf	0.74 ksf

Capacity: 29.8%

CHECK OVERTURNING SF:	LC1	LC2
$M_{ot} = M+H{*}(t+h) =$	6911.2 k-ft	2201.3 k-ft
$M_{st}=P{*}(L/2-e_t)+(W_{f+S}{*}L/2) =$	23922.1 k-ft	24752.5 k-ft
$SF = M_{ot}/M_{st} =$	3.46 > 1.5	11.24 > 1.5

Capacity: 43.3%

TOWER ENGINEERING PROFESSIONALS

JOB:	Straits Turnpike (US-CT-1003); TEP No. 25628.93911		
SHEET #:	2	OF	2
CALCULATED BY:	JAR	DATE	8/24/2016
CHECKED BY:	SJJ	DATE	8/24/2016

CHECK BEAM SHEAR

Vu = 185.4 k
φVc = 1415.3 k Vc > Vu **O.K** **Capacity:** **13.1%**

CHECK PUNCHING SHEAR

Vu = 329.3 k
φVc = 1404.0 k Vc > Vu **O.K** **Capacity:** **23.5%**

CALCULATE REINFORCING REQUIRED

F'c = 3.0 ksi F'y = 60.0 ksi

Temp & Shrinkage Reinforcement, As, temp = 0.39 in^2/ft (ACI 318 Sec. 10.5.4)

BOTTOM REINFORCING

Bar Size= 8
Bar Spacing = 11.8 in.
d = 43.5 in.
Mu= -694.5 in-k/ft

φMn=0.9*As*Fy*(d-1/2*As*Fy/(0.85*b*F'c))

Solution: As,req = 0.30 in^2/ft
Check, As= 0.80 in^2/ft **Capacity:** **37.0%**

TOP REINFORCING

Bar Size= 8
Bar Spacing = 11.8 in.
d= 43.5 in.
Mu= 648.5 in-k/ft

φMn=0.9*As*Fy*d(1-0.59*As*Fy/(b*d*F'c))

Solution: As,req = 0.28 in^2/ft
Check, As= 0.80 in^2/ft **Capacity:** **34.6%**

		PASS	PASS			
	Results Summary:	LC1	LC2	Straits Turnpike (US-CT-1003)		
	Soil Interaction:	N/A	N/A	TEP #:	25628.93911	
				Analysis:	JAR	8/24/2016
Drilled Caisson Tool - Pier Check	Foundation Structural:	34.2%	67.6%	Check:	SJJ	8/24/2016

Code Revisions: TIA-222-F ACI 318-05

Tower Type: Self Support

	LC1	LC2	
Moment:	0.00	0.00	kip-ft
Axial (download):	359.50	0.00	kip
Shear:	35.16	30.92	kip
Axial (uplift):	0.00	312.43	kip

Shaft Information

Diameter:	3.00	ft
Projection:	0.25	ft
Caisson Length:	5.67	ft
f'c:	3.000	ksi
Max εc:	0.003	in/in

Cage 1 Reinforcement

Tie Bar Size:	4	*(fy = 60.0 ksi)*
Clear Cover to Tie:	3.00	*in (Cage Ø = 28.00in)*
Tie Bar Spacing:	16.00	in
Vertical Bar Size:	8	
Vertical Bar Quantity:	11	*(ρ =0.854%)*
fy:	60.0	ksi
E:	29,000	ksi

Reinforcement Capacity

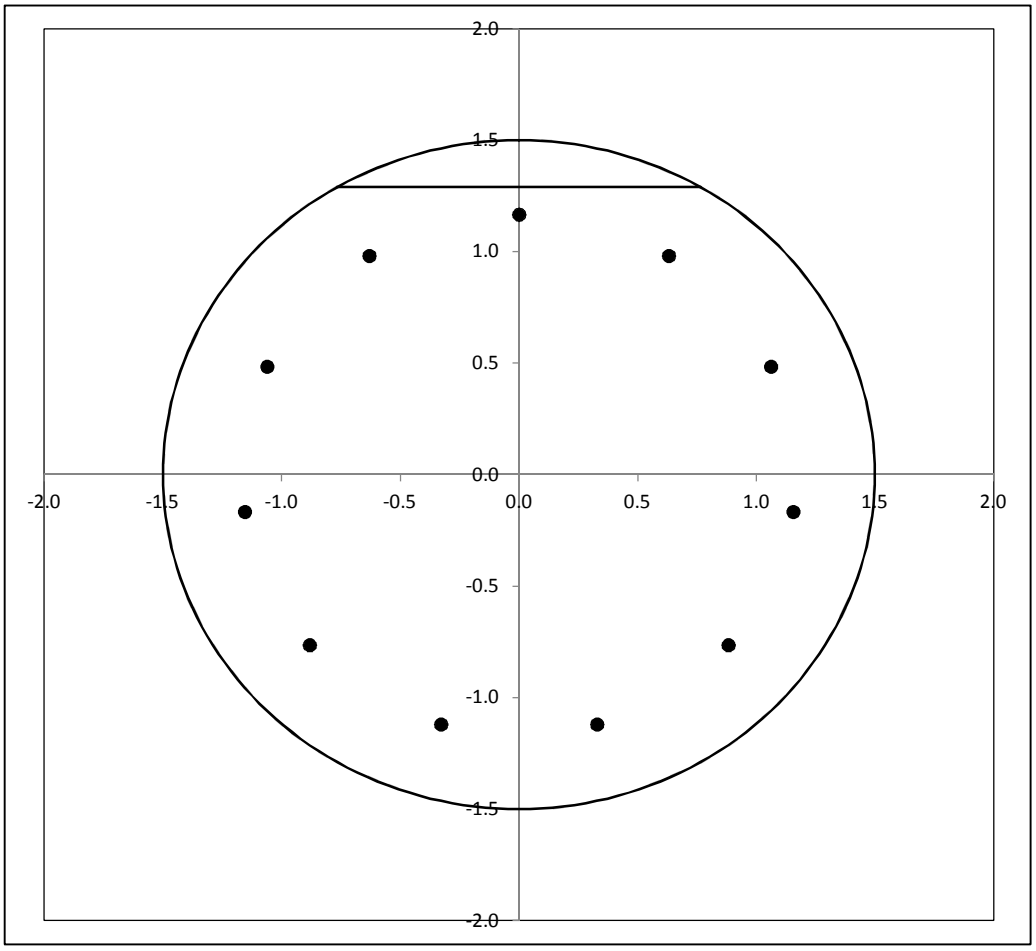

		LC1	LC2	
	Vu =	45.7	45.7	kip
	Vc =	131.2	43.1	kip
fy,tie = 60.0	Vs =	47.1	47.1	kip
	ϕVn =	133.8	67.7	kip
	Capacity =	34.2%	67.6%	
		PASS	PASS	

	LC1	LC2	
Mu =	0.0	0.0	kip-ft
ϕMn =	805.3	86.4	kip-ft
Capacity =	0.0%	0.0%	
	PASS	PASS	

APPENDIX D

STRUCTURAL DESIGN DRAWINGS

STRUCTURAL DESIGN DRAWINGS

SITE NAME:

STRAITS TURNPIKE

SITE NUMBER:

US-CT-1003

SITE ADDRESS:

1021 STRAITS TURNPIKE
MIDDLEBURY, CT 06762
(NEW HAVEN COUNTY)
N41°32'8.78", W73°5'21.27"

MODIFICATION PROVISIONS

THE MODIFICATIONS DEPICTED ON THESE DRAWINGS ARE BASED ON THE RECOMMENDATIONS OUTLINED IN THE STRUCTURAL MODIFICATION ANALYSIS REPORT COMPLETED BY TOWER ENGINEERING PROFESSIONALS (TEP), JOB#: 25628.93911 DATED AUGUST 24, 2016 (REV 1) PER ANSI/TIA-222-F. THIS REPORT IS BASED ON A SPECIFIC ANTENNA LOADING AND COAX CONFIGURATION. SEE THE REPORT FOR THE ANTENNA AND COAX LOADING INFORMATION. ANY OTHER ANTENNA OR COAX CONFIGURATION REQUIRES REVIEW BY TEP. SATISFACTORY COMPLETION OF THE MODIFICATIONS INDICATED ON THESE DRAWINGS WILL RESULT IN THE STRUCTURE MEETING THE REQUIREMENTS OF THE SPECIFICATIONS UNDER WHICH THE STRUCTURAL WAS COMPLETED.

CONTRACTOR SHALL FIELD VERIFY ALL: DIMENSIONS, QUANTITIES, PART NUMBERS AND COAX/ANTENNA PLACEMENTS PRIOR TO: BIDDING, ORDERING MATERIALS, AND CONSTRUCTION.

INDEX OF SHEETS

NO.	SHEET TITLE	REV
T-1	TITLE SHEET	1
N-1	MI CHECKLIST AND NOTES	0
N-2	PROJECT NOTES I	0
N-3	PROJECT NOTES II	0
S-1	TOWER ELEVATION AND MODIFICATION SCHEDULE	0
S-2	DIAGONAL REPLACEMENT DETAILS	0

REVISION NOTES

0	ORIGINAL STRUCTURAL MODIFICATION DESIGN DRAWINGS
1	UPDATED TOWER LOADING

PROJECT TEAM

PROJECT CONTACT:

NAME: PHOENIX TOWER INTERNATIONAL
ADDRESS: 1001 YAMATO ROAD, SUITE 105
CITY, STATE, ZIP: BOCA RATON, FL 33431
CONTACT: DAVID RODRIGUEZ
PHONE: (561) 257-0557
EMAIL: DRODRIGUEZ@PHOENIXINTNL.COM

ENGINEERING FIRM PROJECT MANAGER:

NAME: TOWER ENGINEERING PROFESSIONALS, INC.
ADDRESS: 326 TRYON ROAD
CITY, STATE, ZIP: RALEIGH, NC 27603
CONTACT: ABRAHAM A. SHAH, P.E.
PHONE: (919) 661-6351
EMAIL: SDD@TEPGROUP.NET

PLANS PREPARED FOR:

PHOENIX TOWER INTERNATIONAL

1001 YAMATO ROAD, SUITE 105
BOCA RATON, FL 33431
OFFICE: (561) 257-0557

PLANS PREPARED BY:

TOWER ENGINEERING PROFESSIONALS
326 TRYON ROAD
RALEIGH, NC 27603
OFFICE: (919) 661-6351
www.tepgroup.net

SEAL:

STATE OF CONNECTICUT · GRAHAM M. ANDRES · 29538 · LICENSED · PROFESSIONAL ENGINEER

August 24, 2016

REV	DATE	ISSUED FOR:
1	08-24-16	REVISED LOADING
0	04-19-16	MODIFICATION DRAWINGS

DRAWN BY: JAR | CHECKED BY: SJJ

SHEET TITLE:

TITLE SHEET

SHEET NUMBER: **T-1**

REVISION: 1

TEP #: 25628.93911

MI CHECKLIST

CONSTRUCTION/INSTALLATION INSPECTIONS AND TESTING REQUIRED (COMPLETED BY EOR)	REPORT ITEM
PRE-CONSTRUCTION	
X	MI CHECKLIST DRAWING
NA	EOR APPROVED SHOP DRAWINGS
NA	FABRICATION INSPECTION
NA	FABRICATOR CERTIFIED WELD INSPECTION
X	MATERIAL TEST REPORT (MTR)
NA	FABRICATOR NDE INSPECTION
NA	NDE REPORT OF MONOPOLE BASE PLATE
X	PACKING SLIPS
ADDITIONAL TESTING AND INSPECTIONS:	
CONSTRUCTION	
X	CONSTRUCTION INSPECTIONS
NA	CONTINUOUS FOUNDATION INSPECTIONS
NA	CONCRETE COMP. STRENGTH AND SLUMP TESTS
NA	GROUT COMP. STRENGTH (ASTM C109)
NA	POST INSTALLED ANCHOR ROD VERIFICATION
NA	BASE PLATE GROUT VERIFICATION
NA	CONTRACTOR'S CERTIFIED WELD INSPECTION AND NDE REPORTS
NA	EARTHWORK: LIFT AND DENSITY
X	ON SITE COLD GALVANIZING VERIFICATION
NA	GUY WIRE TENSION REPORT
X	GC AS-BUILT DOCUMENTS
ADDITIONAL TESTING AND INSPECTIONS:	
POST-CONSTRUCTION	
X	MI INSPECTOR REDLINE OR RECORD DRAWING(S)
NA	POST INSTALLED ANCHOR ROD PULL-OUT TESTING
X	PHOTOGRAPHS
ADDITIONAL TESTING AND INSPECTIONS:	

NOTE: X DENOTES A DOCUMENT NEEDED FOR THE PMI REPORT
NA DENOTES A DOCUMENT THAT IS NOT REQUIRED FOR THE PMI REPORT

MODIFICATION INSPECTION NOTES:

GENERAL

THE MODIFICATION INSPECTION (MI) IS A VISUAL INSPECTION OF TOWER MODIFICATIONS AND A REVIEW OF CONSTRUCTION INSPECTIONS AND OTHER REPORTS TO ENSURE THE INSTALLATION WAS CONSTRUCTED IN ACCORDANCE WITH THE CONTRACT DOCUMENTS, NAMELY THE MODIFICATION DRAWINGS, AS DESIGNED BY THE ENGINEER OF RECORD (EOR).

THE MI IS TO CONFIRM INSTALLATION CONFIGURATION AND WORKMANSHIP ONLY AND IS NOT A REVIEW OF THE MODIFICATION DESIGN ITSELF, NOR DOES THE MI INSPECTOR TAKE OWNERSHIP OF THE MODIFICATION DESIGN. OWNERSHIP OF THE STRUCTURAL MODIFICATION DESIGN EFFECTIVENESS AND INTEGRITY RESIDES WITH THE EOR AT ALL TIMES.

ALL MI'S SHALL BE CONDUCTED BY AN OWNER APPROVED ENGINEERING VENDOR THAT IS APPROVED TO PERFORM ELEVATED WORK FOR THE OWNER.

TO ENSURE THAT THE REQUIREMENTS OF THE MI ARE MET, IT IS VITAL THAT THE GENERAL CONTRACTOR (GC) AND THE MI INSPECTOR BEGIN COMMUNICATING AND COORDINATING AS SOON AS A PO IS RECEIVED. IT IS EXPECTED THAT EACH PARTY WILL BE PROACTIVE IN REACHING OUT TO THE OTHER PARTY. IF CONTACT INFORMATION IS NOT KNOWN, CONTACT THE PROJECT CONTACT LISTED ON SHEET T-1.

MI INSPECTOR

THE MI INSPECTOR IS REQUIRED TO CONTACT THE GC AS SOON AS RECEIVING A PO FOR THE MI TO, AT A MINIMUM:

- REVIEW THE REQUIREMENTS OF THE MI CHECKLIST
- WORK WITH THE GC TO DEVELOP A SCHEDULE TO CONDUCT ON-SITE INSPECTIONS, INCLUDING FOUNDATION INSPECTIONS

THE MI INSPECTOR IS RESPONSIBLE FOR COLLECTING ALL GENERAL CONTRACTOR (GC) INSPECTION AND TEST REPORTS, REVIEWING THE DOCUMENTS FOR ADHERENCE TO THE CONTRACT DOCUMENTS, CONDUCTING THE IN-FIELD INSPECTIONS, AND SUBMITTING THE MI REPORT TO THE OWNER.

GENERAL CONTRACTOR

THE GC IS REQUIRED TO CONTACT THE MI INSPECTOR AS SOON AS RECEIVING A PO FOR THE MODIFICATION INSTALLATION OR TURNKEY PROJECT TO, AT A MINIMUM:

- REVIEW THE REQUIREMENTS OF THE MI CHECKLIST.
- WORK WITH THE MI INSPECTOR TO DEVELOP A SCHEDULE TO CONDUCT ON-SITE MI INSPECTIONS, INCLUDING FOUNDATION INSPECTIONS.
- BETTER UNDERSTAND ALL INSPECTION AND TESTING REQUIREMENTS.

THE GC SHALL PERFORM AND RECORD THE TEST AND INSPECTION RESULTS IN ACCORDANCE WITH THE REQUIREMENTS OF THE MI CHECKLIST.

RECOMMENDATIONS

THE FOLLOWING RECOMMENDATIONS AND SUGGESTIONS ARE OFFERED TO ENHANCE THE EFFICIENCY AND EFFECTIVENESS OF DELIVERING A MI REPORT:

- IT IS SUGGESTED THAT THE GC PROVIDE A MINIMUM OF 5 BUSINESS DAYS NOTICE, PREFERABLY 10, TO THE MI INSPECTOR AS TO WHEN THE SITE WILL BE READY FOR THE MI TO BE CONDUCTED.
- THE GC AND MI INSPECTOR COORDINATE CLOSELY THROUGHOUT THE ENTIRE PROJECT.
- WHEN POSSIBLE, IT IS PREFERRED TO HAVE THE GC AND MI INSPECTOR ON-SITE SIMULTANEOUSLY FOR ANY GUY WIRE TENSIONING OR RE-TENSIONING OPERATIONS.
- IT MAY BE BENEFICIAL TO INSTALL ALL TOWER MODIFICATIONS PRIOR TO CONDUCTING THE FOUNDATION INSPECTIONS TO ALLOW FOUNDATION AND MI INSPECTION(S) TO COMMENCE WITH ONE SITE VISIT.
- WHEN POSSIBLE, IT IS PREFERRED TO HAVE THE GC AND MI INSPECTOR ON-SITE DURING THE MI TO HAVE ANY DEFICIENCIES CORRECTED DURING THE INITIAL MI. THEREFORE, THE GC MAY CHOOSE TO COORDINATE THE MI CAREFULLY TO ENSURE ALL CONSTRUCTION FACILITIES ARE AT THEIR DISPOSAL WHEN THE MI INSPECTOR IS ON SITE.

CANCELLATION OR DELAYS IN SCHEDULED MI

IF THE GC AND MI INSPECTOR AGREE TO A DATE ON WHICH THE MI WILL BE CONDUCTED, AND EITHER PARTY CANCELS OR DELAYS, THE OWNER SHALL NOT BE RESPONSIBLE FOR ANY COSTS, FEES, LOSS OF DEPOSITS AND/OR OTHER PENALTIES RELATED TO THE CANCELLATION OR DELAY INCURRED BY EITHER PARTY FOR ANY TIME (E.G. TRAVEL AND LODGING, COSTS OF KEEPING EQUIPMENT ON-SITE, ETC.). IF THE OWNER CONTRACTS DIRECTLY FOR A THIRD PARTY MI, EXCEPTIONS MAY BE MADE IN THE EVENT THAT THE DELAY/CANCELLATION IS CAUSED BY WEATHER OR OTHER CONDITIONS THAT MAY COMPROMISE THE SAFETY OF THE PARTIES INVOLVED.

CORRECTION OF FAILING MI'S

IF THE MODIFICATION INSTALLATION WOULD FAIL THE MI ("FAILED MI"), THE GC SHALL WORK WITH THE OWNER TO COORDINATE A REMEDIATION PLAN IN ONE OF TWO WAYS:

- CORRECT FAILING ISSUES TO COMPLY WITH THE SPECIFICATIONS CONTAINED IN THE ORIGINAL CONTRACT DOCUMENTS AND COORDINATE A SUPPLEMENT MI.
- OR, WITH THE OWNER'S APPROVAL, THE GC MAY WORK WITH THE EOR TO RE-ANALYZE THE MODIFICATION/REINFORCEMENT USING THE AS-BUILT CONDITION.

MI VERIFICATION INSPECTIONS

THE OWNER RESERVES THE RIGHT TO CONDUCT A MI VERIFICATION INSPECTION TO VERIFY THE ACCURACY AND COMPLETENESS OF PREVIOUSLY COMPLETED MI INSPECTION(S) ON TOWER MODIFICATION PROJECTS.

ALL VERIFICATION INSPECTIONS SHALL BE HELD TO THE SAME SPECIFICATIONS AND REQUIREMENTS IN THE CONTRACT DOCUMENTS.

VERIFICATION INSPECTION MAY BE CONDUCTED BY AN INDEPENDENT INSPECTION FIRM AFTER A MODIFICATION PROJECT IS COMPLETED, AS MARKED BY THE DATE OF AN ACCEPTED "PASSING MI" OR "PASS AS NOTED MI" REPORT FOR THE ORIGINAL PROJECT.

REQUIRED PHOTOS

BETWEEN THE GC AND THE MI INSPECTOR THE FOLLOWING PHOTOGRAPHS, AT A MINIMUM, ARE TO BE TAKEN AND INCLUDED IN THE MI REPORT:

- PRE-CONSTRUCTION GENERAL SITE CONDITION
- PHOTOGRAPHS DURING THE REINFORCEMENT MODIFICATION CONSTRUCTION/ERECTION AND INSPECTION:
  - RAW MATERIALS
  - PHOTOS OF ALL CRITICAL DETAILS
  - FOUNDATION MODIFICATIONS
  - WELD PREPARATION
  - BOLT INSTALLATION AND TORQUE
  - FINAL INSTALLED CONDITION
  - SURFACE COATING REPAIR
- POST CONSTRUCTION PHOTOGRAPHS
  - FINAL IN FIELD CONDITION

PHOTOS OF ELEVATED MODIFICATIONS TAKEN FROM THE GROUND SHALL BE CONSIDERED INADEQUATE.

PLANS PREPARED FOR:

PHOENIX TOWER INTERNATIONAL
1001 YAMATO ROAD, SUITE 105
BOCA RATON, FL 33431
OFFICE: (561) 257-0557

PROJECT INFORMATION:

STRAITS TURNPIKE
SITE #: US-CT-1003

1021 STRAITS TURNPIKE
MIDDLEBURY, CT 06762
(NEW HAVEN COUNTY)

PLANS PREPARED BY:

TOWER ENGINEERING PROFESSIONALS
326 TRYON ROAD
RALEIGH, NC 27603
OFFICE: (919) 661-6351
www.tepgroup.net

SEAL:

STATE OF CONNECTICUT · GRANT ANDRES · 29538 · LICENSED · PROFESSIONAL ENGINEER

April 19, 2016

REV	DATE	ISSUED FOR:
0	04-19-16	MODIFICATION DRAWINGS

DRAWN BY: RWT CHECKED BY: JDB

SHEET TITLE:

MI CHECKLIST AND NOTES

SHEET NUMBER: **N-1**

REVISION: 0

TEP #: 25628.47301

GENERAL NOTES:

1. ALL REFERENCES TO THE OWNER IN THESE DOCUMENTS SHALL BE CONSIDERED PHOENIX TOWER INTERNATIONAL OR ITS DESIGNATED REPRESENTATIVE.
2. ALL WORK PRESENTED ON THESE DRAWINGS MUST BE COMPLETED BY THE CONTRACTOR UNLESS NOTED OTHERWISE. THE CONTRACTOR MUST HAVE CONSIDERABLE EXPERIENCE IN PERFORMANCE OF WORK SIMILAR TO THAT DESCRIBED HEREIN. BY ACCEPTANCE OF THIS ASSIGNMENT, THE CONTRACTOR IS ATTESTING THAT HE DOES HAVE SUFFICIENT EXPERIENCE AND ABILITY, THAT HE IS KNOWLEDGEABLE OF THE WORK TO BE PERFORMED AND THAT HE IS PROPERLY LICENSED AND PROPERLY REGISTERED TO DO THIS WORK IN THE STATE OF CONNECTICUT.
3. WORK SHALL BE COMPLETED IN ACCORDANCE WITH THE 2005 CONNECTICUT STATE BUILDING CODE.
4. UNLESS SHOWN OR NOTED OTHERWISE ON THE CONTRACT DRAWINGS, OR IN THE SPECIFICATIONS, THE FOLLOWING NOTES SHALL APPLY TO THE MATERIALS LISTED HEREIN, AND TO THE PROCEDURES TO BE USED ON THIS PROJECT.
5. ALL HARDWARE ASSEMBLY MANUFACTURER'S INSTRUCTIONS SHALL BE FOLLOWED EXACTLY AND SHALL SUPERSEDE ANY CONFLICTING NOTES ENCLOSED HEREIN.
6. IT IS THE CONTRACTOR'S SOLE RESPONSIBILITY TO DETERMINE ERECTION PROCEDURE AND SEQUENCE TO ENSURE THE SAFETY OF THE STRUCTURE AND IT'S COMPONENT PARTS DURING ERECTION AND/OR FIELD MODIFICATIONS. THIS INCLUDES, BUT IS NOT LIMITED TO, THE ADDITION OF TEMPORARY BRACING, GUYS OR TIE DOWNS THAT MAY BE NECESSARY. SUCH MATERIAL SHALL BE REMOVED AND SHALL REMAIN THE PROPERTY OF THE CONTRACTOR AFTER THE COMPLETION OF THE PROJECT.
7. ALL DIMENSIONS, ELEVATIONS, AND EXISTING CONDITIONS SHOWN ON THE DRAWINGS SHALL BE FIELD VERIFIED BY THE CONTRACTOR PRIOR TO BEGINNING ANY MATERIALS ORDERING, FABRICATION OR CONSTRUCTION WORK ON THIS PROJECT. CONTRACTOR SHALL NOT SCALE CONTRACT DRAWINGS IN LIEU OF FIELD VERIFICATIONS. ANY DISCREPANCIES SHALL BE IMMEDIATELY BROUGHT TO THE ATTENTION OF THE OWNER AND THE OWNER'S ENGINEER. THE DISCREPANCIES MUST BE RESOLVED BEFORE THE CONTRACTOR IS TO PROCEED WITH THE WORK. THE CONTRACT DOCUMENTS DO NOT INDICATE THE METHOD OF CONSTRUCTION. THE CONTRACTOR SHALL SUPERVISE AND DIRECT THE WORK AND SHALL BE SOLELY RESPONSIBLE FOR ALL CONSTRUCTION MEANS, METHODS, TECHNIQUES, SEQUENCES, AND PROCEDURES. OBSERVATION VISITS TO THE SITE BY THE OWNER AND/OR THE ENGINEER SHALL NOT INCLUDE INSPECTION OF THE PROTECTIVE MEASURES OR THE PROCEDURES.
8. ALL MATERIALS AND EQUIPMENT FURNISHED SHALL BE NEW AND OF GOOD QUALITY, FREE FROM FAULTS AND DEFECTS AND IN CONFORMANCE WITH THE CONTRACT DOCUMENTS. ANY AND ALL SUBSTITUTIONS MUST BE PROPERLY APPROVED AND AUTHORIZED IN WRITING BY THE OWNER AND ENGINEER PRIOR TO INSTALLATION. THE CONTRACTOR SHALL FURNISH SATISFACTORY EVIDENCE AS TO THE KIND AND QUALITY OF THE MATERIALS AND EQUIPMENT BEING SUBSTITUTED.
9. THE CONTRACTOR SHALL BE RESPONSIBLE FOR INITIATING, MAINTAINING, AND SUPERVISING ALL SAFETY PRECAUTIONS AND PROGRAMS IN CONNECTION WITH THE WORK. THE CONTRACTOR IS RESPONSIBLE FOR ENSURING THAT THIS PROJECT AND RELATED WORK COMPLIES WITH ALL APPLICABLE LOCAL, STATE, AND FEDERAL SAFETY CODES AND REGULATIONS GOVERNING THIS WORK.
10. ACCESS TO THE PROPOSED WORK SITE MAY BE RESTRICTED. THE CONTRACTOR SHALL COORDINATE INTENDED CONSTRUCTION ACTIVITY, INCLUDING WORK SCHEDULE AND MATERIALS ACCESS, WITH THE RESIDENT LEASING AGENT FOR APPROVAL.
11. ALL PERMITS THAT MUST BE OBTAINED ARE THE RESPONSIBILITY OF THE CONTRACTOR. THE CONTRACTOR WILL BE RESPONSIBLE FOR ABIDING BY ALL CONDITIONS AND REQUIREMENTS OF THE PERMITS.
12. IF APPLICABLE, ALL CONCRETE WORK SHALL COMPLY TO LOCAL CODES AND THE ACI 318-05, "BUILDING REQUIREMENTS FOR STRUCTURAL CONCRETE".
13. 24 HOURS PRIOR TO THE BEGINNING OF ANY CONSTRUCTION, THE CONTRACTOR MUST NOTIFY THE APPLICABLE JURISDICTIONAL (STATE, COUNTY OR CITY) ENGINEER.
14. ALL MATERIALS AND WORKMANSHIP SHALL BE WARRANTED FOR ONE YEAR FROM ACCEPTANCE DATE.
15. ALL TOWER DIMENSIONS SHALL BE VERIFIED WITH THE PLANS (LATEST REVISION) PRIOR TO COMMENCING CONSTRUCTION. NOTIFY THE ENGINEER IMMEDIATELY IF ANY DISCREPANCIES ARE DISCOVERED. THE OWNER SHALL HAVE A SET OF APPROVED PLANS AVAILABLE AT THE SITE AT ALL TIMES WHILE WORK IS BEING PERFORMED. A DESIGNATED RESPONSIBLE EMPLOYEE SHALL BE AVAILABLE FOR CONTACT BY GOVERNING AGENCY INSPECTORS.
16. THE CLIMBING FACILITIES, SAFETY CLIMB AND ALL PARTS THEREOF SHALL NOT BE IMPEDED, MODIFIED OR ALTERED WITHOUT THE EXPRESS WRITTEN APPROVAL OF THE TOWER OWNER OR ENGINEER OF RECORD.
17. ANY WORK PERFORMED WITHOUT A PREFABRICATION MAPPING IS DONE AT THE RISK OF THE GC AND/OR FABRICATOR.

ATTENTION

ALL CONSTRUCTION MEANS AND METHODS; INCLUDING BUT NOT LIMITED TO, ERECTION PLANS, RIGGING PLANS, CLIMBING PLANS, AND RESCUE PLANS SHALL BE THE RESPONSIBILITY OF THE GENERAL CONTRACTOR RESPONSIBLE FOR THE EXECUTION OF THE WORK CONTAINED HEREIN AND SHALL MEET ANSI/TIA 1019 (LATEST EDITION), OSHA, AND GENERAL INDUSTRY STANDARDS. ALL RIGGING PLANS SHALL ADHERE TO ANSI/TIA-1019 (LATEST EDITION) INCLUDING THE REQUIRED INVOLVEMENT OF A QUALIFIED ENGINEER FOR CLASS IV CONSTRUCTION.

PLANS PREPARED FOR:

PHOENIX TOWER INTERNATIONAL

1001 YAMATO ROAD, SUITE 105
BOCA RATON, FL 33431
OFFICE: (561) 257-0557

PROJECT INFORMATION:

STRAITS TURNPIKE
SITE #: US-CT-1003

1021 STRAITS TURNPIKE
MIDDLEBURY, CT 06762
(NEW HAVEN COUNTY)

PLANS PREPARED BY:

TOWER ENGINEERING PROFESSIONALS
326 TRYON ROAD
RALEIGH, NC 27603
OFFICE: (919) 661-6351
www.tepgroup.net

SEAL:

STATE OF CONNECTICUT · GRAHAM ANDRES · 29538 · LICENSED · PROFESSIONAL ENGINEER

April 19, 2016

REV	DATE	ISSUED FOR:
0	04-19-16	MODIFICATION DRAWINGS

DRAWN BY: RWT | CHECKED BY: JDB

SHEET TITLE:

PROJECT NOTES I

SHEET NUMBER: **N-2**

REVISION: **0**

TEP #: 25628.47301

STRUCTURAL STEEL NOTES:

1. THE FABRICATION AND ERECTION OF STRUCTURAL STEEL SHALL CONFORM TO THE AISC STEEL CONSTRUCTION MANUAL, LOAD AND RESISTANCE FACTOR DESIGN (LRFD), 13TH EDITION.
2. UNLESS OTHERWISE NOTED, ALL STRUCTURAL ELEMENTS SHALL CONFORM TO THE FOLLOWING REQUIREMENTS:
   STRUCTURAL STEEL:
   - ANGLE: ASTM A36
   - PIPE/TUBE: ASTM A500-46
   - PLATE: ASTM A36 (SELF SUPPORTING AND GUYED TOWERS)
   - PLATE: ASTM A572-65 (MONOPOLE)

   A. ALL BOLTS, ASTM A325 TYPE I GALVANIZED HIGH STRENGTH BOLTS.
   B. ALL U-BOLTS, ASTM A193 GRADE B7
   C. ALL NUTS, ASTM A563 CARBON AND ALLOY STEEL NUTS.
   D. ALL WASHERS, ASTM F436 HARDENED STEEL WASHERS.
3. ALL CONNECTIONS NOT FULLY DETAILED ON THESE PLANS SHALL BE DETAILED BY THE STEEL FABRICATOR IN ACCORDANCE WITH AISC STEEL CONSTRUCTION MANUAL, LRFD, 13TH EDITION.
4. HOLES SHALL NOT BE FLAME CUT THROUGH STEEL UNLESS APPROVED BY THE ENGINEER.
5. HOT-DIP GALVANIZE ALL ITEMS UNLESS OTHERWISE NOTED, AFTER FABRICATION WHERE PRACTICABLE. GALVANIZING: ASTM A123, ASTM, A153/A153M OR ASTM A653/A653M, G90, AS APPLICABLE. ADDITIONALLY, ALL NEW STEEL SHALL BE PAINTED TO MATCH EXISTING STEEL. CONTRACTOR SHALL OBTAIN WRITTEN PERMISSION TO PROTECT STEEL BY ANY OTHER MEANS.
6. REPAIR DAMAGED SURFACES WITH GALVANIZING REPAIR METHOD AND PAINT CONFORMING TO ASTM A780 OR BY APPLICATION OF STICK OR THICK PASTED MATERIAL SPECIFICALLY DESIGNED FOR REPAIR OF GALVANIZING. CLEAN AREAS TO BE REPAIRED AND REMOVE SLAG FROM WELDS. HEAT SURFACES TO WHICH STICK OR PASTE MATERIAL IS APPLIED, WITH A TORCH TO A TEMPERATURE SUFFICIENT TO MELT THE METALLICS IN STICK OR PASTED; SPREAD MOLTEN MATERIAL UNIFORMLY OVER SURFACES TO BE COATED AND WIPE OFF EXCESS MATERIAL. AFTER REPAIR, STEEL SHALL BE REPAINTED TO MATCH EXISTING FINISH (IF APPLICABLE).
7. A NUT LOCKING DEVICE SHALL BE INSTALLED ON ALL PROPOSED AND/OR REPLACED BOLTS.
8. ALL PROPOSED AND/OR REPLACED BOLTS SHALL BE OF SUFFICIENT LENGTH TO EXCLUDE THE THREADS FROM THE SHEAR PLANE.
9. ALL PROPOSED AND/OR REPLACED BOLTS SHALL BE OF SUFFICIENT LENGTH SUCH THAT THE END OF THE BOLT BE AT LEAST FLUSH WITH THE FACE OF THE NUT. IT IS NOT PERMITTED FOR THE BOLT END TO BE BELOW THE FACE OF THE NUT AFTER TIGHTENING IS COMPLETED.
10. GALVANIZED ASTM A325 BOLTS SHALL NOT BE REUSED.

WELDING NOTES:

1. ALL WELDING SHALL BE IN ACCORDANCE WITH THE AWS D1.1/D1.1M: 2004 "STRUCTURAL WELDING CODE-STEEL".
2. ALL WELDING SHALL BE PERFORMED BY AWS CERTIFIED WELDERS.
3. CONTRACTOR SHALL RETAIN AN AWS CERTIFIED WELD INSPECTOR TO PERFORM VISUAL INSPECTIONS ON FIELD WELDS. A LETTER AND REPORT SHALL BE ISSUED TO THE CONTRACTOR. CONTRACTOR SHALL SUBMIT LETTER AND REPORT TO TOWER ENGINEERING PROFESSIONALS.
4. GRIND THE SURFACE ADJACENT TO THE WELD FOR A DISTANCE OF 2" MINIMUM ALL AROUND. GRIND THE SURFACE OF THE ROD TO BE INSTALLED FOR A DISTANCE OF 2" MINIMUM ALL AROUND THE AREA TO BE WELDED. ENSURE BOTH AREAS ARE 100% FREE OF ALL GALVANIZING. SURFACES TO BE WELDED SHALL BE FREE FROM SCALE, SLAG, RUST, MOISTURE, GREASE OR ANY OTHER FOREIGN MATERIAL THAT WOULD PREVENT PROPER WELDING.
5. DO NOT WELD IF THE TEMPERATURE OF THE STEEL IN THE VICINITY OF THE WELD AREA IS BELOW 0°F. THE MINIMUM PREHEAT AND INTERPASS TEMPERATURE REQUIREMENTS SHALL COMPLY WITH SECTION 3.5.1 AND TABLE 3.2 OF THE AWS D1.1/D1.1M:2004.
6. DO NOT WELD ON WET OR FROST-COVERED SURFACES & PROVIDE ADEQUATE PROTECTION FROM HIGH WINDS.
7. FOR ALL WELDING, USE 70 KSI LOW HYDROGEN ELECTRODES. ELECTRODES SHALL BE APPROPRIATE FOR THE WELDING POSITION REQUIRED TO MAKE THE JOINT.
8. AFTER FINAL INSPECTION, THE AREA OF THE WELDS, THE INSTALLATION AND ALL SURFACES DAMAGED BY WELDING OR GRINDING SHALL RECEIVE A COLD-GALVANIZED COATING. THIS COATING SHALL BE APPLIED BY BRUSH. THE GALVANIZING COMPOUND SHALL CONTAIN A MINIMUM OF 95% ± PURE ZINC. THE FINISHED COATING SHALL BE A MINIMUM THICKNESS OF 3 MILS.
9. FOR MONOPOLE TOWERS FULL PENETRATION WELDS IN THE VICINITY OF THE BASE OF THE TOWER ARE REQUIRED TO BE 100% NDE INSPECTED BY ULTRASONIC TESTING (UT) IN ACCORDANCE WITH AWS D1.1.
10. FOR MONOPOLE TOWERS PARTIAL PENETRATION AND FILLET WELDS IN THE VICINITY OF THE BASE OF THE TOWER ARE REQUIRED TO BE 50% NDE INSPECTED BY MAGNETIC PARTICLE (MT) IN ACCORDANCE WITH AWS D1.1.
11. PROVIDE WELDS ALL AROUND OR ADD SEAL WELDS WHERE STRUCTURAL WELDS ARE NOT SPECIFIED.

BOLT TIGHTENING PROCEDURE:

1. UNLESS OTHERWISE NOTED ON DRAWINGS OR BELOW ALL BOLTED CONNECTIONS SHALL BE BROUGHT TO A SNUG TIGHT CONDITION AS DEFINED IN SECTION 8.1 OF THE AISC SPECIFICATION FOR STRUCTURAL JOINTS USING A325 OR A490 BOLTS, LOCATED IN THE AISC MANUAL OF STEEL CONSTRUCTION. ALL SNUG TIGHT BOLTS SHALL BE INSTALLED WITH A NUT-LOCKING DEVICE OR MECHANISM SUCH AS, BUT NOT LIMITED TO, LOCK NUTS, LOCK WASHERS, OR PALNUTS, TO PREVENT LOOSENING.
2. CONNECTION BOLTS SUBJECT TO DIRECT TENSION SHALL BE INSTALLED AND TIGHTENED AS PER SECTION 8.2.1 OF THE AISC SPECIFICATION FOR STRUCTURAL JOINTS USING A325 OR A490 BOLTS, LOCATED IN THE AISC MANUAL OF STEEL CONSTRUCTION. THE INSTALLATION PROCEDURE IS PARAPHRASED AS FOLLOWS:

   8.2.1 TURN-OF-THE-NUT TIGHTENING

   BOLTS SHALL BE INSTALLED IN ALL HOLES OF THE CONNECTION AND BROUGHT TO A SNUG TIGHT CONDITION AS DEFINED IN SECTION 8.1, UNTIL ALL THE BOLTS ARE SIMULTANEOUSLY SNUG TIGHT AND THE CONNECTION IS FULLY COMPACTED. FOLLOWING THIS INITIAL OPERATION ALL BOLTS IN THE CONNECTION SHALL BE TIGHTENED FURTHER BY THE APPLICABLE AMOUNT OF ROTATION SPECIFIED BELOW. DURING THE TIGHTENING OPERATION THERE SHALL BE NO ROTATION OF THE PART NOT TURNED BY THE WRENCH. TIGHTENING SHALL PROGRESS SYSTEMATICALLY FROM THE MOST RIGID PART OF THE JOINT IN A MANNER THAT WILL MINIMIZE RELAXATION OF PREVIOUSLY PRETENSIONED BOLTS.
3. PRE-TENSIONED BOLTS AS SPECIFIED ON THE DRAWINGS SHALL BE TIGHTENED IN ACCORDANCE WITH AISC - "TURN OF THE NUT" METHOD, USING THE CHART BELOW.

BOLT LENGTHS UP TO AND INCLUDING FOUR DIA.

½"	BOLTS UP TO AND INCLUDING 2.0 INCH LENGTH	+⅓ TURN BEYOND SNUG TIGHT
⅝"	BOLTS UP TO AND INCLUDING 2.5 INCH LENGTH	+⅓ TURN BEYOND SNUG TIGHT
¾"	BOLTS UP TO AND INCLUDING 3.0 INCH LENGTH	+⅓ TURN BEYOND SNUG TIGHT
⅞"	BOLTS UP TO AND INCLUDING 3.5 INCH LENGTH	+⅓ TURN BEYOND SNUG TIGHT
1"	BOLTS UP TO AND INCLUDING 4.0 INCH LENGTH	+⅓ TURN BEYOND SNUG TIGHT

BOLT LENGTHS OVER FOUR DIA. BUT NOT EXCEEDING EIGHT DIA.

½"	BOLTS 2.25 TO 4.0 INCH LENGTH	+½ TURN BEYOND SNUG TIGHT
⅝"	BOLTS 2.75 TO 5.0 INCH LENGTH	+½ TURN BEYOND SNUG TIGHT
¾"	BOLTS 3.25 TO 6.0 INCH LENGTH	+½ TURN BEYOND SNUG TIGHT
⅞"	BOLTS 3.75 TO 7.0 INCH LENGTH	+½ TURN BEYOND SNUG TIGHT
1"	BOLTS 4.25 TO 8.0 INCH LENGTH	+½ TURN BEYOND SNUG TIGHT

4. ALL ONE-SIDED BOLTS SHALL BE TIGHTENED IN ACCORDANCE WITH MANUFACTURER RECOMMENDATIONS.

NOMINAL HOLE DIMENSIONS

BOLT DIAMETER	STANDARD HOLE	SHORT SLOT
½	9/16	9/16 X 11/16
⅝	11/16	11/16 X ⅞
¾	13/16	13/16 X 1
⅞	15/16	15/16 X 1⅛
1	1 1/16	1 1/16 X 1 5/16

- DIMENSIONS GIVEN IN INCHES

BOLT EDGE AND SPACING

BOLT DIAMETER	MIN. EDGE	SPACING
½	⅞	1½
⅝	1⅛	1⅞
¾	1¼	2¼
⅞	1½	2⅝
1	1¾	3

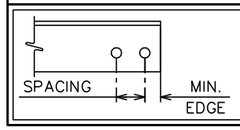

- DIMENSIONS GIVEN IN INCHES

WORKABLE GAGES

LEG	4	3½	3	2½	2	1¾
G	2	1¾	1½	1¼	1	⅞

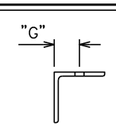

- WORKABLE GAGES GIVEN IN INCHES
- MATCH EXISTING WHEN APPLICABLE

ALLOWABLE ANGLE COPE

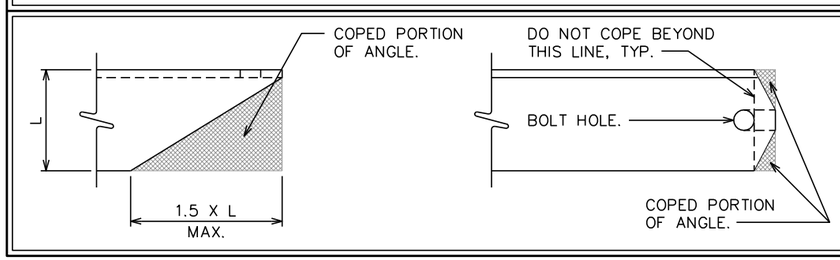

PLANS PREPARED FOR:

PHOENIX TOWER INTERNATIONAL
1001 YAMATO ROAD, SUITE 105
BOCA RATON, FL 33431
OFFICE: (561) 257-0557

PROJECT INFORMATION:

STRAITS TURNPIKE
SITE #: US-CT-1003

1021 STRAITS TURNPIKE
MIDDLEBURY, CT 06762
(NEW HAVEN COUNTY)

PLANS PREPARED BY:

TOWER ENGINEERING PROFESSIONALS
326 TRYON ROAD
RALEIGH, NC 27603
OFFICE: (919) 661-6351
www.tepgroup.net

SEAL:

STATE OF CONNECTICUT · GRAHAM MATTHEW ANDRES · 29538 · LICENSED · PROFESSIONAL ENGINEER

April 19, 2016

REV	DATE	ISSUED FOR:
0	04-19-16	MODIFICATION DRAWINGS

DRAWN BY: RWT CHECKED BY: JDB

SHEET TITLE:

PROJECT NOTES II

SHEET NUMBER: **N-3**

REVISION: 0

TEP #: 25628.47301

MODIFICATION SCHEDULE

NO.	MODIFICATION DESCRIPTION	ELEVATION (FT.)	SHEET
1	REPLACE EXISTING SINGLE ANGLE DIAGONAL BRACING WITH PROPOSED SINGLE ANGLE DIAGONAL BRACING.	106.7 – 120.0	S-2
2	MODIFICATION INSPECTION BY TEP. CONTACT TEP FOR FEE: PMI@TEPGROUP.NET	–	–

NOTE:
ANTENNAS AND OTHER APPURTENANCES MAY NEED TO BE TEMPORARILY REMOVED OR MOVED DURING THE INSTALLATION OF THE MODIFICATIONS SHOWN ABOVE.

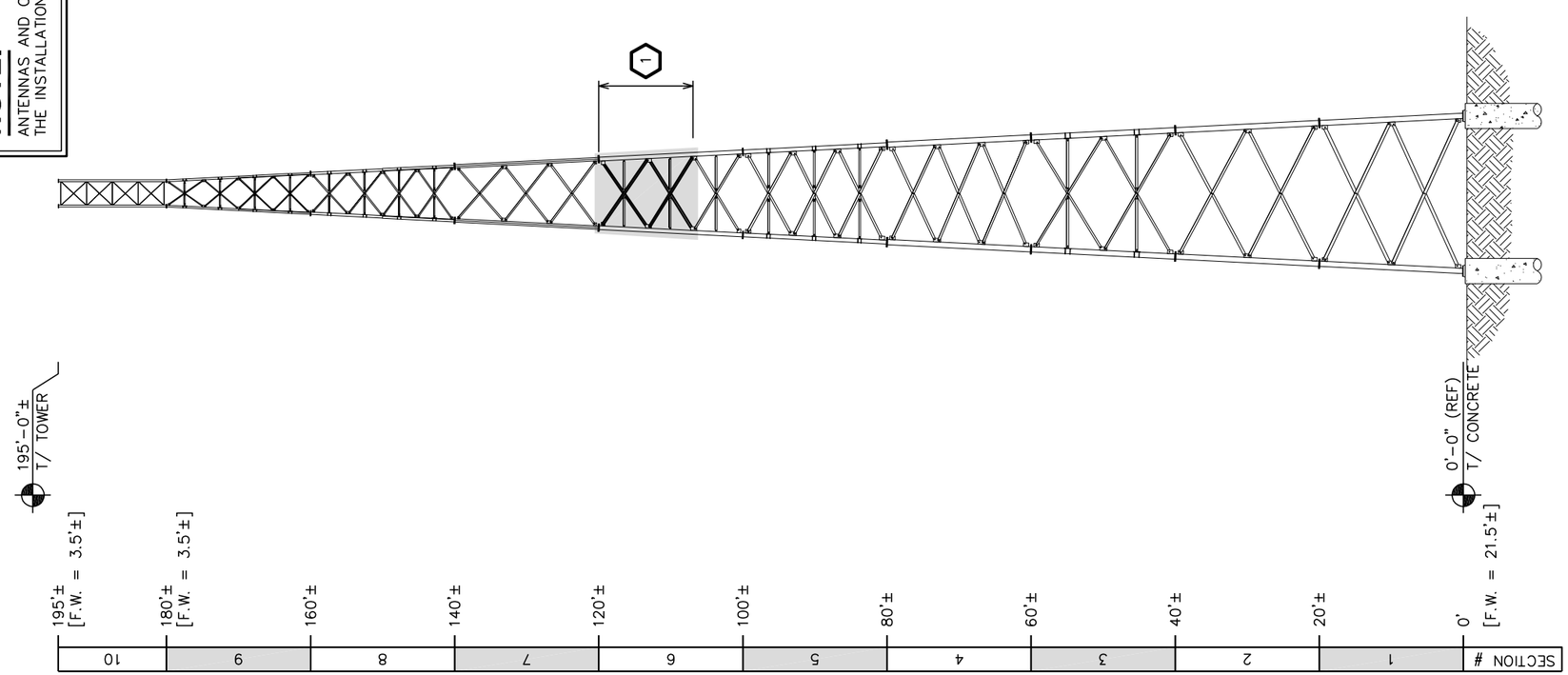

TOWER ELEVATION

SCALE: 1" = 20'

0 20 40
SCALE IN FEET

PLANS PREPARED FOR:

PHOENIX TOWER INTERNATIONAL
1001 YAMATO ROAD, SUITE 105
BOCA RATON, FL 33431
OFFICE: (561) 257-0557

PROJECT INFORMATION:

STRAITS TURNPIKE
SITE #: US-CT-1003

1021 STRAITS TURNPIKE
MIDDLEBURY, CT 06762
(NEW HAVEN COUNTY)

PLANS PREPARED BY:

TOWER ENGINEERING PROFESSIONALS
326 TRYON ROAD
RALEIGH, NC 27603
OFFICE: (919) 661-6351
www.tepgroup.net

SEAL:

STATE OF CONNECTICUT
GRAHAM ANDRES
29538
LICENSED
PROFESSIONAL ENGINEER

April 19, 2016

REV	DATE	ISSUED FOR:
0	04-19-16	MODIFICATION DRAWINGS

DRAWN BY: RWT | CHECKED BY: JDB

SHEET TITLE:
TOWER ELEVATION AND MODIFICATION SCHEDULE

SHEET NUMBER: **S-1**
REVISION: **0**
TEP #: 25628.47301

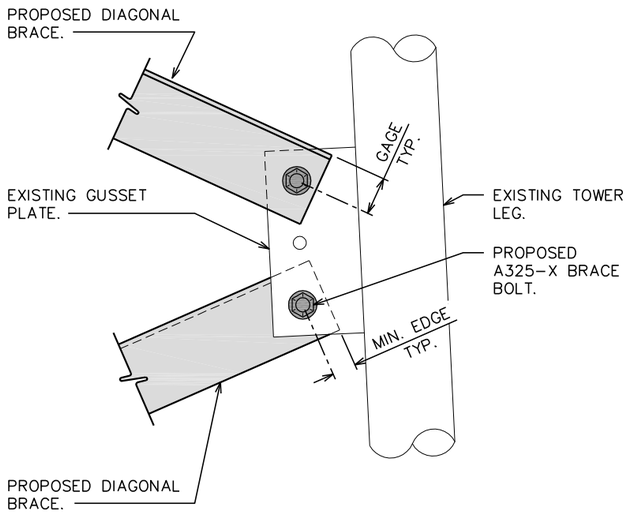

TYP. CONNECTION ALONG LEG

SCALE: N.T.S.

1

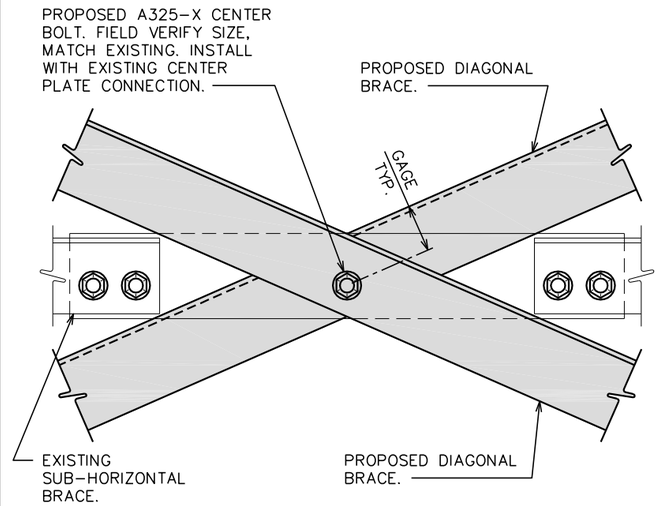

TYP. CONNECTION AT CENTER

SCALE: N.T.S.

2

NOTE:

1. SEE SHEET N-3 FOR GAGE, BOLT SPACING, MINIMUM EDGE DISTANCE, AND MAXIMUM ALLOWABLE ANGLE COPES.

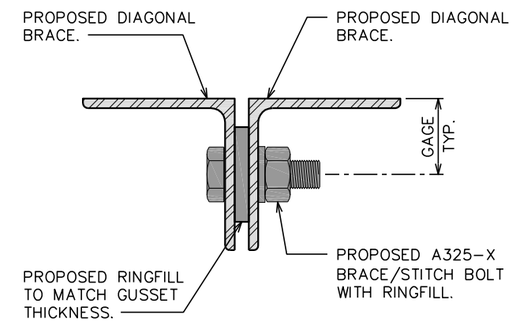

TYP. SECTION AT CENTER CONNECTION

SCALE: N.T.S.

DIAGONAL BRACE SCHEDULE

SECTION #	ELEVATION (FT.)	PANEL	DIAGONAL BRACE				BRACE BOLTS	CENTER BOLTS
			EXISTING (ASTM A36)	PROPOSED (ASTM A36)	AVERAGE LENGTH	QTY	BOLT X QTY (A325-X)	BOLT X QTY (A325-X)
6	106.7 – 120	SEE SHEET S-1	L3x3x3/16"	L3x3x1/4"	12.5'±	12	5/8"ø X 24	1/2"ø X 6

1. PRIOR TO FABRICATION AND INSTALLATION, CONTRACTOR SHALL FIELD VERIFY ALL LENGTHS AND QUANTITIES GIVEN. AVERAGE LENGTH AND QUANTITIES PROVIDED ARE FOR QUOTING PURPOSES ONLY, AND SHALL NOT BE USED FOR FABRICATION.
2. ALL CONNECTIONS NOT FULLY DETAILED ON THESE PLANS SHALL BE DETAILED BY THE STEEL FABRICATOR IN ACCORDANCE WITH THE AISC STEEL CONSTRUCTION MANUAL, LRFD, 13TH EDITION.

PLANS PREPARED FOR:

PHOENIX TOWER INTERNATIONAL

1001 YAMATO ROAD, SUITE 105
BOCA RATON, FL 33431
OFFICE: (561) 257-0557

PROJECT INFORMATION:

STRAITS TURNPIKE
SITE #: US-CT-1003

1021 STRAITS TURNPIKE
MIDDLEBURY, CT 06762
(NEW HAVEN COUNTY)

PLANS PREPARED BY:

TOWER ENGINEERING PROFESSIONALS
326 TRYON ROAD
RALEIGH, NC 27603
OFFICE: (919) 661-6351
www.tepgroup.net

SEAL:

STATE OF CONNECTICUT
GRAHAM E. MARRES
29538
LICENSED
PROFESSIONAL ENGINEER

April 19, 2016

REV	DATE	ISSUED FOR:
0	04-19-16	MODIFICATION DRAWINGS

DRAWN BY: RWT | CHECKED BY: JDB

SHEET TITLE:

DIAGONAL REPLACEMENT DETAILS

SHEET NUMBER: **S-2**

REVISION: 0

TEP #: 25628.47301