STRUCTURAL DESIGN DRAWINGS

SITE NAME:

STRAITS TURNPIKE

SITE NUMBER:

US-CT-1003

SITE ADDRESS:

1021 STRAITS TURNPIKE
MIDDLEBURY, CT 06762
(NEW HAVEN COUNTY)
N41°32'8.78", W73°5'21.27"

MODIFICATION PROVISIONS

THE MODIFICATIONS DEPICTED ON THESE DRAWINGS ARE BASED ON THE RECOMMENDATIONS OUTLINED IN THE STRUCTURAL MODIFICATION ANALYSIS REPORT COMPLETED BY TOWER ENGINEERING PROFESSIONALS (TEP), JOB#: 25628.47301 DATED APRIL 19, 2016 (REV 0) PER ANSI/TIA-222-F. THIS REPORT IS BASED ON A SPECIFIC ANTENNA LOADING AND COAX CONFIGURATION. SEE THE REPORT FOR THE ANTENNA AND COAX LOADING INFORMATION. ANY OTHER ANTENNA OR COAX CONFIGURATION REQUIRES REVIEW BY TEP. SATISFACTORY COMPLETION OF THE MODIFICATIONS INDICATED ON THESE DRAWINGS WILL RESULT IN THE STRUCTURE MEETING THE REQUIREMENTS OF THE SPECIFICATIONS UNDER WHICH THE STRUCTURAL WAS COMPLETED.

CONTRACTOR SHALL FIELD VERIFY ALL: DIMENSIONS, QUANTITIES, PART NUMBERS AND COAX/ANTENNA PLACEMENTS PRIOR TO: BIDDING, ORDERING MATERIALS, AND CONSTRUCTION.

INDEX OF SHEETS

NO.	SHEET TITLE	REV
T-1	TITLE SHEET	0
N-1	MI CHECKLIST AND NOTES	0
N-2	PROJECT NOTES I	0
N-3	PROJECT NOTES II	0
S-1	TOWER ELEVATION AND MODIFICATION SCHEDULE	0
S-2	DIAGONAL REPLACEMENT DETAILS	0

PROJECT TEAM

PROJECT CONTACT:

NAME	PHOENIX TOWER INTERNATIONAL
ADDRESS	1001 YAMATO ROAD, SUITE 105
CITY, STATE, ZIP	BOCA RATON, FL 33431
CONTACT	DAVID RODRIGUEZ
PHONE	(561) 257-0557
EMAIL	DRODRIGUEZ@PHOENIXINTNL.COM

ENGINEERING FIRM PROJECT MANAGER:

NAME	TOWER ENGINEERING PROFESSIONALS, INC.
ADDRESS	326 TRYON ROAD
CITY, STATE, ZIP	RALEIGH, NC 27603
CONTACT	ABRAHAM A. SHAH, P.E.
PHONE	(919) 661-6351
EMAIL	SDD@TEPGROUP.NET

PLANS PREPARED FOR:

PHOENIX TOWER INTERNATIONAL

1001 YAMATO ROAD, SUITE 105
BOCA RATON, FL 33431
OFFICE: (561) 257-0557

PLANS PREPARED BY:

TOWER ENGINEERING PROFESSIONALS
326 TRYON ROAD
RALEIGH, NC 27603
OFFICE: (919) 661-6351
www.tepgroup.net

SEAL:

STATE OF CONNECTICUT · ABRAHAM A. SHAH · 29538 · LICENSED · PROFESSIONAL ENGINEER

April 19, 2016

REV	DATE	ISSUED FOR:
0	04-19-16	MODIFICATION DRAWINGS

DRAWN BY: RWT | CHECKED BY: JDB

SHEET TITLE:

TITLE SHEET

SHEET NUMBER: **T-1**

REVISION: **0**

TEP #: 25628.47301

MI CHECKLIST

CONSTRUCTION/INSTALLATION INSPECTIONS AND TESTING REQUIRED (COMPLETED BY EOR)	REPORT ITEM
PRE-CONSTRUCTION	
X	MI CHECKLIST DRAWING
NA	EOR APPROVED SHOP DRAWINGS
NA	FABRICATION INSPECTION
NA	FABRICATOR CERTIFIED WELD INSPECTION
X	MATERIAL TEST REPORT (MTR)
NA	FABRICATOR NDE INSPECTION
NA	NDE REPORT OF MONOPOLE BASE PLATE
X	PACKING SLIPS
ADDITIONAL TESTING AND INSPECTIONS:	
CONSTRUCTION	
X	CONSTRUCTION INSPECTIONS
NA	CONTINUOUS FOUNDATION INSPECTIONS
NA	CONCRETE COMP. STRENGTH AND SLUMP TESTS
NA	GROUT COMP. STRENGTH (ASTM C109)
NA	POST INSTALLED ANCHOR ROD VERIFICATION
NA	BASE PLATE GROUT VERIFICATION
NA	CONTRACTOR'S CERTIFIED WELD INSPECTION AND NDE REPORTS
NA	EARTHWORK: LIFT AND DENSITY
X	ON SITE COLD GALVANIZING VERIFICATION
NA	GUY WIRE TENSION REPORT
X	GC AS-BUILT DOCUMENTS
ADDITIONAL TESTING AND INSPECTIONS:	
POST-CONSTRUCTION	
X	MI INSPECTOR REDLINE OR RECORD DRAWING(S)
NA	POST INSTALLED ANCHOR ROD PULL-OUT TESTING
X	PHOTOGRAPHS
ADDITIONAL TESTING AND INSPECTIONS:	

NOTE: X DENOTES A DOCUMENT NEEDED FOR THE PMI REPORT
NA DENOTES A DOCUMENT THAT IS NOT REQUIRED FOR THE PMI REPORT

MODIFICATION INSPECTION NOTES:

GENERAL

THE MODIFICATION INSPECTION (MI) IS A VISUAL INSPECTION OF TOWER MODIFICATIONS AND A REVIEW OF CONSTRUCTION INSPECTIONS AND OTHER REPORTS TO ENSURE THE INSTALLATION WAS CONSTRUCTED IN ACCORDANCE WITH THE CONTRACT DOCUMENTS, NAMELY THE MODIFICATION DRAWINGS, AS DESIGNED BY THE ENGINEER OF RECORD (EOR).

THE MI IS TO CONFIRM INSTALLATION CONFIGURATION AND WORKMANSHIP ONLY AND IS NOT A REVIEW OF THE MODIFICATION DESIGN ITSELF, NOR DOES THE MI INSPECTOR TAKE OWNERSHIP OF THE MODIFICATION DESIGN. OWNERSHIP OF THE STRUCTURAL MODIFICATION DESIGN EFFECTIVENESS AND INTEGRITY RESIDES WITH THE EOR AT ALL TIMES.

ALL MI'S SHALL BE CONDUCTED BY AN OWNER APPROVED ENGINEERING VENDOR THAT IS APPROVED TO PERFORM ELEVATED WORK FOR THE OWNER.

TO ENSURE THAT THE REQUIREMENTS OF THE MI ARE MET, IT IS VITAL THAT THE GENERAL CONTRACTOR (GC) AND THE MI INSPECTOR BEGIN COMMUNICATING AND COORDINATING AS SOON AS A PO IS RECEIVED. IT IS EXPECTED THAT EACH PARTY WILL BE PROACTIVE IN REACHING OUT TO THE OTHER PARTY. IF CONTACT INFORMATION IS NOT KNOWN, CONTACT THE PROJECT CONTACT LISTED ON SHEET T-1.

MI INSPECTOR

THE MI INSPECTOR IS REQUIRED TO CONTACT THE GC AS SOON AS RECEIVING A PO FOR THE MI TO, AT A MINIMUM:

- REVIEW THE REQUIREMENTS OF THE MI CHECKLIST
- WORK WITH THE GC TO DEVELOP A SCHEDULE TO CONDUCT ON-SITE INSPECTIONS, INCLUDING FOUNDATION INSPECTIONS

THE MI INSPECTOR IS RESPONSIBLE FOR COLLECTING ALL GENERAL CONTRACTOR (GC) INSPECTION AND TEST REPORTS, REVIEWING THE DOCUMENTS FOR ADHERENCE TO THE CONTRACT DOCUMENTS, CONDUCTING THE IN-FIELD INSPECTIONS, AND SUBMITTING THE MI REPORT TO THE OWNER.

GENERAL CONTRACTOR

THE GC IS REQUIRED TO CONTACT THE MI INSPECTOR AS SOON AS RECEIVING A PO FOR THE MODIFICATION INSTALLATION OR TURNKEY PROJECT TO, AT A MINIMUM:

- REVIEW THE REQUIREMENTS OF THE MI CHECKLIST.
- WORK WITH THE MI INSPECTOR TO DEVELOP A SCHEDULE TO CONDUCT ON-SITE MI INSPECTIONS, INCLUDING FOUNDATION INSPECTIONS.
- BETTER UNDERSTAND ALL INSPECTION AND TESTING REQUIREMENTS.

THE GC SHALL PERFORM AND RECORD THE TEST AND INSPECTION RESULTS IN ACCORDANCE WITH THE REQUIREMENTS OF THE MI CHECKLIST.

RECOMMENDATIONS

THE FOLLOWING RECOMMENDATIONS AND SUGGESTIONS ARE OFFERED TO ENHANCE THE EFFICIENCY AND EFFECTIVENESS OF DELIVERING A MI REPORT:

- IT IS SUGGESTED THAT THE GC PROVIDE A MINIMUM OF 5 BUSINESS DAYS NOTICE, PREFERABLY 10, TO THE MI INSPECTOR AS TO WHEN THE SITE WILL BE READY FOR THE MI TO BE CONDUCTED.
- THE GC AND MI INSPECTOR COORDINATE CLOSELY THROUGHOUT THE ENTIRE PROJECT.
- WHEN POSSIBLE, IT IS PREFERRED TO HAVE THE GC AND MI INSPECTOR ON-SITE SIMULTANEOUSLY FOR ANY GUY WIRE TENSIONING OR RE-TENSIONING OPERATIONS.
- IT MAY BE BENEFICIAL TO INSTALL ALL TOWER MODIFICATIONS PRIOR TO CONDUCTING THE FOUNDATION INSPECTIONS TO ALLOW FOUNDATION AND MI INSPECTION(S) TO COMMENCE WITH ONE SITE VISIT.
- WHEN POSSIBLE, IT IS PREFERRED TO HAVE THE GC AND MI INSPECTOR ON-SITE DURING THE MI TO HAVE ANY DEFICIENCIES CORRECTED DURING THE INITIAL MI. THEREFORE, THE GC MAY CHOOSE TO COORDINATE THE MI CAREFULLY TO ENSURE ALL CONSTRUCTION FACILITIES ARE AT THEIR DISPOSAL WHEN THE MI INSPECTOR IS ON SITE.

CANCELLATION OR DELAYS IN SCHEDULED MI

IF THE GC AND MI INSPECTOR AGREE TO A DATE ON WHICH THE MI WILL BE CONDUCTED, AND EITHER PARTY CANCELS OR DELAYS, THE OWNER SHALL NOT BE RESPONSIBLE FOR ANY COSTS, FEES, LOSS OF DEPOSITS AND/OR OTHER PENALTIES RELATED TO THE CANCELLATION OR DELAY INCURRED BY EITHER PARTY FOR ANY TIME (E.G. TRAVEL AND LODGING, COSTS OF KEEPING EQUIPMENT ON-SITE, ETC.). IF THE OWNER CONTRACTS DIRECTLY FOR A THIRD PARTY MI, EXCEPTIONS MAY BE MADE IN THE EVENT THAT THE DELAY/CANCELLATION IS CAUSED BY WEATHER OR OTHER CONDITIONS THAT MAY COMPROMISE THE SAFETY OF THE PARTIES INVOLVED.

CORRECTION OF FAILING MI'S

IF THE MODIFICATION INSTALLATION WOULD FAIL THE MI ("FAILED MI"), THE GC SHALL WORK WITH THE OWNER TO COORDINATE A REMEDIATION PLAN IN ONE OF TWO WAYS:

- CORRECT FAILING ISSUES TO COMPLY WITH THE SPECIFICATIONS CONTAINED IN THE ORIGINAL CONTRACT DOCUMENTS AND COORDINATE A SUPPLEMENT MI.
- OR, WITH THE OWNER'S APPROVAL, THE GC MAY WORK WITH THE EOR TO RE-ANALYZE THE MODIFICATION/REINFORCEMENT USING THE AS-BUILT CONDITION.

MI VERIFICATION INSPECTIONS

THE OWNER RESERVES THE RIGHT TO CONDUCT A MI VERIFICATION INSPECTION TO VERIFY THE ACCURACY AND COMPLETENESS OF PREVIOUSLY COMPLETED MI INSPECTION(S) ON TOWER MODIFICATION PROJECTS.

ALL VERIFICATION INSPECTIONS SHALL BE HELD TO THE SAME SPECIFICATIONS AND REQUIREMENTS IN THE CONTRACT DOCUMENTS.

VERIFICATION INSPECTION MAY BE CONDUCTED BY AN INDEPENDENT INSPECTION FIRM AFTER A MODIFICATION PROJECT IS COMPLETED, AS MARKED BY THE DATE OF AN ACCEPTED "PASSING MI" OR "PASS AS NOTED MI" REPORT FOR THE ORIGINAL PROJECT.

REQUIRED PHOTOS

BETWEEN THE GC AND THE MI INSPECTOR THE FOLLOWING PHOTOGRAPHS, AT A MINIMUM, ARE TO BE TAKEN AND INCLUDED IN THE MI REPORT:

- PRE-CONSTRUCTION GENERAL SITE CONDITION
- PHOTOGRAPHS DURING THE REINFORCEMENT MODIFICATION CONSTRUCTION/ERECTION AND INSPECTION:
  - RAW MATERIALS
  - PHOTOS OF ALL CRITICAL DETAILS
  - FOUNDATION MODIFICATIONS
  - WELD PREPARATION
  - BOLT INSTALLATION AND TORQUE
  - FINAL INSTALLED CONDITION
  - SURFACE COATING REPAIR
- POST CONSTRUCTION PHOTOGRAPHS
  - FINAL IN FIELD CONDITION

PHOTOS OF ELEVATED MODIFICATIONS TAKEN FROM THE GROUND SHALL BE CONSIDERED INADEQUATE.

PLANS PREPARED FOR:

PHOENIX TOWER INTERNATIONAL
1001 YAMATO ROAD, SUITE 105
BOCA RATON, FL 33431
OFFICE: (561) 257-0557

PROJECT INFORMATION:

STRAITS TURNPIKE
SITE #: US-CT-1003

1021 STRAITS TURNPIKE
MIDDLEBURY, CT 06762
(NEW HAVEN COUNTY)

PLANS PREPARED BY:

TOWER ENGINEERING PROFESSIONALS
326 TRYON ROAD
RALEIGH, NC 27603
OFFICE: (919) 661-6351
www.tepgroup.net

SEAL:

STATE OF CONNECTICUT · GRANT ANDRES · 29538 · LICENSED · PROFESSIONAL ENGINEER

April 19, 2016

REV	DATE	ISSUED FOR:
0	04-19-16	MODIFICATION DRAWINGS

DRAWN BY: RWT CHECKED BY: JDB

SHEET TITLE:

MI CHECKLIST AND NOTES

SHEET NUMBER: **N-1**

REVISION: 0

TEP #: 25628.47301

GENERAL NOTES:

1. ALL REFERENCES TO THE OWNER IN THESE DOCUMENTS SHALL BE CONSIDERED PHOENIX TOWER INTERNATIONAL OR ITS DESIGNATED REPRESENTATIVE.
2. ALL WORK PRESENTED ON THESE DRAWINGS MUST BE COMPLETED BY THE CONTRACTOR UNLESS NOTED OTHERWISE. THE CONTRACTOR MUST HAVE CONSIDERABLE EXPERIENCE IN PERFORMANCE OF WORK SIMILAR TO THAT DESCRIBED HEREIN. BY ACCEPTANCE OF THIS ASSIGNMENT, THE CONTRACTOR IS ATTESTING THAT HE DOES HAVE SUFFICIENT EXPERIENCE AND ABILITY, THAT HE IS KNOWLEDGEABLE OF THE WORK TO BE PERFORMED AND THAT HE IS PROPERLY LICENSED AND PROPERLY REGISTERED TO DO THIS WORK IN THE STATE OF CONNECTICUT.
3. WORK SHALL BE COMPLETED IN ACCORDANCE WITH THE 2005 CONNECTICUT STATE BUILDING CODE.
4. UNLESS SHOWN OR NOTED OTHERWISE ON THE CONTRACT DRAWINGS, OR IN THE SPECIFICATIONS, THE FOLLOWING NOTES SHALL APPLY TO THE MATERIALS LISTED HEREIN, AND TO THE PROCEDURES TO BE USED ON THIS PROJECT.
5. ALL HARDWARE ASSEMBLY MANUFACTURER'S INSTRUCTIONS SHALL BE FOLLOWED EXACTLY AND SHALL SUPERSEDE ANY CONFLICTING NOTES ENCLOSED HEREIN.
6. IT IS THE CONTRACTOR'S SOLE RESPONSIBILITY TO DETERMINE ERECTION PROCEDURE AND SEQUENCE TO ENSURE THE SAFETY OF THE STRUCTURE AND IT'S COMPONENT PARTS DURING ERECTION AND/OR FIELD MODIFICATIONS. THIS INCLUDES, BUT IS NOT LIMITED TO, THE ADDITION OF TEMPORARY BRACING, GUYS OR TIE DOWNS THAT MAY BE NECESSARY. SUCH MATERIAL SHALL BE REMOVED AND SHALL REMAIN THE PROPERTY OF THE CONTRACTOR AFTER THE COMPLETION OF THE PROJECT.
7. ALL DIMENSIONS, ELEVATIONS, AND EXISTING CONDITIONS SHOWN ON THE DRAWINGS SHALL BE FIELD VERIFIED BY THE CONTRACTOR PRIOR TO BEGINNING ANY MATERIALS ORDERING, FABRICATION OR CONSTRUCTION WORK ON THIS PROJECT. CONTRACTOR SHALL NOT SCALE CONTRACT DRAWINGS IN LIEU OF FIELD VERIFICATIONS. ANY DISCREPANCIES SHALL BE IMMEDIATELY BROUGHT TO THE ATTENTION OF THE OWNER AND THE OWNER'S ENGINEER. THE DISCREPANCIES MUST BE RESOLVED BEFORE THE CONTRACTOR IS TO PROCEED WITH THE WORK. THE CONTRACT DOCUMENTS DO NOT INDICATE THE METHOD OF CONSTRUCTION. THE CONTRACTOR SHALL SUPERVISE AND DIRECT THE WORK AND SHALL BE SOLELY RESPONSIBLE FOR ALL CONSTRUCTION MEANS, METHODS, TECHNIQUES, SEQUENCES, AND PROCEDURES. OBSERVATION VISITS TO THE SITE BY THE OWNER AND/OR THE ENGINEER SHALL NOT INCLUDE INSPECTION OF THE PROTECTIVE MEASURES OR THE PROCEDURES.
8. ALL MATERIALS AND EQUIPMENT FURNISHED SHALL BE NEW AND OF GOOD QUALITY, FREE FROM FAULTS AND DEFECTS AND IN CONFORMANCE WITH THE CONTRACT DOCUMENTS. ANY AND ALL SUBSTITUTIONS MUST BE PROPERLY APPROVED AND AUTHORIZED IN WRITING BY THE OWNER AND ENGINEER PRIOR TO INSTALLATION. THE CONTRACTOR SHALL FURNISH SATISFACTORY EVIDENCE AS TO THE KIND AND QUALITY OF THE MATERIALS AND EQUIPMENT BEING SUBSTITUTED.
9. THE CONTRACTOR SHALL BE RESPONSIBLE FOR INITIATING, MAINTAINING, AND SUPERVISING ALL SAFETY PRECAUTIONS AND PROGRAMS IN CONNECTION WITH THE WORK. THE CONTRACTOR IS RESPONSIBLE FOR ENSURING THAT THIS PROJECT AND RELATED WORK COMPLIES WITH ALL APPLICABLE LOCAL, STATE, AND FEDERAL SAFETY CODES AND REGULATIONS GOVERNING THIS WORK.
10. ACCESS TO THE PROPOSED WORK SITE MAY BE RESTRICTED. THE CONTRACTOR SHALL COORDINATE INTENDED CONSTRUCTION ACTIVITY, INCLUDING WORK SCHEDULE AND MATERIALS ACCESS, WITH THE RESIDENT LEASING AGENT FOR APPROVAL.
11. ALL PERMITS THAT MUST BE OBTAINED ARE THE RESPONSIBILITY OF THE CONTRACTOR. THE CONTRACTOR WILL BE RESPONSIBLE FOR ABIDING BY ALL CONDITIONS AND REQUIREMENTS OF THE PERMITS.
12. IF APPLICABLE, ALL CONCRETE WORK SHALL COMPLY TO LOCAL CODES AND THE ACI 318-05, "BUILDING REQUIREMENTS FOR STRUCTURAL CONCRETE".
13. 24 HOURS PRIOR TO THE BEGINNING OF ANY CONSTRUCTION, THE CONTRACTOR MUST NOTIFY THE APPLICABLE JURISDICTIONAL (STATE, COUNTY OR CITY) ENGINEER.
14. ALL MATERIALS AND WORKMANSHIP SHALL BE WARRANTED FOR ONE YEAR FROM ACCEPTANCE DATE.
15. ALL TOWER DIMENSIONS SHALL BE VERIFIED WITH THE PLANS (LATEST REVISION) PRIOR TO COMMENCING CONSTRUCTION. NOTIFY THE ENGINEER IMMEDIATELY IF ANY DISCREPANCIES ARE DISCOVERED. THE OWNER SHALL HAVE A SET OF APPROVED PLANS AVAILABLE AT THE SITE AT ALL TIMES WHILE WORK IS BEING PERFORMED. A DESIGNATED RESPONSIBLE EMPLOYEE SHALL BE AVAILABLE FOR CONTACT BY GOVERNING AGENCY INSPECTORS.
16. THE CLIMBING FACILITIES, SAFETY CLIMB AND ALL PARTS THEREOF SHALL NOT BE IMPEDED, MODIFIED OR ALTERED WITHOUT THE EXPRESS WRITTEN APPROVAL OF THE TOWER OWNER OR ENGINEER OF RECORD.
17. ANY WORK PERFORMED WITHOUT A PREFABRICATION MAPPING IS DONE AT THE RISK OF THE GC AND/OR FABRICATOR.

ATTENTION

ALL CONSTRUCTION MEANS AND METHODS; INCLUDING BUT NOT LIMITED TO, ERECTION PLANS, RIGGING PLANS, CLIMBING PLANS, AND RESCUE PLANS SHALL BE THE RESPONSIBILITY OF THE GENERAL CONTRACTOR RESPONSIBLE FOR THE EXECUTION OF THE WORK CONTAINED HEREIN AND SHALL MEET ANSI/TIA 1019 (LATEST EDITION), OSHA, AND GENERAL INDUSTRY STANDARDS. ALL RIGGING PLANS SHALL ADHERE TO ANSI/TIA-1019 (LATEST EDITION) INCLUDING THE REQUIRED INVOLVEMENT OF A QUALIFIED ENGINEER FOR CLASS IV CONSTRUCTION.

PLANS PREPARED FOR:

PHOENIX TOWER INTERNATIONAL

1001 YAMATO ROAD, SUITE 105
BOCA RATON, FL 33431
OFFICE: (561) 257-0557

PROJECT INFORMATION:

STRAITS TURNPIKE
SITE #: US-CT-1003

1021 STRAITS TURNPIKE
MIDDLEBURY, CT 06762
(NEW HAVEN COUNTY)

PLANS PREPARED BY:

TOWER ENGINEERING PROFESSIONALS
326 TRYON ROAD
RALEIGH, NC 27603
OFFICE: (919) 661-6351
www.tepgroup.net

SEAL:

STATE OF CONNECTICUT · GRAHAM ANDRES · 29538 · LICENSED · PROFESSIONAL ENGINEER

April 19, 2016

REV	DATE	ISSUED FOR:
0	04-19-16	MODIFICATION DRAWINGS

DRAWN BY: RWT | CHECKED BY: JDB

SHEET TITLE:

PROJECT NOTES I

SHEET NUMBER: **N-2**

REVISION: **0**

TEP #: 25628.47301

STRUCTURAL STEEL NOTES:

1. THE FABRICATION AND ERECTION OF STRUCTURAL STEEL SHALL CONFORM TO THE AISC STEEL CONSTRUCTION MANUAL, LOAD AND RESISTANCE FACTOR DESIGN (LRFD), 13TH EDITION.
2. UNLESS OTHERWISE NOTED, ALL STRUCTURAL ELEMENTS SHALL CONFORM TO THE FOLLOWING REQUIREMENTS:
   STRUCTURAL STEEL:
   - ANGLE: ASTM A36
   - PIPE/TUBE: ASTM A500-46
   - PLATE: ASTM A36 (SELF SUPPORTING AND GUYED TOWERS)
   - PLATE: ASTM A572-65 (MONOPOLE)

   A. ALL BOLTS, ASTM A325 TYPE I GALVANIZED HIGH STRENGTH BOLTS.
   B. ALL U-BOLTS, ASTM A193 GRADE B7
   C. ALL NUTS, ASTM A563 CARBON AND ALLOY STEEL NUTS.
   D. ALL WASHERS, ASTM F436 HARDENED STEEL WASHERS.
3. ALL CONNECTIONS NOT FULLY DETAILED ON THESE PLANS SHALL BE DETAILED BY THE STEEL FABRICATOR IN ACCORDANCE WITH AISC STEEL CONSTRUCTION MANUAL, LRFD, 13TH EDITION.
4. HOLES SHALL NOT BE FLAME CUT THROUGH STEEL UNLESS APPROVED BY THE ENGINEER.
5. HOT-DIP GALVANIZE ALL ITEMS UNLESS OTHERWISE NOTED, AFTER FABRICATION WHERE PRACTICABLE. GALVANIZING: ASTM A123, ASTM, A153/A153M OR ASTM A653/A653M, G90, AS APPLICABLE. ADDITIONALLY, ALL NEW STEEL SHALL BE PAINTED TO MATCH EXISTING STEEL. CONTRACTOR SHALL OBTAIN WRITTEN PERMISSION TO PROTECT STEEL BY ANY OTHER MEANS.
6. REPAIR DAMAGED SURFACES WITH GALVANIZING REPAIR METHOD AND PAINT CONFORMING TO ASTM A780 OR BY APPLICATION OF STICK OR THICK PASTED MATERIAL SPECIFICALLY DESIGNED FOR REPAIR OF GALVANIZING. CLEAN AREAS TO BE REPAIRED AND REMOVE SLAG FROM WELDS. HEAT SURFACES TO WHICH STICK OR PASTE MATERIAL IS APPLIED, WITH A TORCH TO A TEMPERATURE SUFFICIENT TO MELT THE METALLICS IN STICK OR PASTED; SPREAD MOLTEN MATERIAL UNIFORMLY OVER SURFACES TO BE COATED AND WIPE OFF EXCESS MATERIAL. AFTER REPAIR, STEEL SHALL BE REPAINTED TO MATCH EXISTING FINISH (IF APPLICABLE).
7. A NUT LOCKING DEVICE SHALL BE INSTALLED ON ALL PROPOSED AND/OR REPLACED BOLTS.
8. ALL PROPOSED AND/OR REPLACED BOLTS SHALL BE OF SUFFICIENT LENGTH TO EXCLUDE THE THREADS FROM THE SHEAR PLANE.
9. ALL PROPOSED AND/OR REPLACED BOLTS SHALL BE OF SUFFICIENT LENGTH SUCH THAT THE END OF THE BOLT BE AT LEAST FLUSH WITH THE FACE OF THE NUT. IT IS NOT PERMITTED FOR THE BOLT END TO BE BELOW THE FACE OF THE NUT AFTER TIGHTENING IS COMPLETED.
10. GALVANIZED ASTM A325 BOLTS SHALL NOT BE REUSED.

WELDING NOTES:

1. ALL WELDING SHALL BE IN ACCORDANCE WITH THE AWS D1.1/D1.1M: 2004 "STRUCTURAL WELDING CODE-STEEL".
2. ALL WELDING SHALL BE PERFORMED BY AWS CERTIFIED WELDERS.
3. CONTRACTOR SHALL RETAIN AN AWS CERTIFIED WELD INSPECTOR TO PERFORM VISUAL INSPECTIONS ON FIELD WELDS. A LETTER AND REPORT SHALL BE ISSUED TO THE CONTRACTOR. CONTRACTOR SHALL SUBMIT LETTER AND REPORT TO TOWER ENGINEERING PROFESSIONALS.
4. GRIND THE SURFACE ADJACENT TO THE WELD FOR A DISTANCE OF 2" MINIMUM ALL AROUND. GRIND THE SURFACE OF THE ROD TO BE INSTALLED FOR A DISTANCE OF 2" MINIMUM ALL AROUND THE AREA TO BE WELDED. ENSURE BOTH AREAS ARE 100% FREE OF ALL GALVANIZING. SURFACES TO BE WELDED SHALL BE FREE FROM SCALE, SLAG, RUST, MOISTURE, GREASE OR ANY OTHER FOREIGN MATERIAL THAT WOULD PREVENT PROPER WELDING.
5. DO NOT WELD IF THE TEMPERATURE OF THE STEEL IN THE VICINITY OF THE WELD AREA IS BELOW 0°F. THE MINIMUM PREHEAT AND INTERPASS TEMPERATURE REQUIREMENTS SHALL COMPLY WITH SECTION 3.5.1 AND TABLE 3.2 OF THE AWS D1.1/D1.1M:2004.
6. DO NOT WELD ON WET OR FROST-COVERED SURFACES & PROVIDE ADEQUATE PROTECTION FROM HIGH WINDS.
7. FOR ALL WELDING, USE 70 KSI LOW HYDROGEN ELECTRODES. ELECTRODES SHALL BE APPROPRIATE FOR THE WELDING POSITION REQUIRED TO MAKE THE JOINT.
8. AFTER FINAL INSPECTION, THE AREA OF THE WELDS, THE INSTALLATION AND ALL SURFACES DAMAGED BY WELDING OR GRINDING SHALL RECEIVE A COLD-GALVANIZED COATING. THIS COATING SHALL BE APPLIED BY BRUSH. THE GALVANIZING COMPOUND SHALL CONTAIN A MINIMUM OF 95% ± PURE ZINC. THE FINISHED COATING SHALL BE A MINIMUM THICKNESS OF 3 MILS.
9. FOR MONOPOLE TOWERS FULL PENETRATION WELDS IN THE VICINITY OF THE BASE OF THE TOWER ARE REQUIRED TO BE 100% NDE INSPECTED BY ULTRASONIC TESTING (UT) IN ACCORDANCE WITH AWS D1.1.
10. FOR MONOPOLE TOWERS PARTIAL PENETRATION AND FILLET WELDS IN THE VICINITY OF THE BASE OF THE TOWER ARE REQUIRED TO BE 50% NDE INSPECTED BY MAGNETIC PARTICLE (MT) IN ACCORDANCE WITH AWS D1.1.
11. PROVIDE WELDS ALL AROUND OR ADD SEAL WELDS WHERE STRUCTURAL WELDS ARE NOT SPECIFIED.

BOLT TIGHTENING PROCEDURE:

1. UNLESS OTHERWISE NOTED ON DRAWINGS OR BELOW ALL BOLTED CONNECTIONS SHALL BE BROUGHT TO A SNUG TIGHT CONDITION AS DEFINED IN SECTION 8.1 OF THE AISC SPECIFICATION FOR STRUCTURAL JOINTS USING A325 OR A490 BOLTS, LOCATED IN THE AISC MANUAL OF STEEL CONSTRUCTION. ALL SNUG TIGHT BOLTS SHALL BE INSTALLED WITH A NUT-LOCKING DEVICE OR MECHANISM SUCH AS, BUT NOT LIMITED TO, LOCK NUTS, LOCK WASHERS, OR PALNUTS, TO PREVENT LOOSENING.
2. CONNECTION BOLTS SUBJECT TO DIRECT TENSION SHALL BE INSTALLED AND TIGHTENED AS PER SECTION 8.2.1 OF THE AISC SPECIFICATION FOR STRUCTURAL JOINTS USING A325 OR A490 BOLTS, LOCATED IN THE AISC MANUAL OF STEEL CONSTRUCTION. THE INSTALLATION PROCEDURE IS PARAPHRASED AS FOLLOWS:

   8.2.1 TURN-OF-THE-NUT TIGHTENING

   BOLTS SHALL BE INSTALLED IN ALL HOLES OF THE CONNECTION AND BROUGHT TO A SNUG TIGHT CONDITION AS DEFINED IN SECTION 8.1, UNTIL ALL THE BOLTS ARE SIMULTANEOUSLY SNUG TIGHT AND THE CONNECTION IS FULLY COMPACTED. FOLLOWING THIS INITIAL OPERATION ALL BOLTS IN THE CONNECTION SHALL BE TIGHTENED FURTHER BY THE APPLICABLE AMOUNT OF ROTATION SPECIFIED BELOW. DURING THE TIGHTENING OPERATION THERE SHALL BE NO ROTATION OF THE PART NOT TURNED BY THE WRENCH. TIGHTENING SHALL PROGRESS SYSTEMATICALLY FROM THE MOST RIGID PART OF THE JOINT IN A MANNER THAT WILL MINIMIZE RELAXATION OF PREVIOUSLY PRETENSIONED BOLTS.
3. PRE-TENSIONED BOLTS AS SPECIFIED ON THE DRAWINGS SHALL BE TIGHTENED IN ACCORDANCE WITH AISC - "TURN OF THE NUT" METHOD, USING THE CHART BELOW.

BOLT LENGTHS UP TO AND INCLUDING FOUR DIA.

½"	BOLTS UP TO AND INCLUDING 2.0 INCH LENGTH	+⅓ TURN BEYOND SNUG TIGHT
⅝"	BOLTS UP TO AND INCLUDING 2.5 INCH LENGTH	+⅓ TURN BEYOND SNUG TIGHT
¾"	BOLTS UP TO AND INCLUDING 3.0 INCH LENGTH	+⅓ TURN BEYOND SNUG TIGHT
⅞"	BOLTS UP TO AND INCLUDING 3.5 INCH LENGTH	+⅓ TURN BEYOND SNUG TIGHT
1"	BOLTS UP TO AND INCLUDING 4.0 INCH LENGTH	+⅓ TURN BEYOND SNUG TIGHT

BOLT LENGTHS OVER FOUR DIA. BUT NOT EXCEEDING EIGHT DIA.

½"	BOLTS 2.25 TO 4.0 INCH LENGTH	+½ TURN BEYOND SNUG TIGHT
⅝"	BOLTS 2.75 TO 5.0 INCH LENGTH	+½ TURN BEYOND SNUG TIGHT
¾"	BOLTS 3.25 TO 6.0 INCH LENGTH	+½ TURN BEYOND SNUG TIGHT
⅞"	BOLTS 3.75 TO 7.0 INCH LENGTH	+½ TURN BEYOND SNUG TIGHT
1"	BOLTS 4.25 TO 8.0 INCH LENGTH	+½ TURN BEYOND SNUG TIGHT

4. ALL ONE-SIDED BOLTS SHALL BE TIGHTENED IN ACCORDANCE WITH MANUFACTURER RECOMMENDATIONS.

NOMINAL HOLE DIMENSIONS

BOLT DIAMETER	STANDARD HOLE	SHORT SLOT
½	9/16	9/16 X 11/16
⅝	11/16	11/16 X ⅞
¾	13/16	13/16 X 1
⅞	15/16	15/16 X 1⅛
1	1 1/16	1 1/16 X 1 5/16

- DIMENSIONS GIVEN IN INCHES

BOLT EDGE AND SPACING

BOLT DIAMETER	MIN. EDGE	SPACING
½	⅞	1½
⅝	1⅛	1⅞
¾	1¼	2¼
⅞	1½	2⅝
1	1¾	3

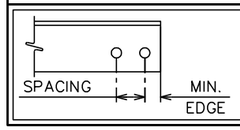

- DIMENSIONS GIVEN IN INCHES

WORKABLE GAGES

LEG	4	3½	3	2½	2	1¾
G	2	1¾	1½	1¼	1	⅞

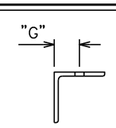

- WORKABLE GAGES GIVEN IN INCHES
- MATCH EXISTING WHEN APPLICABLE

ALLOWABLE ANGLE COPE

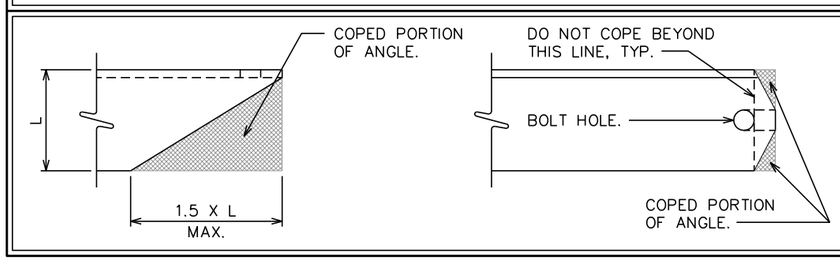

PLANS PREPARED FOR:

PHOENIX TOWER INTERNATIONAL
1001 YAMATO ROAD, SUITE 105
BOCA RATON, FL 33431
OFFICE: (561) 257-0557

PROJECT INFORMATION:

STRAITS TURNPIKE
SITE #: US-CT-1003

1021 STRAITS TURNPIKE
MIDDLEBURY, CT 06762
(NEW HAVEN COUNTY)

PLANS PREPARED BY:

TOWER ENGINEERING PROFESSIONALS
326 TRYON ROAD
RALEIGH, NC 27603
OFFICE: (919) 661-6351
www.tepgroup.net

SEAL:

STATE OF CONNECTICUT · GRAHAM MATTHEW ANDRES · 29538 · LICENSED · PROFESSIONAL ENGINEER

April 19, 2016

REV	DATE	ISSUED FOR:
0	04-19-16	MODIFICATION DRAWINGS

DRAWN BY: RWT CHECKED BY: JDB

SHEET TITLE:

PROJECT NOTES II

SHEET NUMBER: **N-3**

REVISION: 0

TEP #: 25628.47301

MODIFICATION SCHEDULE

NO.	MODIFICATION DESCRIPTION	ELEVATION (FT.)	SHEET
1	REPLACE EXISTING SINGLE ANGLE DIAGONAL BRACING WITH PROPOSED SINGLE ANGLE DIAGONAL BRACING.	106.7 – 120.0	S-2
2	MODIFICATION INSPECTION BY TEP. CONTACT TEP FOR FEE: PMI@TEPGROUP.NET	–	–

NOTE:
ANTENNAS AND OTHER APPURTENANCES MAY NEED TO BE TEMPORARILY REMOVED OR MOVED DURING THE INSTALLATION OF THE MODIFICATIONS SHOWN ABOVE.

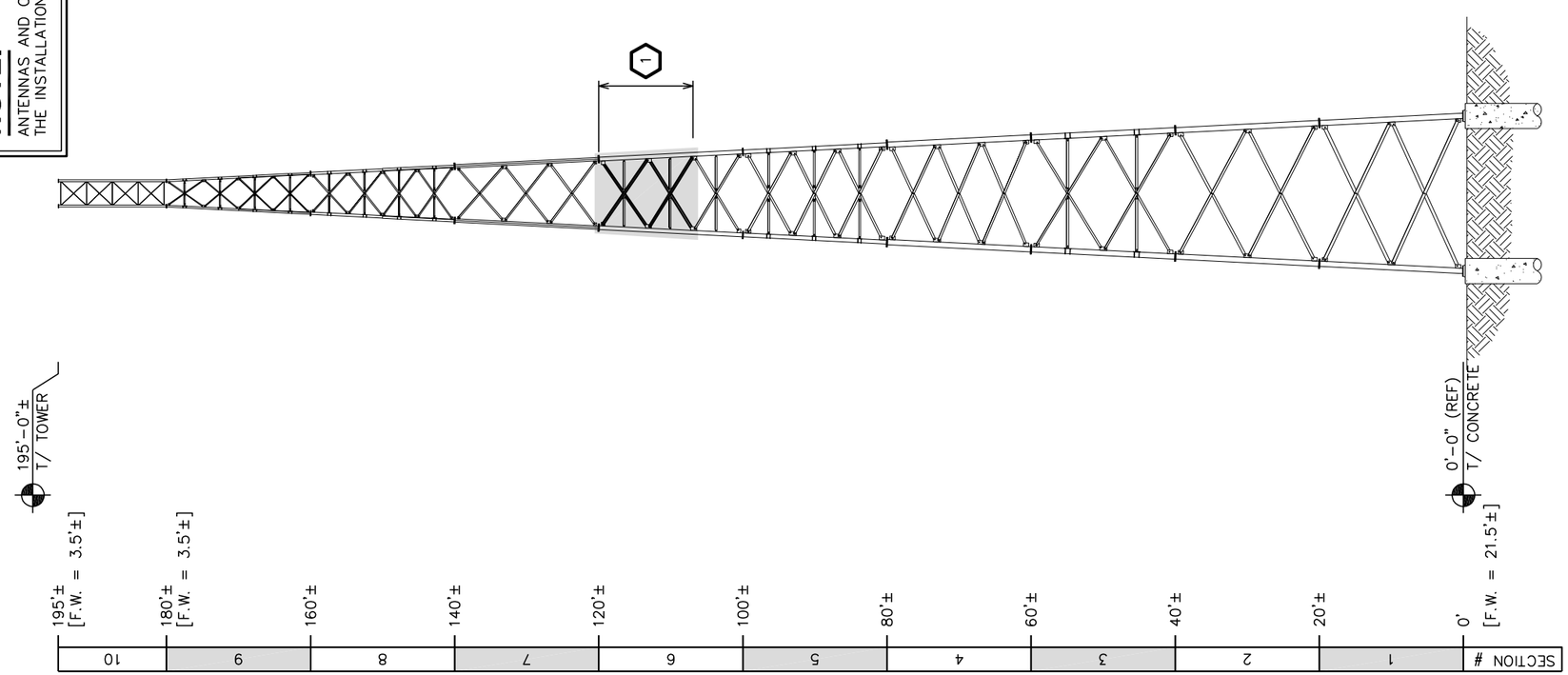

TOWER ELEVATION

SCALE: 1" = 20'

0 20 40
SCALE IN FEET

PLANS PREPARED FOR:

PHOENIX TOWER INTERNATIONAL
1001 YAMATO ROAD, SUITE 105
BOCA RATON, FL 33431
OFFICE: (561) 257-0557

PROJECT INFORMATION:

STRAITS TURNPIKE
SITE #: US-CT-1003

1021 STRAITS TURNPIKE
MIDDLEBURY, CT 06762
(NEW HAVEN COUNTY)

PLANS PREPARED BY:

TOWER ENGINEERING PROFESSIONALS
326 TRYON ROAD
RALEIGH, NC 27603
OFFICE: (919) 661-6351
www.tepgroup.net

SEAL:

STATE OF CONNECTICUT
GRAHAM ANDRES
29538
LICENSED
PROFESSIONAL ENGINEER

April 19, 2016

REV	DATE	ISSUED FOR:
0	04-19-16	MODIFICATION DRAWINGS

DRAWN BY: RWT | CHECKED BY: JDB

SHEET TITLE:
TOWER ELEVATION AND MODIFICATION SCHEDULE

SHEET NUMBER: **S-1**
REVISION: **0**
TEP #: 25628.47301

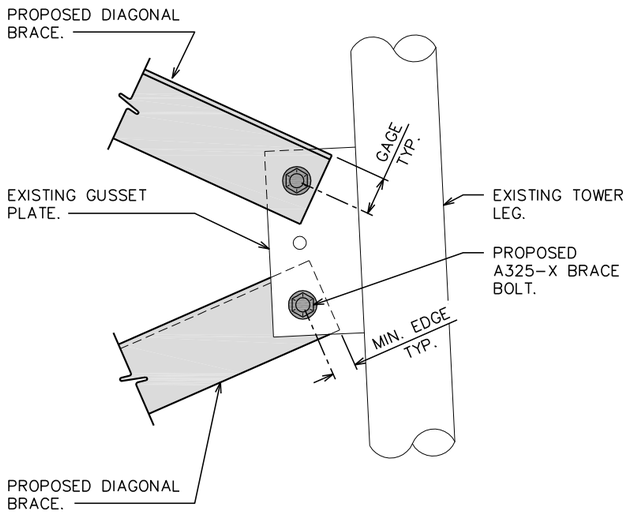

TYP. CONNECTION ALONG LEG

SCALE: N.T.S.

1

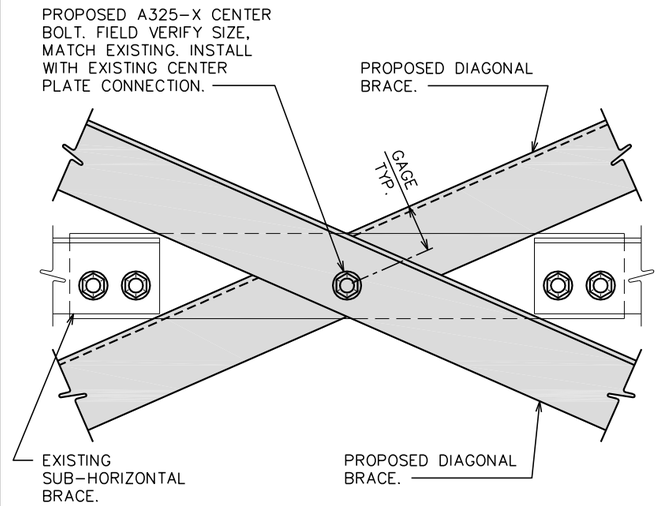

TYP. CONNECTION AT CENTER

SCALE: N.T.S.

2

NOTE:

1. SEE SHEET N-3 FOR GAGE, BOLT SPACING, MINIMUM EDGE DISTANCE, AND MAXIMUM ALLOWABLE ANGLE COPES.

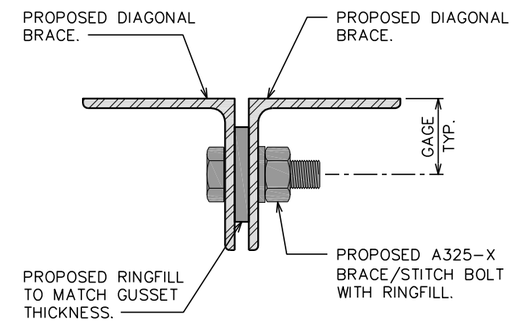

TYP. SECTION AT CENTER CONNECTION

SCALE: N.T.S.

DIAGONAL BRACE SCHEDULE

SECTION #	ELEVATION (FT.)	PANEL	DIAGONAL BRACE				BRACE BOLTS	CENTER BOLTS
			EXISTING (ASTM A36)	PROPOSED (ASTM A36)	AVERAGE LENGTH	QTY	BOLT X QTY (A325-X)	BOLT X QTY (A325-X)
6	106.7 – 120	SEE SHEET S-1	L3x3x3/16"	L3x3x1/4"	12.5'±	12	5/8"ø X 24	1/2"ø X 6

1. PRIOR TO FABRICATION AND INSTALLATION, CONTRACTOR SHALL FIELD VERIFY ALL LENGTHS AND QUANTITIES GIVEN. AVERAGE LENGTH AND QUANTITIES PROVIDED ARE FOR QUOTING PURPOSES ONLY, AND SHALL NOT BE USED FOR FABRICATION.
2. ALL CONNECTIONS NOT FULLY DETAILED ON THESE PLANS SHALL BE DETAILED BY THE STEEL FABRICATOR IN ACCORDANCE WITH THE AISC STEEL CONSTRUCTION MANUAL, LRFD, 13TH EDITION.

PLANS PREPARED FOR:

PHOENIX TOWER INTERNATIONAL

1001 YAMATO ROAD, SUITE 105
BOCA RATON, FL 33431
OFFICE: (561) 257-0557

PROJECT INFORMATION:

STRAITS TURNPIKE
SITE #: US-CT-1003

1021 STRAITS TURNPIKE
MIDDLEBURY, CT 06762
(NEW HAVEN COUNTY)

PLANS PREPARED BY:

TOWER ENGINEERING PROFESSIONALS
326 TRYON ROAD
RALEIGH, NC 27603
OFFICE: (919) 661-6351
www.tepgroup.net

SEAL:

STATE OF CONNECTICUT
GRAHAM E. MARRES
29538
LICENSED
PROFESSIONAL ENGINEER

April 19, 2016

REV	DATE	ISSUED FOR:
0	04-19-16	MODIFICATION DRAWINGS

DRAWN BY: RWT | CHECKED BY: JDB

SHEET TITLE:

DIAGONAL REPLACEMENT DETAILS

SHEET NUMBER: **S-2**

REVISION: 0

TEP #: 25628.47301