AMERICAN TOWER®
CORPORATION

Structural Analysis Report

Structure	:	**180 ft Self Supported Tower**
ATC Site Name	:	**North Madison Volunteer FD, CT**
ATC Site Number	:	**383660**
Engineering Number	:	**OAA745468_C3_01**
Proposed Carrier	:	**AT&T Mobility**
Carrier Site Name	:	**Madison - Opening Hill Road**
Carrier Site Number	:	**CTL02033**
Site Location	:	**864 Opening Hill Road** **Madison, CT 06443-0000** **41.357300,-72.638800**
County	:	**New Haven**
Date	:	**March 14, 2019**
Max Usage	:	**63%**
Result	:	**Pass**

Prepared By:
Robert D. Barrett, E.I.
Structural Engineer II

Robert D. Barrett

Reviewed By:

STATE OF CONNECTICUT
SCOTT A. WIRGAU
30575
LICENSED
PROFESSIONAL ENGINEER

Authorized by "EOR"
Apr 9 2019 4:27 PM

cosign

COA: PEC.0001553

Table of Contents

Introduction 1

Supporting Documents 1

Analysis 1

Conclusion 1

Existing and Reserved Equipment 2

Equipment to be Removed 2

Proposed Equipment 3

Structure Usages 3

Foundations 3

Deflection, Twist, and Sway 3

Standard Conditions 4

Calculations ..... Attached

Introduction

The purpose of this report is to summarize results of a structural analysis performed on the 180 ft self supported tower to reflect the change in loading by AT&T Mobility.

Supporting Documents

Tower Drawings	Rohn Drawing #C981756, dated December 2, 1998
Foundation Drawing	Rohn Drawing #A992935-1, dated July 21, 1999
Geotechnical Report	Clarence Welti Assoc. Job #35130AE, dated June 9, 1997

Analysis

The tower was analyzed using American Tower Corporation's tower analysis software. This program considers an elastic three-dimensional model and second-order effects per ANSI/TIA-222.

Basic Wind Speed:	101 mph (3-Second Gust, V_{asd}) / 130 mph (3-Second Gust, V_{ult})
Basic Wind Speed w/ Ice:	50 mph (3-Second Gust) w/ 3/4" radial ice concurrent
Code:	ANSI/TIA-222-G / 2015 IBC / 2018 Connecticut State Building Code
Structure Class:	II
Exposure Category:	B
Topographic Category:	1
Crest Height:	0 ft
Spectral Response:	Ss = 0.17, S_1 = 0.06
Site Class:	D - Stiff Soil

Conclusion

Based on the analysis results, the structure meets the requirements per the applicable codes listed above. The tower and foundation can support the equipment as described in this report.

If you have any questions or require additional information, please contact American Tower via email at Engineering@americantower.com. Please include the American Tower site name, site number, and engineering number in the subject line for any questions.

Existing and Reserved Equipment

Elev.[1] (ft)	Qty	Antenna	Mount Type	Lines	Carrier
190.8	2	RFS PD455	Side Arms	(3) 7/8" Coax (1) 1/2" Coax (1) 2" Conduit (1) 1" Conduit	--
186.0	1	4-Bay Dipole			
183.0	1	2-Bay Dipole			
170.0	3	Alcatel Lucent RRH ALU 4X45 AWS	Sector Frames	(12) 1 5/8" Coax (2) 1 5/8" Hybrid (1) 1 1/4" Coax	Verizon Wireless
	3	ALU RRH2X60PCS			
	3	ALU RRH4X60LTE			
	6	Commscope SBNHH-1D65B			
	3	Commscope LNX6514DS-A1M			
	1	Andrew 8' MW Dish			
	1	Antel BXA-70063/6CF			
	2	Antel BXA-70063/4CF			
	6	RFS FD9R6004/2C-3L			
	2	RFS DB-T1-6Z-8AB-0Z			
160.0	12	Andrew DB844H90E-XY	Sector Frames	(12) 1 5/8" Coax	Sprint Nextel
150.0	3	ALU 800MHz 2X50W RRH w/ Filter	Sector Frames	(4) 1 1/4" Hybriflex	
	3	ALU 1900MHz 4X45 RRH			
	3	ALU TD-RRH8X20			
	3	RFS APXVTM14-C-I20			
	3	RFS APXVSPP18-C-A20			
140.0	1	Raycap DC6-48-60-18-8F (23.5" Height)	Sector Frames	-	AT&T Mobility
	6	Powerwave Allgon LGP21401			
130.0	3	EMS RR90-17-02DP	T-Arms	(12) 1 5/8" Coax	T-Mobile
	3	Commscope LNX-6515DS-VTM			
	3	RFS ATMAP1412D-1A20			
125.0	1	Sinclair SC323-HF2LDF	Side Arm	(1) 7/8" Coax	Town of Madison, CT
90.0	1	RFI FSA10-67-DIN	Side Arms	(2) 7/8" Coax	
	1	Sinclair SC323-HF2LDF			
75.0	1	PCTEL GPS-TMG-HR-26N	Stand-Off	(1) 1/2" Coax	Sprint Nextel

Equipment to be Removed

Elev.[1] (ft)	Qty	Antenna	Mount Type	Lines	Carrier
110.0	6	Ericsson RRUS 11 (Band 12) (55 lb)	-	(3) 0.78" 8 AWG 6 (12) 1 1/4" Coax	AT&T Mobility
	3	KMW AM-X-CD-16-65-00T-RET			
	6	Powerwave Allgon 7770.00			

Proposed Equipment

Elev.[1] (ft)	Qty	Antenna	Mount Type	Lines	Carrier
140.0	1	Raycap DC6-48-60-18-8F	Modified Sector Frames	(6) 1 1/4" Coax	AT&T Mobility
	3	Ericsson RRUS 8843 B2, B66A			
	3	Ericsson RRUS 4449 B5, B12			
	3	Powerwave Allgon 7770.00			
	3	CCI HPA65R-BU6A			
	3	Kathrein Scala 80010965			

[1] Contracted elevations are shown for appurtenances within contracted installation tolerances. Appurtenances outside of contract limits are shown at installed elevations.

Install proposed lines in the place of the existing AT&T Mobility lines.

Structure Usages

Structural Component	Controlling Usage	Pass/Fail
Legs	49%	Pass
Diagonals	63%	Pass
Horizontals	51%	Pass
Anchor Bolts	35%	Pass
Leg Bolts	46%	Pass

Foundations

Reaction Component	Calculated Capacities	% of Usage
Uplift (Kips)	441.2	58%
Axial (Kips)	517.1	26%
Shear (Kips)	66.3	10%

The structure base reactions resulting from this analysis were found to be acceptable through analysis based on geotechnical and foundation information, therefore no modification or reinforcement of the foundation will be required.

Deflection, Twist and Sway*

Antenna Elevation (ft)	Antenna	Carrier	Deflection (ft)	Twist (°)	Sway (Rotation) (°)
170.0	Andrew 8' MW Dish	Verizon Wireless	0.172	0.007	0.118
140.0	CCI HPA65R-BU6A	AT&T Mobility	0.120	0.006	0.106
	Ericsson RRUS 4449 B5, B12				
	Ericsson RRUS 8843 B2, B66A				
	Kathrein Scala 80010965				
	Powerwave Allgon 7770.00				
	Raycap DC6-48-60-18-8F				

***Deflection, Twist and Sway was evaluated considering a design wind speed of 60 mph (3-Second Gust) per ANSI/TIA-222-G**

AMERICAN TOWER®
CORPORATION

Standard Conditions

All engineering services performed by A.T. Engineering Service, PLLC are prepared on the basis that the information used is current and correct. This information may consist of, but is not limited to the following:

- Information supplied by the client regarding antenna, mounts and feed line loading
- Information from drawings, design and analysis documents, and field notes in the possession of A.T. Engineering Service, PLLC

It is the responsibility of the client to ensure that the information provided to A.T. Engineering Service, PLLC and used in the performance of our engineering services is correct and complete.

All assets of American Tower Corporation, its affiliates and subsidiaries (collectively "American Tower") are inspected at regular intervals. Based upon these inspections and in the absence of information to the contrary, American Tower assumes that all structures were constructed in accordance with the drawings and specifications.

Unless explicitly agreed by both the client and A.T. Engineering Service, PLLC, all services will be performed in accordance with the current revision of ANSI/TIA-222.

All services are performed, results obtained, and recommendations made in accordance with generally accepted engineering principles and practices. A.T. Engineering Service, PLLC is not responsible for the conclusions, opinions and recommendations made by others based on the information supplied herein.

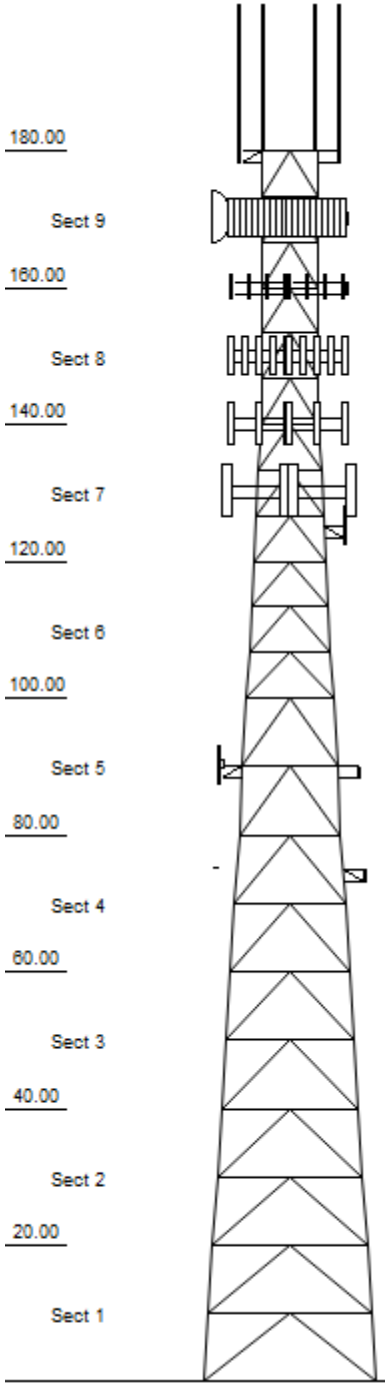

© 2007 - 2019 by ATC IP LLC. All rights reserved.

Loads: 101 mph no ice
50 mph w/ 3/4" radial ice
Site Class: D Ss: 0.17 S1: 0.06
60 mph Serviceability

Job Information

Tower : 383660	Location : North Madison	Base Width : 25.33 ft
Client : AT&T MOBILITY		Top Width : 8.54 ft
Code : ANSI/TIA-222-G		Tower Ht : 180.00 ft
		Shape : Triangle

Sections Properties

Section	Leg Members	Diagonal Members	Horizontal Members
1	PX 50 ksi 10" DIA PIPE	PX 50 ksi 3-1/2" DIA PIPE	PST 50 ksi 3" DIA PIPE
2	PX 50 ksi 10" DIA PIPE	PST 50 ksi 3" DIA PIPE	PST 50 ksi 2-1/2" DIA PIPE
3	PX 50 ksi 8" DIA PIPE	PST 50 ksi 3" DIA PIPE	PST 50 ksi 2-1/2" DIA PIPE
4	PX 50 ksi 8" DIA PIPE	PST 50 ksi 3" DIA PIPE	PST 50 ksi 2" DIA PIPE
5	PSP 50 ksi ROHN 8 EHS	PST 50 ksi 3" DIA PIPE	PST 50 ksi 2" DIA PIPE
6	PSP 50 ksi ROHN 6 EHS	PST 50 ksi 2-1/2" DIA PIPE	PST 50 ksi 2" DIA PIPE
7	PSP 50 ksi ROHN 5 EH	PX 50 ksi 2" DIA PIPE	PST 50 ksi 1-1/2" DIA PIPE
8	PX 50 ksi 4" DIA PIPE	PX 50 ksi 2" DIA PIPE	PST 50 ksi 1-1/2" DIA PIPE
9	PST 50 ksi 3" DIA PIPE	PST 50 ksi 2" DIA PIPE	PST 50 ksi 1-1/2" DIA PIPE

Discrete Appurtenance

Elev (ft)	Type	Qty	Description
180.00	Straight Arm	3	Flat Side Arm
180.00	Whip	2	RFS PD455
180.00	Whip	1	4-Bay Dipole
180.00	Whip	1	2-Bay Dipole
170.00	Mounting Frame	3	Flat Light Sector Frame
170.00	Dish	1	Andrew 8' MW Dish
170.00	Panel	6	Commscope SBNHH-1D65B
170.00	Panel	1	Antel BXA-70063/6CF
170.00	Panel	3	Commscope LNX6514DS-A1M
170.00	Panel	1	RFS DB-T1-6Z-8AB-0Z
170.00	Panel	1	RFS DB-T1-6Z-8AB-0Z
170.00	Panel	2	Antel BXA-70063/4CF
170.00	Panel	3	Alcatel Lucent RRH ALU 4X45 AW
170.00	Panel	3	ALU RRH2X60PCS
170.00	Panel	3	ALU RRH4X60LTE
170.00	Panel	6	RFS FD9R6004/2C-3L
160.00	Mounting Frame	3	Flat Light Sector Frame
160.00	Panel	12	Andrew DB844H90E-XY
150.00	Mounting Frame	3	Flat Light Sector Frame
150.00	Panel	3	RFS APXVSPP18-C-A20
150.00	Panel	3	RFS APXVTM14-C-I20
150.00	Panel	3	ALU TD-RRH8X20
150.00	Panel	3	ALU 1900 MHz 4X45 RRH
150.00	Panel	3	ALU 800 MHz 2X50W RRH w/ Filte
140.00	Mounting Frame	3	Flat Light Sector Frame
140.00	Panel	3	Kathrein Scala 80010965
140.00	Panel	3	CCI HPA65R-BU6A
140.00	Panel	3	Powerwave Allgon 7770.00
140.00		3	Ericsson RRUS 4449 B5, B12
140.00		3	Ericsson RRUS 8843 B2, B66A
140.00		1	Raycap DC6-48-60-18-8F (23.5"
140.00		1	Raycap DC6-48-60-18-8F
140.00		6	Powerwave Allgon LGP21401
130.00	Straight Arm	3	Flat T-Arm
130.00	Mounting Frame	3	Flat Light Sector Frame
130.00	Panel	3	Commscope LNX-6515DS-VTM
130.00	Panel	3	EMS RR90-17-02DP
130.00		3	RFS ATMAP1412D-1A20
125.00	Straight Arm	1	Flat Side Arm
125.00	Whip	1	Sinclair SC323-HF2LDF
90.00	Straight Arm	2	Flat Side Arm
90.00	Panel	1	RFI FSA10-67-DIN
90.00	Whip	1	Sinclair SC323-HF2LDF
75.00	Straight Arm	1	Stand-Off

© 2007 - 2019 by ATC IP LLC. All rights reserved.

Job Information

Tower : 383660	Location : North Madison	Base Width : 25.33 ft
Client : AT&T MOBILITY		Top Width : 8.54 ft
Code : ANSI/TIA-222-G		Tower Ht : 180.00 ft
		Shape : Triangle

75.00	Panel	1	PCTEL GPS-TMG-HR-26N

Linear Appurtenance

Elev (ft) From	To	Qty	Description
0.00	180.00	3	7/8" Coax
0.00	180.00	1	2" Conduit
0.00	180.00	1	1/2" Coax
0.00	180.00	1	1" Conduit
0.00	170.00	1	Waveguide
0.00	170.00	1	1 5/8" Hybrid
0.00	170.00	1	1 5/8" Hybrid
0.00	170.00	12	1 5/8" Coax
0.00	170.00	1	1 1/4" Coax
0.00	160.00	1	Waveguide
0.00	160.00	1	Waveguide
0.00	160.00	12	1 5/8" Coax
0.00	150.00	1	Waveguide
0.00	150.00	1	1 1/4" Hybriflex
0.00	150.00	3	1 1/4" Hybriflex
0.00	140.00	1	Waveguide
0.00	140.00	6	1 1/4" Coax
0.00	130.00	1	Waveguide
0.00	130.00	12	1 5/8" Coax
0.00	125.00	1	7/8" Coax
0.00	90.00	2	7/8" Coax
0.00	75.00	1	1/2" Coax

Global Base Foundation Design Loads

Load Case	Moment (k-ft)	Vertical (kip)	Horizontal (kip)
DL + WL	6,551.99	70.64	61.16
DL + WL + IL	2,186.66	180.25	21.41

Individual Base Foundation Design Loads

Vertical (kip)	Uplift (kip)	Horizontal (kip)
322.19	280.76	37.93

Site Number:	383660	Code:	ANSI/TIA-222-G	© 2007 - 2019 by ATC IP LLC. All rights reserved.
Site Name:	North Madison Volunteer FD, CT	Engineering Number:	OAA745468_C3_01	3/14/2019 7:15:44 PM
Customer:	AT&T MOBILITY			

Analysis Parameters

Location:	New Haven County, CT	Height (ft):	180
Code:	ANSI/TIA-222-G	Base Elevation (ft):	0.00
Shape:	Triangle	Bottom Face Width (ft):	25.33
Tower Manufacturer:	Rohn	Top Face Width (ft):	8.54
Tower Type:	Self Support	Anchor Bolt Detail Type	c
Kd:			
Ke:			

Ice & Wind Parameters

Structure Class:	II	Design Windspeed Without Ice:	101 mph
Exposure Category:	B	Design Windspeed With Ice:	50 mph
Topographic Category:	1	Operational Windspeed:	60 mph
Crest Height:	0 ft	Design Ice Thickness:	0.75 in

Seismic Parameters

Analysis Method:	Equivalent Modal Analysis & Equivalent Lateral Force Methods				
Site Class:	D - Stiff Soil				
Period Based on Rayleigh Method (sec):	0.67				
T_L (sec):	6	p:	1.3	C_S:	0.048
S_S :	0.173	S_1 :	0.060	C_S, Max:	0.048
F_a :	1.600	F_V :	2.400	C_S, Min:	0.030
S_{ds} :	0.185	S_{d1} :	0.096		

Load Cases

1.2D + 1.6W Normal	101 mph Normal to Face with No Ice
1.2D + 1.6W 60 deg	101 mph 60 degree with No Ice
1.2D + 1.6W 90 deg	101 mph 90 degree with No Ice
1.2D + 1.6W 120 deg	101 mph 120 degree with No Ice
1.2D + 1.6W 180 deg	101 mph 180 degree with No Ice
1.2D + 1.6W 210 deg	101 mph 210 degree with No Ice
1.2D + 1.6W 240 deg	101 mph 240 degree with No Ice
1.2D + 1.6W 300 deg	101 mph 300 degree with No Ice
1.2D + 1.6W 330 deg	101 mph 330 degree with No Ice
0.9D + 1.6W Normal	101 mph Normal to Face with No Ice (Reduced DL)
0.9D + 1.6W 60 deg	101 mph 60 deg with No Ice (Reduced DL)
0.9D + 1.6W 90 deg	101 mph 90 deg with No Ice (Reduced DL)
0.9D + 1.6W 120 deg	101 mph 120 deg with No Ice (Reduced DL)
0.9D + 1.6W 180 deg	101 mph 180 deg with No Ice (Reduced DL)
0.9D + 1.6W 210 deg	101 mph 210 deg with No Ice (Reduced DL)
0.9D + 1.6W 240 deg	101 mph 240 deg with No Ice (Reduced DL)
0.9D + 1.6W 300 deg	101 mph 300 deg with No Ice (Reduced DL)
0.9D + 1.6W 330 deg	101 mph 330 deg with No Ice (Reduced DL)
1.2D + 1.0Di + 1.0Wi Normal	50 mph Normal with 0.75 in Radial Ice

© 2007 - 2019 by ATC IP LLC. All rights reserved.

Analysis Parameters

1.2D + 1.0Di + 1.0Wi 60 deg	50 mph 60 deg with 0.75 in Radial Ice
1.2D + 1.0Di + 1.0Wi 90 deg	50 mph 90 deg with 0.75 in Radial Ice
1.2D + 1.0Di + 1.0Wi 120 deg	50 mph 120 deg with 0.75 in Radial Ice
1.2D + 1.0Di + 1.0Wi 180 deg	50 mph 180 deg with 0.75 in Radial Ice
1.2D + 1.0Di + 1.0Wi 210 deg	50 mph 210 deg with 0.75 in Radial Ice
1.2D + 1.0Di + 1.0Wi 240 deg	50 mph 240 deg with 0.75 in Radial Ice
1.2D + 1.0Di + 1.0Wi 300 deg	50 mph 300 deg with 0.75 in Radial Ice
1.2D + 1.0Di + 1.0Wi 330 deg	50 mph 330 deg with 0.75 in Radial Ice
(1.2 + 0.2Sds) * DL + E Normal	Seismic Normal
(1.2 + 0.2Sds) * DL + E 60 deg	Seismic 60 deg
(1.2 + 0.2Sds) * DL + E 90 deg	Seismic 90 deg
(1.2 + 0.2Sds) * DL + E 120 deg	Seismic 120 deg
(1.2 + 0.2Sds) * DL + E 180 deg	Seismic 180 deg
(1.2 + 0.2Sds) * DL + E 210 deg	Seismic 210 deg
(1.2 + 0.2Sds) * DL + E 240 deg	Seismic 240 deg
(1.2 + 0.2Sds) * DL + E 300 deg	Seismic 300 deg
(1.2 + 0.2Sds) * DL + E 330 deg	Seismic 330 deg
(0.9 - 0.2Sds) * DL + E Normal	Seismic (Reduced DL) Normal
(0.9 - 0.2Sds) * DL + E 60 deg	Seismic (Reduced DL) 60 deg
(0.9 - 0.2Sds) * DL + E 90 deg	Seismic (Reduced DL) 90 deg
(0.9 - 0.2Sds) * DL + E 120 deg	Seismic (Reduced DL) 120 deg
(0.9 - 0.2Sds) * DL + E 180 deg	Seismic (Reduced DL) 180 deg
(0.9 - 0.2Sds) * DL + E 210 deg	Seismic (Reduced DL) 210 deg
(0.9 - 0.2Sds) * DL + E 240 deg	Seismic (Reduced DL) 240 deg
(0.9 - 0.2Sds) * DL + E 300 deg	Seismic (Reduced DL) 300 deg
(0.9 - 0.2Sds) * DL + E 330 deg	Seismic (Reduced DL) 330 deg
1.0D + 1.0W Service Normal	Serviceability - 60 mph Wind Normal
1.0D + 1.0W Service 60 deg	Serviceability - 60 mph Wind 60 deg
1.0D + 1.0W Service 90 deg	Serviceability - 60 mph Wind 90 deg
1.0D + 1.0W Service 120 deg	Serviceability - 60 mph Wind 120 deg
1.0D + 1.0W Service 180 deg	Serviceability - 60 mph Wind 180 deg
1.0D + 1.0W Service 210 deg	Serviceability - 60 mph Wind 210 deg
1.0D + 1.0W Service 240 deg	Serviceability - 60 mph Wind 240 deg
1.0D + 1.0W Service 300 deg	Serviceability - 60 mph Wind 300 deg
1.0D + 1.0W Service 330 deg	Serviceability - 60 mph Wind 330 deg

© 2007 - 2019 by ATC IP LLC. All rights reserved.

Tower Loading

Discrete Appurtenance Properties 1.2D + 1.6W

Elevation (ft)	Description	Qty	Wt. (lb)	EPA (sf)	Length (ft)	Width (in)	Depth (in)	K_a	Orient. Factor	Vert. Ecc.(ft)	M_u (lb-ft)	Q_z (psf)	F_a (WL) (lb)	P_a(DL) (lb)
180.0	2-Bay Dipole	1	18	2.0	6.0	4.0	4.0	0.80	1.00	3.0	165.9	26.07	55	21
180.0	4-Bay Dipole	1	35	3.9	12.0	4.0	4.0	0.80	1.00	6.0	666.8	26.19	111	42
180.0	Flat Side Arm	3	150	6.3	0.0	0.0	0.0	1.00	0.67	0.0	0.0	25.95	447	540
180.0	RFS PD455	2	24	6.0	21.5	2.8	2.8	0.80	1.00	10.8	3715.0	26.38	346	58
170.0	Alcatel Lucent RRH	3	63	2.5	2.2	11.4	5.9	0.80	0.67	0.0	0.0	25.53	138	228
170.0	ALU RRH2X60PCS	3	55	2.2	1.8	12.0	9.4	0.80	0.67	0.0	0.0	25.53	123	198
170.0	ALU RRH4X60LTE	3	53	2.1	1.8	12.0	7.2	0.80	0.67	0.0	0.0	25.53	118	191
170.0	Andrew 8' MW Dish	1	400	83.6	8.0	96.0	0.0	1.00	1.00	0.0	0.0	25.53	2904	480
170.0	Antel BXA-70063/4CF	2	10	4.7	4.0	11.2	5.2	0.80	0.77	0.0	0.0	25.53	202	24
170.0	Antel BXA-70063/6CF	1	17	7.6	5.9	11.2	5.2	0.80	0.77	0.0	0.0	25.53	162	20
170.0	Commscope	3	29	5.1	4.0	11.9	7.1	0.80	0.83	0.0	0.0	25.53	352	103
170.0	Commscope SBNHH-	6	41	8.1	6.0	11.9	7.1	0.80	0.83	0.0	0.0	25.53	1118	292
170.0	Flat Light Sector	3	400	17.9	0.0	0.0	0.0	0.75	0.67	0.0	0.0	25.53	937	1440
170.0	RFS DB-T1-6Z-8AB-	1	44	4.8	2.0	24.0	10.0	0.80	0.67	0.0	0.0	25.53	89	53
170.0	RFS DB-T1-6Z-8AB-	1	44	4.8	2.0	24.0	10.0	0.80	0.67	0.0	0.0	25.53	89	53
170.0	RFS FD9R6004/2C-3L	6	3	0.4	0.5	6.5	1.5	0.80	0.50	0.0	0.0	25.53	31	19
160.0	Andrew DB844H90E-	12	14	3.6	4.0	8.0	4.5	0.80	0.82	0.0	0.0	25.09	970	202
160.0	Flat Light Sector	3	400	17.9	0.0	0.0	0.0	0.75	0.75	0.0	0.0	25.09	1031	1440
150.0	ALU 1900 MHz 4X45	3	60	2.3	2.1	11.1	10.7	0.80	0.67	0.0	0.0	24.63	125	216
150.0	ALU 800 MHz 2X50W	3	64	2.1	1.6	13.0	12.2	0.80	0.67	0.0	0.0	24.63	111	230
150.0	ALU TD-RRH8X20	3	66	3.7	2.1	17.5	5.7	0.80	0.67	0.0	0.0	24.63	199	238
150.0	Flat Light Sector	3	400	17.9	0.0	0.0	0.0	0.75	0.75	0.0	0.0	24.63	1012	1440
150.0	RFS APXVSPP18-C-	3	57	8.0	6.0	11.8	7.0	0.80	0.83	0.0	0.0	24.63	535	205
150.0	RFS APXVTM14-C-I20	3	53	6.3	4.7	12.6	6.3	0.80	0.78	0.0	0.0	24.63	398	190
140.0	CCI HPA65R-BU6A	3	42	7.9	5.9	11.7	7.6	0.80	0.70	0.0	0.0	24.15	434	151
140.0	Ericsson RRUS 4449	3	71	2.0	1.5	13.2	9.4	0.80	0.50	0.0	0.0	24.15	78	256
140.0	Ericsson RRUS 8843	3	72	1.6	1.2	13.2	10.9	0.80	0.50	0.0	0.0	24.15	65	259
140.0	Flat Light Sector	3	400	17.9	0.0	0.0	0.0	0.75	0.75	0.0	0.0	24.15	992	1440
140.0	Kathrein Scala	3	98	13.8	6.6	20.0	6.9	0.80	0.62	0.0	0.0	24.15	675	351
140.0	Powerwave Allgon	3	35	5.5	4.6	11.0	5.0	0.80	0.65	0.0	0.0	24.15	282	126
140.0	Powerwave Allgon	6	14	1.1	1.2	9.2	2.6	0.80	0.50	0.0	0.0	24.15	87	102
140.0	Raycap DC6-48-60-	1	20	1.3	2.0	9.7	9.7	0.80	1.00	0.0	0.0	24.15	33	24
140.0	Raycap DC6-48-60-	1	20	1.3	2.0	9.7	9.7	0.80	1.00	0.0	0.0	24.15	33	24
130.0	Commscope LNX-	3	50	11.4	8.0	11.9	7.1	0.80	0.70	0.0	0.0	23.64	618	181
130.0	EMS RR90-17-02DP	3	14	4.4	4.7	8.0	2.8	0.80	0.64	0.0	0.0	23.64	215	49
130.0	Flat Light Sector	3	400	17.9	0.0	0.0	0.0	1.00	0.75	0.0	0.0	23.64	1295	1440
130.0	Flat T-Arm	3	250	12.9	0.0	0.0	0.0	0.75	0.75	0.0	0.0	23.64	700	900
130.0	RFS ATMAP1412D-	3	13	1.0	1.0	10.0	4.0	0.80	0.50	0.0	0.0	23.64	39	47
125.0	Flat Side Arm	1	150	6.3	0.0	0.0	0.0	1.00	1.00	0.0	0.0	23.38	200	180
125.0	Sinclair SC323-	1	6	1.1	5.6	2.0	2.0	1.00	1.00	0.0	0.0	23.38	36	7
90.00	Flat Side Arm	2	150	6.3	0.0	0.0	0.0	0.90	0.90	0.0	0.0	21.29	295	360
90.00	RFI FSA10-67-DIN	1	9	1.4	1.7	23.5	10.0	1.00	1.00	0.0	0.0	21.29	41	11
90.00	Sinclair SC323-	1	6	1.1	5.6	2.0	2.0	1.00	1.00	0.0	0.0	21.29	33	7
75.00	PCTEL GPS-TMG-HR-	1	1	0.2	0.4	3.2	3.2	1.00	1.00	0.0	0.0	20.21	4	1
75.00	Stand-Off	1	75	2.5	0.0	0.0	0.0	1.00	1.00	0.0	0.0	20.21	69	90
	Totals	122	11607	828.3									17824	13928

Discrete Appurtenance Properties 0.9D + 1.6W

Elevation (ft)	Description	Qty	Wt. (lb)	EPA (sf)	Length (ft)	Width (in)	Depth (in)	K_a	Orient. Factor	Vert. Ecc.(ft)	M_u (lb-ft)	Q_z (psf)	F_a (WL) (lb)	P_a(DL) (lb)
180.0	2-Bay Dipole	1	18	2.0	6.0	4.0	4.0	0.80	1.00	3.0	165.9	26.07	55	16

© 2007 - 2019 by ATC IP LLC. All rights reserved.

Tower Loading

180.0	4-Bay Dipole	1	35	3.9	12.0	4.0	4.0	0.80	1.00	6.0	666.8	26.19	111	32
180.0	Flat Side Arm	3	150	6.3	0.0	0.0	0.0	1.00	0.67	0.0	0.0	25.95	447	405
180.0	RFS PD455	2	24	6.0	21.5	2.8	2.8	0.80	1.00	10.8	3715.0	26.38	346	43
170.0	Alcatel Lucent RRH	3	63	2.5	2.2	11.4	5.9	0.80	0.67	0.0	0.0	25.53	138	171
170.0	ALU RRH2X60PCS	3	55	2.2	1.8	12.0	9.4	0.80	0.67	0.0	0.0	25.53	123	149
170.0	ALU RRH4X60LTE	3	53	2.1	1.8	12.0	7.2	0.80	0.67	0.0	0.0	25.53	118	143
170.0	Andrew 8' MW Dish	1	400	83.6	8.0	96.0	0.0	1.00	1.00	0.0	0.0	25.53	2904	360
170.0	Antel BXA-70063/4CF	2	10	4.7	4.0	11.2	5.2	0.80	0.77	0.0	0.0	25.53	202	18
170.0	Antel BXA-70063/6CF	1	17	7.6	5.9	11.2	5.2	0.80	0.77	0.0	0.0	25.53	162	15
170.0	Commscope	3	29	5.1	4.0	11.9	7.1	0.80	0.83	0.0	0.0	25.53	352	77
170.0	Commscope SBNHH-	6	41	8.1	6.0	11.9	7.1	0.80	0.83	0.0	0.0	25.53	1118	219
170.0	Flat Light Sector	3	400	17.9	0.0	0.0	0.0	0.75	0.67	0.0	0.0	25.53	937	1080
170.0	RFS DB-T1-6Z-8AB-	1	44	4.8	2.0	24.0	10.0	0.80	0.67	0.0	0.0	25.53	89	40
170.0	RFS DB-T1-6Z-8AB-	1	44	4.8	2.0	24.0	10.0	0.80	0.67	0.0	0.0	25.53	89	40
170.0	RFS FD9R6004/2C-3L	6	3	0.4	0.5	6.5	1.5	0.80	0.50	0.0	0.0	25.53	31	14
160.0	Andrew DB844H90E-	12	14	3.6	4.0	8.0	4.5	0.80	0.82	0.0	0.0	25.09	970	151
160.0	Flat Light Sector	3	400	17.9	0.0	0.0	0.0	0.75	0.75	0.0	0.0	25.09	1031	1080
150.0	ALU 1900 MHz 4X45	3	60	2.3	2.1	11.1	10.7	0.80	0.67	0.0	0.0	24.63	125	162
150.0	ALU 800 MHz 2X50W	3	64	2.1	1.6	13.0	12.2	0.80	0.67	0.0	0.0	24.63	111	173
150.0	ALU TD-RRH8X20	3	66	3.7	2.1	17.5	5.7	0.80	0.67	0.0	0.0	24.63	199	178
150.0	Flat Light Sector	3	400	17.9	0.0	0.0	0.0	0.75	0.75	0.0	0.0	24.63	1012	1080
150.0	RFS APXVSPP18-C-	3	57	8.0	6.0	11.8	7.0	0.80	0.83	0.0	0.0	24.63	535	154
150.0	RFS APXVTM14-C-I20	3	53	6.3	4.7	12.6	6.3	0.80	0.78	0.0	0.0	24.63	398	143
140.0	CCI HPA65R-BU6A	3	42	7.9	5.9	11.7	7.6	0.80	0.70	0.0	0.0	24.15	434	113
140.0	Ericsson RRUS 4449	3	71	2.0	1.5	13.2	9.4	0.80	0.50	0.0	0.0	24.15	78	192
140.0	Ericsson RRUS 8843	3	72	1.6	1.2	13.2	10.9	0.80	0.50	0.0	0.0	24.15	65	194
140.0	Flat Light Sector	3	400	17.9	0.0	0.0	0.0	0.75	0.75	0.0	0.0	24.15	992	1080
140.0	Kathrein Scala	3	98	13.8	6.6	20.0	6.9	0.80	0.62	0.0	0.0	24.15	675	264
140.0	Powerwave Allgon	3	35	5.5	4.6	11.0	5.0	0.80	0.65	0.0	0.0	24.15	282	95
140.0	Powerwave Allgon	6	14	1.1	1.2	9.2	2.6	0.80	0.50	0.0	0.0	24.15	87	76
140.0	Raycap DC6-48-60-	1	20	1.3	2.0	9.7	9.7	0.80	1.00	0.0	0.0	24.15	33	18
140.0	Raycap DC6-48-60-	1	20	1.3	2.0	9.7	9.7	0.80	1.00	0.0	0.0	24.15	33	18
130.0	Commscope LNX-	3	50	11.4	8.0	11.9	7.1	0.80	0.70	0.0	0.0	23.64	618	136
130.0	EMS RR90-17-02DP	3	14	4.4	4.7	8.0	2.8	0.80	0.64	0.0	0.0	23.64	215	36
130.0	Flat Light Sector	3	400	17.9	0.0	0.0	0.0	1.00	0.75	0.0	0.0	23.64	1295	1080
130.0	Flat T-Arm	3	250	12.9	0.0	0.0	0.0	0.75	0.75	0.0	0.0	23.64	700	675
130.0	RFS ATMAP1412D-	3	13	1.0	1.0	10.0	4.0	0.80	0.50	0.0	0.0	23.64	39	35
125.0	Flat Side Arm	1	150	6.3	0.0	0.0	0.0	1.00	1.00	0.0	0.0	23.38	200	135
125.0	Sinclair SC323-	1	6	1.1	5.6	2.0	2.0	1.00	1.00	0.0	0.0	23.38	36	6
90.00	Flat Side Arm	2	150	6.3	0.0	0.0	0.0	0.90	0.90	0.0	0.0	21.29	295	270
90.00	RFI FSA10-67-DIN	1	9	1.4	1.7	23.5	10.0	1.00	1.00	0.0	0.0	21.29	41	8
90.00	Sinclair SC323-	1	6	1.1	5.6	2.0	2.0	1.00	1.00	0.0	0.0	21.29	33	6
75.00	PCTEL GPS-TMG-HR-	1	1	0.2	0.4	3.2	3.2	1.00	1.00	0.0	0.0	20.21	4	1
75.00	Stand-Off	1	75	2.5	0.0	0.0	0.0	1.00	1.00	0.0	0.0	20.21	69	68
	Totals	122	11607	828.3									17824	10446

Discrete Appurtenance Properties 1.2D + 1.0Di + 1.0Wi

Elevation (ft)	Description	Qty	Ice Wt (lb)	Ice EPA (sf)	Length (ft)	Width (in)	Depth (in)	K_a	Orient. Factor	Vert. Ecc.(ft)	M_u (lb-ft)	Q_z (psf)	F_a (WL) (lb)	P_a(DL) (lb)
180.0	2-Bay Dipole	1	71	4.6	6.0	4.0	4.0	0.80	1.00	3.0	60.1	6.39	20	74
180.0	4-Bay Dipole	1	142	9.2	12.0	4.0	4.0	0.80	1.00	6.0	241.6	6.42	40	149
180.0	Flat Side Arm	3	224	8.8	0.0	0.0	0.0	1.00	0.67	0.0	0.0	6.36	96	763
180.0	RFS PD455	2	299	13.8	21.5	2.8	2.8	0.80	1.00	10.8	1304.9	6.47	121	607
170.0	Alcatel Lucent RRH	3	141	3.2	2.2	11.4	5.9	0.80	0.67	0.0	0.0	6.26	27	462
170.0	ALU RRH2X60PCS	3	127	3.2	1.8	12.0	9.4	0.80	0.67	0.0	0.0	6.26	28	414

© 2007 - 2019 by ATC IP LLC. All rights reserved.

Tower Loading

170.0	ALU RRH4X60LTE	3	127	2.8	1.8	12.0	7.2	0.80	0.67	0.0	0.0	6.26	24	414
170.0	Andrew 8' MW Dish	1	1396	89.8	8.0	96.0	0.0	1.00	1.00	0.0	0.0	6.26	478	1476
170.0	Antel BXA-70063/4CF	2	133	5.7	4.0	11.2	5.2	0.80	0.77	0.0	0.0	6.26	37	270
170.0	Antel BXA-70063/6CF	1	194	8.8	5.9	11.2	5.2	0.80	0.77	0.0	0.0	6.26	29	197
170.0	Commscope	3	173	6.1	4.0	11.9	7.1	0.80	0.83	0.0	0.0	6.26	65	535
170.0	Commscope SBNHH-	6	245	9.4	6.0	11.9	7.1	0.80	0.83	0.0	0.0	6.26	199	1520
170.0	Flat Light Sector	3	705	33.2	0.0	0.0	0.0	0.75	0.67	0.0	0.0	6.26	266	2356
170.0	RFS DB-T1-6Z-8AB-	1	190	5.7	2.0	24.0	10.0	0.80	0.67	0.0	0.0	6.26	16	199
170.0	RFS DB-T1-6Z-8AB-	1	190	5.7	2.0	24.0	10.0	0.80	0.67	0.0	0.0	6.26	16	199
170.0	RFS FD9R6004/2C-3L	6	16	0.6	0.5	6.5	1.5	0.80	0.50	0.0	0.0	6.26	7	99
160.0	Andrew DB844H90E-	12	111	4.5	4.0	8.0	4.5	0.80	0.82	0.0	0.0	6.15	185	1368
160.0	Flat Light Sector	3	702	33.0	0.0	0.0	0.0	0.75	0.75	0.0	0.0	6.15	291	2345
150.0	ALU 1900 MHz 4X45	3	155	3.0	2.1	11.1	10.7	0.80	0.67	0.0	0.0	6.04	25	502
150.0	ALU 800 MHz 2X50W	3	155	2.7	1.6	13.0	12.2	0.80	0.67	0.0	0.0	6.04	22	503
150.0	ALU TD-RRH8X20	3	156	4.9	2.1	17.5	5.7	0.80	0.67	0.0	0.0	6.04	40	506
150.0	Flat Light Sector	3	702	33.0	0.0	0.0	0.0	0.75	0.75	0.0	0.0	6.04	286	2345
150.0	RFS APXVSPP18-C-	3	257	9.3	6.0	11.8	7.0	0.80	0.83	0.0	0.0	6.04	95	804
150.0	RFS APXVTM14-C-I20	3	191	8.5	4.7	12.6	6.3	0.80	0.78	0.0	0.0	6.04	82	604
140.0	CCI HPA65R-BU6A	3	215	10.6	5.9	11.7	7.6	0.80	0.70	0.0	0.0	5.92	89	670
140.0	Ericsson RRUS 4449	3	135	2.9	1.5	13.2	9.4	0.80	0.50	0.0	0.0	5.92	17	447
140.0	Ericsson RRUS 8843	3	133	2.5	1.2	13.2	10.9	0.80	0.50	0.0	0.0	5.92	15	441
140.0	Flat Light Sector	3	697	32.8	0.0	0.0	0.0	0.75	0.75	0.0	0.0	5.92	278	2332
140.0	Kathrein Scala	3	361	16.8	6.6	20.0	6.9	0.80	0.62	0.0	0.0	5.92	126	1141
140.0	Powerwave Allgon	3	168	6.5	4.6	11.0	5.0	0.80	0.65	0.0	0.0	5.92	51	524
140.0	Powerwave Allgon	6	39	1.8	1.2	9.2	2.6	0.80	0.50	0.0	0.0	5.92	22	249
140.0	Raycap DC6-48-60-	1	72	1.9	2.0	9.7	9.7	0.80	1.00	0.0	0.0	5.92	8	76
140.0	Raycap DC6-48-60-	1	72	1.9	2.0	9.7	9.7	0.80	1.00	0.0	0.0	5.92	8	76
130.0	Commscope LNX-	3	277	14.6	8.0	11.9	7.1	0.80	0.70	0.0	0.0	5.79	121	861
130.0	EMS RR90-17-02DP	3	110	5.3	4.7	8.0	2.8	0.80	0.64	0.0	0.0	5.79	40	339
130.0	Flat Light Sector	3	697	32.8	0.0	0.0	0.0	1.00	0.75	0.0	0.0	5.79	364	2332
130.0	Flat T-Arm	3	456	21.0	0.0	0.0	0.0	0.75	0.75	0.0	0.0	5.79	174	1519
130.0	RFS ATMAP1412D-	3	39	1.7	1.0	10.0	4.0	0.80	0.50	0.0	0.0	5.79	10	125
125.0	Flat Side Arm	1	222	8.7	0.0	0.0	0.0	1.00	1.00	0.0	0.0	5.73	43	252
125.0	Sinclair SC323-	1	66	2.5	5.6	2.0	2.0	1.00	1.00	0.0	0.0	5.73	12	67
90.00	Flat Side Arm	2	220	8.6	0.0	0.0	0.0	0.90	0.90	0.0	0.0	5.22	62	499
90.00	RFI FSA10-67-DIN	1	127	4.7	1.7	23.5	10.0	1.00	1.00	0.0	0.0	5.22	21	128
90.00	Sinclair SC323-	1	62	2.5	5.6	2.0	2.0	1.00	1.00	0.0	0.0	5.22	11	64
75.00	PCTEL GPS-TMG-HR-	1	10	0.3	0.4	3.2	3.2	1.00	1.00	0.0	0.0	4.95	1	10
75.00	Stand-Off	1	109	3.7	0.0	0.0	0.0	1.00	1.00	0.0	0.0	4.95	16	124
	Totals	122	28668	1228.8									3985	30989

Discrete Appurtenance Properties 1.0D + 1.0W Service

Elevation (ft)	Description	Qty	Wt. (lb)	EPA (sf)	Length (ft)	Width (in)	Depth (in)	K_a	Orient. Factor	Vert. Ecc.(ft)	M_u (lb-ft)	Q_z (psf)	F_a (WL) (lb)	P_a(DL) (lb)
180.0	2-Bay Dipole	1	18	2.0	6.0	4.0	4.0	0.80	1.00	3.0	36.6	9.20	12	18
180.0	4-Bay Dipole	1	35	3.9	12.0	4.0	4.0	0.80	1.00	6.0	147.1	9.24	25	35
180.0	Flat Side Arm	3	150	6.3	0.0	0.0	0.0	1.00	0.67	0.0	0.0	9.16	99	450
180.0	RFS PD455	2	24	6.0	21.5	2.8	2.8	0.80	1.00	10.8	819.4	9.31	76	48
170.0	Alcatel Lucent RRH	3	63	2.5	2.2	11.4	5.9	0.80	0.67	0.0	0.0	9.01	30	190
170.0	ALU RRH2X60PCS	3	55	2.2	1.8	12.0	9.4	0.80	0.67	0.0	0.0	9.01	27	165
170.0	ALU RRH4X60LTE	3	53	2.1	1.8	12.0	7.2	0.80	0.67	0.0	0.0	9.01	26	159
170.0	Andrew 8' MW Dish	1	400	83.6	8.0	96.0	0.0	1.00	1.00	0.0	0.0	9.01	640	400
170.0	Antel BXA-70063/4CF	2	10	4.7	4.0	11.2	5.2	0.80	0.77	0.0	0.0	9.01	45	20
170.0	Antel BXA-70063/6CF	1	17	7.6	5.9	11.2	5.2	0.80	0.77	0.0	0.0	9.01	36	17
170.0	Commscope	3	29	5.1	4.0	11.9	7.1	0.80	0.83	0.0	0.0	9.01	78	86

© 2007 - 2019 by ATC IP LLC. All rights reserved.

Tower Loading

170.0	Commscope SBNHH-	6	41	8.1	6.0	11.9	7.1	0.80	0.83	0.0	0.0	9.01	246	244
170.0	Flat Light Sector	3	400	17.9	0.0	0.0	0.0	0.75	0.67	0.0	0.0	9.01	207	1200
170.0	RFS DB-T1-6Z-8AB-	1	44	4.8	2.0	24.0	10.0	0.80	0.67	0.0	0.0	9.01	20	44
170.0	RFS DB-T1-6Z-8AB-	1	44	4.8	2.0	24.0	10.0	0.80	0.67	0.0	0.0	9.01	20	44
170.0	RFS FD9R6004/2C-3L	6	3	0.4	0.5	6.5	1.5	0.80	0.50	0.0	0.0	9.01	7	16
160.0	Andrew DB844H90E-	12	14	3.6	4.0	8.0	4.5	0.80	0.82	0.0	0.0	8.85	214	168
160.0	Flat Light Sector	3	400	17.9	0.0	0.0	0.0	0.75	0.75	0.0	0.0	8.85	227	1200
150.0	ALU 1900 MHz 4X45	3	60	2.3	2.1	11.1	10.7	0.80	0.67	0.0	0.0	8.69	28	180
150.0	ALU 800 MHz 2X50W	3	64	2.1	1.6	13.0	12.2	0.80	0.67	0.0	0.0	8.69	24	192
150.0	ALU TD-RRH8X20	3	66	3.7	2.1	17.5	5.7	0.80	0.67	0.0	0.0	8.69	44	198
150.0	Flat Light Sector	3	400	17.9	0.0	0.0	0.0	0.75	0.75	0.0	0.0	8.69	223	1200
150.0	RFS APXVSPP18-C-	3	57	8.0	6.0	11.8	7.0	0.80	0.83	0.0	0.0	8.69	118	171
150.0	RFS APXVTM14-C-I20	3	53	6.3	4.7	12.6	6.3	0.80	0.78	0.0	0.0	8.69	88	159
140.0	CCI HPA65R-BU6A	3	42	7.9	5.9	11.7	7.6	0.80	0.70	0.0	0.0	8.52	96	126
140.0	Ericsson RRUS 4449	3	71	2.0	1.5	13.2	9.4	0.80	0.50	0.0	0.0	8.52	17	213
140.0	Ericsson RRUS 8843	3	72	1.6	1.2	13.2	10.9	0.80	0.50	0.0	0.0	8.52	14	216
140.0	Flat Light Sector	3	400	17.9	0.0	0.0	0.0	0.75	0.75	0.0	0.0	8.52	219	1200
140.0	Kathrein Scala	3	98	13.8	6.6	20.0	6.9	0.80	0.62	0.0	0.0	8.52	149	293
140.0	Powerwave Allgon	3	35	5.5	4.6	11.0	5.0	0.80	0.65	0.0	0.0	8.52	62	105
140.0	Powerwave Allgon	6	14	1.1	1.2	9.2	2.6	0.80	0.50	0.0	0.0	8.52	19	85
140.0	Raycap DC6-48-60-	1	20	1.3	2.0	9.7	9.7	0.80	1.00	0.0	0.0	8.52	7	20
140.0	Raycap DC6-48-60-	1	20	1.3	2.0	9.7	9.7	0.80	1.00	0.0	0.0	8.52	7	20
130.0	Commscope LNX-	3	50	11.4	8.0	11.9	7.1	0.80	0.70	0.0	0.0	8.34	136	151
130.0	EMS RR90-17-02DP	3	14	4.4	4.7	8.0	2.8	0.80	0.64	0.0	0.0	8.34	47	41
130.0	Flat Light Sector	3	400	17.9	0.0	0.0	0.0	1.00	0.75	0.0	0.0	8.34	286	1200
130.0	Flat T-Arm	3	250	12.9	0.0	0.0	0.0	0.75	0.75	0.0	0.0	8.34	154	750
130.0	RFS ATMAP1412D-	3	13	1.0	1.0	10.0	4.0	0.80	0.50	0.0	0.0	8.34	9	39
125.0	Flat Side Arm	1	150	6.3	0.0	0.0	0.0	1.00	1.00	0.0	0.0	8.25	44	150
125.0	Sinclair SC323-	1	6	1.1	5.6	2.0	2.0	1.00	1.00	0.0	0.0	8.25	8	6
90.00	Flat Side Arm	2	150	6.3	0.0	0.0	0.0	0.90	0.90	0.0	0.0	7.51	65	300
90.00	RFI FSA10-67-DIN	1	9	1.4	1.7	23.5	10.0	1.00	1.00	0.0	0.0	7.51	9	9
90.00	Sinclair SC323-	1	6	1.1	5.6	2.0	2.0	1.00	1.00	0.0	0.0	7.51	7	6
75.00	PCTEL GPS-TMG-HR-	1	1	0.2	0.4	3.2	3.2	1.00	1.00	0.0	0.0	7.13	1	1
75.00	Stand-Off	1	75	2.5	0.0	0.0	0.0	1.00	1.00	0.0	0.0	7.13	15	75
	Totals	122	11607	828.3									3931	11607

© 2007 - 2019 by ATC IP LLC. All rights reserved.

Tower Loading

Linear Appurtenance Properties

Elev From (ft)	Elev To (ft)	Description	Qty	Width (in)	Weight (lb/ft)	Pct In Block	Spread On Faces	Bundling Arrangement	Cluster Dia (in)	Out Of Zone	Spacing (in)	Orientation Factor	Ka Override
0.00	180.0	1" Conduit	1	1.30	1.68	100	Lin App	Individual	0.00	N	1.00	1.00	0.00
0.00	180.0	1/2" Coax	1	0.63	0.15	100	Lin App	Individual	0.00	N	1.00	1.00	0.00
0.00	180.0	2" Conduit	1	2.38	3.65	100	Lin App	Individual	0.00	N	1.00	1.00	0.00
0.00	180.0	7/8" Coax	3	1.09	0.33	100	Lin App	Individual	0.00	N	1.00	1.00	0.00
0.00	170.0	1 1/4" Coax	1	1.55	0.63	100	Lin App	Individual	0.00	N	1.00	1.00	0.00
0.00	170.0	1 5/8" Coax	12	1.98	0.82	100	Lin App	Individual	0.00	N	1.00	1.00	0.00
0.00	170.0	1 5/8" Hybrid	1	1.63	1.61	100	Lin App	Individual	0.00	N	1.00	1.00	0.01
0.00	170.0	1 5/8" Hybrid	1	1.63	1.61	100	Lin App	Individual	0.00	N	1.00	1.00	0.01
0.00	170.0	Waveguide	1	1.50	6.00	100	Lin App	Individual	0.00	N	1.00	1.00	0.00
0.00	160.0	1 5/8" Coax	12	1.98	0.82	100	Lin App	Individual	0.00	N	1.00	1.00	0.00
0.00	160.0	Waveguide	1	1.50	6.00	100	Lin App	Individual	0.00	N	1.00	1.00	0.00
0.00	160.0	Waveguide	1	1.50	6.00	100	Lin App	Individual	0.00	N	1.00	1.00	0.00
0.00	150.0	1 1/4" Hybriflex	3	1.54	1.00	100	Lin App	Individual	0.00	N	1.00	1.00	0.00
0.00	150.0	1 1/4" Hybriflex	1	1.54	1.00	100	Lin App	Individual	0.00	N	1.00	1.00	0.00
0.00	150.0	Waveguide	1	1.50	6.00	100	Lin App	Individual	0.00	N	1.00	1.00	0.00
0.00	140.0	1 1/4" Coax	6	1.55	0.63	100	Lin App	Individual	0.00	N	1.00	1.00	0.00
0.00	140.0	Waveguide	1	1.50	6.00	100	Lin App	Individual	0.00	N	1.00	1.00	0.00
0.00	130.0	1 5/8" Coax	12	1.98	0.82	50	Lin App	Block	0.00	N	1.00	1.00	0.00
0.00	130.0	Waveguide	1	1.50	6.00	100	Lin App	Individual	0.00	N	1.00	1.00	0.00
0.00	125.0	7/8" Coax	1	1.09	0.33	100	Lin App	Individual	0.00	N	1.00	1.00	0.00
0.00	90.00	7/8" Coax	2	1.09	0.33	100	Lin App	Individual	0.00	N	1.00	1.00	0.00
0.00	75.00	1/2" Coax	1	0.63	0.15	100	Lin App	Individual	0.00	N	1.00	1.00	0.00

© 2007 - 2019 by ATC IP LLC. All rights reserved.

Equivalent Lateral Force Method

(Based on ASCE7-10 Chapters 11, 12 & 15)

Spectral Response Acceleration for Short Period (S_s):	0.17
Spectral Response Acceleration at 1.0 Second Period (S_1):	0.06
Long-Period Transition Period (T_L - Seconds):	6
Importance Factor (I_e):	1.00
Site Coefficient F_a:	1.60
Site Coefficient F_v:	2.40
Response Modification Coefficient (R):	3.00
Design Spectral Response Acceleration at Short Period (S_{ds}):	0.18
Design Spectral Response Acceleration at 1.0 Second Period (S_{d1}):	0.10
Seismic Response Coefficient (C_s):	0.05
Upper Limit C_s:	0.05
Lower Limit C_s:	0.03
Period based on Rayleigh Method (sec):	0.67
Redundancy Factor (p):	1.30
Seismic Force Distribution Exponent (k):	1.09
Total Unfactored Dead Load:	58.87 k
Seismic Base Shear (E):	3.64 k

LoadCase (1.2 + 0.2Sds) * DL + E Seismic

Section	Height Above Base (ft)	Weight (lb)	W_z (lb-ft)	C_{vx}	Horizontal Force (lb)	Vertical Force (lb)
9	170.00	1,618	427,838	0.057	209	2,002
8	150.00	2,995	691,220	0.093	338	3,705
7	130.00	3,866	763,753	0.102	373	4,782
6	110.00	4,563	751,901	0.101	367	5,644
5	90.00	5,245	695,076	0.093	339	6,488
4	70.00	6,021	607,292	0.081	297	7,448
3	50.00	6,538	457,618	0.061	224	8,087
2	30.00	7,440	299,008	0.040	146	9,203
1	10.00	8,973	109,377	0.015	53	11,099
2-Bay Dipole	180.00	18	4,923	0.001	2	22
4-Bay Dipole	180.00	35	9,845	0.001	5	43
Flat Side Arm	180.00	450	126,581	0.017	62	557
RFS PD455	180.00	48	13,502	0.002	7	59
Alcatel Lucent RRH ALU 4X45 AWS	170.00	190	50,202	0.007	25	235
ALU RRH2X60PCS	170.00	165	43,620	0.006	21	204
ALU RRH4X60LTE	170.00	159	42,034	0.006	21	197
Andrew 8' MW Dish	170.00	400	105,745	0.014	52	495
Antel BXA-70063/4CF	170.00	20	5,234	0.001	3	24
Antel BXA-70063/6CF	170.00	17	4,494	0.001	2	21
Commscope LNX6514DS-A1M	170.00	86	22,762	0.003	11	106
Commscope SBNHH-1D65B	170.00	244	64,399	0.009	31	301
Flat Light Sector Frame	170.00	1,200	317,235	0.043	155	1,484
RFS DB-T1-6Z-8AB-0Z	170.00	44	11,632	0.002	6	54

© 2007 - 2019 by ATC IP LLC. All rights reserved.

Equivalent Lateral Force Method

RFS DB-T1-6Z-8AB-0Z	170.00	44	11,632	0.002	6	54
RFS FD9R6004/2C-3L	170.00	16	4,124	0.001	2	19
Andrew DB844H90E-XY	160.00	168	41,583	0.006	20	208
Flat Light Sector Frame	160.00	1,200	297,022	0.040	145	1,484
ALU 1900 MHz 4X45 RRH	150.00	180	41,538	0.006	20	223
ALU 800 MHz 2X50W RRH w/ Filter	150.00	192	44,307	0.006	22	237
ALU TD-RRH8X20	150.00	198	45,761	0.006	22	245
Flat Light Sector Frame	150.00	1,200	276,918	0.037	135	1,484
RFS APXVSPP18-C-A20	150.00	171	39,461	0.005	19	212
RFS APXVTM14-C-I20	150.00	159	36,622	0.005	18	196
CCI HPA65R-BU6A	140.00	126	26,913	0.004	13	155
Ericsson RRUS 4449 B5, B12	140.00	213	45,605	0.006	22	263
Ericsson RRUS 8843 B2, B66A	140.00	216	46,247	0.006	23	267
Flat Light Sector Frame	140.00	1,200	256,928	0.034	125	1,484
Kathrein Scala 80010965	140.00	293	62,690	0.008	31	362
Powerwave Allgon 7770.00	140.00	105	22,481	0.003	11	130
Powerwave Allgon LGP21401	140.00	85	18,113	0.002	9	105
Raycap DC6-48-60-18-8F	140.00	20	4,282	0.001	2	25
Raycap DC6-48-60-18-8F (23.5" Height)	140.00	20	4,282	0.001	2	25
Commscope LNX-6515DS-VTM	130.00	151	29,810	0.004	15	187
EMS RR90-17-02DP	130.00	41	8,001	0.001	4	50
Flat Light Sector Frame	130.00	1,200	237,061	0.032	116	1,484
Flat T-Arm	130.00	750	148,163	0.020	72	928
RFS ATMAP1412D-1A20	130.00	39	7,704	0.001	4	48
Flat Side Arm	125.00	150	28,397	0.004	14	186
Sinclair SC323-HF2LDF	125.00	6	1,174	0.000	1	8
Flat Side Arm	90.00	300	39,753	0.005	19	371
RFI FSA10-67-DIN	90.00	9	1,193	0.000	1	11
Sinclair SC323-HF2LDF	90.00	6	822	0.000	0	8
PCTEL GPS-TMG-HR-26N	75.00	1	65	0.000	0	1
Stand-Off	75.00	75	8,153	0.001	4	93
		58,868	7,462,096	1.000	3,645	72,815

LoadCase (0.9 - 0.2Sds) * DL + E Seismic (Reduced DL)

Section	Height Above Base (ft)	Weight (lb)	W_z (lb-ft)	C_{vx}	Horizontal Force (lb)	Vertical Force (lb)
9	170.00	1,618	427,838	0.057	209	1,397
8	150.00	2,995	691,220	0.093	338	2,585
7	130.00	3,866	763,753	0.102	373	3,337
6	110.00	4,563	751,901	0.101	367	3,938
5	90.00	5,245	695,076	0.093	339	4,527
4	70.00	6,021	607,292	0.081	297	5,197
3	50.00	6,538	457,618	0.061	224	5,643
2	30.00	7,440	299,008	0.040	146	6,421
1	10.00	8,973	109,377	0.015	53	7,745
2-Bay Dipole	180.00	18	4,923	0.001	2	15
4-Bay Dipole	180.00	35	9,845	0.001	5	30
Flat Side Arm	180.00	450	126,581	0.017	62	388
RFS PD455	180.00	48	13,502	0.002	7	41
Alcatel Lucent RRH ALU 4X45 AWS	170.00	190	50,202	0.007	25	164
ALU RRH2X60PCS	170.00	165	43,620	0.006	21	142
ALU RRH4X60LTE	170.00	159	42,034	0.006	21	137
Andrew 8' MW Dish	170.00	400	105,745	0.014	52	345

© 2007 - 2019 by ATC IP LLC. All rights reserved.

Equivalent Lateral Force Method

Antel BXA-70063/4CF	170.00	20	5,234	0.001	3	17
Antel BXA-70063/6CF	170.00	17	4,494	0.001	2	15
Commscope LNX6514DS-A1M	170.00	86	22,762	0.003	11	74
Commscope SBNHH-1D65B	170.00	244	64,399	0.009	31	210
Flat Light Sector Frame	170.00	1,200	317,235	0.043	155	1,036
RFS DB-T1-6Z-8AB-0Z	170.00	44	11,632	0.002	6	38
RFS DB-T1-6Z-8AB-0Z	170.00	44	11,632	0.002	6	38
RFS FD9R6004/2C-3L	170.00	16	4,124	0.001	2	13
Andrew DB844H90E-XY	160.00	168	41,583	0.006	20	145
Flat Light Sector Frame	160.00	1,200	297,022	0.040	145	1,036
ALU 1900 MHz 4X45 RRH	150.00	180	41,538	0.006	20	155
ALU 800 MHz 2X50W RRH w/ Filter	150.00	192	44,307	0.006	22	166
ALU TD-RRH8X20	150.00	198	45,761	0.006	22	171
Flat Light Sector Frame	150.00	1,200	276,918	0.037	135	1,036
RFS APXVSPP18-C-A20	150.00	171	39,461	0.005	19	148
RFS APXVTM14-C-I20	150.00	159	36,622	0.005	18	137
CCI HPA65R-BU6A	140.00	126	26,913	0.004	13	108
Ericsson RRUS 4449 B5, B12	140.00	213	45,605	0.006	22	184
Ericsson RRUS 8843 B2, B66A	140.00	216	46,247	0.006	23	186
Flat Light Sector Frame	140.00	1,200	256,928	0.034	125	1,036
Kathrein Scala 80010965	140.00	293	62,690	0.008	31	253
Powerwave Allgon 7770.00	140.00	105	22,481	0.003	11	91
Powerwave Allgon LGP21401	140.00	85	18,113	0.002	9	73
Raycap DC6-48-60-18-8F	140.00	20	4,282	0.001	2	17
Raycap DC6-48-60-18-8F (23.5" Height)	140.00	20	4,282	0.001	2	17
Commscope LNX-6515DS-VTM	130.00	151	29,810	0.004	15	130
EMS RR90-17-02DP	130.00	41	8,001	0.001	4	35
Flat Light Sector Frame	130.00	1,200	237,061	0.032	116	1,036
Flat T-Arm	130.00	750	148,163	0.020	72	647
RFS ATMAP1412D-1A20	130.00	39	7,704	0.001	4	34
Flat Side Arm	125.00	150	28,397	0.004	14	129
Sinclair SC323-HF2LDF	125.00	6	1,174	0.000	1	5
Flat Side Arm	90.00	300	39,753	0.005	19	259
RFI FSA10-67-DIN	90.00	9	1,193	0.000	1	8
Sinclair SC323-HF2LDF	90.00	6	822	0.000	0	5
PCTEL GPS-TMG-HR-26N	75.00	1	65	0.000	0	1
Stand-Off	75.00	75	8,153	0.001	4	65
		58,868	7,462,095	1.000	3,645	50,809

© 2007 - 2019 by ATC IP LLC. All rights reserved.

Equivalent Modal Analysis Method

(Based on ASCE7-10 Chapters 11, 12 & 15 and ANSI/TIA-G, section 2.7)

Spectral Response Acceleration for Short Period (S_s):	0.17
Spectral Response Acceleration at 1.0 Second Period (S_1):	0.06
Importance Factor (I_e):	1.00
Site Coefficient F_a:	1.60
Site Coefficient F_v:	2.40
Response Modification Coefficient (R):	3.00
Design Spectral Response Acceleration at Short Period (S_{ds}):	0.18
Desing Spectral Response Acceleration at 1.0 Second Period (S_{d1}):	0.10
Period Based on Rayleigh Method (sec):	0.67
Redundancy Factor (p):	1.30

LoadCase (1.2 + 0.2Sds) * DL + E Seismic

Section	Height Above Base (ft)	Weight (lb)	a	b	c	S_{az}	Horizontal Force (lb)	Vertical Force (lb)
9	170.00	1,618	1.686	1.069	0.793	0.325	228	2,002
8	150.00	2,995	1.312	0.138	0.347	0.175	228	3,705
7	130.00	3,866	0.986	-0.113	0.124	0.104	174	4,782
6	110.00	4,563	0.706	-0.089	0.031	0.078	154	5,644
5	90.00	5,245	0.472	-0.006	0.006	0.066	149	6,488
4	70.00	6,021	0.286	0.048	0.013	0.052	135	7,448
3	50.00	6,538	0.146	0.068	0.031	0.036	103	8,087
2	30.00	7,440	0.053	0.071	0.042	0.024	76	9,203
1	10.00	8,973	0.006	0.047	0.027	0.012	46	11,099
2-Bay Dipole	180.00	18	1.890	1.980	1.140	0.436	3	22
4-Bay Dipole	180.00	35	1.890	1.980	1.140	0.436	7	43
Flat Side Arm	180.00	450	1.890	1.980	1.140	0.436	85	557
RFS PD455	180.00	48	1.890	1.980	1.140	0.436	9	59
Alcatel Lucent RRH ALU 4X45	170.00	190	1.686	1.069	0.793	0.325	27	235
ALU RRH2X60PCS	170.00	165	1.686	1.069	0.793	0.325	23	204
ALU RRH4X60LTE	170.00	159	1.686	1.069	0.793	0.325	22	197
Andrew 8' MW Dish	170.00	400	1.686	1.069	0.793	0.325	56	495
Antel BXA-70063/4CF	170.00	20	1.686	1.069	0.793	0.325	3	24
Antel BXA-70063/6CF	170.00	17	1.686	1.069	0.793	0.325	2	21
Commscope LNX6514DS-A1M	170.00	86	1.686	1.069	0.793	0.325	12	106
Commscope SBNHH-1D65B	170.00	244	1.686	1.069	0.793	0.325	34	301
Flat Light Sector Frame	170.00	1,200	1.686	1.069	0.793	0.325	169	1,484
RFS DB-T1-6Z-8AB-0Z	170.00	44	1.686	1.069	0.793	0.325	6	54
RFS DB-T1-6Z-8AB-0Z	170.00	44	1.686	1.069	0.793	0.325	6	54
RFS FD9R6004/2C-3L	170.00	16	1.686	1.069	0.793	0.325	2	19
Andrew DB844H90E-XY	160.00	168	1.493	0.485	0.535	0.239	17	208
Flat Light Sector Frame	160.00	1,200	1.493	0.485	0.535	0.239	124	1,484
ALU 1900 MHz 4X45 RRH	150.00	180	1.312	0.138	0.347	0.175	14	223
ALU 800 MHz 2X50W RRH w/ Filter	150.00	192	1.312	0.138	0.347	0.175	15	237
ALU TD-RRH8X20	150.00	198	1.312	0.138	0.347	0.175	15	245
Flat Light Sector Frame	150.00	1,200	1.312	0.138	0.347	0.175	91	1,484
RFS APXVSPP18-C-A20	150.00	171	1.312	0.138	0.347	0.175	13	212
RFS APXVTM14-C-I20	150.00	159	1.312	0.138	0.347	0.175	12	196
CCI HPA65R-BU6A	140.00	126	1.143	-0.042	0.215	0.132	7	155
Ericsson RRUS 4449 B5, B12	140.00	213	1.143	-0.042	0.215	0.132	12	263
Ericsson RRUS 8843 B2, B66A	140.00	216	1.143	-0.042	0.215	0.132	12	267
Flat Light Sector Frame	140.00	1,200	1.143	-0.042	0.215	0.132	68	1,484
Kathrein Scala 80010965	140.00	293	1.143	-0.042	0.215	0.132	17	362

© 2007 - 2019 by ATC IP LLC. All rights reserved.

Equivalent Modal Analysis Method

Powerwave Allgon 7770.00	140.00	105	1.143	-0.042	0.215	0.132	6	130
Powerwave Allgon LGP21401	140.00	85	1.143	-0.042	0.215	0.132	5	105
Raycap DC6-48-60-18-8F	140.00	20	1.143	-0.042	0.215	0.132	1	25
Raycap DC6-48-60-18-8F (23.5"	140.00	20	1.143	-0.042	0.215	0.132	1	25
Commscope LNX-6515DS-VTM	130.00	151	0.986	-0.113	0.124	0.104	7	187
EMS RR90-17-02DP	130.00	41	0.986	-0.113	0.124	0.104	2	50
Flat Light Sector Frame	130.00	1,200	0.986	-0.113	0.124	0.104	54	1,484
Flat T-Arm	130.00	750	0.986	-0.113	0.124	0.104	34	928
RFS ATMAP1412D-1A20	130.00	39	0.986	-0.113	0.124	0.104	2	48
Flat Side Arm	125.00	150	0.911	-0.122	0.092	0.094	6	186
Sinclair SC323-HF2LDF	125.00	6	0.911	-0.122	0.092	0.094	0	8
Flat Side Arm	90.00	300	0.472	-0.006	0.006	0.066	9	371
RFI FSA10-67-DIN	90.00	9	0.472	-0.006	0.006	0.066	0	11
Sinclair SC323-HF2LDF	90.00	6	0.472	-0.006	0.006	0.066	0	8
PCTEL GPS-TMG-HR-26N	75.00	1	0.328	0.039	0.010	0.056	0	1
Stand-Off	75.00	75	0.328	0.039	0.010	0.056	2	93
		58,868	63.420	22.654	21.421	10.246	2,306	72,815

LoadCase (0.9 - 0.2Sds) * DL + E Seismic (Reduced DL)

Section	Height Above Base (ft)	Weight (lb)	a	b	c	S_{az}	Horizontal Force (lb)	Vertical Force (lb)
9	170.00	1,618	1.686	1.069	0.793	0.325	228	1,397
8	150.00	2,995	1.312	0.138	0.347	0.175	228	2,585
7	130.00	3,866	0.986	-0.113	0.124	0.104	174	3,337
6	110.00	4,563	0.706	-0.089	0.031	0.078	154	3,938
5	90.00	5,245	0.472	-0.006	0.006	0.066	149	4,527
4	70.00	6,021	0.286	0.048	0.013	0.052	135	5,197
3	50.00	6,538	0.146	0.068	0.031	0.036	103	5,643
2	30.00	7,440	0.053	0.071	0.042	0.024	76	6,421
1	10.00	8,973	0.006	0.047	0.027	0.012	46	7,745
2-Bay Dipole	180.00	18	1.890	1.980	1.140	0.436	3	15
4-Bay Dipole	180.00	35	1.890	1.980	1.140	0.436	7	30
Flat Side Arm	180.00	450	1.890	1.980	1.140	0.436	85	388
RFS PD455	180.00	48	1.890	1.980	1.140	0.436	9	41
Alcatel Lucent RRH ALU 4X45	170.00	190	1.686	1.069	0.793	0.325	27	164
ALU RRH2X60PCS	170.00	165	1.686	1.069	0.793	0.325	23	142
ALU RRH4X60LTE	170.00	159	1.686	1.069	0.793	0.325	22	137
Andrew 8' MW Dish	170.00	400	1.686	1.069	0.793	0.325	56	345
Antel BXA-70063/4CF	170.00	20	1.686	1.069	0.793	0.325	3	17
Antel BXA-70063/6CF	170.00	17	1.686	1.069	0.793	0.325	2	15
Commscope LNX6514DS-A1M	170.00	86	1.686	1.069	0.793	0.325	12	74
Commscope SBNHH-1D65B	170.00	244	1.686	1.069	0.793	0.325	34	210
Flat Light Sector Frame	170.00	1,200	1.686	1.069	0.793	0.325	169	1,036
RFS DB-T1-6Z-8AB-0Z	170.00	44	1.686	1.069	0.793	0.325	6	38
RFS DB-T1-6Z-8AB-0Z	170.00	44	1.686	1.069	0.793	0.325	6	38
RFS FD9R6004/2C-3L	170.00	16	1.686	1.069	0.793	0.325	2	13
Andrew DB844H90E-XY	160.00	168	1.493	0.485	0.535	0.239	17	145
Flat Light Sector Frame	160.00	1,200	1.493	0.485	0.535	0.239	124	1,036
ALU 1900 MHz 4X45 RRH	150.00	180	1.312	0.138	0.347	0.175	14	155
ALU 800 MHz 2X50W RRH w/ Filter	150.00	192	1.312	0.138	0.347	0.175	15	166
ALU TD-RRH8X20	150.00	198	1.312	0.138	0.347	0.175	15	171
Flat Light Sector Frame	150.00	1,200	1.312	0.138	0.347	0.175	91	1,036
RFS APXVSPP18-C-A20	150.00	171	1.312	0.138	0.347	0.175	13	148
RFS APXVTM14-C-I20	150.00	159	1.312	0.138	0.347	0.175	12	137
CCI HPA65R-BU6A	140.00	126	1.143	-0.042	0.215	0.132	7	108
Ericsson RRUS 4449 B5, B12	140.00	213	1.143	-0.042	0.215	0.132	12	184
Ericsson RRUS 8843 B2, B66A	140.00	216	1.143	-0.042	0.215	0.132	12	186
Flat Light Sector Frame	140.00	1,200	1.143	-0.042	0.215	0.132	68	1,036
Kathrein Scala 80010965	140.00	293	1.143	-0.042	0.215	0.132	17	253
Powerwave Allgon 7770.00	140.00	105	1.143	-0.042	0.215	0.132	6	91
Powerwave Allgon LGP21401	140.00	85	1.143	-0.042	0.215	0.132	5	73
Raycap DC6-48-60-18-8F	140.00	20	1.143	-0.042	0.215	0.132	1	17

© 2007 - 2019 by ATC IP LLC. All rights reserved.

Equivalent Modal Analysis Method

Raycap DC6-48-60-18-8F (23.5"	140.00	20	1.143	-0.042	0.215	0.132	1	17
Commscope LNX-6515DS-VTM	130.00	151	0.986	-0.113	0.124	0.104	7	130
EMS RR90-17-02DP	130.00	41	0.986	-0.113	0.124	0.104	2	35
Flat Light Sector Frame	130.00	1,200	0.986	-0.113	0.124	0.104	54	1,036
Flat T-Arm	130.00	750	0.986	-0.113	0.124	0.104	34	647
RFS ATMAP1412D-1A20	130.00	39	0.986	-0.113	0.124	0.104	2	34
Flat Side Arm	125.00	150	0.911	-0.122	0.092	0.094	6	129
Sinclair SC323-HF2LDF	125.00	6	0.911	-0.122	0.092	0.094	0	5
Flat Side Arm	90.00	300	0.472	-0.006	0.006	0.066	9	259
RFI FSA10-67-DIN	90.00	9	0.472	-0.006	0.006	0.066	0	8
Sinclair SC323-HF2LDF	90.00	6	0.472	-0.006	0.006	0.066	0	5
PCTEL GPS-TMG-HR-26N	75.00	1	0.328	0.039	0.010	0.056	0	1
Stand-Off	75.00	75	0.328	0.039	0.010	0.056	2	65
		58,868	63.420	22.654	21.421	10.246	2,306	50,809

© 2007 - 2019 by ATC IP LLC. All rights reserved.

Force/Stress Summary

Section: 1 1 Bot Elev (ft): 0.00 Height (ft): 20.000

Max Compression Member		Pu (kip)	Load Case	Len (ft)	Bracing % X	Y	Z	KL/R	F'y (ksi)	Phic Pn (kip)	Num Bolts	Num Holes	Shear phiRnv (kip)	Bear phiRn (kip)	Use %	Controls
LEG	PX - 10" DIA PIPE	-308.68	1.2D + 1.6W Normal	10.03	100	100	100	33.1	50.0	668.58	0	0	0.00	0.00	46	Member X
HORIZ	PST - 3" DIA PIPE	-8.85	1.2D + 1.6W 90 deg	12.04	100	100	100	124.6	50.0	32.47	2	0	0.00	0.00	27	Member X
DIAG	PX - 3-1/2" DIA PIPE	-12.61	1.2D + 1.6W 90 deg	16.14	100	100	100	147.9	50.0	38.02	3	0	0.00	0.00	33	Member X

Max Tension Member		Pu (kip)	Load Case	Fy (ksi)	Fu (ksi)	Phit Pn (kip)	Num Bolts	Num Holes	Shear phiRnv (kip)	Bear phiRn (kip)	Blk Shear phit Pn (kip)	Use %	Controls
LEG	PX - 10" DIA PIPE	269.34	0.9D + 1.6W 60 deg	50	65	724.50	0	0	0.00	0.00		37	Member
HORIZ	PST - 3" DIA PIPE	9.77	1.2D + 1.6W 90 deg	50	65	100.35	2	0	0.00	32.43	0.00	30	Bolt Bear
DIAG	PX - 3-1/2" DIA PIPE	12.24	1.2D + 1.6W 90 deg	50	65	165.60	3	0	0.00	77.51	0.00	15	Bolt Bear

Max Splice Forces	Pu (kip)	Load Case	phiRnt (kip)	Use %	Num Bolts	Bolt Type
Top Tension	255.55	0.9D + 1.6W 180 deg	0.00	0	0	
Top Compression	291.97	1.2D + 1.6W Normal	0.00	0		
Bot Tension	282.99	0.9D + 1.6W 180 deg	969.19	35	16	1" A354-BC
Bot Compression	323.34	1.2D + 1.6W Normal	0.00	0		

Section: 2 2 Bot Elev (ft): 20.00 Height (ft): 20.000

Max Compression Member		Pu (kip)	Load Case	Len (ft)	Bracing % X	Y	Z	KL/R	F'y (ksi)	Phic Pn (kip)	Num Bolts	Num Holes	Shear phiRnv (kip)	Bear phiRn (kip)	Use %	Controls
LEG	PX - 10" DIA PIPE	-277.37	1.2D + 1.6W Normal	10.03	100	100	100	33.1	50.0	668.58	0	0	0.00	0.00	41	Member X
HORIZ	PST - 2-1/2" DIA PIP	-8.70	1.2D + 1.6W 90 deg	10.79	100	100	100	136.7	50.0	20.59	2	0	0.00	0.00	42	Member X
DIAG	PST - 3" DIA PIPE	-13.00	1.2D + 1.6W 90 deg	15.18	100	100	100	157.0	50.0	20.43	3	0	0.00	0.00	63	Member X

Max Tension Member		Pu (kip)	Load Case	Fy (ksi)	Fu (ksi)	Phit Pn (kip)	Num Bolts	Num Holes	Shear phiRnv (kip)	Bear phiRn (kip)	Blk Shear phit Pn (kip)	Use %	Controls
LEG	PX - 10" DIA PIPE	243.10	0.9D + 1.6W 60 deg	50	65	724.50	0	0	0.00	0.00		33	Member
HORIZ	PST - 2-1/2" DIA PIP	9.22	1.2D + 1.6W 90 deg	50	65	76.68	2	0	0.00	25.33	0.00	36	Bolt Bear
DIAG	PST - 3" DIA PIPE	11.87	1.2D + 1.6W 90 deg	50	65	100.35	3	0	0.00	43.80	0.00	27	Bolt Bear

Max Splice Forces	Pu (kip)	Load Case	phiRnt (kip)	Use %	Num Bolts	Bolt Type
Top Tension	228.86	0.9D + 1.6W 180 deg	0.00	0	0	
Top Compression	260.08	1.2D + 1.6W Normal	0.00	0		
Bot Tension	255.55	0.9D + 1.6W 180 deg	654.20	39	12	1 A325
Bot Compression	0.00		0.00	0		

© 2007 - 2019 by ATC IP LLC. All rights reserved.

Force/Stress Summary

Section: 3 3 Bot Elev (ft): 40.00 Height (ft): 20.000

Max Compression Member	Pu (kip)	Load Case	Len (ft)	Bracing % X	Y	Z	KL/R	F'y (ksi)	Phic Pn (kip)	Num Bolts	Num Holes	Shear phiRnv (kip)	Bear phiRn (kip)	Use %	Controls
LEG PX - 8" DIA PIPE	-245.23	1.2D + 1.6W Normal	10.03	100	100	100	41.8	50.0	506.95	0	0	0.00	0.00	48	Member X
HORIZ PST - 2-1/2" DIA PIP	-7.99	0.9D + 1.6W 90 deg	9.503	100	100	100	120.4	50.0	26.55	2	0	0.00	0.00	30	Member X
DIAG PST - 3" DIA PIPE	-12.42	1.2D + 1.6W 90 deg	14.26	100	100	100	147.6	50.0	23.13	3	0	0.00	0.00	53	Member X

Max Tension Member	Pu (kip)	Load Case	Fy (ksi)	Fu (ksi)	Phit Pn (kip)	Num Bolts	Num Holes	Shear phiRnv (kip)	Bear phiRn (kip)	Blk Shear phit Pn (kip)	Use %	Controls
LEG PX - 8" DIA PIPE	215.98	0.9D + 1.6W 60 deg	50	65	576.00	0	0	0.00	0.00		37	Member
HORIZ PST - 2-1/2" DIA PIP	8.25	1.2D + 1.6W 90 deg	50	65	76.68	2	0	0.00	25.33	0.00	32	Bolt Bear
DIAG PST - 3" DIA PIPE	11.48	1.2D + 1.6W 90 deg	50	65	100.35	3	0	0.00	43.80	0.00	26	Bolt Bear

Max Splice Forces	Pu (kip)	Load Case	phiRnt (kip)	Use %	Num Bolts	Bolt Type
Top Tension	201.43	0.9D + 1.6W 180 deg	0.00	0	0	
Top Compression	227.93	1.2D + 1.6W Normal	0.00	0		
Bot Tension	228.86	0.9D + 1.6W 180 deg	654.20	35	12	1 A325
Bot Compression	0.00		0.00	0		

Section: 4 4 Bot Elev (ft): 60.00 Height (ft): 20.000

Max Compression Member	Pu (kip)	Load Case	Len (ft)	Bracing % X	Y	Z	KL/R	F'y (ksi)	Phic Pn (kip)	Num Bolts	Num Holes	Shear phiRnv (kip)	Bear phiRn (kip)	Use %	Controls
LEG PX - 8" DIA PIPE	-210.95	1.2D + 1.6W Normal	10.03	100	100	100	41.8	50.0	507.00	0	0	0.00	0.00	41	Member X
HORIZ PST - 2" DIA PIPE	-7.90	0.9D + 1.6W 90 deg	8.214	100	100	100	125.2	50.0	15.41	2	0	0.00	0.00	51	Member X
DIAG PST - 3" DIA PIPE	-13.13	1.2D + 1.6W 90 deg	13.35	100	100	100	138.1	50.0	26.41	3	0	0.00	0.00	49	Member X

Max Tension Member	Pu (kip)	Load Case	Fy (ksi)	Fu (ksi)	Phit Pn (kip)	Num Bolts	Num Holes	Shear phiRnv (kip)	Bear phiRn (kip)	Blk Shear phit Pn (kip)	Use %	Controls
LEG PX - 8" DIA PIPE	186.18	0.9D + 1.6W 60 deg	50	65	576.00	0	0	0.00	0.00		32	Member
HORIZ PST - 2" DIA PIPE	8.09	1.2D + 1.6W 90 deg	50	65	48.15	2	0	0.00	19.22	0.00	42	Bolt Bear
DIAG PST - 3" DIA PIPE	12.33	1.2D + 1.6W 90 deg	50	65	100.35	3	0	0.00	43.80	0.00	28	Bolt Bear

Max Splice Forces	Pu (kip)	Load Case	phiRnt (kip)	Use %	Num Bolts	Bolt Type
Top Tension	169.61	0.9D + 1.6W 180 deg	0.00	0	0	
Top Compression	191.71	1.2D + 1.6W Normal	0.00	0		
Bot Tension	201.43	0.9D + 1.6W 180 deg	436.14	46	8	1 A325
Bot Compression	0.00		0.00	0		

© 2007 - 2019 by ATC IP LLC. All rights reserved.

Force/Stress Summary

Section: 5 5 Bot Elev (ft): 80.00 Height (ft): 20.000

Max Compression Member		Pu (kip)	Load Case	Len (ft)	Bracing % X	Y	Z	KL/R	F'y (ksi)	Phic Pn (kip)	Num Bolts	Num Holes	Shear phiRnv (kip)	Bear phiRn (kip)	Use %	Controls
LEG	PSP - ROHN 8 EHS	-171.77	1.2D + 1.6W Normal	10.02	100	100	100	41.2	50.0	386.39	0	0	0.00	0.00	44	Member X
HORIZ	PST - 2" DIA PIPE	-8.02	1.2D + 1.6W 90 deg	7.026	100	100	100	107.1	50.0	20.80	2	0	0.00	0.00	38	Member X
DIAG	PST - 3" DIA PIPE	-14.49	1.2D + 1.6W 90 deg	12.55	100	100	100	129.9	50.0	29.85	3	0	0.00	0.00	48	Member X

Max Tension Member		Pu (kip)	Load Case	Fy (ksi)	Fu (ksi)	Phit Pn (kip)	Num Bolts	Num Holes	Shear phiRnv (kip)	Bear phiRn (kip)	Blk Shear phit Pn (kip)	Use %	Controls
LEG	PSP - ROHN 8 EHS	149.03	1.2D + 1.6W 180 deg	50	65	437.40	0	0	0.00	0.00		34	Member
HORIZ	PST - 2" DIA PIPE	8.14	1.2D + 1.6W 90 deg	50	65	48.15	2	0	0.00	19.22	0.00	42	Bolt Bear
DIAG	PST - 3" DIA PIPE	13.82	1.2D + 1.6W 90 deg	50	65	100.35	3	0	0.00	43.80	0.00	31	Bolt Bear

Max Splice Forces	Pu (kip)	Load Case	phiRnt (kip)	Use %	Num Bolts	Bolt Type
Top Tension	131.95	0.9D + 1.6W 180 deg	0.00	0	0	
Top Compression	149.95	1.2D + 1.6W Normal	0.00	0		
Bot Tension	169.61	0.9D + 1.6W 180 deg	436.14	39	8	1 A325
Bot Compression	0.00		0.00	0		

Section: 6 6 Bot Elev (ft): 100.0 Height (ft): 20.000

Max Compression Member		Pu (kip)	Load Case	Len (ft)	Bracing % X	Y	Z	KL/R	F'y (ksi)	Phic Pn (kip)	Num Bolts	Num Holes	Shear phiRnv (kip)	Bear phiRn (kip)	Use %	Controls
LEG	PSP - ROHN 6 EHS	-135.94	1.2D + 1.6W Normal	6.68	100	100	100	36.0	50.0	274.62	0	0	0.00	0.00	49	Member X
HORIZ	PST - 2" DIA PIPE	-7.41	0.9D + 1.6W 90 deg	6.108	100	100	100	93.1	50.0	25.54	2	0	0.00	0.00	29	Member X
DIAG	PST - 2-1/2" DIA PIP	-11.39	1.2D + 1.6W 90 deg	9.288	100	100	100	117.7	50.0	27.79	3	0	0.00	0.00	40	Member X

Max Tension Member		Pu (kip)	Load Case	Fy (ksi)	Fu (ksi)	Phit Pn (kip)	Num Bolts	Num Holes	Shear phiRnv (kip)	Bear phiRn (kip)	Blk Shear phit Pn (kip)	Use %	Controls
LEG	PSP - ROHN 6 EHS	118.76	0.9D + 1.6W 60 deg	50	65	301.95	0	0	0.00	0.00		39	Member
HORIZ	PST - 2" DIA PIPE	7.51	1.2D + 1.6W 90 deg	50	65	48.15	2	0	0.00	19.22	0.00	39	Bolt Bear
DIAG	PST - 2-1/2" DIA PIP	11.21	1.2D + 1.6W 90 deg	50	65	76.68	3	0	0.00	41.17	0.00	27	Bolt Bear

Max Splice Forces	Pu (kip)	Load Case	phiRnt (kip)	Use %	Num Bolts	Bolt Type
Top Tension	90.38	0.9D + 1.6W 180 deg	0.00	0	0	
Top Compression	104.73	1.2D + 1.6W Normal	0.00	0		
Bot Tension	131.95	0.9D + 1.6W 180 deg	436.14	30	8	1 A325
Bot Compression	0.00		0.00	0		

© 2007 - 2019 by ATC IP LLC. All rights reserved.

Force/Stress Summary

Section: 7 7 Bot Elev (ft): 120.0 Height (ft): 20.000

Max Compression Member		Pu (kip)	Load Case	Len (ft)	Bracing % X	Y	Z	KL/R	F'y (ksi)	Phic Pn (kip)	Num Bolts	Num Holes	Shear phiRnv (kip)	Bear phiRn (kip)	Use %	Controls
LEG	PSP - ROHN 5 EH	-89.30	1.2D + 1.6W Normal	6.68	100	100	100	43.6	50.0	239.34	0	0	0.00	0.00	37	Member X
HORIZ	PST - 1-1/2" DIA PIP	-6.94	1.2D + 1.6W 90 deg	5.049	100	100	100	97.2	50.0	18.01	2	0	0.00	0.00	38	Member X
DIAG	PX - 2" DIA PIPE	-11.72	1.2D + 1.6W 90 deg	8.579	99	99	99	133.1	50.0	18.89	3	0	0.00	0.00	62	Member X

Max Tension Member		Pu (kip)	Load Case	Fy (ksi)	Fu (ksi)	Phit Pn (kip)	Num Bolts	Num Holes	Shear phiRnv (kip)	Bear phiRn (kip)	Blk Shear phit Pn (kip)	Use %	Controls
LEG	PSP - ROHN 5 EH	75.17	0.9D + 1.6W 60 deg	50	65	274.95	0	0	0.00	0.00		27	Member
HORIZ	PST - 1-1/2" DIA PIP	7.00	1.2D + 1.6W 90 deg	50	65	35.96	2	0	0.00	18.10	0.00	38	Bolt Bear
DIAG	PX - 2" DIA PIPE	11.39	1.2D + 1.6W 90 deg	50	65	66.60	3	0	0.00	44.21	0.00	25	Bolt Bear

Max Splice Forces	Pu (kip)	Load Case	phiRnt (kip)	Use %	Num Bolts	Bolt Type
Top Tension	48.37	0.9D + 1.6W 180 deg	0.00	0	0	
Top Compression	58.27	1.2D + 1.6W Normal	0.00	0		
Bot Tension	90.38	0.9D + 1.6W 180 deg	327.10	28	6	1 A325
Bot Compression	0.00		0.00	0		

Section: 8 8 Bot Elev (ft): 140.0 Height (ft): 20.000

Max Compression Member		Pu (kip)	Load Case	Len (ft)	Bracing % X	Y	Z	KL/R	F'y (ksi)	Phic Pn (kip)	Num Bolts	Num Holes	Shear phiRnv (kip)	Bear phiRn (kip)	Use %	Controls
LEG	PX - 4" DIA PIPE	-41.30	1.2D + 1.6W Normal	6.67	100	100	100	54.1	50.0	160.28	0	0	0.00	0.00	25	Member X
HORIZ	PST - 1-1/2" DIA PIP	-5.71	1.2D + 1.6W 90 deg	4.340	100	100	100	83.6	50.0	21.57	2	0	0.00	0.00	26	Member X
DIAG	PX - 2" DIA PIPE	-11.10	1.2D + 1.6W 90 deg	7.963	100	100	100	124.7	50.0	21.49	3	0	0.00	0.00	51	Member X

Max Tension Member		Pu (kip)	Load Case	Fy (ksi)	Fu (ksi)	Phit Pn (kip)	Num Bolts	Num Holes	Shear phiRnv (kip)	Bear phiRn (kip)	Blk Shear phit Pn (kip)	Use %	Controls
LEG	PX - 4" DIA PIPE	33.84	0.9D + 1.6W 180 deg	50	65	198.45	0	0	0.00	0.00		17	Member
HORIZ	PST - 1-1/2" DIA PIP	5.82	1.2D + 1.6W 90 deg	50	65	35.96	2	0	0.00	18.10	0.00	32	Bolt Bear
DIAG	PX - 2" DIA PIPE	10.86	1.2D + 1.6W 90 deg	50	65	66.60	3	0	0.00	44.21	0.00	24	Bolt Bear

Max Splice Forces	Pu (kip)	Load Case	phiRnt (kip)	Use %	Num Bolts	Bolt Type
Top Tension	10.92	0.9D + 1.6W 180 deg	0.00	0	0	
Top Compression	15.50	1.2D + 1.6W Normal	0.00	0		
Bot Tension	48.37	0.9D + 1.6W 180 deg	218.07	22	4	1 A325
Bot Compression	0.00		0.00	0		

© 2007 - 2019 by ATC IP LLC. All rights reserved.

Force/Stress Summary

Section: 9 9 Bot Elev (ft): 160.0 Height (ft): 20.000

Max Compression Member	Pu (kip)	Load Case	Len (ft)	Bracing % X	Bracing % Y	Bracing % Z	KL/R	F'y (ksi)	Phic Pn (kip)	Num Bolts	Num Holes	Shear phiRnv (kip)	Bear phiRn (kip)	Use %	Controls
LEG PST - 3" DIA PIPE	-6.69	1.2D + 1.0Di + 1.0Wi	6.67	100	100	100	69.0	50.0	70.87	0	0	0.00	0.00	9	Member X
HORIZ PST - 1-1/2" DIA PIP	-3.27	1.2D + 1.6W Normal	4.299	100	100	100	82.8	50.0	21.78	2	0	0.00	0.00	15	Member X
DIAG PST - 2" DIA PIPE	-5.85	1.2D + 1.6W 90 deg	7.940	100	100	100	121.1	50.0	16.49	3	0	0.00	0.00	35	Member X

Max Tension Member	Pu (kip)	Load Case	Fy (ksi)	Fu (ksi)	Phit Pn (kip)	Num Bolts	Num Holes	Shear phiRnv (kip)	Bear phiRn (kip)	Blk Shear phit Pn (kip)	Use %	Controls
LEG PST - 3" DIA PIPE	3.05	0.9D + 1.6W 180 deg	50	65	100.35	0	0	0.00	0.00		3	Member
HORIZ PST - 1-1/2" DIA PIP	3.30	1.2D + 1.6W 60 deg	50	65	35.96	2	0	0.00	18.10	0.00	18	Bolt Bear
DIAG PST - 2" DIA PIPE	5.73	1.2D + 1.6W 90 deg	50	65	48.15	3	0	0.00	31.23	0.00	18	Bolt Bear

Max Splice Forces	Pu (kip)	Load Case	phiRnt (kip)	Use %	Num Bolts	Bolt Type
Top Tension	0.00		0.00	0	0	
Top Compression	0.91	1.2D + 1.0Di + 1.0Wi	0.00	0		
Bot Tension	10.92	0.9D + 1.6W 180 deg	166.22	7	4	0.875" A325
Bot Compression	0.00		0.00	0		

© 2007 - 2019 by ATC IP LLC. All rights reserved.

Detailed Reactions

Load Case	Radius (ft)	Elevation (ft)	Azimuth (deg)	Node	FX (kip)	FY (kip)	FZ (kip)	(-) = Uplift (+) = Down
1.2D + 1.6W Normal	**14.63**	**00.00**	**0**	**1**	**0.00**	**322.19**	**-37.93**	
	14.63	**00.00**	**120**	**1a**	**11.10**	**-125.77**	**-11.61**	
	14.63	**00.00**	**240**	**1b**	**-11.10**	**-125.77**	**-11.61**	
1.2D + 1.6W 60 deg	**14.63**	**00.00**	**0**	**1**	**-4.41**	**172.87**	**-20.21**	
	14.63	**00.00**	**120**	**1a**	**-19.70**	**172.56**	**6.28**	
	14.63	**00.00**	**240**	**1b**	**-28.85**	**-274.78**	**-16.65**	
1.2D + 1.6W 90 deg	**14.63**	**00.00**	**0**	**1**	**-5.15**	**23.55**	**-2.42**	
	14.63	**00.00**	**120**	**1a**	**-30.00**	**281.82**	**14.40**	
	14.63	**00.00**	**240**	**1b**	**-26.01**	**-234.72**	**-11.98**	
1.2D + 1.6W 120 deg	**14.63**	**00.00**	**0**	**1**	**-4.52**	**-125.77**	**15.42**	
	14.63	**00.00**	**120**	**1a**	**-32.85**	**321.88**	**18.96**	
	14.63	**00.00**	**240**	**1b**	**-15.60**	**-125.46**	**-3.80**	
1.2D + 1.6W 180 deg	**14.63**	**00.00**	**0**	**1**	**0.00**	**-275.10**	**33.32**	
	14.63	**00.00**	**120**	**1a**	**-15.30**	**172.87**	**13.92**	
	14.63	**00.00**	**240**	**1b**	**15.30**	**172.87**	**13.92**	
1.2D + 1.6W 210 deg	**14.63**	**00.00**	**0**	**1**	**2.63**	**-235.09**	**28.52**	
	14.63	**00.00**	**120**	**1a**	**0.47**	**23.73**	**5.67**	
	14.63	**00.00**	**240**	**1b**	**27.48**	**282.00**	**18.77**	
1.2D + 1.6W 240 deg	**14.63**	**00.00**	**0**	**1**	**4.52**	**-125.77**	**15.42**	
	14.63	**00.00**	**120**	**1a**	**15.60**	**-125.46**	**-3.80**	
	14.63	**00.00**	**240**	**1b**	**32.85**	**321.88**	**18.96**	
1.2D + 1.6W 300 deg	**14.63**	**00.00**	**0**	**1**	**4.41**	**172.87**	**-20.21**	
	14.63	**00.00**	**120**	**1a**	**28.85**	**-274.78**	**-16.65**	
	14.63	**00.00**	**240**	**1b**	**19.70**	**172.56**	**6.28**	
1.2D + 1.6W 330 deg	**14.63**	**00.00**	**0**	**1**	**2.53**	**282.18**	**-33.19**	
	14.63	**00.00**	**120**	**1a**	**23.38**	**-234.91**	**-16.53**	
	14.63	**00.00**	**240**	**1b**	**4.67**	**23.37**	**-3.25**	
0.9D + 1.6W Normal	**14.63**	**00.00**	**0**	**1**	**0.00**	**316.08**	**-37.32**	
	14.63	**00.00**	**120**	**1a**	**11.62**	**-131.55**	**-11.92**	
	14.63	**00.00**	**240**	**1b**	**-11.62**	**-131.55**	**-11.92**	
0.9D + 1.6W 60 deg	**14.63**	**00.00**	**0**	**1**	**-4.42**	**166.87**	**-19.60**	
	14.63	**00.00**	**120**	**1a**	**-19.18**	**166.56**	**5.97**	
	14.63	**00.00**	**240**	**1b**	**-29.37**	**-280.45**	**-16.95**	
0.9D + 1.6W 90 deg	**14.63**	**00.00**	**0**	**1**	**-5.16**	**17.66**	**-1.82**	
	14.63	**00.00**	**120**	**1a**	**-29.47**	**275.74**	**14.10**	
	14.63	**00.00**	**240**	**1b**	**-26.53**	**-240.42**	**-12.28**	
0.9D + 1.6W 120 deg	**14.63**	**00.00**	**0**	**1**	**-4.52**	**-131.55**	**16.02**	
	14.63	**00.00**	**120**	**1a**	**-32.32**	**315.76**	**18.65**	
	14.63	**00.00**	**240**	**1b**	**-16.13**	**-131.23**	**-4.10**	
0.9D + 1.6W 180 deg	**14.63**	**00.00**	**0**	**1**	**0.00**	**-280.76**	**33.92**	
	14.63	**00.00**	**120**	**1a**	**-14.77**	**166.87**	**13.62**	
	14.63	**00.00**	**240**	**1b**	**14.77**	**166.87**	**13.62**	
0.9D + 1.6W 210 deg	**14.63**	**00.00**	**0**	**1**	**2.63**	**-240.78**	**29.12**	
	14.63	**00.00**	**120**	**1a**	**1.00**	**17.84**	**5.37**	

© 2007 - 2019 by ATC IP LLC. All rights reserved.

	14.63	00.00	240	1b	26.95	275.92	18.47
0.9D + 1.6W 240 deg	14.63	00.00	0	1	4.52	-131.55	16.02
	14.63	00.00	120	1a	16.13	-131.23	-4.10
	14.63	00.00	240	1b	32.32	315.76	18.65
0.9D + 1.6W 300 deg	14.63	00.00	0	1	4.42	166.87	-19.60
	14.63	00.00	120	1a	29.37	-280.45	-16.95
	14.63	00.00	240	1b	19.18	166.56	5.97
0.9D + 1.6W 330 deg	14.63	00.00	0	1	2.53	276.10	-32.58
	14.63	00.00	120	1a	23.90	-240.60	-16.83
	14.63	00.00	240	1b	4.15	17.48	-3.56
1.2D + 1.0Di + 1.0Wi Normal	14.63	00.00	0	1	0.00	159.75	-17.39
	14.63	00.00	120	1a	0.20	10.25	-2.01
	14.63	00.00	240	1b	-0.20	10.25	-2.01
1.2D + 1.0Di + 1.0Wi 60 deg	14.63	00.00	0	1	-1.63	109.92	-11.20
	14.63	00.00	120	1a	-10.52	109.81	4.19
	14.63	00.00	240	1b	-6.39	-39.47	-3.69
1.2D + 1.0Di + 1.0Wi 90 deg	14.63	00.00	0	1	-1.89	60.08	-5.02
	14.63	00.00	120	1a	-14.09	146.27	7.05
	14.63	00.00	240	1b	-5.42	-26.10	-2.03
1.2D + 1.0Di + 1.0Wi 120 deg	14.63	00.00	0	1	-1.65	10.25	1.18
	14.63	00.00	120	1a	-15.05	159.64	8.69
	14.63	00.00	240	1b	-1.84	10.36	0.84
1.2D + 1.0Di + 1.0Wi 180 deg	14.63	00.00	0	1	0.00	-39.59	7.38
	14.63	00.00	120	1a	-8.89	109.92	7.01
	14.63	00.00	240	1b	8.89	109.92	7.01
1.2D + 1.0Di + 1.0Wi 210 deg	14.63	00.00	0	1	0.95	-26.23	5.72
	14.63	00.00	120	1a	-3.40	60.15	4.15
	14.63	00.00	240	1b	13.15	146.34	8.68
1.2D + 1.0Di + 1.0Wi 240 deg	14.63	00.00	0	1	1.65	10.25	1.18
	14.63	00.00	120	1a	1.84	10.36	0.84
	14.63	00.00	240	1b	15.05	159.64	8.69
1.2D + 1.0Di + 1.0Wi 300 deg	14.63	00.00	0	1	1.63	109.92	-11.20
	14.63	00.00	120	1a	6.39	-39.47	-3.69
	14.63	00.00	240	1b	10.52	109.81	4.19
1.2D + 1.0Di + 1.0Wi 330 deg	14.63	00.00	0	1	0.94	146.40	-15.73
	14.63	00.00	120	1a	4.47	-26.17	-3.68
	14.63	00.00	240	1b	5.29	60.02	0.87
(1.2 + 0.2Sds) * DL + E Normal M1	14.63	00.00	0	1	0.00	43.82	-4.65
	14.63	00.00	120	1a	-1.32	13.39	0.52
	14.63	00.00	240	1b	1.32	13.39	0.52
(1.2 + 0.2Sds) * DL + E Normal M2	14.63	00.00	0	1	0.00	37.28	-3.86
	14.63	00.00	120	1a	-1.62	16.66	0.80
	14.63	00.00	240	1b	1.62	16.66	0.80
(1.2 + 0.2Sds) * DL + E 60 deg M1	14.63	00.00	0	1	-0.21	33.67	-3.57
	14.63	00.00	120	1a	-3.19	33.67	1.60
	14.63	00.00	240	1b	0.28	3.25	0.16
(1.2 + 0.2Sds) * DL + E 60 deg M2	14.63	00.00	0	1	-0.11	30.41	-3.17
	14.63	00.00	120	1a	-2.80	30.41	1.49
	14.63	00.00	240	1b	0.97	9.78	0.56

© 2007 - 2019 by ATC IP LLC. All rights reserved.

(1.2 + 0.2Sds) * DL + E 90 deg M1	14.63	00.00	0	1	-0.24	23.53	-2.49
	14.63	00.00	120	1a	-3.84	41.10	2.08
	14.63	00.00	240	1b	0.47	5.97	0.41
(1.2 + 0.2Sds) * DL + E 90 deg M2	14.63	00.00	0	1	-0.13	23.53	-2.49
	14.63	00.00	120	1a	-3.21	35.44	1.78
	14.63	00.00	240	1b	1.09	11.62	0.71
(1.2 + 0.2Sds) * DL + E 120 deg M1	14.63	00.00	0	1	-0.21	13.39	-1.41
	14.63	00.00	120	1a	-4.03	43.82	2.32
	14.63	00.00	240	1b	1.11	13.39	0.88
(1.2 + 0.2Sds) * DL + E 120 deg M2	14.63	00.00	0	1	-0.11	16.66	-1.80
	14.63	00.00	120	1a	-3.34	37.28	1.93
	14.63	00.00	240	1b	1.50	16.66	1.00
(1.2 + 0.2Sds) * DL + E 180 deg M1	14.63	00.00	0	1	0.00	3.25	-0.33
	14.63	00.00	120	1a	-2.99	33.67	1.96
	14.63	00.00	240	1b	2.99	33.67	1.96
(1.2 + 0.2Sds) * DL + E 180 deg M2	14.63	00.00	0	1	0.00	9.78	-1.12
	14.63	00.00	120	1a	-2.69	30.41	1.68
	14.63	00.00	240	1b	2.69	30.41	1.68
(1.2 + 0.2Sds) * DL + E 210 deg M1	14.63	00.00	0	1	0.12	5.97	-0.61
	14.63	00.00	120	1a	-2.03	23.53	1.45
	14.63	00.00	240	1b	3.72	41.10	2.28
(1.2 + 0.2Sds) * DL + E 210 deg M2	14.63	00.00	0	1	0.06	11.62	-1.30
	14.63	00.00	120	1a	-2.09	23.53	1.36
	14.63	00.00	240	1b	3.15	35.44	1.89
(1.2 + 0.2Sds) * DL + E 240 deg M1	14.63	00.00	0	1	0.21	13.39	-1.41
	14.63	00.00	120	1a	-1.11	13.39	0.88
	14.63	00.00	240	1b	4.03	43.82	2.32
(1.2 + 0.2Sds) * DL + E 240 deg M2	14.63	00.00	0	1	0.11	16.66	-1.80
	14.63	00.00	120	1a	-1.50	16.66	1.00
	14.63	00.00	240	1b	3.34	37.28	1.93
(1.2 + 0.2Sds) * DL + E 300 deg M1	14.63	00.00	0	1	0.21	33.67	-3.57
	14.63	00.00	120	1a	-0.28	3.25	0.16
	14.63	00.00	240	1b	3.19	33.67	1.60
(1.2 + 0.2Sds) * DL + E 300 deg M2	14.63	00.00	0	1	0.11	30.41	-3.17
	14.63	00.00	120	1a	-0.97	9.78	0.56
	14.63	00.00	240	1b	2.80	30.41	1.49
(1.2 + 0.2Sds) * DL + E 330 deg M1	14.63	00.00	0	1	0.12	41.10	-4.36
	14.63	00.00	120	1a	-0.59	5.97	0.20
	14.63	00.00	240	1b	2.27	23.53	1.04
(1.2 + 0.2Sds) * DL + E 330 deg M2	14.63	00.00	0	1	0.06	35.44	-3.67
	14.63	00.00	120	1a	-1.16	11.62	0.59
	14.63	00.00	240	1b	2.22	23.53	1.13
(0.9 - 0.2Sds) * DL + E Normal M1	14.63	00.00	0	1	0.00	36.68	-3.90
	14.63	00.00	120	1a	-0.67	6.29	0.15
	14.63	00.00	240	1b	0.67	6.29	0.15
(0.9 - 0.2Sds) * DL + E Normal M2	14.63	00.00	0	1	0.00	30.16	-3.11
	14.63	00.00	120	1a	-0.97	9.55	0.43
	14.63	00.00	240	1b	0.97	9.55	0.43

© 2007 - 2019 by ATC IP LLC. All rights reserved.

(0.9 - 0.2Sds) * DL + E 60 deg M1	14.63	00.00	0	1	-0.21	26.55	-2.82
	14.63	00.00	120	1a	-2.54	26.55	1.23
	14.63	00.00	240	1b	-0.37	-3.84	-0.21
(0.9 - 0.2Sds) * DL + E 60 deg M2	14.63	00.00	0	1	-0.11	23.29	-2.42
	14.63	00.00	120	1a	-2.15	23.29	1.11
	14.63	00.00	240	1b	0.32	2.68	0.18
(0.9 - 0.2Sds) * DL + E 90 deg M1	14.63	00.00	0	1	-0.24	16.42	-1.74
	14.63	00.00	120	1a	-3.18	33.97	1.70
	14.63	00.00	240	1b	-0.18	-1.13	0.04
(0.9 - 0.2Sds) * DL + E 90 deg M2	14.63	00.00	0	1	-0.13	16.42	-1.74
	14.63	00.00	120	1a	-2.56	28.32	1.41
	14.63	00.00	240	1b	0.44	4.52	0.33
(0.9 - 0.2Sds) * DL + E 120 deg M1	14.63	00.00	0	1	-0.21	6.29	-0.65
	14.63	00.00	120	1a	-3.38	36.68	1.95
	14.63	00.00	240	1b	0.46	6.29	0.51
(0.9 - 0.2Sds) * DL + E 120 deg M2	14.63	00.00	0	1	-0.11	9.55	-1.05
	14.63	00.00	120	1a	-2.69	30.16	1.55
	14.63	00.00	240	1b	0.85	9.55	0.62
(0.9 - 0.2Sds) * DL + E 180 deg M1	14.63	00.00	0	1	0.00	-3.84	0.43
	14.63	00.00	120	1a	-2.34	26.55	1.59
	14.63	00.00	240	1b	2.34	26.55	1.59
(0.9 - 0.2Sds) * DL + E 180 deg M2	14.63	00.00	0	1	0.00	2.68	-0.36
	14.63	00.00	120	1a	-2.04	23.29	1.31
	14.63	00.00	240	1b	2.04	23.29	1.31
(0.9 - 0.2Sds) * DL + E 210 deg M1	14.63	00.00	0	1	0.12	-1.13	0.14
	14.63	00.00	120	1a	-1.38	16.42	1.08
	14.63	00.00	240	1b	3.06	33.97	1.91
(0.9 - 0.2Sds) * DL + E 210 deg M2	14.63	00.00	0	1	0.06	4.52	-0.55
	14.63	00.00	120	1a	-1.44	16.42	0.98
	14.63	00.00	240	1b	2.50	28.32	1.52
(0.9 - 0.2Sds) * DL + E 240 deg M1	14.63	00.00	0	1	0.21	6.29	-0.65
	14.63	00.00	120	1a	-0.46	6.29	0.51
	14.63	00.00	240	1b	3.38	36.68	1.95
(0.9 - 0.2Sds) * DL + E 240 deg M2	14.63	00.00	0	1	0.11	9.55	-1.05
	14.63	00.00	120	1a	-0.85	9.55	0.62
	14.63	00.00	240	1b	2.69	30.16	1.55
(0.9 - 0.2Sds) * DL + E 300 deg M1	14.63	00.00	0	1	0.21	26.55	-2.82
	14.63	00.00	120	1a	0.37	-3.84	-0.21
	14.63	00.00	240	1b	2.54	26.55	1.23
(0.9 - 0.2Sds) * DL + E 300 deg M2	14.63	00.00	0	1	0.11	23.29	-2.42
	14.63	00.00	120	1a	-0.32	2.68	0.18
	14.63	00.00	240	1b	2.15	23.29	1.11
(0.9 - 0.2Sds) * DL + E 330 deg M1	14.63	00.00	0	1	0.12	33.97	-3.61
	14.63	00.00	120	1a	0.06	-1.13	-0.17
	14.63	00.00	240	1b	1.62	16.42	0.66
(0.9 - 0.2Sds) * DL + E 330 deg M2	14.63	00.00	0	1	0.06	28.32	-2.92
	14.63	00.00	120	1a	-0.51	4.52	0.22
	14.63	00.00	240	1b	1.57	16.42	0.76
1.0D + 1.0W Service Normal	14.63	00.00	0	1	0.00	86.30	-10.02

© 2007 - 2019 by ATC IP LLC. All rights reserved.

	14.63	00.00	120	1a	1.22	-13.72	-1.88
	14.63	00.00	240	1b	-1.22	-13.72	-1.88
1.0D + 1.0W Service 60 deg	14.63	00.00	0	1	-1.01	52.96	-6.02
	14.63	00.00	120	1a	-5.72	52.89	2.13
	14.63	00.00	240	1b	-5.20	-46.99	-3.00
1.0D + 1.0W Service 90 deg	14.63	00.00	0	1	-1.17	19.62	-2.01
	14.63	00.00	120	1a	-8.04	77.29	3.97
	14.63	00.00	240	1b	-4.56	-38.04	-1.95
1.0D + 1.0W Service 120 deg	14.63	00.00	0	1	-1.02	-13.72	2.00
	14.63	00.00	120	1a	-8.68	86.23	5.01
	14.63	00.00	240	1b	-2.24	-13.65	-0.12
1.0D + 1.0W Service 180 deg	14.63	00.00	0	1	0.00	-47.06	6.01
	14.63	00.00	120	1a	-4.70	52.96	3.88
	14.63	00.00	240	1b	4.70	52.96	3.88
1.0D + 1.0W Service 210 deg	14.63	00.00	0	1	0.59	-38.12	4.93
	14.63	00.00	120	1a	-1.16	19.66	2.02
	14.63	00.00	240	1b	7.46	77.33	4.98
1.0D + 1.0W Service 240 deg	14.63	00.00	0	1	1.02	-13.72	2.00
	14.63	00.00	120	1a	2.24	-13.65	-0.12
	14.63	00.00	240	1b	8.68	86.23	5.01
1.0D + 1.0W Service 300 deg	14.63	00.00	0	1	1.01	52.96	-6.02
	14.63	00.00	120	1a	5.20	-46.99	-3.00
	14.63	00.00	240	1b	5.72	52.89	2.13
1.0D + 1.0W Service 330 deg	14.63	00.00	0	1	0.58	77.37	-8.95
	14.63	00.00	120	1a	3.98	-38.08	-2.97
	14.63	00.00	240	1b	2.33	19.58	-0.01

Max Uplift:	280.76 (kip)	Moment Ice:	2,186.66 (kip-ft)	Moment:	6,551.99 (kip-ft)	1.2D + 1.6W 180 deg
Max Down:	322.19 (kip)	Total Down Ice:	180.25 (kip)	Total Down:	70.64 (kip)	
Max Shear:	37.93 (kip)	Total Shear Ice:	21.41 (kip)	Total Shear:	61.16 (kip)	

© 2007 - 2019 by ATC IP LLC. All rights reserved.

Deflections and Rotations

Load Case	Elevation (ft)	Deflection (ft)	Twist (deg)	Sway (deg)	Resultant (deg)
101 mph Normal to Face with No Ice	70.00	0.127	0.0096	0.2056	0.2058
101 mph Normal to Face with No Ice	90.00	0.210	0.0122	0.2686	0.2689
101 mph Normal to Face with No Ice	126.67	0.434	0.0178	0.4358	0.4359
101 mph Normal to Face with No Ice	140.00	0.541	0.0183	0.4809	0.4812
101 mph Normal to Face with No Ice	146.67	0.598	0.0175	0.5027	0.5027
101 mph Normal to Face with No Ice	160.00	0.717	0.0159	0.5209	0.5211
101 mph Normal to Face with No Ice	166.67	0.778	0.0133	0.5359	0.5359
101 mph Normal to Face with No Ice	180.00	0.897	0.0087	0.7930	0.7930
101 mph 60 degree with No Ice	70.00	0.127	0.0120	0.2053	0.2054
101 mph 60 degree with No Ice	90.00	0.209	0.0157	0.2681	0.2683
101 mph 60 degree with No Ice	126.67	0.433	0.0265	0.4345	0.4346
101 mph 60 degree with No Ice	140.00	0.540	0.0302	0.4787	0.4791
101 mph 60 degree with No Ice	146.67	0.596	0.0331	0.4994	0.4997
101 mph 60 degree with No Ice	160.00	0.715	0.0388	0.5206	0.5221
101 mph 60 degree with No Ice	166.67	0.775	0.0478	0.5039	0.5053
101 mph 60 degree with No Ice	180.00	0.892	0.0644	0.4412	0.4459
101 mph 90 degree with No Ice	70.00	0.127	-0.0124	0.2055	0.2059
101 mph 90 degree with No Ice	90.00	0.209	-0.0159	0.2679	0.2684
101 mph 90 degree with No Ice	126.67	0.433	-0.0250	0.4338	0.4340
101 mph 90 degree with No Ice	140.00	0.539	-0.0272	0.4785	0.4793
101 mph 90 degree with No Ice	146.67	0.596	-0.0281	0.4981	0.4983
101 mph 90 degree with No Ice	160.00	0.714	-0.0300	0.5212	0.5220
101 mph 90 degree with No Ice	166.67	0.775	-0.0327	0.4926	0.4932
101 mph 90 degree with No Ice	180.00	0.891	-0.0379	0.2199	0.2232
101 mph 120 degree with No Ice	70.00	0.127	-0.0126	0.2054	0.2056
101 mph 120 degree with No Ice	90.00	0.209	-0.0165	0.2682	0.2684
101 mph 120 degree with No Ice	126.67	0.433	-0.0285	0.4344	0.4345
101 mph 120 degree with No Ice	140.00	0.540	-0.0330	0.4790	0.4794
101 mph 120 degree with No Ice	146.67	0.597	-0.0366	0.5002	0.5003
101 mph 120 degree with No Ice	160.00	0.715	-0.0439	0.5207	0.5224
101 mph 120 degree with No Ice	166.67	0.776	-0.0553	0.5039	0.5065
101 mph 120 degree with No Ice	180.00	0.892	-0.0765	0.4412	0.4462
101 mph 180 degree with No Ice	70.00	0.127	0.0096	0.2055	0.2057
101 mph 180 degree with No Ice	90.00	0.210	0.0122	0.2685	0.2688
101 mph 180 degree with No Ice	126.67	0.434	0.0177	0.4359	0.4359
101 mph 180 degree with No Ice	140.00	0.541	0.0182	0.4807	0.4810
101 mph 180 degree with No Ice	146.67	0.598	0.0174	0.5020	0.5020
101 mph 180 degree with No Ice	160.00	0.717	0.0157	0.5209	0.5211
101 mph 180 degree with No Ice	166.67	0.778	0.0131	0.5359	0.5359
101 mph 180 degree with No Ice	180.00	0.897	0.0083	0.7929	0.7929
101 mph 210 degree with No Ice	70.00	0.127	0.0080	0.2060	0.2062
101 mph 210 degree with No Ice	90.00	0.210	0.0107	0.2686	0.2689
101 mph 210 degree with No Ice	126.67	0.434	0.0193	0.4352	0.4355
101 mph 210 degree with No Ice	140.00	0.541	0.0230	0.4812	0.4814
101 mph 210 degree with No Ice	146.67	0.598	0.0263	0.5007	0.5011
101 mph 210 degree with No Ice	160.00	0.716	0.0329	0.5215	0.5215
101 mph 210 degree with No Ice	166.67	0.777	0.0434	0.5253	0.5271
101 mph 210 degree with No Ice	180.00	0.895	0.0626	0.6964	0.6970
101 mph 240 degree with No Ice	70.00	0.127	0.0126	0.2054	0.2056
101 mph 240 degree with No Ice	90.00	0.209	0.0165	0.2682	0.2684
101 mph 240 degree with No Ice	126.67	0.433	0.0285	0.4344	0.4345
101 mph 240 degree with No Ice	140.00	0.540	0.0330	0.4790	0.4794
101 mph 240 degree with No Ice	146.67	0.597	0.0366	0.5002	0.5003
101 mph 240 degree with No Ice	160.00	0.715	0.0439	0.5207	0.5224
101 mph 240 degree with No Ice	166.67	0.776	0.0553	0.5039	0.5065

© 2007 - 2019 by ATC IP LLC. All rights reserved.

101 mph 240 degree with No Ice	180.00	0.892	0.0765	0.4412	0.4462
101 mph 300 degree with No Ice	70.00	0.127	0.0089	0.2053	0.2054
101 mph 300 degree with No Ice	90.00	0.209	0.0111	0.2681	0.2683
101 mph 300 degree with No Ice	126.67	0.433	0.0149	0.4345	0.4346
101 mph 300 degree with No Ice	140.00	0.540	0.0143	0.4787	0.4791
101 mph 300 degree with No Ice	146.67	0.596	0.0123	0.4994	0.4997
101 mph 300 degree with No Ice	160.00	0.715	0.0081	0.5206	0.5221
101 mph 300 degree with No Ice	166.67	0.775	0.0014	0.5039	0.5053
101 mph 300 degree with No Ice	180.00	0.892	-0.0107	0.4412	0.4459
101 mph 330 degree with No Ice	70.00	0.127	0.0044	0.2057	0.2061
101 mph 330 degree with No Ice	90.00	0.210	0.0053	0.2684	0.2688
101 mph 330 degree with No Ice	126.67	0.434	0.0058	0.4355	0.4355
101 mph 330 degree with No Ice	140.00	0.541	0.0043	0.4804	0.4815
101 mph 330 degree with No Ice	146.67	0.598	0.0020	0.5006	0.5007
101 mph 330 degree with No Ice	160.00	0.716	-0.0029	0.5214	0.5229
101 mph 330 degree with No Ice	166.67	0.777	-0.0105	0.5254	0.5261
101 mph 330 degree with No Ice	180.00	0.895	-0.0246	0.6963	0.6989
101 mph Normal to Face with No Ice (Reduced DL)	70.00	0.127	0.0096	0.2054	0.2056
101 mph Normal to Face with No Ice (Reduced DL)	90.00	0.209	0.0122	0.2683	0.2685
101 mph Normal to Face with No Ice (Reduced DL)	126.67	0.434	0.0177	0.4353	0.4353
101 mph Normal to Face with No Ice (Reduced DL)	140.00	0.540	0.0182	0.4802	0.4806
101 mph Normal to Face with No Ice (Reduced DL)	146.67	0.597	0.0174	0.5020	0.5020
101 mph Normal to Face with No Ice (Reduced DL)	160.00	0.716	0.0159	0.5202	0.5204
101 mph Normal to Face with No Ice (Reduced DL)	166.67	0.777	0.0133	0.5352	0.5352
101 mph Normal to Face with No Ice (Reduced DL)	180.00	0.895	0.0087	0.7923	0.7924
101 mph 60 deg with No Ice (Reduced DL)	70.00	0.127	0.0120	0.2051	0.2053
101 mph 60 deg with No Ice (Reduced DL)	90.00	0.209	0.0157	0.2678	0.2680
101 mph 60 deg with No Ice (Reduced DL)	126.67	0.433	0.0264	0.4339	0.4340
101 mph 60 deg with No Ice (Reduced DL)	140.00	0.539	0.0302	0.4781	0.4785
101 mph 60 deg with No Ice (Reduced DL)	146.67	0.596	0.0330	0.4989	0.4991
101 mph 60 deg with No Ice (Reduced DL)	160.00	0.714	0.0387	0.5199	0.5214
101 mph 60 deg with No Ice (Reduced DL)	166.67	0.774	0.0478	0.5033	0.5046
101 mph 60 deg with No Ice (Reduced DL)	180.00	0.891	0.0644	0.4406	0.4453
101 mph 90 deg with No Ice (Reduced DL)	70.00	0.127	-0.0124	0.2053	0.2057
101 mph 90 deg with No Ice (Reduced DL)	90.00	0.209	-0.0159	0.2676	0.2681
101 mph 90 deg with No Ice (Reduced DL)	126.67	0.433	-0.0250	0.4332	0.4334
101 mph 90 deg with No Ice (Reduced DL)	140.00	0.539	-0.0272	0.4778	0.4786
101 mph 90 deg with No Ice (Reduced DL)	146.67	0.595	-0.0281	0.4974	0.4976
101 mph 90 deg with No Ice (Reduced DL)	160.00	0.713	-0.0299	0.5205	0.5213
101 mph 90 deg with No Ice (Reduced DL)	166.67	0.774	-0.0327	0.4919	0.4925
101 mph 90 deg with No Ice (Reduced DL)	180.00	0.890	-0.0379	0.2193	0.2225
101 mph 120 deg with No Ice (Reduced DL)	70.00	0.127	-0.0125	0.2052	0.2054
101 mph 120 deg with No Ice (Reduced DL)	90.00	0.209	-0.0165	0.2679	0.2681
101 mph 120 deg with No Ice (Reduced DL)	126.67	0.433	-0.0284	0.4339	0.4340
101 mph 120 deg with No Ice (Reduced DL)	140.00	0.539	-0.0329	0.4783	0.4787
101 mph 120 deg with No Ice (Reduced DL)	146.67	0.596	-0.0365	0.4994	0.4995
101 mph 120 deg with No Ice (Reduced DL)	160.00	0.714	-0.0438	0.5200	0.5217
101 mph 120 deg with No Ice (Reduced DL)	166.67	0.775	-0.0553	0.5033	0.5058
101 mph 120 deg with No Ice (Reduced DL)	180.00	0.891	-0.0764	0.4406	0.4456
101 mph 180 deg with No Ice (Reduced DL)	70.00	0.127	0.0096	0.2053	0.2055
101 mph 180 deg with No Ice (Reduced DL)	90.00	0.209	0.0122	0.2682	0.2685
101 mph 180 deg with No Ice (Reduced DL)	126.67	0.434	0.0177	0.4353	0.4353
101 mph 180 deg with No Ice (Reduced DL)	140.00	0.540	0.0181	0.4801	0.4804
101 mph 180 deg with No Ice (Reduced DL)	146.67	0.597	0.0174	0.5014	0.5014
101 mph 180 deg with No Ice (Reduced DL)	160.00	0.716	0.0157	0.5202	0.5204
101 mph 180 deg with No Ice (Reduced DL)	166.67	0.777	0.0131	0.5352	0.5352
101 mph 180 deg with No Ice (Reduced DL)	180.00	0.895	0.0083	0.7922	0.7923
101 mph 210 deg with No Ice (Reduced DL)	70.00	0.127	0.0080	0.2058	0.2060
101 mph 210 deg with No Ice (Reduced DL)	90.00	0.209	0.0106	0.2683	0.2686
101 mph 210 deg with No Ice (Reduced DL)	126.67	0.434	0.0193	0.4347	0.4349
101 mph 210 deg with No Ice (Reduced DL)	140.00	0.540	0.0230	0.4805	0.4807
101 mph 210 deg with No Ice (Reduced DL)	146.67	0.597	0.0262	0.4999	0.5003

© 2007 - 2019 by ATC IP LLC. All rights reserved.

101 mph 210 deg with No Ice (Reduced DL)	160.00	0.716	0.0329	0.5208	0.5208
101 mph 210 deg with No Ice (Reduced DL)	166.67	0.777	0.0433	0.5246	0.5264
101 mph 210 deg with No Ice (Reduced DL)	180.00	0.894	0.0626	0.6958	0.6963
101 mph 240 deg with No Ice (Reduced DL)	70.00	0.127	0.0125	0.2052	0.2054
101 mph 240 deg with No Ice (Reduced DL)	90.00	0.209	0.0165	0.2679	0.2681
101 mph 240 deg with No Ice (Reduced DL)	126.67	0.433	0.0284	0.4339	0.4340
101 mph 240 deg with No Ice (Reduced DL)	140.00	0.539	0.0329	0.4783	0.4787
101 mph 240 deg with No Ice (Reduced DL)	146.67	0.596	0.0365	0.4994	0.4995
101 mph 240 deg with No Ice (Reduced DL)	160.00	0.714	0.0438	0.5200	0.5217
101 mph 240 deg with No Ice (Reduced DL)	166.67	0.775	0.0553	0.5033	0.5058
101 mph 240 deg with No Ice (Reduced DL)	180.00	0.891	0.0764	0.4406	0.4456
101 mph 300 deg with No Ice (Reduced DL)	70.00	0.127	0.0089	0.2051	0.2053
101 mph 300 deg with No Ice (Reduced DL)	90.00	0.209	0.0111	0.2678	0.2680
101 mph 300 deg with No Ice (Reduced DL)	126.67	0.433	0.0149	0.4339	0.4340
101 mph 300 deg with No Ice (Reduced DL)	140.00	0.539	0.0143	0.4781	0.4785
101 mph 300 deg with No Ice (Reduced DL)	146.67	0.596	0.0122	0.4989	0.4991
101 mph 300 deg with No Ice (Reduced DL)	160.00	0.714	0.0081	0.5199	0.5214
101 mph 300 deg with No Ice (Reduced DL)	166.67	0.774	0.0014	0.5033	0.5046
101 mph 300 deg with No Ice (Reduced DL)	180.00	0.891	-0.0107	0.4406	0.4453
101 mph 330 deg with No Ice (Reduced DL)	70.00	0.127	0.0044	0.2055	0.2059
101 mph 330 deg with No Ice (Reduced DL)	90.00	0.209	0.0053	0.2680	0.2685
101 mph 330 deg with No Ice (Reduced DL)	126.67	0.434	0.0058	0.4349	0.4349
101 mph 330 deg with No Ice (Reduced DL)	140.00	0.540	0.0043	0.4798	0.4808
101 mph 330 deg with No Ice (Reduced DL)	146.67	0.597	0.0020	0.4999	0.4999
101 mph 330 deg with No Ice (Reduced DL)	160.00	0.716	-0.0029	0.5207	0.5222
101 mph 330 deg with No Ice (Reduced DL)	166.67	0.776	-0.0105	0.5247	0.5254
101 mph 330 deg with No Ice (Reduced DL)	180.00	0.894	-0.0246	0.6956	0.6982
50 mph Normal with 0.75 in Radial Ice	70.00	0.044	0.0032	0.0676	0.0677
50 mph Normal with 0.75 in Radial Ice	90.00	0.070	0.0040	0.0865	0.0866
50 mph Normal with 0.75 in Radial Ice	126.67	0.141	0.0055	0.1349	0.1350
50 mph Normal with 0.75 in Radial Ice	140.00	0.174	0.0055	0.1475	0.1476
50 mph Normal with 0.75 in Radial Ice	146.67	0.191	0.0053	0.1541	0.1541
50 mph Normal with 0.75 in Radial Ice	160.00	0.227	0.0047	0.1571	0.1572
50 mph Normal with 0.75 in Radial Ice	166.67	0.246	0.0037	0.1637	0.1637
50 mph Normal with 0.75 in Radial Ice	180.00	0.282	0.0021	0.2557	0.2557
50 mph 60 deg with 0.75 in Radial Ice	70.00	0.044	0.0036	0.0674	0.0674
50 mph 60 deg with 0.75 in Radial Ice	90.00	0.071	0.0045	0.0864	0.0864
50 mph 60 deg with 0.75 in Radial Ice	126.67	0.141	0.0069	0.1346	0.1346
50 mph 60 deg with 0.75 in Radial Ice	140.00	0.174	0.0074	0.1465	0.1465
50 mph 60 deg with 0.75 in Radial Ice	146.67	0.191	0.0077	0.1518	0.1520
50 mph 60 deg with 0.75 in Radial Ice	160.00	0.227	0.0083	0.1570	0.1572
50 mph 60 deg with 0.75 in Radial Ice	166.67	0.245	0.0092	0.1523	0.1524
50 mph 60 deg with 0.75 in Radial Ice	180.00	0.281	0.0109	0.1361	0.1364
50 mph 90 deg with 0.75 in Radial Ice	70.00	0.044	-0.0042	0.0674	0.0675
50 mph 90 deg with 0.75 in Radial Ice	90.00	0.071	-0.0052	0.0863	0.0864
50 mph 90 deg with 0.75 in Radial Ice	126.67	0.141	-0.0079	0.1343	0.1344
50 mph 90 deg with 0.75 in Radial Ice	140.00	0.173	-0.0085	0.1463	0.1464
50 mph 90 deg with 0.75 in Radial Ice	146.67	0.191	-0.0089	0.1524	0.1525
50 mph 90 deg with 0.75 in Radial Ice	160.00	0.226	-0.0095	0.1571	0.1574
50 mph 90 deg with 0.75 in Radial Ice	166.67	0.245	-0.0104	0.1484	0.1486
50 mph 90 deg with 0.75 in Radial Ice	180.00	0.280	-0.0122	0.0534	0.0544
50 mph 120 deg with 0.75 in Radial Ice	70.00	0.044	-0.0038	0.0675	0.0676
50 mph 120 deg with 0.75 in Radial Ice	90.00	0.070	-0.0048	0.0863	0.0864
50 mph 120 deg with 0.75 in Radial Ice	126.67	0.141	-0.0076	0.1344	0.1345
50 mph 120 deg with 0.75 in Radial Ice	140.00	0.173	-0.0084	0.1467	0.1468
50 mph 120 deg with 0.75 in Radial Ice	146.67	0.191	-0.0089	0.1532	0.1532
50 mph 120 deg with 0.75 in Radial Ice	160.00	0.226	-0.0100	0.1571	0.1574
50 mph 120 deg with 0.75 in Radial Ice	166.67	0.245	-0.0118	0.1524	0.1526
50 mph 120 deg with 0.75 in Radial Ice	180.00	0.280	-0.0152	0.1358	0.1365
50 mph 180 deg with 0.75 in Radial Ice	70.00	0.045	0.0032	0.0675	0.0675
50 mph 180 deg with 0.75 in Radial Ice	90.00	0.071	0.0040	0.0866	0.0866
50 mph 180 deg with 0.75 in Radial Ice	126.67	0.141	0.0055	0.1351	0.1351

© 2007 - 2019 by ATC IP LLC. All rights reserved.

50 mph 180 deg with 0.75 in Radial Ice	140.00	0.174	0.0055	0.1472	0.1472
50 mph 180 deg with 0.75 in Radial Ice	146.67	0.191	0.0052	0.1527	0.1527
50 mph 180 deg with 0.75 in Radial Ice	160.00	0.228	0.0047	0.1570	0.1571
50 mph 180 deg with 0.75 in Radial Ice	166.67	0.246	0.0037	0.1636	0.1636
50 mph 180 deg with 0.75 in Radial Ice	180.00	0.282	0.0020	0.2554	0.2554
50 mph 210 deg with 0.75 in Radial Ice	70.00	0.044	0.0023	0.0675	0.0676
50 mph 210 deg with 0.75 in Radial Ice	90.00	0.071	0.0029	0.0865	0.0865
50 mph 210 deg with 0.75 in Radial Ice	126.67	0.141	0.0047	0.1348	0.1349
50 mph 210 deg with 0.75 in Radial Ice	140.00	0.174	0.0052	0.1471	0.1472
50 mph 210 deg with 0.75 in Radial Ice	146.67	0.191	0.0057	0.1533	0.1534
50 mph 210 deg with 0.75 in Radial Ice	160.00	0.227	0.0066	0.1572	0.1573
50 mph 210 deg with 0.75 in Radial Ice	166.67	0.246	0.0080	0.1599	0.1601
50 mph 210 deg with 0.75 in Radial Ice	180.00	0.282	0.0107	0.2228	0.2228
50 mph 240 deg with 0.75 in Radial Ice	70.00	0.044	0.0038	0.0675	0.0676
50 mph 240 deg with 0.75 in Radial Ice	90.00	0.070	0.0048	0.0863	0.0864
50 mph 240 deg with 0.75 in Radial Ice	126.67	0.141	0.0076	0.1344	0.1345
50 mph 240 deg with 0.75 in Radial Ice	140.00	0.173	0.0084	0.1467	0.1468
50 mph 240 deg with 0.75 in Radial Ice	146.67	0.191	0.0089	0.1532	0.1532
50 mph 240 deg with 0.75 in Radial Ice	160.00	0.226	0.0100	0.1571	0.1574
50 mph 240 deg with 0.75 in Radial Ice	166.67	0.245	0.0118	0.1524	0.1526
50 mph 240 deg with 0.75 in Radial Ice	180.00	0.280	0.0152	0.1358	0.1365
50 mph 300 deg with 0.75 in Radial Ice	70.00	0.044	0.0034	0.0674	0.0674
50 mph 300 deg with 0.75 in Radial Ice	90.00	0.071	0.0043	0.0864	0.0864
50 mph 300 deg with 0.75 in Radial Ice	126.67	0.141	0.0062	0.1346	0.1346
50 mph 300 deg with 0.75 in Radial Ice	140.00	0.174	0.0064	0.1465	0.1465
50 mph 300 deg with 0.75 in Radial Ice	146.67	0.191	0.0064	0.1518	0.1520
50 mph 300 deg with 0.75 in Radial Ice	160.00	0.227	0.0063	0.1570	0.1572
50 mph 300 deg with 0.75 in Radial Ice	166.67	0.245	0.0062	0.1523	0.1524
50 mph 300 deg with 0.75 in Radial Ice	180.00	0.281	0.0060	0.1361	0.1364
50 mph 330 deg with 0.75 in Radial Ice	70.00	0.044	0.0019	0.0675	0.0676
50 mph 330 deg with 0.75 in Radial Ice	90.00	0.071	0.0023	0.0865	0.0865
50 mph 330 deg with 0.75 in Radial Ice	126.67	0.141	0.0033	0.1349	0.1349
50 mph 330 deg with 0.75 in Radial Ice	140.00	0.174	0.0033	0.1471	0.1472
50 mph 330 deg with 0.75 in Radial Ice	146.67	0.191	0.0032	0.1533	0.1534
50 mph 330 deg with 0.75 in Radial Ice	160.00	0.227	0.0029	0.1572	0.1574
50 mph 330 deg with 0.75 in Radial Ice	166.67	0.246	0.0024	0.1599	0.1600
50 mph 330 deg with 0.75 in Radial Ice	180.00	0.282	0.0015	0.2231	0.2232
Seismic Normal M1	70.00	0.009	0.0007	0.0146	0.0146
Seismic Normal M1	90.00	0.014	0.0009	0.0194	0.0194
Seismic Normal M1	126.67	0.031	0.0013	0.0321	0.0322
Seismic Normal M1	140.00	0.039	0.0013	0.0352	0.0352
Seismic Normal M1	146.67	0.043	0.0013	0.0374	0.0374
Seismic Normal M1	160.00	0.052	0.0013	0.0381	0.0381
Seismic Normal M1	166.67	0.056	0.0012	0.0386	0.0386
Seismic Normal M1	180.00	0.065	0.0012	0.0381	0.0381
Seismic Normal M2	70.00	0.006	0.0004	0.0101	0.0101
Seismic Normal M2	90.00	0.010	0.0005	0.0138	0.0138
Seismic Normal M2	126.67	0.022	0.0008	0.0248	0.0248
Seismic Normal M2	140.00	0.028	0.0008	0.0282	0.0282
Seismic Normal M2	146.67	0.032	0.0008	0.0307	0.0307
Seismic Normal M2	160.00	0.039	0.0008	0.0318	0.0318
Seismic Normal M2	166.67	0.042	0.0008	0.0325	0.0325
Seismic Normal M2	180.00	0.050	0.0007	0.0319	0.0319
Seismic 60 deg M1	70.00	0.009	-0.0007	0.0146	0.0146
Seismic 60 deg M1	90.00	0.014	-0.0009	0.0194	0.0194
Seismic 60 deg M1	126.67	0.031	-0.0013	0.0322	0.0322
Seismic 60 deg M1	140.00	0.039	-0.0013	0.0353	0.0353
Seismic 60 deg M1	146.67	0.043	-0.0013	0.0371	0.0371
Seismic 60 deg M1	160.00	0.052	-0.0013	0.0381	0.0381
Seismic 60 deg M1	166.67	0.056	-0.0012	0.0386	0.0386
Seismic 60 deg M1	180.00	0.065	-0.0012	0.0382	0.0382
Seismic 60 deg M2	70.00	0.006	-0.0004	0.0101	0.0101

© 2007 - 2019 by ATC IP LLC. All rights reserved.

Seismic 60 deg M2	90.00	0.010	-0.0005	0.0139	0.0139
Seismic 60 deg M2	126.67	0.022	-0.0008	0.0248	0.0248
Seismic 60 deg M2	140.00	0.028	-0.0008	0.0283	0.0283
Seismic 60 deg M2	146.67	0.032	-0.0008	0.0303	0.0303
Seismic 60 deg M2	160.00	0.039	-0.0008	0.0318	0.0318
Seismic 60 deg M2	166.67	0.042	-0.0008	0.0325	0.0325
Seismic 60 deg M2	180.00	0.050	-0.0007	0.0320	0.0320
Seismic 90 deg M1	70.00	0.009	-0.0008	0.0146	0.0146
Seismic 90 deg M1	90.00	0.014	-0.0010	0.0194	0.0194
Seismic 90 deg M1	126.67	0.031	-0.0015	0.0322	0.0322
Seismic 90 deg M1	140.00	0.039	-0.0015	0.0353	0.0353
Seismic 90 deg M1	146.67	0.043	-0.0015	0.0373	0.0373
Seismic 90 deg M1	160.00	0.052	-0.0015	0.0381	0.0381
Seismic 90 deg M1	166.67	0.056	-0.0014	0.0386	0.0386
Seismic 90 deg M1	180.00	0.065	-0.0014	0.0381	0.0382
Seismic 90 deg M2	70.00	0.006	-0.0005	0.0101	0.0101
Seismic 90 deg M2	90.00	0.010	-0.0006	0.0139	0.0139
Seismic 90 deg M2	126.67	0.022	-0.0009	0.0248	0.0248
Seismic 90 deg M2	140.00	0.028	-0.0010	0.0282	0.0282
Seismic 90 deg M2	146.67	0.032	-0.0009	0.0306	0.0306
Seismic 90 deg M2	160.00	0.039	-0.0009	0.0318	0.0318
Seismic 90 deg M2	166.67	0.042	-0.0009	0.0325	0.0325
Seismic 90 deg M2	180.00	0.050	-0.0008	0.0320	0.0320
Seismic 120 deg M1	70.00	0.009	-0.0007	0.0146	0.0146
Seismic 120 deg M1	90.00	0.014	-0.0009	0.0194	0.0194
Seismic 120 deg M1	126.67	0.031	-0.0013	0.0321	0.0322
Seismic 120 deg M1	140.00	0.039	-0.0013	0.0352	0.0352
Seismic 120 deg M1	146.67	0.043	-0.0013	0.0374	0.0374
Seismic 120 deg M1	160.00	0.052	-0.0013	0.0381	0.0381
Seismic 120 deg M1	166.67	0.056	-0.0012	0.0386	0.0386
Seismic 120 deg M1	180.00	0.065	-0.0012	0.0381	0.0381
Seismic 120 deg M2	70.00	0.006	0.0004	0.0101	0.0101
Seismic 120 deg M2	90.00	0.010	0.0005	0.0138	0.0138
Seismic 120 deg M2	126.67	0.022	-0.0008	0.0248	0.0248
Seismic 120 deg M2	140.00	0.028	0.0008	0.0282	0.0282
Seismic 120 deg M2	146.67	0.032	0.0008	0.0307	0.0307
Seismic 120 deg M2	160.00	0.039	0.0008	0.0318	0.0318
Seismic 120 deg M2	166.67	0.042	0.0008	0.0325	0.0325
Seismic 120 deg M2	180.00	0.050	0.0007	0.0319	0.0319
Seismic 180 deg M1	70.00	0.009	0.0007	0.0146	0.0146
Seismic 180 deg M1	90.00	0.014	0.0009	0.0194	0.0194
Seismic 180 deg M1	126.67	0.031	0.0013	0.0322	0.0322
Seismic 180 deg M1	140.00	0.039	0.0013	0.0353	0.0353
Seismic 180 deg M1	146.67	0.043	0.0013	0.0371	0.0371
Seismic 180 deg M1	160.00	0.052	0.0013	0.0381	0.0381
Seismic 180 deg M1	166.67	0.056	0.0012	0.0386	0.0386
Seismic 180 deg M1	180.00	0.065	0.0012	0.0382	0.0382
Seismic 180 deg M2	70.00	0.006	0.0004	0.0101	0.0101
Seismic 180 deg M2	90.00	0.010	0.0005	0.0139	0.0139
Seismic 180 deg M2	126.67	0.022	0.0008	0.0248	0.0248
Seismic 180 deg M2	140.00	0.028	0.0008	0.0283	0.0283
Seismic 180 deg M2	146.67	0.032	0.0008	0.0303	0.0303
Seismic 180 deg M2	160.00	0.039	0.0008	0.0318	0.0318
Seismic 180 deg M2	166.67	0.042	0.0008	0.0325	0.0325
Seismic 180 deg M2	180.00	0.050	0.0007	0.0320	0.0320
Seismic 210 deg M1	70.00	0.009	0.0004	0.0146	0.0146
Seismic 210 deg M1	90.00	0.014	0.0005	0.0194	0.0194
Seismic 210 deg M1	126.67	0.031	0.0007	0.0322	0.0322
Seismic 210 deg M1	140.00	0.039	0.0008	0.0353	0.0353
Seismic 210 deg M1	146.67	0.043	0.0007	0.0373	0.0373
Seismic 210 deg M1	160.00	0.052	0.0007	0.0381	0.0381
Seismic 210 deg M1	166.67	0.056	0.0007	0.0386	0.0386

© 2007 - 2019 by ATC IP LLC. All rights reserved.

Seismic 210 deg M1	180.00	0.065	0.0007	0.0381	0.0382
Seismic 210 deg M2	70.00	0.006	0.0002	0.0101	0.0101
Seismic 210 deg M2	90.00	0.010	0.0003	0.0139	0.0139
Seismic 210 deg M2	126.67	0.022	0.0005	0.0248	0.0248
Seismic 210 deg M2	140.00	0.028	0.0005	0.0282	0.0282
Seismic 210 deg M2	146.67	0.032	0.0005	0.0306	0.0306
Seismic 210 deg M2	160.00	0.039	0.0005	0.0318	0.0318
Seismic 210 deg M2	166.67	0.042	0.0004	0.0325	0.0325
Seismic 210 deg M2	180.00	0.050	0.0004	0.0320	0.0320
Seismic 240 deg M1	70.00	0.009	0.0007	0.0146	0.0146
Seismic 240 deg M1	90.00	0.014	0.0009	0.0194	0.0194
Seismic 240 deg M1	126.67	0.031	0.0013	0.0321	0.0322
Seismic 240 deg M1	140.00	0.039	0.0013	0.0352	0.0352
Seismic 240 deg M1	146.67	0.043	0.0013	0.0374	0.0374
Seismic 240 deg M1	160.00	0.052	0.0013	0.0381	0.0381
Seismic 240 deg M1	166.67	0.056	0.0012	0.0386	0.0386
Seismic 240 deg M1	180.00	0.065	0.0012	0.0381	0.0381
Seismic 240 deg M2	70.00	0.006	0.0004	0.0101	0.0101
Seismic 240 deg M2	90.00	0.010	0.0005	0.0138	0.0138
Seismic 240 deg M2	126.67	0.022	0.0008	0.0248	0.0248
Seismic 240 deg M2	140.00	0.028	0.0008	0.0282	0.0282
Seismic 240 deg M2	146.67	0.032	0.0008	0.0307	0.0307
Seismic 240 deg M2	160.00	0.039	0.0008	0.0318	0.0318
Seismic 240 deg M2	166.67	0.042	0.0008	0.0325	0.0325
Seismic 240 deg M2	180.00	0.050	0.0007	0.0319	0.0319
Seismic 300 deg M1	70.00	0.009	0.0007	0.0146	0.0146
Seismic 300 deg M1	90.00	0.014	0.0009	0.0194	0.0194
Seismic 300 deg M1	126.67	0.031	0.0013	0.0322	0.0322
Seismic 300 deg M1	140.00	0.039	0.0013	0.0353	0.0353
Seismic 300 deg M1	146.67	0.043	0.0013	0.0371	0.0371
Seismic 300 deg M1	160.00	0.052	0.0013	0.0381	0.0381
Seismic 300 deg M1	166.67	0.056	0.0012	0.0386	0.0386
Seismic 300 deg M1	180.00	0.065	0.0012	0.0382	0.0382
Seismic 300 deg M2	70.00	0.006	0.0004	0.0101	0.0101
Seismic 300 deg M2	90.00	0.010	0.0005	0.0139	0.0139
Seismic 300 deg M2	126.67	0.022	0.0008	0.0248	0.0248
Seismic 300 deg M2	140.00	0.028	0.0008	0.0283	0.0283
Seismic 300 deg M2	146.67	0.032	0.0008	0.0303	0.0303
Seismic 300 deg M2	160.00	0.039	0.0008	0.0318	0.0318
Seismic 300 deg M2	166.67	0.042	0.0008	0.0325	0.0325
Seismic 300 deg M2	180.00	0.050	0.0007	0.0320	0.0320
Seismic 330 deg M1	70.00	0.009	0.0004	0.0146	0.0146
Seismic 330 deg M1	90.00	0.014	0.0005	0.0194	0.0194
Seismic 330 deg M1	126.67	0.031	0.0007	0.0322	0.0322
Seismic 330 deg M1	140.00	0.039	0.0008	0.0353	0.0353
Seismic 330 deg M1	146.67	0.043	0.0007	0.0373	0.0373
Seismic 330 deg M1	160.00	0.052	0.0007	0.0381	0.0381
Seismic 330 deg M1	166.67	0.056	0.0007	0.0386	0.0386
Seismic 330 deg M1	180.00	0.065	0.0007	0.0381	0.0382
Seismic 330 deg M2	70.00	0.006	0.0002	0.0101	0.0101
Seismic 330 deg M2	90.00	0.010	0.0003	0.0139	0.0139
Seismic 330 deg M2	126.67	0.022	0.0005	0.0248	0.0248
Seismic 330 deg M2	140.00	0.028	0.0005	0.0282	0.0282
Seismic 330 deg M2	146.67	0.032	0.0005	0.0306	0.0306
Seismic 330 deg M2	160.00	0.039	0.0005	0.0318	0.0318
Seismic 330 deg M2	166.67	0.042	0.0004	0.0325	0.0325
Seismic 330 deg M2	180.00	0.050	0.0004	0.0320	0.0320
Seismic (Reduced DL) Normal M1	70.00	0.009	0.0007	0.0146	0.0146
Seismic (Reduced DL) Normal M1	90.00	0.014	0.0009	0.0193	0.0193
Seismic (Reduced DL) Normal M1	126.67	0.031	0.0013	0.0321	0.0321
Seismic (Reduced DL) Normal M1	140.00	0.039	0.0013	0.0351	0.0351
Seismic (Reduced DL) Normal M1	146.67	0.043	0.0013	0.0372	0.0372

© 2007 - 2019 by ATC IP LLC. All rights reserved.

Seismic (Reduced DL) Normal M1	160.00	0.052	0.0013	0.0380	0.0380
Seismic (Reduced DL) Normal M1	166.67	0.056	0.0012	0.0385	0.0385
Seismic (Reduced DL) Normal M1	180.00	0.065	0.0012	0.0380	0.0380
Seismic (Reduced DL) Normal M2	70.00	0.006	0.0004	0.0101	0.0101
Seismic (Reduced DL) Normal M2	90.00	0.010	0.0005	0.0138	0.0138
Seismic (Reduced DL) Normal M2	126.67	0.022	0.0008	0.0247	0.0247
Seismic (Reduced DL) Normal M2	140.00	0.028	0.0008	0.0281	0.0281
Seismic (Reduced DL) Normal M2	146.67	0.031	0.0008	0.0305	0.0305
Seismic (Reduced DL) Normal M2	160.00	0.039	0.0008	0.0317	0.0318
Seismic (Reduced DL) Normal M2	166.67	0.042	0.0008	0.0324	0.0324
Seismic (Reduced DL) Normal M2	180.00	0.050	0.0007	0.0318	0.0318
Seismic (Reduced DL) 60 deg M1	70.00	0.009	-0.0007	0.0145	0.0145
Seismic (Reduced DL) 60 deg M1	90.00	0.014	-0.0009	0.0193	0.0193
Seismic (Reduced DL) 60 deg M1	126.67	0.031	-0.0013	0.0321	0.0321
Seismic (Reduced DL) 60 deg M1	140.00	0.039	-0.0013	0.0351	0.0351
Seismic (Reduced DL) 60 deg M1	146.67	0.043	-0.0013	0.0369	0.0370
Seismic (Reduced DL) 60 deg M1	160.00	0.052	-0.0013	0.0381	0.0381
Seismic (Reduced DL) 60 deg M1	166.67	0.056	-0.0012	0.0385	0.0385
Seismic (Reduced DL) 60 deg M1	180.00	0.065	-0.0012	0.0380	0.0380
Seismic (Reduced DL) 60 deg M2	70.00	0.006	-0.0004	0.0100	0.0100
Seismic (Reduced DL) 60 deg M2	90.00	0.010	-0.0005	0.0138	0.0138
Seismic (Reduced DL) 60 deg M2	126.67	0.022	-0.0008	0.0247	0.0247
Seismic (Reduced DL) 60 deg M2	140.00	0.028	-0.0008	0.0281	0.0281
Seismic (Reduced DL) 60 deg M2	146.67	0.031	-0.0008	0.0302	0.0302
Seismic (Reduced DL) 60 deg M2	160.00	0.039	-0.0008	0.0318	0.0318
Seismic (Reduced DL) 60 deg M2	166.67	0.042	-0.0008	0.0324	0.0324
Seismic (Reduced DL) 60 deg M2	180.00	0.050	-0.0007	0.0319	0.0319
Seismic (Reduced DL) 90 deg M1	70.00	0.009	-0.0008	0.0145	0.0146
Seismic (Reduced DL) 90 deg M1	90.00	0.014	-0.0010	0.0193	0.0193
Seismic (Reduced DL) 90 deg M1	126.67	0.031	-0.0015	0.0321	0.0321
Seismic (Reduced DL) 90 deg M1	140.00	0.039	-0.0015	0.0351	0.0351
Seismic (Reduced DL) 90 deg M1	146.67	0.043	-0.0015	0.0371	0.0371
Seismic (Reduced DL) 90 deg M1	160.00	0.052	-0.0015	0.0380	0.0380
Seismic (Reduced DL) 90 deg M1	166.67	0.056	-0.0014	0.0385	0.0385
Seismic (Reduced DL) 90 deg M1	180.00	0.065	-0.0014	0.0380	0.0380
Seismic (Reduced DL) 90 deg M2	70.00	0.006	-0.0005	0.0100	0.0100
Seismic (Reduced DL) 90 deg M2	90.00	0.010	-0.0006	0.0138	0.0138
Seismic (Reduced DL) 90 deg M2	126.67	0.022	-0.0009	0.0247	0.0247
Seismic (Reduced DL) 90 deg M2	140.00	0.028	-0.0010	0.0281	0.0281
Seismic (Reduced DL) 90 deg M2	146.67	0.031	-0.0009	0.0304	0.0304
Seismic (Reduced DL) 90 deg M2	160.00	0.039	-0.0009	0.0318	0.0318
Seismic (Reduced DL) 90 deg M2	166.67	0.042	-0.0009	0.0324	0.0324
Seismic (Reduced DL) 90 deg M2	180.00	0.050	-0.0008	0.0319	0.0319
Seismic (Reduced DL) 120 deg M1	70.00	0.009	-0.0007	0.0146	0.0146
Seismic (Reduced DL) 120 deg M1	90.00	0.014	-0.0009	0.0193	0.0193
Seismic (Reduced DL) 120 deg M1	126.67	0.031	-0.0013	0.0321	0.0321
Seismic (Reduced DL) 120 deg M1	140.00	0.039	-0.0013	0.0351	0.0351
Seismic (Reduced DL) 120 deg M1	146.67	0.043	-0.0013	0.0372	0.0372
Seismic (Reduced DL) 120 deg M1	160.00	0.052	-0.0013	0.0380	0.0380
Seismic (Reduced DL) 120 deg M1	166.67	0.056	-0.0012	0.0385	0.0385
Seismic (Reduced DL) 120 deg M1	180.00	0.065	-0.0012	0.0380	0.0380
Seismic (Reduced DL) 120 deg M2	70.00	0.006	0.0004	0.0101	0.0101
Seismic (Reduced DL) 120 deg M2	90.00	0.010	0.0005	0.0138	0.0138
Seismic (Reduced DL) 120 deg M2	126.67	0.022	-0.0008	0.0247	0.0247
Seismic (Reduced DL) 120 deg M2	140.00	0.028	-0.0008	0.0281	0.0281
Seismic (Reduced DL) 120 deg M2	146.67	0.031	-0.0008	0.0305	0.0305
Seismic (Reduced DL) 120 deg M2	160.00	0.039	-0.0008	0.0317	0.0318
Seismic (Reduced DL) 120 deg M2	166.67	0.042	0.0008	0.0324	0.0324
Seismic (Reduced DL) 120 deg M2	180.00	0.050	0.0007	0.0318	0.0318
Seismic (Reduced DL) 180 deg M1	70.00	0.009	0.0007	0.0145	0.0145
Seismic (Reduced DL) 180 deg M1	90.00	0.014	0.0009	0.0193	0.0193
Seismic (Reduced DL) 180 deg M1	126.67	0.031	0.0013	0.0321	0.0321

© 2007 - 2019 by ATC IP LLC. All rights reserved.

Seismic (Reduced DL) 180 deg M1	140.00	0.039	0.0013	0.0351	0.0351
Seismic (Reduced DL) 180 deg M1	146.67	0.043	0.0013	0.0369	0.0370
Seismic (Reduced DL) 180 deg M1	160.00	0.052	0.0013	0.0381	0.0381
Seismic (Reduced DL) 180 deg M1	166.67	0.056	0.0012	0.0385	0.0385
Seismic (Reduced DL) 180 deg M1	180.00	0.065	0.0012	0.0380	0.0380
Seismic (Reduced DL) 180 deg M2	70.00	0.006	0.0004	0.0100	0.0100
Seismic (Reduced DL) 180 deg M2	90.00	0.010	0.0005	0.0138	0.0138
Seismic (Reduced DL) 180 deg M2	126.67	0.022	0.0008	0.0247	0.0247
Seismic (Reduced DL) 180 deg M2	140.00	0.028	0.0008	0.0281	0.0281
Seismic (Reduced DL) 180 deg M2	146.67	0.031	0.0008	0.0302	0.0302
Seismic (Reduced DL) 180 deg M2	160.00	0.039	0.0008	0.0318	0.0318
Seismic (Reduced DL) 180 deg M2	166.67	0.042	0.0008	0.0324	0.0324
Seismic (Reduced DL) 180 deg M2	180.00	0.050	0.0007	0.0319	0.0319
Seismic (Reduced DL) 210 deg M1	70.00	0.009	0.0004	0.0145	0.0146
Seismic (Reduced DL) 210 deg M1	90.00	0.014	0.0005	0.0193	0.0193
Seismic (Reduced DL) 210 deg M1	126.67	0.031	0.0007	0.0321	0.0321
Seismic (Reduced DL) 210 deg M1	140.00	0.039	0.0008	0.0351	0.0351
Seismic (Reduced DL) 210 deg M1	146.67	0.043	0.0007	0.0371	0.0371
Seismic (Reduced DL) 210 deg M1	160.00	0.052	0.0007	0.0380	0.0380
Seismic (Reduced DL) 210 deg M1	166.67	0.056	0.0007	0.0385	0.0385
Seismic (Reduced DL) 210 deg M1	180.00	0.065	0.0007	0.0380	0.0380
Seismic (Reduced DL) 210 deg M2	70.00	0.006	0.0002	0.0100	0.0100
Seismic (Reduced DL) 210 deg M2	90.00	0.010	0.0003	0.0138	0.0138
Seismic (Reduced DL) 210 deg M2	126.67	0.022	0.0005	0.0247	0.0247
Seismic (Reduced DL) 210 deg M2	140.00	0.028	0.0005	0.0281	0.0281
Seismic (Reduced DL) 210 deg M2	146.67	0.031	0.0005	0.0304	0.0304
Seismic (Reduced DL) 210 deg M2	160.00	0.039	0.0005	0.0318	0.0318
Seismic (Reduced DL) 210 deg M2	166.67	0.042	0.0004	0.0324	0.0324
Seismic (Reduced DL) 210 deg M2	180.00	0.050	0.0004	0.0319	0.0319
Seismic (Reduced DL) 240 deg M1	70.00	0.009	0.0007	0.0146	0.0146
Seismic (Reduced DL) 240 deg M1	90.00	0.014	0.0009	0.0193	0.0193
Seismic (Reduced DL) 240 deg M1	126.67	0.031	0.0013	0.0321	0.0321
Seismic (Reduced DL) 240 deg M1	140.00	0.039	0.0013	0.0351	0.0351
Seismic (Reduced DL) 240 deg M1	146.67	0.043	0.0013	0.0372	0.0372
Seismic (Reduced DL) 240 deg M1	160.00	0.052	0.0013	0.0380	0.0380
Seismic (Reduced DL) 240 deg M1	166.67	0.056	0.0012	0.0385	0.0385
Seismic (Reduced DL) 240 deg M1	180.00	0.065	0.0012	0.0380	0.0380
Seismic (Reduced DL) 240 deg M2	70.00	0.006	0.0004	0.0101	0.0101
Seismic (Reduced DL) 240 deg M2	90.00	0.010	0.0005	0.0138	0.0138
Seismic (Reduced DL) 240 deg M2	126.67	0.022	0.0008	0.0247	0.0247
Seismic (Reduced DL) 240 deg M2	140.00	0.028	0.0008	0.0281	0.0281
Seismic (Reduced DL) 240 deg M2	146.67	0.031	0.0008	0.0305	0.0305
Seismic (Reduced DL) 240 deg M2	160.00	0.039	0.0008	0.0317	0.0318
Seismic (Reduced DL) 240 deg M2	166.67	0.042	0.0008	0.0324	0.0324
Seismic (Reduced DL) 240 deg M2	180.00	0.050	0.0007	0.0318	0.0318
Seismic (Reduced DL) 300 deg M1	70.00	0.009	0.0007	0.0145	0.0145
Seismic (Reduced DL) 300 deg M1	90.00	0.014	0.0009	0.0193	0.0193
Seismic (Reduced DL) 300 deg M1	126.67	0.031	0.0013	0.0321	0.0321
Seismic (Reduced DL) 300 deg M1	140.00	0.039	0.0013	0.0351	0.0351
Seismic (Reduced DL) 300 deg M1	146.67	0.043	0.0013	0.0369	0.0370
Seismic (Reduced DL) 300 deg M1	160.00	0.052	0.0013	0.0381	0.0381
Seismic (Reduced DL) 300 deg M1	166.67	0.056	0.0012	0.0385	0.0385
Seismic (Reduced DL) 300 deg M1	180.00	0.065	0.0012	0.0380	0.0380
Seismic (Reduced DL) 300 deg M2	70.00	0.006	0.0004	0.0100	0.0100
Seismic (Reduced DL) 300 deg M2	90.00	0.010	0.0005	0.0138	0.0138
Seismic (Reduced DL) 300 deg M2	126.67	0.022	0.0008	0.0247	0.0247
Seismic (Reduced DL) 300 deg M2	140.00	0.028	0.0008	0.0281	0.0281
Seismic (Reduced DL) 300 deg M2	146.67	0.031	0.0008	0.0302	0.0302
Seismic (Reduced DL) 300 deg M2	160.00	0.039	0.0008	0.0318	0.0318
Seismic (Reduced DL) 300 deg M2	166.67	0.042	0.0008	0.0324	0.0324
Seismic (Reduced DL) 300 deg M2	180.00	0.050	0.0007	0.0319	0.0319
Seismic (Reduced DL) 330 deg M1	70.00	0.009	0.0004	0.0145	0.0146

© 2007 - 2019 by ATC IP LLC. All rights reserved.

Seismic (Reduced DL) 330 deg M1	90.00	0.014	0.0005	0.0193	0.0193
Seismic (Reduced DL) 330 deg M1	126.67	0.031	0.0007	0.0321	0.0321
Seismic (Reduced DL) 330 deg M1	140.00	0.039	0.0008	0.0351	0.0351
Seismic (Reduced DL) 330 deg M1	146.67	0.043	0.0007	0.0371	0.0371
Seismic (Reduced DL) 330 deg M1	160.00	0.052	0.0007	0.0380	0.0380
Seismic (Reduced DL) 330 deg M1	166.67	0.056	0.0007	0.0385	0.0385
Seismic (Reduced DL) 330 deg M1	180.00	0.065	0.0007	0.0380	0.0380
Seismic (Reduced DL) 330 deg M2	70.00	0.006	0.0002	0.0100	0.0100
Seismic (Reduced DL) 330 deg M2	90.00	0.010	0.0003	0.0138	0.0138
Seismic (Reduced DL) 330 deg M2	126.67	0.022	0.0005	0.0247	0.0247
Seismic (Reduced DL) 330 deg M2	140.00	0.028	0.0005	0.0281	0.0281
Seismic (Reduced DL) 330 deg M2	146.67	0.031	0.0005	0.0304	0.0304
Seismic (Reduced DL) 330 deg M2	160.00	0.039	0.0005	0.0318	0.0318
Seismic (Reduced DL) 330 deg M2	166.67	0.042	0.0004	0.0324	0.0324
Seismic (Reduced DL) 330 deg M2	180.00	0.050	0.0004	0.0319	0.0319
Serviceability - 60 mph Wind Normal	70.00	0.028	0.0021	0.0458	0.0459
Serviceability - 60 mph Wind Normal	90.00	0.047	0.0027	0.0597	0.0597
Serviceability - 60 mph Wind Normal	126.67	0.096	0.0039	0.0963	0.0964
Serviceability - 60 mph Wind Normal	140.00	0.120	0.0040	0.1063	0.1064
Serviceability - 60 mph Wind Normal	146.67	0.133	0.0038	0.1112	0.1112
Serviceability - 60 mph Wind Normal	160.00	0.159	0.0034	0.1150	0.1150
Serviceability - 60 mph Wind Normal	166.67	0.172	0.0028	0.1183	0.1183
Serviceability - 60 mph Wind Normal	180.00	0.199	0.0018	0.1750	0.1750
Serviceability - 60 mph Wind 60 deg	70.00	0.028	0.0023	0.0456	0.0457
Serviceability - 60 mph Wind 60 deg	90.00	0.047	0.0030	0.0596	0.0596
Serviceability - 60 mph Wind 60 deg	126.67	0.096	0.0046	0.0961	0.0961
Serviceability - 60 mph Wind 60 deg	140.00	0.120	0.0050	0.1056	0.1057
Serviceability - 60 mph Wind 60 deg	146.67	0.132	0.0051	0.1101	0.1101
Serviceability - 60 mph Wind 60 deg	160.00	0.158	0.0053	0.1149	0.1150
Serviceability - 60 mph Wind 60 deg	166.67	0.172	0.0056	0.1112	0.1112
Serviceability - 60 mph Wind 60 deg	180.00	0.198	0.0064	0.0972	0.0974
Serviceability - 60 mph Wind 90 deg	70.00	0.028	-0.0027	0.0457	0.0458
Serviceability - 60 mph Wind 90 deg	90.00	0.047	-0.0035	0.0595	0.0596
Serviceability - 60 mph Wind 90 deg	126.67	0.096	-0.0054	0.0960	0.0960
Serviceability - 60 mph Wind 90 deg	140.00	0.120	-0.0059	0.1057	0.1059
Serviceability - 60 mph Wind 90 deg	146.67	0.132	-0.0061	0.1102	0.1102
Serviceability - 60 mph Wind 90 deg	160.00	0.158	-0.0064	0.1150	0.1152
Serviceability - 60 mph Wind 90 deg	166.67	0.172	-0.0070	0.1087	0.1088
Serviceability - 60 mph Wind 90 deg	180.00	0.197	-0.0081	0.0486	0.0492
Serviceability - 60 mph Wind 120 deg	70.00	0.028	-0.0024	0.0458	0.0458
Serviceability - 60 mph Wind 120 deg	90.00	0.047	-0.0031	0.0596	0.0596
Serviceability - 60 mph Wind 120 deg	126.67	0.096	-0.0050	0.0960	0.0961
Serviceability - 60 mph Wind 120 deg	140.00	0.120	-0.0055	0.1059	0.1059
Serviceability - 60 mph Wind 120 deg	146.67	0.132	-0.0058	0.1107	0.1107
Serviceability - 60 mph Wind 120 deg	160.00	0.158	-0.0064	0.1149	0.1151
Serviceability - 60 mph Wind 120 deg	166.67	0.172	-0.0072	0.1112	0.1113
Serviceability - 60 mph Wind 120 deg	180.00	0.198	-0.0090	0.0972	0.0972
Serviceability - 60 mph Wind 180 deg	70.00	0.028	0.0021	0.0457	0.0457
Serviceability - 60 mph Wind 180 deg	90.00	0.047	0.0027	0.0597	0.0597
Serviceability - 60 mph Wind 180 deg	126.67	0.097	0.0039	0.0964	0.0964
Serviceability - 60 mph Wind 180 deg	140.00	0.120	0.0040	0.1061	0.1062
Serviceability - 60 mph Wind 180 deg	146.67	0.133	0.0038	0.1106	0.1106
Serviceability - 60 mph Wind 180 deg	160.00	0.159	0.0034	0.1150	0.1150
Serviceability - 60 mph Wind 180 deg	166.67	0.172	0.0028	0.1182	0.1182
Serviceability - 60 mph Wind 180 deg	180.00	0.199	0.0017	0.1749	0.1749
Serviceability - 60 mph Wind 210 deg	70.00	0.028	0.0014	0.0458	0.0459
Serviceability - 60 mph Wind 210 deg	90.00	0.047	0.0019	0.0596	0.0597
Serviceability - 60 mph Wind 210 deg	126.67	0.096	0.0030	0.0963	0.0963
Serviceability - 60 mph Wind 210 deg	140.00	0.120	0.0034	0.1062	0.1063
Serviceability - 60 mph Wind 210 deg	146.67	0.133	0.0036	0.1107	0.1108
Serviceability - 60 mph Wind 210 deg	160.00	0.159	0.0040	0.1151	0.1152
Serviceability - 60 mph Wind 210 deg	166.67	0.172	0.0047	0.1159	0.1160

© 2007 - 2019 by ATC IP LLC. All rights reserved.

Serviceability - 60 mph Wind 210 deg	180.00	0.198	0.0060	0.1535	0.1535
Serviceability - 60 mph Wind 240 deg	70.00	0.028	0.0024	0.0458	0.0458
Serviceability - 60 mph Wind 240 deg	90.00	0.047	0.0031	0.0596	0.0596
Serviceability - 60 mph Wind 240 deg	126.67	0.096	0.0050	0.0960	0.0961
Serviceability - 60 mph Wind 240 deg	140.00	0.120	0.0055	0.1059	0.1059
Serviceability - 60 mph Wind 240 deg	146.67	0.132	0.0058	0.1107	0.1107
Serviceability - 60 mph Wind 240 deg	160.00	0.158	0.0064	0.1149	0.1151
Serviceability - 60 mph Wind 240 deg	166.67	0.172	0.0072	0.1112	0.1113
Serviceability - 60 mph Wind 240 deg	180.00	0.198	0.0090	0.0972	0.0972
Serviceability - 60 mph Wind 300 deg	70.00	0.028	0.0023	0.0456	0.0457
Serviceability - 60 mph Wind 300 deg	90.00	0.047	0.0029	0.0596	0.0596
Serviceability - 60 mph Wind 300 deg	126.67	0.096	0.0044	0.0961	0.0961
Serviceability - 60 mph Wind 300 deg	140.00	0.120	0.0047	0.1056	0.1057
Serviceability - 60 mph Wind 300 deg	146.67	0.132	0.0047	0.1101	0.1101
Serviceability - 60 mph Wind 300 deg	160.00	0.158	0.0048	0.1149	0.1150
Serviceability - 60 mph Wind 300 deg	166.67	0.172	0.0048	0.1112	0.1112
Serviceability - 60 mph Wind 300 deg	180.00	0.198	0.0050	0.0972	0.0974
Serviceability - 60 mph Wind 330 deg	70.00	0.028	0.0013	0.0458	0.0459
Serviceability - 60 mph Wind 330 deg	90.00	0.047	0.0016	0.0596	0.0597
Serviceability - 60 mph Wind 330 deg	126.67	0.096	0.0024	0.0963	0.0963
Serviceability - 60 mph Wind 330 deg	140.00	0.120	0.0025	0.1062	0.1063
Serviceability - 60 mph Wind 330 deg	146.67	0.133	0.0025	0.1107	0.1108
Serviceability - 60 mph Wind 330 deg	160.00	0.159	0.0024	0.1151	0.1152
Serviceability - 60 mph Wind 330 deg	166.67	0.172	0.0023	0.1159	0.1160
Serviceability - 60 mph Wind 330 deg	180.00	0.198	0.0020	0.1535	0.1536

Site Name:	North Madison Volunteer FD, CT	*Program Last Updated:*	*5/13/2014*
Site Number:	383660	*American Tower Corporation*	
Engineer:	RDB		
Engineering Number:	OAA745468_C3_01		
Date:	03/14/19		

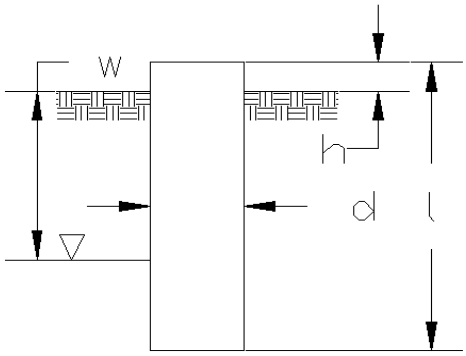

Design Base Loads (Factored) - Analysis per TIA-222-G Standards

Analyze or Design a Foundation?	Analyze	
Foundation Mapped:	N	
Moment (M):	0.0	k-ft
Shear/Leg (V):	38.3	k
Compression/Leg (P):	323.3	k
Uplift/Leg (U):	282.3	k
Tower Type (GT / SST / MP):	SST	
Diameter of Caisson (d):	6.0	ft
Caisson Embedment (L-h):	18.0	ft
Caisson Height Above Ground (h):	0.5	ft
Depth Below Ground Surface to Water Table (w):	2.5	ft
Unit Weight of Concrete:	150.0	pcf
Unit Weight of Water:	62.4	pcf
Tension Skin Friction/Compression Skin Friction:	1.00	
Pullout Angle:	30.0	degrees

Engineer Notes

Soil Mechanical Properties

Depth (ft) Top	Depth (ft) Bottom	γ_{Soil} (pcf)	Cohesion (psf)	ϕ (degree)	Ultimate Skin Friction (psf)	Ultimate Bearing Pressure (psf)
0.0	2.0	125	0	0	0	0
2.0	10.0	125	625	0	313	0
10.0	14.0	135	6250	0	3125	0
14.0	19.0	145	8000	0	5000	36719

Volume of Concrete:	523.1	ft^3 = 19.4 yd^3
Weight of Concrete (Buoyancy Effect Considered):	51.1	k
Average Soil Unit Weight:	77.9	pcf
Skin Friction Resistance:	659.8	k
Compressive Bearing Resistance:	1038.2	k
Pullout Weight (Minus Concrete Weight):	647.7	k
Nominal Uplift Capacity per Leg ($\phi_s T_n$):	485.8	k
Nominal Compressive Capacity per Leg ($\phi_s P_n$):	1273.5	k
P_u:	334.5	k
$T_u/\phi_s T_n$:	0.58	Result: OK
$P_u/\phi_s P_n$:	0.26	Result: OK
Total Lateral Resistance:	2347.2	k
Inflection Point (Below Ground Surface):	14.3	ft
Design Overturning Moment At Inflection Point (M_D):	567.6	k-ft
Nominal Moment Capacity ($\phi_s M_n$):	4527.1	k-ft
$M_D/\phi_s M_n$:	0.13	Result: OK
ϕ_s:	0.75	

Caisson Strength Capacity

Concrete Compressive Strength (f'_c):	4500	psi
Vertical Steel Rebar Size #:	9	
Vertical Steel Rebar Area:	1.00	in^2
# of Vertical Steel Rebars:	26	
Vertical Steel Rebar Yield Strength (F_y):	60	ksi
Horizontal Tie / Stirrup Size #:	5	
Horizontal Tie / Stirrup Area:	0.31	in^2
Design Horizontal Tie / Stirrup Spacing:	12.0	in
Horizontal Tie / Stirrup Steel Yield Strength (F_y):	60	ksi
Rebar Cage Diameter:	64.0	in
Strength Bending/Tension Reduction Factor (ϕ_B):	0.90	ACI318-05 - 9.3.2.1
Strength Shear Reduction Factor (ϕ_V):	0.75	ACI318-05 - 9.3.2.3
Strength Compression Reduction Factor (ϕ_V):	0.65	ACI318-05 - 9.3.2.2
Steel Elastic Modulus:	29000	ksi
Design Moment (M_u):	191.3	k-ft
Nominal Moment Capacity ($\phi_B M_n$):	3662.7	k-ft - ACI318-005 - 10.2
$M_u/\phi_B M_n$:	0.05	Result: OK
Design Shear (V_u):	38.3	k
Nominal Shear Capacity ($\phi_V V_n$):	395.5	k - ACI318-05 - 11.3.1.1 or 11.5.7.2
$V_u/\phi_V V_n$:	0.10	Result: OK
Design Tension (T_u):	282.3	k
Nominal Tension Capacity ($\phi_T T_n$):	1404.0	k - ACI318-05 - 10.2
$T_u/\phi_T T_n$:	0.20	Result: OK
Design Compression (P_u):	334.5	k
Nominal Compression Capacity ($\phi_P P_n$):	8046.5	k - ACI318-05 - 10.3.6.2
$P_u/\phi_P P_n$:	0.04	Result: OK
Bending Reinforcement Ratio:	0.006	ACI318-05 - 10.8.4 & 10.9.1
$M_u/\phi_B M_n + T_u/\phi_T T_n$:	0.25	Result: OK

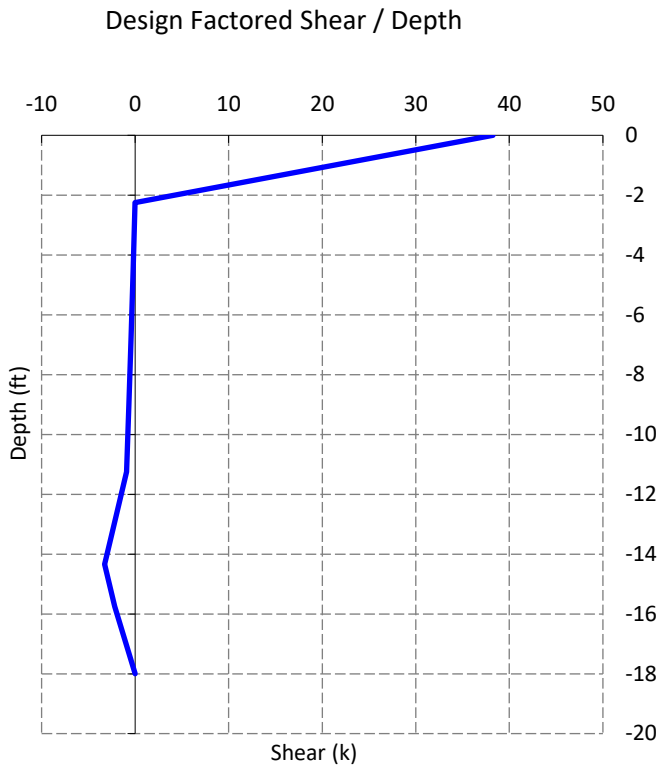
Design Factored Shear / Depth
-10
0
10
20
30
40
50
0
-2
-4
-6
-8
-10
-12
-14
-16
-18
-20
Depth (ft)
Shear (k)

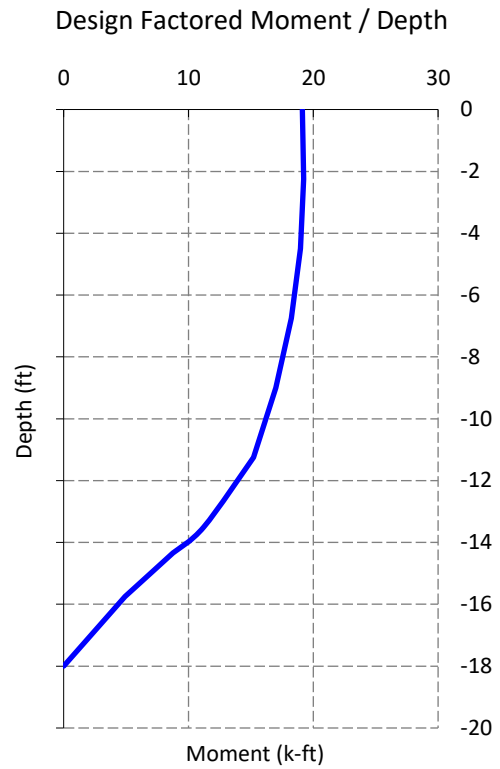
Design Factored Moment / Depth
0
10
20
30
0
-2
-4
-6
-8
-10
-12
-14
-16
-18
-20
Depth (ft)
Moment (k-ft)

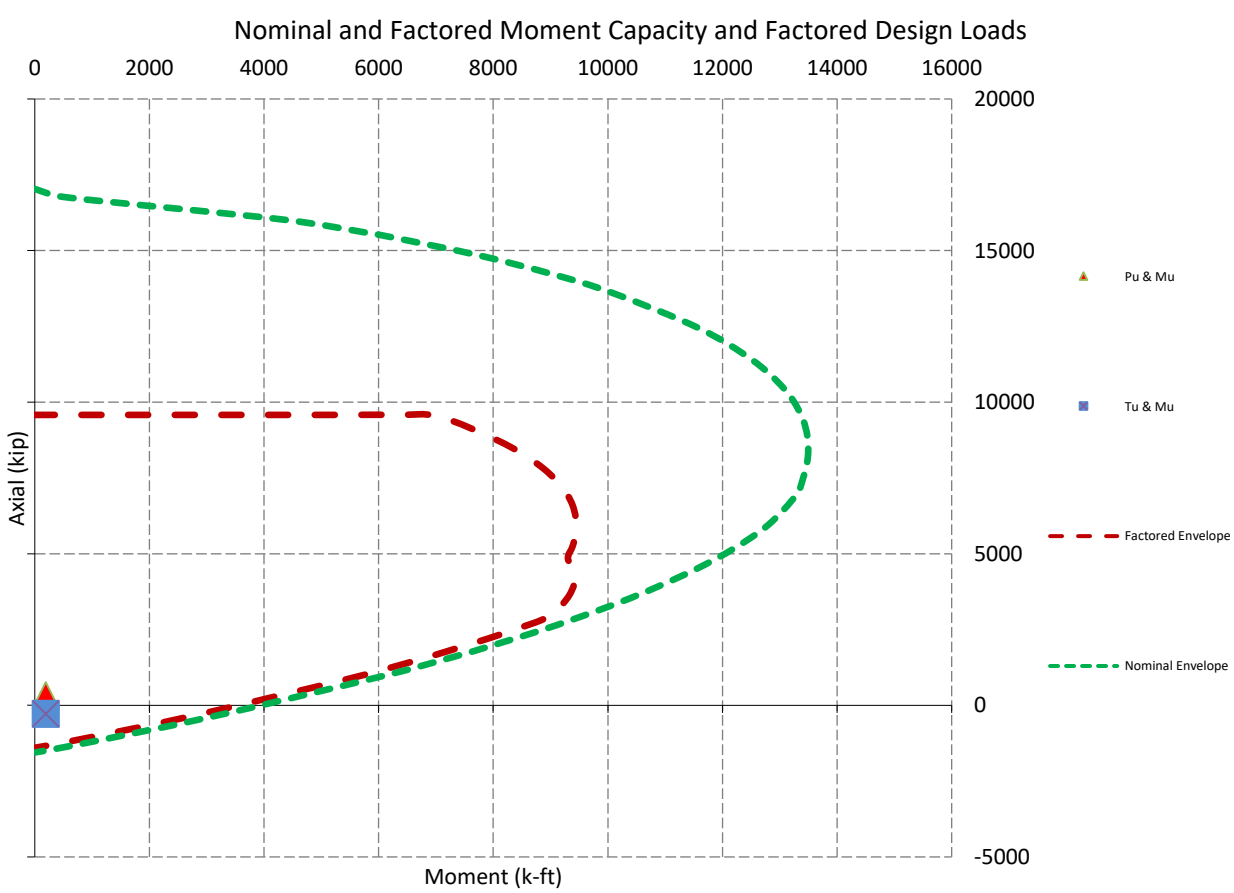
Nominal and Factored Moment Capacity and Factored Design Loads
0
2000
4000
6000
8000
10000
12000
14000
16000
20000
15000
10000
5000
0
-5000
Axial (kip)
Moment (k-ft)
Pu & Mu
Tu & Mu
Factored Envelope
Nominal Envelope