SHEET INDEX

NO.	DESCRIPTION
T1	TITLE SHEET
C1	GENERAL NOTES
C2	OVERALL SITE PLAN
C2A	ENLARGED SITE PLAN
C3	ELEVATION VIEW
C4	ANTENNA ORIENTATION PLAN
C5	EQUIPMENT DETAILS
C6	PLUMBING DIAGRAM
C7	GROUNDING DETAILS
S1–S2	MODIFICATION DETAILS

DRIVING DIRECTIONS

FROM 550 COCHITUATE RD.:

GET ON I-90 WEST/MASSACHUETTS TURNPIKE. HEAD NORTHEAST TOWARD LEGGATT MCCALL CONN. TURN LEFT ONTO LEGGATT MCCALL CONN. CONTINUE ONTO BURR STREET. TURN LEFT ONTO COCHITUATE ROAD. USE THE RIGHT LANE TO TAKE THE RAMP TO I-90 EAST/MASSPIEK WEST/SPRINGFIELD/BOSTON. KEEP LEFT AT THE FORK, FOLLOW SIGNS FOR I-90 WEST/MASSACHUETTS TURNPIKE/WORCESTER/SPRINGFIELD AND MERGE ONTO I-90 WEST/MASSACHUETTS TURNPIKE. FOLLOW I-90 WEST/MASSACHUETTS TURNPIKE AND I-395 SOUTH TO US-6 WEST IN KILLINGLY. TAKE EXIT 37B FROM I-395 SOUTH. MERGE ONTO I-90 WEST/MASSACHUETTS TURNPIKE. TAKE EXIT 10 TOWARD MA-12 NORTH/AUBURN/WORCESTER. KEEP RIGHT AT THE FORK, FOLLOW SIGNS FOR I-395 SOUTH/US-20 EAST/NORWICH CT AND MERGE ONTO I-395 SOUTH. TAKE EXIT 37B TO MERGE ONTO US-6 WEST TOWARD WILLIMANTIC/HARTFORD. FOLLOW US-6 WEST TO FISK STREET IN HAMPTON. MERGE ONTO US-6 WEST. SLIGHT LEFT ONTO FISK STREET.

LOCATION MAP

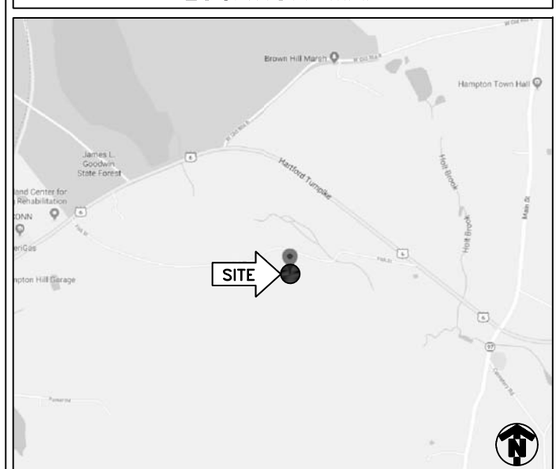

at&t

PROJECT

LTE 2C/3C/4C/5C/RETROFIT

SITE NAME

HAMPTON S CENTRAL

CELL SITE ID

CTL05707

FA SITE NUMBER

10071068

PACE ID

MRCTB041376/MRCTB041380
MRCTB041777/MRCTB041613

SITE ADDRESS

185 FISK ROAD
HAMPTON, CT 06247

STRUCTURE TYPE

GUYED

PROJECT TEAM

smartlink

PROJECT MANAGER

INFINIGY

1033 Watervliet Shaker Rd
Albany, NY 12205
Office # (518) 690-0790
Fax # (518) 690-0793

ENGINEER

SCOPE OF WORK (PER LTE RFDS, DATED 05/24/2019 V1.00):

- HANDICAP ACCESS REQUIREMENTS ARE NOT REQUIRED.
- FACILITY IS UNMANNED AND NOT FOR HUMAN HABITATION.
- FACILITY HAS NO PLUMBING OR REFRIGERANTS.
- THIS FACILITY SHALL MEET OR EXCEED ALL FAA AND FCC REGULATORY REQUIREMENTS.
- ALL NEW MATERIAL SHALL BE FURNISHED AND INSTALLED BY CONTRACTOR UNLESS NOTED OTHERWISE. EQUIPMENT, ANTENNAS/RRU AND CABLES FURNISHED BY OWNER AND INSTALLED BY CONTRACTOR.

TOWER

- REMOVE (6) PANEL ANTENNAS
- INSTALL (6) PANEL ANTENNAS
- REMOVE (3) RRUS-11 B12
- INSTALL (3) 4449 B5/B12
- INSTALL (3) 8843 B2/B66A
- INSTALL (1) DC6 SQUID W/ (1) FIBER AND (2) DC CABLES
- UMTS HOME RUN

GROUND

- INSTALL (3) B14 4478
- INSTALL (3) DIPLEXERS
- SWAP BB W/ (2) 6630
- ADD XMU
- ADD IDLe CABLE

PROJECT SUMMARY

SITE NAME:	HAMPTON S CENTRAL	
CELL SITE ID:	CTL05707	
FA SITE #:	10071068	
SITE ADDRESS:	185 FISK ROAD HAMPTON, CT 06247	
COUNTY:	WINDHAM	
SITE COORDINATES: LATITUDE:	41.7698919° N	(NAD 83)
LONGITUDE:	72.0703989° W	(NAD 83)
RAD CENTER	±130'	(AGL)
LANDLORD:	AMERICAN TOWER CORPORATION 10 PRESIDENTIAL WAY WOBURN, MA 01801	
APPLICANT:	AT&T MOBILITY 550 COCHITUATE RD. FRAMINGHAM, MA 01701	
CLIENT REPRESENTATIVE:	SMARTLINK, LLC 85 RANGEWAY RD., BUILDING 3, SUITE 102 NORTH BILLERICA, MA 01862	
CONTACT:	EDWARD WEISSMAN (917)528-1857	
ENGINEER:	INFINIGY 1033 WATERVLIET SHAKER ROAD ALBANY, NY 12205	
CONTACT:	ALEX WELLER (518) 690-0790	
BUILDING CODE:	2018 CT STATE BUILDING CODE 2015 INTERNATIONAL BUILDING CODE ANSI/TIA-222 G 2015 INTERNATIONAL PLUMBING CODE 2015 INTERNATIONAL MECHANICAL CODE 2015 INTERNATIONAL ENERGY CONSERVATION CODE 2017 NFPA 70	
ELECTRICAL CODE:	NATIONAL ELECTRICAL CODE (LATEST EDITION)	

811 Know what's below. Call before you dig.

TO OBTAIN LOCATION OF PARTICIPANTS UNDERGROUND FACILITIES BEFORE YOU DIG IN CONNECTICUT, CONTACT CALL BEFORE YOU DIG
TOLL FREE: 1-800-922-4455 OR www.cbyd.com
CONNECTICUT STATUTE REQUIRES MIN OF 2 WORKING DAYS NOTICE BEFORE YOU EXCAVATE

INFINIGY
INFINIGY ENGINEERING, PLLC
1033 Watervliet Shaker Rd
Albany, NY 12205
Office # (518) 690-0790
Fax # (518) 690-0793

at&t

STATE OF CONNECTICUT
JOHN S. STEVENS
10/25/2019
24705
LICENSED PROFESSIONAL ENGINEER

UNAUTHORIZED ALTERATION OR ADDITION TO THIS DOCUMENT IS A VIOLATION OF APPLICABLE STATE AND/OR LOCAL LAWS

No.	Submittal / Revision	App'd	Date
2	REVISED FOR PERMIT	ASW	10/25/19
1	ISSUED FOR PERMIT	BMM	09/25/19
0	ISSUED FOR REVIEW	BMM	08/29/19

Drawn: BMM Date: 08/29/19
Designed: ASW Date: 08/29/19
Checked: AJD Date: 08/29/19

Project Number: 499-006

Project Title:
HAMPTON S CENTRAL
CTL05707
FA# 10071068
185 FISK ROAD
HAMPTON, CT 06247

Prepared For: smartlink

Drawing Scale: AS NOTED
Date: 10/25/19
CD

Drawing Title
TITLE PAGE

Drawing Number
T1

GENERAL NOTES

PART 1 – GENERAL REQUIREMENTS

1.1 THE WORK SHALL COMPLY WITH APPLICABLE NATIONAL CODES AND STANDARDS, LATEST EDITION, AND PORTIONS THEREOF, INCLUDED BUT NOT LIMITED TO THE FOLLOWING:
A. GR-63-CORE NEBS REQUIREMENTS: PHYSICAL PROTECTION
B. GR-78-CORE GENERIC REQUIREMENTS FOR THE PHYSICAL DESIGN AND MANUFACTURE OF TELECOMMUNICATIONS EQUIPMENT.
C. NATIONAL FIRE PROTECTION ASSOCIATION CODES AND STANDARDS (NFPA) INCLUDING NFPA 70 (NATIONAL ELECTRICAL CODE – "NEC").
D. AND NFPA 101 (LIFE SAFETY CODE).
E. AMERICAN SOCIETY FOR TESTING OF MATERIALS (ASTM).
F. INSTITUTE OF ELECTRONIC AND ELECTRICAL ENGINEERS (IEEE).

1.2 DEFINITIONS:
A: WORK: THE SUM OF TASKS AND RESPONSIBILITIES IDENTIFIED IN THE CONTRACT DOCUMENTS.
B: COMPANY: AT&T CORPORATION
C. ENGINEER: SYNONYMOUS WITH ARCHITECT & ENGINEER AND "A&E". THE DESIGN PROFESSIONAL HAVING PROFESSIONAL RESPONSIBILITY FOR DESIGN OF THE PROJECT.
D: CONTRACTOR: CONSTRUCTION CONTRACTOR; CONSTRUCTION VENDOR; INDIVIDUAL OR ENTITY WHO AFTER EXECUTION OF A CONTRACT IS BOUND TO ACCOMPLISH THE WORK.
E: THIRD PARTY VENDOR OR AGENCY: A VENDOR OR AGENCY ENGAGED SEPARATELY BY THE COMPANY, A&E, OR CONTRACTOR TO PROVIDE MATERIALS OR TO ACCOMPLISH SPECIFIC TASKS RELATED TO BUT NOT INCLUDED IN THE WORK.

1.3 POINT OF CONTACT: COMMUNICATION BETWEEN THE COMPANY AND THE CONTRACTOR SHALL FLOW THROUGH THE SINGLE COMPANY SITE DEVELOPMENT SPECIALIST OR OTHER PROJECT COORDINATOR APPOINTED TO MANAGE THE PROJECT FOR THE COMPANY.

1.4 ON-SITE SUPERVISION: THE CONTRACTOR SHALL SUPERVISE AND DIRECT THE WORK AND SHALL BE RESPONSIBLE FOR CONSTRUCTION MEANS, METHODS, TECHNIQUES, SEQUENCES, AND PROCEDURES IN ACCORDANCE WITH THE CONTRACT DOCUMENTS. THE CONTRACTOR SHALL EMPLOY A COMPETENT SUPERINTENDENT WHO SHALL BE IN ATTENDANCE AT THE SITE AT ALL TIMES DURING PERFORMANCE OF THE WORK.

1.5 DRAWINGS, SPECIFICATIONS AND DETAILS REQUIRED AT JOBSITE: THE CONSTRUCTION CONTRACTOR SHALL MAINTAIN A FULL SET OF THE CONSTRUCTION DRAWINGS, STANDARD CONSTRUCTION DETAILS FOR WIRELESS SITES, AND THE STANDARD CONSTRUCTION SPECIFICATIONS FOR WIRELESS SITES AT THE JOBSITE FROM MOBILIZATION THROUGH CONSTRUCTION COMPLETION.
A. THE JOBSITE DRAWINGS, SPECIFICATIONS AND DETAILS SHALL BE CLEARLY MARKED DAILY IN PENCIL WITH ANY CHANGES IN CONSTRUCTION OVER WHAT IS DEPICTED IN THE DOCUMENTS. AT CONSTRUCTION COMPLETION, THIS JOBSITE MARKUP SET SHALL BE DELIVERED TO THE COMPANY OR COMPANY'S DESIGNATED REPRESENTATIVE TO BE FORWARDED TO THE COMPANY'S A&E VENDOR FOR PRODUCTION OF "AS-BUILT" DRAWINGS.

1.6 USE OF JOB SITE: THE CONTRACTOR SHALL CONFINE ALL CONSTRUCTION AND RELATED OPERATIONS INCLUDING STAGING AND STORAGE OF MATERIALS AND EQUIPMENT, PARKING, TEMPORARY FACILITIES, AND WASTE STORAGE TO THE LEASE PARCEL UNLESS OTHERWISE PERMITTED BY THE CONTRACT DOCUMENTS.

1.7 NOTICE TO PROCEED:
A. NO WORK SHALL COMMENCE PRIOR TO COMPANY'S WRITTEN NOTICE TO PROCEED.
B. UPON RECEIVING NOTICE TO PROCEED, CONTRACTOR SHALL FULLY PERFORM ALL WORK NECESSARY TO PROVIDE AT&T WITH AN OPERATIONAL WIRELESS FACILITY.

PART 2 – EXECUTION

2.1 TEMPORARY UTILITIES AND FACILITIES: THE CONTRACTOR SHALL BE RESPONSIBLE FOR ALL TEMPORARY UTILITIES AND FACILITIES NECESSARY EXCEPT AS OTHERWISE INDICATED IN THE CONSTRUCTION DOCUMENTS. TEMPORARY UTILITIES AND FACILITIES INCLUDE, POTABLE WATER, HEAT, HVAC, ELECTRICITY, SANITARY FACILITIES, WASTE DISPOSAL FACILITIES, AND TELEPHONE/COMMUNICATION SERVICES. PROVIDE TEMPORARY UTILITIES AND FACILITIES IN ACCORDANCE WITH OSHA AND THE AUTHORITY HAVING JURISDICTION. CONTRACTOR MAY UTILIZE THE COMPANY ELECTRICAL SERVICE IN THE COMPLETION OF THE WORK WHEN IT BECOMES AVAILABLE. USE OF THE LESSORS OR SITE OWNER'S UTILITIES OR FACILITIES IS EXPRESSLY FORBIDDEN EXCEPT AS OTHERWISE ALLOWED IN THE CONTRACT DOCUMENTS.

2.2 ACCESS TO WORK: THE CONTRACTOR SHALL PROVIDE ACCESS TO THE JOB SITE FOR AUTHORIZED COMPANY PERSONNEL AND AUTHORIZED REPRESENTATIVES OF THE ARCHITECT/ENGINEER DURING ALL PHASES OF THE WORK.

2.3 TESTING: REQUIREMENTS FOR TESTING BY THIS CONTRACTOR SHALL BE AS INDICATED HEREWITH, ON THE CONSTRUCTION DRAWINGS, AND IN THE INDIVIDUAL SECTIONS OF THESE SPECIFICATIONS. SHOULD COMPANY CHOOSE TO ENGAGE ANY THIRD-PARTY TO CONDUCT ADDITIONAL TESTING, THE CONTRACTOR SHALL COOPERATE WITH AND PROVIDE A WORK AREA FOR COMPANY'S TEST AGENCY.

2.4 COMPANY FURNISHED MATERIAL AND EQUIPMENT: ALL HANDLING, STORAGE AND INSTALLATION OF COMPANY FURNISHED MATERIAL AND EQUIPMENT SHALL BE IN ACCORDANCE WITH THE REQUIREMENTS OF THE CONTRACT DOCUMENTS AND WITH THE MANUFACTURER'S INSTRUCTIONS AND RECOMMENDATIONS.
A. CONTRACTOR SHALL PROCURE ALL OTHER REQUIRED WORK RELATED MATERIALS NOT PROVIDED BY AT&T TO SUCCESSFULLY CONSTRUCT A WIRELESS FACILITY.

2.5 DIMENSIONS: VERIFY DIMENSIONS INDICATED ON DRAWINGS WITH FIELD DIMENSIONS BEFORE FABRICATION OR ORDERING OF MATERIALS. DO NOT SCALE DRAWINGS.

2.6 EXISTING CONDITIONS: NOTIFY THE COMPANY REPRESENTATIVE OF EXISTING CONDITIONS DIFFERING FROM THOSE INDICATED ON THE DRAWINGS. DO NOT REMOVE OR ALTER STRUCTURAL COMPONENTS WITHOUT PRIOR WRITTEN APPROVAL FROM THE ARCHITECT AND ENGINEER.

PART 3 – RECEIPT OF MATERIAL & EQUIPMENT

3.1 RECEIPT OF MATERIAL AND EQUIPMENT: CONTRACTOR IS RESPONSIBLE FOR AT&T PROVIDED MATERIAL AND EQUIPMENT AND UPON RECEIPT SHALL:
A. ACCEPT DELIVERIES AS SHIPPED AND TAKE RECEIPT.
B. VERIFY COMPLETENESS AND CONDITION OF ALL DELIVERIES.
C. TAKE RESPONSIBILITY FOR EQUIPMENT AND PROVIDE INSURANCE PROTECTION AS REQUIRED IN AGREEMENT.
D. RECORD ANY DEFECTS OR DAMAGES AND WITHIN TWENTY-FOUR HOURS AFTER RECEIPT, REPORT TO AT&T OR ITS DESIGNATED PROJECT REPRESENTATIVE OF SUCH.
E. PROVIDE SECURE AND NECESSARY WEATHER PROTECTED WAREHOUSING.
F. COORDINATE SAFE AND SECURE TRANSPORTATION OF MATERIAL AND EQUIPMENT, DELIVERING AND OFF-LOADING FROM CONTRACTOR'S WAREHOUSE TO SITE.

PART 4 – GENERAL REQUIREMENTS FOR CONSTRUCTION

4.1 CONTRACTOR SHALL KEEP THE SITE FREE FROM ACCUMULATING WASTE MATERIAL, DEBRIS, AND TRASH. AT THE COMPLETION OF THE WORK, CONTRACTOR SHALL REMOVE FROM THE SITE ALL REMAINING RUBBISH, IMPLEMENTS, TEMPORARY FACILITIES, AND SURPLUS MATERIALS.

4.2 EQUIPMENT ROOMS SHALL AT ALL TIMES BE MAINTAINED "BROOM CLEAN" AND CLEAR OF DEBRIS.

4.3 CONTRACTOR SHALL TAKE ALL REASONABLE PRECAUTIONS TO DISCOVER AND LOCATE ANY HAZARDOUS CONDITION.
A. IN THE EVENT CONTRACTOR ENCOUNTERS ANY HAZARDOUS CONDITION WHICH HAS NOT BEEN ABATED OR OTHERWISE MITIGATED, CONTRACTOR AND ALL OTHER PERSONS SHALL IMMEDIATELY STOP WORK IN THE AFFECTED AREA AND NOTIFY COMPANY IN WRITING. THE WORK IN THE AFFECTED AREA SHALL NOT BE RESUMED EXCEPT BY WRITTEN NOTIFICATION BY COMPANY.
B. CONTRACTOR AGREES TO USE CARE WHILE ON THE SITE AND SHALL NOT TAKE ANY ACTION THAT WILL OR MAY RESULT IN OR CAUSE THE HAZARDOUS CONDITION TO BE FURTHER RELEASED IN THE ENVIRONMENT, OR TO FURTHER EXPOSE INDIVIDUALS TO THE HAZARD.

4.4 CONTRACTOR'S ACTIVITIES SHALL BE RESTRICTED TO THE PROJECT LIMITS. SHOULD AREAS OUTSIDE THE PROJECT LIMITS BE AFFECTED BY CONTRACTOR'S ACTIVITIES, CONTRACTOR SHALL IMMEDIATELY RETURN THEM TO ORIGINAL CONDITION.

4.5 CONDUCT TESTING AS REQUIRED HEREIN.

PART 5 – TESTS AND INSPECTIONS

5.1 TESTS AND INSPECTIONS:
A. THE CONTRACTOR SHALL BE RESPONSIBLE FOR ALL CONSTRUCTION TESTS, INSPECTIONS AND PROJECT DOCUMENTATION.

B. CONTRACTOR SHALL COORDINATE TEST AND INSPECTION SCHEDULES WITH COMPANY'S REPRESENTATIVE WHO MUST BE ON SITE TO WITNESS SUCH TESTS AND INSPECTIONS.

C. WHEN THE USE OF A THIRD PARTY INDEPENDENT TESTING AGENCY IS REQUIRED, THE AGENCY THAT IS SELECTED MUST PERFORM SUCH WORK ON A REGULAR BASIS IN THE STATE WHERE THE PROJECT IS LOCATED AND HAVE A THOROUGH UNDERSTANDING OF LOCAL AVAILABLE MATERIALS, INCLUDING THE SOIL, ROCK, AND GROUNDWATER CONDITIONS.

D. THE THIRD PARTY TESTING AGENCY IS TO BE FAMILIAR WITH THE APPLICABLE REQUIREMENTS FOR THE TESTS TO BE DONE, EQUIPMENT TO BE USED, AND ASSOCIATED HEALTH AND SAFETY ISSUES.

E. SITE RESISTANCE TO EARTH TESTING PER EXHIBIT: CELL SITE GROUNDING SYSTEM DESIGN.

F. ANTENNA AND COAX SWEEP TESTS PER EXHIBIT: ANTENNA TRANSMISSION LINE ACCEPTANCE STANDARDS.

G. ALL OTHER TESTS REQUIRED BY COMPANY OR JURISDICTION.

PART 6 – TRENCHING AND BACKFILLING

6.1 TRENCHING AND BACKFILLING: THE CONTRACTOR SHALL PERFORM ALL EXCAVATION OF EVERY DESCRIPTION AND OF WHATEVER SUBSTANCES ENCOUNTERED, TO THE DEPTHS INDICATED ON THE CONSTRUCTION DRAWINGS OR AS OTHERWISE SPECIFIED.

A. PROTECTION OF EXISTING UTILITIES: THE CONTRACTOR SHALL CHECK WITH THE LOCAL UTILITIES AND THE RESPECTIVE UTILITY LOCATOR COMPANIES PRIOR TO STARTING EXCAVATION OPERATIONS IN EACH RESPECTIVE AREA TO ASCERTAIN THE LOCATIONS OF KNOWN UTILITY LINES. THE LOCATIONS, NUMBER AND TYPES OF EXISTING UTILITY LINES DETAILED ON THE CONSTRUCTION DRAWINGS ARE APPROXIMATE AND DO NOT REPRESENT EXACT INFORMATION. THE CONTRACTOR SHALL BE RESPONSIBLE FOR REPAIRING ALL LINES DAMAGED DURING EXCAVATION AND ALL ASSOCIATED OPERATIONS. ALL UTILITY LINES UNCOVERED DURING THE EXCAVATION OPERATIONS, SHALL BE PROTECTED FROM DAMAGE DURING EXCAVATION AND ASSOCIATED OPERATIONS. ALL REPAIRS SHALL BE APPROVED BY THE UTILITY COMPANY.

B. HAND DIGGING: UNLESS APPROVED IN WRITING OTHERWISE, ALL DIGGING WITHIN AN EXISTING CELL SITE COMPOUND IS TO BE DONE BY HAND.

C. DURING EXCAVATION, MATERIAL SUITABLE FOR BACKFILLING SHALL BE STOCKPILED IN AN ORDERLY MANNER A SUFFICIENT DISTANCE FROM THE BANKS OF THE TRENCH TO AVOID OVERLOADING AND TO PREVENT SLIDES OR CAVE-INS. ALL EXCAVATED MATERIALS NOT REQUIRED OR SUITABLE FOR BACKFILL SHALL BE REMOVED AND DISPOSED OF AT THE CONTRACTOR'S EXPENSE.

D. GRADING SHALL BE DONE AS MAY BE NECESSARY TO PREVENT SURFACE WATER FROM FLOWING INTO TRENCHES OR OTHER EXCAVATIONS, AND ANY WATER ACCUMULATING THEREIN SHALL BE REMOVED BY PUMPING OR BY OTHER APPROVED METHOD.

E. SHEETING AND SHORING SHALL BE DONE AS NECESSARY FOR THE PROTECTION OF THE WORK AND FOR THE SAFETY OF PERSONNEL. UNLESS OTHERWISE INDICATED, EXCAVATION SHALL BE BY OPEN CUT, EXCEPT THAT SHORT SECTIONS OF A TRENCH MAY BE TUNNELED IF, THE CONDUIT CAN BE SAFELY AND PROPERLY INSTALLED AND BACKFILL CAN BE PROPERLY TAMPED IN SUCH TUNNEL SECTIONS. EARTH EXCAVATION SHALL COMPRISE ALL MATERIALS AND SHALL INCLUDE CLAY, SILT, SAND, MUCK, GRAVEL, HARDPAN, LOOSE SHALE, AND LOOSE STONE.

F. TRENCHES SHALL BE OF NECESSARY WIDTH FOR THE PROPER LAYING OF THE CONDUIT OR CABLE, AND THE BANKS SHALL BE AS NEARLY VERTICAL AS PRACTICABLE. THE BOTTOM OF THE TRENCHES SHALL BE ACCURATELY GRADED TO PROVIDE UNIFORM BEARING AND SUPPORT FOR EACH SECTION OF THE CONDUIT OR CABLE ON UNDISTURBED SOIL AT EVERY POINT ALONG ITS ENTIRE LENGTH. EXCEPT WHERE ROCK IS ENCOUNTERED, CARE SHALL BE TAKEN NOT TO EXCAVATE BELOW THE DEPTHS INDICATED. WHERE ROCK EXCAVATIONS ARE NECESSARY, THE ROCK SHALL BE EXCAVATED TO A MINIMUM OVER DEPTH OF 6 INCHES BELOW THE TRENCH DEPTHS INDICATED ON THE CONSTRUCTION DRAWINGS OR SPECIFIED. OVER DEPTHS IN THE ROCK EXCAVATION AND UNAUTHORIZED OVER DEPTHS SHALL BE THOROUGHLY BACK FILLED AND TAMPED TO THE APPROPRIATE GRADE. WHENEVER WET OR OTHERWISE UNSTABLE SOIL THAT IS INCAPABLE OF PROPERLY SUPPORTING THE CONDUIT OR CABLE IS ENCOUNTERED IN THE BOTTOM OF THE TRENCH, SUCH SOLID SHALL BE REMOVED TO A MINIMUM OVER DEPTH OF 6 INCHES AND THE TRENCH BACKFILLED TO THE PROPER GRADE WITH EARTH OF OTHER SUITABLE MATERIAL, AS HEREINAFTER SPECIFIED.

G. BACKFILLING OF TRENCHES. TRENCHES SHALL NOT BE BACKFILLED UNTIL ALL SPECIFIED TESTS HAVE BEEN PERFORMED AND ACCEPTED. WHERE COMPACTED BACKFILL IS NOT INDICATED THE TRENCHES SHALL BE CAREFULLY BACKFILLED WITH SELECT MATERIAL SUCH AS EXCAVATED SOILS THAT ARE FREE OF ROOTS, SOD, RUBBISH OR STONES, DEPOSITED IN 6 INCH LAYERS AND THOROUGHLY AND CAREFULLY RAMMED UNTIL THE CONDUIT OR CABLE HAS A COVER OF NOT LESS THAN 1 FOOT. THE REMAINDER OF THE BACKFILL MATERIAL SHALL BE GRANULAR IN NATURE AND SHALL NOT CONTAIN ROOTS, SOD, RUBBING, OR STONES OF 2-1/2 INCH MAXIMUM DIMENSION. BACKFILL SHALL BE CAREFULLY PLACED IN THE TRENCH AND IN 1 FOOT LAYERS AND EACH LAYER TAMPED. SETTLING THE BACKFILL WITH WATER WILL BE PERMITTED. THE SURFACE SHALL BE GRADED TO A REASONABLE UNIFORMITY AND THE MOUNDING OVER THE TRENCHES LEFT IN A UNIFORM AND NEAT CONDITION.

SYMBOL	DESCRIPTION
	CIRCUIT BREAKER
	NON-FUSIBLE DISCONNECT SWITCH
F	FUSIBLE DISCONNECT SWITCH
	SURFACE MOUNTED PANEL BOARD
T	TRANSFORMER
M	KILOWATT HOUR METER
JB	JUNCTION BOX
PB	PULL BOX TO NEC/TELCO STANDARDS
	UNDERGROUND UTILITIES
	EXOTHERMIC WELD CONNECTION
	MECHANICAL CONNECTION
OR	GROUND ROD
OR	GROUND ROD WITH INSPECTION SLEEVE
	GROUND BAR
	120AC DUPLEX RECEPTACLE
G	GROUND CONDUCTOR
	DC POWER AND FIBER OPTIC TRUNK CABLES
	DC POWER CABLES
# / #	REPRESENTS DETAIL NUMBER / REF. DRAWING NUMBER

ABBREVIATIONS

CIGBE	COAX ISOLATED GROUND BAR EXTERNAL
MIGB	MASTER ISOLATED GROUND BAR
SST	SELF SUPPORTING TOWER
GPS	GLOBAL POSITIONING SYSTEM
TYP.	TYPICAL
DWG	DRAWING
BCW	BARE COPPER WIRE
BFG	BELOW FINISH GRADE
PVC	POLYVINYL CHLORIDE
CAB	CABINET
C	CONDUIT
SS	STAINLESS STEEL
G	GROUND
AWG	AMERICAN WIRE GAUGE
RGS	RIGID GALVANIZED STEEL
AHJ	AUTHORITY HAVING JURISDICTION
TTLNA	TOWER TOP LOW NOISE AMPLIFIER
UNO	UNLESS NOTED OTHERWISE
EMT	ELECTRICAL METALLIC TUBING
AGL	ABOVE GROUND LEVEL

INFINIGY
INFINIGY ENGINEERING, PLLC
1033 Watervliet Shaker Rd
Albany, NY 12205
Office # (518) 690-0790
Fax # (518) 690-0793

at&t

STATE OF CONNECTICUT
JOHN S. STEVENS
10/25/2019
24705
LICENSED PROFESSIONAL ENGINEER

UNAUTHORIZED ALTERATION OR ADDITION TO THIS DOCUMENT IS A VIOLATION OF APPLICABLE STATE AND/OR LOCAL LAWS

No.	Submittal / Revision	App'd	Date
2	REVISED FOR PERMIT	ASW	10/25/19
1	ISSUED FOR PERMIT	BMM	09/25/19
0	ISSUED FOR REVIEW	BMM	08/29/19

Drawn: BMM Date: 08/29/19
Designed: ASW Date: 08/29/19
Checked: AJD Date: 08/29/19

Project Number: 499-006

Project Title:
HAMPTON S CENTRAL
CTL05707
FA# 10071068
185 FISK ROAD
HAMPTON, CT 06247

Prepared For: smartlink

Drawing Scale: AS NOTED
Date: 10/25/19
CD

Drawing Title
GENERAL NOTES

Drawing Number
C1

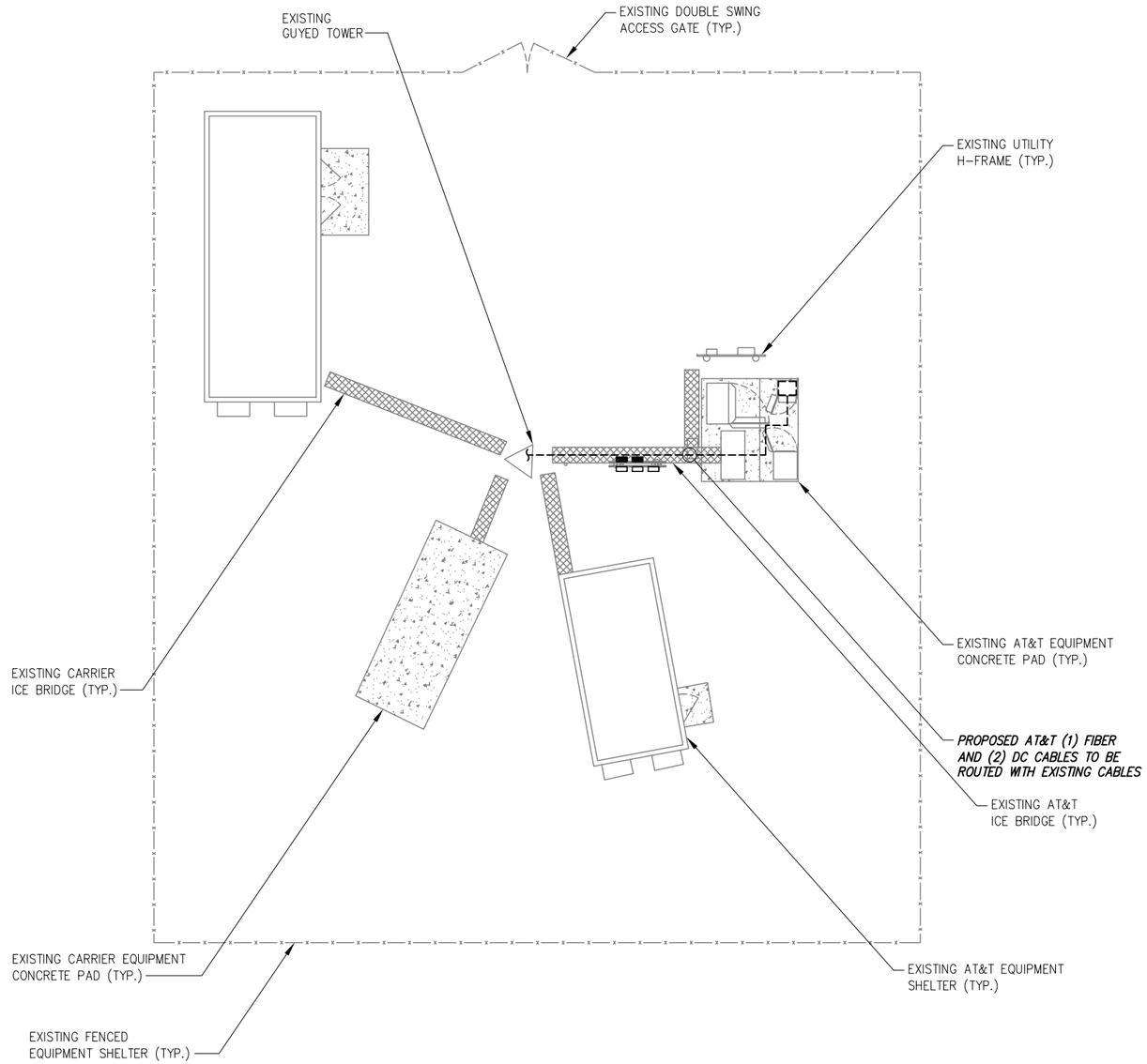

1 SITE PLAN
SCALE: AS NOTED

TRUE NORTH

GRAPHIC SCALE:
10' 5' 0 5' 10'
SCALE (11x17): 1" = 10'-0"
SCALE (22x34): 1" = 5'-0"

BASEMAPPING PREPARED FROM A SITE WALK PERFORMED BY INFINIGY ENGINEERING AND PROVIDED INFORMATION, AND DOES NOT REPRESENT AN ACTUAL FIELD SURVEY.

INFINIGY
INFINIGY ENGINEERING, PLLC
1033 Watervliet Shaker Rd
Albany, NY 12205
Office # (518) 690-0790
Fax # (518) 690-0793

at&t

STATE OF CONNECTICUT
JOHN S. STEVENS
10/25/2019
24705
LICENSED PROFESSIONAL ENGINEER

UNAUTHORIZED ALTERATION OR ADDITION TO THIS DOCUMENT IS A VIOLATION OF APPLICABLE STATE AND/OR LOCAL LAWS

No.	Submittal / Revision	App'd	Date
2	REVISED FOR PERMIT	ASW	10/25/19
1	ISSUED FOR PERMIT	BMM	09/25/19
0	ISSUED FOR REVIEW	BMM	08/29/19

Drawn: BMM Date: 08/29/19
Designed: ASW Date: 08/29/19
Checked: AJD Date: 08/29/19

Project Number: 499-006

Project Title:
HAMPTON S CENTRAL
CTL05707
FA# 10071068
185 FISK ROAD
HAMPTON, CT 06247

Prepared For: smartlink

Drawing Scale: AS NOTED
Date: 10/25/19
CD

Drawing Title
OVERALL SITE PLAN

Drawing Number
C2

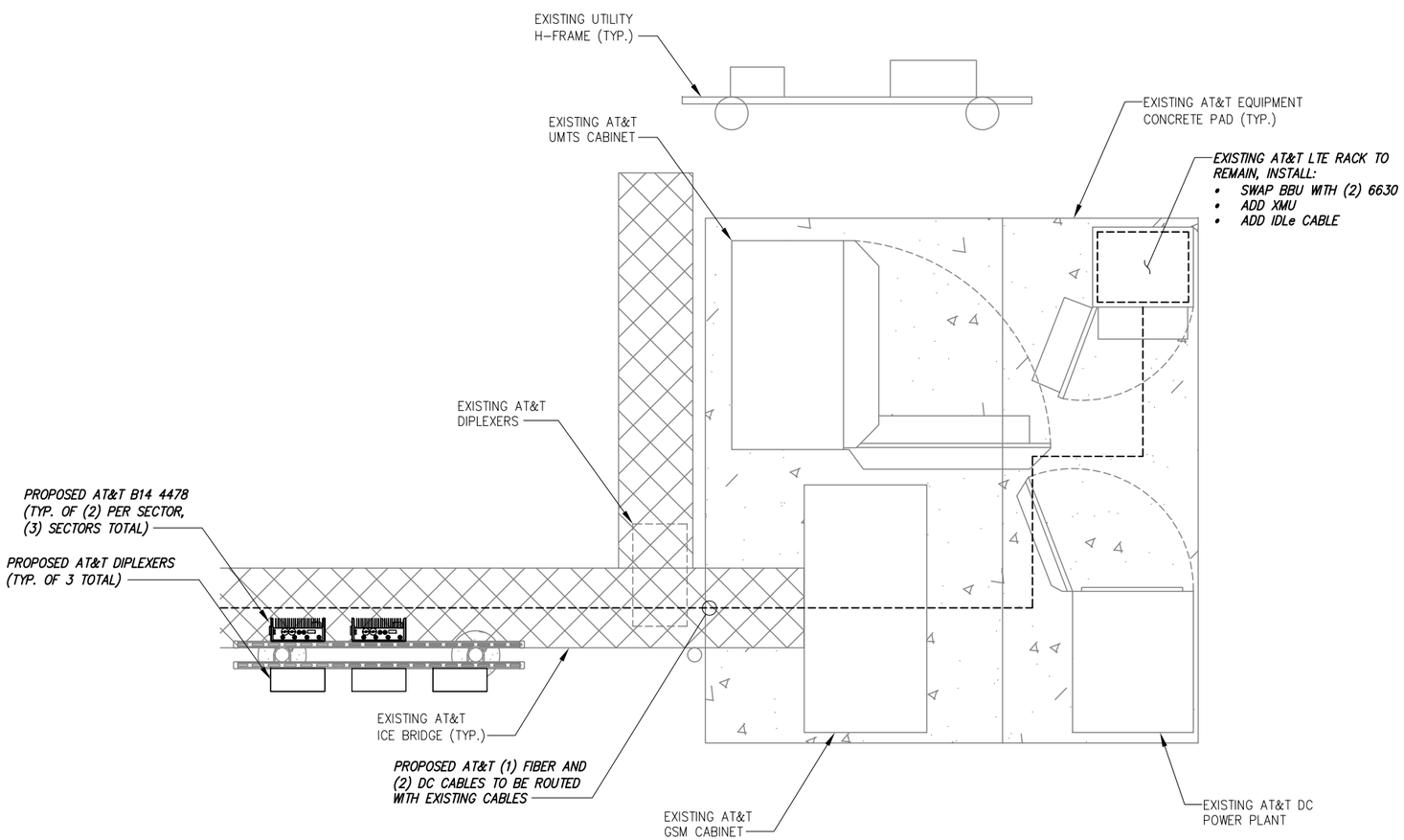

BASEMAPPING PREPARED FROM A SITE WALK PERFORMED BY INFINIGY ENGINEERING AND PROVIDED INFORMATION, AND DOES NOT REPRESENT AN ACTUAL FIELD SURVEY.

TRUE NORTH

2 ENLARGED EQUIPMENT PLAN
SCALE: AS NOTED

GRAPHIC SCALE:
3' 1'-6" 0 1'-6" 3'
SCALE (11x17): 1" = 3'-0"
SCALE (22x34): 1" = 1'-6"

INFINIGY
INFINIGY ENGINEERING, PLLC
1033 Watervliet Shaker Rd
Albany, NY 12205
Office # (518) 690-0790
Fax # (518) 690-0793

at&t

STATE OF CONNECTICUT
JOHN S. STRANS
10/25/2019
24705
LICENSED
PROFESSIONAL ENGINEER

UNAUTHORIZED ALTERATION OR ADDITION TO THIS DOCUMENT IS A VIOLATION OF APPLICABLE STATE AND/OR LOCAL LAWS

No.	Submittal / Revision	App'd	Date
2	REVISED FOR PERMIT	ASW	10/25/19
1	ISSUED FOR PERMIT	BMM	09/25/19
0	ISSUED FOR REVIEW	BMM	08/29/19

Drawn: BMM Date: 08/29/19
Designed: ASW Date: 08/29/19
Checked: AJD Date: 08/29/19

Project Number: 499-006

Project Title:
HAMPTON S CENTRAL
CTL05707
FA# 10071068
185 FISK ROAD
HAMPTON, CT 06247

Prepared For: smartlink

Drawing Scale: AS NOTED
Date: 10/25/19
CD

Drawing Title
ENLARGED SITE PLAN

Drawing Number
C2A

NOTE:
- *INFINIGY ENGINEERING HAS NOT EVALUATED THE TOWER LOADING FOR THIS SITE, AND ASSUMES NO RESPONSIBILITY FOR ITS STRUCTURAL INTEGRITY REGARDING ITS EXISTING OR PROPOSED LOADING. FINAL INSTALLATION TO COMPLY STRUCTURAL ANALYSIS.*
- *FOR ADDITIONAL STRUCTURAL INFORMATION PERTAINING TO THE ANTENNA MOUNT, SEE 'POST MOD MOUNT ANALYSIS REPORT' COMPLETED BY INFINIGY, DATED 09/20/19. SEE SHEETS S1-S2 FOR ADDITIONAL DETAILS.*

NOTE:
- 3' MINIMUM SEPARATION BETWEEN ALL LTE ANTENNAS
- 6' MINIMUM SEPARATION BETWEEN 700 BC/700 DE ANTENNAS

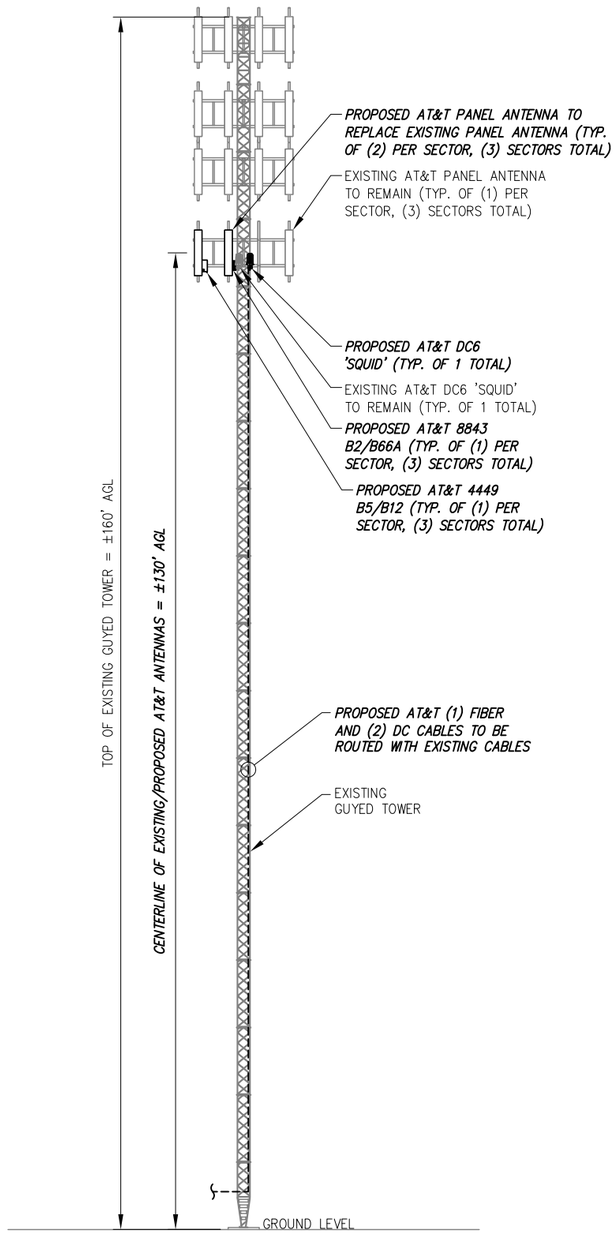

1 ELEVATION VIEW
NOT TO SCALE

FINAL ANTENNA CONFIGURATION & CABLE SCHEDULE BASED ON LTE RFDS DATED 05/24/19, V 1.00

SECTOR	ANTENNA POSITION	ANTENNA STATUS & TECHNOLOGY	ANTENNA MANF/MODEL	TMA/ DIPLEXER	RRUS	AZIMUTH	ANTENNA ℄ HEIGHT	CABLE FEEDER TYPE	CABLE FEEDER LENGTH	RAYCAP UNIT
ALPHA	A-1	(E) UMTS 850/1900	POWERWAVE 7770	(2) (E) LGP17201	--	90°	±130'	(2) (E) 1-1/4" COAX CABLES	±175'	(1) (E) DC6 'SQUID' (1) (P) DC6 'SQUID'
	A-2	--	--	--	--	--	--	--	--	
	A-3	*(P) LTE 700/1900*	*CCI HPA-65R-BU8A-K*	*(1) (P) DBCT108F1V92-1*	*(1) (P) B14 4478 (GROUND) (1) (P) 8843 B2/B66A*	*90°*	*±130'*	(2) (E) 1-1/4" COAX CABLES	±175'	
	A-4	*(P) LTE 700/850/ AWS/5G 850*	*CCI DMP65R-BU8DA*	--	*(1) (P) 4449 B5/B12*	*90°*	*±130'*	(1) (E) FIBER CABLE (2) (E) DC CABLES	--	
BETA	B-1	(E) UMTS 850/1900	POWERWAVE 7770	(2) (E) LGP17201	--	180°	±130'	(2) (E) 1-1/4" COAX CABLES	±175'	
	B-2	--	--	--	--	--	--	--	--	
	B-3	*(P) LTE 700/1900*	*CCI HPA-65R-BU8A-K*	*(1) (P) DBCT108F1V92-1*	*(1) (P) B14 4478 (GROUND) (1) (P) 8843 B2/B66A*	*210°*	*±130'*	(2) (E) 1-1/4" COAX CABLES	±175'	
	B-4	*(P) LTE 700/850/ AWS/5G 850*	*CCI DMP65R-BU8DA*	--	*(1) (P) 4449 B5/B12*	*210°*	*±130'*	*(1) (P) FIBER CABLE (2) (P) DC CABLES*	--	
GAMMA	G-1	(E) UMTS 850/1900	POWERWAVE 7770	(2) (E) LGP17201	--	290°	±130'	(2) (E) 1-1/4" COAX CABLES	±175'	
	G-2	--	--	--	--	--	--	--	--	
	G-3	*(P) LTE 700/1900*	*CCI HPA-65R-BU8A-K*	*(1) (P) DBCT108F1V92-1*	*(1) (P) 8843 B2/B66A*	*320°*	*±130'*	(2) (E) 1-1/4" COAX CABLES	±175'	
	G-4	*(P) LTE 700/850/ AWS/5G 850*	*CCI DMP65R-BU8DA*	--	*(1) (P) 4449 B5/B12*	*320°*	*±130'*	SEE A-4 FOR CABLE INFORMATION	--	

2 AT&T ANTENNA SCHEDULE
NOT TO SCALE

INFINIGY
INFINIGY ENGINEERING, PLLC
1033 Watervliet Shaker Rd.
Albany, NY 12205
Office # (518) 690-0790
Fax # (518) 690-0793

at&t

STATE OF CONNECTICUT
JOHN S. STEVENS
10/25/2019
24705
LICENSED PROFESSIONAL ENGINEER

UNAUTHORIZED ALTERATION OR ADDITION TO THIS DOCUMENT IS A VIOLATION OF APPLICABLE STATE AND/OR LOCAL LAWS

No.	Submittal / Revision	App'd	Date
2	REVISED FOR PERMIT	ASW	10/25/19
1	ISSUED FOR PERMIT	BMM	09/25/19
0	ISSUED FOR REVIEW	BMM	08/29/19

Drawn: BMM Date: 08/29/19
Designed: ASW Date: 08/29/19
Checked: AJD Date: 08/29/19

Project Number: 499-006

Project Title:
HAMPTON S CENTRAL
CTL05707
FA# 10071068
185 FISK ROAD
HAMPTON, CT 06247

Prepared For: smartlink

Drawing Scale: AS NOTED
Date: 10/25/19
CD

Drawing Title
ELEVATION VIEW

Drawing Number
C3

NOTE:
- 3' MINIMUM SEPARATION BETWEEN ALL LTE ANTENNAS
- 6' MINIMUM SEPARATION BETWEEN 700 BC/700 DE ANTENNAS

NOTE:
- *INFINIGY ENGINEERING HAS NOT EVALUATED THE TOWER LOADING FOR THIS SITE, AND ASSUMES NO RESPONSIBILITY FOR ITS STRUCTURAL INTEGRITY REGARDING ITS EXISTING OR PROPOSED LOADING. FINAL INSTALLATION TO COMPLY STRUCTURAL ANALYSIS.*
- *FOR ADDITIONAL STRUCTURAL INFORMATION PERTAINING TO THE ANTENNA MOUNT, SEE 'POST MOD MOUNT ANALYSIS REPORT' COMPLETED BY INFINIGY, DATED 09/20/19. SEE SHEETS S1–S2 FOR ADDITIONAL DETAILS.*

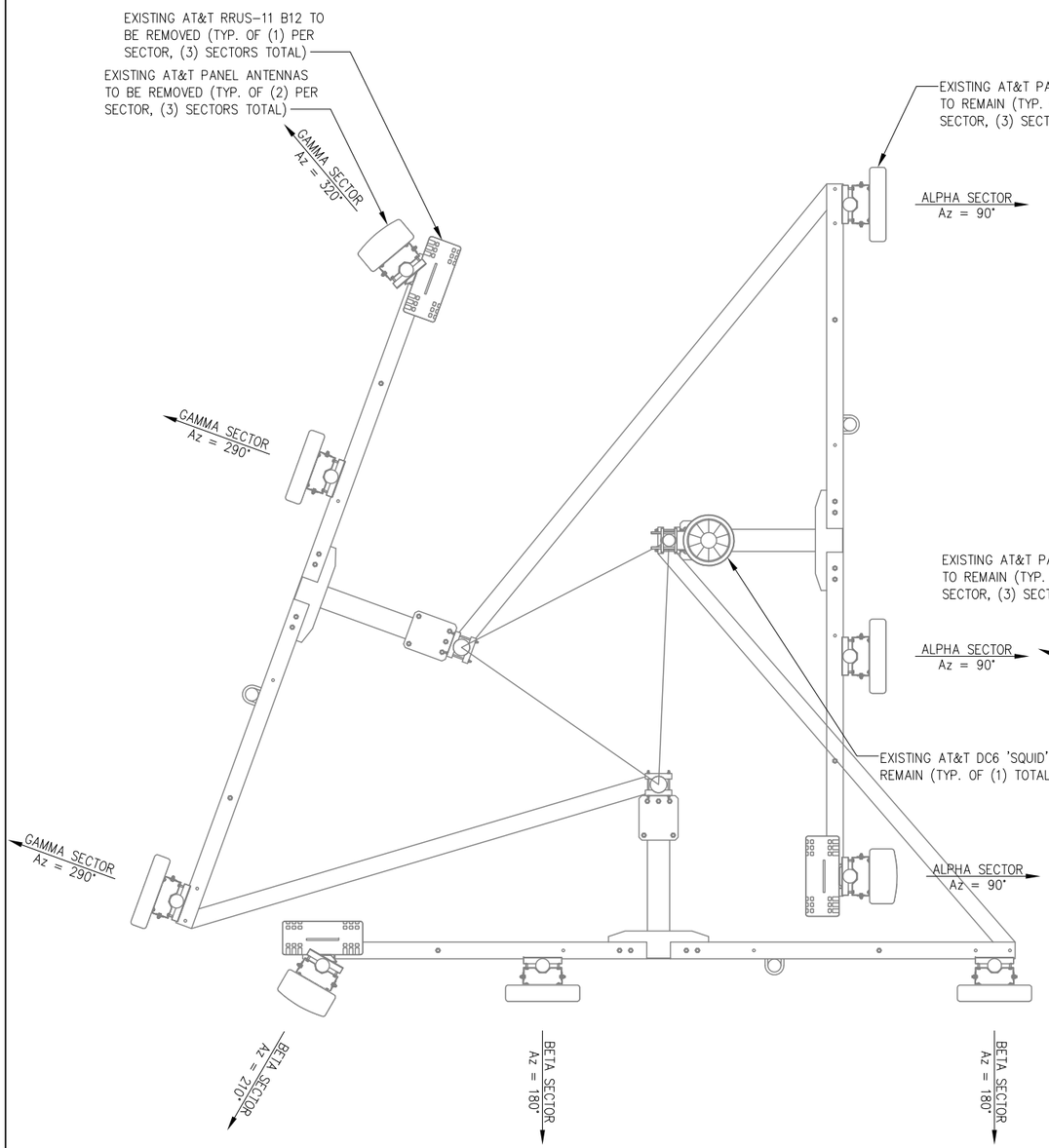

1 EXISTING ANTENNA ORIENTATION PLAN
NOT TO SCALE

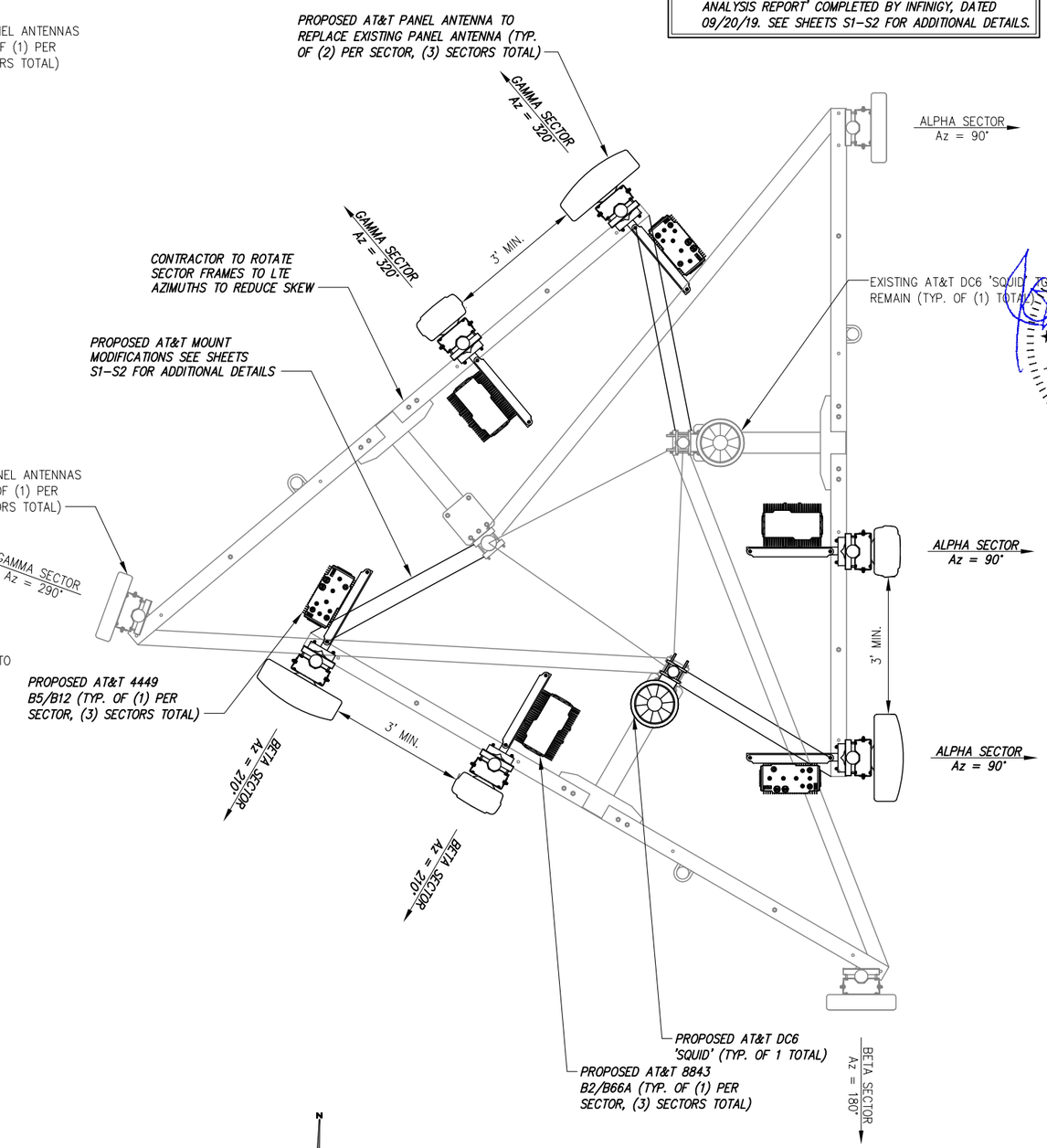

2 PROPOSED ANTENNA ORIENTATION PLAN
NOT TO SCALE

INFINIGY
INFINIGY ENGINEERING, PLLC
1033 Watervliet Shaker Rd
Albany, NY 12205
Office # (518) 690-0790
Fax # (518) 690-0793

at&t

STATE OF CONNECTICUT
JOHN S. STEVENS
10/25/2019
24705
LICENSED PROFESSIONAL ENGINEER

UNAUTHORIZED ALTERATION OR ADDITION TO THIS DOCUMENT IS A VIOLATION OF APPLICABLE STATE AND/OR LOCAL LAWS

No.	Submittal / Revision	App'd	Date
2	REVISED FOR PERMIT	ASW	10/25/19
1	ISSUED FOR PERMIT	BMM	09/25/19
0	ISSUED FOR REVIEW	BMM	08/29/19

Drawn: BMM Date: 08/29/19
Designed: ASW Date: 08/29/19
Checked: AJD Date: 08/29/19

Project Number: 499-006

Project Title:
HAMPTON S CENTRAL
CTL05707
FA# 10071068
185 FISK ROAD
HAMPTON, CT 06247

Prepared For: smartlink

Drawing Scale: AS NOTED
Date: 10/25/19
CD

Drawing Title
ANTENNA ORIENTATION PLAN

Drawing Number
C4

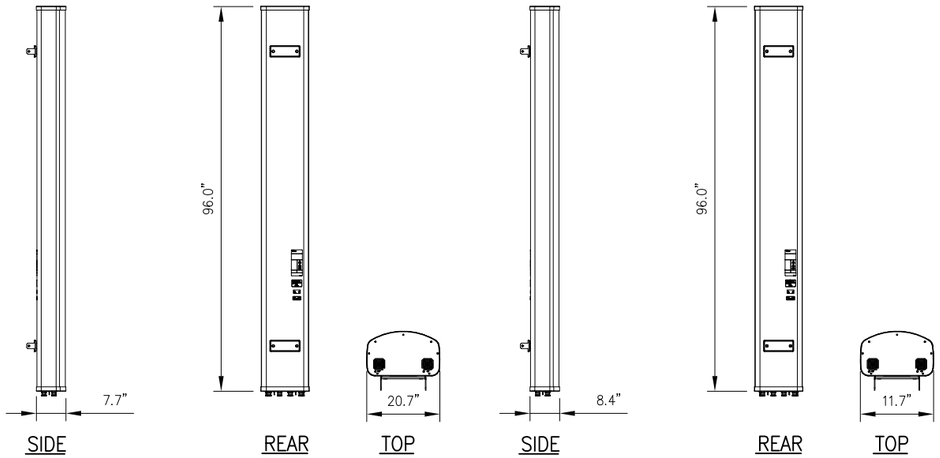

CCI MODEL NO.:	DMP65R-BU8DA
RADOME MATERIAL:	FIBERGLASS
RADOME COLOR:	LIGHT GRAY
DIMENSIONS, HxWxD:	(96.0"x20.7"x7.7")
WEIGHT, W/ PRE-MOUNTED BRACKETS:	95.7 LBS
CONNECTOR:	(8) 4.3-10 FEMALE

CCI MODEL NO.:	HPA-65R-BU8A-K
RADOME MATERIAL:	FIBERGLASS
RADOME COLOR:	LIGHT GRAY
DIMENSIONS, HxWxD:	(96.0"x11.7"x8.4")
WEIGHT, W/ PRE-MOUNTED BRACKETS:	54 LBS
CONNECTOR:	(6) 4.3-10 FEMALE

1 ANTENNA DETAIL
-- NOT TO SCALE

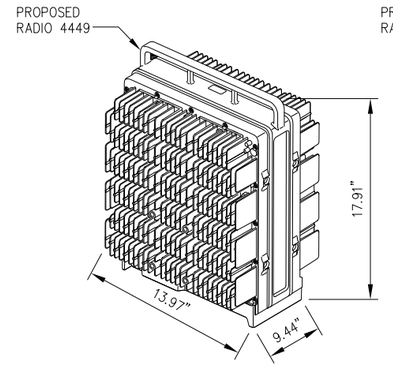

RADIO 4449 SPECIFICATIONS
- HxWxD, (INCHES) : 17.91"x13.97"x9.44"
- WEIGHT (LBS) : 70.54
- COLOR : GRAY

2 ERICSSON RADIO 4449 DETAIL
-- NOT TO SCALE

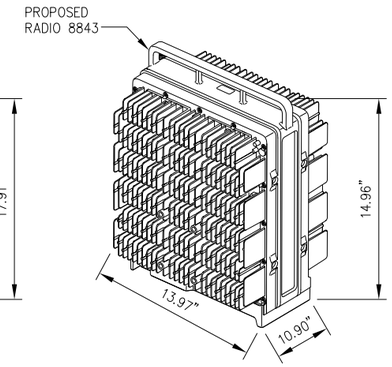

RADIO 8843 SPECIFICATIONS
- HxWxD, (INCHES) : 14.96"x13.97"x10.90"
- WEIGHT (LBS) : 71.87
- COLOR : GRAY

3 ERICSSON RADIO 8843 DETAIL
-- NOT TO SCALE

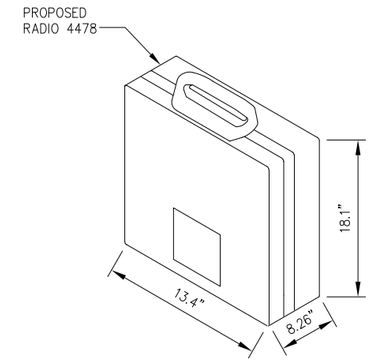

RADIO 4478-B14 SPECIFICATIONS
- HxWxD, (INCHES) : 18.1"x13.4"x8.26"
- WEIGHT (LBS) : 59.5
- COLOR : GRAY
- MOUNTING BRACKET: SXK1250244/1

4 ERICSSON RADIO 4478-B14 DETAIL
-- NOT TO SCALE

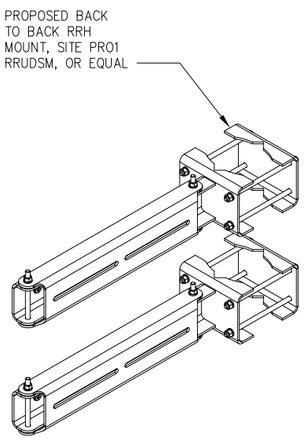

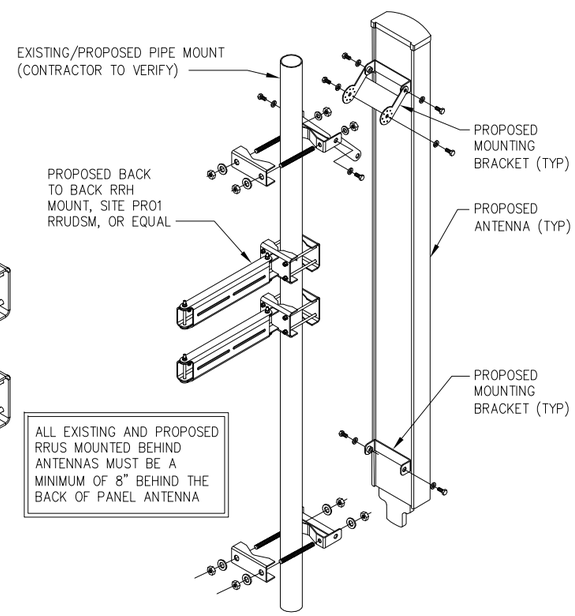

ALL EXISTING AND PROPOSED RRUS MOUNTED BEHIND ANTENNAS MUST BE A MINIMUM OF 8" BEHIND THE BACK OF PANEL ANTENNA

5 BACK TO BACK PIPE MOUNT DETAIL
-- NOT TO SCALE

6 ANTENNA MOUNTING DETAIL
-- NOT TO SCALE

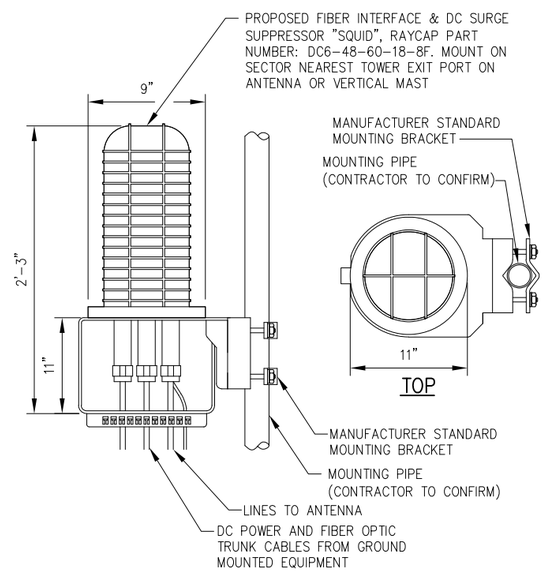

7 SQUID DETAIL
-- NOT TO SCALE

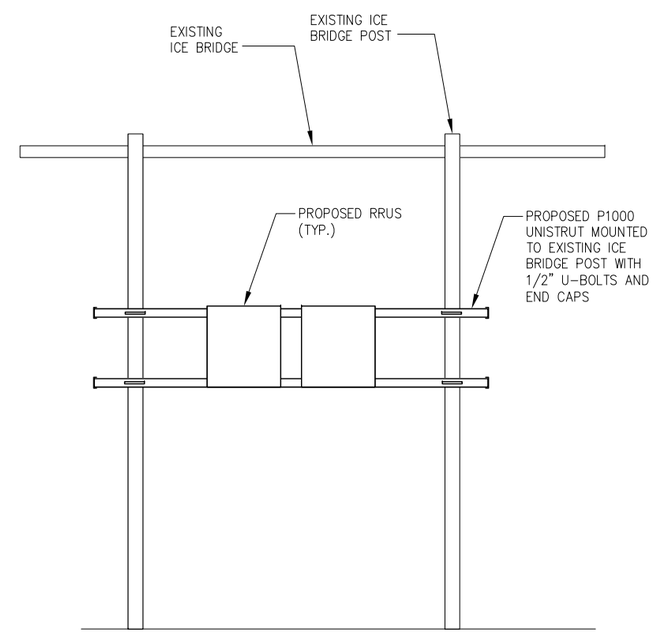

8 H-FRAME DETAIL
-- NOT TO SCALE

INFINIGY
INFINIGY ENGINEERING, PLLC
1033 Watervliet Shaker Rd
Albany, NY 12205
Office # (518) 690-0790
Fax # (518) 690-0793

at&t

STATE OF CONNECTICUT
JOHN S. STEVENS
24705
10/25/2019
LICENSED PROFESSIONAL ENGINEER

UNAUTHORIZED ALTERATION OR ADDITION TO THIS DOCUMENT IS A VIOLATION OF APPLICABLE STATE AND/OR LOCAL LAWS

No.	Submittal / Revision	App'd	Date
2	REVISED FOR PERMIT	ASW	10/25/19
1	ISSUED FOR PERMIT	BMM	09/25/19
0	ISSUED FOR REVIEW	BMM	08/29/19

Drawn: BMM Date: 08/29/19
Designed: ASW Date: 08/29/19
Checked: AJD Date: 08/29/19

Project Number: 499-006

Project Title:
HAMPTON S CENTRAL
CTL05707
FA# 10071068
185 FISK ROAD
HAMPTON, CT 06247

Prepared For: smartlink

Drawing Scale: AS NOTED
Date: 10/25/19
CD

Drawing Title
EQUIPMENT DETAILS

Drawing Number
C5

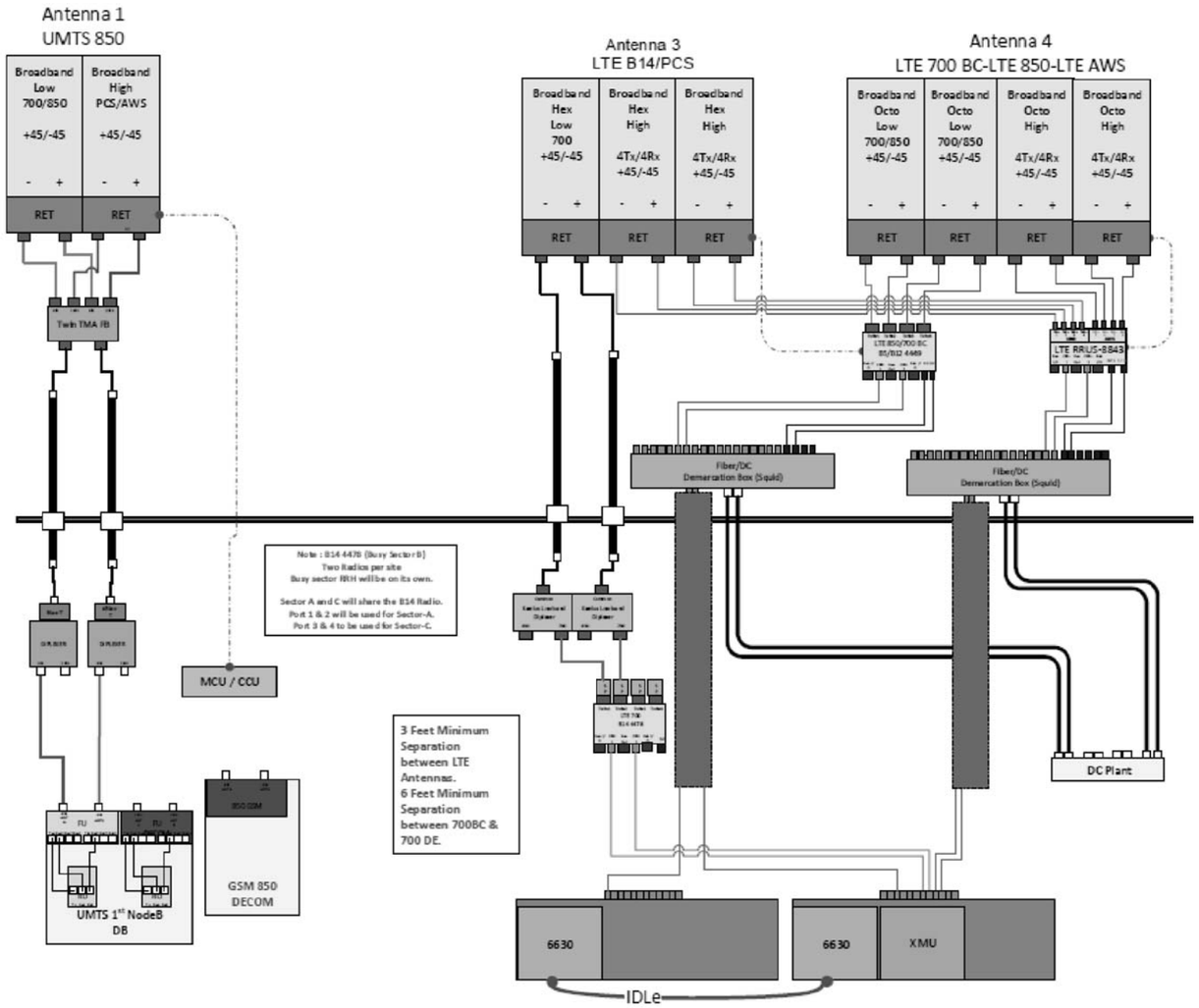

ALPHA/BETA/GAMMA

1 PLUMBING DIAGRAM (FINAL CONFIGURATION)
-- NOT TO SCALE

*BASED ON LTE RFDS, DATED 05/24/2019, V1.00

INFINIGY
INFINIGY ENGINEERING, PLLC
1033 Watervliet Shaker Rd
Albany, NY 12205
Office # (518) 690-0790
Fax # (518) 690-0793

at&t

STATE OF CONNECTICUT
JOHN S. STEVENS
24705
LICENSED PROFESSIONAL ENGINEER
10/25/2019

UNAUTHORIZED ALTERATION OR ADDITION TO THIS DOCUMENT IS A VIOLATION OF APPLICABLE STATE AND/OR LOCAL LAWS

No.	Submittal / Revision	App'd	Date
2	REVISED FOR PERMIT	ASW	10/25/19
1	ISSUED FOR PERMIT	BMM	09/25/19
0	ISSUED FOR REVIEW	BMM	08/29/19

Drawn: BMM Date: 08/29/19
Designed: ASW Date: 08/29/19
Checked: AJD Date: 08/29/19

Project Number: 499-006

Project Title:
HAMPTON S CENTRAL
CTL05707
FA# 10071068
185 FISK ROAD
HAMPTON, CT 06247

Prepared For: smartlink

Drawing Scale: AS NOTED
Date: 10/25/19
CD

Drawing Title
PLUMBING DIAGRAM

Drawing Number
C6

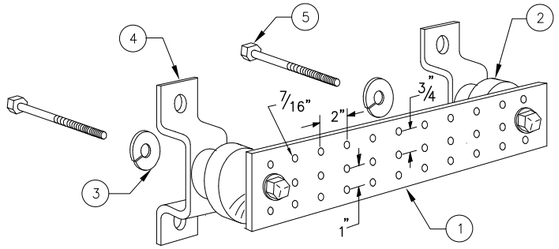

LEGEND

1 – SOLID TINNED COPPER GROUND BAR, 1/4"x 4"x 20" MIN., NEWTON INSTRUMENT CO. HOLE CENTERS TO MATCH NEMA DOUBLE LUG CONFIGURATION
2 – INSULATORS, NEWTON INSTRUMENT CAT. NO. 3061–4
3 – 5/8" LOCKWASHERS, NEWTON INSTRUMENT CO. CAT. NO. 3015–8
4 – WALL MOUNTING BRACKET, NEWTON INSTRUMENT CO. CAT NO. A–6056
5 – 5/8–11 X 1" H.H.C.S. BOLTS, NEWTON INSTRUMENT CO. CAT NO. 3012–1
6 – GROUND BAR SHALL BE SIZED TO ACCOMODATE ALL GROUNDING CONNECTIONS REQUIRED PLUS PROVIDE 50% SPARE CAPACITY
7 – GROUND BARS SHALL NEITHER BE FIELD FABRICATED NOR NEW HOLES DRILLED
8 – GROUND LUGS SHALL MATCH THE HOLE SPACING ON THE BAR
9 – HARDWARE DIAMETER SHALL BE MINIMUM 3/8"

1 GROUND BAR
NOT TO SCALE

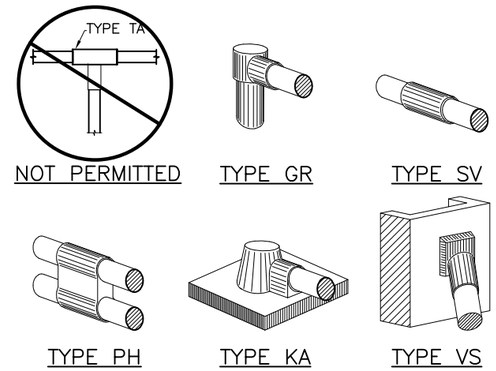

2 CADWELDS (TYPICAL)
NOT TO SCALE

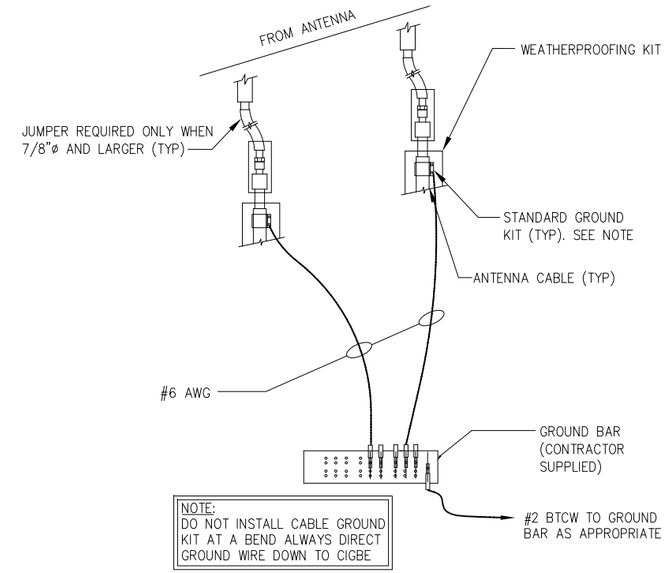

3 CONNECTION OF GROUND WIRES TO GROUNDING BARS @ ANTENNAS
NOT TO SCALE

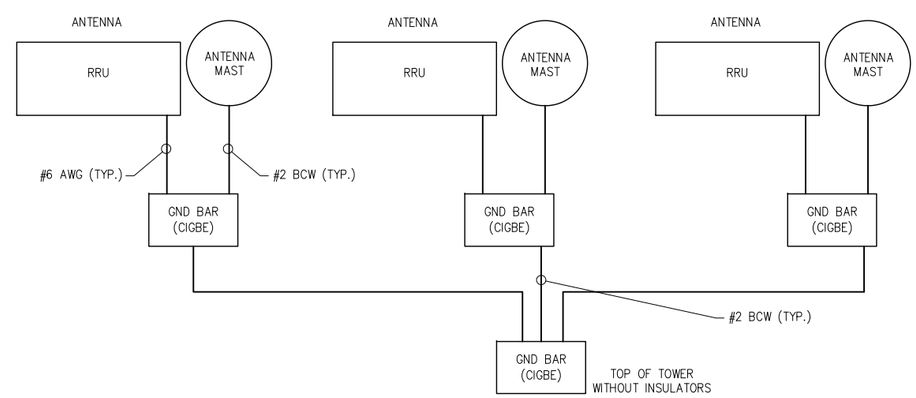

4 SCHEMATIC DIAGRAM GROUNDING SYSTEM
NOT TO SCALE

INFINIGY
INFINIGY ENGINEERING, PLLC
1033 Watervliet Shaker Rd
Albany, NY 12205
Office # (518) 690-0790
Fax # (518) 690-0793

at&t

STATE OF CONNECTICUT
JOHN S. STEVENS
10/25/2019
LICENSED PROFESSIONAL ENGINEER

ANY MODIFICATION OR ALTERATION OR ADDITION TO THIS DOCUMENT IS A VIOLATION OF APPLICABLE STATE AND/OR LOCAL LAWS

No.	Submittal / Revision	App'd	Date
2	REVISED FOR PERMIT	ASW	10/25/19
1	ISSUED FOR PERMIT	BMM	09/25/19
0	ISSUED FOR REVIEW	BMM	08/29/19

Drawn: BMM Date: 08/29/19
Designed: ASW Date: 08/29/19
Checked: AJD Date: 08/29/19

Project Number: 499-006

Project Title:
HAMPTON S CENTRAL
CTL05707
FA# 10071068
185 FISK ROAD
HAMPTON, CT 06247

Prepared For: smartlink

Drawing Scale: AS NOTED
Date: 10/25/19
CD

Drawing Title
GROUNDING DETAILS

Drawing Number
C7

GENERAL NOTES:

1. THESE DOCUMENTS WERE DESIGNED IN ACCORDANCE WITH THE LATEST VERSION OF APPLICABLE LOCAL/STATE/COUNTY/CITY BUILDING CODES, AS WELL AS ANSI/TIA-222 STANDARD, AWWA-D100 STANDARD, NDS, NEC, MSJC, AND/OR THE LATEST VERSION OF THE INTERNATIONAL BUILDING CODE, UNLESS NOTED OTHERWISE IN THE CORRESPONDING STRUCTURAL REPORT.
2. ALL CONSTRUCTION METHODS SHOULD FOLLOW STANDARDS OF GOOD CONSTRUCTION PRACTICE.
3. ALL WORK INDICATED ON THESE DRAWINGS SHALL BE PERFORMED BY QUALIFIED CONTRACTORS EXPERIENCED IN SIMILAR CONSTRUCTION.
4. ALL NEW WORK SHALL ACCOMMODATE EXISTING CONDITIONS. IF OBSTRUCTIONS ARE FOUND, CONTRACTOR SHALL NOTIFY ENGINEER OF RECORD PRIOR TO CONTINUING WORK.
5. ANY CHANGES OR ADDITIONS MUST CONFORM TO THE REQUIREMENTS OF THESE NOTES AND SPECIFICATIONS, AND SHOULD BE SIMILAR TO THOSE SHOWN. ALL CHANGES OR ADDITIONS SHALL BE SUBMITTED TO THE ENGINEER OF RECORD FOR REVIEW AND APPROVAL PRIOR TO FABRICATION AND/OR CONSTRUCTION.
6. THE CONTRACTOR IS RESPONSIBLE FOR THE DESIGN AND EXECUTION OF ALL MISCELLANEOUS SHORING, BRACING, TEMPORARY SUPPORTS, ETC. NECESSARY TO PROVIDE A COMPLETE AND STABLE STRUCTURE DURING CONSTRUCTION. TIA-1019-A-2011 IS AN APPROPRIATE REFERENCE FOR THOSE DESIGNS MEETING TIA STANDARDS. THE ENGINEER OF RECORD MAY PROVIDE FORMAL RIGGING PLANS AT THE REQUEST AND EXPENSE OF THE CONTRACTOR.
7. INSTALLATION SHALL NOT INTERFERE NOR DENY ADEQUATE ACCESS TO OR FROM ANY EXISTING OR PROPOSED OPERATIONAL AND SAFETY EQUIPMENT.
8. CONTRACTOR SHALL FIELD VERIFY ALL DIMENSIONS PRIOR TO ANY FABRICATION. CONTACT INFINIGY ENGINEERING IF ANY DISCREPANCIES EXIST.

STEEL CONSTRUCTION NOTES:

1. STRUCTURAL STEEL SHALL CONFORM TO THE AISC MANUAL OF STEEL CONSTRUCTION 14TH EDITION, FOR THE DESIGN AND FABRICATION OF STEEL COMPONENTS.
2. ALL FIELD CUT SURFACES, FIELD DRILLED HOLES, AND GROUND SURFACES WHERE EXISTING PAINT OR GALVANIZATION REMOVAL WAS REQUIRED SHALL BE REPAIRED WITH (2) BRUSHED COATS OF ZRC GALVILITE COLD GALVANIZING COMPOUND PER ASTM A780 AND MANUFACTURERS' RECOMMENDATIONS.
3. ALL FIELD DRILLED HOLES TO BE USED FOR FIELD BOLTING INSTALLATION SHALL BE STANDARD HOLES, AS DEFINED BY AISC, UNLESS NOTED OTHERWISE.
4. ALL EXTERIOR STEEL WORK SHALL BE GALVANIZED IN ACCORDANCE WITH ASTM A123.
5. ALL STEEL MEMBERS AND CONNECTIONS SHALL MEET THE FOLLOWING GRADES:
   - ANGLES, CHANNELS, PLATES AND BARS TO BE A36. Fy=36 KSI, U.N.O.
   - W SHAPES TO BE A992. Fy=50 KSI, U.N.O.
   - RECTANGULAR HSS TO BE A500, GRADE B. FY=46 KSI, U.N.O.
   - ROUND HSS TO BE A500, GRADE B. FY=42 KSI, U.N.O.
   - STEEL PIPE TO BE A53, GRADE B. Fy=35 KSI, U.N.O.
   - BOLTS TO BE A325-X. Fu=120 KSI, U.N.O.
   - U-BOLTS AND LAG SCREWS TO BE A307 GR A. Fu=60 KSI, U.N.O.
6. ALL WELDING SHALL BE DONE USING E70XX ELECTRODES, U.N.O.
7. ALL WELDING SHALL CONFORM TO AISC AND AWS D1.1 LATEST EDITION.
8. ALL HILTI ANCHORS TO BE CARBON STEEL, U.N.O.
   - MECHANICAL ANCHORS: KWIK BOLT-TZ, U.N.O.
   - CMU BLOCK ANCHORS: ADHESIVE – HY120, U.N.O.
   - CONCRETE ANCHORS: ADHESIVE – HY150, U.N.O.
   - CONCRETE REBAR: ADHESIVE – RE500, U.N.O.
9. ALL STUDS TO BE NELSON CAPACITOR DISCHARGE 1/4"-20 LOW CARBON STEEL COPPER-FLASH AT 55 KSI ULT/50 KSI YIELD, U.N.O.
10. BOLTS SHALL BE TIGHTENED TO A "SNUG TIGHT" CONDITION AS DEFINED BY AISC.
11. MINIMUM EDGE DISTANCES SHALL CONFORM TO AISC TABLE J3.4.

CONCRETE CONSTRUCTION NOTES:

1. CONCRETE TO BE 4000 PSI @ 28 DAYS. REINFORCING BAR TO CONFORM TO ASTM A615 GRADE 60 SPECIFICATIONS. CONCRETE INSTALLATION TO CONFORM TO ACI-318 BUILDING REQUIREMENTS FOR REINFORCED CONCRETE. ALL CONCRETE TO BE PLACED AGAINST UNDISTURBED EARTH FREE OF WATER AND ALL FOREIGN OBJECTS AND MATERIALS. A MINIMUM OF THREE INCHES OF CONCRETE SHALL COVER ALL REINFORCEMENT. WELDING OF REBAR IS NOT PERMITTED.
2. EXISTING CONCRETE SURFACES THAT ARE TO BE IN CONTACT WITH NEW PROPOSED CONCRETE SHOULD BE WIRE BRUSHED CLEAN AND TREATED WITH APPROPRIATE MECHANICAL SCRATCH COAT AND REPAIR MATERIALS OR APPROPRIATE CHEMICAL METHODS SUCH AS THE APPLICATION OF A BONDING AGENT, EX. SAKRETE OR EQUIVALENT, TO ENSURE A QUALITY BOND BETWEEN EXISTING AND PROPOSED CONCRETE SURFACES.

FIBER REINFORCED POLYMER (FRP) NOTES:

1. FRP PLATES, SHAPES, BOLTS AND NUTS (STUD/NUT ASSEMBLIES) SHALL CONFORM TO ASTM D638, 695, 790. PLATES AND SHAPES TO BE FY = 5.35 KSI LW (SAFETY FACTOR OF 8), .945 KSI CW (SAFETY FACTOR OF 8) MIN.
2. IF FIELD FABRICATION IS REQUIRED, ALL CUT EDGES AND DRILLED HOLES TO BE SEALED USING VINYL ESTER SEALING KIT SUPPLIED BY THE MANUFACTURER.
3. ALL FASTENERS TO BE 1/2" DIA FRP THREADED ROD WITH FIBER REINFORCED THERMOPLASTIC NUT, SPACED AT 12 INCHES ON CENTER MAXIMUM, U.N.O., FOR PANELS AND AS DESIGNED FOR STRUCTURAL MEMBERS.
4. THE COLOR AND SURFACE PATTERN OF EXPOSED FRP PANELS SHALL MATCH THE EXTERIOR OF THE EXISTING BUILDING, U.N.O.
5. STUD/NUT ASSEMBLIES SHOULD BE LUBRICATED FOR INSTALLATION
6. ENSURE BEARING SURFACES OF THE NUTS ARE PARALLEL TO THE SURFACES BEING FASTENED.
7. TORQUE BOLTS ACCORDING TO THE FOLLOWING TABLE:

INSTALLATION TORQUE TABLE

SIZE	ULTIMATE TORQUE STRENGTH	RECOMMENDED MAXIMUM INSTALLATION TORQUE
3/8-16 UNC	8 FT-LBS	4 FT-LBS
1/2-13 UNC	18 FT-LBS	8 FT-LBS
5/8-11 UNC	35 FT-LBS	16 FT-LBS
3/4-10 UNC	50 FT-LBS	24 FT-LBS
1-8 UNC	110 FT-LBS	50 FT-LBS

8. WHEN TIGHTENING FRP STUD/NUT ASSEMBLIES, WRENCHES MUST MAKE FULL CONTACT WITH ALL NUT EDGES. A STANDARD SIX POINT SOCKET IS RECOMMENDED.
9. STUD/NUT ASSEMBLIES SHOULD BE BONDED BY APPLYING BONDING AGENT TO ENTIRE NUT AND EXPOSED STUD.
10. ALL FRP MATERIALS TO BE PROVIDED BY FIBERGRATE COMPOSITE STRUCTURES, DALLAS TX, OR APPROVED EQUAL.
11. ALL FRP SHAPES TO BE DYNAFORM PULTRUDED STRUCTURAL SHAPES.
12. ALL FRP PLATES TO BE FIBERPLATE MOLDED FRP PLATE.
13. ALL FRP PANELS TO BE FIBERPLATE CLADDING PANEL.
14. EACH FRP PANEL TO BE IDENTIFIED WITH LARR#25536 AND FIBERGRATE COMPOSITE STRUCTURAL LABEL.
15. FRP MATERIAL TO BE CLASSIFIED AS CC1 OR BETTER, AND HAVE MAXIMUM FLAME SPREAD OF 50.
16. ALL DESIGN AND CONSTRUCTION TO BE COMPLETED IN ACCORDANCE WITH LOS ANGELES RESEARCH REPORT RR25536, DATED FEBRUARY 1, 2016.
17. SPECIAL INSPECTIONS MUST BE PROVIDED FOR ALL FRP INSTALLMENTS. SEE SPECIAL INSPECTION SECTION, THIS SHEET.

RATIO OF EDGE DISTANCE TO FRP FASTENER DIAMETER

	RANGE	RECOMMENDED
EDGE DISTANCE – CL* BOLT TO END	2.0-4.0	3.0
EDGE DISTANCE – CL* BOLT TO SIDE	1.5-3.5	2.5
BOLT PITCH – CL* TO CL*	4.0-5.0	5.0

WOOD CONSTRUCTION NOTES:

1. ALL EXISTING WOOD SHAPES ARE ASSUMED TO BE DOUGLAS FIR-LARCH WITH A REFERENCE DESIGN BENDING VALUE OF 1000 PSI MIN.
2. ALL PROPOSED WOOD SHAPES ARE TO BE DOUGLAS FIR-LARCH WITH A REFERENCE DESIGN BENDING VALUE OF 1000 PSI MIN. U.N.O.
3. ALL EXISTING AND PROPOSED GLUED LAMINATED TIMBERS ARE TO BE 24F-1.8C DOUGLAS FIR BALANCED WITH A REFERENCE DESIGN BENDING VALUE OF 2400 PSI MIN. U.N.O.

MASONRY CONSTRUCTION NOTES:

1. ALL BRICK TO BE 1500 PSI MIN. REINFORCING BAR (IF APPLICABLE) TO CONFORM TO ASTM A615 GRADE 60 SPECIFICATIONS. ALL MORTAR TO BE 2000 PSI MIN.
   - FOR INTERIOR/ABOVE GRADE APPLICATIONS TYPE N MORTAR HAVING MINIMUM MODULUS OF RUPTURE OF 100 PSI SHALL BE USED. FOR EXTERIOR/BELOW GRADE APPLICATIONS TYPE M OR S MORTAR HAVING A MINIMUM MODULUS OF RUPTURE OF 133 PSI.
   - BRICK AND MORTAR INSTALLATION TO CONFORM TO MSJC BUILDING CODE REQUIREMENTS FOR MASONRY STRUCTURES.
2. ALL CMU TO BE 1500 PSI MIN. REINFORCING BAR (IF APPLICABLE) TO CONFORM TO ASTM A615 GRADE 60 SPECIFICATIONS. ALL MORTAR TO BE 2000 PSI MIN.
   - FOR INTERIOR/ABOVE GRADE APPLICATIONS, TYPE N MORTAR HAVING MINIMUM MODULUS OF RUPTURE OF 64 PSI SHALL BE USED FOR UNGROUTED BLOCKS, AND 158 PSI FOR FULLY GROUTED BLOCKS.
   - FOR EXTERIOR/BELOW GRADE APPLICATIONS TYPE M OR S MORTAR HAVING A MINIMUM MODULUS OF RUPTURE OF 84 PSI SHALL BE USED FOR UNGROUTED BLOCKS, AND 163 PSI FOR FULLY GROUTED BLOCKS.
   - BRICK AND MORTAR INSTALLATION TO CONFORM TO MSJC BUILDING CODE REQUIREMENTS FOR MASONRY STRUCTURES.

TOWER PLUMB & TENSION NOTES:

1. PLUMB AND TENSION TOWER UPON COMPLETION OF STRUCTURAL MODIFICATIONS DETAILED IN THESE DRAWINGS.
2. RETENSIONING OF EXISTING GUY WIRES SHALL BE PERFORMED AT A TIME WHEN THE WIND VELOCITY IS LESS THAN 10 MPH AT GROUND LEVEL AND WITH NO ICE ON THE STRUCTURE AND GUY WIRES.
3. PLUMB THE TOWER WHILE RETENSIONING THE EXISTING GUY WIRES. THE HORIZONTAL DISTANCE BETWEEN THE VERTICAL CENTERLINES AT ANY TWO ELEVATIONS SHALL NOT EXCEED 0.25% OF THE VERTICAL DISTANCE BETWEEN TWO ELEVATIONS FOR LATTICED STRUCTURES.
4. THE TWIST BETWEEN ANY TWO ELEVATIONS THROUGHOUT THE HEIGHT OF A LATTICE STRUCTURE SHALL NOT EXCEED 0.5 DEGREES IN 10 FEET. THE MAXIMUM TWIST OVER THE LATTICE STRUCTURE HEIGHT SHALL NOT EXCEED 5 DEGREES.

SPECIAL INSPECTIONS NOTES:

1. A QUALIFIED INDEPENDENT TESTING LABORATORY, EMPLOYED BY THE OWNER AND APPROVED BY THE JURISDICTION, SHALL PERFORM INSPECTION AND TESTING IN ACCORDANCE WITH THE THE GOVERNING BUILDING CODE, APPLICABLE SECTION(S) AS REQUIRED BY PROJECT SPECIFICATIONS FOR THE FOLLOWING CONSTRUCTION WORK:
   a. STRUCTURAL WELDING (CONTINUOUS INSPECTION OF FIELD WELDS ONLY).
   b. HIGH STRENGTH BOLTS (PERIODIC INSPECTION OF A325 AND/OR A490 BOLTS) TO BE TIGHTENED PER "TURN-OF-THE-NUT" METHOD.
   c. MECHANICAL AND EPOXIED ANCHORAGES.
   d. FIBER REINFORCED POLYMER.
      - THE SPECIAL INSPECTOR MUST VERIFY THAT THE FRP MATERIAL SPECIFIED ON THE APPROVED DESIGN DOCUMENTS IS BEING INSTALLED.
      - THE SPECIAL INSPECTOR MUST VERIFY THAT ALL CUT EDGES AND DRILLED HOLES ARE PROPERLY SEALED USING A VINYL ESTER SEALING KIT SUPPLIED BY THE MANUFACTURER.
      - THE SPECIAL INSPECTOR MUST VERIFY THAT THE STRUCTURE IS BUILT IN ACCORDANCE WITH THE APPROVED DESIGN DOCUMENTS.
2. THE INSPECTION AGENCY SHALL SUBMIT INSPECTION AND TEST REPORTS TO THE BUILDING DEPARTMENT, THE ENGINEER OF RECORD, AND THE OWNER UNLESS THE FABRICATOR IS APPROVED BY THE BUILDING OFFICIAL TO PERFORM WORK WITHOUT THE SPECIAL INSPECTIONS.

MAXIMUM ALLOWABLE ANGLE CLIP

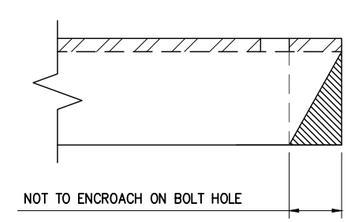

INFINIGY ENGINEERING, PLLC
1033 Watervliet Shaker Rd
Albany, NY 12205
Office # (518) 690-0790
Fax # (518) 690-0793

at&t

STATE OF CONNECTICUT
JOHN S. STEVENS
24705
LICENSED
PROFESSIONAL ENGINEER

09-20-19

UNAUTHORIZED ALTERATION OR ADDITION TO THIS DOCUMENT IS A VIOLATION OF APPLICABLE STATE AND/OR LOCAL LAWS

No.	Submittal / Revision	App'd	Date
0	ISSUED FOR REVIEW	DMB	09/18/19

Drawn: DMB Date: 09/18/19
Designed: TM Date: 09/18/19
Checked: GB Date: 09/18/19

Project Number: 499-006

Project Title:
HAMPTON S CENTRAL
CTL05707
FA# 10071068
185 FISK ROAD
HAMPTON, CT 06247

Prepared For: smartlink

Drawing Scale: AS NOTED
Date: 09/18/19
SD

Drawing Title
GENERAL NOTES

Drawing Number
S1

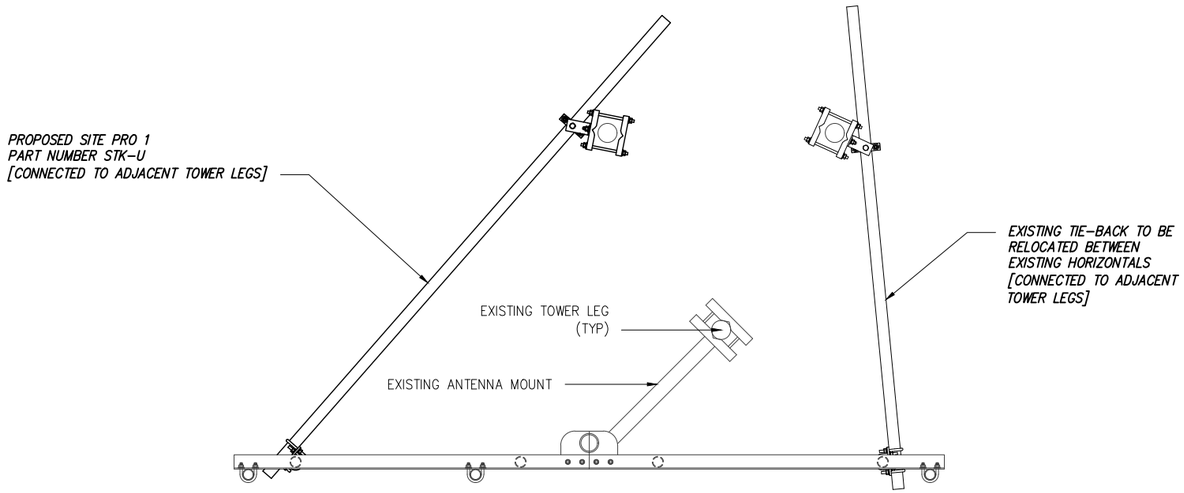

1 PLAN VIEW
SCALE: NOT TO SCALE

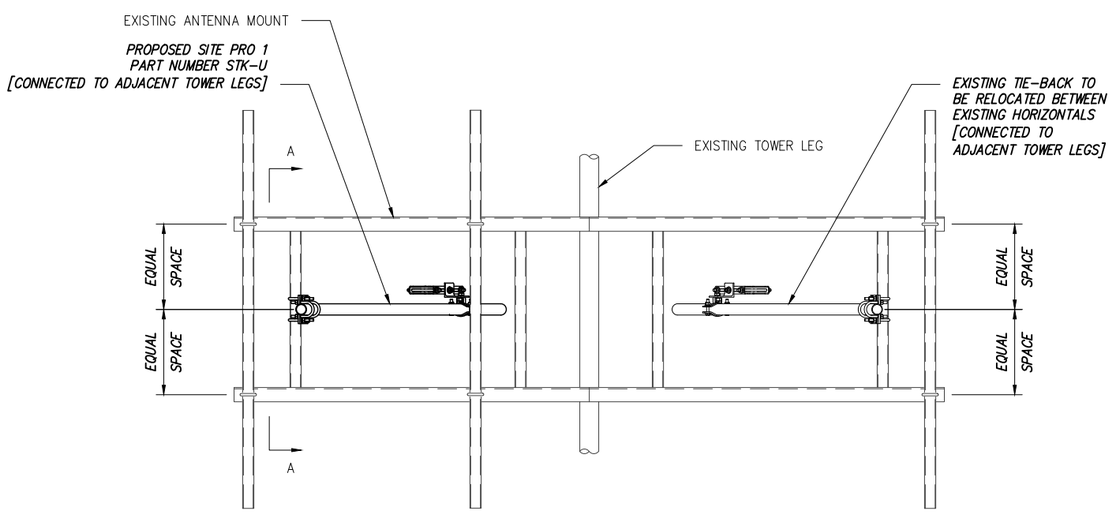

2 ELEVATION VIEW
SCALE: NOT TO SCALE

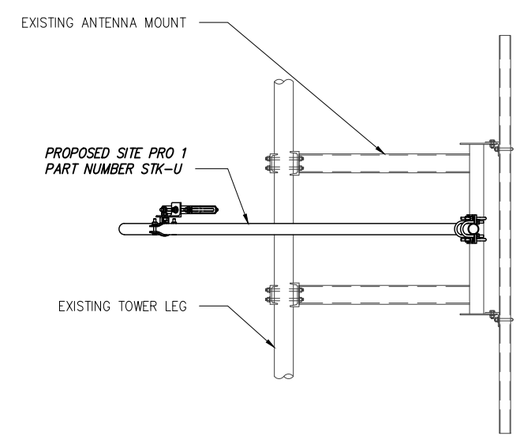

3 SECTION A-A
SCALE: NOT TO SCALE

INFINIGY
INFINIGY ENGINEERING, PLLC
1033 Watervliet Shaker Rd
Albany, NY 12205
Office # (518) 690-0790
Fax # (518) 690-0793

at&t

STATE OF CONNECTICUT
JOHN S. STEVENS
24705
LICENSED
PROFESSIONAL ENGINEER
09-20-19

UNAUTHORIZED ALTERATION OR ADDITION TO THIS DOCUMENT IS A VIOLATION OF APPLICABLE STATE AND/OR LOCAL LAWS

No.	Submittal / Revision	App'd	Date
0	ISSUED FOR REVIEW	DMB	09/18/19

Drawn: DMB Date: 09/18/19
Designed: TM Date: 09/18/19
Checked: GB Date: 09/18/19

Project Number: 499-006

Project Title:
HAMPTON S CENTRAL
CTL05707
FA# 10071068
185 FISK ROAD
HAMPTON, CT 06247

Prepared For: smartlink

Drawing Scale: AS NOTED
Date: 09/18/19
SD

Drawing Title
ANTENNA MOUNT

Drawing Number
S2