Tower Engineering Solutions
Phone (972) 483-0607, Fax (972) 975-9615
8445 Freeport Parkway, Suite 375, Irving, Texas 75063

Structural Analysis Report

Existing 119 ft SABRE Monopole

Customer Name: SBA Communications Corp

Customer Site Number: CT13555-S

Customer Site Name: Montano

Carrier Name: AT&T

Carrier Site ID / Name: CTL01809 / FA# 10577834 / Glastonbury Montano Rd.

Site Location: 58A Montano Road

Glastonbury, CT

Hartford County

Latitude: 41.699444

Longitude: -72.564000

Analysis Result:

Max Structural Usage: 51.7% [Pass]

Max Foundation Usage: 58% [Pass]

Report Prepared By : Jarryd Tibbetts

STATE OF CONNECTICUT
HANMING YOU
28931
LICENSED
PROFESSIONAL ENGINEER
12/30/15

Tower Engineering Solutions
Phone (972) 483-0607, Fax (972) 975-9615
8445 Freeport Parkway, Suite 375, Irving, Texas 75063

Structural Analysis Report

Existing 119 ft SABRE Monopole

Customer Name: SBA Communications Corp

Customer Site Number: CT13555-S

Customer Site Name: Montano

Carrier Name: AT&T

Carrier Site ID / Name: CTL01809 / FA# 10577834 / Glastonbury Montano Rd.

Site Location: 58A Montano Road

Glastonbury, CT

Hartford County

Latitude: 41.699444

Longitude: -72.564000

Analysis Result:

Max Structural Usage: 51.7% [Pass]

Max Foundation Usage: 58% [Pass]

Report Prepared By : Jarryd Tibbetts

Introduction

The purpose of this report is to summarize the analysis results on the 119 ft SABRE Monopole to support the proposed antennas and transmission lines in addition to those currently installed. Any modification listed under Sources of Information was assumed completed and was included in this analysis.

Sources of Information

Tower Drawings	Tower Drawing prepared by Sabre, Job #09-11137 dated 11/19/08
Foundation Drawing	Foundation Drawing prepared by Sabre, Job #09-11137 dated 11/19/08
Geotechnical Report	Geotechnical Report prepared by TES, Project #082695.01 dated 10/27/08
Modification Drawings	N/A

Analysis Criteria

The analysis was performed in accordance with the requirements and stipulations of the ANSI/TIA/EIA 222-F**.** In accordance with this standard, the structure was analyzed using **TESPoles,** a proprietary analysis software. The program considers the structure as an elastic 3-D model with second-order effects and temperature effects incorporated in the analysis. The analysis was performed using multiple wind directions.

Basic Wind Speed Used in the Analysis:	80.0 mph (Fastest mile)
Basic Wind Speed with Ice:	69 mph (Fastest mile) with 1/2” radial ice concurrent
Operational Wind Speed:	50 mph + 0” Radial ice
Standard/Codes:	ANSI/TIA/EIA 222-F / 2005 Connecticut State building Code

Existing Antennas, Mounts and Transmission Lines

The table below summarizes the antennas, mounts and transmission lines that were considered in the analysis as existing on the tower.

Items	Elevation (ft)	Qty.	Antenna Descriptions	Mount Type & Qty.	Transmission Lines	Owner
1	117.0	3	Ericsson - AIR 21 B2A B4P - Panel	Platform w/ Hand Rail	(12) 1 5/8" (1) 1 5/8" Fiber	T-Mobile
2		3	Ericsson - AIR 21 B4A B2P - Panel			
3		3	Commscope - LNX-6515DS-A1M - Panel			
4		3	Ericsson - KRY 112 144/1 - RRU			
5		3	Ericsson - S11B12 - RRU			
6	110.0	3	Argus - LLPX310R - Panel	Pipe	(2) 1/2" (3) 1/4" (3) 5/8"	Clearwire
7		1	Andrew - VHLP2-18 - Dish			
8		1	Andrew - VHLP2.5-18 - Dish			
9	100.0	12	CCI - HPA-65R-BUU-H8 - Panel	Platform w/ Hand Rail	(2) 1/2" Fiber (8) 3/4" DC (3) 3/8" RET	AT&T
10		9	Ericsson - RRUS 11 - RRU			
11		6	Ericsson - RRUS 12 - RRU			
12		3	Ericsson - RRU-32 - RRU			
13		3	Ericsson - RRU E2 - RRU			
14		6	Ericsson - RRUS A2 - RRU			
15		4	Raycap - DC6-48-60-18-8F - Squid			
17	90.0	6	Andrew - HBXX-6517DS-A2M - Panel	Low Profile Platform	(2) 1 5/8" Hybrid	Verizon
18		6	Andrew - LNX-6514DS-A1M - Panel			
19		3	Alcatel Lucent - B13 RRH4x30 - RRH			
20		3	Alcatel Lucent - RRH2X60-AWS - RRH			
21		3	Alcatel Lucent - RRH2x60-PCS - RRH			
22		2	RFS - DB-T1-6Z-8AB-0Z - ODU			

Proposed Carrier's Final Configuration of Antennas, Mounts and Transmission Lines

Information pertaining to the proposed carrier's final configuration of antennas and transmission lines was provided by SBA Communications Corp. The proposed antennas and lines are listed below.

Items	Elevation (ft)	Qty.	Antenna Descriptions	Mount Type & Qty.	Transmission Lines	Owner
9	100.0	12	CCI - HPA-65R-BUU-H8 - Panel	Platform w/ Hand Rail (MTC3067R AD A)	(2) 1/2" Fiber (8) 3/4" DC (3) 3/8" RET	AT&T
10		12	Ericsson - RRU 11 - RRU			
11		6	Ericsson - RRU 12 - RRU			
12		3	Ericsson - RRU-32 - RRU			
14		6	Ericsson - RRU A2 - RRU			
15		4	Raycap - DC6-48-60-18-8F - Surge Suppressor			
16		3	Alcatel Lucent - IBC700-1 - Filters			

All transmission lines are considered running inside of the pole shafts.

Analysis Results

The results of the structural analysis, performed for the wind and ice loading and antenna equipment as defined above, are summarized as the following:

	Pole shafts	Anchor Bolts	Base Plate
Max. Usage:	**51.7%**	**49.4%**	**43.8%**
Pass/Fail	**Pass**	**Pass**	**Pass**

Foundations

	Moment (Kip-Ft)	Shear (Kips)	Axial (Kips)
Original Design Reactions	5405.0	52.8	60.8
Analysis Reactions	2574.2	28.8	42.0
% of Design Reactions	47.6%	54.6%	69.0%

The foundation has been investigated using the supplied documents and soils report and was found adequate. Therefore, no modification to the foundation will be required.

Operational Condition (Rigidity):

Maximum twist and sway of the microwave dishes under the operational wind speed as specified in the Analysis Criteria are listed in the table below:

Elevation (ft)	Dish	Carrier	Twist (deg)	Sway (deg)
110.0	Andrew - VHLP2-18 - Dish	Clearwire	0.001	0.753
	Andrew - VHLP2.5-18 - Dish			

It is recommended that the carrier reviews the twist and sway values of the microwave dishes.

Conclusions

Based on the analysis results, the existing structure and its foundation were found to be adequate to safely support the existing and proposed equipment and meet the minimum requirements per the ANSI/TIA/EIA 222-F Standard under the design basic wind speed as specified in the Analysis Criteria.

Standard Conditions

1. This analysis was performed based on the information supplied to **(TES) Tower Engineering Solutions, LLC.** Verification of the information provided was not included in the Scope of Work for **TES**. The accuracy of the analysis is dependent on the accuracy of the information provided.

2. The analysis is based on the presumption that the tower members and components along with any existing reinforcement items have been correctly and properly designed, manufactured, installed and maintained.

3. All the existing structural members were assumed to be in good condition with no physical damage or deterioration associated with corrosion.

4. An initial tension of 10% of the break strength on all the existing guy wires was assumed in all the structural analyses of guyed towers unless different values were provided by the client. **TES** cannot take responsibility for the deviations in the analysis results because of differences in the initial tension forces of the existing guy wires.

5. Secondary component or connection secondary components, welds and bolts are assumed to be able to carry their intended original design loads. **TES** cannot take responsibility for verification of the adequacy on the connections, bolts and welds present in the structure.

6. The analyses will be performed based on the codes as specified by the client or based on the best knowledge of the engineering staff of **TES**. In the absence of information to the contrary, all work will be performed in accordance with the latest relevant revision of ANSI/TIA-222. If wind speed or/and ice loads are different from the minimum values recommended by the EIA/TIA-222 standard or other codes, **TES** should be notified in writing and the applicable minimum values provided by the client.

7. The configuration of the existing mounts, antennas, coax and other appurtenances were supplied by the customer for the current structural analysis. **TES** has not visited the tower site to verify the adequacy of the information provided. If there is any discrepancy found in the report regarding the existing conditions, **TES** should be notified immediately to evaluate the effect of the discrepancy on the analysis results.

8. The client will assume responsibility for rework associated with the differences in initially provided information, including tower and foundation information, existing and/or proposed equipment and transmission lines.

9. If a feasibility analysis was performed, final acceptance of changed conditions shall be based upon a rigorous structural analysis.

Usage Diagram - Max Stress 51.7% at 0.0ft

Structure:	CT13555-S-SBA	**Code:**	EIA/TIA-222-F	12/30/2015
Site Name:	Montano	**Exposure:**	C	
Height:	119.00 (ft)	**Gh:**	1.69	
Base Elev:	0.000 (ft)			Page: 1

Tower Engineering Solutions

Dead Load Factor: 1.00

Wind Load Factor: 1.00

52 Alllowable Stress

27 Resulting Stress

Load Case : 80 mph Wind with 0 in Ice

Iterations: 18

Copyright © 2015 by Tower Engineering Solutions, LLC. All rights reserved.

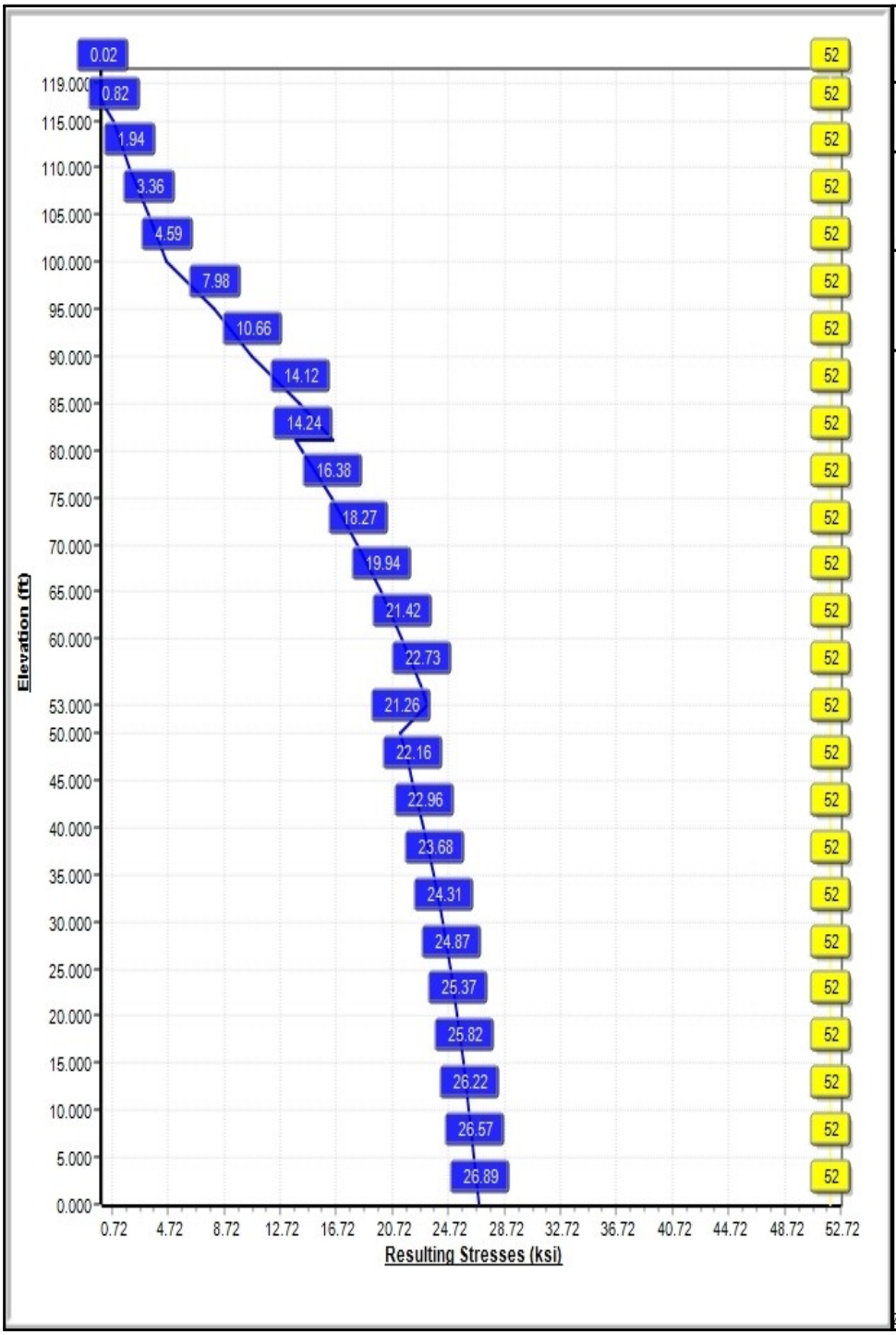

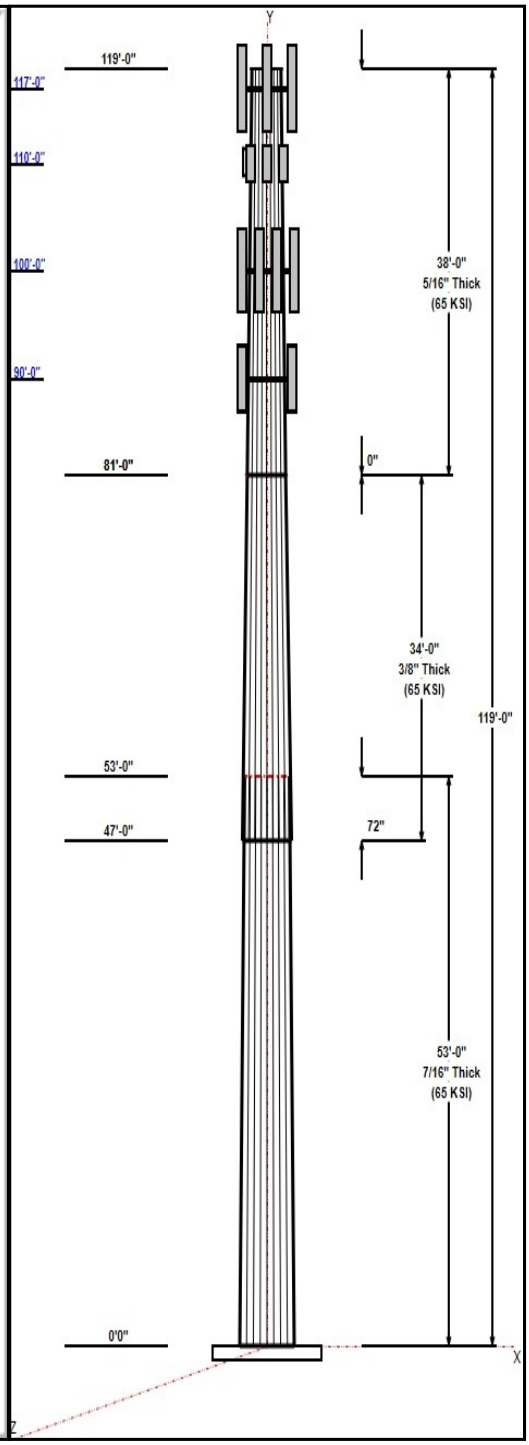

Structure: CT13555-S-SBA

Type:	Tapered	**Base Shape:**	18 Sided	12/30/2015	
Site Name:	Montano	**Taper:**	0.26403		
Height:	119.00 (ft)				
Base Elev:	0.00 (ft)			Page: 2	

Tower Engineering Solutions

Shaft Properties

Seq	Length (ft)	Top (in)	Bottom (in)	Thick (in)	Joint Type	Taper	Grade (ksi)
1	53.00	44.82	58.81	0.438		0.26403	65
2	34.00	38.17	47.15	0.375	Slip	0.26403	65
3	38.00	28.14	38.17	0.313	Butt	0.26403	65

Discrete Appurtenances

Attach Elev (ft)	Force Elev (ft)	Qty	Description	Carrier
117.00	117.00	1	6' Lightning rod	
117.00	117.00	3	AIR 21 B2A B4P	T-Mobile
117.00	117.00	3	AIR 21 B4A B2P	T-Mobile
117.00	117.00	3	KRY 112 144/1	T-Mobile
117.00	117.00	3	LNX-6515DS-A1M	T-Mobile
117.00	117.00	1	Platform w/ Hand Rail	T-Mobile
117.00	117.00	3	S11B12	T-Mobile
110.00	110.00	1	Flush Mount	Clearwire
110.00	110.00	3	LLPX310R	Clearwire
110.00	110.00	1	VHLP2-18	Clearwire
110.00	110.00	1	VHLP2.5-18	Clearwire
100.00	100.00	4	DC6-48-60-18-8F	AT&T
100.00	100.00	12	HPA-65R-BUU-H8	AT&T
100.00	100.00	3	IBC700-1	AT&T
100.00	100.00	1	Platform w/ Hand Rail	AT&T
100.00	100.00	3	RRU-32	AT&T
100.00	100.00	12	RRUS 11	AT&T
100.00	100.00	6	RRUS 12	AT&T
100.00	100.00	6	RRUS A2	AT&T
90.00	90.00	3	B13 RRH4x30	Verizon
90.00	90.00	2	DB-T1-6Z-8AB-0Z	Verizon
90.00	90.00	6	HBXX-6517DS-A2M	Verizon
90.00	90.00	6	LNX-6514DS-A1M	Verizon
90.00	90.00	1	Low Profile Platform	Verizon
90.00	90.00	3	RRH2X60-AWS	Verizon
90.00	90.00	3	RRH2x60-PCS	Verizon

Linear Appurtenances

Elev From (ft)	Elev To (ft)	Placement	Description	Carrier
0.00	117.00	Inside	1 5/8" Coax	T-Mobile
0.00	117.00	Inside	1 5/8" Hybrid Cable	T-Mobile
0.00	110.00	Inside	1/2" Coax	Clearwire
0.00	110.00	Inside	1/4" Coax	Clearwire
0.00	110.00	Inside	5/8" Hybrid Cable	Clearwire
0.00	100.00	Inside	1/2" Coax	AT&T
0.00	100.00	Inside	3/4" DC	AT&T
0.00	100.00	Inside	3/8" Fiber	AT&T
0.00	90.00	Inside	1 5/8" Hybrid Cable	Verizon

Anchor Bolts

Qty	Specifications	Grade (ksi)	Arrangement
20	2.25" 18J	75.0	Cluster

Base Plate

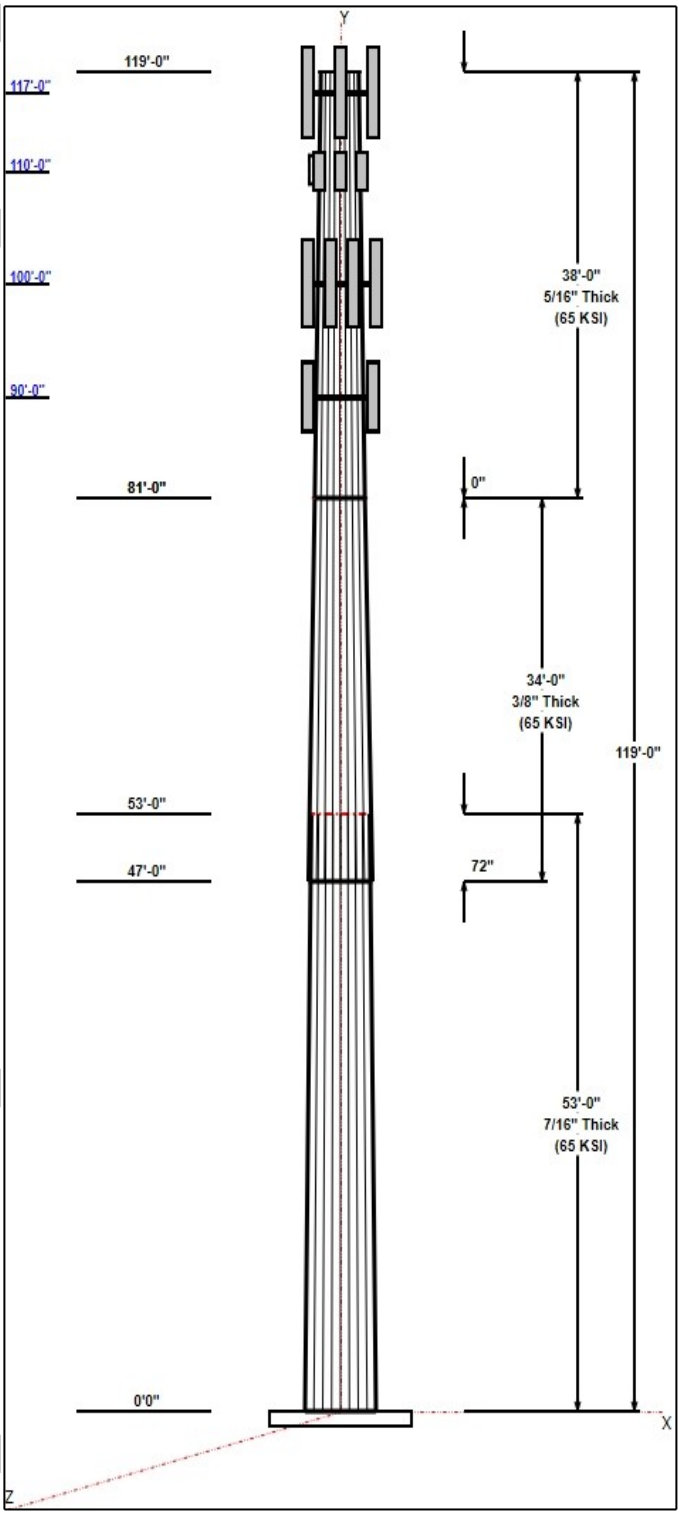

Copyright © 2015 by Tower Engineering Solutions, LLC. All rights reserved.

Thickness (in)	Specifications (in)	Grade (ksi)	Geometry
3.2500	66.0	50.0	Clipped

Reactions

Load Case	Moment	Shear	Axial
80 mph Wind with 0" Ice	2574.2	28.8	34.4
69.28 mph Wind with 0.5" Ice	2071.9	22.9	42.0
50 mph Wind with 0" Ice	1005.7	11.3	34.4

Copyright © 2015 by Tower Engineering Solutions, LLC. All rights reserved.

Structure: CT13555-S-SBA - Coax Line Placement

Type: Monopole
Site Name: Montano
Height: 119.00 (ft)

12/30/2015

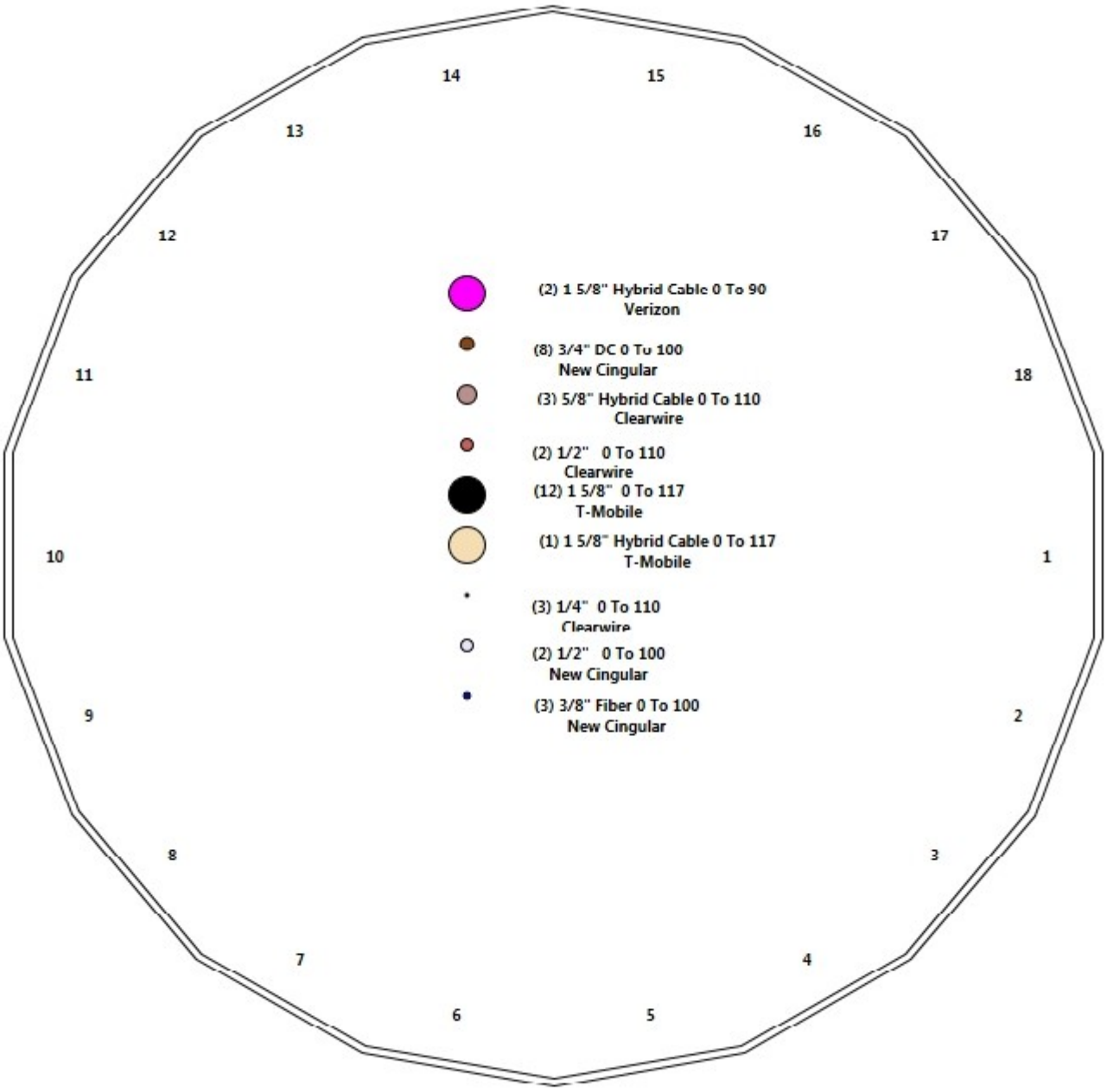

Copyright © 2015 by Tower Engineering Solutions, LLC. All rights reserved.

Shaft Properties

Structure:	CT13555-S-SBA	**Code:**	EIA/TIA-222-F	12/30/2015
Site Name:	Montano	**Exposure:**	C	
Height:	119.00 (ft)	**Gh:**	1.69	
Base Elev:	0.000 (ft)	**Struct Class:**	II	Page: 5

Tower Engineering Solutions

Sec. No.	Shape	Length (ft)	Thick (in)	Fy (ksi)	Joint Type	Overlap (in)	Weight (lb)
1	18	53.000	0.4375	65		0.00	12,866
2	18	34.000	0.3750	65	Slip	72.00	5,823
3	18	38.000	0.3125	65	Flange	0.00	4,212
					Total Shaft Weight:		**22,901**

	Bottom						Top						
Sec. No.	**Dia (in)**	**Elev (ft)**	**Area (sqin)**	**Ix (in^4)**	**W/t Ratio**	**D/t Ratio**	**Dia (in)**	**Elev (ft)**	**Area (sqin)**	**Ix (in^4)**	**W/t Ratio**	**D/t Ratio**	**Taper**
1	58.81	0.00	81.05	34893.72	22.29	134.4	44.82	53.00	61.62	15333.6	16.65	102.4	0.264034
2	47.15	47.00	55.67	15389.65	20.75	125.7	38.17	81.00	44.99	8120.67	16.53	101.7	0.264034
3	38.17	81.00	37.55	6800.85	20.12	122.1	28.14	119.0	27.60	2700.33	14.46	90.04	0.264034

Copyright © 2015 by Tower Engineering Solutions, LLC. All rights reserved.

Loading Summary

Structure:	CT13555-S-SBA	**Code:**	EIA/TIA-222-F	12/30/2015	
Site Name:	Montano	**Exposure:**	C		
Height:	119.00 (ft)	**Gh:**	1.69		
Base Elev:	0.000 (ft)	**Struct Class:**	II	Page: 6	

Tower Engineering Solutions

Discrete Appurtenances

No.	Elev (ft)	Description	Qty	No Ice Weight (lb)	No Ice CaAa (sf)	No Ice CaAa Factor	Ice Weight (lb)	Ice CaAa (sf)	Ice CaAa Factor	Hor. Ecc. (ft)	Vert Ecc (ft)
1	117.0	6' Lightning rod	1	6.50	0.38	1.00	11.80	0.980	1.00	0.00	0.00
2	117.0	AIR 21 B2A B4P	3	91.50	6.52	0.83	129.20	6.970	0.83	0.00	0.00
3	117.0	AIR 21 B4A B2P	3	90.30	6.52	0.83	128.10	6.970	0.83	0.00	0.00
4	117.0	KRY 112 144/1	3	11.00	0.41	0.72	14.10	0.550	0.75	0.00	0.00
5	117.0	LNX-6515DS-A1M	3	50.30	11.45	0.84	115.60	12.34	0.84	0.00	0.00
6	117.0	Platform w/ Hand Rail	1	1600.00	32.00	1.00	2200.00	40.00	1.00	0.00	0.00
7	117.0	S11B12	3	51.00	3.31	0.71	67.10	3.520	0.72	0.00	0.00
8	110.0	Flush Mount	1	350.00	5.00	1.00	450.00	6.000	1.00	0.00	0.00
9	110.0	LLPX310R	3	28.60	4.83	0.75	54.50	5.360	0.77	0.00	0.00
10	110.0	VHLP2-18	1	27.00	4.68	1.00	55.00	5.050	1.00	1.00	0.00
11	110.0	VHLP2.5-18	1	47.60	8.43	1.00	97.00	8.920	1.00	1.00	0.00
12	100.0	DC6-48-60-18-8F	4	32.80	3.34	1.00	55.88	3.580	1.00	0.00	0.00
13	100.0	HPA-65R-BUU-H8	12	60.80	13.56	0.78	130.68	14.17	0.78	0.00	0.00
14	100.0	IBC700-1	3	63.30	3.03	0.91	82.22	3.240	0.91	0.00	0.00
15	100.0	Platform w/ Hand Rail	1	1600.00	40.00	1.00	2200.00	40.00	1.00	0.00	0.00
16	100.0	RRU-32	3	77.00	4.05	0.85	100.66	4.300	0.85	0.00	0.00
17	100.0	RRUS 11	12	54.00	2.99	0.70	68.53	3.190	0.71	0.00	0.00
18	100.0	RRUS 12	6	58.00	3.67	0.70	75.70	3.890	0.71	0.00	0.00
19	100.0	RRUS A2	6	22.00	2.43	0.61	32.31	2.610	0.63	0.00	0.00
20	90.00	B13 RRH4x30	3	57.20	2.52	0.88	72.45	2.710	0.88	0.00	0.00
21	90.00	DB-T1-6Z-8AB-0Z	2	44.00	5.60	1.00	71.06	5.870	1.00	0.00	0.00
22	90.00	HBXX-6517DS-A2M	6	47.00	8.74	0.80	93.81	9.230	0.80	0.00	0.00
23	90.00	LNX-6514DS-A1M	6	38.80	8.41	0.82	85.41	8.890	0.82	0.00	0.00
24	90.00	Low Profile Platform	1	1500.00	25.00	1.00	1800.00	27.00	1.00	0.00	0.00
25	90.00	RRH2X60-AWS	3	55.00	3.78	0.77	75.35	4.050	0.78	0.00	0.00
26	90.00	RRH2x60-PCS	3	55.00	2.35	0.78	67.79	2.530	0.79	0.00	0.00
		Totals:	**94**	**9,613.30**			**14,014.55**				

Linear Appurtenances

Bottom Elev. (ft)	Top Elev. (ft)	Description	No Ice Weight (lb/ft)	No Ice CaAa (sf/ft)	Ice Weight (lb/ft)	Ice CaAa (sf/ft)	Exposed
0.00	117.0	(12) 1 5/8" Coax	1.04	0.00	0.00	0.00	Inside
0.00	117.0	(1) 1 5/8" Hybrid Cable	3.30	0.00	0.00	0.00	Inside
0.00	110.0	(2) 1/2" Coax	0.16	0.00	0.00	0.00	Inside
0.00	110.0	(3) 1/4" Coax	0.04	0.00	0.00	0.00	Inside
0.00	110.0	(3) 5/8" Hybrid Cable	1.56	0.00	0.00	0.00	Inside
0.00	100.0	(2) 1/2" Coax	0.48	0.00	0.00	0.00	Inside
0.00	100.0	(8) 3/4" DC	4.80	0.00	0.00	0.00	Inside
0.00	100.0	(3) 3/8" Fiber	0.48	0.00	0.00	0.00	Inside
0.00	90.00	(2) 1 5/8" Hybrid Cable	6.60	0.00	0.00	0.00	Inside
		Totals:	**1,871.93**		**0.00**		

Copyright © 2015 by Tower Engineering Solutions, LLC. All rights reserved.

Shaft Section Properties

Structure:	CT13555-S-SBA	**Code:**	EIA/TIA-222-F	12/30/2015	
Site Name:	Montano	**Exposure:**	C		
Height:	119.00 (ft)	**Gh:**	1.69		
Base Elev:	0.000 (ft)	**Struct Class:**	II	Page: 7	

Increment Length: **5 (ft)**

Elev (ft)	Description	Thick (in)	Dia (in)	Area (in^2)	Ix (in^4)	W/t Ratio	D/t Ratio	Fy (ksi)	Fb (ksi)	Weight (lb)
0.00		0.4375	58.810	81.055	34893.7	22.29	134.42	65	52	0.0
5.00		0.4375	57.490	79.221	32579.4	21.76	131.41	65	52	1363.5
10.00		0.4375	56.170	77.388	30369.7	21.23	128.39	65	52	1332.3
15.00		0.4375	54.849	75.555	28262.2	20.70	125.37	65	52	1301.1
20.00		0.4375	53.529	73.722	26254.6	20.16	122.35	65	52	1269.9
25.00		0.4375	52.209	71.889	24344.4	19.63	119.34	65	52	1238.7
30.00		0.4375	50.889	70.056	22529.1	19.10	116.32	65	52	1207.5
35.00		0.4375	49.569	68.223	20806.4	18.57	113.30	65	52	1176.3
40.00		0.4375	48.249	66.389	19173.9	18.04	110.28	65	52	1145.1
45.00		0.4375	46.928	64.556	17629.0	17.50	107.27	65	52	1113.9
47.00	Bot - Section 2	0.4375	46.400	63.823	17035.1	17.29	106.06	65	52	436.8
50.00		0.4375	45.608	62.723	16169.5	16.97	104.25	65	52	1209.4
53.00	Top - Section 1	0.3750	45.566	53.787	13878.3	20.01	121.51	65	52	1188.6
55.00		0.3750	45.038	53.158	13397.5	19.77	120.10	65	52	363.9
60.00		0.3750	43.718	51.587	12244.2	19.15	116.58	65	52	891.1
65.00		0.3750	42.398	50.016	11159.1	18.53	113.06	65	52	864.3
70.00		0.3750	41.078	48.445	10140.1	17.90	109.54	65	52	837.6
75.00		0.3750	39.757	46.873	9185.1	17.28	106.02	65	52	810.9
80.00		0.3750	38.437	45.302	8292.0	16.66	102.50	65	52	784.1
81.00	Top - Section 2	0.0000	0.000	0.000	0.0	NAN	NAN	0	0	153.6
81.00	Bot - Section 3	0.3750	38.173	44.988	8120.7	16.54	101.80	65	52	
85.00		0.3125	37.117	36.504	6247.4	19.53	118.77	65	52	504.0
90.00		0.3125	35.797	35.195	5599.0	18.79	114.55	65	52	609.9
95.00		0.3125	34.477	33.886	4997.0	18.04	110.33	65	52	587.7
100.00		0.3125	33.157	32.576	4439.8	17.30	106.10	65	52	565.4
105.00		0.3125	31.836	31.267	3925.7	16.55	101.88	65	52	543.1
110.00		0.3125	30.516	29.957	3452.9	15.81	97.65	65	52	520.8
115.00		0.3125	29.196	28.648	3019.6	15.06	93.43	65	52	498.6
117.00		0.3125	28.668	28.124	2857.0	14.77	91.74	65	52	193.2
119.00		0.3125	28.140	27.600	2700.3	14.47	90.05	65	52	189.6
										22901.0

Copyright © 2015 by Tower Engineering Solutions, LLC. All rights reserved.

Wind Loading - Shaft

Structure:	CT13555-S-SBA	**Code:**	EIA/TIA-222-F	12/30/2015	
Site Name:	Montano	**Exposure:**	C		
Height:	119.00 (ft)	**Gh:**	1.69		
Base Elev:	0.000 (ft)	**Struct Class:**	II	Page: 8	

Load Case: 80 mph Wind with 0" Ice

Dead Load Factor 1.00

Wind Load Factor 1.00

Iterations: 18

Elev (ft)	Description	Kzt	Kz	qz (psf)	qzGh (psf)	C (mph-ft)	Cf	Ice Thick (in)	Tributary (ft)	Aa (sf)	CfAa (sf)	Wind Force X (lb)	Dead Load Ice (lb)	Tot Dead Load (lb)
0.00		0.00	1.00	16.384	27.69	392.07	0.650	0.000	0.00	0.000	0.00	0.0	0.0	0.0
5.00		0.00	1.00	16.384	27.69	383.27	0.650	0.000	5.00	24.229	15.75	436.1	0.0	1363.5
10.00		0.00	1.00	16.384	27.69	374.46	0.650	0.000	5.00	23.679	15.39	426.2	0.0	1332.3
15.00		0.00	1.00	16.384	27.69	365.66	0.650	0.000	5.00	23.129	15.03	416.3	0.0	1301.1
20.00		0.00	1.00	16.384	27.69	356.86	0.650	0.000	5.00	22.579	14.68	406.4	0.0	1269.9
25.00		0.00	1.00	16.384	27.69	348.06	0.650	0.000	5.00	22.029	14.32	396.5	0.0	1238.7
30.00		0.00	1.00	16.384	27.69	339.26	0.650	0.000	5.00	21.479	13.96	386.6	0.0	1207.5
35.00		0.00	1.02	16.662	28.16	333.25	0.650	0.000	5.00	20.929	13.60	383.1	0.0	1176.3
40.00		0.00	1.06	17.310	29.25	330.62	0.650	0.000	5.00	20.379	13.25	387.5	0.0	1145.1
45.00		0.00	1.09	17.902	30.25	327.03	0.650	0.000	5.00	19.829	12.89	389.9	0.0	1113.9
47.00	Bot - Section 2	0.00	1.11	18.126	30.63	325.37	0.650	0.000	2.00	7.777	5.06	154.9	0.0	436.8
50.00		0.00	1.13	18.449	31.18	322.65	0.650	0.000	3.00	11.689	7.60	236.9	0.0	1209.4
53.00	Top - Section 1	0.00	1.14	18.759	31.70	319.70	0.650	0.000	3.00	11.491	7.47	236.8	0.0	1188.6
55.00		0.00	1.16	18.959	32.04	322.98	0.650	0.000	2.00	7.550	4.91	157.2	0.0	363.9
60.00		0.00	1.19	19.436	32.85	317.44	0.650	0.000	5.00	18.491	12.02	394.8	0.0	891.1
65.00		0.00	1.21	19.885	33.61	311.39	0.650	0.000	5.00	17.941	11.66	391.9	0.0	864.3
70.00		0.00	1.24	20.311	34.33	304.91	0.650	0.000	5.00	17.391	11.30	388.0	0.0	837.6
75.00		0.00	1.26	20.715	35.01	298.03	0.650	0.000	5.00	16.841	10.95	383.2	0.0	810.9
80.00		0.00	1.29	21.101	35.66	290.80	0.650	0.000	5.00	16.291	10.59	377.6	0.0	784.1
81.00	Top - Section 2	0.00	1.29	21.176	35.79	289.32	0.650	0.000	1.00	3.192	2.07	74.3	0.0	153.6
85.00		0.00	1.31	21.469	36.28	283.26	0.650	0.000	4.00	12.548	8.16	295.9	0.0	504.0
90.00	Appurtenance(s)	0.00	1.33	21.823	36.88	275.42	0.650	0.000	5.00	15.190	9.87	364.2	0.0	609.9
95.00		0.00	1.35	22.163	37.45	267.32	0.650	0.000	5.00	14.640	9.52	356.4	0.0	587.7
100.00	Appurtenance(s)	0.00	1.37	22.490	38.01	258.98	0.650	0.000	5.00	14.090	9.16	348.1	0.0	565.4
105.00		0.00	1.39	22.806	38.54	250.41	0.650	0.000	5.00	13.540	8.80	339.2	0.0	543.1
110.00	Appurtenance(s)	0.00	1.41	23.111	39.06	241.62	0.650	0.000	5.00	12.990	8.44	329.8	0.0	520.8
115.00		0.00	1.43	23.406	39.56	232.64	0.650	0.000	5.00	12.440	8.09	319.9	0.0	498.6
117.00	Appurtenance(s)	0.00	1.44	23.522	39.75	229.00	0.650	0.000	2.00	4.822	3.13	124.6	0.0	193.2
119.00		0.00	1.44	23.636	39.94	225.32	0.650	0.000	2.00	4.734	3.08	122.9	0.0	189.6
								Totals:	**119.00**			**9,025.0**		**22,901.0**

Copyright © 2015 by Tower Engineering Solutions, LLC. All rights reserved.

Discrete Appurtenance Forces

Structure:	CT13555-S-SB	**Code:**	EIA/TIA-222-F	12/30/2015	
Site Name:	Montano	**Exposure:**	C		
Height:	119.00 (ft)	**Gh:**	1.69		
Base Elev:	0.000 (ft)	**Struct Class:**	II	Page: 9	

Tower Engineering Solutions

Load Case: 80 mph Wind with 0" Ice

Dead Load Factor 1.00

Wind Load Factor 1.00

Iterations: 18

No.	Elev (ft)	Description	Qty	qz (psf)	qzGh (psf)	CaAa Factor	Total CaAa (sf)	Dead Load (lb)	Horiz Ecc (ft)	Vert Ecc (ft)	Wind FX (lb)	Mom Y (lb-ft)	Mom Z (lb-ft)
1	117.00	AIR 21 B4A B2P	3	23.522	39.752	0.83	16.16	270.90	0.000	0.000	642.25	0.00	0.00
2	117.00	6' Lightning rod	1	23.522	39.752	1.00	0.38	6.50	0.000	0.000	15.11	0.00	0.00
3	117.00	AIR 21 B2A B4P	3	23.522	39.752	0.83	16.16	274.50	0.000	0.000	642.25	0.00	0.00
4	117.00	S11B12	3	23.522	39.752	0.71	7.01	153.00	0.000	0.000	278.68	0.00	0.00
5	117.00	KRY 112 144/1	3	23.522	39.752	0.72	0.89	33.00	0.000	0.000	35.25	0.00	0.00
6	117.00	LNX-6515DS-A1M	3	23.522	39.752	0.84	28.72	150.90	0.000	0.000	1141.53	0.00	0.00
7	117.00	Platform w/ Hand Rail	1	23.522	39.752	1.00	32.00	1600.00	0.000	0.000	1272.05	0.00	0.00
8	110.00	VHLP2.5-18	1	23.111	39.057	1.00	8.43	47.60	2.291	0.000	329.25	754.36	0.00
9	110.00	VHLP2-18	1	23.111	39.057	1.00	4.68	27.00	2.291	0.000	182.79	418.79	0.00
10	110.00	LLPX310R	3	23.111	39.057	0.75	10.87	85.80	0.000	0.000	424.45	0.00	0.00
11	110.00	Flush Mount	1	23.111	39.057	1.00	5.00	350.00	0.000	0.000	195.29	0.00	0.00
12	100.00	RRUS A2	6	22.490	38.008	0.61	8.92	132.00	0.000	0.000	339.14	0.00	0.00
13	100.00	RRUS 12	6	22.490	38.008	0.70	15.48	348.00	0.000	0.000	588.36	0.00	0.00
14	100.00	RRUS 11	12	22.490	38.008	0.70	25.30	648.00	0.000	0.000	961.43	0.00	0.00
15	100.00	Platform w/ Hand Rail	1	22.490	38.008	1.00	40.00	1600.00	0.000	0.000	1520.32	0.00	0.00
16	100.00	IBC700-1	3	22.490	38.008	0.91	8.26	189.90	0.000	0.000	314.05	0.00	0.00
17	100.00	HPA-65R-BUU-H8	12	22.490	38.008	0.78	126.76	729.60	0.000	0.000	4817.84	0.00	0.00
18	100.00	DC6-48-60-18-8F	4	22.490	38.008	1.00	13.36	131.20	0.000	0.000	507.79	0.00	0.00
19	100.00	RRU-32	3	22.490	38.008	0.85	10.30	231.00	0.000	0.000	391.60	0.00	0.00
20	90.00	HBXX-6517DS-A2M	6	21.823	36.881	0.80	41.95	282.00	0.000	0.000	1547.22	0.00	0.00
21	90.00	B13 RRH4x30	3	21.823	36.881	0.88	6.62	171.60	0.000	0.000	243.97	0.00	0.00
22	90.00	DB-T1-6Z-8AB-0Z	2	21.823	36.881	1.00	11.20	88.00	0.000	0.000	413.07	0.00	0.00
23	90.00	RRH2x60-PCS	3	21.823	36.881	0.78	5.52	165.00	0.000	0.000	203.59	0.00	0.00
24	90.00	LNX-6514DS-A1M	6	21.823	36.881	0.82	41.43	232.80	0.000	0.000	1527.89	0.00	0.00
25	90.00	Low Profile Platform	1	21.823	36.881	1.00	25.00	1500.00	0.000	0.000	922.02	0.00	0.00
26	90.00	RRH2X60-AWS	3	21.823	36.881	0.77	8.74	165.00	0.000	0.000	322.45	0.00	0.00
						Totals:		**9,613.30**			**19,779.65**		

Copyright © 2015 by Tower Engineering Solutions, LLC. All rights reserved.

Total Applied Force Summary

Structure:	CT13555-S-SB	**Code:**	EIA/TIA-222-F	12/30/2015	
Site Name:	Montano	**Exposure:**	C		
Height:	119.00 (ft)	**Gh:**	1.69		
Base Elev:	0.000 (ft)	**Struct Class:**	II	Page: 10	

Load Case: 80 mph Wind with 0" Ice

Dead Load Factor 1.00

Wind Load Factor 1.00

Iterations: 18

Elev (ft)	Description	Lateral FX (-) (lb)	Axial FY (-) (lb)	Torsion MY (lb-ft)	Moment MZ (lb-ft)
0.00		0.00	0.00	0.00	0.00
5.00		436.07	1455.78	0.00	0.00
10.00		426.17	1424.60	0.00	0.00
15.00		416.27	1393.41	0.00	0.00
20.00		406.37	1362.22	0.00	0.00
25.00		396.47	1331.03	0.00	0.00
30.00		386.57	1299.84	0.00	0.00
35.00		383.06	1268.65	0.00	0.00
40.00		387.49	1237.46	0.00	0.00
45.00		389.94	1206.27	0.00	0.00
47.00		154.86	473.78	0.00	0.00
50.00		236.89	1264.82	0.00	0.00
53.00		236.78	1243.97	0.00	0.00
55.00		157.24	400.84	0.00	0.00
60.00		394.78	983.39	0.00	0.00
65.00		391.90	956.66	0.00	0.00
70.00		388.01	929.92	0.00	0.00
75.00		383.22	903.19	0.00	0.00
80.00		377.60	876.46	0.00	0.00
81.00		74.25	172.08	0.00	0.00
85.00		295.94	577.85	0.00	0.00
90.00	(24) appurtenances	5544.36	3306.67	0.00	0.00
95.00		356.43	646.99	0.00	0.00
100.00	(47) appurtenances	9788.64	4634.41	0.00	0.00
105.00		339.21	573.63	0.00	0.00
110.00	(6) appurtenances	1461.56	1061.75	1173.15	0.00
115.00		319.86	520.25	0.00	0.00
117.00	(17) appurtenances	4151.73	2690.66	0.00	0.00
119.00		122.91	189.62	0.00	0.00
	Totals:	**28,804.60**	**34,386.19**	**1,173.15**	**0.00**

Copyright © 2015 by Tower Engineering Solutions, LLC. All rights reserved.

Resulting Forces and Deflections

Structure:	CT13555-S-SB	**Code:**	EIA/TIA-222-F	12/30/2015	
Site Name:	Montano	**Exposure:**	C		
Height:	119.00 (ft)	**Gh:**	1.69		
Base Elev:	0.000 (ft)	**Struct Class:**	II	Page: 11	

Tower Engineering Solutions

Load Case: 80 mph Wind with 0" Ice

Dead Load Factor 1.00

Wind Load Factor 1.00

Iterations: 18

Elev (ft)	Lateral FX (-) (kips)	Axial FY (-) (kips)	Lateral FZ (kips)	Moment MX (ft-kips)	Torsion MY (ft-kips)	Moment MZ (ft-kips)	Deflect X (in)	Deflect Z (in)	Deflect Resultant (in)	Rotation Sway (deg)	Rotation Twist (deg)
0.00	-28.836	-34.360	0.000	-0.003	-1.170	-2574.1	0.000	0.000	0.000	0.000	0.000
5.00	-28.458	-32.853	0.000	-0.003	-1.170	-2430.0	-0.055	0.000	0.055	-0.102	0.000
10.00	-28.084	-31.379	0.000	-0.003	-1.170	-2287.7	-0.218	0.000	0.218	-0.205	0.000
15.00	-27.716	-29.937	0.000	-0.004	-1.170	-2147.3	-0.489	0.000	0.489	-0.309	0.000
20.00	-27.353	-28.528	0.000	-0.004	-1.171	-2008.7	-0.870	0.000	0.870	-0.413	0.000
25.00	-26.996	-27.150	0.000	-0.005	-1.171	-1871.9	-1.360	0.000	1.360	-0.519	0.000
30.00	-26.644	-25.805	0.000	-0.005	-1.171	-1736.9	-1.960	0.000	1.960	-0.624	0.000
35.00	-26.291	-24.493	0.000	-0.006	-1.171	-1603.7	-2.671	0.000	2.671	-0.729	0.000
40.00	-25.929	-23.214	0.000	-0.007	-1.171	-1472.3	-3.493	0.000	3.493	-0.835	0.000
45.00	-25.549	-21.981	0.000	-0.008	-1.171	-1342.6	-4.424	0.000	4.424	-0.939	-0.001
47.00	-25.406	-21.487	0.000	-0.008	-1.171	-1291.5	-4.827	0.000	4.827	-0.982	-0.001
50.00	-25.168	-20.199	0.000	-0.009	-1.171	-1215.3	-5.464	0.000	5.464	-1.044	-0.001
53.00	-24.925	-18.937	0.000	-0.010	-1.171	-1139.8	-6.141	0.000	6.141	-1.107	-0.001
55.00	-24.785	-18.506	0.000	-0.011	-1.171	-1089.9	-6.614	0.000	6.614	-1.148	-0.001
60.00	-24.402	-17.486	0.000	-0.013	-1.171	-966.06	-7.876	0.000	7.876	-1.257	-0.001
65.00	-24.018	-16.495	0.000	-0.015	-1.172	-844.05	-9.251	0.000	9.251	-1.362	-0.001
70.00	-23.634	-15.535	0.000	-0.017	-1.172	-723.96	-10.733	0.000	10.733	-1.462	-0.001
75.00	-23.250	-14.606	0.001	-0.020	-1.172	-605.80	-12.316	0.000	12.316	-1.555	-0.001
80.00	-22.859	-13.721	0.001	-0.022	-1.172	-489.55	-13.993	0.001	13.993	-1.640	-0.002
81.00	-22.789	-13.536	0.001	-0.023	-1.172	-466.69	-14.338	0.001	14.338	-1.657	-0.002
85.00	-22.492	-12.941	0.001	-0.025	-1.172	-375.53	-15.753	0.001	15.753	-1.716	-0.002
90.00	-16.860	-9.787	0.001	-0.029	-1.172	-263.08	-17.593	0.001	17.593	-1.788	-0.002
95.00	-16.490	-9.138	0.001	-0.032	-1.172	-178.78	-19.498	0.001	19.498	-1.845	-0.002
100.00	-6.558	-4.821	0.000	-0.035	-1.173	-96.332	-21.454	0.001	21.454	-1.884	-0.003
105.00	-6.202	-4.257	0.000	-0.036	-1.173	-63.540	-23.441	0.002	23.441	-1.909	-0.003
110.00	-4.707	-3.244	0.000	0.002	0.000	-32.530	-25.451	0.002	25.451	-1.927	-0.003
115.00	-4.369	-2.734	0.000	0.001	0.000	-8.997	-27.475	0.002	27.475	-1.935	-0.003
117.00	-0.129	-0.185	0.000	0.000	0.000	-0.258	-28.286	0.002	28.286	-1.936	-0.003
119.00	-0.123	0.000	0.000	0.000	0.000	0.000	0.000	0.000	29.096	-1.936	-0.003

Copyright © 2015 by Tower Engineering Solutions, LLC. All rights reserved.

Resulting Stresses

Structure:	CT13555-S-SBA	**Code:**	EIA/TIA-222-F	12/30/2015	
Site Name:	Montano	**Exposure:**	C		
Height:	119.00 (ft)	**Gh:**	1.69		
Base Elev:	0.000 (ft)	**Struct Class:**	II	Page: 12	

Load Case: 80 mph Wind with 0" Ice

Iterations: 18

Dead Load Factor 1.00

Wind Load Factor 1.00

Applied Stresses

Elev (ft)	fa Axial (Y) (ksi)	fvx Shear (X) (ksi)	fvz Shear (Z) (ksi)	fvt Torsion (ksi)	fbx Bending (X) (ksi)	fbz Bending (Z) (ksi)	fb Combined (ksi)	Fb Allow Stress (ksi)	f/Fb Stress Ratio
0.00	0.42	0.72	0.00	0.01	0.00	26.43	26.89	52.0	0.517
5.00	0.41	0.72	0.00	0.01	0.00	26.12	26.57	52.0	0.511
10.00	0.41	0.73	0.00	0.01	0.00	25.78	26.22	52.0	0.504
15.00	0.40	0.74	0.00	0.01	0.00	25.39	25.82	52.0	0.497
20.00	0.39	0.75	0.00	0.01	0.00	24.95	25.37	52.0	0.488
25.00	0.38	0.76	0.00	0.01	0.00	24.46	24.87	52.0	0.478
30.00	0.37	0.77	0.00	0.01	0.00	23.90	24.31	52.0	0.468
35.00	0.36	0.78	0.00	0.01	0.00	23.28	23.68	52.0	0.455
40.00	0.35	0.79	0.00	0.01	0.00	22.57	22.96	52.0	0.442
45.00	0.34	0.80	0.00	0.01	0.00	21.78	22.16	52.0	0.426
47.00	0.34	0.80	0.00	0.01	0.00	21.43	21.82	52.0	0.420
50.00	0.32	0.81	0.00	0.01	0.00	20.89	21.26	52.0	0.409
53.00	0.35	0.93	0.00	0.01	0.00	22.80	23.21	52.0	0.447
55.00	0.35	0.94	0.00	0.01	0.00	22.32	22.73	52.0	0.437
60.00	0.34	0.95	0.00	0.01	0.00	21.02	21.42	52.0	0.412
65.00	0.33	0.97	0.00	0.01	0.00	19.54	19.94	52.0	0.384
70.00	0.32	0.98	0.00	0.01	0.00	17.87	18.27	52.0	0.351
75.00	0.31	1.00	0.00	0.02	0.00	15.98	16.38	52.0	0.315
80.00	0.30	1.02	0.00	0.02	0.00	13.83	14.24	52.0	0.274
81.00	0.30	1.02	0.00	0.02	0.00	13.37	13.78	52.0	0.265
81.00	0.30	1.02	0.00	0.02	0.00	13.37	13.78	52.0	0.317
85.00	0.35	1.24	0.00	0.02	0.00	13.59	14.12	52.0	0.272
90.00	0.28	0.97	0.00	0.02	0.00	10.25	10.66	52.0	0.205
95.00	0.27	0.98	0.00	0.02	0.00	7.52	7.98	52.0	0.153
100.00	0.15	0.41	0.00	0.03	0.00	4.38	4.59	52.0	0.088
105.00	0.14	0.40	0.00	0.03	0.00	3.14	3.36	52.0	0.065
110.00	0.11	0.32	0.00	0.00	0.00	1.75	1.94	52.0	0.037
115.00	0.10	0.31	0.00	0.00	0.00	0.53	0.82	52.0	0.016
117.00	0.01	0.01	0.00	0.00	0.00	0.02	0.03	52.0	0.001
119.00	0.00	0.01	0.00	0.00	0.00	0.00	0.02	52.0	0.000

Copyright © 2015 by Tower Engineering Solutions, LLC. All rights reserved.

Wind Loading - Shaft

Structure:	CT13555-S-SBA	**Code:**	EIA/TIA-222-F	12/30/2015	
Site Name:	Montano	**Exposure:**	C		
Height:	119.00 (ft)	**Gh:**	1.69		
Base Elev:	0.000 (ft)	**Struct Class:**	II	Page: 13	

Load Case: 69.28 mph Wind with 0.5" Ice

Dead Load Factor 1.00

Wind Load Factor 1.00

Iterations: 17

Elev (ft)	Description	Kzt	Kz	qz (psf)	qzGh (psf)	C (mph-ft)	Cf	Ice Thick (in)	Tributary (ft)	Aa (sf)	CfAa (sf)	Wind Force X (lb)	Dead Load Ice (lb)	Tot Dead Load (lb)
0.00		0.00	1.00	12.287	20.77	339.53	0.650	0.500	0.00	0.000	0.00	0.0	0.0	0.0
5.00		0.00	1.00	12.287	20.77	331.91	0.650	0.500	5.00	24.646	16.02	332.7	178.9	1542.4
10.00		0.00	1.00	12.287	20.77	324.29	0.650	0.500	5.00	24.096	15.66	325.2	174.9	1507.1
15.00		0.00	1.00	12.287	20.77	316.66	0.650	0.500	5.00	23.546	15.30	317.8	170.8	1471.9
20.00		0.00	1.00	12.287	20.77	309.04	0.650	0.500	5.00	22.996	14.95	310.4	166.7	1436.6
25.00		0.00	1.00	12.287	20.77	301.42	0.650	0.500	5.00	22.446	14.59	303.0	162.6	1401.3
30.00		0.00	1.00	12.287	20.77	293.80	0.650	0.500	5.00	21.895	14.23	295.5	158.6	1366.1
35.00		0.00	1.02	12.496	21.12	288.59	0.650	0.500	5.00	21.345	13.87	293.0	154.5	1330.8
40.00		0.00	1.06	12.982	21.94	286.32	0.650	0.500	5.00	20.795	13.52	296.5	150.4	1295.6
45.00		0.00	1.09	13.426	22.69	283.21	0.650	0.500	5.00	20.245	13.16	298.6	146.4	1260.3
47.00	Bot - Section 2	0.00	1.11	13.594	22.97	281.77	0.650	0.500	2.00	7.944	5.16	118.6	57.9	494.7
50.00		0.00	1.13	13.836	23.38	279.42	0.650	0.500	3.00	11.939	7.76	181.5	86.8	1296.2
53.00	Top - Section 1	0.00	1.14	14.068	23.78	276.86	0.650	0.500	3.00	11.741	7.63	181.4	85.3	1273.9
55.00		0.00	1.16	14.218	24.03	279.70	0.650	0.500	2.00	7.717	5.02	120.5	56.2	420.1
60.00		0.00	1.19	14.576	24.63	274.90	0.650	0.500	5.00	18.908	12.29	302.7	136.4	1027.5
65.00		0.00	1.21	14.913	25.20	269.67	0.650	0.500	5.00	18.357	11.93	300.7	132.4	996.7
70.00		0.00	1.24	15.232	25.74	264.05	0.650	0.500	5.00	17.807	11.57	298.0	128.3	965.9
75.00		0.00	1.26	15.536	26.26	258.10	0.650	0.500	5.00	17.257	11.22	294.5	124.2	935.1
80.00		0.00	1.29	15.825	26.74	251.84	0.650	0.500	5.00	16.707	10.86	290.4	120.1	904.3
81.00	Top - Section 2	0.00	1.29	15.881	26.84	250.55	0.650	0.500	1.00	3.275	2.13	57.1	23.9	177.5
85.00		0.00	1.31	16.101	27.21	245.30	0.650	0.500	4.00	12.882	8.37	227.8	92.9	596.9
90.00	Appurtenance(s)	0.00	1.33	16.366	27.66	238.52	0.650	0.500	5.00	15.607	10.14	280.6	112.0	721.9
95.00		0.00	1.35	16.621	28.09	231.50	0.650	0.500	5.00	15.057	9.79	274.9	107.9	695.6
100.00	Appurtenance(s)	0.00	1.37	16.866	28.50	224.27	0.650	0.500	5.00	14.507	9.43	268.8	103.9	669.2
105.00		0.00	1.39	17.103	28.90	216.85	0.650	0.500	5.00	13.957	9.07	262.2	99.8	642.9
110.00	Appurtenance(s)	0.00	1.41	17.332	29.29	209.25	0.650	0.500	5.00	13.407	8.71	255.3	95.7	616.5
115.00		0.00	1.43	17.554	29.67	201.47	0.650	0.500	5.00	12.857	8.36	247.9	91.6	590.2
117.00	Appurtenance(s)	0.00	1.44	17.640	29.81	198.31	0.650	0.500	2.00	4.989	3.24	96.7	36.0	229.2
119.00		0.00	1.44	17.726	29.96	195.13	0.650	0.500	2.00	4.901	3.19	95.4	35.4	225.0
								Totals:	**119.00**			**6,927.9**		**26,091.4**

Copyright © 2015 by Tower Engineering Solutions, LLC. All rights reserved.

Discrete Appurtenance Forces

Structure:	CT13555-S-SB	**Code:**	EIA/TIA-222-F	12/30/2015	
Site Name:	Montano	**Exposure:**	C		
Height:	119.00 (ft)	**Gh:**	1.69		
Base Elev:	0.000 (ft)	**Struct Class:**	II	Page: 14	

Tower Engineering Solutions

Load Case: 69.28 mph Wind with 0.5" Ice

Dead Load Factor 1.00

Wind Load Factor 1.00

Iterations: 17

No.	Elev (ft)	Description	Qty	qz (psf)	qzGh (psf)	CaAa Factor	Total CaAa (sf)	Dead Load (lb)	Horiz Ecc (ft)	Vert Ecc (ft)	Wind FX (lb)	Mom Y (lb-ft)	Mom Z (lb-ft)
1	117.00	AIR 21 B4A B2P	3	17.640	29.812	0.83	17.42	384.30	0.000	0.000	519.27	0.00	0.00
2	117.00	6' Lightning rod	1	17.640	29.812	1.00	0.98	11.80	0.000	0.000	29.22	0.00	0.00
3	117.00	AIR 21 B2A B4P	3	17.640	29.812	0.83	17.42	387.60	0.000	0.000	519.27	0.00	0.00
4	117.00	S11B12	3	17.640	29.812	0.72	7.56	201.30	0.000	0.000	225.41	0.00	0.00
5	117.00	KRY 112 144/1	3	17.640	29.812	0.75	1.23	42.30	0.000	0.000	36.70	0.00	0.00
6	117.00	LNX-6515DS-A1M	3	17.640	29.812	0.84	31.10	346.80	0.000	0.000	927.06	0.00	0.00
7	117.00	Platform w/ Hand Rail	1	17.640	29.812	1.00	40.00	2200.00	0.000	0.000	1192.48	0.00	0.00
8	110.00	VHLP2.5-18	1	17.332	29.291	1.00	8.92	97.00	2.291	0.000	261.28	598.62	0.00
9	110.00	VHLP2-18	1	17.332	29.291	1.00	5.05	55.00	2.291	0.000	147.92	338.90	0.00
10	110.00	LLPX310R	3	17.332	29.291	0.77	12.38	163.50	0.000	0.000	362.67	0.00	0.00
11	110.00	Flush Mount	1	17.332	29.291	1.00	6.00	450.00	0.000	0.000	175.75	0.00	0.00
12	100.00	RRUS A2	6	16.866	28.504	0.63	9.80	193.86	0.000	0.000	279.43	0.00	0.00
13	100.00	RRUS 12	6	16.866	28.504	0.71	16.62	454.20	0.000	0.000	473.69	0.00	0.00
14	100.00	RRUS 11	12	16.866	28.504	0.71	27.37	822.36	0.000	0.000	780.17	0.00	0.00
15	100.00	Platform w/ Hand Rail	1	16.866	28.504	1.00	40.00	2200.00	0.000	0.000	1140.17	0.00	0.00
16	100.00	IBC700-1	3	16.866	28.504	0.91	8.87	246.66	0.000	0.000	252.96	0.00	0.00
17	100.00	HPA-65R-BUU-H8	12	16.866	28.504	0.78	132.97	1568.16	0.000	0.000	3790.25	0.00	0.00
18	100.00	DC6-48-60-18-8F	4	16.866	28.504	1.00	14.32	223.52	0.000	0.000	408.18	0.00	0.00
19	100.00	RRU-32	3	16.866	28.504	0.85	11.02	301.98	0.000	0.000	314.02	0.00	0.00
20	90.00	HBXX-6517DS-A2M	6	16.366	27.659	0.80	44.47	562.86	0.000	0.000	1230.00	0.00	0.00
21	90.00	B13 RRH4x30	3	16.366	27.659	0.88	7.16	217.35	0.000	0.000	198.11	0.00	0.00
22	90.00	DB-T1-6Z-8AB-0Z	2	16.366	27.659	1.00	11.74	142.12	0.000	0.000	324.72	0.00	0.00
23	90.00	RRH2x60-PCS	3	16.366	27.659	0.79	6.02	203.37	0.000	0.000	166.48	0.00	0.00
24	90.00	LNX-6514DS-A1M	6	16.366	27.659	0.82	43.90	512.46	0.000	0.000	1214.20	0.00	0.00
25	90.00	Low Profile Platform	1	16.366	27.659	1.00	27.00	1800.00	0.000	0.000	746.79	0.00	0.00
26	90.00	RRH2X60-AWS	3	16.366	27.659	0.78	9.51	226.05	0.000	0.000	263.13	0.00	0.00
						Totals:		**14,014.55**			**15,979.29**		

Copyright © 2015 by Tower Engineering Solutions, LLC. All rights reserved.

Total Applied Force Summary

Structure:	CT13555-S-SB	**Code:**	EIA/TIA-222-F	12/30/2015	
Site Name:	Montano	**Exposure:**	C		
Height:	119.00 (ft)	**Gh:**	1.69		
Base Elev:	0.000 (ft)	**Struct Class:**	II	Page: 15	

Load Case: 69.28 mph Wind with 0.5" Ice

Dead Load Factor 1.00

Wind Load Factor 1.00

Iterations: 17

Elev (ft)	Description	Lateral FX (-) (lb)	Axial FY (-) (lb)	Torsion MY (lb-ft)	Moment MZ (lb-ft)
0.00		0.00	0.00	0.00	0.00
5.00		332.66	1634.72	0.00	0.00
10.00		325.23	1599.46	0.00	0.00
15.00		317.81	1564.20	0.00	0.00
20.00		310.38	1528.94	0.00	0.00
25.00		302.96	1493.67	0.00	0.00
30.00		295.54	1458.41	0.00	0.00
35.00		293.00	1423.15	0.00	0.00
40.00		296.55	1387.89	0.00	0.00
45.00		298.58	1352.62	0.00	0.00
47.00		118.63	531.66	0.00	0.00
50.00		181.45	1351.57	0.00	0.00
53.00		181.44	1329.25	0.00	0.00
55.00		120.53	457.05	0.00	0.00
60.00		302.74	1119.83	0.00	0.00
65.00		300.73	1089.03	0.00	0.00
70.00		297.97	1058.22	0.00	0.00
75.00		294.51	1027.41	0.00	0.00
80.00		290.43	996.61	0.00	0.00
81.00		57.14	195.95	0.00	0.00
85.00		227.84	670.71	0.00	0.00
90.00	(24) appurtenances	4424.01	4478.48	0.00	0.00
95.00		274.91	754.92	0.00	0.00
100.00	(47) appurtenances	7707.65	6739.31	0.00	0.00
105.00		262.22	673.41	0.00	0.00
110.00	(6) appurtenances	1202.87	1412.56	937.52	0.00
115.00		247.91	611.89	0.00	0.00
117.00	(17) appurtenances	3546.06	3811.96	0.00	0.00
119.00		95.43	224.97	0.00	0.00
	Totals:	**22,907.18**	**41,977.86**	**937.52**	**0.00**

Copyright © 2015 by Tower Engineering Solutions, LLC. All rights reserved.

Resulting Forces and Deflections

Structure:	CT13555-S-SB	**Code:**	EIA/TIA-222-F	12/30/2015	
Site Name:	Montano	**Exposure:**	C		
Height:	119.00 (ft)	**Gh:**	1.69		
Base Elev:	0.000 (ft)	**Struct Class:**	II	Page: 16	

Load Case: 69.28 mph Wind with 0.5" Ice

Dead Load Factor 1.00

Wind Load Factor 1.00

Iterations: 17

Elev (ft)	Lateral FX (-) (kips)	Axial FY (-) (kips)	Lateral FZ (kips)	Moment MX (ft-kips)	Torsion MY (ft-kips)	Moment MZ (ft-kips)	Deflect X (in)	Deflect Z (in)	Deflect Resultant (in)	Rotation Sway (deg)	Rotation Twist (deg)
0.00	-22.937	-41.961	0.000	-0.002	-0.936	-2071.9	0.000	0.000	0.000	0.000	0.000
5.00	-22.662	-40.294	0.000	-0.002	-0.936	-1957.2	-0.045	0.000	0.045	-0.082	0.000
10.00	-22.389	-38.662	0.000	-0.002	-0.936	-1843.9	-0.176	0.000	0.176	-0.165	0.000
15.00	-22.120	-37.067	0.000	-0.003	-0.936	-1732.0	-0.394	0.000	0.394	-0.249	0.000
20.00	-21.854	-35.507	0.000	-0.003	-0.936	-1621.4	-0.701	0.000	0.701	-0.333	0.000
25.00	-21.592	-33.984	0.000	-0.003	-0.936	-1512.1	-1.096	0.000	1.096	-0.418	0.000
30.00	-21.333	-32.496	0.000	-0.004	-0.936	-1404.1	-1.580	0.000	1.580	-0.503	0.000
35.00	-21.073	-31.044	0.000	-0.004	-0.936	-1297.5	-2.154	0.000	2.154	-0.589	0.000
40.00	-20.805	-29.629	0.000	-0.005	-0.936	-1192.1	-2.816	0.000	2.816	-0.674	0.000
45.00	-20.519	-28.259	0.000	-0.005	-0.936	-1088.1	-3.568	0.000	3.568	-0.758	0.000
47.00	-20.414	-27.714	0.000	-0.006	-0.936	-1047.0	-3.894	0.000	3.894	-0.793	0.000
50.00	-20.236	-26.347	0.000	-0.006	-0.936	-985.85	-4.409	0.000	4.409	-0.844	-0.001
53.00	-20.053	-25.006	0.000	-0.007	-0.936	-925.14	-4.956	0.000	4.956	-0.894	-0.001
55.00	-19.952	-24.530	0.000	-0.008	-0.936	-885.04	-5.338	0.000	5.338	-0.928	-0.001
60.00	-19.666	-23.385	0.000	-0.009	-0.937	-785.28	-6.358	0.000	6.358	-1.016	-0.001
65.00	-19.377	-22.274	0.000	-0.010	-0.937	-686.96	-7.470	0.000	7.470	-1.102	-0.001
70.00	-19.087	-21.195	0.000	-0.011	-0.937	-590.07	-8.669	0.000	8.669	-1.183	-0.001
75.00	-18.797	-20.151	0.000	-0.013	-0.937	-494.64	-9.951	0.000	9.951	-1.259	-0.001
80.00	-18.497	-19.148	0.000	-0.014	-0.937	-400.66	-11.309	0.000	11.309	-1.329	-0.001
81.00	-18.446	-18.943	0.000	-0.015	-0.937	-382.16	-11.589	0.000	11.589	-1.342	-0.001
85.00	-18.220	-18.260	0.000	-0.017	-0.937	-308.38	-12.735	0.000	12.735	-1.391	-0.001
90.00	-13.699	-13.881	0.000	-0.019	-0.937	-217.28	-14.227	0.001	14.227	-1.450	-0.002
95.00	-13.414	-13.124	0.000	-0.020	-0.937	-148.79	-15.773	0.001	15.773	-1.497	-0.002
100.00	-5.533	-6.588	0.000	-0.022	-0.937	-81.722	-17.361	0.001	17.361	-1.530	-0.002
105.00	-5.255	-5.920	0.000	-0.023	-0.937	-54.055	-18.975	0.001	18.975	-1.551	-0.002
110.00	-4.015	-4.540	0.000	0.001	0.000	-27.780	-20.609	0.001	20.609	-1.566	-0.003
115.00	-3.751	-3.935	0.000	0.000	0.000	-7.705	-22.254	0.001	22.254	-1.574	-0.003
117.00	-0.101	-0.222	0.000	0.000	0.000	-0.203	-22.914	0.002	22.914	-1.574	-0.003
119.00	-0.095	0.000	0.000	0.000	0.000	0.000	0.000	0.000	23.573	-1.574	-0.003

Copyright © 2015 by Tower Engineering Solutions, LLC. All rights reserved.

Resulting Stresses

Structure:	CT13555-S-SBA	**Code:**	EIA/TIA-222-F	12/30/2015	
Site Name:	Montano	**Exposure:**	C		
Height:	119.00 (ft)	**Gh:**	1.69		
Base Elev:	0.000 (ft)	**Struct Class:**	II	Page: 17	

Load Case: 69.28 mph Wind with 0.5" Ice

Iterations: 17

Dead Load Factor 1.00

Wind Load Factor 1.00

Applied Stresses

Elev (ft)	fa Axial (Y) (ksi)	fvx Shear (X) (ksi)	fvz Shear (Z) (ksi)	fvt Torsion (ksi)	fbx Bending (X) (ksi)	fbz Bending (Z) (ksi)	fb Combined (ksi)	Fb Allow Stress (ksi)	f/Fb Stress Ratio
0.00	0.52	0.57	0.00	0.00	0.00	21.28	21.82	52.0	0.420
5.00	0.51	0.58	0.00	0.01	0.00	21.04	21.57	52.0	0.415
10.00	0.50	0.58	0.00	0.01	0.00	20.78	21.30	52.0	0.410
15.00	0.49	0.59	0.00	0.01	0.00	20.48	21.00	52.0	0.404
20.00	0.48	0.60	0.00	0.01	0.00	20.14	20.65	52.0	0.397
25.00	0.47	0.61	0.00	0.01	0.00	19.76	20.26	52.0	0.390
30.00	0.46	0.61	0.00	0.01	0.00	19.32	19.82	52.0	0.381
35.00	0.46	0.62	0.00	0.01	0.00	18.83	19.32	52.0	0.372
40.00	0.45	0.63	0.00	0.01	0.00	18.28	18.76	52.0	0.361
45.00	0.44	0.64	0.00	0.01	0.00	17.65	18.12	52.0	0.349
47.00	0.43	0.64	0.00	0.01	0.00	17.38	17.85	52.0	0.343
50.00	0.42	0.65	0.00	0.01	0.00	16.94	17.40	52.0	0.335
53.00	0.46	0.75	0.00	0.01	0.00	18.51	19.02	52.0	0.366
55.00	0.46	0.76	0.00	0.01	0.00	18.13	18.64	52.0	0.359
60.00	0.45	0.77	0.00	0.01	0.00	17.08	17.59	52.0	0.338
65.00	0.45	0.78	0.00	0.01	0.00	15.90	16.40	52.0	0.316
70.00	0.44	0.79	0.00	0.01	0.00	14.56	15.07	52.0	0.290
75.00	0.43	0.81	0.00	0.01	0.00	13.04	13.55	52.0	0.261
80.00	0.42	0.82	0.00	0.01	0.00	11.32	11.83	52.0	0.228
81.00	0.42	0.83	0.00	0.01	0.00	10.95	11.46	52.0	0.220
81.00	0.42	0.83	0.00	0.01	0.00	10.95	11.46	52.0	0.263
85.00	0.50	1.01	0.00	0.02	0.00	11.16	11.80	52.0	0.227
90.00	0.39	0.78	0.00	0.02	0.00	8.46	8.97	52.0	0.172
95.00	0.39	0.80	0.00	0.02	0.00	6.25	6.79	52.0	0.131
100.00	0.20	0.34	0.00	0.02	0.00	3.72	3.97	52.0	0.076
105.00	0.19	0.34	0.00	0.02	0.00	2.67	2.93	52.0	0.056
110.00	0.15	0.27	0.00	0.00	0.00	1.50	1.71	52.0	0.033
115.00	0.14	0.26	0.00	0.00	0.00	0.45	0.75	52.0	0.014
117.00	0.01	0.01	0.00	0.00	0.00	0.01	0.02	52.0	0.000
119.00	0.00	0.01	0.00	0.00	0.00	0.00	0.01	52.0	0.000

Copyright © 2015 by Tower Engineering Solutions, LLC. All rights reserved.

Wind Loading - Shaft

Structure:	CT13555-S-SBA	**Code:**	EIA/TIA-222-F	12/30/2015	
Site Name:	Montano	**Exposure:**	C		
Height:	119.00 (ft)	**Gh:**	1.69		
Base Elev:	0.000 (ft)	**Struct Class:**	II	Page: 18	

Load Case: 50 mph Wind with 0" Ice

Dead Load Factor 1.00

Wind Load Factor 1.00

Iterations: 17

Elev (ft)	Description	Kzt	Kz	qz (psf)	qzGh (psf)	C (mph-ft)	Cf	Ice Thick (in)	Tributary (ft)	Aa (sf)	CfAa (sf)	Wind Force X (lb)	Dead Load Ice (lb)	Tot Dead Load (lb)
0.00		0.00	1.00	6.400	10.82	245.04	0.650	0.000	0.00	0.000	0.00	0.0	0.0	0.0
5.00		0.00	1.00	6.400	10.82	239.54	0.650	0.000	5.00	24.229	15.75	170.3	0.0	1363.5
10.00		0.00	1.00	6.400	10.82	234.04	0.650	0.000	5.00	23.679	15.39	166.5	0.0	1332.3
15.00		0.00	1.00	6.400	10.82	228.54	0.650	0.000	5.00	23.129	15.03	162.6	0.0	1301.1
20.00		0.00	1.00	6.400	10.82	223.04	0.650	0.000	5.00	22.579	14.68	158.7	0.0	1269.9
25.00		0.00	1.00	6.400	10.82	217.54	0.650	0.000	5.00	22.029	14.32	154.9	0.0	1238.7
30.00		0.00	1.00	6.400	10.82	212.04	0.650	0.000	5.00	21.479	13.96	151.0	0.0	1207.5
35.00		0.00	1.02	6.509	11.00	208.28	0.650	0.000	5.00	20.929	13.60	149.6	0.0	1176.3
40.00		0.00	1.06	6.762	11.43	206.64	0.650	0.000	5.00	20.379	13.25	151.4	0.0	1145.1
45.00		0.00	1.09	6.993	11.82	204.39	0.650	0.000	5.00	19.829	12.89	152.3	0.0	1113.9
47.00	Bot - Section 2	0.00	1.11	7.080	11.97	203.35	0.650	0.000	2.00	7.777	5.06	60.5	0.0	436.8
50.00		0.00	1.13	7.207	12.18	201.66	0.650	0.000	3.00	11.689	7.60	92.5	0.0	1209.4
53.00	Top - Section 1	0.00	1.14	7.328	12.38	199.81	0.650	0.000	3.00	11.491	7.47	92.5	0.0	1188.6
55.00		0.00	1.16	7.406	12.52	201.87	0.650	0.000	2.00	7.550	4.91	61.4	0.0	363.9
60.00		0.00	1.19	7.592	12.83	198.40	0.650	0.000	5.00	18.491	12.02	154.2	0.0	891.1
65.00		0.00	1.21	7.768	13.13	194.62	0.650	0.000	5.00	17.941	11.66	153.1	0.0	864.3
70.00		0.00	1.24	7.934	13.41	190.57	0.650	0.000	5.00	17.391	11.30	151.6	0.0	837.6
75.00		0.00	1.26	8.092	13.68	186.27	0.650	0.000	5.00	16.841	10.95	149.7	0.0	810.9
80.00		0.00	1.29	8.242	13.93	181.75	0.650	0.000	5.00	16.291	10.59	147.5	0.0	784.1
81.00	Top - Section 2	0.00	1.29	8.272	13.98	180.82	0.650	0.000	1.00	3.192	2.07	29.0	0.0	153.6
85.00		0.00	1.31	8.387	14.17	177.04	0.650	0.000	4.00	12.548	8.16	115.6	0.0	504.0
90.00	Appurtenance(s)	0.00	1.33	8.525	14.41	172.14	0.650	0.000	5.00	15.190	9.87	142.2	0.0	609.9
95.00		0.00	1.35	8.657	14.63	167.08	0.650	0.000	5.00	14.640	9.52	139.2	0.0	587.7
100.00	Appurtenance(s)	0.00	1.37	8.785	14.85	161.86	0.650	0.000	5.00	14.090	9.16	136.0	0.0	565.4
105.00		0.00	1.39	8.908	15.06	156.50	0.650	0.000	5.00	13.540	8.80	132.5	0.0	543.1
110.00	Appurtenance(s)	0.00	1.41	9.028	15.26	151.01	0.650	0.000	5.00	12.990	8.44	128.8	0.0	520.8
115.00		0.00	1.43	9.143	15.45	145.40	0.650	0.000	5.00	12.440	8.09	124.9	0.0	498.6
117.00	Appurtenance(s)	0.00	1.44	9.188	15.53	143.12	0.650	0.000	2.00	4.822	3.13	48.7	0.0	193.2
119.00		0.00	1.44	9.233	15.60	140.83	0.650	0.000	2.00	4.734	3.08	48.0	0.0	189.6
								Totals:	**119.00**			**3,525.4**		**22,901.0**

Copyright © 2015 by Tower Engineering Solutions, LLC. All rights reserved.

Discrete Appurtenance Forces

Structure:	CT13555-S-SB	**Code:**	EIA/TIA-222-F	12/30/2015	
Site Name:	Montano	**Exposure:**	C		
Height:	119.00 (ft)	**Gh:**	1.69		
Base Elev:	0.000 (ft)	**Struct Class:**	II	Page: 19	

Tower Engineering Solutions

Load Case: 50 mph Wind with 0" Ice

Dead Load Factor 1.00

Wind Load Factor 1.00

Iterations: 17

No.	Elev (ft)	Description	Qty	qz (psf)	qzGh (psf)	CaAa Factor	Total CaAa (sf)	Dead Load (lb)	Horiz Ecc (ft)	Vert Ecc (ft)	Wind FX (lb)	Mom Y (lb-ft)	Mom Z (lb-ft)
1	117.00	AIR 21 B4A B2P	3	9.188	15.528	0.83	16.16	270.90	0.000	0.000	250.88	0.00	0.00
2	117.00	6' Lightning rod	1	9.188	15.528	1.00	0.38	6.50	0.000	0.000	5.90	0.00	0.00
3	117.00	AIR 21 B2A B4P	3	9.188	15.528	0.83	16.16	274.50	0.000	0.000	250.88	0.00	0.00
4	117.00	S11B12	3	9.188	15.528	0.71	7.01	153.00	0.000	0.000	108.86	0.00	0.00
5	117.00	KRY 112 144/1	3	9.188	15.528	0.72	0.89	33.00	0.000	0.000	13.77	0.00	0.00
6	117.00	LNX-6515DS-A1M	3	9.188	15.528	0.84	28.72	150.90	0.000	0.000	445.91	0.00	0.00
7	117.00	Platform w/ Hand Rail	1	9.188	15.528	1.00	32.00	1600.00	0.000	0.000	496.90	0.00	0.00
8	110.00	VHLP2.5-18	1	9.028	15.257	1.00	8.43	47.60	2.291	0.000	128.61	294.67	0.00
9	110.00	VHLP2-18	1	9.028	15.257	1.00	4.68	27.00	2.291	0.000	71.40	163.59	0.00
10	110.00	LLPX310R	3	9.028	15.257	0.75	10.87	85.80	0.000	0.000	165.80	0.00	0.00
11	110.00	Flush Mount	1	9.028	15.257	1.00	5.00	350.00	0.000	0.000	76.28	0.00	0.00
12	100.00	RRUS A2	6	8.785	14.847	0.61	8.92	132.00	0.000	0.000	132.48	0.00	0.00
13	100.00	RRUS 12	6	8.785	14.847	0.70	15.48	348.00	0.000	0.000	229.83	0.00	0.00
14	100.00	RRUS 11	12	8.785	14.847	0.70	25.30	648.00	0.000	0.000	375.56	0.00	0.00
15	100.00	Platform w/ Hand Rail	1	8.785	14.847	1.00	40.00	1600.00	0.000	0.000	593.87	0.00	0.00
16	100.00	IBC700-1	3	8.785	14.847	0.91	8.26	189.90	0.000	0.000	122.68	0.00	0.00
17	100.00	HPA-65R-BUU-H8	12	8.785	14.847	0.78	126.76	729.60	0.000	0.000	1881.97	0.00	0.00
18	100.00	DC6-48-60-18-8F	4	8.785	14.847	1.00	13.36	131.20	0.000	0.000	198.35	0.00	0.00
19	100.00	RRU-32	3	8.785	14.847	0.85	10.30	231.00	0.000	0.000	152.97	0.00	0.00
20	90.00	HBXX-6517DS-A2M	6	8.525	14.407	0.80	41.95	282.00	0.000	0.000	604.38	0.00	0.00
21	90.00	B13 RRH4x30	3	8.525	14.407	0.88	6.62	171.60	0.000	0.000	95.30	0.00	0.00
22	90.00	DB-T1-6Z-8AB-0Z	2	8.525	14.407	1.00	11.20	88.00	0.000	0.000	161.35	0.00	0.00
23	90.00	RRH2x60-PCS	3	8.525	14.407	0.78	5.52	165.00	0.000	0.000	79.53	0.00	0.00
24	90.00	LNX-6514DS-A1M	6	8.525	14.407	0.82	41.43	232.80	0.000	0.000	596.83	0.00	0.00
25	90.00	Low Profile Platform	1	8.525	14.407	1.00	25.00	1500.00	0.000	0.000	360.16	0.00	0.00
26	90.00	RRH2X60-AWS	3	8.525	14.407	0.77	8.74	165.00	0.000	0.000	125.96	0.00	0.00
						Totals:		**9,613.30**			**7,726.42**		

Copyright © 2015 by Tower Engineering Solutions, LLC. All rights reserved.

Total Applied Force Summary

Structure:	CT13555-S-SB	**Code:**	EIA/TIA-222-F	12/30/2015	
Site Name:	Montano	**Exposure:**	C		
Height:	119.00 (ft)	**Gh:**	1.69		
Base Elev:	0.000 (ft)	**Struct Class:**	II	Page: 20	

Tower Engineering Solutions

Load Case: 50 mph Wind with 0" Ice

Dead Load Factor 1.00

Wind Load Factor 1.00

Iterations: 17

Elev (ft)	Description	Lateral FX (-) (lb)	Axial FY (-) (lb)	Torsion MY (lb-ft)	Moment MZ (lb-ft)
0.00		0.00	0.00	0.00	0.00
5.00		170.34	1455.78	0.00	0.00
10.00		166.47	1424.60	0.00	0.00
15.00		162.61	1393.41	0.00	0.00
20.00		158.74	1362.22	0.00	0.00
25.00		154.87	1331.03	0.00	0.00
30.00		151.00	1299.84	0.00	0.00
35.00		149.63	1268.65	0.00	0.00
40.00		151.37	1237.46	0.00	0.00
45.00		152.32	1206.27	0.00	0.00
47.00		60.49	473.78	0.00	0.00
50.00		92.53	1264.82	0.00	0.00
53.00		92.49	1243.97	0.00	0.00
55.00		61.42	400.84	0.00	0.00
60.00		154.21	983.39	0.00	0.00
65.00		153.09	956.66	0.00	0.00
70.00		151.57	929.92	0.00	0.00
75.00		149.70	903.19	0.00	0.00
80.00		147.50	876.46	0.00	0.00
81.00		29.01	172.08	0.00	0.00
85.00		115.60	577.85	0.00	0.00
90.00	(24) appurtenances	2165.76	3306.67	0.00	0.00
95.00		139.23	646.99	0.00	0.00
100.00	(47) appurtenances	3823.69	4634.41	0.00	0.00
105.00		132.50	573.63	0.00	0.00
110.00	(6) appurtenances	570.92	1061.75	458.26	0.00
115.00		124.94	520.25	0.00	0.00
117.00	(17) appurtenances	1621.77	2690.66	0.00	0.00
119.00		48.01	189.62	0.00	0.00
	Totals:	**11,251.80**	**34,386.19**	**458.26**	**0.00**

Copyright © 2015 by Tower Engineering Solutions, LLC. All rights reserved.

Resulting Forces and Deflections

Structure:	CT13555-S-SB	**Code:**	EIA/TIA-222-F	12/30/2015	
Site Name:	Montano	**Exposure:**	C		
Height:	119.00 (ft)	**Gh:**	1.69		
Base Elev:	0.000 (ft)	**Struct Class:**	II	Page: 21	

Load Case: 50 mph Wind with 0" Ice

Dead Load Factor 1.00

Wind Load Factor 1.00

Iterations: 17

Elev (ft)	Lateral FX (-) (kips)	Axial FY (-) (kips)	Lateral FZ (kips)	Moment MX (ft-kips)	Torsion MY (ft-kips)	Moment MZ (ft-kips)	Deflect X (in)	Deflect Z (in)	Deflect Resultant (in)	Rotation Sway (deg)	Rotation Twist (deg)
0.00	-11.264	-34.382	0.000	0.000	-0.458	-1005.6	0.000	0.000	0.000	0.000	0.000
5.00	-11.116	-32.919	0.000	0.000	-0.458	-949.36	-0.022	0.000	0.022	-0.040	0.000
10.00	-10.970	-31.486	0.000	0.000	-0.458	-893.78	-0.085	0.000	0.085	-0.080	0.000
15.00	-10.826	-30.086	0.000	-0.001	-0.458	-838.93	-0.191	0.000	0.191	-0.121	0.000
20.00	-10.685	-28.716	0.000	-0.001	-0.458	-784.80	-0.340	0.000	0.340	-0.162	0.000
25.00	-10.545	-27.378	0.000	-0.001	-0.458	-731.37	-0.531	0.000	0.531	-0.203	0.000
30.00	-10.408	-26.071	0.000	-0.001	-0.458	-678.65	-0.766	0.000	0.766	-0.244	0.000
35.00	-10.270	-24.796	0.000	-0.001	-0.458	-626.61	-1.044	0.000	1.044	-0.285	0.000
40.00	-10.129	-23.552	0.000	-0.001	-0.458	-575.25	-1.365	0.000	1.365	-0.326	0.000
45.00	-9.981	-22.342	0.000	-0.001	-0.458	-524.61	-1.728	0.000	1.728	-0.367	0.000
47.00	-9.925	-21.865	0.000	-0.001	-0.458	-504.65	-1.886	0.000	1.886	-0.384	0.000
50.00	-9.833	-20.597	0.000	-0.001	-0.458	-474.87	-2.135	0.000	2.135	-0.408	0.000
53.00	-9.738	-19.350	0.000	-0.002	-0.458	-445.38	-2.399	0.000	2.399	-0.432	0.000
55.00	-9.683	-18.945	0.000	-0.002	-0.458	-425.90	-2.584	0.000	2.584	-0.448	0.000
60.00	-9.534	-17.956	0.000	-0.002	-0.458	-377.48	-3.077	0.000	3.077	-0.491	0.000
65.00	-9.384	-16.994	0.000	-0.002	-0.458	-329.82	-3.614	0.000	3.614	-0.532	0.000
70.00	-9.234	-16.059	0.000	-0.003	-0.458	-282.89	-4.194	0.000	4.194	-0.571	0.000
75.00	-9.085	-15.152	0.000	-0.003	-0.458	-236.72	-4.812	0.000	4.812	-0.608	-0.001
80.00	-8.932	-14.274	0.000	-0.003	-0.458	-191.30	-5.467	0.000	5.467	-0.641	-0.001
81.00	-8.905	-14.100	0.000	-0.003	-0.458	-182.37	-5.602	0.000	5.602	-0.647	-0.001
85.00	-8.789	-13.520	0.000	-0.004	-0.458	-146.75	-6.155	0.000	6.155	-0.670	-0.001
90.00	-6.588	-10.236	0.000	-0.004	-0.458	-102.80	-6.874	0.000	6.874	-0.699	-0.001
95.00	-6.444	-9.589	0.000	-0.005	-0.458	-69.866	-7.619	0.000	7.619	-0.721	-0.001
100.00	-2.563	-5.003	0.000	-0.005	-0.458	-37.645	-8.383	0.000	8.383	-0.736	-0.001
105.00	-2.424	-4.431	0.000	-0.005	-0.458	-24.831	-9.160	0.000	9.160	-0.746	-0.001
110.00	-1.839	-3.377	0.000	0.000	0.000	-12.712	-9.945	0.000	9.945	-0.753	-0.001
115.00	-1.708	-2.858	0.000	0.000	0.000	-3.516	-10.736	0.000	10.736	-0.756	-0.001
117.00	-0.050	-0.189	0.000	0.000	0.000	-0.101	-11.053	0.000	11.053	-0.757	-0.001
119.00	-0.048	0.000	0.000	0.000	0.000	0.000	0.000	0.000	11.370	-0.757	-0.001

Copyright © 2015 by Tower Engineering Solutions, LLC. All rights reserved.

Resulting Stresses

Structure:	CT13555-S-SBA	**Code:**	EIA/TIA-222-F	12/30/2015	
Site Name:	Montano	**Exposure:**	C		
Height:	119.00 (ft)	**Gh:**	1.69		
Base Elev:	0.000 (ft)	**Struct Class:**	II	Page: 22	

Load Case: 50 mph Wind with 0" Ice

Dead Load Factor 1.00

Wind Load Factor 1.00

Iterations: 17

Applied Stresses

Elev (ft)	fa Axial (Y) (ksi)	fvx Shear (X) (ksi)	fvz Shear (Z) (ksi)	fvt Torsion (ksi)	fbx Bending (X) (ksi)	fbz Bending (Z) (ksi)	fb Combined (ksi)	Fb Allow Stress (ksi)	f/Fb Stress Ratio
0.00	0.42	0.28	0.00	0.00	0.00	10.33	10.76	52.0	0.207
5.00	0.42	0.28	0.00	0.00	0.00	10.21	10.63	52.0	0.205
10.00	0.41	0.29	0.00	0.00	0.00	10.07	10.49	52.0	0.202
15.00	0.40	0.29	0.00	0.00	0.00	9.92	10.33	52.0	0.199
20.00	0.39	0.29	0.00	0.00	0.00	9.75	10.15	52.0	0.195
25.00	0.38	0.30	0.00	0.00	0.00	9.56	9.95	52.0	0.191
30.00	0.37	0.30	0.00	0.00	0.00	9.34	9.73	52.0	0.187
35.00	0.36	0.30	0.00	0.00	0.00	9.10	9.47	52.0	0.182
40.00	0.35	0.31	0.00	0.00	0.00	8.82	9.19	52.0	0.177
45.00	0.35	0.31	0.00	0.00	0.00	8.51	8.87	52.0	0.171
47.00	0.34	0.31	0.00	0.00	0.00	8.37	8.73	52.0	0.168
50.00	0.33	0.32	0.00	0.00	0.00	8.16	8.51	52.0	0.164
53.00	0.36	0.36	0.00	0.00	0.00	8.91	9.29	52.0	0.179
55.00	0.36	0.37	0.00	0.00	0.00	8.72	9.10	52.0	0.175
60.00	0.35	0.37	0.00	0.00	0.00	8.21	8.58	52.0	0.165
65.00	0.34	0.38	0.00	0.01	0.00	7.63	8.00	52.0	0.154
70.00	0.33	0.38	0.00	0.01	0.00	6.98	7.34	52.0	0.141
75.00	0.32	0.39	0.00	0.01	0.00	6.24	6.60	52.0	0.127
80.00	0.32	0.40	0.00	0.01	0.00	5.40	5.76	52.0	0.111
81.00	0.31	0.40	0.00	0.01	0.00	5.22	5.58	52.0	0.107
81.00	0.31	0.40	0.00	0.01	0.00	5.22	5.58	52.0	0.128
85.00	0.37	0.49	0.00	0.01	0.00	5.31	5.75	52.0	0.111
90.00	0.29	0.38	0.00	0.01	0.00	4.00	4.35	52.0	0.084
95.00	0.28	0.38	0.00	0.01	0.00	2.94	3.29	52.0	0.063
100.00	0.15	0.16	0.00	0.01	0.00	1.71	1.89	52.0	0.036
105.00	0.14	0.16	0.00	0.01	0.00	1.23	1.40	52.0	0.027
110.00	0.11	0.12	0.00	0.00	0.00	0.68	0.83	52.0	0.016
115.00	0.10	0.12	0.00	0.00	0.00	0.21	0.37	52.0	0.007
117.00	0.01	0.00	0.00	0.00	0.00	0.01	0.01	52.0	0.000
119.00	0.00	0.00	0.00	0.00	0.00	0.00	0.01	52.0	0.000

Copyright © 2015 by Tower Engineering Solutions, LLC. All rights reserved.

Reactions

Load Case	Shear FX (kips)	Shear FZ (kips)	Axial FY (kips)	Moment MX (ft-kips)	Moment MY (ft-kips)	Moment MZ (ft-kips)
80 mph Wind with 0" Ice	28.8	0.00	34.36	0.00	1.17	2574.19
69.28 mph Wind with 0.5" Ice	22.9	0.00	41.96	0.00	0.94	2071.95
50 mph Wind with 0" Ice	11.3	0.00	34.38	0.00	0.46	1005.68

Max Stresses

Load Case	fa Axial (Y) (ksi)	fvx Shear (X) (ksi)	fvz Shear (Z) (ksi)	fvt Torsion (ksi)	fbx Bending (X) (ksi)	fbz Bending (Z) (ksi)	Combined Stress (ksi)	Allowable Stress (ksi)	Elev (ft)	Stress Ratio
80 mph Wind with 0" Ice	0.42	0.72	0.00	0.01	0.00	26.43	26.89	52.0	0.00	0.517
69.28 mph Wind with 0.5" Ice	0.52	0.57	0.00	0.00	0.00	21.28	21.82	52.0	0.00	0.420
50 mph Wind with 0" Ice	0.42	0.28	0.00	0.00	0.00	10.33	10.76	52.0	0.00	0.207

Copyright © 2015 by Tower Engineering Solutions, LLC. All rights reserved.

Monopole Mat Foundation Design

			Date
			12/30/2015
Customer Name:	AT&T	**EIA/TIA Standard:**	EIA-222-F
Site Name:	Montano	**Structure Height (Ft.):**	119
Site Nmber:	CT13555-S-SBA	**Engineer Name:**	J. Tibbetts
Engr. Number:	19665	**Engineer Login ID:**	

Foundation Info Obtained from: Drawings/Calculations

Structure Type: Monopole

Analysis or Design? Analysis

Base Reactions (Unfactored)

Axial Load (Kips):	34.4	Shear Force (Kips):	28.8
Uplift Force (Kips):	0.0	Moment (Kips-ft):	2574.2
Allowable overstress %:	5.0%		

Foundation Geometries:

		Mods required -Yes/No ?:	No
Diameter of Pier (ft.):	7.0	Depth of Base BG (ft.):	6.0
Pier Height A. G. (ft.):	1.00	Thickness of Pad (ft):	2.00
Length of Pad (ft.):	26.5	Width of Pad (ft.):	26.5
Final Length of pad (ft)	26.5	Final width of pad (ft):	26.5
Control Value for Cell D18:	0	Control Value for Cell F18:	0

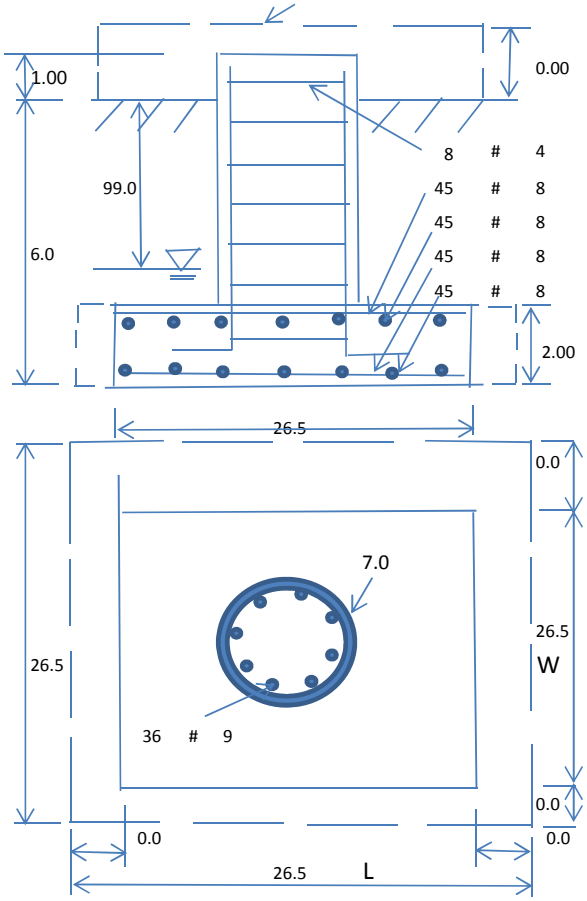

Material Properties and Reabr Info:

Concrete Strength (psi):	4000	Steel Elastic Modulus:	29000	ksi
Vertical bar yield (ksi)	60	Tie steel yield (ksi):	60	
Vertical Rebar Size #:	9	Tie / Stirrup Size #:	4	
Qty. of Vertical Rebars:	36	Tie Spacing (in):	12.0	
Pad Rebar Yield (Ksi):	60	Pad Steel Rebar Size (#):	8	
Concrete Cover (in.):	3	Unit Weight of Concrete:	150.0	pcf

Rebar at the bottom of the concrete pad:

Qty. of Rebar in Pad (L):	45	Qty. of Rebar in Pad (W):	45

Rebar at the top of the concrete pad:

Qty. of Rebar in Pad (L):	45	Qty. of Rebar in Pad (W):	45
Apply 1.35 factor for e/w Per G:	1.35		

Soil Design Parameters:

Soil Unit Weight (pcf):	110.0	Soil Buoyant Weight:	50.0	Pcf		
Water Table B.G.S. (ft):	99.0	Unit Weight of Water:	62.4	pcf	Angle from Top of Pad:	30
Allowable Net Soil Bearing (psf):	3500	Allowable Skin Friction:	1200	Psf	Angle from Bottm of Pad:	25
Consider Friction for O.T.M. (Y/N):	No	Consider Friction for bearing (Y/N):	No		Angle from Bottm of Pad:	25
Consider soil hori. force for O.T.M.:	No	Reduction factor on the maximum soil bearing pressure:				1.00

Foundation Analysis and Design:

Total Dry Soil Volume (cu. Ft.):	2655.06	Total Dry Soil Weight (Kips):	292.06
Total Buoyant Soil Volume (cu. Ft.):	0.00	Total Buoyant Soil Weight (Kips):	0.00
Total Effective Soil Weight (Kips):	292.06	Weight from the Concrete Block at Top (K):	0.00
Total Dry Concrete Volume (cu. Ft.):	1596.92	Total Dry Concrete Weight (Kips):	239.54
Total Buoyant Concrete Volume (cu. Ft.):	0.00	Total Buoyant Concrete Weight (Kips):	0.00
Total Effective Concrete Weight (Kips):	239.54	Total Vertical Load on Base (Kips):	565.96

Check Soil Capacities:

					Load/ Capacity Ratio	
Calculated Maxium Net Soil Pressure under the base (psf):	1460	<	Allowable Soil Bearing (psf):	3500	0.42	OK!
Allowable Foundation Overturning Resistance (SF=1.5, kips-ft.):	4999.3	>	Applied Momont (kips-ft):	2776	0.56	OK!
Factor of Safety Against Overturning (O. R. Moment/Design Moment):	2.70	OK!				

Check the capacities of Reinforceing Concrete:

Strength reduction factor (Flexure and axial tension):	0.90	Strength reduction factor (Shear):		0.75		
Strength reduction factor (Axial compresion):	0.65	Wind Load Factor on Concrete Design:		1.30		
					Load/ Capacity Ratio	
(1) Concrete Pier:						
Vertical Steel Rebar Area (sq. in./each):	1.00		Tie / Stirrup Area (sq. in./each):	0.20		
Calculated Moment Capacity (Mn,Kips-Ft):	6090.2	>	Design Factored Moment (Mu, Kips-F	3533.7	0.58	OK!
Calculated Shear Capacity (Kips):	660.1	>	Design Factored Shear (Kips):	37.4	0.06	OK!
Calculated Tension Capacity (Tn, Kips):	1944.0	>	Design Factored Tension (Tu Kips):	0.0	0.00	OK!
Calculated Compression Capacity (Pn, Kips):	9734.2	>	Design Factored Axial Load (Pu Kips):	44.7	0.00	OK!
Moment & Axial Strength Combination(Pu/Pn+Mu/Mn):	0.58	OK!	Check Tie Spacing (Design/Required):		1	OK!
Pier Reinforcement Ratio:	0.006	Reinforcement Ratio is satisfied per ACI				
(2).Concrete Pad:						
One-Way Design Shear Capacity (L-Direction, Kips):	618.4	>	One-Way Factored Shear (L-D. Kips):	214.3	0.35	OK!
One-Way Design Shear Capacity (W-Direction, Kips):	618.4	>	One-Way Factored Shear (W-D., Kips)	214.3	0.35	OK!
One-Way Design Shear Capacity (Corner-Corner. Kips):	711.3	>	One-Way Factored Shear (C-C, Kips):	278.0	0.39	OK!
Lower Steel Pad Reinforcement Ratio (L-Direct.):	0.0055	OK!	Lower Steel Pad Reinf. Ratio (W-Direc	0.0055		
Lower Steel Pad Moment Capacity (L-Direction. Kips-ft):	3121.7	>	Moment at Bottom (L-Direct. K-Ft):	662.7	0.21	OK!
Lower Steel Pad Moment Capacity (W-Direction. Kips-ft):	3121.7	>	Moment at Bottom (W-Direct. K-Ft):	662.7	0.21	OK!
Lower Steel Pad Moment Capacity (Corner-Corner,K-ft):	4363.5	>	Moment at Bottom (C-C Dir. K-Ft):	937.2	0.21	OK!
Upper Steel Pad Reinforcement Ratio (L-Direct.):	0.0055	OK!	Upper Steel Reinf. Ratio (W-Direct.):	0.0055		
Upper Steel Pad Moment Capacity (L-Direction. Kips-ft):	3121.7	>	Moment at the top (L-Dir Kips-Ft):	505.3	0.16	OK!
Upper Steel Pad Moment Capacity (W-Direction. Kips-ft):	3121.7	>	Moment at the top (W-Dir Kips-Ft):	505.3	0.16	OK!
Upper Steel Pad Moment Capacity (Corner-Corner. K-ft):	4363.5	>	Moment at the top (C-C Direc. K-Ft):	630.0	0.14	OK!

Pier Foundation Design For Monopole

			Date
			12/30/2015
Customer Name:	**AT&T**	**EIA/TIA Standard:**	EIA-222-F
Site Name:	Montano	**Structure Height (Ft.):**	119
Site Number:	CT13555-S-SBA	**Engineer Name:**	J. Tibbetts
Engr. Number:	19665	**Engineer Login ID:**	

Foundation Info Obtained from: Drawings/Calculations

Acceptable overstress (5.0%

Structure Type: Monopole

Analysis or Design? Analysis

Base Reactions (Unfactored)

Axial Load (Kips):	34.4	Shear Force (Kips):	28.8
Uplift Force (Kips):	0.0	Moment (Kips-ft):	2574.2

Foundation Geometries:

Mods required -Yes/No ?:	No			ft.
Diameter of Pier (ft.):	7.0	Depth of Base B. G. S. :	29.0	ft.
Pier Height A. G. (ft.):	1.00			

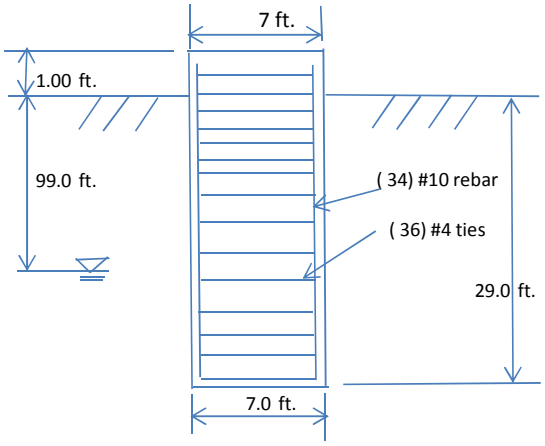

Material Properties and Reabr Info:

Concrete Strength (psi):	4000	Steel Elastic Modulus:	29000	ksi
Vertical bar yield (ksi)	60	Tie steel yield strength:	60	ksi
Vertical Rebar Size #:	10	Tie / Stirrup Size #:	4	
Qty. of Vertical Rebars:	34	Tie Spacing:	12.0	in.
Concrete Cover (in.):	3	Concrete unit weight:	150.0	pcf

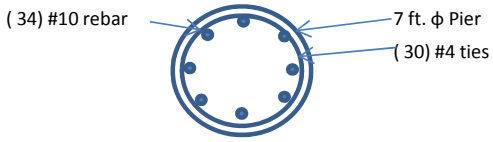

Monopole Pier Foundation

Soil Design Parameters:

Water Table B.G.S. (ft):	99.0	Unit weight of water:	62.4	psf
Ratio of Uplift/Axial Skin Friction:	1.0	Pullout failure Angle:	30	(°)
Skin Frictions are to be obtained from:		Soil Report		

Depth of Layers (ft) Top	Bottom	γ_{soil} (pcf)	ϕ (°)	Cohesion (psf)	Allowable Skin Friction (psf)	Allowable Bearing (psf)	Soil Types					
0.0	3.0	100	0	0	0	0	Sand					
3.0	25.0	110	33	0	500	3000	Sand					
25.0	50.0	105	30	0	800	4000	Sand					
50.0	55.0	100	30	0	800	4000	Sand					

Soil weight Increase Factor for bouyant soils (1.0 to 1.15): 1.1

Foundation Analysis and Design:

Total Dry Soil Volume from Conical Failure (cu. Ft.):	13814	Dry Soil Weight from Conical Failure:	1468	Kips
Total Buoyant Soil Volume from Conical Failure (cu. Ft.):	0	Buoyant Soil Weight from Conical Failure (K	0	Kips
Total Dry Concrete Volume (cu. Ft.):	1155	Total Dry Concrete Weight:	173.2	Kips
Total Buoyant Concrete Volume (cu. Ft.):	0.0	Total Buoyant Concrete Weight:	0.00	Kips
Total Effective Concrete Weight (Kips):	173.2	Total Effective Soil Weight:	1468.0	Kips
Total Effective Vertical Load on Base (Kips):	88.9			

Check Soil Capacities:

					Usage	
Allowable Foundation Overturning Resistance (kips-ft.):	7165.5	>	Applied Momont (kips-ft):	3163	0.44	OK!
Factor of Safety of Passive Soil Resistance against Moment:	4.53	OK!				

Check the capacities of Reinforceing Concrete:

Strength reduction factor (Flexure and axial tension):	0.90	Strength reduction factor (Shear):	0.75
Strength reduction factor (Axial compresion):	0.65	Wind Load Factor on Concrete Design:	1.30

Reinforcing Concrete Pier:

					Usage	
Vertical Steel Rebar Area (sq. in./each):	1.27		Tie / Stirrup Area (sq. in./each):	0.20		
Calculated Moment Capacity (Mn,Kips-Ft):	7293	>	Design Factored Moment (Mu, K-Ft):	3514.5	0.48	OK!
Calculated Shear Capacity (Kips):	1120.9	>	Design Factored Shear (Kips):	319.2	0.28	OK!
Calculated Tension Capacity (Tn, Kips):	2331.7	>	Design Factored Tension (Tu Kips):	0.0	0.00	OK!
Calculated Compression Capacity (Pn, Kips):	9722	>	Design Factored Axial Load (Pu Kips):	44.7	0.00	OK!
Moment & Axial Strength Combination(Tu/Tn+Mu/Mn):	0.49	OK!	Max. Allowable Tie/Stirrup Spacing:	12.00	in.	
Pier Reinforcement Ratio:	0.008	Reinforcement Ratio is satisfied per ACI				