February 13, 2019

Melanie A. Bachman, Executive Director
Connecticut Siting Council
10 Franklin Square
New Britain, CT 06051

Re:	**Notice of Exempt Modification – Antenna and RRU Add**
Property Address:	**188 Moody Road, Enfield CT 06082**
Applicant:	**AT&T Mobility, LLC**

Dear Ms. Bachman:

On behalf of AT&T, please accept this application as notification pursuant to R.C.S.A. §16-50j-73, for construction that constitutes an exempt modification pursuant to R.C.S.A. §16- 50j-72(b) (2).

AT&T currently maintains a wireless telecommunications facility consisting of six (6) wireless telecommunication antennas at an antenna center line height of 158 feet on an existing 192-foot monopole, owned by SBA 2012 TC Assets LLC, 8051 Congress Avenue, Boca Raton FL 33487. AT&T now intends to add (2) 8' Kathrein 800-10966 panel antennas in positions [3] and [4], all sectors, and add (1) RRUS-4415 B30 in position [2], all sectors. In addition, AT&T intends to replace the existing (1) PCS RRU in position [3] with (1) RRUS-8843 B2/B66A, all sectors, and replace the existing [1] 700-band RRU in position 4 with [1] RRUS-4449 B5/B12, all sectors. AT&T is also proposing to add (2) Raycap Squids to their equipment configuration. All the changes will take place on new Site Pro RMPQ-12-H5 mounts, to replace the existing T-arm mounts.

Attached is a summary of the planned modifications including power density calculations reflecting the change in AT&T's operations at the site. Also included is documentation of the structural sufficiency of the tower to accommodate the revised antenna configuration.

Please accept this letter pursuant to Regulation of Connecticut State Agencies §16-50j-73, for construction that constitutes an exempt modification pursuant to R.C.S.A. § 16-5I0j-72(b) (2). In accordance with R.C.S.A., a copy of this letter is being sent to:

- Michael Ludwick -- Mayor, Town of Enfield, CT at 820 Enfield St, Enfield CT 06082
- Laurie Whitten – Director of Development Services, Town of Enfield, CT at 820 Enfield St, Enfield CT 06082
- Troiano Realty Corp -- Property Owner, at 777 Enfield St, Enfield CT 06082
- SBA 2012 TC Assets, LLC – Structure Owner, at 8051 Congress Ave, Boca Raton FL 33487

The following is a list of subsequent decisions by the Connecticut Siting Council:

- **EM-AT&T-049-020311** - AT&T Wireless notice of intent to modify an existing telecommunications facility located at 188 Moody Road, Enfield, Connecticut
- **EM-CING-025-034-049-099-167-070911** – New Cingular Wireless PCS, LLC notice of intent to modify existing telecommunications facilities located at 500 Highland Avenue, Cheshire; 18 Old Ridgebury Road, Danbury; 188 Moody Road, Enfield; 88 Parsonage Road, North Branford; and 77 Pease Road, Woodbridge, Connecticut
- **EM-CING-049-080530** – New Cingular Wireless PCS, LLC notice of intent to modify an existing telecommunications facility located at 188 Moody Road, Enfield, Connecticut
- **EM-AT&T-049-120510** – AT&T Mobility notice of intent to modify an existing telecommunications facility located at 188 Moody Road, Enfield, Connecticut
- **EM-AT&T-049-140114** – American Telephone and Telegraph (AT&T) notice of intent to modify an existing telecommunications facility located at 188 Moody Road, Enfield, Connecticut

- **EM-AT&T-049-170317 -** AT&T notice of intent to modify an existing telecommunications facility located at 188 Moody Road, Enfield, Connecticut

The planned modifications to AT&T's facility fall squarely within those activities explicitly provided for in R.C.S.A. §16-50j-
72(b) (2).

1. The proposed modifications will not result in an increase in the height of the existing tower. AT&T's additional equipment will be installed at the 158-foot level of the 192-foot monopole.
2. The proposed modifications will not involve any changes to ground-mounted equipment and, therefore, will not require and extension of the site boundary.
3. The proposed modifications will not increase the noise levels at the facility by six decibels or more, or to levels that exceed state and local criteria.
4. The operation of the modified facility will not increase radio frequency (RF) emissions at the facility to a level at or above the Federal Communications Commission (FCC) safety standard. A cumulative worst-case RF emissions calculation for AT&T's modified facility is provided in the RF Emissions Compliance Report, included in Tab 2.
5. The proposed modifications will not cause a change or alteration in the physical or environmental characteristics of the site.
6. The tower and its foundation can support AT&T's proposed modifications. (See Structural Analysis Report included in Tab 3).

For the foregoing reasons, AT&T respectfully submits that the proposed modifications to the above referenced telecommunications facility constitutes an exempt modification under R.C.S.A. §16-50j-72(b) (2).

Sincerely,

Ryan Burgdorfer

CC w/enclosures:

Michael Ludwick – Mayor, Town of Enfield, CT
Laurie Whitten – Director of Development Services, Town of Enfield, CT
Troiano Realty Corp. – Property Owner
SBA 2012 TC Assets, LLC – Tower Owner

85 Rangeway Road • Building 3, Suite 102 • North Billerica, MA 01862
p: 978-215-9990 • f: 443.221.2962
www.smartlinkllc.com

PROJECT:	LTE3C/4C/5C/RETROFIT
SITE NUMBER:	CTL05293
FA NUMBER:	10090926
PTN NUMBER:	2051A0KPHT/2051A0KQ9Y/2051AOKQ9A/2051AOKQAP/2051A0KQAQ
PACE NUMBER:	MRCTB035230/MRCTB035245/MRCTB035207/MRCTB035311/MRCTB035313
SBA#:	CT46124
SITE NAME:	ENFIELD - MOODY ROAD
SITE ADDRESS:	188 MOODY ROAD ENFIELD, CT 06082

at&t
550 COCHITUATE ROAD
SUITE 550 13 AND 14
FRAMINGHAM, MA 01701

smartlink
1362 MELLON ROAD
SUITE 140
HANOVER, MD 21076

FULLERTON
ENGINEERING · DESIGN
1100 E. WOODFIELD ROAD, SUITE 500
SCHAUMBURG, ILLINOIS 60173
TEL: 847-908-8400
COA# PEC.0001444
www.FullertonEngineering.com

PROJECT INFORMATION

SITE NAME:	ENFIELD – MOODY ROAD
SITE NUMBER:	CTL05293
SITE ADDRESS:	188 MOODY ROAD ENFIELD, CT 06082
FA NUMBER:	10090926
PTN NUMBER:	2051A0KPHT/2051A0KQ9Y/2051AOKQ9A/2051AOKQAP/2051A0KQAQ
PACE NUMBER:	MRCTB035230/MRCTB035245/MRCTB035207/MRCTB035311/MRCTB035313
USID NUMBER:	25932
SBA NUMBER:	CT46124
APPLICANT:	AT&T WIRELESS 550 COCHITUATE ROAD SUITE 550 13 AND 14 FRAMINGHAM, MA 01701
TOWER OWNER:	SBA COMMUNICATIONS CORPORATION 8051 CONGRESS AVENUE BOCA RATON, FL 33487
JURISDICTION:/ ZONING:	ENFIELD CONNECTICUT / I–1
COUNTY:	HARTFORD
SITE COORDINATES FROM	(RFDS)
LATITUDE:	42.002392° / 42° 00' 08.6"
LONGITUDE:	–72.521499° / –72° 31' 17.4"
GROUND ELEV.:	177'
PROPOSED USE:	TELECOMMUNICATIONS FACILITY
AT&T RF MANAGER:	DEEPAK RATHORE
PHONE:	(860) 965–3068
EMAIL:	dr701e@att.com

PROJECT CONSULTANTS

PROJECT MANAGER:	SMARTLINK
ADDRESS:	85 RANGEWAY ROAD, SUITE 102 NORTH BILLERICA, MA 01862
CONTACT:	EDWARD WEISSMAN (917) 528–1857
EMAIL:	Edward.Weissman@smartlinkllc.com
SITE AQUISITION:	SMARTLINK
ADDRESS:	85 RANGEWAY ROAD, SUITE 102 NORTH BILLERICA, MA 01862
CONTACT:	SHARON KEEFE (978) 930–3918
EMAIL:	Sharon.Keefe@smartlinkllc.com
ENGINEER/ARCHITECT:	FULLERTON ENGINEERING
ADDRESS:	1100 E. WOODFIELD ROAD, SUITE 500 SCHAUMBURG, IL 60173
CONTACT:	MILEN DIMITROV (847) 908–8439
EMAIL:	MDimitrov@FullertonEngineering.com
CONSTRUCTION:	SMARTLINK
ADDRESS:	85 RANGEWAY ROAD, SUITE 102 NORTH BILLERICA, MA 01862
CONTACT:	MARK DONNELLY (617) 515–2080
EMAIL:	mark.donnelly@smartlinkllc.com

SCOPE OF WORK

LTE WCS/AWS/850/700/1900 WILL BE 3C/4C/5C/RETROFIT AT THE SITE WITH BRONZE CONFIGURATION. PROPOSED 3C/4C/5C/RETROFIT PROJECT SCOPE HEREIN BASED ON RFDS ID # 2589691, VERSION 4.00 LAST UPDATED 01/11/19.

- (1) NEW ANTENNA PLATFORM
- (6) NEW ANTENNAS
- (3) NEW RRUS–4415 B30
- (3) NEW RRUS–8843 B2/B66A
- (3) NEW RRUS–4449 B5/B12
- (2) NEW RAYCAP UNITS
- (1) FIBER CABLE AND (4) DC POWER CABLES
- UPGRADE DUS TO (1) NEW 6630
- INSTALL (1) NEW XMU CARD, INSTALL (1) NEW RBS 6630 FOR 5G
- CONTRACTOR SHALL FURNISH ALL MATERIAL WITH THE EXCEPTION OF AT&T SUPPLIED MATERIAL.
- ALL MATERIAL SHALL BE INSTALLED BY THE CONTRACTOR, UNLESS STATED OTHERWISE.

SITE LOCATION MAP

NO SCALE

DIRECTIONS

SCAN QR CODE FOR LINK TO SITE LOCATION MAP

APPLICABLE BUILDING CODES AND STANDARDS

ALL WORK AND MATERIALS SHALL BE PERFORMED AND INSTALLED IN ACCORDANCE WITH THE CURRENT EDITIONS OF THE FOLLOWING CODES AS ADOPTED BY THE LOCAL GOVERNING AUTHORITIES.

BUILDING CODE: 2012 INTERNATIONAL BUILDING CODE
2018 CONNECTICUT STATE BUILDING CODE SUPPLEMENT

ELECTRICAL CODE: 2014 NATIONAL ELECTRIC CODE

- FACILITY IS UNMANNED AND NOT FOR HUMAN HABITATION.
- ADA ACCESS REQUIREMENTS ARE NOT REQUIRED.
- THIS FACILITY DOES NOT REQUIRE POTABLE WATER AND WILL NOT PRODUCE ANY SEWAGE

DRAWING INDEX

T1	TITLE SHEET
SP1	NOTES AND SPECIFICATIONS
SP2	NOTES AND SPECIFICATIONS
A1	COMPOUND PLAN
A2	EQUIPMENT PLAN
A3	ELEVATIONS
A4	ANTENNA PLANS
A5	EQUIPMENT DETAILS
A5A	ANTENNA PLATFORM
A6	ANTENNA & CABLE CONFIGURATION
A7	CABLE NOTES AND COLOR CODING
A8	GROUNDING DETAILS
A9	PLUMBING DIAGRAMS

NOTE: DRAWING SCALES ARE FOR 11"x17" SHEETS UNLESS OTHERWISE NOTED

REV	DATE	DESCRIPTION	BY
0	01/17/19	90% REVIEW	EB
1	02/01/19	FOR PERMIT	KC

I HEREBY CERTIFY THAT THESE DRAWINGS WERE PREPARED BY ME OR UNDER MY DIRECT SUPERVISION AND CONTROL, AND TO THE BEST OF MY KNOWLEDGE AND BELIEF COMPLY WITH THE REQUIREMENTS OF ALL APPLICABLE CODES.

SITE NAME
ENFIELD - MOODY ROAD

SITE NUMBER:
CTL05293

SITE ADDRESS
188 MOODY ROAD
ENFIELD, CT 06082

SHEET NAME
TITLE SHEET

SHEET NUMBER
T1

THESE DRAWINGS ARE THE PROPERTY OF FULLERTON ENGINEERING CONSULTANTS, INC. IT IS FOR THE EXCLUSIVE USE OF THIS PROJECT. ANY RE-USE OF THIS DRAWING WITHOUT THE EXPRESSED WRITTEN CONSENT OF FULLERTON ENGINEERING CONSULTANTS, INC. IS PROHIBITED.

GENERAL CONSTRUCTION

1. FOR THE PURPOSE OF CONSTRUCTION DRAWINGS, THE FOLLOWING DEFINITIONS SHALL APPLY:
   CONTRACTOR/CM – SMARTLINK
   OWNER – AT&T WIRELESS
2. ALL SITE WORK SHALL BE COMPLETED AS INDICATED ON THE DRAWINGS AND AT&T PROJECT SPECIFICATIONS.
3. GENERAL CONTRACTOR SHALL VISIT THE SITE AND SHALL FAMILIARIZE HIMSELF WITH ALL CONDITIONS AFFECTING THE PROPOSED WORK AND SHALL MAKE PROVISIONS. GENERAL CONTRACTOR SHALL BE RESPONSIBLE FOR FAMILIARIZING HIMSELF WITH ALL CONTRACT DOCUMENTS, FIELD CONDITIONS, DIMENSIONS, AND CONFIRMING THAT THE WORK MAY BE ACCOMPLISHED AS SHOWN PRIOR TO PROCEEDING WITH CONSTRUCTION. ANY DISCREPANCIES SHALL BE BROUGHT TO THE ATTENTION OF THE ENGINEER PRIOR TO THE COMMENCEMENT OF WORK.
4. ALL MATERIALS FURNISHED AND INSTALLED SHALL BE IN STRICT ACCORDANCE WITH ALL APPLICABLE CODES, REGULATIONS, AND ORDINANCES. GENERAL CONTRACTOR SHALL ISSUE ALL APPROPRIATE NOTICES AND COMPLY WITH ALL LAWS, ORDINANCES, RULES, REGULATIONS, AND LAWFUL ORDERS OF ANY PUBLIC AUTHORITY REGARDING THE PERFORMANCE OF WORK.
5. ALL WORK CARRIED OUT SHALL COMPLY WITH ALL APPLICABLE MUNICIPAL AND UTILITY COMPANY SPECIFICATIONS AND LOCAL JURISDICTIONAL CODES, ORDINANCES, AND APPLICABLE REGULATIONS.
6. UNLESS NOTED OTHERWISE, THE WORK SHALL INCLUDE FURNISHING MATERIALS, EQUIPMENT, APPURTENANCES, AND LABOR NECESSARY TO COMPLETE ALL INSTALLATIONS AS INDICATED ON THE DRAWINGS.
7. PLANS ARE NOT TO BE SCALED. THESE PLANS ARE INTENDED TO BE A DIAGRAMMATIC OUTLINE ONLY UNLESS OTHERWISE NOTED. DIMENSIONS SHOWN ARE TO FINISH SURFACES UNLESS OTHERWISE NOTED. SPACING BETWEEN EQUIPMENT IS THE MINIMUM REQUIRED CLEARANCE. THEREFORE, IT IS CRITICAL TO FIELD VERIFY DIMENSIONS, SHOULD THERE BE ANY QUESTIONS REGARDING THE CONTRACT DOCUMENTS, THE CONTRACTOR SHALL BE RESPONSIBLE FOR OBTAINING A CLARIFICATION FROM THE ENGINEER PRIOR TO PROCEEDING WITH THE WORK. DETAILS ARE INTENDED TO SHOW DESIGN INTENT. MODIFICATIONS MAY BE REQUIRED TO SUIT JOB DIMENSIONS OR CONDITIONS AND SUCH MODIFICATIONS SHALL BE INCLUDED AS PART OF WORK AND PREPARED BY THE ENGINEER PRIOR TO PROCEEDING WITH WORK.
8. THE CONTRACTOR SHALL INSTALL ALL EQUIPMENT AND MATERIALS IN ACCORDANCE WITH MANUFACTURER'S RECOMMENDATIONS UNLESS SPECIFICALLY STATED OTHERWISE.
9. IF THE SPECIFIED EQUIPMENT CANNOT BE INSTALLED AS SHOWN ON THESE DRAWINGS, THE CONTRACTOR SHALL PROPOSE AN ALTERNATIVE INSTALLATION SPACE FOR APPROVAL BY THE ENGINEER PRIOR TO PROCEEDING.
10. GENERAL CONTRACTOR SHALL BE RESPONSIBLE FOR THE SAFETY OF WORK AREA, ADJACENT AREAS AND BUILDING OCCUPANTS THAT ARE LIKELY TO BE AFFECTED BY THE WORK UNDER THIS CONTRACT. WORK SHALL CONFIRM TO ALL OSHA REQUIREMENTS AND THE LOCAL JURISDICTION.
11. GENERAL CONTRACTOR SHALL COORDINATE WORK AND SCHEDULE WORK ACTIVITIES WITH OTHER DISCIPLINES.
12. ERECTION SHALL BE DONE IN A WORKMANLIKE MANNER BY COMPETENT EXPERIENCED WORKMAN IN ACCORDANCE WITH APPLICABLE CODES AND THE BEST ACCEPTED PRACTICE. ALL MEMBERS SHALL BE LAID PLUMB AND TRUE AS INDICATED ON THE DRAWINGS.
13. SEAL PENETRATIONS THROUGH FIRE RATED AREAS WITH UL LISTED MATERIALS APPROVED BY LOCAL JURISDICTION. CONTRACTOR SHALL KEEP AREA CLEAN, HAZARD FREE, AND DISPOSE OF ALL DEBRIS.
14. WORK PREVIOUSLY COMPLETED IS REPRESENTED BY LIGHT SHADED LINES AND NOTES. THE SCOPE OF WORK FOR THIS PROJECT IS REPRESENTED BY DARK SHADED LINES AND NOTES. CONTRACTOR SHALL NOTIFY THE GENERAL CONTRACTOR OF ANY EXISTING CONDITIONS THAT DEVIATE FROM THE DRAWINGS PRIOR TO BEGINNING CONSTRUCTION.
15. CONTRACTOR SHALL PROVIDE WRITTEN NOTICE TO THE CONSTRUCTION MANAGER 48 HOURS PRIOR TO COMMENCEMENT OF WORK.
16. THE CONTRACTOR SHALL PROTECT EXISTING IMPROVEMENTS, PAVEMENTS, CURBS, LANDSCAPING AND STRUCTURES. ANY DAMAGED PART SHALL BE REPAIRED AT CONTRACTOR'S EXPENSE TO THE SATISFACTION OF THE OWNER.
17. THE CONTRACTOR SHALL CONTACT UTILITY LOCATING SERVICES PRIOR TO THE START OF CONSTRUCTION.
18. GENERAL CONTRACTOR SHALL COORDINATE AND MAINTAIN ACCESS FOR ALL TRADES AND CONTRACTORS TO THE SITE AND/OR BUILDING.
19. THE GENERAL CONTRACTOR SHALL BE RESPONSIBLE FOR SECURITY OF THE SITE FOR THE DURATION OF CONSTRUCTION UNTIL JOB COMPLETION.
20. THE GENERAL CONTRACTOR SHALL MAINTAIN IN GOOD CONDITION ONE COMPLETE SET OF PLANS WITH ALL REVISIONS, ADDENDA, AND CHANGE ORDERS ON THE PREMISES AT ALL TIMES.
21. THE GENERAL CONTRACTOR SHALL PROVIDE PORTABLE FIRE EXTINGUISHERS WITH A RATING OF NOT LESS THAN 2–A OT 2–A:10–B:C AND SHALL BE WITHIN 25 FEET OF TRAVEL DISTANCE TO ALL PORTIONS OF WHERE THE WORK IS BEING COMPLETED DURING CONSTRUCTION.
22. ALL EXISTING ACTIVE SEWER, WATER, GAS, ELECTRIC, AND OTHER UTILITIES SHALL BE PROTECTED AT ALL TIMES, AND WHERE REQUIRED FOR THE PROPER EXECUTION OF THE WORK, SHALL BE RELOCATED AS DIRECTED BY THE ENGINEER. EXTREME CAUTION SHOULD BE USED BY THE CONTRACTOR WHEN EXCAVATING OR DRILLING PIERS AROUND OR NEAR UTILITIES. CONTRACTOR SHALL PROVIDE SAFETY TRAINING FOR THE WORKING CREW. THIS SHALL INCLUDE BUT NOT BE LIMITED TO A) FALL PROTECTION, B) CONFINED SPACE, C) ELECTRICAL SAFETY, AND D) TRENCHING & EXCAVATION.
23. ALL EXISTING INACTIVE SEWER, WATER, GAS, ELECTRIC, AND OTHER UTILITIES, WHICH INTERFERE WITH THE EXECUTION OF THE WORK, SHALL BE REMOVED, CAPPED, PLUGGED OR OTHERWISE DISCONNECTED AT POINTS WHICH WILL NOT INTERFERE WITH THE EXECUTION OF THE WORK, AS DIRECTED BY THE RESPONSIBLE ENGINEER, AND SUBJECT TO THE APPROVAL OF THE OWNER AND/OR LOCAL UTILITIES.
24. THE AREAS OF THE OWNER'S PROPERTY DISTURBED BY THE WORK AND NOT COVERED BY THE TOWER, EQUIPMENT OR DRIVEWAY, SHALL BE GRADED TO A UNIFORM SLOPE, AND STABILIZED TO PREVENT EROSION.
25. CONTRACTOR SHALL MINIMIZE DISTURBANCE TO THE EXISTING SITE DURING CONSTRUCTION. EROSION CONTROL MEASURES, IF REQUIRED DURING CONSTRUCTION, SHALL BE IN CONFORMANCE WITH THE FEDERAL AND LOCAL JURISDICTION FOR EROSION AND SEDIMENT CONTROL.
26. NO FILL OR EMBANKMENT MATERIAL SHALL BE PLACED ON FROZEN GROUNDING. FROZEN MATERIALS, SNOW OR ICE SHALL NOT BE PLACED IN ANY FILL OR EMBANKMENT.
27. THE SUBGRADE SHALL BE BROUGHT TO A SMOOTH UNIFORM GRADE AND COMPACTED TO 95 PERCENT STANDARD PROCTOR DENSITY UNDER PAVEMENT AND STRUCTURES AND 80 PERCENT STANDARD PROCTOR DENSITY IN OPEN SPACE. ALL TRENCHES IN PUBLIC RIGHT OF WAY SHALL BE BACKFILLED WITH FLOWABLE FILL OR OTHER MATERIAL PRE–APPROVED BY THE LOCAL JURISDICTION.
28. ALL NECESSARY RUBBISH, STUMPS, DEBRIS, STICKS, STONES, AND OTHER REFUSE SHALL BE REMOVED FROM THE SITE AND DISPOSED OF IN A LAWFUL MANNER.
29. ALL BROCHURES, OPERATING AND MAINTENANCE MANUALS, CATALOGS, SHOP DRAWINGS, AND OTHER DOCUMENTS SHALL BE TURNED OVER TO THE GENERAL CONTRACTOR AT COMPLETION OF CONSTRUCTION AND PRIOR TO PAYMENT.
30. CONTRACTOR SHALL SUBMIT A COMPLETE SET OF AS–BUILT REDLINES TO THE GENERAL CONTRACTOR UPON COMPLETION OF PROJECT AND PRIOR TO FINAL PAYMENT.
31. CONTRACTOR SHALL LEAVE PREMISES IN A CLEAN CONDITION.
32. THE PROPOSED FACILITY WILL BE UNMANNED AND DOES NOT REQUIRE POTABLE WATER OR SEWER SERVICE, AND IS NOT FOR HUMAN HABITAT (NO HANDICAP ACCESS REQUIRED).
33. OCCUPANCY IS LIMITED TO PERIODIC MAINTENANCE AND INSPECTION, APPROXIMATELY 2 TIMES PER MONTH, BY AT&T TECHNICIANS.
34. NO OUTDOOR STORAGE OR SOLID WASTE CONTAINERS ARE PROPOSED.
35. ALL MATERIAL SHALL BE FURNISHED AND WORK SHALL BE PERFORMED IN ACCORDANCE WITH THE LATEST REVISION AT&T MOBILITY GROUNDING STANDARD "TECHNICAL SPECIFICATION FOR CONSTRUCTION OF GSM/GPRS WIRELESS SITES" AND "TECHNICAL SPECIFICATION FOR FACILITY GROUNDING". IN CASE OF A CONFLICT BETWEEN THE CONSTRUCTION SPECIFICATION AND THE DRAWINGS, THE DRAWINGS SHALL GOVERN.
36. CONTRACTORS SHALL BE RESPONSIBLE FOR OBTAINING ALL PERMITS AND INSPECTIONS REQUIRED FOR CONSTRUCTION. IF CONTRACTOR CANNOT OBTAIN A PERMIT, THEY MUST NOTIFY THE GENERAL CONTRACTOR IMMEDIATELY.
37. CONTRACTOR SHALL REMOVE ALL TRASH AND DEBRIS FROM THE SITE ON A DAILY BASIS.
38. INFORMATION SHOWN ON THESE DRAWINGS WAS OBTAINED FROM SITE VISITS AND/OR DRAWINGS PROVIDED BY THE SITE OWNER. CONTRACTORS SHALL NOTIFY THE ENGINEER OF ANY DISCREPANCIES PRIOR TO ORDERING MATERIAL OR PROCEEDING WITH CONSTRUCTION.
39. NO WHITE STROBE LIGHTS ARE PERMITTED. LIGHTING IF REQUIRED, WILL MEET FAA STANDARDS AND REQUIREMENTS.

ANTENNA MOUNTING

40. DESIGN AND CONSTRUCTION OF ANTENNA SUPPORTS SHALL CONFORM TO CURRENT ANSI/TIA–222 OR APPLICABLE LOCAL CODES.
41. ALL STEEL MATERIALS SHALL BE GALVANIZED AFTER FABRICATION IN ACCORDANCE WITH ASTM A123 "ZINC (HOT–DIP GALVANIZED) COATINGS ON IRON AND STEEL PRODUCTS", UNLESS NOTED OTHERWISE.
42. ALL BOLTS, ANCHORS AND MISCELLANEOUS HARDWARE SHALL BE GALVANIZED IN ACCORDANCE WITH ASTM A153 "ZINC–COATING (HOT–DIP) ON IRON AND STEEL HARDWARE", UNLESS NOTED OTHERWISE.
43. DAMAGED GALVANIZED SURFACES SHALL BE REPAIRED BY COLD GALVANIZING IN ACCORDANCE WITH ASTM A780.
44. ALL ANTENNA MOUNTS SHALL BE INSTALLED WITH LOCK NUTS, DOUBLE NUTS AND SHALL BE TORQUED TO MANUFACTURER'S RECOMMENDATIONS.
45. CONTRACTOR SHALL INSTALL ANTENNA PER MANUFACTURER'S RECOMMENDATION FOR INSTALLATION AND GROUNDING.
46. ALL UNUSED PORTS ON ANY ANTENNAS SHALL BE TERMINATED WITH A 50–OHM LOAD TO ENSURE ANTENNAS PERFORM AS DESIGNED.
47. PRIOR TO SETTING ANTENNA AZIMUTHS AND DOWNTILTS, ANTENNA CONTRACTOR SHALL CHECK THE ANTENNA MOUNT FOR TIGHTNESS AND ENSURE THAT THEY ARE PLUMB. ANTENNA AZIMUTHS SHALL BE SET FROM TRUE NORTH AND BE ORIENTED WITHIN +/– 5% AS DEFINED BY THE RFDS. ANTENNA DOWNTILTS SHALL BE WITHIN +/– 0.5% AS DEFINED BY THE RFDS. REFER TO ND–00246.
48. JUMPERS FROM THE TMA'S MUST TERMINATE TO OPPOSITE POLARIZATION'S IN EACH SECTOR.
49. CONTRACTOR SHALL RECORD THE SERIAL #, SECTOR, AND POSITION OF EACH ACTUATOR INSTALLED AT THE ANTENNAS AND PROVIDE THE INFORMATION TO AT&T.
50. TMA'S SHALL BE MOUNTED ON PIPE DIRECTLY BEHIND ANTENNAS AS CLOSE TO ANTENNA AS FEASIBLE IN A VERTICAL POSITION.

TORQUE REQUIREMENTS

51. ALL RF CONNECTIONS SHALL BE TIGHTENED BY A TORQUE WRENCH.
52. ALL RF CONNECTIONS, GROUNDING HARDWARE AND ANTENNA HARDWARE SHALL HAVE A TORQUE MARK INSTALLED IN A CONTINUOUS STRAIGHT LINE FROM BOTH SIDES OF THE CONNECTION.
    A. RF CONNECTION BOTH SIDES OF THE CONNECTOR.
    B. GROUNDING AND ANTENNA HARDWARE ON THE NUT SIDE STARTING FROM THE THREADS TO THE SOLID SURFACE. EXAMPLE OF SOLID SURFACE: GROUND BAR, ANTENNA BRACKET METAL.

FIBER & POWER CABLE MOUNTING

53. THE FIBER OPTIC TRUNK CABLES SHALL BE INSTALLED INTO CONDUITS, CHANNEL CABLE TRAYS, OR CABLE TRAY. WHEN INSTALLING FIBER OPTIC TRUNK CABLES INTO A CABLE TRAY SYSTEM, THEY SHALL BE INSTALLED INTO AN INTER DUCT AND A PARTITION BARRIER SHALL BE INSTALLED BETWEEN THE 600 VOLT CABLES AND THE INTER DUCT IN ORDER TO SEGREGATE CABLE TYPES. OPTIC FIBER TRUNK CABLES SHALL HAVE APPROVED CABLE RESTRAINTS EVERY (60) SIXTY FEET AND SECURELY FASTENED TO THE CABLE TRAY SYSTEM. NFPA 70 (NEC) ARTICLE 770 RULES SHALL APPLY.
54. THE TYPE TC–ER CABLES SHALL BE INSTALLED INTO CONDUITS, CHANNEL CABLE TRAYS, OR CABLE TRAY AND SHALL BE SECURED AT INTERVALS NOT EXCEEDING (6) SIX FEET. AN EXCEPTION; WHERE TYPE TC–ER CABLES ARE NOT SUBJECT TO PHYSICAL DAMAGE, CABLES SHALL BE PERMITTED TO MAKE A TRANSITION BETWEEN CONDUITS, CHANNEL CABLE TRAYS, OR CABLE TRAY WHICH ARE SERVING UTILIZATION EQUIPMENT OR DEVICES, A DISTANCE (6) SIX FEET SHALL NOT BE EXCEEDED WITHOUT CONTINUOUS SUPPORTING. NFPA 70 (NEC) ARTICLES 336 AND 392 RULES SHALL APPLY.
55. WHEN INSTALLING OPTIC FIBER TRUNK CABLES OR TYPE TC–ER CABLES INTO CONDUITS, NFPA 70 (NEC) ARTICLE 300 RULES SHALL APPLY.

COAXIAL CABLE NOTES

62. TYPES AND SIZES OF THE ANTENNA CABLE ARE BASED ON ESTIMATED LENGTHS. PRIOR TO

    ORDERING CABLE, CONTRACTOR SHALL VERIFY ACTUAL LENGTH BASED ON CONSTRUCTION LAYOUT AND NOTIFY THE PROJECT MANAGER IF ACTUAL LENGTHS EXCEED ESTIMATED LENGTHS.
63. CONTRACTOR SHALL VERIFY THE DOWN–TILT OF EACH ANTENNA WITH A DIGITAL LEVEL.
64. CONTRACTOR SHALL CONFIRM COAX COLOR CODING PRIOR TO CONSTRUCTION.
65. ALL JUMPERS TO THE ANTENNAS FROM THE MAIN TRANSMISSION LINE SHALL BE 1/2" DIA. LDF AND SHALL NOT EXCEED 6'–0".
66. ALL COAXIAL CABLE SHALL BE SECURED TO THE DESIGNED SUPPORT STRUCTURE, IN AN APPROVED MANNER, AT DISTANCES NOT TO EXCEED 4'–0" OC.
67. CONTRACTOR SHALL FOLLOW ALL MANUFACTURER'S RECOMMENDATIONS REGARDING BOTH THE INSTALLATION AND GROUNDING OF ALL COAXIAL CABLES, CONNECTORS, ANTENNAS, AND ALL OTHER EQUIPMENT.
68. CONTRACTOR SHALL GROUND ALL EQUIPMENT. INCLUDING ANTENNAS, RET MOTORS, TMA'S, COAX CABLES, AND RET CONTROL CABLES AS A COMPLETE SYSTEM. GROUNDING SHALL BE EXECUTED BY QUALIFIED WIREMEN IN COMPLIANCE WITH MANUFACTURER'S SPECIFICATION AND RECOMMENDATION.
69. CONTRACTOR SHALL PROVIDE STRAIN–RELIEF AND CABLE SUPPORTS FOR ALL CABLE ASSEMBLIES, COAX CABLES, AND RET CONTROL CABLES. CABLE STRAIN–RELIEFS AND CABLE SUPPORTS SHALL BE APPROVED FOR THE PURPOSE. INSTALLATION SHALL BE IN ACCORDANCE WITH MANUFACTURER'S SPECIFICATIONS AND RECOMMENDATIONS.
70. CONTRACTOR TO VERIFY THAT EXISTING COAX HANGERS ARE STACKABLE SNAP IN HANGERS. IF EXISTING HANGERS ARE NOT STACKABLE SNAP IN HANGERS THE CONTRACTOR SHALL REPLACE EXISTING HANGERS WITH NEW SNAP IN HANGERS IF APPLICABLE.

GENERAL CABLE AND EQUIPMENT NOTES

71. CONTRACTOR SHALL BE RESPONSIBLE TO VERIFY ANTENNA, TMAS, DIPLEXERS, AND COAX CONFIGURATION, MAKE AND MODELS PRIOR TO INSTALLATION.
72. ALL CONNECTIONS FOR HANGERS, SUPPORTS, BRACING, ETC. SHALL BE INSTALLED PER TOWER MANUFACTURER'S RECOMMENDATIONS.
73. CONTRACTOR SHALL REFERENCE THE TOWER STRUCTURAL ANALYSIS/DESIGN DRAWINGS FOR DIRECTIONS ON CABLE DISTRIBUTION/ROUTING.
74. ALL OUTDOOR RF CONNECTORS/CONNECTIONS SHALL BE WEATHERPROOFED, EXCEPT THE RET CONNECTORS, USING BUTYL TAPE AFTER INSTALLATION AND FINAL CONNECTIONS ARE MADE. BUTYL TAPE SHALL HAVE A MINIMUM OF ONE–HALF TAPE WIDTH OVERLAP ON EACH TURN AND EACH LAYER SHALL BE WRAPPED THREE TIMES. WEATHERPROOFING SHALL BE SMOOTH WITHOUT BUCKLING. BUTYL BLEEDING IS NOT ALLOWED.
75. IF REQUIRED TO PAINT ANTENNAS AND/OR COAX:
    A. TEMPERATURE SHALL BE ABOVE 50° F.
    B. PAINT COLOR MUST BE APPROVED BY BUILDING OWNER/LANDLORD.
    C. FOR REGULATED TOWERS, FAA/FCC APPROVED PAINT IS REQUIRED.
    D. DO NOT PAINT OVER COLOR CODING OR ON EQUIPMENT MODEL NUMBERS
76. ALL CABLES SHALL BE GROUNDED WITH COAXIAL CABLE GROUND KITS. FOLLOW THE MANUFACTURER'S RECOMMENDATIONS.
    A. GROUNDING AT THE ANTENNA LEVEL.
    B. GROUNDING AT MID LEVEL, TOWERS WHICH ARE OVER 200'–0", ADDITIONAL CABLE GROUNDING REQUIRED.
    C. GROUNDING AT BASE OF TOWER PRIOR TO TURNING HORIZONTAL.
    D. GROUNDING OUTSIDE THE EQUIPMENT SHELTER AT ENTRY PORT.
    E. GROUNDING INSIDE THE EQUIPMENT SHELTER AT THE ENTRY PORT.
77. ALL PROPOSED GROUND BAR DOWNLEADS ARE TO BE TERMINATED TO THE EXISTING ADJACENT GROUND BAR DOWNLEADS A MINIMUM DISTANCE OF 4'–0" BELOW GROUND BAR. TERMINATIONS MAY BE EXOTHERMIC OR COMPRESSION.

at&t
550 COCHITUATE ROAD
SUITE 550 13 AND 14
FRAMINGHAM, MA 01701

smartlink
1362 MELLON ROAD
SUITE 140
HANOVER, MD 21076

FULLERTON ENGINEERING·DESIGN
1100 E. WOODFIELD ROAD, SUITE 500
SCHAUMBURG, ILLINOIS 60173
TEL: 847-908-8400
COA# PEC.0001444
www.FullertonEngineering.com

REV	DATE	DESCRIPTION	BY
0	01/17/19	90% REVIEW	EB
1	02/01/19	FOR PERMIT	KC

I HEREBY CERTIFY THAT THESE DRAWINGS WERE PREPARED BY ME OR UNDER MY DIRECT SUPERVISION AND CONTROL, AND TO THE BEST OF MY KNOWLEDGE AND BELIEF COMPLY WITH THE REQUIREMENTS OF ALL APPLICABLE CODES.

STATE OF CONNECTICUT · HENRY M. BELLAGAMBA · 25358 · LICENSED PROFESSIONAL ENGINEER

SITE NAME
ENFIELD - MOODY ROAD

SITE NUMBER:
CTL05293

SITE ADDRESS
188 MOODY ROAD
ENFIELD, CT 06082

SHEET NAME
NOTES AND SPECIFICATIONS

SHEET NUMBER
SP1

THESE DRAWINGS ARE THE PROPERTY OF FULLERTON ENGINEERING CONSULTANTS, INC. IT IS FOR THE EXCLUSIVE USE OF THIS PROJECT. ANY RE–USE OF THIS DRAWING WITHOUT THE EXPRESSED WRITTEN CONSENT OF FULLERTON ENGINEERING CONSULTANTS, INC. IS PROHIBITED.

NOTICE

Beyond This Point you are entering a controlled area where RF emissions *may exceed* the FCC General Population Exposure Limits.

Follow all posted signs and site guidelines for working in a RF environment.

at&t

Ref: 47CFR 1.1307(b)

CAUTION

Beyond This Point you are entering a controlled area where RF emissions *may exceed* the FCC Occupational Exposure Limits.

Obey all posted signs and site guidelines for working in a RF environment.

at&t

Ref: 47CFR 1.1307(b)

ALERTING SIGNS

WARNING!

DANGER DO NOT TOUCH TOWER!

SERIOUS "RF" BURN HAZARD!

MAINTAIN AN ADEQUATE CLEARANCE BETWEEN TOWER SUPPORTS AND GUY WIRES

FAILURE TO OBEY ALL POSTED SIGNS AND SITE GUIDELINES FOR WORKING IN A RADIO FREQUENCY ENVIRONMENT COULD RESULT IN SERIOUS INJURY. CONTACT CURRENT MAY EXCEED LIMITS PRESCRIBED IN ANSI/EEE C95.1-1992 FOR CONTROLLED ENVIRONMENTS.

at&t

ALERTING SIGN

PROPERTY OF AT&T

at&t

AUTHORIZED PERSONNEL ONLY

IN CASE OF EMERGENCY, OR PRIOR TO PERFORMING MAINTENANCE ON THIS SITE, CALL 800-638-2822 AND REFERENCE CELL SITE NUMBER_____

INFO SIGN #4

INFORMATION

AT&T operates telecommunications antennas at this location. Remain at least 3 feet away from any antenna and obey all posted signs.

Contact the owner(s) of the antenna(s) before working closer than 3 feet from the antenna.

Contact AT&T at _____ prior to performing any maintenance or repairs near AT&T antennas. This is Site#_____

Contact the management office if this door/hatch/gate is found unlocked.

INFORMACION

En esta propiedad se ubican antenas de telecomunicationes operadas por AT&T. Favor mantener una distancia de no menos de 3 pies y obedecer todos los avisos.

Comuniquese con el propietario o los propicatarios de las antenas antes de trabajar o caminar a una distancia de menos de 3 pies de la antena.

Comuniquese con AT&T _____antes de realizar cualquier mantenimiento o reparaciones cerca de la antenas de AT&T.

Esta es la estacion base numero_____

Favor comunicarse con la oficina de la administracion del edificio si esta puerta o compuerta se encuentra sin candado.

at&t

INFO SIGN #1

INFORMATION

ACTIVE ANTENNAS ARE MOUNTED

☐ ON THE OUTSIDE OF THIS BUILDING

☐ BEHIND THIS PANEL

☐ ON THIS STRUCTURE

STAY BACK A MINIMUM OF 3 FEET FROM THESE ANTENNAS

Contact AT&T at _____ and follow their instructions prior to performing any maintenance or repairs closer than 3 feet from the antennas.

This is AT&T site# _____

at&t

INFO SIGN #2

ALERTING SIGN
(FOR CELL SITE BATTERIES)

ALERTING SIGN
(FOR DIESEL FUEL)

ALERTING SIGN
(FOR PROPANE)

STAY BACK 3 FEET FROM ANTENNA

at&t

INFO SIGN #3

GENERAL SIGNAGE GUIDELINES

STRUCTURE TYPE	INFO SIGN #1	INFO SIGN #2	INFO SIGN #3	INFO SIGN #4	STRIPING	NOTICE SIGN	CAUTION SIGN
TOWERS							
MONOPOLE/MONOPINE/MONOPALM	ENTRANCE GATES, SHELTER DOORS OR ON THE OUTDOOR CABINETS	CLIMBING SIDE OF THE TOWER	ON BACKSIDE OF ANTENNAS	ENTRANCE GATES, SHELTER DOORS OR ON THE OUTDOOR CABINETS			AT THE HEIGHT OF THE FIRST CLIMBING STEP, MIN 9 FT ABOVE GROUND
SEC TOWERS/TOWERS WITH HIGH VOLTAGE	ENTRANCE GATES, SHELTER DOORS OR ON THE OUTDOOR CABINETS	CLIMBING SIDE OF THE TOWER	ON BACKSIDE OF ANTENNAS	ENTRANCE GATES, SHELTER DOORS OR ON THE OUTDOOR CABINETS			
LIGHT POLES/FLAG POLES	ENTRANCE GATES, SHELTER DOORS OR ON THE OUTDOOR CABINETS	ON THE POLE, NO LESS THAN 3FT BELOW THE ANTENNA AND LESS THAN 9FT ABOVE GROUND	ON BACKSIDE OF ANTENNAS	ENTRANCE GATES, SHELTER DOORS OR ON THE OUTDOOR CABINETS			
UTILITY WOOD POLES (JPA)	ENTRANCE GATES, SHELTER DOORS OR ON THE OUTDOOR CABINETS	ON THE POLE, NO LESS THAN 3FT BELOW THE ANTENNA AND LESS THAN 9FT ABOVE GROUND	ON BACKSIDE OF ANTENNAS	ENTRANCE GATES, SHELTER DOORS OR ON THE OUTDOOR CABINETS		IF GP MAX VALUE OF MPE AT ANTENNA LEVEL IS: 0-99%; NOTICE SIGN; OVER 99%: CAUTION SIGN AT NO LESS THAN 3FT BELOW ANTENNA AND 9FT ABOVE GROUND	
MICROCELLS MOUNTED ON NON-JPA POLES	ENTRANCE GATES, SHELTER DOORS OR ON THE OUTDOOR CABINETS	ON THE POLE, NO LESS THAN 3FT BELOW THE ANTENNA AND LESS THAN 9FT ABOVE GROUND	ON BACKSIDE OF ANTENNAS	ENTRANCE GATES, SHELTER DOORS OR ON THE OUTDOOR CABINETS		NOTICE OR CAUTION SIGN AT NO LESS THAN 9FT ABOVE GROUND: ONLY IF THE EXPOSURE EXCEEDS 90% OF THE GENERAL PUBLIC EXPOSURE AT EXPOSURE AT 6FT ABOVE GROUND OR AT OUTSIDE OF SURFACE OF ADJACENT BUILDING	
TOWERS							
AT ALL ACCESS POINTS TO THE ROOF	X			X			
ON ANTENNAS	X		X	X			
CONCEALED ANTENNAS	X	X		X			
ANTENNAS MOUNTED FACING OUTSIDE THE BUILDING	X	X		X			
ANTENNAS ON SUPPORT STRUCTURE	X	X		X			
ROOFVIEW GRAPH							
RADIATION AREA IS WITHIN 3FT FROM ANTENNA	X	ADJACENT TO EACH ANTENNA		X		EITHER NOTICE OR CAUTION SIGN (BASED ON ROOFVIEW RESULTS) AT ANTENNA /BARRIER	
RADIATION AREA IS BEYOND 3FT FROM ANTENNA	X	ADJACENT TO EACH ANTENNA		X	DIAGONAL, YELLOW STRIPING AS TO ROOFVIEW GRAPH		
CHURCH STEEPLES	ACCESS TO STEEPLE	ADJACENT TO ANTENNAS IF ANTENNAS ARE CONCEALED	ON BACKSIDE OF ANTENNAS	ACCESS TO STEEPLE			CAUTION SIGN AT THE ANTENNAS
WATER STATIONS	ACCESS TO LADDER	ADJACENT TO ANTENNAS IF ANTENNAS ARE CONCEALED	ON BACKSIDE OF ANTENNAS	ACCESS TO LADDER			CAUTION SIGN BESIDE INFO SIGN #1, MIN. 9FT ABOVE GROUND

NOTES FOR ROOFTOP SITES:

1. EITHER NOTICE OR CAUTION SIGNS NEED TO BE POSTED AT EACH SECTOR AS CLOSE AS POSSIBLE TO: THE OUTER EDGE OF THE STRIPED OFF AREA OR THE OUTER ANTENNAS OF THE SECTOR
2. IF ROOFVIEWS SHOWS: ONLY BLUE = NOTICE SIGN, BLUE AND YELLOW = CAUTION SIGN, ONLY YELLOW = CAUTION SIGN TO BE INSTALLED
3. SHOULD THE REQUIRED STRIPING AREAS INTERFERE WITH ANY STRUCTURE OR EQUIPMENT (A/C, VENTS, ROOF HATCH, DOORS, OTHER ANTENNAS, DISHES, ETC.). PLEASE NOTIFY AT&T TO MODIFY THE STRIPING AREA, PRIOR TO STARTING THE WORK.

SIGNAGE GUIDELINES CHART

at&t
550 COCHITUATE ROAD
SUITE 550 13 AND 14
FRAMINGHAM, MA 01701

smartlink
1362 MELLON ROAD
SUITE 140
HANOVER, MD 21076

FULLERTON ENGINEERING·DESIGN
1100 E. WOODFIELD ROAD, SUITE 500
SCHAUMBURG, ILLINOIS 60173
TEL: 847-908-8400
COA# PEC.0001444
www.FullertonEngineering.com

REV	DATE	DESCRIPTION	BY
0	01/17/19	90% REVIEW	EB
1	02/01/19	FOR PERMIT	KC

I HEREBY CERTIFY THAT THESE DRAWINGS WERE PREPARED BY ME OR UNDER MY DIRECT SUPERVISION AND CONTROL, AND TO THE BEST OF MY KNOWLEDGE AND BELIEF COMPLY WITH THE REQUIREMENTS OF ALL APPLICABLE CODES.

STATE OF CONNECTICUT · HENRY M. BELLAGAMBA · 25358 · LICENSED PROFESSIONAL ENGINEER

SITE NAME
ENFIELD - MOODY ROAD

SITE NUMBER:
CTL05293

SITE ADDRESS
188 MOODY ROAD
ENFIELD, CT 06082

SHEET NAME
NOTES AND SPECIFICATIONS

SHEET NUMBER
SP2

THESE DRAWINGS ARE THE PROPERTY OF FULLERTON ENGINEERING CONSULTANTS, INC. IT IS FOR THE EXCLUSIVE USE OF THIS PROJECT. ANY RE-USE OF THIS DRAWING WITHOUT THE EXPRESSED WRITTEN CONSENT OF FULLERTON ENGINEERING CONSULTANTS, INC. IS PROHIBITED.

PROJECT# 2018.0171. E084

ABBREVIATIONS

AFF	ABOVE FINISHED FLOOR
AGL	ABOVE GRADE LEVEL
AMSL	ABOVE MEAN SEA LEVEL
APPROX	APPROXIMATE
ATS	AUTOMATIC TRANSFER SWITCH
AWG	AMERICAN WIRE GAUGE
BLDG	BUILDING
BTS	BASE TRANSMISSION STATION
℄	CENTERLINE
CLR	CLEAR
COL	COLUMN
CONC	CONCRETE
CND	CONDUIT
DWG	DRAWING
FT	FOOT(FEET)
EGB	EQUIPMENT GROUND BAR
ELEC	ELECTRICAL
EMT	ELECTRICAL METALLIC TUBING
ELEV	ELEVATION
EQUIP	EQUIPMENT
(E)	EXISTING
EXT	EXTERIOR
FND	FOUNDATION
F	FIBER
FIF	FACILITY INTERFACE FRAME
GA	GAUGE
GALV	GALVANIZED
GPS	GLOBAL POSITIONING SYSTEM
GND	GROUND
GSM	GLOBAL SYSTEM FOR MOBILE COMMUNICATION
LTE	LONG TERM EVOLUTION
MAX	MAXIMUM
MCPA	MULTI-CARRIER POWER AMPLIFIER
MFR	MANUFACTURER
MGB	MASTER GROUND BAR
MIN	MINIMUM
MTS	MANUAL TRANSFER SWITCH
N.T.S.	NOT TO SCALE
O.C.	ON CENTER
OE/OT	OVERHEAD ELECTRIC/TELCO
PPC	POWER PROTECTION CABINET
PL	PROPERY LINE
RBS	RADIO BASED STATION
RET	REMOTE ELECTRIC TILT
RRU	REMOTE RADIO UNIT
RGS	RIGID GALVANIZED STEEL
IN	INCH(ES)
INT	INTERIOR
LB(S), #	POUND(S)
SF	SQUARE FOOT
STL	STEEL
TMA	TOWER MOUNTED AMPLIFIER
TYP	TYPICAL
UE/UT	UNDERGROUND ELECTRIC/TELCO
UNO	UNLESS NOTED OTHERWISE
UMTS	UNIVERSAL MOBILE TELE-COMMUNICATION SYSTEM
VIF	VERIFY IN FIELD
W/	WITH
XFMR	TRANSFORMER

SYMBOLS

- REVISION
- WORK POINT
- UTILITY POLE
- COMPRESSED STONE
- BRICK
- GRAVEL
- CONCRETE
- MASONRY
- EARTH
- STEEL
- CENTERLINE
- PROPERTY LINE
- LEASE LINE
- EASEMENT LINE
- CHAIN LINK FENCE
- WOOD FENCE
- UE — BELOW GRADE ELECTRIC
- UT — BELOW GRADE TELEPHONE
- OE/OT — OVERHEAD ELECTRIC/TELEPHONE
- SECTION REFERENCE (A / S-1)

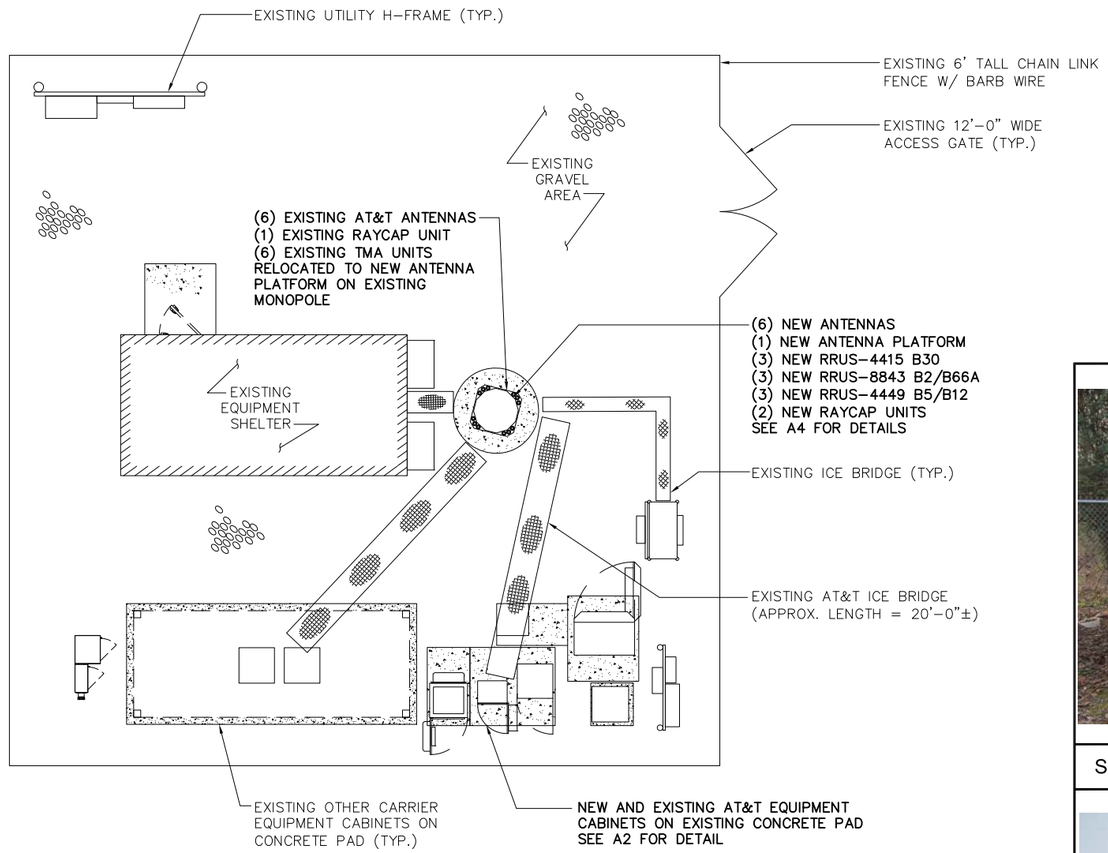

COMPOUND PLAN — 0 2' 4' 8' 16' — SCALE: 3/32" = 1'-0" — 1

SITE PHOTO 1 — SCALE: N.T.S. — 2

SITE PHOTO 2 — SCALE: N.T.S. — 3

at&t
550 COCHITUATE ROAD
SUITE 550 13 AND 14
FRAMINGHAM, MA 01701

smartlink
1362 MELLON ROAD
SUITE 140
HANOVER, MD 21076

FULLERTON ENGINEERING·DESIGN
1100 E. WOODFIELD ROAD, SUITE 500
SCHAUMBURG, ILLINOIS 60173
TEL: 847-908-8400
COA# PEC.0001444
www.FullertonEngineering.com

REV	DATE	DESCRIPTION	BY
0	01/17/19	90% REVIEW	EB
1	02/01/19	FOR PERMIT	KC

I HEREBY CERTIFY THAT THESE DRAWINGS WERE PREPARED BY ME OR UNDER MY DIRECT SUPERVISION AND CONTROL, AND TO THE BEST OF MY KNOWLEDGE AND BELIEF COMPLY WITH THE REQUIREMENTS OF ALL APPLICABLE CODES.

STATE OF CONNECTICUT — HENRY M. BELLAGAMBA — 25358 — LICENSED PROFESSIONAL ENGINEER

SITE NAME
ENFIELD - MOODY ROAD

SITE NUMBER:
CTL05293

SITE ADDRESS
188 MOODY ROAD
ENFIELD, CT 06082

SHEET NAME
COMPOUND PLAN

SHEET NUMBER
A1

THESE DRAWINGS ARE THE PROPERTY OF FULLERTON ENGINEERING CONSULTANTS, INC. IT IS FOR THE EXCLUSIVE USE OF THIS PROJECT. ANY RE-USE OF THIS DRAWING WITHOUT THE EXPRESSED WRITTEN CONSENT OF FULLERTON ENGINEERING CONSULTANTS, INC. IS PROHIBITED.

PROJECT# 2018.0171. E084

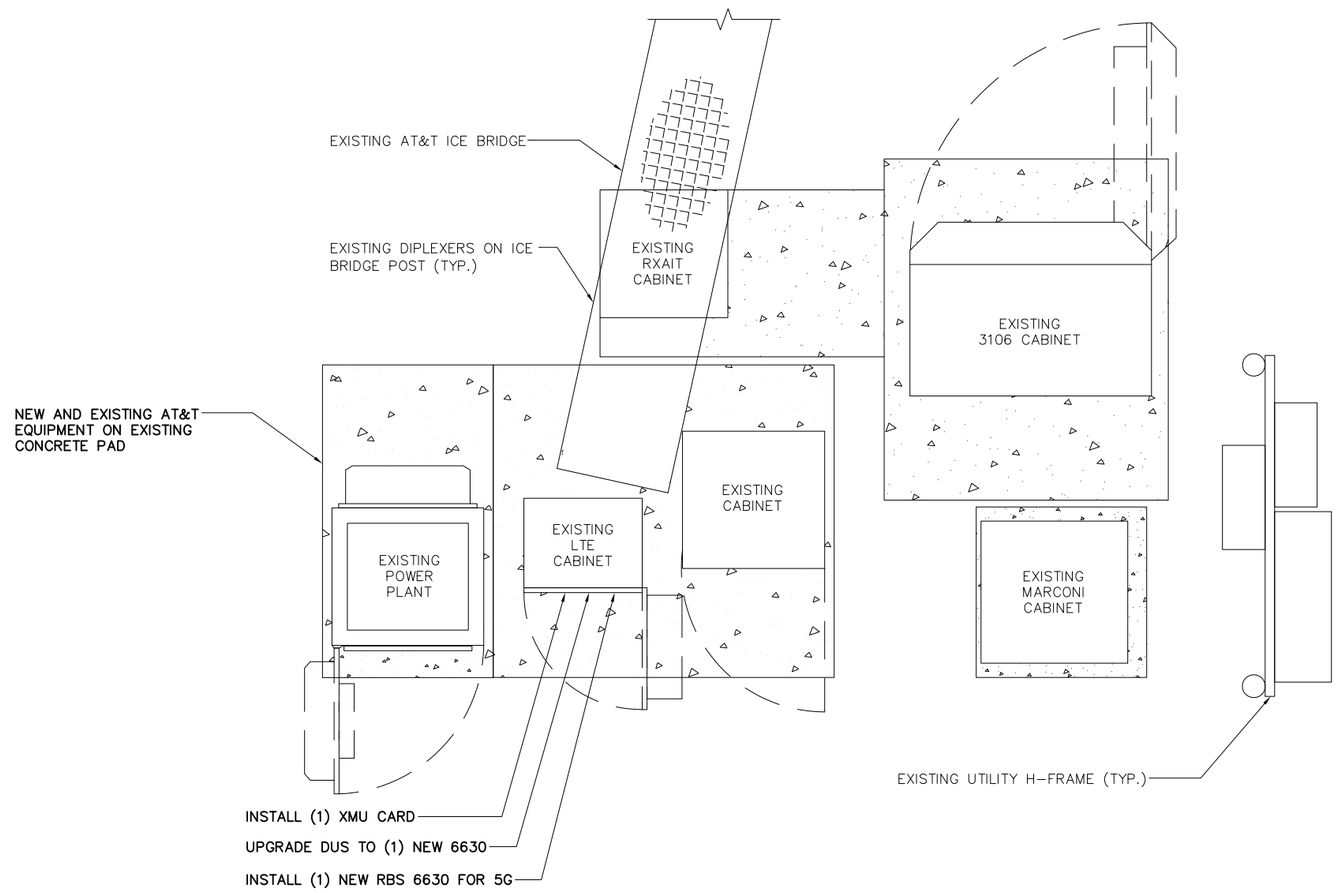

EQUIPMENT PLAN

0 6" 1' 2' 4'

SCALE: 3/8" = 1'-0"

1

at&t
550 COCHITUATE ROAD
SUITE 550 13 AND 14
FRAMINGHAM, MA 01701

smartlink
1362 MELLON ROAD
SUITE 140
HANOVER, MD 21076

FULLERTON ENGINEERING·DESIGN
1100 E. WOODFIELD ROAD, SUITE 500
SCHAUMBURG, ILLINOIS 60173
TEL: 847-908-8400
COA# PEC.0001444
www.FullertonEngineering.com

REV	DATE	DESCRIPTION	BY
0	01/17/19	90% REVIEW	EB
1	02/01/19	FOR PERMIT	KC

I HEREBY CERTIFY THAT THESE DRAWINGS WERE PREPARED BY ME OR UNDER MY DIRECT SUPERVISION AND CONTROL, AND TO THE BEST OF MY KNOWLEDGE AND BELIEF COMPLY WITH THE REQUIREMENTS OF ALL APPLICABLE CODES.

STATE OF CONNECTICUT
HENRY M. BELLAGAMBA
25358
LICENSED PROFESSIONAL ENGINEER

SITE NAME
ENFIELD - MOODY ROAD

SITE NUMBER:
CTL05293

SITE ADDRESS
188 MOODY ROAD
ENFIELD, CT 06082

SHEET NAME
EQUIPMENT PLAN

SHEET NUMBER
A2

THESE DRAWINGS ARE THE PROPERTY OF FULLERTON ENGINEERING CONSULTANTS, INC. IT IS FOR THE EXCLUSIVE USE OF THIS PROJECT. ANY RE-USE OF THIS DRAWING WITHOUT THE EXPRESSED WRITTEN CONSENT OF FULLERTON ENGINEERING CONSULTANTS, INC. IS PROHIBITED.

PROJECT# 2018.0171. E084

NOTES:

1. CALCULATIONS FOR THE STRUCTURE WERE PREPARED BY OTHERS AND THOSE CALCULATIONS CERTIFY THE CAPACITY OF THE STRUCTURE TO SUPPORT THE NEW EQUIPMENT
2. CALCULATIONS FOR THE ANTENNA MOUNTS WERE PREPARED BY FULLERTON AND THOSE CALCULATIONS CERTIFY THE CAPACITY OF THE STRUCTURE TO SUPPORT THE NEW EQUIPMENT
3. CABLES NOT SHOWN FOR CLARITY

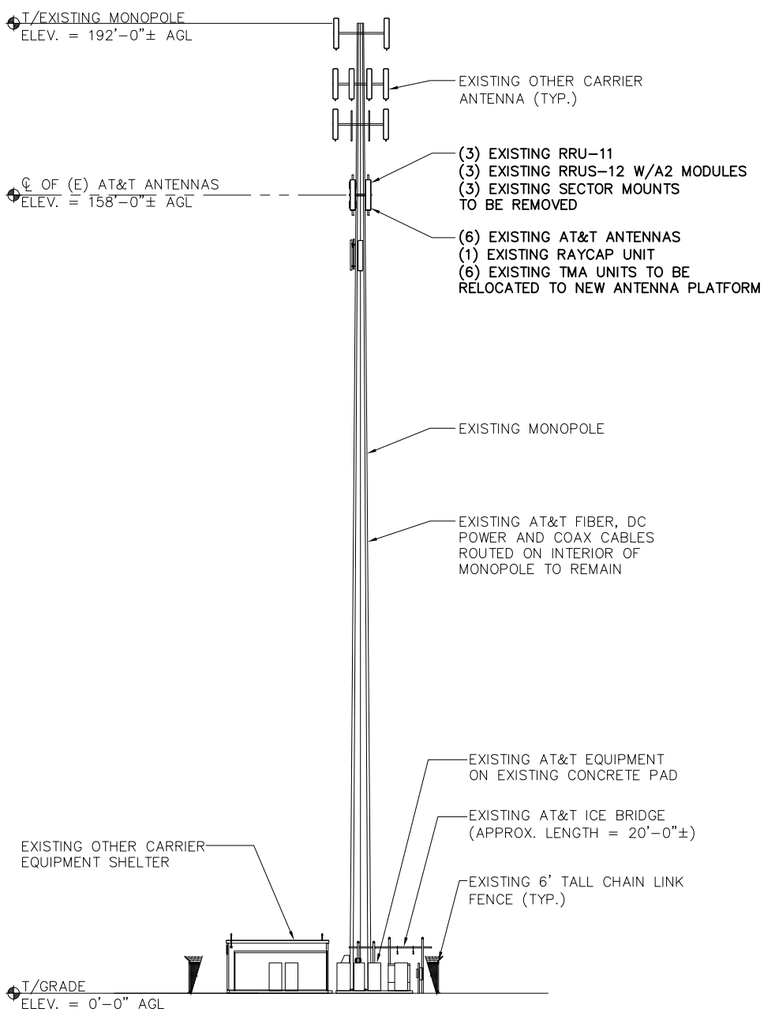

EXISTING ELEVATION

0 15 30 45 SCALE: 1" = 30'-0" 1

NOTES:

1. 3 FEET MINIMUM SEPARATION BETWEEN LTE ANTENNAS
2. 6 FEET MINIMUM SEPARATION BETWEEN 700DE & 700BC

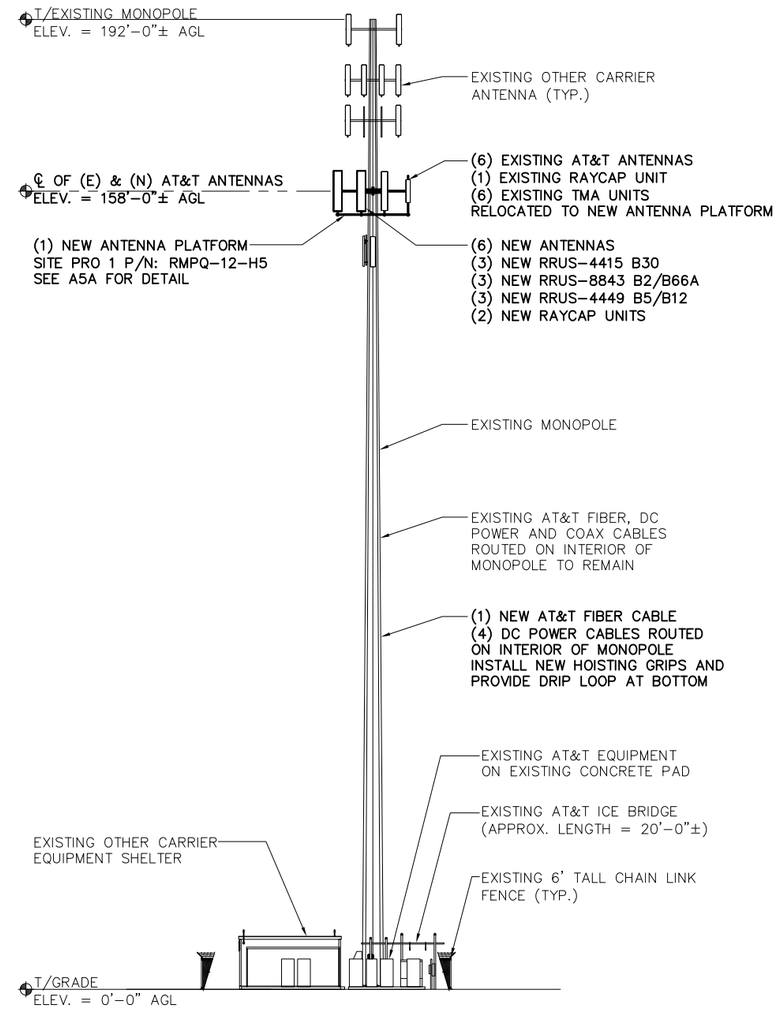

NEW ELEVATION

0 15 30 45 SCALE: 1" = 30'-0" 2

at&t
550 COCHITUATE ROAD
SUITE 550 13 AND 14
FRAMINGHAM, MA 01701

smartlink
1362 MELLON ROAD
SUITE 140
HANOVER, MD 21076

FULLERTON ENGINEERING·DESIGN
1100 E. WOODFIELD ROAD, SUITE 500
SCHAUMBURG, ILLINOIS 60173
TEL: 847-908-8400
COA# PEC.0001444
www.FullertonEngineering.com

REV	DATE	DESCRIPTION	BY
0	01/17/19	90% REVIEW	EB
1	02/01/19	FOR PERMIT	KC

I HEREBY CERTIFY THAT THESE DRAWINGS WERE PREPARED BY ME OR UNDER MY DIRECT SUPERVISION AND CONTROL, AND TO THE BEST OF MY KNOWLEDGE AND BELIEF COMPLY WITH THE REQUIREMENTS OF ALL APPLICABLE CODES.

STATE OF CONNECTICUT
HENRY M. BELLAGAMBA
25358
LICENSED PROFESSIONAL ENGINEER

SITE NAME
ENFIELD - MOODY ROAD

SITE NUMBER:
CTL05293

SITE ADDRESS
188 MOODY ROAD
ENFIELD, CT 06082

SHEET NAME
ELEVATIONS

SHEET NUMBER
A3

THESE DRAWINGS ARE THE PROPERTY OF FULLERTON ENGINEERING CONSULTANTS, INC. IT IS FOR THE EXCLUSIVE USE OF THIS PROJECT. ANY RE-USE OF THIS DRAWING WITHOUT THE EXPRESSED WRITTEN CONSENT OF FULLERTON ENGINEERING CONSULTANTS, INC. IS PROHIBITED.

PROJECT# 2018.0171. E084

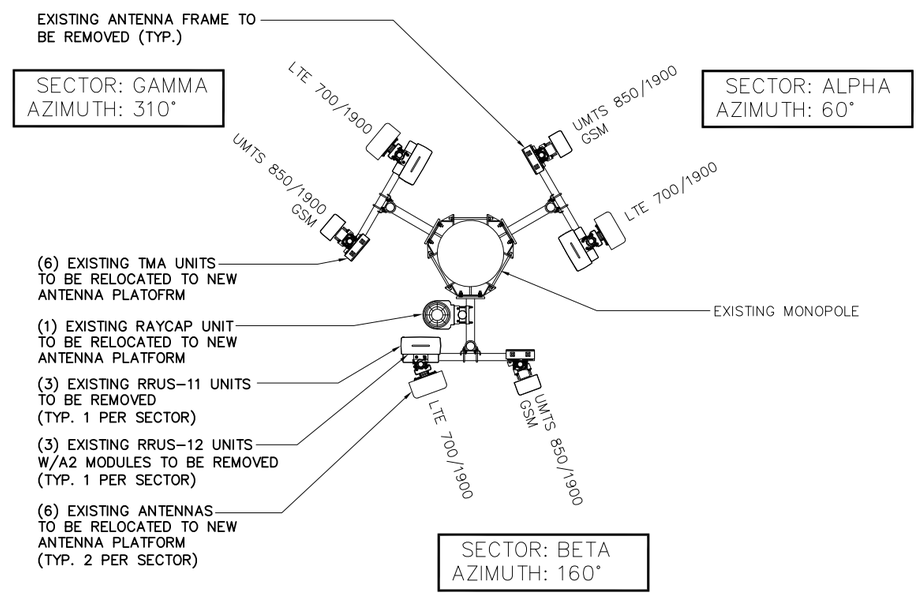

EXISTING ANTENNA PLAN

0 1' 2' 4' 8'

SCALE: 3/16" = 1'-0"

1

NOTES:
1. EXISTING ANTENNA MOUNTING PIPE TO BE REUSED, RELOCATED OR REPLACED AS REQUIRED
2. IF REQUIRED INSTALL NEW GALV. MOUNTING PIPE(S) 2.5 STD. (2-7/8" O.D.)

NOTES:
1. 3 FEET MINIMUM SEPARATION BETWEEN LTE ANTENNAS
2. 6 FEET MINIMUM SEPARATION BETWEEN 700DE & 700BC

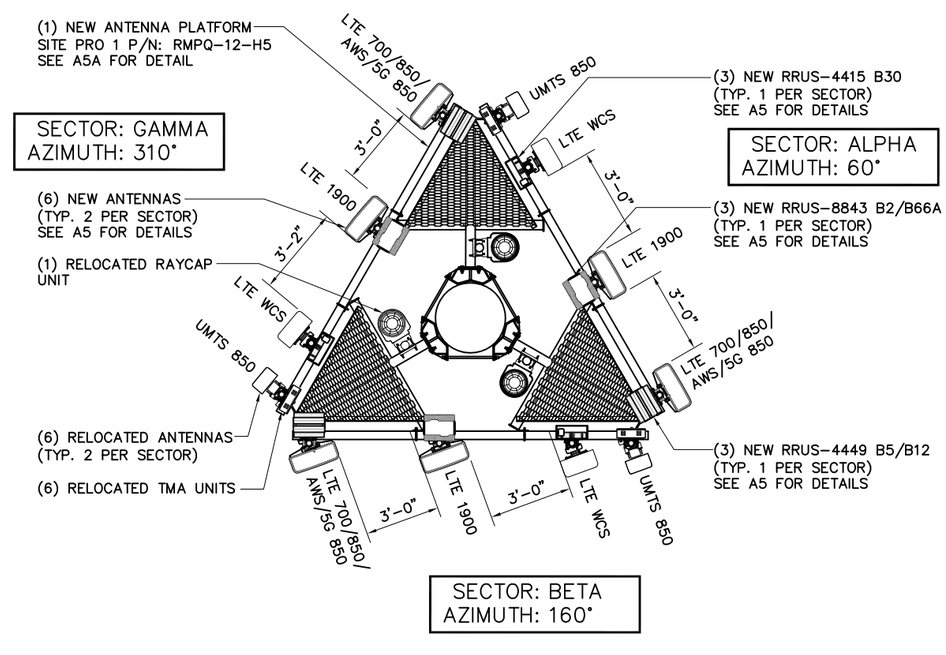

FINAL ANTENNA PLAN

0 1' 2' 4' 8'

SCALE: 3/16" = 1'-0"

2

at&t
550 COCHITUATE ROAD
SUITE 550 13 AND 14
FRAMINGHAM, MA 01701

smartlink
1362 MELLON ROAD
SUITE 140
HANOVER, MD 21076

FULLERTON ENGINEERING·DESIGN
1100 E. WOODFIELD ROAD, SUITE 500
SCHAUMBURG, ILLINOIS 60173
TEL: 847-908-8400
COA# PEC.0001444
www.FullertonEngineering.com

REV	DATE	DESCRIPTION	BY
0	01/17/19	90% REVIEW	EB
1	02/01/19	FOR PERMIT	KC

I HEREBY CERTIFY THAT THESE DRAWINGS WERE PREPARED BY ME OR UNDER MY DIRECT SUPERVISION AND CONTROL, AND TO THE BEST OF MY KNOWLEDGE AND BELIEF COMPLY WITH THE REQUIREMENTS OF ALL APPLICABLE CODES.

SITE NAME

ENFIELD - MOODY ROAD

SITE NUMBER:

CTL05293

SITE ADDRESS

188 MOODY ROAD
ENFIELD, CT 06082

SHEET NAME

ANTENNA PLANS

SHEET NUMBER

A4

THESE DRAWINGS ARE THE PROPERTY OF FULLERTON ENGINEERING CONSULTANTS, INC. IT IS FOR THE EXCLUSIVE USE OF THIS PROJECT. ANY RE-USE OF THIS DRAWING WITHOUT THE EXPRESSED WRITTEN CONSENT OF FULLERTON ENGINEERING CONSULTANTS, INC. IS PROHIBITED.

PROJECT# 2018.0171. E084

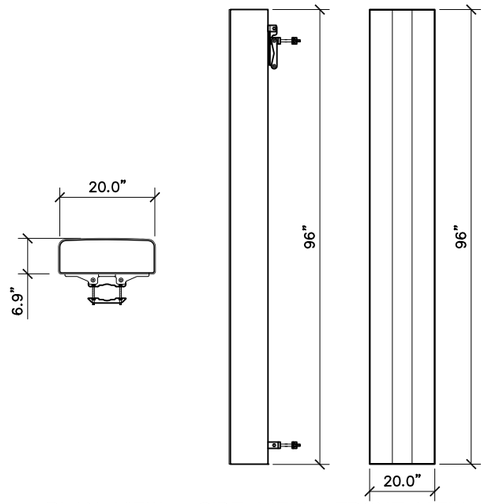

KATHREIN – 80010966

FREQUENCY RANGE	698–806 MHz 791–862 MHz 824–894 MHz 880–960 MHz
ANTENNA (NET WEIGHT)	114.6 Lbs
SIZE	96"x20"x6.9"

ANTENNA SPEC SCALE: N.T.S. 1

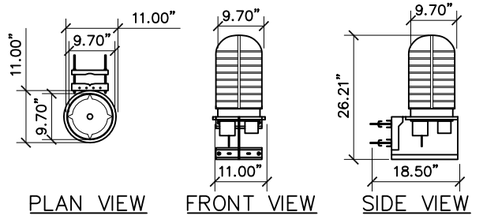

RAYCAP – DC6–48–60–18–8F

TOWER DC OVER VOLTAGE PROTECTION POWER CONNECTION SOLUTION

UNIT WEIGHT 32.8 Lbs

RAYCAP SPEC SCALE: N.T.S. 2

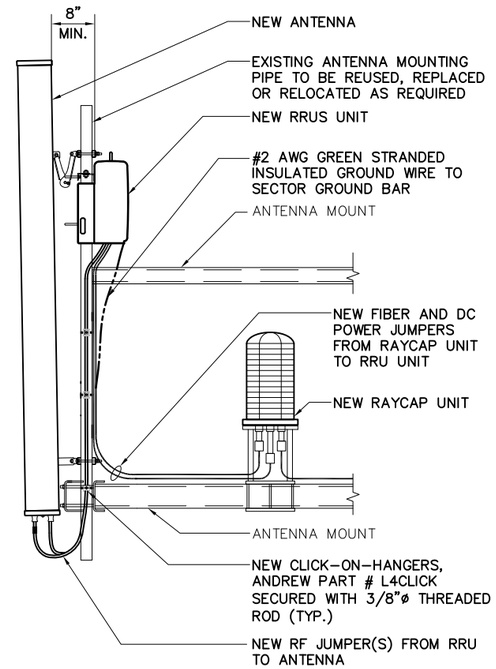

ANTENNA SCHEMATIC SCALE: N.T.S. 3

NOT USED SCALE: N.T.S. 4

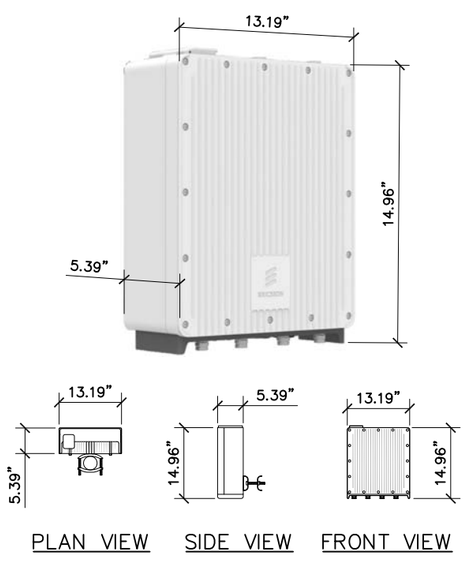

ERICSSON – RRUS 4415 B30

TOTAL WEIGHT 46.0 Lbs

RRU SPEC SCALE: N.T.S. 5

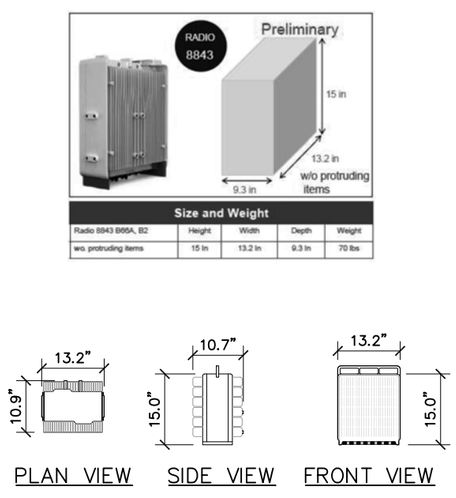

ERICCSON – RADIO B2 & B66

DUAL BAND REMOTE RADIO

FREQUENCY B2	UPLINK 1850–1910 MHz DOWNLINK 1930–1990 MHz
FREQUENCY B66	UPLINK 1710–1780 MHz DOWN LINK 2110–2180 MHz
TOTAL WEIGHT	71.9 Lbs

RRU SPEC SCALE: N.T.S. 6

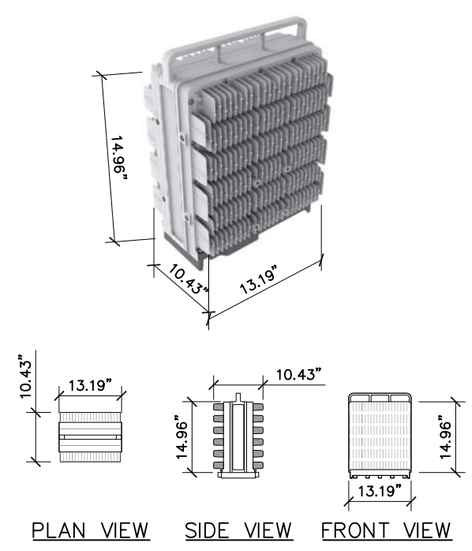

ERICSSON

RADIO 4449 DUAL B5 & B12

AISG TMA & RET SUPPORT

4TX/4RX PER BAND (B5 & B12)

WEIGHT ~73 Lbs

RRU SPEC SCALE: N.T.S. 7

NOT USED SCALE: N.T.S. 8

at&t
550 COCHITUATE ROAD
SUITE 550 13 AND 14
FRAMINGHAM, MA 01701

smartlink
1362 MELLON ROAD
SUITE 140
HANOVER, MD 21076

FULLERTON ENGINEERING·DESIGN
1100 E. WOODFIELD ROAD, SUITE 500
SCHAUMBURG, ILLINOIS 60173
TEL: 847-908-8400
COA# PEC.0001444
www.FullertonEngineering.com

REV	DATE	DESCRIPTION	BY
0	01/17/19	90% REVIEW	EB
1	02/01/19	FOR PERMIT	KC

I HEREBY CERTIFY THAT THESE DRAWINGS WERE PREPARED BY ME OR UNDER MY DIRECT SUPERVISION AND CONTROL, AND TO THE BEST OF MY KNOWLEDGE AND BELIEF COMPLY WITH THE REQUIREMENTS OF ALL APPLICABLE CODES.

STATE OF CONNECTICUT · HENRY M. BELLAGAMBA · 25358 · LICENSED PROFESSIONAL ENGINEER

SITE NAME

ENFIELD - MOODY ROAD

SITE NUMBER:

CTL05293

SITE ADDRESS

188 MOODY ROAD
ENFIELD, CT 06082

SHEET NAME

EQUIPMENT DETAILS

SHEET NUMBER

A5

THESE DRAWINGS ARE THE PROPERTY OF FULLERTON ENGINEERING CONSULTANTS, INC. IT IS FOR THE EXCLUSIVE USE OF THIS PROJECT. ANY RE-USE OF THIS DRAWING WITHOUT THE EXPRESSED WRITTEN CONSENT OF FULLERTON ENGINEERING CONSULTANTS, INC. IS PROHIBITED.

PROJECT# 2018.0171. E084

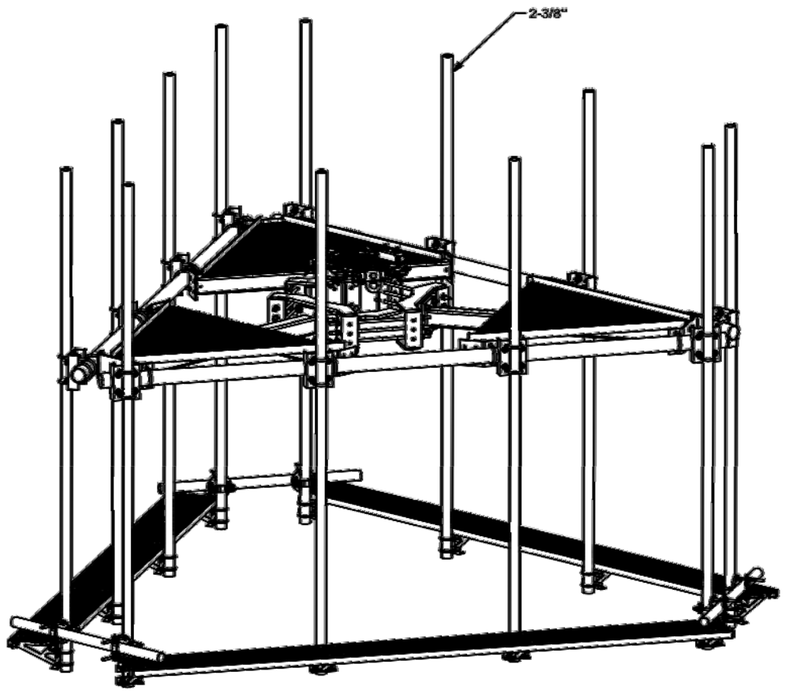

PARTS LIST						
ITEM	QTY	PART NO.	PART DESCRIPTION	LENGTH	UNIT WT.	NET WT.
1	3	X-SV196	LOW PROFILE PLATFORM CORNER		212.10	636.31
2	3	X-LWRM	RING MOUNT WELDMENT		68.81	206.42
3	12	X-SP219	SMALL SUPPORT CROSS PLATE	8 1/4 in	8.61	103.33
4	12	X-WWSB	WALKWAY SUPPORT BRACKET		6.73	80.75
5	6	X-127594	FLAT DISK CLAMP PLATE 4" CENTERS (GALV.)		2.51	15.04
6	12	X-100064	CLAMP (4" V-CLAMP) GALVANIZED		0.91	10.95
7	12	P2120	2-3/8" x 120" (2" SCH. 40) GALAVANIZED PIPE	120 in	38.81	465.74
8	3	P3150	3-1/2" X 150" (3" SCH 40) GALVANIZED PIPE	150 in	94.80	284.40
9	3	P248	2-3/8" X 63"SCH 40 GALVANIZED PIPE	63 in	20.18	60.55
10	9	G58R-24	5/8" x 24" THREADED ROD (HDG.)	24 in	0.40	3.59
10	9	G58R-48	5/8" x 48" THREADED ROD (HDG.)	48 in	0.40	3.59
11	12	A58234	5/8" x 2-3/4" HDG A325 HEX BOLT	2 3/4 in	0.36	4.27
12	12	A58FW	5/8" HDG A325 FLATWASHER		0.03	0.41
13	30	G58LW	5/8" HDG LOCKWASHER		0.03	0.78
14	30	A58NUT	5/8" HDG A325 HEX NUT		0.13	3.90
15	3	GRS12-12	12" WIDE GRIP STRUT	120 in	31.00	93.00
16	36	X-UB1306	1/2" X 3-5/8" X 6" X 3" U-BOLT (HDG.)		0.83	29.82
17	24	X-UB1212	1/2" X 2" X 3" X 1-1/4" U-BOLT (HDG.)		0.60	14.33
18	12	G1204	1/2" x 4" HDG HEX BOLT GR5 FULL THREAD	4 in	0.27	3.24
19	12	G12065	1/2" x 6-1/2" HDG HEX BOLT GR5 FULL THREAD	6 1/2 in	0.41	4.91
20	144	G12FW	1/2" HDG USS FLATWASHER	3/32 in	0.03	4.91
21	144	G12LW	1/2" HDG LOCKWASHER	1/8 in	0.01	2.00
22	144	G12NUT	1/2" HDG HEAVY 2H HEX NUT		0.07	10.31
23	24	X-UB3212	3/8" X 2-1/2" X 3-5/8" X 1-3/4" U-BOLT (HDG.)		0.29	6.97
24	48	G3802	3/8" x 2" HDG HEX BOLT GR5		0.09	4.21
25	48	SQW38	3/8" SQUARE WASHER	2 in	0.29	13.89
26	96	G38FW	3/8" HDG USS FLATWASHER		0.01	1.13
27	96	G38LW	3/8" HDG LOCKWASHER		0.01	0.64
28	96	G38NUT	3/8" HDG HEAVY 2H HEX NUT		0.03	3.25
29	1	HALO40	5,000 LB. MAINTENANCE TIE-OFF POINT		41.12	41.12
					TOTAL WT. #	2136.59

TOLERANCE NOTES

TOLERANCES ON DIMENSIONS, UNLESS OTHERWISE NOTED ARE:
SAWED, SHEARED AND GAS CUT EDGES *(± 0.030")*
DRILLED AND GAS CUT HOLES *(± 0.030")* - NO CONING OF HOLES
LASER CUT EDGES AND HOLES *(± 0.010")* - NO CONING OF HOLES
BENDS ARE ± 1/2 DEGREE
ALL OTHER MACHINING *(± 0.030")*
ALL OTHER ASSEMBLY *(± 0.060")*

PROPRIETARY NOTE:
THE DATA AND TECHNIQUES CONTAINED IN THIS DRAWING ARE PROPRIETARY INFORMATION OF VALMONT INDUSTRIES AND CONSIDERED A TRADE SECRET. ANY USE OR DISCLOSURE WITHOUT THE CONSENT OF VALMONT INDUSTRIES IS STRICTLY PROHIBITED.

DESCRIPTION: RMQP-12-H5

SITE PRO 1 — A Valmont company
Engineering Support Team: 1-888-753-7446
Locations: New York, NY; Atlanta, GA; Los Angeles, CA; Pipestone, MN; Salem, OR; Dallas, TX

CPD NO.	DRAWN BY	ENG. APPROVAL	PART NO.	PAGE
	CEK 11/1/2017		RMQP-12-H5	1 OF 3
CLASS / SUB	DRAWING USAGE	CHECKED BY	DWG. NO.	
	CUSTOMER		RMQP-12-H5	

ANTENNA PLATFORM

SCALE: N.T.S. | 1

PROJECT# 2018.0171. E084

at&t
550 COCHITUATE ROAD
SUITE 550 13 AND 14
FRAMINGHAM, MA 01701

smartlink
1362 MELLON ROAD
SUITE 140
HANOVER, MD 21076

FULLERTON ENGINEERING · DESIGN
1100 E. WOODFIELD ROAD, SUITE 500
SCHAUMBURG, ILLINOIS 60173
TEL: 847-908-8400
COA# PEC.0001444
www.FullertonEngineering.com

REV	DATE	DESCRIPTION	BY
0	01/17/19	90% REVIEW	EB
1	02/01/19	FOR PERMIT	KC

I HEREBY CERTIFY THAT THESE DRAWINGS WERE PREPARED BY ME OR UNDER MY DIRECT SUPERVISION AND CONTROL, AND TO THE BEST OF MY KNOWLEDGE AND BELIEF COMPLY WITH THE REQUIREMENTS OF ALL APPLICABLE CODES.

STATE OF CONNECTICUT · HENRY M. BELLAGAMBA · 25358 · LICENSED PROFESSIONAL ENGINEER

SITE NAME
ENFIELD - MOODY ROAD

SITE NUMBER:
CTL05293

SITE ADDRESS
188 MOODY ROAD
ENFIELD, CT 06082

SHEET NAME
ANTENNA PLATFORM

SHEET NUMBER
A5

THESE DRAWINGS ARE THE PROPERTY OF FULLERTON ENGINEERING CONSULTANTS, INC. IT IS FOR THE EXCLUSIVE USE OF THIS PROJECT. ANY RE-USE OF THIS DRAWING WITHOUT THE EXPRESSED WRITTEN CONSENT OF FULLERTON ENGINEERING CONSULTANTS, INC. IS PROHIBITED.

FINAL ANTENNA CONFIGURATION AND CABLE SCHEDULE
SUPPLIED BY AT&T WIRELESS, FROM RF CONFIG. DATED (01/11/19)

SECTOR	ANTENNA NUMBER	ANTENNA STATUS & TYPE	ANTENNA MODEL NUMBER	ANTENNA VENDOR	TMA/RRU UNIT	AZIMUTH	ANTENNA CL FROM GROUND	CABLE FEEDER TYPE	CABLE FEEDER LENGTH	RAYCAP UNIT
ALPHA	A-1	(E) UMTS ANTENNA	800-10121	KATHREIN	(2) EXISTING TMA UNITS	60°	158'-0"	1-5/8"ø LDF7-50A	200'-0"	(1) (E) DC6-48-60-18-8F UNIT **(2) (E) DC6-48-60-18-8F UNIT**
								1-5/8"ø LDF7-50A	200'-0"	
	A-2	(E) **LTE3C** ANTENNA	HPA-65R-BUU-H8	CCI	**(1) NEW RRUS-4415 B30**	60°	158'-0"	(1) EXISTING FIBER CABLE	200'-0"	
								(2) EXISTING DC POWER CABLES	200'-0"	
	A-3	**(N) LTE2C ANTENNA**	**800-10966**	**KATHREIN**	**(1) NEW RRUS-8843 B2/B66A**	60°	158'-0"	**SEE ANTENNA B-3 FOR CABLE TYPE AND LENGTH**		
	A-4	**(N) LTE4C/5C ANTENNA**	**800-10966**	**KATHREIN**	**(1) NEW RRUS-4449 B5/B12**	60°	158'-0"	**SEE ANTENNA C-4 FOR CABLE TYPE AND LENGTH**		
BETA	B-1	(E) UMTS ANTENNA	800-10121	KATHREIN	(2) EXISTING TMA UNITS	160°	158'-0"	1-5/8"ø LDF7-50A	200'-0"	
								1-5/8"ø LDF7-50A	200'-0"	
	B-2	(E) **LTE3C** ANTENNA	HPA-65R-BUU-H8	CCI	**(1) NEW RRUS-4415 B30**	160°	158'-0"	SEE ANTENNA A-2 FOR CABLE TYPE AND LENGTH		
	B-3	**(N) LTE2C ANTENNA**	**800-10966**	**KATHREIN**	**(1) NEW RRUS-8843 B2/B66A**	160°	158'-0"	**(1) NEW FIBER CABLE**	**200'-0"**	
								(2) NEW DC POWER CABLES	**200'-0"**	
	B-4	**(N) LTE4C/5C ANTENNA**	**800-10966**	**KATHREIN**	**(1) NEW RRUS-4449 B5/B12**	160°	158'-0"	**SEE ANTENNA C-4 FOR CABLE TYPE AND LENGTH**		
GAMMA	C-1	(E) UMTS ANTENNA	800-10121	KATHREIN	(2) EXISTING TMA UNITS	310°	158'-0"	1-5/8"ø LDF7-50A	200'-0"	
								1-5/8"ø LDF7-50A	200'-0"	
	C-2	(E) **LTE3C** ANTENNA	HPA-65R-BUU-H8	CCI	**(1) NEW RRUS-4415 B30**	310°	158'-0"	SEE ANTENNA A-2 FOR CABLE TYPE AND LENGTH		
	C-3	**(N) LTE2C ANTENNA**	**800-10966**	**KATHREIN**	**(1) NEW RRUS-8843 B2/B66A**	310°	158'-0"	**SEE ANTENNA B-3 FOR CABLE TYPE AND LENGTH**		
	C-4	**(N) LTE4C/5C ANTENNA**	**800-10966**	**KATHREIN**	**(1) NEW RRUS-4449 B5/B12**	310°	158'-0"	**SEE ANTENNA B-3 FOR FIBER CABLE**		
								(2) NEW DC POWER CABLES	**200'-0"**	

ANTENNA & CABLE CONFIGURATION

SCALE: N.T.S.

1

at&t
550 COCHITUATE ROAD
SUITE 550 13 AND 14
FRAMINGHAM, MA 01701

smartlink
1362 MELLON ROAD
SUITE 140
HANOVER, MD 21076

FULLERTON ENGINEERING·DESIGN
1100 E. WOODFIELD ROAD, SUITE 500
SCHAUMBURG, ILLINOIS 60173
TEL: 847-908-8400
COA# PEC.0001444
www.FullertonEngineering.com

REV	DATE	DESCRIPTION	BY
0	01/17/19	90% REVIEW	EB
1	02/01/19	FOR PERMIT	KC

I HEREBY CERTIFY THAT THESE DRAWINGS WERE PREPARED BY ME OR UNDER MY DIRECT SUPERVISION AND CONTROL, AND TO THE BEST OF MY KNOWLEDGE AND BELIEF COMPLY WITH THE REQUIREMENTS OF ALL APPLICABLE CODES.

STATE OF CONNECTICUT · HENRY M. BELLAGAMBA · 25358 · LICENSED PROFESSIONAL ENGINEER

SITE NAME
ENFIELD - MOODY ROAD

SITE NUMBER:
CTL05293

SITE ADDRESS
188 MOODY ROAD
ENFIELD, CT 06082

SHEET NAME
ANTENNA & CABLE CONFIGURATION

SHEET NUMBER
A6

THESE DRAWINGS ARE THE PROPERTY OF FULLERTON ENGINEERING CONSULTANTS, INC. IT IS FOR THE EXCLUSIVE USE OF THIS PROJECT. ANY RE-USE OF THIS DRAWING WITHOUT THE EXPRESSED WRITTEN CONSENT OF FULLERTON ENGINEERING CONSULTANTS, INC. IS PROHIBITED.

1. CONTRACTOR IS TO REFER TO AT&T'S MOST CURRENT RADIO FREQUENCY DATA SHEET (RFDS) PRIOR TO CONSTRUCTION.
2. THE SIZE, HEIGHT, AND DIRECTION OF THE ANTENNAS SHALL BE ADJUSTED TO ACHIEVE THE AZIMUTHS SPECIFIED AND LIMIT SHADOWING AND TO MEET THE SYSTEM REQUIREMENTS.
3. CONTRACTOR SHALL VERIFY THE HEIGHT OF THE ANTENNA WITH THE AT&T WIRELESS PROJECT MANAGER.
4. VERIFY TYPE AND SIZE OF TOWER LEG PRIOR TO ORDERING ANY ANTENNA MOUNT.
5. UNLESS NOTED OTHERWISE THE CONTRACTOR MUST PROVIDE ALL MATERIAL NECESSARY.
6. ANTENNA AZIMUTHS ARE DEGREES OFF OF TRUE NORTH, BEARING CLOCKWISE, IN WHICH ANTENNA FACE IS DIRECTED. ALL ANTENNAS (AND SUPPORTING STRUCTURES AS PRACTICAL) SHALL BE ACCURATELY ORIENTED IN THE SPECIFIED DIRECTION.
7. CONTRACTOR SHALL VERIFY ALL RF INFORMATION PRIOR TO CONSTRUCTION.
8. SWEEP TEST SHALL BE PERFORMED BY GENERAL CONTRACTOR AND SUBMITTED TO AT&T WIRELESS CONSTRUCTION SPECIALIST. TEST SHALL BE PERFORMED PER AT&T WIRELESS STANDARDS.
9. CABLE LENGTHS WERE DETERMINED BASED ON THE DESIGN DRAWING. CONTRACTOR TO VERIFY ACTUAL LENGTH DURING PRE-CONSTRUCTION WALK.
10. CONTRACTOR TO USE ROSENBERGER FIBER LINE HANGER COMPONENTS (OR ENGINEER APPROVED EQUAL).

ANTENNA AND CABLING NOTES

SCALE: N.T.S. | 1

RF, DC, & COAX CABLE MARKING LOCATIONS TABLE

NO	LOCATIONS
1	EACH TOP-JUMPER SHALL BE COLOR CODED WITH (1) SET OF 3" WIDE BANDS.
2	EACH MAIN COAX SHALL BE COLOR CODED WITH (1) SET OF 3" WIDE BANDS NEAR THE TOP-JUMPER CONNECTION AND WITH (1) SET OF 3/4" WIDE COLOR BANDS JUST PRIOR TO ENTERING THE BTS OR TRANSMITTER BUILDING.
3	CABLE ENTRY PORT ON THE INTERIOR OF THE SHELTER.
4	ALL BOTTOM JUMPERS SHALL BE COLOR CODED WITH (1) SET OF 3/4" WIDE BANDS ON EACH END OF THE BOTTOM JUMPER.
5	ALL BOTTOM JUMPERS SHALL BE COLOR CODED WITH (1) SET OF 3/4" WIDE BANDS ON EACH END OF THE BOTTOM JUMPER.

CABLE MARKING DIAGRAM

SCALE: N.T.S. | 2

1. THE ANTENNA SYSTEM COAX SHALL BE LABELED WITH VINYL TAPE.
2. THE STANDARD IS BASED ON EIGHT COLORED TAPES-RED, BLUE, GREEN, YELLOW, ORANGE, BROWN, WHITE, AND VIOLET. THESE TAPES MUST BE 3/4" WIDE & UV RESISTANT SUCH AS SCOTCH 35 VINYL ELECTRICAL COLOR CODING TAPE AND SHOULD BE READILY AVAILABLE TO THE ELECTRICIAN OR CONTRACTOR ON SITE.
3. USING COLOR BANDS ON THE CABLES, MARK ALL RF CABLE BY SECTOR AND CABLE NUMBER AS SHOWN ON "CABLE COLOR CHART".
4. WHEN AN EXISTING COAXIAL LINE THAT IS INTENDED TO BE A SHARED LINE BETWEEN TECHNOLOGIES IS ENCOUNTERED, THE CONTRACTOR SHALL REMOVE THE EXISTING COLOR CODING SCHEME AND REPLACE IT WITH THE COLOR CODING STANDARD. IN THE ABSENCE OF AN EXISTING COLOR CODING AND TAGGING SCHEME, OR WHEN INSTALLING PROPOSED COAXIAL CABLES, THIS GUIDELINE SHALL BE IMPLEMENTED AT THAT SITE REGARDLESS OF TECHNOLOGY.
5. ALL COLOR CODE TAPE SHALL BE 3M-35 AND SHALL BE INSTALLED USING A MINIMUM OF (3) THREE WRAPS OF TAPE AND SHALL BE NEATLY TRIMMED AND SMOOTHED OUT SO AS TO AVOID UNRAVELING.
6. ALL COLOR BANDS INSTALLED AT THE TOP OF THE TOWER SHALL BE A MINIMUM OF 3" WIDE, AND SHALL HAVE A MINIMUM OF 3/4" OF SPACE BETWEEN EACH COLOR.
7. ALL COLOR CODES SHALL BE INSTALLED SO AS TO ALIGN NEATLY WITH ONE ANOTHER FROM SIDE-TO-SIDE.
8. IF EXISTING CABLES AT THE SITE ALREADY HAVE A COLOR CODING SCHEME AND THEY ARE NOT INTENDED TO BE REUSED OR SHARED WITH THE NEW TECHNOLOGY, THE EXISTING COLOR CODING SCHEME SHALL REMAIN UNTOUCHED.

CABLE MARKING NOTES

SCALE: N.T.S. | 3

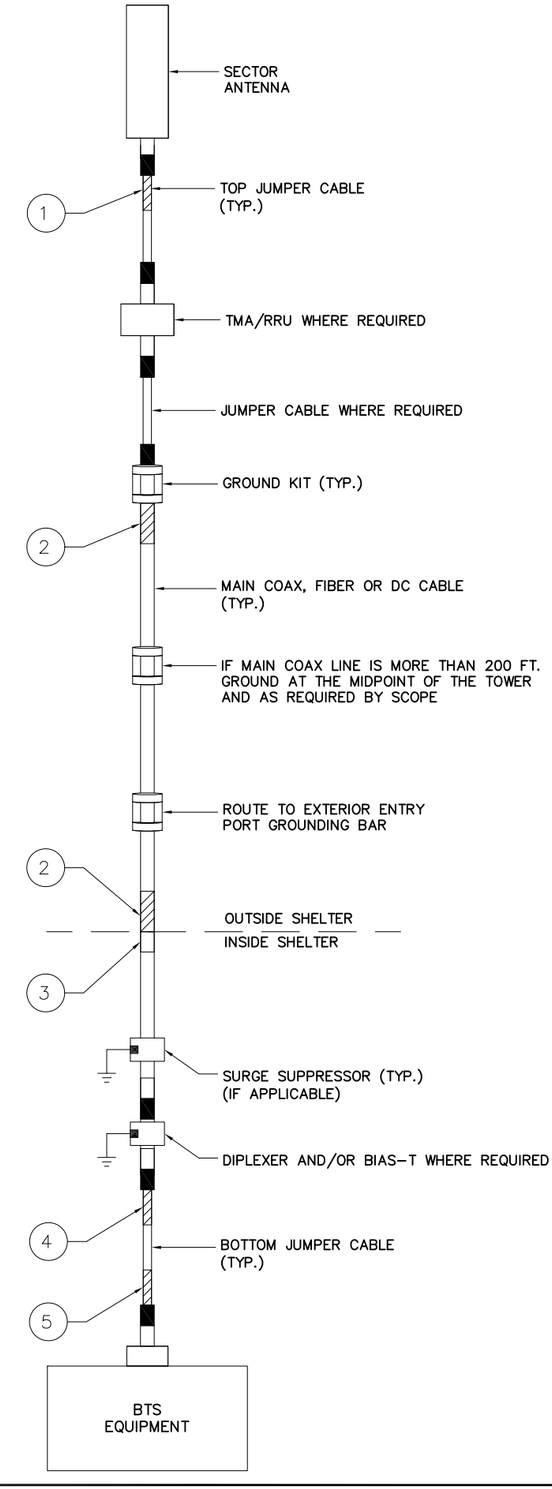

CABLE COLOR CODING DIAGRAM

SCALE: N.T.S. | 4

at&t
550 COCHITUATE ROAD
SUITE 550 13 AND 14
FRAMINGHAM, MA 01701

smartlink
1362 MELLON ROAD
SUITE 140
HANOVER, MD 21076

FULLERTON ENGINEERING·DESIGN
1100 E. WOODFIELD ROAD, SUITE 500
SCHAUMBURG, ILLINOIS 60173
TEL: 847-908-8400
COA# PEC.0001444
www.FullertonEngineering.com

REV	DATE	DESCRIPTION	BY
0	01/17/19	90% REVIEW	EB
1	02/01/19	FOR PERMIT	KC

I HEREBY CERTIFY THAT THESE DRAWINGS WERE PREPARED BY ME OR UNDER MY DIRECT SUPERVISION AND CONTROL, AND TO THE BEST OF MY KNOWLEDGE AND BELIEF COMPLY WITH THE REQUIREMENTS OF ALL APPLICABLE CODES.

STATE OF CONNECTICUT · HENRY M. BELLAGAMBA · 25358 · LICENSED PROFESSIONAL ENGINEER

SITE NAME
ENFIELD - MOODY ROAD

SITE NUMBER:
CTL05293

SITE ADDRESS
188 MOODY ROAD
ENFIELD, CT 06082

SHEET NAME
CABLE NOTES AND COLOR CODING

SHEET NUMBER
A7

THESE DRAWINGS ARE THE PROPERTY OF FULLERTON ENGINEERING CONSULTANTS, INC. IT IS FOR THE EXCLUSIVE USE OF THIS PROJECT. ANY RE-USE OF THIS DRAWING WITHOUT THE EXPRESSED WRITTEN CONSENT OF FULLERTON ENGINEERING CONSULTANTS, INC. IS PROHIBITED.

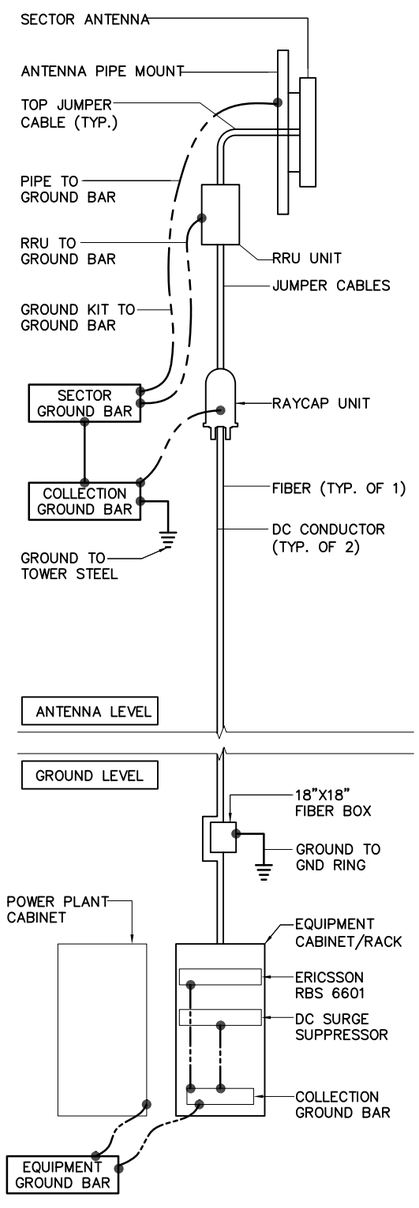

GROUNDING SCHEMATIC SCALE: N.T.S. 1

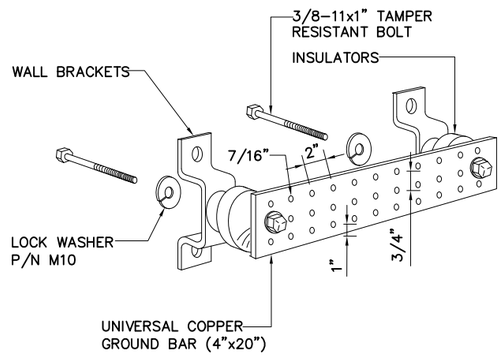

GROUND BAR DETAIL SCALE: N.T.S. 2

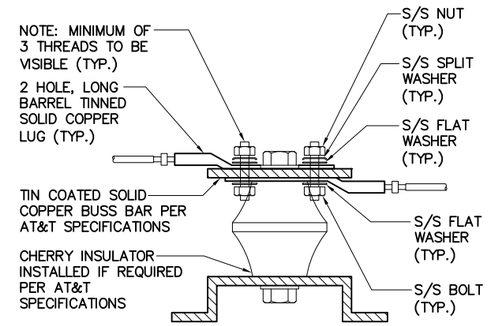

NOTES:

1. ALL HARDWARE 18-8 STAINLESS STEEL INCLUDING SPLIT WASHERS.
2. COAT WIRE END WITH ANTI-OXIDATION COMPOUND PRIOR TO INSERTION INTO LUG BARREL AND CRIMPING.
3. APPLY ANTI-OXIDATION COMPOUND BETWEEN ALL LUGS AND BUSS BARS PRIOR TO MATING AND BOLTING.

LUG DETAIL SCALE: N.T.S. 3

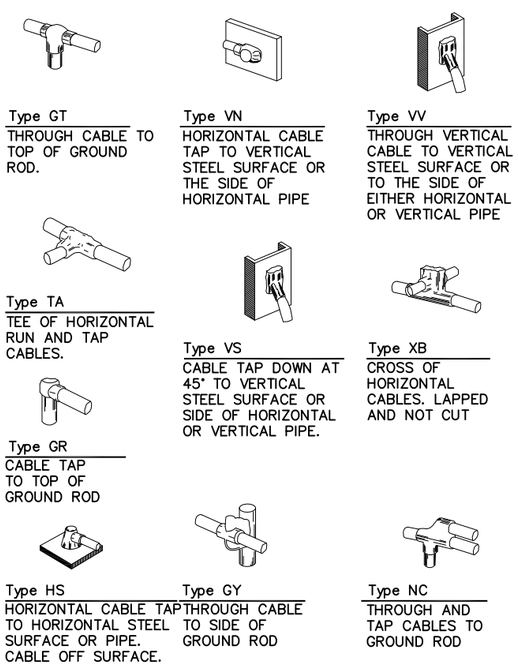

EXOTHERMIC WELD DETAILS SCALE: N.T.S. 4

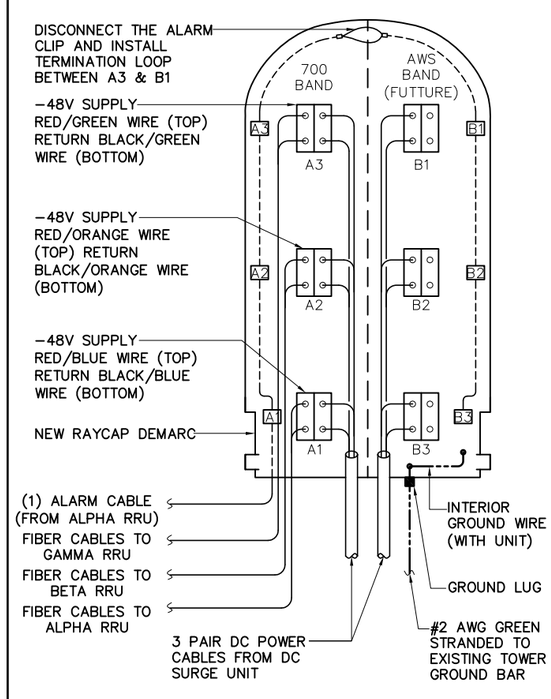

RAYCAP DC POWER AND ALARM DET. SCALE: N.T.S. 5

NOT USED SCALE: N.T.S. 6

at&t
550 COCHITUATE ROAD
SUITE 550 13 AND 14
FRAMINGHAM, MA 01701

smartlink
1362 MELLON ROAD
SUITE 140
HANOVER, MD 21076

FULLERTON ENGINEERING·DESIGN
1100 E. WOODFIELD ROAD, SUITE 500
SCHAUMBURG, ILLINOIS 60173
TEL: 847-908-8400
COA# PEC.0001444
www.FullertonEngineering.com

REV	DATE	DESCRIPTION	BY
0	01/17/19	90% REVIEW	EB
1	02/01/19	FOR PERMIT	KC

I HEREBY CERTIFY THAT THESE DRAWINGS WERE PREPARED BY ME OR UNDER MY DIRECT SUPERVISION AND CONTROL, AND TO THE BEST OF MY KNOWLEDGE AND BELIEF COMPLY WITH THE REQUIREMENTS OF ALL APPLICABLE CODES.

STATE OF CONNECTICUT · HENRY M. BELLAGAMBA · 25358 · LICENSED PROFESSIONAL ENGINEER

SITE NAME
ENFIELD - MOODY ROAD

SITE NUMBER:
CTL05293

SITE ADDRESS
188 MOODY ROAD
ENFIELD, CT 06082

SHEET NAME
GROUNDING DETAILS

SHEET NUMBER
A8

THESE DRAWINGS ARE THE PROPERTY OF FULLERTON ENGINEERING CONSULTANTS, INC. IT IS FOR THE EXCLUSIVE USE OF THIS PROJECT. ANY RE-USE OF THIS DRAWING WITHOUT THE EXPRESSED WRITTEN CONSENT OF FULLERTON ENGINEERING CONSULTANTS, INC. IS PROHIBITED.

PROJECT# 2018.0171. E084

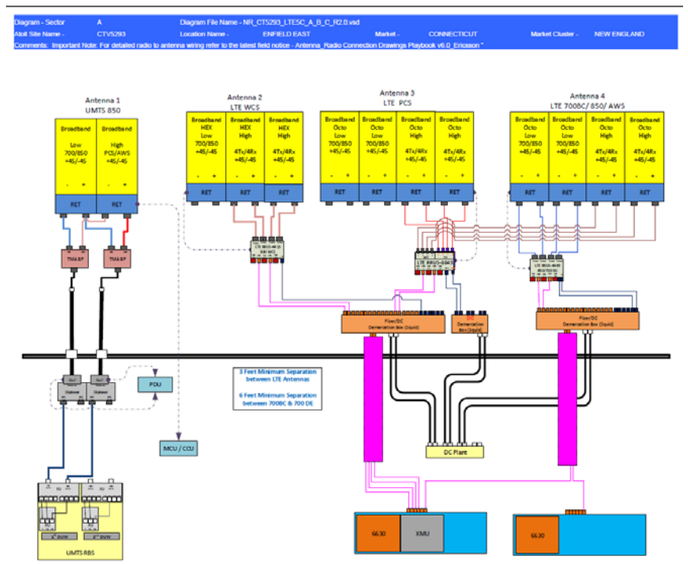

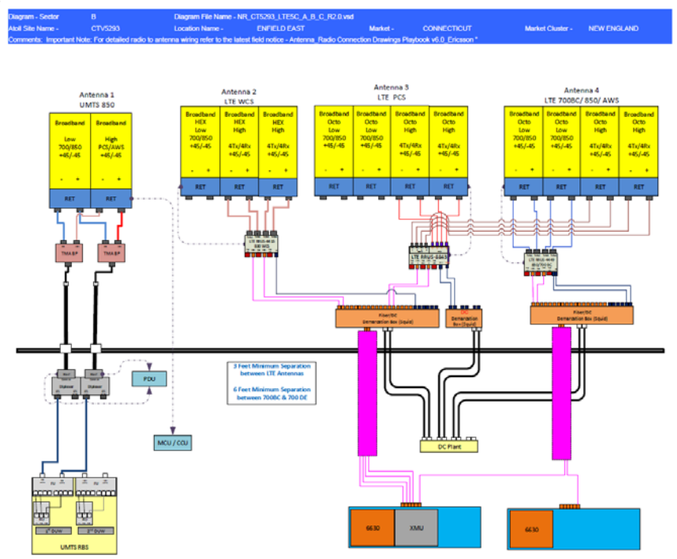

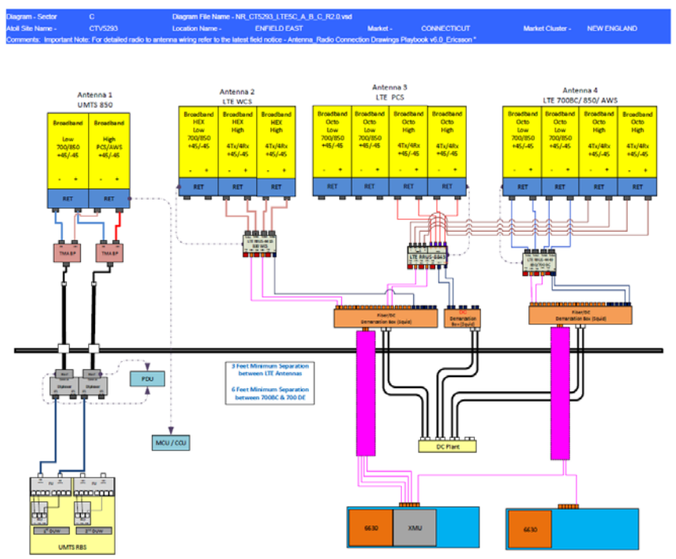

*BASED ON RFDS V4.0, DATED (01/11/19)

PLUMBING DIAGRAMS

SCALE: N.T.S. | 1

at&t
550 COCHITUATE ROAD
SUITE 550 13 AND 14
FRAMINGHAM, MA 01701

smartlink
1362 MELLON ROAD
SUITE 140
HANOVER, MD 21076

FULLERTON ENGINEERING · DESIGN
1100 E. WOODFIELD ROAD, SUITE 500
SCHAUMBURG, ILLINOIS 60173
TEL: 847-908-8400
COA# PEC.0001444
www.FullertonEngineering.com

REV	DATE	DESCRIPTION	BY
0	01/17/19	90% REVIEW	EB
1	02/01/19	FOR PERMIT	KC

I HEREBY CERTIFY THAT THESE DRAWINGS WERE PREPARED BY ME OR UNDER MY DIRECT SUPERVISION AND CONTROL, AND TO THE BEST OF MY KNOWLEDGE AND BELIEF COMPLY WITH THE REQUIREMENTS OF ALL APPLICABLE CODES.

STATE OF CONNECTICUT · HENRY M. BELLAGAMBA · 25358 · LICENSED PROFESSIONAL ENGINEER

SITE NAME
ENFIELD - MOODY ROAD

SITE NUMBER:
CTL05293

SITE ADDRESS
188 MOODY ROAD
ENFIELD, CT 06082

SHEET NAME
PLUMBING DIAGRAMS

SHEET NUMBER
A9

THESE DRAWINGS ARE THE PROPERTY OF FULLERTON ENGINEERING CONSULTANTS, INC. IT IS FOR THE EXCLUSIVE USE OF THIS PROJECT. ANY RE-USE OF THIS DRAWING WITHOUT THE EXPRESSED WRITTEN CONSENT OF FULLERTON ENGINEERING CONSULTANTS, INC. IS PROHIBITED.

PROJECT# 2018.0171. E084

Tower Engineering Solutions
Phone (972) 483-0607, Fax (972) 975-9615
1320 Greenway Drive, Suite 600, Irving, Texas 75038

Structural Analysis Report

Existing 188 ft. SUMMIT Monopole

Customer Name: SBA Communications Corp

Customer Site Number: CT46124-A

Customer Site Name: Enfield-Moody Rd.

Carrier Name: AT&T (App#: 107137, V1)

Carrier Site ID / Name: CTL05293 / Enfield - Moody Road

Site Location: 188 Moody Rd

Enfield, Connecticut

Hartford County

Latitude: 42.002000

Longitude: -72.521694

STATE OF CONNECTICUT
HANMING YOU
28931
LICENSED
PROFESSIONAL ENGINEER

2/6/19

Analysis Result:

Max Structural Usage: 97.6% [Pass]

Max Foundation Usage: 89.5% [Pass]

Additional Usage Caused by New Mount: +5.6%

Report Prepared By : Delu Zhou

Tower Engineering Solutions
Phone (972) 483-0607, Fax (972) 975-9615
1320 Greenway Drive, Suite 600, Irving, Texas 75038

Structural Analysis Report

Existing 188 ft. SUMMIT Monopole

Customer Name: SBA Communications Corp

Customer Site Number: CT46124-A

Customer Site Name: Enfield-Moody Rd.

Carrier Name: AT&T (App#: 107137, V1)

Carrier Site ID / Name: CTL05293 / Enfield - Moody Road

Site Location: 188 Moody Rd

Enfield, Connecticut

Hartford County

Latitude: 42.002000

Longitude: -72.521694

Analysis Result:

Max Structural Usage: 97.6% [Pass]

Max Foundation Usage: 89.5% [Pass]

Additional Usage Caused by New Mount: +5.6%

Report Prepared By : Delu Zhou

Introduction

The purpose of this report is to summarize the analysis results on the 188 ft. SUMMIT Monopole to support the proposed antennas and transmission lines in addition to those currently installed. Any modification listed under Sources of Information was assumed completed and was included in this analysis.

Sources of Information

Tower Drawings	Summit, Job # 29200-155, dated 2/12/00
Foundation Drawing	Summit, Job # 29200-155, dated 2/12/00
Geotechnical Report	Tectonic, Project # 1170.C054, dated 9/17/98
Modification Drawings	FDH Engineering, Project #1335291400 dated February 20, 2015 Tower Engineering Solutions, Job #19423 dated June 1, 2016

Analysis Criteria

The rigorous analysis was performed in accordance with the requirements and stipulations of the ANSI/TIA/EIA 222-G**.** In accordance with this standard, the structure was analyzed using **TESPoles,** a proprietary analysis software. The program considers the structure as an elastic 3-D model with second-order effects and temperature effects incorporated in the analysis. The analysis was performed using multiple wind directions.

Wind Speed Used in the Analysis:	Ultimate Design Wind Speed V_{ult} = 121.0 mph (3-Sec. Gust)/ Nominal Design Wind Speed V_{asd} = 94.0 mph (3-Sec. Gust)
Wind Speed with Ice:	50 mph (3-Sec. Gust) with 1” radial ice concurrent
Operational Wind Speed:	60 mph + 0” Radial ice
Standard/Codes:	ANSI/TIA/EIA 222-G / 2015 IBC / 2018 Connecticut State Building Code
Exposure Category:	C
Structure Class:	II
Topographic Category:	1
Crest Height:	0 ft.
Seismic Parameters:	S_S = 0.175, S_1 = 0.064

This structural analysis is based upon the tower being classified as a Structure Class II; however, if a different classification is required subsequent to the date hereof, the tower classification will be changed to meet such requirement and a new structural analysis will be run.

Existing Antennas, Mounts and Transmission Lines

The table below summarizes the antennas, mounts and transmission lines that were considered in the analysis as existing on the tower.

Items	Elevation (ft)	Qty.	Antenna Descriptions	Mount Type & Qty.	Transmission Lines	Owner
1	187.0	3	Ericsson KRD901146-1_B66A_B2A (Octa)	Low Profile Platform w/Handrails	(16) 1 1/4" (2) 1-1/4" Hybrid	T-Mobile
2		3	RFS APXVAARR24_43-U-NA20 (Octa)			
3		3	Commscope LNX-6515DS-A1M - Panel			
4		12	Ericsson KRY 112 114-1 Double TMA			
5		3	Ericsson Radio 4449 B71 + B12			
6		3	Kathrein 782 11054-Smart Bias T			
7	168.0	1	RFS APXV9ERR18-C-A20 - Panel	Low Profile Platform	(3) 1-1/4" Fiber (1) 0.7" Fiber	Sprint
8		2	RFS APXVSPP18-C-A20 - Panel			
9		3	RFS APXVTM14-C-120 - Panel			
10		4	ACU-A20-N - RET			
11		3	Alcatel-Lucent 1900MHz RRU			
12		3	Alcatel-Lucent 800 MHz RRH			
13		3	Alcatel-Lucent TD-RRH8x20-25 - RRU			
14		3	Alcatel-Lucent 800 MHz Filter			
-	158.0	3	Kathrein 800 10121 Panel	(1) Low-profile T-Arm	(12) 1 5/8" (1) 3/8" Fiber (2) 5/8" DC	AT&T
-		3	Cci HPA-65R-BUU-H8 Panel			
-		6	Powerwave LGP21401 TMA			
-		6	Kathrein 860 10025 RET			
-		6	Ericsson RRUS-11 RRU			
-		3	Ericsson RRUS-12 RRU			
-		3	Ericsson RRUS-A2 RRU			
-		1	Raycap DC-48-60-18-8F COVP			

Proposed Carrier's Final Configuration of Antennas, Mounts and Transmission Lines

Information pertaining to the proposed carrier's final configuration of antennas and transmission lines was provided by SBA Communications Corp. The proposed antennas and lines are listed below.

Items	Elevation (ft)	Qty.	Antenna Descriptions	Mount Type & Qty.	Transmission Lines	Owner
15	158.0	3	Kathrein 800 10121 - Panel	(1) Platform Mount [SitePro RMQP-12-H5]	(12) 1 5/8" (2) 3/8" Fiber (6) 5/8" DC	AT&T
16		3	CCI HPA-65R-BUU-H8 - Panel			
17		6	Kathrein 800 10966 - Panel			
18		6	Powerwave LGP21401 TMA			
19		6	Kathrein 860-10025 RET			
20		3	Ericsson RRUS 4415 B25 RRU			
21		3	Ericsson 8843 B2 B66A RRU			
22		3	Ericsson 4449 B5 B12 RRU			
23		3	Ericsson RRUS-A2 RRU			
24		2	Raycap DC6-48-60-18-8F COVP			
25		1	Raycap DC6-48-60-0-8C COVP			

See the attached coax layout for the line placement considered in the analysis.

Analysis Results

The results of the structural analysis, performed for the wind and ice loading and antenna equipment as defined above, are summarized as the following:

	Pole shafts	Anchor Bolts	Base Plate	Reinforce Plate
Max. Usage:	**87.5%**	**73.5%**	**89.5%**	**97.6%**
Pass/Fail	**Pass**	**Pass**	**Pass**	**Pass**

Foundations

	Moment (Kip-Ft)	Shear (Kips)	Axial (Kips)
Analysis Reactions	4592.0	33.4	89.7

The foundation has been investigated using the supplied documents and soils report and was found adequate. Therefore, no modification to the foundation will be required.

Operational Condition (Rigidity):

Operational characteristics of the tower are found to be within the limits prescribed by ANSI/TIA/EIA 222-G for the installed antennas. The maximum twist/sway at the elevation of the proposed equipment is 2.0911 degrees under the operational wind speed as specified in the Analysis Criteria.

Conclusions

Based on the analysis results, the existing structure and its foundation were found to be adequate to safely support the existing and proposed equipment and meet the minimum requirements per the ANSI/TIA/EIA 222-G Standard under the design basic wind speed as specified in the Analysis Criteria.

Standard Conditions

1. This analysis was performed based on the information supplied to **(TES) Tower Engineering Solutions, LLC.** Verification of the information provided was not included in the Scope of Work for **TES**. The accuracy of the analysis is dependent on the accuracy of the information provided.

2. The structural analysis was performance based upon the evidence available at the time of this report. All information provided by the client is considered to be accurate.

3. The analyses will be performed based on the codes as specified by the client or based on the best knowledge of the engineering staff of **TES**. In the absence of information to the contrary, all work will be performed in accordance with the latest relevant revision of ANSI/TIA-222. If wind speed and/or ice loads are different from the minimum values recommended by the EIA/TIA-222 standard or other codes, **TES** should be notified in writing and the applicable minimum values provided by the client.

4. The configuration of the existing mounts, antennas, coax and other appurtenances were supplied by the customer for the current structural analysis. **TES** has not visited the tower site to verify the adequacy of the information provided. If there is any discrepancy found in the report regarding the existing conditions, **TES** should be notified immediately to evaluate the effect of the discrepancy on the analysis results.

5. The client will assume responsibility for rework associated with the differences in initially provided information, including tower and foundation information, existing and/or proposed equipment and transmission lines.

6. If a feasibility analysis was performed, final acceptance of changed conditions shall be based upon a rigorous structural analysis.

Usage Diagram - Max Ratio 87.48% at 0.0ft

Structure:	CT46124-A-SBA	**Code:**	EIA/TIA-222-G	2/6/2019
Site Name:	Enfield-Moody Rd.	**Exposure:**	C	
Height:	188.00 (ft)	**Gh:**	1.1	
Base Elev:	0.000 (ft)			Page: 1

Tower Engineering Solutions

Dead Load Factor: 1.20

Wind Load Factor: 1.60

Load Case : 1.2D + 1.6W 94 mph Wind

Iterations: 30

Copyright © 2019 by Tower Engineering Solutions, LLC. All rights reserved.

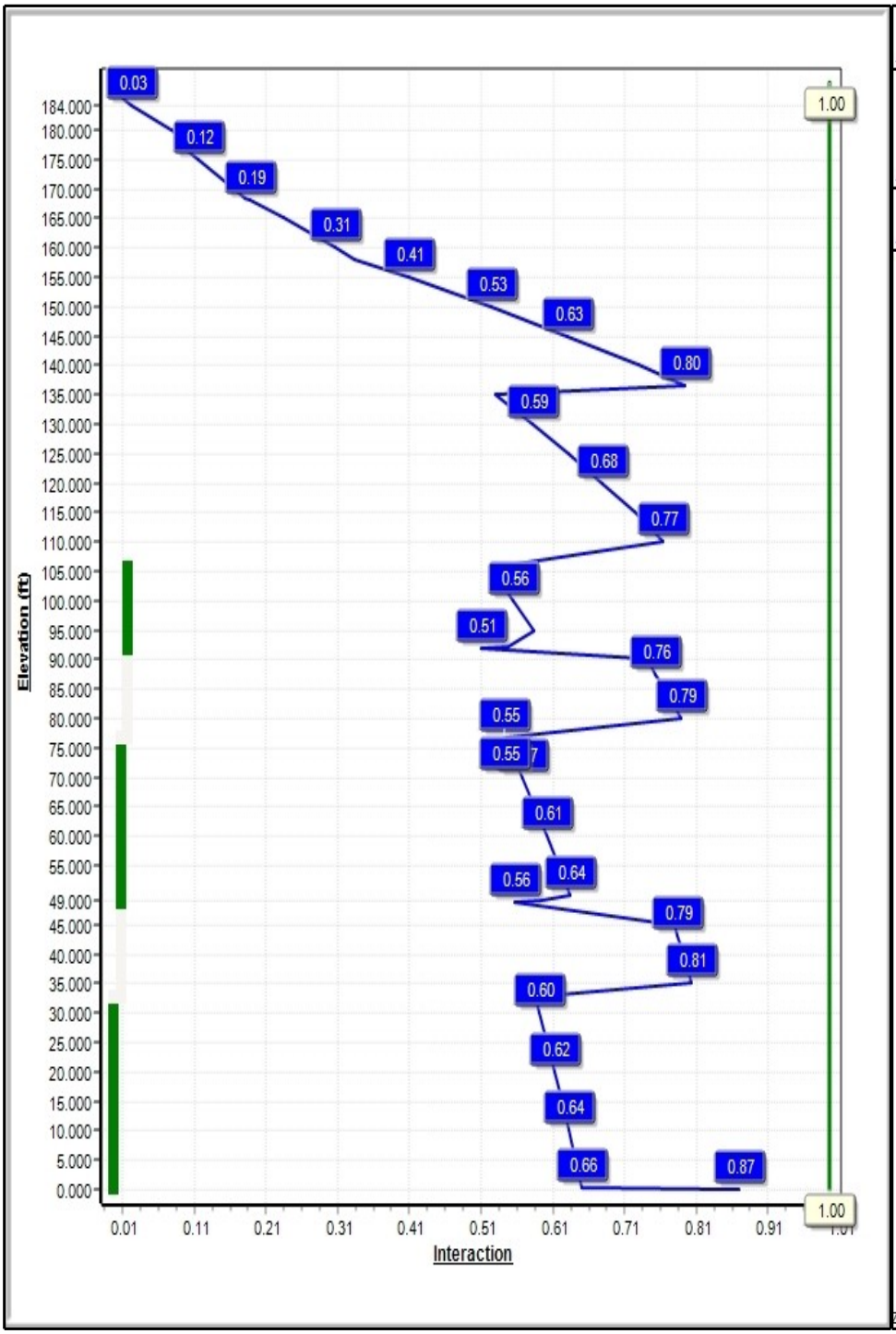

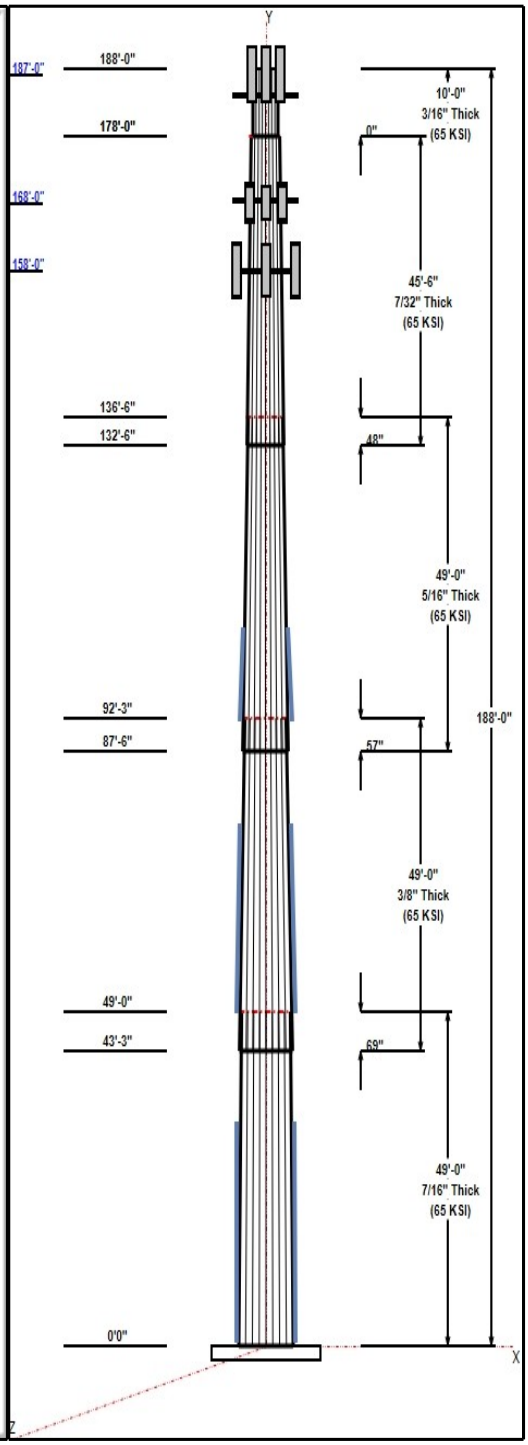

Structure: CT46124-A-SBA

Type:	Custom	**Base Shape:**	18 Sided	2/6/2019
Site Name:	Enfield-Moody Rd.	**Taper:**	0.00000	
Height:	188.00 (ft)			
Base Elev:	0.00 (ft)			Page: 2

Tower Engineering Solutions

Shaft Properties

Seq	Length (ft)	Top (in)	Bottom (in)	Thick (in)	Joint Type	Taper	Grade (ksi)
1	49.00	43.60	51.74	0.438		0.16603	65
2	49.00	37.17	45.31	0.375	Slip	0.16603	65
3	49.00	30.45	38.59	0.313	Slip	0.16603	65
4	45.50	24.00	31.55	0.219	Slip	0.16603	65
5	10.00	22.34	24.00	0.188	Butt	0.00000	65

Discrete Appurtenances

Attach Elev (ft)	Force Elev (ft)	Qty	Description	Carrier
187.00	187.00	12	Ericsson KRY 112 114-1	T-Mobile
187.00	187.00	3	Commscope	T-Mobile
187.00	187.00	3	Kathrein 782 11054-Smart	T-Mobile
187.00	187.00	3	Ericsson	T-Mobile
187.00	187.00	3	RFS	T-Mobile
187.00	187.00	3	Ericsson Radio 4449 B71	T-Mobile
184.00	184.00	1	Platform w/ Hand Rail	T-Mobile
168.50	168.50	1	Low Profile Platform	Sprint
168.00	168.00	4	ACU-A20-N	Sprint
168.00	168.00	1	APXV9ERR18-C-A20	Sprint
168.00	168.00	2	APXVSPP18-C-A20	Sprint
168.00	168.00	3	800 MHz Filters	Sprint
168.00	168.00	3	APXVTM14-C-120	Sprint
168.00	168.00	3	1900 MHz RRH	Sprint
168.00	168.00	3	800 MHz RRH	Sprint
168.00	168.00	3	TD-RRH8x20-25	Sprint
158.00	158.00	6	800 10966	AT&T
158.00	158.00	3	Ericsson RRUS 4415 B25	AT&T
158.00	158.00	3	Ericsson 8843 B2 B66A	AT&T
158.00	158.00	3	Ericsson 4449 B5 B12	AT&T
158.00	158.00	1	Raycap DC6-48-60-0-8C	AT&T
158.00	158.00	1	Plateform Mount	AT&T
158.00	158.00	6	Powerwave LGP21401	AT&T
158.00	158.00	2	Raycap DC6-48-60-18-8F	AT&T
158.00	158.00	3	800 10121	AT&T
158.00	158.00	3	HPA-65R-BUU-H8	AT&T
158.00	158.00	6	Kathrein 860-10025 RET	AT&T
158.00	158.00	3	Ericsson RRUS-A2 RRU	AT&T

Linear Appurtenances

Elev From (ft)	Elev To (ft)	Placement	Description	Carrier
0.00	187.00	Inside	1 1/4" Coax	T-Mobile
0.00	187.00	Inside	1-1/4" Hybrid	T-Mobile
0.00	168.00	Inside	0.7" Fiber	Sprint
0.00	168.00	Inside	1-1/4" Fiber	Sprint
0.00	158.00	Inside	1 5/8" Coax	AT&T
0.00	158.00	Inside	3/8" Fiber	AT&T
0.00	158.00	Inside	5/8" DC	AT&T
90.25	107.25	Outside	1.25" Reinforcing plate	
46.50	79.25	Outside	1.25" Reinforcing plate	
0.00	35.50	Outside	1.25" Reinforcing plate	

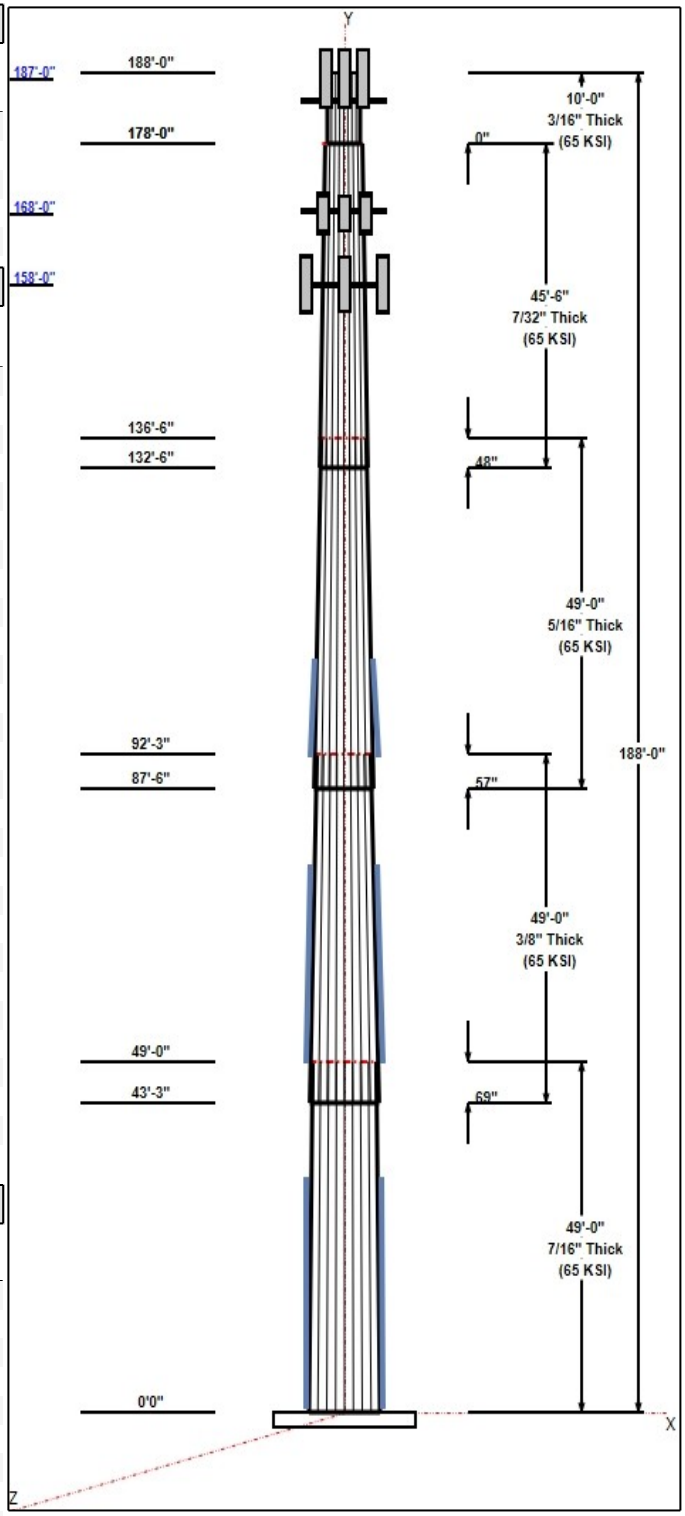

Anchor Bolts

Copyright © 2019 by Tower Engineering Solutions, LLC. All rights reserved.

Qty	Specifications	Grade (ksi)	Arrangement
16	2.25" 18J	75.0	Cluster

Base Plate

Thickness (in)	Specifications (in)	Grade (ksi)	Geometry
3.2500	57.0	50.0	Clipped

Reactions

Load Case	Moment (FT-Kips)	Shear (Kips)	Axial (Kips)
1.2D + 1.6W 94 mph Wind	4592.0	33.4	50.7
0.9D + 1.6W 94 mph Wind	4521.5	33.4	38.1
1.2D + 1.0Di + 1.0Wi 50 mph Wind	1623.5	11.2	89.7
1.2D + 1.0E	262.1	1.9	50.8
0.9D + 1.0E	257.8	1.9	38.1
1.0D + 1.0W 60 mph Wind	1160.7	8.5	42.3

Copyright © 2019 by Tower Engineering Solutions, LLC. All rights reserved.

Structure: CT46124-A-SBA - Coax Line Placement

Type: Monopole
Site Name: Enfield-Moody Rd.
Height: 188.00 (ft)

2/6/2019

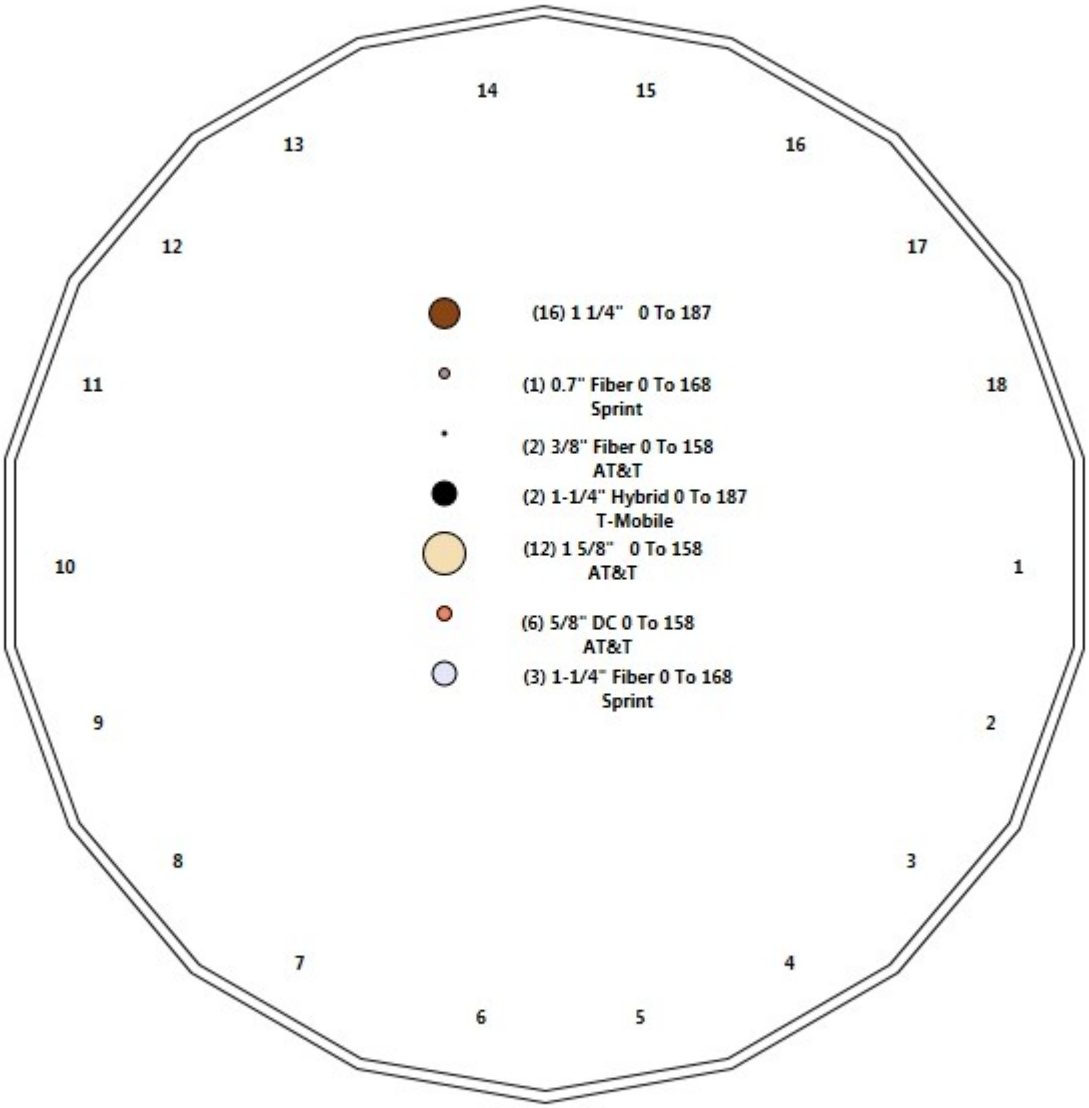

Copyright © 2019 by Tower Engineering Solutions, LLC. All rights reserved.

Shaft Properties

Structure:	CT46124-A-SBA		**Code:**	EIA/TIA-222-G	2/6/2019
Site Name:	Enfield-Moody Rd.		**Exposure:**	C	
Height:	188.00 (ft)		**Crest Height:**	0.00	
Base Elev:	0.000 (ft)		**Site Class:**	D - Stiff Soil	
Gh:	1.1	**Topography:** 1	**Struct Class:**	II	Page: 5

Tower Engineering Solutions

Sec. No.	Shape	Length (ft)	Thick (in)	Fy (ksi)	Joint Type	Overlap (in)	Weight (lb)
1	18	49.000	0.4375	65		0.00	10,936
2	18	49.000	0.3750	65	Slip	69.00	8,110
3	18	49.000	0.3125	65	Slip	57.00	5,657
4	18	45.500	0.2188	65	Slip	48.00	2,963
5	18	10.000	0.1875	65	Flange	0.00	482
					Total Shaft Weight:		**28,148**

	Bottom						Top						
Sec. No.	**Dia (in)**	**Elev (ft)**	**Area (sqin)**	**Ix (in^4)**	**W/t Ratio**	**D/t Ratio**	**Dia (in)**	**Elev (ft)**	**Area (sqin)**	**Ix (in^4)**	**W/t Ratio**	**D/t Ratio**	**Taper**
1	51.74	0.00	71.24	23688.52	19.44	118.26	43.60	49.00	59.94	14111.8	16.16	99.67	0.166026
2	45.31	43.25	53.48	13643.07	19.89	120.83	37.17	92.25	43.80	7493.55	16.07	99.13	0.166026
3	38.59	87.50	37.96	7026.65	20.36	123.48	30.45	136.50	29.89	3431.02	15.77	97.45	0.166026
4	31.55	132.5	21.76	2699.58	24.02	144.21	24.00	178.00	16.51	1180.03	17.93	109.6	0.166026
5	24.00	178.0	14.17	1015.22	21.16	128.00	22.34	188.00	14.17	1015.22	21.16	119.1	0.000000

Additional Steel

							Intermediate Connectors		Termination Connectors			
Elev From (ft)	**Elev To (ft)**	**Qty**	**Description**	**Fy (ksi)**	**Fu (ksi)**	**Offset (in)**	**Description**	**Spacing (in)**	**Description**	**Spacing (in)**	**Lower Qty**	**Upper Qty**
0.25	32.83	3	PLT 6"X1-1/4"(1.25" Hole	65	80	0.00	AJM20&sleeve	21.00	AJM20&sleeve	3.00		11
48.92	76.83	3	PLT 5.5"x1 1/4"(1.25"hol	65	80	0.00	AJM20&sleeve	21.00	AJM20&sleeve	3.00	10	10
91.92	105.5	3	PLT 4.5"x 1-1/4"(1.25"ho	65	80	0.00	AJM20&sleeve	24.00	AJM20&sleeve	3.00	7	7

Copyright © 2019 by Tower Engineering Solutions, LLC. All rights reserved.

Load Summary

Structure:	CT46124-A-SBA	**Code:**	EIA/TIA-222-G	2/6/2019	
Site Name:	Enfield-Moody Rd.	**Exposure:**	C		
Height:	188.00 (ft)	**Crest Height:**	0.00		
Base Elev:	0.000 (ft)	**Site Class:**	D - Stiff Soil		
Gh:	1.1 **Topography:** 1	**Struct Class:**	II	Page: 6	

Tower Engineering Solutions

Discrete Appurtenances

				No Ice			Ice				
No.	Elev (ft)	Description	Qty	Weight (lb)	CaAa (sf)	CaAa Factor	Weight (lb)	CaAa (sf)	CaAa Factor	Hor. Ecc. (ft)	Vert Ecc (ft)
1	187.00	Ericsson KRY 112 114-1 Double	12	11.00	0.41	0.50	25.70	1.058	0.50	0.00	0.00
2	187.00	Commscope LNX-6515DS-A1M	3	49.80	10.47	0.80	362.69	14.535	0.80	0.00	0.00
3	187.00	Kathrein 782 11054-Smart Bias T	3	1.80	0.22	0.50	5.18	0.893	0.50	0.00	0.00
4	187.00	Ericsson KRD901146-1_B66A_B2A	3	132.20	6.51	0.86	398.86	8.075	0.86	0.00	0.00
5	187.00	RFS APXVAARR24_43-U-NA20	3	128.00	18.24	0.70	724.23	22.865	0.70	0.00	0.00
6	187.00	Ericsson Radio 4449 B71 + B12	3	74.00	2.65	0.50	175.96	2.412	0.50	0.00	0.00
7	184.00	Platform w/ Hand Rail	1	1600.00	32.00	1.00	4457.58	70.000	1.00	0.00	0.00
8	168.50	Low Profile Platform	1	1400.00	22.00	1.00	3047.92	45.824	1.00	0.00	0.00
9	168.00	ACU-A20-N	4	1.00	0.14	0.50	6.79	0.540	0.67	0.00	0.00
10	168.00	APXV9ERR18-C-A20	1	62.00	8.02	0.81	306.73	11.787	0.81	0.00	0.00
11	168.00	APXVSPP18-C-A20	2	57.00	8.02	0.81	290.10	11.787	0.81	0.00	0.00
12	168.00	800 MHz Filters	3	54.00	2.94	0.50	155.87	4.579	0.50	0.00	0.00
13	168.00	APXVTM14-C-120	3	56.00	6.34	0.78	287.79	7.875	0.78	0.00	0.00
14	168.00	1900 MHz RRH	3	44.00	2.94	0.50	134.92	4.579	0.50	0.00	0.00
15	168.00	800 MHz RRH	3	54.00	2.94	0.50	155.87	4.579	0.50	0.00	0.00
16	168.00	TD-RRH8x20-25	3	70.00	3.05	0.50	230.02	5.176	0.50	0.00	0.00
17	158.00	800 10966	6	114.60	14.31	0.71	617.51	19.818	0.71	0.00	0.00
18	158.00	Ericsson RRUS 4415 B25 RRU	3	46.00	1.64	0.50	101.09	2.330	0.50	0.00	0.00
19	158.00	Ericsson 8843 B2 B66A RRU	3	72.00	1.64	0.50	134.78	2.306	0.50	0.00	0.00
20	158.00	Ericsson 4449 B5 B12 RRU	3	73.00	1.65	0.67	178.33	2.398	0.50	0.00	0.00
21	158.00	Raycap DC6-48-60-0-8C COVP	1	26.20	4.78	1.00	297.76	5.965	1.00	0.00	0.00
22	158.00	Plateform Mount [RMQP-12-H5]	1	2136.59	44.30	1.00	4935.27	18.907	1.00	0.00	0.00
23	158.00	Powerwave LGP21401 TMA	6	17.50	1.26	0.50	48.20	2.369	0.50	0.00	0.00
24	158.00	Raycap DC6-48-60-18-8F COVP	2	31.80	1.47	0.50	114.66	2.408	0.50	0.00	0.00
25	158.00	800 10121	3	44.10	5.15	0.78	190.74	7.974	0.78	0.00	0.00
26	158.00	HPA-65R-BUU-H8	3	68.00	12.98	0.78	480.19	15.189	0.78	0.00	0.00
27	158.00	Kathrein 860-10025 RET	6	1.16	0.16	0.50	8.75	0.626	0.50	0.00	0.00
28	158.00	Ericsson RRUS-A2 RRU	3	21.10	1.86	0.50	69.27	3.165	0.50	0.00	0.00
		Totals:	**91**	**9,301.95**			**29,594.47**				

Linear Appurtenances

Bottom Elev. (ft)	Top Elev. (ft)	Description	Exposed Width	Exposed
0.00	187.00	(16) 1 1/4" Coax	0.00	Inside
0.00	187.00	(2) 1-1/4" Hybrid	0.00	Inside
0.00	168.00	(1) 0.7" Fiber	0.00	Inside
0.00	168.00	(3) 1-1/4" Fiber	0.00	Inside
0.00	158.00	(12) 1 5/8" Coax	0.00	Inside
0.00	158.00	(2) 3/8" Fiber	0.00	Inside
0.00	158.00	(6) 5/8" DC	0.00	Inside
90.25	107.25	(3) 1.25" Reinforcing plate	1.25	Outside
46.50	79.25	(3) 1.25" Reinforcing plate	1.25	Outside
0.00	35.50	(3) 1.25" Reinforcing plate	1.25	Outside

Copyright © 2019 by Tower Engineering Solutions, LLC. All rights reserved.

Shaft Section Properties

Structure:	CT46124-A-SBA	**Code:**	EIA/TIA-222-G	2/6/2019	
Site Name:	Enfield-Moody Rd.	**Exposure:**	C		
Height:	188.00 (ft)	**Crest Height:**	0.00		
Base Elev:	0.000 (ft)	**Site Class:**	D - Stiff Soil		
Gh:	1.1	**Topography:** 1	**Struct Class:**	II	Page: 7

Tower Engineering Solutions

Increment Length: **5 (ft)**

Elev (ft)	Description	Thick (in)	Flat Dia (in)	Area (in^2)	Ix (in^4)	W/t Ratio	D/t Ratio	Fy (ksi)	Fb (ksi)	Weight (lb)	Additional Reinforcing Area (in^2)	Additional Reinforcing Ixp (in^4)	Additional Reinforcing Iyp (in^4)	Additional Reinforcing Weight (lb)
0.00		0.4375	51.740	71.237	23688.5	19.44	118.26	65	79	0.0				
0.25	RB1	0.4375	51.698	71.180	23631.1	19.43	118.17	65	79	60.6	22.50	7920.2	7920.2	19.1
5.00		0.4375	50.910	70.085	22557.1	19.11	116.37	65	79	1141.6	22.50	7687.0	7687.0	363.7
10.00		0.4375	50.080	68.932	21462.3	18.77	114.47	65	79	1182.6	22.50	7445.4	7445.4	382.8
15.00		0.4375	49.250	67.779	20403.5	18.44	112.57	65	80	1163.0	22.50	7207.7	7207.7	382.8
20.00		0.4375	48.419	66.627	19380.1	18.10	110.67	65	80	1143.4	22.50	6973.8	6973.8	382.8
25.00		0.4375	47.589	65.474	18391.6	17.77	108.78	65	81	1123.8	22.50	6743.8	6743.8	382.8
30.00		0.4375	46.759	64.321	17437.2	17.43	106.88	65	81	1104.2	22.50	6517.7	6517.7	382.8
32.83	RT1	0.4375	46.289	63.669	16911.9	17.25	105.80	65	81	616.3	22.50	6391.4	6391.4	216.7
35.00		0.4375	45.929	63.168	16516.4	17.10	104.98	65	81	468.3				
40.00		0.4375	45.099	62.016	15628.6	16.77	103.08	65	82	1064.9				
43.25	Bot - Section 2	0.4375	44.559	61.267	15069.0	16.55	101.85	65	82	681.7				
45.00		0.4375	44.269	60.863	14773.3	16.43	101.19	65	82	681.1				
48.92	RB2	0.4375	43.618	59.959	14124.9	16.17	99.70	65	82	1509.4	20.63	5392.4	5392.4	275.1
49.00	Top - Section 1	0.3750	44.355	52.345	12791.9	19.45	118.28	65	79	30.6	20.63	5389.3	5389.3	5.6
50.00		0.3750	44.189	52.147	12647.5	19.37	117.84	65	79	177.8	20.63	5350.3	5350.3	70.2
55.00		0.3750	43.359	51.159	11942.2	18.98	115.62	65	79	878.8	20.63	5157.6	5157.6	350.9
60.00		0.3750	42.528	50.171	11263.5	18.59	113.41	65	80	862.0	20.63	4968.5	4968.5	350.9
65.00		0.3750	41.698	49.183	10611.1	18.20	111.20	65	80	845.2	20.63	4782.8	4782.8	350.9
70.00		0.3750	40.868	48.195	9984.4	17.81	108.98	65	80	828.4	20.63	4600.8	4600.8	350.9
75.00		0.3750	40.038	47.207	9382.8	17.42	106.77	65	81	811.6	20.63	4422.3	4422.3	350.9
76.83	RT2	0.3750	39.734	46.846	9168.9	17.27	105.96	65	81	292.8	20.63	4357.8	4357.8	128.4
80.00		0.3750	39.208	46.219	8805.9	17.03	104.55	65	81	501.9				
85.00		0.3750	38.378	45.231	8253.2	16.63	102.34	65	82	778.0				
87.50	Bot - Section 3	0.3750	37.963	44.737	7985.7	16.44	101.23	65	82	382.7				
90.00		0.3750	37.548	44.243	7724.1	16.24	100.13	65	82	699.7				
91.92	RB3	0.3750	37.229	43.864	7527.1	16.09	99.28	65	82	532.1	16.88	3240.8	3240.8	110.2
92.25	Top - Section 2	0.3125	37.799	37.181	6601.2	19.92	120.96	65	78	91.0	16.88	3231.8	3231.8	18.9
95.00		0.3125	37.343	36.728	6362.9	19.66	119.50	65	78	345.8	16.88	3157.0	3157.0	157.9
100.00		0.3125	36.512	35.904	5944.5	19.19	116.84	65	79	617.9	16.88	3023.3	3023.3	287.1
105.00		0.3125	35.682	35.081	5544.9	18.72	114.18	65	79	603.9	16.88	2892.5	2892.5	287.1
105.58	RT3	0.3125	35.586	34.986	5499.7	18.67	113.88	65	79	69.1	16.88	2877.5	2877.5	33.3
110.00		0.3125	34.852	34.258	5163.6	18.25	111.53	65	80	520.7				
115.00		0.3125	34.022	33.434	4800.1	17.79	108.87	65	80	575.9				
120.00		0.3125	33.192	32.611	4454.2	17.32	106.21	65	81	561.8				
125.00		0.3125	32.362	31.788	4125.2	16.85	103.56	65	82	547.8				
130.00		0.3125	31.532	30.964	3812.9	16.38	100.90	65	82	533.8				
132.50	Bot - Section 4	0.3125	31.117	30.553	3662.8	16.15	99.57	65	82	261.7				
135.00		0.3125	30.702	30.141	3516.8	15.91	98.24	65	83	442.1				
136.50	Top - Section 3	0.2188	30.890	21.300	2531.6	23.48	141.18	65	74	262.4				
140.00		0.2188	30.309	20.896	2390.4	23.01	138.52	65	74	251.3				
145.00		0.2188	29.479	20.320	2197.9	22.35	134.73	65	75	350.6				
150.00		0.2188	28.649	19.743	2016.1	21.68	130.94	65	76	340.8				
155.00		0.2188	27.819	19.167	1844.6	21.01	127.14	65	77	331.0				
158.00		0.2188	27.321	18.821	1746.6	20.61	124.87	65	77	193.9				
160.00		0.2188	26.988	18.590	1683.1	20.34	123.35	65	77	127.3				
165.00		0.2188	26.158	18.014	1531.4	19.67	119.55	65	78	311.4				
168.00		0.2188	25.660	17.668	1444.8	19.27	117.28	65	79	182.1				
168.50		0.2188	25.577	17.610	1430.7	19.20	116.90	65	79	30.0				
170.00		0.2188	25.328	17.437	1389.0	19.00	115.76	65	79	89.4				

Copyright © 2019 by Tower Engineering Solutions, LLC. All rights reserved.

Increment Length: **5 (ft)**

Elev (ft)	Description	Thick (in)	Flat Dia (in)	Area (in^2)	Ix (in^4)	W/t Ratio	D/t Ratio	Fy (ksi)	Fb (ksi)	Weight (lb)	Additional Reinforcing Area (in^2)	Additional Reinforcing Ixp (in^4)	Additional Reinforcing Iyp (in^4)	Additional Reinforcing Weight (lb)
175.00		0.2188	24.498	16.861	1255.7	18.33	111.97	65	80	291.8				
178.00	Top - Section 4	0.2188	24.000	16.515	1180.0	17.93	109.69	65	80	170.4				
178.00	Bot - Section 5	0.1875	24.000	14.171	1015.2	20.92	128.00	65	77					
180.00		0.1875	24.000	14.171	1015.2	21.16	128.00	65	77	96.4				
184.00		0.1875	24.000	14.171	1015.2	21.16	128.00	65	77	192.9				
185.00		0.1875	24.000	14.171	1015.2	21.16	128.00	65	77	48.2				
187.00		0.1875	24.000	14.171	1015.2	21.16	128.00	65	77	96.4				
188.00		0.1875	24.000	14.171	1015.2	21.16	128.00	65	77	48.2				
									Total Weight	**28148.4**				**5642.0**

Copyright © 2019 by Tower Engineering Solutions, LLC. All rights reserved.

Wind Loading - Shaft

Structure:	CT46124-A-SBA		**Code:**	EIA/TIA-222-G	2/6/2019
Site Name:	Enfield-Moody Rd.		**Exposure:**	C	
Height:	188.00 (ft)		**Crest Height:**	0.00	
Base Elev:	0.000 (ft)		**Site Class:**	D - Stiff Soil	
Gh:	1.1	**Topography:** 1	**Struct Class:**	II	Page: 9

Tower Engineering Solutions

Load Case: 1.2D + 1.6W 94 mph Wind

Dead Load Factor 1.20

Wind Load Factor 1.60

Iterations 30

Elev (ft)	Description	Kzt	Kz	qz (psf)	qzGh (psf)	C (mph-ft)	Cf	Ice Thick (in)	Tributary (ft)	Aa (sf)	CfAa (sf)	Wind Force X (lb)	Dead Load Ice (lb)	Tot Dead Load (lb)
0.00		1.00	0.85	18.266	20.09	379.43	0.650	0.000	0.00	0.000	0.00	0.0	0.0	0.0
0.25	RB1	1.00	0.85	18.266	20.09	379.13	0.650	0.000	0.25	1.094	0.71	22.9	0.0	72.7
5.00		1.00	0.85	18.266	20.09	373.34	0.650	0.000	4.75	20.621	13.40	430.9	0.0	1370.0
10.00		1.00	0.85	18.266	20.09	367.25	0.650	0.000	5.00	21.364	13.89	446.4	0.0	1419.1
15.00		1.00	0.85	18.266	20.09	361.17	0.650	0.000	5.00	21.013	13.66	439.1	0.0	1395.6
20.00		1.00	0.90	19.381	21.32	365.76	0.650	0.000	5.00	20.662	13.43	458.1	0.0	1372.1
25.00		1.00	0.95	20.313	22.34	368.03	0.650	0.000	5.00	20.310	13.20	472.0	0.0	1348.5
30.00		1.00	0.98	21.108	23.22	368.62	0.650	0.000	5.00	19.959	12.97	482.0	0.0	1325.0
32.83	RT1	1.00	1.00	21.512	23.66	368.39	0.650	0.000	2.83	11.141	7.24	274.2	0.0	739.5
35.00		1.00	1.01	21.804	23.98	367.99	0.650	0.000	2.17	8.467	5.50	211.2	0.0	561.9
40.00		1.00	1.04	22.426	24.67	366.46	0.650	0.000	5.00	19.257	12.52	494.0	0.0	1277.9
43.25	Bot - Section 2	1.00	1.06	22.798	25.08	365.06	0.650	0.000	3.25	12.329	8.01	321.5	0.0	818.0
45.00		1.00	1.07	22.989	25.29	364.20	0.650	0.000	1.75	6.688	4.35	175.9	0.0	817.3
48.92	RB2	1.00	1.09	23.397	25.74	362.02	0.650	0.000	3.92	14.825	9.64	396.8	0.0	1811.3
49.00	Top - Section 1	1.00	1.09	23.405	25.75	361.97	0.650	0.000	0.08	0.300	0.20	8.0	0.0	36.7
50.00		1.00	1.09	23.504	25.85	367.60	0.650	0.000	1.00	3.746	2.44	100.7	0.0	213.3
55.00		1.00	1.12	23.981	26.38	364.33	0.650	0.000	5.00	18.520	12.04	508.1	0.0	1054.6
60.00		1.00	1.14	24.424	26.87	360.64	0.650	0.000	5.00	18.169	11.81	507.7	0.0	1034.4
65.00		1.00	1.16	24.839	27.32	356.59	0.650	0.000	5.00	17.818	11.58	506.3	0.0	1014.2
70.00		1.00	1.17	25.230	27.75	352.23	0.650	0.000	5.00	17.467	11.35	504.1	0.0	994.1
75.00		1.00	1.19	25.599	28.16	347.59	0.650	0.000	5.00	17.115	11.13	501.2	0.0	973.9
76.83	RT2	1.00	1.20	25.729	28.30	345.83	0.650	0.000	1.83	6.176	4.01	181.8	0.0	351.4
80.00		1.00	1.21	25.949	28.54	342.70	0.650	0.000	3.17	10.588	6.88	314.3	0.0	602.3
85.00		1.00	1.22	26.282	28.91	337.60	0.650	0.000	5.00	16.413	10.67	493.5	0.0	933.6
87.50	Bot - Section 3	1.00	1.23	26.443	29.09	334.97	0.650	0.000	2.50	8.075	5.25	244.3	0.0	459.2
90.00		1.00	1.24	26.600	29.26	332.29	0.650	0.000	2.50	8.119	5.28	247.1	0.0	839.6
91.92	RB3	1.00	1.24	26.719	29.39	330.20	0.650	0.000	1.92	6.176	4.01	188.8	0.0	638.5
92.25	Top - Section 2	1.00	1.24	26.739	29.41	329.84	0.650	0.000	0.33	1.056	0.69	32.3	0.0	109.2
95.00		1.00	1.25	26.905	29.60	332.36	0.650	0.000	2.75	8.743	5.68	269.1	0.0	415.0
100.00		1.00	1.27	27.197	29.92	326.73	0.650	0.000	5.00	15.624	10.16	486.1	0.0	741.5
105.00		1.00	1.28	27.478	30.23	320.94	0.650	0.000	5.00	15.273	9.93	480.1	0.0	724.6
105.58	RT3	1.00	1.28	27.510	30.26	320.26	0.650	0.000	0.58	1.749	1.14	55.0	0.0	83.0
110.00		1.00	1.29	27.748	30.52	315.02	0.650	0.000	4.42	13.172	8.56	418.1	0.0	624.9
115.00		1.00	1.30	28.009	30.81	308.96	0.650	0.000	5.00	14.570	9.47	466.9	0.0	691.0
120.00		1.00	1.32	28.261	31.09	302.77	0.650	0.000	5.00	14.219	9.24	459.7	0.0	674.2
125.00		1.00	1.33	28.505	31.36	296.47	0.650	0.000	5.00	13.868	9.01	452.2	0.0	657.4
130.00		1.00	1.34	28.742	31.62	290.06	0.650	0.000	5.00	13.516	8.79	444.4	0.0	640.6
132.50	Bot - Section 4	1.00	1.34	28.857	31.74	286.82	0.650	0.000	2.50	6.627	4.31	218.8	0.0	314.0
135.00		1.00	1.35	28.971	31.87	283.55	0.650	0.000	2.50	6.631	4.31	219.8	0.0	530.5
136.50	Top - Section 3	1.00	1.35	29.038	31.94	281.57	0.650	0.000	1.50	3.937	2.56	130.8	0.0	314.8
140.00		1.00	1.36	29.193	32.11	281.00	0.650	0.000	3.50	9.063	5.89	302.7	0.0	301.5
145.00		1.00	1.37	29.410	32.35	274.31	0.650	0.000	5.00	12.648	8.22	425.5	0.0	420.7
150.00		1.00	1.38	29.621	32.58	267.54	0.650	0.000	5.00	12.297	7.99	416.7	0.0	409.0
155.00		1.00	1.39	29.826	32.81	260.69	0.650	0.000	5.00	11.946	7.76	407.6	0.0	397.2
158.00	Appurtenance(s)	1.00	1.39	29.946	32.94	256.54	0.650	0.000	3.00	6.999	4.55	239.8	0.0	232.7
160.00		1.00	1.40	30.026	33.03	253.75	0.650	0.000	2.00	4.596	2.99	157.9	0.0	152.8
165.00		1.00	1.41	30.221	33.24	246.75	0.650	0.000	5.00	11.243	7.31	388.7	0.0	373.7

Copyright © 2019 by Tower Engineering Solutions, LLC. All rights reserved.

Wind Loading - Shaft

Structure:	CT46124-A-SBA		**Code:**	EIA/TIA-222-G	2/6/2019
Site Name:	Enfield-Moody Rd.		**Exposure:**	C	
Height:	188.00 (ft)		**Crest Height:**	0.00	
Base Elev:	0.000 (ft)		**Site Class:**	D - Stiff Soil	
Gh:	1.1	**Topography:** 1	**Struct Class:**	II	Page: 10

Tower Engineering Solutions

168.00 Appurtenance(s)	1.00	1.41	30.336	33.37	242.51	0.650	0.000	3.00	6.577	4.28	228.3	0.0	218.5
168.50 Appurtenance(s)	1.00	1.41	30.355	33.39	241.80	0.650	0.000	0.50	1.084	0.70	37.6	0.0	36.0
170.00	1.00	1.42	30.411	33.45	239.67	0.650	0.000	1.50	3.231	2.10	112.4	0.0	107.3
175.00	1.00	1.42	30.598	33.66	232.52	0.650	0.000	5.00	10.541	6.85	369.0	0.0	350.1
178.00 Top - Section 4	1.00	1.43	30.707	33.78	228.20	0.650	0.000	3.00	6.156	4.00	216.2	0.0	204.4
180.00	1.00	1.43	30.780	33.86	228.47	0.650	0.000	2.00	4.062	2.64	143.0	0.0	115.7
184.00 Appurtenance(s)	1.00	1.44	30.922	34.01	229.00	0.650	0.000	4.00	8.123	5.28	287.4	0.0	231.5
185.00	1.00	1.44	30.958	34.05	229.13	0.650	0.000	1.00	2.031	1.32	71.9	0.0	57.9
187.00 Appurtenance(s)	1.00	1.44	31.028	34.13	229.39	0.650	0.000	2.00	4.062	2.64	144.2	0.0	115.7
188.00	1.00	1.45	31.063	34.17	229.52	0.650	0.000	1.00	2.031	1.32	72.2	0.0	57.9
							Totals:	**188.00**			**17,085.2**		**33,778.1**

Copyright © 2019 by Tower Engineering Solutions, LLC. All rights reserved.

Discrete Appurtenance Forces

Structure:	CT46124-A-SBA		**Code:**	EIA/TIA-222-G	2/6/2019
Site Name:	Enfield-Moody Rd.		**Exposure:**	C	
Height:	188.00 (ft)		**Crest Height:**	0.00	
Base Elev:	0.000 (ft)		**Site Class:**	D - Stiff Soil	
Gh:	1.1	**Topography:** 1	**Struct Class:**	II	Page: 11

Tower Engineering Solutions

Load Case: 1.2D + 1.6W 94 mph Wind

Dead Load Factor 1.20

Wind Load Factor 1.60

Iterations 30

No.	Elev (ft)	Description	Qty	qz (psf)	qzGh (psf)	CaAa x Ka	Ka	Total CaAa (sf)	Dead Load (lb)	Horiz Ecc (ft)	Vert Ecc (ft)	Wind FX (lb)	Mom Y (lb-ft)	Mom Z (lb-ft)
1	187.00	Ericsson Radio 4449 B71	3	31.028	34.131	0.38	0.75	2.98	266.40	0.000	0.000	162.80	0.00	0.00
2	187.00	RFS	3	31.028	34.131	0.52	0.75	28.73	460.80	0.000	0.000	1568.81	0.00	0.00
3	187.00	Ericsson	3	31.028	34.131	0.65	0.75	12.60	475.92	0.000	0.000	687.90	0.00	0.00
4	187.00	Kathrein 782 11054-Smart	3	31.028	34.131	0.38	0.75	0.25	6.48	0.000	0.000	13.52	0.00	0.00
5	187.00	Commscope	3	31.028	34.131	0.60	0.75	18.85	179.28	0.000	0.000	1029.16	0.00	0.00
6	187.00	Ericsson KRY 112 114-1	12	31.028	34.131	0.38	0.75	1.84	158.40	0.000	0.000	100.75	0.00	0.00
7	184.00	Platform w/ Hand Rail	1	30.922	34.015	1.00	1.00	32.00	1920.00	0.000	0.000	1741.55	0.00	0.00
8	168.50	Low Profile Platform	1	30.355	33.390	1.00	1.00	22.00	1680.00	0.000	0.000	1175.34	0.00	0.00
9	168.00	TD-RRH8x20-25	3	30.336	33.369	0.40	0.80	3.66	252.00	0.000	0.000	195.41	0.00	0.00
10	168.00	800 MHz RRH	3	30.336	33.369	0.40	0.80	3.53	194.40	0.000	0.000	188.36	0.00	0.00
11	168.00	1900 MHz RRH	3	30.336	33.369	0.40	0.80	3.53	158.40	0.000	0.000	188.36	0.00	0.00
12	168.00	APXVTM14-C-120	3	30.336	33.369	0.62	0.80	11.87	201.60	0.000	0.000	633.67	0.00	0.00
13	168.00	800 MHz Filters	3	30.336	33.369	0.40	0.80	3.53	194.40	0.000	0.000	188.36	0.00	0.00
14	168.00	APXVSPP18-C-A20	2	30.336	33.369	0.65	0.80	10.39	136.80	0.000	0.000	554.94	0.00	0.00
15	168.00	APXV9ERR18-C-A20	1	30.336	33.369	0.65	0.80	5.20	74.40	0.000	0.000	277.47	0.00	0.00
16	168.00	ACU-A20-N	4	30.336	33.369	0.40	0.80	0.22	4.80	0.000	0.000	11.96	0.00	0.00
17	158.00	Plateform Mount	1	29.946	32.941	1.00	1.00	44.30	2563.91	0.000	0.000	2334.86	0.00	0.00
18	158.00	800 10966	6	29.946	32.941	0.57	0.80	48.77	825.12	0.000	0.000	2570.38	0.00	0.00
19	158.00	Ericsson RRUS 4415 B25	3	29.946	32.941	0.40	0.80	1.97	165.60	0.000	0.000	103.72	0.00	0.00
20	158.00	Ericsson 8843 B2 B66A	3	29.946	32.941	0.40	0.80	1.97	259.20	0.000	0.000	103.72	0.00	0.00
21	158.00	Ericsson 4449 B5 B12	3	29.946	32.941	0.54	0.80	2.65	262.80	0.000	0.000	139.84	0.00	0.00
22	158.00	Raycap DC6-48-60-0-8C	1	29.946	32.941	1.00	1.00	4.78	31.44	0.000	0.000	251.93	0.00	0.00
23	158.00	Powerwave LGP21401	6	29.946	32.941	0.40	0.80	3.02	126.00	0.000	0.000	159.38	0.00	0.00
24	158.00	Raycap DC6-48-60-18-8F	2	29.946	32.941	0.40	0.80	1.18	76.32	0.000	0.000	61.98	0.00	0.00
25	158.00	800 10121	3	29.946	32.941	0.58	0.75	9.04	158.76	0.000	0.000	476.37	0.00	0.00
26	158.00	HPA-65R-BUU-H8	3	29.946	32.941	0.62	0.80	24.30	244.80	0.000	0.000	1280.67	0.00	0.00
27	158.00	Kathrein 860-10025 RET	6	29.946	32.941	0.40	0.80	0.38	8.35	0.000	0.000	20.24	0.00	0.00
28	158.00	Ericsson RRUS-A2 RRU	3	29.946	32.941	0.40	0.80	2.23	75.96	0.000	0.000	117.64	0.00	0.00
							Totals:		**11,162.34**			**16,339.12**		

Copyright © 2019 by Tower Engineering Solutions, LLC. All rights reserved.

Total Applied Force Summary

Structure:	CT46124-A-SBA		**Code:**	EIA/TIA-222-G	2/6/2019
Site Name:	Enfield-Moody Rd.		**Exposure:**	C	
Height:	188.00 (ft)		**Crest Height:**	0.00	
Base Elev:	0.000 (ft)		**Site Class:**	D - Stiff Soil	
Gh:	1.1	**Topography:** 1	**Struct Class:**	II	Page: 12

Tower Engineering Solutions

Load Case: 1.2D + 1.6W 94 mph Wind

Dead Load Factor 1.20

Wind Load Factor 1.60

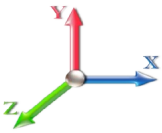

Iterations 30

Elev (ft)	Description	Lateral FX (-) (lb)	Axial FY (-) (lb)	Torsion MY (lb-ft)	Moment MZ (lb-ft)
0.00		0.00	0.00	0.00	0.00
0.25		22.86	81.16	0.00	0.00
5.00		430.90	1530.87	0.00	0.00
10.00		446.42	1588.50	0.00	0.00
15.00		439.09	1564.96	0.00	0.00
20.00		458.10	1541.43	0.00	0.00
25.00		471.97	1517.89	0.00	0.00
30.00		481.96	1494.36	0.00	0.00
32.83		274.19	835.38	0.00	0.00
35.00		211.19	635.45	0.00	0.00
40.00		494.03	1447.29	0.00	0.00
43.25		321.53	928.12	0.00	0.00
45.00		175.89	876.57	0.00	0.00
48.92		396.80	1944.09	0.00	0.00
49.00		8.04	39.40	0.00	0.00
50.00		100.73	247.21	0.00	0.00
55.00		508.09	1223.96	0.00	0.00
60.00		507.67	1203.79	0.00	0.00
65.00		506.31	1183.61	0.00	0.00
70.00		504.14	1163.44	0.00	0.00
75.00		501.23	1143.27	0.00	0.00
76.83		181.80	413.39	0.00	0.00
80.00		314.31	709.70	0.00	0.00
85.00		493.49	1102.92	0.00	0.00
87.50		244.27	543.90	0.00	0.00
90.00		247.08	924.29	0.00	0.00
91.92		188.78	703.58	0.00	0.00
92.25		32.31	120.38	0.00	0.00
95.00		269.10	508.12	0.00	0.00
100.00		486.11	910.82	0.00	0.00
105.00		480.09	894.01	0.00	0.00
105.58		55.04	102.62	0.00	0.00
110.00		418.15	774.59	0.00	0.00
115.00		466.86	860.39	0.00	0.00
120.00		459.71	843.58	0.00	0.00
125.00		452.23	826.77	0.00	0.00
130.00		444.43	809.96	0.00	0.00
132.50		218.76	398.68	0.00	0.00
135.00		219.78	615.14	0.00	0.00
136.50		130.77	365.66	0.00	0.00
140.00		302.66	420.08	0.00	0.00
145.00		425.54	590.11	0.00	0.00
150.00		416.69	578.34	0.00	0.00
155.00		407.59	566.57	0.00	0.00
158.00	(40) attachments	7860.51	5132.55	0.00	0.00
160.00		157.86	188.01	0.00	0.00
165.00		388.70	461.79	0.00	0.00

Copyright © 2019 by Tower Engineering Solutions, LLC. All rights reserved.

Total Applied Force Summary

Structure:	CT46124-A-SBA		**Code:**	EIA/TIA-222-G	2/6/2019
Site Name:	Enfield-Moody Rd.		**Exposure:**	C	
Height:	188.00 (ft)		**Crest Height:**	0.00	
Base Elev:	0.000 (ft)		**Site Class:**	D - Stiff Soil	
Gh:	1.1	**Topography:** 1	**Struct Class:**	II	Page: 13

Tower Engineering Solutions

168.00	(22) attachments	2466.80	1488.22	0.00	0.00
168.50	(1) attachments	1212.98	1723.49	0.00	0.00
170.00		112.40	129.77	0.00	0.00
175.00		368.96	424.93	0.00	0.00
178.00		216.25	249.31	0.00	0.00
180.00		143.02	145.65	0.00	0.00
184.00	(1) attachments	2028.92	2211.30	0.00	0.00
185.00		71.92	72.83	0.00	0.00
187.00	(27) attachments	3707.12	1692.93	0.00	0.00
188.00		72.17	57.86	0.00	0.00
	Totals:	**33,424.27**	**50,753.02**	**0.00**	**0.00**

Copyright © 2019 by Tower Engineering Solutions, LLC. All rights reserved.

Linear Appurtenance Segment Forces (Factored)

Structure:	CT46124-A-SBA	**Code:**	EIA/TIA-222-G	2/6/2019	
Site Name:	Enfield-Moody Rd.	**Exposure:**	C		
Height:	188.00 (ft)	**Crest Height:**	0.00		
Base Elev:	0.000 (ft)	**Site Class:**	D - Stiff Soil		
Gh:	1.1 **Topography:** 1	**Struct Class:**	II	Page: 14	

Load Case: 1.2D + 1.6W 94 mph Wind

Dead Load Factor 1.20

Wind Load Factor 1.60

Iterations 30

Top Elev (ft)	Description	Wind Exposed	Length (ft)	Ca	Exposed Width (in)	Area (sqft)	CaAa (sqft)	Ra	Cf Adjust Factor	qz (psf)	F X (lb)	Dead Load (lb)
0.25	1.25" Reinforcing	Yes	0.25	0.000	1.25	0.03	0.00	0.024	0.000	18.266	0.00	0.00
5.00	1.25" Reinforcing	Yes	4.75	0.000	1.25	0.49	0.00	0.024	0.000	18.266	0.00	0.00
10.00	1.25" Reinforcing	Yes	5.00	0.000	1.25	0.52	0.00	0.024	0.000	18.266	0.00	0.00
15.00	1.25" Reinforcing	Yes	5.00	0.000	1.25	0.52	0.00	0.025	0.000	18.266	0.00	0.00
20.00	1.25" Reinforcing	Yes	5.00	0.000	1.25	0.52	0.00	0.025	0.000	19.381	0.00	0.00
25.00	1.25" Reinforcing	Yes	5.00	0.000	1.25	0.52	0.00	0.026	0.000	20.313	0.00	0.00
30.00	1.25" Reinforcing	Yes	5.00	0.000	1.25	0.52	0.00	0.026	0.000	21.108	0.00	0.00
32.83	1.25" Reinforcing	Yes	2.83	0.000	1.25	0.29	0.00	0.026	0.000	21.512	0.00	0.00
35.00	1.25" Reinforcing	Yes	2.17	0.000	1.25	0.23	0.00	0.027	0.000	21.804	0.00	0.00
40.00	1.25" Reinforcing	Yes	0.50	0.000	1.25	0.05	0.00	0.003	0.000	22.426	0.00	0.00
48.92	1.25" Reinforcing	Yes	2.42	0.000	1.25	0.25	0.00	0.017	0.000	23.397	0.00	0.00
49.00	1.25" Reinforcing	Yes	0.08	0.000	1.25	0.01	0.00	0.028	0.000	23.405	0.00	0.00
50.00	1.25" Reinforcing	Yes	1.00	0.000	1.25	0.10	0.00	0.028	0.000	23.504	0.00	0.00
55.00	1.25" Reinforcing	Yes	5.00	0.000	1.25	0.52	0.00	0.028	0.000	23.981	0.00	0.00
60.00	1.25" Reinforcing	Yes	5.00	0.000	1.25	0.52	0.00	0.029	0.000	24.424	0.00	0.00
65.00	1.25" Reinforcing	Yes	5.00	0.000	1.25	0.52	0.00	0.029	0.000	24.839	0.00	0.00
70.00	1.25" Reinforcing	Yes	5.00	0.000	1.25	0.52	0.00	0.030	0.000	25.230	0.00	0.00
75.00	1.25" Reinforcing	Yes	5.00	0.000	1.25	0.52	0.00	0.030	0.000	25.599	0.00	0.00
76.83	1.25" Reinforcing	Yes	1.83	0.000	1.25	0.19	0.00	0.031	0.000	25.729	0.00	0.00
80.00	1.25" Reinforcing	Yes	2.42	0.000	1.25	0.25	0.00	0.024	0.000	25.949	0.00	0.00
91.92	1.25" Reinforcing	Yes	1.67	0.000	1.25	0.17	0.00	0.029	0.000	26.719	0.00	0.00
92.25	1.25" Reinforcing	Yes	0.33	0.000	1.25	0.03	0.00	0.033	0.000	26.739	0.00	0.00
95.00	1.25" Reinforcing	Yes	2.75	0.000	1.25	0.29	0.00	0.033	0.000	26.905	0.00	0.00
100.00	1.25" Reinforcing	Yes	5.00	0.000	1.25	0.52	0.00	0.033	0.000	27.197	0.00	0.00
105.00	1.25" Reinforcing	Yes	5.00	0.000	1.25	0.52	0.00	0.034	0.000	27.478	0.00	0.00
105.58	1.25" Reinforcing	Yes	0.58	0.000	1.25	0.06	0.00	0.035	0.000	27.510	0.00	0.00
110.00	1.25" Reinforcing	Yes	1.67	0.000	1.25	0.17	0.00	0.013	0.000	27.748	0.00	0.00
										Totals:	**0.0**	**0.0**

Copyright © 2019 by Tower Engineering Solutions, LLC. All rights reserved.

Calculated Forces

Structure:	CT46124-A-SBA	**Code:**	EIA/TIA-222-G	2/6/2019	
Site Name:	Enfield-Moody Rd.	**Exposure:**	C		
Height:	188.00 (ft)	**Crest Height:**	0.00		
Base Elev:	0.000 (ft)	**Site Class:**	D - Stiff Soil		
Gh:	1.1	**Topography:** 1	**Struct Class:**	II	Page: 15

Tower Engineering Solutions

Load Case: 1.2D + 1.6W 94 mph Wind

Dead Load Factor 1.20

Wind Load Factor 1.60

Iterations 30

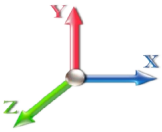

Seg Elev (ft)	Pu FY (-) (kips)	Vu FX (-) (kips)	Tu MY (-) (ft-kips)	Mu MZ (ft-kips)	Mu MX (ft-kips)	Resultant Moment (ft-kips)	phi Pn (kips)	phi Vn (kips)	phi Tn (ft-kips)	phi Mn (ft-kips)	Total Deflect (in)	Rotation Sway (deg)	Rotation Twist (deg)	Stress Ratio
0.00	-50.75	-33.43	0.00	-4592.0	0.00	4592.04	5035.03	2517.52	10606.9	5311.37	0.00	0.000	0.000	0.875
0.25	-50.61	-33.50	0.00	-4583.6	0.00	4583.68	5032.22	2516.11	10592.3	5304.07	0.00	-0.014	0.000	0.655
5.00	-48.96	-33.24	0.00	-4424.5	0.00	4424.56	4978.38	2489.19	10316.4	5165.91	0.11	-0.207	0.000	0.646
10.00	-47.26	-32.95	0.00	-4258.3	0.00	4258.38	4920.91	2460.46	10028.2	5021.57	0.44	-0.411	0.000	0.637
15.00	-45.58	-32.66	0.00	-4093.6	0.00	4093.63	4862.63	2431.31	9742.31	4878.39	0.98	-0.616	0.000	0.627
20.00	-43.93	-32.34	0.00	-3930.3	0.00	3930.33	4803.53	2401.76	9458.77	4736.42	1.73	-0.823	0.000	0.617
25.00	-42.30	-32.00	0.00	-3768.6	0.00	3768.61	4743.61	2371.81	9177.73	4595.68	2.71	-1.031	0.000	0.607
30.00	-40.73	-31.61	0.00	-3608.6	0.00	3608.61	4682.88	2341.44	8899.25	4456.24	3.90	-1.240	0.000	0.596
32.83	-39.84	-31.39	0.00	-3519.1	0.00	3519.17	4648.14	2324.07	8742.80	4377.90	4.67	-1.359	0.000	0.590
32.83	-39.84	-31.39	0.00	-3519.1	0.00	3519.17	4648.14	2324.07	8742.80	4377.90	4.67	-1.359	0.000	0.590
35.00	-39.10	-31.29	0.00	-3451.0	0.00	3451.07	4621.33	2310.66	8623.42	4318.12	5.31	-1.452	0.000	0.808
40.00	-37.54	-30.91	0.00	-3294.6	0.00	3294.61	4558.96	2279.48	8350.33	4181.37	6.98	-1.742	0.000	0.796
43.25	-36.55	-30.66	0.00	-3194.1	0.00	3194.14	4517.98	2258.99	8174.32	4093.24	8.24	-1.934	0.000	0.789
45.00	-35.59	-30.56	0.00	-3140.4	0.00	3140.49	4495.78	2247.89	8080.06	4046.03	8.96	-2.039	0.000	0.784
48.92	-33.60	-30.16	0.00	-3020.7	0.00	3020.71	4445.67	2222.84	7870.19	3940.94	10.74	-2.271	0.000	0.561
49.00	-33.54	-30.16	0.00	-3018.3	0.00	3018.30	3699.57	1849.78	6681.20	3345.56	10.77	-2.275	0.000	0.598
50.00	-33.23	-30.13	0.00	-2988.1	0.00	2988.14	3689.91	1844.95	6638.39	3324.13	11.26	-2.319	0.000	0.638
55.00	-31.91	-29.70	0.00	-2837.4	0.00	2837.49	3641.14	1820.57	6425.47	3217.51	13.81	-2.549	0.000	0.622
60.00	-30.61	-29.26	0.00	-2689.0	0.00	2689.00	3591.55	1795.77	6214.50	3111.87	16.60	-2.779	0.000	0.606
65.00	-29.34	-28.81	0.00	-2542.7	0.00	2542.71	3541.14	1770.57	6005.55	3007.24	19.63	-3.008	0.000	0.589
70.00	-28.10	-28.36	0.00	-2398.6	0.00	2398.66	3489.91	1744.96	5798.71	2903.67	22.90	-3.236	0.000	0.571
75.00	-26.91	-27.86	0.00	-2256.8	0.00	2256.88	3437.87	1718.94	5594.07	2801.19	26.41	-3.463	0.000	0.553
76.83	-26.45	-27.71	0.00	-2205.9	0.00	2205.90	3418.62	1709.31	5519.73	2763.97	27.75	-3.548	0.000	0.547
76.83	-26.45	-27.71	0.00	-2205.9	0.00	2205.90	3418.62	1709.31	5519.73	2763.97	27.75	-3.548	0.000	0.547
80.00	-25.65	-27.46	0.00	-2118.0	0.00	2118.07	3385.02	1692.51	5391.70	2699.86	30.15	-3.692	0.000	0.792
85.00	-24.46	-27.00	0.00	-1980.7	0.00	1980.79	3331.35	1665.67	5191.69	2599.71	34.20	-4.023	0.000	0.770
87.50	-23.86	-26.78	0.00	-1913.3	0.00	1913.30	3304.20	1652.10	5092.60	2550.09	36.35	-4.191	0.000	0.758
90.00	-22.89	-26.53	0.00	-1846.3	0.00	1846.34	3276.86	1638.43	4994.13	2500.78	38.58	-4.358	0.000	0.746
91.92	-22.17	-26.31	0.00	-1795.4	0.00	1795.41	3255.72	1627.86	4918.94	2463.13	40.36	-4.487	0.000	0.515
92.25	-22.02	-26.30	0.00	-1786.7	0.00	1786.73	2609.22	1304.61	4017.17	2011.57	40.67	-4.502	0.000	0.552
95.00	-21.45	-26.06	0.00	-1714.4	0.00	1714.41	2587.46	1293.73	3934.74	1970.29	43.30	-4.630	0.000	0.588
100.00	-20.47	-25.59	0.00	-1584.1	0.00	1584.11	2547.26	1273.63	3786.04	1895.83	48.27	-4.877	0.000	0.560
105.00	-19.57	-25.08	0.00	-1456.1	0.00	1456.18	2506.24	1253.12	3638.92	1822.16	53.50	-5.118	0.000	0.531
105.58	-19.42	-25.05	0.00	-1441.6	0.00	1441.63	2501.42	1250.71	3621.96	1813.67	54.13	-5.146	0.000	0.527
105.58	-19.42	-25.05	0.00	-1441.6	0.00	1441.63	2501.42	1250.71	3621.96	1813.67	54.13	-5.146	0.000	0.527
110.00	-18.56	-24.66	0.00	-1330.9	0.00	1330.90	2464.40	1232.20	3493.46	1749.33	58.98	-5.354	0.000	0.769
115.00	-17.61	-24.22	0.00	-1207.6	0.00	1207.61	2421.75	1210.87	3349.75	1677.36	64.77	-5.704	0.000	0.728
120.00	-16.68	-23.77	0.00	-1086.5	0.00	1086.53	2378.28	1189.14	3207.87	1606.32	70.92	-6.044	0.000	0.684
125.00	-15.77	-23.32	0.00	-967.68	0.00	967.68	2333.99	1167.00	3067.90	1536.23	77.41	-6.372	0.000	0.637
130.00	-14.93	-22.85	0.00	-851.09	0.00	851.09	2288.89	1144.45	2929.94	1467.15	84.24	-6.685	0.000	0.587
132.50	-14.50	-22.62	0.00	-793.97	0.00	793.97	2266.03	1133.02	2861.73	1432.99	87.77	-6.839	0.000	0.561
135.00	-13.87	-22.36	0.00	-737.42	0.00	737.42	2239.33	1119.66	2789.52	1396.83	91.39	-6.987	0.000	0.535
136.50	-13.46	-22.22	0.00	-703.89	0.00	703.89	1414.34	707.17	1783.76	893.21	93.59	-7.075	0.000	0.799
140.00	-12.98	-21.92	0.00	-626.13	0.00	626.13	1397.90	698.95	1729.39	865.98	98.84	-7.268	0.000	0.733
145.00	-12.33	-21.50	0.00	-516.51	0.00	516.51	1373.73	686.86	1652.26	827.36	106.61	-7.608	0.000	0.634
150.00	-11.71	-21.06	0.00	-409.04	0.00	409.04	1348.73	674.37	1575.83	789.09	114.72	-7.907	0.000	0.528
155.00	-11.14	-20.61	0.00	-303.73	0.00	303.73	1322.92	661.46	1500.20	751.22	123.12	-8.159	0.000	0.414
158.00	-7.17	-12.11	0.00	-241.89	0.00	241.89	1307.05	653.52	1455.24	728.70	128.27	-8.285	0.000	0.338

Copyright © 2019 by Tower Engineering Solutions, LLC. All rights reserved.

Calculated Forces

Structure:	CT46124-A-SBA		**Code:**	EIA/TIA-222-G	2/6/2019
Site Name:	Enfield-Moody Rd.		**Exposure:**	C	
Height:	188.00 (ft)		**Crest Height:**	0.00	
Base Elev:	0.000 (ft)		**Site Class:**	D - Stiff Soil	
Gh:	1.1	**Topography:** 1	**Struct Class:**	II	Page: 16

Tower Engineering Solutions

160.00	-6.98	-11.94	0.00	-217.67	0.00	217.67	1296.30	648.15	1425.45	713.78	131.75	-8.360	0.000	0.311
165.00	-6.56	-11.50	0.00	-157.95	0.00	157.95	1268.86	634.43	1351.65	676.83	140.56	-8.519	0.000	0.239
168.00	-5.45	-8.85	0.00	-123.44	0.00	123.44	1252.00	626.00	1307.87	654.91	145.92	-8.597	0.000	0.193
168.50	-3.92	-7.39	0.00	-119.01	0.00	119.01	1249.16	624.58	1300.61	651.27	146.82	-8.609	0.000	0.186
170.00	-3.80	-7.27	0.00	-107.92	0.00	107.92	1240.60	620.30	1278.90	640.40	149.52	-8.643	0.000	0.172
175.00	-3.43	-6.84	0.00	-71.59	0.00	71.59	1211.52	605.76	1207.28	604.54	158.58	-8.735	0.000	0.121
178.00	-3.21	-6.59	0.00	-51.07	0.00	51.07	1193.69	596.84	1164.89	583.31	164.07	-8.776	0.000	0.090
178.00	-3.21	-6.59	0.00	-51.07	0.00	51.07	975.84	487.92	954.81	478.11	164.07	-8.776	0.000	0.110
180.00	-3.09	-6.43	0.00	-37.89	0.00	37.89	975.84	487.92	954.81	478.11	167.73	-8.798	0.000	0.083
184.00	-1.21	-4.09	0.00	-12.17	0.00	12.17	975.84	487.92	954.81	478.11	175.09	-8.826	0.000	0.027
185.00	-1.15	-4.00	0.00	-8.09	0.00	8.09	975.84	487.92	954.81	478.11	176.93	-8.829	0.000	0.018
187.00	-0.05	-0.08	0.00	-0.08	0.00	0.08	975.84	487.92	954.81	478.11	180.62	-8.831	0.000	0.000
188.00	0.00	-0.07	0.00	0.00	0.00	0.00	975.84	487.92	954.81	478.11	182.46	-8.831	0.000	0.000

Copyright © 2019 by Tower Engineering Solutions, LLC. All rights reserved.

Wind Loading - Shaft

Structure:	CT46124-A-SBA		**Code:**	EIA/TIA-222-G	2/6/2019
Site Name:	Enfield-Moody Rd.		**Exposure:**	C	
Height:	188.00 (ft)		**Crest Height:**	0.00	
Base Elev:	0.000 (ft)		**Site Class:**	D - Stiff Soil	
Gh:	1.1	**Topography:** 1	**Struct Class:**	II	Page: 17

Tower Engineering Solutions

Load Case: 0.9D + 1.6W 94 mph Wind

Dead Load Factor 0.90

Wind Load Factor 1.60

Iterations 29

Elev (ft)	Description	Kzt	Kz	qz (psf)	qzGh (psf)	C (mph-ft)	Cf	Ice Thick (in)	Tributary (ft)	Aa (sf)	CfAa (sf)	Wind Force X (lb)	Dead Load Ice (lb)	Tot Dead Load (lb)
0.00		1.00	0.85	18.266	20.09	379.43	0.650	0.000	0.00	0.000	0.00	0.0	0.0	0.0
0.25	RB1	1.00	0.85	18.266	20.09	379.13	0.650	0.000	0.25	1.094	0.71	22.9	0.0	54.5
5.00		1.00	0.85	18.266	20.09	373.34	0.650	0.000	4.75	20.621	13.40	430.9	0.0	1027.5
10.00		1.00	0.85	18.266	20.09	367.25	0.650	0.000	5.00	21.364	13.89	446.4	0.0	1064.3
15.00		1.00	0.85	18.266	20.09	361.17	0.650	0.000	5.00	21.013	13.66	439.1	0.0	1046.7
20.00		1.00	0.90	19.381	21.32	365.76	0.650	0.000	5.00	20.662	13.43	458.1	0.0	1029.0
25.00		1.00	0.95	20.313	22.34	368.03	0.650	0.000	5.00	20.310	13.20	472.0	0.0	1011.4
30.00		1.00	0.98	21.108	23.22	368.62	0.650	0.000	5.00	19.959	12.97	482.0	0.0	993.7
32.83	RT1	1.00	1.00	21.512	23.66	368.39	0.650	0.000	2.83	11.141	7.24	274.2	0.0	554.6
35.00		1.00	1.01	21.804	23.98	367.99	0.650	0.000	2.17	8.467	5.50	211.2	0.0	421.5
40.00		1.00	1.04	22.426	24.67	366.46	0.650	0.000	5.00	19.257	12.52	494.0	0.0	958.4
43.25	Bot - Section 2	1.00	1.06	22.798	25.08	365.06	0.650	0.000	3.25	12.329	8.01	321.5	0.0	613.5
45.00		1.00	1.07	22.989	25.29	364.20	0.650	0.000	1.75	6.688	4.35	175.9	0.0	613.0
48.92	RB2	1.00	1.09	23.397	25.74	362.02	0.650	0.000	3.92	14.825	9.64	396.8	0.0	1358.5
49.00	Top - Section 1	1.00	1.09	23.405	25.75	361.97	0.650	0.000	0.08	0.300	0.20	8.0	0.0	27.5
50.00		1.00	1.09	23.504	25.85	367.60	0.650	0.000	1.00	3.746	2.44	100.7	0.0	160.0
55.00		1.00	1.12	23.981	26.38	364.33	0.650	0.000	5.00	18.520	12.04	508.1	0.0	790.9
60.00		1.00	1.14	24.424	26.87	360.64	0.650	0.000	5.00	18.169	11.81	507.7	0.0	775.8
65.00		1.00	1.16	24.839	27.32	356.59	0.650	0.000	5.00	17.818	11.58	506.3	0.0	760.7
70.00		1.00	1.17	25.230	27.75	352.23	0.650	0.000	5.00	17.467	11.35	504.1	0.0	745.6
75.00		1.00	1.19	25.599	28.16	347.59	0.650	0.000	5.00	17.115	11.13	501.2	0.0	730.4
76.83	RT2	1.00	1.20	25.729	28.30	345.83	0.650	0.000	1.83	6.176	4.01	181.8	0.0	263.6
80.00		1.00	1.21	25.949	28.54	342.70	0.650	0.000	3.17	10.588	6.88	314.3	0.0	451.7
85.00		1.00	1.22	26.282	28.91	337.60	0.650	0.000	5.00	16.413	10.67	493.5	0.0	700.2
87.50	Bot - Section 3	1.00	1.23	26.443	29.09	334.97	0.650	0.000	2.50	8.075	5.25	244.3	0.0	344.4
90.00		1.00	1.24	26.600	29.26	332.29	0.650	0.000	2.50	8.119	5.28	247.1	0.0	629.7
91.92	RB3	1.00	1.24	26.719	29.39	330.20	0.650	0.000	1.92	6.176	4.01	188.8	0.0	478.9
92.25	Top - Section 2	1.00	1.24	26.739	29.41	329.84	0.650	0.000	0.33	1.056	0.69	32.3	0.0	81.9
95.00		1.00	1.25	26.905	29.60	332.36	0.650	0.000	2.75	8.743	5.68	269.1	0.0	311.2
100.00		1.00	1.27	27.197	29.92	326.73	0.650	0.000	5.00	15.624	10.16	486.1	0.0	556.1
105.00		1.00	1.28	27.478	30.23	320.94	0.650	0.000	5.00	15.273	9.93	480.1	0.0	543.5
105.58	RT3	1.00	1.28	27.510	30.26	320.26	0.650	0.000	0.58	1.749	1.14	55.0	0.0	62.2
110.00		1.00	1.29	27.748	30.52	315.02	0.650	0.000	4.42	13.172	8.56	418.1	0.0	468.6
115.00		1.00	1.30	28.009	30.81	308.96	0.650	0.000	5.00	14.570	9.47	466.9	0.0	518.3
120.00		1.00	1.32	28.261	31.09	302.77	0.650	0.000	5.00	14.219	9.24	459.7	0.0	505.7
125.00		1.00	1.33	28.505	31.36	296.47	0.650	0.000	5.00	13.868	9.01	452.2	0.0	493.1
130.00		1.00	1.34	28.742	31.62	290.06	0.650	0.000	5.00	13.516	8.79	444.4	0.0	480.4
132.50	Bot - Section 4	1.00	1.34	28.857	31.74	286.82	0.650	0.000	2.50	6.627	4.31	218.8	0.0	235.5
135.00		1.00	1.35	28.971	31.87	283.55	0.650	0.000	2.50	6.631	4.31	219.8	0.0	397.8
136.50	Top - Section 3	1.00	1.35	29.038	31.94	281.57	0.650	0.000	1.50	3.937	2.56	130.8	0.0	236.1
140.00		1.00	1.36	29.193	32.11	281.00	0.650	0.000	3.50	9.063	5.89	302.7	0.0	226.1
145.00		1.00	1.37	29.410	32.35	274.31	0.650	0.000	5.00	12.648	8.22	425.5	0.0	315.6
150.00		1.00	1.38	29.621	32.58	267.54	0.650	0.000	5.00	12.297	7.99	416.7	0.0	306.7
155.00		1.00	1.39	29.826	32.81	260.69	0.650	0.000	5.00	11.946	7.76	407.6	0.0	297.9
158.00	Appurtenance(s)	1.00	1.39	29.946	32.94	256.54	0.650	0.000	3.00	6.999	4.55	239.8	0.0	174.5
160.00		1.00	1.40	30.026	33.03	253.75	0.650	0.000	2.00	4.596	2.99	157.9	0.0	114.6
165.00		1.00	1.41	30.221	33.24	246.75	0.650	0.000	5.00	11.243	7.31	388.7	0.0	280.2

Copyright © 2019 by Tower Engineering Solutions, LLC. All rights reserved.

Wind Loading - Shaft

Structure:	CT46124-A-SBA	**Code:**	EIA/TIA-222-G	2/6/2019	
Site Name:	Enfield-Moody Rd.	**Exposure:**	C		
Height:	188.00 (ft)	**Crest Height:**	0.00		
Base Elev:	0.000 (ft)	**Site Class:**	D - Stiff Soil		
Gh:	1.1	**Topography:** 1	**Struct Class:**	II	Page: 18

Tower Engineering Solutions

168.00 Appurtenance(s)	1.00	1.41	30.336	33.37	242.51	0.650	0.000	3.00	6.577	4.28	228.3	0.0	163.9
168.50 Appurtenance(s)	1.00	1.41	30.355	33.39	241.80	0.650	0.000	0.50	1.084	0.70	37.6	0.0	27.0
170.00	1.00	1.42	30.411	33.45	239.67	0.650	0.000	1.50	3.231	2.10	112.4	0.0	80.5
175.00	1.00	1.42	30.598	33.66	232.52	0.650	0.000	5.00	10.541	6.85	369.0	0.0	262.6
178.00 Top - Section 4	1.00	1.43	30.707	33.78	228.20	0.650	0.000	3.00	6.156	4.00	216.2	0.0	153.3
180.00	1.00	1.43	30.780	33.86	228.47	0.650	0.000	2.00	4.062	2.64	143.0	0.0	86.8
184.00 Appurtenance(s)	1.00	1.44	30.922	34.01	229.00	0.650	0.000	4.00	8.123	5.28	287.4	0.0	173.6
185.00	1.00	1.44	30.958	34.05	229.13	0.650	0.000	1.00	2.031	1.32	71.9	0.0	43.4
187.00 Appurtenance(s)	1.00	1.44	31.028	34.13	229.39	0.650	0.000	2.00	4.062	2.64	144.2	0.0	86.8
188.00	1.00	1.45	31.063	34.17	229.52	0.650	0.000	1.00	2.031	1.32	72.2	0.0	43.4
							Totals:	**188.00**			**17,085.2**		**25,333.6**

Copyright © 2019 by Tower Engineering Solutions, LLC. All rights reserved.

Discrete Appurtenance Forces

Structure:	CT46124-A-SBA		**Code:**	EIA/TIA-222-G	2/6/2019
Site Name:	Enfield-Moody Rd.		**Exposure:**	C	
Height:	188.00 (ft)		**Crest Height:**	0.00	
Base Elev:	0.000 (ft)		**Site Class:**	D - Stiff Soil	
Gh:	1.1	**Topography:** 1	**Struct Class:**	II	Page: 19

Tower Engineering Solutions

Load Case: 0.9D + 1.6W 94 mph Wind

Dead Load Factor 0.90

Wind Load Factor 1.60

Iterations 29

No.	Elev (ft)	Description	Qty	qz (psf)	qzGh (psf)	CaAa x Ka	Ka	Total CaAa (sf)	Dead Load (lb)	Horiz Ecc (ft)	Vert Ecc (ft)	Wind FX (lb)	Mom Y (lb-ft)	Mom Z (lb-ft)
1	187.00	Ericsson Radio 4449 B71	3	31.028	34.131	0.38	0.75	2.98	199.80	0.000	0.000	162.80	0.00	0.00
2	187.00	RFS	3	31.028	34.131	0.52	0.75	28.73	345.60	0.000	0.000	1568.81	0.00	0.00
3	187.00	Ericsson	3	31.028	34.131	0.65	0.75	12.60	356.94	0.000	0.000	687.90	0.00	0.00
4	187.00	Kathrein 782 11054-Smart	3	31.028	34.131	0.38	0.75	0.25	4.86	0.000	0.000	13.52	0.00	0.00
5	187.00	Commscope	3	31.028	34.131	0.60	0.75	18.85	134.46	0.000	0.000	1029.16	0.00	0.00
6	187.00	Ericsson KRY 112 114-1	12	31.028	34.131	0.38	0.75	1.84	118.80	0.000	0.000	100.75	0.00	0.00
7	184.00	Platform w/ Hand Rail	1	30.922	34.015	1.00	1.00	32.00	1440.00	0.000	0.000	1741.55	0.00	0.00
8	168.50	Low Profile Platform	1	30.355	33.390	1.00	1.00	22.00	1260.00	0.000	0.000	1175.34	0.00	0.00
9	168.00	TD-RRH8x20-25	3	30.336	33.369	0.40	0.80	3.66	189.00	0.000	0.000	195.41	0.00	0.00
10	168.00	800 MHz RRH	3	30.336	33.369	0.40	0.80	3.53	145.80	0.000	0.000	188.36	0.00	0.00
11	168.00	1900 MHz RRH	3	30.336	33.369	0.40	0.80	3.53	118.80	0.000	0.000	188.36	0.00	0.00
12	168.00	APXVTM14-C-120	3	30.336	33.369	0.62	0.80	11.87	151.20	0.000	0.000	633.67	0.00	0.00
13	168.00	800 MHz Filters	3	30.336	33.369	0.40	0.80	3.53	145.80	0.000	0.000	188.36	0.00	0.00
14	168.00	APXVSPP18-C-A20	2	30.336	33.369	0.65	0.80	10.39	102.60	0.000	0.000	554.94	0.00	0.00
15	168.00	APXV9ERR18-C-A20	1	30.336	33.369	0.65	0.80	5.20	55.80	0.000	0.000	277.47	0.00	0.00
16	168.00	ACU-A20-N	4	30.336	33.369	0.40	0.80	0.22	3.60	0.000	0.000	11.96	0.00	0.00
17	158.00	Plateform Mount	1	29.946	32.941	1.00	1.00	44.30	1922.93	0.000	0.000	2334.86	0.00	0.00
18	158.00	800 10966	6	29.946	32.941	0.57	0.80	48.77	618.84	0.000	0.000	2570.38	0.00	0.00
19	158.00	Ericsson RRUS 4415 B25	3	29.946	32.941	0.40	0.80	1.97	124.20	0.000	0.000	103.72	0.00	0.00
20	158.00	Ericsson 8843 B2 B66A	3	29.946	32.941	0.40	0.80	1.97	194.40	0.000	0.000	103.72	0.00	0.00
21	158.00	Ericsson 4449 B5 B12	3	29.946	32.941	0.54	0.80	2.65	197.10	0.000	0.000	139.84	0.00	0.00
22	158.00	Raycap DC6-48-60-0-8C	1	29.946	32.941	1.00	1.00	4.78	23.58	0.000	0.000	251.93	0.00	0.00
23	158.00	Powerwave LGP21401	6	29.946	32.941	0.40	0.80	3.02	94.50	0.000	0.000	159.38	0.00	0.00
24	158.00	Raycap DC6-48-60-18-8F	2	29.946	32.941	0.40	0.80	1.18	57.24	0.000	0.000	61.98	0.00	0.00
25	158.00	800 10121	3	29.946	32.941	0.58	0.75	9.04	119.07	0.000	0.000	476.37	0.00	0.00
26	158.00	HPA-65R-BUU-H8	3	29.946	32.941	0.62	0.80	24.30	183.60	0.000	0.000	1280.67	0.00	0.00
27	158.00	Kathrein 860-10025 RET	6	29.946	32.941	0.40	0.80	0.38	6.26	0.000	0.000	20.24	0.00	0.00
28	158.00	Ericsson RRUS-A2 RRU	3	29.946	32.941	0.40	0.80	2.23	56.97	0.000	0.000	117.64	0.00	0.00
							Totals:		**8,371.75**			**16,339.12**		

Copyright © 2019 by Tower Engineering Solutions, LLC. All rights reserved.

Total Applied Force Summary

Structure:	CT46124-A-SBA		**Code:**	EIA/TIA-222-G	2/6/2019
Site Name:	Enfield-Moody Rd.		**Exposure:**	C	
Height:	188.00 (ft)		**Crest Height:**	0.00	
Base Elev:	0.000 (ft)		**Site Class:**	D - Stiff Soil	
Gh:	1.1	**Topography:** 1	**Struct Class:**	II	Page: 20

Tower Engineering Solutions

Load Case: 0.9D + 1.6W 94 mph Wind

Dead Load Factor 0.90

Wind Load Factor 1.60

Iterations 29

Elev (ft)	Description	Lateral FX (-) (lb)	Axial FY (-) (lb)	Torsion MY (lb-ft)	Moment MZ (lb-ft)
0.00		0.00	0.00	0.00	0.00
0.25		22.86	60.87	0.00	0.00
5.00		430.90	1148.15	0.00	0.00
10.00		446.42	1191.37	0.00	0.00
15.00		439.09	1173.72	0.00	0.00
20.00		458.10	1156.07	0.00	0.00
25.00		471.97	1138.42	0.00	0.00
30.00		481.96	1120.77	0.00	0.00
32.83		274.19	626.53	0.00	0.00
35.00		211.19	476.59	0.00	0.00
40.00		494.03	1085.47	0.00	0.00
43.25		321.53	696.09	0.00	0.00
45.00		175.89	657.43	0.00	0.00
48.92		396.80	1458.07	0.00	0.00
49.00		8.04	29.55	0.00	0.00
50.00		100.73	185.41	0.00	0.00
55.00		508.09	917.97	0.00	0.00
60.00		507.67	902.84	0.00	0.00
65.00		506.31	887.71	0.00	0.00
70.00		504.14	872.58	0.00	0.00
75.00		501.23	857.45	0.00	0.00
76.83		181.80	310.05	0.00	0.00
80.00		314.31	532.28	0.00	0.00
85.00		493.49	827.19	0.00	0.00
87.50		244.27	407.92	0.00	0.00
90.00		247.08	693.22	0.00	0.00
91.92		188.78	527.68	0.00	0.00
92.25		32.31	90.28	0.00	0.00
95.00		269.10	381.09	0.00	0.00
100.00		486.11	683.12	0.00	0.00
105.00		480.09	670.51	0.00	0.00
105.58		55.04	76.96	0.00	0.00
110.00		418.15	580.94	0.00	0.00
115.00		466.86	645.29	0.00	0.00
120.00		459.71	632.69	0.00	0.00
125.00		452.23	620.08	0.00	0.00
130.00		444.43	607.47	0.00	0.00
132.50		218.76	299.01	0.00	0.00
135.00		219.78	461.36	0.00	0.00
136.50		130.77	274.24	0.00	0.00
140.00		302.66	315.06	0.00	0.00
145.00		425.54	442.58	0.00	0.00
150.00		416.69	433.76	0.00	0.00
155.00		407.59	424.93	0.00	0.00
158.00	(40) attachments	7860.51	3849.41	0.00	0.00
160.00		157.86	141.01	0.00	0.00
165.00		388.70	346.34	0.00	0.00

Copyright © 2019 by Tower Engineering Solutions, LLC. All rights reserved.

Total Applied Force Summary

Structure:	CT46124-A-SBA		**Code:**	EIA/TIA-222-G	2/6/2019
Site Name:	Enfield-Moody Rd.		**Exposure:**	C	
Height:	188.00 (ft)		**Crest Height:**	0.00	
Base Elev:	0.000 (ft)		**Site Class:**	D - Stiff Soil	
Gh:	1.1	**Topography:** 1	**Struct Class:**	II	Page: 21

Tower Engineering Solutions

168.00	(22) attachments	2466.80	1116.17	0.00	0.00
168.50	(1) attachments	1212.98	1292.62	0.00	0.00
170.00		112.40	97.33	0.00	0.00
175.00		368.96	318.70	0.00	0.00
178.00		216.25	186.98	0.00	0.00
180.00		143.02	109.24	0.00	0.00
184.00	(1) attachments	2028.92	1658.48	0.00	0.00
185.00		71.92	54.62	0.00	0.00
187.00	(27) attachments	3707.12	1269.70	0.00	0.00
188.00		72.17	43.40	0.00	0.00
	Totals:	**33,424.27**	**38,064.77**	**0.00**	**0.00**

Copyright © 2019 by Tower Engineering Solutions, LLC. All rights reserved.

Linear Appurtenance Segment Forces (Factored)

Structure:	CT46124-A-SBA	**Code:**	EIA/TIA-222-G	2/6/2019	
Site Name:	Enfield-Moody Rd.	**Exposure:**	C		
Height:	188.00 (ft)	**Crest Height:**	0.00		
Base Elev:	0.000 (ft)	**Site Class:**	D - Stiff Soil		
Gh:	1.1 **Topography:** 1	**Struct Class:**	II	Page: 22	

Tower Engineering Solutions

Load Case: 0.9D + 1.6W 94 mph Wind

Dead Load Factor 0.90

Wind Load Factor 1.60

Iterations 29

Top Elev (ft)	Description	Wind Exposed	Length (ft)	Ca	Exposed Width (in)	Area (sqft)	CaAa (sqft)	Ra	Cf Adjust Factor	qz (psf)	F X (lb)	Dead Load (lb)
0.25	1.25" Reinforcing	Yes	0.25	0.000	1.25	0.03	0.00	0.024	0.000	18.266	0.00	0.00
5.00	1.25" Reinforcing	Yes	4.75	0.000	1.25	0.49	0.00	0.024	0.000	18.266	0.00	0.00
10.00	1.25" Reinforcing	Yes	5.00	0.000	1.25	0.52	0.00	0.024	0.000	18.266	0.00	0.00
15.00	1.25" Reinforcing	Yes	5.00	0.000	1.25	0.52	0.00	0.025	0.000	18.266	0.00	0.00
20.00	1.25" Reinforcing	Yes	5.00	0.000	1.25	0.52	0.00	0.025	0.000	19.381	0.00	0.00
25.00	1.25" Reinforcing	Yes	5.00	0.000	1.25	0.52	0.00	0.026	0.000	20.313	0.00	0.00
30.00	1.25" Reinforcing	Yes	5.00	0.000	1.25	0.52	0.00	0.026	0.000	21.108	0.00	0.00
32.83	1.25" Reinforcing	Yes	2.83	0.000	1.25	0.29	0.00	0.026	0.000	21.512	0.00	0.00
35.00	1.25" Reinforcing	Yes	2.17	0.000	1.25	0.23	0.00	0.027	0.000	21.804	0.00	0.00
40.00	1.25" Reinforcing	Yes	0.50	0.000	1.25	0.05	0.00	0.003	0.000	22.426	0.00	0.00
48.92	1.25" Reinforcing	Yes	2.42	0.000	1.25	0.25	0.00	0.017	0.000	23.397	0.00	0.00
49.00	1.25" Reinforcing	Yes	0.08	0.000	1.25	0.01	0.00	0.028	0.000	23.405	0.00	0.00
50.00	1.25" Reinforcing	Yes	1.00	0.000	1.25	0.10	0.00	0.028	0.000	23.504	0.00	0.00
55.00	1.25" Reinforcing	Yes	5.00	0.000	1.25	0.52	0.00	0.028	0.000	23.981	0.00	0.00
60.00	1.25" Reinforcing	Yes	5.00	0.000	1.25	0.52	0.00	0.029	0.000	24.424	0.00	0.00
65.00	1.25" Reinforcing	Yes	5.00	0.000	1.25	0.52	0.00	0.029	0.000	24.839	0.00	0.00
70.00	1.25" Reinforcing	Yes	5.00	0.000	1.25	0.52	0.00	0.030	0.000	25.230	0.00	0.00
75.00	1.25" Reinforcing	Yes	5.00	0.000	1.25	0.52	0.00	0.030	0.000	25.599	0.00	0.00
76.83	1.25" Reinforcing	Yes	1.83	0.000	1.25	0.19	0.00	0.031	0.000	25.729	0.00	0.00
80.00	1.25" Reinforcing	Yes	2.42	0.000	1.25	0.25	0.00	0.024	0.000	25.949	0.00	0.00
91.92	1.25" Reinforcing	Yes	1.67	0.000	1.25	0.17	0.00	0.029	0.000	26.719	0.00	0.00
92.25	1.25" Reinforcing	Yes	0.33	0.000	1.25	0.03	0.00	0.033	0.000	26.739	0.00	0.00
95.00	1.25" Reinforcing	Yes	2.75	0.000	1.25	0.29	0.00	0.033	0.000	26.905	0.00	0.00
100.00	1.25" Reinforcing	Yes	5.00	0.000	1.25	0.52	0.00	0.033	0.000	27.197	0.00	0.00
105.00	1.25" Reinforcing	Yes	5.00	0.000	1.25	0.52	0.00	0.034	0.000	27.478	0.00	0.00
105.58	1.25" Reinforcing	Yes	0.58	0.000	1.25	0.06	0.00	0.035	0.000	27.510	0.00	0.00
110.00	1.25" Reinforcing	Yes	1.67	0.000	1.25	0.17	0.00	0.013	0.000	27.748	0.00	0.00
										Totals:	**0.0**	**0.0**

Copyright © 2019 by Tower Engineering Solutions, LLC. All rights reserved.

Calculated Forces

Structure:	CT46124-A-SBA	**Code:**	EIA/TIA-222-G	2/6/2019	
Site Name:	Enfield-Moody Rd.	**Exposure:**	C		
Height:	188.00 (ft)	**Crest Height:**	0.00		
Base Elev:	0.000 (ft)	**Site Class:**	D - Stiff Soil		
Gh:	1.1	**Topography:** 1	**Struct Class:**	II	Page: 23

TES Tower Engineering Solutions

Load Case: 0.9D + 1.6W 94 mph Wind

Dead Load Factor 0.90

Wind Load Factor 1.60

Iterations 29

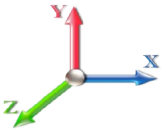

Seg Elev (ft)	Pu FY (-) (kips)	Vu FX (-) (kips)	Tu MY (-) (ft-kips)	Mu MZ (ft-kips)	Mu MX (ft-kips)	Resultant Moment (ft-kips)	phi Pn (kips)	phi Vn (kips)	phi Tn (ft-kips)	phi Mn (ft-kips)	Total Deflect (in)	Rotation Sway (deg)	Rotation Twist (deg)	Stress Ratio
0.00	-38.06	-33.43	0.00	-4521.5	0.00	4521.53	5035.03	2517.52	10606.9	5311.37	0.00	0.000	0.000	0.859
0.25	-37.94	-33.47	0.00	-4513.1	0.00	4513.17	5032.22	2516.11	10592.3	5304.07	0.00	-0.014	0.000	0.643
5.00	-36.68	-33.17	0.00	-4354.1	0.00	4354.18	4978.38	2489.19	10316.4	5165.91	0.11	-0.203	0.000	0.634
10.00	-35.37	-32.84	0.00	-4188.3	0.00	4188.35	4920.91	2460.46	10028.2	5021.57	0.43	-0.404	0.000	0.625
15.00	-34.09	-32.51	0.00	-4024.1	0.00	4024.17	4862.63	2431.31	9742.31	4878.39	0.96	-0.606	0.000	0.615
20.00	-32.83	-32.15	0.00	-3861.6	0.00	3861.62	4803.53	2401.76	9458.77	4736.42	1.71	-0.810	0.000	0.605
25.00	-31.58	-31.78	0.00	-3700.8	0.00	3700.86	4743.61	2371.81	9177.73	4595.68	2.66	-1.014	0.000	0.594
30.00	-30.38	-31.36	0.00	-3541.9	0.00	3541.98	4682.88	2341.44	8899.25	4456.24	3.83	-1.219	0.000	0.584
32.83	-29.71	-31.12	0.00	-3453.2	0.00	3453.24	4648.14	2324.07	8742.80	4377.90	4.59	-1.336	0.000	0.577
32.83	-29.71	-31.12	0.00	-3453.2	0.00	3453.24	4648.14	2324.07	8742.80	4377.90	4.59	-1.336	0.000	0.577
35.00	-29.13	-31.00	0.00	-3385.7	0.00	3385.70	4621.33	2310.66	8623.42	4318.12	5.22	-1.427	0.000	0.791
40.00	-27.94	-30.59	0.00	-3230.7	0.00	3230.72	4558.96	2279.48	8350.33	4181.37	6.87	-1.712	0.000	0.779
43.25	-27.17	-30.31	0.00	-3131.3	0.00	3131.31	4517.98	2258.99	8174.32	4093.24	8.10	-1.900	0.000	0.771
45.00	-26.43	-30.19	0.00	-3078.2	0.00	3078.26	4495.78	2247.89	8080.06	4046.03	8.81	-2.002	0.000	0.767
48.92	-24.93	-29.79	0.00	-2959.9	0.00	2959.90	4445.67	2222.84	7870.19	3940.94	10.55	-2.230	0.000	0.548
49.00	-24.89	-29.79	0.00	-2957.5	0.00	2957.52	3699.57	1849.78	6681.20	3345.56	10.59	-2.234	0.000	0.585
50.00	-24.64	-29.74	0.00	-2927.7	0.00	2927.72	3689.91	1844.95	6638.39	3324.13	11.06	-2.277	0.000	0.624
55.00	-23.63	-29.29	0.00	-2779.0	0.00	2779.01	3641.14	1820.57	6425.47	3217.51	13.57	-2.502	0.000	0.608
60.00	-22.64	-28.83	0.00	-2632.5	0.00	2632.55	3591.55	1795.77	6214.50	3111.87	16.31	-2.727	0.000	0.592
65.00	-21.67	-28.37	0.00	-2488.4	0.00	2488.40	3541.14	1770.57	6005.55	3007.24	19.28	-2.952	0.000	0.575
70.00	-20.71	-27.90	0.00	-2346.5	0.00	2346.57	3489.91	1744.96	5798.71	2903.67	22.49	-3.175	0.000	0.558
75.00	-19.81	-27.40	0.00	-2207.0	0.00	2207.08	3437.87	1718.94	5594.07	2801.19	25.93	-3.397	0.000	0.540
76.83	-19.46	-27.24	0.00	-2156.9	0.00	2156.94	3418.62	1709.31	5519.73	2763.97	27.25	-3.480	0.000	0.533
76.83	-19.46	-27.24	0.00	-2156.9	0.00	2156.94	3418.62	1709.31	5519.73	2763.97	27.25	-3.480	0.000	0.533
80.00	-18.84	-26.97	0.00	-2070.5	0.00	2070.59	3385.02	1692.51	5391.70	2699.86	29.61	-3.620	0.000	0.773
85.00	-17.93	-26.50	0.00	-1935.7	0.00	1935.75	3331.35	1665.67	5191.69	2599.71	33.57	-3.944	0.000	0.750
87.50	-17.47	-26.28	0.00	-1869.5	0.00	1869.51	3304.20	1652.10	5092.60	2550.09	35.68	-4.108	0.000	0.739
90.00	-16.73	-26.02	0.00	-1803.8	0.00	1803.82	3276.86	1638.43	4994.13	2500.78	37.87	-4.272	0.000	0.727
91.92	-16.19	-25.81	0.00	-1753.8	0.00	1753.86	3255.72	1627.86	4918.94	2463.13	39.61	-4.397	0.000	0.502
92.25	-16.07	-25.79	0.00	-1745.3	0.00	1745.34	2609.22	1304.61	4017.17	2011.57	39.92	-4.413	0.000	0.538
95.00	-15.63	-25.55	0.00	-1674.4	0.00	1674.41	2587.46	1293.73	3934.74	1970.29	42.49	-4.537	0.000	0.573
100.00	-14.88	-25.07	0.00	-1546.6	0.00	1546.69	2547.26	1273.63	3786.04	1895.83	47.37	-4.778	0.000	0.545
105.00	-14.20	-24.56	0.00	-1421.3	0.00	1421.35	2506.24	1253.12	3638.92	1822.16	52.49	-5.013	0.000	0.517
105.58	-14.08	-24.53	0.00	-1407.1	0.00	1407.10	2501.42	1250.71	3621.96	1813.67	53.10	-5.041	0.000	0.514
105.58	-14.08	-24.53	0.00	-1407.1	0.00	1407.10	2501.42	1250.71	3621.96	1813.67	53.10	-5.041	0.000	0.514
110.00	-13.42	-24.13	0.00	-1298.6	0.00	1298.68	2464.40	1232.20	3493.46	1749.33	57.86	-5.244	0.000	0.748
115.00	-12.68	-23.68	0.00	-1178.0	0.00	1178.04	2421.75	1210.87	3349.75	1677.36	63.53	-5.585	0.000	0.708
120.00	-11.97	-23.22	0.00	-1059.6	0.00	1059.66	2378.28	1189.14	3207.87	1606.32	69.55	-5.917	0.000	0.665
125.00	-11.28	-22.77	0.00	-943.54	0.00	943.54	2333.99	1167.00	3067.90	1536.23	75.90	-6.237	0.000	0.619
130.00	-10.63	-22.30	0.00	-829.69	0.00	829.69	2288.89	1144.45	2929.94	1467.15	82.59	-6.543	0.000	0.571
132.50	-10.31	-22.08	0.00	-773.93	0.00	773.93	2266.03	1133.02	2861.73	1432.99	86.05	-6.692	0.000	0.545
135.00	-9.83	-21.83	0.00	-718.74	0.00	718.74	2239.33	1119.66	2789.52	1396.83	89.58	-6.837	0.000	0.519
136.50	-9.52	-21.69	0.00	-686.00	0.00	686.00	1414.34	707.17	1783.76	893.21	91.74	-6.922	0.000	0.776
140.00	-9.15	-21.39	0.00	-610.10	0.00	610.10	1397.90	698.95	1729.39	865.98	96.87	-7.110	0.000	0.712
145.00	-8.65	-20.96	0.00	-503.16	0.00	503.16	1373.73	686.86	1652.26	827.36	104.48	-7.442	0.000	0.615
150.00	-8.18	-20.53	0.00	-398.37	0.00	398.37	1348.73	674.37	1575.83	789.09	112.41	-7.733	0.000	0.512
155.00	-7.75	-20.09	0.00	-295.73	0.00	295.73	1322.92	661.46	1500.20	751.22	120.63	-7.978	0.000	0.400
158.00	-5.02	-11.78	0.00	-235.47	0.00	235.47	1307.05	653.52	1455.24	728.70	125.66	-8.101	0.000	0.327

Copyright © 2019 by Tower Engineering Solutions, LLC. All rights reserved.

Calculated Forces

Structure:	CT46124-A-SBA		**Code:**	EIA/TIA-222-G	2/6/2019
Site Name:	Enfield-Moody Rd.		**Exposure:**	C	
Height:	188.00 (ft)		**Crest Height:**	0.00	
Base Elev:	0.000 (ft)		**Site Class:**	D - Stiff Soil	
Gh:	1.1	**Topography:** 1	**Struct Class:**	II	Page: 24

Tower Engineering Solutions

160.00	-4.88	-11.61	0.00	-211.92	0.00	211.92	1296.30	648.15	1425.45	713.78	129.06	-8.174	0.000	0.301
165.00	-4.57	-11.18	0.00	-153.87	0.00	153.87	1268.86	634.43	1351.65	676.83	137.68	-8.329	0.000	0.231
168.00	-3.82	-8.58	0.00	-120.32	0.00	120.32	1252.00	626.00	1307.87	654.91	142.92	-8.405	0.000	0.187
168.50	-2.71	-7.20	0.00	-116.03	0.00	116.03	1249.16	624.58	1300.61	651.27	143.80	-8.417	0.000	0.180
170.00	-2.62	-7.07	0.00	-105.23	0.00	105.23	1240.60	620.30	1278.90	640.40	146.44	-8.450	0.000	0.167
175.00	-2.36	-6.66	0.00	-69.86	0.00	69.86	1211.52	605.76	1207.28	604.54	155.31	-8.539	0.000	0.118
178.00	-2.20	-6.42	0.00	-49.87	0.00	49.87	1193.69	596.84	1164.89	583.31	160.67	-8.580	0.000	0.087
178.00	-2.20	-6.42	0.00	-49.87	0.00	49.87	975.84	487.92	954.81	478.11	160.67	-8.580	0.000	0.107
180.00	-2.11	-6.27	0.00	-37.03	0.00	37.03	975.84	487.92	954.81	478.11	164.25	-8.601	0.000	0.080
184.00	-0.77	-4.01	0.00	-11.96	0.00	11.96	975.84	487.92	954.81	478.11	171.45	-8.628	0.000	0.026
185.00	-0.73	-3.93	0.00	-7.94	0.00	7.94	975.84	487.92	954.81	478.11	173.25	-8.631	0.000	0.017
187.00	-0.03	-0.08	0.00	-0.08	0.00	0.08	975.84	487.92	954.81	478.11	176.85	-8.633	0.000	0.000
188.00	0.00	-0.07	0.00	0.00	0.00	0.00	975.84	487.92	954.81	478.11	178.65	-8.633	0.000	0.000

Copyright © 2019 by Tower Engineering Solutions, LLC. All rights reserved.

Wind Loading - Shaft

Structure:	CT46124-A-SBA		**Code:**	EIA/TIA-222-G	2/6/2019
Site Name:	Enfield-Moody Rd.		**Exposure:**	C	
Height:	188.00 (ft)		**Crest Height:**	0.00	
Base Elev:	0.000 (ft)		**Site Class:**	D - Stiff Soil	
Gh:	1.1	**Topography:** 1	**Struct Class:**	II	Page: 25

Tower Engineering Solutions

Load Case: 1.2D + 1.0Di + 1.0Wi 50 mph Wind

Dead Load Factor 1.20

Wind Load Factor 1.00

Iterations 30

Elev (ft)	Description	Kzt	Kz	qz (psf)	qzGh (psf)	C (mph-ft)	Cf	Ice Thick (in)	Tributary (ft)	Aa (sf)	CfAa (sf)	Wind Force X (lb)	Dead Load Ice (lb)	Tot Dead Load (lb)
0.00		1.00	0.85	5.168	5.68	0.00	1.200	0.000	0.00	0.000	0.00	0.0	0.0	0.0
0.25	RB1	1.00	0.85	5.168	5.68	0.00	1.200	1.227	0.25	1.145	1.37	7.8	20.3	93.0
5.00		1.00	0.85	5.168	5.68	0.00	1.200	1.656	4.75	21.932	26.32	149.6	518.0	1888.0
10.00		1.00	0.85	5.168	5.68	0.00	1.200	1.775	5.00	22.843	27.41	155.8	576.5	1995.6
15.00		1.00	0.85	5.168	5.68	0.00	1.200	1.848	5.00	22.553	27.06	153.9	591.5	1987.1
20.00		1.00	0.90	5.483	6.03	0.00	1.200	1.902	5.00	22.247	26.70	161.0	599.5	1971.6
25.00		1.00	0.95	5.747	6.32	0.00	1.200	1.945	5.00	21.931	26.32	166.4	603.5	1952.0
30.00		1.00	0.98	5.972	6.57	0.00	1.200	1.981	5.00	21.610	25.93	170.4	604.7	1929.7
32.83	RT1	1.00	1.00	6.087	6.70	0.00	1.200	1.999	2.83	12.084	14.50	97.1	342.2	1081.7
35.00		1.00	1.01	6.169	6.79	0.00	1.200	2.012	2.17	9.194	11.03	74.9	262.1	824.1
40.00		1.00	1.04	6.345	6.98	0.00	1.200	2.039	5.00	20.956	25.15	175.5	601.9	1879.8
43.25	Bot - Section 2	1.00	1.06	6.450	7.10	0.00	1.200	2.055	3.25	13.442	16.13	114.4	389.9	1207.9
45.00		1.00	1.07	6.504	7.15	0.00	1.200	2.063	1.75	7.290	8.75	62.6	212.9	1030.2
48.92	RB2	1.00	1.09	6.620	7.28	0.00	1.200	2.080	3.92	16.184	19.42	141.4	474.4	2285.7
49.00	Top - Section 1	1.00	1.09	6.622	7.28	0.00	1.200	2.081	0.08	0.328	0.39	2.9	9.7	46.4
50.00		1.00	1.09	6.650	7.32	0.00	1.200	2.085	1.00	4.094	4.91	35.9	120.8	334.2
55.00		1.00	1.12	6.785	7.46	0.00	1.200	2.105	5.00	20.274	24.33	181.6	599.2	1653.8
60.00		1.00	1.14	6.910	7.60	0.00	1.200	2.123	5.00	19.939	23.93	181.9	593.7	1628.1
65.00		1.00	1.16	7.028	7.73	0.00	1.200	2.140	5.00	19.602	23.52	181.8	587.5	1601.8
70.00		1.00	1.17	7.138	7.85	0.00	1.200	2.156	5.00	19.264	23.12	181.5	580.9	1575.0
75.00		1.00	1.19	7.243	7.97	0.00	1.200	2.171	5.00	18.925	22.71	180.9	573.8	1547.7
76.83	RT2	1.00	1.20	7.280	8.01	0.00	1.200	2.176	1.83	6.840	8.21	65.7	209.0	560.4
80.00		1.00	1.21	7.342	8.08	0.00	1.200	2.185	3.17	11.742	14.09	113.8	359.1	961.4
85.00		1.00	1.22	7.436	8.18	0.00	1.200	2.198	5.00	18.245	21.89	179.1	558.6	1492.1
87.50	Bot - Section 3	1.00	1.23	7.482	8.23	0.00	1.200	2.205	2.50	8.994	10.79	88.8	277.3	736.5
90.00		1.00	1.24	7.526	8.28	0.00	1.200	2.211	2.50	9.041	10.85	89.8	279.5	1119.2
91.92	RB3	1.00	1.24	7.560	8.32	0.00	1.200	2.216	1.92	6.885	8.26	68.7	213.5	852.0
92.25	Top - Section 2	1.00	1.24	7.565	8.32	0.00	1.200	2.217	0.33	1.178	1.41	11.8	36.7	145.9
95.00		1.00	1.25	7.612	8.37	0.00	1.200	2.223	2.75	9.762	11.71	98.1	302.9	717.9
100.00		1.00	1.27	7.695	8.46	0.00	1.200	2.234	5.00	17.486	20.98	177.6	542.1	1283.5
105.00		1.00	1.28	7.774	8.55	0.00	1.200	2.245	5.00	17.144	20.57	175.9	533.2	1257.9
105.58	RT3	1.00	1.28	7.783	8.56	0.00	1.200	2.247	0.58	1.966	2.36	20.2	61.7	144.7
110.00		1.00	1.29	7.851	8.64	0.00	1.200	2.256	4.42	14.834	17.80	153.7	463.3	1088.2
115.00		1.00	1.30	7.925	8.72	0.00	1.200	2.266	5.00	16.458	19.75	172.2	514.8	1205.8
120.00		1.00	1.32	7.996	8.80	0.00	1.200	2.276	5.00	16.115	19.34	170.1	505.3	1179.5
125.00		1.00	1.33	8.065	8.87	0.00	1.200	2.285	5.00	15.772	18.93	167.9	495.6	1153.0
130.00		1.00	1.34	8.132	8.95	0.00	1.200	2.294	5.00	15.428	18.51	165.6	485.7	1126.3
132.50	Bot - Section 4	1.00	1.34	8.165	8.98	0.00	1.200	2.298	2.50	7.584	9.10	81.7	240.4	554.4
135.00		1.00	1.35	8.197	9.02	0.00	1.200	2.303	2.50	7.591	9.11	82.1	241.0	771.5
136.50	Top - Section 3	1.00	1.35	8.216	9.04	0.00	1.200	2.305	1.50	4.513	5.42	48.9	143.7	458.5
140.00		1.00	1.36	8.260	9.09	0.00	1.200	2.311	3.50	10.411	12.49	113.5	330.3	631.8
145.00		1.00	1.37	8.321	9.15	0.00	1.200	2.319	5.00	14.581	17.50	160.1	461.6	882.3
150.00		1.00	1.38	8.381	9.22	0.00	1.200	2.327	5.00	14.236	17.08	157.5	451.2	860.2
155.00		1.00	1.39	8.439	9.28	0.00	1.200	2.335	5.00	13.891	16.67	154.7	440.6	837.8
158.00	Appurtenance(s)	1.00	1.39	8.473	9.32	0.00	1.200	2.339	3.00	8.168	9.80	91.4	260.5	493.2
160.00		1.00	1.40	8.495	9.34	0.00	1.200	2.342	2.00	5.376	6.45	60.3	172.0	324.7
165.00		1.00	1.41	8.551	9.41	0.00	1.200	2.349	5.00	13.201	15.84	149.0	419.2	792.8

Copyright © 2019 by Tower Engineering Solutions, LLC. All rights reserved.

Wind Loading - Shaft

Structure:	CT46124-A-SBA		**Code:**	EIA/TIA-222-G	2/6/2019
Site Name:	Enfield-Moody Rd.		**Exposure:**	C	
Height:	188.00 (ft)		**Crest Height:**	0.00	
Base Elev:	0.000 (ft)		**Site Class:**	D - Stiff Soil	
Gh:	1.1	**Topography:** 1	**Struct Class:**	II	Page: 26

168.00 Appurtenance(s)	1.00	1.41	8.583	9.44	0.00	1.200	2.353	3.00	7.754	9.30	87.8	247.6	466.1
168.50 Appurtenance(s)	1.00	1.41	8.588	9.45	0.00	1.200	2.354	0.50	1.280	1.54	14.5	41.2	77.2
170.00	1.00	1.42	8.604	9.46	0.00	1.200	2.356	1.50	3.820	4.58	43.4	122.5	229.8
175.00	1.00	1.42	8.657	9.52	0.00	1.200	2.363	5.00	12.510	15.01	143.0	397.2	747.4
178.00 Top - Section 4	1.00	1.43	8.688	9.56	0.00	1.200	2.367	3.00	7.339	8.81	84.2	234.4	438.8
180.00	1.00	1.43	8.709	9.58	0.00	1.200	2.370	2.00	4.852	5.82	55.8	156.4	272.2
184.00 Appurtenance(s)	1.00	1.44	8.749	9.62	0.00	1.200	2.375	4.00	9.707	11.65	112.1	313.6	545.1
185.00	1.00	1.44	8.759	9.63	0.00	1.200	2.376	1.00	2.427	2.91	28.1	78.4	136.3
187.00 Appurtenance(s)	1.00	1.44	8.779	9.66	0.00	1.200	2.379	2.00	4.855	5.83	56.3	157.1	272.8
188.00	1.00	1.45	8.789	9.67	0.00	1.200	2.380	1.00	2.428	2.91	28.2	78.6	136.4
							Totals:	**188.00**			**6,248.9**		**53,467.1**

Copyright © 2019 by Tower Engineering Solutions, LLC. All rights reserved.

Discrete Appurtenance Forces

Structure:	CT46124-A-SBA		**Code:**	EIA/TIA-222-G	2/6/2019
Site Name:	Enfield-Moody Rd.		**Exposure:**	C	
Height:	188.00 (ft)		**Crest Height:**	0.00	
Base Elev:	0.000 (ft)		**Site Class:**	D - Stiff Soil	
Gh:	1.1	**Topography:** 1	**Struct Class:**	II	Page: 27

Tower Engineering Solutions

Load Case: 1.2D + 1.0Di + 1.0Wi 50 mph Wind

Dead Load Factor 1.20

Wind Load Factor 1.00

Iterations 30

No.	Elev (ft)	Description	Qty	qz (psf)	qzGh (psf)	CaAa x Ka	Ka	Total CaAa (sf)	Dead Load (lb)	Horiz Ecc (ft)	Vert Ecc (ft)	Wind FX (lb)	Mom Y (lb-ft)	Mom Z (lb-ft)
1	187.00	Ericsson Radio 4449 B71	3	8.779	9.657	0.38	0.75	2.71	572.29	0.000	0.000	26.21	0.00	0.00
2	187.00	RFS	3	8.779	9.657	0.52	0.75	36.01	2249.48	0.000	0.000	347.76	0.00	0.00
3	187.00	Ericsson	3	8.779	9.657	0.65	0.75	15.62	1275.89	0.000	0.000	150.88	0.00	0.00
4	187.00	Kathrein 782 11054-Smart	3	8.779	9.657	0.38	0.75	1.01	10.02	0.000	0.000	9.71	0.00	0.00
5	187.00	Commscope	3	8.779	9.657	0.60	0.75	26.16	920.55	0.000	0.000	252.64	0.00	0.00
6	187.00	Ericsson KRY 112 114-1	12	8.779	9.657	0.38	0.75	4.76	297.55	0.000	0.000	45.96	0.00	0.00
7	184.00	Platform w/ Hand Rail	1	8.749	9.624	1.00	1.00	70.00	4177.58	0.000	0.000	673.67	0.00	0.00
8	168.50	Low Profile Platform	1	8.588	9.447	1.00	1.00	45.82	2927.92	0.000	0.000	432.91	0.00	0.00
9	168.00	TD-RRH8x20-25	3	8.583	9.441	0.40	0.80	6.21	732.06	0.000	0.000	58.64	0.00	0.00
10	168.00	800 MHz RRH	3	8.583	9.441	0.40	0.80	5.49	435.22	0.000	0.000	51.87	0.00	0.00
11	168.00	1900 MHz RRH	3	8.583	9.441	0.40	0.80	5.49	373.26	0.000	0.000	51.87	0.00	0.00
12	168.00	APXVTM14-C-120	3	8.583	9.441	0.62	0.80	14.74	896.98	0.000	0.000	139.18	0.00	0.00
13	168.00	800 MHz Filters	3	8.583	9.441	0.40	0.80	5.49	435.22	0.000	0.000	51.87	0.00	0.00
14	168.00	APXVSPP18-C-A20	2	8.583	9.441	0.65	0.80	15.28	503.99	0.000	0.000	144.23	0.00	0.00
15	168.00	APXV9ERR18-C-A20	1	8.583	9.441	0.65	0.80	7.64	267.23	0.000	0.000	72.12	0.00	0.00
16	168.00	ACU-A20-N	4	8.583	9.441	0.54	0.80	1.16	22.77	0.000	0.000	10.93	0.00	0.00
17	158.00	Plateform Mount	1	8.473	9.320	1.00	1.00	118.91	5241.18	0.000	0.000	1108.23	0.00	0.00
18	158.00	800 10966	6	8.473	9.320	0.57	0.80	67.54	3842.61	0.000	0.000	629.48	0.00	0.00
19	158.00	Ericsson RRUS 4415 B25	3	8.473	9.320	0.40	0.80	2.80	302.67	0.000	0.000	26.06	0.00	0.00
20	158.00	Ericsson 8843 B2 B66A	3	8.473	9.320	0.40	0.80	2.77	411.55	0.000	0.000	25.79	0.00	0.00
21	158.00	Ericsson 4449 B5 B12	3	8.473	9.320	0.40	0.80	2.88	578.78	0.000	0.000	26.82	0.00	0.00
22	158.00	Raycap DC6-48-60-0-8C	1	8.473	9.320	1.00	1.00	5.97	283.40	0.000	0.000	55.60	0.00	0.00
23	158.00	Powerwave LGP21401	6	8.473	9.320	0.40	0.80	5.69	258.60	0.000	0.000	53.00	0.00	0.00
24	158.00	Raycap DC6-48-60-18-8F	2	8.473	9.320	0.40	0.80	1.93	206.64	0.000	0.000	17.95	0.00	0.00
25	158.00	800 10121	3	8.473	9.320	0.58	0.75	13.99	493.39	0.000	0.000	130.42	0.00	0.00
26	158.00	HPA-65R-BUU-H8	3	8.473	9.320	0.62	0.80	28.43	1481.37	0.000	0.000	265.01	0.00	0.00
27	158.00	Kathrein 860-10025 RET	6	8.473	9.320	0.40	0.80	1.50	45.24	0.000	0.000	13.99	0.00	0.00
28	158.00	Ericsson RRUS-A2 RRU	3	8.473	9.320	0.40	0.80	3.80	189.57	0.000	0.000	35.40	0.00	0.00
							Totals:		**29,433.01**			**4,908.22**		

Copyright © 2019 by Tower Engineering Solutions, LLC. All rights reserved.

Total Applied Force Summary

Structure:	CT46124-A-SBA		**Code:**	EIA/TIA-222-G	2/6/2019
Site Name:	Enfield-Moody Rd.		**Exposure:**	C	
Height:	188.00 (ft)		**Crest Height:**	0.00	
Base Elev:	0.000 (ft)		**Site Class:**	D - Stiff Soil	
Gh:	1.1	**Topography:** 1	**Struct Class:**	II	Page: 28

Tower Engineering Solutions

Load Case: 1.2D + 1.0Di + 1.0Wi 50 mph Wind

Dead Load Factor 1.20

Wind Load Factor 1.00

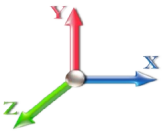

Iterations 30

Elev (ft)	Description	Lateral FX (-) (lb)	Axial FY (-) (lb)	Torsion MY (lb-ft)	Moment MZ (lb-ft)
0.00		0.00	0.00	0.00	0.00
0.25		7.81	102.96	0.00	0.00
5.00		149.62	2089.59	0.00	0.00
10.00		155.83	2212.05	0.00	0.00
15.00		153.85	2206.29	0.00	0.00
20.00		161.03	2192.78	0.00	0.00
25.00		166.38	2174.80	0.00	0.00
30.00		170.36	2153.89	0.00	0.00
32.83		97.09	1208.96	0.00	0.00
35.00		74.87	921.90	0.00	0.00
40.00		175.51	2054.87	0.00	0.00
43.25		114.44	1318.02	0.00	0.00
45.00		62.59	1089.47	0.00	0.00
48.92		141.42	2446.92	0.00	0.00
49.00		2.87	50.02	0.00	0.00
50.00		35.94	379.83	0.00	0.00
55.00		181.58	1882.92	0.00	0.00
60.00		181.87	1857.92	0.00	0.00
65.00		181.84	1832.31	0.00	0.00
70.00		181.51	1806.15	0.00	0.00
75.00		180.93	1779.52	0.00	0.00
76.83		65.73	645.36	0.00	0.00
80.00		113.80	1099.27	0.00	0.00
85.00		179.09	1661.49	0.00	0.00
87.50		88.82	821.16	0.00	0.00
90.00		89.81	1203.84	0.00	0.00
91.92		68.70	938.51	0.00	0.00
92.25		11.77	161.28	0.00	0.00
95.00		98.09	846.53	0.00	0.00
100.00		177.61	1517.95	0.00	0.00
105.00		175.93	1492.72	0.00	0.00
105.58		20.20	171.95	0.00	0.00
110.00		153.73	1259.92	0.00	0.00
115.00		172.17	1375.19	0.00	0.00
120.00		170.09	1348.87	0.00	0.00
125.00		167.90	1322.37	0.00	0.00
130.00		165.61	1295.70	0.00	0.00
132.50		81.74	639.05	0.00	0.00
135.00		82.13	856.16	0.00	0.00
136.50		48.94	509.36	0.00	0.00
140.00		113.51	750.40	0.00	0.00
145.00		160.15	1051.71	0.00	0.00
150.00		157.48	1029.52	0.00	0.00
155.00		154.73	1007.20	0.00	0.00
158.00	(40) attachments	2479.11	13929.83	0.00	0.00
160.00		60.29	359.99	0.00	0.00
165.00		148.99	880.95	0.00	0.00

Copyright © 2019 by Tower Engineering Solutions, LLC. All rights reserved.

Total Applied Force Summary

Structure:	CT46124-A-SBA		**Code:**	EIA/TIA-222-G	2/6/2019
Site Name:	Enfield-Moody Rd.		**Exposure:**	C	
Height:	188.00 (ft)		**Crest Height:**	0.00	
Base Elev:	0.000 (ft)		**Site Class:**	D - Stiff Soil	
Gh:	1.1	**Topography:** 1	**Struct Class:**	II	Page: 29

Tower Engineering Solutions

168.00	(22) attachments	668.57	4185.74	0.00	0.00
168.50	(1) attachments	447.42	3012.57	0.00	0.00
170.00		43.38	252.25	0.00	0.00
175.00		142.95	822.18	0.00	0.00
178.00		84.17	483.67	0.00	0.00
180.00		55.77	302.08	0.00	0.00
184.00	(1) attachments	785.77	4782.49	0.00	0.00
185.00		28.06	151.27	0.00	0.00
187.00	(27) attachments	889.41	5628.51	0.00	0.00
188.00		28.16	136.45	0.00	0.00
	Totals:	**11,157.13**	**89,694.66**	**0.00**	**0.00**

Copyright © 2019 by Tower Engineering Solutions, LLC. All rights reserved.

Linear Appurtenance Segment Forces (Factored)

Structure:	CT46124-A-SBA	**Code:**	EIA/TIA-222-G	2/6/2019	
Site Name:	Enfield-Moody Rd.	**Exposure:**	C		
Height:	188.00 (ft)	**Crest Height:**	0.00		
Base Elev:	0.000 (ft)	**Site Class:**	D - Stiff Soil		
Gh:	1.1 **Topography:** 1	**Struct Class:**	II	Page: 30	

Tower Engineering Solutions

Load Case: 1.2D + 1.0Di + 1.0Wi 50 mph Wind

Dead Load Factor 1.20

Wind Load Factor 1.00

Iterations 30

Top Elev (ft)	Description	Wind Exposed	Length (ft)	Ca	Exposed Width (in)	Area (sqft)	CaAa (sqft)	Ra	Cf Adjust Factor	qz (psf)	F X (lb)	Dead Load (lb)
0.25	1.25" Reinforcing	Yes	0.25	0.000	1.25	0.08	0.00	0.024	0.000	5.168	0.00	1.45
5.00	1.25" Reinforcing	Yes	4.75	0.000	1.25	1.81	0.00	0.024	0.000	5.168	0.00	40.72
10.00	1.25" Reinforcing	Yes	5.00	0.000	1.25	2.00	0.00	0.024	0.000	5.168	0.00	47.08
15.00	1.25" Reinforcing	Yes	5.00	0.000	1.25	2.06	0.00	0.025	0.000	5.168	0.00	49.78
20.00	1.25" Reinforcing	Yes	5.00	0.000	1.25	2.11	0.00	0.025	0.000	5.483	0.00	51.80
25.00	1.25" Reinforcing	Yes	5.00	0.000	1.25	2.14	0.00	0.026	0.000	5.747	0.00	53.44
30.00	1.25" Reinforcing	Yes	5.00	0.000	1.25	2.17	0.00	0.026	0.000	5.972	0.00	54.82
32.83	1.25" Reinforcing	Yes	2.83	0.000	1.25	1.24	0.00	0.026	0.000	6.087	0.00	31.42
35.00	1.25" Reinforcing	Yes	2.17	0.000	1.25	0.95	0.00	0.027	0.000	6.169	0.00	24.31
40.00	1.25" Reinforcing	Yes	0.50	0.000	1.25	0.22	0.00	0.003	0.000	6.345	0.00	5.71
48.92	1.25" Reinforcing	Yes	2.42	0.000	1.25	1.09	0.00	0.017	0.000	6.620	0.00	28.43
49.00	1.25" Reinforcing	Yes	0.08	0.000	1.25	0.04	0.00	0.028	0.000	6.622	0.00	0.94
50.00	1.25" Reinforcing	Yes	1.00	0.000	1.25	0.45	0.00	0.028	0.000	6.650	0.00	11.78
55.00	1.25" Reinforcing	Yes	5.00	0.000	1.25	2.27	0.00	0.028	0.000	6.785	0.00	59.71
60.00	1.25" Reinforcing	Yes	5.00	0.000	1.25	2.29	0.00	0.029	0.000	6.910	0.00	60.46
65.00	1.25" Reinforcing	Yes	5.00	0.000	1.25	2.30	0.00	0.029	0.000	7.028	0.00	61.15
70.00	1.25" Reinforcing	Yes	5.00	0.000	1.25	2.32	0.00	0.030	0.000	7.138	0.00	61.80
75.00	1.25" Reinforcing	Yes	5.00	0.000	1.25	2.33	0.00	0.030	0.000	7.243	0.00	62.41
76.83	1.25" Reinforcing	Yes	1.83	0.000	1.25	0.85	0.00	0.031	0.000	7.280	0.00	22.92
80.00	1.25" Reinforcing	Yes	2.42	0.000	1.25	1.13	0.00	0.024	0.000	7.342	0.00	30.49
91.92	1.25" Reinforcing	Yes	1.67	0.000	1.25	0.79	0.00	0.029	0.000	7.560	0.00	21.46
92.25	1.25" Reinforcing	Yes	0.33	0.000	1.25	0.16	0.00	0.033	0.000	7.565	0.00	4.24
95.00	1.25" Reinforcing	Yes	2.75	0.000	1.25	1.31	0.00	0.033	0.000	7.612	0.00	35.51
100.00	1.25" Reinforcing	Yes	5.00	0.000	1.25	2.38	0.00	0.033	0.000	7.695	0.00	65.04
105.00	1.25" Reinforcing	Yes	5.00	0.000	1.25	2.39	0.00	0.034	0.000	7.774	0.00	65.50
105.58	1.25" Reinforcing	Yes	0.58	0.000	1.25	0.28	0.00	0.035	0.000	7.783	0.00	7.60
110.00	1.25" Reinforcing	Yes	1.67	0.000	1.25	0.80	0.00	0.013	0.000	7.851	0.00	22.02
										Totals:	**0.0**	**982.0**

Copyright © 2019 by Tower Engineering Solutions, LLC. All rights reserved.

Calculated Forces

Structure:	CT46124-A-SBA	**Code:**	EIA/TIA-222-G	2/6/2019	
Site Name:	Enfield-Moody Rd.	**Exposure:**	C		
Height:	188.00 (ft)	**Crest Height:**	0.00		
Base Elev:	0.000 (ft)	**Site Class:**	D - Stiff Soil		
Gh:	1.1	**Topography:** 1	**Struct Class:**	II	Page: 31

Tower Engineering Solutions

Load Case: 1.2D + 1.0Di + 1.0Wi 50 mph Wind

Dead Load Factor 1.20

Wind Load Factor 1.00

Iterations 30

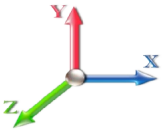

Seg Elev (ft)	Pu FY (-) (kips)	Vu FX (-) (kips)	Tu MY (-) (ft-kips)	Mu MZ (ft-kips)	Mu MX (ft-kips)	Resultant Moment (ft-kips)	phi Pn (kips)	phi Vn (kips)	phi Tn (ft-kips)	phi Mn (ft-kips)	Total Deflect (in)	Rotation Sway (deg)	Rotation Twist (deg)	Stress Ratio
0.00	-89.69	-11.16	0.00	-1623.4	0.00	1623.47	5035.03	2517.52	10606.9	5311.37	0.00	0.000	0.000	0.323
0.25	-89.58	-11.21	0.00	-1620.6	0.00	1620.68	5032.22	2516.11	10592.3	5304.07	0.00	-0.005	0.000	0.242
5.00	-87.48	-11.17	0.00	-1567.4	0.00	1567.43	4978.38	2489.19	10316.4	5165.91	0.04	-0.073	0.000	0.240
10.00	-85.25	-11.12	0.00	-1511.5	0.00	1511.59	4920.91	2460.46	10028.2	5021.57	0.15	-0.146	0.000	0.237
15.00	-83.04	-11.06	0.00	-1456.0	0.00	1456.02	4862.63	2431.31	9742.31	4878.39	0.35	-0.219	0.000	0.233
20.00	-80.83	-10.99	0.00	-1400.7	0.00	1400.71	4803.53	2401.76	9458.77	4736.42	0.61	-0.292	0.000	0.230
25.00	-78.64	-10.92	0.00	-1345.7	0.00	1345.74	4743.61	2371.81	9177.73	4595.68	0.96	-0.366	0.000	0.227
30.00	-76.48	-10.81	0.00	-1291.1	0.00	1291.16	4682.88	2341.44	8899.25	4456.24	1.38	-0.441	0.000	0.223
32.83	-75.26	-10.75	0.00	-1260.5	0.00	1260.56	4648.14	2324.07	8742.80	4377.90	1.66	-0.484	0.000	0.221
32.83	-75.26	-10.75	0.00	-1260.5	0.00	1260.56	4648.14	2324.07	8742.80	4377.90	1.66	-0.484	0.000	0.221
35.00	-74.33	-10.76	0.00	-1237.2	0.00	1237.23	4621.33	2310.66	8623.42	4318.12	1.89	-0.517	0.000	0.303
40.00	-72.26	-10.67	0.00	-1183.4	0.00	1183.43	4558.96	2279.48	8350.33	4181.37	2.48	-0.621	0.000	0.299
43.25	-70.93	-10.61	0.00	-1148.7	0.00	1148.75	4517.98	2258.99	8174.32	4093.24	2.93	-0.690	0.000	0.296
45.00	-69.83	-10.61	0.00	-1130.1	0.00	1130.18	4495.78	2247.89	8080.06	4046.03	3.19	-0.728	0.000	0.295
48.92	-67.38	-10.48	0.00	-1088.6	0.00	1088.60	4445.67	2222.84	7870.19	3940.94	3.82	-0.811	0.000	0.211
49.00	-67.33	-10.49	0.00	-1087.7	0.00	1087.76	3699.57	1849.78	6681.20	3345.56	3.84	-0.813	0.000	0.225
50.00	-66.94	-10.51	0.00	-1077.2	0.00	1077.27	3689.91	1844.95	6638.39	3324.13	4.01	-0.829	0.000	0.241
55.00	-65.05	-10.39	0.00	-1024.7	0.00	1024.75	3641.14	1820.57	6425.47	3217.51	4.92	-0.912	0.000	0.235
60.00	-63.18	-10.27	0.00	-972.80	0.00	972.80	3591.55	1795.77	6214.50	3111.87	5.92	-0.995	0.000	0.229
65.00	-61.33	-10.14	0.00	-921.45	0.00	921.45	3541.14	1770.57	6005.55	3007.24	7.00	-1.078	0.000	0.223
70.00	-59.52	-10.01	0.00	-870.74	0.00	870.74	3489.91	1744.96	5798.71	2903.67	8.18	-1.161	0.000	0.217
75.00	-57.73	-9.85	0.00	-820.68	0.00	820.68	3437.87	1718.94	5594.07	2801.19	9.44	-1.243	0.000	0.211
76.83	-57.08	-9.81	0.00	-802.66	0.00	802.66	3418.62	1709.31	5519.73	2763.97	9.92	-1.274	0.000	0.208
76.83	-57.08	-9.81	0.00	-802.66	0.00	802.66	3418.62	1709.31	5519.73	2763.97	9.92	-1.274	0.000	0.208
80.00	-55.97	-9.76	0.00	-771.56	0.00	771.56	3385.02	1692.51	5391.70	2699.86	10.78	-1.326	0.000	0.302
85.00	-54.30	-9.62	0.00	-722.77	0.00	722.77	3331.35	1665.67	5191.69	2599.71	12.24	-1.447	0.000	0.294
87.50	-53.47	-9.57	0.00	-698.70	0.00	698.70	3304.20	1652.10	5092.60	2550.09	13.01	-1.508	0.000	0.290
90.00	-52.26	-9.50	0.00	-674.78	0.00	674.78	3276.86	1638.43	4994.13	2500.78	13.82	-1.569	0.000	0.286
91.92	-51.32	-9.43	0.00	-656.54	0.00	656.54	3255.72	1627.86	4918.94	2463.13	14.46	-1.616	0.000	0.198
92.25	-51.15	-9.44	0.00	-653.43	0.00	653.43	2609.22	1304.61	4017.17	2011.57	14.57	-1.622	0.000	0.212
95.00	-50.30	-9.37	0.00	-627.48	0.00	627.48	2587.46	1293.73	3934.74	1970.29	15.52	-1.669	0.000	0.226
100.00	-48.77	-9.23	0.00	-580.62	0.00	580.62	2547.26	1273.63	3786.04	1895.83	17.31	-1.759	0.000	0.216
105.00	-47.28	-9.04	0.00	-534.48	0.00	534.48	2506.24	1253.12	3638.92	1822.16	19.20	-1.847	0.000	0.206
105.58	-47.10	-9.05	0.00	-529.24	0.00	529.24	2501.42	1250.71	3621.96	1813.67	19.43	-1.858	0.000	0.204
105.58	-47.10	-9.05	0.00	-529.24	0.00	529.24	2501.42	1250.71	3621.96	1813.67	19.43	-1.858	0.000	0.204
110.00	-45.83	-8.94	0.00	-489.22	0.00	489.22	2464.40	1232.20	3493.46	1749.33	21.18	-1.934	0.000	0.298
115.00	-44.44	-8.82	0.00	-444.52	0.00	444.52	2421.75	1210.87	3349.75	1677.36	23.28	-2.063	0.000	0.283
120.00	-43.08	-8.69	0.00	-400.42	0.00	400.42	2378.28	1189.14	3207.87	1606.32	25.50	-2.188	0.000	0.267
125.00	-41.75	-8.56	0.00	-356.96	0.00	356.96	2333.99	1167.00	3067.90	1536.23	27.86	-2.309	0.000	0.250
130.00	-40.45	-8.40	0.00	-314.16	0.00	314.16	2288.89	1144.45	2929.94	1467.15	30.34	-2.425	0.000	0.232
132.50	-39.81	-8.33	0.00	-293.16	0.00	293.16	2266.03	1133.02	2861.73	1432.99	31.63	-2.481	0.000	0.222
135.00	-38.95	-8.24	0.00	-272.34	0.00	272.34	2239.33	1119.66	2789.52	1396.83	32.94	-2.536	0.000	0.212
136.50	-38.43	-8.20	0.00	-259.98	0.00	259.98	1414.34	707.17	1783.76	893.21	33.74	-2.569	0.000	0.318
140.00	-37.67	-8.12	0.00	-231.27	0.00	231.27	1397.90	698.95	1729.39	865.98	35.65	-2.640	0.000	0.294
145.00	-36.62	-7.99	0.00	-190.66	0.00	190.66	1373.73	686.86	1652.26	827.36	38.48	-2.765	0.000	0.257
150.00	-35.58	-7.84	0.00	-150.72	0.00	150.72	1348.73	674.37	1575.83	789.09	41.44	-2.876	0.000	0.218
155.00	-34.57	-7.68	0.00	-111.51	0.00	111.51	1322.92	661.46	1500.20	751.22	44.50	-2.968	0.000	0.175
158.00	-20.79	-4.49	0.00	-88.47	0.00	88.47	1307.05	653.52	1455.24	728.70	46.38	-3.015	0.000	0.137

Copyright © 2019 by Tower Engineering Solutions, LLC. All rights reserved.

Calculated Forces

Structure:	CT46124-A-SBA	**Code:**	EIA/TIA-222-G 2/6/2019
Site Name:	Enfield-Moody Rd.	**Exposure:**	C
Height:	188.00 (ft)	**Crest Height:**	0.00
Base Elev:	0.000 (ft)	**Site Class:**	D - Stiff Soil
Gh:	1.1 **Topography:** 1	**Struct Class:**	II Page: 32

Tower Engineering Solutions

160.00	-20.43	-4.42	0.00	-79.50	0.00	79.50	1296.30	648.15	1425.45	713.78	47.65	-3.042	0.000	0.127
165.00	-19.56	-4.24	0.00	-57.38	0.00	57.38	1268.86	634.43	1351.65	676.83	50.87	-3.100	0.000	0.100
168.00	-15.41	-3.35	0.00	-44.65	0.00	44.65	1252.00	626.00	1307.87	654.91	52.82	-3.128	0.000	0.081
168.50	-12.43	-2.74	0.00	-42.98	0.00	42.98	1249.16	624.58	1300.61	651.27	53.15	-3.133	0.000	0.076
170.00	-12.18	-2.69	0.00	-38.86	0.00	38.86	1240.60	620.30	1278.90	640.40	54.14	-3.145	0.000	0.071
175.00	-11.36	-2.51	0.00	-25.41	0.00	25.41	1211.52	605.76	1207.28	604.54	57.45	-3.178	0.000	0.051
178.00	-10.88	-2.40	0.00	-17.89	0.00	17.89	1193.69	596.84	1164.89	583.31	59.45	-3.192	0.000	0.040
178.00	-10.88	-2.40	0.00	-17.89	0.00	17.89	975.84	487.92	954.81	478.11	59.45	-3.192	0.000	0.049
180.00	-10.59	-2.33	0.00	-13.10	0.00	13.10	975.84	487.92	954.81	478.11	60.79	-3.200	0.000	0.038
184.00	-5.85	-1.28	0.00	-3.79	0.00	3.79	975.84	487.92	954.81	478.11	63.47	-3.209	0.000	0.014
185.00	-5.70	-1.24	0.00	-2.51	0.00	2.51	975.84	487.92	954.81	478.11	64.14	-3.210	0.000	0.011
187.00	-0.13	-0.04	0.00	-0.04	0.00	0.04	975.84	487.92	954.81	478.11	65.49	-3.211	0.000	0.000
188.00	0.00	-0.03	0.00	0.00	0.00	0.00	975.84	487.92	954.81	478.11	66.16	-3.211	0.000	0.000

Copyright © 2019 by Tower Engineering Solutions, LLC. All rights reserved.

Seismic Segment Forces (Factored)

Structure:	CT46124-A-SBA		**Code:**	EIA/TIA-222-G	2/6/2019
Site Name:	Enfield-Moody Rd.		**Exposure:**	C	
Height:	188.00 (ft)		**Crest Height:**	0.00	
Base Elev:	0.000 (ft)		**Site Class:**	D - Stiff Soil	
Gh:	1.1	**Topography:** 1	**Struct Class:**	II	Page: 33

Tower Engineering Solutions

Load Case:	1.2D + 1.0E					**Iterations**	26
Gust Response Factor	1.10			**Sds**	0.19	**Ss**	0.17
Dead Load Factor	1.20	**Seismic Load Factor**	1.00	**Sd1**	0.10	**S1**	0.06
Wind Load Factor	0.00	**Structure Frequency (f1)**	0.24	**SA**	0.02	**Seismic Importance Factor**	1.00

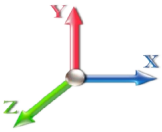

Top Elev (ft)	Description	Wz (lb)	a	b	c	Lateral Fs (lb)	R: 1.50
0.00		0.00	0.00	0.00	0.00	0.00	
0.25	RB1	60.58	0.00	0.00	0.00	0.09	
5.00		1141.6	0.00	0.03	0.01	21.59	
10.00		1182.6	0.01	0.05	0.03	32.42	
15.00		1163.0	0.01	0.06	0.03	37.12	
20.00		1143.3	0.02	0.06	0.04	39.35	
25.00		1123.7	0.03	0.07	0.04	40.31	
30.00		1104.1	0.05	0.07	0.04	40.65	
32.83	RT1	616.26	0.06	0.07	0.04	22.96	
35.00		468.28	0.07	0.07	0.04	17.59	
40.00		1064.9	0.09	0.07	0.04	40.79	
43.25	Bot - Section 2	681.69	0.10	0.07	0.04	26.45	
45.00		681.08	0.11	0.07	0.04	26.62	
48.92	RB2	1509.4	0.13	0.07	0.03	59.94	
49.00	Top - Section 1	30.57	0.13	0.07	0.03	1.21	
50.00		177.78	0.13	0.07	0.03	7.09	
55.00		878.82	0.16	0.07	0.03	35.67	
60.00		862.01	0.19	0.06	0.02	35.34	
65.00		845.20	0.23	0.06	0.02	34.46	
70.00		828.39	0.26	0.05	0.02	32.70	
75.00		811.58	0.30	0.05	0.01	29.64	
76.83	RT2	292.84	0.32	0.04	0.01	10.22	
80.00		501.94	0.34	0.03	0.01	15.70	
85.00		777.96	0.39	0.02	0.01	18.03	
87.50	Bot - Section 3	382.68	0.41	0.02	0.01	6.88	
90.00		699.67	0.43	0.01	0.01	8.46	
91.92	RB3	532.12	0.45	0.00	0.01	3.81	
92.25	Top - Section 2	91.00	0.46	0.00	0.01	0.57	
95.00		345.80	0.48	-0.01	0.01	-0.44	
100.00		617.88	0.53	-0.03	0.01	-9.40	
105.00		603.87	0.59	-0.05	0.01	-16.76	
105.58	RT3	69.14	0.60	-0.05	0.01	-2.01	
110.00		520.72	0.65	-0.07	0.02	-19.48	
115.00		575.85	0.71	-0.09	0.03	-25.04	
120.00		561.85	0.77	-0.11	0.05	-25.80	
125.00		547.84	0.84	-0.12	0.06	-24.59	
130.00		533.83	0.90	-0.12	0.09	-21.67	
132.50	Bot - Section 4	261.66	0.94	-0.12	0.10	-9.76	
135.00		442.05	0.97	-0.12	0.12	-14.69	
136.50	Top - Section 3	262.37	1.00	-0.11	0.13	-7.98	
140.00		251.27	1.05	-0.09	0.16	-5.75	
145.00		350.62	1.12	-0.06	0.20	-3.34	
150.00		340.81	1.20	0.01	0.26	2.30	
155.00		331.00	1.28	0.10	0.32	8.62	
158.00	Appurtenance(s)	4192.4	1.33	0.17	0.37	163.77	
160.00		127.30	1.37	0.23	0.40	6.16	

Copyright © 2019 by Tower Engineering Solutions, LLC. All rights reserved.

Seismic Segment Forces (Factored)

Structure:	CT46124-A-SBA		**Code:**	EIA/TIA-222-G	2/6/2019
Site Name:	Enfield-Moody Rd.		**Exposure:**	C	
Height:	188.00 (ft)		**Crest Height:**	0.00	
Base Elev:	0.000 (ft)		**Site Class:**	D - Stiff Soil	
Gh:	1.1	**Topography:** 1	**Struct Class:**	II	Page: 34

Tower Engineering Solutions

165.00		311.39	1.46	0.40	0.49	22.98		
168.00	Appurtenance(s)	1196.1	1.51	0.52	0.55	108.35		
168.50	Appurtenance(s)	1430.0	1.52	0.55	0.56	133.70		
170.00		89.44	1.55	0.62	0.60	9.16		
175.00		291.77	1.64	0.90	0.72	39.18		
178.00	Top - Section 4	170.35	1.69	1.10	0.81	26.40		
180.00		96.44	1.73	1.25	0.87	16.34		
184.00	Appurtenance(s)	1792.8	1.81	1.59	1.00	358.63		
185.00		48.22	1.83	1.68	1.03	10.03		
187.00	Appurtenance(s)	1385.8	1.87	1.88	1.10	310.99		
188.00		48.22	1.89	1.98	1.14	11.23		
	Totals:	**37,450.4**				**1,686.8**	**Total Wind:**	**33,424.3**

Seismic Base Shear is Less Than 50% of Wind Force - An Analysis is NOT Required

Copyright © 2019 by Tower Engineering Solutions, LLC. All rights reserved.

Calculated Forces

Structure:	CT46124-A-SBA	**Code:**	EIA/TIA-222-G	2/6/2019	
Site Name:	Enfield-Moody Rd.	**Exposure:**	C		
Height:	188.00 (ft)	**Crest Height:**	0.00		
Base Elev:	0.000 (ft)	**Site Class:**	D - Stiff Soil		
Gh:	1.1	**Topography:** 1	**Struct Class:**	II	Page: 35

Tower Engineering Solutions

Load Case: 1.2D + 1.0E

Iterations 26

Gust Response Factor	1.10			**Sds**	0.19			**Ss**	0.17
Dead Load Factor	1.20	**Seismic Load Factor**	1.00	**Sd1**	0.10			**S1**	0.06
Wind Load Factor	0.00	**Structure Frequency (f1)**	0.24	**SA**	0.02	**Seismic Importance Factor**			1.00

Seg Elev (ft)	Pu FY (-) (kips)	Vu FX (-) (kips)	Tu MY (-) (ft-kips)	Mu MZ (ft-kips)	Mu MX (ft-kips)	Resultant Moment (ft-kips)	phi Pn (kips)	phi Vn (kips)	phi Tn (ft-kips)	phi Mn (ft-kips)	Total Deflect (in)	Rotation Sway (deg)	Rotation Twist (deg)	Stress Ratio
0.00	-50.75	-1.87	0.00	-262.15	0.00	262.15	5035.03	2517.52	10606.9	5311.37		0.00	0.00	0.059
0.25	-50.67	-1.88	0.00	-261.68	0.00	261.68	5032.22	2516.11	10592.3	5304.07		0.00	0.00	0.045
5.00	-49.14	-1.87	0.00	-252.76	0.00	252.76	4978.38	2489.19	10316.4	5165.91		0.01	-0.01	0.044
10.00	-47.55	-1.84	0.00	-243.44	0.00	243.44	4920.91	2460.46	10028.2	5021.57		0.02	-0.02	0.043
15.00	-45.99	-1.81	0.00	-234.23	0.00	234.23	4862.63	2431.31	9742.31	4878.39		0.06	-0.04	0.043
20.00	-44.44	-1.78	0.00	-225.16	0.00	225.16	4803.53	2401.76	9458.77	4736.42		0.10	-0.05	0.042
25.00	-42.93	-1.75	0.00	-216.24	0.00	216.24	4743.61	2371.81	9177.73	4595.68		0.15	-0.06	0.041
30.00	-41.43	-1.71	0.00	-207.50	0.00	207.50	4682.88	2341.44	8899.25	4456.24		0.22	-0.07	0.040
32.83	-40.60	-1.69	0.00	-202.65	0.00	202.65	4648.14	2324.07	8742.80	4377.90		0.27	-0.08	0.040
32.83	-40.60	-1.69	0.00	-202.65	0.00	202.65	4648.14	2324.07	8742.80	4377.90		0.27	-0.08	0.040
35.00	-39.96	-1.68	0.00	-198.97	0.00	198.97	4621.33	2310.66	8623.42	4318.12		0.30	-0.08	0.055
40.00	-38.51	-1.65	0.00	-190.55	0.00	190.55	4558.96	2279.48	8350.33	4181.37		0.40	-0.10	0.054
43.25	-37.58	-1.63	0.00	-185.19	0.00	185.19	4517.98	2258.99	8174.32	4093.24		0.47	-0.11	0.054
45.00	-36.71	-1.61	0.00	-182.34	0.00	182.34	4495.78	2247.89	8080.06	4046.03		0.51	-0.12	0.053
48.92	-34.76	-1.55	0.00	-176.05	0.00	176.05	4445.67	2222.84	7870.19	3940.94		0.62	-0.13	0.038
49.00	-34.72	-1.54	0.00	-175.92	0.00	175.92	3699.57	1849.78	6681.20	3345.56		0.62	-0.13	0.041
50.00	-34.48	-1.54	0.00	-174.38	0.00	174.38	3689.91	1844.95	6638.39	3324.13		0.65	-0.13	0.044
55.00	-33.25	-1.51	0.00	-166.67	0.00	166.67	3641.14	1820.57	6425.47	3217.51		0.79	-0.15	0.043
60.00	-32.05	-1.48	0.00	-159.11	0.00	159.11	3591.55	1795.77	6214.50	3111.87		0.95	-0.16	0.042
65.00	-30.86	-1.45	0.00	-151.71	0.00	151.71	3541.14	1770.57	6005.55	3007.24		1.13	-0.17	0.041
70.00	-29.70	-1.42	0.00	-144.46	0.00	144.46	3489.91	1744.96	5798.71	2903.67		1.32	-0.19	0.040
75.00	-28.56	-1.39	0.00	-137.36	0.00	137.36	3437.87	1718.94	5594.07	2801.19		1.52	-0.20	0.039
76.83	-28.14	-1.38	0.00	-134.81	0.00	134.81	3418.62	1709.31	5519.73	2763.97		1.60	-0.21	0.039
76.83	-28.14	-1.38	0.00	-134.81	0.00	134.81	3418.62	1709.31	5519.73	2763.97		1.60	-0.21	0.039
80.00	-27.43	-1.37	0.00	-130.43	0.00	130.43	3385.02	1692.51	5391.70	2699.86		1.74	-0.22	0.056
85.00	-26.33	-1.36	0.00	-123.56	0.00	123.56	3331.35	1665.67	5191.69	2599.71		1.98	-0.24	0.055
87.50	-25.79	-1.35	0.00	-120.17	0.00	120.17	3304.20	1652.10	5092.60	2550.09		2.10	-0.25	0.055
90.00	-24.86	-1.34	0.00	-116.79	0.00	116.79	3276.86	1638.43	4994.13	2500.78		2.24	-0.26	0.054
91.92	-24.16	-1.34	0.00	-114.21	0.00	114.21	3255.72	1627.86	4918.94	2463.13		2.34	-0.27	0.038
92.25	-24.04	-1.34	0.00	-113.77	0.00	113.77	2609.22	1304.61	4017.17	2011.57		2.36	-0.27	0.040
95.00	-23.53	-1.34	0.00	-110.08	0.00	110.08	2587.46	1293.73	3934.74	1970.29		2.51	-0.27	0.044
100.00	-22.62	-1.34	0.00	-103.37	0.00	103.37	2547.26	1273.63	3786.04	1895.83		2.81	-0.29	0.042
105.00	-21.72	-1.34	0.00	-96.65	0.00	96.65	2506.24	1253.12	3638.92	1822.16		3.12	-0.31	0.041
105.58	-21.62	-1.35	0.00	-95.87	0.00	95.87	2501.42	1250.71	3621.96	1813.67		3.16	-0.31	0.041
105.58	-21.62	-1.35	0.00	-95.87	0.00	95.87	2501.42	1250.71	3621.96	1813.67		3.16	-0.31	0.041
110.00	-20.85	-1.35	0.00	-89.92	0.00	89.92	2464.40	1232.20	3493.46	1749.33		3.45	-0.32	0.060
115.00	-19.99	-1.35	0.00	-83.18	0.00	83.18	2421.75	1210.87	3349.75	1677.36		3.80	-0.35	0.058
120.00	-19.14	-1.35	0.00	-76.43	0.00	76.43	2378.28	1189.14	3207.87	1606.32		4.18	-0.37	0.056
125.00	-18.31	-1.36	0.00	-69.66	0.00	69.66	2333.99	1167.00	3067.90	1536.23		4.58	-0.39	0.053
130.00	-17.50	-1.36	0.00	-62.88	0.00	62.88	2288.89	1144.45	2929.94	1467.15		5.00	-0.42	0.051
132.50	-17.10	-1.36	0.00	-59.49	0.00	59.49	2266.03	1133.02	2861.73	1432.99		5.22	-0.43	0.049
135.00	-16.49	-1.35	0.00	-56.10	0.00	56.10	2239.33	1119.66	2789.52	1396.83		5.45	-0.44	0.048
136.50	-16.12	-1.35	0.00	-54.07	0.00	54.07	1414.34	707.17	1783.76	893.21		5.59	-0.45	0.072
140.00	-15.70	-1.36	0.00	-49.33	0.00	49.33	1397.90	698.95	1729.39	865.98		5.92	-0.46	0.068
145.00	-15.11	-1.36	0.00	-42.54	0.00	42.54	1373.73	686.86	1652.26	827.36		6.41	-0.49	0.062
150.00	-14.53	-1.36	0.00	-35.75	0.00	35.75	1348.73	674.37	1575.83	789.09		6.94	-0.51	0.056
155.00	-13.97	-1.35	0.00	-28.96	0.00	28.96	1322.92	661.46	1500.20	751.22		7.49	-0.54	0.049

Copyright © 2019 by Tower Engineering Solutions, LLC. All rights reserved.

Calculated Forces

Structure:	CT46124-A-SBA	**Code:**	EIA/TIA-222-G
Site Name:	Enfield-Moody Rd.	**Exposure:**	C
Height:	188.00 (ft)	**Crest Height:**	0.00
Base Elev:	0.000 (ft)	**Site Class:**	D - Stiff Soil
Gh:	1.1	**Topography:** 1	**Struct Class:** II

2/6/2019

Tower Engineering Solutions

158.00	-8.84	-1.14	0.00	-24.92	0.00	24.92	1307.05	653.52	1455.24	728.70	7.83	-0.55	0.041
160.00	-8.65	-1.13	0.00	-22.64	0.00	22.64	1296.30	648.15	1425.45	713.78	8.06	-0.56	0.038
165.00	-8.19	-1.11	0.00	-16.99	0.00	16.99	1268.86	634.43	1351.65	676.83	8.65	-0.57	0.032
168.00	-6.70	-0.98	0.00	-13.67	0.00	13.67	1252.00	626.00	1307.87	654.91	9.01	-0.58	0.026
168.50	-4.98	-0.83	0.00	-13.18	0.00	13.18	1249.16	624.58	1300.61	651.27	9.08	-0.58	0.024
170.00	-4.85	-0.82	0.00	-11.93	0.00	11.93	1240.60	620.30	1278.90	640.40	9.26	-0.59	0.023
175.00	-4.42	-0.78	0.00	-7.82	0.00	7.82	1211.52	605.76	1207.28	604.54	9.88	-0.60	0.017
178.00	-4.17	-0.75	0.00	-5.48	0.00	5.48	1193.69	596.84	1164.89	583.31	10.25	-0.60	0.013
178.00	-4.17	-0.75	0.00	-5.48	0.00	5.48	975.84	487.92	954.81	478.11	10.25	-0.60	0.016
180.00	-4.03	-0.73	0.00	-3.98	0.00	3.98	975.84	487.92	954.81	478.11	10.51	-0.60	0.012
184.00	-1.82	-0.35	0.00	-1.04	0.00	1.04	975.84	487.92	954.81	478.11	11.01	-0.61	0.004
185.00	-1.75	-0.34	0.00	-0.69	0.00	0.69	975.84	487.92	954.81	478.11	11.14	-0.61	0.003
187.00	-0.06	-0.01	0.00	-0.01	0.00	0.01	975.84	487.92	954.81	478.11	11.39	-0.61	0.000
188.00	0.00	-0.01	0.00	0.00	0.00	0.00	975.84	487.92	954.81	478.11	11.52	-0.61	0.000

Copyright © 2019 by Tower Engineering Solutions, LLC. All rights reserved.

Seismic Segment Forces (Factored)

Structure:	CT46124-A-SBA	**Code:**	EIA/TIA-222-G	2/6/2019	
Site Name:	Enfield-Moody Rd.	**Exposure:**	C		
Height:	188.00 (ft)	**Crest Height:**	0.00		
Base Elev:	0.000 (ft)	**Site Class:**	D - Stiff Soil		
Gh:	1.1 **Topography:** 1	**Struct Class:**	II	Page: 37	

Tower Engineering Solutions

Load Case:	0.9D + 1.0E							**Iterations**	26
Gust Response Factor	1.10			**Sds**	0.19			**Ss**	0.17
Dead Load Factor	0.90	**Seismic Load Factor**	1.00	**Sd1**	0.10			**S1**	0.06
Wind Load Factor	0.00	**Structure Frequency (f1)**	0.24	**SA**	0.02	**Seismic Importance Factor**			1.00

Top Elev (ft)	Description	Wz (lb)	a	b	c	Lateral Fs (lb)	R: 1.50
0.00		0.00	0.00	0.00	0.00	0.00	
0.25	RB1	60.58	0.00	0.00	0.00	0.09	
5.00		1141.6	0.00	0.03	0.01	21.59	
10.00		1182.6	0.01	0.05	0.03	32.42	
15.00		1163.0	0.01	0.06	0.03	37.12	
20.00		1143.3	0.02	0.06	0.04	39.35	
25.00		1123.7	0.03	0.07	0.04	40.31	
30.00		1104.1	0.05	0.07	0.04	40.65	
32.83	RT1	616.26	0.06	0.07	0.04	22.96	
35.00		468.28	0.07	0.07	0.04	17.59	
40.00		1064.9	0.09	0.07	0.04	40.79	
43.25	Bot - Section 2	681.69	0.10	0.07	0.04	26.45	
45.00		681.08	0.11	0.07	0.04	26.62	
48.92	RB2	1509.4	0.13	0.07	0.03	59.94	
49.00	Top - Section 1	30.57	0.13	0.07	0.03	1.21	
50.00		177.78	0.13	0.07	0.03	7.09	
55.00		878.82	0.16	0.07	0.03	35.67	
60.00		862.01	0.19	0.06	0.02	35.34	
65.00		845.20	0.23	0.06	0.02	34.46	
70.00		828.39	0.26	0.05	0.02	32.70	
75.00		811.58	0.30	0.05	0.01	29.64	
76.83	RT2	292.84	0.32	0.04	0.01	10.22	
80.00		501.94	0.34	0.03	0.01	15.70	
85.00		777.96	0.39	0.02	0.01	18.03	
87.50	Bot - Section 3	382.68	0.41	0.02	0.01	6.88	
90.00		699.67	0.43	0.01	0.01	8.46	
91.92	RB3	532.12	0.45	0.00	0.01	3.81	
92.25	Top - Section 2	91.00	0.46	0.00	0.01	0.57	
95.00		345.80	0.48	-0.01	0.01	-0.44	
100.00		617.88	0.53	-0.03	0.01	-9.40	
105.00		603.87	0.59	-0.05	0.01	-16.76	
105.58	RT3	69.14	0.60	-0.05	0.01	-2.01	
110.00		520.72	0.65	-0.07	0.02	-19.48	
115.00		575.85	0.71	-0.09	0.03	-25.04	
120.00		561.85	0.77	-0.11	0.05	-25.80	
125.00		547.84	0.84	-0.12	0.06	-24.59	
130.00		533.83	0.90	-0.12	0.09	-21.67	
132.50	Bot - Section 4	261.66	0.94	-0.12	0.10	-9.76	
135.00		442.05	0.97	-0.12	0.12	-14.69	
136.50	Top - Section 3	262.37	1.00	-0.11	0.13	-7.98	
140.00		251.27	1.05	-0.09	0.16	-5.75	
145.00		350.62	1.12	-0.06	0.20	-3.34	
150.00		340.81	1.20	0.01	0.26	2.30	
155.00		331.00	1.28	0.10	0.32	8.62	
158.00	Appurtenance(s)	4192.4	1.33	0.17	0.37	163.77	
160.00		127.30	1.37	0.23	0.40	6.16	

Copyright © 2019 by Tower Engineering Solutions, LLC. All rights reserved.

Seismic Segment Forces (Factored)

Structure:	CT46124-A-SBA		**Code:**	EIA/TIA-222-G	2/6/2019
Site Name:	Enfield-Moody Rd.		**Exposure:**	C	
Height:	188.00 (ft)		**Crest Height:**	0.00	
Base Elev:	0.000 (ft)		**Site Class:**	D - Stiff Soil	
Gh:	1.1	**Topography:** 1	**Struct Class:**	II	Page: 38

Tower Engineering Solutions

165.00		311.39	1.46	0.40	0.49	22.98		
168.00	Appurtenance(s)	1196.1	1.51	0.52	0.55	108.35		
168.50	Appurtenance(s)	1430.0	1.52	0.55	0.56	133.70		
170.00		89.44	1.55	0.62	0.60	9.16		
175.00		291.77	1.64	0.90	0.72	39.18		
178.00	Top - Section 4	170.35	1.69	1.10	0.81	26.40		
180.00		96.44	1.73	1.25	0.87	16.34		
184.00	Appurtenance(s)	1792.8	1.81	1.59	1.00	358.63		
185.00		48.22	1.83	1.68	1.03	10.03		
187.00	Appurtenance(s)	1385.8	1.87	1.88	1.10	310.99		
188.00		48.22	1.89	1.98	1.14	11.23		
	Totals:	**37,450.4**				**1,686.8**	**Total Wind:**	**33,424.3**

Seismic Base Shear is Less Than 50% of Wind Force - An Analysis is NOT Required

Copyright © 2019 by Tower Engineering Solutions, LLC. All rights reserved.

Calculated Forces

Structure:	CT46124-A-SBA	**Code:**	EIA/TIA-222-G	2/6/2019	
Site Name:	Enfield-Moody Rd.	**Exposure:**	C		
Height:	188.00 (ft)	**Crest Height:**	0.00		
Base Elev:	0.000 (ft)	**Site Class:**	D - Stiff Soil		
Gh:	1.1	**Topography:** 1	**Struct Class:**	II	Page: 39

Tower Engineering Solutions

Load Case: 0.9D + 1.0E

Iterations 26

Gust Response Factor	1.10			**Sds**	0.19			**Ss**	0.17
Dead Load Factor	0.90	**Seismic Load Factor**	1.00	**Sd1**	0.10			**S1**	0.06
Wind Load Factor	0.00	**Structure Frequency (f1)**	0.24	**SA**	0.02	**Seismic Importance Factor**			1.00

Seg Elev (ft)	Pu FY (-) (kips)	Vu FX (-) (kips)	Tu MY (-) (ft-kips)	Mu MZ (ft-kips)	Mu MX (ft-kips)	Resultant Moment (ft-kips)	phi Pn (kips)	phi Vn (kips)	phi Tn (ft-kips)	phi Mn (ft-kips)	Total Deflect (in)	Rotation Sway (deg)	Rotation Twist (deg)	Stress Ratio
0.00	-38.06	-1.87	0.00	-257.85	0.00	257.85	5035.03	2517.52	10606.9	5311.37		0.00	0.00	0.056
0.25	-38.00	-1.88	0.00	-257.38	0.00	257.38	5032.22	2516.11	10592.3	5304.07		0.00	0.00	0.042
5.00	-36.86	-1.86	0.00	-248.47	0.00	248.47	4978.38	2489.19	10316.4	5165.91		0.01	-0.01	0.041
10.00	-35.66	-1.84	0.00	-239.16	0.00	239.16	4920.91	2460.46	10028.2	5021.57		0.02	-0.02	0.041
15.00	-34.49	-1.81	0.00	-229.98	0.00	229.98	4862.63	2431.31	9742.31	4878.39		0.05	-0.03	0.040
20.00	-33.33	-1.77	0.00	-220.95	0.00	220.95	4803.53	2401.76	9458.77	4736.42		0.10	-0.05	0.039
25.00	-32.19	-1.74	0.00	-212.10	0.00	212.10	4743.61	2371.81	9177.73	4595.68		0.15	-0.06	0.039
30.00	-31.07	-1.70	0.00	-203.41	0.00	203.41	4682.88	2341.44	8899.25	4456.24		0.22	-0.07	0.038
32.83	-30.45	-1.68	0.00	-198.60	0.00	198.60	4648.14	2324.07	8742.80	4377.90		0.26	-0.08	0.038
32.83	-30.45	-1.68	0.00	-198.60	0.00	198.60	4648.14	2324.07	8742.80	4377.90		0.26	-0.08	0.038
35.00	-29.97	-1.67	0.00	-194.95	0.00	194.95	4621.33	2310.66	8623.42	4318.12		0.30	-0.08	0.052
40.00	-28.88	-1.63	0.00	-186.62	0.00	186.62	4558.96	2279.48	8350.33	4181.37		0.39	-0.10	0.051
43.25	-28.19	-1.61	0.00	-181.32	0.00	181.32	4517.98	2258.99	8174.32	4093.24		0.46	-0.11	0.051
45.00	-27.53	-1.58	0.00	-178.50	0.00	178.50	4495.78	2247.89	8080.06	4046.03		0.50	-0.11	0.050
48.92	-26.07	-1.52	0.00	-172.29	0.00	172.29	4445.67	2222.84	7870.19	3940.94		0.60	-0.13	0.036
49.00	-26.04	-1.52	0.00	-172.17	0.00	172.17	3699.57	1849.78	6681.20	3345.56		0.61	-0.13	0.038
50.00	-25.86	-1.52	0.00	-170.65	0.00	170.65	3689.91	1844.95	6638.39	3324.13		0.63	-0.13	0.041
55.00	-24.94	-1.49	0.00	-163.05	0.00	163.05	3641.14	1820.57	6425.47	3217.51		0.78	-0.14	0.040
60.00	-24.04	-1.46	0.00	-155.61	0.00	155.61	3591.55	1795.77	6214.50	3111.87		0.94	-0.16	0.039
65.00	-23.15	-1.42	0.00	-148.33	0.00	148.33	3541.14	1770.57	6005.55	3007.24		1.11	-0.17	0.039
70.00	-22.27	-1.39	0.00	-141.21	0.00	141.21	3489.91	1744.96	5798.71	2903.67		1.29	-0.18	0.038
75.00	-21.42	-1.36	0.00	-134.24	0.00	134.24	3437.87	1718.94	5594.07	2801.19		1.49	-0.20	0.037
76.83	-21.11	-1.36	0.00	-131.74	0.00	131.74	3418.62	1709.31	5519.73	2763.97		1.57	-0.20	0.037
76.83	-21.11	-1.36	0.00	-131.74	0.00	131.74	3418.62	1709.31	5519.73	2763.97		1.57	-0.20	0.037
80.00	-20.57	-1.34	0.00	-127.44	0.00	127.44	3385.02	1692.51	5391.70	2699.86		1.71	-0.21	0.053
85.00	-19.75	-1.33	0.00	-120.72	0.00	120.72	3331.35	1665.67	5191.69	2599.71		1.94	-0.23	0.052
87.50	-19.34	-1.32	0.00	-117.40	0.00	117.40	3304.20	1652.10	5092.60	2550.09		2.06	-0.24	0.052
90.00	-18.65	-1.31	0.00	-114.10	0.00	114.10	3276.86	1638.43	4994.13	2500.78		2.19	-0.25	0.051
91.92	-18.12	-1.31	0.00	-111.57	0.00	111.57	3255.72	1627.86	4918.94	2463.13		2.29	-0.26	0.036
92.25	-18.03	-1.31	0.00	-111.14	0.00	111.14	2609.22	1304.61	4017.17	2011.57		2.31	-0.26	0.038
95.00	-17.65	-1.31	0.00	-107.54	0.00	107.54	2587.46	1293.73	3934.74	1970.29		2.46	-0.27	0.041
100.00	-16.96	-1.31	0.00	-100.98	0.00	100.98	2547.26	1273.63	3786.04	1895.83		2.75	-0.28	0.040
105.00	-16.29	-1.31	0.00	-94.42	0.00	94.42	2506.24	1253.12	3638.92	1822.16		3.06	-0.30	0.038
105.58	-16.21	-1.31	0.00	-93.66	0.00	93.66	2501.42	1250.71	3621.96	1813.67		3.10	-0.30	0.038
105.58	-16.21	-1.31	0.00	-93.66	0.00	93.66	2501.42	1250.71	3621.96	1813.67		3.10	-0.30	0.038
110.00	-15.63	-1.32	0.00	-87.85	0.00	87.85	2464.40	1232.20	3493.46	1749.33		3.38	-0.32	0.057
115.00	-14.99	-1.32	0.00	-81.27	0.00	81.27	2421.75	1210.87	3349.75	1677.36		3.73	-0.34	0.055
120.00	-14.35	-1.32	0.00	-74.68	0.00	74.68	2378.28	1189.14	3207.87	1606.32		4.09	-0.36	0.053
125.00	-13.73	-1.32	0.00	-68.08	0.00	68.08	2333.99	1167.00	3067.90	1536.23		4.48	-0.38	0.050
130.00	-13.13	-1.32	0.00	-61.47	0.00	61.47	2288.89	1144.45	2929.94	1467.15		4.90	-0.41	0.048
132.50	-12.83	-1.32	0.00	-58.16	0.00	58.16	2266.03	1133.02	2861.73	1432.99		5.11	-0.42	0.046
135.00	-12.36	-1.32	0.00	-54.86	0.00	54.86	2239.33	1119.66	2789.52	1396.83		5.34	-0.43	0.045
136.50	-12.09	-1.32	0.00	-52.88	0.00	52.88	1414.34	707.17	1783.76	893.21		5.47	-0.44	0.068
140.00	-11.77	-1.32	0.00	-48.26	0.00	48.26	1397.90	698.95	1729.39	865.98		5.80	-0.45	0.064
145.00	-11.33	-1.32	0.00	-41.65	0.00	41.65	1373.73	686.86	1652.26	827.36		6.28	-0.48	0.059
150.00	-10.90	-1.32	0.00	-35.03	0.00	35.03	1348.73	674.37	1575.83	789.09		6.79	-0.50	0.052
155.00	-10.47	-1.31	0.00	-28.42	0.00	28.42	1322.92	661.46	1500.20	751.22		7.33	-0.52	0.046

Copyright © 2019 by Tower Engineering Solutions, LLC. All rights reserved.

Calculated Forces

Structure:	CT46124-A-SBA		**Code:**	EIA/TIA-222-G	2/6/2019
Site Name:	Enfield-Moody Rd.		**Exposure:**	C	
Height:	188.00 (ft)		**Crest Height:**	0.00	
Base Elev:	0.000 (ft)		**Site Class:**	D - Stiff Soil	
Gh:	1.1	**Topography:** 1	**Struct Class:**	II	Page: 40

Tower Engineering Solutions

158.00	-6.62	-1.11	0.00	-24.48	0.00	24.48	1307.05	653.52	1455.24	728.70	7.67	-0.54	0.039
160.00	-6.48	-1.11	0.00	-22.25	0.00	22.25	1296.30	648.15	1425.45	713.78	7.89	-0.54	0.036
165.00	-6.14	-1.08	0.00	-16.70	0.00	16.70	1268.86	634.43	1351.65	676.83	8.47	-0.56	0.030
168.00	-5.02	-0.97	0.00	-13.45	0.00	13.45	1252.00	626.00	1307.87	654.91	8.83	-0.57	0.025
168.50	-3.73	-0.82	0.00	-12.97	0.00	12.97	1249.16	624.58	1300.61	651.27	8.88	-0.57	0.023
170.00	-3.63	-0.81	0.00	-11.74	0.00	11.74	1240.60	620.30	1278.90	640.40	9.06	-0.57	0.021
175.00	-3.31	-0.77	0.00	-7.70	0.00	7.70	1211.52	605.76	1207.28	604.54	9.67	-0.58	0.015
178.00	-3.13	-0.74	0.00	-5.39	0.00	5.39	1193.69	596.84	1164.89	583.31	10.04	-0.59	0.012
178.00	-3.13	-0.74	0.00	-5.39	0.00	5.39	975.84	487.92	954.81	478.11	10.04	-0.59	0.014
180.00	-3.02	-0.72	0.00	-3.92	0.00	3.92	975.84	487.92	954.81	478.11	10.29	-0.59	0.011
184.00	-1.36	-0.35	0.00	-1.03	0.00	1.03	975.84	487.92	954.81	478.11	10.78	-0.59	0.004
185.00	-1.31	-0.34	0.00	-0.68	0.00	0.68	975.84	487.92	954.81	478.11	10.91	-0.59	0.003
187.00	-0.04	-0.01	0.00	-0.01	0.00	0.01	975.84	487.92	954.81	478.11	11.16	-0.59	0.000
188.00	0.00	-0.01	0.00	0.00	0.00	0.00	975.84	487.92	954.81	478.11	11.28	-0.59	0.000

Copyright © 2019 by Tower Engineering Solutions, LLC. All rights reserved.

Wind Loading - Shaft

Structure:	CT46124-A-SBA		**Code:**	EIA/TIA-222-G	2/6/2019
Site Name:	Enfield-Moody Rd.		**Exposure:**	C	
Height:	188.00 (ft)		**Crest Height:**	0.00	
Base Elev:	0.000 (ft)		**Site Class:**	D - Stiff Soil	
Gh:	1.1	**Topography:** 1	**Struct Class:**	II	Page: 41

Tower Engineering Solutions

Load Case: 1.0D + 1.0W 60 mph Wind

Dead Load Factor 1.00

Wind Load Factor 1.00

Iterations 28

Elev (ft)	Description	Kzt	Kz	qz (psf)	qzGh (psf)	C (mph-ft)	Cf	Ice Thick (in)	Tributary (ft)	Aa (sf)	CfAa (sf)	Wind Force X (lb)	Dead Load Ice (lb)	Tot Dead Load (lb)
0.00		1.00	0.85	7.442	8.19	242.19	0.650	0.000	0.00	0.000	0.00	0.0	0.0	0.0
0.25	RB1	1.00	0.85	7.442	8.19	241.99	0.650	0.000	0.25	1.094	0.71	5.8	0.0	60.6
5.00		1.00	0.85	7.442	8.19	238.30	0.650	0.000	4.75	20.621	13.40	109.7	0.0	1141.6
10.00		1.00	0.85	7.442	8.19	234.42	0.650	0.000	5.00	21.364	13.89	113.7	0.0	1182.6
15.00		1.00	0.85	7.442	8.19	230.53	0.650	0.000	5.00	21.013	13.66	111.8	0.0	1163.0
20.00		1.00	0.90	7.896	8.69	233.46	0.650	0.000	5.00	20.662	13.43	116.7	0.0	1143.4
25.00		1.00	0.95	8.276	9.10	234.91	0.650	0.000	5.00	20.310	13.20	120.2	0.0	1123.8
30.00		1.00	0.98	8.600	9.46	235.29	0.650	0.000	5.00	19.959	12.97	122.7	0.0	1104.2
32.83	RT1	1.00	1.00	8.765	9.64	235.14	0.650	0.000	2.83	11.141	7.24	69.8	0.0	616.3
35.00		1.00	1.01	8.883	9.77	234.89	0.650	0.000	2.17	8.467	5.50	53.8	0.0	468.3
40.00		1.00	1.04	9.137	10.05	233.91	0.650	0.000	5.00	19.257	12.52	125.8	0.0	1064.9
43.25	Bot - Section 2	1.00	1.06	9.288	10.22	233.02	0.650	0.000	3.25	12.329	8.01	81.9	0.0	681.7
45.00		1.00	1.07	9.366	10.30	232.47	0.650	0.000	1.75	6.688	4.35	44.8	0.0	681.1
48.92	RB2	1.00	1.09	9.532	10.49	231.07	0.650	0.000	3.92	14.825	9.64	101.0	0.0	1509.4
49.00	Top - Section 1	1.00	1.09	9.536	10.49	231.04	0.650	0.000	0.08	0.300	0.20	2.0	0.0	30.6
50.00		1.00	1.09	9.576	10.53	234.64	0.650	0.000	1.00	3.746	2.44	25.7	0.0	177.8
55.00		1.00	1.12	9.770	10.75	232.55	0.650	0.000	5.00	18.520	12.04	129.4	0.0	878.8
60.00		1.00	1.14	9.951	10.95	230.20	0.650	0.000	5.00	18.169	11.81	129.3	0.0	862.0
65.00		1.00	1.16	10.120	11.13	227.61	0.650	0.000	5.00	17.818	11.58	128.9	0.0	845.2
70.00		1.00	1.17	10.279	11.31	224.83	0.650	0.000	5.00	17.467	11.35	128.4	0.0	828.4
75.00		1.00	1.19	10.430	11.47	221.87	0.650	0.000	5.00	17.115	11.13	127.6	0.0	811.6
76.83	RT2	1.00	1.20	10.483	11.53	220.74	0.650	0.000	1.83	6.176	4.01	46.3	0.0	292.8
80.00		1.00	1.21	10.572	11.63	218.75	0.650	0.000	3.17	10.588	6.88	80.0	0.0	501.9
85.00		1.00	1.22	10.708	11.78	215.49	0.650	0.000	5.00	16.413	10.67	125.7	0.0	778.0
87.50	Bot - Section 3	1.00	1.23	10.774	11.85	213.81	0.650	0.000	2.50	8.075	5.25	62.2	0.0	382.7
90.00		1.00	1.24	10.838	11.92	212.10	0.650	0.000	2.50	8.119	5.28	62.9	0.0	699.7
91.92	RB3	1.00	1.24	10.886	11.97	210.77	0.650	0.000	1.92	6.176	4.01	48.1	0.0	532.1
92.25	Top - Section 2	1.00	1.24	10.894	11.98	210.53	0.650	0.000	0.33	1.056	0.69	8.2	0.0	91.0
95.00		1.00	1.25	10.962	12.06	212.14	0.650	0.000	2.75	8.743	5.68	68.5	0.0	345.8
100.00		1.00	1.27	11.081	12.19	208.55	0.650	0.000	5.00	15.624	10.16	123.8	0.0	617.9
105.00		1.00	1.28	11.195	12.31	204.86	0.650	0.000	5.00	15.273	9.93	122.2	0.0	603.9
105.58	RT3	1.00	1.28	11.208	12.33	204.42	0.650	0.000	0.58	1.749	1.14	14.0	0.0	69.1
110.00		1.00	1.29	11.305	12.44	201.07	0.650	0.000	4.42	13.172	8.56	106.5	0.0	520.7
115.00		1.00	1.30	11.412	12.55	197.21	0.650	0.000	5.00	14.570	9.47	118.9	0.0	575.9
120.00		1.00	1.32	11.514	12.67	193.26	0.650	0.000	5.00	14.219	9.24	117.1	0.0	561.8
125.00		1.00	1.33	11.614	12.78	189.24	0.650	0.000	5.00	13.868	9.01	115.2	0.0	547.8
130.00		1.00	1.34	11.710	12.88	185.14	0.650	0.000	5.00	13.516	8.79	113.2	0.0	533.8
132.50	Bot - Section 4	1.00	1.34	11.757	12.93	183.07	0.650	0.000	2.50	6.627	4.31	55.7	0.0	261.7
135.00		1.00	1.35	11.803	12.98	180.99	0.650	0.000	2.50	6.631	4.31	56.0	0.0	442.1
136.50	Top - Section 3	1.00	1.35	11.831	13.01	179.73	0.650	0.000	1.50	3.937	2.56	33.3	0.0	262.4
140.00		1.00	1.36	11.894	13.08	179.36	0.650	0.000	3.50	9.063	5.89	77.1	0.0	251.3
145.00		1.00	1.37	11.982	13.18	175.09	0.650	0.000	5.00	12.648	8.22	108.4	0.0	350.6
150.00		1.00	1.38	12.068	13.27	170.77	0.650	0.000	5.00	12.297	7.99	106.1	0.0	340.8
155.00		1.00	1.39	12.152	13.37	166.39	0.650	0.000	5.00	11.946	7.76	103.8	0.0	331.0
158.00	Appurtenance(s)	1.00	1.39	12.201	13.42	163.75	0.650	0.000	3.00	6.999	4.55	61.1	0.0	193.9
160.00		1.00	1.40	12.233	13.46	161.97	0.650	0.000	2.00	4.596	2.99	40.2	0.0	127.3
165.00		1.00	1.41	12.313	13.54	157.50	0.650	0.000	5.00	11.243	7.31	99.0	0.0	311.4

Copyright © 2019 by Tower Engineering Solutions, LLC. All rights reserved.

Wind Loading - Shaft

Structure:	CT46124-A-SBA		**Code:**	EIA/TIA-222-G	2/6/2019
Site Name:	Enfield-Moody Rd.		**Exposure:**	C	
Height:	188.00 (ft)		**Crest Height:**	0.00	
Base Elev:	0.000 (ft)		**Site Class:**	D - Stiff Soil	
Gh:	1.1	**Topography:** 1	**Struct Class:**	II	Page: 42

168.00 Appurtenance(s)	1.00	1.41	12.360	13.60	154.79	0.650	0.000	3.00	6.577	4.28	58.1	0.0	182.1
168.50 Appurtenance(s)	1.00	1.41	12.367	13.60	154.34	0.650	0.000	0.50	1.084	0.70	9.6	0.0	30.0
170.00	1.00	1.42	12.390	13.63	152.98	0.650	0.000	1.50	3.231	2.10	28.6	0.0	89.4
175.00	1.00	1.42	12.466	13.71	148.42	0.650	0.000	5.00	10.541	6.85	94.0	0.0	291.8
178.00 Top - Section 4	1.00	1.43	12.511	13.76	145.66	0.650	0.000	3.00	6.156	4.00	55.1	0.0	170.4
180.00	1.00	1.43	12.540	13.79	145.83	0.650	0.000	2.00	4.062	2.64	36.4	0.0	96.4
184.00 Appurtenance(s)	1.00	1.44	12.599	13.86	146.17	0.650	0.000	4.00	8.123	5.28	73.2	0.0	192.9
185.00	1.00	1.44	12.613	13.87	146.25	0.650	0.000	1.00	2.031	1.32	18.3	0.0	48.2
187.00 Appurtenance(s)	1.00	1.44	12.642	13.91	146.42	0.650	0.000	2.00	4.062	2.64	36.7	0.0	96.4
188.00	1.00	1.45	12.656	13.92	146.50	0.650	0.000	1.00	2.031	1.32	18.4	0.0	48.2
							Totals:	**188.00**			**4,350.6**		**28,148.4**

Copyright © 2019 by Tower Engineering Solutions, LLC. All rights reserved.

Discrete Appurtenance Forces

Structure:	CT46124-A-SBA		**Code:**	EIA/TIA-222-G	2/6/2019
Site Name:	Enfield-Moody Rd.		**Exposure:**	C	
Height:	188.00 (ft)		**Crest Height:**	0.00	
Base Elev:	0.000 (ft)		**Site Class:**	D - Stiff Soil	
Gh:	1.1	**Topography:** 1	**Struct Class:**	II	Page: 43

Tower Engineering Solutions

Load Case: 1.0D + 1.0W 60 mph Wind

Dead Load Factor 1.00

Wind Load Factor 1.00

Iterations 28

No.	Elev (ft)	Description	Qty	qz (psf)	qzGh (psf)	CaAa x Ka	Ka	Total CaAa (sf)	Dead Load (lb)	Horiz Ecc (ft)	Vert Ecc (ft)	Wind FX (lb)	Mom Y (lb-ft)	Mom Z (lb-ft)
1	187.00	Ericsson Radio 4449 B71	3	12.642	13.906	0.38	0.75	2.98	222.00	0.000	0.000	41.46	0.00	0.00
2	187.00	RFS	3	12.642	13.906	0.52	0.75	28.73	384.00	0.000	0.000	399.48	0.00	0.00
3	187.00	Ericsson	3	12.642	13.906	0.65	0.75	12.60	396.60	0.000	0.000	175.17	0.00	0.00
4	187.00	Kathrein 782 11054-Smart	3	12.642	13.906	0.38	0.75	0.25	5.40	0.000	0.000	3.44	0.00	0.00
5	187.00	Commscope	3	12.642	13.906	0.60	0.75	18.85	149.40	0.000	0.000	262.07	0.00	0.00
6	187.00	Ericsson KRY 112 114-1	12	12.642	13.906	0.38	0.75	1.84	132.00	0.000	0.000	25.66	0.00	0.00
7	184.00	Platform w/ Hand Rail	1	12.599	13.858	1.00	1.00	32.00	1600.00	0.000	0.000	443.47	0.00	0.00
8	168.50	Low Profile Platform	1	12.367	13.604	1.00	1.00	22.00	1400.00	0.000	0.000	299.29	0.00	0.00
9	168.00	TD-RRH8x20-25	3	12.360	13.596	0.40	0.80	3.66	210.00	0.000	0.000	49.76	0.00	0.00
10	168.00	800 MHz RRH	3	12.360	13.596	0.40	0.80	3.53	162.00	0.000	0.000	47.96	0.00	0.00
11	168.00	1900 MHz RRH	3	12.360	13.596	0.40	0.80	3.53	132.00	0.000	0.000	47.96	0.00	0.00
12	168.00	APXVTM14-C-120	3	12.360	13.596	0.62	0.80	11.87	168.00	0.000	0.000	161.36	0.00	0.00
13	168.00	800 MHz Filters	3	12.360	13.596	0.40	0.80	3.53	162.00	0.000	0.000	47.96	0.00	0.00
14	168.00	APXVSPP18-C-A20	2	12.360	13.596	0.65	0.80	10.39	114.00	0.000	0.000	141.31	0.00	0.00
15	168.00	APXV9ERR18-C-A20	1	12.360	13.596	0.65	0.80	5.20	62.00	0.000	0.000	70.66	0.00	0.00
16	168.00	ACU-A20-N	4	12.360	13.596	0.40	0.80	0.22	4.00	0.000	0.000	3.05	0.00	0.00
17	158.00	Plateform Mount	1	12.201	13.421	1.00	1.00	44.30	2136.59	0.000	0.000	594.55	0.00	0.00
18	158.00	800 10966	6	12.201	13.421	0.57	0.80	48.77	687.60	0.000	0.000	654.52	0.00	0.00
19	158.00	Ericsson RRUS 4415 B25	3	12.201	13.421	0.40	0.80	1.97	138.00	0.000	0.000	26.41	0.00	0.00
20	158.00	Ericsson 8843 B2 B66A	3	12.201	13.421	0.40	0.80	1.97	216.00	0.000	0.000	26.41	0.00	0.00
21	158.00	Ericsson 4449 B5 B12	3	12.201	13.421	0.54	0.80	2.65	219.00	0.000	0.000	35.61	0.00	0.00
22	158.00	Raycap DC6-48-60-0-8C	1	12.201	13.421	1.00	1.00	4.78	26.20	0.000	0.000	64.15	0.00	0.00
23	158.00	Powerwave LGP21401	6	12.201	13.421	0.40	0.80	3.02	105.00	0.000	0.000	40.59	0.00	0.00
24	158.00	Raycap DC6-48-60-18-8F	2	12.201	13.421	0.40	0.80	1.18	63.60	0.000	0.000	15.78	0.00	0.00
25	158.00	800 10121	3	12.201	13.421	0.58	0.75	9.04	132.30	0.000	0.000	121.30	0.00	0.00
26	158.00	HPA-65R-BUU-H8	3	12.201	13.421	0.62	0.80	24.30	204.00	0.000	0.000	326.11	0.00	0.00
27	158.00	Kathrein 860-10025 RET	6	12.201	13.421	0.40	0.80	0.38	6.96	0.000	0.000	5.15	0.00	0.00
28	158.00	Ericsson RRUS-A2 RRU	3	12.201	13.421	0.40	0.80	2.23	63.30	0.000	0.000	29.96	0.00	0.00
							Totals:		**9,301.95**			**4,160.59**		

Copyright © 2019 by Tower Engineering Solutions, LLC. All rights reserved.

Total Applied Force Summary

Structure:	CT46124-A-SBA		**Code:**	EIA/TIA-222-G	2/6/2019
Site Name:	Enfield-Moody Rd.		**Exposure:**	C	
Height:	188.00 (ft)		**Crest Height:**	0.00	
Base Elev:	0.000 (ft)		**Site Class:**	D - Stiff Soil	
Gh:	1.1	**Topography:** 1	**Struct Class:**	II	Page: 44

Tower Engineering Solutions

Load Case: 1.0D + 1.0W 60 mph Wind

Dead Load Factor 1.00

Wind Load Factor 1.00

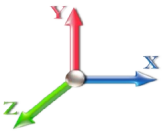

Iterations 28

Elev (ft)	Description	Lateral FX (-) (lb)	Axial FY (-) (lb)	Torsion MY (lb-ft)	Moment MZ (lb-ft)
0.00		0.00	0.00	0.00	0.00
0.25		5.82	67.63	0.00	0.00
5.00		109.72	1275.73	0.00	0.00
10.00		113.68	1323.75	0.00	0.00
15.00		111.81	1304.14	0.00	0.00
20.00		116.65	1284.52	0.00	0.00
25.00		120.18	1264.91	0.00	0.00
30.00		122.73	1245.30	0.00	0.00
32.83		69.82	696.15	0.00	0.00
35.00		53.78	529.54	0.00	0.00
40.00		125.80	1206.08	0.00	0.00
43.25		81.88	773.43	0.00	0.00
45.00		44.79	730.48	0.00	0.00
48.92		101.04	1620.07	0.00	0.00
49.00		2.05	32.83	0.00	0.00
50.00		25.65	206.01	0.00	0.00
55.00		129.38	1019.96	0.00	0.00
60.00		129.27	1003.15	0.00	0.00
65.00		128.93	986.34	0.00	0.00
70.00		128.37	969.53	0.00	0.00
75.00		127.63	952.72	0.00	0.00
76.83		46.29	344.49	0.00	0.00
80.00		80.03	591.42	0.00	0.00
85.00		125.66	919.10	0.00	0.00
87.50		62.20	453.25	0.00	0.00
90.00		62.92	770.24	0.00	0.00
91.92		48.07	586.32	0.00	0.00
92.25		8.23	100.32	0.00	0.00
95.00		68.52	423.43	0.00	0.00
100.00		123.78	759.02	0.00	0.00
105.00		122.25	745.01	0.00	0.00
105.58		14.02	85.51	0.00	0.00
110.00		106.48	645.49	0.00	0.00
115.00		118.88	716.99	0.00	0.00
120.00		117.06	702.99	0.00	0.00
125.00		115.15	688.98	0.00	0.00
130.00		113.17	674.97	0.00	0.00
132.50		55.70	332.23	0.00	0.00
135.00		55.96	512.62	0.00	0.00
136.50		33.30	304.71	0.00	0.00
140.00		77.07	350.07	0.00	0.00
145.00		108.36	491.76	0.00	0.00
150.00		106.11	481.95	0.00	0.00
155.00		103.79	472.14	0.00	0.00
158.00	(40) attachments	2001.60	4277.13	0.00	0.00
160.00		40.20	156.68	0.00	0.00
165.00		98.98	384.83	0.00	0.00

Copyright © 2019 by Tower Engineering Solutions, LLC. All rights reserved.

Total Applied Force Summary

Structure:	CT46124-A-SBA		**Code:**	EIA/TIA-222-G	2/6/2019
Site Name:	Enfield-Moody Rd.		**Exposure:**	C	
Height:	188.00 (ft)		**Crest Height:**	0.00	
Base Elev:	0.000 (ft)		**Site Class:**	D - Stiff Soil	
Gh:	1.1	**Topography:** 1	**Struct Class:**	II	Page: 45

Tower Engineering Solutions

168.00	(22) attachments	628.15	1240.19	0.00	0.00
168.50	(1) attachments	308.87	1436.24	0.00	0.00
170.00		28.62	108.15	0.00	0.00
175.00		93.95	354.11	0.00	0.00
178.00		55.07	207.76	0.00	0.00
180.00		36.42	121.38	0.00	0.00
184.00	(1) attachments	516.64	1842.75	0.00	0.00
185.00		18.31	60.69	0.00	0.00
187.00	(27) attachments	943.98	1410.78	0.00	0.00
188.00		18.38	48.22	0.00	0.00
	Totals:	**8,511.16**	**42,294.18**	**0.00**	**0.00**

Copyright © 2019 by Tower Engineering Solutions, LLC. All rights reserved.

Linear Appurtenance Segment Forces (Factored)

Structure:	CT46124-A-SBA	**Code:**	EIA/TIA-222-G	2/6/2019	
Site Name:	Enfield-Moody Rd.	**Exposure:**	C		
Height:	188.00 (ft)	**Crest Height:**	0.00		
Base Elev:	0.000 (ft)	**Site Class:**	D - Stiff Soil		
Gh:	1.1 **Topography:** 1	**Struct Class:**	II	Page: 46	

Tower Engineering Solutions

Load Case: 1.0D + 1.0W 60 mph Wind

Dead Load Factor 1.00

Wind Load Factor 1.00

Iterations 28

Top Elev (ft)	Description	Wind Exposed	Length (ft)	Ca	Exposed Width (in)	Area (sqft)	CaAa (sqft)	Ra	Cf Adjust Factor	qz (psf)	F X (lb)	Dead Load (lb)
0.25	1.25" Reinforcing	Yes	0.25	0.000	1.25	0.03	0.00	0.024	0.000	7.442	0.00	0.00
5.00	1.25" Reinforcing	Yes	4.75	0.000	1.25	0.49	0.00	0.024	0.000	7.442	0.00	0.00
10.00	1.25" Reinforcing	Yes	5.00	0.000	1.25	0.52	0.00	0.024	0.000	7.442	0.00	0.00
15.00	1.25" Reinforcing	Yes	5.00	0.000	1.25	0.52	0.00	0.025	0.000	7.442	0.00	0.00
20.00	1.25" Reinforcing	Yes	5.00	0.000	1.25	0.52	0.00	0.025	0.000	7.896	0.00	0.00
25.00	1.25" Reinforcing	Yes	5.00	0.000	1.25	0.52	0.00	0.026	0.000	8.276	0.00	0.00
30.00	1.25" Reinforcing	Yes	5.00	0.000	1.25	0.52	0.00	0.026	0.000	8.600	0.00	0.00
32.83	1.25" Reinforcing	Yes	2.83	0.000	1.25	0.29	0.00	0.026	0.000	8.765	0.00	0.00
35.00	1.25" Reinforcing	Yes	2.17	0.000	1.25	0.23	0.00	0.027	0.000	8.883	0.00	0.00
40.00	1.25" Reinforcing	Yes	0.50	0.000	1.25	0.05	0.00	0.003	0.000	9.137	0.00	0.00
48.92	1.25" Reinforcing	Yes	2.42	0.000	1.25	0.25	0.00	0.017	0.000	9.532	0.00	0.00
49.00	1.25" Reinforcing	Yes	0.08	0.000	1.25	0.01	0.00	0.028	0.000	9.536	0.00	0.00
50.00	1.25" Reinforcing	Yes	1.00	0.000	1.25	0.10	0.00	0.028	0.000	9.576	0.00	0.00
55.00	1.25" Reinforcing	Yes	5.00	0.000	1.25	0.52	0.00	0.028	0.000	9.770	0.00	0.00
60.00	1.25" Reinforcing	Yes	5.00	0.000	1.25	0.52	0.00	0.029	0.000	9.951	0.00	0.00
65.00	1.25" Reinforcing	Yes	5.00	0.000	1.25	0.52	0.00	0.029	0.000	10.120	0.00	0.00
70.00	1.25" Reinforcing	Yes	5.00	0.000	1.25	0.52	0.00	0.030	0.000	10.279	0.00	0.00
75.00	1.25" Reinforcing	Yes	5.00	0.000	1.25	0.52	0.00	0.030	0.000	10.430	0.00	0.00
76.83	1.25" Reinforcing	Yes	1.83	0.000	1.25	0.19	0.00	0.031	0.000	10.483	0.00	0.00
80.00	1.25" Reinforcing	Yes	2.42	0.000	1.25	0.25	0.00	0.024	0.000	10.572	0.00	0.00
91.92	1.25" Reinforcing	Yes	1.67	0.000	1.25	0.17	0.00	0.029	0.000	10.886	0.00	0.00
92.25	1.25" Reinforcing	Yes	0.33	0.000	1.25	0.03	0.00	0.033	0.000	10.894	0.00	0.00
95.00	1.25" Reinforcing	Yes	2.75	0.000	1.25	0.29	0.00	0.033	0.000	10.962	0.00	0.00
100.00	1.25" Reinforcing	Yes	5.00	0.000	1.25	0.52	0.00	0.033	0.000	11.081	0.00	0.00
105.00	1.25" Reinforcing	Yes	5.00	0.000	1.25	0.52	0.00	0.034	0.000	11.195	0.00	0.00
105.58	1.25" Reinforcing	Yes	0.58	0.000	1.25	0.06	0.00	0.035	0.000	11.208	0.00	0.00
110.00	1.25" Reinforcing	Yes	1.67	0.000	1.25	0.17	0.00	0.013	0.000	11.305	0.00	0.00
										Totals:	**0.0**	**0.0**

Copyright © 2019 by Tower Engineering Solutions, LLC. All rights reserved.

Calculated Forces

Structure:	CT46124-A-SBA	**Code:**	EIA/TIA-222-G	2/6/2019	
Site Name:	Enfield-Moody Rd.	**Exposure:**	C		
Height:	188.00 (ft)	**Crest Height:**	0.00		
Base Elev:	0.000 (ft)	**Site Class:**	D - Stiff Soil		
Gh:	1.1	**Topography:** 1	**Struct Class:**	II	Page: 47

Tower Engineering Solutions

Load Case: 1.0D + 1.0W 60 mph Wind

Dead Load Factor 1.00

Wind Load Factor 1.00

Iterations 28

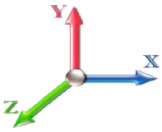

Seg Elev (ft)	Pu FY (-) (kips)	Vu FX (-) (kips)	Tu MY (-) (ft-kips)	Mu MZ (ft-kips)	Mu MX (ft-kips)	Resultant Moment (ft-kips)	phi Pn (kips)	phi Vn (kips)	phi Tn (ft-kips)	phi Mn (ft-kips)	Total Deflect (in)	Rotation Sway (deg)	Rotation Twist (deg)	Stress Ratio
0.00	-42.29	-8.51	0.00	-1160.6	0.00	1160.66	5035.03	2517.52	10606.9	5311.37	0.00	0.000	0.000	0.227
0.25	-42.22	-8.53	0.00	-1158.5	0.00	1158.53	5032.22	2516.11	10592.3	5304.07	0.00	-0.003	0.000	0.170
5.00	-40.94	-8.45	0.00	-1118.0	0.00	1118.04	4978.38	2489.19	10316.4	5165.91	0.03	-0.052	0.000	0.168
10.00	-39.61	-8.37	0.00	-1075.7	0.00	1075.78	4920.91	2460.46	10028.2	5021.57	0.11	-0.104	0.000	0.165
15.00	-38.30	-8.29	0.00	-1033.9	0.00	1033.93	4862.63	2431.31	9742.31	4878.39	0.25	-0.156	0.000	0.163
20.00	-37.01	-8.20	0.00	-992.47	0.00	992.47	4803.53	2401.76	9458.77	4736.42	0.44	-0.208	0.000	0.160
25.00	-35.73	-8.11	0.00	-951.45	0.00	951.45	4743.61	2371.81	9177.73	4595.68	0.68	-0.260	0.000	0.157
30.00	-34.48	-8.01	0.00	-910.90	0.00	910.90	4682.88	2341.44	8899.25	4456.24	0.98	-0.313	0.000	0.154
32.83	-33.78	-7.95	0.00	-888.24	0.00	888.24	4648.14	2324.07	8742.80	4377.90	1.18	-0.343	0.000	0.153
32.83	-33.78	-7.95	0.00	-888.24	0.00	888.24	4648.14	2324.07	8742.80	4377.90	1.18	-0.343	0.000	0.153
35.00	-33.25	-7.92	0.00	-870.98	0.00	870.98	4621.33	2310.66	8623.42	4318.12	1.34	-0.367	0.000	0.209
40.00	-32.03	-7.82	0.00	-831.38	0.00	831.38	4558.96	2279.48	8350.33	4181.37	1.76	-0.440	0.000	0.206
43.25	-31.26	-7.75	0.00	-805.97	0.00	805.97	4517.98	2258.99	8174.32	4093.24	2.08	-0.488	0.000	0.204
45.00	-30.52	-7.72	0.00	-792.40	0.00	792.40	4495.78	2247.89	8080.06	4046.03	2.26	-0.515	0.000	0.203
48.92	-28.90	-7.62	0.00	-762.12	0.00	762.12	4445.67	2222.84	7870.19	3940.94	2.71	-0.573	0.000	0.145
49.00	-28.86	-7.62	0.00	-761.51	0.00	761.51	3699.57	1849.78	6681.20	3345.56	2.72	-0.574	0.000	0.154
50.00	-28.65	-7.61	0.00	-753.89	0.00	753.89	3689.91	1844.95	6638.39	3324.13	2.84	-0.585	0.000	0.165
55.00	-27.63	-7.50	0.00	-715.82	0.00	715.82	3641.14	1820.57	6425.47	3217.51	3.49	-0.643	0.000	0.161
60.00	-26.62	-7.39	0.00	-678.32	0.00	678.32	3591.55	1795.77	6214.50	3111.87	4.19	-0.701	0.000	0.157
65.00	-25.63	-7.27	0.00	-641.39	0.00	641.39	3541.14	1770.57	6005.55	3007.24	4.96	-0.759	0.000	0.152
70.00	-24.65	-7.15	0.00	-605.04	0.00	605.04	3489.91	1744.96	5798.71	2903.67	5.78	-0.817	0.000	0.148
75.00	-23.70	-7.03	0.00	-569.27	0.00	569.27	3437.87	1718.94	5594.07	2801.19	6.67	-0.874	0.000	0.143
76.83	-23.35	-6.99	0.00	-556.41	0.00	556.41	3418.62	1709.31	5519.73	2763.97	7.01	-0.895	0.000	0.141
76.83	-23.35	-6.99	0.00	-556.41	0.00	556.41	3418.62	1709.31	5519.73	2763.97	7.01	-0.895	0.000	0.141
80.00	-22.75	-6.92	0.00	-534.25	0.00	534.25	3385.02	1692.51	5391.70	2699.86	7.62	-0.932	0.000	0.205
85.00	-21.83	-6.81	0.00	-499.64	0.00	499.64	3331.35	1665.67	5191.69	2599.71	8.64	-1.015	0.000	0.199
87.50	-21.37	-6.75	0.00	-482.63	0.00	482.63	3304.20	1652.10	5092.60	2550.09	9.18	-1.058	0.000	0.196
90.00	-20.60	-6.69	0.00	-465.75	0.00	465.75	3276.86	1638.43	4994.13	2500.78	9.74	-1.100	0.000	0.193
91.92	-20.01	-6.63	0.00	-452.91	0.00	452.91	3255.72	1627.86	4918.94	2463.13	10.19	-1.132	0.000	0.133
92.25	-19.91	-6.63	0.00	-450.72	0.00	450.72	2609.22	1304.61	4017.17	2011.57	10.27	-1.136	0.000	0.143
95.00	-19.48	-6.57	0.00	-432.49	0.00	432.49	2587.46	1293.73	3934.74	1970.29	10.94	-1.168	0.000	0.152
100.00	-18.72	-6.45	0.00	-399.64	0.00	399.64	2547.26	1273.63	3786.04	1895.83	12.19	-1.231	0.000	0.145
105.00	-17.97	-6.32	0.00	-367.40	0.00	367.40	2506.24	1253.12	3638.92	1822.16	13.51	-1.291	0.000	0.137
105.58	-17.88	-6.31	0.00	-363.73	0.00	363.73	2501.42	1250.71	3621.96	1813.67	13.67	-1.299	0.000	0.137
105.58	-17.88	-6.31	0.00	-363.73	0.00	363.73	2501.42	1250.71	3621.96	1813.67	13.67	-1.299	0.000	0.137
110.00	-17.23	-6.21	0.00	-335.82	0.00	335.82	2464.40	1232.20	3493.46	1749.33	14.90	-1.351	0.000	0.199
115.00	-16.51	-6.10	0.00	-304.75	0.00	304.75	2421.75	1210.87	3349.75	1677.36	16.36	-1.439	0.000	0.189
120.00	-15.80	-5.99	0.00	-274.23	0.00	274.23	2378.28	1189.14	3207.87	1606.32	17.91	-1.525	0.000	0.177
125.00	-15.11	-5.88	0.00	-244.27	0.00	244.27	2333.99	1167.00	3067.90	1536.23	19.56	-1.608	0.000	0.166
130.00	-14.43	-5.76	0.00	-214.88	0.00	214.88	2288.89	1144.45	2929.94	1467.15	21.28	-1.687	0.000	0.153
132.50	-14.09	-5.71	0.00	-200.47	0.00	200.47	2266.03	1133.02	2861.73	1432.99	22.18	-1.726	0.000	0.146
135.00	-13.58	-5.64	0.00	-186.21	0.00	186.21	2239.33	1119.66	2789.52	1396.83	23.09	-1.763	0.000	0.139
136.50	-13.27	-5.61	0.00	-177.75	0.00	177.75	1414.34	707.17	1783.76	893.21	23.65	-1.785	0.000	0.208
140.00	-12.92	-5.53	0.00	-158.13	0.00	158.13	1397.90	698.95	1729.39	865.98	24.98	-1.834	0.000	0.192
145.00	-12.42	-5.43	0.00	-130.46	0.00	130.46	1373.73	686.86	1652.26	827.36	26.94	-1.920	0.000	0.167
150.00	-11.94	-5.32	0.00	-103.33	0.00	103.33	1348.73	674.37	1575.83	789.09	29.00	-1.996	0.000	0.140
155.00	-11.47	-5.21	0.00	-76.73	0.00	76.73	1322.92	661.46	1500.20	751.22	31.12	-2.059	0.000	0.111
158.00	-7.26	-3.06	0.00	-61.11	0.00	61.11	1307.05	653.52	1455.24	728.70	32.43	-2.091	0.000	0.089

Copyright © 2019 by Tower Engineering Solutions, LLC. All rights reserved.

160.00	-7.11	-3.01	0.00	-55.00	0.00	55.00	1296.30	648.15	1425.45	713.78	33.31	-2.110	0.000	0.083
165.00	-6.73	-2.90	0.00	-39.93	0.00	39.93	1268.86	634.43	1351.65	676.83	35.54	-2.150	0.000	0.064
168.00	-5.51	-2.23	0.00	-31.22	0.00	31.22	1252.00	626.00	1307.87	654.91	36.90	-2.170	0.000	0.052
168.50	-4.09	-1.87	0.00	-30.11	0.00	30.11	1249.16	624.58	1300.61	651.27	37.12	-2.173	0.000	0.050
170.00	-3.98	-1.84	0.00	-27.31	0.00	27.31	1240.60	620.30	1278.90	640.40	37.81	-2.182	0.000	0.046
175.00	-3.63	-1.73	0.00	-18.13	0.00	18.13	1211.52	605.76	1207.28	604.54	40.10	-2.205	0.000	0.033
178.00	-3.42	-1.67	0.00	-12.94	0.00	12.94	1193.69	596.84	1164.89	583.31	41.49	-2.215	0.000	0.025
178.00	-3.42	-1.67	0.00	-12.94	0.00	12.94	975.84	487.92	954.81	478.11	41.49	-2.215	0.000	0.031
180.00	-3.30	-1.63	0.00	-9.60	0.00	9.60	975.84	487.92	954.81	478.11	42.42	-2.221	0.000	0.023
184.00	-1.48	-1.04	0.00	-3.10	0.00	3.10	975.84	487.92	954.81	478.11	44.29	-2.228	0.000	0.008
185.00	-1.42	-1.02	0.00	-2.06	0.00	2.06	975.84	487.92	954.81	478.11	44.75	-2.229	0.000	0.006
187.00	-0.05	-0.02	0.00	-0.02	0.00	0.02	975.84	487.92	954.81	478.11	45.69	-2.229	0.000	0.000
188.00	0.00	-0.02	0.00	0.00	0.00	0.00	975.84	487.92	954.81	478.11	46.15	-2.229	0.000	0.000

Copyright © 2019 by Tower Engineering Solutions, LLC. All rights reserved.

Final Analysis Summary

Structure:	CT46124-A-SBA		**Code:**	EIA/TIA-222-G	2/6/2019
Site Name:	Enfield-Moody Rd.		**Exposure:**	C	
Height:	188.00 (ft)		**Crest Height:**	0.00	
Base Elev:	0.000 (ft)		**Site Class:**	D - Stiff Soil	
Gh:	1.1	**Topography:** 1	**Struct Class:**	II	Page: 49

Tower Engineering Solutions

Reactions

Load Case	Shear FX (kips)	Shear FZ (kips)	Axial FY (kips)	Moment MX (ft-kips)	Moment MY (ft-kips)	Moment MZ (ft-kips)
1.2D + 1.6W 94 mph Wind	33.4	0.00	50.75	0.00	0.00	4592.04
0.9D + 1.6W 94 mph Wind	33.4	0.00	38.06	0.00	0.00	4521.53
1.2D + 1.0Di + 1.0Wi 50 mph Wind	11.2	0.00	89.69	0.00	0.00	1623.47
1.2D + 1.0E	1.9	0.00	50.75	0.00	0.00	262.15
0.9D + 1.0E	1.9	0.00	38.06	0.00	0.00	257.85
1.0D + 1.0W 60 mph Wind	8.5	0.00	42.29	0.00	0.00	1160.66

Max Stresses

Load Case	Pu FY (-) (kips)	Vu FX (-) (kips)	Tu MY (-) (ft-kips)	Mu MZ (ft-kips)	Mu MX (ft-kips)	Resultant Moment (ft-kips)	phi Pn (kips)	phi Vn (kips)	phi Tn (ft-kips)	phi Mn (ft-kips)	Elev (ft)	Stress Ratio
1.2D + 1.6W 94 mph Wind	-50.75	-33.43	0.00	-4592.0	0.00	-4592.0	5035.03	2517.5	10606.9	5311.37	0.00	0.875
0.9D + 1.6W 94 mph Wind	-38.06	-33.43	0.00	-4521.5	0.00	-4521.5	5035.03	2517.5	10606.9	5311.37	0.00	0.859
1.2D + 1.0Di + 1.0Wi 50 mph Wind	-89.69	-11.16	0.00	-1623.4	0.00	-1623.4	5035.03	2517.5	10606.9	5311.37	0.00	0.323
1.2D + 1.0E	-16.12	-1.35	0.00	-54.07	0.00	-54.07	1414.34	707.17	1783.76	893.21	136.50	0.072
0.9D + 1.0E	-12.09	-1.32	0.00	-52.88	0.00	-52.88	1414.34	707.17	1783.76	893.21	136.50	0.068
1.0D + 1.0W 60 mph Wind	-42.29	-8.51	0.00	-1160.6	0.00	-1160.6	5035.03	2517.5	10606.9	5311.37	0.00	0.227

Additional Steel Summary

			Intermediate Connectors			Lower Termination				Upper Termination				Max Member			
Elev From (ft)	Elev To (ft)	Member	VQ/I (lb/in)	Vu (kips)	phi Vn (kips)	MQ/I (kips)	phi Vn (kips)	Num Reqd	Num Actual	MQ/I (kips)	phi Vn (kips)	Num Reqd	Num Actual	Pu (kips)	phi Pn (kips)	phi Tn (kips)	Ratio
0.3	32.8	(3) PLT-6"X1-1/4"(1.25" Hole	-240.1	-5.04	37.1	346.1	37.1	10	0	323.1	37.1	9	11	346.15	404.8	356.25	0.972
48.9	76.8	(3) PLT-5.5"x1 1/4"(1.25"hol	-288.6	-6.06	37.1	291.2	37.1	8	10	275.7	37.1	8	10	311.19	371.1	318.75	0.976
91.9	105.6	(3) PLT-4.5"x 1-1/4"(1.25"ho	-309.8	-7.44	37.1	220.1	37.1	6	7	213.9	37.1	6	7	234.56	296.2	243.75	0.962

Copyright © 2019 by Tower Engineering Solutions, LLC. All rights reserved.

Base Plate Summary

Structure:	CT46124-A-SB		**Code:**	EIA/TIA-222-G	2/6/2019
Site Name:	Enfield-Moody Rd.		**Exposure:**	C	
Height:	188.00 (ft)		**Crest Height:**	0.00	
Base Elev:	0.000 (ft)		**Site Class:**	D - Stiff Soil	
Gh:	1.1	**Topography:** 1	**Struct Class:**	II	Page: 50

Tower Engineering Solutions

Reactions	
Original Design	
Moment (kip-ft):	3850.00
Axial (kip):	34.00
Shear (kip):	30.00
Analysis	
Moment (kip-ft):	4592.04
Axial (kip):	89.69
Shear (kip):	33.43
Moment Design %:	119.27

Base Plate	
Yield (ksi):	50.00
Width (in):	57.00
Style:	Clipped
Polygon Sides:	0.00
Clip Length (in):	8.00
Effective Len (in):	8.17
Moment (kip-in):	867.93
Allow Stress (ksi):	67.50
Applied Stress (ksi):	0.00
Stress Ratio:	0.89

Anchor Bolts	
Bolt Circle:	59.00
Number Bolts:	16.00
Bolt Type:	2.25" 18J
Bolt Diameter (in):	2.25
Yield (ksi):	75.00
Ultimate (ksi):	100.00
Arrangement:	Clustered
Cluster Dist (in):	6.00
Start Angle (deg):	45.00
Compression	
Force (kip):	186.92
Allowable (kip):	260.00
Ratio:	0.73
Tension	
Force (kip):	175.70
Allowable (kip):	260.00
Ratio:	0.69

Copyright © 2019 by Tower Engineering Solutions, LLC. All rights reserved.

FULLERTON
ENGINEERING · DESIGN

Fullerton Engineering Consultants, Inc.
1100 E. Woodfield Road, Suite 500
Schaumburg, IL 60173
Tel: 847.908.8400
www.fullertonengineering.com

January 21, 2019

RE:	**AT&T LTE 3C/4C/5C/RETROFIT**
Prepared For:	Smartlink / AT&T
Site Number:	CTL05293
FA Location:	10090926
Pace Number:	MRCTB035230/MRCTB035245/MRCTB035207/MRCTB035311/MRCTB035313
Site Name:	ENFIELD EAST
Site Address:	188 Moody Road Enfield, CT 06082

To Whom It May Concern,

This structural assessment is in regards to the adequacy of the proposed antenna mounting frame for the AT&T LTE 3C/4C/5C/RETROFIT project. The purpose was to determine conformance of the proposed antenna mounting structure under the 2018 Connecticut State Building Code (2015 International Building Code w/amendments) and the industry standard ANSI/TIA-222-G (Structural Standards for Steel Antenna Towers and Antenna Supporting Structures). The antenna and the equipment supports were rated to the code requirement of 105 mph (3-second gust) basic wind speed, and an ice thickness of 1.0 in. In addition, the mount has been analyzed for various live loading conditions consisting of a 250-pound man live load applied individually at the midpoint and cantilevered ends of horizontal members as well as a 500-pound man live load applied individually at mount pipe locations using a 3-second gust wind speed of 30 mph.

Based on collected information via existing and proposed loading presented in the RFDS provided by AT&T dated 01/11/2019 Rev. 04, technical data of the proposed equipment, structural calculations and engineering judgment, the proposed low-profile platform, Valmont/Site Pro1 P/N RMQP-12-H5 is **adequate** to support the proposed installation for the above-referenced program.

This PE certification completed by Fullerton Engineering Consultants is inclusive of the proposed antenna mounting structure that will support the existing and proposed loading provided by the client.

This certification assumes that all the proposed structural members of the proposed antenna mounting structure are in good condition and have not been altered from the manufacturer's original design. Prior to installation of new equipment, contractor shall inspect the condition of all relevant members and connectors. The contractor shall be responsible for the means and methods of construction.

Respectfully,

Henry M. Bellagamba, P.E.

FULLERTON
ENGINEERING · DESIGN

Fullerton Engineering Consultants, Inc.
1100 E. Woodfield Road, Suite 500
Schaumburg, IL 60173
Tel: 847.908.8400
www.fullertonengineering.com

Site Number: **CTL05293**
Site Name: ENFIELD EAST
Created By: TQ
Checked By: BK
Date: 1/21/2019
Code: ANSI/TIA-222-G

Sectors	3
Ka	0.9

Base Structure Type	**Type**	Monopole	
Structure Height Above Grade (ft)	**Ht**	192.00	
RAD Center (ft)	**z**	158.00	
Windspeed no ice (mph, 3-sec gust)	**V**	105.00	see wind maps
Windspeed with ice (mph, 3-sec gust)	**Vi**	50.00	see wind maps
Windspeed for maintenance (mph, 3-sec gust)	**Vm**	30.00	Section 16.6
Ice Thickness	**ti**	1.00	see ice maps
Exposure Category (B/C/D)	**Exposure**	C	Section 2.6.5.1
Topographic Category (1,2,3,4)	**Topo**	1	Section 2.6.6.2
Structure Class (I,II,III)	**Class**	II	Table 2-1
Crest Height (or assume 5ft)	**C**	5.00	Section 2.6.6.4
Gust Effect Factor	**Gh**	1.00	Section 2.6.7.1
Design Ice Thickness	**tiz**	2.34	Section 2.6.8
Velocity Pressure for Maintenance	**qzm**	3.05	
Velocity Pressure With Ice	**qzi**	8.47	Section 2.6.9.6
Velocity Pressure No Ice	**qz**	37.37	Section 2.6.9.6

Appurtenance Properties								Loads (force per connection)							
Manufacturer	**Model**	**R/F**	**L**	**W**	**D**	**Weight**	**# Conn**	**Wt**	**Ice Wt**	**F no ice**	**S no ice**	**F ice**	**S ice**	**Fm**	**Sm**
Kathrein	800 10121	Flat	54.5	10.3	5.9	46.3	2	23.2	72.8	87	55	30	22	7	5
CCIAntennas	HPA-65R-BUU-H8	Flat	92.4	14.8	7.4	68	2	34.0	137.9	218	126	66	45	18	11
	Kathrein-800-10966	Flat	96	20	6.9	114.6	2	57.3	138.4	292	126	84	45	25	11
Ericsson	RRUS-4415	Flat	16	14	6	44	2	22.0	30.0	31	14	12	7	3	1
	Ericsson-8843 B2/B66A	Flat	15	13.2	10.7	75	2	37.5	40.9	28	22	11	10	2	2
	Ericsson-4449 B5/B12	Flat	14.96	13.1	10.43	73	2	36.5	40.0	27	22	11	9	2	2
Powerwave	LGP-21401	Flat	14.4	9.2	2.6	14.1	2	7.1	16.8	19	6	8	4	2	0
	LGP21901	Flat	11	4.9	4.7	10	1	10.0	32.1	15	14	10	9	1	1
Raycap	DC6-48-60-18-8F	Round	24	9.7	9.7	32.8	1	32.8	96.6	38	38	15	15	3	3
	Pipe 3.0	Round	150	3.5	3.5	0	12.5	0.0	16.7	12	12	6	6	1	1
	HSS4x4x4	Flat	67.5	4	4	0	5.625	0.0	22.9	19	19	9	9	2	2
	HSS4x4x4	Flat	37	4	4	0	3.08333	0.0	22.9	17	17	8	8	1	1
	L2x2x3	Flat	60	2	2	0	5	0.0	14.8	11	11	7	7	1	1
	L2X2x4	Flat	150	2	2	0	12.5	0.0	14.8	11	11	8	8	1	1
	Pipe 2.0	Round	26	2.4	2.4	0	2.16667	0.0	13.5	6	6	4	4	1	1
	Pipe 2.0	Round	60	2.4	2.4	0	5	0.0	13.5	8	8	4	4	1	1
	Pipe 2.0	Round	120	2.4	2.4	0	10	0.0	13.5	8	8	5	5	1	1

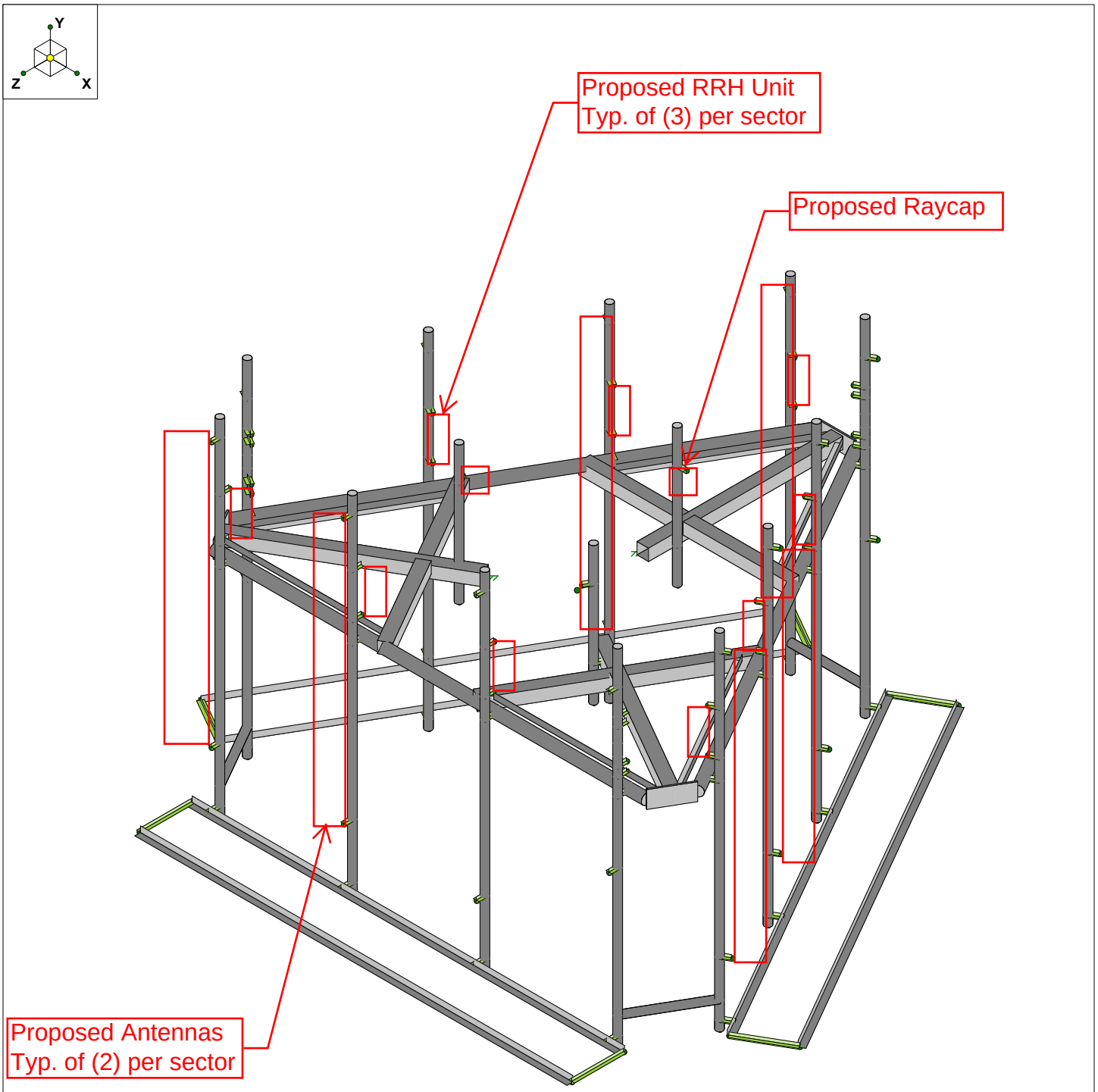

Envelope Only Solution

Fullerton Engineering Con...		SK - 1
TQ	Mount Analysis	Jan 21, 2019 at 2:34 PM
CTL05293	3D Render	CTL05293 - Mount Analysis.r3d

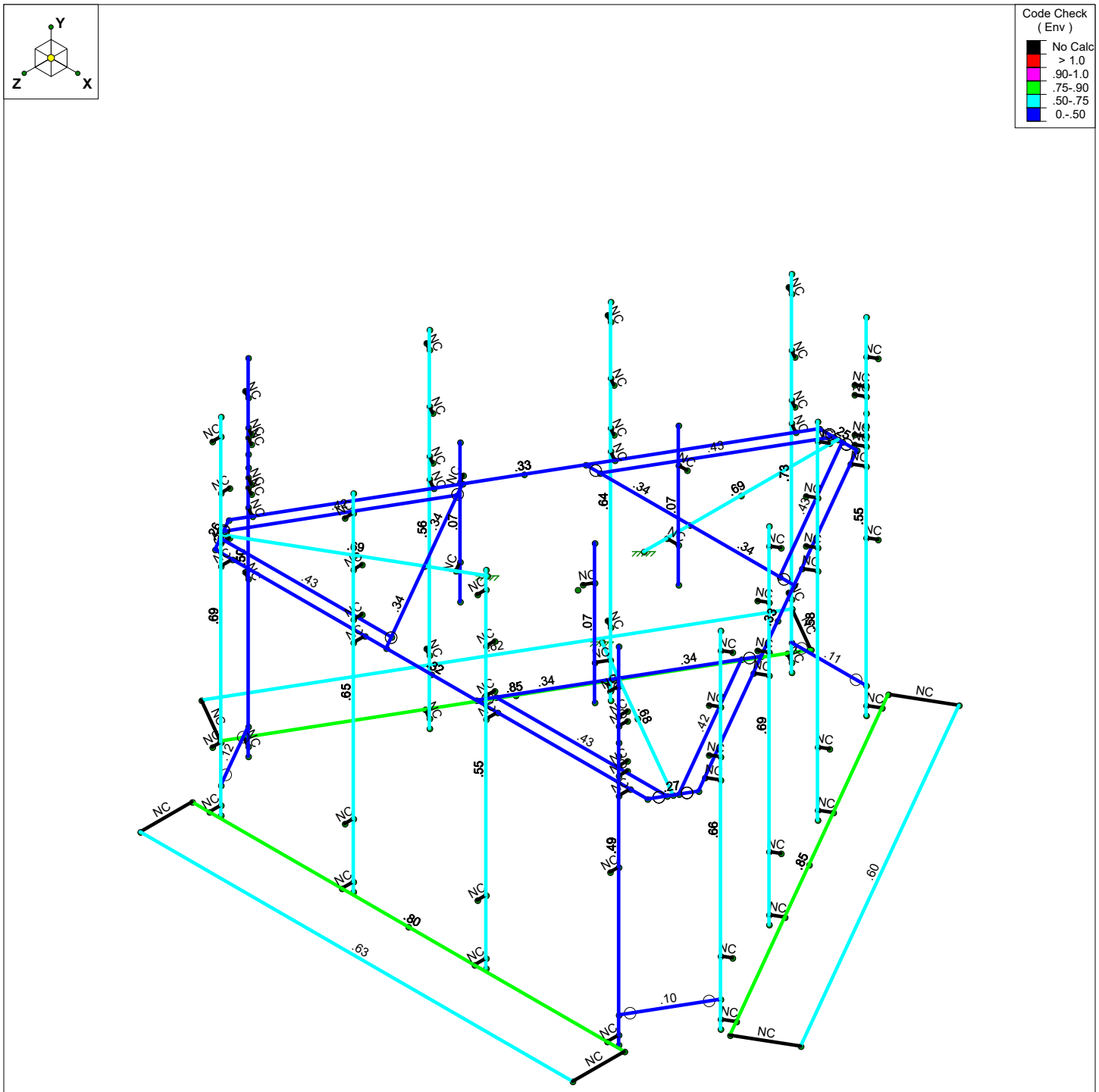

Member Code Checks Displayed (Enveloped)
Envelope Only Solution

Fullerton Engineering Con...		SK - 2
TQ	Mount Analysis	Jan 21, 2019 at 2:38 PM
CTL05293	Unity Graphic	CTL05293 - Mount Analysis.r3d

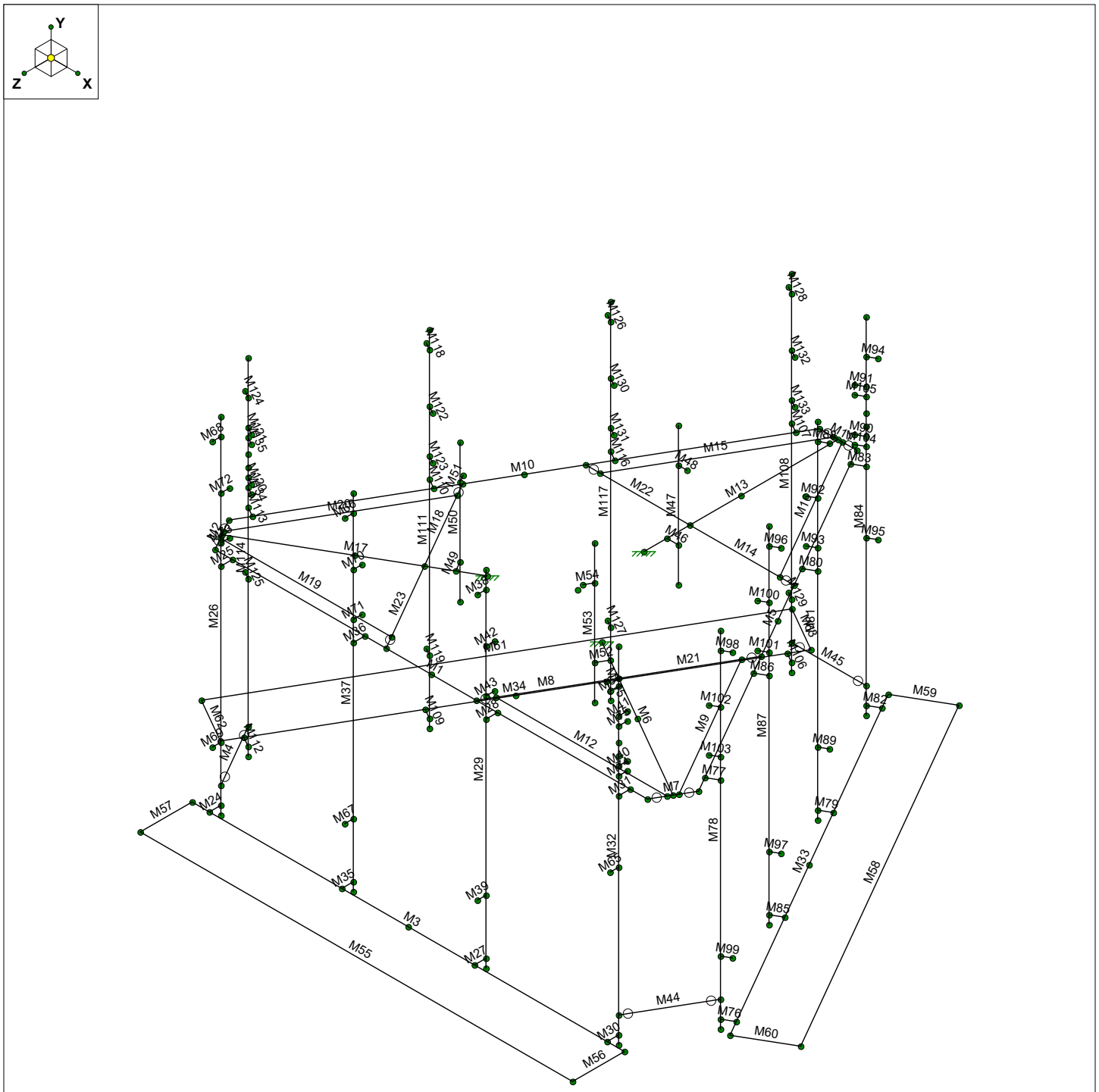

Envelope Only Solution

Fullerton Engineering Con...		SK - 3
TQ	Mount Analysis	Jan 21, 2019 at 2:38 PM
CTL05293	Member Label	CTL05293 - Mount Analysis.r3d

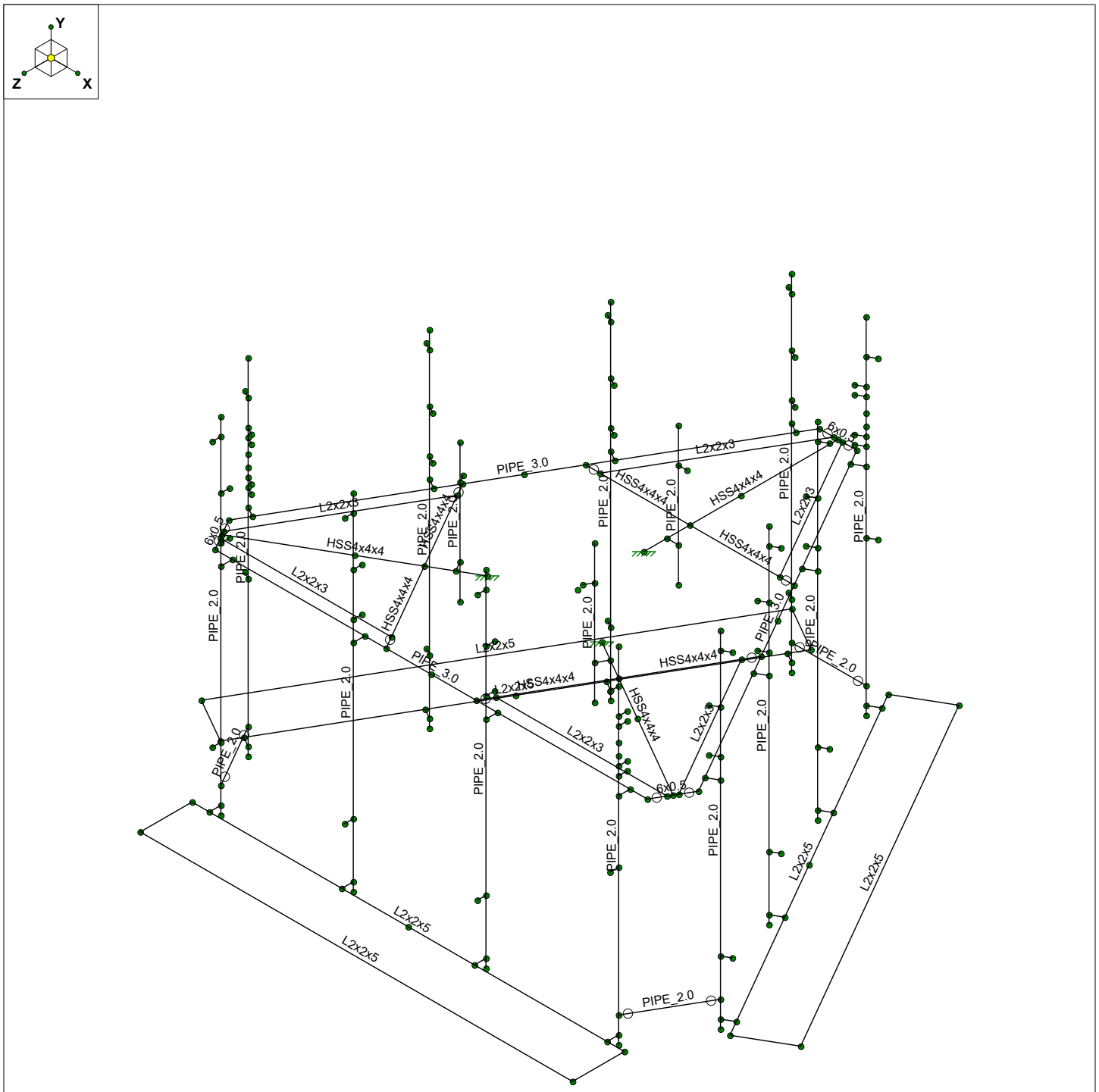

Envelope Only Solution

Fullerton Engineering Con...		SK - 4
TQ	Mount Analysis	Jan 21, 2019 at 2:38 PM
CTL05293	Shape	CTL05293 - Mount Analysis.r3d

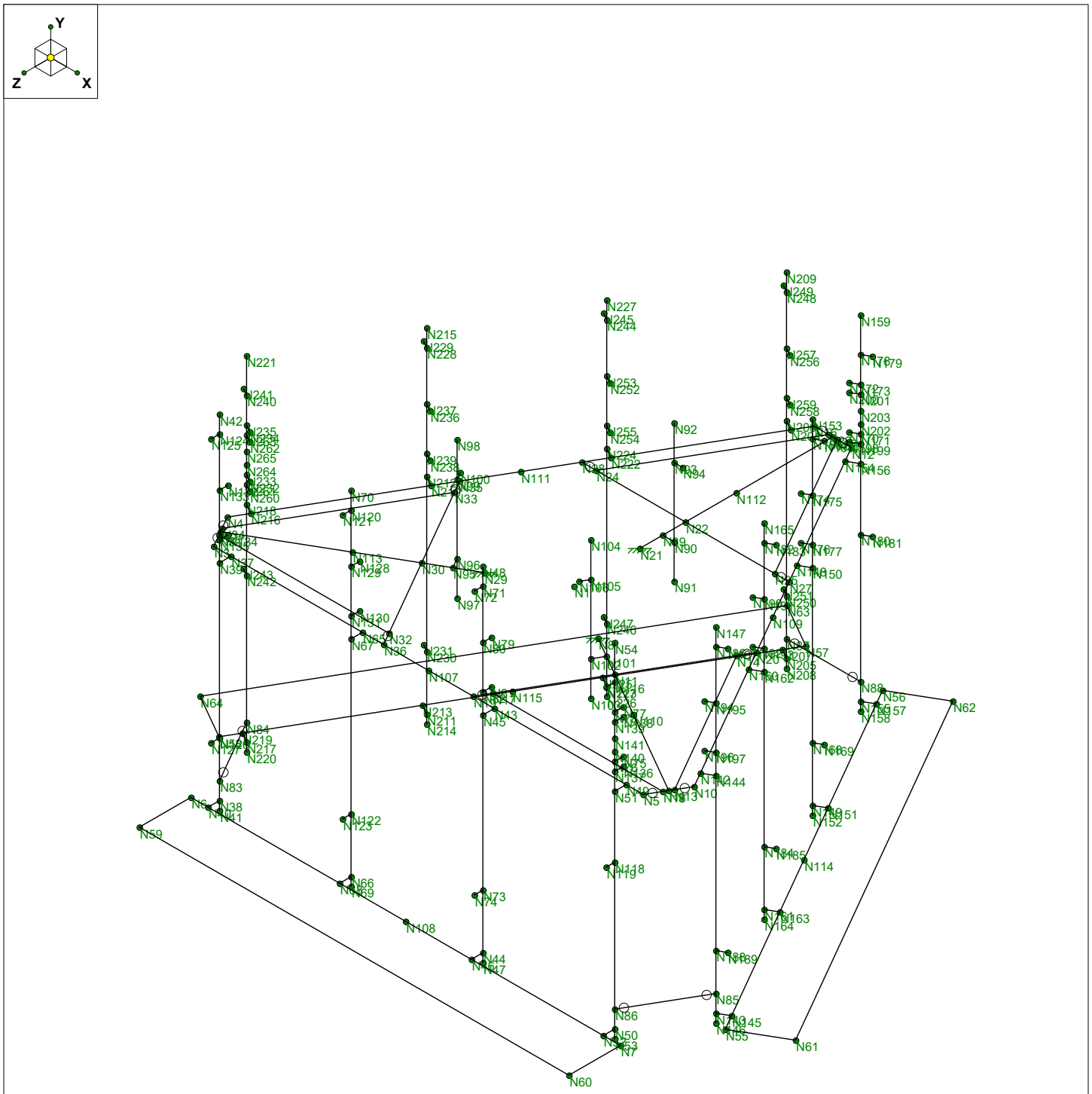

Envelope Only Solution

Fullerton Engineering Con...		SK - 5
TQ	Mount Analysis	Jan 21, 2019 at 2:39 PM
CTL05293	Nodes	CTL05293 - Mount Analysis.r3d

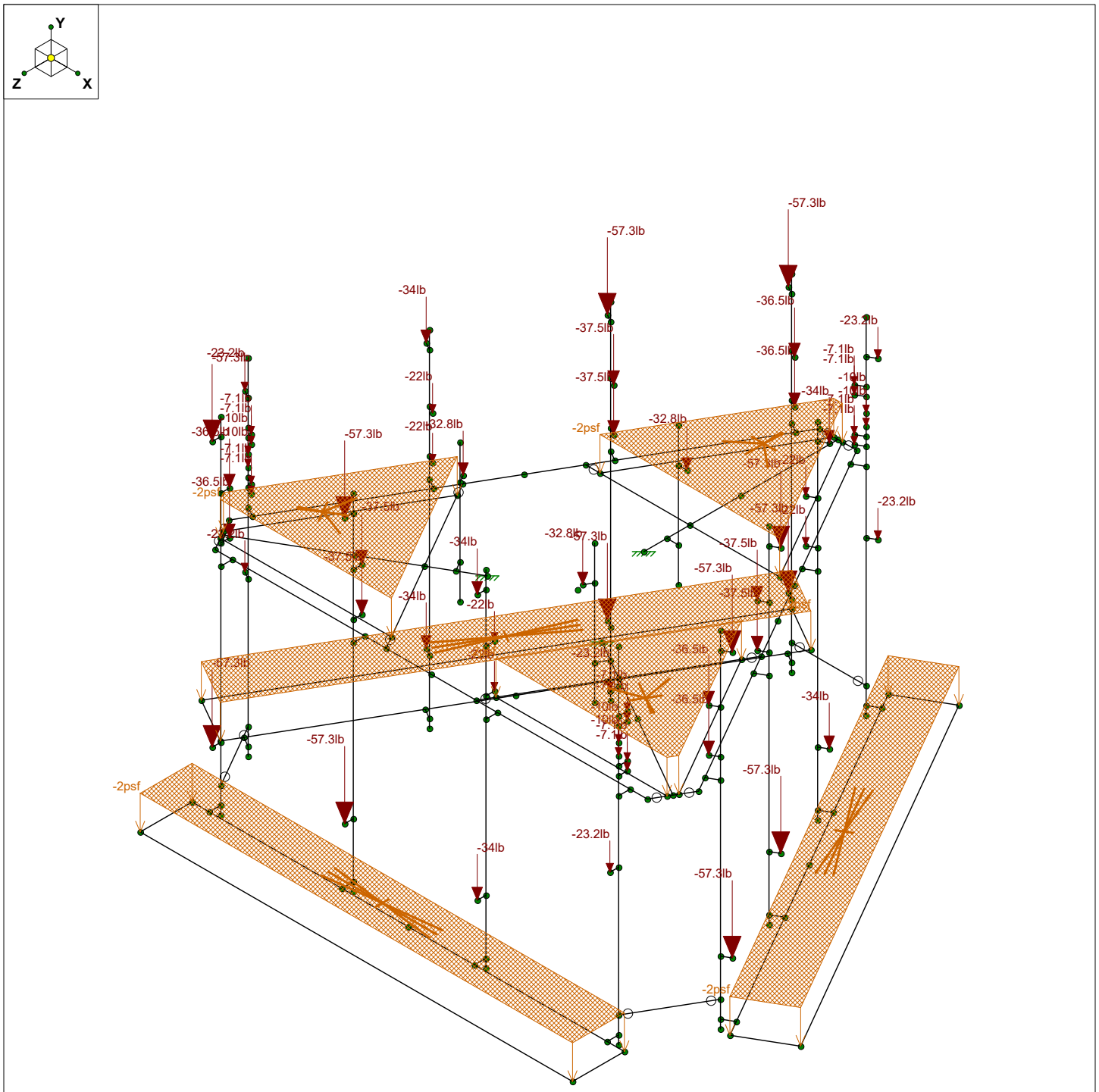

Loads: BLC 1, DL
Envelope Only Solution

Fullerton Engineering Con…		SK - 6
TQ	Mount Analysis	Jan 21, 2019 at 2:40 PM
CTL05293	Dead Load	CTL05293 - Mount Analysis.r3d

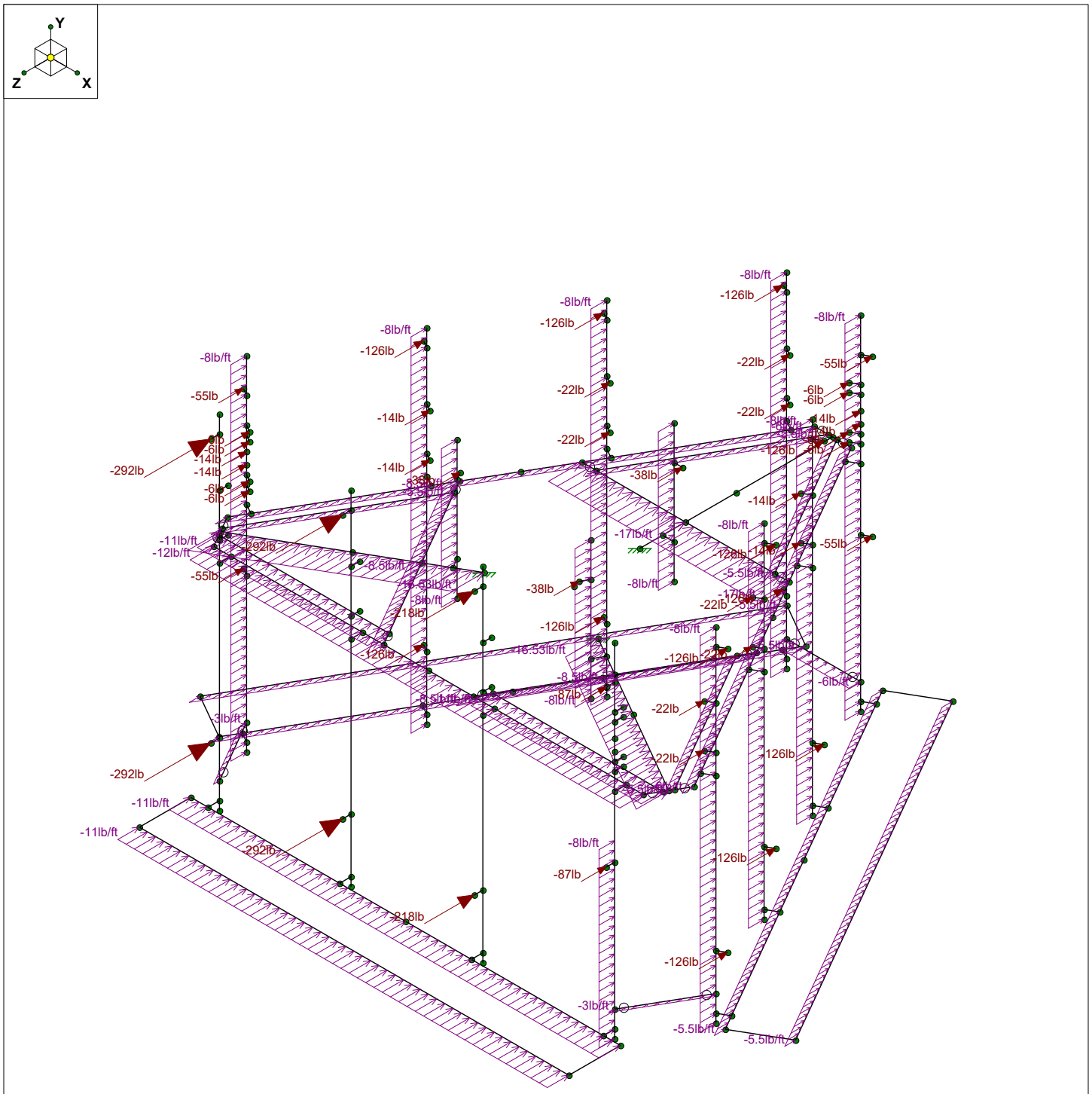

Loads: BLC 3, WL(0)
Envelope Only Solution

Fullerton Engineering Con...		SK - 7
TQ	Mount Analysis	Jan 21, 2019 at 2:40 PM
CTL05293	Wind Load (Z-Direction)	CTL05293 - Mount Analysis.r3d

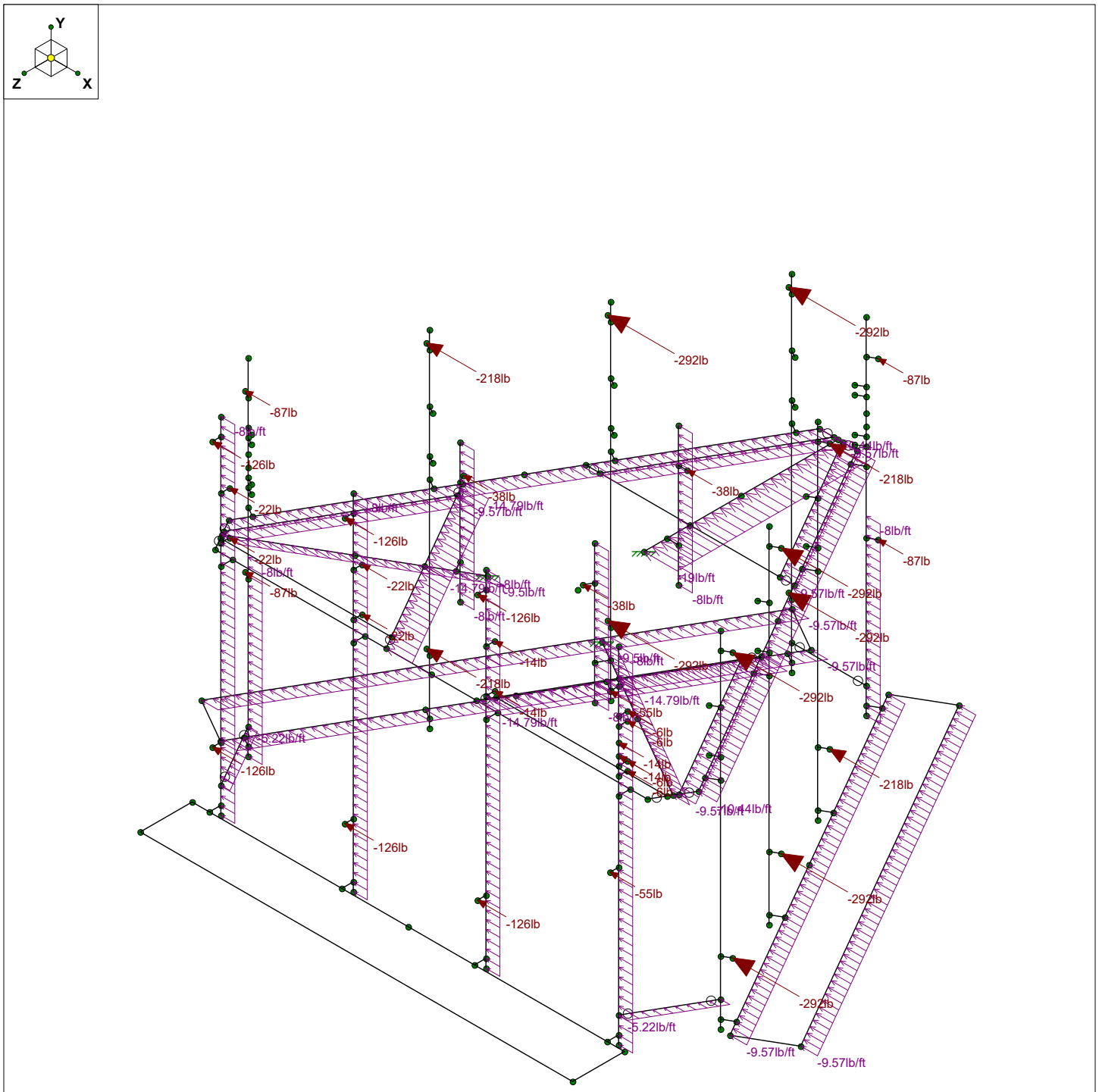

Loads: BLC 4, WL(90)
Envelope Only Solution

Fullerton Engineering Con...		SK - 8
TQ	Mount Analysis	Jan 21, 2019 at 2:40 PM
CTL05293	Wind Load (X-Direction)	CTL05293 - Mount Analysis.r3d

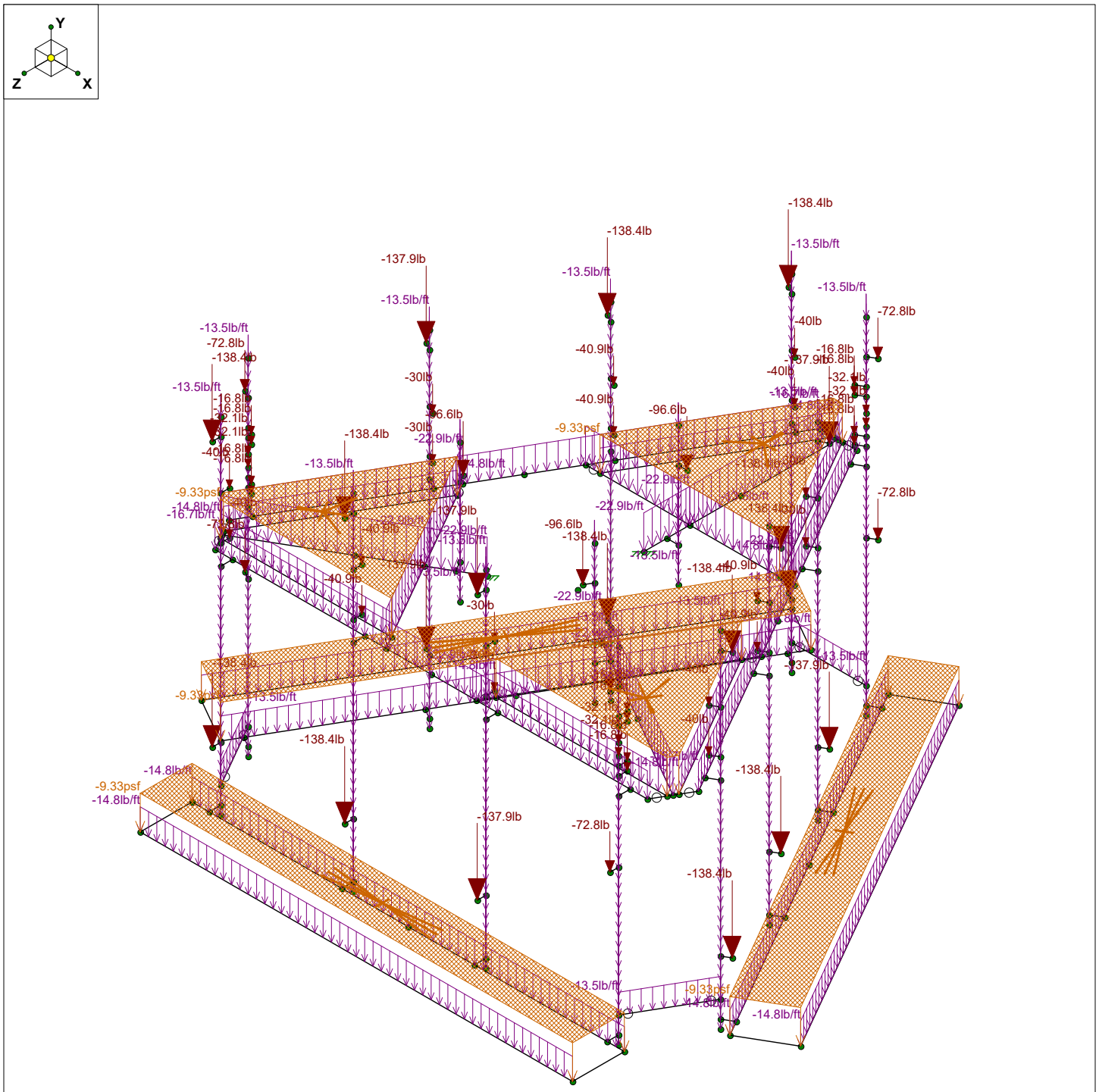

Loads: BLC 2, DLi
Envelope Only Solution

Fullerton Engineering Con…		SK - 9
TQ	Mount Analysis	Jan 21, 2019 at 2:41 PM
CTL05293	Ice Load	CTL05293 - Mount Analysis.r3d

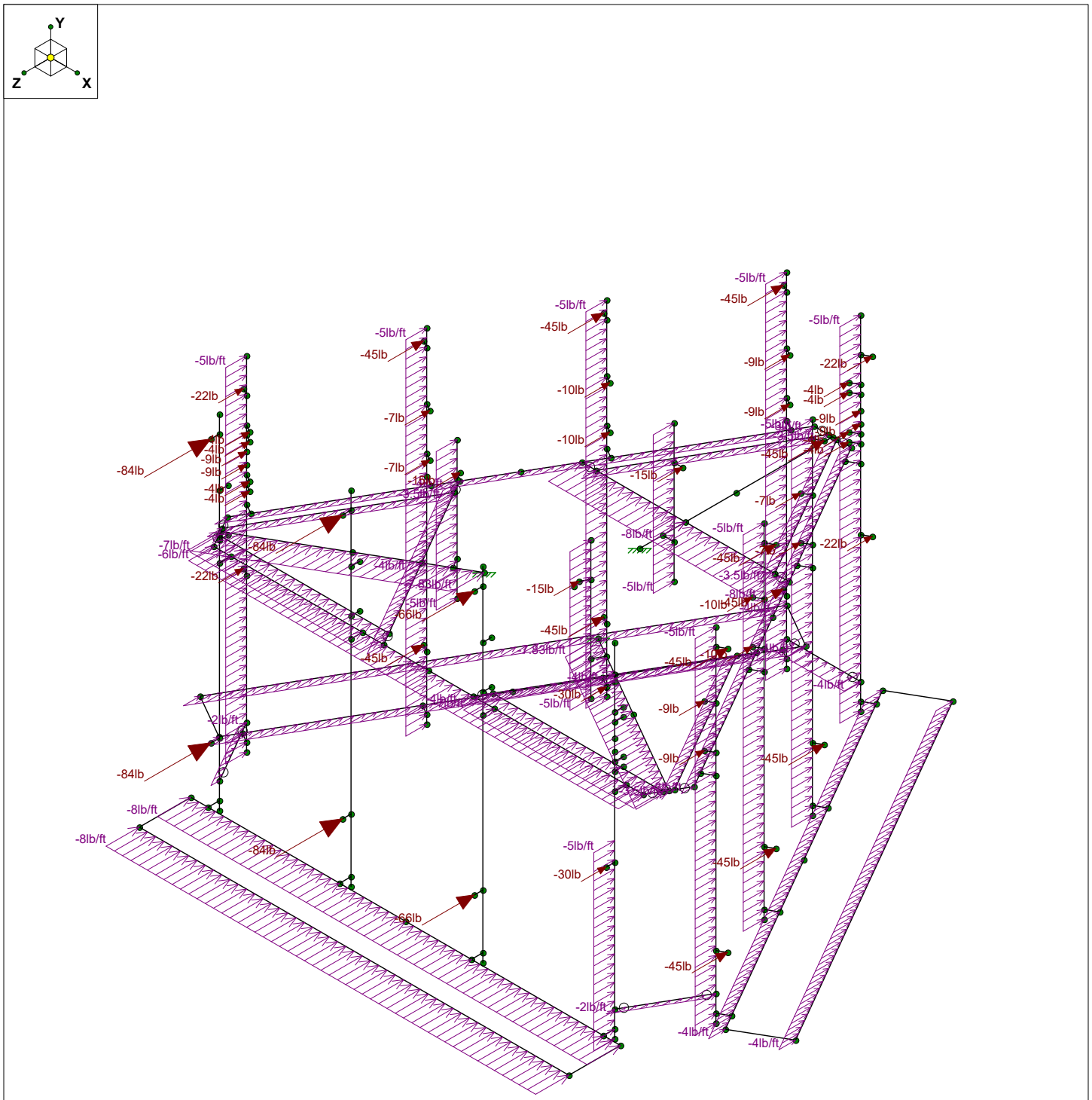

Loads: BLC 5, WL.i(0)
Envelope Only Solution

Fullerton Engineering Con...		SK - 10
TQ	Mount Analysis	Jan 21, 2019 at 2:41 PM
CTL05293	Wind Load with Ice (Z-Direction)	CTL05293 - Mount Analysis.r3d

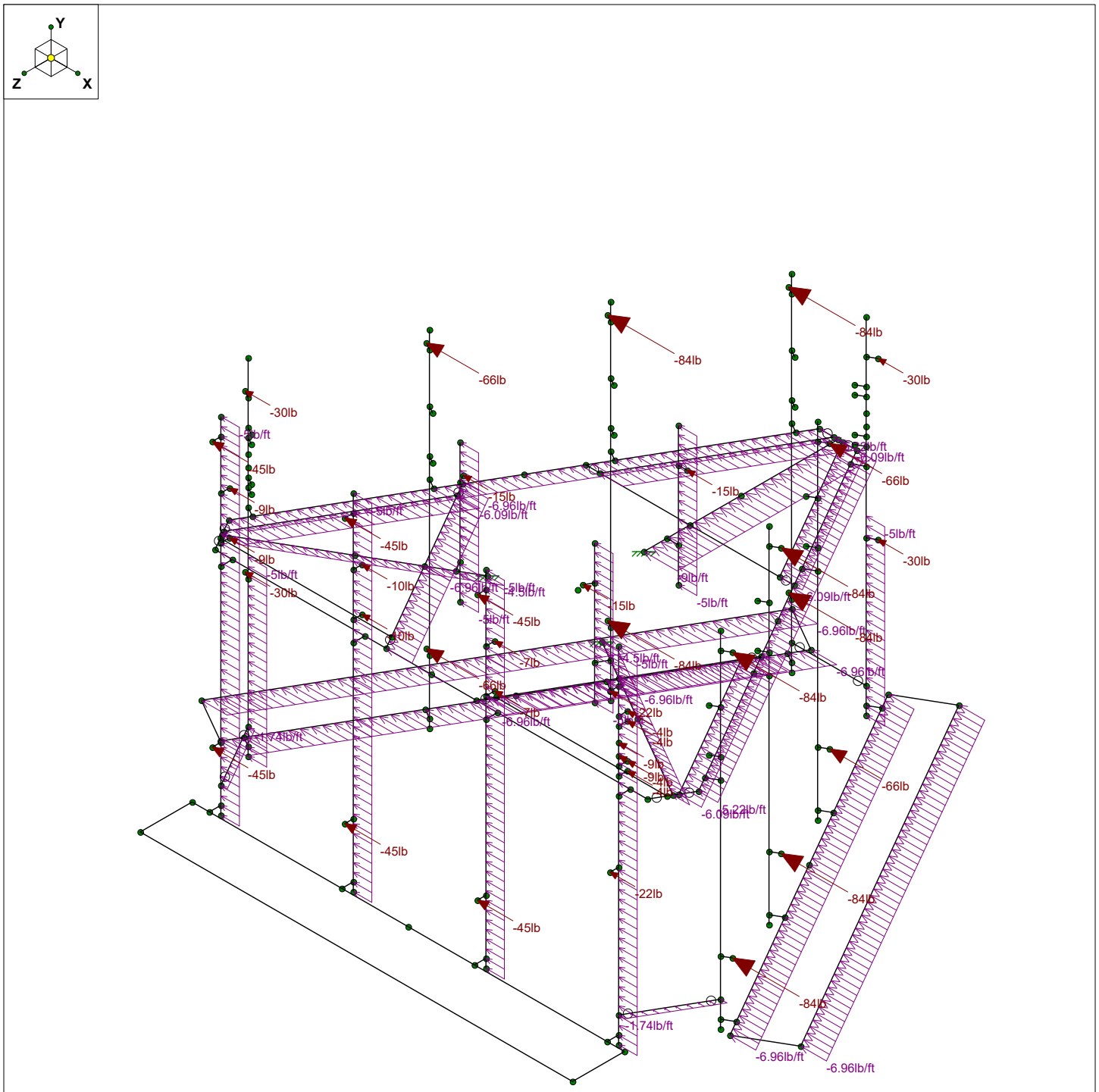

Loads: BLC 6, WL.i(90)
Envelope Only Solution

Fullerton Engineering Con...		SK - 11
TQ	Mount Analysis	Jan 21, 2019 at 2:41 PM
CTL05293	Wind Load with Ice (X-Direction)	CTL05293 - Mount Analysis.r3d

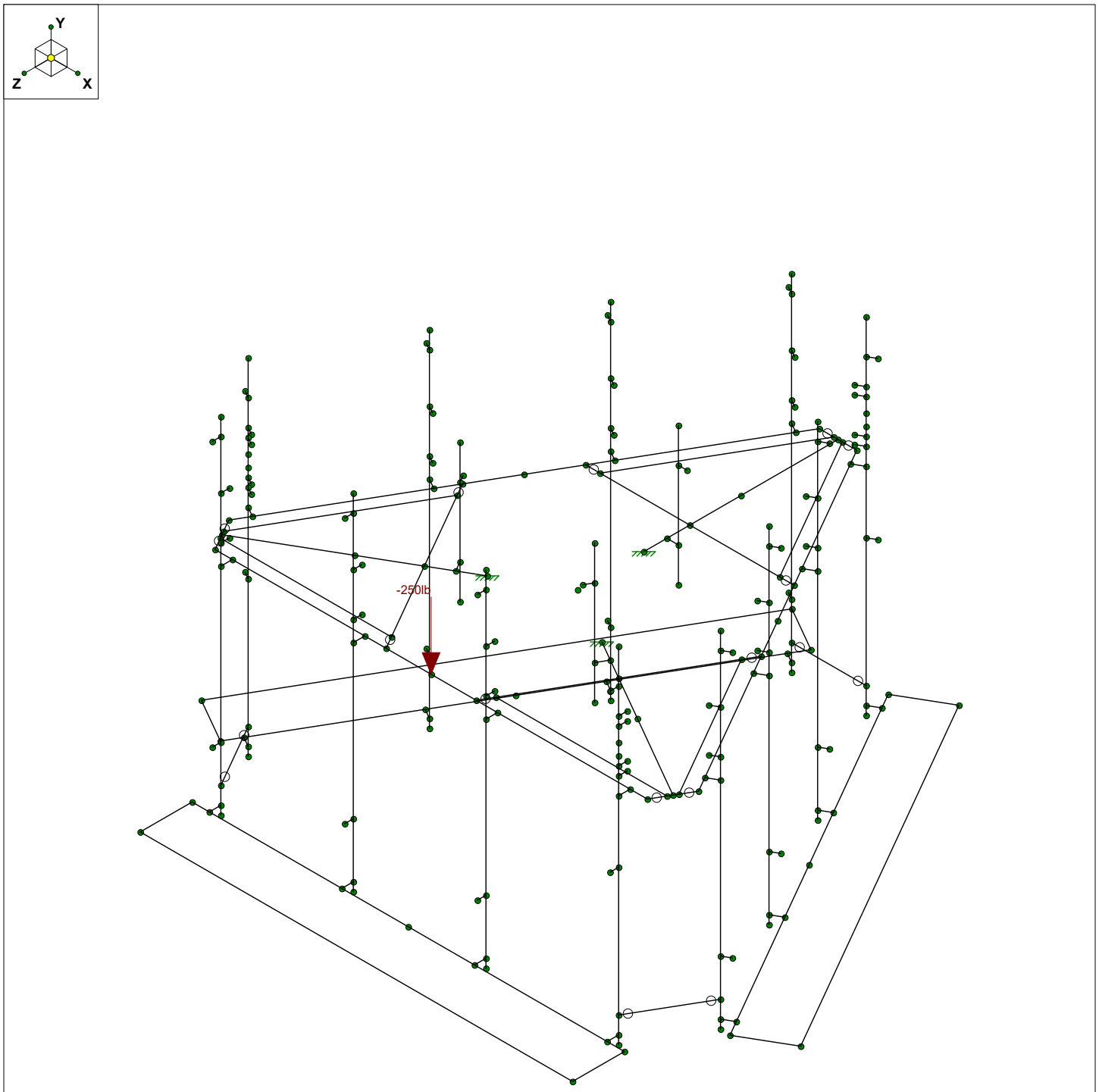

250lb Live Loads are applied on each face horizontal and standoff members.
Only one is shown for clarification purposes, but all are considered in the calculations.

Fullerton Engineering Con...		SK - 12
TQ	Mount Analysis	Jan 21, 2019 at 2:41 PM
CTL05293	250lb Live Load	CTL05293 - Mount Analysis.r3d

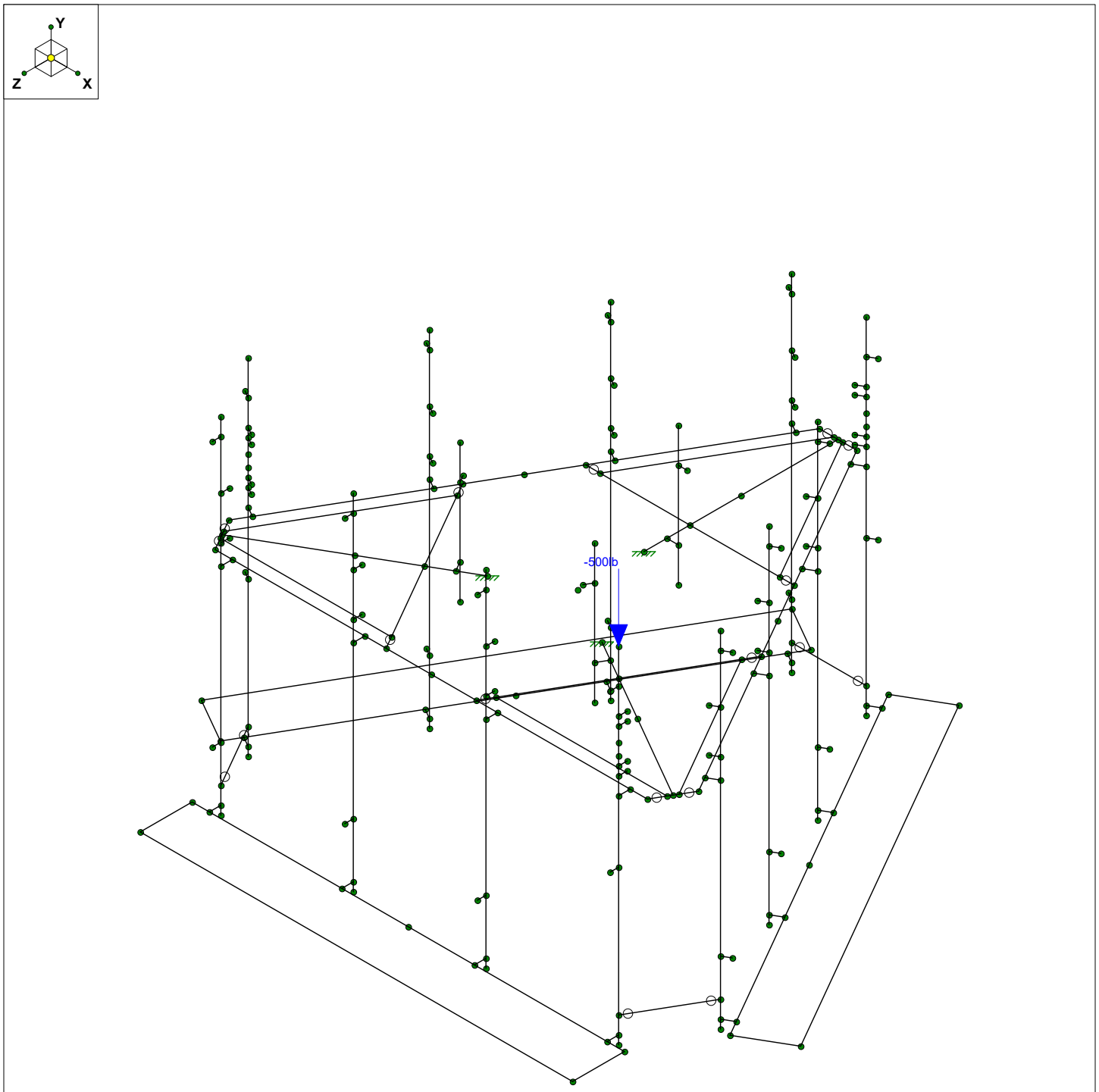

500lb Live Loads are applied at mounting pipe positions.
Only one is shown for clarification purposes, but all are considered in the calculations.

Fullerton Engineering Con...		SK - 13
TQ	Mount Analysis	Jan 21, 2019 at 2:42 PM
CTL05293	500lb Live Load	CTL05293 - Mount Analysis.r3d

(Global) Model Settings

Display Sections for Member Calcs	5
Max Internal Sections for Member Calcs	97
Include Shear Deformation?	Yes
Increase Nailing Capacity for Wind?	Yes
Include Warping?	Yes
Trans Load Btwn Intersecting Wood Wall?	Yes
Area Load Mesh (in^2)	144
Merge Tolerance (in)	.12
P-Delta Analysis Tolerance	0.50%
Include P-Delta for Walls?	Yes
Automatically Iterate Stiffness for Walls?	Yes
Max Iterations for Wall Stiffness	3
Gravity Acceleration (in/sec^2)	386.4
Wall Mesh Size (in)	12
Eigensolution Convergence Tol. (1.E-)	4
Vertical Axis	Y
Global Member Orientation Plane	XZ
Static Solver	Sparse Accelerated
Dynamic Solver	Accelerated Solver

Hot Rolled Steel Code	AISC 14th(360-10): LRFD
Adjust Stiffness?	Yes(Iterative)
RISAConnection Code	AISC 14th(360-10): LRFD
Cold Formed Steel Code	None
Wood Code	None
Wood Temperature	< 100F
Concrete Code	None
Masonry Code	None
Aluminum Code	None - Building

Number of Shear Regions	4
Region Spacing Increment (in)	4
Biaxial Column Method	Exact Integration
Parme Beta Factor (PCA)	.65
Concrete Stress Block	Rectangular
Use Cracked Sections?	Yes
Use Cracked Sections Slab?	Yes
Bad Framing Warnings?	No
Unused Force Warnings?	Yes
Min 1 Bar Diam. Spacing?	No
Concrete Rebar Set	REBAR_SET_ASTMA615
Min % Steel for Column	1
Max % Steel for Column	8

(Global) Model Settings, Continued

Seismic Code	ASCE 7-10
Seismic Base Elevation (in)	Not Entered
Add Base Weight?	Yes
Ct X	.02
Ct Z	.02
T X (sec)	Not Entered
T Z (sec)	Not Entered
R X	3
R Z	3
Ct Exp. X	.75
Ct Exp. Z	.75
SD1	1
SDS	1
S1	1
TL (sec)	5
Risk Cat	I or II
Drift Cat	Other
Om Z	1
Om X	1
Cd Z	4
Cd X	4
Rho Z	1
Rho X	1

Hot Rolled Steel Design Parameters

	Label	Shape	Length[in]	Lbyy[in]	Lbzz[in]	Lcomp top[in]	Lcomp bot[in]	L-torq...	Kyy	Kzz	Cb	Function
1	M1	PIPE_3.0	150.251			Lbyy						Lateral
2	M2	6x0.5	13									Lateral
3	M3	L2x2x5	150.251			Lbyy						Lateral
4	M4	PIPE_2.0	25.928									Lateral
5	M5	PIPE_3.0	150.251			Lbyy						Lateral
6	M6	HSS4x4x4	67.5			Lbyy						Lateral
7	M7	6x0.5	13									Lateral
8	M8	HSS4x4x4	36.234			Lbyy						Lateral
9	M9	L2x2x3	59.467			Lbyy						Lateral
10	M10	PIPE_3.0	150.251			Lbyy						Lateral
11	M11	6x0.5	13									Lateral
12	M12	L2x2x3	59.467			Lbyy						Lateral
13	M13	HSS4x4x4	67.5			Lbyy						Lateral
14	M14	HSS4x4x4	36.234			Lbyy						Lateral
15	M15	L2x2x3	59.467			Lbyy						Lateral
16	M16	L2x2x3	59.467			Lbyy						Lateral
17	M17	HSS4x4x4	67.5			Lbyy						Lateral
18	M18	HSS4x4x4	36.234			Lbyy						Lateral
19	M19	L2x2x3	59.467			Lbyy						Lateral
20	M20	L2x2x3	59.467			Lbyy						Lateral
21	M21	HSS4x4x4	36.234			Lbyy						Lateral
22	M22	HSS4x4x4	36.234			Lbyy						Lateral
23	M23	HSS4x4x4	36.234			Lbyy						Lateral
24	M26	PIPE_2.0	120									Lateral
25	M29	PIPE_2.0	120									Lateral
26	M32	PIPE_2.0	120									Lateral
27	M33	L2x2x5	150.251			Lbyy						Lateral
28	M34	L2x2x5	150.251			Lbyy						Lateral
29	M37	PIPE_2.0	120									Lateral
30	M44	PIPE_2.0	25.928									Lateral

Hot Rolled Steel Design Parameters (Continued)

	Label	Shape	Length[in]	Lbyy[in]	Lbzz[in]	Lcomp top[in]	Lcomp bot[in]	L-torq...	Kyy	Kzz	Cb	Function
31	M45	PIPE_2.0	25.928									Lateral
32	M47	PIPE_2.0	48			Lbyy						Lateral
33	M50	PIPE_2.0	48			Lbyy						Lateral
34	M53	PIPE_2.0	48			Lbyy						Lateral
35	M55	L2x2x5	150.251			Lbyy						Lateral
36	M58	L2x2x5	150.251			Lbyy						Lateral
37	M61	L2x2x5	150.251			Lbyy						Lateral
38	M78	PIPE_2.0	120									Lateral
39	M81	PIPE_2.0	120									Lateral
40	M84	PIPE_2.0	120									Lateral
41	M87	PIPE_2.0	120									Lateral
42	M108	PIPE_2.0	120									Lateral
43	M111	PIPE_2.0	120									Lateral
44	M114	PIPE_2.0	120									Lateral
45	M117	PIPE_2.0	120									Lateral

Material Takeoff

	Material	Size	Pieces	Length[in]	Weight[K]
1	General				
2	RIGID		90	387	0
3	Total General		90	387	0
4					
5	Hot Rolled Steel				
6	A36 Gr.36	L2x2x3	6	356.8	0
7	A36 Gr.36	L2x2x5	6	901.5	.3
8	A36 Gr.36	6x0.5	3	39	0
9	A500 Gr.46	HSS4x4x4	9	419.9	.4
10	A53 Gr. B	PIPE_2.0	18	1661.8	.5
11	A53 Gr. B	PIPE_3.0	3	450.8	.3
12	Total HR Steel		45	3829.7	1.5

Basic Load Cases

	BLC Description	Category	X Gravity	Y Gravity	Z Gravity	Joint	Point	Distributed	Area(Me...	Surface(P...
1	DL	None		-1		63			6	
2	DLi	None				63		48	6	
3	WL(0)	None				51		38		
4	WL(90)	None				39		28		
5	WL.i(0)	None				51		38		
6	WL.i(90)	None				39		28		
7	T	None								
8	WM(0)	None				51		38		
9	WM(90)	None				39		28		
10	LV1	None				1				
11	LV2	None				1				
12	LM1	None					1			
13	LM2	None					1			
14	LM3	None					1			
15	LM4	None					1			
16	LM5	None					1			
17	LM6	None					1			
18	LM7	None					1			
19	LM8	None					1			
20	LM9	None					1			
21	LM10	None					1			

Basic Load Cases (Continued)

	BLC Description	Category	X Gravity	Y Gravity	Z Gravity	Joint	Point	Distributed	Area(Me...	Surface(P...
22	LM11	None					1			
23	LM12	None					1			
24	LM13	None								
25	LM14	None								
26	LM15	None								
27	LV3	None				1				
28	LV4	None				1				
29	LV5	None				1				
30	LV6	None				1				
31	LV7	None				1				
32	LV8	None				1				
33	LV9	None				1				
34	BLC 1 Transient Area...	None						60		
35	BLC 2 Transient Area...	None						60		

Load Combinations

	Description	S...	P...	S...	B...	Fa...	B...	Fa...	B...	Fa...	B...	Fa...	B...	Fa...	B...	Fa...	B...	Fa...	B...	Fa...	B...	Fa...	B...	Fa...
1	1.4*DL	Y...	Y		1	1.4																		
2	1.2*DL + 1.0* WL(0)	Y...	Y		1	1.2	3	1																
3	1.2*DL + 1.0* WL(30)	Y...	Y		1	1.2	3	.869	4	.5														
4	1.2*DL + 1.0* WL(60)	Y...	Y		1	1.2	3	.5	4	.869														
5	1.2*DL + 1.0*WL(90)	Y...	Y		1	1.2	4	1																
6	1.2*DL + 1.0*WL(120)	Y...	Y		1	1.2	3	-.5	4	.869														
7	1.2*DL +1.0*WL(150)	Y...	Y		1	1.2	3	-.8...	4	.5														
8	1.2*DL + 1.0 * WL(180)	Y...	Y		1	1.2	3	-1																
9	1.2*DL + 1.0* WL(210)	Y...	Y		1	1.2	3	-.8...	4	-.5														
10	1.2*DL + 1.0* WL(240)	Y...	Y		1	1.2	3	-.5	4	-.8...														
11	1.2*DL + 1.0*WL(270)	Y...	Y		1	1.2	4	-1																
12	1.2*DL + 1.0*WL(300)	Y...	Y		1	1.2	3	.5	4	-.8...														
13	1.2*DL +1.0*WL(330)	Y...	Y		1	1.2	3	.869	4	-.5														
14	1.2*DL+1.0*DLi+1.0*WL.i(0)+1.0*T	Y...	Y		1	1.2	2	1	5	1	7	1												
15	1.2*DL+1.0*DLi+1.0*WL.i(30)+1.0*T	Y...	Y		1	1.2	2	1	5	.866	6	.5	7	1										
16	1.2*DL+1.0*DLi+1.0*WL.i(60)+1.0*T	Y...	Y		1	1.2	2	1	5	.5	6	.866	7	1										
17	1.2*DL+1.0*DLi+1.0*WL.i(90)+1.0*T	Y...	Y		1	1.2	2	1	6	1	7	1												
18	1.2*DL+1.0*DLi+1.0*WL.i(120)+1.0*T	Y...	Y		1	1.2	2	1	5	-.5	6	.866	7	1										
19	1.2*DL+1.0*DLi+1.0*WL.i(150)+1.0*T	Y...	Y		1	1.2	2	1	5	-.8...	6	.5	7	1										
20	1.2*DL+1.0*DLi+1.0*WL.i(180)+1.0*T	Y...	Y		1	1.2	2	1	5	-1	7	1												
21	1.2*DL+1.0*DLi+1.0*WL.i(210)+1.0*T	Y...	Y		1	1.2	2	1	5	-.8...	6	-.5	7	1										
22	1.2*DL+1.0*DLi+1.0*WL.i(240)+1.0*T	Y...	Y		1	1.2	2	1	5	-.5	6	-.8...	7	1										
23	1.2*DL+1.0*DLi+1.0*WL.i(270)+1.0*T	Y...	Y		1	1.2	2	1	6	-1	7	1												
24	1.2*DL+1.0*DLi+1.0*WL.i(300)+1.0*T	Y...	Y		1	1.2	2	1	5	.5	6	-.8...	7	1										
25	1.2*DL+1.0*DLi+1.0*WL.i(330)+1.0*T	Y...	Y		1	1.2	2	1	5	.866	6	-.5	7	1										
26	1.2*DL+1.5*LV1	Y...	Y		1	1.2	10	1.5																
27	1.2*DL+1.5*LV2	Y...	Y		1	1.2	11	1.5																
28	1.2*DL+1.5*LM1+1.0*WM(0)	Y...	Y		1	1.2	12	1.5	8	1														
29	1.2*DL+1.5*LM1+1.0*WM(30)	Y...	Y		1	1.2	12	1.5	8	.866	9	.5												
30	1.2*DL+1.5*LM1+1.0*WM(60)	Y...	Y		1	1.2	12	1.5	8	.5	9	.866												
31	1.2*DL+1.5*LM1+1.0*WM(90)	Y...	Y		1	1.2	12	1.5	9	1														
32	1.2*DL+1.5*LM1+1.0*WM(120)	Y...	Y		1	1.2	12	1.5	8	-.5	9	.866												
33	1.2*DL+1.5*LM1+1.0*WM(150)	Y...	Y		1	1.2	12	1.5	8	-.8...	9	.5												
34	1.2*DL+1.5*LM1+1.0*WM(180)	Y...	Y		1	1.2	12	1.5	8	-1														
35	1.2*DL+1.5*LM1+1.0*WM(210)	Y...	Y		1	1.2	12	1.5	8	-.8...	9	-.5												
36	1.2*DL+1.5*LM1+1.0*WM(240)	Y...	Y		1	1.2	12	1.5	8	-.5	9	-.8...												
37	1.2*DL+1.5*LM1+1.0*WM(270)	Y...	Y		1	1.2	12	1.5	9	-1														
38	1.2*DL+1.5*LM1+1.0*WM(300)	Y...	Y		1	1.2	12	1.5	8	.5	9	-.8...												

Load Combinations (Continued)

	Description	S...	P...	S...	B...	Fa...	B...	Fa...	B...	Fa...	B...	Fa...	B...	Fa...	B...	Fa...	B...	Fa...	B...	Fa...	B...	Fa...	B...	Fa...
39	1.2*DL+1.5*LM1+1.0*WM(330)	Y...	Y		1	1.2	12	1.5	8	.866	9	-.5												
40	1.2*DL+1.5*LM2+1.0*WM(0)	Y...	Y		1	1.2	13	1.5	8	1														
41	1.2*DL+1.5*LM2+1.0*WM(30)	Y...	Y		1	1.2	13	1.5	8	.866	9	.5												
42	1.2*DL+1.5*LM2+1.0*WM(60)	Y...	Y		1	1.2	13	1.5	8	.5	9	.866												
43	1.2*DL+1.5*LM2+1.0*WM(90)	Y...	Y		1	1.2	13	1.5	9	1														
44	1.2*DL+1.5*LM2+1.0*WM(120)	Y...	Y		1	1.2	13	1.5	8	-.5	9	.866												
45	1.2*DL+1.5*LM2+1.0*WM(150)	Y...	Y		1	1.2	13	1.5	8	-.8...	9	.5												
46	1.2*DL+1.5*LM2+1.0*WM(180)	Y...	Y		1	1.2	13	1.5	8	-1														
47	1.2*DL+1.5*LM2+1.0*WM(210)	Y...	Y		1	1.2	13	1.5	8	-.8...	9	-.5												
48	1.2*DL+1.5*LM2+1.0*WM(240)	Y...	Y		1	1.2	13	1.5	8	-.5	9	-.8...												
49	1.2*DL+1.5*LM2+1.0*WM(270)	Y...	Y		1	1.2	13	1.5	9	-1														
50	1.2*DL+1.5*LM2+1.0*WM(300)	Y...	Y		1	1.2	13	1.5	8	.5	9	-.8...												
51	1.2*DL+1.5*LM2+1.0*WM(330)	Y...	Y		1	1.2	13	1.5	8	.866	9	-.5												
52	1.2*DL+1.5*LM3+1.0*WM(0)	Y...	Y		1	1.2	14	1.5	8	1														
53	1.2*DL+1.5*LM3+1.0*WM(30)	Y...	Y		1	1.2	14	1.5	8	.866	9	.5												
54	1.2*DL+1.5*LM3+1.0*WM(60)	Y...	Y		1	1.2	14	1.5	8	.5	9	.866												
55	1.2*DL+1.5*LM3+1.0*WM(90)	Y...	Y		1	1.2	14	1.5	9	1														
56	1.2*DL+1.5*LM3+1.0*WM(120)	Y...	Y		1	1.2	14	1.5	8	-.5	9	.866												
57	1.2*DL+1.5*LM3+1.0*WM(150)	Y...	Y		1	1.2	14	1.5	8	-.8...	9	.5												
58	1.2*DL+1.5*LM3+1.0*WM(180)	Y...	Y		1	1.2	14	1.5	8	-1														
59	1.2*DL+1.5*LM3+1.0*WM(210)	Y...	Y		1	1.2	14	1.5	8	-.8...	9	-.5												
60	1.2*DL+1.5*LM3+1.0*WM(240)	Y...	Y		1	1.2	14	1.5	8	-.5	9	-.8...												
61	1.2*DL+1.5*LM3+1.0*WM(270)	Y...	Y		1	1.2	14	1.5	9	-1														
62	1.2*DL+1.5*LM3+1.0*WM(300)	Y...	Y		1	1.2	14	1.5	8	.5	9	-.8...												
63	1.2*DL+1.5*LM3+1.0*WM(330)	Y...	Y		1	1.2	14	1.5	8	.866	9	-.5												
64	1.2*DL+1.5*LM4+1.0*WM(0)	Y...	Y		1	1.2	15	1.5	8	1														
65	1.2*DL+1.5*LM4+1.0*WM(30)	Y...	Y		1	1.2	15	1.5	8	.866	9	.5												
66	1.2*DL+1.5*LM4+1.0*WM(60)	Y...	Y		1	1.2	15	1.5	8	.5	9	.866												
67	1.2*DL+1.5*LM4+1.0*WM(90)	Y...	Y		1	1.2	15	1.5	9	1														
68	1.2*DL+1.5*LM4+1.0*WM(120)	Y...	Y		1	1.2	15	1.5	8	-.5	9	.866												
69	1.2*DL+1.5*LM4+1.0*WM(150)	Y...	Y		1	1.2	15	1.5	8	-.8...	9	.5												
70	1.2*DL+1.5*LM4+1.0*WM(180)	Y...	Y		1	1.2	15	1.5	8	-1														
71	1.2*DL+1.5*LM4+1.0*WM(210)	Y...	Y		1	1.2	15	1.5	8	-.8...	9	-.5												
72	1.2*DL+1.5*LM4+1.0*WM(240)	Y...	Y		1	1.2	15	1.5	8	-.5	9	-.8...												
73	1.2*DL+1.5*LM4+1.0*WM(270)	Y...	Y		1	1.2	15	1.5	9	-1														
74	1.2*DL+1.5*LM4+1.0*WM(300)	Y...	Y		1	1.2	15	1.5	8	.5	9	-.8...												
75	1.2*DL+1.5*LM4+1.0*WM(330)	Y...	Y		1	1.2	15	1.5	8	.866	9	-.5												
76	1.2*DL+1.5*LM5+1.0*WM(0)	Y...	Y		1	1.2	16	1.5	8	1														
77	1.2*DL+1.5*LM5+1.0*WM(30)	Y...	Y		1	1.2	16	1.5	8	.866	9	.5												
78	1.2*DL+1.5*LM5+1.0*WM(60)	Y...	Y		1	1.2	16	1.5	8	.5	9	.866												
79	1.2*DL+1.5*LM5+1.0*WM(90)	Y...	Y		1	1.2	16	1.5	9	1														
80	1.2*DL+1.5*LM5+1.0*WM(120)	Y...	Y		1	1.2	16	1.5	8	-.5	9	.866												
81	1.2*DL+1.5*LM5+1.0*WM(150)	Y...	Y		1	1.2	16	1.5	8	-.8...	9	.5												
82	1.2*DL+1.5*LM5+1.0*WM(180)	Y...	Y		1	1.2	16	1.5	8	-1														
83	1.2*DL+1.5*LM5+1.0*WM(210)	Y...	Y		1	1.2	16	1.5	8	-.8...	9	-.5												
84	1.2*DL+1.5*LM5+1.0*WM(240)	Y...	Y		1	1.2	16	1.5	8	-.5	9	-.8...												
85	1.2*DL+1.5*LM5+1.0*WM(270)	Y...	Y		1	1.2	16	1.5	9	-1														
86	1.2*DL+1.5*LM5+1.0*WM(300)	Y...	Y		1	1.2	16	1.5	8	.5	9	-.8...												
87	1.2*DL+1.5*LM5+1.0*WM(330)	Y...	Y		1	1.2	16	1.5	8	.866	9	-.5												
88	1.2*DL+1.5*LM6+1.0*WM(0)	Y...	Y		1	1.2	17	1.5	8	1														
89	1.2*DL+1.5*LM6+1.0*WM(30)	Y...	Y		1	1.2	17	1.5	8	.866	9	.5												
90	1.2*DL+1.5*LM6+1.0*WM(60)	Y...	Y		1	1.2	17	1.5	8	.5	9	.866												
91	1.2*DL+1.5*LM6+1.0*WM(90)	Y...	Y		1	1.2	17	1.5	9	1														
92	1.2*DL+1.5*LM6+1.0*WM(120)	Y...	Y		1	1.2	17	1.5	8	-.5	9	.866												
93	1.2*DL+1.5*LM6+1.0*WM(150)	Y...	Y		1	1.2	17	1.5	8	-.8...	9	.5												
94	1.2*DL+1.5*LM6+1.0*WM(180)	Y...	Y		1	1.2	17	1.5	8	-1														
95	1.2*DL+1.5*LM6+1.0*WM(210)	Y...	Y		1	1.2	17	1.5	8	-.8...	9	-.5												

Load Combinations (Continued)

	Description	S...	P...	S...	B...	Fa...	B...	Fa...	B...	Fa...	B...	Fa...	B...	Fa...	B...	Fa...	B...	Fa...	B...	Fa...	B...	Fa...	B...	Fa...
96	1.2*DL+1.5*LM6+1.0*WM(240)	Y...	Y		1	1.2	17	1.5	8	-.5	9	-.8...												
97	1.2*DL+1.5*LM6+1.0*WM(270)	Y...	Y		1	1.2	17	1.5	9	-1														
98	1.2*DL+1.5*LM6+1.0*WM(300)	Y...	Y		1	1.2	17	1.5	8	.5	9	-.8...												
99	1.2*DL+1.5*LM6+1.0*WM(330)	Y...	Y		1	1.2	17	1.5	8	.866	9	-.5												
100	1.2*DL+1.5*LM7+1.0*WM(0)	Y...	Y		1	1.2	18	1.5	8	1														
101	1.2*DL+1.5*LM7+1.0*WM(30)	Y...	Y		1	1.2	18	1.5	8	.866	9	.5												
102	1.2*DL+1.5*LM7+1.0*WM(60)	Y...	Y		1	1.2	18	1.5	8	.5	9	.866												
103	1.2*DL+1.5*LM7+1.0*WM(90)	Y...	Y		1	1.2	18	1.5	9	1														
104	1.2*DL+1.5*LM7+1.0*WM(120)	Y...	Y		1	1.2	18	1.5	8	-.5	9	.866												
105	1.2*DL+1.5*LM7+1.0*WM(150)	Y...	Y		1	1.2	18	1.5	8	-.8...	9	.5												
106	1.2*DL+1.5*LM7+1.0*WM(180)	Y...	Y		1	1.2	18	1.5	8	-1														
107	1.2*DL+1.5*LM7+1.0*WM(210)	Y...	Y		1	1.2	18	1.5	8	-.8...	9	-.5												
108	1.2*DL+1.5*LM7+1.0*WM(240)	Y...	Y		1	1.2	18	1.5	8	-.5	9	-.8...												
109	1.2*DL+1.5*LM7+1.0*WM(270)	Y...	Y		1	1.2	18	1.5	9	-1														
110	1.2*DL+1.5*LM7+1.0*WM(300)	Y...	Y		1	1.2	18	1.5	8	.5	9	-.8...												
111	1.2*DL+1.5*LM7+1.0*WM(330)	Y...	Y		1	1.2	18	1.5	8	.866	9	-.5												
112	1.2*DL+1.5*LM8+1.0*WM(0)	Y...	Y		1	1.2	19	1.5	8	1														
113	1.2*DL+1.5*LM8+1.0*WM(30)	Y...	Y		1	1.2	19	1.5	8	.866	9	.5												
114	1.2*DL+1.5*LM8+1.0*WM(60)	Y...	Y		1	1.2	19	1.5	8	.5	9	.866												
115	1.2*DL+1.5*LM8+1.0*WM(90)	Y...	Y		1	1.2	19	1.5	9	1														
116	1.2*DL+1.5*LM8+1.0*WM(120)	Y...	Y		1	1.2	19	1.5	8	-.5	9	.866												
117	1.2*DL+1.5*LM8+1.0*WM(150)	Y...	Y		1	1.2	19	1.5	8	-.8...	9	.5												
118	1.2*DL+1.5*LM8+1.0*WM(180)	Y...	Y		1	1.2	19	1.5	8	-1														
119	1.2*DL+1.5*LM8+1.0*WM(210)	Y...	Y		1	1.2	19	1.5	8	-.8...	9	-.5												
120	1.2*DL+1.5*LM8+1.0*WM(240)	Y...	Y		1	1.2	19	1.5	8	-.5	9	-.8...												
121	1.2*DL+1.5*LM8+1.0*WM(270)	Y...	Y		1	1.2	19	1.5	9	-1														
122	1.2*DL+1.5*LM8+1.0*WM(300)	Y...	Y		1	1.2	19	1.5	8	.5	9	-.8...												
123	1.2*DL+1.5*LM8+1.0*WM(330)	Y...	Y		1	1.2	19	1.5	8	.866	9	-.5												
124	1.2*DL+1.5*LM9+1.0*WM(0)	Y...	Y		1	1.2	20	1.5	8	1														
125	1.2*DL+1.5*LM9+1.0*WM(30)	Y...	Y		1	1.2	20	1.5	8	.866	9	.5												
126	1.2*DL+1.5*LM9+1.0*WM(60)	Y...	Y		1	1.2	20	1.5	8	.5	9	.866												
127	1.2*DL+1.5*LM9+1.0*WM(90)	Y...	Y		1	1.2	20	1.5	9	1														
128	1.2*DL+1.5*LM9+1.0*WM(120)	Y...	Y		1	1.2	20	1.5	8	-.5	9	.866												
129	1.2*DL+1.5*LM9+1.0*WM(150)	Y...	Y		1	1.2	20	1.5	8	-.8...	9	.5												
130	1.2*DL+1.5*LM9+1.0*WM(180)	Y...	Y		1	1.2	20	1.5	8	-1														
131	1.2*DL+1.5*LM9+1.0*WM(210)	Y...	Y		1	1.2	20	1.5	8	-.8...	9	-.5												
132	1.2*DL+1.5*LM9+1.0*WM(240)	Y...	Y		1	1.2	20	1.5	8	-.5	9	-.8...												
133	1.2*DL+1.5*LM9+1.0*WM(270)	Y...	Y		1	1.2	20	1.5	9	-1														
134	1.2*DL+1.5*LM9+1.0*WM(300)	Y...	Y		1	1.2	20	1.5	8	.5	9	-.8...												
135	1.2*DL+1.5*LM9+1.0*WM(330)	Y...	Y		1	1.2	20	1.5	8	.866	9	-.5												
136	1.2*DL+1.5*LM10+1.0*WM(0)	Y...	Y		1	1.2	21	1.5	8	1														
137	1.2*DL+1.5*LM10+1.0*WM(30)	Y...	Y		1	1.2	21	1.5	8	.866	9	.5												
138	1.2*DL+1.5*LM10+1.0*WM(60)	Y...	Y		1	1.2	21	1.5	8	.5	9	.866												
139	1.2*DL+1.5*LM10+1.0*WM(90)	Y...	Y		1	1.2	21	1.5	9	1														
140	1.2*DL+1.5*LM10+1.0*WM(120)	Y...	Y		1	1.2	21	1.5	8	-.5	9	.866												
141	1.2*DL+1.5*LM10+1.0*WM(150)	Y...	Y		1	1.2	21	1.5	8	-.8...	9	.5												
142	1.2*DL+1.5*LM10+1.0*WM(180)	Y...	Y		1	1.2	21	1.5	8	-1														
143	1.2*DL+1.5*LM10+1.0*WM(210)	Y...	Y		1	1.2	21	1.5	8	-.8...	9	-.5												
144	1.2*DL+1.5*LM10+1.0*WM(240)	Y...	Y		1	1.2	21	1.5	8	-.5	9	-.8...												
145	1.2*DL+1.5*LM10+1.0*WM(270)	Y...	Y		1	1.2	21	1.5	9	-1														
146	1.2*DL+1.5*LM10+1.0*WM(300)	Y...	Y		1	1.2	21	1.5	8	.5	9	-.8...												
147	1.2*DL+1.5*LM10+1.0*WM(330)	Y...	Y		1	1.2	21	1.5	8	.866	9	-.5												
148	1.2*DL+1.5*LM11+1.0*WM(0)	Y...	Y		1	1.2	22	1.5	8	1														
149	1.2*DL+1.5*LM11+1.0*WM(30)	Y...	Y		1	1.2	22	1.5	8	.866	9	.5												
150	1.2*DL+1.5*LM11+1.0*WM(60)	Y...	Y		1	1.2	22	1.5	8	.5	9	.866												
151	1.2*DL+1.5*LM11+1.0*WM(90)	Y...	Y		1	1.2	22	1.5	9	1														
152	1.2*DL+1.5*LM11+1.0*WM(120)	Y...	Y		1	1.2	22	1.5	8	-.5	9	.866												

Load Combinations (Continued)

	Description	S...	P...	S...	B...	Fa...	B...	Fa...	B...	Fa...	B...	Fa...	B...	Fa...	B...	Fa...	B...	Fa...	B...	Fa...	B...	Fa...	B...	Fa...
153	1.2*DL+1.5*LM11+1.0*WM(150)	Y...	Y		1	1.2	22	1.5	8	-.8...	9	.5												
154	1.2*DL+1.5*LM11+1.0*WM(180)	Y...	Y		1	1.2	22	1.5	8	-1														
155	1.2*DL+1.5*LM11+1.0*WM(210)	Y...	Y		1	1.2	22	1.5	8	-.8...	9	-.5												
156	1.2*DL+1.5*LM11+1.0*WM(240)	Y...	Y		1	1.2	22	1.5	8	-.5	9	-.8...												
157	1.2*DL+1.5*LM11+1.0*WM(270)	Y...	Y		1	1.2	22	1.5	9	-1														
158	1.2*DL+1.5*LM11+1.0*WM(300)	Y...	Y		1	1.2	22	1.5	8	.5	9	-.8...												
159	1.2*DL+1.5*LM11+1.0*WM(330)	Y...	Y		1	1.2	22	1.5	8	.866	9	-.5												
160	1.2*DL+1.5*LM12+1.0*WM(0)	Y...	Y		1	1.2	23	1.5	8	1														
161	1.2*DL+1.5*LM12+1.0*WM(30)	Y...	Y		1	1.2	23	1.5	8	.866	9	.5												
162	1.2*DL+1.5*LM12+1.0*WM(60)	Y...	Y		1	1.2	23	1.5	8	.5	9	.866												
163	1.2*DL+1.5*LM12+1.0*WM(90)	Y...	Y		1	1.2	23	1.5	9	1														
164	1.2*DL+1.5*LM12+1.0*WM(120)	Y...	Y		1	1.2	23	1.5	8	-.5	9	.866												
165	1.2*DL+1.5*LM12+1.0*WM(150)	Y...	Y		1	1.2	23	1.5	8	-.8...	9	.5												
166	1.2*DL+1.5*LM12+1.0*WM(180)	Y...	Y		1	1.2	23	1.5	8	-1														
167	1.2*DL+1.5*LM12+1.0*WM(210)	Y...	Y		1	1.2	23	1.5	8	-.8...	9	-.5												
168	1.2*DL+1.5*LM12+1.0*WM(240)	Y...	Y		1	1.2	23	1.5	8	-.5	9	-.8...												
169	1.2*DL+1.5*LM12+1.0*WM(270)	Y...	Y		1	1.2	23	1.5	9	-1														
170	1.2*DL+1.5*LM12+1.0*WM(300)	Y...	Y		1	1.2	23	1.5	8	.5	9	-.8...												
171	1.2*DL+1.5*LM12+1.0*WM(330)	Y...	Y		1	1.2	23	1.5	8	.866	9	-.5												
172	1.2*DL+1.5*LM13+1.0*WM(0)	Y...	Y		1	1.2	24	1.5	8	1														
173	1.2*DL+1.5*LM13+1.0*WM(30)	Y...	Y		1	1.2	24	1.5	8	.866	9	.5												
174	1.2*DL+1.5*LM13+1.0*WM(60)	Y...	Y		1	1.2	24	1.5	8	.5	9	.866												
175	1.2*DL+1.5*LM13+1.0*WM(90)	Y...	Y		1	1.2	24	1.5	9	1														
176	1.2*DL+1.5*LM13+1.0*WM(120)	Y...	Y		1	1.2	24	1.5	8	-.5	9	.866												
177	1.2*DL+1.5*LM13+1.0*WM(150)	Y...	Y		1	1.2	24	1.5	8	-.8...	9	.5												
178	1.2*DL+1.5*LM13+1.0*WM(180)	Y...	Y		1	1.2	24	1.5	8	-1														
179	1.2*DL+1.5*LM13+1.0*WM(210)	Y...	Y		1	1.2	24	1.5	8	-.8...	9	-.5												
180	1.2*DL+1.5*LM13+1.0*WM(240)	Y...	Y		1	1.2	24	1.5	8	-.5	9	-.8...												
181	1.2*DL+1.5*LM13+1.0*WM(270)	Y...	Y		1	1.2	24	1.5	9	-1														
182	1.2*DL+1.5*LM13+1.0*WM(300)	Y...	Y		1	1.2	24	1.5	8	.5	9	-.8...												
183	1.2*DL+1.5*LM13+1.0*WM(330)	Y...	Y		1	1.2	24	1.5	8	.866	9	-.5												
184	1.2*DL+1.5*LM14+1.0*WM(0)	Y...	Y		1	1.2	25	1.5	8	1														
185	1.2*DL+1.5*LM14+1.0*WM(30)	Y...	Y		1	1.2	25	1.5	8	.866	9	.5												
186	1.2*DL+1.5*LM14+1.0*WM(60)	Y...	Y		1	1.2	25	1.5	8	.5	9	.866												
187	1.2*DL+1.5*LM14+1.0*WM(90)	Y...	Y		1	1.2	25	1.5	9	1														
188	1.2*DL+1.5*LM14+1.0*WM(120)	Y...	Y		1	1.2	25	1.5	8	-.5	9	.866												
189	1.2*DL+1.5*LM14+1.0*WM(150)	Y...	Y		1	1.2	25	1.5	8	-.8...	9	.5												
190	1.2*DL+1.5*LM14+1.0*WM(180)	Y...	Y		1	1.2	25	1.5	8	-1														
191	1.2*DL+1.5*LM14+1.0*WM(210)	Y...	Y		1	1.2	25	1.5	8	-.8...	9	-.5												
192	1.2*DL+1.5*LM14+1.0*WM(240)	Y...	Y		1	1.2	25	1.5	8	-.5	9	-.8...												
193	1.2*DL+1.5*LM14+1.0*WM(270)	Y...	Y		1	1.2	25	1.5	9	-1														
194	1.2*DL+1.5*LM14+1.0*WM(300)	Y...	Y		1	1.2	25	1.5	8	.5	9	-.8...												
195	1.2*DL+1.5*LM14+1.0*WM(330)	Y...	Y		1	1.2	25	1.5	8	.866	9	-.5												
196	1.2*DL+1.5*LM15+1.0*WM(0)	Y...	Y		1	1.2	26	1.5	8	1														
197	1.2*DL+1.5*LM15+1.0*WM(30)	Y...	Y		1	1.2	26	1.5	8	.866	9	.5												
198	1.2*DL+1.5*LM15+1.0*WM(60)	Y...	Y		1	1.2	26	1.5	8	.5	9	.866												
199	1.2*DL+1.5*LM15+1.0*WM(90)	Y...	Y		1	1.2	26	1.5	9	1														
200	1.2*DL+1.5*LM15+1.0*WM(120)	Y...	Y		1	1.2	26	1.5	8	-.5	9	.866												
201	1.2*DL+1.5*LM15+1.0*WM(150)	Y...	Y		1	1.2	26	1.5	8	-.8...	9	.5												
202	1.2*DL+1.5*LM15+1.0*WM(180)	Y...	Y		1	1.2	26	1.5	8	-1														
203	1.2*DL+1.5*LM15+1.0*WM(210)	Y...	Y		1	1.2	26	1.5	8	-.8...	9	-.5												
204	1.2*DL+1.5*LM15+1.0*WM(240)	Y...	Y		1	1.2	26	1.5	8	-.5	9	-.8...												
205	1.2*DL+1.5*LM15+1.0*WM(270)	Y...	Y		1	1.2	26	1.5	9	-1														
206	1.2*DL+1.5*LM15+1.0*WM(300)	Y...	Y		1	1.2	26	1.5	8	.5	9	-.8...												
207	1.2*DL+1.5*LM15+1.0*WM(330)	Y...	Y		1	1.2	26	1.5	8	.866	9	-.5												
208	1.2*DL+1.5*LV3	Y...	Y		1	1.2	27	1.5																
209	1.2*DL+1.5*LV4	Y...	Y		1	1.2	28	1.5																

Load Combinations (Continued)

	Description	S...	P...	S...	B...	Fa...	B...	Fa...	B...	Fa...	B...	Fa...	B...	Fa...	B...	Fa...	B...	Fa...	B...	Fa...	B...	Fa...	B...	Fa...
210	1.2*DL+1.5*LV5	Y...	Y		1	1.2	29	1.5																
211	1.2*DL+1.5*LV6	Y...	Y		1	1.2	30	1.5																
212	1.2*DL+1.5*LV7	Y...	Y		1	1.2	31	1.5																
213	1.2*DL+1.5*LV8	Y...	Y		1	1.2	32	1.5																
214	1.2*DL+1.5*LV9	Y...	Y		1	1.2	33	1.5																

Envelope Joint Reactions

	Joint		X [lb]	LC	Y [lb]	LC	Z [lb]	LC	MX [k-ft]	LC	MY [k-ft]	LC	MZ [k-ft]	LC
1	N8	max	2437.812	5	5091.898	16	1752.882	3	-.531	10	.935	8	9.324	16
2		min	-2415.239	11	802.048	10	-1738.297	9	-5.306	16	-.943	2	.654	10
3	N21	max	1987.267	5	5119.447	20	2616.438	2	10.868	20	2.21	11	.741	138
4		min	-1984.994	11	801.791	2	-2643.896	8	.615	2	-2.216	5	-.823	108
5	N29	max	2119.954	5	5091.408	24	2268.679	13	-.289	6	1.505	2	-.699	6
6		min	-2144.801	11	805.741	6	-2255.619	7	-5.422	24	-1.503	8	-9.282	24
7	Totals:	max	6545.033	5	14276.84	24	6222.88	2						
8		min	-6545.033	11	4299.071	6	-6222.884	8						

Stress ratio <1.0,members are adequate

Envelope AISC 14th(360-10): LRFD Steel Code Checks

	Member	Shape	Code Che...	Loc[in]	LC	Shear ...	Loc[in]	Dir	LC	phi*Pnc ...	phi*Pnt [...	phi*Mn ...	phi*Mn ...	Cb	Eqn
1	M34	L2x2x5	.850	143....	19	1.176	145....	y	24	1729.577	37584	.813	1.818	3....	H2-1
2	M33	L2x2x5	.849	143....	16	1.168	145....	y	21	1729.577	37584	.813	1.818	3....	H2-1
3	M3	L2x2x5	.805	143....	24	1.158	145....	y	16	1729.577	37584	.813	1.808	2....	H2-1
4	M108	PIPE_2.0	.731	45	5	.083	45		12	9836.597	32130	1.872	1.872	1....	H1-1b
5	M17	HSS4x4x4	.691	0	25	.143	8.438	y	14	122214....	139518	16.181	16.181	2....	H1-1b
6	M13	HSS4x4x4	.690	0	21	.143	8.438	y	21	122214....	139518	16.181	16.181	2....	H1-1b
7	M26	PIPE_2.0	.690	45	9	.067	45		10	9836.597	32130	1.872	1.872	2....	H1-1b
8	M87	PIPE_2.0	.686	45	11	.097	45		10	9836.597	32130	1.872	1.872	1....	H1-1b
9	M6	HSS4x4x4	.679	0	15	.144	8.438	y	17	122214....	139518	16.181	16.181	2....	H1-1b
10	M78	PIPE_2.0	.661	45	12	.075	45		10	9836.597	32130	1.872	1.872	1....	H1-1b
11	M37	PIPE_2.0	.654	45	8	.088	45		5	9836.597	32130	1.872	1.872	2....	H1-1b
12	M117	PIPE_2.0	.636	45	5	.101	45		13	9836.597	32130	1.872	1.872	1....	H1-1b
13	M55	L2x2x5	.632	150....	15	.018	150....	y	16	1729.577	37584	.813	1.614	1....	H2-1
14	M61	L2x2x5	.618	150....	23	.019	150....	y	24	1729.577	37584	.813	1.647	1....	H2-1
15	M58	L2x2x5	.604	0	17	.018	150....	y	21	1729.577	37584	.813	1.631	1....	H2-1
16	M81	PIPE_2.0	.581	45	11	.083	45		9	9836.597	32130	1.872	1.872	1....	H1-1b
17	M111	PIPE_2.0	.557	45	5	.117	45		6	9836.597	32130	1.872	1.872	1....	H1-1b
18	M84	PIPE_2.0	.551	45	11	.067	45		3	9836.597	32130	1.872	1.872	2....	H1-1b
19	M29	PIPE_2.0	.549	45	8	.102	45		4	9836.597	32130	1.872	1.872	2....	H1-1b
20	M114	PIPE_2.0	.495	45	3	.085	45		6	9836.597	32130	1.872	1.872	2....	H1-1b
21	M32	PIPE_2.0	.491	45	7	.068	45		10	9836.597	32130	1.872	1.872	2....	H1-1b
22	M16	L2x2x3	.431	0	24	.016	0	z	22	6979.48	23392.8	.558	1.192	2....	H2-1
23	M19	L2x2x3	.429	59.4...	20	.016	59.4...	z	23	6979.48	23392.8	.558	1.193	2....	H2-1
24	M12	L2x2x3	.429	0	20	.016	0	z	18	6979.48	23392.8	.558	1.188	2....	H2-1
25	M15	L2x2x3	.425	59.4...	16	.016	59.4...	z	18	6979.48	23392.8	.558	1.198	2....	H2-1
26	M20	L2x2x3	.422	0	16	.016	0	z	14	6979.48	23392.8	.558	1.189	2....	H2-1
27	M9	L2x2x3	.421	59.4...	24	.016	59.4...	z	14	6979.48	23392.8	.558	1.195	2....	H2-1
28	M23	HSS4x4x4	.344	0	25	.096	31.3...	z	8	134294....	139518	16.181	16.181	1....	H1-1b
29	M22	HSS4x4x4	.344	0	21	.105	31.3...	z	4	134294....	139518	16.181	16.181	1....	H1-1b
30	M21	HSS4x4x4	.344	0	17	.107	31.3...	z	12	134294....	139518	16.181	16.181	1....	H1-1b
31	M14	HSS4x4x4	.341	36.2...	19	.113	4.907	z	12	134294....	139518	16.181	16.181	1....	H1-1b
32	M8	HSS4x4x4	.340	36.2...	15	.102	4.907	y	19	134294....	139518	16.181	16.181	1....	H1-1b
33	M18	HSS4x4x4	.338	36.2...	23	.109	4.907	z	4	134294....	139518	16.181	16.181	1....	H1-1b
34	M5	PIPE_3.0	.329	90.7...	23	.192	90.7...		11	28171.6...	65205	5.749	5.749	1....	H1-1b
35	M10	PIPE_3.0	.325	90.7...	14	.172	90.7...		15	28171.6...	65205	5.749	5.749	1....	H1-1b

Envelope AISC 14th(360-10): LRFD Steel Code Checks (Continued)

	Member	Shape	Code Che...	Loc[in]	LC	Shear ...	Loc[in]	Dir	LC	phi*Pnc ...	phi*Pnt [...	phi*Mn ...	phi*Mn ...	Cb	Eqn
36	M1	PIPE_3.0	.321	90.7...	19	.175	90.7...		19	28171.6...	65205	5.749	5.749	1....	H1-1b
37	M7	6x0.5	.273	6.5	11	.363	6.5	y	19	63416.1...	97200	1.012	12.15	1....	H1-1b
38	M2	6x0.5	.264	6.5	7	.375	4.875	y	3	63416.1...	97200	1.012	12.15	1....	H1-1b
39	M11	6x0.5	.255	6.5	3	.382	4.875	y	11	63416.1...	97200	1.012	12.15	1....	H1-1b
40	M4	PIPE_2.0	.116	10.8...	3	.351	0		3	30380.9...	32130	1.872	1.872	1....	H3-6
41	M45	PIPE_2.0	.108	14.5...	11	.340	0		11	30380.9...	32130	1.872	1.872	1....	H3-6
42	M44	PIPE_2.0	.104	11.0...	6	.332	25.9...		7	30380.9...	32130	1.872	1.872	1....	H3-6
43	M53	PIPE_2.0	.066	12	7	.012	12		10	26521.4...	32130	1.872	1.872	1....	H1-1b
44	M50	PIPE_2.0	.066	12	3	.012	12		6	26521.4...	32130	1.872	1.872	1....	H1-1b
45	M47	PIPE_2.0	.066	12	11	.012	12		2	26521.4...	32130	1.872	1.872	1....	H1-1b

Stress ratio <1.0,members are adequate

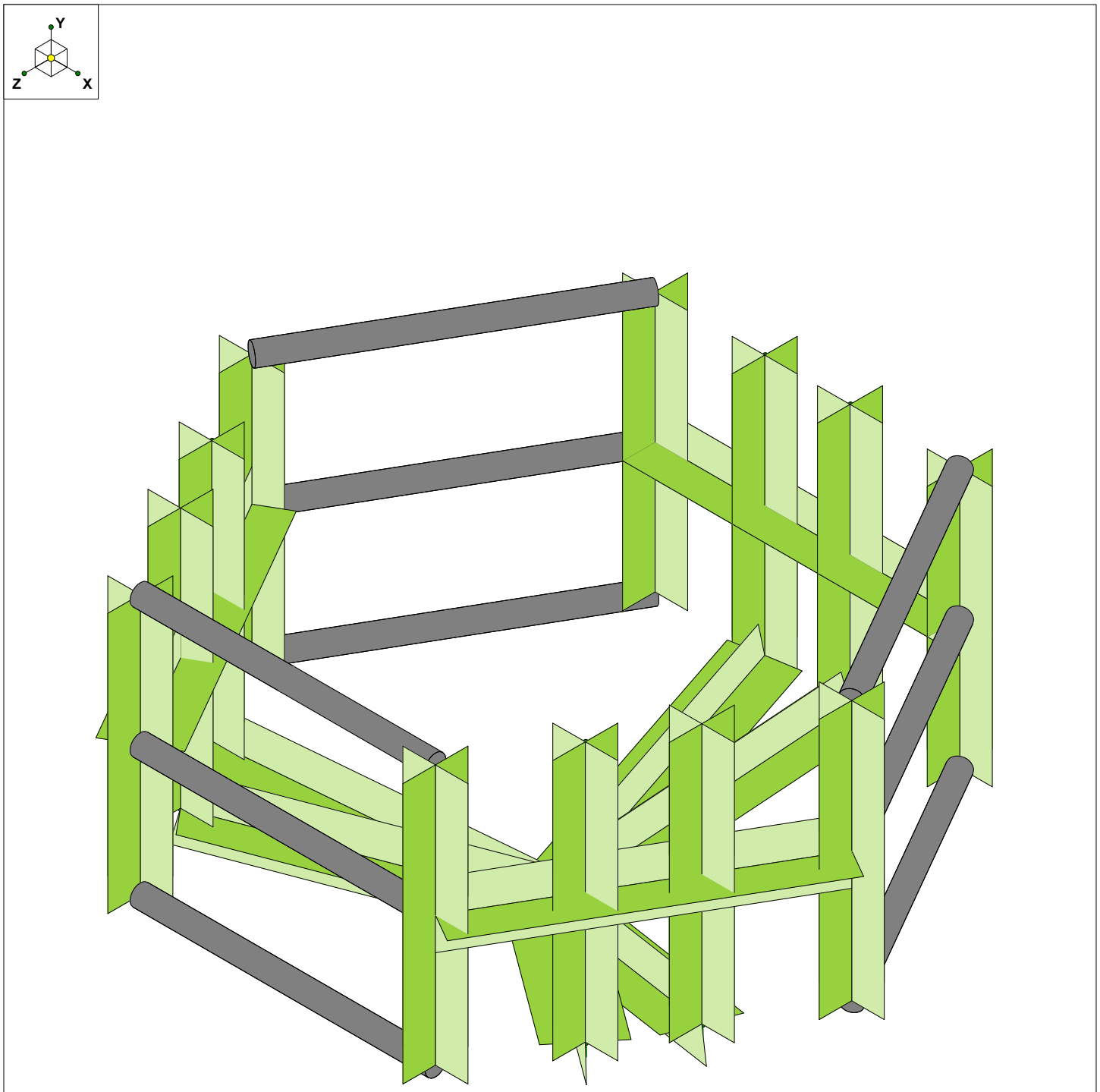

Envelope Only Solution

Fullerton Engineering Con...		SK - 1
TQ	Mount Analysis - Collar Mount	Jan 21, 2019 at 2:28 PM
CTL05293	3D Render	CTL05293 - Collar Mount.r3d

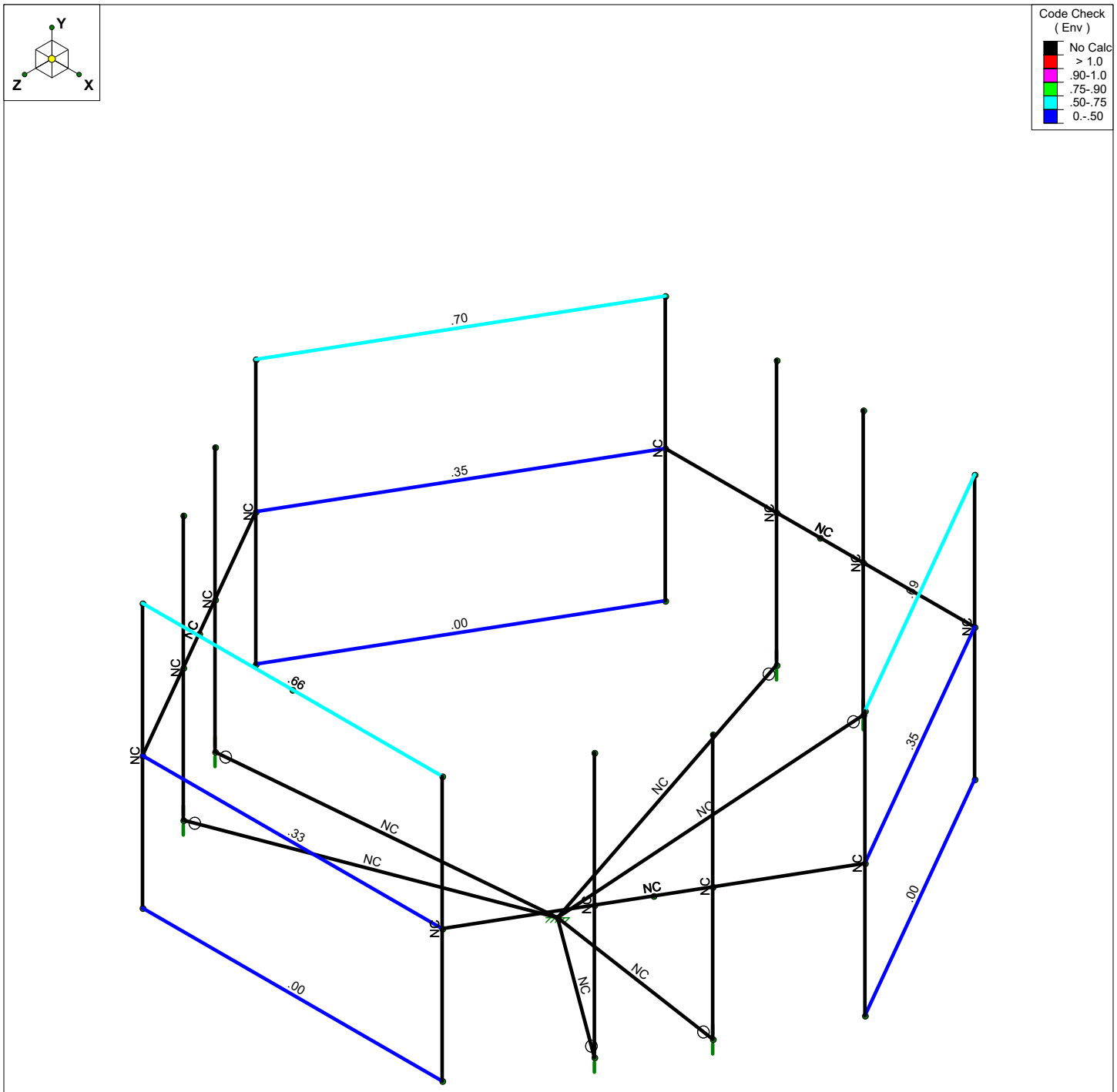

Member Code Checks Displayed (Enveloped)
Envelope Only Solution

Fullerton Engineering Con...		SK - 2
TQ	Mount Analysis - Collar Mount	Jan 21, 2019 at 2:30 PM
CTL05293	Unity Graphic	CTL05293 - Collar Mount.r3d

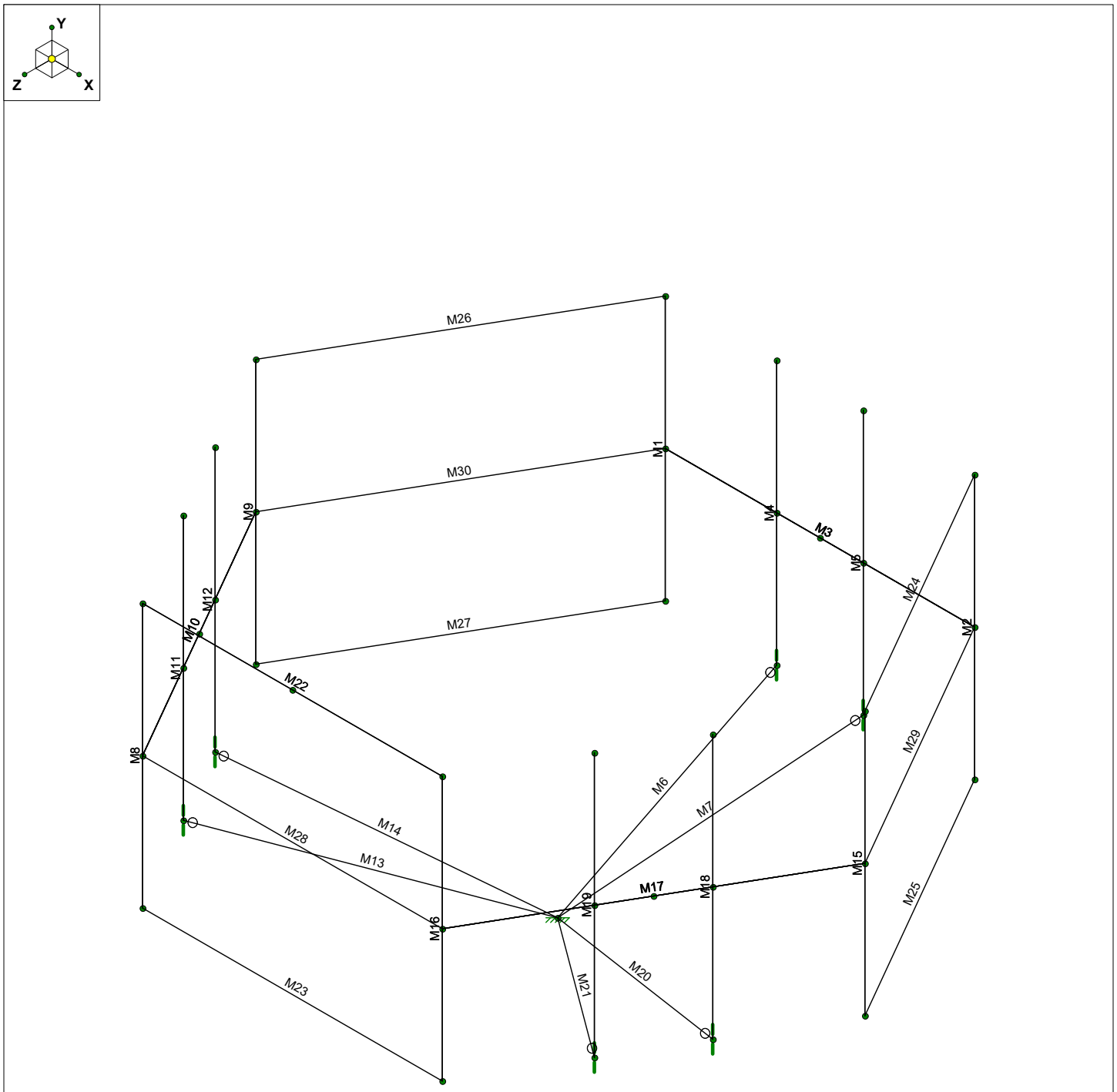

Envelope Only Solution

Fullerton Engineering Con...		SK - 3
TQ	Mount Analysis - Collar Mount	Jan 21, 2019 at 2:30 PM
CTL05293	Member Label	CTL05293 - Collar Mount.r3d

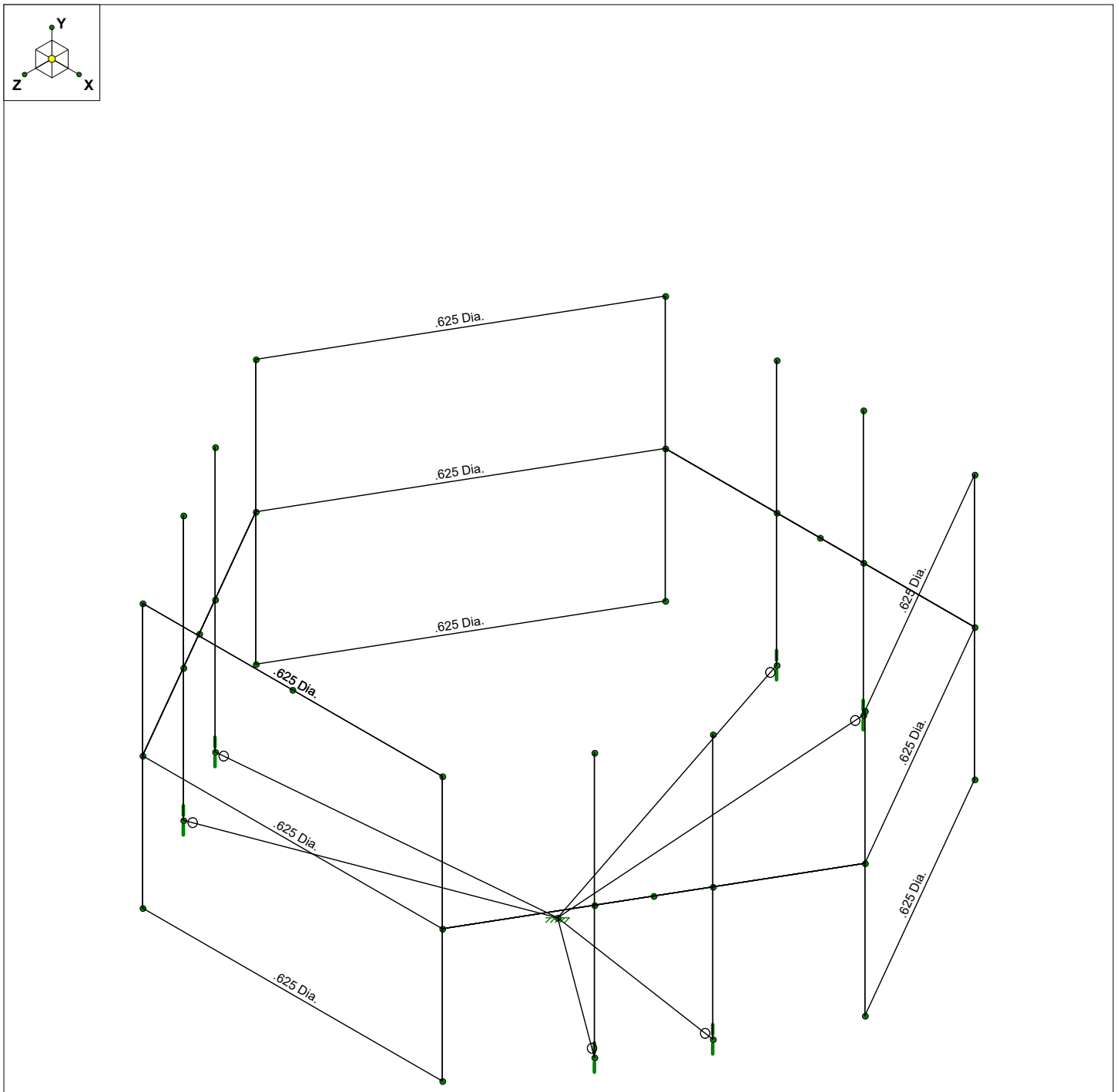

Envelope Only Solution

Fullerton Engineering Con...		SK - 4
TQ	Mount Analysis - Collar Mount	Jan 21, 2019 at 2:30 PM
CTL05293	Shape	CTL05293 - Collar Mount.r3d

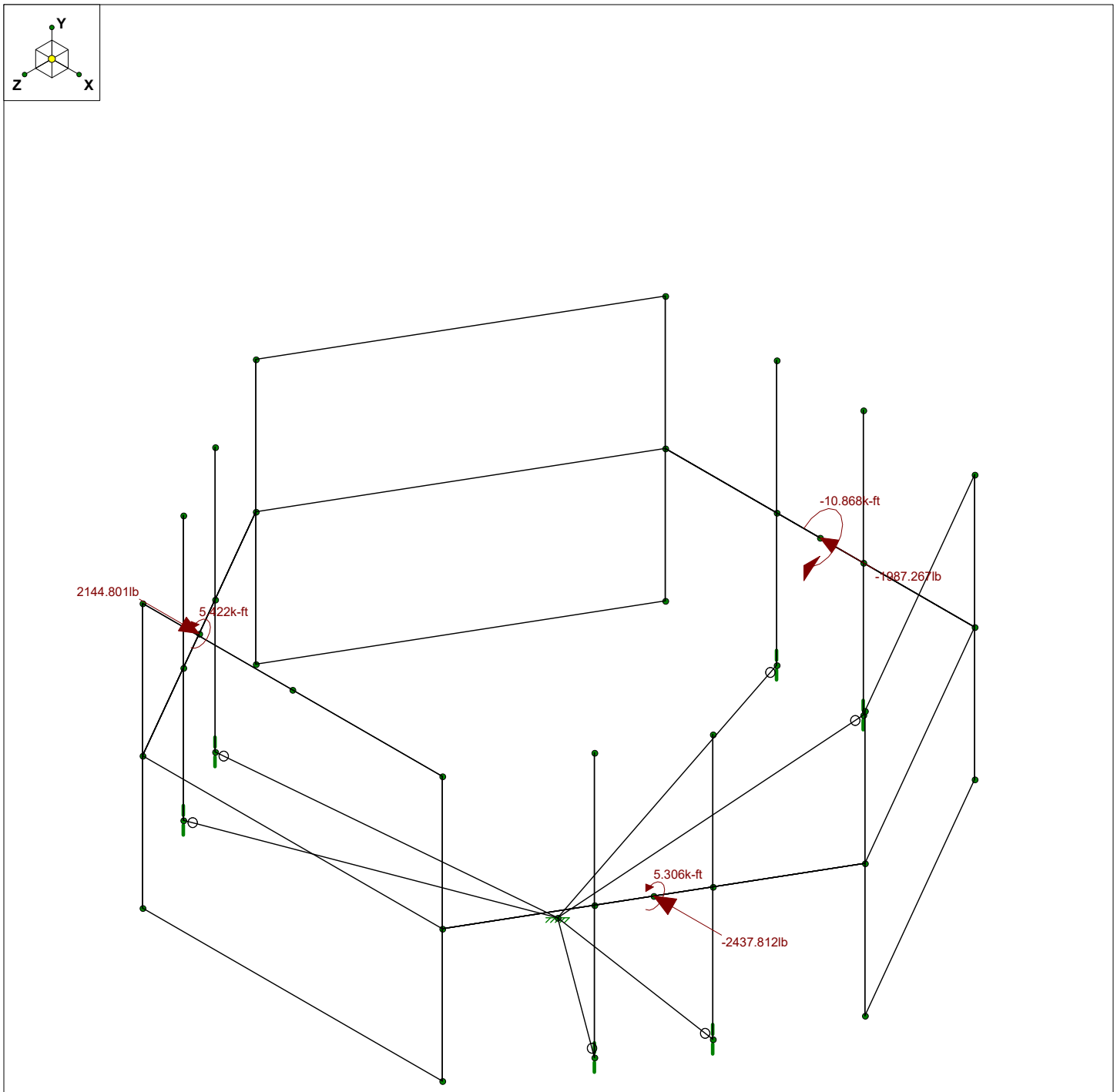

Loads: BLC 1, Max X
Envelope Only Solution

Fullerton Engineering Con...		SK - 5
TQ	Mount Analysis - Collar Mount	Jan 21, 2019 at 2:31 PM
CTL05293	Max X	CTL05293 - Collar Mount.r3d

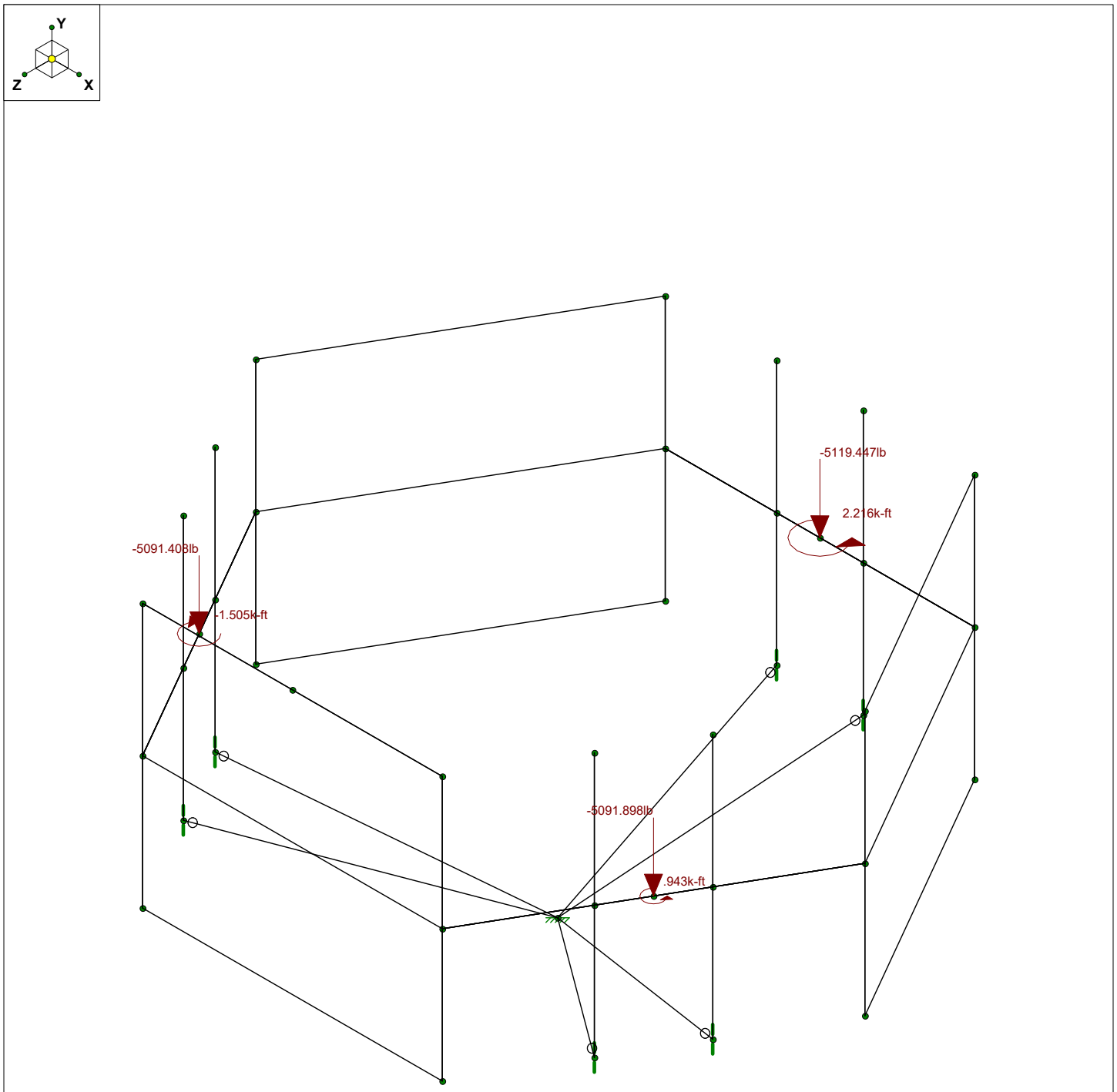

Loads: BLC 2, Max Y
Envelope Only Solution

Fullerton Engineering Con...		SK - 6
TQ	Mount Analysis - Collar Mount	Jan 21, 2019 at 2:31 PM
CTL05293	Max Y	CTL05293 - Collar Mount.r3d

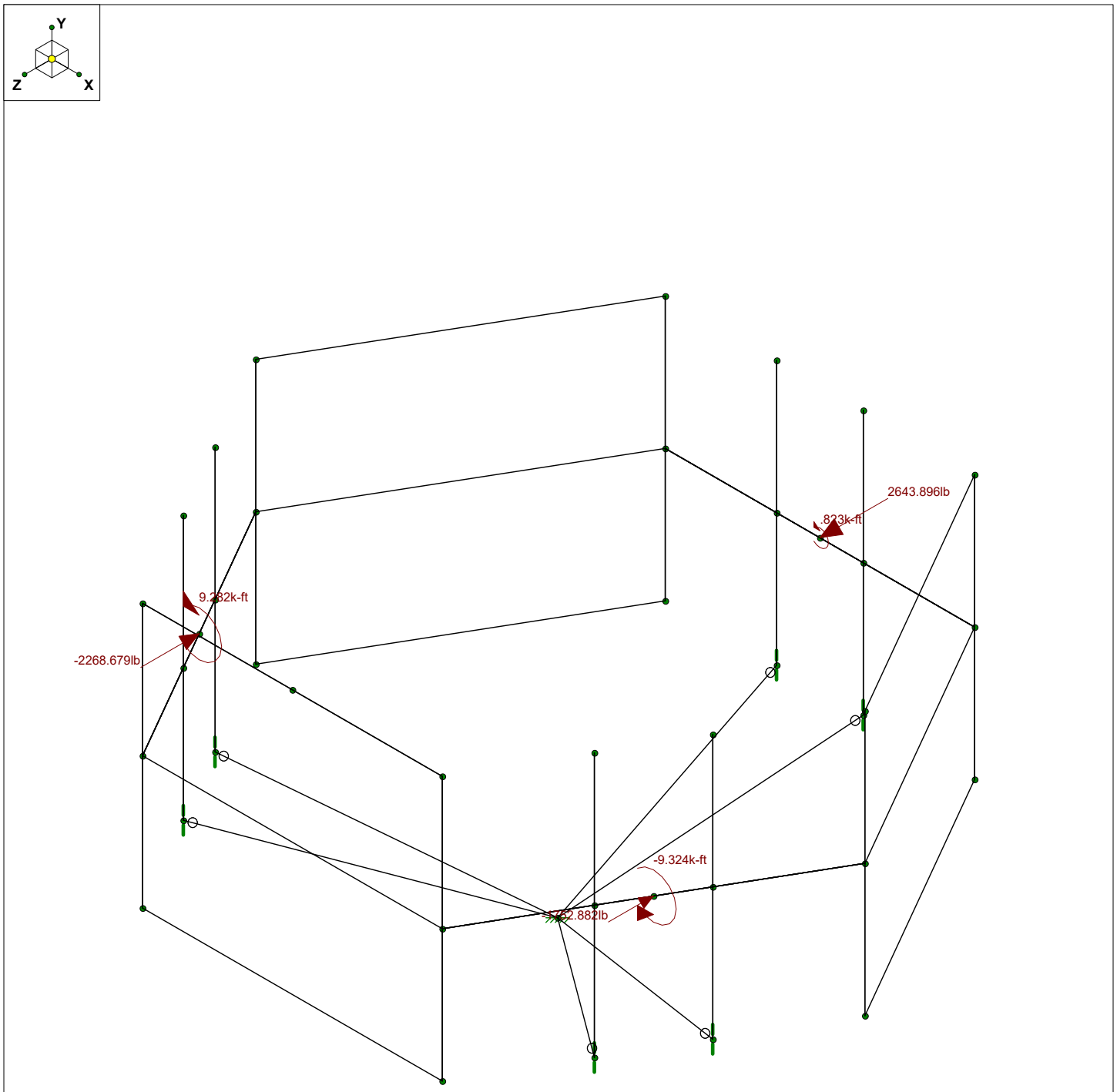

Loads: BLC 3, Max Z
Envelope Only Solution

Fullerton Engineering Con…		SK - 7
TQ	Mount Analysis - Collar Mount	Jan 21, 2019 at 2:31 PM
CTL05293	Max Z	CTL05293 - Collar Mount.r3d

(Global) Model Settings

Display Sections for Member Calcs	5
Max Internal Sections for Member Calcs	97
Include Shear Deformation?	Yes
Increase Nailing Capacity for Wind?	Yes
Include Warping?	Yes
Trans Load Btwn Intersecting Wood Wall?	Yes
Area Load Mesh (in^2)	144
Merge Tolerance (in)	.12
P-Delta Analysis Tolerance	0.50%
Include P-Delta for Walls?	Yes
Automatically Iterate Stiffness for Walls?	Yes
Max Iterations for Wall Stiffness	3
Gravity Acceleration (in/sec^2)	386.4
Wall Mesh Size (in)	12
Eigensolution Convergence Tol. (1.E-)	4
Vertical Axis	Y
Global Member Orientation Plane	XZ
Static Solver	Sparse Accelerated
Dynamic Solver	Accelerated Solver

Hot Rolled Steel Code	AISC 14th(360-10): LRFD
Adjust Stiffness?	Yes(Iterative)
RISAConnection Code	AISC 14th(360-10): LRFD
Cold Formed Steel Code	None
Wood Code	None
Wood Temperature	< 100F
Concrete Code	None
Masonry Code	None
Aluminum Code	None - Building

Number of Shear Regions	4
Region Spacing Increment (in)	4
Biaxial Column Method	Exact Integration
Parme Beta Factor (PCA)	.65
Concrete Stress Block	Rectangular
Use Cracked Sections?	Yes
Use Cracked Sections Slab?	Yes
Bad Framing Warnings?	No
Unused Force Warnings?	Yes
Min 1 Bar Diam. Spacing?	No
Concrete Rebar Set	REBAR_SET_ASTMA615
Min % Steel for Column	1
Max % Steel for Column	8

(Global) Model Settings, Continued

Seismic Code	ASCE 7-10
Seismic Base Elevation (in)	Not Entered
Add Base Weight?	Yes
Ct X	.02
Ct Z	.02
T X (sec)	Not Entered
T Z (sec)	Not Entered
R X	3
R Z	3
Ct Exp. X	.75
Ct Exp. Z	.75
SD1	1
SDS	1
S1	1
TL (sec)	5
Risk Cat	I or II
Drift Cat	Other
Om Z	1
Om X	1
Cd Z	4
Cd X	4
Rho Z	1
Rho X	1

Hot Rolled Steel Design Parameters

	Label	Shape	Length[in]	Lbyy[in]	Lbzz[in]	Lcomp top[in]	Lcomp bot[in]	L-torq...	Kyy	Kzz	Cb	Function
1	M22	.625 Dia.	9.081			Lbyy						Lateral
2	M23	.625 Dia.	9.081			Lbyy						Lateral
3	M24	.625 Dia.	9.081			Lbyy						Lateral
4	M25	.625 Dia.	9.081			Lbyy						Lateral
5	M26	.625 Dia.	9.081			Lbyy						Lateral
6	M27	.625 Dia.	9.081			Lbyy						Lateral
7	M28	.625 Dia.	9.081			Lbyy						Lateral
8	M29	.625 Dia.	9.081			Lbyy						Lateral
9	M30	.625 Dia.	9.081			Lbyy						Lateral

Basic Load Cases

	BLC Description	Category	X Gravity	Y Gravity	Z Gravity	Joint	Point	Distributed	Area(Me...	Surface(P...
1	Max X	None				6				
2	Max Y	None		-1		6				
3	Max Z	None				6				

Load Combinations

	Description	S...	P...	S...	B...	Fa...	B...	Fa...	B...	Fa...	B...	Fa...	B...	Fa...	B...	Fa...	B...	Fa...	B...	Fa...	B...	Fa...	B...	Fa...
1	Max Reactions	Y...	Y		1	1	2	1	3	1														

Stress ratio<1.0, members are adequate

Envelope AISC 14th(360-10): LRFD Steel Code Checks

	Member	Shape	Code Che...	Loc[in]	LC	Shear ...	Loc[in]	Dir	LC	phi*Pnc ...	phi*Pnt [...	phi*Mn ...	phi*Mn ...	Cb	Eqn
1	M26	.625 Dia.	.697	0	1	.001	0		1	8320.704	9940.19	.104	.104	1....	H1-1a*
2	M24	.625 Dia.	.694	0	1	.001	9.081		1	8320.704	9940.19	.104	.104	1....	H1-1a*
3	M22	.625 Dia.	.662	4.541	1	.001	0		1	8320.704	9940.19	.104	.104	1....	H1-1a*
4	M30	.625 Dia.	.348	0	1	.001	0		1	8320.704	9940.19	.104	.104	1....	H1-1a*

Envelope AISC 14th(360-10): LRFD Steel Code Checks (Continued)

	Member	Shape	Code Che...	Loc[in]	LC	Shear ...	Loc[in]	Dir	LC	phi*Pnc ...	phi*Pnt [...	phi*Mn ...	phi*Mn ...	Cb	Eqn
5	M29	.625 Dia.	.347	0	1	.001	9.081		1	8320.704	9940.19	.104	.104	1....	H1-1a*
6	M28	.625 Dia.	.331	0	1	.000	0		1	8320.704	9940.19	.104	.104	1....	H1-1a*
7	M23	.625 Dia.	.000	0	1	.000	0		1	8320.704	9940.19	.104	.104	1....	H1-1b*
8	M25	.625 Dia.	.000	0	1	.001	9.081		1	8320.704	9940.19	.104	.104	1....	H1-1b*
9	M27	.625 Dia.	.000	0	1	.000	0		1	8320.704	9940.19	.104	.104	1	H1-1a

Stress ratio<1.0, members are adequate

Mount Analysisand Mapping Checklist

Mount Detail	
Mount Type	Platform
Mount Model Number	Valmont/Site Pro1 P/N RMQP-12-H5
If RT, then how is it attached	
If WT, then how is it attached	

Inspector
(Vendor name)
(Inspector name)
(Contact phone)
(Contact email)

Mount Mapping Detail	
Material condition (discoloration, cracks, pitting)	
Mfg. drawing, cutsheet, spec. available?	
Date of mount mapping	
Searched prior OOM for material?	
Photos of installation available?	
Original tower drawings show mounts?	
Searched for previous mapping?	
Is latest mod design (dwgs) available?	
Is the latest structural analysis available?	

Project Detail	
Market	CONNECTICUT
PACE Project ID	MRCTB035230/MRCTB035245/MRCTB035207 MRCTB035311/MRCTB035313
Site Name	ENFIELD EAST
City, State	ENFIELD, CT
RFDS Version Number	4
Initiative (list mult., if applicable)	3C/4C/5C/RETROFIT
Tower Owner	
SA Vendor	
A&E firm (for structural analysis)	
A&E firm (for mapping, if different)	
Last amendment date or last site visit	

Site Information	
Original Lease Date	
FA Code	10090926
Tower Type	Monopole
Tower Height (Ft)	
AT&T Rad Center # 1	158
AT&T Rad Center # 2	

Measurements and Deliverables on sketches	
Pipe / Angle dimenions and lengths	Pipe 3.0, 12.5'
bolt diameters and lengths	
U-Bolt diameters and lengths	
Steel Grade if indicated	
welds :length and sizes	
appurtenance relative locations	
Grounding Condition	

Equipment Detail Alpha Sector	Model Number for Ant, MW, RRU, TMA, Squid / Size of Coax, DC-Fiber Trunks & Jumpers	Height / COAX-DC-Fiber Trunk & Jumper Lengths in feet	Approz Az	mount position location
Antennas	(1) Kathrein-800 10121			
Antennas	(1) CCI-HPA-65R-BUU-H8			
Antennas	(2) Kathrein-800-10966			
MW	0			
RRU	(1) Ericsson RRUS 4415			
RRU	(1) Ericsson-4449 B5/B12			
RRU	(1) Ericsson RRUS 8843 B2/B12			
RRU				
RRU				
TMA	(2) Powerwave LGP-21401, (2) Powerwave LGP-21901			
Coax	(2) 1-5/8" LDF7-50A			
RET (not imbedded in antenna)				
DC Cable	(2) DC			
Fiber Cable	(1) Fiber			
Squid	(1) DC6-48-60-18-8F			

Equipment Detail Beta Sector	Model Number for Ant, MW, RRU, TMA, Squid / Size of Coax, DC-Fiber Trunks & Jumpers	Height / COAX-DC-Fiber Trunk & Jumper Lengths in feet	Approz Az	mount position location
Antennas	(1) Kathrein-800 10121			
Antennas	(1) CCI-HPA-65R-BUU-H8			
Antennas	(2) Kathrein-800-10966			
MW	0			
RRU	(1) Ericsson RRUS 4415			
RRU	(1) Ericsson-4449 B5/B12			
RRU	(1) Ericsson RRUS 8843 B2/B12			
RRU				
RRU				
TMA	(2) Powerwave LGP-21401, (2) Powerwave LGP-21901			
Coax	(2) 1-5/8" LDF7-50A			
RET (not imbedded in antenna)				
DC Cable	(2) DC			
Fiber Cable	(1) Fiber			
Squid	(1) DC6-48-60-18-8F			

Equipment Detail Gamma Sector	Model Number for Ant, MW, RRU, TMA, Squid / Size of Coax, DC-Fiber Trunks & Jumpers	Height / COAX-DC-Fiber Trunk & Jumper Lengths in feet	Approz Az	mount position location
Antennas	(1) Kathrein-800 10121			
Antennas	(1) CCI-HPA-65R-BUU-H8			
Antennas	(2) Kathrein-800-10966			
MW	0			
RRU	(1) Ericsson RRUS 4415			
RRU	(1) Ericsson-4449 B5/B12			
RRU	(1) Ericsson RRUS 8843 B2/B12			
RRU				
RRU				
TMA	(2) Powerwave LGP-21401, (2) Powerwave LGP-21901			
Coax	(2) 1-5/8" LDF7-50A			
RET (not imbedded in antenna)				
DC Cable	(2) DC			
Fiber Cable	(1) Fiber			
Squid	(1) DC6-48-60-18-8F			

Comments

RF EMISSIONS COMPLIANCE REPORT

Smartlink on Behalf of AT&T Mobility, LLC

Site: Enfield East
FA: 10090926
Site ID: 25932
USID: CT5293
188 Moody Road
Enfield, CT
2/8/2019

Report Status:

AT&T Mobility, LLC Is Compliant

sealed 10feb2019 mike@h2dc.com
H2DC PLLC Ct CoA#: 0001714

Prepared By:

Sitesafe, LLC

8618 Westwood Center Drive,
Suite 315
Vienna, VA 22182
Voice 703-276-1100
Fax 703-276-1169

Engineering Statement in Re:
Electromagnetic Energy Analysis
Smartlink
Enfield, CT

My signature on the cover of this document indicates:

That I, Michael A McGuire, am currently and actively licensed to provide (in this state/jurisdiction as indicated within the professional electrical engineering seal on the cover of this document) professional electrical engineering services, as an employee of Hurricane Hill Development Company, PLLC , a duly authorized/registered engineering firm (in this state, as applicable) on behalf of SiteSafe, LLC; and

That I am thoroughly familiar with the Rules and Regulations of the Federal Communications Commission ("the FCC" and "the FCC Rules") both in general and specifically as they apply to the FCC's Guidelines for Human Exposure to Radiofrequency Electromagnetic Fields; and

That the technical information serving as the basis for this report was supplied by Smartlink (See attached Site Summary and Carrier documents), and that AT&T Mobility, LLC's installations involve communications equipment, antennas and associated technical equipment at a location referred to as the "Enfield East" ("the site"); and

That AT&T Mobility, LLC proposes to operate at the site with transmit antennas listed in the carrier summary and with a maximum effective radiated power as specified by AT&T Mobility, LLC and shown on the worksheet, and that worst-case 100% duty cycle have been assumed; and

That this analysis has been performed with the assumption that the ground immediately surrounding the tower is primarily flat or falling; and

That at this time, the FCC requires that certain licensees address specific levels of radio-frequency energy to which workers or members of the public might possibly be exposed (at §1.1307(b) of the FCC Rules); and

That such consideration of possible exposure of humans to radio-frequency radiation must utilize the standards set by the FCC, which is the Federal Agency having jurisdiction over communications facilities; and

That the FCC rules define two tiers of permissible exposure guidelines: 1) "uncontrolled environments," defined as situations in which persons may not be aware of (the "general public"), or may not be able to control their exposure to a transmission facility; and (2) "controlled environments," which defines situations in which persons are aware of their potential for exposure (industry personnel); and

That this statement specifically addresses the uncontrolled environment (which is more conservative than the controlled environment) and the limit set forth in the FCC rules for licensees of AT&T Mobility, LLC's operating frequency as shown on the attached antenna worksheet; and

That when applying the uncontrolled environment standards, the predicted Maximum Power Density at two meters above ground level from the proposed AT&T Mobility, LLC operation is no more than 2.925% of the maximum in any accessible area on the ground and

That it is understood per FCC Guidelines and OET65 Appendix A, that regardless of the existent radio-frequency environment, only those licenses whose contributions exceed five percent of the exposure limit pertinent to their operation(s) bear any responsibility for bringing any non-compliant area(s) into compliance; and

That when applying the uncontrolled environment standards, the cumulative predicted energy density from the proposed operation is no more than 2.925% of the maximum in any accessible area up to two meters above the ground per OET-65; and

That the calculations provided in this report are based on data provided by the client and antenna pattern data supplied by the antenna manufacturer, in accordance with FCC guidelines listed in OET-65. Horizontal and vertical antenna patterns are combined for modeling purposes to accurately reflect the energy two meters above ground level where on-axis energy refers to maximum energy two meters above the ground along the azimuth of the antenna and where area energy refers to the maximum energy anywhere two meters above the ground regardless of the antenna azimuth, accounting for cumulative energy from multiple antennas for the carrier and frequency range indicated; and

That the Occupational Safety and Health Administration has policies in place which address worker safety in and around communications sites, thus individual companies will be responsible for their employees' training regarding Radio Frequency Safety.

In summary, it is stated here that the proposed operation at the site would not result in exposure of the Public to excessive levels of radio-frequency energy as defined in the FCC Rules and Regulations, specifically 47 CFR 1.1307 and that AT&T Mobility, LLC's proposed operation is completely compliant.

Finally, it is stated that access to the tower should be restricted to communication industry professionals, and approved contractor personnel trained in radio-frequency safety; and that the instant analysis addresses exposure levels at two meters above ground level and does not address exposure levels on the tower, or in the immediate proximity of the antennas.

AT&T Mobility, LLC
Enfield East
Site Summary

Carrier	Area Maximum Percentage MPE
AT&T Mobility, LLC (Proposed)	0.506 %
AT&T Mobility, LLC (Proposed)	0.572 %
AT&T Mobility, LLC (Proposed)	0.492 %
AT&T Mobility, LLC (Proposed)	0.942 %
AT&T Mobility, LLC (Proposed)	0.3 %
AT&T Mobility, LLC	0.113 %

Composite Site MPE: 2.925 %

AT&T Mobility, LLC (Proposed)
Enfield East
Carrier Summary

Frequency:	2100	MHz
Maximum Permissible Exposure (MPE):	1000	µW/cm^2
Maximum power density at ground level:	5.05631	µW/cm^2
Highest percentage of Maximum Permissible Exposure:	0.50563	%

					On Axis		Area	
Antenna Make	**Model**	**Height (feet)**	**Orientation (degrees true)**	**ERP (Watts)**	**Max Power Density (µW/cm^2)**	**Percent of MPE**	**Max Power Density (µW/cm^2)**	**Percent of MPE**
Kathrein-Scala	800-10966	158	60	7364	2.265581	0.226558	3.928083	0.392808
Kathrein-Scala	800-10966	158	160	7364	2.719131	0.271913	4.494514	0.449451
Kathrein-Scala	800-10966	158	310	7364	2.893922	0.289392	4.689759	0.468976

AT&T Mobility, LLC (Proposed)
Enfield East
Carrier Summary

Frequency:	850	MHz
Maximum Permissible Exposure (MPE):	566.67	µW/cm^2
Maximum power density at ground level:	3.2395	µW/cm^2
Highest percentage of Maximum Permissible Exposure:	0.57168	%

					On Axis		Area	
Antenna Make	**Model**	**Height (feet)**	**Orientation (degrees true)**	**ERP (Watts)**	**Max Power Density (µW/cm^2)**	**Percent of MPE**	**Max Power Density (µW/cm^2)**	**Percent of MPE**
Kathrein-Scala	800-10966	158	60	2143	0.78031	0.137702	1.051633	0.185582
Kathrein-Scala	800-10966	158	160	2143	0.775255	0.13681	1.051633	0.185582
Kathrein-Scala	800-10966	158	310	2143	1.520311	0.26829	1.612502	0.284559
Kathrein-Scala	800-10966	158	60	2143	0.78031	0.137702	1.051633	0.185582
Kathrein-Scala	800-10966	158	160	2143	0.775255	0.13681	1.051633	0.185582
Kathrein-Scala	800-10966	158	310	2143	1.520311	0.26829	1.612502	0.284559

AT&T Mobility, LLC (Proposed)
Enfield East
Carrier Summary

Frequency:	737	MHz
Maximum Permissible Exposure (MPE):	491.33	µW/cm^2
Maximum power density at ground level:	2.41913	µW/cm^2
Highest percentage of Maximum Permissible Exposure:	0.49236	%

					On Axis		Area	
Antenna Make	**Model**	**Height (feet)**	**Orientation (degrees true)**	**ERP (Watts)**	**Max Power Density (µW/cm^2)**	**Percent of MPE**	**Max Power Density (µW/cm^2)**	**Percent of MPE**
Kathrein-Scala	800-10966	158	60	3623	1.707467	0.347517	1.707521	0.347528
Kathrein-Scala	800-10966	158	160	3623	1.707467	0.347517	1.707521	0.347528
Kathrein-Scala	800-10966	158	310	3623	1.992586	0.405547	1.992645	0.405559

AT&T Mobility, LLC (Proposed)
Enfield East
Carrier Summary

Frequency:	1900	MHz
Maximum Permissible Exposure (MPE):	1000	µW/cm^2
Maximum power density at ground level:	9.41782	µW/cm^2
Highest percentage of Maximum Permissible Exposure:	0.94178	%

					On Axis		Area	
Antenna Make	**Model**	**Height (feet)**	**Orientation (degrees true)**	**ERP (Watts)**	**Max Power Density (µW/cm^2)**	**Percent of MPE**	**Max Power Density (µW/cm^2)**	**Percent of MPE**
Kathrein-Scala	800-10966	158	60	6168	2.12398	0.212398	3.021477	0.302148
Kathrein-Scala	800-10966	158	160	6168	2.722699	0.27227	3.503015	0.350301
Kathrein-Scala	800-10966	158	310	6168	2.713048	0.271305	3.662312	0.366231
Kathrein-Scala	800-10966	158	60	6168	2.12398	0.212398	3.021477	0.302148
Kathrein-Scala	800-10966	158	160	6168	2.722699	0.27227	3.503015	0.350301
Kathrein-Scala	800-10966	158	310	6168	2.713048	0.271305	3.662312	0.366231

AT&T Mobility, LLC (Proposed)
Enfield East
Carrier Summary

Frequency:	2300	MHz
Maximum Permissible Exposure (MPE):	1000	µW/cm^2
Maximum power density at ground level:	2.99631	µW/cm^2
Highest percentage of Maximum Permissible Exposure:	0.29963	%

					On Axis		Area	
Antenna Make	**Model**	**Height (feet)**	**Orientation (degrees true)**	**ERP (Watts)**	**Max Power Density (µW/cm^2)**	**Percent of MPE**	**Max Power Density (µW/cm^2)**	**Percent of MPE**
CCI Antennas	HPA-65R-BUU-H8	158	60	3350	1.989093	0.198909	2.880666	0.288067
CCI Antennas	HPA-65R-BUU-H8	158	160	3350	1.989093	0.198909	2.880666	0.288067
CCI Antennas	HPA-65R-BUU-H8	158	310	3350	1.971428	0.197143	2.880666	0.288067

AT&T Mobility, LLC
Enfield East
Carrier Summary

Frequency:	851	MHz
Maximum Permissible Exposure (MPE):	567.33	µW/cm^2
Maximum power density at ground level:	0.64373	µW/cm^2
Highest percentage of Maximum Permissible Exposure:	0.11347	%

					On Axis		Area	
Antenna Make	**Model**	**Height (feet)**	**Orientation (degrees true)**	**ERP (Watts)**	**Max Power Density (µW/cm^2)**	**Percent of MPE**	**Max Power Density (µW/cm^2)**	**Percent of MPE**
Kathrein-Scala	800-10121	158	60	521	0.599904	0.105741	0.607801	0.107133
Kathrein-Scala	800-10121	158	160	521	0.477302	0.084131	0.483617	0.085244
Kathrein-Scala	800-10121	158	310	521	0.599904	0.105741	0.607801	0.107133

188 MOODY RD

Location	188 MOODY RD	**Mblu**	100/ / 0012/ /
Acct#	001600020130	**Owner**	TROIANO REALTY CORP
Assessment	$1,312,310	**Appraisal**	$1,874,720
PID	2238	**Building Count**	1
Fire District	3		

Current Value

Appraisal			
Valuation Year	**Improvements**	**Land**	**Total**
2017	$1,168,800	$705,920	$1,874,720
Assessment			
Valuation Year	**Improvements**	**Land**	**Total**
2017	$818,160	$494,150	$1,312,310

Owner of Record

Owner	TROIANO REALTY CORP	**Sale Price**	$0
Co-Owner		**Certificate**	1
Address	0777 ENFIELD ST ENFIELD, CT 06082	**Book & Page**	305/ 468
		Sale Date	

Ownership History

Ownership History				
Owner	**Sale Price**	**Certificate**	**Book & Page**	**Sale Date**
TROIANO REALTY CORP	$0	1	305/ 468	

Building Information

Building 1 : Section 1

Year Built:	1965
Living Area:	10,980
Replacement Cost:	$490,290
Building Percent Good:	37
Replacement Cost Less Depreciation:	$181,410

Building Attributes

Field	Description
STYLE	Industrial Flex Bldg
MODEL	Ind/Comm
Grade	Average
Stories:	1
Occupancy	3
Exterior Wall 1	Pre-finsh Metl
Exterior Wall 2	
Roof Structure	Gable
Roof Cover	Metal/Tin
Interior Wall 1	Minim/Masonry
Interior Wall 2	
Interior Floor 1	Vinyl/Asphalt
Interior Floor 2	
Heating Fuel	Gas
Heating Type	Forced Air-Duc
AC Type	None
Bldg Use	Industrial
Total Rooms	
Total Bedrms	
Total Baths	
Total H Bths	
Extra Fixtures	
1st Floor Use:	
Heat/AC	None
Frame Type	Steel
Baths/Plumbing	Average
Ceiling/Wall	None
Rooms/Prtns	Average
Wall Height	15
% Comn Wall	

Building Photo

(http://images.vgsi.com/photos2/EnfieldCTPhotos//\00\01\95/47

Building Layout

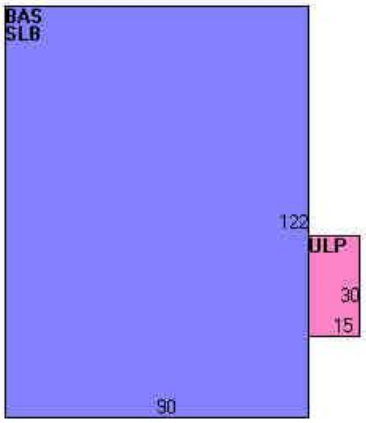

(http://images.vgsi.com/photos2/EnfieldCTPhotos//Sketches/223

Building Sub-Areas (sq ft)			Legend
Code	**Description**	**Gross Area**	**Living Area**
BAS	First Floor	10,980	10,980
SLB	Slab	10,980	0
ULP	Uncvrd Loading Platform	450	0
		22,410	10,980

Extra Features

Extra Features	Legend
No Data for Extra Features	

Land

Land Use

Land Line Valuation

Use Code	301	**Size (Acres)**	15.1
Description	Industrial	**Frontage**	
Zone	I-1	**Depth**	
Neighborhood	C500	**Assessed Value**	$494,150
Alt Land Appr	No	**Appraised Value**	$705,920
Category			

Outbuildings

Outbuildings						Legend
Code	**Description**	**Sub Code**	**Sub Description**	**Size**	**Value**	**Bldg #**
PAV1	Paving	AS	Asphalt	32200 S.F.	$5,540	1
TNK2	Tank - Oil			500000 GALS	$240,000	1
FN2	FENCE-6' CHAIN			900 L.F.	$1,220	1
TWR5	Cell Twr5 Carriers			1 UNITS	$740,630	1

Valuation History

Appraisal			
Valuation Year	**Improvements**	**Land**	**Total**
2018	$1,168,800	$705,920	$1,874,720
2017	$1,168,800	$705,920	$1,874,720
2016	$1,168,800	$705,920	$1,874,720

Assessment			
Valuation Year	**Improvements**	**Land**	**Total**
2018	$818,160	$494,150	$1,312,310
2017	$818,160	$494,150	$1,312,310
2016	$818,160	$494,150	$1,312,310

(c) 2016 Vision Government Solutions, Inc. All rights reserved.

Ryan Burgdorfer

From: TrackingUpdates@fedex.com
Sent: Friday, February 15, 2019 10:10 AM
To: Ryan Burgdorfer
Subject: FedEx Shipment 774464454379 Delivered

Your package has been delivered

Tracking # 774464454379

Ship date:
Thu, 2/14/2019

Ryan Burgdorfer
Smartlink LLC
NORTH BILLERICA, MA 01862
US

Delivered

Delivery date:
Fri, 2/15/2019 9:59 am

Laurie Whitten
LAURIE WHITTEN
820 ENFIELD ST
TOWN OF ENFIELD
ENFIELD, CT 06082296420
US

Shipment Facts

Our records indicate that the following package has been delivered.

Tracking number:	774464454379
Status:	Delivered: 02/15/2019 09:59 AM
Reference:	CTL05293
Delivery location:	Enfield, CT
Service type:	FedEx Ground
Packaging type:	Package
Number of pieces:	1
Weight:	1.00 lb.
Special handling/Services:	;
Standard transit:	2/15/2019

Please do not respond to this message. This email was sent from an unattended mailbox. This report was generated at approximately 9:10 AM CST on 02/15/2019.

All weights are estimated.

To track the latest status of your shipment, click on the tracking number above.

Ryan Burgdorfer

From: TrackingUpdates@fedex.com
Sent: Tuesday, February 19, 2019 1:05 PM
To: Ryan Burgdorfer
Subject: FedEx Shipment 774464705118 Delivered

Your package has been delivered

Tracking # 774464705118

Ship date:
Thu, 2/14/2019

Ryan Burgdorfer
Smartlink LLC
NORTH BILLERICA, MA 01862
US

Delivered

Delivery date:
Tue, 2/19/2019 1:03 pm

Carla Shorter
SBA COMMUNICATIONS CORP.
8051 CONGRESS AVE
BOCA RATON, FL
33487131099
US

Shipment Facts

Our records indicate that the following package has been delivered.

Tracking number:	774464705118
Status:	Delivered: 02/19/2019 1:03 PM Signed for By: JMETZ
Reference:	CTL05293
Signed for by:	JMETZ
Service type:	FedEx Ground
Packaging type:	Package
Number of pieces:	1
Weight:	1.00 lb.
Special handling/Services:	;
Standard transit:	2/19/2019

Please do not respond to this message. This email was sent from an unattended mailbox. This report was generated at approximately 12:04 PM CST on 02/19/2019.

All weights are estimated.

To track the latest status of your shipment, click on the tracking number above.

Ryan Burgdorfer

From: TrackingUpdates@fedex.com
Sent: Friday, February 15, 2019 10:14 AM
To: Ryan Burgdorfer
Subject: FedEx Shipment 774464671539 Delivered

Your package has been delivered

Tracking # 774464671539

Ship date:
Thu, 2/14/2019

Ryan Burgdorfer
Smartlink LLC
NORTH BILLERICA, MA 01862
US

Delivered

Delivery date:
Fri, 2/15/2019 10:12 am

TROIANO REALTY CORP
777 ENFIELD ST
ENFIELD, CT 06082290477
US

Shipment Facts

Our records indicate that the following package has been delivered.

Tracking number:	774464671539
Status:	Delivered: 02/15/2019 10:12 AM Signed for By: Signature Not Req
Reference:	CTL05293
Signed for by:	Signature Not Req
Service type:	FedEx Ground
Packaging type:	Package
Number of pieces:	1
Weight:	1.00 lb.
Special handling/Services:	;
Standard transit:	2/15/2019

Please do not respond to this message. This email was sent from an unattended mailbox. This report was generated at approximately 9:14 AM CST on 02/15/2019.

All weights are estimated.

To track the latest status of your shipment, click on the tracking number above.

Standard transit is the date the package should be delivered by, based on the selected service, destination, and ship date. Limitations and exceptions may apply.Please see the FedEx Service Guide for terms and conditions of service, including the FedEx Money-Back Guarantee, or contact your FedEx Customer Support representative.

Ryan Burgdorfer

From: TrackingUpdates@fedex.com
Sent: Friday, February 15, 2019 10:10 AM
To: Ryan Burgdorfer
Subject: FedEx Shipment 774463545966 Delivered

Your package has been delivered

Tracking # 774463545966

Ship date:
Thu, 2/14/2019

Ryan Burgdorfer
Smartlink LLC
NORTH BILLERICA, MA 01862
US

Delivered

Delivery date:
Fri, 2/15/2019 9:59 am

Mayor Michael Ludwick
MAYOR MICHAEL LUDWICK
820 ENFIELD ST
TOWN OF ENFIELD
ENFIELD, CT 06082296420
US

Shipment Facts

Our records indicate that the following package has been delivered.

Tracking number:	774463545966
Status:	Delivered: 02/15/2019 09:59 AM
Reference:	CTL05293
Delivery location:	Enfield, CT
Service type:	FedEx Ground
Packaging type:	Package
Number of pieces:	1
Weight:	1.00 lb.
Special handling/Services:	;
Standard transit:	2/15/2019

Please do not respond to this message. This email was sent from an unattended mailbox. This report was generated at approximately 9:10 AM CST on 02/15/2019.

All weights are estimated.

To track the latest status of your shipment, click on the tracking number above.