STATE OF CONNECTICUT
CONNECTICUT SITING COUNCIL
Ten Franklin Square, New Britain, CT 06051
Phone: (860) 827-2935 Fax: (860) 827-2950
E-Mail: siting.council@ct.gov
www.ct.gov/csc

May 29, 2012

Lauren Groppi
TRM, Inc.
16 Chestnut Street
Foxborough, MA 02035

RE: **EM-AT&T-049-120510** – AT&T Mobility notice of intent to modify an existing telecommunications facility located at 188 Moody Road, Enfield, Connecticut.

Dear Ms. Groppi:

The Connecticut Siting Council (Council) hereby acknowledges your notice to modify this existing telecommunications facility, pursuant to Section 16-50j-73 of the Regulations of Connecticut State Agencies with the following conditions:

- Any deviation from the proposed modification as specified in this notice and supporting materials with Council shall render this acknowledgement invalid;
- Any material changes to this modification as proposed shall require the filing of a new notice with the Council;
- Not less than 45 days after completion of construction, the Council shall be notified in writing that construction has been completed;
- The validity of this action shall expire one year from the date of this letter; and
- The applicant may file a request for an extension of time beyond the one year deadline provided that such request is submitted to the Council not less than 60 days prior to the expiration;

The proposed modifications including the placement of all necessary equipment and shelters within the tower compound are to be implemented as specified here and in your notice dated May 10, 2012. The modifications are in compliance with the exception criteria in Section 16-50j-72 (b) of the Regulations of Connecticut State Agencies as changes to an existing facility site that would not increase tower height, extend the boundaries of the tower site, increase noise levels at the tower site boundary by six decibels, and increase the total radio frequencies electromagnetic radiation power density measured at the tower site boundary to or above the standard adopted by the State Department of Environmental Protection pursuant to General Statutes § 22a-162. This facility has also been carefully modeled to ensure that radio frequency emissions are conservatively below State and federal standards applicable to the frequencies now used on this tower.

This decision is under the exclusive jurisdiction of the Council. Please be advised that the validity of this action shall expire one year from the date of this letter. Any additional change to this facility will require explicit notice to this agency pursuant to Regulations of Connecticut State Agencies Section 16-50j-73. Such notice shall include all relevant information regarding the proposed change

with cumulative worst-case modeling of radio frequency exposure at the closest point of uncontrolled access to the tower base, consistent with Federal Communications Commission, Office of Engineering and Technology, Bulletin 65. Thank you for your attention and cooperation.

Very truly yours,

Linda Roberts

Linda Roberts
Executive Director

LR/cm

c: The Honorable Scott Kaupin, Mayor, Town of Enfield
Matthew W. Coppler, Town Manager, Town of Enfield
Jose Giner, Director of Planning and Community Development, Town of Enfield

STATE OF CONNECTICUT

CONNECTICUT SITING COUNCIL

Ten Franklin Square, New Britain, CT 06051
Phone: (860) 827-2935 Fax: (860) 827-2950
E-Mail: siting.council@ct.gov
www.ct.gov/csc

May 11, 2012

The Honorable Scott Kaupin
Mayor
Town of Enfield
820 Enfield Street
Enfield, CT 06082

RE: **EM-AT&T-049-120510** – AT&T Mobility notice of intent to modify an existing telecommunications facility located at 188 Moody Road, Enfield, Connecticut.

Dear Mayor Kaupin:

The Connecticut Siting Council (Council) received this request to modify an existing telecommunications facility, pursuant to Regulations of Connecticut State Agencies Section 16-50j-72.

If you have any questions or comments regarding this proposal, please call me or inform the Council by May 25, 2012.

Thank you for your cooperation and consideration.

Very truly yours,

Linda Roberts MHB

Linda Roberts
Executive Director

LR/cm

Enclosure: Notice of Intent

c: Matthew W. Coppler, Town Manager, Town of Enfield
Jose Giner, Director of Planning and Community Development, Town of Enfield

EM-AT&T-049-120510

ORIGINAL

May 10, 2012

RECEIVED
MAY 10 2012
CONNECTICUT
SITING COUNCIL

Ms. Linda Roberts, Executive Director
Connecticut Siting Council
10 Franklin Square
New Britain, CT 06051

RE: AT&T Exempt Modification Acknowledgement
188 Moody Road, Enfield, CT

Dear Ms. Roberts:

Enclosed please find an original and 5 copies of the above noted Applications and the corresponding filing fee on behalf of AT&T.

The proposed AT&T installation will replace the existing antenna array, add three (3) antennas and a surge arrestor on the Existing Monopole with supporting ground equipment.

Please do not hesitate to contact me with any questions or concerns.

Thank you.

Sincerely,

Lauren Groppi
TRM, Inc.
16 Chestnut Street
Foxborough, MA 02035
lgroppi@trmcom.com

May 10, 2012

Greg Csapo
TowerCo
5000 Valleystone Dr.
Cary, NC 27519

RE: AT&T Exempt Modification Application
188 Moody Road, Enfield, CT

Dear Mr. Csapo:

This letter is being sent to you on behalf of AT&T. AT&T filed an Exempt Modification Application with the Connecticut Siting Council on May 10, 2012, seeking acknowledgement to modify their existing installation on the existing Monopole at 188 Moody Road, Enfield, CT.

If you have any questions or concerns, please do not hesitate to contact me.

Thank you.

Sincerely,

Lauren Groppi
TRM, Inc.
16 Chestnut Street
Foxborough, MA 02035
lgroppi@trmcom.com

Cc: Linda Roberts, Executive Director, Connecticut Siting Council

Request of AT&T

For the Acknowledgement to Modify
An Existing Installation on a Monopole

Located at 188 Moody Road, Enfield, CT

Table of Contents

1. Project Narrative and Summary

2. Exhibits
    A. Site Plan

    B. Structural Analysis

    C. Radio Frequency Electromagnetic Power Density Reports

CONNECTICUT SITING COUNCIL

Request of AT&T	:	
For the Acknowledgement to of an Exempt	:	
Modification to an Existing Monopole	:	May 10, 2012
Located at 188 Moody Road,	:	
Enfield, CT	:	

EXEMPT MODIFICATION APPLICATION
TO MODIFY AN INSTALLATION ON AN EXISTING MONOPOLE
AT 188 MOODY ROAD, ENFIELD, CT

1. Introduction

Pursuant to Section 16-50j-72 and 16-50j-73 of the Connecticut General Statutes (the "Statute"), AT&T requests that the Connecticut Siting Council (the "Council") acknowledge this Exempt Modification Application to modify an existing installation on an existing monopole. The existing monopole is located at 188 Moody Road, Enfield, CT and is owned by TowerCo.

The AT&T modification involves adding three (3) antennas on an existing array at one hundred fifty eight feet (158') above ground level along with accompanying ground equipment.

The modification will not cause substantial adverse environmental effect. The Site is technically feasible, environmentally feasible and avoids the unnecessary siting of additional tower facilities within the Town of Enfield.

2. Proposed AT&T Installation

AT&T is licensed to provide wireless telecommunication services to the State of Connecticut by the Federal Communications Commission ("FCC").

The existing one hundred and ninety two foot (192') monopole is located at 188 Moody Road (Latitude: 42° 0' 8.61" N, Longitude: 72° 31' 17.4" W).

The AT&T installation is proposed at one hundred fifty eight (158') feet above ground level. The ground equipment will be located within AT&T's existing compound area. The proposed AT&T installation will not interfere with either of the existing facilities.

AT&T intends to replace the existing mount with a new T-Arm mount. Two (2) Powerwave P65-17-XLH-RR antennas, one (1) Commscope SBNH-1D6565C antenna, six (6) Ericsson RRUS11 remote radio heads and one (1) DC6-48-60-18-8F Surge Arrestor will be placed on the replacement array with the current existing equipment on the monopole. In addition to the antennas and surge arrestor, one (1) 3/8" fiber cables will be run to serve all of the new antennas along with two (2) 5/8" DC cables. These cables will be placed on the interior of the monopole.

AT&T proposes to place the ground equipment in the existing compound. The ground installation includes two cabinets: one (1) Emerson DC Plant (on a concrete pad extension (5' 6" x 3' 0")) and one (1) RBS6601 LTE cabinet on the existing concrete pad. Further details can be seen on the Site Plan attached as Exhibit A.

A. Technical Feasibility

The monopole is capable of supporting AT&T's proposed installation. TowerCo performed a structural assessment on monopole and provided a full report to AT&T. Based on their review, TowerCo determined that the existing monopole will satisfy the requirements of applicable codes and standards, consistent with the requirement of the Statute. Please see Exhibit C for the Structural Analysis.

B. Environmental Feasibility

The proposed installation will have negligible impact. The environmental impact to the Town of Enfield is reduced by carriers collocating on an existing installation on an existing structure. AT&T proposes to collocate at approximately 158' feet above ground level on its existing antenna array, which will not increase the height of the monopole and have little or no increase in visibility to the Town.

AT&T's proposed installation will not impact wetlands or water resources.

AT&T's proposed facilities will not create air pollutants nor increase the impact on air quality during normal operation of the facility. There will only be a slight increase in noise pollution during site construction.

There will be a small amount of traffic generated at the Site during construction as workers arrive and depart the site and materials are delivered. When construction is complete, the traffic will be minimal with an average of one maintenance visit per month.

C. Public Safety Concerns

The proposed installation will not have an adverse impact to the health and safety of the surrounding residences and businesses.

The total radio frequency electromagnetic power density at the Site will not be increased above the standard adopted by the Connecticut Department of Environmental Protection as set forth in Section 22a-162 of the Connecticut General Statutes and the MPE limits established by the Federal Communications Commission. These findings are noted in the power density report included as Exhibit C.

With the proposed installation, AT&T will better serve its customers including local residences and businesses. By seeking to expand their LTE network in Connecticut, AT&T will be able to provide more reliable wireless service to their customers in the Enfield area, fulfilling their coverage goals to comply with their FCC License.

3. Conclusion

The proposed installation will comply with all the requirements set forth by the Statute. In accordance with RCSA § 16-50j-73, the proposed installation does not increase the tower height, extend the boundaries of the tower site, increase noise levels at the tower site boundary by 6 decibels, nor will it add radio frequency sending or receiving capability to or above the standard adopted by the State Department of Environmental Protection pursuant to Section 22a-162 of the Connecticut General Statutes. Therefore, AT&T respectfully requests that the Council acknowledge this Exempt Modification Application at 188 Moody Road, Enfield, CT.

Respectfully Submitted,

Lauren Groppi, TRM, Inc.
On behalf of AT&T

Cc: Matthew Coppler, General Manager, Town of Enfield
Gregory P. Csapo, TowerCo
Linda Roberts, Executive Director, Connecticut Siting Council

Certificate of Service

This is to certify that on this 10th day of May, 2012 the foregoing Application was sent via first class mail, to the following:

Matthew Coppler, General Manager
Town of Enfield, Connecticut
41 Center Street
Enfield, CT 06040

By: _____
Lauren Groppi

TowerCo

PASS
(Shaft, 98% capacity)

vertical solutions

May 1, 2012

Ms. Catherine Godwin
TowerCo, LLC
5000 Valleystone Drive
Cary, NC 27519
(919) 653-5737

Vertical Solutions, Inc.
PO Box 579
Holly Springs, NC 27540
(888) 321-6167
operations@verticalsolutions-inc.com

Subject:	**Rigorous Structural Analysis**
Carrier Designation	**AT&T, Reconfiguration** **Site Number: CT5293** **Site Name: AWE – ENFIELD EAST**
TowerCo Designation	**Site Number: CT2000** **Site Name: Enfield-moody Rd**
Engineering Firm Designation	**Vertical Solutions Project: 120735, Revision 0**
Site Data	**188 Moody Road, Enfield, Hartford County, CT 06082** **Latitude: N42° 00' 7.20"±; Longitude: W072° 31' 18.10"±** **Elevation: 178 ft±, Topography Category: 1;** **188-ft Self-Supporting Pole Structure (Monopole)**

Dear Ms. Godwin,

To your request, we present our structural analysis.

Our work indicates that with the proposed appurtenance configuration, the tower and foundation **will** satisfy the structural strength requirements of TIA/EIA-222-F-1996, *Structural Standards for Steel Antenna Towers and Antenna Supporting Structures* (industry standard) and the *2005 Connecticut Building Code* (local building code) for:

- 80-mph fastest mile basic wind speed
- 69-mph fastest mile basic wind speed with 1/2-in radial ice

We trust you find our work satisfactory. Please do not hesitate to call should you have any questions.

Sincerely,

Joshua H. Walton, E.I.
Structural Engineer-In-Training

STATE OF CONNECTICUT
No. 25064
LICENSED
PROFESSIONAL ENGINEER

05/03/2012

Michael L. Lassiter, S.E., P.E., C.W.I.
Structural Engineer, Civil Engineer, Certified Weld Inspector
& President

Produced by: JEJ

Table 1: Existing, Proposed and Reserved Appurtenance Configuration

Elevation (AGL, ft)	Carrier	Mount	Equipment	Coax	Location
188	T-Mobile	Low Profile Platform[1]	(9) RFS APX16PV-16-PVL-E (12) TMAs[4]	(18) 1 5/8	Inside
181.0	Clearwire	Low Profile Platform	(2) Andrew VHLP1-23	(2) 1/2	Inside
178.5	Sprint / Nextel		(3) Kathrein 840-10054 (3) RRU 26" x 14" x 9"[4] (1) GPS (9) Decibel DB844H90E-XY	(6) 5/16 (1) 1/2 (9) 1 5/8	Inside
168.5[2]	Sprint / Nextel [Existing]	Low Profile Platform	(6) Andrew DB980F90E-M	(6) 1 5/8	Inside
	Sprint / Nextel [Design]	Low Profile Platform	(12) Decibel DB844	(12) 1 5/8	Inside
158.0	**AT&T[3]**	**(3) T-Arms**	**(2) Powerwave P65-17-XLH-RR** **(1) Powerwave SBNH-1D6565C** **(6) Ericsson RRUS11[4]** **(1) Raycap DC48-60-18-8F** (3) Powerwave 7770 (6) Powerwave LGP21401[4]	**(1) 3/8** **(2) 5/8** (6) 1 5/8	**Inside**
148	Pocket Communication	Flush	(3) Kathrein 742-213	(6) 1 5/8	Outside
60.5	Sprint / Nextel	Side Arms	(1) GPS	(1) 1/2	Outside

1 – Low profile platform at 184 ft.
2 – Design loading [EPA = 40.1 sq. ft] is greater than existing loading [EPA = 18.9 sq. ft] but less than the maximum reserved loading. Therefore, the design loading was considered in the analysis.
3 – AT&T to remove existing stand off arms.
4 – TMAs assumed to be mounted behind antennas

Table 2: Tower Structure Results, Percent Capacity Utilized[1]

Elevation (ft)	Shaft	Result	Connections	Result
188 to 178	11	O. K.	60	O.K.
178 to 132.5	82	O. K.	-	-
132.5 to 87.5	95	O. K.	-	-
87.5 to 43.25	**98**	**O. K.**	-	-
43.25 to 0	94	O. K.	96	O.K.

1 – Utilization of 105% or less is considered acceptable.

Table 3: Foundation Results, Percent Capacity Utilized

Component	Design	Analysis	Percent Utilized	Result
Soil	27' caisson	26' caisson	96	O. K.
Structure	5232 kip-ft	4827 kip-ft	92	O. K.

1 – Utilization of 105% or less is considered acceptable.

Attachments:

- Project History
- Coax configuration
- Program input and output
- Base plate and anchor rod calculations
- Flange plate and Flange bolts calculations
- Foundation calculations

Project History

VSi Project #: 120735, Revision 0
TowerCo Site Id: CT2000
TowerCo Site Name: Enfield-moody Rd.

Design Documents						
TowerCo Document	Structure	Issued Date	Document ID	Issued By	Issued To	Description
505442	CT2000	9/30/1998	19980930_GEO_CT2000	Tectonic Enigneering & Surveying Consultants	Nextel	Geotechnical Investigation
197314	CT2000	2/12/2000	20000212_TFDC_CT2000	Summit Manufacturing, LLC	Nextel	Tower and Foundation Design Calculations
242075	CT2000	11/14/2001	242075_CT2000 Enfield-Moody Rd. Sprint SLA 12-11-00.pdf	Sprint Spectrum	Nextel	Site Lease Agreement
505401	CT2000	5/31/2002	20020531_SLA_CT2000	TowerCo	AT&T	Site Lease Agreement
242073	CT2000	8/28/2007	20070828_SRL_CT2000	Paul J. Ford	Sprint	Structural Analysis
197323	CT2000	11/17/2007	197323_CT2000 Enfield-Moody Rd. T-Mobile Tower Load Form 11-17-07.pdf	Sprint		Tower Loading Form
242061	CT2000	11/27/2007	242061_CT2000 Enfield-Moody Rd. Cingular Tower Loading Form 11-27-07.pdf	Sprint		Tower Loading Form
242083	CT2000	12/17/2007	20071217_SAR_CT2000	Semaan Engineering Solutions	Sprint	Structural Analysis
310379	CT2000	2/12/2008	310379_CT2000 Enfield-moody Rd. Cingular Site Lease Amend 1_02.12.08.pdf	Nextel	New Cingular	Site Lease Agreement
242069	CT2000	2/19/2008	242069_CT2000 Enfield-Moody Rd. Cingular 1st Amend. 02-19-08.pdf	Nextel	New Cingular	Site Lease Agreement
513579	CT2000	3/12/2008	20080312_SLA_CT2000	TowerCo	Pocket Communications	Site Lease Agreement
779387	CT2000	3/14/2008	20080314_TID_CT2000	Paul J. Ford	Sprint	Tower Improvement Drawings
197321	CT2000	3/19/2008	20080319_SAR_CT2000	Semaan Engineering Solutions	Sprint	Structural Analysis
242081	CT2000	3/26/2008	20080326_SLA_CT2000	TowerCo	T-Mobile	Site Lease Agreement

vertical solutions
"execute & deliver"

Design Documents						
TowerCo Document	Structure	Issued Date	Document ID	Issued By	Issued To	Description
197320	CT2000	4/23/2008	197320_CT2000 Enfield-Moody Rd. T-Mobile Rent Commencment Letter 04-23-08.pdf	T-Mobile	Sprint	Commencement Notice
242062	CT2000	6/12/2008	242062_CT2000 Enfield-Moody Rd. Cingular 1st Amend to SLA -Partially Executed- 06-12-08.pdf	Nextel	New Cingular	Site Lease Agreement
695459	CT2000	8/19/2008	695459_CT2000 Enfield-moody Rd. Pocket PCS Closeout Package.pdf	Pocket Communications		Close-Out Letter
779315	CT2000	8/28/2008	20080828_SAR_CT2000	Semaan Engineering Solutions	Sprint	Structural Analysis
711875	CT2000	9/23/2008	20080923_SLA_CT2000	TowerCo	Sprint	Site Lease Agreement
714939	CT2000	10/27/2008	20081027_TED_CT2000	SiteMaster	TowerCo	Tower Elevation Drawing
719719	CT2000	10/27/2008	20081027_SIR_CT2000	SiteMaster	TowerCo	site inspection report
844315	CT2000	3/3/2009	844315_CT2000 Enfield-moody Rd. Email from AT&T Confirming Rent Comm Date.pdf	TowerCo		Commencement Notice
844313	CT2000	3/31/2009	844313_CT2000 Enfield-moody Rd. Email from Pocket now Metro PCS Confirming Rent Comm Date.pdf	TowerCo		Commencement Notice
780307	CT2000	2/24/2010	780307_CT2000 Enfield-moody Rd. _Vertical_Structural Analysis_Clearwire_Reconfiguration_20100224.pdf	Vertical Solutions	TowerCo	Structural Analysis Report
786038	CT2000	3/17/2010	786038_CT2000 Enfield-moody Rd. Sprint-Clearwire 1st Amendment Fully Executed.pdf	TowerCo	Sprint	Site Lease Agreement
790096	CT2000	4/20/2010	790096_CT2000 Enfield-moody Rd. Sprint-Clearwire 1st Amendment Rent Comm Letter.pdf	Sprint	TowerCo	Commencement Notice
793447	CT2000	4/21/2010	793447_CT2000 Enfield-moody Rd. Sprint Rent Comm Letter to TowerCo.pdf	Sprint	TowerCo	Commencement Notice
859142	CT2000	6/13/2010	859142_CT2000 Enfield-moody Rd. Tower_Inspection_Photos_Clearwire_20110613.pdf	TowerCo	Vertical Solutions	Photos
804677	CT2000	8/27/2010	804677_CT2000 Enfield-moody Rd. Pocket PCS Clerical Error Amendment.pdf	TowerCo	Youghiogheny Communications LLC	Clerical Error Ammendment
708797	CT2000	3/2/2011	708797_CT2000 Enfield-moody Rd. Site Plan.pdf	TowerCo		Site Plan

Design Documents						
TowerCo Document	Structure	Issued Date	Document ID	Issued By	Issued To	Description
--	CT2000	4/24/2012	CT2000 SA Loading.xls	TowerCo	Vertical Solutions	SA Loading
--	CT2000	4/24/2012	CT5293 ATT LTE CD REV1 041312.pdf	Hudson Design Group	AT&T	Construction Drawings
--	CT2000	4/24/2012	CT5293 TowerCo CT2000 Collocation App Rev 032912.doc	TowerCo	AT&T	Reconfiguration Tenant Application
--	CT2000	4/24/2012	TOWERDOCS_n242081_v1_CT2000_Enfield-Moody_Rd__T-Mobile_SLA_03-26-08.pdf	T-Mobile	Sprint	Site Lease Agreement
--	CT2000	4/24/2012	TOWERDOCS_n513579_v1_CT2000_Enfield-moody_Rd___Pocket_Fully_Executed_SLA.pdf	TowerCo	Youghiogheny Communications, LLC	Site Lease Agreement
--	CT2000	4/24/2012	TOWERDOCS_n786038_v1_CT2000_Enfield-moody_Rd__Sprint_Clearwire_1st_Amendment_Fully_Executed.pdf	TowerCo	Sprint Spectrum	Site Lease Agreement

Table Note:

Files name format YYYYMMDD-XXX-ZZZZZZ.pdf

Where:

YYYYMMDD = Year, Month, Day published/issued
XXX=file describer
ZZZZZZ=TowerCo Site ID

COAX CONFIGURATION PLAN AT 178.5-FT

SCALE: 1" = 1'-0"

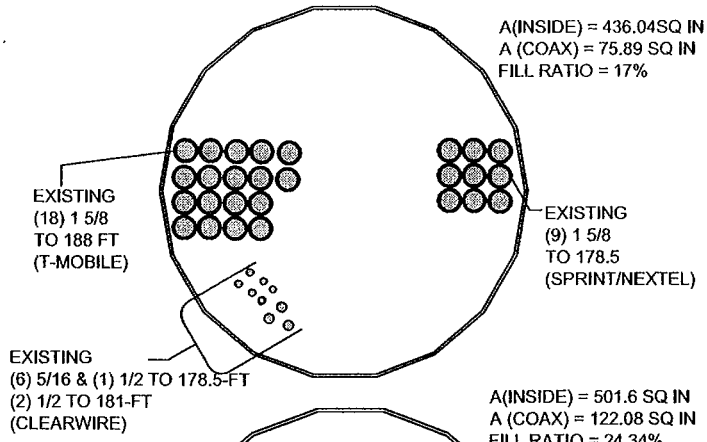

COAX CONFIGURATION PLAN AT 168.5-FT

SCALE: 1" = 1'-0"

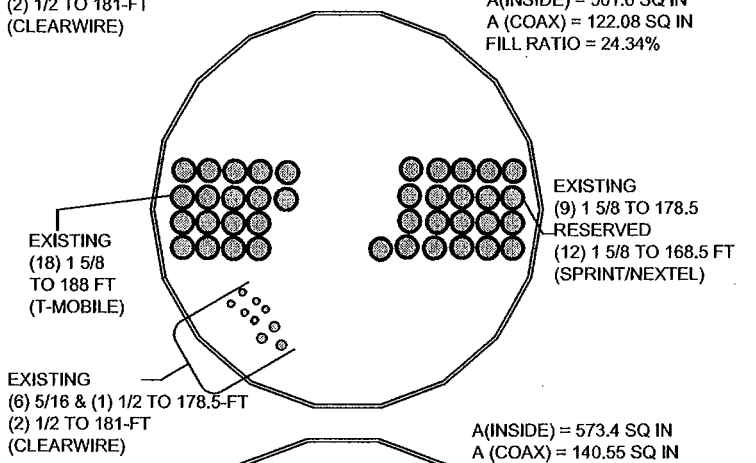

COAX CONFIGURATION PLAN AT 158-FT

SCALE: 1" = 1'-0"

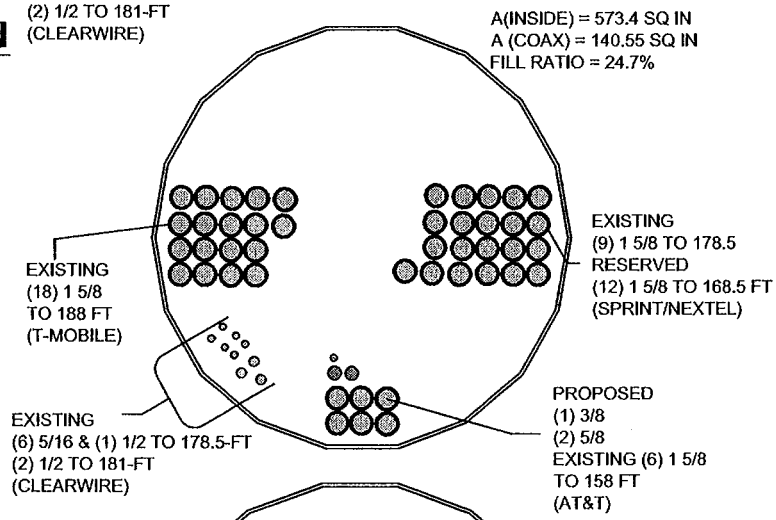

COAX CONFIGURATION PLAN AT 148-FT

SCALE: 1" = 1'-0"

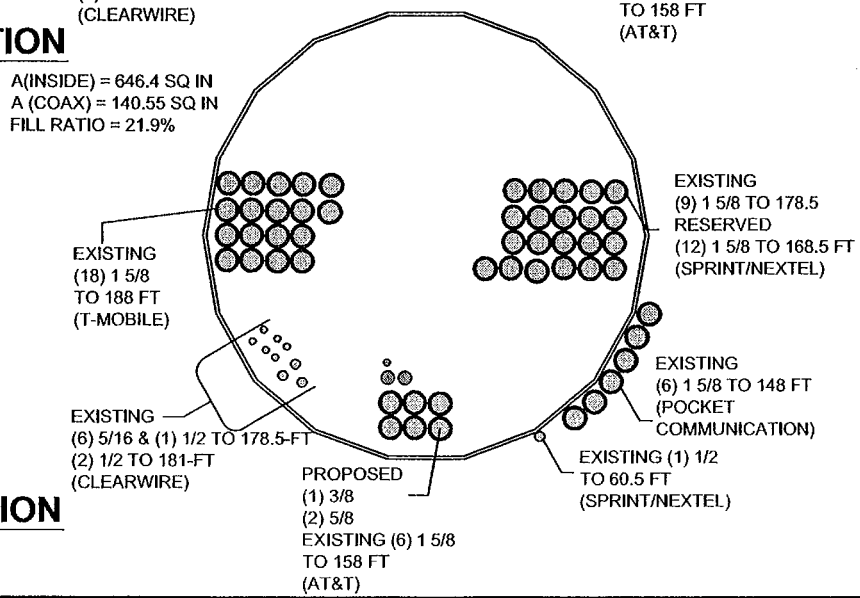

DRAWN BY: JEJ | CHECKED BY: JHW

SHEET NUMBER: QP-P

REVISION: 0

VSI #: 120735

REV	DATE
0	04/30/2012

PREPARED FOR:

TowerCo
5000 Valley Stone Drive
Cary, NC 27519
Office: (919) 469-5559
Fax: (919) 469-5530
www.towerco.com

PROJECT NAME: ENFIELD MOODY RD

TOWERCO JOB #: CT2000

PREPARED BY:

vertical solutions
2002 Production Drive
Apex, NC 27539
Office: (888) 321-6167
Fax: (919) 321-1768
www.verticalsolutions-inc.com

Section	Length (ft)	Number of Sides	Thickness (in)	Socket Length (ft)	Top Dia (in)	Bot Dia (in)	Grade	Weight (K)
1	10.00	18	0.1875		22.3400	24.0000		0.5
2	45.50	18	0.2188	4.00	24.0000	31.5540		3.0
3	49.00	18	0.3125	4.75	30.4524	38.5880	A572-65	5.7
4	49.00	18	0.3750	5.75	37.1743	45.3090		8.1
5	49.00	18	0.4375		43.6044	51.7400		10.9
								28.1

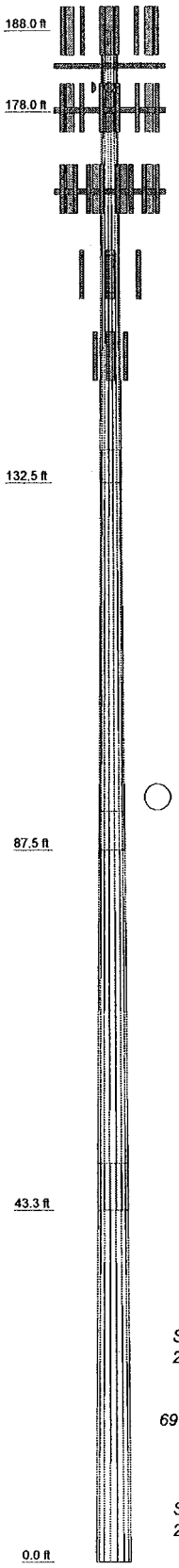

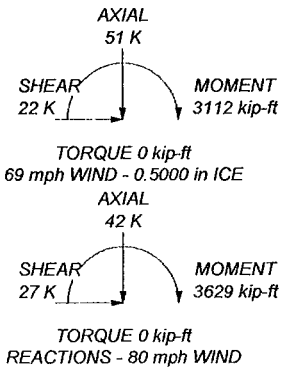

DESIGNED APPURTENANCE LOADING

TYPE	ELEVATION	TYPE	ELEVATION
(3) APX16PV-16-PVL-E w/ 2" Pipe (T-Mobile)	188	(4) DB844H90 (Sprint)	168.5
(3) APX16PV-16-PVL-E w/ 2" Pipe (T-Mobile)	188	PiROD 13' Low Profile Platform (Sprint)	168.5
(3) APX16PV-16-PVL-E w/ 2" Pipe (T-Mobile)	188	Powerwave 7770.00 with Mount Pipe (ATI)	158
(4) TMA (T-Mobile)	188	(2) Powerwave LGP21401 (ATI)	158
(4) TMA (T-Mobile)	188	(2) Powerwave LGP21401 (ATI)	158
(4) TMA (T-Mobile)	188	(2) Powerwave LGP21401 (ATI)	158
PiROD 13' Low Profile Platform (T-Mobile)	184	4' T-Arm (12' face width) (ATI)	158
VHLP1-23 (Clearwire)	181	4' T-Arm (12' face width) (ATI)	158
VHLP1-23 (Clearwire)	181	4' T-Arm (12' face width) (ATI)	158
(3) DB844H90E-XY (Sprint)	178.5	(2) Ericsson RRUS-11 (ATI)	158
PiROD 13' Low Profile Platform (Sprint)	178.5	Raycap DC6-48-60-18-8F (ATI)	158
Kathrein 840-10054 w Mount Pipe (Sprint)	178.5	Powerwave 7770.00 with Mount Pipe (ATI)	158
Kathrein 840-10054 w Mount Pipe (Sprint)	178.5	Powerwave 7770.00 with Mount Pipe (ATI)	158
Kathrein 840-10054 w Mount Pipe (Sprint)	178.5	Powerwave P65-17-XLH-RR w/ MP (ATI)	158
RRU 26" x 14" x 9" TMA (Sprint)	178.5	Powerwave P65-17-XLH-RR w/ MP (ATI)	158
RRU 26" x 14" x 9" TMA (Sprint)	178.5	Commscope SBNH-1D6565C with Mount Pipe (ATI)	158
RRU 26" x 14" x 9" TMA (Sprint)	178.5	(2) Ericsson RRUS-11 (ATI)	158
GPS (Sprint)	178.5	(2) Ericsson RRUS-11 (ATI)	158
(3) DB844H90E-XY (Sprint)	178.5	Kathrein 742-213 w/MP (Pocket PCS)	148
(3) DB844H90E-XY (Sprint)	178.5	Kathrein 742-213 w/MP (Pocket PCS)	148
(4) DB844H90 (Sprint)	168.5	Kathrein 742-213 w/MP (Pocket PCS)	148
(4) DB844H90 (Sprint)	168.5	GPS (Sprint)	60.5
		Side Arm (Sprint)	60.5

MATERIAL STRENGTH

GRADE	Fy	Fu	GRADE	Fy	Fu
A572-65	65 ksi	80 ksi			

TOWER DESIGN NOTES

1. Tower is located in Hartford County, Connecticut.
2. Tower designed for a 80 mph basic wind in accordance with the TIA/EIA-222-F Standard.
3. Tower is also designed for a 69 mph basic wind with 0.50 in ice.
4. Deflections are based upon a 60 mph wind.
5. TOWER RATING: 97.6%

TowerCo

TowerCo
5000 Valleystone Drive
Cary, NC 27519
Phone: (919) 469-5559
FAX: (919) 469-5530

Job: *CT2000-ERP*			
Project: *ENG-14521 (98%)*			
Client: TowerCo	Drawn by: jjones	App'd:	
Code: TIA/EIA-222-F	Date: 05/01/12	Scale: NTS	
Path: L:\20120735_Enfield Moody Rd_CT\Task 1\Models\tnxtower\ERP\CT2000-ERP.or		Dwg No. E-1	

Tower Input Data

There is a pole section.
This tower is designed using the TIA/EIA-222-F standard.
The following design criteria apply:

Tower is located in Hartford County, Connecticut.
Basic wind speed of 80 mph.
Nominal ice thickness of 0.5000 in.
Ice density of 56 pcf.
A wind speed of 69 mph is used in combination with ice.
Temperature drop of 50 °F.
Deflections calculated using a wind speed of 60 mph.
A non-linear (P-delta) analysis was used.
Pressures are calculated at each section.
Stress ratio used in pole design is 1.333.
Local bending stresses due to climbing loads, feedline supports, and appurtenance mounts are not considered.

Tapered Pole Section Geometry

Section	Elevation ft	Section Length ft	Splice Length ft	Number of Sides	Top Diameter in	Bottom Diameter in	Wall Thickness in	Bend Radius in	Pole Grade
L1	188.00-178.00	10.00	0.00	18	22.3400	24.0000	0.1875	0.7500	A572-65 (65 ksi)
L2	178.00-132.50	45.50	4.00	18	24.0000	31.5540	0.2188	0.8750	A572-65 (65 ksi)
L3	132.50-87.50	49.00	4.75	18	30.4524	38.5880	0.3125	1.2500	A572-65 (65 ksi)
L4	87.50-43.25	49.00	5.75	18	37.1743	45.3090	0.3750	1.5000	A572-65 (65 ksi)
L5	43.25-0.00	49.00		18	43.6044	51.7400	0.4375	1.7500	A572-65 (65 ksi)

Tapered Pole Properties

Section	Tip Dia. in	Area in^2	I in^4	r in	C in	I/C in^3	J in^4	It/Q in^2	w in	w/t
L1	22.6846	13.1835	817.3609	7.8641	11.3487	72.0223	1635.7974	6.5930	3.6018	19.21
	24.3702	14.1714	1015.2211	8.4534	12.1920	83.2694	2031.7780	7.0871	3.8940	20.768
L2	24.3702	16.5116	1179.7676	8.4423	12.1920	96.7657	2361.0876	8.2574	3.8390	17.55
	32.0408	21.7565	2698.9319	11.1240	16.0294	168.3735	5401.4151	10.8803	5.1685	23.627
L3	31.5966	29.8950	3430.9970	10.6997	15.4698	221.7864	6866.5085	14.9504	4.8096	15.391
	39.1833	37.9645	7026.7906	13.5878	19.6027	358.4603	14062.8273	18.9859	6.2415	19.973
L4	38.5485	43.8004	7493.6938	13.0638	18.8846	396.8157	14997.2479	21.9044	5.8827	15.687
	46.0080	53.4827	13642.7174	15.9516	23.0170	592.7242	27303.3862	26.7464	7.3144	19.505
L5	45.2465	59.9427	14111.5821	15.3243	22.1510	637.0616	28241.7327	29.9770	6.9044	15.781
	52.5382	71.2399	23688.5249	18.2124	26.2839	901.2554	47408.2197	35.6267	8.3362	19.054

Tower Elevation ft	Gusset Area (per face) ft^2	Gusset Thickness in	Gusset Grade	Adjust. Factor A_f	Adjust. Factor A_r	Weight Mult.	Double Angle Stitch Bolt Spacing Diagonals in	Double Angle Stitch Bolt Spacing Horizontals in
L1 188.00-178.00				1	1	1		
L2 178.00-132.50				1	1	1		
L3 132.50-87.50				1	1	1		
L4 87.50-43.25				1	1	1		
L5 43.25-0.00				1	1	1		

Feed Line/Linear Appurtenances - Entered As Area

Description	Face or Leg	Allow Shield	Component Type	Placement ft	Total Number		C_AA_A ft^2/ft	Weight plf
LDF7-50A (1-5/8 FOAM) (T-Mobile) ****	C	No	Inside Pole	188.00 - 0.00	18	No Ice 1/2" Ice	0.00 0.00	0.82 0.82
LDF4P-50A (1/2 FOAM) (Clearwire)	C	No	Inside Pole	181.00 - 0.00	2	No Ice 1/2" Ice	0.00 0.00	0.15 0.15
LDF4P-50A (1/2 FOAM) (Sprint)	C	No	Inside Pole	178.50 - 0.00	1	No Ice 1/2" Ice	0.00 0.00	0.15 0.15
RG-11 (5/16 FOAM POLYE.) (Sprint) **	C	No	Inside Pole	178.50 - 0.00	6	No Ice 1/2" Ice	0.00 0.00	0.09 0.09
LDF7-50A (1-5/8 FOAM) (Sprint) **	C	No	Inside Pole	178.50 - 0.00	9	No Ice 1/2" Ice	0.00 0.00	0.82 0.82
LDF7-50A (1-5/8 FOAM) (Sprint) ****	C	No	Inside Pole	168.50 - 0.00	12	No Ice 1/2" Ice	0.00 0.00	0.82 0.82
LDF7-50A (1-5/8 FOAM) (AT&T)	C	No	Inside Pole	158.00 - 0.00	6	No Ice 1/2" Ice	0.00 0.00	0.82 0.82
LDF2-50A (3/8 FOAM) (AT&T)	C	No	Inside Pole	158.00 - 0.00	1	No Ice 1/2" Ice	0.00 0.00	0.08 0.08
LDF4.5-50 (5/8 FOAM) (AT&T) ***	C	No	Inside Pole	158.00 - 0.00	2	No Ice 1/2" Ice	0.00 0.00	0.15 0.15
LDF7-50A (1-5/8 FOAM) (Pocket PCS)	C	No	CaAa (Out Of Face)	148.00 - 8.00	1	No Ice 1/2" Ice	0.20 0.30	0.82 2.33
LDF7-50A (1-5/8 FOAM) (Pocket PCS)	C	No	CaAa (Out Of Face)	148.00 - 8.00	5	No Ice 1/2" Ice	0.00 0.00	0.82 2.33
LDF4P-50A (1/2 FOAM) (Sprint)	C	No	CaAa (Out Of Face)	60.50 - 0.00	1	No Ice 1/2" Ice	0.06 0.16	0.15 0.84

Feed Line/Linear Appurtenances Section Areas

Tower Section	Tower Elevation ft	Face	A_R ft^2	A_F ft^2	C_AA_A In Face ft^2	C_AA_A Out Face ft^2	Weight K
L1	188.00-178.00	A	0.000	0.000	0.000	0.000	0.00
		B	0.000	0.000	0.000	0.000	0.00
		C	0.000	0.000	0.000	0.000	0.15
L2	178.00-132.50	A	0.000	0.000	0.000	0.000	0.00
		B	0.000	0.000	0.000	0.000	0.00
		C	0.000	0.000	0.000	3.069	1.62
L3	132.50-87.50	A	0.000	0.000	0.000	0.000	0.00
		B	0.000	0.000	0.000	0.000	0.00
		C	0.000	0.000	0.000	8.910	1.94
L4	87.50-43.25	A	0.000	0.000	0.000	0.000	0.00
		B	0.000	0.000	0.000	0.000	0.00
		C	0.000	0.000	0.000	9.848	1.91
L5	43.25-0.00	A	0.000	0.000	0.000	0.000	0.00
		B	0.000	0.000	0.000	0.000	0.00
		C	0.000	0.000	0.000	9.704	1.84

Feed Line/Linear Appurtenances Section Areas - With Ice

Tower Section	Tower Elevation ft	Face or Leg	Ice Thickness in	A_R ft^2	A_F ft^2	C_AA_A In Face ft^2	C_AA_A Out Face ft^2	Weight K
L1	188.00-178.00	A	0.500	0.000	0.000	0.000	0.000	0.00
		B		0.000	0.000	0.000	0.000	0.00
		C		0.000	0.000	0.000	0.000	0.15
L2	178.00-132.50	A	0.500	0.000	0.000	0.000	0.000	0.00
		B		0.000	0.000	0.000	0.000	0.00
		C		0.000	0.000	0.000	4.619	1.76
L3	132.50-87.50	A	0.500	0.000	0.000	0.000	0.000	0.00
		B		0.000	0.000	0.000	0.000	0.00
		C		0.000	0.000	0.000	13.410	2.35
L4	87.50-43.25	A	0.500	0.000	0.000	0.000	0.000	0.00
		B		0.000	0.000	0.000	0.000	0.00
		C		0.000	0.000	0.000	15.998	2.33
L5	43.25-0.00	A	0.500	0.000	0.000	0.000	0.000	0.00
		B		0.000	0.000	0.000	0.000	0.00
		C		0.000	0.000	0.000	17.554	2.19

Discrete Tower Loads

Description	Face or Leg	Offset Type	Offsets: Horz Lateral Vert ft ft ft	Azimuth Adjustment °	Placement ft		C_AA_A Front ft^2	C_AA_A Side ft^2	Weight K
(3) APX16PV-16-PVL-E w/ 2" Pipe (T-Mobile)	A	From Leg	3.00 0.00 0.00	0.0000	188.00	No Ice 1/2" Ice	7.07 7.64	4.27 5.10	0.06 0.11
(3) APX16PV-16-PVL-E w/ 2" Pipe (T-Mobile)	B	From Leg	3.00 0.00 0.00	0.0000	188.00	No Ice 1/2" Ice	7.07 7.64	4.27 5.10	0.06 0.11
(3) APX16PV-16-PVL-E w/	C	From Leg	3.00	0.0000	188.00	No Ice	7.07	4.27	0.06

Description	Face or Leg	Offset Type	Offsets: Horz Lateral Vert ft ft ft	Azimuth Adjustment °	Placement ft		C_AA_A Front ft^2	C_AA_A Side ft^2	Weight K
2" Pipe			0.00			1/2" Ice	7.64	5.10	0.11
(T-Mobile)			0.00						
PiROD 13' Low Profile	A	None		0.0000	184.00	No Ice	15.70	15.70	1.30
Platform						1/2" Ice	20.10	20.10	1.76
(T-Mobile)									
(4) TMA	A	From Leg	3.00	0.0000	188.00	No Ice	0.00	0.70	0.01
(T-Mobile)			0.00			1/2" Ice	0.00	0.80	0.01
			0.00						
(4) TMA	B	From Leg	3.00	0.0000	188.00	No Ice	0.00	0.70	0.01
(T-Mobile)			0.00			1/2" Ice	0.00	0.80	0.01
			0.00						
(4) TMA	C	From Leg	3.00	0.0000	188.00	No Ice	0.00	0.70	0.01
(T-Mobile)			0.00			1/2" Ice	0.00	0.80	0.01
			0.00						
****									
(3) DB844H90E-XY	A	From Leg	3.00	0.0000	178.50	No Ice	2.87	3.73	0.01
(Sprint)			0.00			1/2" Ice	3.18	4.10	0.04
			0.00						
(3) DB844H90E-XY	B	From Leg	3.00	0.0000	178.50	No Ice	2.87	3.73	0.01
(Sprint)			0.00			1/2" Ice	3.18	4.10	0.04
			0.00						
(3) DB844H90E-XY	C	From Leg	3.00	0.0000	178.50	No Ice	2.87	3.73	0.01
(Sprint)			0.00			1/2" Ice	3.18	4.10	0.04
			0.00						
PiROD 13' Low Profile	A	None		0.0000	178.50	No Ice	15.70	15.70	1.30
Platform						1/2" Ice	20.10	20.10	1.76
(Sprint)									
****									
(4) DB844H90	A	From Leg	3.00	0.0000	168.50	No Ice	2.87	3.97	0.01
(Sprint)			0.00			1/2" Ice	3.18	4.34	0.04
			0.00						
(4) DB844H90	B	From Leg	3.00	0.0000	168.50	No Ice	2.87	3.97	0.01
(Sprint)			0.00			1/2" Ice	3.18	4.34	0.04
			0.00						
(4) DB844H90	C	From Leg	3.00	0.0000	168.50	No Ice	2.87	3.97	0.01
(Sprint)			0.00			1/2" Ice	3.18	4.34	0.04
			0.00						
PiROD 13' Low Profile	A	None		0.0000	168.50	No Ice	15.70	15.70	1.30
Platform						1/2" Ice	20.10	20.10	1.76
(Sprint)									
****									
Powerwave P65-17-XLH-RR	A	From Leg	3.00	0.0000	158.00	No Ice	11.47	9.10	0.12
w/ MP			0.00			1/2" Ice	12.08	10.52	0.20
(AT&T)			0.00						
Powerwave P65-17-XLH-RR	B	From Leg	3.00	0.0000	158.00	No Ice	11.47	9.10	0.12
w/ MP			0.00			1/2" Ice	12.08	10.52	0.20
(AT&T)			0.00						
Commscope SBNH-1D6565C	C	From Leg	3.00	0.0000	158.00	No Ice	11.63	9.79	0.09
with Mount Pipe			0.00			1/2" Ice	12.35	11.31	0.18
(AT&T)			0.00						
(2) Ericsson RRUS-11	A	From Leg	1.00	0.0000	158.00	No Ice	0.00	2.94	0.05
(AT&T)			0.00			1/2" Ice	0.00	3.17	0.08
			0.00						
(2) Ericsson RRUS-11	B	From Leg	1.00	0.0000	158.00	No Ice	0.00	2.94	0.05
(AT&T)			0.00			1/2" Ice	0.00	3.17	0.08
			0.00						
(2) Ericsson RRUS-11	C	From Leg	1.00	0.0000	158.00	No Ice	0.00	2.94	0.05

Description	Face or Leg	Offset Type	Offsets: Horz Lateral Vert ft ft ft	Azimuth Adjustment °	Placement ft		C_AA_A Front ft^2	C_AA_A Side ft^2	Weight K
(AT&T)			0.00 0.00			1/2" Ice	0.00	3.17	0.08
Raycap DC6-48-60-18-8F	A	From Leg	1.00	0.0000	158.00	No Ice	0.00	1.42	0.02
(AT&T)			0.00 0.00			1/2" Ice	0.00	1.67	0.04
Powerwave 7770.00 with	A	From Leg	3.00	0.0000	158.00	No Ice	5.98	4.12	0.05
Mount Pipe			0.00			1/2" Ice	6.44	4.77	0.10
(AT&T)			0.00						
Powerwave 7770.00 with	B	From Leg	3.00	0.0000	158.00	No Ice	5.98	4.12	0.05
Mount Pipe			0.00			1/2" Ice	6.44	4.77	0.10
(AT&T)			0.00						
Powerwave 7770.00 with	C	From Leg	3.00	0.0000	158.00	No Ice	5.98	4.12	0.05
Mount Pipe			0.00			1/2" Ice	6.44	4.77	0.10
(AT&T)			0.00						
(2) Powerwave LGP21401	A	From Leg	1.00	0.0000	158.00	No Ice	0.00	0.37	0.02
(AT&T)			0.00 0.00			1/2" Ice	0.00	0.48	0.03
(2) Powerwave LGP21401	B	From Leg	1.00	0.0000	158.00	No Ice	0.00	0.37	0.02
(AT&T)			0.00 0.00			1/2" Ice	0.00	0.48	0.03
(2) Powerwave LGP21401	C	From Leg	1.00	0.0000	158.00	No Ice	0.00	0.37	0.02
(AT&T)			0.00 0.00			1/2" Ice	0.00	0.48	0.03
4' T-Arm (12' face width)	A	None		0.0000	158.00	No Ice	5.50	3.50	0.13
(AT&T)						1/2" Ice	6.90	4.00	0.17
4' T-Arm (12' face width)	B	None		0.0000	158.00	No Ice	5.50	3.50	0.13
(AT&T)						1/2" Ice	6.90	4.00	0.17
4' T-Arm (12' face width)	C	None		0.0000	158.00	No Ice	5.50	3.50	0.13
(AT&T)						1/2" Ice	6.90	4.00	0.17
****									
Kathrein 742-213 w/MP	A	From Leg	1.00	0.0000	148.00	No Ice	5.32	4.88	0.06
(Pocket PCS)			0.00 0.00			1/2" Ice	5.84	6.07	0.11
Kathrein 742-213 w/MP	B	From Leg	1.00	0.0000	148.00	No Ice	5.32	4.88	0.06
(Pocket PCS)			0.00 0.00			1/2" Ice	5.84	6.07	0.11
Kathrein 742-213 w/MP	C	From Leg	1.00	0.0000	148.00	No Ice	5.32	4.88	0.06
(Pocket PCS)			0.00 0.00			1/2" Ice	5.84	6.07	0.11
****									
Kathrein 840-10054 w Mount	A	From Leg	3.00	0.0000	178.50	No Ice	5.77	2.66	0.05
Pipe			0.00			1/2" Ice	6.23	3.23	0.09
(Sprint)			0.00						
Kathrein 840-10054 w Mount	B	From Leg	3.00	0.0000	178.50	No Ice	5.77	2.66	0.05
Pipe			0.00			1/2" Ice	6.23	3.23	0.09
(Sprint)			0.00						
Kathrein 840-10054 w Mount	C	From Leg	3.00	0.0000	178.50	No Ice	5.77	2.66	0.05
Pipe			0.00			1/2" Ice	6.23	3.23	0.09
(Sprint)			0.00						
RRU 26" x 14" x 9" TMA	A	From Leg	3.00	0.0000	178.50	No Ice	0.00	3.54	0.01
(Sprint)			0.00 0.00			1/2" Ice	0.00	3.80	0.03
RRU 26" x 14" x 9" TMA	B	From Leg	3.00	0.0000	178.50	No Ice	0.00	3.54	0.01
(Sprint)			0.00 0.00			1/2" Ice	0.00	3.80	0.03
RRU 26" x 14" x 9" TMA	C	From Leg	3.00	0.0000	178.50	No Ice	0.00	3.54	0.01
(Sprint)			0.00			1/2" Ice	0.00	3.80	0.03

Description	Face or Leg	Offset Type	Offsets: Horz Lateral Vert ft ft ft	Azimuth Adjustment °	Placement ft		C_AA_A Front ft^2	C_AA_A Side ft^2	Weight K
			0.00						
GPS (Sprint)	C	From Leg	3.00 0.00 0.00	0.0000	178.50	No Ice 1/2" Ice	0.30 0.37	0.30 0.37	0.00 0.00
***									
GPS (Sprint)	C	From Leg	1.00 0.00 0.00	0.0000	60.50	No Ice 1/2" Ice	0.30 0.37	0.30 0.37	0.00 0.00
Side Arm (Sprint)	C	None		0.0000	60.50	No Ice 1/2" Ice	0.25 0.50	2.00 2.50	0.03 0.12

Dishes

Description	Face or Leg	Dish Type	Offset Type	Offsets: Horz Lateral Vert ft	Azimuth Adjustment °	3 dB Beam Width °	Elevation ft	Outside Diameter ft		Aperture Area ft^2	Weight K
VHLP1-23 (Clearwire)	A	Paraboloid w/o Radome	From Leg	1.00 0.00 0.00	0.0000		181.00	1.27	No Ice 1/2" Ice	1.28 1.45	0.03 0.01
VHLP1-23 (Clearwire)	C	Paraboloid w/o Radome	From Leg	1.00 0.00 0.00	0.0000		181.00	1.27	No Ice 1/2" Ice	1.28 1.45	0.03 0.01

Load Combinations

Comb. No.	Description
1	Dead Only
2	Dead+Wind 0 deg - No Ice
3	Dead+Wind 90 deg - No Ice
4	Dead+Wind 180 deg - No Ice
5	Dead+Ice+Temp
6	Dead+Wind 0 deg+Ice+Temp
7	Dead+Wind 90 deg+Ice+Temp
8	Dead+Wind 180 deg+Ice+Temp
9	Dead+Wind 0 deg - Service
10	Dead+Wind 90 deg - Service
11	Dead+Wind 180 deg - Service

Maximum Tower Deflections - Service Wind

Section No.	Elevation ft	Horz. Deflection in	Gov. Load Comb.	Tilt °	Twist °
L1	188 - 178	99.815	10	4.6982	0.0015
L2	178 - 132.5	90.004	10	4.6716	0.0015
L3	136.5 - 87.5	52.322	10	3.7848	0.0007
L4	92.25 - 43.25	23.065	10	2.4359	0.0003
L5	49 - 0	6.363	10	1.1951	0.0001

Critical Deflections and Radius of Curvature - Service Wind

Elevation ft	Appurtenance	Gov. Load Comb.	Deflection in	Tilt °	Twist °	Radius of Curvature ft
188.00	(3) APX16PV-16-PVL-E w/ 2" Pipe	10	99.815	4.6982	0.0015	15478
184.00	PiROD 13' Low Profile Platform	10	95.882	4.6935	0.0015	15478
181.00	VHLP1-23	10	92.938	4.6859	0.0015	11073
178.50	(3) DB844H90E-XY	10	90.492	4.6746	0.0015	8256
168.50	(4) DB844H90	10	80.821	4.5684	0.0014	4416
158.00	Powerwave P65-17-XLH-RR w/ MP	10	70.963	4.3675	0.0012	2993
148.00	Kathrein 742-213 w/MP	10	61.985	4.1158	0.0009	2289
60.50	GPS	10	9.609	1.5077	0.0002	1797

Maximum Tower Deflections - Design Wind

Section No.	Elevation ft	Horz. Deflection in	Gov. Load Comb.	Tilt °	Twist °
L1	188 - 178	176.549	3	8.3160	0.0026
L2	178 - 132.5	159.224	3	8.2691	0.0025
L3	136.5 - 87.5	92.650	3	6.7028	0.0012
L4	92.25 - 43.25	40.880	3	4.3171	0.0006
L5	49 - 0	11.284	3	2.1192	0.0002

Critical Deflections and Radius of Curvature - Design Wind

Elevation ft	Appurtenance	Gov. Load Comb.	Deflection in	Tilt °	Twist °	Radius of Curvature ft
188.00	(3) APX16PV-16-PVL-E w/ 2" Pipe	3	176.549	8.3160	0.0029	9045
184.00	PiROD 13' Low Profile Platform	3	169.604	8.3078	0.0029	9045
181.00	VHLP1-23	3	164.405	8.2943	0.0029	6470
178.50	(3) DB844H90E-XY	3	160.086	8.2744	0.0028	4822
168.50	(4) DB844H90	3	143.006	8.0869	0.0026	2569
158.00	Powerwave P65-17-XLH-RR w/ MP	3	125.592	7.7321	0.0022	1736
148.00	Kathrein 742-213 w/MP	3	109.730	7.2876	0.0018	1325
60.50	GPS	3	17.039	2.6732	0.0003	1017

Compression Checks

Pole Design Data

Section No.	Elevation ft	Size	L ft	L_u ft	Kl/r	F_a ksi	A in^2	Actual P K	Allow. P_a K	Ratio $\frac{P}{P_a}$
L1	188 - 178 (1)	TP24x22.34x0.1875	10.00	0.00	0.0	39.000	14.1714	-3.17	552.68	0.006
L2	178 - 132.5 (2)	TP31.554x24x0.2188	45.50	0.00	0.0	39.000	21.2954	-9.30	830.52	0.011
L3	132.5 - 87.5 (3)	TP38.588x30.4524x0.3125	49.00	0.00	0.0	39.000	37.1823	-16.93	1450.11	0.012
L4	87.5 - 43.25 (4)	TP45.309x37.1743x0.375	49.00	0.00	0.0	39.000	52.3465	-27.16	2041.51	0.013
L5	43.25 - 0 (5)	TP51.74x43.6044x0.4375	49.00	0.00	0.0	39.000	71.2399	-42.08	2778.36	0.015

Pole Bending Design Data

Section No.	Elevation ft	Size	Actual M_x kip-ft	Actual f_{bx} ksi	Allow. F_{bx} ksi	Ratio $\frac{f_{bx}}{F_{bx}}$	Actual M_y kip-ft	Actual f_{by} ksi	Allow. F_{by} ksi	Ratio $\frac{f_{by}}{F_{by}}$
L1	188 - 178 (1)	TP24x22.34x0.1875	36.23	5.221	39.000	0.134	0.00	0.000	39.000	0.000
L2	178 - 132.5 (2)	TP31.554x24x0.2188	566.75	42.166	39.000	1.081	0.00	0.000	39.000	0.000
L3	132.5 - 87.5 (3)	TP38.588x30.4524x0.3125	1403.49	48.990	39.000	1.256	0.00	0.000	39.000	0.000
L4	87.5 - 43.25 (4)	TP45.309x37.1743x0.375	2374.87	50.199	39.000	1.287	0.00	0.000	39.000	0.000
L5	43.25 - 0 (5)	TP51.74x43.6044x0.4375	3628.57	48.314	39.000	1.239	0.00	0.000	39.000	0.000

Pole Shear Design Data

Section No.	Elevation ft	Size	Actual V K	Actual f_v ksi	Allow. F_v ksi	Ratio $\frac{f_v}{F_v}$	Actual T kip-ft	Actual f_{vt} ksi	Allow. F_{vt} ksi	Ratio $\frac{f_{vt}}{F_{vt}}$
L1	188 - 178 (1)	TP24x22.34x0.1875	7.29	0.514	26.000	0.040	0.07	0.005	26.000	0.000
L2	178 - 132.5 (2)	TP31.554x24x0.2188	17.04	0.800	26.000	0.062	0.18	0.006	26.000	0.000
L3	132.5 - 87.5 (3)	TP38.588x30.4524x0.3125	20.74	0.558	26.000	0.043	0.10	0.002	26.000	0.000
L4	87.5 - 43.25 (4)	TP45.309x37.1743x0.375	24.10	0.460	26.000	0.035	0.09	0.001	26.000	0.000
L5	43.25 - 0 (5)	TP51.74x43.6044x0.4375	26.95	0.378	26.000	0.029	0.09	0.001	26.000	0.000

Pole Interaction Design Data

Section No.	Elevation ft	Ratio $\frac{P}{P_a}$	Ratio $\frac{f_{bx}}{F_{bx}}$	Ratio $\frac{f_{by}}{F_{by}}$	Ratio $\frac{f_v}{F_v}$	Ratio $\frac{f_{vt}}{F_{vt}}$	Comb. Stress Ratio	Allow. Stress Ratio	Criteria
L1	188 - 178 (1)	0.006	0.134	0.000	0.040	0.000	0.140 ✔	1.333	H1-3+VT ✔
L2	178 - 132.5 (2)	0.011	1.081	0.000	0.062	0.000	1.093 ✔	1.333	H1-3+VT ✔
L3	132.5 - 87.5 (3)	0.012	1.256	0.000	0.043	0.000	1.268 ✔	1.333	H1-3+VT ✔

Section No.	Elevation ft	Ratio $\frac{P}{P_a}$	Ratio $\frac{f_{bx}}{F_{bx}}$	Ratio $\frac{f_{by}}{F_{by}}$	Ratio $\frac{f_v}{F_v}$	Ratio $\frac{f_{vt}}{F_{vt}}$	Comb. Stress Ratio	Allow. Stress Ratio	Criteria
L4	87.5 - 43.25 (4)	0.013	1.287	0.000	0.035	0.000	1.301 ✔	1.333	H1-3+VT ✔
L5	43.25 - 0 (5)	0.015	1.239	0.000	0.029	0.000	1.254 ✔	1.333	H1-3+VT ✔

Section Capacity Table

Section No.	Elevation ft	Component Type	Size	Critical Element	P K	$SF*P_{allow}$ K	% Capacity	Pass Fail
L1	188 - 178	Pole	TP24x22.34x0.1875	1	-3.17	736.73	10.5	Pass
L2	178 - 132.5	Pole	TP31.554x24x0.2188	2	-9.30	1107.08	82.0	Pass
L3	132.5 - 87.5	Pole	TP38.588x30.4524x0.3125	3	-16.93	1933.00	95.1	Pass
L4	87.5 - 43.25	Pole	TP45.309x37.1743x0.375	4	-27.16	2721.33	97.6	Pass
L5	43.25 - 0	Pole	TP51.74x43.6044x0.4375	5	-42.08	3703.55	94.1	Pass
							Summary	
						Pole (L4)	97.6	Pass
						RATING =	**97.6**	**Pass**

BASE PLATE

SCALE: 3/4" = 1'-0"

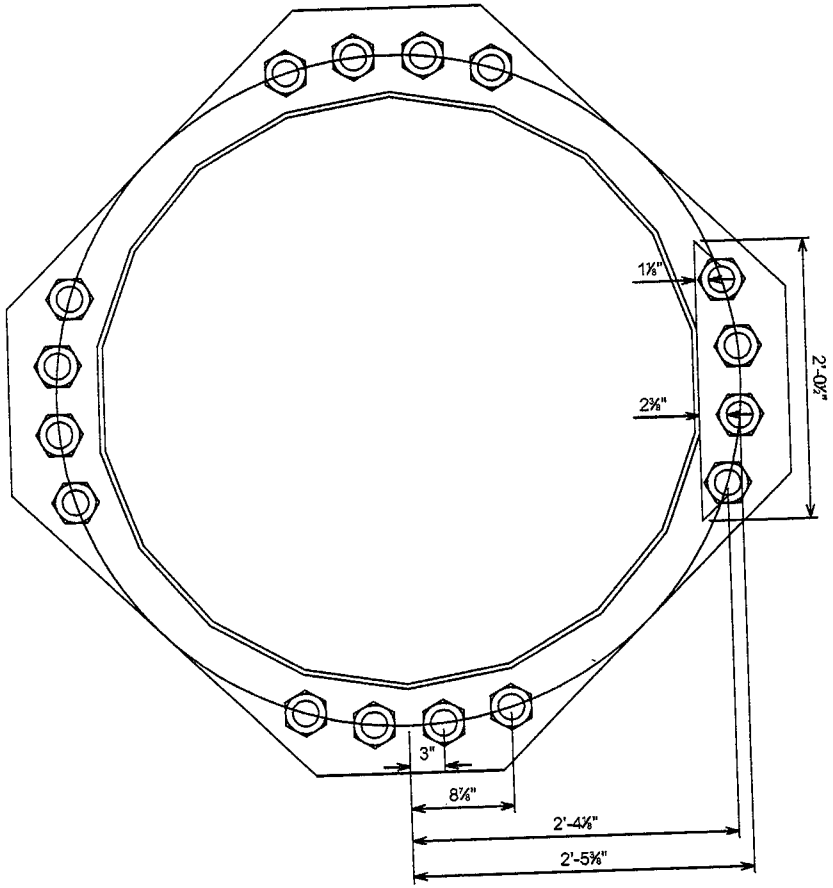

PREPARED BY:

vertical solutions

2002 Production Drive
Apex, NC 27539
Office: (888) 321-6187
Fax: (919) 321-1768
www.verticalsolutions-inc.com

PROJECT NAME:

ENFIELD MOODY RD

TOWERCO JOB #:

CT2000

PREPARED FOR:

TowerCo

5000 Valley Stone Drive
Cary, NC 27519
Office: (919) 469-5559
Fax: (919) 469-5530
www.towerco.com

REV	DATE
0	04/30/2012

DRAWN BY: JEJ

CHECKED BY: JHW

SHEET NUMBER: BPL

REVISION: 0

VSI #: 120735

vertical solutions

VSi Job No.:120735
Date: 04/30/2012
Calculated by: JEJ

FLANGE PLATE DESIGN, DEFORMATION METHOD (DIFFERENT AREAS)

Input -

$M := 3629 \cdot kip \cdot ft$ = moment at top of flange plate

$P := 42 \cdot kip$ = axial load (use zero if base plate is grouted)

$F_y := 50 \cdot ksi$ = yield stress of flange plate

$b_{eff} := 24.5 \cdot in$ = effective width of flange plate in flexure

$t := 3.25 \cdot in$ = thickness of flange plate

$ASI := 133 \cdot \%$ = allowable stress increase

CONSTANTS:

$psi \equiv \frac{lb}{in^2}$

$ksi \equiv 1000 \cdot psi$

$kip \equiv 1000 \cdot lb$

$$Q := \begin{pmatrix} 4 \\ 4 \\ 4 \\ 4 \\ 0 \\ 0 \\ 0 \\ 0 \\ 0 \end{pmatrix} \quad d := \begin{pmatrix} 2 \cdot 12 + 5 + \frac{3}{8} \\ 2 \cdot 12 + 4 + \frac{1}{8} \\ 8 + \frac{7}{8} \\ 3 \\ 0 \\ 0 \\ 0 \\ 0 \\ 0 \end{pmatrix} \cdot in \quad A_{stiff} := \begin{pmatrix} 3.976 \\ 3.976 \\ 3.976 \\ 3.976 \\ 0 \\ 0 \\ 0 \\ 0 \\ 0 \end{pmatrix} in^2 \quad A_{stress} := \begin{pmatrix} 3.25 \\ 3.25 \\ 3.25 \\ 3.25 \\ 0 \\ 0 \\ 0 \\ 0 \\ 0 \end{pmatrix} in^2 \quad F_t := \begin{pmatrix} 0.6 \cdot 75 \\ 0.6 \cdot 75 \\ 0.6 \cdot 75 \\ 0.6 \cdot 75 \\ 0 \\ 0 \\ 0 \\ 0 \\ 0 \end{pmatrix} \cdot ksi$$

$$\sum \overrightarrow{(Q)} = 16 \qquad sumQAd := \sum \overrightarrow{\left(Q \cdot d^2 \cdot A_{stiff}\right)}$$

$$sumQAd = 27700 \cdot in^4$$

$$R := \frac{M \cdot \overrightarrow{\left(d \cdot A_{stiff}\right)}}{sumQAd} + \frac{P \cdot A_{stiff}}{\sum \overrightarrow{\left(A_{stiff} \cdot Q\right)}}$$

$$f_t := \overrightarrow{\left(\frac{R}{A_{stress}}\right)} \qquad r := \overrightarrow{\left(\frac{f_t}{ASI \cdot F_t}\right)}$$

$$R = \begin{pmatrix} 186.2 \\ 178.4 \\ 58.1 \\ 21.4 \\ 0.0 \\ 0.0 \\ 0.0 \\ 0.0 \\ 0.0 \\ 0.0 \end{pmatrix} \cdot kip \quad f_t = \begin{pmatrix} 57.3 \\ 54.9 \\ 17.9 \\ 6.6 \\ 0.0 \\ 0.0 \\ 0.0 \\ 0.0 \\ 0.0 \\ 0.0 \end{pmatrix} \cdot ksi \quad r = \begin{pmatrix} 96 \\ 92 \\ 30 \\ 11 \\ 0 \\ 0 \\ 0 \\ 0 \\ 0 \\ 0 \end{pmatrix} \cdot \%$$

Q = quantity of fasteners

d = distance from center

A = area of fastener

Ft = allowable tension stress

$$m := \begin{pmatrix} 2 + \frac{3}{8} \\ 1 + \frac{1}{8} \\ 0 \\ 0 \\ 0 \\ 0 \\ 0 \\ 0 \\ 0 \\ 0 \end{pmatrix} \cdot in \qquad M_{PL} := \overrightarrow{\left[\left(\frac{Q}{2}\right) \cdot R \cdot m\right]} \qquad M_{PL} = \begin{pmatrix} 73.7 \\ 33.5 \\ 0.0 \\ 0.0 \\ 0.0 \\ 0.0 \\ 0.0 \\ 0.0 \\ 0.0 \\ 0.0 \end{pmatrix} \cdot kip \cdot ft \qquad \sum M_{PL} = 1286.1 \cdot kip \cdot in$$

$$f_b := \frac{\sum M_{PL}}{\left(\frac{b_{eff} \cdot t^2}{6}\right)} \qquad f_b = 29.8 \cdot ksi$$

$$F'_b := ASI \cdot 0.75 \cdot F_y$$

$$r_b := \frac{f_b}{F'_b}$$

$$r_b = 60 \cdot \%$$

vertical solutions

VSi Job No.:120735
Date: 04/30/2012
Calculated by: JEJ

FLANGE PLATE DESIGN, DEFORMATION METHOD (DIFFERENT AREAS)

CONSTANTS:

$psi \equiv \frac{lb}{in^2}$

$ksi \equiv 1000 \cdot psi$

$kip \equiv 1000 \cdot lb$

Input -

$M := 36 \cdot kip \cdot ft$ = moment at top of flange plate

$P := 3 \cdot kip$ = axial load (use zero if base plate is grouted)

$F_y := 36 \cdot ksi$ = yield stress of flange plate

$b_{eff} := 7.5625 \cdot in$ = effective width of flange plate in flexure

$t := 1.0 \cdot in$ = thickness of flange plate

$ASI := 133 \cdot \%$ = allowable stress increase

$$Q := \begin{pmatrix} 1 \\ 2 \\ 2 \\ 2 \\ 2 \\ 0 \\ 0 \\ 0 \\ 0 \\ 0 \end{pmatrix} \qquad d := \begin{pmatrix} 9 + \frac{1}{2} \\ 9 \\ 7 + \frac{1}{16} \\ 4 + \frac{3}{4} \\ 1 + \frac{15}{16} \\ 0 \\ 0 \\ 0 \\ 0 \\ 0 \end{pmatrix} \cdot in \qquad A_{stiff} := \begin{pmatrix} .442 \\ .442 \\ .442 \\ .442 \\ .442 \\ 0 \\ 0 \\ 0 \\ 0 \\ 0 \end{pmatrix} in^2 \qquad A_{stress} := \begin{pmatrix} .334 \\ .334 \\ .334 \\ .334 \\ .334 \\ 0 \\ 0 \\ 0 \\ 0 \\ 0 \end{pmatrix} in^2 \qquad F_t := \begin{pmatrix} 0.33 \cdot 120 \\ 0.33 \cdot 120 \\ 0.33 \cdot 120 \\ 0.33 \cdot 120 \\ 0.33 \cdot 120 \\ 0 \\ 0 \\ 0 \\ 0 \\ 0 \end{pmatrix} \cdot ksi$$

$$\sum \overrightarrow{(Q)} = 9 \qquad sumQAd := \sum \overrightarrow{\left(Q \cdot d^2 \cdot A_{stiff}\right)}$$

$$sumQAd = 179 \cdot in^4$$

$$R := \frac{M \cdot \overrightarrow{\left(d \cdot A_{stiff}\right)}}{sumQAd} + \frac{P \cdot A_{stiff}}{\sum \overrightarrow{\left(A_{stiff} \cdot Q\right)}}$$

$$f_t := \overrightarrow{\left(\frac{R}{A_{stress}}\right)} \qquad r := \overrightarrow{\left(\frac{f_t}{ASI \cdot F_t}\right)}$$

$$R = \begin{pmatrix} 10.5 \\ 9.9 \\ 7.9 \\ 5.4 \\ 2.4 \\ 0.0 \\ 0.0 \\ 0.0 \\ 0.0 \\ 0.0 \end{pmatrix} \cdot kip \qquad f_t = \begin{pmatrix} 31.4 \\ 29.8 \\ 23.6 \\ 16.2 \\ 7.2 \\ 0.0 \\ 0.0 \\ 0.0 \\ 0.0 \\ 0.0 \end{pmatrix} \cdot ksi \qquad r = \begin{pmatrix} 60 \\ 57 \\ 45 \\ 31 \\ 14 \\ 0 \\ 0 \\ 0 \\ 0 \\ 0 \end{pmatrix} \cdot \%$$

Q = quantity of fasteners

d = distance from center

A = area of fastener

Ft = allowable tension stress

$$m := \begin{pmatrix} 2 + \frac{1}{2} \\ 0 \\ 0 \\ 0 \\ 0 \\ 0 \\ 0 \\ 0 \\ 0 \\ 0 \end{pmatrix} \cdot in \qquad M_{PL} := \overrightarrow{\left[\left(\frac{Q}{2}\right) \cdot R \cdot m\right]} \qquad M_{PL} = \begin{pmatrix} 1.1 \\ 0.0 \\ 0.0 \\ 0.0 \\ 0.0 \\ 0.0 \\ 0.0 \\ 0.0 \\ 0.0 \\ 0.0 \end{pmatrix} \cdot kip \cdot ft \qquad \sum M_{PL} = 13.1 \cdot kip \cdot in$$

$$f_b := \frac{\sum M_{PL}}{\left(\frac{b_{eff} \cdot t^2}{6}\right)} \qquad f_b = 10.4 \cdot ksi$$

$$F'_b := ASI \cdot 0.75 \cdot F_y$$

$$r_b := \frac{f_b}{F'_b}$$

$$r_b = 29 \cdot \%$$

CAISSON Version 4.91 5:52:17 PM Tuesday, May 01, 2012
Vertical Solutions Inc.

```
*****************************************************************************
*                                                                           *
*  PIER FOUNDATIONS ANALYSIS AND DESIGN - (C) 1995,2002 POWER LINE SYSTEMS, INC.*
*                                                                           *
*****************************************************************************
```

*** ANALYSIS IDENTIFICATION : CT2000
NOTES : ENG-14521

*** PIER PROPERTIES CONCRETE STRENGTH (ksi) = 3.00 STEEL STRENGTH (ksi) = 60.00

DIAMETER (ft) = 7.000 DISTANCE FROM TOP OF PIER TO GROUND LEVEL (ft) = 0.50

*** SOIL PROPERTIES

LAYER	TYPE	THICKNESS (ft)	DEPTH AT TOP OF LAYER (ft)	DENSITY (pcf)	CU (psf)	KP	PHI (degrees)
1	S	5.00	0.00	110.0		1.000	-0.00
2	S	10.00	5.00	60.0		3.540	34.02
3	S	5.00	15.00	55.0		3.000	30.00
4	S	15.00	20.00	60.0		3.250	31.97
5	S	7.00	35.00	65.0		3.850	35.99

*** DESIGN (FACTORED) LOADS AT TOP OF PIER MOMENT (ft-k) = 4717.0 VERTICAL (k) = 55.0 SHEAR (k) = 35.0
ADDITIONAL SAFETY FACTOR AGAINST SOIL FAILURE = 1.54

*** CALCULATED PIER LENGTH (ft) = 26.000

*** CHECK OF SOILS PROPERTIES AND ULTIMATE RESISTING FORCES ALONG PIER

TYPE	TOP OF LAYER BELOW TOP OF PIER (ft)	THICKNESS (ft)	DENSITY (pcf)	CU (psf)	KP	FORCE (k)	ARM (ft)
S	0.50	5.00	110.0		1.000	28.88	3.83
S	5.50	10.00	60.0		3.540	631.89	11.09
S	15.50	2.57	55.0		3.000	197.89	16.81
S	18.07	2.43	55.0		3.000	-207.68	19.31
S	20.50	5.50	60.0		3.250	-596.85	23.35

*** SHEAR AND MOMENTS ALONG PIER

DISTANCE BELOW TOP OF PIER (ft)	WITH THE ADDITIONAL SAFETY FACTOR SHEAR (k)	MOMENT (ft-k)	WITHOUT ADDITIONAL SAFETY FACTOR SHEAR (k)	MOMENT (ft-k)
0.00	54.1	7498.9	35.2	4869.4
2.60	49.0	7636.1	31.8	4958.5
5.20	28.6	7740.4	18.6	5026.3
7.80	-80.6	7689.4	-52.3	4993.1
10.40	-228.6	7294.0	-148.5	4736.3
13.00	-406.8	6474.4	-264.2	4204.1
15.60	-613.9	5152.3	-398.6	3345.6
18.20	-794.2	3301.3	-515.7	2143.7
20.80	-567.5	1523.4	-368.5	989.2
23.40	-297.6	392.9	-193.2	255.1
26.00	0.0	-0.0	0.0	-0.0

LPILE Plus for Windows, Version 5.0 (5.0.41)

Analysis of Individual Piles and Drilled Shafts
Subjected to Lateral Loading Using the p-y Method

(c) 1985-2009 by Ensoft, Inc.
All Rights Reserved

This program is licensed to:

testing
demo

Path to file locations: L:\2012\0735_Enfield Moody Rd._CT\Task 1\Models\Caisson\
Name of input data file: CT2000-ERP - DESIGN.lpd
Name of output file: CT2000-ERP - DESIGN.lpo
Name of plot output file: CT2000-ERP - DESIGN.lpp
Name of runtime file: CT2000-ERP - DESIGN.lpr

Time and Date of Analysis

Date: May 1, 2012 Time: 9:30:11

Problem Title

Enfiels-moody road, 120735, CT2000

Program Options

Units Used in Computations - US Customary Units: Inches, Pounds

Basic Program Options:

Analysis Type 3:
- Computation of Nonlinear Bending Stiffness and Ultimate Bending Moment Capacity with Pile Response Computed Using Nonlinear EI

Computation Options:
- Only internally-generated p-y curves used in analysis
- Analysis does not use p-y multipliers (individual pile or shaft action only)
- Analysis assumes no shear resistance at pile tip
- Analysis for fixed-length pile or shaft only
- No computation of foundation stiffness matrix elements
- Output pile response for full length of pile
- Analysis assumes no soil movements acting on pile
- No additional p-y curves to be computed at user-specified depths

Solution Control Parameters:

- Number of pile increments = 100
- Maximum number of iterations allowed = 100
- Deflection tolerance for convergence = 1.0000E-05 in
- Maximum allowable deflection = 1.0000E+02 in

Printing Options:
- Values of pile-head deflection, bending moment, shear force, and soil reaction are printed for full length of pile.
- Printing Increment (spacing of output points) = 1

Pile Structural Properties and Geometry

Pile Length = 324.00 in

Depth of ground surface below top of pile = 6.00 in

Slope angle of ground surface = 0.00 deg.

Structural properties of pile defined using 2 points

Point	Depth X in	Pile Diameter in	Moment of Inertia in**4	Pile Area Sq.in	Modulus of Elasticity lbs/Sq.in
1	0.0000	84.00000000	2443920.	5541.8000	3122019.
2	324.0000	84.00000000	2443920.	5541.8000	3122019.

Please note that because this analysis makes computations of ultimate moment capacity and pile response using nonlinear bending stiffness that the above values of moment of inertia and modulus of are not used for any computations other than total stress due to combined axial loading and bending.

Soil and Rock Layering Information

The soil profile is modelled using 5 layers

Layer 1 is sand, p-y criteria by Reese et al., 1974
Distance from top of pile to top of layer = 6.000 in
Distance from top of pile to bottom of layer = 60.000 in
p-y subgrade modulus k for top of soil layer = 0.000 lbs/in**3
p-y subgrade modulus k for bottom of layer = 0.000 lbs/in**3

NOTE: Internal default values for p-y subgrade modulus will be computed for the above soil layer.

Layer 2 is sand, p-y criteria by Reese et al., 1974
Distance from top of pile to top of layer = 60.000 in
Distance from top of pile to bottom of layer = 180.000 in
p-y subgrade modulus k for top of soil layer = 60.000 lbs/in**3
p-y subgrade modulus k for bottom of layer = 60.000 lbs/in**3

Layer 3 is sand, p-y criteria by Reese et al., 1974
Distance from top of pile to top of layer = 180.000 in
Distance from top of pile to bottom of layer = 240.000 in
p-y subgrade modulus k for top of soil layer = 20.000 lbs/in**3
p-y subgrade modulus k for bottom of layer = 20.000 lbs/in**3

Layer 4 is sand, p-y criteria by Reese et al., 1974
Distance from top of pile to top of layer = 240.000 in
Distance from top of pile to bottom of layer = 420.000 in
p-y subgrade modulus k for top of soil layer = 60.000 lbs/in**3
p-y subgrade modulus k for bottom of layer = 60.000 lbs/in**3

Layer 5 is sand, p-y criteria by Reese et al., 1974
Distance from top of pile to top of layer = 420.000 in
Distance from top of pile to bottom of layer = 504.000 in
p-y subgrade modulus k for top of soil layer = 125.000 lbs/in**3
p-y subgrade modulus k for bottom of layer = 125.000 lbs/in**3

(Depth of lowest layer extends 180.00 in below pile tip)

Effective Unit Weight of Soil vs. Depth

Effective unit weight of soil with depth defined using 10 points

Point No.	Depth X in	Eff. Unit Weight lbs/in**3
1	6.00	0.06366
2	60.00	0.06366
3	60.00	0.03472
4	180.00	0.03472
5	180.00	0.03183
6	240.00	0.03183
7	240.00	0.03472
8	420.00	0.03472
9	420.00	0.03762
10	504.00	0.03762

Shear Strength of Soils

Shear strength parameters with depth defined using 10 points

Point No.	Depth X in	Cohesion c lbs/in**2	Angle of Friction Deg.	E50 or k_rm	RQD %
1	6.000	0.00000	30.00	------	------
2	60.000	0.00000	30.00	------	------
3	60.000	0.00000	34.02	------	------
4	180.000	0.00000	34.02	------	------
5	180.000	0.00000	30.00	------	------
6	240.000	0.00000	30.00	------	------
7	240.000	0.00000	31.97	------	------
8	420.000	0.00000	31.97	------	------
9	420.000	0.00000	35.99	------	------
10	504.000	0.00000	35.99	------	------

Notes:

(1) Cohesion = uniaxial compressive strength for rock materials.
(2) Values of E50 are reported for clay strata.

(3) Default values will be generated for E50 when input values are 0.
(4) RQD and k_rm are reported only for weak rock strata.

Loading Type

Static loading criteria was used for computation of p-y curves.

Pile-head Loading and Pile-head Fixity Conditions

Number of loads specified = 1

Load Case Number 1

Pile-head boundary conditions are Shear and Moment (BC Type 1)
Shear force at pile head = 26950.000 lbs
Bending moment at pile head = 43542840.000 in-lbs
Axial load at pile head = 42080.000 lbs

Non-zero moment at pile head for this load case indicates the pile-head may rotate under the applied pile-head loading, but is not a free-head (zero moment) condition.

Computations of Nominal Moment Capacity and Nonlinear Bending Stiffness

---

Number of sections = 1

Pile Section No. 1

The sectional shape is a circular drilled shaft (bored pile).

Outside Diameter = 84.0000 in

Material Properties:

Compressive Strength of Concrete	=	4.000	kip/in**2
Yield Stress of Reinforcement	=	60.	kip/in**2
Modulus of Elasticity of Reinforcement	=	29000.	kip/in**2
Number of Reinforcing Bars	=	20	
Area of Single Bar	=	1.56000	in**2
Number of Rows of Reinforcing Bars	=	11	
Area of Steel	=	31.200	in**2
Area of Shaft	=	5541.769	in**2
Percentage of Steel Reinforcement	=	0.563	percent
Cover Thickness (edge to bar center)	=	4.312	in

Unfactored Axial Squash Load Capacity = 20607.94 kip

Distribution and Area of Steel Reinforcement

Row Number	Area of Reinforcement in**2	Distance to Centroidal Axis in
1	1.560	37.688
2	3.120	35.843
3	3.120	30.490
4	3.120	22.152
5	3.120	11.646
6	3.120	0.000
7	3.120	-11.646
8	3.120	-22.152
9	3.120	-30.490
10	3.120	-35.843
11	1.560	-37.688

Axial Thrust Force = 42080.00 lbs

Bending Moment in-lbs	Bending Stiffness lb-in2	Bending Curvature rad/in	Maximum Strain in/in	Neutral Axis Position inches	Max. Concrete Stress psi	Max. Steel Stress psi
5943759.	9.510014E+12	6.250000E-07	0.00002836	45.37564927	100.78455	744.26958
11834607.	9.467686E+12	0.00000125	0.00005471	43.76770109	192.95779	1430.25104
17673221.	9.425718E+12	0.00000188	0.00008110	43.25135833	283.95336	2117.30042
23457911.	9.383165E+12	0.00000250	0.00010745	42.97839314	373.51245	2803.27725
29189444.	9.340622E+12	0.00000313	0.00013380	42.81455094	461.76502	3489.24837
29189444.	7.783852E+12	0.00000375	0.00007733	20.62119752	266.24491	6423.46039
29189444.	6.671873E+12	0.00000438	0.00008866	20.26536494	304.16399	7539.18339
29189444.	5.837889E+12	0.00000500	0.00010000	20.00068098	341.89003	8654.58876
29189444.	5.189235E+12	0.00000563	0.00011136	19.79677445	379.42256	9769.67461
29189444.	4.670311E+12	0.00000625	0.00012272	19.63541561	416.76095	10884.44030
29189444.	4.245737E+12	0.00000688	0.00013447	19.55964535	455.17611	11987.99102
29189444.	3.891926E+12	0.00000750	0.00014582	19.44287950	491.98987	13103.20496
29189444.	3.592547E+12	0.00000813	0.00015718	19.34557003	528.61260	14218.06725
29189444.	3.335936E+12	0.00000875	0.00016856	19.26355129	565.04362	15332.57698
29189444.	3.113541E+12	0.00000938	0.00017994	19.19377416	601.28245	16446.73171
29189444.	2.918944E+12	0.00001000	0.00019134	19.13395303	637.32861	17560.52862
29189444.	2.747242E+12	0.00001063	0.00020275	19.08233303	673.18139	18673.96707
29189444.	2.594617E+12	0.00001125	0.00021417	19.03755480	708.84028	

19787.04462						
29189444.	2.458058E+12	0.00001188	0.00022561	18.99854690	744.30481	
20899.75822						
29189444.	2.335156E+12	0.00001250	0.00023706	18.96445066	779.57444	
22012.10539						
29189444.	2.223958E+12	0.00001313	0.00024852	18.93456513	814.64841	
23124.08584						
29189444.	2.122869E+12	0.00001375	0.00025999	18.90832454	849.52625	
24235.69621						
29189444.	2.030570E+12	0.00001438	0.00027148	18.88525826	884.20737	
25346.93453						
29189444.	1.945963E+12	0.00001500	0.00028297	18.86497575	918.69122	
26457.79805						
29189444.	1.868124E+12	0.00001563	0.00029449	18.84714907	952.97728	
27568.28401						
29189444.	1.796273E+12	0.00001625	0.00030601	18.83149534	987.06471	
28678.39219						
29189444.	1.729745E+12	0.00001688	0.00031755	18.81778175	1020.95313	
29788.11837						
29189444.	1.667968E+12	0.00001750	0.00032910	18.80580300	1054.64181	
30897.46123						
29189444.	1.610452E+12	0.00001813	0.00034067	18.79538637	1088.13027	
32006.41722						
29189444.	1.556770E+12	0.00001875	0.00035224	18.78637666	1121.41769	
33114.98582						
29189444.	1.506552E+12	0.00001938	0.00036384	18.77864617	1154.50369	
34223.16225						
29445285.	1.472264E+12	0.00002000	0.00037544	18.77207476	1187.38737	
35330.94664						
30320196.	1.470070E+12	0.00002063	0.00038706	18.76656479	1220.06833	
36438.33437						
31194306.	1.467967E+12	0.00002125	0.00039869	18.76202613	1252.54589	
37545.32327						
32067608.	1.465948E+12	0.00002188	0.00041034	18.75837868	1284.81933	
38651.91133						
32940099.	1.464004E+12	0.00002250	0.00042200	18.75555235	1316.88804	
39758.09584						
33811771.	1.462131E+12	0.00002313	0.00043367	18.75348204	1348.75119	
40863.87579						
34682630.	1.460321E+12	0.00002375	0.00044536	18.75211769	1380.40851	
41969.24456						
35552664.	1.458571E+12	0.00002438	0.00045707	18.75140423	1411.85902	
43074.20270						
37290245.	1.455229E+12	0.00002563	0.00048051	18.75175720	1474.13711	
45282.87386						
39024479.	1.452074E+12	0.00002688	0.00050402	18.75423056	1535.58004	
47489.86687						
40755332.	1.449078E+12	0.00002813	0.00052758	18.75856894	1596.18220	
49695.15939						
42482770.	1.446222E+12	0.00002938	0.00055121	18.76456207	1655.93795	
51898.72775						
44206757.	1.443486E+12	0.00003063	0.00057489	18.77203470	1714.84155	
54100.54762						
45927251.	1.440855E+12	0.00003188	0.00059864	18.78083664	1772.88688	
56300.59694						
47644225.	1.438316E+12	0.00003313	0.00062245	18.79084772	1830.06830	
58498.84660						
49290443.	1.433904E+12	0.00003438	0.00064601	18.79307574	1885.63836	
60000.00000						
50592094.	1.420129E+12	0.00003563	0.00066805	18.75235552	1936.57226	
60000.00000						
51673274.	1.401309E+12	0.00003688	0.00068911	18.68780798	1984.33513	
60000.00000						

52752261.	1.383666E+12	0.00003813	0.00071022	18.62860769	2031.40364
60000.00000					
53547459.	1.359935E+12	0.00003938	0.00072989	18.53693837	2074.43930
60000.00000					
54260130.	1.335634E+12	0.00004063	0.00074918	18.44133872	2115.91860
60000.00000					
54971249.	1.312746E+12	0.00004188	0.00076850	18.35222286	2156.81005
60000.00000					
55680800.	1.291149E+12	0.00004313	0.00078785	18.26903254	2197.11067
60000.00000					
56161024.	1.265601E+12	0.00004438	0.00080762	18.19999892	2237.64098
60000.00000					
56993115.	1.249164E+12	0.00004563	0.00082908	18.17167050	2280.99402
60000.00000					
57413788.	1.224827E+12	0.00004688	0.00084631	18.05461425	2314.85020
60000.00000					
57833440.	1.201734E+12	0.00004813	0.00086356	17.94416696	2348.23772
60000.00000					
58252057.	1.179788E+12	0.00004938	0.00088084	17.83982795	2381.15427
60000.00000					
58669644.	1.158907E+12	0.00005063	0.00089815	17.74115163	2413.59810
60000.00000					
59086197.	1.139011E+12	0.00005188	0.00091548	17.64773244	2445.56712
60000.00000					
59501694.	1.120032E+12	0.00005313	0.00093283	17.55919987	2477.05888
60000.00000					
59916144.	1.101906E+12	0.00005438	0.00095022	17.47522348	2508.07154
60000.00000					
60329531.	1.084576E+12	0.00005563	0.00096762	17.39549786	2538.60273
60000.00000					
60741855.	1.067989E+12	0.00005688	0.00098506	17.31974763	2568.65041
60000.00000					
60977431.	1.049074E+12	0.00005813	0.00100095	17.22061819	2595.42800
60000.00000					
61201321.	1.030759E+12	0.00005938	0.00101676	17.12436265	2621.63294
60000.00000					
61424471.	1.013187E+12	0.00006063	0.00103259	17.03242046	2647.43974
60000.00000					
61646872.	9.963131E+11	0.00006188	0.00104844	16.94453126	2672.84666
60000.00000					
61868527.	9.800955E+11	0.00006313	0.00106432	16.86045724	2697.85220
60000.00000					
62191587.	9.660829E+11	0.00006438	0.00108150	16.80000025	2724.54555
60000.00000					
62367992.	9.503694E+11	0.00006563	0.00110180	16.78939837	2755.67135
60000.00000					
62580920.	9.357895E+11	0.00006688	0.00111716	16.70516163	2778.38849
60000.00000					
62793168.	9.217346E+11	0.00006813	0.00113253	16.62431949	2800.72949
60000.00000					
63004739.	9.081764E+11	0.00006938	0.00114793	16.54669172	2822.69294
60000.00000					
63215623.	8.950885E+11	0.00007063	0.00116334	16.47210807	2844.27711
60000.00000					
63425812.	8.824461E+11	0.00007188	0.00117878	16.40041083	2865.48036
60000.00000					
63635307.	8.702264E+11	0.00007313	0.00119424	16.33145481	2886.30118
60000.00000					
63844097.	8.584080E+11	0.00007438	0.00120972	16.26510233	2906.73783
60000.00000					
64259575.	8.358969E+11	0.00007688	0.00124074	16.13971227	2946.45262
60000.00000					
64672195.	8.147678E+11	0.00007938	0.00127185	16.02331442	2984.61115

60000.00000					
64893356.	7.925906E+11	0.00008188	0.00130026	15.88103145	3017.80662
60000.00000					
65092510.	7.714668E+11	0.00008438	0.00132844	15.74451131	3049.35696
60000.00000					
65289663.	7.515357E+11	0.00008688	0.00135670	15.61665541	3079.62662
60000.00000					
65484772.	7.326968E+11	0.00008938	0.00138502	15.49674028	3108.60510
60000.00000					
65484772.	7.127594E+11	0.00009188	0.00141487	15.39999908	3137.75721
60000.00000					
65944447.	6.987491E+11	0.00009438	0.00145152	15.38039500	3171.82075
60000.00000					
66121329.	6.825427E+11	0.00009688	0.00147867	15.26364917	3195.11487
60000.00000					
66296396.	6.671335E+11	0.00009938	0.00150588	15.15346724	3217.21293
60000.00000					
66469646.	6.524628E+11	0.00010188	0.00153316	15.04937607	3238.10555
60000.00000					
66641026.	6.384769E+11	0.00010438	0.00156050	14.95094007	3257.78254
60000.00000					
66810541.	6.251279E+11	0.00010688	0.00158792	14.85777372	3276.23431
60000.00000					
66978160.	6.123717E+11	0.00010938	0.00161542	14.76952153	3293.45064
60000.00000					
67143855.	6.001685E+11	0.00011188	0.00164298	14.68586057	3309.42120
60000.00000					
67307626.	5.884820E+11	0.00011438	0.00167062	14.60650045	3324.13574
60000.00000					
67469454.	5.772788E+11	0.00011688	0.00169833	14.53117329	3337.58361
60000.00000					
67629287.	5.665281E+11	0.00011938	0.00172612	14.45962876	3349.75370
60000.00000					
67787133.	5.562021E+11	0.00012188	0.00175398	14.39164656	3360.63520
60000.00000					
67942965.	5.462751E+11	0.00012438	0.00178192	14.32701892	3370.21678
60000.00000					
68096744.	5.367231E+11	0.00012688	0.00180994	14.26555306	3378.48681
60000.00000					
68211672.	5.272400E+11	0.00012938	0.00183692	14.19841701	3385.16579
60000.00000					
68274016.	5.177177E+11	0.00013188	0.00186242	14.12258917	3390.32155
60000.00000					
68334865.	5.085385E+11	0.00013438	0.00188798	14.05006582	3394.39023
60000.00000					
68529007.	5.006685E+11	0.00013688	0.00191625	14.00000042	3397.62404
60000.00000					
69055931.	4.954686E+11	0.00013938	0.00195125	14.00000042	3399.74549
60000.00000					
69055931.	4.867378E+11	0.00014188	0.00198363	13.98150784	3396.18329
60000.00000					
69055931.	4.783095E+11	0.00014438	0.00200779	13.90680403	3390.25966
60000.00000					
69055931.	4.701680E+11	0.00014688	0.00203203	13.83507425	3384.31931
60000.00000					
69055931.	4.622991E+11	0.00014938	0.00205632	13.76617330	3384.25799
60000.00000					
69055931.	4.546893E+11	0.00015188	0.00208068	13.69996601	3388.63171
60000.00000					
69055931.	4.473259E+11	0.00015438	0.00210511	13.63632721	3392.30649
60000.00000					
69055931.	4.401972E+11	0.00015688	0.00212960	13.57513922	3395.27513
60000.00000					

69055931.	4.332921E+11	0.00015938	0.00215416	13.51629192	3397.53027	60000.00000
69055931.	4.266003E+11	0.00016188	0.00217879	13.45968014	3399.06437	60000.00000
69055931.	4.201121E+11	0.00016438	0.00220348	13.40520877	3399.86981	60000.00000
69055931.	4.138183E+11	0.00016688	0.00222831	13.35315567	3397.88588	60000.00000
69055931.	4.077103E+11	0.00016938	0.00225328	13.30349582	3392.67479	60000.00000
69055931.	4.017800E+11	0.00017188	0.00227830	13.25557333	3387.45040	60000.00000
69086184.	3.961932E+11	0.00017438	0.00230337	13.20931560	3382.21263	60000.00000
69154134.	3.855283E+11	0.00017938	0.00235367	13.12152404	3379.83370	60000.00000
69220819.	3.754350E+11	0.00018438	0.00240418	13.03962547	3388.01880	60000.00000
69286219.	3.658678E+11	0.00018938	0.00245490	12.96317929	3394.11733	60000.00000
69350284.	3.567860E+11	0.00019438	0.00250584	12.89178747	3398.08828	60000.00000
69412991.	3.481529E+11	0.00019938	0.00255700	12.82509702	3399.88923	60000.00000
69472438.	3.399263E+11	0.00020438	0.00260863	12.76391906	3393.80534	60000.00000
69530196.	3.320845E+11	0.00020938	0.00266052	12.70694178	3384.71845	60000.00000
69587202.	3.246050E+11	0.00021438	0.00271256	12.65332156	3375.59196	60000.00000
69643453.	3.174630E+11	0.00021938	0.00276475	12.60284311	3368.47339	60000.00000
69643453.	3.103886E+11	0.00022438	0.00282712	12.59999925	3380.34200	60000.00000
69643453.	3.036227E+11	0.00022938	0.00289012	12.59999925	3389.54670	60000.00000
69643453.	2.971454E+11	0.00023438	0.00295312	12.59999925	3395.86865	60000.00000
69797654.	2.915829E+11	0.00023938	0.00301612	12.59999925	3399.30783	60000.00000
69960494.	2.862834E+11	0.00024438	0.00307205	12.57104498	3398.74694	60000.00000
70005963.	2.807257E+11	0.00024938	0.00312387	12.52680999	3391.52707	60000.00000
70048108.	2.753734E+11	0.00025438	0.00317643	12.48720628	3384.11279	60000.00000
70083532.	2.702016E+11	0.00025938	0.00323044	12.45471472	3376.31573	60000.00000
70118539.	2.652238E+11	0.00026438	0.00328460	12.42401809	3368.47914	60000.00000
70153099.	2.604291E+11	0.00026938	0.00333891	12.39502877	3360.60213	60000.00000
70187204.	2.558076E+11	0.00027438	0.00339338	12.36766917	3359.11320	60000.00000
70195775.	2.512600E+11	0.00027938	0.00344368	12.32636064	3366.26606	60000.00000
70195775.	2.468423E+11	0.00028438	0.00349151	12.27783984	3371.92329	60000.00000
70195775.	2.425772E+11	0.00028938	0.00353943	12.23127919	3377.08615	60000.00000
70195775.	2.384570E+11	0.00029438	0.00358743	12.18658358	3381.74715	60000.00000
70195775.	2.344744E+11	0.00029938	0.00363551	12.14366537	3385.89867	

```
60000.00000
   70195775.  2.306227E+11    0.00030438    0.00368368    12.10243696    3389.53247
60000.00000
   70195775.  2.268954E+11    0.00030938    0.00373194    12.06282574    3392.64075
60000.00000
   70195775.  2.232868E+11    0.00031438    0.00378028    12.02475661    3395.21501
60000.00000
   70195775.  2.197911E+11    0.00031938    0.00382872    11.98815948    3397.24659
60000.00000
```

Unfactored (Nominal) Moment Capacity at Concrete Strain of 0.003 = 69758.18628 in-kip

---

Computed Values of Load Distribution and Deflection
for Lateral Loading for Load Case Number 1

Pile-head boundary conditions are Shear and Moment (BC Type 1)
Specified shear force at pile head = 26950.000 lbs
Specified moment at pile head = 43542840.000 in-lbs
Specified axial load at pile head = 42080.000 lbs

Non-zero moment for this load case indicates the pile-head may rotate under the applied pile-head loading, but is not a free-head (zero moment)condition.

Depth X in	Deflect. y in	Moment M lbs-in	Shear V lbs	Slope S Rad.	Total Stress lbs/in**2	Flx. Rig. EI lbs-in**2	Soil Res. Es*h p lbs/in	F/L
0.000	1.248	4.35E+07	26950.	-0.008972	755.899	1.44E+12	0.000	0.000
3.240	1.219	4.36E+07	26950.	-0.008874	757.420	1.44E+12	0.000	0.000
6.480	1.190	4.37E+07	26927.	-0.008776	758.942	1.44E+12	-14.081	38.324
9.720	1.162	4.38E+07	26729.	-0.008678	760.460	1.44E+12	-108.079	301.320
12.960	1.134	4.39E+07	26234.	-0.008580	761.959	1.44E+12	-197.348	563.760
16.200	1.107	4.40E+07	25458.	-0.008481	763.422	1.44E+12	-282.170	826.200
19.440	1.079	4.41E+07	24413.	-0.008382	764.834	1.44E+12	-362.621	1088.640
22.680	1.052	4.41E+07	23115.	-0.008283	766.180	1.44E+12	-438.780	1351.080
25.920	1.026	4.42E+07	21577.	-0.008184	767.447	1.44E+12	-510.725	1613.520
29.160	0.999196	4.43E+07	19812.	-0.008085	768.621	1.44E+12	-578.535	1875.960
32.400	0.973162	4.43E+07	17834.	-0.007985	769.691	1.44E+12	-642.287	2138.400
35.640	0.947451	4.44E+07	15656.	-0.007886	770.644	1.44E+12	-702.061	2400.840
38.880	0.922063	4.44E+07	13291.	-0.007786	771.471	1.44E+12	-757.935	2663.280
42.120	0.896997	4.45E+07	10751.	-0.007686	772.161	1.44E+12	-809.989	

2925.720								
45.360	0.872256	4.45E+07	8048.614	-0.007586	772.705	1.44E+12	-858.300	
3188.160								
48.600	0.847838	4.45E+07	5195.393	-0.007486	773.093	1.44E+12	-902.948	
3450.600								
51.840	0.823745	4.46E+07	2203.318	-0.007386	773.318	1.44E+12	-944.012	
3713.040								
55.080	0.799976	4.46E+07	-916.124	-0.007286	773.373	1.44E+12	-981.570	
3975.480								
58.320	0.776530	4.46E+07	-4151.705	-0.007186	773.250	1.44E+12	-1015.702	
4237.920								
61.560	0.753409	4.45E+07	-8745.414	-0.007086	772.944	1.44E+12	-1819.921	
7826.480								
64.800	0.730612	4.45E+07	-14763.	-0.006986	772.310	1.44E+12	-1894.846	
8402.953								
68.040	0.708139	4.44E+07	-21020.	-0.006886	771.333	1.44E+12	-1967.336	
9001.297								
71.280	0.685989	4.44E+07	-27508.	-0.006787	770.001	1.44E+12	-2037.337	
9622.565								
74.520	0.664162	4.43E+07	-34218.	-0.006687	768.301	1.44E+12	-2104.779	
10268.								
77.760	0.642656	4.41E+07	-41142.	-0.006588	766.222	1.44E+12	-2169.578	
10938.								
81.000	0.621472	4.40E+07	-48272.	-0.006489	763.751	1.44E+12	-2231.643	
11635.								
84.240	0.600607	4.38E+07	-55599.	-0.006391	760.877	1.44E+12	-2290.875	
12358.								
87.480	0.580061	4.36E+07	-63112.	-0.006292	757.589	1.44E+12	-2347.170	
13110.								
90.720	0.559832	4.34E+07	-70804.	-0.006195	753.878	1.44E+12	-2400.422	
13892.								
93.960	0.539919	4.32E+07	-78662.	-0.006098	749.733	1.45E+12	-2450.520	
14705.								
97.200	0.520320	4.29E+07	-86678.	-0.006001	745.146	1.45E+12	-2497.351	
15551.								
100.440	0.501032	4.26E+07	-94844.	-0.005905	740.109	1.45E+12	-2543.592	
16449.								
103.680	0.482054	4.23E+07	-1.03E+05	-0.005810	734.612	1.45E+12	-2587.162	
17389.								
106.920	0.463382	4.20E+07	-1.12E+05	-0.005716	728.648	1.45E+12	-2590.337	
18112.								
110.160	0.445015	4.16E+07	-1.20E+05	-0.005622	722.217	1.45E+12	-2574.175	
18742.								
113.400	0.426950	4.12E+07	-1.28E+05	-0.005530	715.321	1.45E+12	-2552.675	
19372.								
116.640	0.409183	4.08E+07	-1.36E+05	-0.005438	707.965	1.45E+12	-2525.994	
20001.								
119.880	0.391711	4.03E+07	-1.45E+05	-0.005347	700.152	1.45E+12	-2494.286	
20631.								
123.120	0.374531	3.98E+07	-1.53E+05	-0.005258	691.889	1.45E+12	-2457.698	
21261.								
126.360	0.357639	3.93E+07	-1.60E+05	-0.005170	683.183	1.45E+12	-2416.378	
21891.								
129.600	0.341032	3.88E+07	-1.68E+05	-0.005083	674.041	1.45E+12	-2370.467	
22521.								
132.840	0.324705	3.82E+07	-1.76E+05	-0.004997	664.471	1.45E+12	-2320.101	
23151.								
136.080	0.308654	3.76E+07	-1.83E+05	-0.004912	654.482	1.45E+12	-2265.414	
23781.								
139.320	0.292874	3.70E+07	-1.91E+05	-0.004829	644.084	1.46E+12	-2206.532	
24410.								
142.560	0.277362	3.64E+07	-1.98E+05	-0.004747	633.287	1.46E+12	-2143.580	
25040.								

145.800	0.262112	3.58E+07	-2.04E+05	-0.004667	622.104	1.46E+12	-2076.674	25670.
149.040	0.247119	3.51E+07	-2.11E+05	-0.004588	610.546	1.46E+12	-2005.929	26300.
152.280	0.232379	3.44E+07	-2.17E+05	-0.004511	598.626	1.46E+12	-1931.453	26930.
155.520	0.217885	3.37E+07	-2.24E+05	-0.004436	586.358	1.46E+12	-1853.347	27560.
158.760	0.203634	3.29E+07	-2.29E+05	-0.004362	573.755	1.46E+12	-1771.710	28190.
162.000	0.189619	3.22E+07	-2.35E+05	-0.004290	560.832	1.47E+12	-1686.633	28819.
165.240	0.175834	3.14E+07	-2.40E+05	-0.004220	547.604	1.47E+12	-1598.203	29449.
168.480	0.162274	3.06E+07	-2.45E+05	-0.004151	534.088	1.47E+12	-1506.500	30079.
171.720	0.148933	2.98E+07	-2.50E+05	-0.004085	520.301	1.47E+12	-1411.599	30709.
174.960	0.135805	2.90E+07	-2.54E+05	-0.004047	506.258	9.34E+12	-1313.571	31339.
178.200	0.122710	2.82E+07	-2.59E+05	-0.004037	491.978	9.35E+12	-1210.760	31969.
181.440	0.109646	2.73E+07	-2.61E+05	-0.004027	477.480	9.35E+12	-449.158	13272.
184.680	0.096613	2.65E+07	-2.63E+05	-0.004018	462.901	9.36E+12	-402.029	13482.
187.920	0.083609	2.56E+07	-2.64E+05	-0.004009	448.249	9.36E+12	-353.336	13692.
191.160	0.070635	2.48E+07	-2.65E+05	-0.004000	433.534	9.37E+12	-303.082	13902.
194.400	0.057688	2.39E+07	-2.66E+05	-0.003992	418.764	9.38E+12	-251.267	14112.
197.640	0.044767	2.31E+07	-2.67E+05	-0.003984	403.948	9.39E+12	-197.892	14322.
200.880	0.031873	2.22E+07	-2.67E+05	-0.003976	389.097	9.39E+12	-142.959	14532.
204.120	0.019004	2.13E+07	-2.67E+05	-0.003968	374.220	9.40E+12	-86.467	14742.
207.360	0.006158	2.05E+07	-2.68E+05	-0.003961	359.327	9.40E+12	-28.418	14952.
210.600	-0.006665	1.96E+07	-2.68E+05	-0.003954	344.430	9.41E+12	31.190	15162.
213.840	-0.019466	1.87E+07	-2.67E+05	-0.003948	329.537	9.42E+12	92.355	15372.
217.080	-0.032246	1.79E+07	-2.67E+05	-0.003941	314.662	9.42E+12	155.079	15582.
220.320	-0.045006	1.70E+07	-2.66E+05	-0.003935	299.814	9.43E+12	219.362	15792.
223.560	-0.057747	1.61E+07	-2.66E+05	-0.003930	285.006	9.43E+12	285.206	16002.
226.800	-0.070471	1.53E+07	-2.65E+05	-0.003924	270.250	9.44E+12	352.611	16212.
230.040	-0.083177	1.44E+07	-2.63E+05	-0.003919	255.557	9.44E+12	421.578	16422.
233.280	-0.095867	1.36E+07	-2.62E+05	-0.003914	240.940	9.45E+12	492.110	16632.
236.520	-0.108543	1.27E+07	-2.60E+05	-0.003910	226.412	9.46E+12	564.209	16842.
239.760	-0.121204	1.19E+07	-2.58E+05	-0.003906	211.985	9.47E+12	637.875	17052.
243.000	-0.133851	1.11E+07	-2.54E+05	-0.003902	197.674	9.47E+12	2038.169	49336.
246.240	-0.146487	1.02E+07	-2.47E+05	-0.003898	183.730	9.47E+12	2259.050	

```
49966.
 249.480 -0.159111  9.46E+06 -2.39E+05 -0.003895   170.194  9.48E+12  2484.666
50596.
 252.720 -0.171725  8.70E+06 -2.31E+05 -0.003892   157.106  9.48E+12  2600.717
49069.
 255.960 -0.184329  7.97E+06 -2.22E+05 -0.003889   144.488  9.49E+12  2673.693
46996.
 259.200 -0.196925  7.26E+06 -2.14E+05 -0.003886   132.351  9.49E+12  2743.876
45145.
 262.440 -0.209512  6.58E+06 -2.05E+05 -0.003884   120.710  9.50E+12  2811.493
43478.
 265.680 -0.222092  5.93E+06 -1.95E+05 -0.003882   109.576  9.51E+12  2876.726
41967.
 268.920 -0.234665  5.32E+06 -1.86E+05 -0.003880    98.961  9.51E+12  2939.726
40588.
 272.160 -0.247233  4.73E+06 -1.76E+05 -0.003878    88.876  9.51E+12  3000.616
39323.
 275.400 -0.259795  4.17E+06 -1.67E+05 -0.003877    79.333  9.51E+12  3059.497
38156.
 278.640 -0.272353  3.65E+06 -1.57E+05 -0.003875    70.341  9.51E+12  3116.453
37074.
 281.880 -0.284907  3.16E+06 -1.46E+05 -0.003874    61.912  9.51E+12  3171.555
36067.
 285.120 -0.297457  2.70E+06 -1.36E+05 -0.003873    54.055  9.51E+12  3224.859
35126.
 288.360 -0.310004  2.28E+06 -1.26E+05 -0.003872    46.779  9.51E+12  3276.413
34243.
 291.600 -0.322549  1.89E+06 -1.15E+05 -0.003872    40.095  9.51E+12  3326.254
33412.
 294.840 -0.335092  1.54E+06 -1.04E+05 -0.003871    34.011  9.51E+12  3374.415
32627.
 298.080 -0.347633  1.22E+06   -92956. -0.003870    28.536  9.51E+12  3420.919
31884.
 301.320 -0.360172  9.36E+05   -81800. -0.003870    23.677  9.51E+12  3465.786
31177.
 304.560 -0.372711  6.90E+05   -70501. -0.003870    19.444  9.51E+12  3509.030
30504.
 307.800 -0.385249  4.80E+05   -59064. -0.003870    15.844  9.51E+12  3550.661
29862.
 311.040 -0.397786  3.08E+05   -47495. -0.003869    12.885  9.51E+12  3590.687
29246.
 314.280 -0.410323  1.73E+05   -35799. -0.003869    10.573  9.51E+12  3629.110
28656.
 317.520 -0.422860    77004.   -23981. -0.003869     8.917  9.51E+12  3665.931
28089.
 320.760 -0.435397    19075.   -12046. -0.003869     7.921  9.51E+12  3701.147
27542.
 324.000 -0.447933     0.000     0.000 -0.003869     7.593  9.51E+12  3734.756
13507.
```

Please note that because this analysis makes computations of ultimate moment capacity and pile response using nonlinear bending stiffness that the above values of total stress due to combined axial stress and bending may not be representative of actual conditions.

Output Verification:

Computed forces and moments are within specified convergence limits.

Output Summary for Load Case No. 1:

```
Pile-head deflection              =     1.24792548 in
Computed slope at pile head       =    -0.00897203
Maximum bending moment            =      44559636. lbs-in
Maximum shear force               =  -267676.45324 lbs
Depth of maximum bending moment   =    55.08000000 in
Depth of maximum shear force      =      207.36000 in
Number of iterations              =             79
Number of zero deflection points  =              1
```

Summary of Pile Response(s)

Definition of Symbols for Pile-Head Loading Conditions:

```
Type 1 = Shear and Moment,          y = pile-head displacment in
Type 2 = Shear and Slope,           M = Pile-head Moment lbs-in
Type 3 = Shear and Rot. Stiffness,  V = Pile-head Shear Force lbs
Type 4 = Deflection and Moment,     S = Pile-head Slope, radians
Type 5 = Deflection and Slope,      R = Rot. Stiffness of Pile-head in-lbs/rad
```

Load Type	Pile-Head Condition 1	Pile-Head Condition 2	Axial Load lbs	Pile-Head Deflection in	Maximum Moment in-lbs	Maximum Shear lbs
1	V= 26950.	M= 4.35E+07	42080.0000	1.2479	4.4560E+07	-267676.

This analysis ended normally.

C Squared Systems, LLC
65 Dartmouth Drive, Unit A3
Auburn, NH 03032
(603) 644-2800
support@csquaredsystems.com

Calculated Radio Frequency Emissions

CT5293

(AWE – Enfield East)

188 Moody Street, Enfield, CT 06082

May 8, 2012

Table of Contents

1. Introduction 1
2. FCC Guidelines for Evaluating RF Radiation Exposure Limits 1
3. RF Exposure Prediction Methods 2
4. Calculation Results 3
5. Conclusion 4
6. Statement of Certification 4
Attachment A: References 5
Attachment B: FCC Limits for Maximum Permissible Exposure (MPE) 6
Attachment C: AT&T Antenna Data Sheets and Electrical Patterns 8

List of Tables

Table 1: Carrier Information 3
Table 2: FCC Limits for Maximum Permissible Exposure (MPE) 6

List of Figures

Figure 1: Graph of FCC Limits for Maximum Permissible Exposure (MPE) 7

1. Introduction

The purpose of this report is to investigate compliance with applicable FCC regulations for the proposed modifications to the existing AT&T antenna arrays mounted on the monopole tower located at 188 Moody Street in Enfield, CT. The coordinates of the tower are 42-00-07.22 N, 72-31-18.28 W.

AT&T is proposing the following modifications:

1) Install three 700MHz LTE antennas (one per sector).

2. FCC Guidelines for Evaluating RF Radiation Exposure Limits

In 1985, the FCC established rules to regulate radio frequency (RF) exposure from FCC licensed antenna facilities. In 1996, the FCC updated these rules, which were further amended in August 1997 by OET Bulletin 65 Edition 97-01. These new rules include Maximum Permissible Exposure (MPE) limits for transmitters operating between 300 kHz and 100 GHz. The FCC MPE limits are based upon those recommended by the National Council on Radiation Protection and Measurements (NCRP), developed by the Institute of Electrical and Electronics Engineers, Inc., (IEEE) and adopted by the American National Standards Institute (ANSI).

The FCC general population/uncontrolled limits set the maximum exposure to which most people may be subjected. General population/uncontrolled exposures apply in situations in which the general public may be exposed, or in which persons that are exposed as a consequence of their employment may not be fully aware of the potential for exposure or cannot exercise control over their exposure.

Public exposure to radio frequencies is regulated and enforced in units of milliwatts per square centimeter (mW/cm^2). The general population exposure limits for the various frequency ranges are defined in the attached "FCC Limits for Maximum Permissible Exposure (MPE)" in Attachment B of this report.

Higher exposure limits are permitted under the occupational/controlled exposure category, but only for persons who are exposed as a consequence of their employment and who have been made fully aware of the potential for exposure, and they must be able to exercise control over their exposure. General population/uncontrolled limits are five times more stringent than the levels that are acceptable for occupational, or radio frequency trained individuals. Attachment B contains excerpts from OET Bulletin 65 and defines the Maximum Exposure Limit.

Finally, it should be noted that the MPE limits adopted by the FCC for both general population/uncontrolled exposure and for occupational/controlled exposure incorporate a substantial margin of safety and have been established to be well below levels generally accepted as having the potential to cause adverse health effects.

3. RF Exposure Prediction Methods

The emission field calculation results displayed in the following figures were generated using the following formula as outlined in FCC bulletin OET 65:

$$\text{Power Density} = \left(\frac{1.6^2 \times EIRP}{4\pi \times R^2}\right) \text{x Off Beam Loss}$$

Where:

EIRP = Effective Isotropic Radiated Power

R = Radial Distance = $\sqrt{(H^2 + V^2)}$

H = Horizontal Distance from antenna in meters

V = Vertical Distance from radiation center of antenna in meters

Ground reflection factor of 1.6

Off Beam Loss is determined by the selected antenna pattern

These calculations assume that the antennas are operating at 100 percent capacity and power, and that all channels are transmitting simultaneously. Obstructions (trees, buildings, etc.) that would normally attenuate the signal are not taken into account. The calculations assume even terrain in the area of study and do not take into account actual terrain elevations which could attenuate the signal. As a result, the predicted signal levels reported below are much higher than the actual signal levels will be from the finished modifications.

4. Calculation Results

Table 1 below outlines the power density information for the site. Because the proposed AT&T antennas are directional in nature, the majority of the RF power is focused out towards the horizon. As a result, there will be less RF power directed below the antennas relative to the horizon, and consequently lower power density levels around the base of the tower. Please refer to Attachment C for the vertical pattern of the proposed AT&T antennas. The calculated results for AT&T in Table 1 include a nominal 10 dB off-beam pattern loss to account for the lower relative gain below the antennas.

Carrier	Antenna Height (Feet)	Operating Frequency (MHz)	Number of Trans.	ERP Per Transmitter (Watts)	Power Density (mw/cm^2)	Limit	%MPE
Cingular GSM	*158*	*1900*	*2*	*625*	*0.0180*	*1.0000*	*1.80%*
Cingular UMTS	*158*	*880*	*1*	*500*	*0.0072*	*0.5867*	*1.23%*
Pocket	148	2130	3	631	0.0311	1.0000	3.11%
Nextel	180	851	9	100	0.0100	0.5673	1.76%
Sprint	170	1962.5	11	291	0.0398	1.0000	3.98%
Clearwire	177	2496	2	153	0.0035	1.0000	0.35%
Clearwire	177	11000	1	211	0.0024	1.0000	0.24%
T-Mobile	188	1945	8	138	0.0112	1.0000	1.12%
AT&T UMTS	158	880	2	565	0.0016	0.5867	0.28%
AT&T UMTS	158	1900	2	1077	0.0031	1.0000	0.31%
AT&T LTE	158	734	1	1615	0.0023	0.4893	0.48%
AT&T GSM	158	880	1	283	0.0004	0.5867	0.07%
AT&T GSM	158	1900	4	646	0.0037	1.0000	0.37%
						Total	**12.07%**

Table 1: Carrier Information[1 2 3]

[1] The existing CSC filing for Cingular should be removed and replaced with the updated AT&T technologies and values provided in Table 1. The power density information for carriers other than AT&T was taken directly from the CSC database dated 3/29/2012. Please note that %MPE values listed are rounded to two decimal points. The total %MPE listed is a summation of each unrounded contribution. Therefore, summing each rounded value may not reflect the total listed reflected in the table.

[2] In the case where antenna models are not uniform across all 3 sectors for the same frequency band, the antenna model with the highest gain was used for the calculations to present a worse-case scenario.

[3] Antenna height listed for AT&T is in reference to the Vertical Solutions, Inc. Structural Analysis report dated 5/1/2012.

5. Conclusion

The above analysis verifies that emissions from the existing site will be below the maximum power density levels as outlined by the FCC in the OET Bulletin 65 Ed. 97-01. Even when using conservative methods, the cumulative power density from the proposed transmit antennas at the existing facility is well below the limits for the general public. The highest expected percent of Maximum Permissible Exposure at ground level is **12.07% of the FCC limit**.

As noted previously, obstructions (trees, buildings, etc.) that would normally attenuate the signal are not taken into account. As a result, the predicted signal levels are more conservative (higher) than the actual signal levels will be from the finished modifications.

6. Statement of Certification

I certify to the best of my knowledge that the statements in this report are true and accurate. The calculations follow guidelines set forth in ANSI/IEEE Std. C95.3, ANSI/IEEE Std. C95.1 and FCC OET Bulletin 65 Edition 97-01.

Daniel L. Goulet
C Squared Systems, LLC

May 8, 2012
Date

Attachment A: References

OET Bulletin 65 - Edition 97-01 - August 1997 Federal Communications Commission Office of Engineering & Technology

ANSI C95.1-1982, American National Standard Safety Levels With Respect to Human Exposure to Radio Frequency Electromagnetic Fields, 300 kHz to 100 GHz. IEEE-SA Standards Board

IEEE Std C95.3-1991 (Reaff 1997), IEEE Recommended Practice for the Measurement of Potentially Hazardous Electromagnetic Fields - RF and Microwave. IEEE-SA Standards Board

Attachment B: FCC Limits for Maximum Permissible Exposure (MPE)

(A) Limits for Occupational/Controlled Exposure[4]

Frequency Range (MHz)	Electric Field Strength (E) (V/m)	Magnetic Field Strength (E) (A/m)	Power Density (S) (mW/cm^2)	Averaging Time $\|E\|^2$, $\|H\|^2$ or S (minutes)
0.3-3.0	614	1.63	(100)*	6
3.0-30	1842/f	4.89/f	($900/f^2$)*	6
30-300	61.4	0.163	1.0	6
300-1500	-	-	f/300	6
1500-100,000	-	-	5	6

(B) Limits for General Population/Uncontrolled Exposure[5]

Frequency Range (MHz)	Electric Field Strength (E) (V/m)	Magnetic Field Strength (E) (A/m)	Power Density (S) (mW/cm^2)	Averaging Time $\|E\|^2$, $\|H\|^2$ or S (minutes)
0.3-1.34	614	1.63	(100)*	30
1.34-30	824/f	2.19/f	($180/f^2$)*	30
30-300	27.5	0.073	0.2	30
300-1500	-	-	f/1500	30
1500-100,000	-	-	1.0	30

f = frequency in MHz * Plane-wave equivalent power density

Table 2: FCC Limits for Maximum Permissible Exposure (MPE)

[4] Occupational/controlled limits apply in situations in which persons are exposed as a consequence of their employment provided those persons are fully aware of the potential for exposure and can exercise control over their exposure. Limits for occupational/controlled exposure also apply in situations when an individual is transient through a location where occupational/controlled limits apply provided he or she is made aware of the potential for exposure.

[5] General population/uncontrolled exposures apply in situations in which the general public may be exposed, or in which persons that are exposed as a consequence of their employment may not be fully aware of the potential for exposure or cannot exercise control over their exposure.

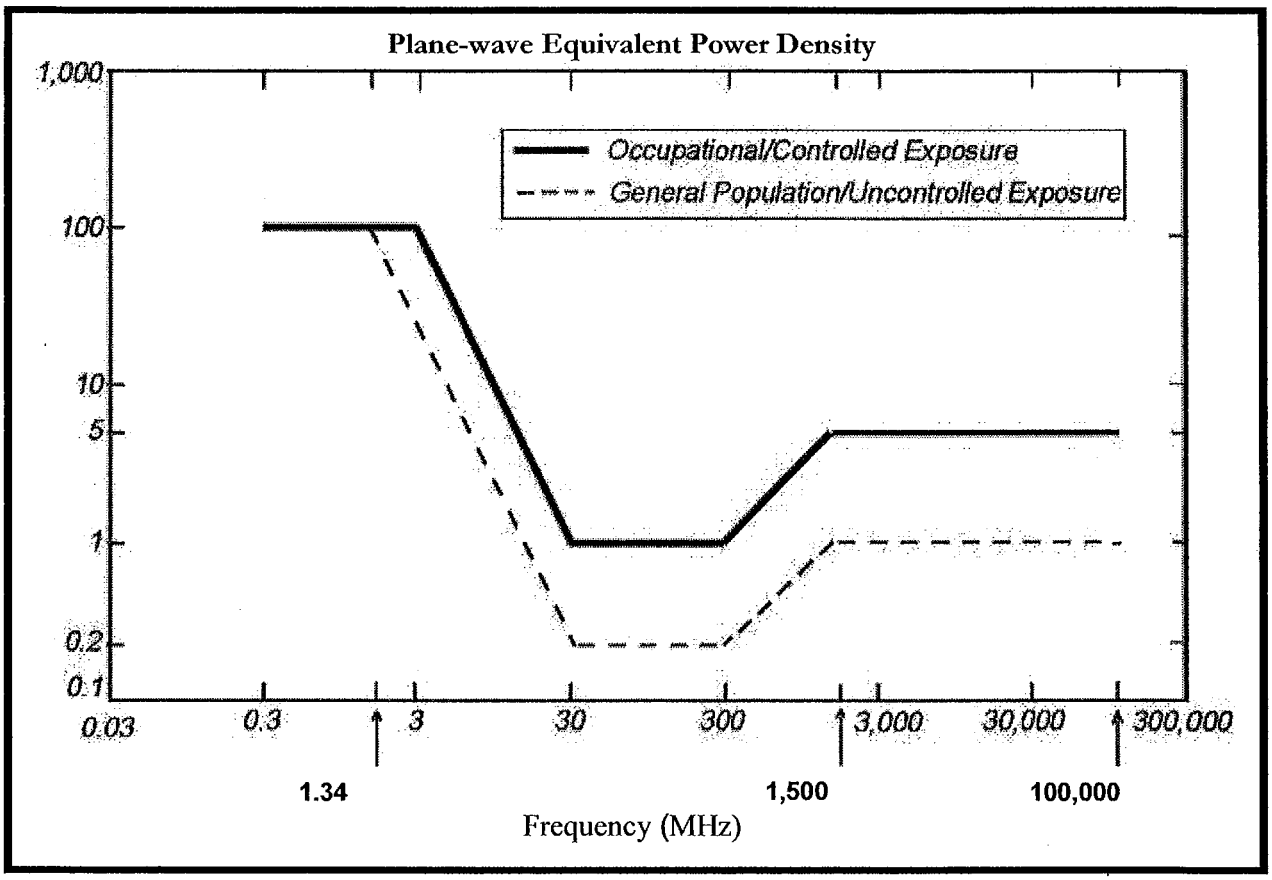

Figure 1: Graph of FCC Limits for Maximum Permissible Exposure (MPE)

Attachment C: AT&T Antenna Data Sheets and Electrical Patterns

700 MHz

Manufacturer:	Powerwave
Model #:	P65-17-XLH-RR
Frequency Band:	698-806 MHz
Gain:	14.3 dBd
Vertical Beamwidth:	8.4°
Horizontal Beamwidth:	70°
Polarization:	Dual Linear ±45°
Size L x W x D:	96.0" x 12.0" x 6.0"

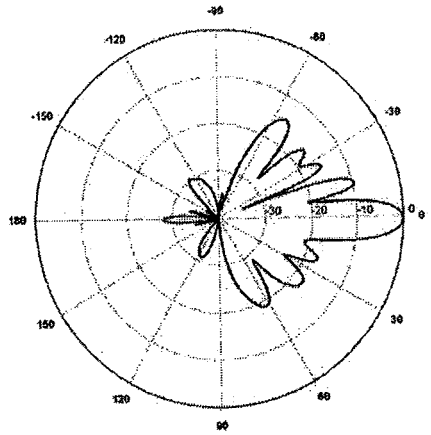

850 MHz

Manufacturer:	Kathrein-Scala
Model #:	800 10121
Frequency Band:	824-896 MHz
Gain:	11.5 dBd
Vertical Beamwidth:	14.5°
Horizontal Beamwidth:	86°
Polarization:	±45°
Size L x W x D:	54.5" x 10.3" x 5.9"

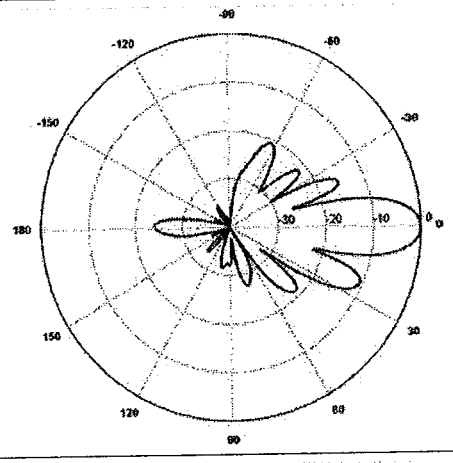

1900 MHz

Manufacturer:	Kathrein-Scala
Model #:	800 10121
Frequency Band:	1850-1990 MHz
Gain:	14.3 dBd
Vertical Beamwidth:	6.6°
Horizontal Beamwidth:	85°
Polarization:	±45°
Size L x W x D:	54.5" x 10.3" x 5.9"

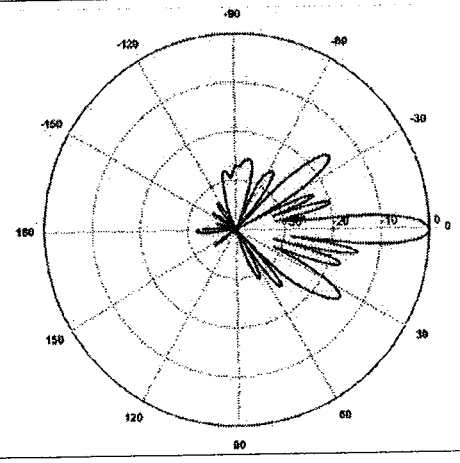

PROJECT INFORMATION

SCOPE OF WORK:	UNMANNED TELECOMMUNICATIONS FACILITY MODIFICATIONS
SITE ADDRESS:	188 MOODY STREET ENFIELD, CT 06082
LATITUDE:	42.002392 N 42° 0' 8.61" N
LONGITUDE:	72.521499 W 72° 31' 17.4" W
JURISDICTION:	NATIONAL, STATE & LOCAL CODES OR ORDINANCES
CURRENT USE:	TELECOMMUNICATIONS FACILITY
PROPOSED USE:	TELECOMMUNICATIONS FACILITY
MAP/LOT:	100/12
ZONING:	I-1
LAND USE:	LIGHT MFG & ASSEMBLY
PROPERTY OWNER:	TROIANO REALTY CORP. 188 MOODY ROAD ENFIELD, CT 06082
STRUCTURE OWNER:	TOWERCO 5000 VALLEYSTONE DRIVE CARY, NC 27519

at&t

SITE NUMBER: CT5293
SITE NAME: ENFIELD EAST

DRAWING INDEX

		REV
T-1	TITLE SHEET	1
GN-1	GENERAL NOTES	1
A-1	EQUIPMENT & COMPOUND PLAN	1
A-2	ANTENNA LAYOUT & ELEVATION PLAN	1
A-3	DETAILS	1
G-1	PLUMBING DIAGRAM & GROUNDING DETAILS	1

VICINITY MAP

DIRECTIONS TO SITE:
FROM ROCKY HILL, CT, MERGE ONTO I-91 N VIA THE RAMP ON THE LEFT TOWARD HARTFORD. (26.9 MILES) TAKE THE ELM ST / CT-220 EXIT- EXIT 48- TOWARD THOMPSONVILLE. (0.1 MILES) TURN RIGHT ONTO ELM ST / CT-220. (0.9 MILES) TURN SLIGHT RIGHT ONTO ELM ST. (0.6 MILES) TURN LEFT ONTO MOODY RD.

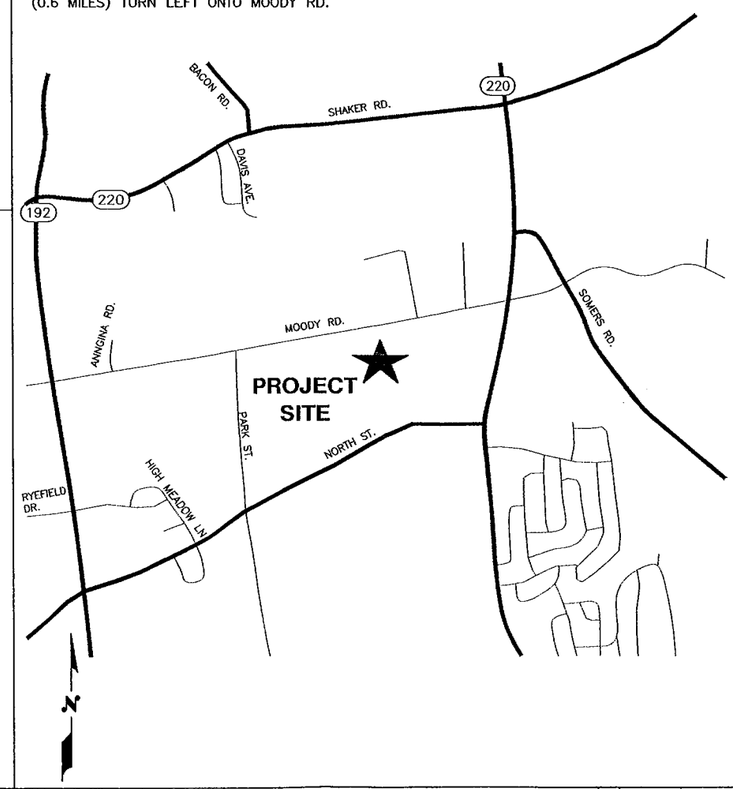

GENERAL NOTES

1. THIS DOCUMENT IS THE CREATION, DESIGN, PROPERTY AND COPYRIGHTED WORK OF AT&T. ANY DUPLICATION OR USE WITHOUT EXPRESS WRITTEN CONSENT IS STRICTLY PROHIBITED. DUPLICATION AND USE BY GOVERNMENT AGENCIES FOR THE PURPOSES OF CONDUCTING THEIR LAWFULLY AUTHORIZED REGULATORY AND ADMINISTRATIVE FUNCTIONS IS SPECIFICALLY ALLOWED.
2. THE FACILITY IS AN UNMANNED PRIVATE AND SECURED EQUIPMENT INSTALLATION. IT IS ONLY ACCESSED BY TRAINED TECHNICIANS FOR PERIODIC ROUTINE MAINTENANCE AND THEREFORE DOES NOT REQUIRE ANY WATER OR SANITARY SEWER SERVICE. THE FACILITY IS NOT GOVERNED BY REGULATIONS REQUIRING PUBLIC ACCESS PER ADA REQUIREMENTS.
3. CONTRACTOR SHALL VERIFY ALL PLANS AND EXISTING DIMENSIONS AND CONDITIONS ON THE JOB SITE AND SHALL IMMEDIATELY NOTIFY THE AT&T REPRESENTATIVE IN WRITING OF DISCREPANCIES BEFORE PROCEEDING WITH THE WORK OR BE RESPONSIBLE FOR SAME.

CALL
BEFORE YOU DIG
CALL TOLL FREE 800-922-4455

UNDERGROUND SERVICE ALERT

Hudson Design Groupe
1600 OSGOOD STREET
BUILDING 20 NORTH, SUITE 2-101
N. ANDOVER, MA 01845
TEL: (978) 557-5553
FAX: (978) 336-5586

NEXLINK GLOBAL SERVICES
a UniTek GLOBAL SERVICES company
800 MARSHALL PHELPS ROAD UNIT#: 2A
WINDSOR, CT 06095

SITE NUMBER: CT5293
SITE NAME: ENFIELD EAST

188 MOODY STREET
ENFIELD, CT 06082
HARTFORD COUNTY

at&t
500 ENTERPRISE DRIVE, SUITE 3A
ROCKY HILL, CT 06067

NO.	DATE	REVISIONS	BY	CHK	APP'D
1	04/13/12	ISSUED FOR CONSTRUCTION	PN	DC	DPH
0	03/23/12	ISSUED FOR REVIEW	JG	DC	DPH

SCALE: AS SHOWN | DESIGNED BY: DC | DRAWN BY: JG

STATE OF CONNECTICUT DANIEL P. HAMM No. 24178 LICENSED PROFESSIONAL ENGINEER

AT&T

TITLE SHEET (LTE)

JOB NUMBER	DRAWING NUMBER	REV
5293.01	T-1	1

GROUNDING NOTES

1. THE SUBCONTRACTOR SHALL REVIEW AND INSPECT THE EXISTING FACILITY GROUNDING SYSTEM AND LIGHTNING PROTECTION SYSTEM (AS DESIGNED AND INSTALLED) FOR STRICT COMPLIANCE WITH THE NEC (AS ADOPTED BY THE AHJ), THE SITE-SPECIFIC (UL, LPI, OR NFPA) LIGHTING PROTECTION CODE, AND GENERAL COMPLIANCE WITH TELCORDIA AND TIA GROUNDING STANDARDS. THE SUBCONTRACTOR SHALL REPORT ANY VIOLATIONS OR ADVERSE FINDINGS TO THE CONTRACTOR FOR RESOLUTION.

2. ALL GROUND ELECTRODE SYSTEMS (INCLUDING TELECOMMUNICATION, RADIO, LIGHTNING PROTECTION, AND AC POWER GES'S) SHALL BE BONDED TOGETHER, AT OR BELOW GRADE, BY TWO OR MORE COPPER BONDING CONDUCTORS IN ACCORDANCE WITH THE NEC.

3. THE SUBCONTRACTOR SHALL PERFORM IEEE FALL-OF-POTENTIAL RESISTANCE TO EARTH TESTING (PER IEEE 1100 AND 81) FOR NEW GROUND ELECTRODE SYSTEMS. THE SUBCONTRACTOR SHALL FURNISH AND INSTALL SUPPLEMENTAL GROUND ELECTRODES AS NEEDED TO ACHIEVE A TEST RESULT OF 5 OHMS OR LESS.

4. METAL RACEWAY SHALL NOT BE USED AS THE NEC REQUIRED EQUIPMENT GROUND CONDUCTOR. STRANDED COPPER CONDUCTORS WITH GREEN INSULATION, SIZED IN ACCORDANCE WITH THE NEC, SHALL BE FURNISHED AND INSTALLED WITH THE POWER CIRCUITS TO BTS EQUIPMENT.

5. EACH BTS CABINET FRAME SHALL BE DIRECTLY CONNECTED TO THE MASTER GROUND BAR WITH GREEN INSULATED SUPPLEMENTAL EQUIPMENT GROUND WIRES, 6 AWG STRANDED COPPER OR LARGER FOR INDOOR BTS 2 AWG STRANDED COPPER FOR OUTDOOR BTS.

6. EXOTHERMIC WELDS SHALL BE USED FOR ALL GROUNDING CONNECTIONS BELOW GRADE.

7. APPROVED ANTIOXIDANT COATINGS (I.E., CONDUCTIVE GEL OR PASTE) SHALL BE USED ON ALL COMPRESSION AND BOLTED GROUND CONNECTIONS.

8. ICE BRIDGE BONDING CONDUCTORS SHALL BE EXOTHERMICALLY BONDED OR BOLTED TO THE BRIDGE AND THE TOWER GROUND BAR.

9. ALUMINUM CONDUCTOR OR COPPER CLAD STEEL CONDUCTOR SHALL NOT BE USED FOR GROUNDING CONNECTIONS.

10. MISCELLANEOUS ELECTRICAL AND NON-ELECTRICAL METAL BOXES, FRAMES AND SUPPORTS SHALL BE BONDED TO THE GROUND RING, IN ACCORDANCE WITH THE NEC.

11. METAL CONDUIT SHALL BE MADE ELECTRICALLY CONTINUOUS WITH LISTED BONDING FITTINGS OR BY BONDING ACROSS THE DISCONTINUITY WITH 6 AWS COPPER WIRE UL APPROVED GROUNDING TYPE CONDUIT CLAMPS.

12. ALL NEW STRUCTURES WITH A FOUNDATION AND/OR FOOTING HAVING 20 FT. OR MORE OF 1/2 IN. OR GREATER ELECTRICALLY CONDUCTIVE REINFORCING STEEL MUST HAVE IT BONDED TO THE GROUND RING USING AN EXOTHERMIC WELD CONNECTION USING #2 AWG SOLID BARE TINNED COPPER GROUND WIRE, PER NEC 250.50

GENERAL NOTES

1. FOR THE PURPOSE OF CONSTRUCTION DRAWING, THE FOLLOWING DEFINITIONS SHALL APPLY:
CONTRACTOR – NEXLINK
SUBCONTRACTOR – GENERAL CONTRACTOR (CONSTRUCTION)
OWNER – AT&T MOBILITY

2. PRIOR TO THE SUBMISSION OF BIDS, THE BIDDING SUBCONTRACTOR SHALL VISIT THE CELL SITE TO FAMILIARIZE WITH THE EXISTING CONDITIONS AND TO CONFIRM THAT THE WORK CAN BE ACCOMPLISHED AS SHOWN ON THE CONSTRUCTION DRAWINGS. ANY DISCREPANCY FOUND SHALL BE BROUGHT TO THE ATTENTION OF CONTRACTOR.

3. ALL MATERIALS FURNISHED AND INSTALLED SHALL BE IN STRICT ACCORDANCE WITH ALL APPLICABLE CODES, REGULATIONS, AND ORDINANCES. SUBCONTRACTOR SHALL ISSUE ALL APPROPRIATE NOTICES AND COMPLY WITH ALL LAWS, ORDINANCES, RULES, REGULATIONS, AND LAWFUL ORDERS OF ANY PUBLIC AUTHORITY REGARDING THE PERFORMANCE OF THE WORK. ALL WORK CARRIED OUT SHALL COMPLY WITH ALL APPLICABLE MUNICIPAL AND UTILITY COMPANY SPECIFICATIONS AND LOCAL JURISDICTIONAL CODES, ORDINANCES AND APPLICABLE REGULATIONS.

4. DRAWINGS PROVIDED HERE ARE NOT TO BE SCALED AND ARE INTENDED TO SHOW OUTLINE ONLY.

5. UNLESS NOTED OTHERWISE, THE WORK SHALL INCLUDE FURNISHING MATERIALS, EQUIPMENT, APPURTENANCES, AND LABOR NECESSARY TO COMPLETE ALL INSTALLATIONS AS INDICATED ON THE DRAWINGS.

6. "KITTING LIST" SUPPLIED WITH THE BID PACKAGE IDENTIFIES ITEMS THAT WILL BE SUPPLIED BY CONTRACTOR. ITEMS NOT INCLUDED IN THE BILL OF MATERIALS AND KITTING LIST SHALL BE SUPPLIED BY THE SUBCONTRACTOR.

7. THE SUBCONTRACTOR SHALL INSTALL ALL EQUIPMENT AND MATERIALS IN ACCORDANCE WITH MANUFACTURER'S RECOMMENDATIONS UNLESS SPECIFICALLY STATED OTHERWISE.

8. IF THE SPECIFIED EQUIPMENT CANNOT BE INSTALLED AS SHOWN ON THESE DRAWINGS, THE SUBCONTRACTOR SHALL PROPOSE AN ALTERNATIVE INSTALLATION SPACE FOR APPROVAL BY THE CONTRACTOR.

9. SUBCONTRACTOR SHALL DETERMINE ACTUAL ROUTING OF CONDUIT, POWER AND T1 CABLES, GROUNDING CABLES AS SHOWN ON THE POWER, GROUNDING AND TELCO PLAN DRAWING. SUBCONTRACTOR SHALL UTILIZE EXISTING TRAYS AND/OR SHALL ADD NEW TRAYS AS NECESSARY. SUBCONTRACTOR SHALL CONFIRM THE ACTUAL ROUTING WITH THE CONTRACTOR.

10. THE SUBCONTRACTOR SHALL PROTECT EXISTING IMPROVEMENTS, PAVEMENTS, CURBS, LANDSCAPING AND STRUCTURES. ANY DAMAGED PART SHALL BE REPAIRED AT SUBCONTRACTOR'S EXPENSE TO THE SATISFACTION OF OWNER.

11. SUBCONTRACTOR SHALL LEGALLY AND PROPERLY DISPOSE OF ALL SCRAP MATERIALS SUCH AS COAXIAL CABLES AND OTHER ITEMS REMOVED FROM THE EXISTING FACILITY. ANTENNAS REMOVED SHALL BE RETURNED TO THE OWNER'S DESIGNATED LOCATION.

12. SUBCONTRACTOR SHALL LEAVE PREMISES IN CLEAN CONDITION.

13. ALL CONCRETE REPAIR WORK SHALL BE DONE IN ACCORDANCE WITH AMERICAN CONCRETE INSTITUTE (ACI) 301.

14. ANY NEW CONCRETE NEEDED FOR THE CONSTRUCTION SHALL BE AIR-ENTRAINED AND SHALL HAVE 4000 PSI STRENGTH AT 28 DAYS. ALL CONCRETE WORK SHALL BE DONE IN ACCORDANCE WITH ACI 318 CODE REQUIREMENTS.

15. ALL STRUCTURAL STEEL WORK SHALL BE DETAILED, FABRICATED AND ERECTED IN ACCORDANCE WITH AISC SPECIFICATIONS. ALL STRUCTURAL STEEL SHALL BE ASTM A36 (Fy = 36 ksi) UNLESS OTHERWISE NOTED. PIPES SHALL BE ASTM A53 TYPE E (Fy = 36 ksi). ALL STEEL EXPOSED TO WEATHER SHALL BE HOT DIPPED GALVANIZED. TOUCHUP ALL SCRATCHES AND OTHER MARKS IN THE FIELD AFTER STEEL IS ERECTED USING A COMPATIBLE ZINC RICH PAINT.

16. CONSTRUCTION SHALL COMPLY WITH UMTS SPECIFICATIONS AND "GENERAL CONSTRUCTION SERVICES FOR CONSTRUCTION OF AT&T MOBILITY SITES."

17. SUBCONTRACTOR SHALL VERIFY ALL EXISTING DIMENSIONS AND CONDITIONS PRIOR TO COMMENCING ANY WORK. ALL DIMENSIONS OF EXISTING CONSTRUCTION SHOWN ON THE DRAWINGS MUST BE VERIFIED. SUBCONTRACTOR SHALL NOTIFY THE CONTRACTOR OF ANY DISCREPANCIES PRIOR TO ORDERING MATERIAL OR PROCEEDING WITH CONSTRUCTION.

18. THE EXISTING CELL SITE IS IN FULL COMMERCIAL OPERATION. ANY CONSTRUCTION WORK BY SUBCONTRACTOR SHALL NOT DISRUPT THE EXISTING NORMAL OPERATION. ANY WORK ON EXISTING EQUIPMENT MUST BE COORDINATED WITH CONTRACTOR. ALSO, WORK SHOULD BE SCHEDULED FOR AN APPROPRIATE MAINTENANCE WINDOW USUALLY IN LOW TRAFFIC PERIODS AFTER MIDNIGHT.

19. SINCE THE CELL SITE IS ACTIVE, ALL SAFETY PRECAUTIONS MUST BE TAKEN WHEN WORKING AROUND HIGH LEVELS OF ELECTROMAGNETIC RADIATION. EQUIPMENT SHOULD BE SHUTDOWN PRIOR TO PERFORMING ANY WORK THAT COULD EXPOSE THE WORKERS TO DANGER. PERSONAL RF EXPOSURE MONITORS ARE ADVISED TO BE WORN TO ALERT OF ANY DANGEROUS EXPOSURE LEVELS.

20. APPLICABLE BUILDING CODES:
SUBCONTRACTOR'S WORK SHALL COMPLY WITH ALL APPLICABLE NATIONAL, STATE, AND LOCAL CODES AS ADOPTED BY THE LOCAL AUTHORITY HAVING JURISDICTION (AHJ) FOR THE LOCATION. THE EDITION OF THE AHJ ADOPTED CODES AND STANDARDS IN EFFECT ON THE DATE OF CONTRACT AWARD SHALL GOVERN THE DESIGN.
BUILDING CODE: 2003 IBC WITH 2005 CT SUPPLEMENT & 2009 CT AMENDMENTS
ELECTRICAL CODE: REFER TO ELECTRICAL DRAWINGS
LIGHTENING CODE: REFER TO ELECTRICAL DRAWINGS

SUBCONTRACTOR'S WORK SHALL COMPLY WITH THE LATEST EDITION OF THE FOLLOWING STANDARDS:

AMERICAN CONCRETE INSTITUTE (ACI) 318; BUILDING CODE REQUIREMENTS FOR STRUCTURAL CONCRETE;

AMERICAN INSTITUTE OF STEEL CONSTRUCTION (AISC)

MANUAL OF STEEL CONSTRUCTION, ASD, NINTH EDITION;

TELECOMMUNICATIONS INDUSTRY ASSOCIATION (TIA) 222-F, STRUCTURAL STANDARDS FOR STEEL

ANTENNA TOWER AND ANTENNA SUPPORTING STRUCTURES; REFER TO ELECTRICAL DRAWINGS FOR SPECIFIC ELECTRICAL STANDARDS.

FOR ANY CONFLICTS BETWEEN SECTIONS OF LISTED CODES AND STANDARDS REGARDING MATERIAL, METHODS OF CONSTRUCTION, OR OTHER REQUIREMENTS, THE MOST RESTRICTIVE REQUIREMENT SHALL GOVERN. WHERE THERE IS CONFLICT BETWEEN A GENERAL REQUIREMENT AND A SPECIFIC REQUIREMENT, THE SPECIFIC REQUIREMENT SHALL GOVERN.

ABBREVIATIONS

AGL	ABOVE GRADE LEVEL	G.C.	GENERAL CONTRACTOR	RF	RADIO FREQUENCY
AWG	AMERICAN WIRE GAUGE	MGB	MASTER GROUND BUS		
BCW	BARE COPPER WIRE	MIN	MINIMUM	TBD	TO BE DETERMINED
BTS	BASE TRANSCEIVER STATION	PROPOSED	NEW	TBR	TO BE REMOVED
EXISTING	EXISTING	N.T.S.	NOT TO SCALE	TBRR	TO BE REMOVED AND REPLACED
EG	EQUIPMENT GROUND	REF	REFERENCE		
EGR	EQUIPMENT GROUND RING	REQ	REQUIRED	TYP	TYPICAL

Hudson Design Groupac
1600 OSGOOD STREET
BUILDING 20 NORTH, SUITE 2-101
N. ANDOVER, MA 01845
TEL: (978) 557-5553
FAX: (978) 336-5586

NEXLINK GLOBAL SERVICES
a UniTek GLOBAL SERVICES company
800 MARSHALL PHELPS ROAD UNIT#: 2A
WINDSOR, CT 06095

SITE NUMBER: CT5293
SITE NAME: ENFIELD EAST

188 MOODY STREET
ENFIELD, CT 06082
HARTFORD COUNTY

at&t
500 ENTERPRISE DRIVE, SUITE 3A
ROCKY HILL, CT 06067

NO.	DATE	REVISIONS	BY	CHK	APP'D
1	04/13/12	ISSUED FOR CONSTRUCTION	PN	DC	DPH
0	03/23/12	ISSUED FOR REVIEW	JG	DC	DPH

SCALE: AS SHOWN | DESIGNED BY: DC | DRAWN BY: JG

STATE OF CONNECTICUT — DANIEL P. HAMM — No. 24178 — LICENSED PROFESSIONAL ENGINEER

AT&T

GENERAL NOTES (LTE)

JOB NUMBER	DRAWING NUMBER	REV
S293.01	GN-1	1

NOTE:

REFER TO THE FINAL RF DATA SHEET FOR FINAL ANTENNA SETTINGS.

NOTE:

AN ANALYSIS FOR THE CAPACITY OF THE EXISTING STRUCTURES TO SUPPORT THE PROPOSED EQUIPMENT SHALL BE DETERMINED PRIOR TO CONSTRUCTION.

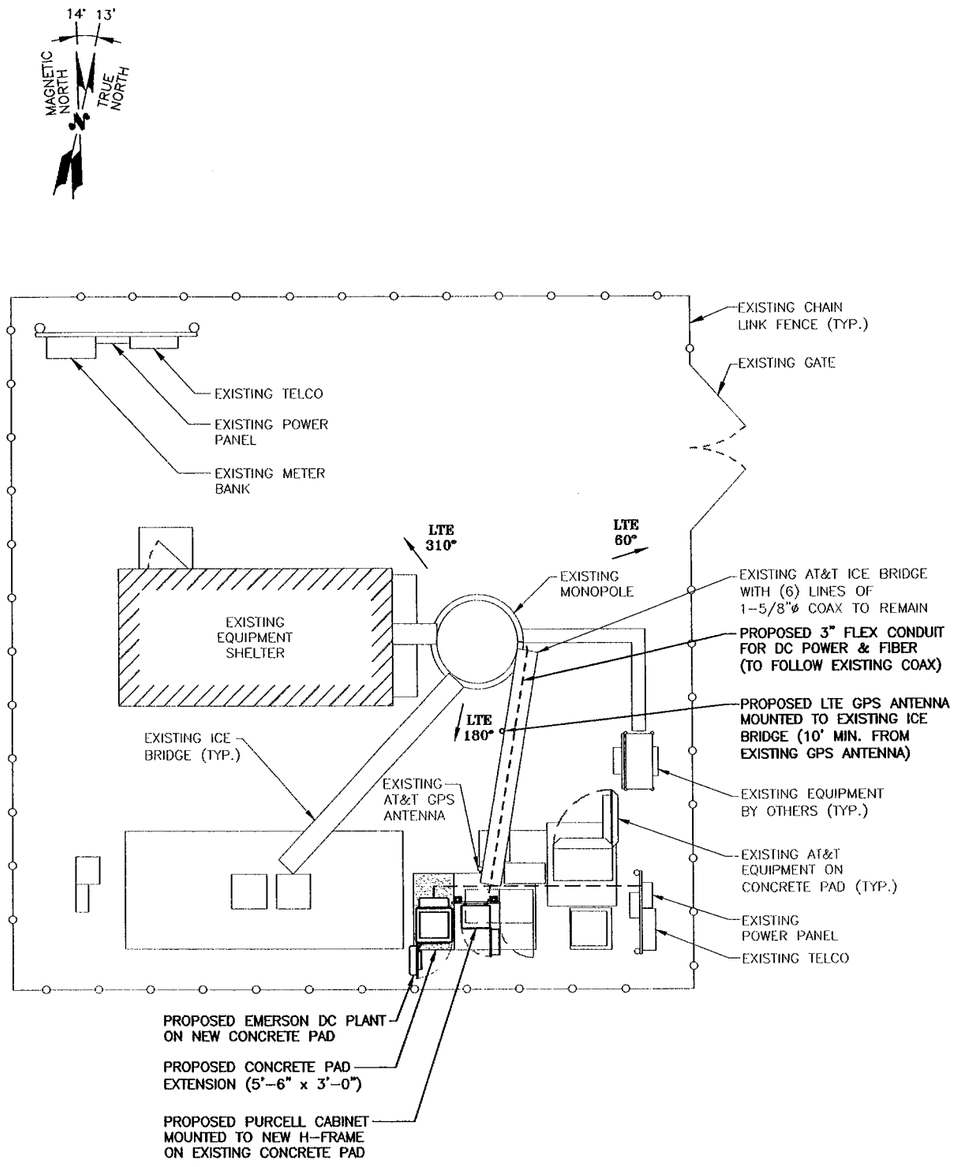

COMPOUND PLAN

SCALE: 3/16"=1'-0"

0 2'-8" 5'-4" 10'-8" 16'-0"

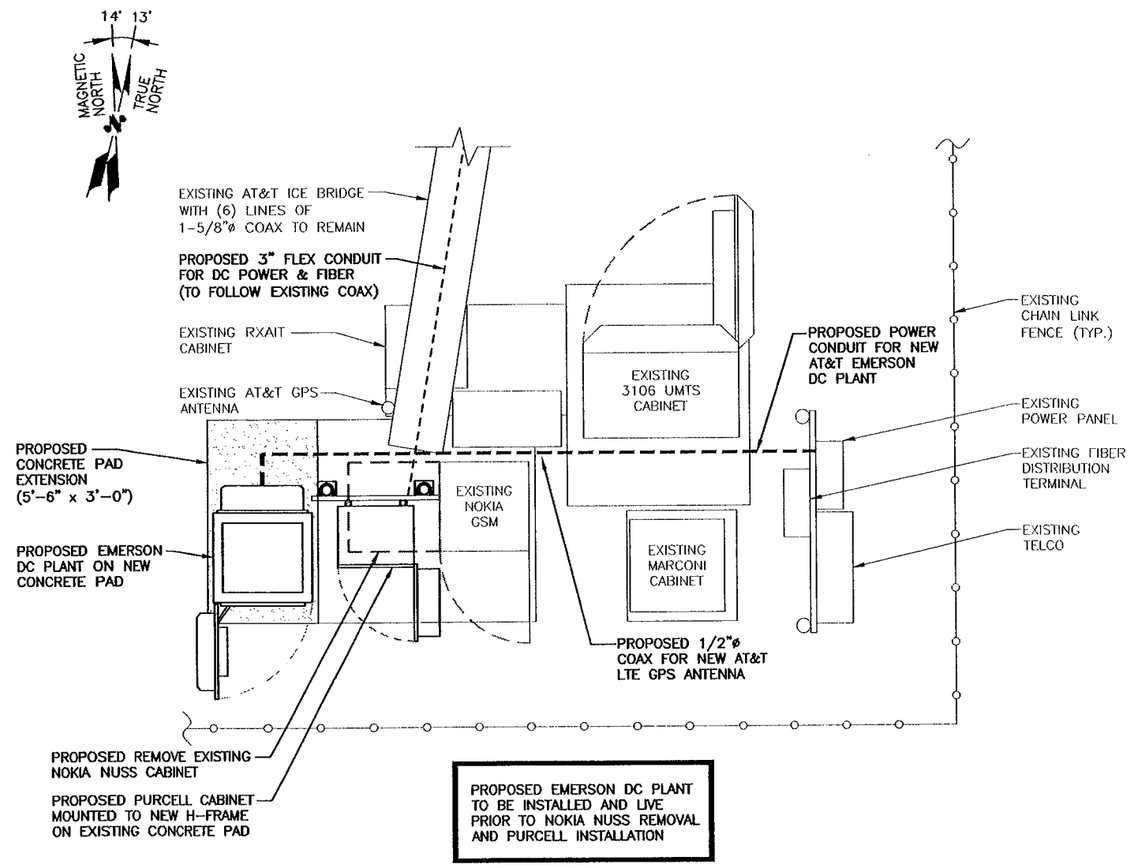

PROPOSED EMERSON DC PLANT TO BE INSTALLED AND LIVE PRIOR TO NOKIA NUSS REMOVAL AND PURCELL INSTALLATION

EQUIPMENT PLAN

SCALE: 1/2"=1'-0"

0 1'-0" 2'-0" 4'-0" 6'-0"

STATE OF CONNECTICUT DANIEL P. HAMM No. 24178 LICENSED PROFESSIONAL ENGINEER

Hudson Design Groupac
1600 OSGOOD STREET
BUILDING 20 NORTH, SUITE 2-101
N. ANDOVER, MA 01845
TEL: (978) 557-5553
FAX: (978) 336-5586

NEXLINK GLOBAL SERVICES
a UniTek GLOBAL SERVICES company
800 MARSHALL PHELPS ROAD UNIT#: 2A
WINDSOR, CT 06095

SITE NUMBER: CT5293
SITE NAME: ENFIELD EAST

188 MOODY STREET
ENFIELD, CT 06082
HARTFORD COUNTY

at&t
500 ENTERPRISE DRIVE, SUITE 3A
ROCKY HILL, CT 06067

NO.	DATE	REVISIONS	BY	CHK	APP'D
1	04/13/12	ISSUED FOR CONSTRUCTION	PN	DC	DPH
0	03/23/12	ISSUED FOR REVIEW	JG	DC	DPH

SCALE: AS SHOWN | DESIGNED BY: DC | DRAWN BY: JG

AT&T

EQUIPMENT & COMPOUND PLAN (LTE)

JOB NUMBER	DRAWING NUMBER	REV
5293.01	A-1	1

NOTE:

REFER TO THE FINAL RF DATA SHEET FOR FINAL ANTENNA SETTINGS.

NOTE:

AN ANALYSIS FOR THE CAPACITY OF THE EXISTING STRUCTURES TO SUPPORT THE PROPOSED EQUIPMENT SHALL BE DETERMINED PRIOR TO CONSTRUCTION.

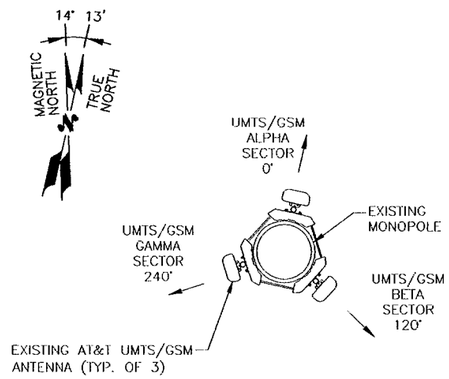

EXISTING GSM/UMTS ANTENNA PLAN

SCALE: N.T.S.

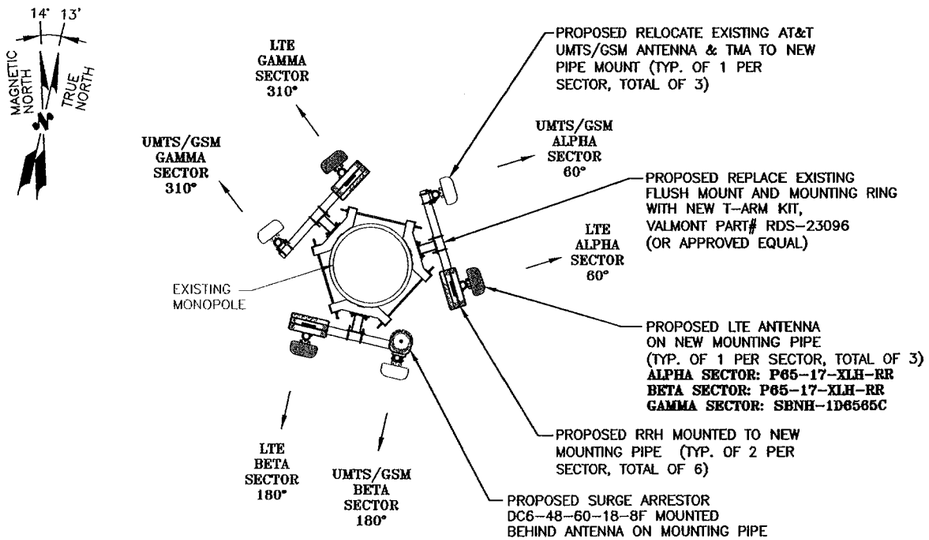

PROPOSED LTE ANTENNA PLAN

SCALE: N.T.S.

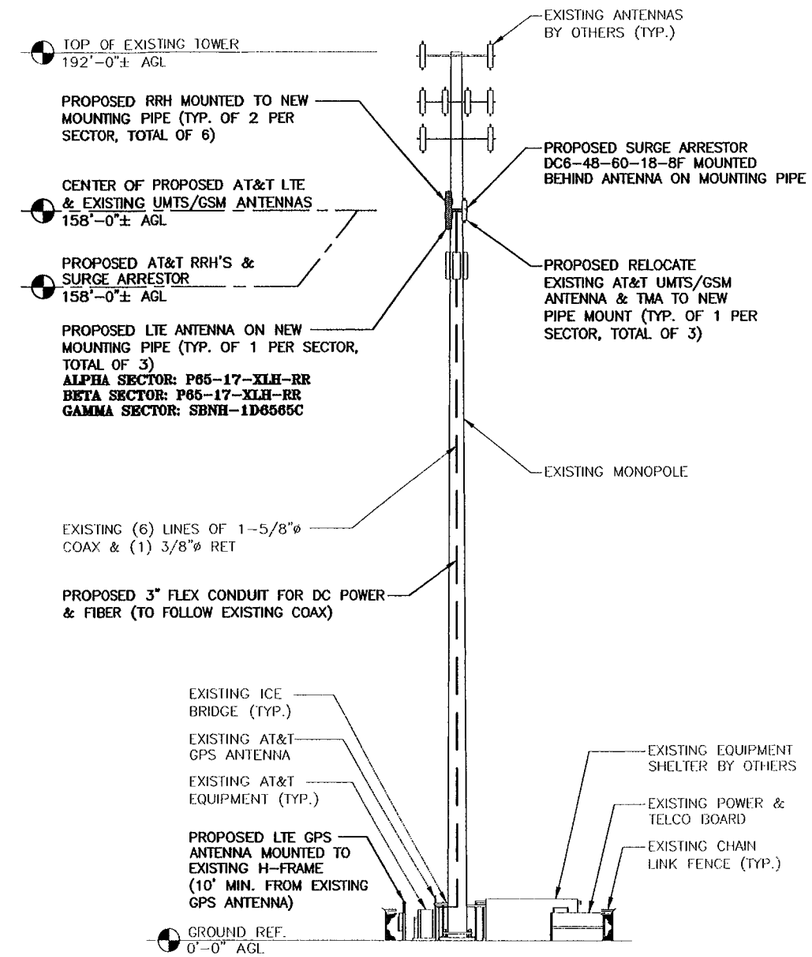

NORTH ELEVATION

SCALE: 1/16"=1'-0"

0 8'-0" 16'-0" 32'-0" 48'-0"

Hudson Design Groupac
1600 OSGOOD STREET, BUILDING 20 NORTH, SUITE 2-101, N. ANDOVER, MA 01845
TEL: (978) 557-5553 FAX: (978) 336-5586

NEXLINK GLOBAL SERVICES
a UniTek GLOBAL SERVICES company
800 MARSHALL PHELPS ROAD UNIT#: 2A
WINDSOR, CT 06095

SITE NUMBER: CT5293
SITE NAME: ENFIELD EAST

188 MOODY STREET
ENFIELD, CT 06082
HARTFORD COUNTY

at&t
500 ENTERPRISE DRIVE, SUITE 3A
ROCKY HILL, CT 06067

NO.	DATE	REVISIONS	BY	CHK	APP'D
1	04/13/12	ISSUED FOR CONSTRUCTION	PN	DC	DPH
0	03/23/12	ISSUED FOR REVIEW	JG	DC	DPH

SCALE: AS SHOWN | DESIGNED BY: DC | DRAWN BY: JG

STATE OF CONNECTICUT DANIEL P. HAMM No. 24173 LICENSED PROFESSIONAL ENGINEER

AT&T

ANTENNA LAYOUT & ELEVATION PLAN (LTE)

JOB NUMBER	DRAWING NUMBER	REV
5293.01	A-2	1

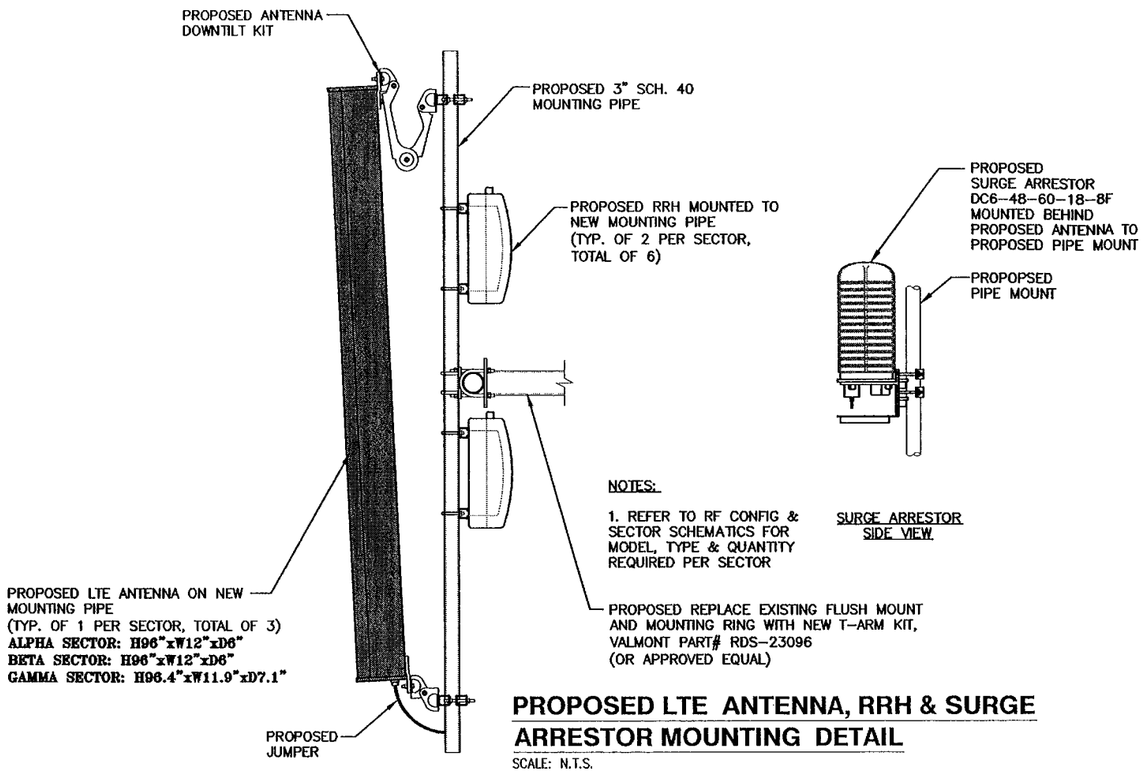

NOTES:

1. REFER TO RF CONFIG & SECTOR SCHEMATICS FOR MODEL, TYPE & QUANTITY REQUIRED PER SECTOR

PROPOSED LTE ANTENNA, RRH & SURGE ARRESTOR MOUNTING DETAIL

SCALE: N.T.S.

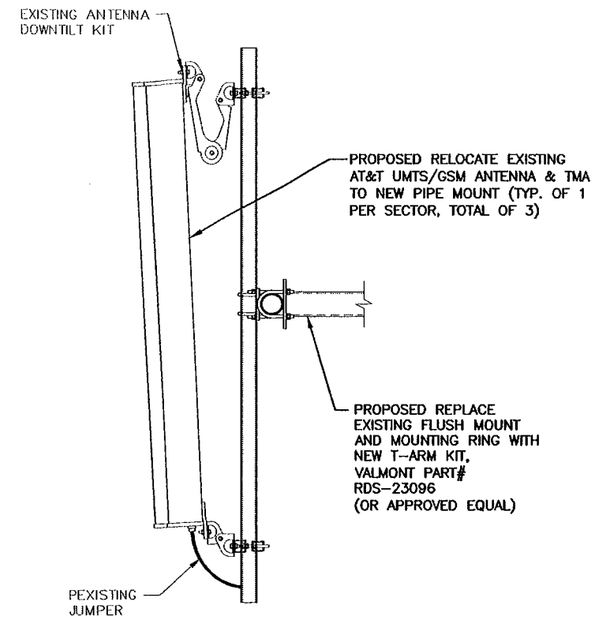

PROPOSED UMTS/GSM ANTENNA MOUNTING DETAIL

SCALE: N.T.S.

NOTE:

REFER TO THE FINAL RF DATA SHEET FOR FINAL ANTENNA SETTINGS.

NOTE:

AN ANALYSIS FOR THE CAPACITY OF THE EXISTING STRUCTURES TO SUPPORT THE PROPOSED EQUIPMENT SHALL BE DETERMINED PRIOR TO CONSTRUCTION.

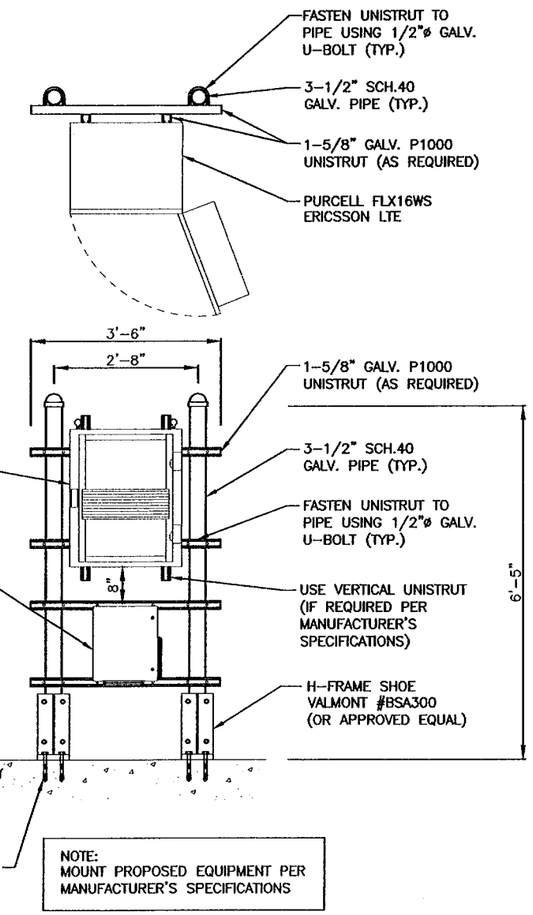

NOTE:
MOUNT PROPOSED EQUIPMENT PER MANUFACTURER'S SPECIFICATIONS

PROPOSED EQUIPMENT MOUNTING DETAIL

SCALE: N.T.S.

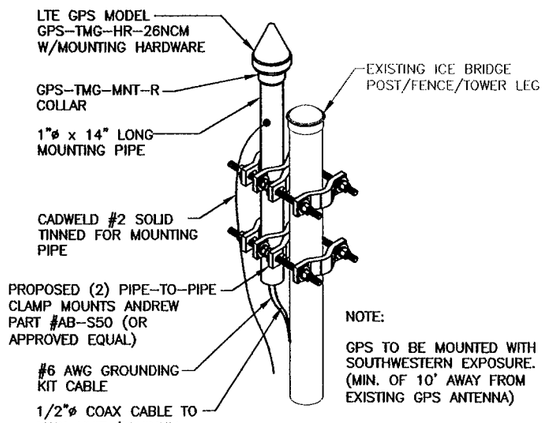

NOTE:

GPS TO BE MOUNTED WITH SOUTHWESTERN EXPOSURE. (MIN. OF 10' AWAY FROM EXISTING GPS ANTENNA)

GPS MOUNTING DETAIL

SCALE: N.T.S.

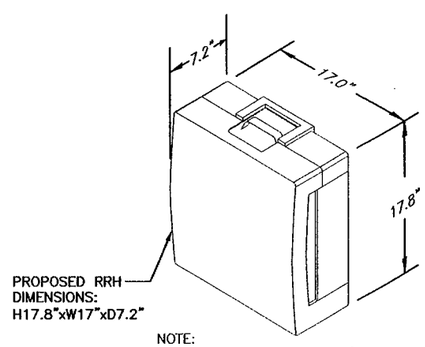

NOTE:
MOUNT PER MANUFACTURER'S SPECIFICATIONS.

RRH DETAIL

SCALE: N.T.S.

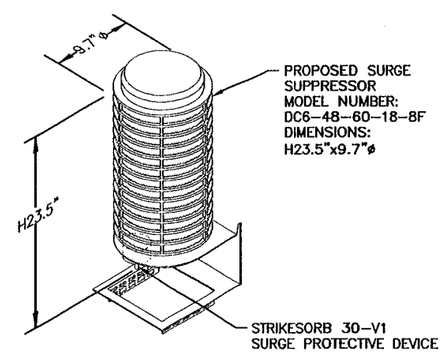

NOTE:
MOUNT PER MANUFACTURER'S SPECIFICATIONS.

DC SURGE SUPPRESSOR DETAIL

SCALE: N.T.S.

Hudson Design Groupe LLC
1600 OSGOOD STREET
BUILDING 20 NORTH, SUITE 2-101
N. ANDOVER, MA 01845
TEL: (978) 557-5553
FAX: (978) 336-5586

NEXLINK GLOBAL SERVICES
a UniTek GLOBAL SERVICES company
800 MARSHALL PHELPS ROAD UNIT#: 2A
WINDSOR, CT 06095

SITE NUMBER: CT5293
SITE NAME: ENFIELD EAST

188 MOODY STREET
ENFIELD, CT 06082
HARTFORD COUNTY

at&t
500 ENTERPRISE DRIVE, SUITE 3A
ROCKY HILL, CT 06067

NO.	DATE	REVISIONS	BY	CHK	APP'D
1	04/13/12	ISSUED FOR CONSTRUCTION	PN	DC	DPH
0	03/23/12	ISSUED FOR REVIEW	JG	DC	DPH

SCALE: AS SHOWN | DESIGNED BY: DC | DRAWN BY: JG

STATE OF CONNECTICUT DANIEL P. HAMM No. 24173 LICENSED PROFESSIONAL ENGINEER

AT&T

DETAILS (LTE)

JOB NUMBER	DRAWING NUMBER	REV
5293.01	A-3	1

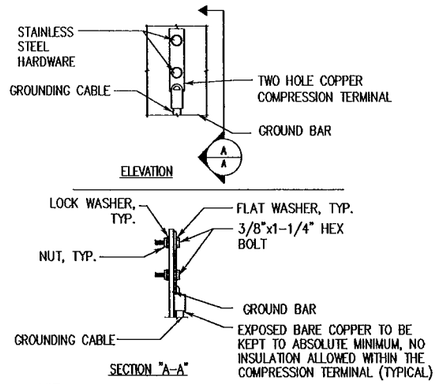

NOTE:
1. "DOUBLING UP" OR "STACKING " OF CONNECTION IS NOT PERMITTED.
2. OXIDE INHIBITING COMPOUND TO BE USED AT ALL LOCATIONS.
3. CADWELD DOWNLEADS FROM UPPER EGB, LOWER EGB, AND MGB.

TYPICAL GROUND BAR CONNECTION DETAIL

2 / —

N.T.S.

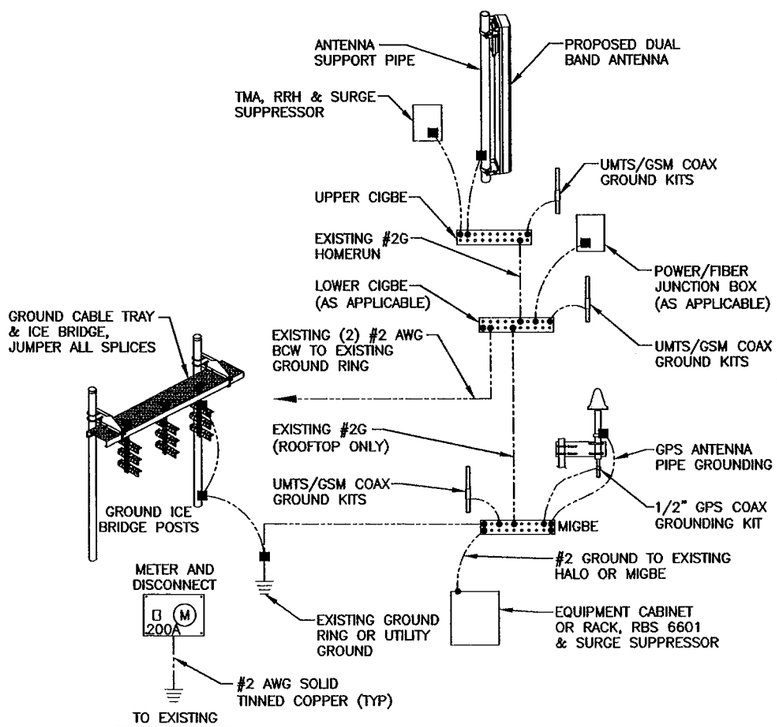

GROUNDING RISER DIAGRAM

1 / —

N.T.S.

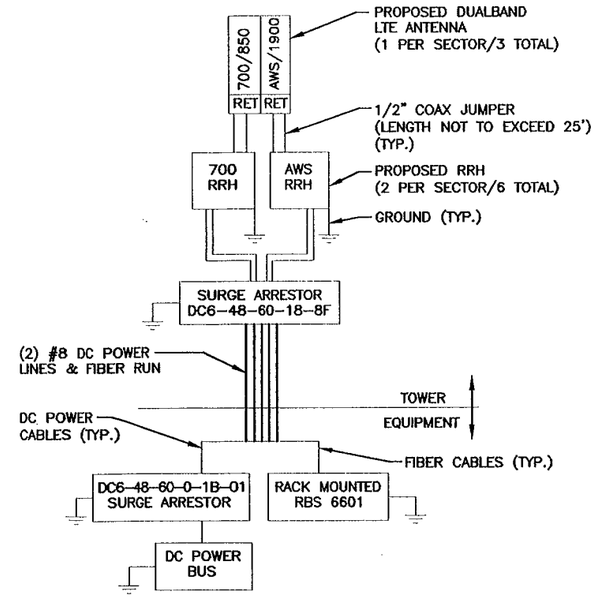

NOTES:

1. CONTRACTOR TO CONFIRM ALL PARTS.
2. INSTALL ALL EQUIPMENT TO MANUFACTURER'S RECOMMENDATIONS.

PLUMBING DIAGRAM

3 / —

N.T.S.

WIRELESS SOLUTIONS INC.			
NO.	REQ.	PART NO.	DESCRIPTION
1	1	HLGB-0420-IS	SOLID GND. BAR (20"x4"x1/4")
2	2	———	WALL MTG. BRKT.
3	2	———	INSULATORS
4	4	———	5/8"-11x1" H.H.C.S.
5	4	———	5/8 LOCKWASHER

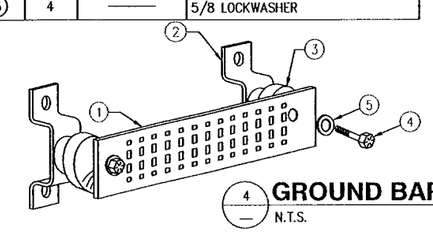

GROUND BAR - DETAIL

4 / —

N.T.S.

EACH GROUND CONDUCTOR TERMINATING ON ANY GROUND BAR SHALL HAVE AN IDENTIFICATION TAG ATTACHED AT EACH END THAT WILL IDENTIFY ITS ORIGIN AND DESTINATION.

SECTION "P" – SURGE PRODUCERS

CABLE ENTRY PORTS (HATCH PLATES) (#2)
GENERATOR FRAMEWORK (IF AVAILABLE) (#2)
TELCO GROUND BAR
COMMERCIAL POWER COMMON NEUTRAL/GROUND BOND (#2)
+24V POWER SUPPLY RETURN BAR (#2)
–48V POWER SUPPLY RETURN BAR (#2)
RECTIFIER FRAMES.

SECTION "A" – SURGE ABSORBERS

INTERIOR GROUND RING (#2)
EXTERNAL EARTH GROUND FIELD (BURIED GROUND RING) (#2)
METALLIC COLD WATER PIPE (IF AVAILABLE) (#2)
BUILDING STEEL (IF AVAILABLE) (#2)

Hudson Design Groupe LLC
1600 OSGOOD STREET
BUILDING 20 NORTH, SUITE 2-101
N. ANDOVER, MA 01845
TEL: (978) 557-5553
FAX: (978) 336-5586

NEXLINK GLOBAL SERVICES
a UniTek GLOBAL SERVICES company
800 MARSHALL PHELPS ROAD UNIT#: 2A
WINDSOR, CT 06095

SITE NUMBER: CT5293
SITE NAME: ENFIELD EAST

188 MOODY STREET
ENFIELD, CT 06082
HARTFORD COUNTY

at&t
500 ENTERPRISE DRIVE, SUITE 3A
ROCKY HILL, CT 06067

NO.	DATE	REVISIONS	BY	CHK	APP'D
1	04/13/12	ISSUED FOR CONSTRUCTION	PN	DC	DPH
0	03/23/12	ISSUED FOR REVIEW	JG	DC	DPH

SCALE: AS SHOWN | DESIGNED BY: DC | DRAWN BY: JG

STATE OF CONNECTICUT — DANIEL P. HAMM — No. 24178 — LICENSED PROFESSIONAL ENGINEER

AT&T

PLUMBING DIAGRAM & GROUNDING DETAILS (LTE)

JOB NUMBER	DRAWING NUMBER	REV
5293.01	G-1	1