STATE OF CONNECTICUT
CONNECTICUT SITING COUNCIL
Ten Franklin Square, New Britain, CT 06051
Phone: (860) 827-2935 Fax: (860) 827-2950
E-Mail: siting.council@ct.gov
www.ct.gov/csc

June 1, 2012

Lauren Groppi
TRM, Inc.
16 Chestnut Street
Foxborough, MA 02035

RE: **EM-AT&T-049-120516** – AT&T Mobility notice of intent to modify an existing telecommunications facility located at 1654 King Street, Enfield, Connecticut.

Dear Ms. Groppi:

The Connecticut Siting Council (Council) hereby acknowledges your notice to modify this existing telecommunications facility, pursuant to Section 16-50j-73 of the Regulations of Connecticut State Agencies with the following conditions:

- Any deviation from the proposed modification as specified in this notice and supporting materials with Council shall render this acknowledgement invalid;
- Any material changes to this modification as proposed shall require the filing of a new notice with the Council;
- Not less than 45 days after completion of construction, the Council shall be notified in writing that construction has been completed;
- The validity of this action shall expire one year from the date of this letter; and
- The applicant may file a request for an extension of time beyond the one year deadline provided that such request is submitted to the Council not less than 60 days prior to the expiration;

The proposed modifications including the placement of all necessary equipment and shelters within the tower compound are to be implemented as specified here and in your notice dated May 16, 2012. The modifications are in compliance with the exception criteria in Section 16-50j-72 (b) of the Regulations of Connecticut State Agencies as changes to an existing facility site that would not increase tower height, extend the boundaries of the tower site, increase noise levels at the tower site boundary by six decibels, and increase the total radio frequencies electromagnetic radiation power density measured at the tower site boundary to or above the standard adopted by the State Department of Environmental Protection pursuant to General Statutes § 22a-162. This facility has also been carefully modeled to ensure that radio frequency emissions are conservatively below State and federal standards applicable to the frequencies now used on this tower.

This decision is under the exclusive jurisdiction of the Council. Please be advised that the validity of this action shall expire one year from the date of this letter. Any additional change to this facility will require explicit notice to this agency pursuant to Regulations of Connecticut State Agencies Section 16-50j-73. Such notice shall include all relevant information regarding the proposed change with cumulative worst-case modeling of radio frequency exposure at the closest point of

uncontrolled access to the tower base, consistent with Federal Communications Commission, Office of Engineering and Technology, Bulletin 65. Thank you for your attention and cooperation.

Very truly yours,

Linda Roberts

Linda Roberts
Executive Director

LR/CDM/cm

c: The Honorable Scott Kaupin, Mayor, Town of Enfield
Matthew W. Coppler, Town Manager, Town of Enfield
Jose Giner, Director of Planning and Community Development, Town of Enfield

STATE OF CONNECTICUT
CONNECTICUT SITING COUNCIL
Ten Franklin Square, New Britain, CT 06051
Phone: (860) 827-2935 Fax: (860) 827-2950
E-Mail: siting.council@ct.gov
www.ct.gov/csc

May 16, 2012

The Honorable Scott Kaupin
Mayor
Town of Enfield
820 Enfield Street
Enfield, CT 06082

RE: **EM-AT&T-049-120516** – AT&T Mobility notice of intent to modify an existing telecommunications facility located at 1654 King Street, Enfield, Connecticut

Dear Mayor Kaupin:

The Connecticut Siting Council (Council) received this request to modify an existing telecommunications facility, pursuant to Regulations of Connecticut State Agencies Section 16-50j-72.

If you have any questions or comments regarding this proposal, please call me or inform the Council by May 30, 2012.

Thank you for your cooperation and consideration.

Very truly yours,

Linda Roberts
Executive Director

LR/cm

Enclosure: Notice of Intent

c: Matthew W. Coppler, Town Manager, Town of Enfield
Jose Giner, Director of Planning and Community Development, Town of Enfield

EM-AT&T-049-120516

ORIGINAL

May 16, 2012

RECEIVED
MAY 16 2012
CONNECTICUT
SITING COUNCIL

Ms. Linda Roberts, Executive Director
Connecticut Siting Council
10 Franklin Square
New Britain, CT 06051

RE: AT&T Exempt Modification Acknowledgement
1654 King Street, Enfield, CT

Dear Ms. Roberts:

Enclosed please find an original and 5 copies of the above noted Applications and the corresponding filing fee on behalf of AT&T.

The proposed installation consists of adding three (3) antennas and a surge arrestor to AT&T's existing installation on the Existing Monopole with supporting ground equipment.

Please do not hesitate to contact me with any questions or concerns.

Thank you.

Sincerely,

Lauren Groppi
TRM, Inc.
16 Chestnut Street
Foxborough, MA 02035
lgroppi@trmcom.com

May 16, 2012

Zack Felsen
Lease Administrator
Global Tower Partners
750 Park of Commerce Blvd, Suite # 300
Boca Raton, FL 33487

RE: AT&T Exempt Modification Application
1654 King Street, Enfield, CT

Dear Sir/Madam:

This letter is being sent to you on behalf of AT&T. AT&T filed an Exempt Modification Application with the Connecticut Siting Council on May 16, 2012, seeking acknowledgement to modify their existing installation on the existing Monopole at 1654 King Street, Enfield, CT.

AT&T seeks to install three additional antennas and a surge arrestor on the monopole with accompanying ground equipment.

If you have any questions or concerns, please do not hesitate to contact me.

Thank you.

Sincerely,

Lauren Groppi
TRM, Inc.
16 Chestnut Street
Foxborough, MA 02035
lgroppi@trmcom.com

Cc: Linda Roberts, Executive Director, Connecticut Siting Council

Notice of Intent by AT&T
To Modify an Existing Installation
On an Existing Monopole

Located at 1654 King Street, Enfield, CT

Table of Contents

1. Project Narrative and Summary

2. Exhibits
    A. Site Plan

    B. Structural Analysis

    C. Radio Frequency Electromagnetic Power Density Reports

CONNECTICUT SITING COUNCIL

Request of AT&T	:	
For the Acknowledgement to of an Exempt	:	
Modification to an Existing Monopole	:	May 16, 2012
Located at 1654 King Street,	:	
Enfield, CT	:	

EXEMPT MODIFICATION NOTICE OF INTENT
TO MODIFY AN INSTALLATION ON AN EXISTING MONOPOLE
AT 1654 KING STREET, ENFIELD, CT

1. Introduction

Pursuant to Section 16-50j-72 and 16-50j-73 of the Connecticut General Statutes (the "Statute"), AT&T requests that the Connecticut Siting Council (the "Council") acknowledge this Exempt Modification Notice of Intent to modify an existing installation on an existing monopole. The existing monopole is located at 1654 King Street, Enfield, CT and is owned by GTP Structures IV, LLC.

The AT&T modification involves adding three (3) antennas on an existing array at one hundred fifty feet (150') above ground level with the antennas top mounted at one hundred fifty five feet(155') centerline along with accompanying ground equipment.

The modification will not cause substantial adverse environmental effect. The Site is technically feasible, environmentally feasible and avoids the unnecessary siting of additional tower facilities within the Town of Enfield.

2. Proposed AT&T Installation

AT&T is licensed to provide wireless telecommunication services to the State of Connecticut by the Federal Communications Commission ("FCC").

The existing one hundred and fifty foot (150') monopole is located at 1654 King Street (Latitude: 41° 56' 44.85" N, Longitude: 72° 36' 20.16" W).

The AT&T installation is proposed at one hundred fifty eight (150') feet above ground level with the antennas top mounted at one hundred fifty five (155') centerline. The ground equipment will be located within AT&T's existing compound area. The proposed AT&T installation will not interfere with either of the existing facilities.

AT&T intends to mount two (2) KMW AM-X-CD-16-65-00T antennas, one (1) Powerwave P65-17-XLH-RR antenna, six (6) Ericsson RRUS11 remote radio heads and one (1) DC6-48-60-18-8F Surge Arrestor on the existing array with the current existing equipment on the monopole. In addition to the antennas and surge arrestor, one (1) 3/8" fiber cables will be run to serve all of the new antennas along with two (2) 5/8" DC cables. These cables will be placed on the interior of the monopole.

AT&T proposes to place the ground equipment in the existing shelter. The ground installation is one (1) RBS6601 LTE cabinet. Further details can be seen on the Site Plan attached as Exhibit A.

A. Technical Feasibility

The monopole is capable of supporting AT&T's proposed installation. Global Tower Services performed a structural assessment on monopole and provided a full report to AT&T. Based on their review, Global Tower Services determined that the existing monopole will satisfy the requirements of applicable codes and standards, consistent with the requirement of the Statute. Please see Exhibit C for the Structural Analysis.

B. Environmental Feasibility

The proposed installation will have negligible impact. The environmental impact to the Town of Enfield is reduced by carriers collocating on an existing installation on an existing structure. AT&T proposes to collocate at approximately 150' feet above ground level on its existing antenna array, which will have little or no increase in visibility to the Town.

AT&T's proposed installation will not impact wetlands or water resources.

AT&T's proposed facilities will not create air pollutants nor increase the impact on air quality during normal operation of the facility. There will only be a slight increase in noise pollution during site construction.

There will be a small amount of traffic generated at the Site during construction as workers arrive and depart the site and materials are delivered. When construction is complete, the traffic will be minimal with an average of one maintenance visit per month.

C. Public Safety Concerns

The proposed installation will not have an adverse impact to the health and safety of the surrounding residences and businesses.

The total radio frequency electromagnetic power density at the Site will not be increased above the standard adopted by the Connecticut Department of Environmental Protection as set forth in Section 22a-162 of the Connecticut General Statutes and the MPE limits established by the Federal Communications Commission. These findings are noted in the power density report included as Exhibit C.

With the proposed installation, AT&T will better serve its customers including local residences and businesses. By seeking to expand their LTE network in Connecticut, AT&T will be able to provide more reliable wireless service to their customers in the Enfield area, fulfilling their coverage goals to comply with their FCC License.

3. Conclusion

The proposed installation will comply with all the requirements set forth by the Statute. In accordance with RCSA § 16-50j-73, the proposed installation does not increase the tower height, extend the boundaries of the tower site, increase noise levels at the tower site boundary by 6 decibels, nor will it add radio frequency sending or receiving capability to or above the standard adopted by the State Department of Environmental Protection pursuant to Section 22a-162 of the Connecticut General Statutes. Therefore, AT&T respectfully requests that the Council acknowledge this Exempt Modification Application at 1654 King Street, Enfield, CT.

Respectfully Submitted,

Lauren Groppi, TRM, Inc.
On behalf of AT&T

Cc: Matthew Coppler, General Manager, Town of Enfield
Zack Felsen, Global Tower Partners
Linda Roberts, Executive Director, Connecticut Siting Council

Certificate of Service

This is to certify that on this 16th day of May, 2012 the foregoing Application was sent via first class mail, to the following:

Matthew Coppler, General Manager
Town of Enfield, Connecticut
41 Center Street
Enfield, CT 06040

By: _____
Lauren Groppi

Global Tower Services

750 Park of Commerce Boulevard
Suite 300
Boca Raton, FL 33487-3612

P: 605.422.1548
F: 605.422.1550

Structural Analysis Report

151 ft. Tapered Monopole

1654 King Street, Enfield, CT 06082
Hartford County
(CT-5042, East Windsor)

AT & T
AT & T Site Number: CT5153
AT & T Site Name: AWE-EAST WINSOR

Prepared by:
Global Tower Services, LLC
Michael T. De Boer, P.E.
Senior Director of Engineering

May, 7, 2012

Global Tower Services, LLC
May, 7, 2012
East Windsor
CT-5042

Table of Contents

Introduction.....3

Description of Structure.....3

Design Parameter.....3

Antenna Loading Information.....4

Analysis Results.....4 - 5

Analysis Summary and Conclusions.....5

Standard Conditions.....6

Disclaimer of Warranties.....7

Appendix A - Monopole Profile.....Attached

Appendix B - Calculations.....Attached

Appendix C – Collocation Application.....Attached

Global Tower Services, LLC
May, 7, 2012
East Windsor
CT-5042

INTRODUCTION

We have completed the structural analysis for the existing 151 ft. tapered monopole located in Hartford County (1654 King St., Enfield), CT. The objective of the analysis is to determine if the existing tapered monopole design is in conformance / compliance with the current codes and standards for the proposed equipment installation.

TSTower written by TowerSoft was utilized in performing the analysis. This program is a commercially available software program which was used to create a non-linear three-dimensional beam model and calculate member stresses for various loading conditions.

DESCRIPTION OF STRUCTURE

The existing structure is a 151 ft. tapered monopole. The original monopole manufacturer is unknown. The existing structure consists of four (4) sections with slip connections.

Tower steel as well as existing loading information was taken from a tower mapping performed by Morrison Hershfield. (MH Job No. GTP-409/60/80310, December, 23, 2011) The monopole shaft is considered to be manufactured from 65 ksi steel, the base plate is considered to be 50 ksi steel and the anchor bolts are considered to be A615 Grade 75 steel.

The monopole, for the purpose of analysis, is considered to be in good condition with no defects.

DESIGN PARAMETERS

- Standard:	ANSI/TIA-222-F-1996
- Basic Wind Speed:	80 mph (fastest mile) 69.6 mph (3-sec gust)
- Serviceability Wind Speed:	50 mph (fastest mile)
- Basic Wind Speed with Ice:	73.95 mph (fastest mile)
- Design Ice Thickness:	0.50 (inch)
- Allowable Stress Increase:	1/3 for wind loading conditions

Global Tower Services, LLC
May, 7, 2012
East Windsor
CT-5042

ANTENNA LOADING INFORMATION

Existing and Reserved Loading Information

Antenna Description/Mount	Qty	Elev. (ft.)	TX Lines	Qty	Customer
800-10121 / LP Platform	6	155	1 5/8"	12	ATT
LGP21401 / LP Platform	6	155			ATT
LGP21901 / LP Platform	6	155			ATT
RET's / LP Platform	12	155			ATT
LLPX310R / Side Arms	3	139	1 5/8"	3	Clearwire
Dragonwave A-ANT-18G-2-C / Side Arms	2	139	1/2"	2	Clearwire

Proposed Loading Information

Antenna Description/Mount	Qty	Elev. (ft.)	TX Lines	Qty	Customer
KMW AM-X-CD-16-65-00T / Low Profile Platform	2	155	1 ½" Fiber	1	ATT
Powerwave P65-17-XLH-RR / Low Profile Platform	1	155	DC cables	2	ATT
Ericsson RRUS11 /Low Profile Platform	6	155			ATT
DC6-48-60-18-8F / LP Platform	1	155			ATT

Note: Final configuration for ATT to include: Nine (9) antennas, six (6) RRU's, six (6) TMA's, six (6) diplexers, twelve (12) RET's, one (1) surge suppressor, one (1) hybrid line, and twelve (12) 1 5/8" lines.

ANALYSIS RESULTS

Structure

The existing 151 ft. tapered monopole **is structurally capable** of supporting the proposed equipment. **(See table below)**

Monopole Member	% Capacity	Results
Monopole Shaft	55	Pass
Monopole Base Plate	19	Pass
Anchor Bolts	61	Pass

(105 percent is considered acceptable.)

Global Tower Services, LLC
May, 7, 2012
East Windsor
CT-5042

ANALYSIS RESULTS continued

Foundation

The existing foundation has not been evaluated. No foundation information was available at the time of analysis. Based on the remaining capacity of the monopole, the foundation should be within acceptable tolerance. Monopole foundations are typically designed to match the capacity of the monopole. To verify capacity, the existing foundation information will need to be obtained along with a soils report.

Monopole Rating: 61 %

SUMMARY AND CONCLUSIONS

The existing 151 ft. tapered monopole located in Hartford County (1654 King St., Enfield), CT **is structurally acceptable** based upon the EIA-222-F 1996 Standard and the local building code with the proposed equipment installed.

If any other changes are proposed, another structural analysis should be performed to assure the tower is in compliance / conformance with the applicable codes and standards.

Should any further questions arise, please contact the Global Tower Services, LLC Engineering Department at 941-400-2206.

Global Tower Services, LLC

Reviewed By:

STATE OF CONNECTICUT
MICHAEL T. DE BOER
No.18022
LICENSED
PROFESSIONAL ENGINEER

Cory Blake, E.I.T.
GTS Engineering

Michael T. De Boer, P.E.
Director of Engineering

5/11/12

Global Tower Services, LLC
May, 7, 2012
East Windsor
CT-5042

Standard Conditions

All engineering services are performed on the basis that the information used is current and correct. This information may consist of, but not necessarily limited to:

- Information supplied by the client regarding the structure itself, the antenna and transmission line loading on the structure and it components, or relevant information.

- Information from drawings in possession of Global Tower Services, LLC, or generated by field inspections or measurements of the structure.

It is the responsibility of the client to ensure that the information provided to Global Tower Services, LLC and used in the performance of our engineering services is correct and complete. In the absence of information contrary, we consider that all structures were constructed in accordance with the drawings and specifications and are in an un-corroded condition and have not deteriorated; and we, therefore consider that their capacity has not significantly changed from the original design condition.

All services will be performed to the codes and standards specified by the client, and we do not imply to meet any other code and standard requirements unless explicitly agreed to in writing. If wind and ice loads or other relevant parameters are to be different from the minimum values recommended by the codes and standards, the client shall specify the exact requirements. In the absence of information to the contrary, all work will be performed in accordance with the revision of ANSI/TIA/EIA-222 requested.

All services are performed, results obtained and recommendations made in accordance with the generally accepted engineering principles and practices. Global Tower Services, LLC is not responsible for the conclusions, opinions and recommendations made by others based on the information we supply.

Global Tower Services, LLC
May, 7, 2012
East Windsor
CT-5042

Disclaimer of Warranties

The engineering services by **Global Tower Services, LLC** in connection with this Structural Analysis are limited to a computer analysis of the tower structure, size and capacity of its members. **Global Tower Services, LLC** does not analyze the fabrication, including welding, except as included in this report.

The purpose of this report is to assess the feasibility of adding appurtenances usually accompanied by transmission lines. Any mention of structural modifications are reasonable estimates and should not be used a precise construction document. Precise modification drawings are obtainable from **Global Tower Services, LLC** but are beyond the scope of this report.

Global Tower Services, LLC makes no warranties, expressed or implied, in connection with this report and disclaim any liability arising from material, fabrication and erection of this tower. **Global Tower Services, LLC** will not be responsible whatsoever for or on account of, consequential or incidental damages sustained by any person, firm, or organization as a result of any data or conclusions contained in this report. The maximum liability of **Global Tower Services, LLC** pursuant to this report will be limited to the total fee received for preparation of this report.

APPENDIX A

Monopole Profile

File: C:\Documents and Settings\cblake\Desktop\Tower Models for Approval\Complete\Complete\CT\CT-5
Contract:
Project: Structural analysis of a 151' Monopole
Date and Time: 5/8/2012 8:52:24 AM

Revision:
Site: CT-5042 (East Windsor)
Engineer: Mike De Boer

DESIGN SPECIFICATION

Design Standard: TIA/EIA-222-F-1996
Basic Wind speed = 80.0 (mph)
Service Wind speed = 50.0 (mph)
Ice thickness = 1.00 (in)

Sct.	Length (ft)	Overlap (ft)	Top Dia. (in)	Bot Dia. (in)	Thick. (in)
1	45.51	5.53	41.96	52.28	0.4375
2	41.65	4.45	34.15	43.59	0.3750
3	36.90	3.49	27.16	35.53	0.2500
4	40.41	0.00	19.17	28.33	0.1875

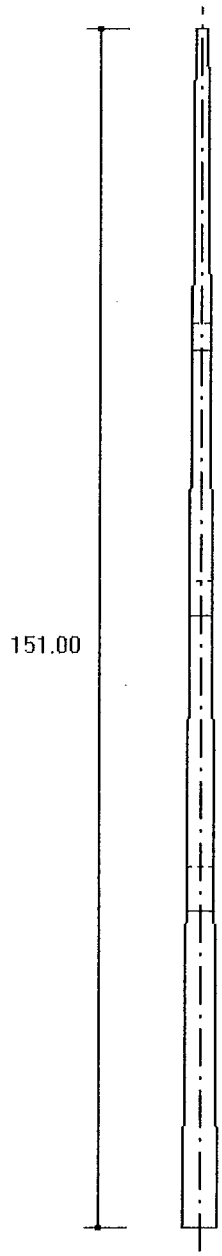

MAXIMUM BASE REACTIONS

Download (Kips)	35.4
Shear (Kips)	15.7
Moment (Kipsft)	1593.2

APPENDIX B

Calculations

Section A: PROJECT DATA

Project Title:	Structural analysis of a 151' Monopole
Customer Name:	ATT
Site:	CT-5042 (East Windsor)
Contract No.:	
Revision:	
Engineer:	Mike De Boer
Date:	May 8 2012
Time:	08:52:08 AM
Design Standard:	TIA/EIA-222-F-1996

GENERAL DESIGN CONDITIONS

Start Wind direction:	0.00 (Deg)
End Wind direction:	315.00 (Deg)
Increment wind direction:	45.00 (Deg)
Elevation above ground:	0.00(ft)
Gust Response Factor Gh:	1.69
Material Density:	490.1(lbs/ft^3)
Young's Modulus:	29000.0(ksi)
Poisson Ratio:	0.3
Weight Multiplier:	1.00
Allowable Stress Incr. Factor:	1.333
Increase allowable stress:	Yes

WIND ONLY CONDITIONS:

Basic Wind Speed:	80.00(mph)

WIND AND ICE CONDITIONS:

Basic Wind Speed:	80.00(mph)
Ice Thickness:	1.00(in)
Ice density:	56.19(lbs/ft^3)
Wind pressure reduction for iced conditions:	0.75

WIND ONLY SERVICEABILITY CONDITIONS:

Operational Wind Speed:	50.00(mph)

Analysis performed using: TowerSoft Finite Element Analysis Program

Section C: ANTENNA DATA

Structure Azimuth from North: 0

ANTENNAS

Ant No.	Elev. (ft)	Antenna (#) Type	Ant. Azim.	Mount. Radius (ft)	Mount Type	Mount Azim.	Tx Line (#) Type	Mounting Pipe Size (in)	Length (ft) Full	Length (ft) Shielded
1	139.00	(1) HP2	0	1.13		0		3.500	0.00	2.21
		Vert. Offset 0.00 (ft)								
2	139.00	(1) HP2	180	1.13		180		3.500	0.00	2.21
		Vert. Offset 0.00 (ft)								

ANTENNA AND MOUNT WIND AREAS AND WEIGHTS

Ant No.	Antenna/Mount	Frontal Bare Area (ft)^2	Lateral Bare Area (ft)^2	Frontal Iced Area (ft)^2	Lateral Iced Area (ft)^2	Weight Bare (lbs)	Weight Iced (lbs)	Frequency GHz	Allowable Signal Loss dB
1	HP2	4.86	0.34	4.86	0.34	40.78	140.82	6.00	10
2	HP2	4.86	0.34	4.86	0.34	40.78	140.82	6.00	10

Section D: TRANSMISSION LINE DATA

Transmission Lines Position

No.	Bot El (ft)	Top El (ft)	Desc.	Radius (ft)	Az.	Orient.	No.	Shielded	Shielded Lines	Antenna
1	0.00	150.00	LDF7P-50A	0.00	0.00	0.00	12	Yes	12	
2	0.00	139.00	LDF7P-50A	0.00	0.00	0.00	3	Yes	3	
3	0.00	139.00	LDF4P-50A	0.00	0.00	0.00	2	Yes	2	
4	0.00	150.00	LDF6P-50A	0.00	0.00	0.00	3	Yes	3	

Transmission Lines Details

No.	Desc.	Width (in)	Depth (in)	Unit Mass (lb/ft)
1	LDF7P-50A	2.01	2.01	0.92
2	LDF7P-50A	2.01	2.01	0.92
3	LDF4P-50A	0.63	0.63	0.15
4	LDF6P-50A	1.55	1.55	0.66

Utilization of the cross-section for TX Lines: 13.81%

Section F: POINT LOAD DATA

Structure Azimuth from North:0.00

POINT LOADS

No.	Description	Elev. (ft)	Radius (ft)	Azim. (Deg)	Orient. (Deg)	Vertical Offset (ft)	Tx Line	Comments
1	(6) Kathrein 800-10121	155.00	0.00	0.0	0.0	0.00		ATT (0.80)2.21
2	(6) LGP21401	155.00	0.00	0.0	0.0	0.00		ATT (0.80)
3	(6) LGP21901	155.00	0.00	0.0	0.0	0.00		ATT (0.80)
4	(12) RET's	155.00	0.00	0.0	0.0	0.00		ATT
5	(2) KMW AM-X-CD-16-65-00T	155.00	0.00	0.0	0.0	0.00		ATT (0.80)
6	(1)P65-17-XLH-RR	155.00	0.00	0.0	0.0	0.00		ATT (0.80)
7	(6) RRUS11	155.00	0.00	0.0	0.0	0.00		ATT (0.80)
8	(1) DC6-48-60-18-8F	155.00	0.00	0.0	0.0	0.00		ATT
9	LP Platform	150.00	0.00	0.0	0.0	0.00		ATT
10	(3) LLPX310R	139.00	0.00	0.0	0.0	0.00		Clearwire
11	Side Arms	139.00	0.00	0.0	0.0	0.00		Clearwire

POINT LOADS WIND AREAS AND WEIGHTS

No.	Description	Frontal Bare Area (ft^2)	Lateral Bare Area (ft^2)	Frontal Iced Area (ft^2)	Lateral Iced Area (ft^2)	Weight Bare (Kips)	Weight Iced (Kips)
1	(6) Kathrein 800-10121	26.21	26.21	29.28	29.28	0.34	0.54
2	(6) LGP21401	6.19	6.19	7.34	7.34	0.09	0.13
3	(6) LGP21901	1.62	1.62	2.30	2.30	0.03	0.06
4	(12) RET's	6.00	6.00	8.00	8.00	0.07	0.15
5	(2) KMW AM-X-CD-16-65-00T	12.32	12.32	13.63	13.63	0.10	0.18
6	(1)P65-17-XLH-RR	8.96	8.96	9.81	9.81	0.06	0.12
7	(6) RRUS11	14.11	14.11	15.79	15.79	0.32	0.45
8	(1) DC6-48-60-18-8F	2.22	2.22	2.66	2.66	0.02	0.04
9	LP Platform	24.00	24.00	30.00	30.00	1.50	2.00
10	(3) LLPX310R	14.52	14.52	16.11	16.11	0.09	0.18
11	Side Arms	12.00	12.00	14.00	14.00	0.24	0.35

Section H: STRUCTURE DISPLACEMENT DATA

Load Combination Max Envelope

Wind Direction Maximum displacements

Elev. (ft)	N-S Disp (in)	W-E Disp (in)	Vert.Disp (in)	N-S Rot (deg)	W-E Rot (deg)	Twist Rot (deg)
151.00	62.1	-61.4	-1.4	-4.33	-4.38	0.00
143.62	55.4	-54.8	-1.2	-4.22	-4.27	0.00
136.23	49.0	-48.4	-1.0	-4.03	-4.08	0.00
128.85	42.9	-42.4	-0.8	-3.78	-3.82	0.00
121.47	37.2	-36.7	-0.6	-3.47	-3.52	0.00
114.08	32.0	-31.6	-0.5	-3.14	-3.18	0.00
110.59	29.7	-29.4	-0.4	-2.98	-3.02	0.00
104.80	26.2	-25.9	-0.4	-2.77	-2.80	0.00
99.01	22.9	-22.7	-0.3	-2.55	-2.58	0.00
93.22	19.9	-19.7	-0.2	-2.33	-2.35	0.00
87.43	17.2	-17.0	-0.2	-2.10	-2.13	0.00
81.63	14.8	-14.6	-0.1	-1.88	-1.91	0.00
77.18	13.1	-12.9	-0.1	-1.72	-1.74	0.00
70.85	10.9	-10.7	-0.1	-1.55	-1.57	0.00
64.51	8.9	-8.8	-0.1	-1.39	-1.40	0.00
58.18	7.1	-7.1	-0.1	-1.23	-1.24	0.00
51.84	5.6	-5.5	0.0	-1.07	-1.08	0.00
45.51	4.3	-4.2	0.0	-0.92	-0.93	0.00
39.98	3.3	-3.2	0.0	-0.79	-0.79	0.00
33.32	2.2	-2.2	0.0	-0.65	-0.65	0.00
26.66	1.4	-1.4	0.0	-0.51	-0.52	0.00
19.99	0.8	-0.8	0.0	-0.38	-0.38	0.00
13.33	0.4	-0.3	0.0	-0.25	-0.25	0.00
6.66	0.1	-0.1	0.0	-0.12	-0.12	0.00
0.00	0.0	0.0	0.0	0.00	0.00	0.00

Section J: ANTENNA DISPLACEMENT DATA

Load Combination Max Envelope

Wind Direction Maximum displacements

Ant.	Elev. (ft)	N-S Disp (in)	W-E Disp (in)	Vert.Disp (in)	N-S Rot (Deg)	W-E Rot (Deg)	Twist Tot (Deg)	Allow. (Deg)
1	139.00	52.2	-51.6	-1.1	-4.13	-4.18	0.00	4.43
2	139.00	52.2	-51.6	-1.1	-4.13	-4.18	0.00	4.43

Section K: POLE OUTPUT LOAD DATA

Load Combination: Max Envelope
Wind Direction: Maximum

Elev. (ft)	Axial Ld. (kips)	Shear Ld. (kips)	Torque (kipsft)	Bend Mom. (kipsft)
151.00	3.43	4.58	0.02	13.43
143.62	3.43	4.58	0.04	47.11
143.62	4.56	5.65	0.03	47.23
136.23	4.56	5.65	0.03	88.77
136.23	5.69	6.94	0.01	88.91
128.85	5.69	6.94	0.02	139.98
128.85	6.40	7.36	0.03	140.12
121.47	6.40	7.36	0.04	194.24
121.47	7.16	7.78	0.04	194.37
114.08	7.16	7.78	0.05	251.64
114.08	7.75	8.11	0.05	251.73
110.59	7.75	8.11	0.05	279.83
110.59	8.46	8.40	0.06	279.90
104.80	8.46	8.40	0.06	328.51
104.80	9.37	8.77	0.06	328.60
99.01	9.37	8.77	0.06	379.06
99.01	10.18	9.14	0.07	379.15
93.22	10.18	9.14	0.07	432.04
93.22	11.02	9.51	0.07	432.12
87.43	11.02	9.51	0.07	486.87
87.43	11.89	9.89	0.07	486.94
81.63	11.89	9.89	0.07	544.22
81.63	12.69	10.23	0.07	544.28
77.18	12.69	10.23	0.07	589.46
77.18	14.02	10.60	0.07	589.52
70.85	14.02	10.60	0.07	656.83
70.85	15.68	11.05	0.07	656.90
64.51	15.68	11.05	0.07	726.69
64.51	17.07	11.49	0.07	726.75
58.18	17.07	11.49	0.07	799.31
58.18	18.52	11.92	0.07	799.36
51.84	18.52	11.92	0.07	874.68
51.84	20.01	12.35	0.07	874.73
45.51	20.01	12.35	0.06	952.79
45.51	21.44	12.75	0.07	952.83
39.98	21.44	12.75	0.06	1023.00
39.98	23.63	13.16	0.06	1023.03
33.32	23.63	13.16	0.06	1110.55
33.32	26.10	13.60	0.06	1110.58
26.66	26.10	13.60	0.06	1201.50
26.66	28.06	14.04	0.06	1201.52
19.99	28.06	14.04	0.06	1294.90
19.99	30.08	14.48	0.06	1294.92
13.33	30.08	14.48	0.06	1391.29
13.33	32.17	14.93	0.06	1391.30
6.66	32.17	14.93	0.06	1490.71
6.66	34.31	15.40	0.06	1490.72
0.00	34.31	15.40	0.06	1593.25
Base	35.39	15.66	0.06	1593.25

Section L: STRENGTH ASSESSMENT DATA

Load Combination Max Envelope
Wind Direction Maximum

Elev. (ft)	Bending Stress (ksi)	Axial Stress (ksi)	Shear Stress (ksi)	Total Stress (ksi)	Allowable Stress (ksi)	Assess.
151.00	3.05	0.19	0.41	3.32	52.00	0.064
143.62	9.03	0.18	0.37	9.23	52.00	0.177
143.62	9.05	0.23	0.46	9.32	52.00	0.179
136.23	14.55	0.22	0.43	14.79	52.00	0.284
136.23	14.57	0.26	0.52	14.87	52.00	0.286
128.85	19.85	0.25	0.49	20.11	52.00	0.387
128.85	19.87	0.28	0.51	20.16	52.00	0.388
121.47	24.05	0.26	0.48	24.33	52.00	0.468
121.47	24.07	0.30	0.51	24.38	52.00	0.469
114.08	27.45	0.28	0.48	27.74	52.00	0.533
114.08	27.46	0.30	0.50	27.78	52.00	0.534
110.59	22.36	0.25	0.38	22.62	52.00	0.435
104.80	23.92	0.24	0.36	24.16	52.00	0.465
104.80	23.92	0.27	0.38	24.20	52.00	0.465
99.01	25.25	0.26	0.36	25.52	52.00	0.491
99.01	25.26	0.28	0.38	25.55	52.00	0.491
93.22	26.43	0.27	0.36	26.71	52.00	0.514
93.22	26.44	0.29	0.38	26.74	52.00	0.514
87.43	27.45	0.28	0.36	27.74	52.00	0.534
87.43	27.46	0.30	0.38	27.77	52.00	0.534
81.63	28.37	0.29	0.36	28.67	52.00	0.551
81.63	28.38	0.31	0.38	28.70	52.00	0.552
77.18	19.96	0.23	0.26	20.20	52.00	0.388
70.85	20.50	0.22	0.25	20.73	52.00	0.399
70.85	20.51	0.26	0.26	20.77	52.00	0.399
64.51	20.98	0.25	0.25	21.23	52.00	0.408
64.51	20.98	0.27	0.26	21.26	52.00	0.409
58.18	21.40	0.26	0.25	21.67	52.00	0.417
58.18	21.40	0.28	0.26	21.69	52.00	0.417
51.84	21.78	0.27	0.25	22.06	52.00	0.424
51.84	21.79	0.30	0.26	22.09	52.00	0.425
45.51	22.13	0.29	0.25	22.42	52.00	0.431
45.51	22.13	0.31	0.26	22.44	52.00	0.432
39.98	19.62	0.29	0.22	19.92	52.00	0.383
33.32	19.86	0.28	0.21	20.15	52.00	0.387
33.32	19.86	0.32	0.22	20.18	52.00	0.388
26.66	20.09	0.31	0.21	20.40	52.00	0.392
26.66	20.09	0.33	0.22	20.42	52.00	0.393
19.99	20.28	0.32	0.21	20.61	52.00	0.396
19.99	20.28	0.35	0.22	20.63	52.00	0.397
13.33	20.46	0.33	0.21	20.80	52.00	0.400
13.33	20.46	0.36	0.22	20.82	52.00	0.400
6.66	20.62	0.35	0.21	20.97	52.00	0.403
6.66	20.62	0.37	0.22	21.00	52.00	0.404
0.00	20.77	0.36	0.21	21.13	52.00	0.406

Section M: SECTION PROPERTIES DATA

Elev. (ft)	Diam. (in)	Width (in)	Thick. (in)	W/t	Area (in^2)	S (in^3)
151.0	19.2	3.0	0.188	16.0	11.3	52.83
143.6	20.8	3.3	0.188	17.6	12.3	62.60
143.6	20.8	3.3	0.188	17.6	12.3	62.60
136.2	22.5	3.6	0.188	19.2	13.3	73.21
136.2	22.5	3.6	0.188	19.2	13.3	73.21
128.8	24.2	3.9	0.188	20.8	14.3	84.64
128.8	24.2	3.9	0.188	20.8	14.3	84.64
121.5	25.9	4.2	0.188	22.3	15.3	96.91
121.5	25.9	4.2	0.188	22.3	15.3	96.91
114.1	27.5	4.5	0.188	23.9	16.3	110.00
114.1	27.5	4.5	0.188	23.9	16.3	110.00
110.6	28.3	4.6	0.188	24.6	16.7	116.49
110.6	28.0	4.4	0.250	17.7	22.0	150.18
104.8	29.3	4.7	0.250	18.6	23.0	164.82
104.8	29.3	4.7	0.250	18.6	23.0	164.82
99.0	30.6	4.9	0.250	19.6	24.1	180.13
99.0	30.6	4.9	0.250	19.6	24.1	180.13
93.2	31.9	5.1	0.250	20.5	25.1	196.13
93.2	31.9	5.1	0.250	20.5	25.1	196.13
87.4	33.2	5.4	0.250	21.4	26.2	212.81
87.4	33.2	5.4	0.250	21.4	26.2	212.81
81.6	34.5	5.6	0.250	22.3	27.2	230.16
81.6	34.5	5.6	0.250	22.3	27.2	230.16
77.2	35.5	5.8	0.250	23.1	28.0	243.97
77.2	35.2	5.4	0.375	14.5	41.4	354.38
70.8	36.6	5.7	0.375	15.2	43.1	384.41
70.8	36.6	5.7	0.375	15.2	43.1	384.41
64.5	38.0	6.0	0.375	15.9	44.8	415.66
64.5	38.0	6.0	0.375	15.9	44.8	415.66
58.2	39.5	6.2	0.375	16.6	46.5	448.13
58.2	39.5	6.2	0.375	16.6	46.5	448.13
51.8	40.9	6.5	0.375	17.2	48.2	481.83
51.8	40.9	6.5	0.375	17.2	48.2	481.83
45.5	42.3	6.7	0.375	17.9	49.9	516.74
45.5	42.3	6.7	0.375	17.9	49.9	516.74
40.0	43.6	6.9	0.375	18.5	51.4	548.20
40.0	43.2	6.7	0.438	15.4	59.4	625.73
33.3	44.7	7.0	0.438	16.0	61.5	670.94
33.3	44.7	7.0	0.438	16.0	61.5	670.94
26.7	46.2	7.3	0.438	16.6	63.6	717.73
26.7	46.2	7.3	0.438	16.6	63.6	717.73
20.0	47.7	7.5	0.438	17.2	65.7	766.09
20.0	47.7	7.5	0.438	17.2	65.7	766.09
13.3	49.3	7.8	0.438	17.9	67.8	816.03
13.3	49.3	7.8	0.438	17.9	67.8	816.03
6.7	50.8	8.1	0.438	18.5	69.9	867.55
6.7	50.8	8.1	0.438	18.5	69.9	867.55
0.0	52.3	8.3	0.438	19.1	72.0	920.64

Note: w/t values marked with * (asterisk) indicate width to thickness exceeding maximum allowable values by standards.

TowerSoft Tower - v 5.2.1 Monopole Analysis Program
Licensed to: Global Tower Partners, Boca Raton, FL
(c) 1997-2012 TowerSoft, Mississauga, Ontario.

Project: Structural analysis of a 151' Monopole
Site: CT-5042 (East Windsor)
Contract:
Engineer: Mike De Boer

BASE PLATE DETAILS

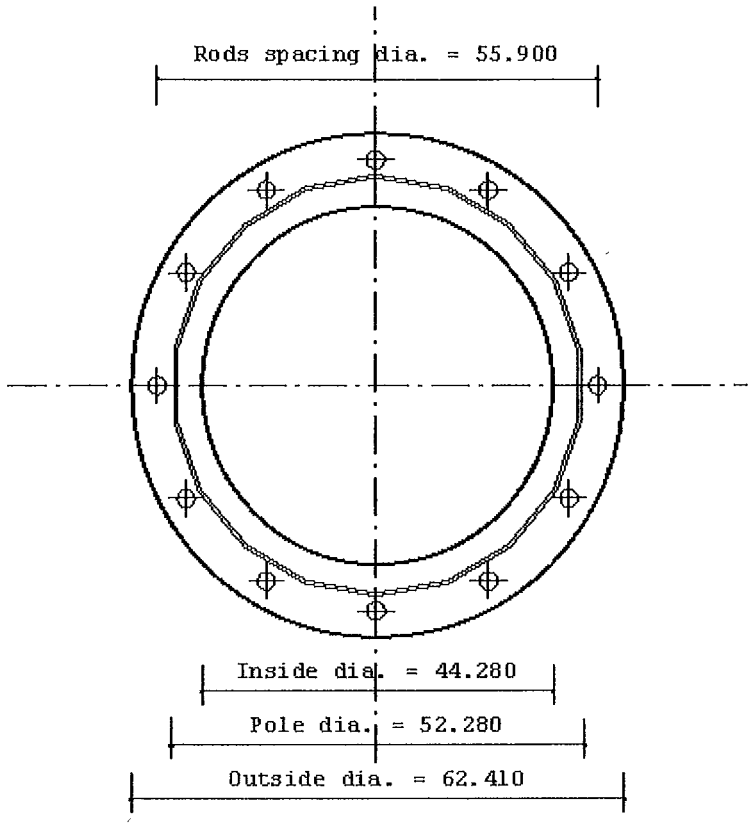

Maximum Base Reactions

Axial Load(Kips)	= 26.94
Shear Load(Kips)	= 15.66
Bending Moment(Kipsft)	= 1593.25
Torque(Kipsft)	= 0.06

Anchor Rod Data

No of rods	= 12
Grade	= A615 Gr.75
Size	= 2 1/4 in
Lar * (in)	= 0.000
Shear Load(Kips)	= 1.31
Axial Load(Kips)	= 116.25
Shear Cap.(Kips)	= 90.12
Axial Cap.(Kips)	= 194.85
Assessment Ratio	= 0.61
Allow. Stress Increase	= 1.33

Plate Data

Thickness(in)	= 1.750
Grade	= A572 gr.60
Max. Stress(ksi)	= 11.4
Allow. Stress(ksi)	= 60.0
Assessment Ratio	= 0.2
Allow. Stress Increase	= 1.33

Plate Bottom above Concrete

* Lar = Length from top of concrete to bottom of anchor rod leveling nut.

Horizontal Displacement Diagram

Max. Envelope (All Loading Cases)

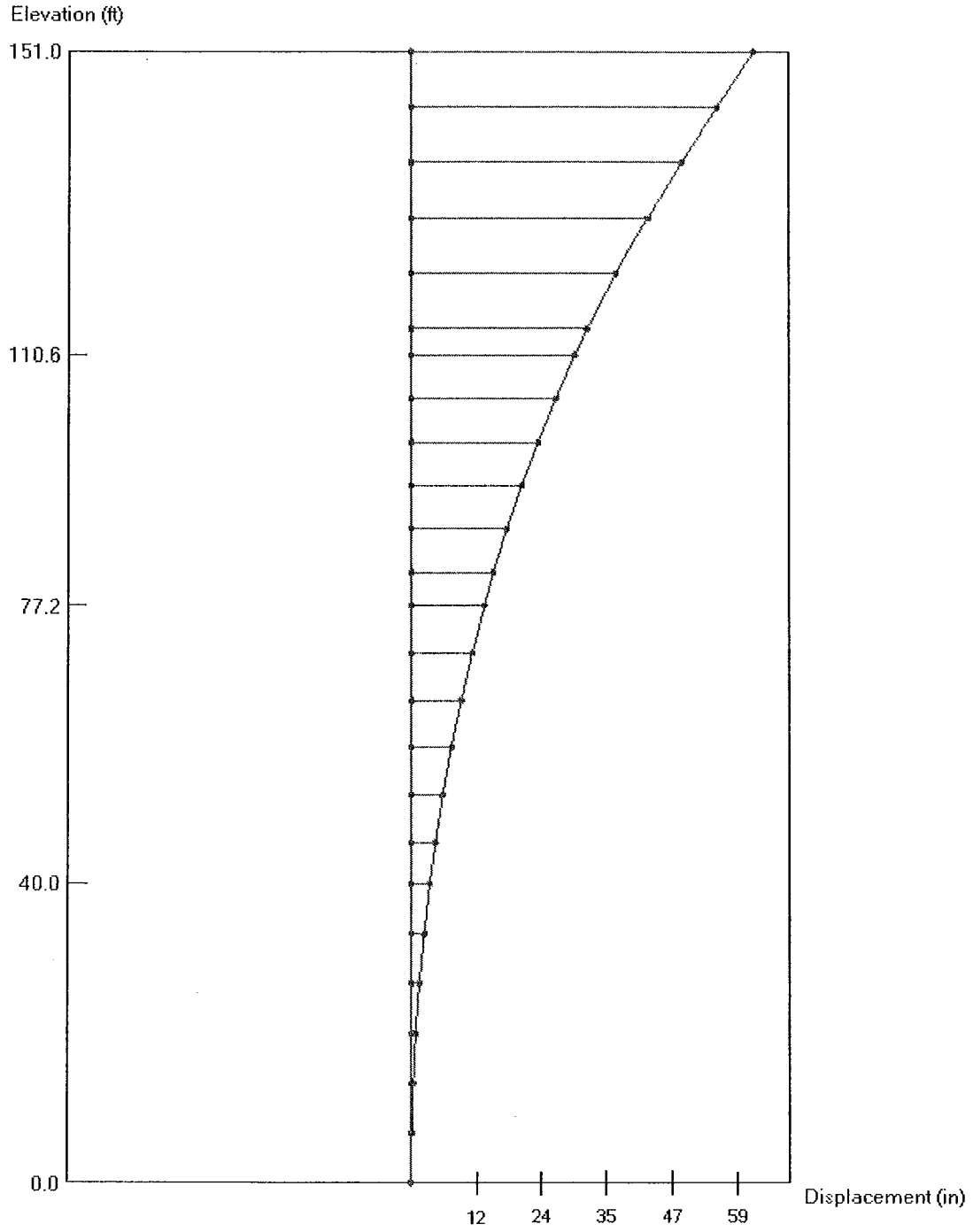

Bending Moment Diagram

Max. Envelope (All Loading Cases)

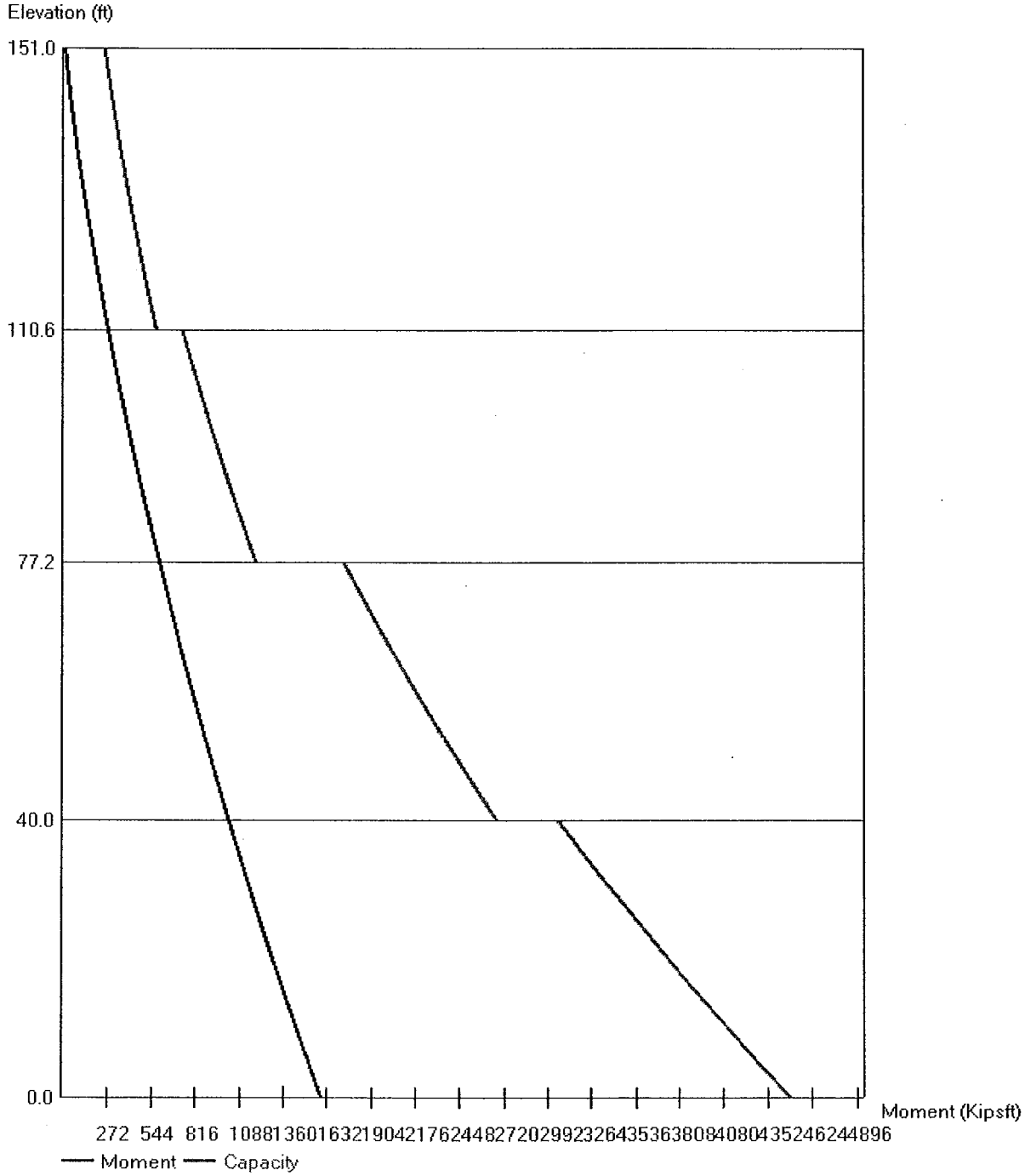

APPENDIX C

Collocation Application

GLOBAL TOWER PARTNERS

Collocation Application

Check one: New ☐ Addition to Existing ☐ Modification ☒	LEASE #21582	
PLEASE RETURN THIS APPLICATION TO: rcrews@gtpsites.com	GTP Site #:	CT-5042
GTP	GTP Site Name:	East Windsor
750 Park of Commerce Blvd — E-Mail: rcrews@gtpsites.com	GTP Date Received:	2-27-12
Suite 300	Revision Dates:	2-27-12, 2-29-12, 3-3-12, 3-16-12, 3-29-12 3-30-12, 5-4-12
Boca Raton, FL 33487-3612 — Office: (561) 843-8416	RSM Approval:	Charles Laurette 3-3-12
Attn: Leasing — Fax: (561) 982-7032		

APPLICANT/CARRIER INFORMATION

Carrier Name:	AT&T	Contact Name:	Lauren Groppi
Carrier Site Name:	AWE-EAST WINDSOR	Contact Number:	508-572-1187
Carrier Site Number:	CT5153	Contact Fax:	
Carrier Legal Entity Name,	New Cingular Wireless PCS, LLC	Contact Address:	16 Chestnut Street Foxboro, MA 02035
State of registration:	CT		
Type of entity (LP, LLC, Corp) d/b/a/ (If applicable)	LLC		
Notice Address for Lease:	Attn: Network Real Estate Administration RE: Cell Site No. CT5153; FA#10071022 12555 Cingular Way, Suite 1300 Alpharetta, GA 30004	Contact E-mail:	lgroppi@trmcom.com
With copies to:	New Cingular Wireless PCS, LLC Atm: Legal Department RE: Cell Site No. CT5153; FA#10071022 340 Mt. Kemble Ave. Morristown, NJ 07960-6656	Additional E-mail:	
Carrier Invoice Address:	500 Enterprise Drive, Suite 3A Rocky Hill, CT 06067	Other:	
Carrier Invoice Contact - Name, Title, Phone No.		Carrier NOC#	

ADDITIONAL CARRIER INFORMATION

Leasing Contact Name/Number:	Lauren Groppi / 508-572-1187
RF Contact Name/Number:	**Radu Alecsandru** /860-965-6685
Construction Contact Name/Number:	Mark Roberts/ 860-420-8562
Emergency Contact Name/Number:	Mark Roberts/ 860-420-8562

SITE INFORMATION

Latitude:	41	56	44.199	N	Existing Structure Type:	Monopole
Longitude:	72	36	17.7984	W	Existing Structure Height:	153'
Site Address:	1654 King Street, Enfield, CT					

Antenna Equipment Specifications

Sectors **(1, 2, 3 etc. - if applicable)**	Alpha/Beta/Gamma	Alpha/Beta/Gamma	Alpha/Beta/Gamma	Alpha/Beta/Gamma	Alpha/Beta/Gamma	
Equipment Type (Panel, Omni, RRU, TMA, RET, MW Dish etc.)	Panel	TMA's	Diplexers	**Panel**	**RRU**	**Surge Arrestor**
Installation Status (Existing, Proposed etc.)	Existing (Staying on Tower)	Existing (Staying on Tower)	Existing (Staying on Tower)	**Proposed**	**Proposed**	**Proposed**
Rad Center AGL (ft)	155'	155'	155'	155'	155'	155'
Equipment Mount Height (ft)	150'	150'	150'	150'	150'	150'
Equipment Mount Type	Top Mount	Top Mount	Top Mount	Top Mount	Top Mount	
Equipment Quantity	6 (2 / sector)	6 (2 / sector)	6 (2 / sector)	3 (1/sector)	6 (2/sector)	1
Equipment Manufacturer	Kathrein	Powerwave	Powerwave	(2) KMW (1) Powerwave	Ericsson	RayCap

GLOBAL TOWER PARTNERS

Collocation Application

Equipment Model #	800-10121	LGP21401	LGP21901	(2) AM-X-CD-16-65-00T (1) P65-17-XLH-RR	RRU-11	DC6-48-60-18-8F
Equipment Weight (per item in lbs))	44.1	14	5.5	KMW - 48.5 Powerwave - 70	50	20 lbs
Equipment Dimensions (HxWxD) (Indicate feet or inches)	54.5"x10.3"x5.9"	9.2" x 14.4" x 2.6"	4.4" x 6.3" x 3.0"	KMW – 72"x11".8x5.9" Powerwave – 96.0" x 12.0" x 6.0"	17.6" x 17.3"x 7.2"	23.5" x 9.7"
TOTAL # of LINES for equipment in column	12	N/A	N/A	1	N/A	N/A
Line Type	Coax - Andrews			One (1) Ericsson Fiber / FB-L98B-002-075		Two (2) DC cables 3/8" (WR-VG86ST-BRD)
Line Diameter/Size	1-5/8"			1-1/2"		
Orientation/Azimuth (degrees from true north)	142/254/23			50/160/280		
Mechanical Tilt (degrees)	0					
TX Frequency	869-892 MHz 1930-1990 MHz			TX: 704-716 MHz	734-745 MHz 2130-2135 MHz	
RX Frequency	824-847 MHz 1850-1910 MHz			RX:734-746 MHz	703-715 MHz 1730-1735 MHz	
ERP (watts)					500 Max	
Type of Technology (i.e. 3G, LTE, CMDA etc)	GSM/UMTS			LTE	LTE	

Will RRU's be installed behind Antennas ☑ **Yes** ☐ **No**

If no, please explain:

FIBER: ☐ **Yes** ☐ **No** **Who is Provider?**

PLEASE NOTE - All Equipment Lines are required to be installed inside the tower when space is available. Carriers will be charged an additional $25.00 per line per month if equipment lines are installed on the outside of the tower even though there is available space inside the tower. GTP must approve any installation of lines on the outside of towers prior to installation commencement.

GROUND SPACE REQUIREMENTS

Total Ground Area Dimensions Required (length x width x height in ft.)	10' x 20'	**Generator:** ☐ Diesel ☐ Propane ☐ Natural Gas Pad Dimension (L X W, ft.):	
Cabinet Pad Dimensions		Cabinet Manufacturer	
Shelter Pad Dimensions	10' x 20'	Shelter Manufacturer	

AC POWER REQUIREMENTS

Voltage:	Total Amperage:

Comments: (12) Existing RETs to remain

GPS Antennas: (1) GPS – Existing
GPS-TMG-HR-26N
Dimensions: 5.0" H x 3.2" D, Weight: 1.9 lbs.

(1) Tallycom GPS
Model #: GPS-TMG-HR-26NCM
Dimensions: 5.0(H) x 3.2 (D) in.
(Ground mount on Shelter - Mounted min. 10' feet from existing GPS)

Scope of Work:

Add 3 new LTE antennas with RRUs, add 1 surge protector, add LTE GPS, all azimuths to match new LTE configuration.

FINAL CONFIG: (6) existing panels with (12) existing coax lines, TMAs, diplexers, RETs, (1) existing GPS, (3) new LTE antennas, (1) new fiber line, (1) new LTE GPS, (1) new Surge Protector with (2) DC power lines. Existing leased ground space with new rack added.

One (1) Surge Arrestor (DC-48-60-18-8F) to be installed on tower with two (2) DC power lines (WR-VG86ST-BRD). One (1) fiber cable @ 1-1/2" to serve all three antenna sectors. LTE GPS antenna to be installed on Shelter.

AT&T will be adding a rack into their existing leased area. Raycap DC6-48-60-RM (BTS) and Ericsson RBS6601 (LTE Cabinet) to be installed on proposed rack.

Final Configuration on Tower:

- Nine (9) antennas as listed in the table above (3 New LTE antennas)
- Six (6) RRU's
- One (1) RayCap Surge Arresotor
- One (1) Conduit @ 1 – ½" (for DC Cables)
- Six (6) TMA's (Existing)
- Six (6) Diplexers (Existing)
- Twelve (12) RETs (Existing)
- Twelve (12) Existing Coax

C Squared Systems, LLC
65 Dartmouth Drive, Unit A3
Auburn, NH 03032
(603) 644-2800
support@csquaredsystems.com

Calculated Radio Frequency Emissions

CT5153

(AWE – East Windsor)

1654 King Street, Enfield, CT 06082

May 4, 2012

Table of Contents

1. Introduction 1
2. FCC Guidelines for Evaluating RF Radiation Exposure Limits 1
3. RF Exposure Prediction Methods 2
4. Calculation Results 3
5. Conclusion 4
6. Statement of Certification 4
Attachment A: References 5
Attachment B: FCC Limits for Maximum Permissible Exposure (MPE) 6
Attachment C: AT&T Antenna Data Sheets and Electrical Patterns 8

List of Tables

Table 1: Carrier Information 3
Table 2: FCC Limits for Maximum Permissible Exposure (MPE) 6

List of Figures

Figure 1: Graph of FCC Limits for Maximum Permissible Exposure (MPE) 7

1. Introduction

The purpose of this report is to investigate compliance with applicable FCC regulations for the proposed modifications to the existing AT&T antenna arrays mounted on the monopole tower located at 1654 King Street in Enfield, CT. The coordinates of the tower are 41-56-44.14 N, 72-36-17.89 W.

AT&T is proposing the following modifications:

1) Install three 700MHz LTE antennas (one per sector).

2. FCC Guidelines for Evaluating RF Radiation Exposure Limits

In 1985, the FCC established rules to regulate radio frequency (RF) exposure from FCC licensed antenna facilities. In 1996, the FCC updated these rules, which were further amended in August 1997 by OET Bulletin 65 Edition 97-01. These new rules include Maximum Permissible Exposure (MPE) limits for transmitters operating between 300 kHz and 100 GHz. The FCC MPE limits are based upon those recommended by the National Council on Radiation Protection and Measurements (NCRP), developed by the Institute of Electrical and Electronics Engineers, Inc., (IEEE) and adopted by the American National Standards Institute (ANSI).

The FCC general population/uncontrolled limits set the maximum exposure to which most people may be subjected. General population/uncontrolled exposures apply in situations in which the general public may be exposed, or in which persons that are exposed as a consequence of their employment may not be fully aware of the potential for exposure or cannot exercise control over their exposure.

Public exposure to radio frequencies is regulated and enforced in units of milliwatts per square centimeter (mW/cm^2). The general population exposure limits for the various frequency ranges are defined in the attached "FCC Limits for Maximum Permissible Exposure (MPE)" in Attachment B of this report.

Higher exposure limits are permitted under the occupational/controlled exposure category, but only for persons who are exposed as a consequence of their employment and who have been made fully aware of the potential for exposure, and they must be able to exercise control over their exposure. General population/uncontrolled limits are five times more stringent than the levels that are acceptable for occupational, or radio frequency trained individuals. Attachment B contains excerpts from OET Bulletin 65 and defines the Maximum Exposure Limit.

Finally, it should be noted that the MPE limits adopted by the FCC for both general population/uncontrolled exposure and for occupational/controlled exposure incorporate a substantial margin of safety and have been established to be well below levels generally accepted as having the potential to cause adverse health effects.

3. RF Exposure Prediction Methods

The emission field calculation results displayed in the following figures were generated using the following formula as outlined in FCC bulletin OET 65:

$$\text{Power Density} = \left(\frac{1.6^2 \times EIRP}{4\pi \times R^2} \right) \text{x Off Beam Loss}$$

Where:

EIRP = Effective Isotropic Radiated Power

R = Radial Distance = $\sqrt{(H^2 + V^2)}$

H = Horizontal Distance from antenna in meters

V = Vertical Distance from radiation center of antenna in meters

Ground reflection factor of 1.6

Off Beam Loss is determined by the selected antenna pattern

These calculations assume that the antennas are operating at 100 percent capacity and power, and that all channels are transmitting simultaneously. Obstructions (trees, buildings, etc.) that would normally attenuate the signal are not taken into account. The calculations assume even terrain in the area of study and do not take into account actual terrain elevations which could attenuate the signal. As a result, the predicted signal levels reported below are much higher than the actual signal levels will be from the finished modifications.

4. Calculation Results

Table 1 below outlines the power density information for the site. Because the proposed AT&T antennas are directional in nature, the majority of the RF power is focused out towards the horizon. As a result, there will be less RF power directed below the antennas relative to the horizon, and consequently lower power density levels around the base of the tower. Please refer to Attachment C for the vertical pattern of the proposed AT&T antennas. The calculated results for AT&T in Table 1 include a nominal 10 dB off-beam pattern loss to account for the lower relative gain below the antennas.

Carrier	Antenna Height (Feet)	Operating Frequency (MHz)	Number of Trans.	ERP Per Transmitter (Watts)	Power Density (mw/cm^2)	Limit	%MPE
Cingular UMTS	*148*	*880*	*1*	*500*	*0.0062*	*0.5867*	*1.46%*
Cingular GSM	*148*	*1900*	*2*	*427*	*0.0140*	*1.0000*	*1.46%*
Clearwire	140	2496	2	153	0.0056	1.0000	0.56%
Clearwire	140	11000	1	211	0.0039	1.0000	0.39%
AT&T UMTS	155	880	2	565	0.0017	0.5867	0.29%
AT&T UMTS	155	1900	2	1077	0.0032	1.0000	0.32%
AT&T LTE	155	734	1	1615	0.0024	0.4893	0.49%
AT&T GSM	155	880	1	283	0.0004	0.5867	0.07%
AT&T GSM	155	1900	4	646	0.0039	1.0000	0.39%
						Total	**2.51%**

Table 1: Carrier Information[1 2 3]

[1] The existing CSC filing for Cingular should be removed and replaced with the updated AT&T technologies and values provided in Table 1. The power density information for carriers other than AT&T was taken directly from the CSC database dated 3/29/2012. Please note that %MPE values listed are rounded to two decimal points. The total %MPE listed is a summation of each unrounded contribution. Therefore, summing each rounded value may not reflect the total value listed in the table.

[2] In the case where antenna models are not uniform across all 3 sectors for the same frequency band, the antenna model with the highest gain was used for the calculations to present a worse-case scenario.

[3] Antenna height listed for AT&T is in reference to the Hudson Design Group construction drawings dated 4/11/2012.

5. Conclusion

The above analysis verifies that emissions from the existing site will be below the maximum power density levels as outlined by the FCC in the OET Bulletin 65 Ed. 97-01. Even when using conservative methods, the cumulative power density from the proposed transmit antennas at the existing facility is well below the limits for the general public. The highest expected percent of Maximum Permissible Exposure at ground level is **2.51% of the FCC limit**.

As noted previously, obstructions (trees, buildings, etc.) that would normally attenuate the signal are not taken into account. As a result, the predicted signal levels are more conservative (higher) than the actual signal levels will be from the finished modifications.

6. Statement of Certification

I certify to the best of my knowledge that the statements in this report are true and accurate. The calculations follow guidelines set forth in ANSI/IEEE Std. C95.3, ANSI/IEEE Std. C95.1 and FCC OET Bulletin 65 Edition 97-01.

Daniel L. Goulet
C Squared Systems, LLC

May 4, 2012
Date

Attachment A: References

OET Bulletin 65 - Edition 97-01 - August 1997 Federal Communications Commission Office of Engineering & Technology

ANSI C95.1-1982, American National Standard Safety Levels With Respect to Human Exposure to Radio Frequency Electromagnetic Fields, 300 kHz to 100 GHz. IEEE-SA Standards Board

IEEE Std C95.3-1991 (Reaff 1997), IEEE Recommended Practice for the Measurement of Potentially Hazardous Electromagnetic Fields - RF and Microwave. IEEE-SA Standards Board

Attachment B: FCC Limits for Maximum Permissible Exposure (MPE)

(A) Limits for Occupational/Controlled Exposure[4]

Frequency Range (MHz)	Electric Field Strength (E) (V/m)	Magnetic Field Strength (E) (A/m)	Power Density (S) (mW/cm^2)	Averaging Time $\|E\|^2$, $\|H\|^2$ or S (minutes)
0.3-3.0	614	1.63	(100)*	6
3.0-30	1842/f	4.89/f	($900/f^2$)*	6
30-300	61.4	0.163	1.0	6
300-1500	-	-	f/300	6
1500-100,000	-	-	5	6

(B) Limits for General Population/Uncontrolled Exposure[5]

Frequency Range (MHz)	Electric Field Strength (E) (V/m)	Magnetic Field Strength (E) (A/m)	Power Density (S) (mW/cm^2)	Averaging Time $\|E\|^2$, $\|H\|^2$ or S (minutes)
0.3-1.34	614	1.63	(100)*	30
1.34-30	824/f	2.19/f	($180/f^2$)*	30
30-300	27.5	0.073	0.2	30
300-1500	-	-	f/1500	30
1500-100,000	-	-	1.0	30

f = frequency in MHz * Plane-wave equivalent power density

Table 2: FCC Limits for Maximum Permissible Exposure (MPE)

[4] Occupational/controlled limits apply in situations in which persons are exposed as a consequence of their employment provided those persons are fully aware of the potential for exposure and can exercise control over their exposure. Limits for occupational/controlled exposure also apply in situations when an individual is transient through a location where occupational/controlled limits apply provided he or she is made aware of the potential for exposure.

[5] General population/uncontrolled exposures apply in situations in which the general public may be exposed, or in which persons that are exposed as a consequence of their employment may not be fully aware of the potential for exposure or cannot exercise control over their exposure.

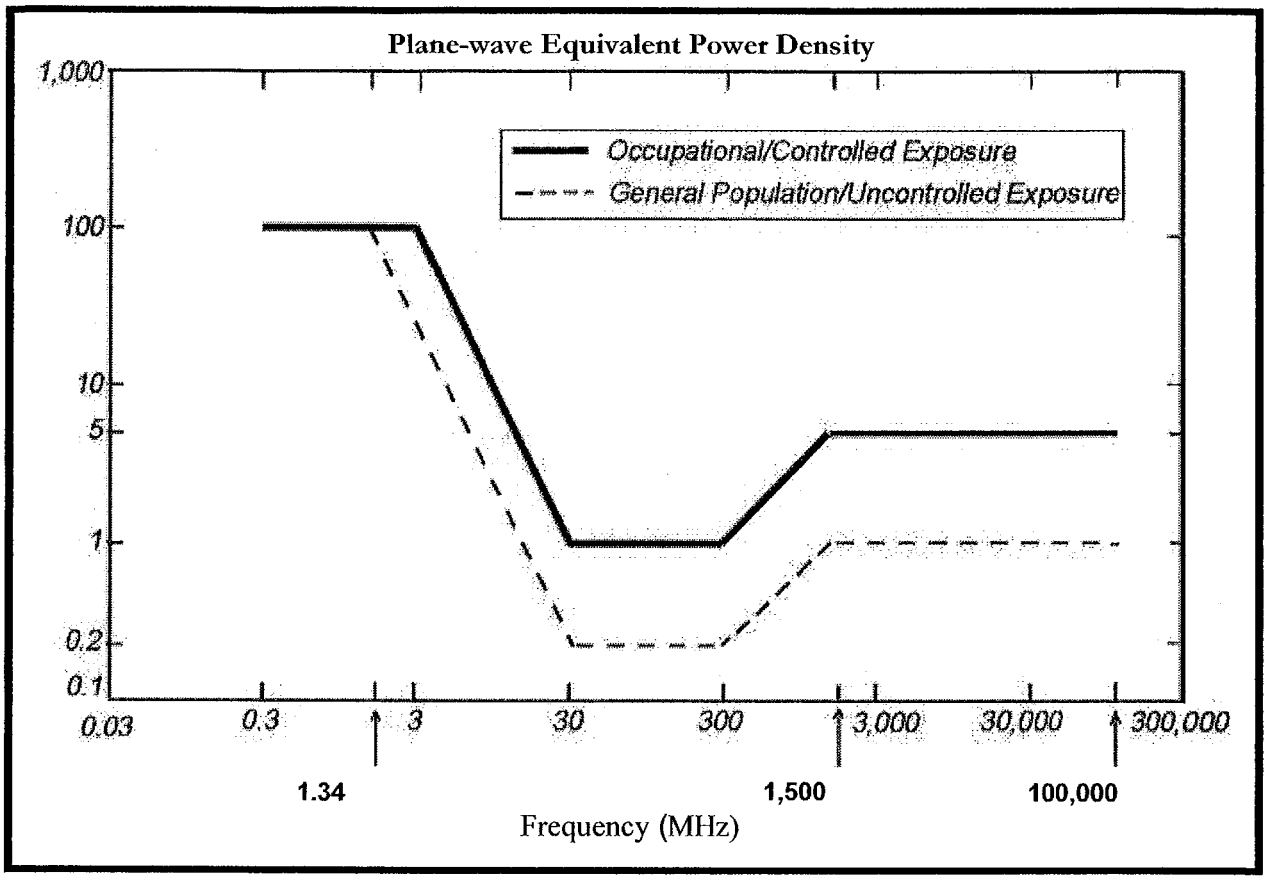

Figure 1: Graph of FCC Limits for Maximum Permissible Exposure (MPE)

Attachment C: AT&T Antenna Data Sheets and Electrical Patterns

700 MHz

Manufacturer:	Powerwave
Model #:	P65-17-XLH-RR
Frequency Band:	698-806 MHz
Gain:	14.3 dBd
Vertical Beamwidth:	8.4°
Horizontal Beamwidth:	70°
Polarization:	Dual Linear ± 45°
Size L x W x D:	96.0" x 12.0" x 6.0"

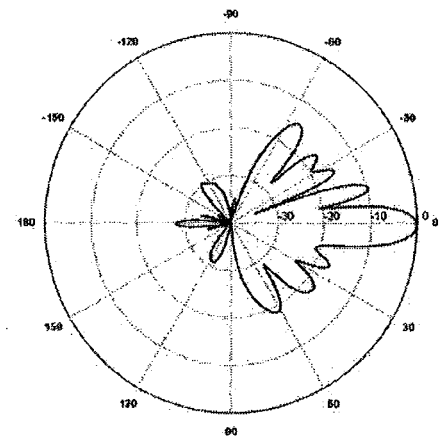

850 MHz

Manufacturer:	Kathrein-Scala
Model #:	800-10121
Frequency Band:	824-896 MHz
Gain:	11.5 dBd
Vertical Beamwidth:	14.5°
Horizontal Beamwidth:	86°
Polarization:	±45°
Size L x W x D:	54.5" x 10.3" x 5.9"

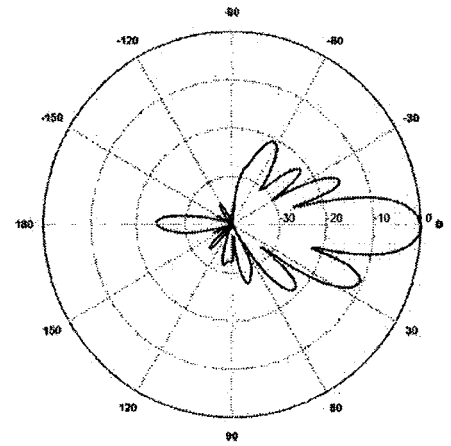

1900 MHz

Manufacturer:	Kathrein-Scala
Model #:	800-10121
Frequency Band:	1850-1990 MHz
Gain:	14.3 dBd
Vertical Beamwidth:	6.6°
Horizontal Beamwidth:	85°
Polarization:	±45°
Size L x W x D:	54.5" x 10.3" x 5.9"

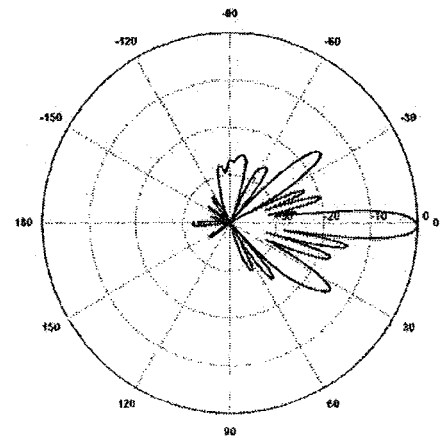

PROJECT INFORMATION

SCOPE OF WORK:	UNMANNED TELECOMMUNICATIONS FACILITY MODIFICATIONS
SITE ADDRESS:	1654 KING STREET ENFIELD, CT 06082
LATITUDE:	41.945792 N 41° 56' 44.85" N
LONGITUDE:	72.605599 W 72° 36' 20.16" W
JURISDICTION:	NATIONAL, STATE & LOCAL CODES OR ORDINANCES
CURRENT USE:	TELECOMMUNICATIONS FACILITY
PROPOSED USE:	TELECOMMUNICATIONS FACILITY
MAP/LOT:	13/9
ZONING:	INDUSTRIAL (I-2)
PROPERTY OWNER:	JFP REALTY LLC 1654 KING STREET ENFIELD, CT 06082
STRUCTURE OWNER:	GTP STRUCTURES IV, LLC 750 PARK OF COMMERCE BLVD, SUITE #300 BOCA RATON, FL 33487

SITE NUMBER: CT5153
SITE NAME: AWE - EAST WINDSOR

DRAWING INDEX

		REV
T-1	TITLE SHEET	1
GN-1	GENERAL NOTES	1
A-1	COMPOUND & EQUIPMENT PLAN	1
A-2	ANTENNA & ELEVATION PLAN	1
A-3	DETAILS	1
G-1	PLUMBING DIAGRAM & GROUNDING DETAILS	1

VICINITY MAP

DIRECTIONS:
FROM ROCKY HILL, CT, START OUT GOING EAST ON ELM ST / CT-160 TOWARD MAIN ST / CT-99. <0.1 MILES, TURN LEFT ONTO SILAS DEANE HWY / CT-99. 1.1 MILES, MERGE ONTO I-91 N TOWARD HARTFORD. 19.4 MILES 4: TAKE THE CT-140 EXIT- EXIT 45- TOWARD WAREHOUSE PT / ELLINGTON. 0.1 MILES, TURN RIGHT ONTO BRIDGE ST / CT-140. 0.1 MILES, TURN LEFT ONTO PROSPECT HILL RD / US-5. CONTINUE TO FOLLOW US-5. 0.9 MILES, END AT 1654 KING ST ENFIELD, CT 06082-6000, US

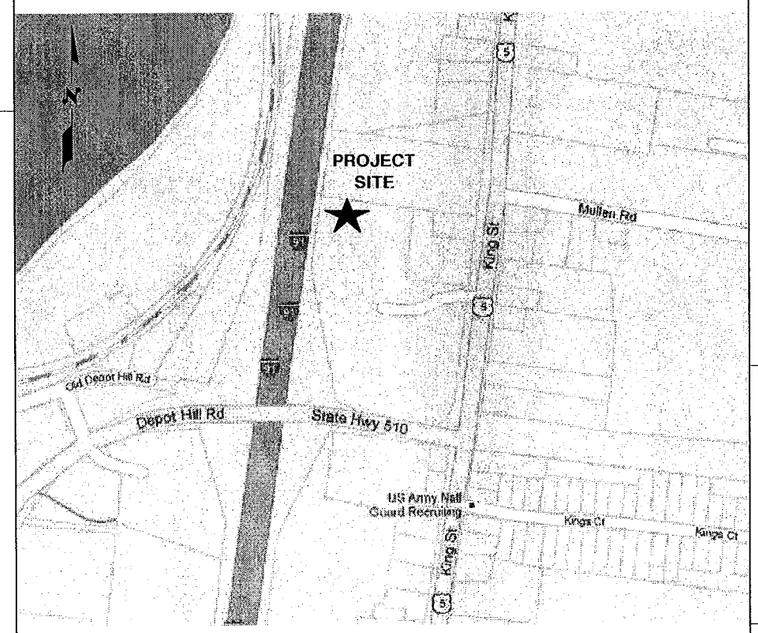

GENERAL NOTES

1. THIS DOCUMENT IS THE CREATION, DESIGN, PROPERTY AND COPYRIGHTED WORK OF AT&T. ANY DUPLICATION OR USE WITHOUT EXPRESS WRITTEN CONSENT IS STRICTLY PROHIBITED. DUPLICATION AND USE BY GOVERNMENT AGENCIES FOR THE PURPOSES OF CONDUCTING THEIR LAWFULLY AUTHORIZED REGULATORY AND ADMINISTRATIVE FUNCTIONS IS SPECIFICALLY ALLOWED.
2. THE FACILITY IS AN UNMANNED PRIVATE AND SECURED EQUIPMENT INSTALLATION. IT IS ONLY ACCESSED BY TRAINED TECHNICIANS FOR PERIODIC ROUTINE MAINTENANCE AND THEREFORE DOES NOT REQUIRE ANY WATER OR SANITARY SEWER SERVICE. THE FACILITY IS NOT GOVERNED BY REGULATIONS REQUIRING PUBLIC ACCESS PER ADA REQUIREMENTS.
3. CONTRACTOR SHALL VERIFY ALL PLANS AND EXISTING DIMENSIONS AND CONDITIONS ON THE JOB SITE AND SHALL IMMEDIATELY NOTIFY THE AT&T REPRESENTATIVE IN WRITING OF DISCREPANCIES BEFORE PROCEEDING WITH THE WORK OR BE RESPONSIBLE FOR SAME.

CALL
BEFORE YOU DIG
CALL TOLL FREE 800-922-4455

UNDERGROUND SERVICE ALERT

Hudson Design Groupac
1600 OSGOOD STREET
BUILDING 20 NORTH, SUITE 2-101
N. ANDOVER, MA 01845
TEL: (978) 557-5553
FAX: (978) 336-5586

NEXLINK GLOBAL SERVICES
a UniTek GLOBAL SERVICES company
800 MARSHALL PHELPS ROAD UNIT#: 2A
WINDSOR, CT 06095

SITE NUMBER: CT5153
SITE NAME:
AWE - EAST WINDSOR
1654 KING STREET
ENFIELD, CT 06082
HARTFORD COUNTY

at&t
500 ENTERPRISE DRIVE
ROCKY HILL, CT 06067

NO.	DATE	REVISIONS	BY	CHK	APP'D
1	04/11/12	ISSUED FOR CONSTRUCTION	JG	DC	DPH
0	03/22/12	ISSUED FOR REVIEW	JG	DC	DPH

SCALE: AS SHOWN | DESIGNED BY: DC | DRAWN BY: JG

STATE OF CONNECTICUT · DANIEL P. HAMM · No. 24173 · LICENSED PROFESSIONAL ENGINEER

AT&T

TITLE SHEET (LTE)

JOB NUMBER	DRAWING NUMBER	REV
5153.01	T-1	1

GROUNDING NOTES

1. THE SUBCONTRACTOR SHALL REVIEW AND INSPECT THE EXISTING FACILITY GROUNDING SYSTEM AND LIGHTNING PROTECTION SYSTEM (AS DESIGNED AND INSTALLED) FOR STRICT COMPLIANCE WITH THE NEC (AS ADOPTED BY THE AHJ), THE SITE-SPECIFIC (UL, LPI, OR NFPA) LIGHTING PROTECTION CODE, AND GENERAL COMPLIANCE WITH TELCORDIA AND TIA GROUNDING STANDARDS. THE SUBCONTRACTOR SHALL REPORT ANY VIOLATIONS OR ADVERSE FINDINGS TO THE CONTRACTOR FOR RESOLUTION.

2. ALL GROUND ELECTRODE SYSTEMS (INCLUDING TELECOMMUNICATION, RADIO, LIGHTNING PROTECTION, AND AC POWER GES'S) SHALL BE BONDED TOGETHER, AT OR BELOW GRADE, BY TWO OR MORE COPPER BONDING CONDUCTORS IN ACCORDANCE WITH THE NEC.

3. THE SUBCONTRACTOR SHALL PERFORM IEEE FALL-OF-POTENTIAL RESISTANCE TO EARTH TESTING (PER IEEE 1100 AND 81) FOR NEW GROUND ELECTRODE SYSTEMS. THE SUBCONTRACTOR SHALL FURNISH AND INSTALL SUPPLEMENTAL GROUND ELECTRODES AS NEEDED TO ACHIEVE A TEST RESULT OF 5 OHMS OR LESS.

4. METAL RACEWAY SHALL NOT BE USED AS THE NEC REQUIRED EQUIPMENT GROUND CONDUCTOR. STRANDED COPPER CONDUCTORS WITH GREEN INSULATION, SIZED IN ACCORDANCE WITH THE NEC, SHALL BE FURNISHED AND INSTALLED WITH THE POWER CIRCUITS TO BTS EQUIPMENT.

5. EACH BTS CABINET FRAME SHALL BE DIRECTLY CONNECTED TO THE MASTER GROUND BAR WITH GREEN INSULATED SUPPLEMENTAL EQUIPMENT GROUND WIRES, 6 AWG STRANDED COPPER OR LARGER FOR INDOOR BTS 2 AWG STRANDED COPPER FOR OUTDOOR BTS.

6. EXOTHERMIC WELDS SHALL BE USED FOR ALL GROUNDING CONNECTIONS BELOW GRADE.

7. APPROVED ANTIOXIDANT COATINGS (I.E., CONDUCTIVE GEL OR PASTE) SHALL BE USED ON ALL COMPRESSION AND BOLTED GROUND CONNECTIONS.

8. ICE BRIDGE BONDING CONDUCTORS SHALL BE EXOTHERMICALLY BONDED OR BOLTED TO THE BRIDGE AND THE TOWER GROUND BAR.

9. ALUMINUM CONDUCTOR OR COPPER CLAD STEEL CONDUCTOR SHALL NOT BE USED FOR GROUNDING CONNECTIONS.

10. MISCELLANEOUS ELECTRICAL AND NON-ELECTRICAL METAL BOXES, FRAMES AND SUPPORTS SHALL BE BONDED TO THE GROUND RING, IN ACCORDANCE WITH THE NEC.

11. METAL CONDUIT SHALL BE MADE ELECTRICALLY CONTINUOUS WITH LISTED BONDING FITTINGS OR BY BONDING ACROSS THE DISCONTINUITY WITH 6 AWS COPPER

ALL NEW STRUCTURES WITH A FOUNDATION AND/OR FOOTING HAVING 20 FT. OR MORE OF 1/2 IN. OR GREATER ELECTRICALLY CONDUCTIVE REINFORCING STEEL MUST HAVE IT BONDED TO THE GROUND RING USING AN EXOTHERMIC WELD CONNECTION USING #2 AWG SOLID BARE TINNED COPPER GROUND WIRE, PER NEC 250.50

GENERAL NOTES

1. FOR THE PURPOSE OF CONSTRUCTION DRAWING, THE FOLLOWING DEFINITIONS SHALL APPLY:
CONTRACTOR – NEXLINK
SUBCONTRACTOR – GENERAL CONTRACTOR (CONSTRUCTION)
OWNER – AT&T MOBILITY

2. PRIOR TO THE SUBMISSION OF BIDS, THE BIDDING SUBCONTRACTOR SHALL VISIT THE CELL SITE TO FAMILIARIZE WITH THE EXISTING CONDITIONS AND TO CONFIRM THAT THE WORK CAN BE ACCOMPLISHED AS SHOWN ON THE CONSTRUCTION DRAWINGS. ANY DISCREPANCY FOUND SHALL BE BROUGHT TO THE ATTENTION OF CONTRACTOR.

3. ALL MATERIALS FURNISHED AND INSTALLED SHALL BE IN STRICT ACCORDANCE WITH ALL APPLICABLE CODES, REGULATIONS, AND ORDINANCES. SUBCONTRACTOR SHALL ISSUE ALL APPROPRIATE NOTICES AND COMPLY WITH ALL LAWS, ORDINANCES, RULES, REGULATIONS, AND LAWFUL ORDERS OF ANY PUBLIC AUTHORITY REGARDING THE PERFORMANCE OF THE WORK. ALL WORK CARRIED OUT SHALL COMPLY WITH ALL APPLICABLE MUNICIPAL AND UTILITY COMPANY SPECIFICATIONS AND LOCAL JURISDICTIONAL CODES, ORDINANCES AND APPLICABLE REGULATIONS.

4. DRAWINGS PROVIDED HERE ARE NOT TO BE SCALED AND ARE INTENDED TO SHOW OUTLINE ONLY.

5. UNLESS NOTED OTHERWISE, THE WORK SHALL INCLUDE FURNISHING MATERIALS, EQUIPMENT, APPURTENANCES, AND LABOR NECESSARY TO COMPLETE ALL INSTALLATIONS AS INDICATED ON THE DRAWINGS.

6. "KITTING LIST" SUPPLIED WITH THE BID PACKAGE IDENTIFIES ITEMS THAT WILL BE SUPPLIED BY CONTRACTOR. ITEMS NOT INCLUDED IN THE BILL OF MATERIALS AND KITTING LIST SHALL BE SUPPLIED BY THE SUBCONTRACTOR.

7. THE SUBCONTRACTOR SHALL INSTALL ALL EQUIPMENT AND MATERIALS IN ACCORDANCE WITH MANUFACTURER'S RECOMMENDATIONS UNLESS SPECIFICALLY STATED OTHERWISE.

8. IF THE SPECIFIED EQUIPMENT CANNOT BE INSTALLED AS SHOWN ON THESE DRAWINGS, THE SUBCONTRACTOR SHALL PROPOSE AN ALTERNATIVE INSTALLATION SPACE FOR APPROVAL BY THE CONTRACTOR.

9. SUBCONTRACTOR SHALL DETERMINE ACTUAL ROUTING OF CONDUIT, POWER AND T1 CABLES, GROUNDING CABLES AS SHOWN ON THE POWER, GROUNDING AND TELCO PLAN DRAWING. SUBCONTRACTOR SHALL UTILIZE EXISTING TRAYS AND/OR SHALL ADD NEW TRAYS AS NECESSARY. SUBCONTRACTOR SHALL CONFIRM THE ACTUAL ROUTING WITH THE CONTRACTOR.

10. THE SUBCONTRACTOR SHALL PROTECT EXISTING IMPROVEMENTS, PAVEMENTS, CURBS, LANDSCAPING AND STRUCTURES. ANY DAMAGED PART SHALL BE REPAIRED AT SUBCONTRACTOR'S EXPENSE TO THE SATISFACTION OF OWNER.

11. SUBCONTRACTOR SHALL LEGALLY AND PROPERLY DISPOSE OF ALL SCRAP MATERIALS SUCH AS COAXIAL CABLES AND OTHER ITEMS REMOVED FROM THE EXISTING FACILITY. ANTENNAS REMOVED SHALL BE RETURNED TO THE OWNER'S DESIGNATED LOCATION.

12. SUBCONTRACTOR SHALL LEAVE PREMISES IN CLEAN CONDITION.

13. ALL CONCRETE REPAIR WORK SHALL BE DONE IN ACCORDANCE WITH AMERICAN CONCRETE INSTITUTE (ACI) 301.

14. ANY NEW CONCRETE NEEDED FOR THE CONSTRUCTION SHALL BE AIR-ENTRAINED AND SHALL HAVE 4000 PSI STRENGTH AT 28 DAYS. ALL CONCRETE WORK SHALL BE DONE IN ACCORDANCE WITH ACI 318 CODE REQUIREMENTS.

15. ALL STRUCTURAL STEEL WORK SHALL BE DETAILED, FABRICATED AND ERECTED IN ACCORDANCE WITH AISC SPECIFICATIONS. ALL STRUCTURAL STEEL SHALL BE ASTM A36 (Fy = 36 ksi) UNLESS OTHERWISE NOTED. PIPES SHALL BE ASTM A53 TYPE E (Fy = 36 ksi). ALL STEEL EXPOSED TO WEATHER SHALL BE HOT DIPPED GALVANIZED. TOUCHUP ALL SCRATCHES AND OTHER MARKS IN THE FIELD AFTER STEEL IS ERECTED USING A COMPATIBLE ZINC RICH PAINT.

16. CONSTRUCTION SHALL COMPLY WITH UMTS SPECIFICATIONS AND "GENERAL CONSTRUCTION SERVICES FOR CONSTRUCTION OF AT&T MOBILITY SITES."

17. SUBCONTRACTOR SHALL VERIFY ALL EXISTING DIMENSIONS AND CONDITIONS PRIOR TO COMMENCING ANY WORK. ALL DIMENSIONS OF EXISTING CONSTRUCTION SHOWN ON THE DRAWINGS MUST BE VERIFIED. SUBCONTRACTOR SHALL NOTIFY THE CONTRACTOR OF ANY DISCREPANCIES PRIOR TO ORDERING MATERIAL OR PROCEEDING WITH CONSTRUCTION.

18. THE EXISTING CELL SITE IS IN FULL COMMERCIAL OPERATION. ANY CONSTRUCTION WORK BY SUBCONTRACTOR SHALL NOT DISRUPT THE EXISTING NORMAL OPERATION. ANY WORK ON EXISTING EQUIPMENT MUST BE COORDINATED WITH CONTRACTOR. ALSO, WORK SHOULD BE SCHEDULED FOR AN APPROPRIATE MAINTENANCE WINDOW USUALLY IN LOW TRAFFIC PERIODS AFTER MIDNIGHT.

19. SINCE THE CELL SITE IS ACTIVE, ALL SAFETY PRECAUTIONS MUST BE TAKEN WHEN WORKING AROUND HIGH LEVELS OF ELECTROMAGNETIC RADIATION. EQUIPMENT SHOULD BE SHUTDOWN PRIOR TO PERFORMING ANY WORK THAT COULD EXPOSE THE WORKERS TO DANGER. PERSONAL RF EXPOSURE MONITORS ARE ADVISED TO BE WORN TO ALERT OF ANY DANGEROUS EXPOSURE LEVELS.

20. APPLICABLE BUILDING CODES:
SUBCONTRACTOR'S WORK SHALL COMPLY WITH ALL APPLICABLE NATIONAL, STATE, AND LOCAL CODES AS ADOPTED BY THE LOCAL AUTHORITY HAVING JURISDICTION (AHJ) FOR THE LOCATION. THE EDITION OF THE AHJ ADOPTED CODES AND STANDARDS IN EFFECT ON THE DATE OF CONTRACT AWARD SHALL GOVERN THE DESIGN.
BUILDING CODE: 2003 IBC WITH 2005 CT SUPPLEMENT & 2009 CT AMENDMENTS
ELECTRICAL CODE: REFER TO ELECTRICAL DRAWINGS
LIGHTENING CODE: REFER TO ELECTRICAL DRAWINGS

SUBCONTRACTOR'S WORK SHALL COMPLY WITH THE LATEST EDITION OF THE FOLLOWING STANDARDS:

AMERICAN CONCRETE INSTITUTE (ACI) 318; BUILDING CODE REQUIREMENTS FOR STRUCTURAL CONCRETE;

AMERICAN INSTITUTE OF STEEL CONSTRUCTION (AISC)

MANUAL OF STEEL CONSTRUCTION, ASD, NINTH EDITION;

TELECOMMUNICATIONS INDUSTRY ASSOCIATION (TIA) 222-F, STRUCTURAL STANDARDS FOR STEEL

ANTENNA TOWER AND ANTENNA SUPPORTING STRUCTURES; REFER TO ELECTRICAL DRAWINGS FOR SPECIFIC ELECTRICAL STANDARDS.

FOR ANY CONFLICTS BETWEEN SECTIONS OF LISTED CODES AND STANDARDS REGARDING MATERIAL, METHODS OF CONSTRUCTION, OR OTHER REQUIREMENTS, THE MOST RESTRICTIVE REQUIREMENT SHALL GOVERN. WHERE THERE IS CONFLICT BETWEEN A GENERAL REQUIREMENT AND A SPECIFIC REQUIREMENT, THE SPECIFIC REQUIREMENT SHALL GOVERN.

ABBREVIATIONS

AGL	ABOVE GRADE LEVEL	G.C.	GENERAL CONTRACTOR	RF	RADIO FREQUENCY
AWG	AMERICAN WIRE GAUGE	MGB	MASTER GROUND BUS		
BCW	BARE COPPER WIRE	MIN	MINIMUM	TBD	TO BE DETERMINED
BTS	BASE TRANSCEIVER STATION	PROPOSED	NEW	TBR	TO BE REMOVED
EXISTING	EXISTING	N.T.S.	NOT TO SCALE	TBRR	TO BE REMOVED AND REPLACED
EG	EQUIPMENT GROUND	REF	REFERENCE		
EGR	EQUIPMENT GROUND RING	REQ	REQUIRED	TYP	TYPICAL

Hudson Design Group LLC
1600 OSGOOD STREET
BUILDING 20 NORTH, SUITE 2-101
N. ANDOVER, MA 01845
TEL: (978) 557-5553
FAX: (978) 336-5586

NEXLINK GLOBAL SERVICES
a UniTek GLOBAL SERVICES company
800 MARSHALL PHELPS ROAD UNIT#: 2A
WINDSOR, CT 06095

SITE NUMBER: CT5153
SITE NAME:
AWE - EAST WINDSOR
1654 KING STREET
ENFIELD, CT 06082
HARTFORD COUNTY

at&t
500 ENTERPRISE DRIVE
ROCKY HILL, CT 06067

NO.	DATE	REVISIONS	BY	CHK	APP'D
1	04/11/12	ISSUED FOR CONSTRUCTION	JG	DC	DPH
0	03/22/12	ISSUED FOR REVIEW	JG	DC	DPH

SCALE: AS SHOWN | DESIGNED BY: DC | DRAWN BY: JG

CONNECTICUT DANIEL P. HAMM No. 24175 LICENSED PROFESSIONAL ENGINEER

AT&T

GENERAL NOTES (LTE)

JOB NUMBER	DRAWING NUMBER	REV
5153.01	GN-1	1

NOTE:

REFER TO THE FINAL RF DATA SHEET FOR FINAL ANTENNA SETTINGS.

NOTE:

AN ANALYSIS FOR THE CAPACITY OF THE EXISTING STRUCTURES TO SUPPORT THE PROPOSED EQUIPMENT SHALL BE DETERMINED PRIOR TO CONSTRUCTION.

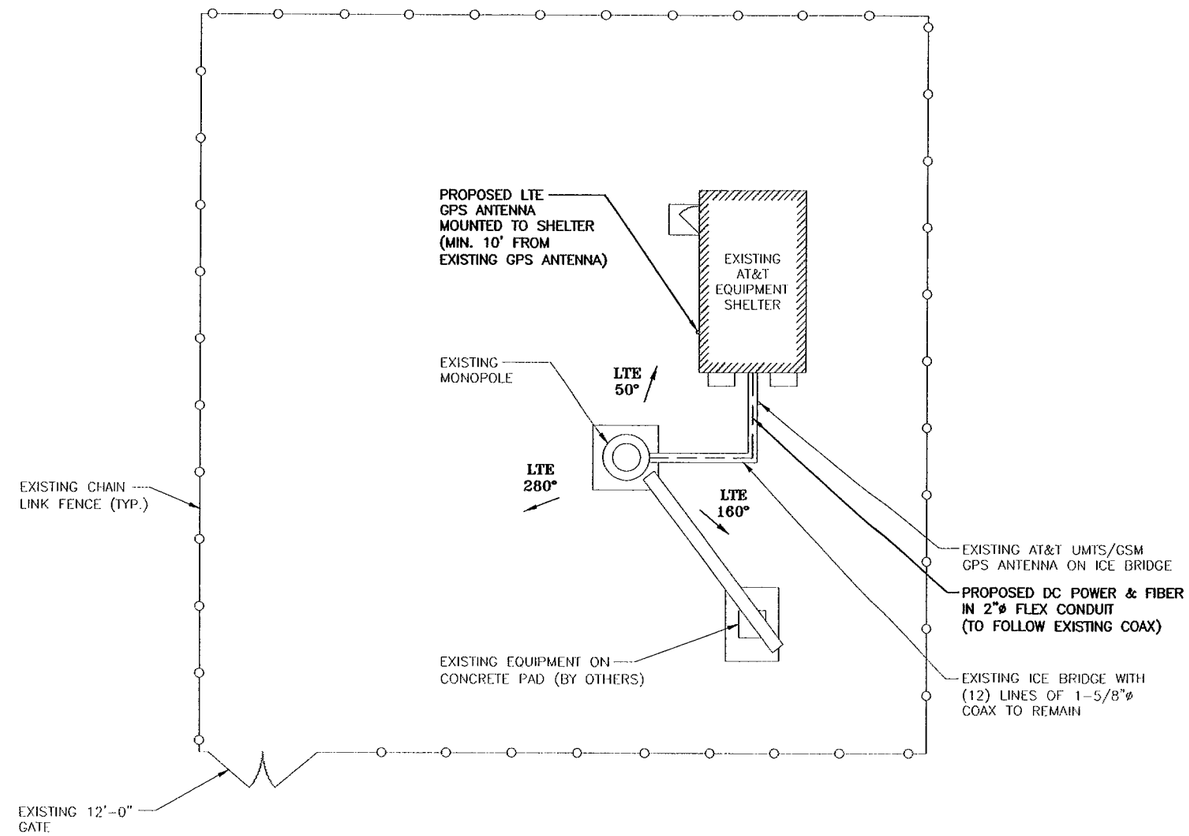

COMPOUND PLAN

SCALE: 1/8"=1'-0"

0 4'-0" 8'-0" 16'-0" 24'-0"

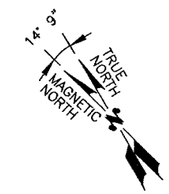

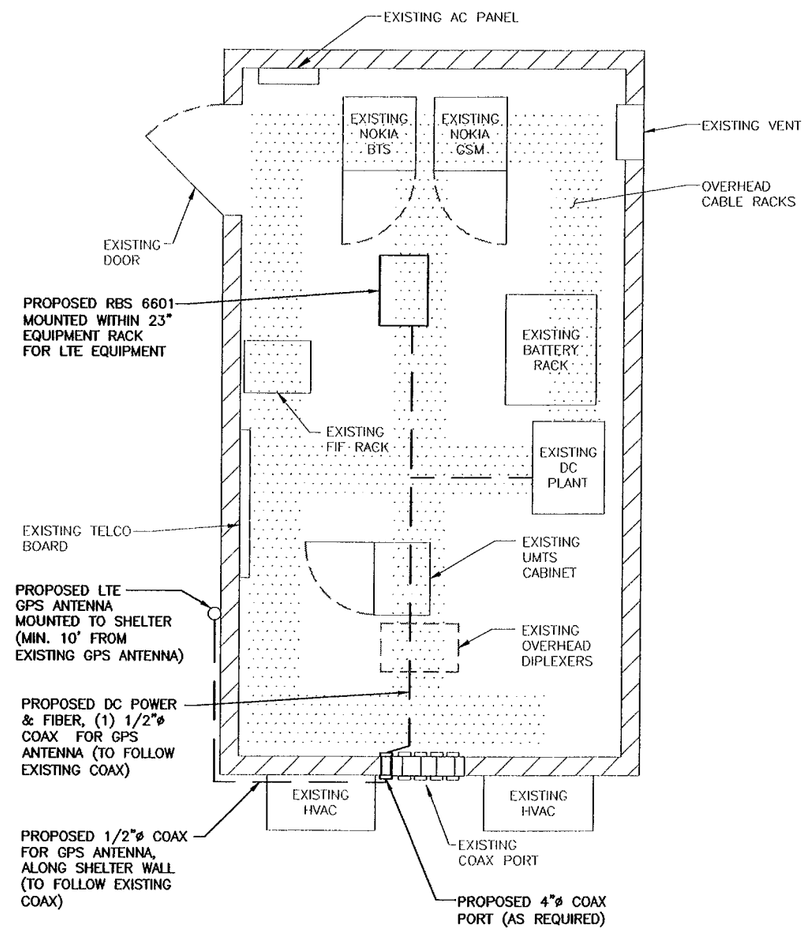

EQUIPMENT PLAN

SCALE: 1/2"=1'-0"

0 1'-0" 2'-0" 4'-0" 6'-0"

Hudson Design Group LLC
1600 OSGOOD STREET
BUILDING 20 NORTH, SUITE 2-101
N. ANDOVER, MA 01845
TEL: (978) 557-5553
FAX: (978) 336-5586

NEXLINK GLOBAL SERVICES
a UniTek GLOBAL SERVICES company
800 MARSHALL PHELPS ROAD UNIT#: 2A
WINDSOR, CT 06095

SITE NUMBER: CT5153
SITE NAME:
AWE - EAST WINDSOR
1654 KING STREET
ENFIELD, CT 06082
HARTFORD COUNTY

at&t
500 ENTERPRISE DRIVE
ROCKY HILL, CT 06067

NO.	DATE	REVISIONS	BY	CHK	APP'D
1	04/11/12	ISSUED FOR CONSTRUCTION	JG	DC	DPH
0	03/22/12	ISSUED FOR REVIEW	JG	DC	DPH

SCALE: AS SHOWN | DESIGNED BY: DC | DRAWN BY: JG

STATE OF CONNECTICUT · DANIEL P. HAMM · No. 24173 · LICENSED PROFESSIONAL ENGINEER

AT&T

COMPOUND & EQUIPMENT PLAN (LTE)

JOB NUMBER	DRAWING NUMBER	REV
5153.01	A-1	1

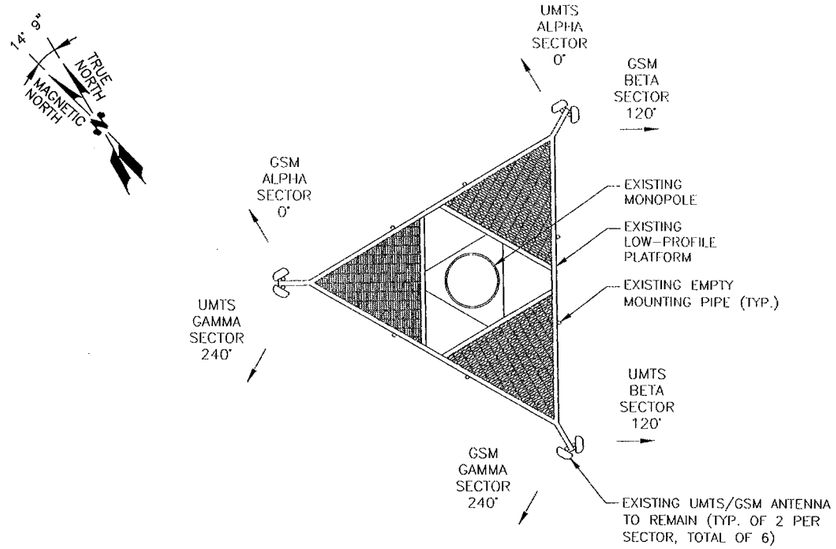

EXISTING UMTS/GSM ANTENNA PLAN

N.T.S.

NOTE:

REFER TO THE FINAL RF DATA SHEET FOR FINAL ANTENNA SETTINGS.

NOTE:

PAINT ALL VISIBLE PROPOSED EQUIPMENT TO MATCH EXISTING SURROUNDINGS.

NOTE:

AN ANALYSIS FOR THE CAPACITY OF THE EXISTING STRUCTURES TO SUPPORT THE PROPOSED EQUIPMENT SHALL BE DETERMINED PRIOR TO CONSTRUCTION.

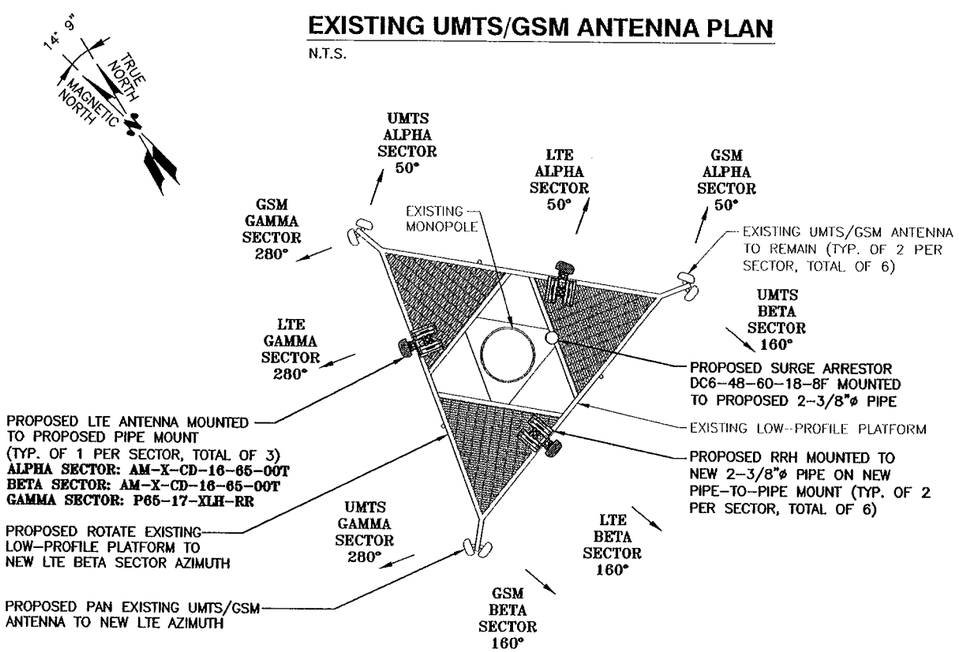

PROPOSED LTE ANTENNA PLAN

N.T.S.

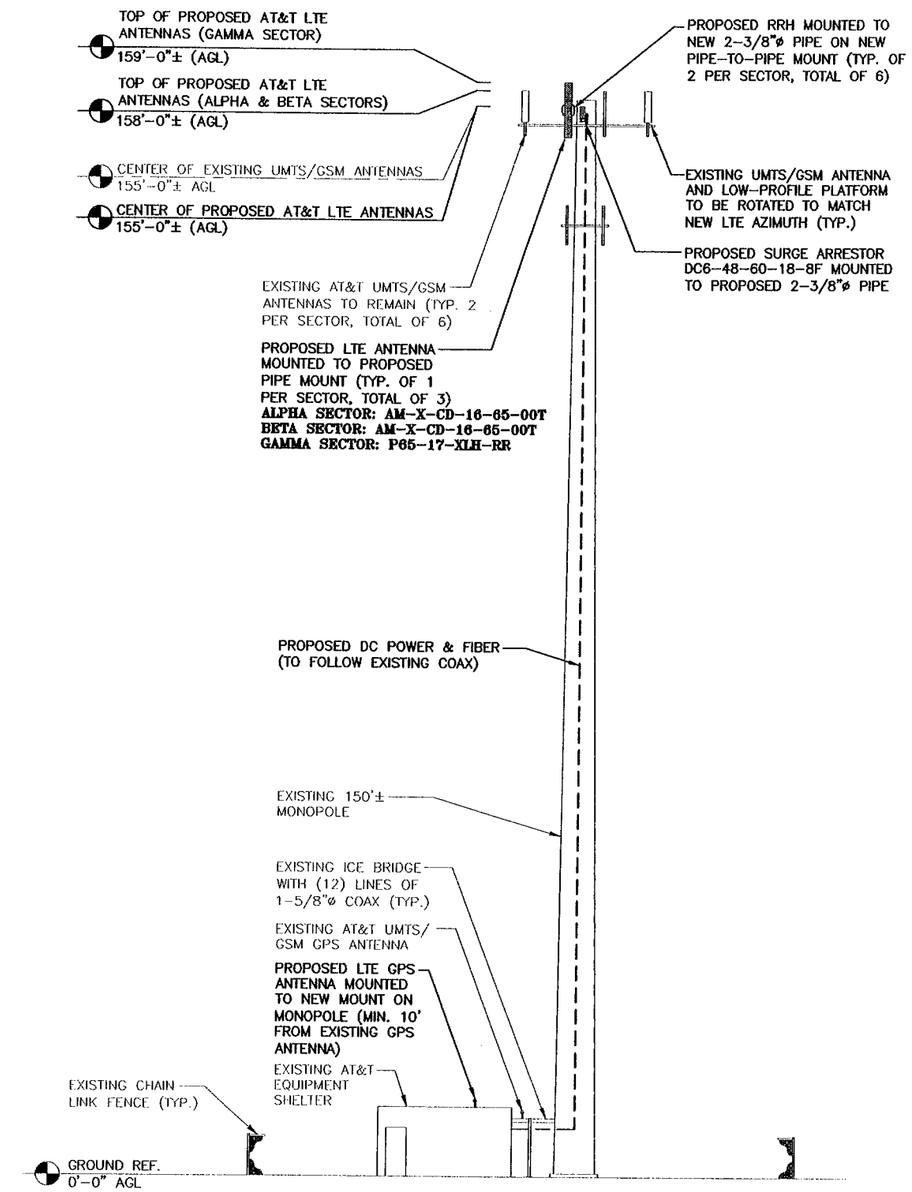

NORTHWEST ELEVATION

SCALE: 3/32"=1'-0"

0 5'-4" 10'-8" 21'-4" 32'-0"

Hudson Design Group LLC
1400 OSGOOD STREET
BUILDING 20 NORTH, SUITE 2-101
N. ANDOVER, MA 01845
TEL: (978) 557-5553
FAX: (978) 336-5586

NEXLINK GLOBAL SERVICES
a UniTek GLOBAL SERVICES company
800 MARSHALL PHELPS ROAD UNIT#: 2A
WINDSOR, CT 06095

SITE NUMBER: CT5153
SITE NAME:
AWE - EAST WINDSOR
1654 KING STREET
ENFIELD, CT 06082
HARTFORD COUNTY

at&t
500 ENTERPRISE DRIVE
ROCKY HILL, CT 06067

NO.	DATE	REVISIONS	BY	CHK	APP'D
1	04/11/12	ISSUED FOR CONSTRUCTION	JG	DC	DPH
0	03/22/12	ISSUED FOR REVIEW	JG	DC	DPH

SCALE: AS SHOWN | DESIGNED BY: DC | DRAWN BY: JG

STATE OF CONNECTICUT
DANIEL P. HAMM
No. 24175
LICENSED PROFESSIONAL ENGINEER

AT&T

ANTENNA & ELEVATION PLAN (LTE)

JOB NUMBER	DRAWING NUMBER	REV
5153.01	A-2	1

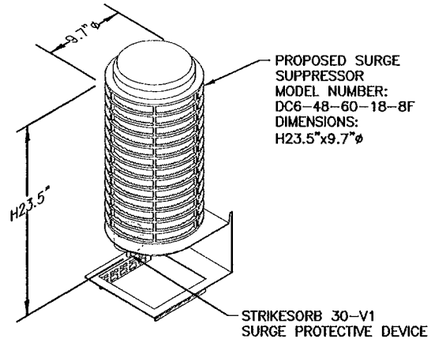

NOTE:
MOUNT PER MANUFACTURER'S SPECIFICATIONS.

DC SURGE SUPPRESSOR DETAIL

SCALE: N.T.S.

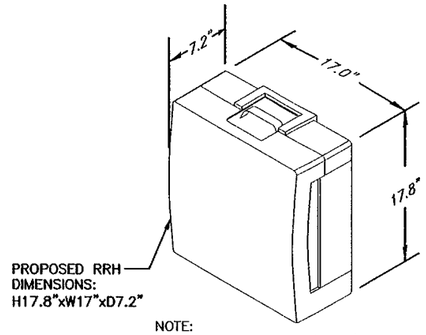

NOTE:
MOUNT PER MANUFACTURER'S SPECIFICATIONS.

RRH DETAIL

SCALE: N.T.S.

NOTE:

REFER TO THE FINAL RF DATA SHEET FOR FINAL ANTENNA SETTINGS.

NOTE:

PAINT ALL VISIBLE PROPOSED EQUIPMENT TO MATCH EXISTING SURROUNDINGS.

NOTE:

AN ANALYSIS FOR THE CAPACITY OF THE EXISTING STRUCTURES TO SUPPORT THE PROPOSED EQUIPMENT SHALL BE DETERMINED PRIOR TO CONSTRUCTION.

NOTE:

GPS TO BE MOUNTED WITH SOUTHWESTERN EXPOSURE, 10' (MIN.) FROM EXISTING GPS ANTENNA.

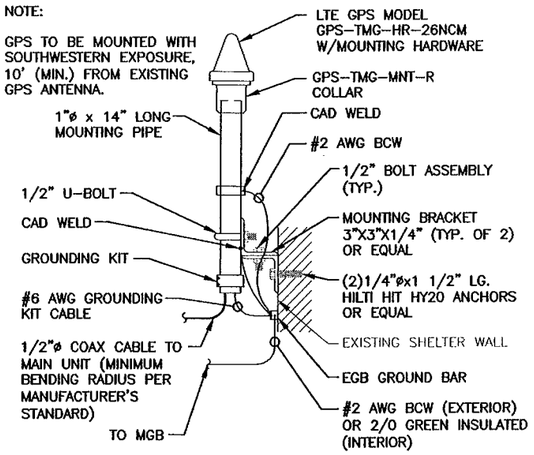

GPS MOUNTING DETAIL

SCALE: N.T.S.

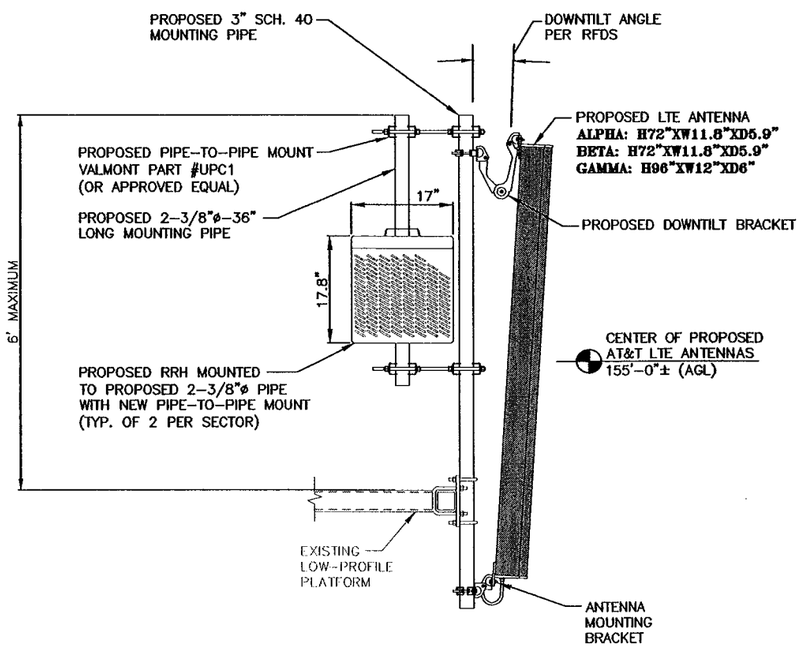

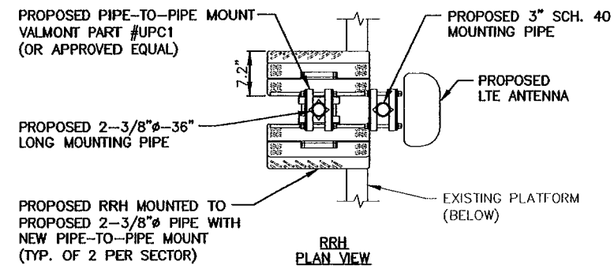

RRH
PLAN VIEW

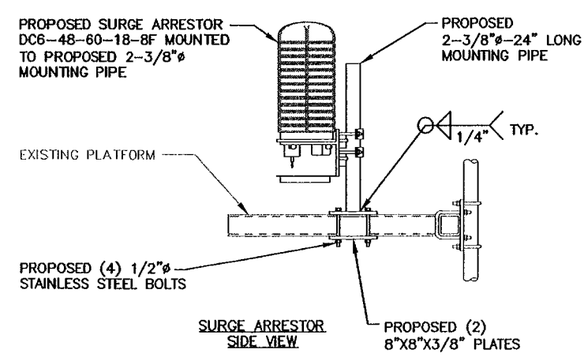

SURGE ARRESTOR
SIDE VIEW

PROPOSED LTE ANTENNA, RRH & SURGE ARRESTOR MOUNTING DETAIL

SCALE: N.T.S.

Hudson Design Group LLC
1600 OSGOOD STREET
BUILDING 20 NORTH, SUITE 2-101
N. ANDOVER, MA 01845
TEL: (978) 557-5553
FAX: (978) 336-5586

NEXLINK GLOBAL SERVICES
a UniTek GLOBAL SERVICES company
800 MARSHALL PHELPS ROAD UNIT#: 2A
WINDSOR, CT 06095

SITE NUMBER: CT5153
SITE NAME:
AWE - EAST WINDSOR
1654 KING STREET
ENFIELD, CT 06082
HARTFORD COUNTY

at&t
500 ENTERPRISE DRIVE
ROCKY HILL, CT 06067

NO.	DATE	REVISIONS	BY	CHK	APP'D
1	04/11/12	ISSUED FOR CONSTRUCTION	JG	DC	DPH
0	03/22/12	ISSUED FOR REVIEW	JG	DC	DPH

SCALE: AS SHOWN | DESIGNED BY: DC | DRAWN BY: JG

STATE OF CONNECTICUT
DANIEL P. HAMM
No. 24178
LICENSED PROFESSIONAL ENGINEER

AT&T

DETAILS
(LTE)

JOB NUMBER	DRAWING NUMBER	REV
5153.01	A-3	1

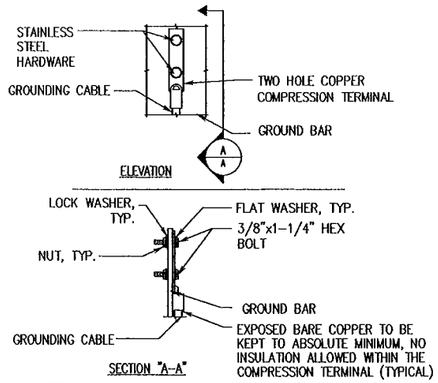

NOTE:
1. "DOUBLING UP" OR "STACKING " OF CONNECTION IS NOT PERMITTED.
2. OXIDE INHIBITING COMPOUND TO BE USED AT ALL LOCATIONS.
3. CADWELD DOWNLEADS FROM UPPER EGB, LOWER EGB, AND MGB.

TYPICAL GROUND BAR CONNECTION DETAIL

1 — N.T.S.

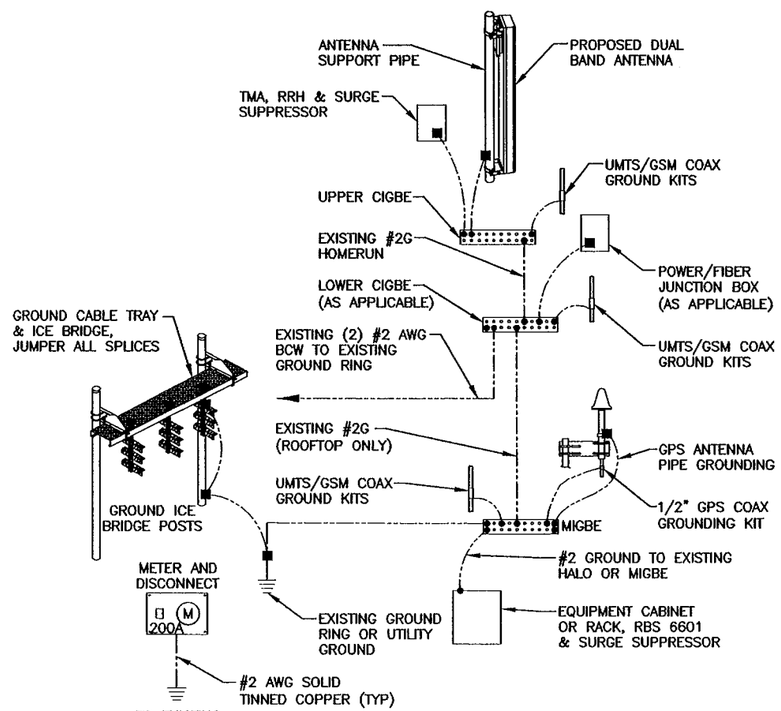

GROUNDING RISER DIAGRAM

3 — N.T.S.

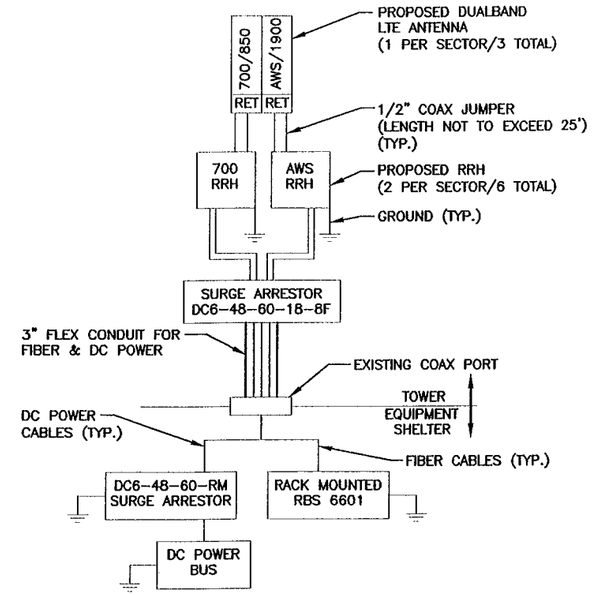

NOTES:

1. CONTRACTOR TO CONFIRM ALL PARTS.
2. INSTALL ALL EQUIPMENT TO MANUFACTURER'S RECOMMENDATIONS.

PLUMBING DIAGRAM

2 — N.T.S.

EACH GROUND CONDUCTOR TERMINATING ON ANY GROUND BAR SHALL HAVE AN IDENTIFICATION TAG ATTACHED AT EACH END THAT WILL IDENTIFY ITS ORIGIN AND DESTINATION.

SECTION "P" -- SURGE PRODUCERS

CABLE ENTRY PORTS (HATCH PLATES) (#2)
GENERATOR FRAMEWORK (IF AVAILABLE) (#2)
TELCO GROUND BAR
COMMERCIAL POWER COMMON NEUTRAL/GROUND BOND (#2)
+24V POWER SUPPLY RETURN BAR (#2)
-48V POWER SUPPLY RETURN BAR (#2)
RECTIFIER FRAMES.

SECTION "A" -- SURGE ABSORBERS

INTERIOR GROUND RING (#2)
EXTERNAL EARTH GROUND FIELD (BURIED GROUND RING) (#2)
METALLIC COLD WATER PIPE (IF AVAILABLE) (#2)
BUILDING STEEL (IF AVAILABLE) (#2)

WIRELESS SOLUTIONS INC.			
NO.	REQ.	PART NO.	DESCRIPTION
1	1	HLGB-0420-IS	SOLID GND. BAR (20"x4"x1/4")
2	2	———	WALL MTG. BRKT.
3	2	———	INSULATORS
4	4	———	5/8"-11x1" H.H.C.S.
5	4	———	5/8 LOCKWASHER

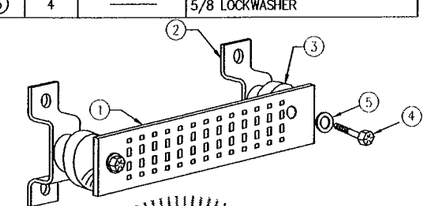

GROUND BAR - DETAIL

4 — N.T.S.

Hudson Design Group inc
1600 OSGOOD STREET
BUILDING 20 NORTH, SUITE 2-101
N. ANDOVER, MA 01845
TEL: (978) 557-5553
FAX: (978) 336-5586

NEXLINK GLOBAL SERVICES
a UniTek GLOBAL SERVICES company
800 MARSHALL PHELPS ROAD UNIT#: 2A
WINDSOR, CT 06095

SITE NUMBER: CT5153
SITE NAME:
AWE - EAST WINDSOR
1654 KING STREET
ENFIELD, CT 06082
HARTFORD COUNTY

at&t
500 ENTERPRISE DRIVE
ROCKY HILL, CT 06067

NO.	DATE	REVISIONS	BY	CHK	APP'D
1	04/11/12	ISSUED FOR CONSTRUCTION	JG	DC	DPH
0	03/22/12	ISSUED FOR REVIEW	JG	DC	DPH

SCALE: AS SHOWN | DESIGNED BY: DC | DRAWN BY: JG

STATE OF CONNECTICUT — DANIEL P. HAMM — No. 24173 — LICENSED PROFESSIONAL ENGINEER

AT&T

PLUMBING DIAGRAM & GROUNDING DETAILS (LTE)

JOB NUMBER	DRAWING NUMBER	REV
5153.01	G-1	1