April 17, 2019

Melanie A. Bachman, Executive Director
Connecticut Siting Council
10 Franklin Square
New Britain, CT 06051

Re:	**Notice of Exempt Modification – Antenna and RRU Swap/Add**
Property Address:	**46 Meadow Rd, Clinton, CT 06413**
Applicant:	**AT&T Mobility, LLC**

Dear Ms. Bachman:

On behalf of AT&T, please accept this application as notification pursuant to R.C.S.A. §16-50j-73, for construction that constitutes an exempt modification pursuant to R.C.S.A. §16- 50j-72(b) (2).

AT&T currently maintains a wireless telecommunications facility consisting of nine (9) wireless telecommunication antennas at an antenna center line height of 150 feet on an existing 199-foot lattice tower, owned by SBA Towers, LLC, 5901 Broken Sound Parkway NW, 2nd Floor, Boca Raton, FL 33487. AT&T now intends to swap/add equipment as follows:

Swap (3) existing Powerwave 7770 Panel Antennas for (3) Kathrein 800-10964 Panel Antennas, add (3) Andrew SBNHH-1D65A Panel Antennas, swap (3) existing RRUS-32 B2's for (3) 8843 B2/B66 RRU's, add (3) RRUS-32's, add (3) 4449 B5/B12 RRU's. Additionally, AT&T plans to add (1) DC/Fiber Squid, (1) DC-only Squid, (1) Fiber line and (4) DC cables. All the proposed changes will take place at the existing antenna centerline of 150 feet.

Attached is a summary of the planned modifications including power density calculations reflecting the change in AT&T's operations at the site. Also included is documentation of the structural sufficiency of the tower to accommodate the revised antenna configuration.

Please accept this letter pursuant to Regulation of Connecticut State Agencies §16-50j-73, for construction that constitutes an exempt modification pursuant to R.C.S.A. § 16-5I0j-72(b) (2). In accordance with R.C.S.A., a copy of this letter is being sent to:

Christine Goupil – First Selectman, Town of Clinton at 54 E. Main St., Clinton, CT 06413
Eric Knapp – Zoning Enforcement Officer, Town of Clinton at 54 E. Main St., Clinton, CT 06413
Michael and Robert Charney -- Property Owners, at 46 Meadow Road, Clinton, CT 06413
SBA Towers, LLC – Structure Owner, at 8051 Congress Ave, 2nd Fl., Boca Raton, FL 33487

The following is a list of subsequent decisions by the Connecticut Siting Council:

- EM-CING-027-040309 - Southwestern Bell Mobile Systems, LLC notice of intent to modify an existing telecommunications facility located at 46 Meadow Road, Clinton, Connecticut.
- EM-CING-027-027-059-137-137-070717 – New Cingular Wireless PCS, LLC notice of intent to modify existing telecommunication facilities located at 46 Meadow Road, Clinton; 48 Cow Hill Road, Clinton; 78 Roberts Road, Groton; 72 Jerry Brown Road, Stonington; and 171 S. Broad Street, Stonington, Connecticut.
- EM-CING-027-110314 - New Cingular Wireless PCS, LLC notice of intent to modify an existing telecommunications facility located at 46 Meadow Road, Clinton, Connecticut.
- EM-AT&T-027-131213 - American Telephone and Telegraph Company (AT&T) notice of intent to modify an existing telecommunications facility located at 46 Meadow Road, Clinton, Connecticut.
- EM-AT&T-027-160222 – AT&T Mobility, LLC notice of intent to modify an existing telecommunications facility located at 46 Meadow Road, Clinton, Connecticut.

- EM-AT&T-027-160927 – AT&T notice of intent to modify an existing telecommunications facility located at 46 Meadow Road, Clinton, Connecticut.

The planned modifications to AT&T's facility fall squarely within those activities explicitly provided for in R.C.S.A. §16-50j-
72(b) (2).

1. The proposed modifications will not result in an increase in the height of the existing tower. AT&T's additional antennas will be installed at the 150-foot level of the 199-foot lattice tower.
2. The proposed modifications will involve changes to ground-mounted equipment, however these changes will not require an extension of the site boundary.
3. The proposed modifications will not increase the noise levels at the facility by six decibels or more, or to levels that exceed state and local criteria.
4. The operation of the modified facility will not increase radio frequency (RF) emissions at the facility to a level at or above the Federal Communications Commission (FCC) safety standard. A cumulative worst-case RF emissions calculation for AT&T's modified facility is provided in the RF Emissions Compliance Report, included in Tab 2.
5. The proposed modifications will not cause a change or alteration in the physical or environmental characteristics of the site.
6. The tower and its foundation can support AT&T's proposed modifications. (See Structural Analysis Report included in Tab 3).

For the foregoing reasons, AT&T respectfully submits that the proposed modifications to the above referenced telecommunications facility constitutes an exempt modification under R.C.S.A. §16-50j-72(b) (2).

Sincerely,

Ryan Burgdorfer

Ryan Burgdorfer | Real Estate Specialist
Smartlink
(m) 508.665.8005

CC w/enclosures:

Christine Goupil – First Selectman, Town of Clinton
Eric Knapp – Zoning Enforcement Officer, Town of Clinton
Michael and Robert Charney -- Property Owners
SBA Towers, LLC – Structure Owner

PROJECT NOTES

1. SITE INFORMATION OBTAINED FROM THE FOLLOWING:
   A. PLAN ENTITLED "CLINTON MEADOW ROAD" PREPARED BY TRYLON OF BRAMPTON, ON LAST REVISED 09/08/2016.
   B. LIMITED FIELD OBSERVATION BY MASER CONSULTING ON 10/23/2018.
2. THE CONTRACTOR SHALL COMPLY WITH ALL APPLICABLE CODES, ORDINANCES, LAWS AND REGULATIONS OF ALL MUNICIPALITIES, UTILITY COMPANIES OR OTHER PUBLIC/GOVERNING AUTHORITIES.
3. THE CONTRACTOR SHALL BE RESPONSIBLE FOR OBTAINING ALL PERMITS AND INSPECTIONS THAT MAY BE REQUIRED BY ANY FEDERAL, STATE, COUNTY OR MUNICIPAL AUTHORITIES.
4. THE CONTRACTOR SHALL NOTIFY THE CONSTRUCTION MANAGER, IN WRITING, OF ANY CONFLICTS, ERRORS OR OMISSIONS PRIOR TO THE SUBMISSION OF BIDS OR PERFORMANCE OF WORK.
5. THE CONTRACTOR SHALL BE RESPONSIBLE FOR PROTECTING ALL EXISTING SITE IMPROVEMENTS PRIOR TO COMMENCING CONSTRUCTION. THE CONTRACTOR SHALL REPAIR ANY DAMAGE AS A RESULT OF CONSTRUCTION OF THIS FACILITY AT THE CONTRACTOR'S EXPENSE TO THE SATISFACTION OF THE OWNER.
6. THE SCOPE OF WORK FOR THIS PROJECT SHALL INCLUDE PROVIDING ALL MATERIALS, EQUIPMENT AND LABOR REQUIRED TO COMPLETE THIS PROJECT. ALL EQUIPMENT SHALL BE INSTALLED IN ACCORDANCE WITH MANUFACTURER'S RECOMMENDATIONS.
7. THE CONTRACTOR SHALL VISIT THE PROJECT SITE PRIOR TO SUBMITTING THE BID TO VERIFY THAT THE PROJECT CAN BE CONSTRUCTED IN ACCORDANCE WITH THE CONTRACT DOCUMENTS AND CONSTRUCTION DRAWINGS.
8. THE CONTRACTOR SHALL VERIFY ALL EXISTING DIMENSIONS AND CONDITIONS PRIOR TO COMMENCING ANY WORK. ALL DIMENSIONS OF EXISTING CONSTRUCTION SHOWN ON THESE DRAWINGS MUST BE VERIFIED. THE CONTRACTOR SHALL NOTIFY THE CONSTRUCTION MANAGER OF ANY DISCREPANCIES PRIOR TO ORDERING MATERIAL OR PROCEEDING WITH CONSTRUCTION.
9. SINCE THE CELL SITE MAY BE ACTIVE, ALL SAFETY PRECAUTIONS MUST BE TAKEN WHEN WORKING AROUND HIGH LEVELS OF ELECTROMAGNETIC RADIATION. EQUIPMENT SHOULD BE SHUTDOWN PRIOR TO PERFORMING ANY WORK THAT COULD EXPOSE THE WORKERS TO DANGER. PERSONAL RF EXPOSURE MONITORS ARE REQUIRED TO BE WORN TO ALERT OF ANY POTENTIALLY DANGEROUS EXPOSURE LEVELS.
10. THE PROPOSED FACILITY WILL CAUSE AN INSIGNIFICANT OR "DE-MINIMUS" INCREASE IN STORM WATER RUNOFF, THEREFORE, NO DRAINAGE STRUCTURES ARE PROPOSED.
11. NO NOISE, SMOKE, DUST OR ODOR WILL RESULT FROM THIS FACILITY AS TO CAUSE A NUISANCE.
12. THE FACILITY IS UNMANNED AND NOT FOR HUMAN HABITATION (NO HANDICAP ACCESS IS REQUIRED).
13. THE FACILITY DOES NOT REQUIRE POTABLE WATER OR SANITARY SERVICE.
14. CONTRACTOR SHALL VERIFY ANTENNA ELEVATION AND AZIMUTHS WITH RF ENGINEERING PRIOR TO INSTALLATION.
15. THE TOWER, MOUNTS AND ANTENNAS SHALL BE DESIGNED TO MEET EIA/TIA-222-G AS PER IBC REQUIREMENTS.
16. CONTRACTOR MUST FIELD LOCATE ALL EXISTING UNDERGROUND UTILITIES PRIOR TO ANY EXCAVATION.
17. CONSTRUCTION SHALL NOT COMMENCE UNTIL COMPLETION OF A PASSING STRUCTURAL ANALYSIS CERTIFIED BY A LICENSED PROFESSIONAL ENGINEER. THE STRUCTURAL ANALYSIS IS TO BE PERFORMED BY OTHERS.

COPYRIGHT © 2018, MASER CONSULTING CONNECTICUT ALL RIGHTS RESERVED

THIS DRAWING AND ALL THE INFORMATION CONTAINED HEREIN IS AUTHORIZED FOR USE ONLY BY THE PARTY FOR WHOM THE WORK WAS CONTRACTED OR TO WHOM IT IS CERTIFIED. THIS DRAWING MAY NOT BE COPIED, REUSED, DISCLOSED, DISTRIBUTED OR RELIED UPON FOR ANY OTHER PURPOSE WITHOUT THE EXPRESS WRITTEN CONSENT OF MASER CONSULTING CT

MAP Artist 4.1HB (00049127 CTL02230 REV 1 CT CCO.mxd)T-1 By: ACOA

at&t

SITE NAME: CLINTON MEADOW ROAD
FA NUMBER: 10049127
SITE NUMBER: CT2230
3C - MRCTB033583
4C - MRCTB033616
5C - MRCTB033722
RETROFIT - MRCTB033754
46 MEADOW ROAD
CLINTON, CT 06413
MIDDLESEX COUNTY

VICINITY MAP

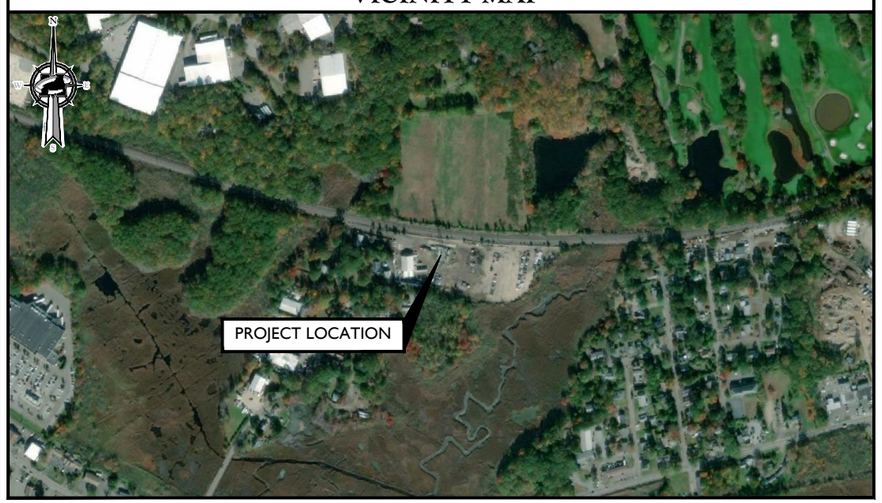

CODE COMPLIANCE

ALL WORK AND MATERIALS SHALL BE PERFORMED AND INSTALLED IN ACCORDANCE WITH THE CURRENT EDITIONS OF THE FOLLOWING CODES AS ADOPTED BY THE LOCAL GOVERNING AUTHORITIES. NOTHING IN THESE PLANS IS TO BE CONSTRUED TO PERMIT WORK NOT CONFORMING TO THE LATEST EDITIONS OF THE FOLLOWING CODES.

1. 2018 CONNECTICUT STATE BUILDING CODE, INCORPORATING THE 2015 IBC
2. 2017 NATIONAL ELECTRICAL CODE - NFPA 70
3. 2017 NFPA 101
4. AMERICAN INSTITUTE OF STEEL CONSTRUCTION 360-10
5. AMERICAN CONCRETE INSTITUTE
6. TIA-222-G
7. TIA 607 FOR GROUNDING
8. INSTITUTE FOR ELECTRICAL AND ELECTRONICS ENGINEERS 81 IEEE C2 LATEST EDITION
9. TELCORDIA GR-1275
10. ANSI T1.311
11. PROPOSED USE: UNMANNED TELECOM FACILITY
12. HANDICAP REQUIREMENTS: FACILITY IS UNMANNED AND NOT FOR HUMAN HABITATION. HANDICAPPED ACCESS NOT REQUIRED.
13. CONSTRUCTION TYPE: IIB
14. USE GROUP: U

PROJECT INFORMATION

SITE INFORMATION

LATITUDE: 41.2751981° N
LONGITUDE: 72.4977069° W
JURISDICTION: MIDDLESEX COUNTY

APPLICANT/LESSEE

COMPANY: NEW CINGULAR WIRELESS PCS, LLC
ADDRESS: 550 COCHITUATE ROAD
CITY, STATE, ZIP: FRAMINGHAM, MA 01701

STRUCTURE OWNER

COMPANY: SBA COMMUNICATIONS CORP
ADDRESS: 8501 CONGRESS AVENUE
CITY, STATE, ZIP: BOCA RATON, FL 33427

CLIENT REPRESENTATIVE

COMPANY: EMPIRE TELECOM
ADDRESS: 16 ESQUIRE ROAD
CITY, STATE, ZIP: BILLERICA, MA 01862
CONTACT: DAVID COOPER
E-MAIL: DCOOPER@EMPIRETELECOM.COM

SITE ACQUISITION

COMPANY: EMPIRE TELECOM
ADDRESS: 16 ESQUIRE ROAD
CITY, STATE, ZIP: BILLERICA, MA 01862
CONTACT: DAVID COOPER
E-MAIL: DCOOPER@EMPIRETELECOM.COM

ENGINEER

COMPANY: MASER CONSULTING CONNECTICUT
ADDRESS: 331 NEWMAN SPRINGS ROAD
CITY, STATE, ZIP: RED BANK, NJ 07701-5669
CONTACT: ROBERT ANDREWS
PHONE: (856) 797-0412
E-MAIL: RANDREWS@MASERCONSULTING.COM

PROJECT DESCRIPTION/ SCOPE OF WORK

- INSTALL (9) NEW RRU'S, (3) PER SECTOR
- REMOVE (6) EXISTING RRU'S, (2) PER SECTOR
- INSTALL (6) NEW PANEL ANTENNAS, (2) PER SECTOR
- REMOVE (3) EXISTING PANEL ANTENNAS, (1) PER SECTOR
- INSTALL (2) NEW DC-6 SURGE SUPPRESSION DOME
- INSTALL (1) NEW 18- PAIR FIBER CABLE
- INSTALL (4) NEW 6/C DC CABLES
- SWAP DUS's WITH (1) 5216
- ADD 2ND XMU AND (1) RBS 6630
- INSTALL (3) NEW KICKERS, (1) PER SECTOR
- INSTALL (3) NEW STABILIZER ARMS, (1) PER SECTOR

PROPOSED PROJECT SCOPE BASED ON RFDS ID# 2461335, VERSION 2.00, LAST UPDATED 11/05/2018.

SHEET INDEX

SHEET	DESCRIPTION
T-1	TITLE SHEET
GN-1	GENERAL NOTES
C-1	COMPOUND PLAN
C-2	EQUIPMENT LAYOUT AND ELEVATION VIEW
C-3	ANTENNA LAYOUTS AND ANTENNA SCHEDULE
A-1	CONSTRUCTION DETAILS
A-2	CONSTRUCTION DETAILS
A-3	RF PLUMBING DIAGRAM
G-1	GROUNDING DETAILS
S-1	STRUCTURAL DETAILS

MASER CONSULTING CONNECTICUT

Customer Loyalty *through* Client Satisfaction
www.maserconsulting.com
Engineers ■ Planners ■ Surveyors
Landscape Architects ■ Environmental Scientists

Copyright © 2019. Maser Consulting Connecticut All Rights Reserved. This drawing and all the information contained herein is authorized for use only by the party for whom the services were contracted or to whom it is certified. This drawing may not be copied, reused, disclosed, distributed or relied upon for any other purpose without the express written consent of Maser Consulting Connecticut.

at&t

smartlink

811 Know what's below. Call before you dig.

PROTECT YOURSELF
ALL STATES REQUIRE NOTIFICATION OF EXCAVATORS, DESIGNERS, OR ANY PERSON PREPARING TO DISTURB THE EARTH'S SURFACE ANYWHERE IN ANY STATE

FOR STATE SPECIFIC DIRECT PHONE NUMBERS VISIT: WWW.CALL811.COM

SCALE: AS SHOWN
JOB NUMBER: 18946064A

REV	DATE	DESCRIPTION	DRAWN BY	CHECKED BY
2	01/18/19	REVISED PER COMMENTS	AJC	RA
1	12/21/18	REVISED PER COMMENTS	AJC	RA
0	12/7/18	ISSUED FOR REVIEW	AJC	RA

STATE OF CONNECTICUT
PETROS E. TSOUKALAS
CONNECTICUT PROFESSIONAL ENGINEER - LICENSE NUMBER: 32577
32577

IT IS A VIOLATION OF LAW FOR ANY PERSON, UNLESS THEY ARE ACTING UNDER THE DIRECTION OF THE RESPONSIBLE LICENSED PROFESSIONAL ENGINEER, TO ALTER THIS DOCUMENT.

SITE NAME:

CLINTON MEADOW ROAD
FA# 10049127
SITE# CTL02230

46 MEADOW ROAD
CLINTON, CT 064113
MIDDLESEX COUNTY

RED BANK OFFICE
331 Newman Springs Road
Suite 203
Red Bank, NJ 07701-5669
Phone: .732.383.1950
Fax: .732.383.1984
email: solutions@maserconsulting.com

SHEET TITLE: TITLE SHEET

SHEET NUMBER: T-1

GENERAL NOTES:

1. THE SUBCONTRACTOR SHALL REVIEW AND INSPECT THE EXISTING FACILITY GROUNDING SYSTEM (AS DESIGNED AND INSTALLED) FOR STRICT COMPLIANCE WITH THE NEC (AS ADOPTED BY THE AHJ), THE SITE-SPECIFIC (UL, LPI, OR NFPA) LIGHTING PROTECTION CODE, AND GENERAL COMPLIANCE WITH TELCORDIA AND TIA GROUNDING STANDARDS. THE SUBCONTRACTOR SHALL REPORT ANY VIOLATIONS OR ADVERSE FINDINGS TO THE CONTRACTOR FOR RESOLUTION.
2. ALL GROUND ELECTRODE SYSTEMS (INCLUDING TELECOMMUNICATION, RADIO, LIGHTNING PROTECTION, AND AC POWER GES'S) SHALL BE BONDED TOGETHER, AT OR BELOW GRADE, BY TWO OR MORE COPPER BONDING CONDUCTORS IN ACCORDANCE WITH THE NEC.
3. THE SUBCONTRACTOR SHALL PERFORM IEEE FALL-OF-POTENTIAL RESISTANCE TO EARTH TESTING (PER IEEE 1100 AND 81) FOR GROUND ELECTRODE SYSTEMS. THE SUBCONTRACTOR SHALL FURNISH AND INSTALL SUPPLEMENTAL GROUND ELECTRODES AS NEEDED TO ACHIEVE A TEST RESULT OF 5O HMS OR LESS.
4. THE SUBCONTRACTOR IS RESPONSIBLE FOR PROPERLY SEQUENCING GROUNDING AND UNDERGROUND CONDUIT INSTALLATION AS TO PREVENT ANY LOSS OF CONTINUITY IN THE GROUNDING SYSTEM OR DAMAGE TO THE CONDUIT.
5. METAL CONDUIT AND TRAY SHALL BE GROUNDED AND MADE ELECTRICALLY CONTINUOUS WITH LISTED BONDING FITTINGS OR BY BONDING ACROSS THE DISCONTINUITY WITH #6 AWG COPPER WIRE UL APPROVED GROUNDING TYPE CONDUIT CLAMPS.
6. METAL RACEWAY SHALL NOT BE USED AS THE NEC REQUIRED EQUIPMENT GROUND CONDUCTOR. STRANDED COPPER CONDUCTORS WITH GREEN INSULATION, SIZED IN ACCORDANCE WITH THE NEC, SHALL BE FURNISHED AND INSTALLED WITH THE POWER CIRCUITS TO BTS EQUIPMENT.
7. EACH BTS CABINET FRAME SHALL BE DIRECTLY CONNECTED TO THE EQUIPMENT GROUND RING WITH GREEN INSULATED SUPPLEMENTAL EQUIPMENT GROUND WIRES, 6 AWG STRANDED COPPER OR LARGER FOR INDOOR BTS; 2 AWG STRANDED COPPER FOR OUTDOOR BTS.
8. CONNECTIONS TO THE GROUND BUS SHALL NOT BE DOUBLED UP OR STACKED. BACK TO BACK CONNECTIONS ON OPPOSITE SIDES OF THE GROUND BUS ARE PERMITTED.
9. ALL EXTERIOR GROUND CONDUCTORS BETWEEN EQUIPMENT/GROUND BARS AND THE GROUND RING, SHALL BE #2 AWG SOLID TINNED COPPER UNLESS OTHERWISE INDICATED.
10. ALUMINUM CONDUCTOR OR COPPER CLAD STEEL CONDUCTOR SHALL NOT BE USED FOR GROUNDING CONNECTIONS.
11. USE OF 90° BENDS IN THE PROTECTION GROUNDING CONDUCTORS SHALL BE AVOIDED WHEN 45° BENDS CAN BE ADEQUATELY SUPPORTED. ALL BENDS SHALL BE MADE WITH 12" RADIUS OR LARGER.
12. EXOTHERMIC WELDS SHALL BE USED FOR ALL GROUNDING CONNECTIONS BELOW GRADE.
13. ALL GROUND CONNECTIONS ABOVE GRADE (INTERIOR) SHALL BE FORMED USING HIGH PRESS CRIMPS EXCEPT FOR GROUND BAR CONNECTION FROM MGB TO OUTSIDE EXTERIOR GROUND SHALL ALL BE CADWELD CONNECTIONS.
14. COMPRESSION GROUND CONNECTIONS MAY BE REPLACED BY EXOTHERMIC WELD CONNECTIONS.
15. ICE BRIDGE BONDING CONDUCTORS SHALL BE EXOTHERMICALLY BONDED TO THE TOWER GROUND BAR.
16. APPROVED ANTIOXIDANT COATINGS (I.E. CONDUCTIVE GEL OR PASTE) SHALL BE USED ON ALL COMPRESSION AND BOLTED GROUND CONNECTIONS.
17. ALL EXTERIOR AND INTERIOR GROUND CONNECTIONS SHALL BE COATED WITH A CORROSION RESISTANT MATERIAL.
18. MISCELLANEOUS ELECTRICAL AND NON-ELECTRICAL METAL BOXES, FRAMES AND SUPPORTS SHALL BE BONDED TO THE GROUND RING, IN ACCORDANCE WITH THE NEC.
19. BOND ALL METALLIC OBJECTS WITHIN 6 FT OF MAIN GROUND WIRES WITH 1-#2 AWG TIN-PLATED COPPER GROUND CONDUCTOR.
20. GROUND CONDUCTORS USED IN THE FACILITY GROUND AND LIGHTNING PROTECTION SYSTEMS SHALL NOT BE ROUTED THROUGH METALLIC OBJECTS THAT FORM A RING AROUND THE CONDUCTOR, SUCH AS METALLIC CONDUITS, METAL SUPPORT CLIPS OR SLEEVES THROUGH WALLS OR FLOORS. WHEN IT IS REQUIRED TO BE HOUSED IN CONDUIT TO MEET CODE REQUIREMENTS OR LOCAL CONDITIONS, NON-METALLIC MATERIAL SUCH AS PVC PLASTIC CONDUIT SHALL BE USED. WHERE USE OF METAL CONDUIT IS UNAVOIDABLE (E.G. NON-METALLIC CONDUIT PROHIBITED BY LOCAL CODE) THE GROUND CONDUCTOR SHALL BE BONDED TO EACH END OF THE METAL CONDUIT.
21. ALL NEW STRUCTURES WITH A FOUNDATION AND/OR FOOTING HAVING 20 FT. OR MORE OF 1/4" IN. OR GREATER ELECTRICALLY CONDUCTIVE REINFORCING STEEL MUST HAVE IT BONDED TO THE GROUND RING USING AN EXOTHERMIC WELD CONNECTION USING #2 AWG SOLID BARE TINNED COPPER GROUND WIRE, PER NEC 250.50.
22. FOR THE PURPOSE OF CONSTRUCTION DRAWING, THE FOLLOWING DEFINITIONS SHALL APPLY:

    CONTRACTOR - SMARTLINK
    SUBCONTRACTOR - GENERAL CONTRACTOR (CONSTRUCTION)
    OWNER - AT&T (NEW CINGULAR WIRELESS PCS, LLC)

23. ALL SITE WORK SHALL BE COMPLETED AS INDICATED ON THE DRAWINGS AND PROJECT SPECIFICATIONS.
24. DRAWINGS PROVIDED HERE ARE NOT TO BE SCALED AND ARE INTENDED TO SHOW OUTLINE ONLY.
25. ALL MATERIALS FURNISHED AND INSTALLED SHALL BE IN STRICT ACCORDANCE WITH ALL APPLICABLE CODES, REGULATIONS, AND ORDINANCES. SUBCONTRACTOR SHALL ISSUE ALL APPROPRIATE NOTICES AND COMPLY WITH ALL LAWS, ORDINANCES, RULES, REGULATIONS, AND LAWFUL ORDERS OF ANY PUBLIC AUTHORITY REGARDING THE PERFORMANCE OF THE WORK.
26. ALL WORK CARRIED OUT SHALL COMPLY WITH ALL APPLICABLE MUNICIPAL AND UTILITY COMPANY SPECIFICATIONS AND LOCAL JURISDICTIONAL CODES, ORDINANCES AND APPLICABLE REGULATIONS.
27. UNLESS NOTED OTHERWISE, THE WORK SHALL INCLUDE FURNISHING MATERIALS, EQUIPMENT, APPURTENANCES, AND LABOR NECESSARY TO COMPLETE ALL INSTALLATIONS AS INDICATED ON THE DRAWINGS.
28. THE SUBCONTRACTOR SHALL INSTALL ALL EQUIPMENT AND MATERIALS IN ACCORDANCE WITH MANUFACTURER'S RECOMMENDATIONS UNLESS SPECIFICALLY STATED OTHERWISE.
29. IF THE SPECIFIED EQUIPMENT CANNOT BE INSTALLED AS SHOWN ON THESE DRAWINGS, THE SUBCONTRACTOR SHALL PROPOSE AN ALTERNATIVE INSTALLATION SPACE FOR APPROVAL BY THE CONTRACTOR.
30. THE SUBCONTRACTOR SHALL PROTECT EXISTING IMPROVEMENTS, PAVEMENTS, CURBS, LANDSCAPING AND STRUCTURES. ANY DAMAGED PART SHALL BE REPAIRED AT SUBCONTRACTOR'S EXPENSE TO THE SATISFACTION OF OWNER.
31. THE SUBCONTRACTOR SHALL CONTACT UTILITY LOCATING SERVICES PRIOR TO THE START OF CONSTRUCTION.
32. ALL EXISTING ACTIVE SEWER, WATER, GAS, ELECTRIC, AND OTHER UTILITIES WHERE ENCOUNTERED IN THE WORK, SHALL BE PROTECTED AT ALL TIMES, AND WHERE REQUIRED FOR THE PROPER EXECUTION OF THE WORK, SHALL BE RELOCATED AS DIRECTED BY THE RESPONSIBLE ENGINEER. EXTREME CAUTION SHOULD BE USED BY THE SUBCONTRACTOR WHEN EXCAVATING OR DRILLING PIERS AROUND OR NEAR UTILITIES. SUBCONTRACTOR SHALL PROVIDE SAFETY TRAINING FOR THE WORKING CREW. THIS WILL INCLUDE BUT NOT BE LIMITED TO A) FALL PROTECTION B) CONFINED SPACE C) ELECTRICAL SAFETY D) TRENCHING & EXCAVATION.
33. ALL EXISTING INACTIVE SEWER, WATER, GAS, ELECTRIC AND OTHER UTILITIES, WHICH INTERFERE WITH THE EXECUTION OF THE WORK, SHALL BE REMOVED AND/OR CAPPED, PLUGGED OR OTHERWISE DISCONTINUED AT POINTS WHICH WILL NOT INTERFERE WITH THE EXECUTION OF THE WORK, AS DIRECTED BY THE RESPONSIBLE ENGINEER, AND SUBJECT TO THE APPROVAL OF THE OWNER AND/OR LOCAL UTILITIES.
34. THE AREAS OF THE OWNER'S PROPERTY DISTURBED BY THE WORK AND NOT COVERED BY THE TOWER, EQUIPMENT OR DRIVEWAY SHALL BE GRADED TO A UNIFORM SLOPE AND STABILIZED TO PREVENT EROSION.
35. SUBCONTRACTOR SHALL MINIMIZE DISTURBANCE TO EXISTING SITE DURING CONSTRUCTION. EROSION CONTROL MEASURES, IF REQUIRED DURING CONSTRUCTION, SHALL BE IN CONFORMANCE WITH THE LOCAL GUIDELINES FOR EROSION AND SEDIMENT CONTROL.
36. NO FILL OR EMBANKMENT MATERIAL SHALL BE PLACED ON FROZEN GROUND. FROZEN MATERIALS, SNOW OR ICE SHALL NOT BE PLACED IN ANY FILL OR EMBANKMENT.
37. THE SUBGRADE SHALL BE COMPACTED AND BROUGHT TO A SMOOTH UNIFORM GRADE PRIOR TO FINISHED SURFACE APPLICATION.
38. THE SITE SHALL BE GRADED TO CAUSE SURFACE WATER TO FLOW AWAY FROM THE BTS EQUIPMENT AND TOWER AREAS.
39. IF NECESSARY, RUBBISH, STUMPS, DEBRIS, STICKS, STONES AND OTHER REFUSE SHALL BE REMOVED FROM THE SITE AND DISPOSED OF LEGALLY.
40. THE SUBCONTRACTOR SHALL PROVIDE SITE SIGNAGE IN ACCORDANCE WITH THE TECHNICAL SPECIFICATION FOR SITE SIGNAGE.
41. SUBCONTRACTOR SHALL LEAVE PREMISES IN CLEAN CONDITION.
42. PRIOR TO THE SUBMISSION OF BIDS, THE BIDDING SUBCONTRACTOR SHALL VISIT THE CELL SITE TO FAMILIARIZE WITH THE EXISTING CONDITIONS AND TO CONSTRUCTION DRAWINGS. ANY DISCREPANCY FOUND SHALL BE BROUGHT TO THE ATTENTION OF THE CONTRACTOR.
43. SUBCONTRACTOR SHALL DETERMINE ACTUAL ROUTING OF CONDUIT, POWER AND T1 CABLES, GROUNDING CABLES AS SHOWN ON THE POWER, GROUNDING AND TELCO PLAN DRAWING. SUBCONTRACTOR SHALL UTILIZE EXISTING TRAYS AND/OR SHALL ADD NEW TRAYS AS NECESSARY. SUBCONTRACTOR SHALL CONFIRM THE ACTUAL ROUTING WITH THE CONTRACTOR.
44. ALL CONCRETE REPAIR WORK SHALL BE DONE IN ACCORDANCE WITH AMERICAN CONCRETE INSTITUTE (ACI) 301.
45. ANY NEW CONCRETE NEEDED FOR THE CONSTRUCTION SHALL BE AIR-ENTRAINED AND SHALL HAVE 4000 PSI STRENGTH AT 28 DAYS.
46. ALL STRUCTURAL STEEL WORK SHALL BE DETAILED, FABRICATED AND ERECTED IN ACCORDANCE WITH AISC SPECIFICATIONS. ALL STRUCTURAL STEEL SHALL BE ASTM A36 (Fy = 36 ksi) UNLESS OTHERWISE NOTED. PIPES SHALL BE ASTM A53 TYPE E (Fy = 36 ksi). ALL STEEL EXPOSED TO WEATHER SHALL BE HOT DIPPED GALVANIZED. TOUCHUP ALL SCRATCHES AND OTHER MARKS IN THE FIELD AFTER STEEL IS ERECTED USING A COMPATIBLE ZINC RICH PAINT.
47. CONSTRUCTION SHALL COMPLY WITH SPECIFICATIONS AND "GENERAL CONSTRUCTION SERVICES FOR CONSTRUCTION OF AT&T MOBILITY SITES."
48. SUBCONTRACTOR SHALL VERIFY ALL EXISTING DIMENSIONS AND CONDITIONS PRIOR TO COMMENCING ANY WORK. ALL DIMENSIONS OF EXISTING CONSTRUCTION SHOWN ON THE DRAWINGS MUST BE VERIFIED. SUBCONTRACTOR SHALL NOTIFY THE CONTRACTOR OF ANY DISCREPANCIES PRIOR TO ORDERING MATERIAL OR PROCEEDING WITH CONSTRUCTION.
49. THE EXISTING CELL SITE IS IN FULL COMMERCIAL OPERATION, ANY CONSTRUCTION WORK BY SUBCONTRACTOR SHALL NOT DISRUPT THE EXISTING NORMAL OPERATION. ANY WORK ON EXISTING EQUIPMENT MUST BE COORDINATED WITH CONTRACTOR. ALSO, WORK SHOULD BE SCHEDULED FOR AN APPROPRIATE MAINTENANCE WINDOW USUALLY IN LOW TRAFFIC PERIODS AFTER MIDNIGHT.
50. SINCE THE CELL SITE IS ACTIVE, ALL SAFETY PRECAUTIONS MUST BE TAKEN WHEN WORKING AROUND HIGH LEVELS OF ELECTROMAGNETIC RADIATION. EQUIPMENT SHOULD BE SHUTDOWN PRIOR TO PERFORMING ANY WORK THAT COULD EXPOSE THE WORKERS TO DANGER. PERSONAL RF EXPOSURE MONITORS ARE ADVISED TO BE WORN ALERT OF DANGEROUS EXPOSURE LEVELS.

MASER CONSULTING
— CONNECTICUT —

Customer Loyalty *through* Client Satisfaction
www.maserconsulting.com
Engineers ■ Planners ■ Surveyors
Landscape Architects ■ Environmental Scientists

Copyright © 2019. Maser Consulting Connecticut All Rights Reserved. This drawing and all the information contained herein is authorized for use only by the party for whom the services were contracted or to whom it is certified. This drawing may not be copied, reused, disclosed, distributed or relied upon for any other purpose without the express written consent of Maser Consulting Connecticut.

at&t

smartlink

811
Know what's below. Call before you dig.

PROTECT YOURSELF
ALL STATES REQUIRE NOTIFICATION OF EXCAVATORS, DESIGNERS, OR ANY PERSON PREPARING TO DISTURB THE EARTH'S SURFACE ANYWHERE IN ANY STATE

FOR STATE SPECIFIC DIRECT PHONE NUMBERS VISIT: WWW.CALL811.COM

SCALE :	JOB NUMBER :
AS SHOWN	18946064A

REV	DATE	DESCRIPTION	DRAWN BY	CHECKED BY
.	.	.	.	.
.	.	.	.	.
.	.	.	.	.
.	.	.	.	.
.	.	.	.	.
2	01/18/19	REVISED PER COMMENTS	AJC	RA
1	12/21/18	REVISED PER COMMENTS	AJC	RA
0	12/7/18	ISSUED FOR REVIEW	AJC	RA

PETROS E. TSOUKALAS
CONNECTICUT PROFESSIONAL ENGINEER - LICENSE NUMBER: 32577

STATE OF CONNECTICUT PETROS TSOUKALAS 32577 LICENSED PROFESSIONAL ENGINEER

IT IS A VIOLATION OF LAW FOR ANY PERSON, UNLESS THEY ARE ACTING UNDER THE DIRECTION OF THE RESPONSIBLE LICENSED PROFESSIONAL ENGINEER, TO ALTER THIS DOCUMENT.

SITE NAME:

CLINTON MEADOW ROAD
FA# 10049127
SITE# CTL02230

46 MEADOW ROAD
CLINTON, CT 064113
MIDDLESEX COUNTY

RED BANK OFFICE
331 Newman Springs Road
Suite 203
Red Bank, NJ 07701-5669
Phone: .732.383.1950
Fax: .732.383.1984
email: solutions@maserconsulting.com

SHEET TITLE :
GENERAL NOTES

SHEET NUMBER :
GN-1

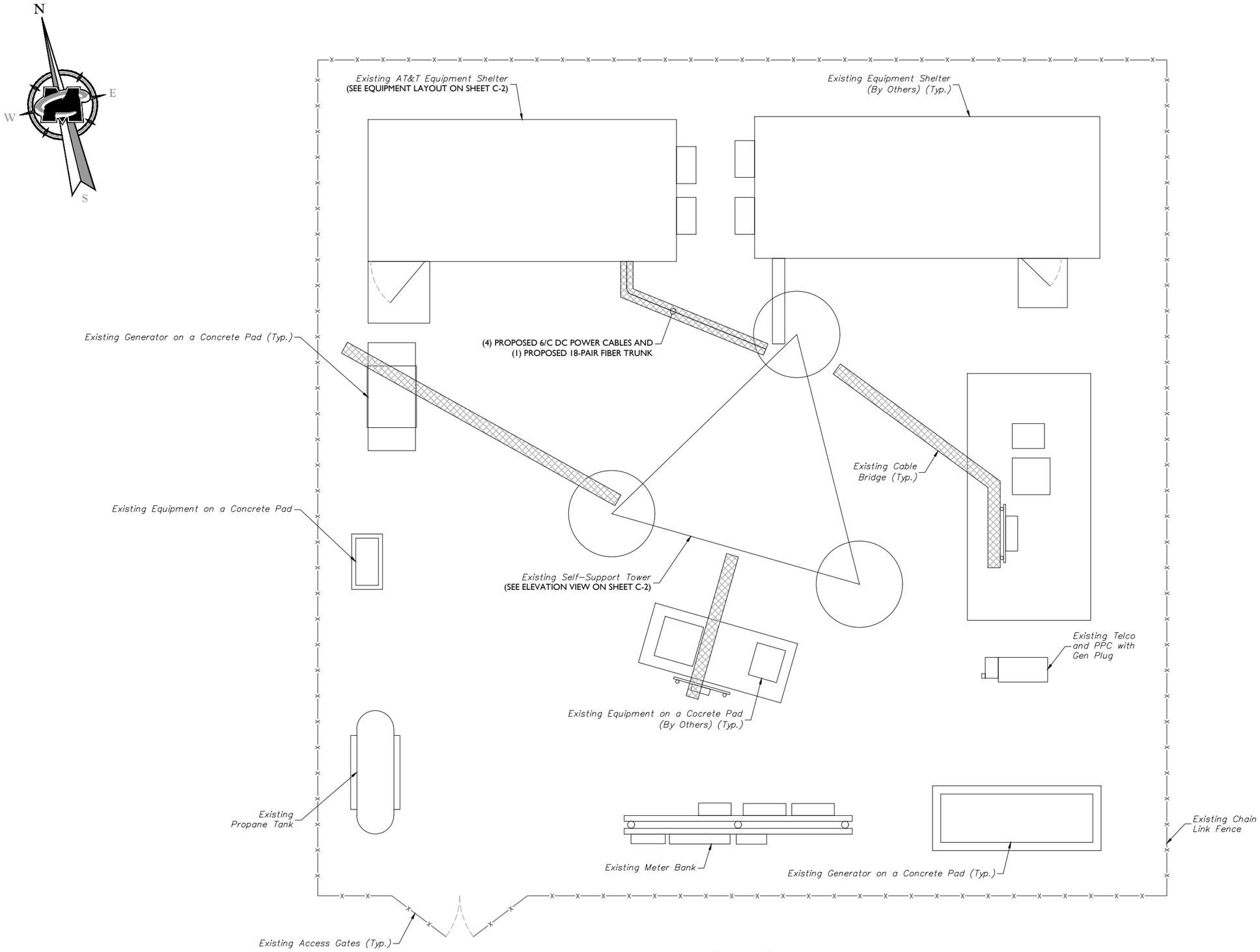

COMPOUND PLAN

4 3.2 2.4 1.6 0.8 0 2 4 8

SCALE : 1" = 4' FOR 22"X34"
(SCALE : 1" = 8' FOR 11"X17")

MASER CONSULTING
CONNECTICUT

Customer Loyalty *through* Client Satisfaction
www.maserconsulting.com
Engineers ■ Planners ■ Surveyors
Landscape Architects ■ Environmental Scientists

Copyright © 2019. Maser Consulting Connecticut All Rights Reserved. This drawing and all the information contained herein is authorized for use only by the party for whom the services were contracted or to whom it is certified. This drawing may not be copied, reused, disclosed, distributed or relied upon for any other purpose without the express written consent of Maser Consulting Connecticut.

at&t

smartlink

811 Know what's below. Call before you dig.

PROTECT YOURSELF
ALL STATES REQUIRE NOTIFICATION OF EXCAVATORS, DESIGNERS, OR ANY PERSON PREPARING TO DISTURB THE EARTH'S SURFACE ANYWHERE IN ANY STATE

FOR STATE SPECIFIC DIRECT PHONE NUMBERS VISIT:
WWW.CALL811.COM

SCALE :	JOB NUMBER :
AS SHOWN	18946064A

REV	DATE	DESCRIPTION	DRAWN BY	CHECKED BY
2	01/18/19	REVISED PER COMMENTS	AJC	RA
1	12/21/18	REVISED PER COMMENTS	AJC	RA
0	12/7/18	ISSUED FOR REVIEW	AJC	RA

STATE OF CONNECTICUT
PETROS E. TSOUKALAS
CONNECTICUT PROFESSIONAL ENGINEER - LICENSE NUMBER: 32578
32577

IT IS A VIOLATION OF LAW FOR ANY PERSON, UNLESS THEY ARE ACTING UNDER THE DIRECTION OF THE RESPONSIBLE LICENSED PROFESSIONAL ENGINEER, TO ALTER THIS DOCUMENT.

SITE NAME:

CLINTON MEADOW ROAD
FA# 10049127
SITE# CTL02230

46 MEADOW ROAD
CLINTON, CT 064113
MIDDLESEX COUNTY

RED BANK OFFICE
331 Newman Springs Road
Suite 203
Red Bank, NJ 07701-5669
Phone: .732.383.1950
Fax: .732.383.1984
email: solutions@maserconsulting.com

SHEET TITLE :
COMPOUND PLAN

SHEET NUMBER :
C-1

A:\Autodesk A360\10049127_CTL02230_REV_1_CT_CO.dwg\C-1 By: ACOA

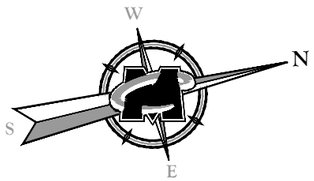

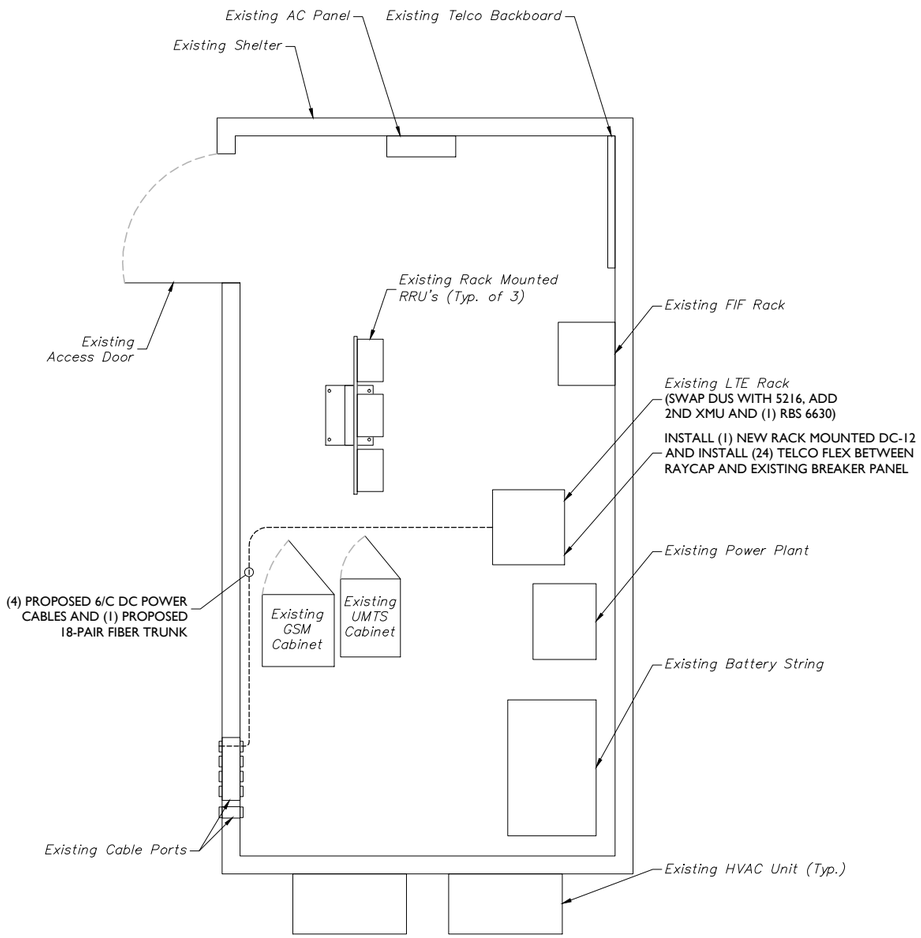

EQUIPMENT LAYOUT

2 1.6 1.2 0.8 0.4 0 1 2 4

SCALE : 1" = 2' FOR 22"X34"
(SCALE : 1" = 4' FOR 11"X17")

STRUCTURAL NOTES:

1. MASER CONSULTING P.A. HAS NOT BEEN CONTRACTED TO PERFORM A STRUCTURAL ANALYSIS ON THIS TOWER AND THEREFORE ASSUMES NO RESPONSIBILITY FOR THE STRUCTURAL CAPACITY AS REQUIRED UNDER THE MOST CURRENT LOCAL, STATE AND FEDERAL CODES. A STRUCTURAL ANALYSIS OF THE ANTENNA MOUNT, TOWER AND TOWER FOUNDATION MUST BE PREPARED BY AN APPROPRIATE LICENSED STRUCTURAL ENGINEER CERTIFYING THAT THE EXISTING TOWER AND ANY REQUIRED IMPROVEMENTS AND REINFORCEMENTS HAVE SUFFICIENT CAPACITY TO SUPPORT ALL EXISTING AND PROPOSED ANTENNAS, SUPPORTS, CABLES AND APPURTENANCES COMPLIES WITH THE MOST CURRENT LOCAL, STATE AND FEDERAL CODES.

2. THE CONTRACTOR IS RESPONSIBLE TO CONFIRM THAT ANY IMPROVEMENTS AND REINFORCEMENTS REQUIRED BY THE STRUCTURAL ANALYSIS CERTIFICATION ARE PROPERLY INSTALLED PRIOR TO THE ADDITION OF ANTENNAS, CABLES, SUPPORTS AND APPURTENANCES PROPOSED ON THESE DRAWINGS OR OTHERWISE NOTED IN THE STRUCTURAL ANALYSIS.

ELEVATION VIEW

10 8 6 4 2 0 5 10 20

SCALE : 1" = 10' FOR 22"X34"
(SCALE : 1" = 20' FOR 11"X17")

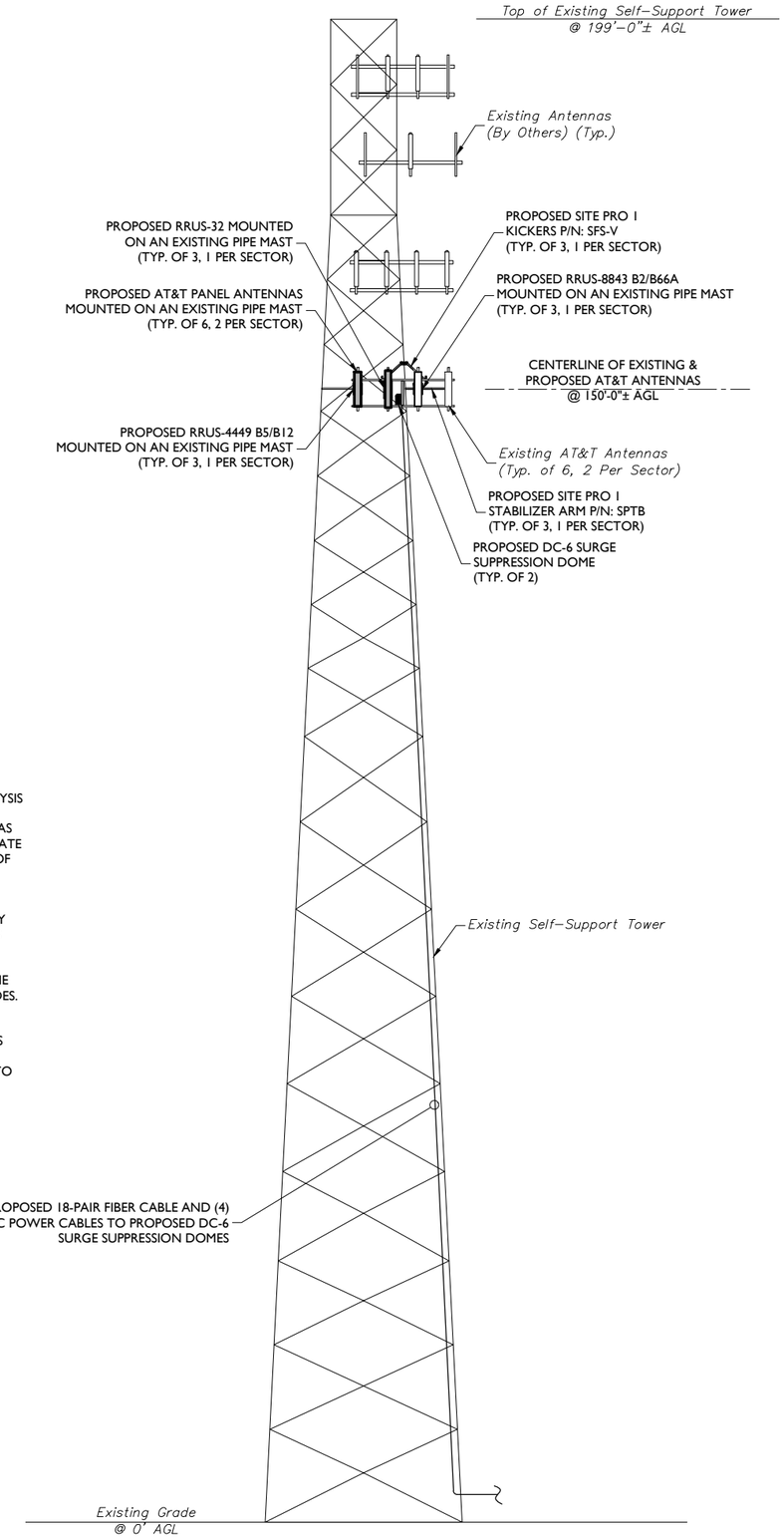

MASER CONSULTING
CONNECTICUT

Customer Loyalty *through* Client Satisfaction
www.maserconsulting.com
Engineers ■ Planners ■ Surveyors
Landscape Architects ■ Environmental Scientists

Copyright © 2019. Maser Consulting Connecticut All Rights Reserved. This drawing and all the information contained herein is authorized for use only by the party for whom the services were contracted or to whom it is certified. This drawing may not be copied, reused, disclosed, distributed or relied upon for any other purpose without the express written consent of Maser Consulting Connecticut.

at&t

smartlink

811 Know what's below. Call before you dig.

PROTECT YOURSELF
ALL STATES REQUIRE NOTIFICATION OF EXCAVATORS, DESIGNERS, OR ANY PERSON PREPARING TO DISTURB THE EARTH'S SURFACE ANYWHERE IN ANY STATE

FOR STATE SPECIFIC DIRECT PHONE NUMBERS VISIT: WWW.CALL811.COM

SCALE : AS SHOWN
JOB NUMBER : 18946064A

REV	DATE	DESCRIPTION	DRAWN BY	CHECKED BY
.	.	.	.	.
.	.	.	.	.
.	.		.	.
.	.	.	.	.
.	.	.	.	.
2	01/18/19	REVISED PER COMMENTS	AJC	RA
1	12/21/18	REVISED PER COMMENTS	AJC	RA
0	12/7/18	ISSUED FOR REVIEW	AJC	RA

STATE OF CONNECTICUT
PETROS E. TSOUKALAS
CONNECTICUT PROFESSIONAL ENGINEER - LICENSE NUMBER: 32577
32577
PROFESSIONAL ENGINEER

IT IS A VIOLATION OF LAW FOR ANY PERSON, UNLESS THEY ARE ACTING UNDER THE DIRECTION OF THE RESPONSIBLE LICENSED PROFESSIONAL ENGINEER, TO ALTER THIS DOCUMENT.

SITE NAME:

CLINTON MEADOW ROAD
FA# 10049127
SITE# CTL02230

46 MEADOW ROAD
CLINTON, CT 064113
MIDDLESEX COUNTY

RED BANK OFFICE
331 Newman Springs Road
Suite 203
Red Bank, NJ 07701-5669
Phone: .732.383.1950
Fax: .732.383.1984
email: solutions@maserconsulting.com

SHEET TITLE :
EQUIPMENT LAYOUT AND ELEVATION VIEW

SHEET NUMBER :
C-2

A:\Projects_4-48\10049127_CTL02230_REV_1_CT_CO.dwg\C-2 By: AJCOA

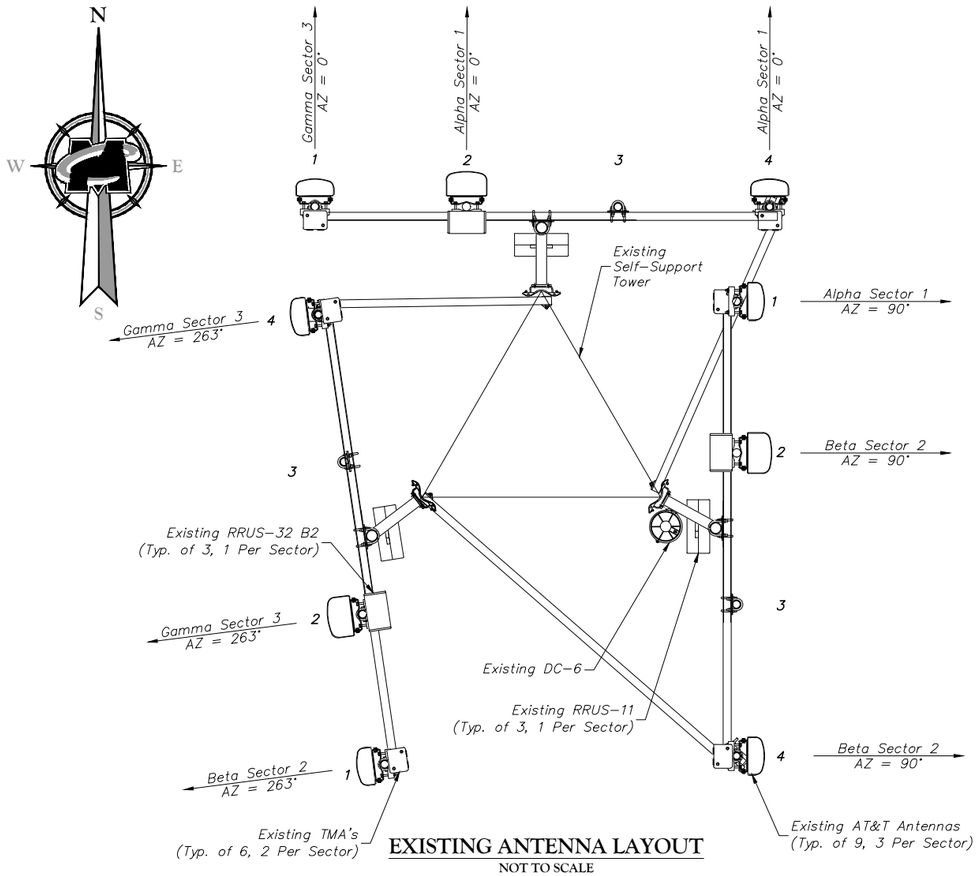

EXISTING ANTENNA LAYOUT

NOT TO SCALE

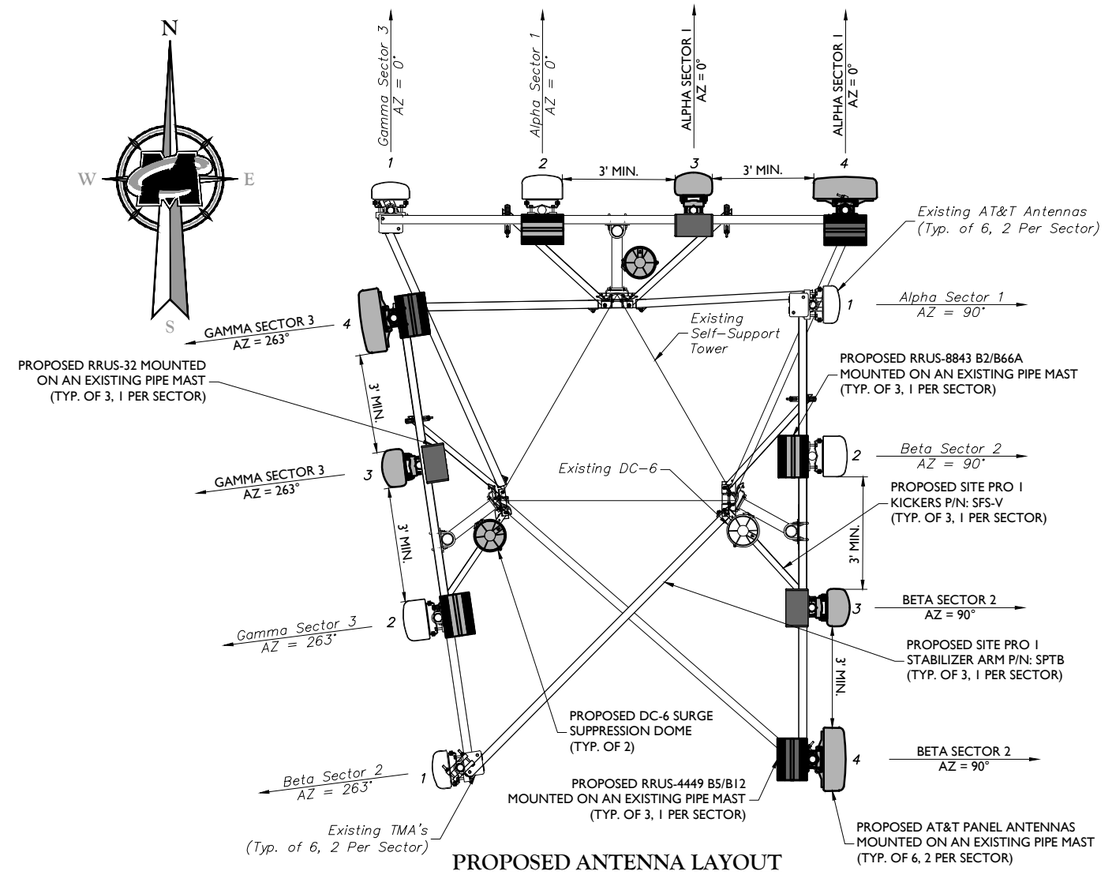

PROPOSED ANTENNA LAYOUT

NOT TO SCALE

3 FEET MINIMUM SEPARATION
BETWEEN LTE ANTENNAS
6 FEET MINIMUM SEPARATION
BETWEEN 700BC & 700 DE
8 INCH MINIMUM SEPARATION
BETWEEN BACK OF PANEL ANTENNA
TO EXISTING/PROPOSED EQUIPMENT

ANTENNA SCHEDULE

SECTOR		EXISTING ANTENNA	PROPOSED ANTENNA	TECHNOLOGY	ANTENNA STATUS	HEIGHT (in)	WIDTH (in)	DEPTH (in)	WEIGHT (lbs)	ANTENNA AZIMUTH (DEG.)	ANT. CL. ELEV. (ft.)	REMOTE RADIO/TMA CONFIGURATION	TRANSMISSION CABLE		
													QUANTITY	TYPE	STATUS
Sector 1	1	POWERWAVE 7770	POWERWAVE 7770	UMTS	EXISTING	55.00	11.00	5.00	35.00	90	150'	(2) LGP 21901 DIPLEXER (1) TT19-08BP111-001 TMA	2	1 5/8" COAX	EXISTING
	2	COMMSCOPE SBNHH-1D65A	COMMSCOPE SBNHH-1D65A	LTE	EXISTING	55.60	11.90	7.10	46.80	0	150'	(1) RRUS-8843 B2/B66A (2) CM1007-DBPXBC-003 (1) TT19-08BP111-001 TMA	2	1 5/8" COAX	EXISTING
	3		**COMMSCOPE SBNHH-1D65A**	**LTE**	**PROPOSED**	**55.60**	**11.90**	**7.10**	**46.80**	**0**	**150'**	**(1) RRUS-32**	1/2'	FIBER/DC	EXISTING
	4	POWERWAVE 7770	**KATHREIN 80010964**	**LTE**	**PROPOSED**	**59.00**	**20.00**	**6.90**	**94.80**	**0**	**150'**	**(1) RRUS-4449 B5/B12**		-	-
Sector 2	1	POWERWAVE 7770	POWERWAVE 7770	UMTS	EXISTING	55.00	11.00	5.00	35.00	263	150'	(2) LGP 21901 DIPLEXER (1) TT19-08BP111-001 TMA	2	1 5/8" COAX	EXISTING
	2	COMMSCOPE SBNHH-1D65A	COMMSCOPE SBNHH-1D65A	LTE	EXISTING	55.60	11.90	7.10	46.80	**90**	150'	(1) RRUS-8843 B2/B66A (2) CM1007-DBPXBC-003 (1) TT19-08BP111-001 TMA	2	1 5/8" COAX	EXISTING
	3		**COMMSCOPE SBNHH-1D65A**	**LTE**	**PROPOSED**	**55.60**	**11.90**	**7.10**	**46.80**	**90**	**150'**	**(1) RRUS-32**	**1/2'**	**FIBER/DC**	**PROPOSED**
	4	POWERWAVE 7770	**KATHREIN 80010964**	**LTE**	**PROPOSED**	**59.00**	**20.00**	**6.90**	**94.80**	**90**	**150'**	**(1) RRUS-4449 B5/B12**		-	-
Sector 3	1	POWERWAVE 7770	POWERWAVE 7770	UMTS	EXISTING	55.00	11.00	5.00	35.00	0	150'	(2) LGP 21901 DIPLEXER (1) TT19-08BP111-001 TMA	2	1 5/8" COAX	EXISTING
	2	COMMSCOPE SBNHH-1D65A	COMMSCOPE SBNHH-1D65A	LTE	EXISTING	55.60	11.90	7.10	46.80	**263**	150'	(1) RRUS-8843 B2/B66A (2) CM1007-DBPXBC-003 (1) TT19-08BP111-001 TMA	2	1 5/8" COAX	EXISTING
	3		**COMMSCOPE SBNHH-1D65A**	**LTE**	**PROPOSED**	**55.60**	**11.90**	**7.10**	**46.80**	**263**	**150'**	**(1) RRUS-32**	**2**	**DC**	**PROPOSED**
	4	POWERWAVE 7770	**KATHREIN 80010964**	**LTE**	**PROPOSED**	**59.00**	**20.00**	**6.90**	**94.80**	**263**	**150'**	**(1) RRUS-4449 B5/B12**		-	-

MASER CONSULTING
CONNECTICUT
Customer Loyalty *through* Client Satisfaction
www.maserconsulting.com
Engineers ■ Planners ■ Surveyors
Landscape Architects ■ Environmental Scientists

Copyright © 2019. Maser Consulting Connecticut All Rights Reserved. This drawing and all the information contained herein is authorized for use only by the party for whom the services were contracted or to whom it is certified. This drawing may not be copied, reused, disclosed, distributed or relied upon for any other purpose without the express written consent of Maser Consulting Connecticut.

at&t

smartlink

811 Know what's below. Call before you dig.

PROTECT YOURSELF
ALL STATES REQUIRE NOTIFICATION OF EXCAVATORS, DESIGNERS, OR ANY PERSON PREPARING TO DISTURB THE EARTH'S SURFACE ANYWHERE IN ANY STATE

FOR STATE SPECIFIC DIRECT PHONE NUMBERS VISIT: WWW.CALL811.COM

SCALE : AS SHOWN

JOB NUMBER : 18946064A

REV	DATE	DESCRIPTION	DRAWN BY	CHECKED BY
2	01/18/19	REVISED PER COMMENTS	AJC	RA
1	12/21/18	REVISED PER COMMENTS	AJC	RA
0	12/7/18	ISSUED FOR REVIEW	AJC	RA

STATE OF CONNECTICUT
PETROS E. SOUKALAS
CONNECTICUT LICENSED PROFESSIONAL ENGINEER - LICENSE NUMBER: 32577
32577

IT IS A VIOLATION OF LAW FOR ANY PERSON, UNLESS THEY ARE ACTING UNDER THE DIRECTION OF THE RESPONSIBLE, LICENSED PROFESSIONAL ENGINEER, TO ALTER THIS DOCUMENT.

SITE NAME:

CLINTON MEADOW ROAD
FA# 10049127
SITE# CTL02230

46 MEADOW ROAD
CLINTON, CT 064113
MIDDLESEX COUNTY

RED BANK OFFICE
331 Newman Springs Road
Suite 203
Red Bank, NJ 07701-5669
Phone: .732.383.1950
Fax: .732.383.1984
email: solutions@maserconsulting.com

SHEET TITLE :
ANTENNA LAYOUTS AND ANTENNA SCHEDULE

SHEET NUMBER :
C-3

\\JAFiles-s\48\10049127_CTL02230_REV 1_CT_CD.dwg\C-3 By: ACOA

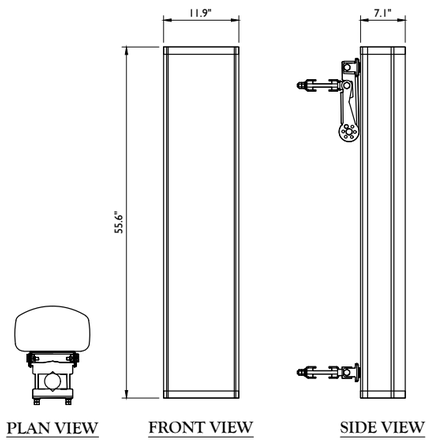

WEIGHT = 33.5 LB
WEIGHT WITH BRACKETS = 46.8 LB

COMMSCOPE SBNHH-1D65A
NOT TO SCALE

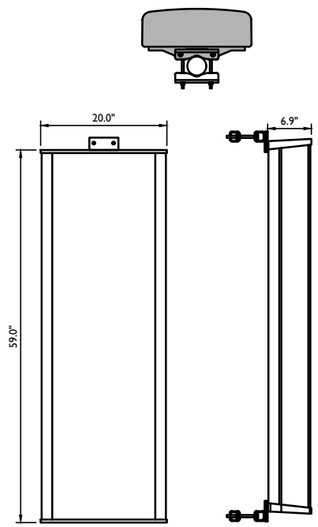

WEIGHT = 83.8 LB

KATHREIN 80010964
NOT TO SCALE

ANTENNA DETAILS
NOT TO SCALE

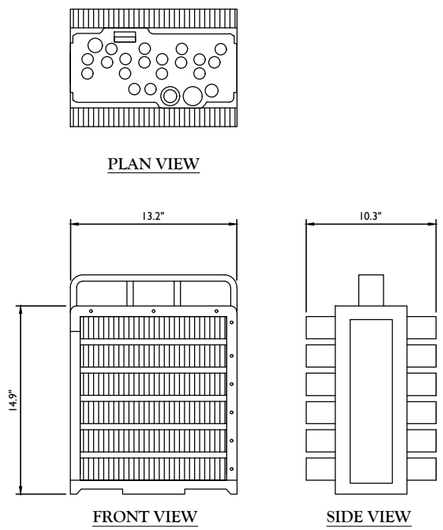

WEIGHT = 72.0 LBS W/O MOUNTING HARDWARE
(INCLUDES SUNSHIELD AND DOUBLE FILTER CHASSIS)
WEIGHT: 72.0 LBS

ERICSSON DUAL BAND RRU-8843 B2+B66A DETAIL
NOT TO SCALE

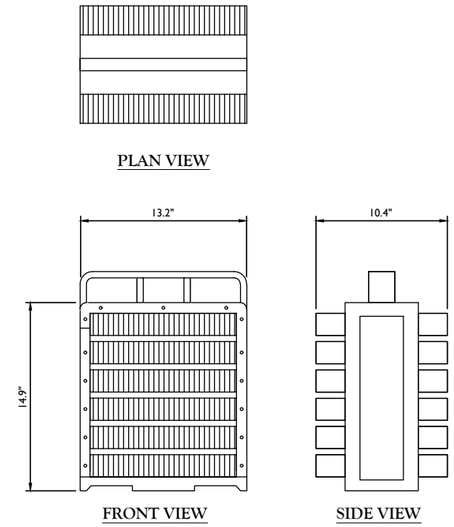

WEIGHT = 73 LBS W/O MOUNTING HARDWARE
DIMENSIONS (H X W X D): 14.9"H X 13.2"W X10.4"
(INCLUDES SUNSHIELD) WEIGHT: 73.0 LBS

ERICSSON DUAL BAND RRUS-4449 B5+B12 DETAIL
NOT TO SCALE

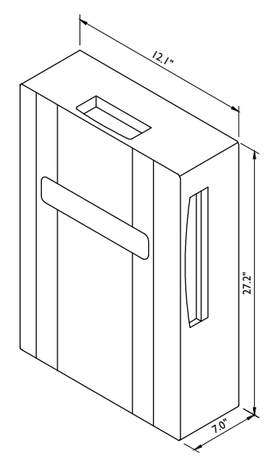

RRUS-32 DIMENSIONS (H X W X D): 27.2" X 12.1" X 7.0" (INCLUDES SUNSHIELD)
WEIGHT: 53 LBS

RRUS-32 DETAIL
NOT TO SCALE

RRUS DETAILS
NOT TO SCALE

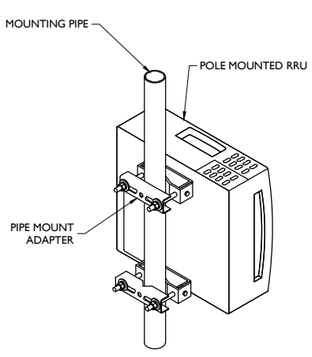

RRUS MOUNTING DETAIL
NOT TO SCALE

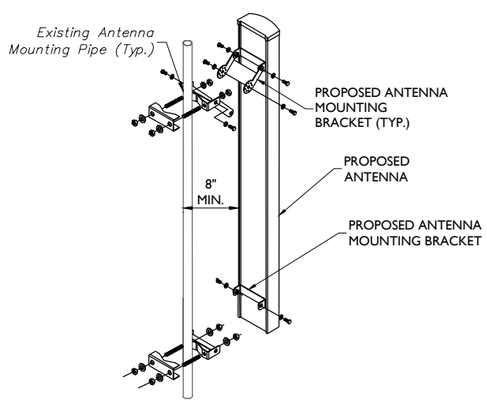

ANTENNA MOUNTING DETAIL
NOT TO SCALE

MASER CONSULTING
CONNECTICUT

Customer Loyalty *through* Client Satisfaction
www.maserconsulting.com
Engineers ■ Planners ■ Surveyors
Landscape Architects ■ Environmental Scientists

Copyright © 2019. Maser Consulting Connecticut All Rights Reserved. This drawing and all the information contained herein is authorized for use only by the party for whom the services were contracted or to whom it is certified. This drawing may not be copied, reused, disclosed, distributed or relied upon for any other purpose without the express written consent of Maser Consulting Connecticut.

at&t

smartlink

811
Know what's below. Call before you dig.

PROTECT YOURSELF
ALL STATES REQUIRE NOTIFICATION OF EXCAVATORS, DESIGNERS, OR ANY PERSON PREPARING TO DISTURB THE EARTH'S SURFACE ANYWHERE IN ANY STATE

FOR STATE SPECIFIC DIRECT PHONE NUMBERS VISIT:
WWW.CALL811.COM

SCALE :	JOB NUMBER :
AS SHOWN	18946064A

REV	DATE	DESCRIPTION	DRAWN BY	CHECKED BY
.	.	.	.	.
.	.	.	.	.
.	.	.	.	.
.	.	.	.	.
.	.	.	.	.
2	01/18/19	REVISED PER COMMENTS	AJC	RA
1	12/21/18	REVISED PER COMMENTS	AJC	RA
0	12/7/18	ISSUED FOR REVIEW	AJC	RA

STATE OF CONNECTICUT
PETROS E. TSOUKALAS
CONNECTICUT PROFESSIONAL ENGINEER - LICENSE NUMBER: 32577#
32577

IT IS A VIOLATION OF LAW FOR ANY PERSON, UNLESS THEY ARE ACTING UNDER THE DIRECTION OF THE RESPONSIBLE LICENSED PROFESSIONAL ENGINEER, TO ALTER THIS DOCUMENT.

SITE NAME:

CLINTON MEADOW ROAD
FA# 10049127
SITE# CTL02230

46 MEADOW ROAD
CLINTON, CT 064113
MIDDLESEX COUNTY

RED BANK OFFICE
331 Newman Springs Road
Suite 203
Red Bank, NJ 07701-5669
Phone: .732.383.1950
Fax: .732.383.1984

email: solutions@maserconsulting.com

SHEET TITLE :
CONSTRUCTION DETAILS

SHEET NUMBER :
A-1

M:\Projects_4168\10049127_CTL02230_ADV 1_CT_CD.dwg\A-1 By: AJCOA

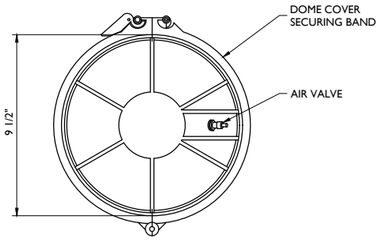

TOP VIEW

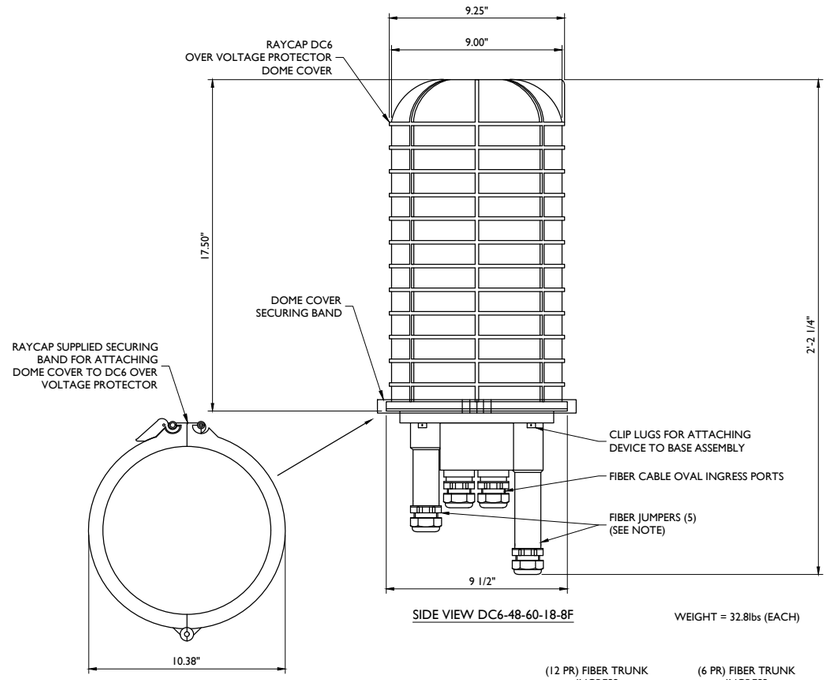

SIDE VIEW DC6-48-60-18-8F

WEIGHT = 32.8lbs (EACH)

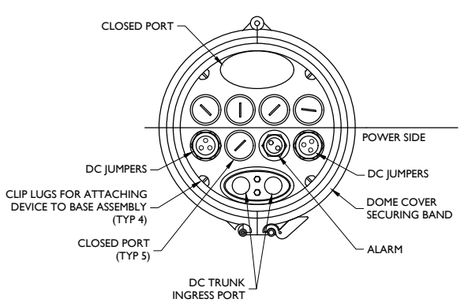

BOTTOM VIEW
DC6-48-60-0-8F

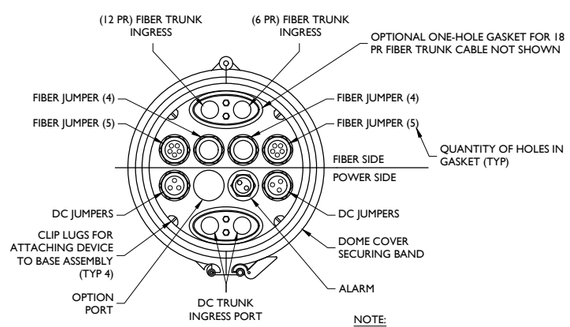

BOTTOM VIEW
DC6-48-60-18-8F

NOTE:

REMOVE CABLE SEALING GLAND AND INSTALL M32x1.5 METRIC-TO-1" NPT ADAPTER (COOPER CROUSE-HINES P/N CAP 740 994 OR EQUIVALENT MFR) WHEN CONNECTING CONDUIT TO OVP.

DC6 SURGE SUPPRESSION DOME DETAIL

NOT TO SCALE

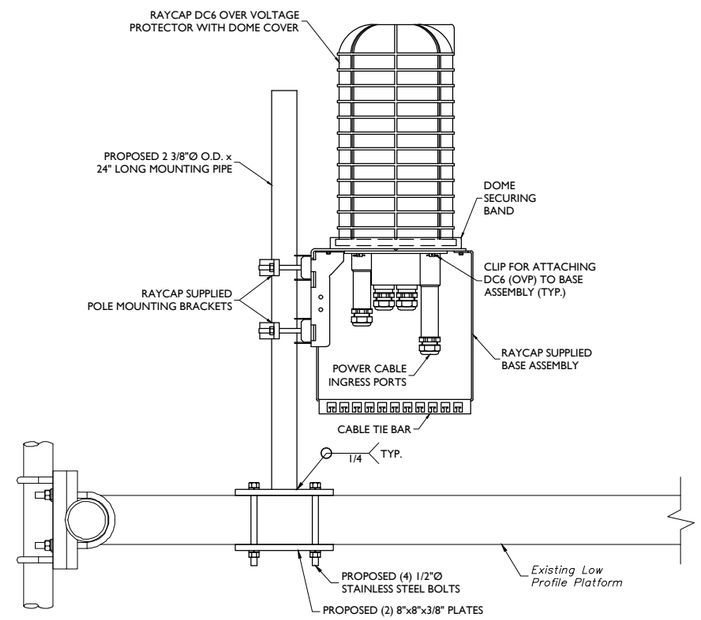

NOTES:

RAYCAP VIA AT&T SUPPLIES THE DC6 OVER VOLTAGE PROTECTOR AND PIPE MOUNTING BRACKETS. SUBCONTRACTOR SHALL SUPPLY THE PIPE.

DC6 SURGE SUPPRESSION DOME ANTENNA PLATFORM MOUNT ASSEMBLY

NOT TO SCALE

MASER CONSULTING
CONNECTICUT

Customer Loyalty *through* Client Satisfaction
www.maserconsulting.com
Engineers ■ Planners ■ Surveyors
Landscape Architects ■ Environmental Scientists

Copyright © 2019. Maser Consulting Connecticut All Rights Reserved. This drawing and all the information contained herein is authorized for use only by the party for whom the services were contracted or to whom it is certified. This drawing may not be copied, reused, disclosed, distributed or relied upon for any other purpose without the express written consent of Maser Consulting Connecticut.

at&t

smartlink

811 PROTECT YOURSELF
ALL STATES REQUIRE NOTIFICATION OF EXCAVATORS, DESIGNERS, OR ANY PERSON PREPARING TO DISTURB THE EARTH'S SURFACE ANYWHERE IN ANY STATE
Know what's below. Call before you dig.
FOR STATE SPECIFIC DIRECT PHONE NUMBERS VISIT: WWW.CALL811.COM

SCALE : AS SHOWN
JOB NUMBER : 18946064A

REV	DATE	DESCRIPTION	DRAWN BY	CHECKED BY
2	01/18/19	REVISED PER COMMENTS	AJC	RA
1	12/21/18	REVISED PER COMMENTS	AJC	RA
0	12/7/18	ISSUED FOR REVIEW	AJC	RA

STATE OF CONNECTICUT
PETROS E. TSOUKALAS
CONNECTICUT PROFESSIONAL ENGINEER - LICENSE NUMBER: 32577
32577
PROFESSIONAL ENGINEER

IT IS A VIOLATION OF LAW FOR ANY PERSON, UNLESS THEY ARE ACTING UNDER THE DIRECTION OF THE RESPONSIBLE LICENSED PROFESSIONAL ENGINEER, TO ALTER THIS DOCUMENT.

SITE NAME:

CLINTON MEADOW ROAD
FA# 10049127
SITE# CTL02230

46 MEADOW ROAD
CLINTON, CT 064113
MIDDLESEX COUNTY

RED BANK OFFICE
331 Newman Springs Road
Suite 203
Red Bank, NJ 07701-5669
Phone: .732.383.1950
Fax: .732.383.1984
email: solutions@maserconsulting.com

SHEET TITLE : CONSTRUCTION DETAILS

SHEET NUMBER : A-2

AJCAdmin 4148 10049127 CTL02230 REV 1_CT CD-1.dwg(A-2) By: AJCOA

Diagram - Sector: A | Diagram File Name - CT2230_A_B_C_LTE_AWS_PCS_WCS_850_700BC_Rev12.vsd
Asoft Site Name - CTL02230 | Location Name - CLINTON MEADOW RD | Market - CONNECTICUT | Market Cluster - NEW ENGLAND
Comments: Important Note: For detailed radio to antenna wiring refer to the latest field notice - Antenna_Radio Connection Drawings Playbook v6.0_Ericsson

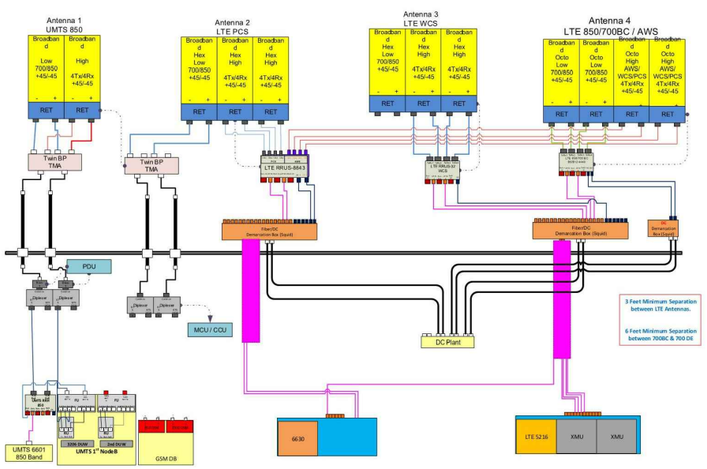

ALPHA SECTOR

Diagram - Sector: B | Diagram File Name - CT2230_A_B_C_LTE_AWS_PCS_WCS_850_700BC_Rev12.vsd
Asoft Site Name - CTL02230 | Location Name - CLINTON MEADOW RD | Market - CONNECTICUT | Market Cluster - NEW ENGLAND
Comments: Important Note: For detailed radio to antenna wiring refer to the latest field notice - Antenna_Radio Connection Drawings Playbook v6.0_Ericsson

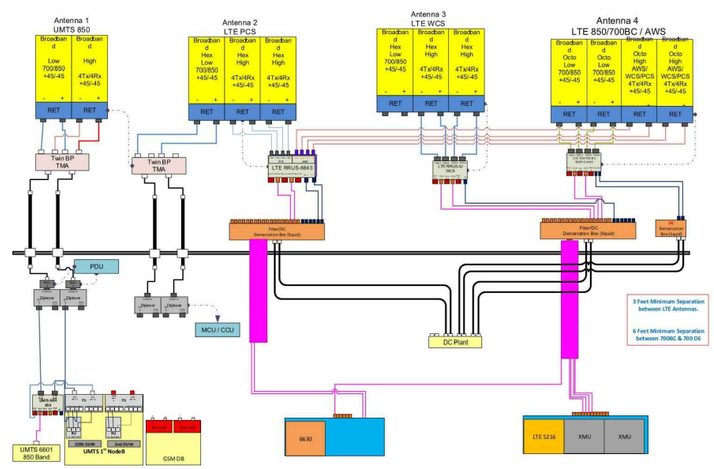

BETA SECTOR

Diagram - Sector: C | Diagram File Name - CT2230_A_B_C_LTE_AWS_PCS_WCS_850_700BC_Rev12.vsd
Asoft Site Name - CTL02230 | Location Name - CLINTON MEADOW RD | Market - CONNECTICUT | Market Cluster - NEW ENGLAND
Comments: Important Note: For detailed radio to antenna wiring refer to the latest field notice - Antenna_Radio Connection Drawings Playbook v6.0_Ericsson

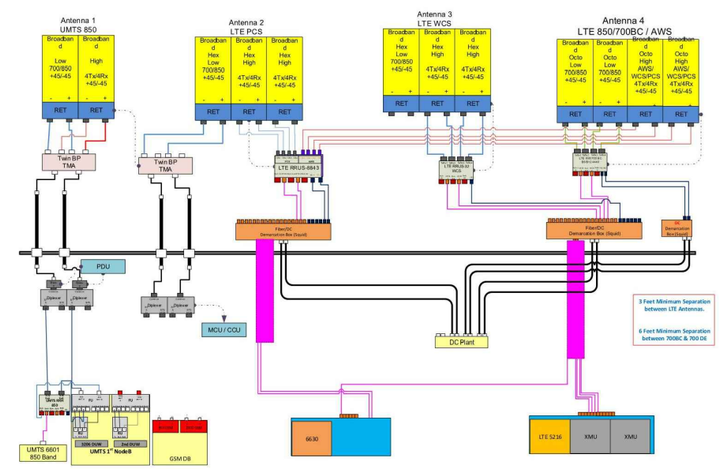

GAMMA SECTOR

BASED ON: RF ENGINEERING DESIGN ENTITLED "NEW-ENGLAND_CONNECTICUT_CTL02230_2019-LTE-Next-Carrier_LTE_mm093q_2051A0JDAR_10049127_59449_07-09-2018_Final-Approved_v2.00", LAST REVISED 11/05/2018.

RF PLUMBING DIAGRAMS

MASER CONSULTING
CONNECTICUT

Customer Loyalty *through* Client Satisfaction
www.maserconsulting.com
Engineers ■ Planners ■ Surveyors
Landscape Architects ■ Environmental Scientists

Copyright © 2019. Maser Consulting Connecticut All Rights Reserved. This drawing and all the information contained herein is authorized for use only by the party for whom the services were contracted or to whom it is certified. This drawing may not be copied, reused, disclosed, distributed or relied upon for any other purpose without the express written consent of Maser Consulting Connecticut.

at&t

smartlink

811 Know what's below. Call before you dig.

PROTECT YOURSELF
ALL STATES REQUIRE NOTIFICATION OF EXCAVATORS, DESIGNERS, OR ANY PERSON PREPARING TO DISTURB THE EARTH'S SURFACE ANYWHERE IN ANY STATE

FOR STATE SPECIFIC DIRECT PHONE NUMBERS VISIT: WWW.CALL811.COM

SCALE : AS SHOWN

JOB NUMBER : 18946064A

REV	DATE	DESCRIPTION	DRAWN BY	CHECKED BY
2	01/18/19	REVISED PER COMMENTS	AJC	RA
1	12/21/18	REVISED PER COMMENTS	AJC	RA
0	12/7/18	ISSUED FOR REVIEW	AJC	RA

STATE OF CONNECTICUT
PETROS E. SOUKALIS
CONNECTICUT PROFESSIONAL ENGINEER - LICENSE NUMBER: 32577
32577

IT IS A VIOLATION OF LAW FOR ANY PERSON, UNLESS THEY ARE ACTING UNDER THE DIRECTION OF THE RESPONSIBLE LICENSED PROFESSIONAL ENGINEER, TO ALTER THIS DOCUMENT.

SITE NAME:

CLINTON MEADOW ROAD
FA# 10049127
SITE# CTL02230

46 MEADOW ROAD
CLINTON, CT 064113
MIDDLESEX COUNTY

RED BANK OFFICE
331 Newman Springs Road
Suite 203
Red Bank, NJ 07701-5669
Phone: .732.383.1950
Fax: .732.383.1984
email: solutions@maserconsulting.com

SHEET TITLE : RF PLUMBING DIAGRAM

SHEET NUMBER : A-3

AJC/Autoc 4148-10049127_CTL02230_REV 1_CT_CD.dwg/A-3 By: ACOA

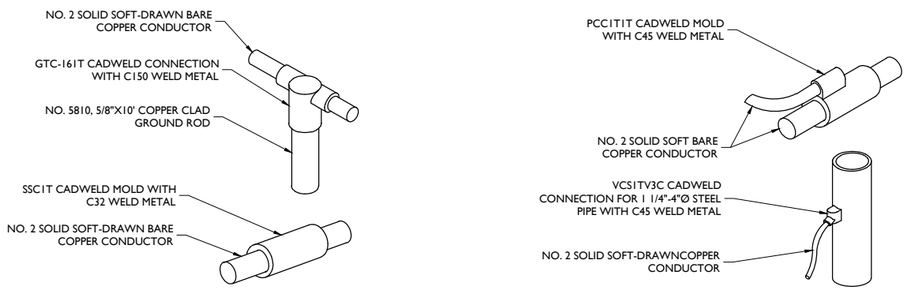

CADWELD DETAILS

NOT TO SCALE

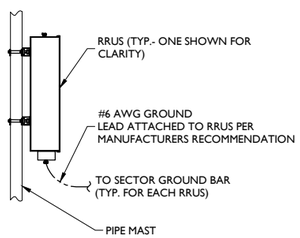

RRU GROUNDING

NOT TO SCALE

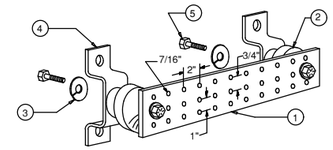

LEGEND

1- TINNED COPPER GROUND BAR, 1/4"x4"x20", NEWTON INSTRUMENT CO. CAT. NO. B-6142 OR EQUAL. HOLE CENTERS TO MATCH NEMA DOUBLE LUG CONFIGURATION.

2- INSULATORS, NEWTON INSTRUMENT CAT. NO. 3061-4

3- 5/8" LOCKWASHERS, NEWTON INSTRUMENT CO. CAT. NO. 3015-8

4- WALL MOUNTING BRACKET, NEWTON INSTRUMENT CO. CAT NO. A-5056

5- 5/8-11 X 1" HHCS BOLTS, NEWTON INSTRUMENT CO. CAT NO. 3012-1

6- EACH GROUND CONDUCTOR TERMINATING ON ANY GROUND BAR HAVE AN IDENTIFICATION TAG ATTACHED AT EACH END THAT WILL IDENTIFY ITS ORIGIN AND DESTINATION.

SECTION "P" - SURGE PRODUCERS

CABLE ENTRY PORTS (HATCH PLATES) (#2)
GENERATOR FRAMEWORK (IF AVAILABLE) (#2)
TELCO GROUND BAR
COMMERCIAL POWER COMMON NEUTRAL/GROUND BOND (#2)
+24V POWER SUPPLY RETURN BAR (#2)
-48V POWER SUPPLT RETURN BAR (#2)
RECTIFIER FRAMES.

SECTION "A" - SURGE ABSORBERS

INTERIOR GROUND RING (#2)
EXTERNAL EARTH GROUND FIELD (BURIED GROUND RING) (#2)
METALLIC COLD WATER PIPE (IF AVAILABLE) (#2)
BUILDING STEEL (IF AVAILABLE) (#2)

MASTER GROUND BAR

NOT TO SCALE

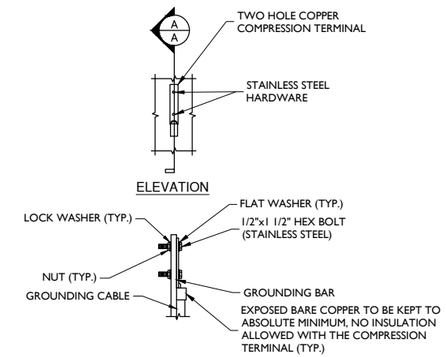

TYPICAL GROUND BAR CONNECTION DETAIL

NOT TO SCALE

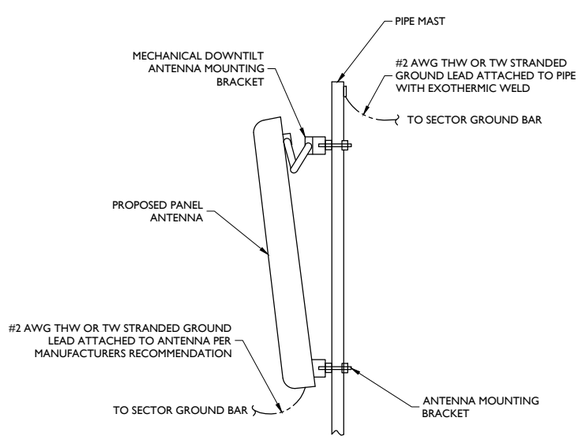

ANTENNA GROUNDING

NOT TO SCALE

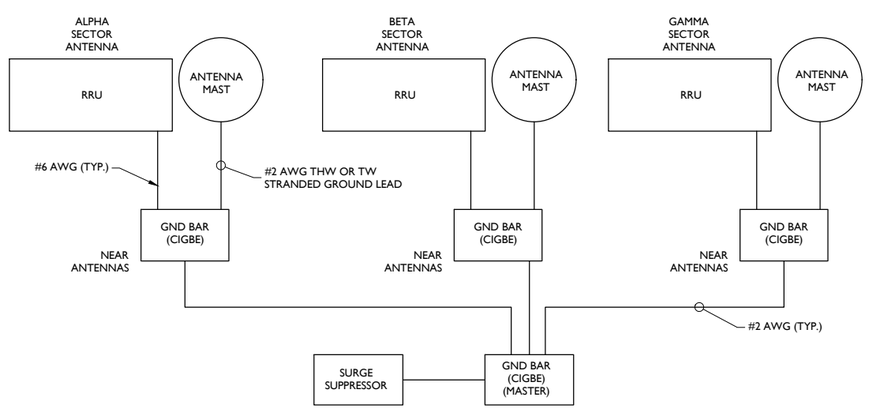

SCHEMATIC DIAGRAM GROUNDING SYSTEM

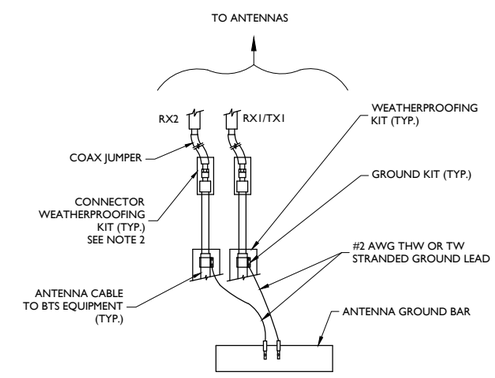

NOTES:

1. DO NOT INSTALL CABLE GROUND KIT AT A BEND AND ALWAYS DIRECT GROUND WIRE DOWN TO ANTENNA GROUND BAR.
2. WEATHER PROOFING SHALL BE TWO-PART TAPE KIT, COLD SHRINK SHALL NOT BE USED.

TYPICAL GROUND WIRE TO GROUNDING BAR

NOT TO SCALE

MASER CONSULTING
CONNECTICUT
Customer Loyalty *through* Client Satisfaction
www.maserconsulting.com
Engineers ■ Planners ■ Surveyors
Landscape Architects ■ Environmental Scientists

Copyright © 2019. Maser Consulting Connecticut All Rights Reserved. This drawing and all the information contained herein is authorized for use only by the party for whom the services were contracted or to whom it is certified. This drawing may not be copied, reused, disclosed, distributed or relied upon for any other purpose without the express written consent of Maser Consulting Connecticut.

at&t

smartlink

811 Know what's below. Call before you dig.

PROTECT YOURSELF
ALL STATES REQUIRE NOTIFICATION OF EXCAVATORS, DESIGNERS, OR ANY PERSON PREPARING TO DISTURB THE EARTH'S SURFACE ANYWHERE IN ANY STATE

FOR STATE SPECIFIC DIRECT PHONE NUMBERS VISIT: WWW.CALL811.COM

SCALE :	JOB NUMBER :
AS SHOWN	18946064A

REV	DATE	DESCRIPTION	DRAWN BY	CHECKED BY
.	.	.	.	.
.	.	.	.	.
.	.	.	.	.
.	.	.	.	.
.	.	.	.	.
2	01/18/19	REVISED PER COMMENTS	AJC	RA
1	12/21/18	REVISED PER COMMENTS	AJC	RA
0	12/7/18	ISSUED FOR REVIEW	AJC	RA

STATE OF CONNECTICUT
PETROS E. TSOUKALAS
CONNECTICUT PROFESSIONAL ENGINEER - LICENSE NUMBER: 32577#
32577

IT IS A VIOLATION OF LAW FOR ANY PERSON, UNLESS THEY ARE ACTING UNDER THE DIRECTION OF THE RESPONSIBLE LICENSED PROFESSIONAL ENGINEER, TO ALTER THIS DOCUMENT.

SITE NAME:

CLINTON MEADOW ROAD
FA# 10049127
SITE# CTL02230

46 MEADOW ROAD
CLINTON, CT 064113
MIDDLESEX COUNTY

RED BANK OFFICE
331 Newman Springs Road
Suite 203
Red Bank, NJ 07701-5669
Phone: .732.383.1950
Fax: .732.383.1984
email: solutions@maserconsulting.com

SHEET TITLE :
GROUNDING DETAILS

SHEET NUMBER :
G-1

M:\Projects\18946064A\CTL02230_ATV_CT_CD\dwg\G-1 By: AJCOA

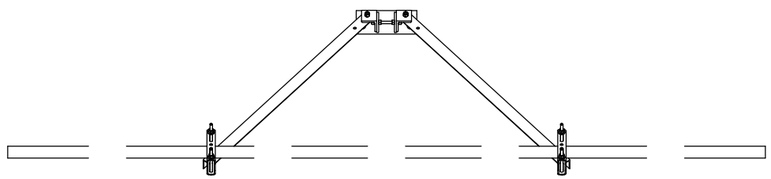

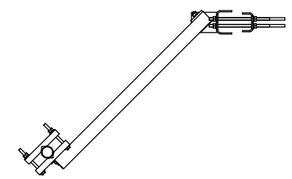

SITE PRO 1 P/N: SFS-V
NOT TO SCALE

PARTS LIST						
ITEM	QTY	PART NO.	PART DESCRIPTION	LENGTH	UNIT WT.	NET WT.
1	2	X-SPTB	SLIDING PIPE TIE BACK PLATE	5 1/2 in	5.87	11.74
2	2	X-TBCA	TIE BACK CLIP ANGLE		2.08	4.16
3	1	P2126	2-3/8" OD X 126" SCH 40 GALVANIZED PIPE	126 in	40.75	40.75
4	2	MCP	CLAMP HALF 1/2" THICK, 11-5/8" LONG	12 1/16 in	3.59	7.19
5	4	DCP	1/2" THICK, 5-3/4" CNTER TO CENTER CLAMP HALF	8 1/8 in	2.42	9.68
6	2	G58R-12	5/8" x 12" THREADED ROD (HDG.)		1.05	2.09
7	4	G58R-8	5/8" x 8" THREADED ROD (HDG.)		0.70	2.79
8	4	X-UB525S	5/8" X 2-5/8" X 4-1/2" X 2" U-BOLT (HDG.)		1.00	4.00
9	4	G5804	5/8" x 4" HDG HEX BOLT GR5		0.44	1.78
10	2	G5802	5/8" x 2" HDG HEX BOLT GR5		0.27	0.54
11	10	G58FW	5/8" HDG USS FLATWASHER	1/8 in	0.07	0.70
12	18	G58LW	5/8" HDG LOCKWASHER		0.03	0.47
13	20	G58NUT	5/8" HDG HEAVY 2H HEX NUT		0.13	2.60
					TOTAL WT. #	88.49

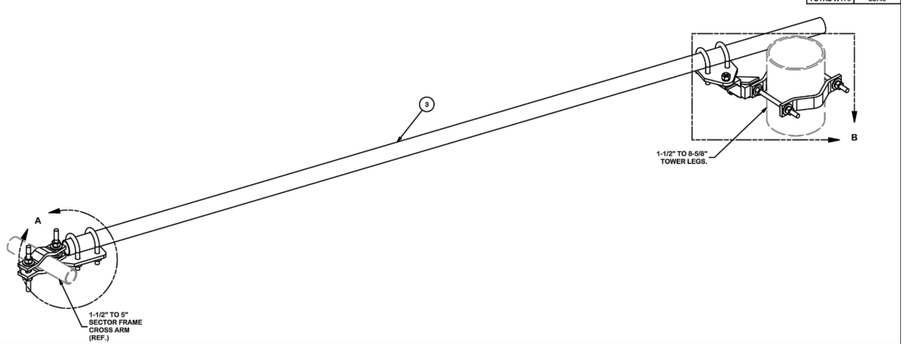

TOLERANCE NOTES

TOLERANCES ON DIMENSIONS, UNLESS OTHERWISE NOTED ARE:
SAWED, SHEARED AND GAS CUT EDGES *(± 0.030")*
DRILLED AND GAS CUT HOLES *(± 0.030")* - NO CONING OF HOLES
LASER CUT EDGES AND HOLES *(± 0.010")* - NO CONING OF HOLES
BENDS ARE ± 1/2 DEGREE
ALL OTHER MACHINING *(± 0.030")*
ALL OTHER ASSEMBLY *(± 0.060")*

PROPRIETARY NOTE:
THE INFORMATION AND CONCEPTS CONTAINED IN THIS DRAWING ARE PROPRIETARY INFORMATION OF VALMONT INDUSTRIES AND CONSIDERED A TRADE SECRET. ANY USE OR DISCLOSURE WITHOUT THE CONSENT OF VALMONT INDUSTRIES IS STRICTLY PROHIBITED.

DESCRIPTION: SLIDING PIPE TIE BACK ASSEMBLY

SITE PRO 1 — A valmont COMPANY
Engineering Support Team: 1-888-753-7446
Locations: New York, NY; Atlanta, GA; Los Angeles, CA; Plymouth, IN; Salem, OR; Dallas, TX

CFD NO.	DRAWN BY	ENG. APPROVAL	PART NO.	PAGE
	CEK 10/19/2016		SPTB	1 OF 3

CLASS	SUB	DRAWING USAGE	CHECKED BY	DWG. NO.
81	02	CUSTOMER	BMC 11/17/2016	SPTB

STRUCTURAL MODIFICATIONS
NOT TO SCALE

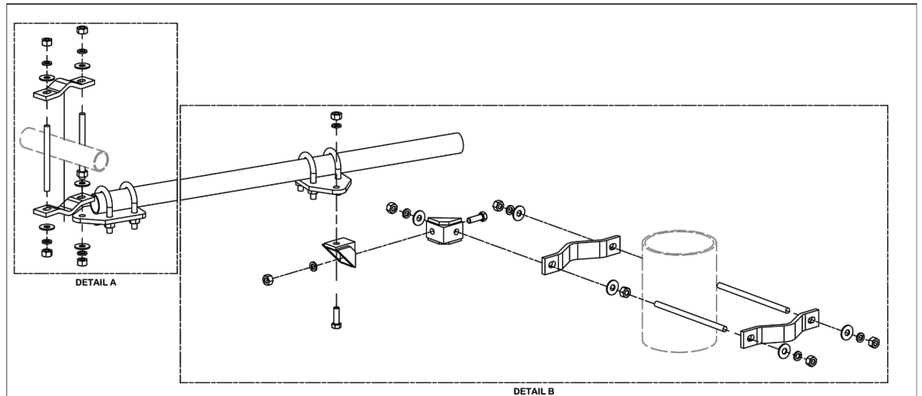

SEE PAGE 3 FOR HARDWARE DETAILS

TOLERANCE NOTES

TOLERANCES ON DIMENSIONS, UNLESS OTHERWISE NOTED ARE:
SAWED, SHEARED AND GAS CUT EDGES *(± 0.030")*
DRILLED AND GAS CUT HOLES *(± 0.030")* - NO CONING OF HOLES
LASER CUT EDGES AND HOLES *(± 0.010")* - NO CONING OF HOLES
BENDS ARE ± 1/2 DEGREE
ALL OTHER MACHINING *(± 0.030")*
ALL OTHER ASSEMBLY *(± 0.060")*

PROPRIETARY NOTE:
THE INFORMATION AND CONCEPTS CONTAINED IN THIS DRAWING ARE PROPRIETARY INFORMATION OF VALMONT INDUSTRIES AND CONSIDERED A TRADE SECRET. ANY USE OR DISCLOSURE WITHOUT THE CONSENT OF VALMONT INDUSTRIES IS STRICTLY PROHIBITED.

DESCRIPTION: SLIDING PIPE TIE BACK ASSEMBLY

SITE PRO 1 — A valmont COMPANY
Engineering Support Team: 1-888-753-7446
Locations: New York, NY; Atlanta, GA; Los Angeles, CA; Plymouth, IN; Salem, OR; Dallas, TX

CFD NO.	DRAWN BY	ENG. APPROVAL	PART NO.	PAGE
	CEK 10/19/2016		SPTB	2 OF 3

CLASS	SUB	DRAWING USAGE	CHECKED BY	DWG. NO.
81	02	CUSTOMER	BMC 11/17/2016	SPTB

MASER CONSULTING
CONNECTICUT

Customer Loyalty *through* Client Satisfaction
www.maserconsulting.com
Engineers ■ Planners ■ Surveyors
Landscape Architects ■ Environmental Scientists

Copyright © 2019. Maser Consulting Connecticut All Rights Reserved. This drawing and all the information contained herein is authorized for use only by the party for whom the services were contracted or to whom it is certified. This drawing may not be copied, reused, disclosed, distributed or relied upon for any other purpose without the express written consent of Maser Consulting Connecticut.

at&t

smartlink

811 Know what's below. Call before you dig.

PROTECT YOURSELF
ALL STATES REQUIRE NOTIFICATION OF EXCAVATORS, DESIGNERS, OR ANY PERSON PREPARING TO DISTURB THE EARTH'S SURFACE ANYWHERE IN ANY STATE

FOR STATE SPECIFIC DIRECT PHONE NUMBERS VISIT: WWW.CALL811.COM

SCALE :	JOB NUMBER :
AS SHOWN	18946064A

REV	DATE	DESCRIPTION	DRAWN BY	CHECKED BY
.	.	.	.	.
.	.	.	.	.
.	.	.	.	.
.	.	.	.	.
.	.	.	.	.
2	01/18/19	REVISED PER COMMENTS	AJC	RA
1	12/21/18	REVISED PER COMMENTS	AJC	RA
0	12/7/18	ISSUED FOR REVIEW	AJC	RA

STATE OF CONNECTICUT
PETROS E. SOUKALAS
CONNECTICUT PROFESSIONAL ENGINEER - LICENSE NUMBER: 32577
32577
PROFESSIONAL ENGINEER

IT IS A VIOLATION OF LAW FOR ANY PERSON, UNLESS THEY ARE ACTING UNDER THE DIRECTION OF THE RESPONSIBLE LICENSED PROFESSIONAL ENGINEER, TO ALTER THIS DOCUMENT.

SITE NAME:

CLINTON MEADOW ROAD
FA# 10049127
SITE# CTL02230

46 MEADOW ROAD
CLINTON, CT 064113
MIDDLESEX COUNTY

RED BANK OFFICE
331 Newman Springs Road
Suite 203
Red Bank, NJ 07701-5669
Phone: .732.383.1950
Fax: .732.383.1984

email: solutions@maserconsulting.com

SHEET TITLE :
STRUCTURAL DETAILS

SHEET NUMBER :
S-1

AJC-Adobe_4-MB-10049127_CTL02230_REV_1_CT_CD.Mapl5-1 By: AJCOA

Tower Engineering Solutions
Phone (972) 483-0607, Fax (972) 975-9615
1320 Greenway Drive, Suite 600, Irving, Texas 75038

Post-Mod Structural Analysis Report

Existing 195 ft Sabre Self Supporting Tower

Customer Name: SBA Communications Corp

Customer Site Number: CT01879-S

Customer Site Name: Clinton 4 CT

Carrier Name: AT&T (App#: 105228, V3)

Carrier Site ID / Name: CTL02230 / 2230 Clinton Meadow

Site Location: 46 Meadow Road

Clinton, Connecticut

Middlesex County

Latitude: 41.275205

Longitude: -72.497711

STATE OF CONNECTICUT
HANMING YOU
28931
LICENSED
PROFESSIONAL ENGINEER

3/27/19

Analysis Result:

Max Structural Usage: 98.5% [Pass]

Max Foundation Usage: 98.0% [Pass]

Report Prepared By : Delu Zhou

Tower Engineering Solutions
Phone (972) 483-0607, Fax (972) 975-9615
1320 Greenway Drive, Suite 600, Irving, Texas 75038

Post-Mod Structural Analysis Report

Existing 195 ft Sabre Self Supporting Tower

Customer Name: SBA Communications Corp

Customer Site Number: CT01879-S

Customer Site Name: Clinton 4 CT

Carrier Name: AT&T (App#: 105228, V3)

Carrier Site ID / Name: CTL02230 / 2230 Clinton Meadow

Site Location: 46 Meadow Road

Clinton, Connecticut

Middlesex County

Latitude: 41.275205

Longitude: -72.497711

Analysis Result:

Max Structural Usage: 98.5% [Pass]

Max Foundation Usage: 98.0% [Pass]

Report Prepared By : Delu Zhou

Introduction

The purpose of this report is to summarize the analysis results on the 195 ft Sabre Self Supporting Tower to support the proposed antennas and transmission lines in addition to those currently installed. Any existing modification listed under Sources of Information was assumed completed and was included in this analysis.

The proposed modification by **TES** listed under Sources of Information was considered completed and was included in this analysis.

Sources of Information

Tower Drawings	Sabre, Job # 00-10101, dated 11/19/99
Foundation Drawing	Sabre, Dwg # 9014022, dated 11/23/99
Geotechnical Report	JGI, Project # 99500G, dated 12/13/99 Original design soil parameters from Sabre Job # 00-10101, dated 11/23/99
Existing Modification	FDH, Project # 1465YH1400, dated 6/3/14; FDH, Project # 15BZTJ1400, dated 9/24/15 TES, Job # 32039, dated 1/10/2018
Proposed Modification	TES Job # 71440

Analysis Criteria

The rigorous analysis was performed in accordance with the requirements and stipulations of the ANSI/TIA/EIA 222-G**.** In accordance with this standard, the structure was analyzed using **TESTowers,** a proprietary analysis software. The program considers the structure as an elastic 3-D model with second-order effects and temperature effects incorporated in the analysis. The analysis was performed using multiple wind directions.

Wind Speed Used in the Analysis:	Ultimate Design Wind Speed V_{ult} = 135.0 mph (3-Sec. Gust)/ Nominal Design Wind Speed V_{asd} = 105.0 mph (3-Sec. Gust)
Basic Wind Speed with Ice:	50 mph (3-Sec. Gust) with 3/4" radial ice concurrent
Operational Wind Speed:	60 mph + 0" Radial ice
Standard/Codes:	ANSI/TIA/EIA 222-G / 2015 IBC / 2018 Connecticut State Building Code
Exposure Category:	D
Structure Class:	II
Topographic Category:	1
Crest Height:	0 ft.

This structural analysis is based upon the tower being classified as a Structure Class II; however, if a different classification is required subsequent to the date hereof, the tower classification will be changed to meet such requirement and a new structural analysis will be run.

Existing Antennas, Mounts and Transmission Lines

The table below summarizes the antennas, mounts and transmission lines that were considered in the analysis as existing on the tower.

Items	Elevation (ft)	Qty.	Antenna Descriptions	Mount Type & Qty.	Transmission Lines	Owner
1	194.0	3	AIR 21 B2A B4P - Panel	(3) Sector Frame	(12) 1 5/8" (1) 1 5/8" Fiber	T-Mobile
2		3	AIR 21 B4A B2P - Panel			
3	192.5	3	KRY 112 144/1			
4	184.0	1	PD1151	Direct	(1) 7/8"	Town of Clinton
5	182.0	3	RFS APXVTM14-C-120 - Panel	(3) Sector Frame	(4) 1 1/4" Hybrid	Sprint Nextel
6		3	RFS APXVSPP18-C-A20 - Panel			
7		3	ALU TD-RRH8x20-25 - RRH			
8		3	ALU 1900 MHz RRH - RRH			
9		3	ALU 800 MHz RRH			
10		4	RFS ACU-A20-N RET			
11		3	ALU ALU 800 MHz Filter			
12	162.0	6	SBNHH-1D65B - Panel	(3) Sector Frame	(10) 1 5/8" (2) 1 5/8" Fiber	Verizon
13		4	LPA-80063-4CF - Panel			
14		2	LPA-80063/6CF - Panel			
15		6	FD9R6004/2C-3L			
16		3	RRH2X60-AWS			
17		3	RRH2X60-PCS			
18		3	RRH2X60-700			
19		2	DB-T1-6Z-8AB-0Z			
20	150.5	6	Powerwave 7770 - Panel	(3) Sector Frame	(12) 1 5/8" (1) 1/2" Fiber & (2) 3/4" DC in (1) 3" Flex Conduit	AT&T
21		3	Andrew SBNHH-1D65A - Panel			
22		6	Powerwave TT19-08BP111-001 - TMA			
23		12	Powerwave 7020			
24		3	Ericsson RRUS 11 - RRU			
25		3	Ericsson RRUS 32 B2 - RRU			
26		1	Raycap DC6-48-60-18-8F			
27	141.5	3	SD312HL	(3) Side Arm	(4) 7/8"	Town of Clinton
28	102.0	1	Radiowave RDH4518A - Dish	Pipe	(2) CAT5e	
29	75.0	1	GPS	Direct	(1) 1/2	Verizon

Proposed Carrier's Final Configuration of Antennas, Mounts and Transmission Lines

Information pertaining to the proposed carrier's final configuration of antennas and transmission lines was provided by SBA Communications Corp. The proposed antennas and lines are listed below.

Items	Elevation (ft)	Qty.	Antenna Descriptions	Mount Type & Qty.	Transmission Lines	Owner
20	150.5	3	Kathrein - 800 10964 - Panel	(3) Sector Frame w/ (3) Stabilizer Arm (3) SFS-V Kickers	(1) 3" Conduit (6) 3/4" DC (2) 1/2" Fiber (12) 1 5/8"	AT&T
21		6	Andrew - SBNHH-1D65A - Panel			
22		3	Kathrein - 7770 - Panel			
23		6	Powerwave TT19-08BP111-001 TMA			
24		12	Powerwave 7020.00 RET			
25		3	Ericsson 4449 B5 B12 RRU			
26		3	Ericsson RRUS 32 RRU			
27		3	Ericsson RRUS 8843 B2 B66A RRU			
28		3	Raycap DC6-48-60-18-8F COVP			

See the attached coax layout for the line placement considered in the analysis.

Analysis Results

The results of the structural analysis, performed for the wind and ice loading and antenna equipment as defined above, are summarized as the following:

Tower Component	Legs	Diagonals	Horizontals
Max. Usage:	**98.5%**	**81.5%**	**14.1%**
Pass/Fail	**Pass**	**Pass**	**Pass**

Foundations

	Compression (Kips)	Uplift (Kips)	Shear (Kips)
Analysis Reactions	505.5	445.2	54.2

The foundation has been investigated using the supplied documents and soils report and was found adequate. Therefore, no modification to the foundation will be required.

Operational Condition (Rigidity):

The maximum twist and sway of the microwave dishes under the operational wind speed as specified in the Analysis Criteria are listed in the table below:

Elevation (ft)	Antenna / Dish	Carrier	Twist (deg)	Sway (deg)
102.0	Radiowave RDH4518A - Dish	Town of Clinton	0.005	0.149

It is recommended that the carriers review the twist and sway values of the microwave dishes.

Conclusions

Based on the analysis results, the structure and its foundation will be adequate to safely support the existing and proposed equipment and meet the minimum requirements per the design ANSI/TIA/EIA 222-G standards under a basic wind speed of 105 mph no ice and 50 mph with 3/4" radial ice after the following proposed modification is successfully completed.

- Proposed modification design drawing by **TES** Job # 71440

Pre-Mod Installation Determination

We have also checked this tower to determine if the proposed AT&T equipment loading can be installed prior to the completion of the required modifications. We ran a reduced wind loading case as required by TIA-322 considering a construction period of no more than 6 months.

The tower and foundations passed, so the Carrier can proceed and install their proposed loading prior to the mods completion. Please be aware that this approval is being provided and is based on the method outlined in TIA-322. This approval is not a blanket approval and there is still a risk that the tower will experience a wind event that cannot be predicted by TIA-322 or our Engineers. In the event of an unforeseen wind event, Tower Engineering Solutions will not be liable nor responsible for damage to the tower or the Carriers equipment. Additionally, the tower cannot go beyond the 6 month construction period without the modifications being completed. If the modifications cannot be completed within 6 months from the completed installation of the Carrier's proposed equipment, TES must be notified immediately for further review.

Standard Conditions

1. This analysis was performed based on the information supplied to **(TES) Tower Engineering Solutions, LLC.** Verification of the information provided was not included in the Scope of Work for **TES**. The accuracy of the analysis is dependent on the accuracy of the information provided.

2. The structural analysis was performance based upon the evidence available at the time of this report. All information provided by the client is considered to be accurate.

3. The analyses will be performed based on the codes as specified by the client or based on the best knowledge of the engineering staff of **TES**. In the absence of information to the contrary, all work will be performed in accordance with the latest relevant revision of ANSI/TIA-222. If wind speed and/or ice loads are different from the minimum values recommended by the EIA/TIA-222 standard or other codes, **TES** should be notified in writing and the applicable minimum values provided by the client.

4. The configuration of the existing mounts, antennas, coax and other appurtenances were supplied by the customer for the current structural analysis. **TES** has not visited the tower site to verify the adequacy of the information provided. If there is any discrepancy found in the report regarding the existing conditions, **TES** should be notified immediately to evaluate the effect of the discrepancy on the analysis results.

5. The client will assume responsibility for rework associated with the differences in initially provided information, including tower and foundation information, existing and/or proposed equipment and transmission lines.

6. If a feasibility analysis was performed, final acceptance of changed conditions shall be based upon a rigorous structural analysis.

Structure: CT01879-S-SBA

Site Name:	Clinton 4 CT			**Code:**	EIA/TIA-222-G	3/27/2019
Type:	Self Support	**Base Shape:**	Triangle	**Basic WS:**	105.00	
Height:	195.00 (ft)	**Base Width:**	23.00	**Basic Ice WS:**	50.00	
Base Elev:	0.00 (ft)	**Top Width:**	5.00	**Operational WS:**	60.00	Page: 1

Tower Engineering Solutions

Section Properties

Sect	Leg Members	Diagonal Members	Horizontal Members
1-2	PX 8" DIA PIPE	SAE 4X4X0.375	
3-5	MOD 8"PST+5x5x3/8L	SAE 4X4X0.375	
6-7	MOD 6"PX+L4x4x3/8	SAE 4X4X0.375	
8	MOD 6"PST+4x4x3/8L	SAE 3X3X0.375	
9-10	PX 5" DIA PIPE	SAE 2.5X2.5X0.375	
11-12	PX 4" DIA PIPE	SAE 2.5X2.5X0.25	
13	PX 3" DIA PIPE	SAE 2.5X2.5X0.375	
14	PST 3" DIA PIPE	SAE 1.75X1.75X0.1875	SAE 1.75X1.75X0.1875
15	PST 2" DIA PIPE	SAE 1.75X1.75X0.1875	SAE 1.75X1.75X0.1875

Discrete Appurtenances

Attach Elev (ft)	Force Elev (ft)	Qty	Description
194.00	194.00	3	AIR 21 B2A B4P
194.00	194.00	3	AIR 21 B4A B2P
194.00	194.00	3	Sector Frame
192.50	192.50	3	KRY 112 144/1
184.00	192.60	1	PD1151
182.00	182.00	3	Sector Frame
182.00	182.00	3	APXVTM14-C-120
182.00	182.00	3	APXVSPP18-C-A20
182.00	182.00	3	TD-RRH8x20-25
182.00	182.00	3	1900 MHz RRH
182.00	182.00	3	800 MHz RRH
182.00	182.00	4	ACU-A20-N
182.00	182.00	3	ALU 800 MHz Filter
162.00	162.00	3	Sector Frame
162.00	162.00	6	SBNHH-1D65B
162.00	162.00	4	LPA-80063-4CF
162.00	162.00	2	LPA-80063/6CF
162.00	162.00	6	FD9R6004/2C-3L
162.00	162.00	3	RRH2X60-AWS
162.00	162.00	3	RRH2X60-PCS
162.00	162.00	3	RRH2X60-700
162.00	162.00	2	DB-T1-6Z-8AB-0Z
150.50	150.50	3	Sector Frame
150.50	150.50	1	(3) Stabilizer Kit + SFS-V Kit
150.50	150.50	3	7770
150.50	150.50	6	SBNHH-1D65A
150.50	150.50	6	TT19-08BP111-001
150.50	150.50	12	Powerwave 7020.00 RET
150.50	150.50	3	Raycap DC6-48-60-18-8F COVP
150.50	150.50	3	800 10964
150.50	150.50	3	Ericsson 4449 B5 B12 RRU
150.50	150.50	3	Ericsson RRUS 32 RRU
150.50	150.50	3	Ericsson RRUS 8843 B2 B66A RRU
141.50	141.50	3	Side Arm
141.50	144.96	3	SD312HL
102.00	102.00	1	Radiowave RDH4518A
102.00	102.00	1	Pipe Mount
75.00	75.00	1	GPS

Linear Appurtenances

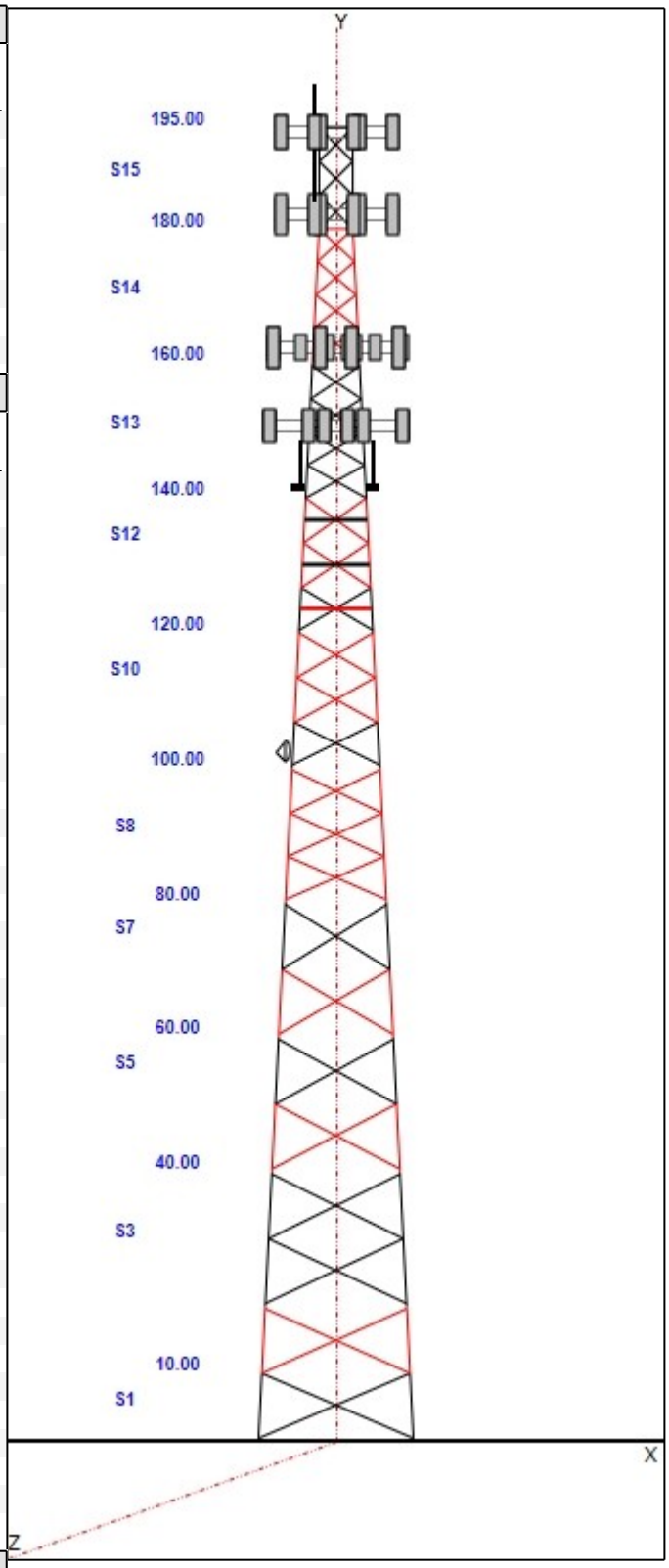

Copyright © 2019 by Tower Engineering Solutions, LLC. All rights reserved.

Structure: CT01879-S-SBA

Site Name:	Clinton 4 CT			**Code:**	EIA/TIA-222-G	3/27/2019
Type:	Self Support	**Base Shape:**	Triangle	**Basic WS:**	105.00	
Height:	195.00 (ft)	**Base Width:**	23.00	**Basic Ice WS:**	50.00	
Base Elev:	0.00 (ft)	**Top Width:**	5.00	**Operational WS:**	60.00	Page: 2

Elev From (ft)	Elev To (ft)	Qty	Description
0.00	195.00	1	Climbing Ladder
0.00	195.00	1	Safety Cable
0.00	194.00	12	1 5/8" Coax
0.00	194.00	1	1 5/8" Fiber
0.00	194.00	1	W/G Ladder
0.00	184.00	1	7/8" Coax
0.00	182.00	4	1 1/4" Hybrid
0.00	182.00	1	W/G Ladder
0.00	162.00	10	1 5/8" Coax
0.00	162.00	2	1 5/8" Fiber
0.00	162.00	1	W/G Ladder
0.00	150.50	6	1 5/8" Coax
0.00	150.50	6	1 5/8" Coax
0.00	150.50	2	1/2" Fiber
0.00	150.50	1	3" Conduit
0.00	150.50	6	3/4" DC
0.00	150.50	1	W/G Ladder
0.00	141.50	4	7/8" Coax
0.00	102.00	2	CAT5e
0.00	75.00	1	1/2" Coax

Base Reactions

Leg			Overturning		
Max Uplift:	-445.20	(kips	Moment:	9627.81	(ft-kips)
Max Down:	505.47	(kips	Total Down:	66.35	(kips)
Max Shear:	54.23	(kips	Total Shear:	90.05	(kips)

Copyright © 2019 by Tower Engineering Solutions, LLC. All rights reserved.

Structure: CT01879-S-SBA

Site Name:	Clinton 4 CT			**Code:**	EIA/TIA-222-G	3/27/2019
Type:	Self Support	**Base Shape:**	Triangle	**Basic WS:**	105.00	
Height:	195.00 (ft)	**Base Width:**	23.00	**Basic Ice WS:**	50.00	
Base Elev:	0.00 (ft)	**Top Width:**	5.00	**Operational WS:**	60.00	Page: 3

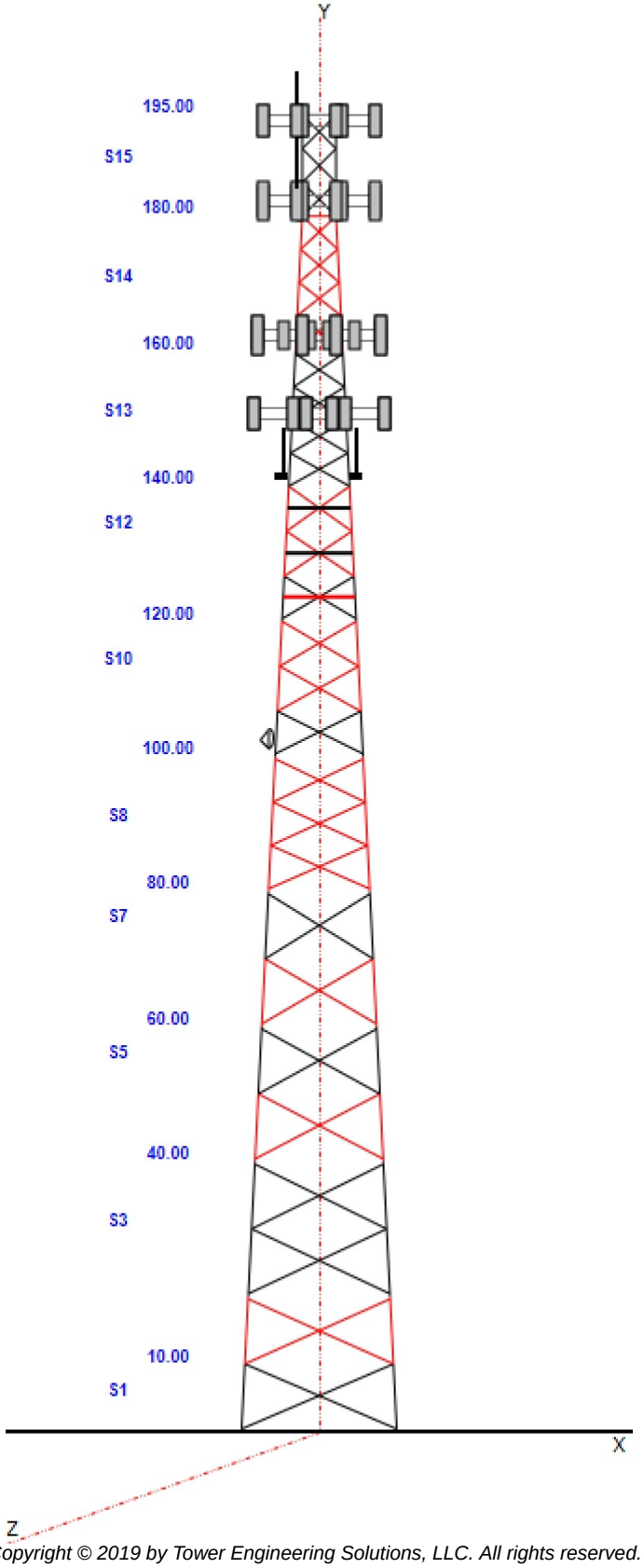

Copyright © 2019 by Tower Engineering Solutions, LLC. All rights reserved.

Structure: CT01879-S-SBA - Coax Line Placement

Type: Self Support
Site Name: Clinton 4 CT
Height: 195.00 (ft)

11/30/2017

Tower Engineering Solutions

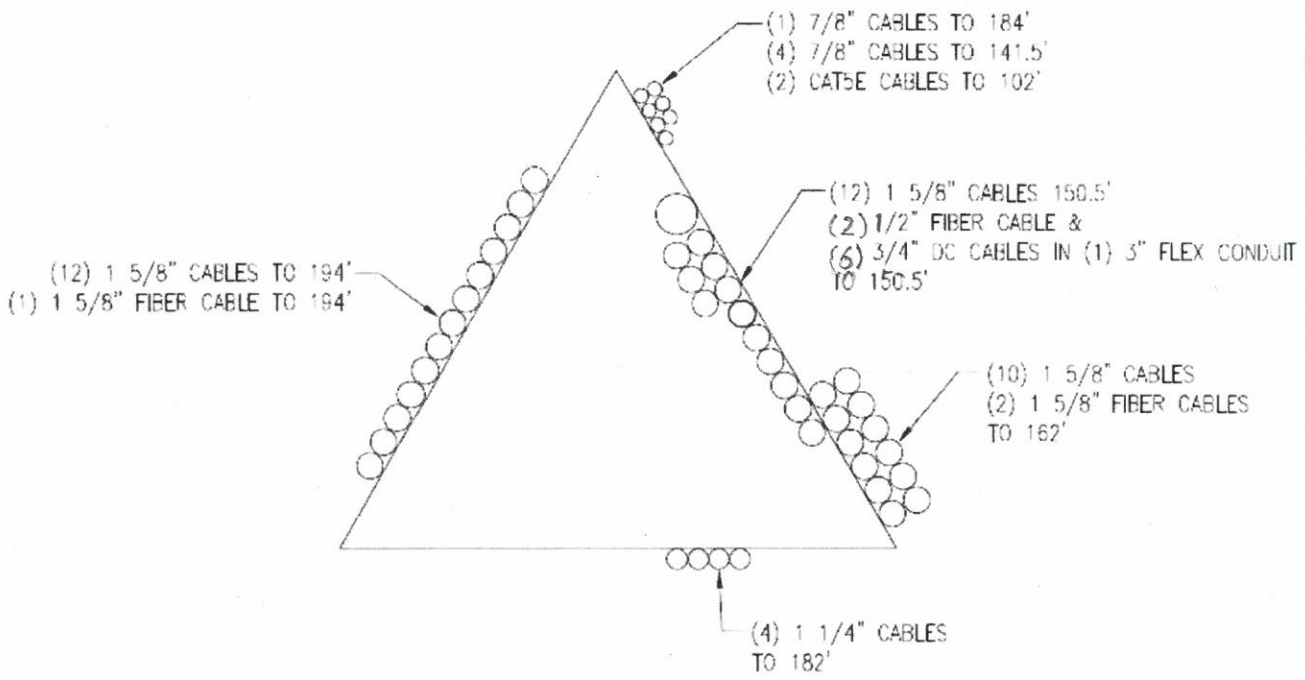

Copyright © 2017 by Tower Engineering Solutions, LLC. All rights reserved.

Loading Summary

Structure:	CT01879-S-SBA		**Code:**	EIA/TIA-222-G	3/27/2019
Site Name:	Clinton 4 CT		**Exposure:**	D	
Height:	195.00 (ft)		**Crest Height:**	0.00	
Base Elev:	0.000 (ft)		**Site Class:**	D - Stiff Soil	
Gh:	0.85	**Topography:** 1	**Struct Class:**	II	Page: 5

Tower Engineering Solutions

Discrete Appurtenances Properties

Attach Elev (ft)	Description	Qty	No Ice Weight (lb)	No Ice CaAa (sf)	Ice Weight (lb)	Ice CaAa (sf)	Len (in)	Width (in)	Depth (in)	Ka	Orientation Factor	Vert Ecc (ft)
194.00	AIR 21 B2A B4P	3	91.50	6.090	264.95	7.214	56.000	12.100	7.900	0.90	0.86	0.000
194.00	AIR 21 B4A B2P	3	90.40	6.090	263.85	7.214	56.000	12.100	7.900	0.90	0.86	0.000
194.00	Sector Frame	3	500.00	17.500	1213.84	31.741	0.000	0.000	0.000	0.75	0.67	0.000
192.50	KRY 112 144/1	3	11.00	0.410	22.02	0.896	6.900	6.100	2.700	0.80	0.67	0.000
184.00	PD1151	1	20.00	4.820	243.60	11.145	206.400	2.800	2.800	1.00	1.00	8.600
182.00	Sector Frame	3	500.00	17.500	1206.88	31.602	0.000	0.000	0.000	0.75	0.67	0.000
182.00	APXVTM14-C-120	3	56.00	6.340	218.85	7.468	56.300	12.600	6.300	0.80	0.79	0.000
182.00	APXVSPP18-C-A20	3	57.00	8.020	259.69	9.332	72.000	11.800	7.000	0.80	0.83	0.000
182.00	TD-RRH8x20-25	3	70.00	4.050	182.15	4.874	26.100	18.600	6.700	0.80	0.67	0.000
182.00	1900 MHz RRH	3	44.00	3.800	154.54	5.207	23.000	13.000	17.000	0.80	0.67	0.000
182.00	800 MHz RRH	3	53.00	2.490	127.89	3.648	19.700	13.000	10.800	0.80	0.67	0.000
182.00	ACU-A20-N	4	1.00	0.140	5.35	0.441	4.000	2.000	3.500	0.80	0.67	0.000
182.00	ALU 800 MHz Filter	3	8.80	0.780	26.67	1.435	10.000	8.000	3.000	0.80	0.67	0.000
162.00	Sector Frame	3	500.00	17.500	1206.88	31.602	0.000	0.000	0.000	0.75	0.67	0.000
162.00	SBNHH-1D65B	6	40.60	8.080	245.24	9.389	72.000	11.900	7.100	0.80	0.81	0.000
162.00	LPA-80063-4CF	4	20.00	6.150	228.53	7.197	47.400	15.200	13.100	0.80	0.92	0.000
162.00	LPA-80063/6CF	2	27.00	9.600	319.21	10.971	70.900	15.000	13.100	0.80	0.94	0.000
162.00	FD9R6004/2C-3L	6	3.10	0.360	11.23	0.809	5.800	6.500	1.500	0.80	0.67	0.000
162.00	RRH2X60-AWS	3	55.00	3.500	136.02	4.299	37.000	11.000	6.000	0.80	0.67	0.000
162.00	RRH2X60-PCS	3	55.00	2.200	140.85	2.845	22.000	12.000	9.400	0.80	0.67	0.000
162.00	RRH2X60-700	3	55.00	3.500	136.02	4.299	37.000	11.000	6.000	0.80	0.67	0.000
162.00	DB-T1-6Z-8AB-0Z	2	18.90	4.800	164.77	5.685	24.000	24.000	10.000	0.80	0.71	0.000
150.50	Sector Frame	3	450.00	14.000	801.84	21.037	0.000	0.000	0.000	0.75	0.75	0.000
150.50	(3) Stabilizer Kit + SFS-V Kit	1	180.00	8.100	406.18	16.582	0.000	0.000	0.000	1.00	1.00	0.000
150.50	7770	3	35.00	5.500	170.17	6.565	55.000	11.000	5.000	0.80	0.73	0.000
150.50	SBNHH-1D65A	6	33.50	5.880	191.86	6.960	55.000	11.900	7.100	0.80	0.83	0.000
150.50	TT19-08BP111-001	6	16.00	0.640	36.24	1.233	9.900	6.700	5.400	0.80	0.50	0.000
150.50	Powerwave 7020.00 RET	12	2.20	0.400	12.43	0.884	4.900	8.300	2.400	0.80	0.50	0.000
150.50	Raycap DC6-48-60-18-8F COVP	3	32.80	0.920	96.57	1.358	24.000	11.000	18.500	0.80	0.57	0.000
150.50	800 10964	3	83.80	10.000	309.47	11.299	59.000	20.000	6.390	0.80	0.71	0.000
150.50	Ericsson 4449 B5 B12 RRU	3	73.00	1.970	127.88	2.517	14.960	13.190	10.430	0.80	0.57	0.000
150.50	Ericsson RRUS 32 RRU	3	77.00	1.650	125.49	2.230	20.900	9.500	3.300	0.80	0.57	0.000
150.50	Ericsson RRUS 8843 B2 B66A RRU	3	72.00	1.640	119.30	2.156	14.900	13.200	10.900	0.80	0.57	0.000
141.50	Side Arm	3	120.00	4.500	223.49	9.685	0.000	0.000	0.000	0.75	0.75	0.000
141.50	SD312HL	3	10.30	3.450	107.58	6.230	83.100	3.500	18.900	1.00	1.00	3.462
102.00	Radiowave RDH4518A	1	110.00	8.920	276.38	10.612	0.000	0.000	0.000	1.00	1.00	0.000
102.00	Pipe Mount	1	100.00	2.000	180.71	3.345	0.000	0.000	0.000	1.00	1.00	0.000
75.00	GPS	1	10.00	1.000	37.36	1.664	12.000	9.000	6.000	1.00	1.00	0.000
	Totals:	**125**	**10,483.20**		**29,032.88**						**Number of Appurtenances :**	**38**

Copyright © 2019 by Tower Engineering Solutions, LLC. All rights reserved.

Linear Appurtenances Properties

Elev. From (ft)	Elev. To (ft)	Description	Qty	Width (in)	Weight (lb/ft)	Pct In Block	Spread On Faces	Bundling Arrangement	Cluster Dia (in)	Out of Zone	Spacing (in)	Orientation Factor	Ka Override
0.00	195.00	Climbing Ladder	1	1.00	6.90	100.00	2	Individual NR		N	1.00	1.00	
0.00	195.00	Safety Cable	1	0.38	0.27	100.00	2	Individual NR		N	1.00	1.00	
0.00	194.00	1 5/8" Coax	12	1.98	1.04	100.00	1	Individual IR		N	1.00	1.00	
0.00	194.00	1 5/8" Fiber	1	1.63	1.10	100.00	1	Individual NR		N	1.00	1.00	
0.00	194.00	W/G Ladder	1	1.00	6.00	100.00	1	Individual NR		N	1.00	1.00	
0.00	184.00	7/8" Coax	1	1.11	0.52	100.00	2	Individual NR		N	1.00	1.00	
0.00	182.00	1 1/4" Hybrid	4	1.55	0.66	100.00	3	Individual IR		N	0.50	1.00	
0.00	182.00	W/G Ladder	1	1.00	6.00	100.00	3	Individual NR		N	1.00	1.00	
0.00	162.00	1 5/8" Coax	10	1.98	1.04	50.00	2	Block		N	0.40	1.00	
0.00	162.00	1 5/8" Fiber	2	1.63	1.10	50.00	2	Block		N	0.40	1.00	
0.00	162.00	W/G Ladder	1	1.00	6.00	100.00	2	Individual NR		N	1.00	1.00	
0.00	150.50	1 5/8" Coax	6	1.98	1.04	100.00	2	Individual IR		N	1.00	1.00	0
0.00	150.50	1 5/8" Coax	6	1.98	1.04	50.00	2	Block		N	0.40	1.00	
0.00	150.50	1/2" Fiber	2	0.50	0.16	50.00	1	Block		N	1.00	1.00	
0.00	150.50	3" Conduit	1	3.00	1.78	100.00	2	Individual NR		N	1.00	1.00	
0.00	150.50	3/4" DC	6	0.75	0.40	50.00	1	Block		N	1.00	1.00	
0.00	150.50	W/G Ladder	1	1.00	6.00	100.00	2	Individual NR		N	1.00	1.00	
0.00	141.50	7/8" Coax	4	1.11	0.52	50.00	2	Block		N	0.40	1.00	
0.00	102.00	CAT5e	2	0.19	0.02	50.00	2	Block		N	0.50	1.00	
0.00	75.00	1/2" Coax	1	0.65	0.16	100.00	2	Individual NR		N	1.00	1.00	

Copyright © 2019 by Tower Engineering Solutions, LLC. All rights reserved.

Section Forces

Structure:	CT01879-S-SBA	**Code:**	EIA/TIA-222-G	3/27/2019	
Site Name:	Clinton 4 CT	**Exposure:**	D		
Height:	195.00 (ft)	**Crest Height:**	0.00		
Base Elev:	0.000 (ft)	**Site Class:**	D - Stiff Soil		
Gh:	0.85 **Topography:** 1	**Struct Class:**	II	Page: 7	

Tower Engineering Solutions

Load Case: 1.2D + 1.6W Normal Wind — 1.2D + 1.6W 105 mph Wind at Normal To Face

Wind Load Factor: 1.60 — **Wind Importance Factor:** 1.00

Dead Load Factor: 1.20

Ice Dead Load Factor: 0.00 — **Ice Importance Factor:** 1.00

Sect Seq	Wind Height (ft)	qz (psf)	Total Flat Area (sqft)	Total Round Area (sqft)	Ice Round Area (sqft)	Sol Ratio	Cf	Df	Dr	Ice Thick (in)	Eff Area (sqft)	Linear Area (sqft)	Ice Linear Area (sqft)	Total Weight (lb)	Weight Ice (lb)	Struct Force (lb)	Linear Force (lb)	Total Force (lb)
1	5.0	24.71	15.825	14.40	0.00	0.13	2.85	1.00	1.00	0.00	21.71	67.74	0.00	4,214.2	0.0	2076.52	1552.21	3,628.72
2	15.0	24.72	15.237	14.40	0.00	0.13	2.83	1.00	1.00	0.00	21.15	67.74	0.00	4,152.0	0.0	2014.20	1552.56	3,566.75
3	30.0	27.88	28.213	41.18	0.00	0.17	2.72	1.00	1.00	0.00	45.77	135.48	0.00	7,923.0	0.0	4716.14	3502.92	8,219.06
4	45.0	29.92	13.208	20.59	0.00	0.17	2.69	1.00	1.00	0.00	22.08	67.74	0.00	3,866.4	0.0	2415.06	1879.42	4,294.48
5	55.0	30.98	12.642	20.59	0.00	0.18	2.67	1.00	1.00	0.00	21.58	67.74	0.00	3,806.5	0.0	2424.68	1946.17	4,370.85
6	65.0	31.90	12.188	16.14	0.00	0.16	2.72	1.00	1.00	0.00	19.06	67.74	0.00	3,651.5	0.0	2250.18	2003.54	4,253.72
7	75.0	32.70	11.639	16.14	0.00	0.17	2.70	1.00	1.00	0.00	18.57	67.47	0.00	3,592.4	0.0	2227.64	2045.36	4,273.00
8	90.0	33.75	21.896	32.28	0.00	0.18	2.65	1.00	1.00	0.00	35.97	134.39	0.00	6,307.8	0.0	4382.41	4204.60	8,587.02
9	103.3	34.57	5.694	6.19	0.00	0.14	2.82	1.00	1.00	0.00	8.41	44.75	0.00	1,713.8	0.0	1116.97	1433.21	2,550.18
10	113.3	35.13	10.812	12.38	0.00	0.14	2.80	1.00	1.00	0.00	16.25	89.36	0.00	3,367.0	0.0	2171.24	2907.93	5,079.17
11	123.3	35.65	7.214	5.01	0.00	0.17	2.71	1.00	1.00	0.00	9.71	44.69	0.00	1,495.7	0.0	1277.42	1514.74	2,792.15
12	133.3	36.14	13.498	10.02	0.00	0.18	2.68	1.00	1.00	0.00	18.51	89.38	0.00	2,925.4	0.0	2437.15	3069.27	5,506.42
13	150.0	36.89	15.173	11.69	0.00	0.16	2.73	1.00	1.00	0.00	21.51	108.17	0.00	3,869.5	0.0	2943.26	3932.53	6,875.78
14	170.0	37.70	9.382	11.69	0.00	0.17	2.71	1.00	1.00	0.00	15.71	62.48	0.00	1,894.7	0.0	2181.11	2383.08	4,564.18
15	187.5	38.35	6.700	5.94	0.00	0.16	2.73	1.00	1.00	0.00	10.08	34.08	0.00	988.1	0.0	1433.57	1295.50	2,729.07
														53,768.1	**0.0**			**71,290.57**

Load Case: 1.2D + 1.6W 60° Wind — 1.2D + 1.6W 105 mph Wind at 60° From Face

Wind Load Factor: 1.60 — **Wind Importance Factor:** 1.00

Dead Load Factor: 1.20

Ice Dead Load Factor: 0.00 — **Ice Importance Factor:** 1.00

Sect Seq	Wind Height (ft)	qz (psf)	Total Flat Area (sqft)	Total Round Area (sqft)	Ice Round Area (sqft)	Sol Ratio	Cf	Df	Dr	Ice Thick (in)	Eff Area (sqft)	Linear Area (sqft)	Ice Linear Area (sqft)	Total Weight (lb)	Weight Ice (lb)	Struct Force (lb)	Linear Force (lb)	Total Force (lb)
1	5.0	24.71	15.825	14.40	0.00	0.13	2.85	0.80	1.00	0.00	18.55	67.74	0.00	4,214.2	0.0	1773.83	1552.21	3,326.03
2	15.0	24.72	15.237	14.40	0.00	0.13	2.83	0.80	1.00	0.00	18.10	67.74	0.00	4,152.0	0.0	1723.94	1552.56	3,276.49
3	30.0	27.88	28.213	41.18	0.00	0.17	2.72	0.80	1.00	0.00	40.13	135.48	0.00	7,923.0	0.0	4134.79	3502.92	7,637.71
4	45.0	29.92	13.208	20.59	0.00	0.17	2.69	0.80	1.00	0.00	19.44	67.74	0.00	3,866.4	0.0	2126.10	1879.42	4,005.52
5	55.0	30.98	12.642	20.59	0.00	0.18	2.67	0.80	1.00	0.00	19.05	67.74	0.00	3,806.5	0.0	2140.62	1946.17	4,086.80
6	65.0	31.90	12.188	16.14	0.00	0.16	2.72	0.80	1.00	0.00	16.62	67.74	0.00	3,651.5	0.0	1962.38	2003.54	3,965.92
7	75.0	32.70	11.639	16.14	0.00	0.17	2.70	0.80	1.00	0.00	16.24	67.47	0.00	3,592.4	0.0	1948.36	2045.36	3,993.72
8	90.0	33.75	21.896	32.28	0.00	0.18	2.65	0.80	1.00	0.00	31.59	134.39	0.00	6,307.8	0.0	3848.91	4204.60	8,053.52
9	103.3	34.57	5.694	6.19	0.00	0.14	2.82	0.80	1.00	0.00	7.27	44.75	0.00	1,713.8	0.0	965.73	1433.21	2,398.94
10	113.3	35.13	10.812	12.38	0.00	0.14	2.80	0.80	1.00	0.00	14.09	89.36	0.00	3,367.0	0.0	1882.36	2907.93	4,790.29
11	123.3	35.65	7.214	5.01	0.00	0.17	2.71	0.80	1.00	0.00	8.27	44.69	0.00	1,495.7	0.0	1087.59	1514.74	2,602.33
12	133.3	36.14	13.498	10.02	0.00	0.18	2.68	0.80	1.00	0.00	15.81	89.38	0.00	2,925.4	0.0	2081.63	3069.27	5,150.89
13	150.0	36.89	15.173	11.69	0.00	0.16	2.73	0.80	1.00	0.00	18.47	108.17	0.00	3,869.5	0.0	2527.96	3932.53	6,460.49
14	170.0	37.70	9.382	11.69	0.00	0.17	2.71	0.80	1.00	0.00	13.83	62.48	0.00	1,894.7	0.0	1920.54	2383.08	4,303.62
15	187.5	38.35	6.700	5.94	0.00	0.16	2.73	0.80	1.00	0.00	8.74	34.08	0.00	988.1	0.0	1242.95	1295.50	2,538.45
														53,768.1	**0.0**			**66,590.72**

Copyright © 2019 by Tower Engineering Solutions, LLC. All rights reserved.

Section Forces

Structure:	CT01879-S-SBA	**Code:**	EIA/TIA-222-G	3/27/2019	
Site Name:	Clinton 4 CT	**Exposure:**	D		
Height:	195.00 (ft)	**Crest Height:**	0.00		
Base Elev:	0.000 (ft)	**Site Class:**	D - Stiff Soil		
Gh:	0.85 **Topography:** 1	**Struct Class:**	II	Page: 8	

Tower Engineering Solutions

Load Case: 1.2D + 1.6W 90° Wind — 1.2D + 1.6W 105 mph Wind at 90° From Face

Wind Load Factor: 1.60
Dead Load Factor: 1.20
Ice Dead Load Factor: 0.00
Wind Importance Factor: 1.00
Ice Importance Factor: 1.00

Sect Seq	Wind Height (ft)	qz (psf)	Total Flat Area (sqft)	Total Round Area (sqft)	Ice Round Area (sqft)	Sol Ratio	Cf	Df	Dr	Ice Thick (in)	Eff Area (sqft)	Linear Area (sqft)	Ice Linear Area (sqft)	Total Weight (lb)	Weight Ice (lb)	Struct Force (lb)	Linear Force (lb)	Total Force (lb)
1	5.0	24.71	15.825	14.40	0.00	0.13	2.85	0.85	1.00	0.00	19.34	67.74	0.00	4,214.2	0.0	1849.50	1552.21	3,401.71
2	15.0	24.72	15.237	14.40	0.00	0.13	2.83	0.85	1.00	0.00	18.86	67.74	0.00	4,152.0	0.0	1796.50	1552.56	3,349.06
3	30.0	27.88	28.213	41.18	0.00	0.17	2.72	0.85	1.00	0.00	41.54	135.48	0.00	7,923.0	0.0	4280.13	3502.92	7,783.05
4	45.0	29.92	13.208	20.59	0.00	0.17	2.69	0.85	1.00	0.00	20.10	67.74	0.00	3,866.4	0.0	2198.34	1879.42	4,077.76
5	55.0	30.98	12.642	20.59	0.00	0.18	2.67	0.85	1.00	0.00	19.69	67.74	0.00	3,806.5	0.0	2211.64	1946.17	4,157.81
6	65.0	31.90	12.188	16.14	0.00	0.16	2.72	0.85	1.00	0.00	17.23	67.74	0.00	3,651.5	0.0	2034.33	2003.54	4,037.87
7	75.0	32.70	11.639	16.14	0.00	0.17	2.70	0.85	1.00	0.00	16.82	67.47	0.00	3,592.4	0.0	2018.18	2045.36	4,063.54
8	90.0	33.75	21.896	32.28	0.00	0.18	2.65	0.85	1.00	0.00	32.69	134.39	0.00	6,307.8	0.0	3982.29	4204.60	8,186.89
9	103.3	34.57	5.694	6.19	0.00	0.14	2.82	0.85	1.00	0.00	7.56	44.75	0.00	1,713.8	0.0	1003.54	1433.21	2,436.75
10	113.3	35.13	10.812	12.38	0.00	0.14	2.80	0.85	1.00	0.00	14.63	89.36	0.00	3,367.0	0.0	1954.58	2907.93	4,862.51
11	123.3	35.65	7.214	5.01	0.00	0.17	2.71	0.85	1.00	0.00	8.63	44.69	0.00	1,495.7	0.0	1135.05	1514.74	2,649.78
12	133.3	36.14	13.498	10.02	0.00	0.18	2.68	0.85	1.00	0.00	16.48	89.38	0.00	2,925.4	0.0	2170.51	3069.27	5,239.77
13	150.0	36.89	15.173	11.69	0.00	0.16	2.73	0.85	1.00	0.00	19.23	108.17	0.00	3,869.5	0.0	2631.79	3932.53	6,564.31
14	170.0	37.70	9.382	11.69	0.00	0.17	2.71	0.85	1.00	0.00	14.30	62.48	0.00	1,894.7	0.0	1985.68	2383.08	4,368.76
15	187.5	38.35	6.700	5.94	0.00	0.16	2.73	0.85	1.00	0.00	9.07	34.08	0.00	988.1	0.0	1290.60	1295.50	2,586.10
														53,768.1	**0.0**			**67,765.68**

Load Case: 0.9D + 1.6W Normal Wind — 0.9D + 1.6W 105 mph Wind at Normal To Face

Wind Load Factor: 1.60
Dead Load Factor: 0.90
Ice Dead Load Factor: 0.00
Wind Importance Factor: 1.00
Ice Importance Factor: 1.00

Sect Seq	Wind Height (ft)	qz (psf)	Total Flat Area (sqft)	Total Round Area (sqft)	Ice Round Area (sqft)	Sol Ratio	Cf	Df	Dr	Ice Thick (in)	Eff Area (sqft)	Linear Area (sqft)	Ice Linear Area (sqft)	Total Weight (lb)	Weight Ice (lb)	Struct Force (lb)	Linear Force (lb)	Total Force (lb)
1	5.0	24.71	15.825	14.40	0.00	0.13	2.85	1.00	1.00	0.00	21.71	67.74	0.00	3,160.7	0.0	2076.52	1552.21	3,628.72
2	15.0	24.72	15.237	14.40	0.00	0.13	2.83	1.00	1.00	0.00	21.15	67.74	0.00	3,114.0	0.0	2014.20	1552.56	3,566.75
3	30.0	27.88	28.213	41.18	0.00	0.17	2.72	1.00	1.00	0.00	45.77	135.48	0.00	5,942.3	0.0	4716.14	3502.92	8,219.06
4	45.0	29.92	13.208	20.59	0.00	0.17	2.69	1.00	1.00	0.00	22.08	67.74	0.00	2,899.8	0.0	2415.06	1879.42	4,294.48
5	55.0	30.98	12.642	20.59	0.00	0.18	2.67	1.00	1.00	0.00	21.58	67.74	0.00	2,854.9	0.0	2424.68	1946.17	4,370.85
6	65.0	31.90	12.188	16.14	0.00	0.16	2.72	1.00	1.00	0.00	19.06	67.74	0.00	2,738.6	0.0	2250.18	2003.54	4,253.72
7	75.0	32.70	11.639	16.14	0.00	0.17	2.70	1.00	1.00	0.00	18.57	67.47	0.00	2,694.3	0.0	2227.64	2045.36	4,273.00
8	90.0	33.75	21.896	32.28	0.00	0.18	2.65	1.00	1.00	0.00	35.97	134.39	0.00	4,730.9	0.0	4382.41	4204.60	8,587.02
9	103.3	34.57	5.694	6.19	0.00	0.14	2.82	1.00	1.00	0.00	8.41	44.75	0.00	1,285.3	0.0	1116.97	1433.21	2,550.18
10	113.3	35.13	10.812	12.38	0.00	0.14	2.80	1.00	1.00	0.00	16.25	89.36	0.00	2,525.3	0.0	2171.24	2907.93	5,079.17
11	123.3	35.65	7.214	5.01	0.00	0.17	2.71	1.00	1.00	0.00	9.71	44.69	0.00	1,121.8	0.0	1277.42	1514.74	2,792.15
12	133.3	36.14	13.498	10.02	0.00	0.18	2.68	1.00	1.00	0.00	18.51	89.38	0.00	2,194.1	0.0	2437.15	3069.27	5,506.42
13	150.0	36.89	15.173	11.69	0.00	0.16	2.73	1.00	1.00	0.00	21.51	108.17	0.00	2,902.1	0.0	2943.26	3932.53	6,875.78
14	170.0	37.70	9.382	11.69	0.00	0.17	2.71	1.00	1.00	0.00	15.71	62.48	0.00	1,421.0	0.0	2181.11	2383.08	4,564.18
15	187.5	38.35	6.700	5.94	0.00	0.16	2.73	1.00	1.00	0.00	10.08	34.08	0.00	741.1	0.0	1433.57	1295.50	2,729.07
														40,326.0	**0.0**			**71,290.57**

Copyright © 2019 by Tower Engineering Solutions, LLC. All rights reserved.

Section Forces

Structure:	CT01879-S-SBA	**Code:**	EIA/TIA-222-G	3/27/2019	
Site Name:	Clinton 4 CT	**Exposure:**	D		
Height:	195.00 (ft)	**Crest Height:**	0.00		
Base Elev:	0.000 (ft)	**Site Class:**	D - Stiff Soil		
Gh:	0.85 **Topography:** 1	**Struct Class:**	II	Page: 9	

Tower Engineering Solutions

Load Case: 0.9D + 1.6W 60° Wind — 0.9D + 1.6W 105 mph Wind at 60° From Face

Wind Load Factor: 1.60 — **Wind Importance Factor:** 1.00

Dead Load Factor: 0.90

Ice Dead Load Factor: 0.00 — **Ice Importance Factor:** 1.00

Sect Seq	Wind Height (ft)	qz (psf)	Total Flat Area (sqft)	Total Round Area (sqft)	Ice Round Area (sqft)	Sol Ratio	Cf	Df	Dr	Ice Thick (in)	Eff Area (sqft)	Linear Area (sqft)	Ice Linear Area (sqft)	Total Weight (lb)	Weight Ice (lb)	Struct Force (lb)	Linear Force (lb)	Total Force (lb)
1	5.0	24.71	15.825	14.40	0.00	0.13	2.85	0.80	1.00	0.00	18.55	67.74	0.00	3,160.7	0.0	1773.83	1552.21	3,326.03
2	15.0	24.72	15.237	14.40	0.00	0.13	2.83	0.80	1.00	0.00	18.10	67.74	0.00	3,114.0	0.0	1723.94	1552.56	3,276.49
3	30.0	27.88	28.213	41.18	0.00	0.17	2.72	0.80	1.00	0.00	40.13	135.48	0.00	5,942.3	0.0	4134.79	3502.92	7,637.71
4	45.0	29.92	13.208	20.59	0.00	0.17	2.69	0.80	1.00	0.00	19.44	67.74	0.00	2,899.8	0.0	2126.10	1879.42	4,005.52
5	55.0	30.98	12.642	20.59	0.00	0.18	2.67	0.80	1.00	0.00	19.05	67.74	0.00	2,854.9	0.0	2140.62	1946.17	4,086.80
6	65.0	31.90	12.188	16.14	0.00	0.16	2.72	0.80	1.00	0.00	16.62	67.74	0.00	2,738.6	0.0	1962.38	2003.54	3,965.92
7	75.0	32.70	11.639	16.14	0.00	0.17	2.70	0.80	1.00	0.00	16.24	67.47	0.00	2,694.3	0.0	1948.36	2045.36	3,993.72
8	90.0	33.75	21.896	32.28	0.00	0.18	2.65	0.80	1.00	0.00	31.59	134.39	0.00	4,730.9	0.0	3848.91	4204.60	8,053.52
9	103.3	34.57	5.694	6.19	0.00	0.14	2.82	0.80	1.00	0.00	7.27	44.75	0.00	1,285.3	0.0	965.73	1433.21	2,398.94
10	113.3	35.13	10.812	12.38	0.00	0.14	2.80	0.80	1.00	0.00	14.09	89.36	0.00	2,525.3	0.0	1882.36	2907.93	4,790.29
11	123.3	35.65	7.214	5.01	0.00	0.17	2.71	0.80	1.00	0.00	8.27	44.69	0.00	1,121.8	0.0	1087.59	1514.74	2,602.33
12	133.3	36.14	13.498	10.02	0.00	0.18	2.68	0.80	1.00	0.00	15.81	89.38	0.00	2,194.1	0.0	2081.63	3069.27	5,150.89
13	150.0	36.89	15.173	11.69	0.00	0.16	2.73	0.80	1.00	0.00	18.47	108.17	0.00	2,902.1	0.0	2527.96	3932.53	6,460.49
14	170.0	37.70	9.382	11.69	0.00	0.17	2.71	0.80	1.00	0.00	13.83	62.48	0.00	1,421.0	0.0	1920.54	2383.08	4,303.62
15	187.5	38.35	6.700	5.94	0.00	0.16	2.73	0.80	1.00	0.00	8.74	34.08	0.00	741.1	0.0	1242.95	1295.50	2,538.45
														40,326.0	**0.0**			**66,590.72**

Load Case: 0.9D + 1.6W 90° Wind — 0.9D + 1.6W 105 mph Wind at 90° From Face

Wind Load Factor: 1.60 — **Wind Importance Factor:** 1.00

Dead Load Factor: 0.90

Ice Dead Load Factor: 0.00 — **Ice Importance Factor:** 1.00

Sect Seq	Wind Height (ft)	qz (psf)	Total Flat Area (sqft)	Total Round Area (sqft)	Ice Round Area (sqft)	Sol Ratio	Cf	Df	Dr	Ice Thick (in)	Eff Area (sqft)	Linear Area (sqft)	Ice Linear Area (sqft)	Total Weight (lb)	Weight Ice (lb)	Struct Force (lb)	Linear Force (lb)	Total Force (lb)
1	5.0	24.71	15.825	14.40	0.00	0.13	2.85	0.85	1.00	0.00	19.34	67.74	0.00	3,160.7	0.0	1849.50	1552.21	3,401.71
2	15.0	24.72	15.237	14.40	0.00	0.13	2.83	0.85	1.00	0.00	18.86	67.74	0.00	3,114.0	0.0	1796.50	1552.56	3,349.06
3	30.0	27.88	28.213	41.18	0.00	0.17	2.72	0.85	1.00	0.00	41.54	135.48	0.00	5,942.3	0.0	4280.13	3502.92	7,783.05
4	45.0	29.92	13.208	20.59	0.00	0.17	2.69	0.85	1.00	0.00	20.10	67.74	0.00	2,899.8	0.0	2198.34	1879.42	4,077.76
5	55.0	30.98	12.642	20.59	0.00	0.18	2.67	0.85	1.00	0.00	19.69	67.74	0.00	2,854.9	0.0	2211.64	1946.17	4,157.81
6	65.0	31.90	12.188	16.14	0.00	0.16	2.72	0.85	1.00	0.00	17.23	67.74	0.00	2,738.6	0.0	2034.33	2003.54	4,037.87
7	75.0	32.70	11.639	16.14	0.00	0.17	2.70	0.85	1.00	0.00	16.82	67.47	0.00	2,694.3	0.0	2018.18	2045.36	4,063.54
8	90.0	33.75	21.896	32.28	0.00	0.18	2.65	0.85	1.00	0.00	32.69	134.39	0.00	4,730.9	0.0	3982.29	4204.60	8,186.89
9	103.3	34.57	5.694	6.19	0.00	0.14	2.82	0.85	1.00	0.00	7.56	44.75	0.00	1,285.3	0.0	1003.54	1433.21	2,436.75
10	113.3	35.13	10.812	12.38	0.00	0.14	2.80	0.85	1.00	0.00	14.63	89.36	0.00	2,525.3	0.0	1954.58	2907.93	4,862.51
11	123.3	35.65	7.214	5.01	0.00	0.17	2.71	0.85	1.00	0.00	8.63	44.69	0.00	1,121.8	0.0	1135.05	1514.74	2,649.78
12	133.3	36.14	13.498	10.02	0.00	0.18	2.68	0.85	1.00	0.00	16.48	89.38	0.00	2,194.1	0.0	2170.51	3069.27	5,239.77
13	150.0	36.89	15.173	11.69	0.00	0.16	2.73	0.85	1.00	0.00	19.23	108.17	0.00	2,902.1	0.0	2631.79	3932.53	6,564.31
14	170.0	37.70	9.382	11.69	0.00	0.17	2.71	0.85	1.00	0.00	14.30	62.48	0.00	1,421.0	0.0	1985.68	2383.08	4,368.76
15	187.5	38.35	6.700	5.94	0.00	0.16	2.73	0.85	1.00	0.00	9.07	34.08	0.00	741.1	0.0	1290.60	1295.50	2,586.10
														40,326.0	**0.0**			**67,765.68**

Copyright © 2019 by Tower Engineering Solutions, LLC. All rights reserved.

Section Forces

Structure:	CT01879-S-SBA		**Code:**	EIA/TIA-222-G	3/27/2019
Site Name:	Clinton 4 CT		**Exposure:**	D	
Height:	195.00 (ft)		**Crest Height:**	0.00	
Base Elev:	0.000 (ft)		**Site Class:**	D - Stiff Soil	
Gh:	0.85	**Topography:** 1	**Struct Class:**	II	Page: 10

Tower Engineering Solutions

Load Case: 1.2D + 1.0Di + 1.0Wi Normal Wind — 1.2D + 1.0Di + 1.0Wi 50 mph Wind at Normal From Face

Wind Load Factor: 1.00
Dead Load Factor: 1.20
Ice Dead Load Factor: 1.00
Wind Importance Factor: 1.00
Ice Importance Factor: 1.00

Sect Seq	Wind Height (ft)	qz (psf)	Total Flat Area (sqft)	Total Round Area (sqft)	Ice Round Area (sqft)	Sol Ratio	Cf	Df	Dr	Ice Thick (in)	Eff Area (sqft)	Linear Area (sqft)	Ice Linear Area (sqft)	Total Weight (lb)	Weight Ice (lb)	Struct Force (lb)	Linear Force (lb)	Total Force (lb)
1	5.0	5.60	15.825	28.67	14.27	0.19	2.63	1.00	1.00	1.24	32.25	109.02	14.49	7,945.4	3731.2	403.92	480.78	884.70
2	15.0	5.60	15.237	29.92	15.52	0.20	2.59	1.00	1.00	1.39	32.43	112.15	16.17	8,312.0	4160.0	400.49	500.56	901.05
3	30.0	6.32	28.213	73.08	31.90	0.24	2.47	1.00	1.00	1.49	70.76	228.61	34.67	17,142.	9219.3	940.68	1150.24	2,090.92
4	45.0	6.78	13.208	36.50	15.91	0.25	2.43	1.00	1.00	1.55	34.57	115.64	18.05	8,600.6	4734.2	485.23	625.48	1,110.71
5	55.0	7.03	12.642	36.38	15.79	0.26	2.41	1.00	1.00	1.58	34.02	116.32	18.42	8,590.8	4784.2	488.69	651.50	1,140.19
6	65.0	7.23	12.188	31.71	15.57	0.25	2.44	1.00	1.00	1.61	30.74	116.89	18.73	8,306.3	4654.8	460.69	677.76	1,138.45
7	75.0	7.41	11.639	31.49	15.35	0.26	2.41	1.00	1.00	1.63	30.14	117.12	17.64	8,241.9	4649.6	457.28	688.01	1,145.29
8	90.0	7.65	21.896	68.89	36.62	0.30	2.29	1.00	1.00	1.66	63.18	235.00	33.17	15,767.	9459.5	942.58	1397.41	2,339.99
9	103.3	7.84	5.694	17.86	11.66	0.26	2.40	1.00	1.00	1.68	16.20	77.32	11.21	4,539.0	2825.2	258.91	476.78	735.69
10	113.3	7.97	10.812	35.14	22.76	0.28	2.36	1.00	1.00	1.70	31.62	153.76	22.62	8,982.4	5615.4	504.74	961.07	1,465.81
11	123.3	8.08	7.214	15.87	10.87	0.31	2.28	1.00	1.00	1.71	16.75	77.10	11.41	4,515.6	3019.9	262.54	485.80	748.34
12	133.3	8.20	13.498	31.20	21.18	0.32	2.23	1.00	1.00	1.72	32.44	154.54	23.00	8,900.8	5975.3	504.44	982.92	1,487.36
13	150.0	8.36	15.173	45.23	33.54	0.35	2.17	1.00	1.00	1.75	43.07	183.77	32.14	11,038.	7168.7	663.59	1269.00	1,932.59
14	170.0	8.55	9.382	43.21	31.52	0.40	2.07	1.00	1.00	1.77	36.86	108.05	24.15	6,594.6	4700.0	553.20	853.34	1,406.54
15	187.5	8.70	6.700	28.97	23.03	0.43	2.00	1.00	1.00	1.78	25.56	56.98	13.98	3,824.0	2835.9	378.34	434.72	813.07
														131,301.1	**77533.1**			**19,340.69**

Load Case: 1.2D + 1.0Di + 1.0Wi 60° Wind — 1.2D + 1.0Di + 1.0Wi 50 mph Wind at 60° From Face

Wind Load Factor: 1.00
Dead Load Factor: 1.20
Ice Dead Load Factor: 1.00
Wind Importance Factor: 1.00
Ice Importance Factor: 1.00

Sect Seq	Wind Height (ft)	qz (psf)	Total Flat Area (sqft)	Total Round Area (sqft)	Ice Round Area (sqft)	Sol Ratio	Cf	Df	Dr	Ice Thick (in)	Eff Area (sqft)	Linear Area (sqft)	Ice Linear Area (sqft)	Total Weight (lb)	Weight Ice (lb)	Struct Force (lb)	Linear Force (lb)	Total Force (lb)
1	5.0	5.60	15.825	28.67	14.27	0.19	2.63	0.80	1.00	1.24	29.08	109.02	14.49	7,945.4	3731.2	364.28	480.78	845.06
2	15.0	5.60	15.237	29.92	15.52	0.20	2.59	0.80	1.00	1.39	29.39	112.15	16.17	8,312.0	4160.0	362.86	500.56	863.42
3	30.0	6.32	28.213	73.08	31.90	0.24	2.47	0.80	1.00	1.49	65.11	228.61	34.67	17,142.	9219.3	865.66	1150.24	2,015.90
4	45.0	6.78	13.208	36.50	15.91	0.25	2.43	0.80	1.00	1.55	31.93	115.64	18.05	8,600.6	4734.2	448.16	625.48	1,073.63
5	55.0	7.03	12.642	36.38	15.79	0.26	2.41	0.80	1.00	1.58	31.50	116.32	18.42	8,590.8	4784.2	452.37	651.50	1,103.87
6	65.0	7.23	12.188	31.71	15.57	0.25	2.44	0.80	1.00	1.61	28.30	116.89	18.73	8,306.3	4654.8	424.16	677.76	1,101.92
7	75.0	7.41	11.639	31.49	15.35	0.26	2.41	0.80	1.00	1.63	27.81	117.12	17.64	8,241.9	4649.6	421.96	688.01	1,109.97
8	90.0	7.65	21.896	68.89	36.62	0.30	2.29	0.80	1.00	1.66	58.80	235.00	33.17	15,767.	9459.5	877.25	1397.41	2,274.65
9	103.3	7.84	5.694	17.86	11.66	0.26	2.40	0.80	1.00	1.68	15.06	77.32	11.21	4,539.0	2825.2	240.71	476.78	717.49
10	113.3	7.97	10.812	35.14	22.76	0.28	2.36	0.80	1.00	1.70	29.46	153.76	22.62	8,982.4	5615.4	470.22	961.07	1,431.30
11	123.3	8.08	7.214	15.87	10.87	0.31	2.28	0.80	1.00	1.71	15.31	77.10	11.41	4,515.6	3019.9	239.93	485.80	725.73
12	133.3	8.20	13.498	31.20	21.18	0.32	2.23	0.80	1.00	1.72	29.74	154.54	23.00	8,900.8	5975.3	462.46	982.92	1,445.38
13	150.0	8.36	15.173	45.23	33.54	0.35	2.17	0.80	1.00	1.75	40.03	183.77	32.14	11,038.	7168.7	616.83	1269.00	1,885.83
14	170.0	8.55	9.382	43.21	31.52	0.40	2.07	0.80	1.00	1.77	34.98	108.05	24.15	6,594.6	4700.0	525.04	853.34	1,378.38
15	187.5	8.70	6.700	28.97	23.03	0.43	2.00	0.80	1.00	1.78	24.22	56.98	13.98	3,824.0	2835.9	358.51	434.72	793.23
														131,301.1	**77533.1**			**18,765.75**

Copyright © 2019 by Tower Engineering Solutions, LLC. All rights reserved.

Section Forces

Structure:	CT01879-S-SBA		**Code:**	EIA/TIA-222-G	3/27/2019
Site Name:	Clinton 4 CT		**Exposure:**	D	
Height:	195.00 (ft)		**Crest Height:**	0.00	
Base Elev:	0.000 (ft)		**Site Class:**	D - Stiff Soil	
Gh:	0.85	**Topography:** 1	**Struct Class:**	II	Page: 11

Tower Engineering Solutions

Load Case: 1.2D + 1.0Di + 1.0Wi 90° Wind — 1.2D + 1.0Di + 1.0Wi 50 mph Wind at 90° From Face

Wind Load Factor: 1.00
Dead Load Factor: 1.20
Ice Dead Load Factor: 1.00
Wind Importance Factor: 1.00
Ice Importance Factor: 1.00

Sect Seq	Wind Height (ft)	qz (psf)	Total Flat Area (sqft)	Total Round Area (sqft)	Ice Round Area (sqft)	Sol Ratio	Cf	Df	Dr	Ice Thick (in)	Eff Area (sqft)	Linear Area (sqft)	Ice Linear Area (sqft)	Total Weight (lb)	Weight Ice (lb)	Struct Force (lb)	Linear Force (lb)	Total Force (lb)
1	5.0	5.60	15.825	28.67	14.27	0.19	2.63	0.85	1.00	1.24	29.87	109.02	14.49	7,945.4	3731.2	374.19	480.78	854.97
2	15.0	5.60	15.237	29.92	15.52	0.20	2.59	0.85	1.00	1.39	30.15	112.15	16.17	8,312.0	4160.0	372.27	500.56	872.83
3	30.0	6.32	28.213	73.08	31.90	0.24	2.47	0.85	1.00	1.49	66.52	228.61	34.67	17,142.	9219.3	884.42	1150.24	2,034.65
4	45.0	6.78	13.208	36.50	15.91	0.25	2.43	0.85	1.00	1.55	32.59	115.64	18.05	8,600.6	4734.2	457.42	625.48	1,082.90
5	55.0	7.03	12.642	36.38	15.79	0.26	2.41	0.85	1.00	1.58	32.13	116.32	18.42	8,590.8	4784.2	461.45	651.50	1,112.95
6	65.0	7.23	12.188	31.71	15.57	0.25	2.44	0.85	1.00	1.61	28.91	116.89	18.73	8,306.3	4654.8	433.29	677.76	1,111.05
7	75.0	7.41	11.639	31.49	15.35	0.26	2.41	0.85	1.00	1.63	28.39	117.12	17.64	8,241.9	4649.6	430.79	688.01	1,118.80
8	90.0	7.65	21.896	68.89	36.62	0.30	2.29	0.85	1.00	1.66	59.89	235.00	33.17	15,767.	9459.5	893.58	1397.41	2,290.99
9	103.3	7.84	5.694	17.86	11.66	0.26	2.40	0.85	1.00	1.68	15.35	77.32	11.21	4,539.0	2825.2	245.26	476.78	722.04
10	113.3	7.97	10.812	35.14	22.76	0.28	2.36	0.85	1.00	1.70	30.00	153.76	22.62	8,982.4	5615.4	478.85	961.07	1,439.93
11	123.3	8.08	7.214	15.87	10.87	0.31	2.28	0.85	1.00	1.71	15.67	77.10	11.41	4,515.6	3019.9	245.58	485.80	731.38
12	133.3	8.20	13.498	31.20	21.18	0.32	2.23	0.85	1.00	1.72	30.41	154.54	23.00	8,900.8	5975.3	472.96	982.92	1,455.87
13	150.0	8.36	15.173	45.23	33.54	0.35	2.17	0.85	1.00	1.75	40.79	183.77	32.14	11,038.	7168.7	628.52	1269.00	1,897.52
14	170.0	8.55	9.382	43.21	31.52	0.40	2.07	0.85	1.00	1.77	35.45	108.05	24.15	6,594.6	4700.0	532.08	853.34	1,385.42
15	187.5	8.70	6.700	28.97	23.03	0.43	2.00	0.85	1.00	1.78	24.55	56.98	13.98	3,824.0	2835.9	363.47	434.72	798.19
														131,301.1	**77533.1**			**18,909.48**

Load Case: 1.0D + 1.0W Normal Wind — 1.0D + 1.0W 60 mph Wind at Normal To Face

Wind Load Factor: 1.00
Dead Load Factor: 1.00
Ice Dead Load Factor: 0.00
Wind Importance Factor: 1.00
Ice Importance Factor: 1.00

Sect Seq	Wind Height (ft)	qz (psf)	Total Flat Area (sqft)	Total Round Area (sqft)	Ice Round Area (sqft)	Sol Ratio	Cf	Df	Dr	Ice Thick (in)	Eff Area (sqft)	Linear Area (sqft)	Ice Linear Area (sqft)	Total Weight (lb)	Weight Ice (lb)	Struct Force (lb)	Linear Force (lb)	Total Force (lb)
1	5.0	8.07	15.825	14.40	0.00	0.13	2.85	1.00	1.00	0.00	23.14	67.74	0.00	3,511.8	0.0	451.66	316.78	768.44
2	15.0	8.07	15.237	14.40	0.00	0.13	2.83	1.00	1.00	0.00	22.56	67.74	0.00	3,460.0	0.0	438.59	316.85	755.44
3	30.0	9.10	28.213	41.18	0.00	0.17	2.72	1.00	1.00	0.00	45.77	135.48	0.00	6,602.5	0.0	962.48	714.88	1,677.36
4	45.0	9.77	13.208	20.59	0.00	0.17	2.69	1.00	1.00	0.00	22.08	67.74	0.00	3,222.0	0.0	492.87	383.56	876.42
5	55.0	10.12	12.642	20.59	0.00	0.18	2.67	1.00	1.00	0.00	21.58	67.74	0.00	3,172.1	0.0	494.83	397.18	892.01
6	65.0	10.41	12.188	16.14	0.00	0.16	2.72	1.00	1.00	0.00	19.66	67.74	0.00	3,042.9	0.0	473.62	408.89	882.51
7	75.0	10.68	11.639	16.14	0.00	0.17	2.70	1.00	1.00	0.00	19.10	67.47	0.00	2,993.6	0.0	467.77	417.42	885.19
8	90.0	11.02	21.896	32.28	0.00	0.18	2.65	1.00	1.00	0.00	36.89	134.39	0.00	5,256.5	0.0	917.05	858.08	1,775.13
9	103.3	11.29	5.694	6.19	0.00	0.14	2.82	1.00	1.00	0.00	9.16	44.75	0.00	1,428.2	0.0	248.27	292.49	540.77
10	113.3	11.47	10.812	12.38	0.00	0.14	2.80	1.00	1.00	0.00	17.73	89.36	0.00	2,805.9	0.0	483.45	593.46	1,076.91
11	123.3	11.64	7.214	5.01	0.00	0.17	2.71	1.00	1.00	0.00	10.07	44.69	0.00	1,246.4	0.0	270.27	301.21	571.48
12	133.3	11.80	13.498	10.02	0.00	0.18	2.68	1.00	1.00	0.00	19.21	89.38	0.00	2,437.8	0.0	516.40	610.60	1,127.00
13	150.0	12.05	15.173	11.69	0.00	0.16	2.73	1.00	1.00	0.00	21.82	108.17	0.00	3,224.6	0.0	609.44	790.20	1,399.64
14	170.0	12.31	9.382	11.69	0.00	0.17	2.71	1.00	1.00	0.00	16.04	62.48	0.00	1,578.9	0.0	454.50	486.34	940.84
15	187.5	12.52	6.700	5.94	0.00	0.16	2.73	1.00	1.00	0.00	10.08	34.08	0.00	823.4	0.0	292.57	264.39	556.95
														44,806.7	**0.0**			**14,726.11**

Copyright © 2019 by Tower Engineering Solutions, LLC. All rights reserved.

Section Forces

Structure:	CT01879-S-SBA	**Code:**	EIA/TIA-222-G	3/27/2019	
Site Name:	Clinton 4 CT	**Exposure:**	D		
Height:	195.00 (ft)	**Crest Height:**	0.00		
Base Elev:	0.000 (ft)	**Site Class:**	D - Stiff Soil		
Gh:	0.85 **Topography:** 1	**Struct Class:**	II	Page: 12	

Tower Engineering Solutions

Load Case: 1.0D + 1.0W 60° Wind — 1.0D + 1.0W 60 mph Wind at 60° From Face

Wind Load Factor: 1.00 — **Wind Importance Factor:** 1.00

Dead Load Factor: 1.00

Ice Dead Load Factor: 0.00 — **Ice Importance Factor:** 1.00

Sect Seq	Wind Height (ft)	qz (psf)	Total Flat Area (sqft)	Total Round Area (sqft)	Ice Round Area (sqft)	Sol Ratio	Cf	Df	Dr	Ice Thick (in)	Eff Area (sqft)	Linear Area (sqft)	Ice Linear Area (sqft)	Total Weight (lb)	Weight Ice (lb)	Struct Force (lb)	Linear Force (lb)	Total Force (lb)
1	5.0	8.07	15.825	14.40	0.00	0.13	2.85	0.80	1.00	0.00	19.98	67.74	0.00	3,511.8	0.0	389.89	316.78	706.67
2	15.0	8.07	15.237	14.40	0.00	0.13	2.83	0.80	1.00	0.00	19.52	67.74	0.00	3,460.0	0.0	379.36	316.85	696.20
3	30.0	9.10	28.213	41.18	0.00	0.17	2.72	0.80	1.00	0.00	40.13	135.48	0.00	6,602.5	0.0	843.83	714.88	1,558.72
4	45.0	9.77	13.208	20.59	0.00	0.17	2.69	0.80	1.00	0.00	19.44	67.74	0.00	3,222.0	0.0	433.90	383.56	817.45
5	55.0	10.12	12.642	20.59	0.00	0.18	2.67	0.80	1.00	0.00	19.05	67.74	0.00	3,172.1	0.0	436.86	397.18	834.04
6	65.0	10.41	12.188	16.14	0.00	0.16	2.72	0.80	1.00	0.00	17.22	67.74	0.00	3,042.9	0.0	414.89	408.89	823.78
7	75.0	10.68	11.639	16.14	0.00	0.17	2.70	0.80	1.00	0.00	16.78	67.47	0.00	2,993.6	0.0	410.78	417.42	828.20
8	90.0	11.02	21.896	32.28	0.00	0.18	2.65	0.80	1.00	0.00	32.51	134.39	0.00	5,256.5	0.0	808.17	858.08	1,666.26
9	103.3	11.29	5.694	6.19	0.00	0.14	2.82	0.80	1.00	0.00	8.02	44.75	0.00	1,428.2	0.0	217.41	292.49	509.90
10	113.3	11.47	10.812	12.38	0.00	0.14	2.80	0.80	1.00	0.00	15.57	89.36	0.00	2,805.9	0.0	424.50	593.46	1,017.95
11	123.3	11.64	7.214	5.01	0.00	0.17	2.71	0.80	1.00	0.00	8.62	44.69	0.00	1,246.4	0.0	231.53	301.21	532.74
12	133.3	11.80	13.498	10.02	0.00	0.18	2.68	0.80	1.00	0.00	16.51	89.38	0.00	2,437.8	0.0	443.84	610.60	1,054.45
13	150.0	12.05	15.173	11.69	0.00	0.16	2.73	0.80	1.00	0.00	18.79	108.17	0.00	3,224.6	0.0	524.69	790.20	1,314.89
14	170.0	12.31	9.382	11.69	0.00	0.17	2.71	0.80	1.00	0.00	14.16	62.48	0.00	1,578.9	0.0	401.32	486.34	887.67
15	187.5	12.52	6.700	5.94	0.00	0.16	2.73	0.80	1.00	0.00	8.74	34.08	0.00	823.4	0.0	253.66	264.39	518.05
														44,806.7	**0.0**			**13,766.95**

Load Case: 1.0D + 1.0W 90° Wind — 1.0D + 1.0W 60 mph Wind at 90° From Face

Wind Load Factor: 1.00 — **Wind Importance Factor:** 1.00

Dead Load Factor: 1.00

Ice Dead Load Factor: 0.00 — **Ice Importance Factor:** 1.00

Sect Seq	Wind Height (ft)	qz (psf)	Total Flat Area (sqft)	Total Round Area (sqft)	Ice Round Area (sqft)	Sol Ratio	Cf	Df	Dr	Ice Thick (in)	Eff Area (sqft)	Linear Area (sqft)	Ice Linear Area (sqft)	Total Weight (lb)	Weight Ice (lb)	Struct Force (lb)	Linear Force (lb)	Total Force (lb)
1	5.0	8.07	15.825	14.40	0.00	0.13	2.85	0.85	1.00	0.00	20.77	67.74	0.00	3,511.8	0.0	405.33	316.78	722.11
2	15.0	8.07	15.237	14.40	0.00	0.13	2.83	0.85	1.00	0.00	20.28	67.74	0.00	3,460.0	0.0	394.17	316.85	711.01
3	30.0	9.10	28.213	41.18	0.00	0.17	2.72	0.85	1.00	0.00	41.54	135.48	0.00	6,602.5	0.0	873.50	714.88	1,588.38
4	45.0	9.77	13.208	20.59	0.00	0.17	2.69	0.85	1.00	0.00	20.10	67.74	0.00	3,222.0	0.0	448.64	383.56	832.20
5	55.0	10.12	12.642	20.59	0.00	0.18	2.67	0.85	1.00	0.00	19.69	67.74	0.00	3,172.1	0.0	451.35	397.18	848.53
6	65.0	10.41	12.188	16.14	0.00	0.16	2.72	0.85	1.00	0.00	17.83	67.74	0.00	3,042.9	0.0	429.57	408.89	838.46
7	75.0	10.68	11.639	16.14	0.00	0.17	2.70	0.85	1.00	0.00	17.36	67.47	0.00	2,993.6	0.0	425.03	417.42	842.45
8	90.0	11.02	21.896	32.28	0.00	0.18	2.65	0.85	1.00	0.00	33.60	134.39	0.00	5,256.5	0.0	835.39	858.08	1,693.48
9	103.3	11.29	5.694	6.19	0.00	0.14	2.82	0.85	1.00	0.00	8.31	44.75	0.00	1,428.2	0.0	225.12	292.49	517.62
10	113.3	11.47	10.812	12.38	0.00	0.14	2.80	0.85	1.00	0.00	16.11	89.36	0.00	2,805.9	0.0	439.24	593.46	1,032.69
11	123.3	11.64	7.214	5.01	0.00	0.17	2.71	0.85	1.00	0.00	8.98	44.69	0.00	1,246.4	0.0	241.21	301.21	542.43
12	133.3	11.80	13.498	10.02	0.00	0.18	2.68	0.85	1.00	0.00	17.19	89.38	0.00	2,437.8	0.0	461.98	610.60	1,072.58
13	150.0	12.05	15.173	11.69	0.00	0.16	2.73	0.85	1.00	0.00	19.54	108.17	0.00	3,224.6	0.0	545.87	790.20	1,336.08
14	170.0	12.31	9.382	11.69	0.00	0.17	2.71	0.85	1.00	0.00	14.63	62.48	0.00	1,578.9	0.0	414.62	486.34	900.96
15	187.5	12.52	6.700	5.94	0.00	0.16	2.73	0.85	1.00	0.00	9.07	34.08	0.00	823.4	0.0	263.39	264.39	527.78
														44,806.7	**0.0**			**14,006.74**

Copyright © 2019 by Tower Engineering Solutions, LLC. All rights reserved.

Force/Stress Compression Summary

Structure:	CT01879-S-SBA	**Code:**	EIA/TIA-222-G	3/27/2019	
Site Name:	Clinton 4 CT	**Exposure:**	D		
Height:	195.00 (ft)	**Crest Height:**	0.00		
Base Elev:	0.000 (ft)	**Site Class:**	D - Stiff Soil		
Gh:	0.85	**Topography:** 1	**Struct Class:**	II	Page: 13

Tower Engineering Solutions

LEG MEMBERS

Sect	Top Elev	Member	Force (kips)	Load Case	Len (ft)	Bracing % X	Bracing % Y	Bracing % Z	KL/R	Fy (ksi)	Mem Cap (kips)	Leg Use %	Controls
1	10	PX - 8" DIA PIPE	-493.35	1.2D + 1.6W Normal Wind	9.64	100	100	100	40.20	50.00	510.21	96.7	Member X
2	20	PX - 8" DIA PIPE	-469.10	1.2D + 1.6W Normal Wind	9.64	100	100	100	40.20	50.00	510.21	91.9	Member X
3	40	MOD - 8"PST+5x5x3/8L	-441.45	1.2D + 1.6W Normal Wind	9.62	100	100	100	43.01	50.00	472.01	93.5	Member X
4	50	MOD - 8"PST+5x5x3/8L	-387.48	1.2D + 1.6W Normal Wind	9.64	100	100	100	43.13	50.00	471.68	82.1	Member X
5	60	MOD - 8"PST+5x5x3/8L	-359.77	1.2D + 1.6W Normal Wind	9.64	100	100	100	43.13	50.00	471.68	76.3	Member X
6	70	MOD - 6"PX+L4x4x3/8	-332.66	1.2D + 1.6W Normal Wind	9.64	100	100	100	56.38	50.00	401.71	82.8	Member X
7	80	MOD - 6"PX+L4x4x3/8	-304.77	1.2D + 1.6W Normal Wind	9.64	100	100	100	56.38	50.00	401.71	75.9	Member X
8	100	MOD - 6"PST+4x4x3/8L	-281.31	1.2D + 1.6W Normal Wind	6.43	100	100	100	37.83	50.00	342.05	82.2	Member X
9	106.6	PX - 5" DIA PIPE	-225.45	1.2D + 1.6W Normal Wind	6.31	100	100	100	41.12	50.00	242.97	92.8	Member X
10	120	PX - 5" DIA PIPE	-207.30	1.2D + 1.6W Normal Wind	6.68	100	100	100	43.54	50.00	239.36	86.6	Member X
11	126.6	PX - 4" DIA PIPE	-178.14	1.2D + 1.6W Normal Wind	0.38	50	50	50	1.52	50.00	198.42	89.8	Member X
12	140	PX - 4" DIA PIPE	-149.11	1.2D + 1.6W Normal Wind	6.68	50	50	50	27.07	50.00	188.10	79.3	Member X
13	160	PX - 3" DIA PIPE	-110.09	1.2D + 1.6W Normal Wind	4.91	100	100	100	51.73	50.00	111.75	98.5	Member X
14	180	PST - 3" DIA PIPE	-50.52	1.2D + 1.6W Normal Wind	4.91	100	100	100	50.84	50.00	83.07	60.8	Member X
15	195	PST - 2" DIA PIPE	-14.52	1.2D + 1.6W Normal Wind	5.00	100	100	100	76.24	50.00	31.48	46.1	Member X

Splices

		Top Splice						Bottom Splice					
Sect	Top Elev	Load Case	Force (kips)	Cap (kips)	Use %	Bolt Type	Num Bolts	Load Case	Force (kips)	Cap (kips)	Use %	Bolt Type	Num Bolts
1	10	1.2D + 1.6W Normal Wind	481.56	0.00	0.0			1.2D + 1.6W Normal Wind	507.27	0.00			
2	20	1.2D + 1.6W Normal Wind	456.95	0.00	0.0			1.2D + 1.6W Normal Wind	481.56	0.00			
3	40	1.2D + 1.6W Normal Wind	402.84	0.00	0.0			1.2D + 1.6W Normal Wind	456.95	0.00			
4	50	1.2D + 1.6W Normal Wind	373.49	0.00	0.0			1.2D + 1.6W Normal Wind	402.84	0.00			
5	60	1.2D + 1.6W Normal Wind	347.59	0.00	0.0			1.2D + 1.6W Normal Wind	373.49	0.00			
6	70	1.2D + 1.6W Normal Wind	318.77	0.00	0.0			1.2D + 1.6W Normal Wind	347.59	0.00			
7	80	1.2D + 1.6W Normal Wind	292.36	0.00	0.0			1.2D + 1.6W Normal Wind	318.77	0.00			
8	100	1.2D + 1.6W Normal Wind	236.12	0.00	0.0			1.2D + 1.6W Normal Wind	292.36	0.00			
9	106.6	1.2D + 1.6W Normal Wind	215.94	0.00	0.0			1.2D + 1.6W Normal Wind	236.12	0.00			
10	120	1.2D + 1.6W Normal Wind	177.15	0.00	0.0			1.2D + 1.6W Normal Wind	215.94	0.00			
11	126.6	1.2D + 1.6W Normal Wind	158.48	0.00	0.0			1.2D + 1.6W Normal Wind	177.15	0.00			
12	140	1.2D + 1.6W Normal Wind	117.27	0.00	0.0			1.2D + 1.6W Normal Wind	158.48	0.00			
13	160	1.2D + 1.6W Normal Wind	57.03	0.00	0.0			1.2D + 1.6W Normal Wind	117.27	0.00			
14	180	1.2D + 1.6W Normal Wind	19.52	0.00	0.0			1.2D + 1.6W Normal Wind	57.03	0.00			
15	195	1.2D + 1.0Di + 1.0Wi 90° Wind	2.10	0.00	0.0			1.2D + 1.6W Normal Wind	19.52	0.00			

HORIZONTAL MEMBERS

Sect	Top Elev	Member	Force (kips)	Load Case	Len (ft)	Bracing % X	Bracing % Y	Bracing % Z	KL/R	Fy (ksi)	Mem Cap (kips)	Num Bolts	Num Holes	Shear Cap (kips)	Bear Cap (kips)	Use %	Controls
1	10										0.00	0	0				
2	20										0.00	0	0				
3	40										0.00	0	0				
4	50										0.00	0	0				
5	60										0.00	0	0				
6	70										0.00	0	0				
7	80										0.00	0	0				
8	100										0.00	0	0				
9	106.										0.00	0	0				
10	120										0.00	0	0				
11	126.										0.00	0	0				

Copyright © 2019 by Tower Engineering Solutions, LLC. All rights reserved.

Force/Stress Compression Summary

Structure:	CT01879-S-SBA	**Code:**	EIA/TIA-222-G	3/27/2019	
Site Name:	Clinton 4 CT	**Exposure:**	D		
Height:	195.00 (ft)	**Crest Height:**	0.00		
Base Elev:	0.000 (ft)	**Site Class:**	D - Stiff Soil		
Gh:	0.85 **Topography:** 1	**Struct Class:**	II	Page: 14	

Tower Engineering Solutions

HORIZONTAL MEMBERS

Sect	Top Elev	Member	Force (kips)	Load Case	Len (ft)	Bracing % X	Bracing % Y	Bracing % Z	KL/R	Fy (ksi)	Mem Cap (kips)	Num Bolts	Num Holes	Shear Cap (kips)	Bear Cap (kips)	Use %	Controls
12	140										0.00	0	0				
13	160										0.00	0	0				
14	180	SAE - 1.75X1.75X0.1875	-0.65	1.2D + 1.6W 60° Wind	5.00	100	100	100	174.92	36.00	4.58	1	1	15.19	9.79	14	Member Z
15	195	SAE - 1.75X1.75X0.1875	-0.51	0.9D + 1.6W 60° Wind	5.00	100	100	100	174.92	36.00	4.58	1	1	15.19	9.79	11	Member Z

DIAGONAL MEMBERS

Sect	Top Elev	Member	Force (kips)	Load Case	Len (ft)	Bracing % X	Bracing % Y	Bracing % Z	KL/R	Fy (ksi)	Mem Cap (kips)	Num Bolts	Num Holes	Shear Cap (kips)	Bear Cap (kips)	Use %	Controls
1	10	SAE - 4X4X0.375	-16.0	1.2D + 1.6W 90° Wind	24.46	48	48	48	178.77	36.00	20.22	1	1	21.86	20.2	79	Member Z
2	20	SAE - 4X4X0.375	-17.5	0.9D + 1.6W 90° Wind	23.57	48	48	48	172.32	36.00	21.76	1	1	21.86	21.5	82	Bolt Bear
3	40	SAE - 4X4X0.375	-16.4	1.2D + 1.6W 90° Wind	21.75	48	48	48	159.02	36.00	25.55	1	1	21.86	21.5	77	Bolt Bear
4	50	SAE - 4X4X0.375	-15.3	1.2D + 1.6W 90° Wind	20.84	48	48	48	152.33	36.00	27.85	1	1	21.86	21.5	71	Bolt Bear
5	60	SAE - 4X4X0.375	-15.5	1.2D + 1.6W 90° Wind	19.99	48	48	48	146.12	36.00	30.26	1	1	21.86	21.5	72	Bolt Bear
6	70	SAE - 4X4X0.375	-13.9	1.2D + 1.6W 90° Wind	19.09	48	48	48	139.53	36.00	33.19	1	1	21.86	21.5	65	Bolt Bear
7	80	SAE - 4X4X0.375	-14.4	1.2D + 1.6W 90° Wind	18.26	48	48	48	133.50	36.00	36.26	1	1	21.86	21.5	67	Bolt Bear
8	100	SAE - 3X3X0.375	-12.2	1.2D + 1.6W 90° Wind	15.99	48	48	48	156.87	36.00	19.37	1	1	21.86	21.5	63	Member Z
9	106.	SAE - 2.5X2.5X0.375	-11.0	1.2D + 1.6W 90° Wind	14.13	48	48	48	167.11	36.00	14.00	1	1	15.19	19.5	79	Member Z
10	120	SAE - 2.5X2.5X0.375	-11.0	1.2D + 1.6W 90° Wind	13.15	48	48	48	155.52	36.00	16.16	1	1	15.19	19.5	73	Bolt Shear
11	126.	SAE - 2.5X2.5X0.25	-9.97	1.2D + 1.6W 90° Wind	12.37	46	46	46	139.06	36.00	13.90	1	1	15.19	13.0	76	Bolt Bear
12	140	SAE - 2.5X2.5X0.25	-10.1	1.2D + 1.6W 90° Wind	12.02	46	46	46	135.13	36.00	14.72	1	1	15.19	13.0	78	Bolt Bear
13	160	SAE - 2.5X2.5X0.375	-8.71	1.2D + 1.6W 90° Wind	9.61	49	49	49	117.04	36.00	27.25	1	1	15.19	19.5	57	Bolt Shear
14	180	SAE - 1.75X1.75X0.1875	-4.25	1.2D + 1.6W 90° Wind	8.32	49	49	49	142.61	36.00	6.89	1	1	15.19	9.79	62	Member Z
15	195	SAE - 1.75X1.75X0.1875	-2.90	1.2D + 1.6W Normal Wind	7.07	50	50	50	123.69	36.00	8.98	1	1	15.19	9.79	32	Member Z

Copyright © 2019 by Tower Engineering Solutions, LLC. All rights reserved.

Force/Stress Tension Summary

Structure:	CT01879-S-SBA	**Code:**	EIA/TIA-222-G	3/27/2019	
Site Name:	Clinton 4 CT	**Exposure:**	D		
Height:	195.00 (ft)	**Crest Height:**	0.00		
Base Elev:	0.000 (ft)	**Site Class:**	D - Stiff Soil		
Gh:	0.85 **Topography:** 1	**Struct Class:**	II	Page: 15	

Tower Engineering Solutions

LEG MEMBERS

Sect	Top Elev	Member	Force (kips)	Load Case	Fy (ksi)	Mem Cap (kips)	Leg Use %	Controls
1	10	PX - 8" DIA PIPE	447.65	0.9D + 1.6W 60° Wind	50	574.20	78.0	Member
2	20	PX - 8" DIA PIPE	413.70	0.9D + 1.6W 60° Wind	50	574.20	72.0	Member
3	40	MOD - 8"PST+5x5x3/8L	403.73	0.9D + 1.6W 60° Wind	50	540.39	74.7	Member
4	50	MOD - 8"PST+5x5x3/8L	357.18	0.9D + 1.6W 60° Wind	50	540.39	66.1	Member
5	60	MOD - 8"PST+5x5x3/8L	319.49	0.9D + 1.6W 60° Wind	50	540.39	59.1	Member
6	70	MOD - 6"PX+L4x4x3/8	309.21	0.9D + 1.6W 60° Wind	50	506.83	61.0	Member
7	80	MOD - 6"PX+L4x4x3/8	271.54	0.9D + 1.6W 60° Wind	50	506.83	53.6	Member
8	100	MOD - 6"PST+4x4x3/8L	260.85	0.9D + 1.6W 60° Wind	50	379.79	68.7	Member
9	106.67	PX - 5" DIA PIPE	210.88	0.9D + 1.6W 60° Wind	50	274.95	76.7	Member
10	120	PX - 5" DIA PIPE	185.06	0.9D + 1.6W 60° Wind	50	274.95	67.3	Member
11	126.66	PX - 4" DIA PIPE	158.80	0.9D + 1.6W 60° Wind	50	198.45	80.0	Member
12	140	PX - 4" DIA PIPE	131.68	0.9D + 1.6W 60° Wind	50	198.45	66.4	Member
13	160	PX - 3" DIA PIPE	96.04	0.9D + 1.6W 60° Wind	50	135.90	70.7	Member
14	180	PST - 3" DIA PIPE	48.47	0.9D + 1.6W 60° Wind	50	100.35	48.3	Member
15	195	PST - 2" DIA PIPE	11.57	0.9D + 1.6W 60° Wind	50	48.15	24.0	Member

Splices

		Top Splice						Bottom Splice					
Sect	Top Elev	Load Case	Force (kips)	Cap (kips)	Use %	Bolt Type	Num Bolts	Load Case	Force (kips)	Cap (kips)	Use %	Bolt Type	Num Bolts
1	10	0.9D + 1.6W 60° Wind	424.33	0.00	0.0			0.9D + 1.6W 60° Wind	447.6	0.00			
2	20	0.9D + 1.6W 60° Wind	403.25	0.00	0.0			0.9D + 1.6W 60° Wind	424.3	0.00			
3	40	0.9D + 1.6W 60° Wind	356.73	0.00	0.0			0.9D + 1.6W 60° Wind	403.2	0.00			
4	50	0.9D + 1.6W 60° Wind	331.03	0.00	0.0			0.9D + 1.6W 60° Wind	356.7	0.00			
5	60	0.9D + 1.6W 60° Wind	308.78	0.00	0.0			0.9D + 1.6W 60° Wind	331.0	0.00			
6	70	0.9D + 1.6W 60° Wind	283.44	0.00	0.0			0.9D + 1.6W 60° Wind	308.7	0.00			
7	80	0.9D + 1.6W 60° Wind	260.45	0.00	0.0			0.9D + 1.6W 60° Wind	283.4	0.00			
8	100	0.9D + 1.6W 60° Wind	210.60	0.00	0.0			0.9D + 1.6W 60° Wind	260.4	0.00			
9	106.67	0.9D + 1.6W 60° Wind	192.61	0.00	0.0			0.9D + 1.6W 60° Wind	210.6	0.00			
10	120	0.9D + 1.6W 60° Wind	156.82	0.00	0.0			0.9D + 1.6W 60° Wind	192.6	0.00			
11	126.66	0.9D + 1.6W 60° Wind	140.23	0.00	0.0			0.9D + 1.6W 60° Wind	156.8	0.00			
12	140	0.9D + 1.6W 60° Wind	101.80	0.00	0.0			0.9D + 1.6W 60° Wind	140.2	0.00			
13	160	0.9D + 1.6W 60° Wind	48.32	0.00	0.0			0.9D + 1.6W 60° Wind	101.8	0.00			
14	180	0.9D + 1.6W 60° Wind	14.29	0.00	0.0			0.9D + 1.6W 60° Wind	48.32	0.00			
15	195		0.00	0.00	0.0			0.9D + 1.6W 60° Wind	14.29	0.00			

HORIZONTAL MEMBERS

Sect	Top Elev	Member	Force (kips)	Load Case	Fy (ksi)	Mem Cap (kips)	Num Bolts	Num Holes	Shear Cap (kips)	Bear Cap (kips)	B.S. Cap (kips)	Use %	Controls
1	10	-			36	0.00	0	0					
2	20	-			36	0.00	0	0					
3	40	-			36	0.00	0	0					
4	50	-			36	0.00	0	0					
5	60	-			36	0.00	0	0					
6	70	-			36	0.00	0	0					
7	80	-			36	0.00	0	0					
8	100	-			36	0.00	0	0					
9	106.67	-			36	0.00	0	0					
10	120	-			36	0.00	0	0					
11	126.66	-			36	0.00	0	0					
12	140	-			36	0.00	0	0					

Copyright © 2019 by Tower Engineering Solutions, LLC. All rights reserved.

Force/Stress Tension Summary

Structure:	CT01879-S-SBA		**Code:**	EIA/TIA-222-G	3/27/2019
Site Name:	Clinton 4 CT		**Exposure:**	D	
Height:	195.00 (ft)		**Crest Height:**	0.00	
Base Elev:	0.000 (ft)		**Site Class:**	D - Stiff Soil	
Gh:	0.85	**Topography:** 1	**Struct Class:**	II	Page: 16

Tower Engineering Solutions

HORIZONTAL MEMBERS

Sect	Top Elev	Member	Force (kips)	Load Case	Fy (ksi)	Mem Cap (kips)	Num Bolts	Num Holes	Shear Cap (kips)	Bear Cap (kips)	B.S. Cap (kips)	Use %	Controls
13	160	-			36	0.00	0	0					
14	180	SAE - 1.75X1.75X0.1875	0.55	1.2D + 1.6W 90° Wind	36	15.64	1	1	15.19	9.79	7.50	7.4	Blck Shear
15	195	SAE - 1.75X1.75X0.1875	0.54	1.2D + 1.6W 90° Wind	36	15.64	1	1	15.19	9.79	7.50	7.2	Blck Shear

DIAGONAL MEMBERS

Sect	Top Elev	Member	Force (kips)	Load Case	Fy (ksi)	Mem Cap (kips)	Num Bolts	Num Holes	Shear Cap (kips)	Bear Cap (kips)	B.S. Cap (kips)	Use %	Controls
1	10	SAE - 4X4X0.375	15.43	0.9D + 1.6W 90° Wind	36	82.60	1	1	21.86	20.24	24.55	76.3	Bolt Bear
2	20	SAE - 4X4X0.375	17.12	0.9D + 1.6W 90° Wind	36	82.60	1	1	21.86	21.53	24.93	79.5	Bolt Bear
3	40	SAE - 4X4X0.375	16.03	0.9D + 1.6W 90° Wind	36	82.60	1	1	21.86	21.53	24.93	74.4	Bolt Bear
4	50	SAE - 4X4X0.375	15.08	0.9D + 1.6W 90° Wind	36	82.60	1	1	21.86	21.53	24.93	70.0	Bolt Bear
5	60	SAE - 4X4X0.375	15.06	0.9D + 1.6W 90° Wind	36	82.60	1	1	21.86	21.53	24.93	69.9	Bolt Bear
6	70	SAE - 4X4X0.375	13.72	1.2D + 1.6W 90° Wind	36	82.60	1	1	21.86	21.53	24.93	63.7	Bolt Bear
7	80	SAE - 4X4X0.375	13.87	1.2D + 1.6W 90° Wind	36	82.60	1	1	21.86	21.53	24.93	64.4	Bolt Bear
8	100	SAE - 3X3X0.375	12.14	1.2D + 1.6W 90° Wind	36	58.13	1	1	21.86	21.53	20.85	58.2	Blck Shear
9	106.67	SAE - 2.5X2.5X0.375	10.88	1.2D + 1.6W 90° Wind	36	47.27	1	1	15.19	19.58	19.07	71.7	Bolt Shear
10	120	SAE - 2.5X2.5X0.375	10.84	1.2D + 1.6W 90° Wind	36	47.27	1	1	15.19	19.58	19.07	71.4	Bolt Shear
11	126.66	SAE - 2.5X2.5X0.25	9.76	1.2D + 1.6W 90° Wind	36	32.71	1	1	15.19	13.05	14.07	74.8	Bolt Bear
12	140	SAE - 2.5X2.5X0.25	10.03	1.2D + 1.6W 90° Wind	36	32.71	1	1	15.19	13.05	12.71	78.9	Blck Shear
13	160	SAE - 2.5X2.5X0.375	8.49	1.2D + 1.6W 90° Wind	36	47.27	1	1	15.19	19.58	19.07	55.9	Bolt Shear
14	180	SAE - 1.75X1.75X0.1875	4.32	1.2D + 1.6W 90° Wind	36	15.64	1	1	15.19	9.79	7.50	57.7	Blck Shear
15	195	SAE - 1.75X1.75X0.1875	2.71	0.9D + 1.6W 60° Wind	36	15.64	1	1	15.19	9.79	7.50	36.1	Blck Shear

Copyright © 2019 by Tower Engineering Solutions, LLC. All rights reserved.

Support Forces Summary

Structure:	CT01879-S-SBA		**Code:**	EIA/TIA-222-G	3/27/2019
Site Name:	Clinton 4 CT		**Exposure:**	D	
Height:	195.00 (ft)		**Crest Height:**	0.00	
Base Elev:	0.000 (ft)		**Site Class:**	D - Stiff Soil	
Gh:	0.85	**Topography:** 1	**Struct Class:**	II	Page: 17

Tower Engineering Solutions

Load Case	Node	FX (kips)	FY (kips)	FZ (kips)	(-) = Uplift (+) = Down
1.2D + 1.6W Normal Wind	1	0.00	505.47	-54.23	
	1a	18.91	-219.56	-17.91	
	1b	-18.91	-219.56	-17.91	
1.2D + 1.6W 60° Wind	1	-5.68	253.53	-26.44	
	1a	-25.62	253.07	8.49	
	1b	-42.61	-440.25	-24.72	
1.2D + 1.6W 90° Wind	1	-6.73	22.23	-1.25	
	1a	-40.90	426.81	19.99	
	1b	-38.90	-382.69	-18.74	
0.9D + 1.6W Normal Wind	1	0.00	499.33	-53.87	
	1a	19.20	-224.78	-18.09	
	1b	-19.20	-224.78	-18.09	
0.9D + 1.6W 60° Wind	1	-5.69	247.69	-26.09	
	1a	-25.32	247.27	8.30	
	1b	-42.90	-445.20	-24.89	
0.9D + 1.6W 90° Wind	1	-6.74	16.68	-0.90	
	1a	-40.59	420.80	19.81	
	1b	-39.20	-387.72	-18.91	
1.2D + 1.0Di + 1.0Wi Normal Wind	1	0.00	177.39	-12.82	
	1a	5.88	-8.96	-5.16	
	1b	-5.88	-8.96	-5.16	
1.2D + 1.0Di + 1.0Wi 60° Wind	1	-1.50	114.28	-5.84	
	1a	-5.77	113.88	1.66	
	1b	-12.29	-68.69	-7.12	
1.2D + 1.0Di + 1.0Wi 90° Wind	1	-1.74	53.36	0.84	
	1a	-9.76	159.00	4.68	
	1b	-11.23	-52.89	-5.51	
1.0D + 1.0W Normal Wind	1	0.00	117.53	-12.08	
	1a	3.10	-31.12	-3.22	
	1b	-3.10	-31.12	-3.22	
1.0D + 1.0W 60° Wind	1	-1.19	66.02	-6.36	
	1a	-6.07	65.82	2.19	
	1b	-7.98	-76.55	-4.63	
1.0D + 1.0W 90° Wind	1	-1.39	18.52	-1.17	
	1a	-9.22	101.47	4.57	
	1b	-7.21	-64.70	-3.40	

Max Reactions

Leg			Overturning		
Max Uplift:	-445.20	(kips)	Moment:	9627.81	(ft-kips)
Max Down:	505.47	(kips)	Total Down:	66.35	(kips)
Max Shear:	54.23	(kips)	Total Shear:	90.05	(kips)

Copyright © 2019 by Tower Engineering Solutions, LLC. All rights reserved.

Max Reactions

Leg			Overturning		
Max Uplift:	-445.20	(kips)	Moment:	9627.81	(ft-kips)
Max Down:	505.47	(kips)	Total Down:	66.35	(kips)
Max Shear:	54.23	(kips)	Total Shear:	90.05	(kips)

Anchor Bolts

Bolt Size (in.):	1.50	Number Bolts:	8
Yield Strength (Ksi):	105.00	Tensile Strength (Ksi):	125.00
Detail Type:	C		

Interaction Ratio: 0.48

Max Usages

Max Leg: 98.5% (1.2D + 1.6W Normal Wind - Sect 13)
Max Diag: 81.5% (0.9D + 1.6W 90° Wind - Sect 2)
Max Horiz: 14.1% (1.2D + 1.6W 60° Wind - Sect 14)

Max Deflection, Twist and Sway

Load Case	Elevation (ft)	Deflection (ft)	Twist (deg)	Sway (deg)
0.9D + 1.6W 105 mph Wind at 60° From Face	79.63	0.3344	0.0073	0.5186
	100.38	0.5278	0.0190	0.6567
	140.00	1.0708	0.0670	0.9578
	149.81	1.2464	0.1022	1.1012
	160.38	1.4593	0.1502	1.4901
	180.00	1.8951	0.3029	1.3955
	185.00	2.0123	0.4128	1.2073
	190.00	2.1340	0.4316	1.5009
	195.00	2.2558	0.4252	1.3992
0.9D + 1.6W 105 mph Wind at 90° From Face	79.63	0.3378	-0.0168	0.5108
	100.38	0.5330	-0.0175	0.6454
	140.00	1.0798	0.0592	0.9490
	149.81	1.2578	0.0647	1.1032
	160.38	1.4714	0.0758	1.4756
	180.00	1.9107	0.0771	1.4309
	185.00	2.0281	0.0332	0.7186
	190.00	2.1502	0.0769	1.5960
	195.00	2.2729	0.0772	1.4049
0.9D + 1.6W 105 mph Wind at Normal To Face	79.63	0.3494	0.0164	0.5739
	100.38	0.5506	0.0256	0.7274
	140.00	1.1128	0.0254	1.0245
	149.81	1.2957	0.0253	1.1438
	160.38	1.5156	-0.0251	1.5546
	180.00	1.9677	-0.0321	1.3975
	185.00	2.0898	0.0248	2.0769
	190.00	2.2159	-0.0322	1.4584
	195.00	2.3424	-0.0318	1.5440

Copyright © 2019 by Tower Engineering Solutions, LLC. All rights reserved.

1.0D + 1.0W 60 mph Wind at 60° From Face	79.63	0.0688	-0.0018	0.1060
	100.38	0.1086	-0.0013	0.1346
	140.00	0.2198	0.0110	0.1960
	149.81	0.2560	0.0126	0.2262
	160.38	0.2995	0.0158	0.3078
	180.00	0.3889	0.0166	0.2835
	185.00	0.4130	0.0209	0.2447
	190.00	0.4378	0.0215	0.3069
	195.00	0.4628	0.0211	0.2874
1.0D + 1.0W 60 mph Wind at 90° From Face	79.63	0.0694	-0.0036	0.1049
	100.38	0.1095	-0.0039	0.1325
	140.00	0.2216	0.0113	0.1948
	149.81	0.2581	0.0120	0.2263
	160.38	0.3019	0.0136	0.3021
	180.00	0.3918	0.0136	0.2929
	185.00	0.4159	0.0047	0.1476
	190.00	0.4409	0.0129	0.3267
	195.00	0.4660	0.0128	0.2882
1.0D + 1.0W 60 mph Wind at Normal To Face	79.63	0.0718	0.0032	0.1168
	100.38	0.1131	0.0050	0.1488
	140.00	0.2283	0.0045	0.2099
	149.81	0.2656	0.0042	0.2336
	160.38	0.3106	-0.0062	0.3153
	180.00	0.4031	-0.0075	0.2867
	185.00	0.4284	0.0031	0.4258
	190.00	0.4539	-0.0075	0.2988
	195.00	0.4797	-0.0075	0.3151
1.2D + 1.0Di + 1.0Wi 50 mph Wind at 60° From Face	79.63	0.0875	-0.0025	0.1351
	100.38	0.1383	-0.0018	0.1717
	140.00	0.2808	0.0143	0.2486
	149.81	0.3262	0.0162	0.2861
	160.38	0.3813	0.0202	0.3896
	180.00	0.4941	0.0390	0.3600
	185.00	0.5241	0.0482	0.3157
	190.00	0.5557	0.0496	0.3939
	195.00	0.5874	0.0490	0.3633
1.2D + 1.0Di + 1.0Wi 50 mph Wind at 90° From Face	79.63	0.0885	-0.0052	0.1336
	100.38	0.1393	-0.0058	0.1680
	140.00	0.2812	0.0148	0.2456
	149.81	0.3268	0.0160	0.2847
	160.38	0.3819	0.0182	0.3801
	180.00	0.4947	0.0186	0.3730
	185.00	0.5249	0.0174	0.1392
	190.00	0.5562	0.0183	0.4225
	195.00	0.5878	0.0183	0.3619
1.2D + 1.0Di + 1.0Wi 50 mph Wind at Normal From Face	79.63	0.0887	0.0026	0.1453
	100.38	0.1404	0.0041	0.1862
	140.00	0.2852	0.0037	0.2611
	149.81	0.3316	0.0035	0.2892
	160.38	0.3874	-0.0074	0.3869
	180.00	0.5024	-0.0090	0.3584
	185.00	0.5334	0.0026	0.5808
	190.00	0.5656	-0.0091	0.3737
	195.00	0.5979	-0.0090	0.3988
1.2D + 1.6W 105 mph Wind at 60° From Face	79.63	0.3349	0.0073	0.5193
	100.38	0.5286	0.0190	0.6579
	140.00	1.0727	0.0672	0.9599
	149.81	1.2487	0.1024	1.1040
	160.38	1.4621	0.1504	1.4945
	180.00	1.8991	0.3034	1.3988
	185.00	2.0165	0.4136	1.2110
	190.00	2.1386	0.4325	1.5045
	195.00	2.2607	0.4260	1.4032

Copyright © 2019 by Tower Engineering Solutions, LLC. All rights reserved.

1.2D + 1.6W 105 mph Wind at 90° From Face	79.63	0.3382	-0.0169	0.5116
	100.38	0.5337	-0.0176	0.6466
	140.00	1.0817	0.0592	0.9511
	149.81	1.2601	0.0648	1.1057
	160.38	1.4742	0.0760	1.4792
	180.00	1.9145	0.0772	1.4345
	185.00	2.0323	0.0331	0.7222
	190.00	2.1548	0.0771	1.5998
	195.00	2.2778	0.0774	1.4089
1.2D + 1.6W 105 mph Wind at Normal To Face	79.63	0.3499	0.0164	0.5745
	100.38	0.5515	0.0256	0.7287
	140.00	1.1148	0.0254	1.0268
	149.81	1.2981	0.0253	1.1464
	160.38	1.5186	-0.0253	1.5585
	180.00	1.9719	-0.0323	1.4015
	185.00	2.0943	0.0248	2.0813
	190.00	2.2208	-0.0325	1.4626
	195.00	2.3476	-0.0321	1.5478

Copyright © 2019 by Tower Engineering Solutions, LLC. All rights reserved.

Pier Foundation For Self Supporting Tower

Customer Name:	SBA Communications Corp	EIA/TIA Standard:	EIA-222-G
Site Name:		Structure Height (Ft.):	195
Site Number:	CT01879-S-SBA	Engineer Name:	D. Zhou
Engr. Number:	71440	Engineer Login ID:	

Date: 3/27/2019

Foundation Info Obtained from: Drawings/Calculations

Acceptable overstress (% 5.0%

Structure Type: Self Supporting Tower

Analysis or Design? Analysis

Base Reactions (Factored):

Axial Load (Kips):	505.5	Shear Force (Kips):	54.2
Uplift Force (Kips):	445.2	Moment (Kips-ft):	0.0

Foundation Geometries:

Diameter of Pier (ft.):	6.0	Depth of Base B. G. S. :	51.0	ft.
Pier Height A. G. (ft.):	0.50			

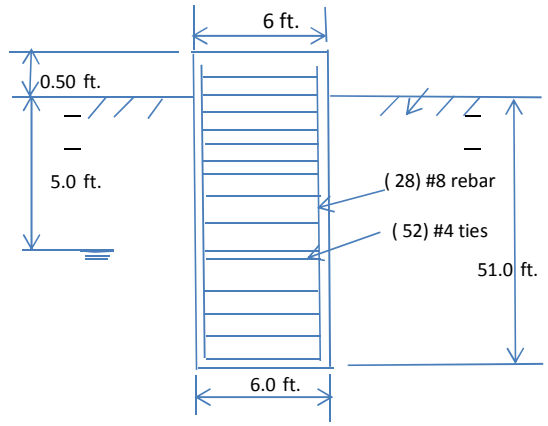

Material Properties and Reabr Info:

Concrete Strength (psi):	3000	Steel Elastic Modulus:	29000	ksi
Vertical bar yield (ksi)	60	Tie steel yield strength:	60	ksi
Vertical Rebar Size #:	8	Tie / Stirrup Size #:	4	
Qty. of Vertical Rebars:	28	Tie Spacing:	12.0	in.
Concrete Cover (in.):	3	Concrete unit weight:	0.0	pcf
Consider ties in concrete shear strength?		Yes		

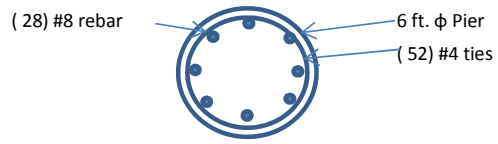

SST Pier Foundation

Soil Design Parameters:

Water Table B.G.S. (ft):	5.0	Unit weight of water:	62.4	psf
Ratio of Uplift/Axial Skin Friction:	1.00	Pullout failure Angle:	30	(°)

Skin Frictions are to be obtained from: Calculations

Please Enter Ultimate End Bearing Pressure (psf): Sand 10000

Kc =	1.15	For Sand	Kt =	0.7	For Sand and Silt	Friction δ Between Pier & Soil =	0.95
Kc =	1.0	Silt/Clay	Kt =	0.85	For Clay		

Depth of Layers (ft) Top	Bottom	γ_{soil} (pcf)	ϕ (°)	Cohesion (psf)			Soil Types	Ultimate Uplift Skin Friction (psf)	Ultimate Axial Skin Friction (psf)	Kc	Kt	α
0.0	2.5	100	28	0	0	0	Sand	43.8	72.0	1.15	0.70	
2.5	55.0	120	30	0	730	10000	Sand	765.8	1258.2	1.15	0.70	
55.0	60.0	120	30	0	730	10000	Sand	832.0	1366.8	1.15	0.70	

Soil weight Increase Factor for bouyant soils (1.0 to 1.15): 1.1

Foundation Analysis and Design:

Uplift Strength Reduction Factor:	0.75	Soil Bearing Strength Reduction Factor:	0.75	
Total Dry Soil Volume from Conical Failure (cu. Ft.):	14952	Dry Soil Weight from Conical Failure:	1645	Kips
Total Buoyant Soil Volume from Conical Failure (cu. Ft.):	45491	Buoyant Soil Weight from Conical Failure (Ki	3439	Kips
Total Dry Concrete Volume (cu. Ft.):	156	Total Dry Concrete Weight:	0.00	Kips
Total Buoyant Concrete Volume (cu. Ft.):	1301	Total Buoyant Concrete Weight:	-81.16	Kips
Total Effective Concrete Weight (Kips):	-81.2	Total Effective Soil Weight:	5084	Kips
Total Effective Vertical Load on Base (Kips):	310			

TES Engr. Number: 71440 Page 2/2 Date: 3/27/2019

Check Soil Capacities:

					Usage	
Calculated Foundation Allowable Axail Capacity (Kips):	1262.1	>	Design Factored Axial Load (Kips):	310	0.25	OK!
Calculated Foundation Uplift Capacity (Kips):	453.61	>	Design Factored Uplift Load (Kips):	445	0.98	OK!

Check the capacities of Reinforceing Concrete:

Strength reduction factor (Flexure and axial tension):	0.90	Strength reduction factor (Shear):	0.75
Strength reduction factor (Axial compression):	0.65	Wind Load Factor on Concrete Design:	1.00

Reinforcing Concrete Pier:

					Usage	
Vertical Steel Rebar Area (sq. in./each):	0.79		Tie / Stirrup Area (sq. in./each):	0.20		
Calculated Moment Capacity (Mn,Kips-Ft):	2046	>	Design Factored Moment (Mu, K-Ft):	272.6	0.13	OK!
Calculated Shear Capacity (Kips):	337.5	>	Design Factored Shear (Kips):	54.2	0.16	OK!
Calculated Tension Capacity (Tn, Kips):	1194.5	>	Design Factored Tension (Tu Kips):	445.2	0.37	OK!
Calculated Compression Capacity (Pn, Kips):	5369	>	Design Factored Axial Load (Pu Kips):	505.5	0.09	OK!
Moment & Tension Strength Combination:	0.13	OK!	Max. Allowable Tie/Stirrup Spacing:	12.00	in.	
Pier Reinforcement Ratio:	0.005	Reinforcement Ratio is satisfied per ACI				

Reinforce Pier Foundation by Adding Concrete Block (Yes/No ?) No

Engineers Planners Surveyors Landscape Architects Environmental Scientists

MASER CONSULTING
CONNECTICUT

Antenna Mount Modifications

FOR

CTL02230 – Clinton Meadow Road

FA #: 10049127
46 Meadow Road
Clinton, CT 06413
Middlesex County

LTE 3C-MRCTB033583/LTE 4C-MRCTB033616/LTE 5C-MRCTB033722/RETROFIT-MRCTB033754

Mount Utilization: 87.6%

December 21, 2018

Prepared For

AT&T
550 Cochituate Road
Framingham, MA 01701

Prepared By

Maser Consulting Connecticut
331 Newman Springs Road, Suite 203
Red Bank, NJ 07701
732.383.1950

Petros E. Tsoukalas, P.E.
Geographic Discipline Leader
Connecticut License No. 32557

MC Project No. 18946064A

Objective:

The objective of this report is to determine the capacity of the modified antenna support mount at the subject facility for the final wireless telecommunications configuration, per the applicable codes and standards.

Introduction:

Maser Consulting Connecticut has reviewed the following documents in completing this report:

Document Type	Remarks	Source
Failing Structural Analysis	*Project# 18946064A* *Dated December 13, 2018*	*Hudson Design Group*
Radio Frequency Data Sheet (RFDS)	*RFDS ID 2461335, Version 2.00* *Dated November 5, 2018*	*Smartlink, LLC*
Spec Sheet	*SitePro1 P/N SFS-V* *Dated April 30, 2014*	*SitePro1*
Spec Sheet	*SitePro1 P/N SPTB* *Dated November 17, 2016*	*SitePro1*

Codes, Standards and Loading:

Maser Consulting Connecticut utilized the following codes and standards:

- 2018 Connecticut State Building Code, Incorporating the 2015 International Building Code
- Structural Standards for Antenna Supporting Structures and Antennas ANSI/TIA-222-G
    - Ultimate Wind Speed – 135 mph (3-Second Gust)
    - Nominal Wind Speed – 105 mph (3-Second Gust)
    - Exposure Category – C
    - Structure Class – II
    - Topographic Factor, K_{zt} – 1.0
    - Ice Wind Speed – 50 mph (3-Second Gust)
    - Design Ice Thickness – ¾”
    - Maintenance Wind Speed – 30 mph
        - Maintenance Live Load – 250 lbs. at the wort-case location on the mount
        - Maintenance Live Load – 250 lbs. at the worst-case antenna location

The following equipment has been considered for the analysis of the antenna mount(s):

Quantity	Manufacturer	Antenna/ Appurtenance	Status	Sector
3	*POWERWAVE*	*7770*	*Existing*	*Alpha, Beta, & Gamma*
6	***COMMSCOPE***	***SBNHH-1D65A***	***Existing/Proposed***	***Alpha, Beta, & Gamma***
3	**KATHREIN**	**80010964**	**Proposed**	**Alpha, Beta, & Gamma**
3	**ERICSSON**	**RRUS 8843 B2 B66A**	**Proposed**	**Alpha, Beta, & Gamma**
3	**ERICSSON**	**RRUS 32**	**Proposed**	**Alpha, Beta, & Gamma**
3	**ERICSSON**	**RRUS B5/B12**	**Proposed**	**Alpha, Beta, & Gamma**
3	***RAYCAP***	***DC6-48-60-18-8F***	***Existing/Proposed***	***Alpha, Beta, & Gamma***
6	*POWERWAVE*	*TT19-08BP111-001*	*Existing*	*Alpha, Beta, & Gamma*

Analysis Approach:

The modified antenna mount for Alpha sector has been modeled in RISA-3D (V17), a comprehensive structural analysis program. The program performs design checks of structures under user specified loads. The user specified loads have been calculated separately based on the requirements of the above referenced codes and standards. The program performs an analysis based on the applicable steel code to determine the adequacy of the members and produces the reactions at the connection points of the mounts to the existing structure.

The scope of this assessment does not include analysis of the supporting tower structure. This mounting frame was not analyzed as an anchor attachment point for fall protection. All climbing activities are required to have a fall protection plan completed by a competent engineer.

Assumptions:

General Site Design Assumptions:

1. All engineering services are performed on the basis that the information provided to Maser Consulting Connecticut and used in this analysis is current and correct.
2. The mounting frames were properly fabricated, installed and maintained in good condition, twist free and plumb in accordance with its original design and manufacturer's specifications.
3. The connection from the tower to the mount is in good condition and has been analyzed and found sufficient assuming it will achieve its theoretical strength.
4. It is the responsibility of the client to ensure that the information provided to Maser Consulting Connecticut and used in the performance of our engineering services is correct and complete. In the absence of information to the contrary, we assume that the original design, material production, fabrication, and erection of the existing structure was performed in accordance with accepted industry design standards and in accordance with all applicable codes. Further, it is assumed that the existing structure and appurtenances have been properly maintained in accordance with all applicable codes and manufacturer's specifications and no structural defects and/or deterioration to the structural members has occurred.
5. All member connections are assumed to have been designed to meet or exceed the load carrying capacity of the connected member unless otherwise specified in this report.
6. The existing equipment loading has been applied at locations determined from the supplied documentation and field observations. Should the existing equipment configuration differ from what is utilized in this analysis, the results of this analysis are invalid.
7. All services are performed, results obtained, and recommendations made in accordance with generally accepted engineering principles and practices. Maser Consulting Connecticut is not responsible for the conclusion, opinions, and recommendations made by others based on the information supplied.

Site Specific Assumptions and Design Parameters:

1. Structural Steel Grades have been assumed as follows, if applicable, unless otherwise noted in this analysis:
   - Angle — ASTM A36 (Gr. 36)
   - HSS (Rectangular) — ASTM 500 (Gr. B-46)
   - Pipe — ASTM A53 (Gr. B-35)
   - Threaded Rod — F1554 (Gr. 36)
2. All proposed equipment locations are to be as depicted in the rendered diagram in Appendix A of this report. Any changes made to the proposed equipment locations will render this report invalid.
3. All existing antenna pipe masts were assumed to be 6' long 2.0 STD pipe masts.
4. The existing stabilizer arm was assumed to be 9' long in each sector.
5. The threaded rods at the connection to the tower leg are assumed to be ½" dia A36.
6. **Proposed stabilizer arms (SitePro1 P/N SPTB) and proposed kickers (SitePro1 P/N SFS-V) are to be installed in each sector**

Discrepancies between in-field conditions and the assumptions listed above may render this analysis invalid unless explicitly approved by Maser Consulting Connecticut

Calculations:

Selected calculations and analysis output can be found in Appendix A of this report.

Analysis Results and Conclusion:

Component	Utilization %	Pass/Fail
Mount Pipe	*52.4*	*Pass*
Face Horizontal	*72.7*	*Pass*
Stabilizer	*7.9*	*Pass*
Standoff Vertical	*87.6*	*Pass*
Standoff Horizontal	*24.3*	*Pass*
Mast Pipe	*37.3*	*Pass*
Kickers	*12.3*	*Pass*
Mount to Tower Connection, Bolts	*17.7*	*Pass*

Structure Rating – *(Controlling Utilization of all Components)*	**87.6%**

Recommendation:

The modified mounting frames are **SUFFICIENT** for the final loading configuration after the proposed modifications have been installed properly

The conclusions reached by Maser Consulting Connecticut in this evaluation are only applicable for the structural members supporting the **AT&T** telecommunications installation described herein. Further, no structural qualifications are made or implied by this document for the existing structure. The mount was checked up to the threaded rods that fasten it to the tower leg. However, no structural qualifications are made or implied by this document for the mount attachment.

Maser Consulting Connecticut reserves the right to amend this report if additional information regarding the members is provided. The conclusions reached by Maser Consulting Connecticut in this report are only valid for the appurtenances listed in this report. Any change to the installation will require a revision to this structural analysis.

We appreciate the opportunity to be of service on this project. If you should have any questions or require any additional information, please do not hesitate to call our office.

Sincerely,
Maser Consulting Connecticut

Petros E. Tsoukalas, P.E.
Geographic Discipline Leader

Vincent DiGirolamo
Engineer

Disclaimer of Warranties:

The engineering services rendered by Maser Consulting Connecticut in connection with this structural analysis are limited to a computer analysis of the mounting frame structure and theoretical capacity of its main structural members. No allowance has been made for any damaged, bent, missing, loose, or rusted members or connections.

Maser Consulting Connecticut will accept no liability which may arise due to any deficiency in design, material, fabrication, erection, construction, or lack of maintenance. Maser Consulting Connecticut has not performed a site visit of the mounting frame to verify member sizes or equipment loading. Contractor should inspect the condition of the existing structure, mounting frames and connections and notify Maser Consulting Connecticut of any discrepancies or deficiencies before proceeding with installation.

The attached sketch is a schematic representation of the analyzed mounting frames. The contractor shall be responsible for field verifying the existing conditions, proper fit, and clearances in the field.

Miscellaneous items such as antenna mounts, etc., have not been designed or detailed as part of our work. We recommend that material of suitable size and strength be purchased from a reputable manufacturer.

Maser Consulting Connecticut makes no warranties, expressed and/or implied, in connection with this report and disclaims any liability arising from material, fabrication, and erection of the mounting frames. Maser Consulting Connecticut will not be responsible whatsoever for, or on account of, consequential or incidental damages sustained by any person, firm, or organization as a result of any data or conclusions contained in this report.

APPENDIX A

Client:	ATT	Computed By:	VD
Site Name:	CT2230	Date:	12/21/2018
Project No.	18946064A	Verified By:	PET
Title:	Antenna Mount Analysis	Page:	1

Version 4.0

LOADING SUMMARY

Quantity	Manufacturer	Antenna/ Appurtenance	Status	Sector	
3	*POWERWAVE*	*7770*	*Existing*	*Alpha, Beta, & Gamma*	
6	***COMMSCOPE***	***SBNHH-1D65A***	***Existing/Proposed***	***Alpha, Beta, & Gamma***	
3	**KATHREIN**	**80010964**	**Proposed**	**Alpha, Beta, & Gamma**	
3	**ERICSSON**	**RRUS 8843 B2 B66A**	**Proposed**	**Alpha, Beta, & Gamma**	
3	**ERICSSON**	**RRUS 32**	**Proposed**	**Alpha, Beta, & Gamma**	
3	**ERICSSON**	**RRUS B5/B12**	**Proposed**	**Alpha, Beta, & Gamma**	
3	***RAYCAP***	***DC6-48-60-18-8F***	***Existing/Proposed***	***Alpha, Beta, & Gamma***	(1 existing mounted to tower leg)
6	*POWERWAVE*	*TT19-08BP111-001*	*Existing*	*Alpha, Beta, & Gamma*	

The worst case loading occurs in the Alpha Sector

Quantity	Manufacturer	Antenna/ Appurtenance	Status
1	POWERWAVE	7770	Existing
2	COMMSCOPE	SBNHH-1D65A	Existing/Proposed
1	KATHREIN	80010964	Proposed
1	ERICSSON	RRUS 8843 B2 B66A	Proposed
1	ERICSSON	RRUS 32	Proposed
1	ERICSSON	RRUS B5/B12	Proposed
1	RAYCAP	DC6-48-60-18-8F	Existing/Proposed
2	POWERWAVE	TT19-08BP111-001	Existing

I. DESIGN INPUTS

Calculations for gravity and lateral loading on equipment and support mounts are determined as per the ANSI/TIA-222-G Code, Addendum 2

				Reference	Equation
Wind Load Inputs Parameters					
Antenna Centerline	z	150	ft		
Ultimate Wind Speed	V_U	135	mph		
Nominal Wind Speed (3 sec. Gust):	V	105	mph	Ref. 1, Eqn. 16-33	
Nominal Wind Speed with Ice (3 sec. gust):	V_i	50.0	mph	(Figure a5-2a, p. 233)	
Maintenance Wind Speed:	V_m	30.0	mph		
Service Wind Speed:	V_s	60.0	mph	(Figure a5-2a, p. 233)	
Design Ice Thickness:	t_i	0.75	in	(Figure A1-2a, p. 233)	
Exposure Category:		C		Ref. 3, Section 2.6.5.1	
Structure Class:		II		Ref. 3, Table 2-1	
Gust Effect Factor:	G_h	1.00		Ref. 3, Section 2.6.7	
Wind Directionality Factor:	K_d	0.85		Ref. 3, Table 2-2	
Topographic Category:		1		Ref. 3, Section 2.6.6.2	
Wind Load Coefficients					
Importance Factors:					
Non-Iced:	I	1		Ref. 3, Table 2-3	
Iced:	I_{ice}	1		(Table 2-3, P. 39)	
Exposure Category Coefficients:					
3-s Gust-Speed Power Law Exponent:	α	9.5		Ref. 3, Table 2-4	
Nominal Height of the Atmospheric Boundary Layer:	Z_g	900	ft	Ref. 3, Table 2-4	
Min. Value for k_z:	Kz_{min}	0.85		Ref. 3, Table 2-4	
Terrain Constant:	K_e	1.00		Ref. 3, Table 2-4	
Velocity Pressure Exposure Coefficient:	K_z	1.378		Ref. 3, Section 2.6.5.2	$=2.01\cdot(z/z_g)^{2/\alpha}$
Topographic Category Coefficients:					
Topographic Constant:	K_t	N/A		Ref. 3, Table 2-5	
Height Attenuation Factor:	f	N/A		Ref. 3, Table 2-5	
Height Reduction Factor:	K_h	N/A		Ref. 3, Section 2.6.6.4	$=e^{(f\cdot z/H)}$
Topographic Factor:	K_{zt}	1.00		Ref.3, Section 2.6.6.4	$=[1+(K_e\cdot K_t/K_h)]^2$
Ice Accumulation:					
Ice Velocity Pressure Exposure Coefficient:	K_{iz}	1.16			$=(z/33)^{0.10}$
Factored Ice Thickness:	t_{iz}	1.75	in	(Section 2.6.8, p. 16)	$=2.0\cdot t_i\cdot I\cdot K_{iz}\cdot K_{zt}$
Ice Density:	ρ_i	56.00	pcf		
Design Wind Pressures:					
Velocity Pressure:	q_z	32.80	psf	Ref. 3, Section 2.6.9.6	$=0.00256\cdot K_z\cdot K_{zt}\cdot K_d\cdot V^2\cdot I$
Velocity Pressure (With Ice):	q_{zi}	7.50	psf	(Section 2.6.9.6, P. 25)	$=.00256\cdot K_z\cdot K_{zt}\cdot K_d\cdot V_i^2\cdot I$
Velocity Pressure (Maintenance):	q_{zm}	2.70	psf	(Section 2.6.9.6, P. 25)	$=.00256\cdot K_z\cdot K_{zt}\cdot K_d\cdot V_m^2\cdot I$
Velocity Pressure (Service):	q_{zs}	10.80	psf	(Section 2.6.9.6, P. 25)	$=.00256\cdot K_z\cdot K_{zt}\cdot K_d\cdot V_i^2\cdot I$

Client:	ATT	Computed By:	VD
Site Name:	CT2230	Date:	12/21/2018
Project No.	18946064A	Verified By:	PET
Title:	Antenna Mount Analysis	Page:	3

II. CALCULATIONS

▪ *Wind Load on Appurtenances*

Dimensions and Force Coefficients

Antenna/ Appurtenance	Non-Iced Condition								Iced Condition							
	Mounting Pipe			Equipment					Mounting Pipe			Equipment				
	Length (in)	Diameter (in)	Force Coefficient C_a	Height (in)	Width (in)	Depth (in)	Force Coefficient $C_{a\ Front}$	Force Coefficient $C_{a\ Side}$	Length (in)	Diameter (in)	Force Coefficient C_a	Height (in)	Width (in)	Depth (in)	Force Coefficient $C_{a\ Front}$	Force Coefficient $C_{a\ Side}$
7770	72.0	2.375	1.200	55.00	11.00	5.00	1.31	1.53	75.5	5.9	0.930	58.49	14.49	8.49	1.27	1.39
SBNHH-1D65A	72.0	2.375	1.200	55.60	11.90	7.10	1.30	1.43	75.5	5.9	0.930	59.09	15.39	10.59	1.26	1.34
80010964	72.0	2.375	1.200	59.00	20.00	6.90	1.22	1.45	75.5	5.9	0.930	62.49	23.49	10.39	1.21	1.36
RRUS 8843 B2 B66A	0.0	0.000	0.000	14.90	13.20	10.90	1.20	1.20	0.0	0.0	0.000	18.39	16.69	14.39	1.20	1.20
RRUS 32	0.0	0.000	0.000	27.20	12.00	7.00	1.20	1.26	0.0	0.0	0.000	30.69	15.49	10.49	1.20	1.22
RRUS B5/B12	0.0	0.000	0.000	14.96	13.19	10.43	1.20	1.20	0.0	0.0	0.000	18.45	16.68	13.92	1.20	1.20
DC6-48-60-18-8F	0.0	0.000	0.000	31.40	10.20	10.20	0.71	0.71	0.0	0.0	0.000	34.89	13.69	13.69	0.70	0.70
TT19-08BP111-001	0.0	0.000	0.000	9.90	6.70	5.40	1.20	1.20	0.0	0.0	0.000	13.39	10.19	8.89	1.20	1.20

Antenna/ Appurtenance	# of Brackets	Non-Iced Condition			Iced Condition			Maintenance Condition	
		Wind Force (lbs.)		Gravity (lbs.)	Wind Force (lbs.)		Gravity (lbs.)	Wind Force (lbs.)	
		F_N	F_T		F_N	F_T		F_N	F_T
7770	2	95.8	71.4	**17.5**	31.1	28.8	**71.9**	7.9	5.9
SBNHH-1D65A	2	103.0	87.6	**23.4**	32.8	32.5	**81.9**	8.5	7.2
80010964	2	168.2	90.7	**47.4**	48.5	33.7	**127.1**	13.8	7.5
RRUS 8843 B2 B66A	1	53.8	44.4	**77.0**	19.2	16.5	**61.6**	4.4	3.7
RRUS 32	1	89.2	54.7	**52.9**	29.7	20.4	**85.3**	7.3	4.5
RRUS B5/B12	1	53.9	42.6	**73.0**	19.2	16.0	**60.8**	4.4	3.5
DC6-48-60-18-8F	1	52.0	52.0	**26.2**	17.4	17.4	**74.1**	4.3	4.3
TT19-08BP111-001	1	18.1	14.6	**21.0**	8.5	7.4	**24.6**	1.5	1.2

**** ALL CALCULATED LOADS ARE PER MOUNTING BRACKET. TO GET THE TOTAL EQUIPMENT LOAD, MULTIPLY THE INDIVIDUAL LOADS BY THE NUMBER OF BRACKETS***

▪ *Wind Load on Framing Members*

Member Category	Member Shape	Length (in)	Member Surface	Non-Iced Condition			Iced Condition						Maintenance Condition
				Exposed Wind Height (in)	Force Coefficient C_a	Wind Load (plf)	Exposed Wind Height (in)	Depth (in)	Length (in)	Force Coefficient C_a	Wind Load (plf)	Ice Weight (plf)	Wind Load (plf)
Pipe	Pipe 2.0	150	Round	2.38	1.20	7.79	5.87	5.87	153.49	1.20	4.40	8.79	0.64
Pipe	Pipe 2.0	108	Round	2.38	1.20	7.79	5.87	5.87	111.49	1.07	3.91	8.79	0.64
Pipe	Pipe 3.0	56	Round	3.50	1.00	9.56	6.99	6.99	59.49	0.83	3.64	11.18	0.79
Square HSS	HSS 3X3	19.5	Square	3.00	1.38	11.30	6.49	6.49	22.99	1.25	5.05	12.77	0.93
Pipe	Pipe 2.0	36	Round	2.38	0.98	6.37	5.87	5.87	39.49	0.79	2.91	8.79	0.52
Equal Angle	L2.5x2.5	48	Square	2.50	1.81	12.34	5.99	5.99	51.49	1.45	5.44	11.26	1.02

BASIC EQUATIONS

ANSI/TIA-222-G Reference

Importance Factor: Table 2-3, Pg. 39

$$I := \begin{cases} 1.0 & \text{if } Class = \text{"II"} \\ 1.15 & \text{if } Class = \text{"III"} \end{cases}$$

Force Coefficient: (Square) Table 2-8, P. 42

$$C_{f\_square}(h, w) := \begin{cases} 1.2 & \text{if } \frac{h}{w} \le 2.5 \\ \left[1.2 + \frac{0.2}{4.5}\cdot\left(\frac{h}{w} - 2.5\right)\right] & \text{if } \frac{h}{w} > 2.5 \wedge \frac{h}{w} \le 7 \\ \left[1.4 + \frac{0.6}{18}\cdot\left(\frac{h}{w} - 7\right)\right] & \text{if } \frac{h}{w} > 7 \wedge \frac{h}{w} \le 25 \\ 2.0 & \text{otherwise} \end{cases}$$

Force Coefficient: (Round) Table 2-8, P. 42

$$C_{f\_round}(h, w) := \begin{cases} 0.7 & \text{if } \frac{h}{w} \le 2.5 \\ \left[0.7 + \frac{0.1}{4.5}\cdot\left(\frac{h}{w} - 2.5\right)\right] & \text{if } \frac{h}{w} > 2.5 \wedge \frac{h}{w} \le 7 \\ \left[0.8 + \frac{0.4}{18}\cdot\left(\frac{h}{w} - 7\right)\right] & \text{if } \frac{h}{w} > 7 \wedge \frac{h}{w} \le 25 \\ 1.2 & \text{otherwise} \end{cases}$$

Terrain Exposure Constants: Table 2-4, P. 40

$$\alpha := \begin{cases} 7.0 & \text{if } Exp = \text{"B"} \\ 9.5 & \text{if } Exp = \text{"C"} \\ 11.5 & \text{if } Exp = \text{"D"} \end{cases} \quad Z_g := \begin{cases} 1200\text{ft} & \text{if } Exp = \text{"B"} \\ 900\text{ft} & \text{if } Exp = \text{"C"} \\ 700\text{ft} & \text{if } Exp = \text{"D"} \end{cases} \quad K_{zmin} := \begin{cases} 0.70 & \text{if } Exp = \text{"B"} \\ 0.85 & \text{if } Exp = \text{"C"} \\ 1.03 & \text{if } Exp = \text{"D"} \end{cases}$$

BASIC EQUATIONS

ANSI/TIA-222-G Reference

Velocity Pressure Coefficient:

$$Kz(z) := \left| \begin{array}{l} K_z \leftarrow \max\left[2.01 \cdot \left(\frac{z}{Z_g}\right)^{\frac{2}{\alpha}}, K_{zmin}\right] \\ K_z \leftarrow \min\left(K_z, 2.01\right) \end{array} \right.$$

$$K_z := Kz(z)$$

Section 2.6.5, P. 13

$$Kzt(z) := K_{zt} \leftarrow \left| \begin{array}{l} 1.0 \ \text{ if } \ Topo = \text{"1"} \\ \text{otherwise} \\ \quad K_e \leftarrow \left| \begin{array}{l} 0.90 \ \text{ if } \ Exp = \text{"B"} \\ 1.00 \ \text{ if } \ Exp = \text{"C"} \\ 1.10 \ \text{ if } \ Exp = \text{"D"} \end{array} \right. \\ \quad K_t \leftarrow \left| \begin{array}{l} 0.43 \ \text{ if } \ Topo = \text{"2"} \\ 0.53 \ \text{ if } \ Topo = \text{"3"} \\ 0.72 \ \text{ if } \ Topo = \text{"4"} \end{array} \right. \\ \quad f \leftarrow \left| \begin{array}{l} 1.25 \ \text{ if } \ Topo = \text{"2"} \\ 2.00 \ \text{ if } \ Topo = \text{"3"} \\ 1.50 \ \text{ if } \ Topo = \text{"4"} \end{array} \right. \\ \quad K_h \leftarrow e^{\left(\frac{f \cdot z}{CH}\right)} \\ \quad \left(1 + \frac{K_e \cdot K_t}{K_h}\right)^2 \end{array} \right.$$

Section 2.6.6.4, p. 14

Table 2-4 p. 40

Table 2-5 p. 40

Table 2-5 p. 40

Section 2.6.6.4, P. 14

Section 2.6.6.4, P. 14

$$K_{zt} := Kzt(z)$$

Velocity Pressure:

Section 2.6.9.6, P. 25

$$q_z := 0.00256 \cdot K_z \cdot K_{zt} \cdot K_d \cdot V^2 \cdot I \cdot psf$$

LOAD EQUATIONS

WIND LOAD

Area (Normal): $AN_{area} = H_{ant} \cdot Want$

Area (Side): $AT_{area} = H_{ant} \cdot Dant$

Force Coefficient (Normal): $C_{fn} = C_{fsquare}(H_{ant}, Want)$

Force Coefficient (Side): $C_{fs} = C_{fsquare}(H_{ant}, Dant)$

Pipe Area (Normal): $AN_p = \max[(L_p - H_{ant}) * Dp, 0]$

Pipe Area (Side): $AT_p = L_p \cdot Dp$

Force Coefficient (Normal): $C_{fp} = C_{fround}(Lp, Dp)$

Normal Effective Projected Area: $E_{pan} = (C_{fn} \cdot ANarea) + (Cfp \cdot ANp)$

Side Effective Projected Area: $E_{pat} = (C_{fs} \cdot ATarea) + (Cfp \cdot ATp)$

Effective Projected Area: $EPA = max(E_{pan}, Epat)$

Wind Force: $F_{ant} = q_z \cdot Gh \cdot EPA$

ICE DEAD LOAD

Largest Out-to-Out Dimension: $D_{ant} = \sqrt{{D_{ant}}^2 + {W_{ant}}^2}$

Cross Sectional Area of Ice: $A_{ice\_ant} = \pi \cdot tiz \cdot (Dant + tiz)$

Total Ice Dead Load: $DL_{ice\_ant} = \boldsymbol{\rho_i} \cdot (Aice_{\_ant} \cdot Hant)$

ICE WIND LOAD

Dimensions: $H_{i_{ant}} = H_{ant} + 2tiz$

$W_{i_{ant}} = W_{ant} + 2tiz$

$D_{i_{ant}} = D_{ant} + 2tiz$

Area (Normal): $AIN_{area} = H_{i\_ant} \cdot W_{i\_ant}$

Area (Side): $AIT_{area} = H_{i\_ant} \cdot D_{i\_ant}$

Force Coefficient (Normal): $Ci_{fn} = C_{fsquare}(H_{i\_ant}, W_{i\_ant})$

Force Coefficient (Side): $Ci_{fs} = C_{fsquare}(H_{i\_ant}, D_{i\_ant})$

Pipe Area (Normal): $AN_p = \max[(L_{ip} - H_{i\_ant}) * D_{ip}, 0]$

Pipe Area (Side): $AT_p = L_{ip} \cdot Dip$

Force Coefficient (Normal): $C_{fp} = C_{fround}(L_{ip}, D_{ip})$

Normal Effective Projected Area: $E_{pain} = (Ci_{fn} \cdot ANarea) + (Cfp \cdot ANp)$

Side Effective Projected Area: $E_{pait} = (Ci_{fs} \cdot ATarea) + (Cfp \cdot ATp)$

Effective Projected Area: $EPA_i = max(E_{pain}, Epait)$

Wind Force: $F_{i\_ant} = q_z \cdot Gh \cdot EPAi$

III. ATTACHMENTS

RISA MODEL

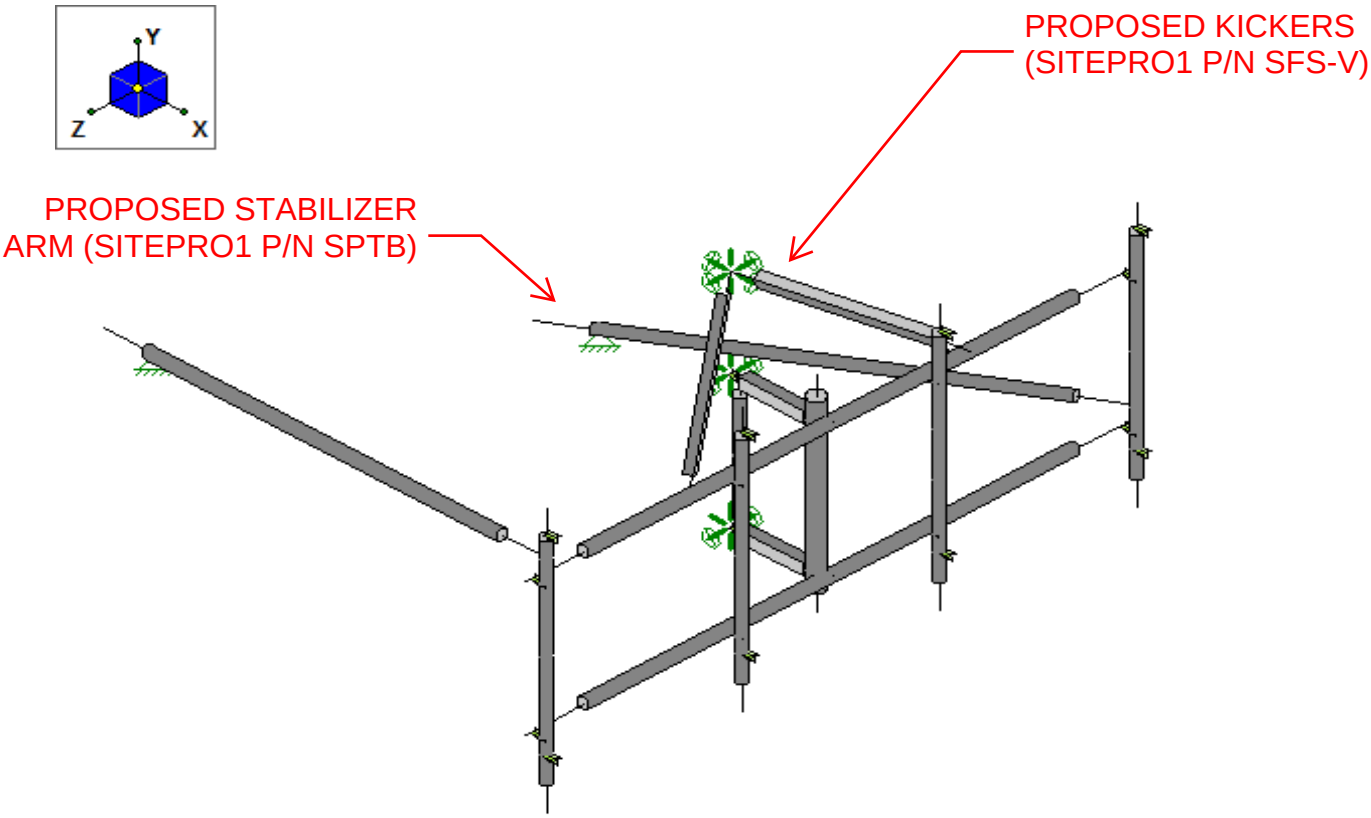
Y
Z
X
PROPOSED KICKERS
(SITEPRO1 P/N SFS-V)
PROPOSED STABILIZER
ARM (SITEPRO1 P/N SPTB)

RISA MODEL

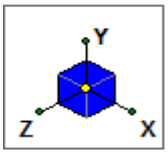
Y
Z
X

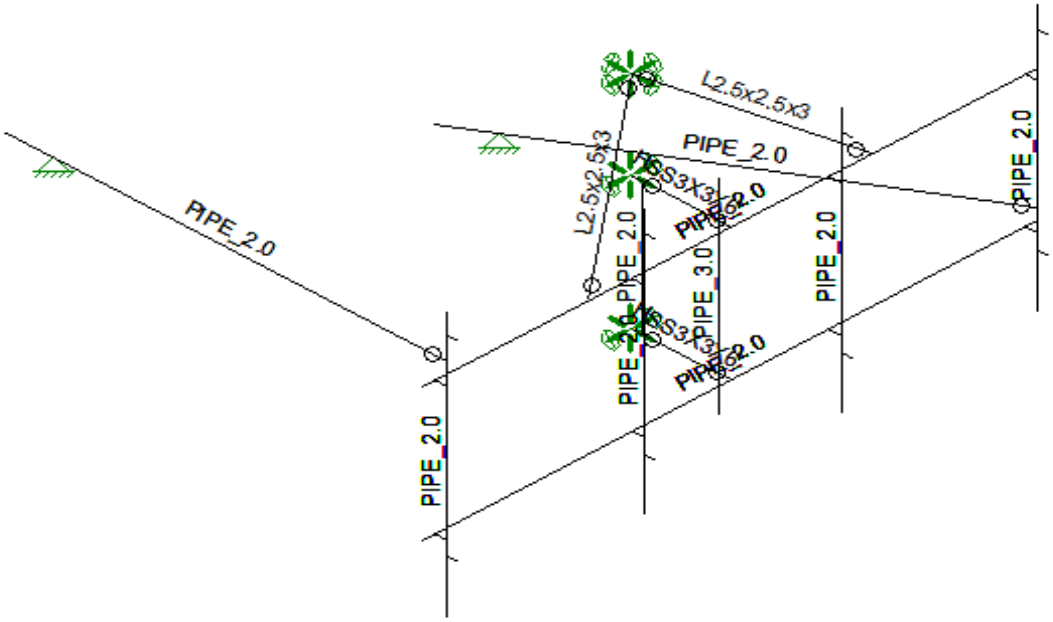
PIPE_2.0
PIPE_2.0
L2.5x2.5x3
L2.5x2.5x3
PIPE_2.0
PIPE_2.0
PIPE_2.0
PIPE_2.0
PIPE_3.0
PIPE_2.0
PIPE_2.0
PIPE_2.0
PIPE_2.0
PIPE_2.0

RISA WORST CASE LOADING

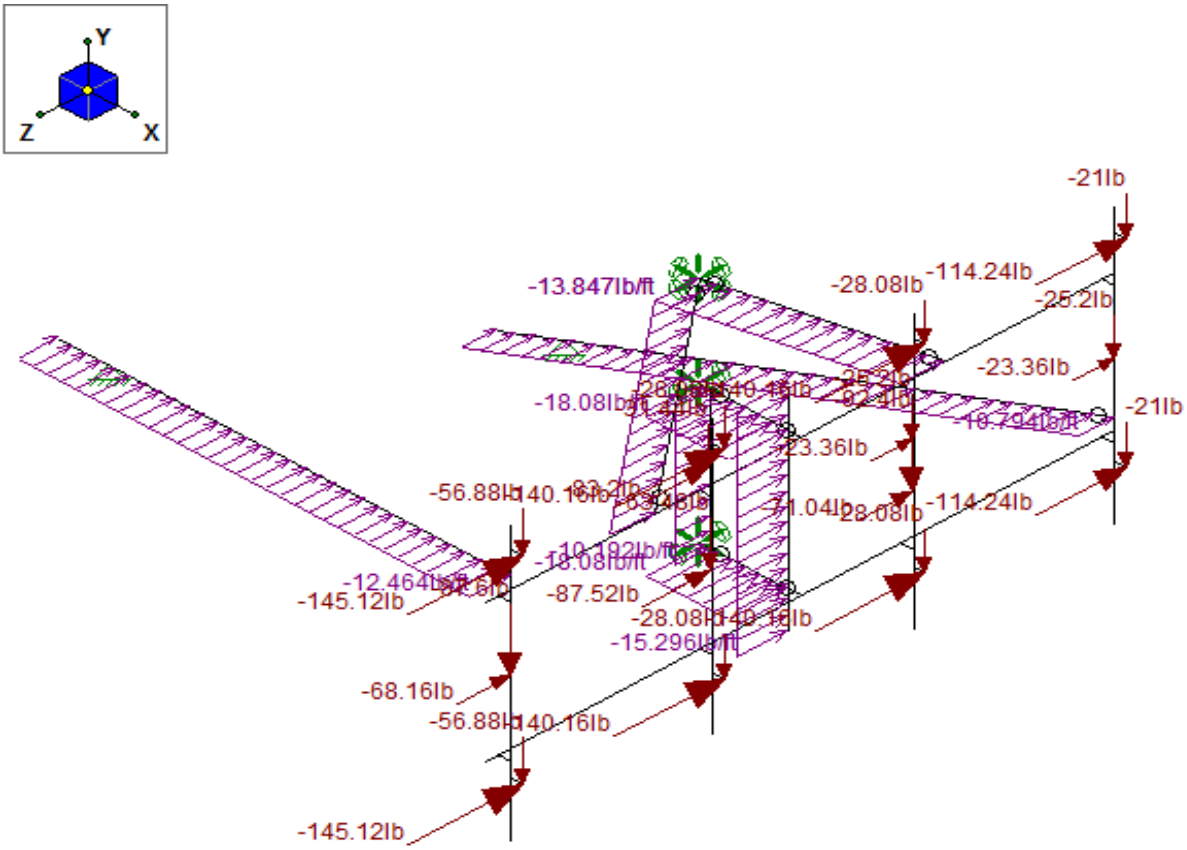

Client:	ATT	Computed By:	VD
Site Name:	CT2230	Date:	12/21/2018
Project No.	18946064A	Verified By:	PET
Title:	Antenna Mount Analysis	Page:	10

RISA CODE CHECK

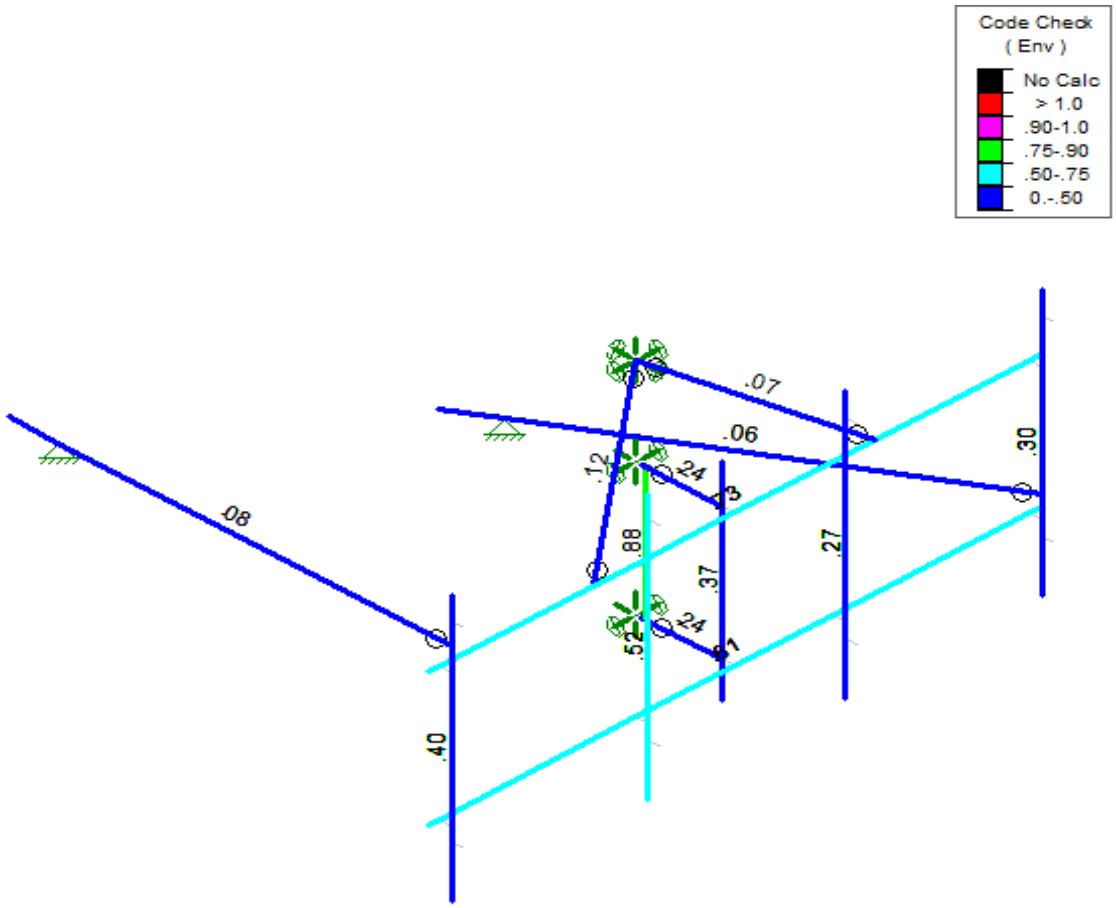

RISA MODS

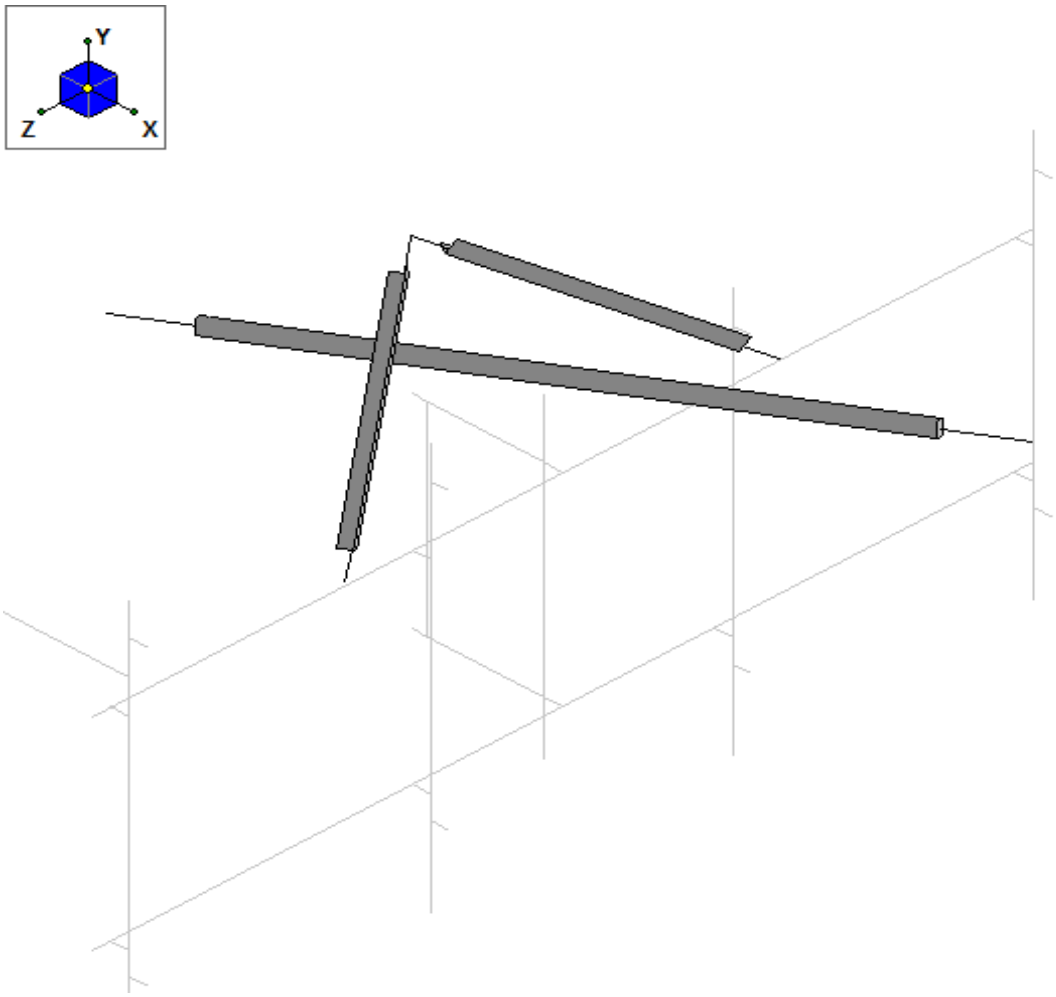

Mount to Monopole Ring Mount Kit Connection Check:

Applied Tension:	$\square := \square\square\square\cdot lbf$	From Risa 3D LRFD Loading
Applied Shear:	$\square y := \square\square lbf$	From Risa 3D LRFD Loading
Applied Shear:	$\square z := \square\square\square\cdot lbf$	From Risa 3D LRFD Loading
Applied Torque:	$M\square := \square\cdot lbf\cdot ft$	From Risa 3D LRFD Loading
Applied Moment:	$My := \square lbf\cdot ft$	From Risa 3D LRFD Loading
Applied Moment:	$Mz := \square\square\cdot lbf\cdot ft$	From Risa 3D LRFD Loading
Number of Bolts:	$n := \square$	Per Specifications
Bolts Vertical Spacing:	$S_{\square} := \square in$	Assumed
Bolts Horizontal Spacing:	$S_{\square} := \square in$	Assumed

Applied Tension at Bolt: $P_{a\square} := \frac{\square\square}{n} + \frac{\square My}{n\cdot S_{\square}} + \frac{\square Mz}{n\cdot S_{\square}} = \square\square\square lbf$

Applied Shear at Bolt: $P_{a\square} := \frac{\sqrt{\square y^{\square} + \square z^{\square}}}{n} + \frac{\square M\square}{n\sqrt{S_{\square}^{\square} + S_{\square}^{\square}}} = \square\square\square\square lbf$

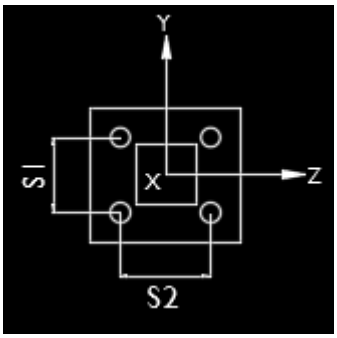

Bolt Type Used:	**A36**	
Nominal Tensile Stress, Fnt:	$\square_{n\square} := \square\square\square\square si$	AISC, Table J3-2, P. 16.1-104
Nominal Shear Stress, Fnv:	$\square_{n\square} := \square\square\square\square si$	AISC, Table J3-2, P. 16.1-104
Nominal Bolt Diameter:	$d_b := \frac{\square}{\square} in$	Assumed
Gross Area of the Bolt:	$A_{b\square} := \square\square\square\square in^{\square}$	AISC, Table 7-18, P. 7-83
Net Area of the Bolt:	$A_{b\square} := \square\square\square\square in^{\square}$	AISC, Table 7-18, P. 7-83
Strength Reduction Factor, ϕ:	$\phi := \square\square\square$	

Applied Tensile Stress: $\square_{a\square} := \frac{P_{a\square}}{A_{b\square}} = \square\square\cdot\square si$

Applied Shear Stress: $\square_{a\square} := \frac{P_{a\square}}{A_{b\square}} = \square\square\cdot\square si$

Combined Tension And Shear Check

Nominal Tensile Stress, Fnt $\square_{n\square} = \square\square\square\cdot\square si$

Nominal Shear Stress, Fnv $\square_{n\square} = \square\square\square\cdot\square si$

Nominal Tensile Reduced Fntr

$$F_{ntr} := 1.3 \cdot F_{nt} - \frac{F_{nt}}{\phi \cdot F_{nv}} \cdot \frac{P_{av}}{A_{bg}} = 90.0 \cdot ksi$$

AISC Eq. J3-3a, P. 16.1-109

$$F_{ntr} := \begin{cases} F_{ntr} & \text{if } F_{ntr} \le F_{nt} \\ F_{nt} & \text{otherwise} \end{cases} = 90.0 \cdot ksi$$

Nominal Shear Reduced Fntv

$$F_{nvr} := 1.3 \cdot F_{nv} - \frac{F_{nv}}{\phi \cdot F_{nt}} \cdot \frac{P_{at}}{A_{bg}} = 54.0 \cdot ksi$$

AISC Eq. J3-3a, P. 16.1-109

$$F_{nvr} := \begin{cases} F_{nvr} & \text{if } F_{nvr} \le F_{nv} \\ F_{nv} & \text{otherwise} \end{cases} = 54.0 \cdot ksi$$

Avalaible Tensile Stress:

$$F_{nt} := \begin{cases} F_{nt} & \text{if } \frac{F_{at}}{F_{nt}} \le 0.75 \\ F_{ntr} & \text{otherwise} \end{cases} = 90.0 \cdot ksi$$

Bolt Nominal Tensile Strength

$$R_{nt} := F_{nt} \cdot A_{bg} = 54.0 \cdot kip$$

Tension Check

$$Check := \begin{cases} \text{"OK"} & \text{if } \phi \cdot R_{nt} \ge P_{at} \\ \text{"NOT GOOD"} & \text{otherwise} \end{cases}$$

Check = "OK"

Tension Ratio

$$Ratio_t := \frac{P_{at}}{\phi \cdot R_{nt}} \qquad Ratio_t = 0.74$$

Avalaible Shear Stress:

$$F_{nv} := \begin{cases} F_{nv} & \text{if } \frac{F_{av}}{F_{nv}} \le 0.75 \\ F_{nvr} & \text{otherwise} \end{cases} = 54.0 \cdot ksi$$

Bolt Nominal Shear Strength

$$R_{nv} := F_{nv} \cdot A_{bg} = 32.4 \cdot kip$$

Shear Check

$$Check := \begin{cases} \text{"OK"} & \text{if } \phi \cdot R_{nv} \ge P_{av} \\ \text{"NOT GOOD"} & \text{otherwise} \end{cases}$$

Check = "OK"

Shear Ratio

$$Ratio_v := \frac{P_{av}}{\phi \cdot R_{nv}} = 0.74$$

RF EMISSIONS COMPLIANCE REPORT

Smartlink on behalf of AT&T Mobility, LLC

Site Name: Clinton Meadow Rd
AT&T Mobility, LLC Site FA #: 10049127
AT&T Mobility, LLC Site USID: 59449
AT&T Mobility, LLC Site ID: CT2230
46 Meadow Road
Clinton, CT
2/26/2019

Report Status:

AT&T Mobility, LLC Is Compliant

sealed 27feb2019 mike@h2dc.com
H2DC PLLC CT CoA#: 0001714

Prepared By:

Sitesafe, LLC

8618 Westwood Center Drive, Suite 315 Vienna, VA 22182 Voice 703-276-1100 Fax 703-276-1169

Engineering Statement in Re:
Electromagnetic Energy Analysis
Smartlink
Clinton, CT

My signature on the cover of this document indicates:

That I, Michael A McGuire, am currently and actively licensed to provide (in this state/jurisdiction as indicated within the professional electrical engineering seal on the cover of this document) professional electrical engineering services, as an employee of Hurricane Hill Development Company, PLLC , a duly authorized/registered engineering firm (in this state, as applicable) on behalf of SiteSafe, LLC; and

That I am thoroughly familiar with the Rules and Regulations of the Federal Communications Commission ("the FCC" and "the FCC Rules") both in general and specifically as they apply to the FCC's Guidelines for Human Exposure to Radiofrequency Electromagnetic Fields; and

That the technical information serving as the basis for this report was supplied by Smartlink (See attached Site Summary and Carrier documents), and that AT&T Mobility, LLC's installations involve communications equipment, antennas and associated technical equipment at a location referred to as the "Clinton Meadow Rd" ("the site"); and

That AT&T Mobility, LLC proposes to operate at the site with transmit antennas listed in the carrier summary and with a maximum effective radiated power as specified by AT&T Mobility, LLC and shown on the worksheet, and that worst-case 100% duty cycle have been assumed; and

That this analysis has been performed with the assumption that the ground immediately surrounding the tower is primarily flat or falling; and

That at this time, the FCC requires that certain licensees address specific levels of radio-frequency energy to which workers or members of the public might possibly be exposed (at §1.1307(b) of the FCC Rules); and

That such consideration of possible exposure of humans to radio-frequency radiation must utilize the standards set by the FCC, which is the Federal Agency having jurisdiction over communications facilities; and

That the FCC rules define two tiers of permissible exposure guidelines: 1) "uncontrolled environments," defined as situations in which persons may not be aware of (the "general public"), or may not be able to control their exposure to a transmission facility; and (2) "controlled environments," which defines situations in which persons are aware of their potential for exposure (industry personnel); and

That this statement specifically addresses the uncontrolled environment (which is more conservative than the controlled environment) and the limit set forth in the FCC rules for licensees of AT&T Mobility, LLC's operating frequency as shown on the attached antenna worksheet; and

That when applying the uncontrolled environment standards, the predicted Maximum Power Density at two meters above ground level from the proposed AT&T Mobility, LLC operation is no more than 1.742% of the maximum in any accessible area on the ground and

That it is understood per FCC Guidelines and OET65 Appendix A, that regardless of the existent radio-frequency environment, only those licenses whose contributions exceed five percent of the exposure limit pertinent to their operation(s) bear any responsibility for bringing any non-compliant area(s) into compliance; and

That when applying the uncontrolled environment standards, the cumulative predicted energy density from the proposed operation is no more than 3.415% of the maximum in any accessible area up to two meters above the ground per OET-65; and

That the calculations provided in this report are based on data provided by the client and antenna pattern data supplied by the antenna manufacturer, in accordance with FCC guidelines listed in OET-65. Horizontal and vertical antenna patterns are combined for modeling purposes to accurately reflect the energy two meters above ground level where on-axis energy refers to maximum energy two meters above the ground along the azimuth of the antenna and where area energy refers to the maximum energy anywhere two meters above the ground regardless of the antenna azimuth, accounting for cumulative energy from multiple antennas for the carrier and frequency range indicated; and

That the Occupational Safety and Health Administration has policies in place which address worker safety in and around communications sites, thus individual companies will be responsible for their employees' training regarding Radio Frequency Safety.

In summary, it is stated here that the proposed operation at the site would not result in exposure of the Public to excessive levels of radio-frequency energy as defined in the FCC Rules and Regulations, specifically 47 CFR 1.1307 and that AT&T Mobility, LLC's proposed operation is completely compliant.

Finally, it is stated that access to the tower should be restricted to communication industry professionals, and approved contractor personnel trained in radio-frequency safety; and that the instant analysis addresses exposure levels at two meters above ground level and does not address exposure levels on the tower, or in the immediate proximity of the antennas.

Smartlink
Clinton Meadow Rd
Site Summary

Carrier	Area Maximum Percentage MPE
AT&T Mobility, LLC	0.352 %
AT&T Mobility, LLC	0.155 %
AT&T Mobility, LLC (Proposed)	0.413 %
AT&T Mobility, LLC (Proposed)	0.244 %
AT&T Mobility, LLC (Proposed)	0.302 %
AT&T Mobility, LLC (Proposed)	0.276 %
Unknown Carrier	0.681 %
Unknown Carrier	0.245 %
Unknown Carrier	0.339 %
Unknown Carrier	0.408 %
Composite Site MPE:	3.415 %

AT&T Mobility, LLC
Clinton Meadow Rd
Carrier Summary

Frequency:	1900	MHz
Maximum Permissible Exposure (MPE):	1000	µW/cm^2
Maximum power density at ground level:	3.51872	µW/cm^2
Highest percentage of Maximum Permissible Exposure:	0.35187	%

					On Axis		Area	
Antenna Make	**Model**	**Height (feet)**	**Orientation (degrees true)**	**ERP (Watts)**	**Max Power Density (µW/cm^2)**	**Percent of MPE**	**Max Power Density (µW/cm^2)**	**Percent of MPE**
ANDREW	SBNHH-1D65A	150	0	4657	1.553401	0.15534	2.026791	0.202679
ANDREW	SBNHH-1D65A	150	90	4657	2.344923	0.234492	2.466772	0.246677
ANDREW	SBNHH-1D65A	150	263	4657	3.230412	0.323041	3.257532	0.325753

AT&T Mobility, LLC
Clinton Meadow Rd
Carrier Summary

Frequency:	850	MHz
Maximum Permissible Exposure (MPE):	566.67	µW/cm^2
Maximum power density at ground level:	0.87893	µW/cm^2
Highest percentage of Maximum Permissible Exposure:	0.1551	%

					On Axis		Area	
Antenna Make	**Model**	**Height (feet)**	**Orientation (degrees true)**	**ERP (Watts)**	**Max Power Density (µW/cm^2)**	**Percent of MPE**	**Max Power Density (µW/cm^2)**	**Percent of MPE**
Powerwave	7770	150	90	547	0.422124	0.074492	0.43167	0.076177
Powerwave	7770	150	263	547	0.422124	0.074492	0.431669	0.076177
Powerwave	7770	150	0	547	0.678528	0.11974	0.690453	0.121845

AT&T Mobility, LLC (Proposed)
Clinton Meadow Rd
Carrier Summary

Frequency:	2100	MHz
Maximum Permissible Exposure (MPE):	1000	µW/cm^2
Maximum power density at ground level:	4.12892	µW/cm^2
Highest percentage of Maximum Permissible Exposure:	0.41289	%

					On Axis		Area	
Antenna Make	**Model**	**Height (feet)**	**Orientation (degrees true)**	**ERP (Watts)**	**Max Power Density (µW/cm^2)**	**Percent of MPE**	**Max Power Density (µW/cm^2)**	**Percent of MPE**
Kathrein-Scala	800-10964	150	0	5274	2.53508	0.253508	2.948419	0.294842
Kathrein-Scala	800-10964	150	90	5274	2.53508	0.253508	2.948419	0.294842
Kathrein-Scala	800-10964	150	263	5274	3.163021	0.316302	3.240209	0.324021

AT&T Mobility, LLC (Proposed)
Clinton Meadow Rd
Carrier Summary

Frequency:	850	MHz
Maximum Permissible Exposure (MPE):	566.67	µW/cm^2
Maximum power density at ground level:	1.38256	µW/cm^2
Highest percentage of Maximum Permissible Exposure:	0.24398	%

					On Axis		Area	
Antenna Make	**Model**	**Height (feet)**	**Orientation (degrees true)**	**ERP (Watts)**	**Max Power Density (µW/cm^2)**	**Percent of MPE**	**Max Power Density (µW/cm^2)**	**Percent of MPE**
Kathrein-Scala	800-10964	150	0	1316	0.519192	0.091622	0.527103	0.093018
Kathrein-Scala	800-10964	150	0	1316	0.519192	0.091622	0.527103	0.093018
Kathrein-Scala	800-10964	150	90	1316	0.519192	0.091622	0.527103	0.093018
Kathrein-Scala	800-10964	150	90	1316	0.519192	0.091622	0.527103	0.093018
Kathrein-Scala	800-10964	150	263	1316	0.519192	0.091622	0.527103	0.093018
Kathrein-Scala	800-10964	150	263	1316	0.519192	0.091622	0.527103	0.093018

AT&T Mobility, LLC (Proposed)
Clinton Meadow Rd
Carrier Summary

Frequency:	737	MHz
Maximum Permissible Exposure (MPE):	491.33	µW/cm^2
Maximum power density at ground level:	1.4818	µW/cm^2
Highest percentage of Maximum Permissible Exposure:	0.30159	%

					On Axis		Area	
Antenna Make	**Model**	**Height (feet)**	**Orientation (degrees true)**	**ERP (Watts)**	**Max Power Density (µW/cm^2)**	**Percent of MPE**	**Max Power Density (µW/cm^2)**	**Percent of MPE**
Kathrein-Scala	800-10964	150	0	2209	1.122244	0.228408	1.205792	0.245412
Kathrein-Scala	800-10964	150	90	2209	1.122244	0.228408	1.205792	0.245412
Kathrein-Scala	800-10964	150	263	2209	1.122244	0.228408	1.205792	0.245412

AT&T Mobility, LLC (Proposed)
Clinton Meadow Rd
Carrier Summary

Frequency:	2300	MHz
Maximum Permissible Exposure (MPE):	1000	µW/cm^2
Maximum power density at ground level:	2.76398	µW/cm^2
Highest percentage of Maximum Permissible Exposure:	0.2764	%

					On Axis		Area	
Antenna Make	**Model**	**Height (feet)**	**Orientation (degrees true)**	**ERP (Watts)**	**Max Power Density (µW/cm^2)**	**Percent of MPE**	**Max Power Density (µW/cm^2)**	**Percent of MPE**
ANDREW	SBNHH-1D65A	150	0	2685	1.627512	0.162751	2.639191	0.263919
ANDREW	SBNHH-1D65A	150	90	2685	1.627512	0.162751	2.639191	0.263919
ANDREW	SBNHH-1D65A	150	263	2685	1.588362	0.158836	2.639191	0.263919

Unknown Carrier
Clinton Meadow Rd
Carrier Summary

Frequency:	2100	MHz
Maximum Permissible Exposure (MPE):	1000	µW/cm^2
Maximum power density at ground level:	6.81312	µW/cm^2
Highest percentage of Maximum Permissible Exposure:	0.68131	%

					On Axis		Area	
Antenna Make	**Model**	**Height (feet)**	**Orientation (degrees true)**	**ERP (Watts)**	**Max Power Density (µW/cm^2)**	**Percent of MPE**	**Max Power Density (µW/cm^2)**	**Percent of MPE**
Generic	Panel	160	0	4277	3.822693	0.382269	3.825588	0.382559
Generic	Panel	160	120	4277	3.801479	0.380148	3.825588	0.382559
Generic	Panel	160	240	4277	3.822693	0.382269	3.825588	0.382559
Generic	Panel	180	0	2139	1.498027	0.149803	1.498781	0.149878
Generic	Panel	180	120	2139	1.498027	0.149803	1.498781	0.149878
Generic	Panel	180	240	2139	1.489841	0.148984	1.498781	0.149878

Unknown Carrier
Clinton Meadow Rd
Carrier Summary

Frequency:	700	MHz
Maximum Permissible Exposure (MPE):	466.67	µW/cm^2
Maximum power density at ground level:	1.14118	µW/cm^2
Highest percentage of Maximum Permissible Exposure:	0.24454	%

					On Axis		Area	
Antenna Make	**Model**	**Height (feet)**	**Orientation (degrees true)**	**ERP (Watts)**	**Max Power Density (µW/cm^2)**	**Percent of MPE**	**Max Power Density (µW/cm^2)**	**Percent of MPE**
Generic	Panel	160	0	2159	0.700152	0.150033	1.056697	0.226435
Generic	Panel	160	120	2159	0.701787	0.150383	1.056697	0.226435
Generic	Panel	160	240	2159	0.700152	0.150033	1.056697	0.226435

Unknown Carrier
Clinton Meadow Rd
Carrier Summary

Frequency:	1900	MHz
Maximum Permissible Exposure (MPE):	1000	µW/cm^2
Maximum power density at ground level:	3.38919	µW/cm^2
Highest percentage of Maximum Permissible Exposure:	0.33892	%

					On Axis		Area	
Antenna Make	**Model**	**Height (feet)**	**Orientation (degrees true)**	**ERP (Watts)**	**Max Power Density (µW/cm^2)**	**Percent of MPE**	**Max Power Density (µW/cm^2)**	**Percent of MPE**
Generic	Panel	160	0	5060	0.85417	0.085417	1.601232	0.160123
Generic	Panel	160	120	5060	0.85418	0.085418	1.601233	0.160123
Generic	Panel	160	240	5060	0.85417	0.085417	1.601233	0.160123
Generic	Panel	170	0	3795	0.551309	0.055131	1.050385	0.105039
Generic	Panel	170	120	3795	0.551309	0.055131	1.050385	0.105038
Generic	Panel	170	240	3795	0.551337	0.055134	1.050385	0.105038
Generic	Panel	180	0	2530	0.33673	0.033673	0.625179	0.062518
Generic	Panel	180	120	2530	0.33673	0.033673	0.625179	0.062518
Generic	Panel	180	240	2530	0.33673	0.033673	0.625179	0.062518

Unknown Carrier
Clinton Meadow Rd
Carrier Summary

Frequency:	850	MHz
Maximum Permissible Exposure (MPE):	566.67	µW/cm^2
Maximum power density at ground level:	2.31182	µW/cm^2
Highest percentage of Maximum Permissible Exposure:	0.40797	%

					On Axis		Area	
Antenna Make	**Model**	**Height (feet)**	**Orientation (degrees true)**	**ERP (Watts)**	**Max Power Density (µW/cm^2)**	**Percent of MPE**	**Max Power Density (µW/cm^2)**	**Percent of MPE**
Generic	Panel	160	0	1758	0.679156	0.119851	1.010951	0.178403
Generic	Panel	160	120	1758	0.682766	0.120488	1.010951	0.178403
Generic	Panel	160	240	1758	0.679156	0.119851	1.010951	0.178403
Generic	Panel	170	0	2198	0.750077	0.132367	1.1137	0.196535
Generic	Panel	170	120	2198	0.754039	0.133066	1.1137	0.196535
Generic	Panel	170	240	2198	0.750077	0.132367	1.1137	0.196535

46-1 MEADOW RD

Location	46-1 MEADOW RD	**Mblu**	85/ 69/ 1-1/ /
Acct#	C0092110	**Owner**	CHARNEY MICHAEL R 1/2 & ROBERT 1/2
Assessment	$17,700	**Appraisal**	$25,300
PID	129359	**Building Count**	1

Current Value

Appraisal			
Valuation Year	**Improvements**	**Land**	**Total**
2015	$22,000	$3,300	$25,300
Assessment			
Valuation Year	**Improvements**	**Land**	**Total**
2015	$15,400	$2,300	$17,700

Owner of Record

Owner	CHARNEY MICHAEL R 1/2 & ROBERT 1/2	**Sale Price**	$0
Co-Owner	C/O SBA TOWERS, LLC	**Certificate**	
Address	8051 CONGRESS AVENUE BOCA RATON, FL 33487-1307	**Book & Page**	442/1250
		Sale Date	06/01/2010
		Instrument	11

Ownership History

Ownership History					
Owner	**Sale Price**	**Certificate**	**Book & Page**	**Instrument**	**Sale Date**
CHARNEY MICHAEL R 1/2 & ROBERT 1/2	$0		442/1250	11	06/01/2010
CHARNEY ANN LOUISE 1/2 INT	$0		312/1009	11	03/11/2002
CHARNEY ANN LOUISE 1/2 INT	$0				

Building Information

Building 1 : Section 1

Year Built:	
Living Area:	0
Replacement Cost:	$0
Building Percent Good:	

Replacement Cost Less Depreciation: $0

Building Attributes	
Field	**Description**
Style	Outbuildings
Model	
Grade:	
Stories:	
Occupancy	
Exterior Wall 1	
Exterior Wall 2	
Roof Structure:	
Roof Cover	
Interior Wall 1	
Interior Wall 2	
Interior Flr 1	
Interior Flr 2	
Heat Fuel	
Heat Type:	
AC Type:	
Total Bedrooms:	
Total Bthrms:	
Total Half Baths:	
Total Xtra Fixtrs:	
Total Rooms:	
Bath Style:	
Kitchen Style:	

Building Photo

(http://images.vgsi.com/photos/ClintonCTPhotos//\00\01\36/38.

Building Layout

Building Layout
(http://images.vgsi.com/photos/ClintonCTPhotos//Sketches/1293

Building Sub-Areas (sq ft)	Legend
No Data for Building Sub-Areas	

Extra Features

Extra Features	Legend
No Data for Extra Features	

Land

Land Use

Use Code	430V
Description	TEL X STA MDL-00
Zone	I-2
Neighborhood	1100
Alt Land Appr	No
Category	

Land Line Valuation

Size (Acres)	0.1
Frontage	
Depth	
Assessed Value	$2,300
Appraised Value	$3,300

Outbuildings

Outbuildings						Legend
Code	**Description**	**Sub Code**	**Sub Description**	**Size**	**Value**	**Bldg #**
	CONC PAD			200	$10,000	1
	CELL SHELTER			240	$12,000	1

Valuation History

Appraisal			
Valuation Year	**Improvements**	**Land**	**Total**
2010	$22,000	$3,300	$25,300
2009	$22,000	$5,500	$27,500
2005	$22,000	$5,500	$27,500

Assessment			
Valuation Year	**Improvements**	**Land**	**Total**
2010	$15,400	$2,300	$17,700
2009	$15,400	$3,900	$19,300
2005	$15,400	$3,900	$19,300

(c) 2019 Vision Government Solutions, Inc. All rights reserved.

Ryan Burgdorfer

From: TrackingUpdates@fedex.com
Sent: Wednesday, April 24, 2019 4:53 PM
To: Ryan Burgdorfer
Subject: FedEx Shipment 774995256405 Delivered

Your package has been delivered

Tracking # 774995256405

Ship date:
Thu, 4/18/2019

Ryan Burgdorfer
Smartlink LLC
NORTH BILLERICA, MA 01862
US

Delivered

Delivery date:
Mon, 4/22/2019 3:00 pm

Eric Knapp
TOWN OF CLINTON
54 E MAIN ST
ZONING ENFORCEMENT OFFICER
CLINTON, CT 06413203554
US

Shipment Facts

Our records indicate that the following package has been delivered.

Tracking number:	774995256405
Status:	Delivered: 04/22/2019 3:00 PM Signed for By: Signature Not Req
Reference:	CTL02230 Zoning Official
Signed for by:	Signature Not Req
Service type:	FedEx Ground
Packaging type:	Package
Number of pieces:	1
Weight:	1.00 lb.
Standard transit:	4/19/2019

Please do not respond to this message. This email was sent from an unattended mailbox. This report was generated at approximately 3:49 PM CDT on 04/24/2019.

All weights are estimated.

Ryan Burgdorfer

From: TrackingUpdates@fedex.com
Sent: Monday, April 22, 2019 3:08 PM
To: Ryan Burgdorfer
Subject: FedEx Shipment 774995283512 Delivered

Your package has been delivered

Tracking # 774995283512

Ship date:
Thu, 4/18/2019

Ryan Burgdorfer
Smartlink LLC
NORTH BILLERICA, MA 01862
US

Delivered

Delivery date:
Mon, 4/22/2019 3:04 pm

Carla Shorter
SBA COMMUNICATIONS CORP.
8051 CONGRESS AVE
BOCA RATON, FL
33487131099
US

Shipment Facts

Our records indicate that the following package has been delivered.

Tracking number:	774995283512
Status:	Delivered: 04/22/2019 3:04 PM Signed for By: JMETZ
Reference:	CTL02230 Structure Owner
Signed for by:	JMETZ
Delivery location:	Boca Raton, FL
Service type:	FedEx Ground
Packaging type:	Package
Number of pieces:	1
Weight:	1.00 lb.
Standard transit:	4/23/2019

Please do not respond to this message. This email was sent from an unattended mailbox. This report was generated at approximately 2:08 PM CDT on 04/22/2019.

All weights are estimated.

Ryan Burgdorfer

From: TrackingUpdates@fedex.com
Sent: Friday, April 19, 2019 1:14 PM
To: Ryan Burgdorfer
Subject: FedEx Shipment 774995311023 Delivered

Your package has been delivered

Tracking # 774995311023

Ship date:
Thu, 4/18/2019

Ryan Burgdorfer
Smartlink LLC
NORTH BILLERICA, MA 01862
US

Delivered

Delivery date:
Fri, 4/19/2019

Michael and Robert Charney
MICHAEL AND ROBERT CHARNEY
46 MEADOW RD
CLINTON, CT 06413221246
US

Shipment Facts

Our records indicate that the following package has been delivered.

Tracking number:	774995311023
Status:	Delivered: 04/19/2019
Reference:	CTL02230 Property Owner
Delivery location:	Clinton, CT
Service type:	FedEx Ground
Packaging type:	Package
Number of pieces:	1
Weight:	1.00 lb.
Standard transit:	4/19/2019

Please do not respond to this message. This email was sent from an unattended mailbox. This report was generated at approximately 12:13 PM CDT on 04/19/2019.

All weights are estimated.

To track the latest status of your shipment, click on the tracking number above.

Standard transit is the date the package should be delivered by, based on the selected service, destination, and ship date. Limitations and exceptions may apply.Please see the FedEx Service Guide for terms and conditions of service, including the FedEx Money-Back Guarantee, or contact your FedEx Customer Support representative.

Ryan Burgdorfer

From: TrackingUpdates@fedex.com
Sent: Wednesday, April 24, 2019 4:53 PM
To: Ryan Burgdorfer
Subject: FedEx Shipment 774995230622 Delivered

Your package has been delivered

Tracking # 774995230622

Ship date:
Thu, 4/18/2019

Ryan Burgdorfer
Smartlink LLC
NORTH BILLERICA, MA 01862
US

Delivery date:
Mon, 4/22/2019 3:00 pm

Christine Goupil
TOWN OF CLINTON
54 E MAIN ST
FIRST SELECTMAN
CLINTON, CT 06413203554
US

Shipment Facts

Our records indicate that the following package has been delivered.

Tracking number:	774995230622
Status:	Delivered: 04/22/2019 3:00 PM Signed for By: Signature Not Req
Reference:	CTL02230 Elected Official
Signed for by:	Signature Not Req
Service type:	FedEx Ground
Packaging type:	Package
Number of pieces:	1
Weight:	1.00 lb.
Standard transit:	4/19/2019

Please do not respond to this message. This email was sent from an unattended mailbox. This report was generated at approximately 3:49 PM CDT on 04/24/2019.

All weights are estimated.

To track the latest status of your shipment, click on the tracking number above.