AMERICAN TOWER®
CORPORATION

Structural Analysis Report

Structure	:	**120 ft Monopole**
ATC Site Name	:	**Brst - Bristol, CT**
ATC Site Number	:	**302500**
Engineering Number	:	**OAA686853_C3_02**
Proposed Carrier	:	**AT&T Mobility**
Carrier Site Name	:	**Bristol**
Carrier Site Number	:	**CTL01055 / 10035029**
Site Location	:	**790 Willis Street** **Bristol, CT 06010-7269** **41.649083,-72.948000**
County	:	**Hartford**
Date	:	**December 27, 2016**
Max Usage	:	**85%**
Result	:	**Pass**

Prepared By:
Christopher Clark Poe, E.I.
Structural Engineer II

Reviewed By:

STATE OF CONNECTICUT
WILLIAM GARRETT
No. 23235
LICENSED
PROFESSIONAL ENGINEER

Dec 27 2016 4:46 PM

cosign

COA: PEC.0001553

Table of Contents

Introduction 1

Supporting Documents 1

Analysis 1

Conclusion 1

Existing and Reserved Equipment 2

Equipment to be Removed 2

Proposed Equipment 2

Structure Usages 3

Foundations 3

Deflection, Twist, and Sway 3

Standard Conditions 4

Calculations ..... Attached

Introduction

The purpose of this report is to summarize results of a structural analysis performed on the 120 ft monopole to reflect the change in loading by AT&T Mobility.

Supporting Documents

Tower Drawings	Valmont Drawing #DC1671Z, dated December 29, 1995
Foundation Drawing	FDH Project #01-0612, dated June 23, 2001
Geotechnical Report	Johnson Soils Job #15220-B, dated May 21, 2002
Modifications	Spectrasite Site #CT-0036, dated June 12, 2002 ATC Project #64490338, dated May 5, 2016

Analysis

The tower was analyzed using American Tower Corporation's tower analysis software. This program considers an elastic three-dimensional model and second-order effects per ANSI/TIA-222.

Basic Wind Speed:	93 mph (3-Second Gust, V_{asd}) / 120 mph (3-Second Gust, V_{ult})
Basic Wind Speed w/ Ice:	50 mph (3-Second Gust) w/ 1" radial ice concurrent
Code:	ANSI/TIA-222-G / 2012 IBC / 2016 Connecticut State Building Code
Structure Class:	II
Exposure Category:	B
Topographic Category:	3
Crest Height:	198 ft
Spectral Response:	$Ss = 0.19$, $S_1 = 0.06$
Site Class:	D - Stiff Soil

Conclusion

Based on the analysis results, the structure meets the requirements per the applicable codes listed above. The tower and foundation can support the equipment as described in this report.

If you have any questions or require additional information, please contact American Tower via email at Engineering@americantower.com. Please include the American Tower site name, site number, and engineering number in the subject line for any questions.

Existing and Reserved Equipment

Elevation[1] (ft)		Qty	Antenna	Mount Type	Lines	Carrier
Mount	RAD					
124.0	124.0	2	Raycap DC6-48-60-18-8F	Platform w/ Handrails	(6) 1 1/4" Coax (4) 0.78" 8 AWG 6 (2) 0.39" Fiber Trunk (1) 3" Conduit (1) 7/8" Coax	AT&T Mobility
		3	Ericsson RRUS A2			
		3	Ericsson RRUS-11 1900MHz			
		3	Ericsson RRUS 32 (50.8 lbs)			
		1	2' Std. Dish			
		3	Powerwave 7770.00			
		1	KMW AM-X-CD-16-65-00T-RET			
		1	Quintel QS66512-3 (112 lbs.)			
		2	Andrew SBNH-1D6565C (60.8 lbs)			
		2	CCI TPA-65R-LCUUUU-H8			
101.0	101.0	3	RFS APXV18-206517S-C	Flush	(6) 1 5/8" Coax	Metro PCS
93.0	93.0	3	Argus LLPX310R	Side Arms	-	Clearwire
91.0	91.0	4	Horizon Compact		(4) 1/2" Coax	
		3	NextNet BTS-2500			
		1	DragonWave A-ANT-18G-2-C			
		3	DragonWave A-ANT-11G-2.5-C			
90.0	-	-	-		(6) 5/16" Coax (2) 2" Conduit	

Equipment to be Removed

Elevation[1] (ft)		Qty	Antenna	Mount Type	Lines	Carrier
Mount	RAD					
124.0	124.0	3	Ericsson RRUS-11 1900MHz	-	-	AT&T Mobility
		3	CCI DTMABP7819VG12A			

Proposed Equipment

Elevation[1] (ft)		Qty	Antenna	Mount Type	Lines	Carrier
Mount	RAD					
124.0	124.0	6	CCI TPX-070821	Platform w/ Handrails	-	AT&T Mobility
		6	Powerwave LGP21401			
		3	Ericsson RRUS 32 B2			

[1]Mount elevation is defined as height above bottom of steel structure to the bottom of mount, RAD elevation is defined as center of antenna above ground level (AGL).

Structure Usages

Structural Component	Controlling Usage	Pass/Fail
Anchor Bolts	47%	Pass
Shaft	72%	Pass
Base Plate	35%	Pass
Reinforcement	85%	Pass

Foundations

Reaction Component	Analysis Reactions	% of Usage
Moment (Kips-Ft)	1,824.9	77%
Axial (Kips)	54.5	13%
Shear (Kips)	24.2	14%

The structure base reactions resulting from this analysis were found to be acceptable through analysis based on geotechnical and foundation information, therefore no modification or reinforcement of the foundation will be required.

Deflection and Sway*

Antenna Elevation (ft)	Antenna	Carrier	Deflection (ft)	Sway (Rotation) (°)
120.0	CCI TPX-070821	AT&T Mobility	1.905	1.769
	Powerwave LGP21401			
	Ericsson RRUS 32 B2			
	2' Std. Dish			
91.0	DragonWave A-ANT-18G-2-C	Clearwire	1.120	1.319
	DragonWave A-ANT-11G-2.5-C			

***Deflection and Sway was evaluated considering a design wind speed of 60 mph (3-Second Gust) per ANSI/TIA-222-G**

AMERICAN TOWER®
CORPORATION

Standard Conditions

All engineering services are performed on the basis that the information used is current and correct. This information may consist of, but is not necessary limited, to:

-- Information supplied by the client regarding the structure itself, antenna, mounts and feed line loading on the structure and its components, or other relevant information.

-- Information from drawings in the possession of American Tower Corporation, or generated by field inspections or measurements of the structure.

It is the responsibility of the client to ensure that the information provided to A.T. Engineering Service, PLLC and used in the performance of our engineering services is correct and complete. In the absence of information to the contrary, we assume that all structures were constructed in accordance with the drawings and specifications and that their capacity has not significantly changed from the "as new" condition.

Unless explicitly agreed by both the client and American Tower Corporation, all services will be performed in accordance with the current revision of ANSI/TIA -222. The design basic wind speed will be determined based on the minimum basic wind speed as prescribed in ANSI/TIA-222. Although every effort is taken to ensure that the loading considered is adequate to meet the requirements of all applicable regulatory entities, we can provide no assurance to meet any other local and state codes or requirements. If wind and ice loads or other relevant parameters are to be different from the minimum values recommended by the codes, the client shall specify the exact requirement.

All services are performed, results obtained, and recommendations made in accordance with generally accepted engineering principles and practices. A.T. Engineering Service, PLLC is not responsible for the conclusions, opinions and recommendations made by others based on the information we supply.

© 2007 - 2016 by ATC IP LLC. All rights reserved.

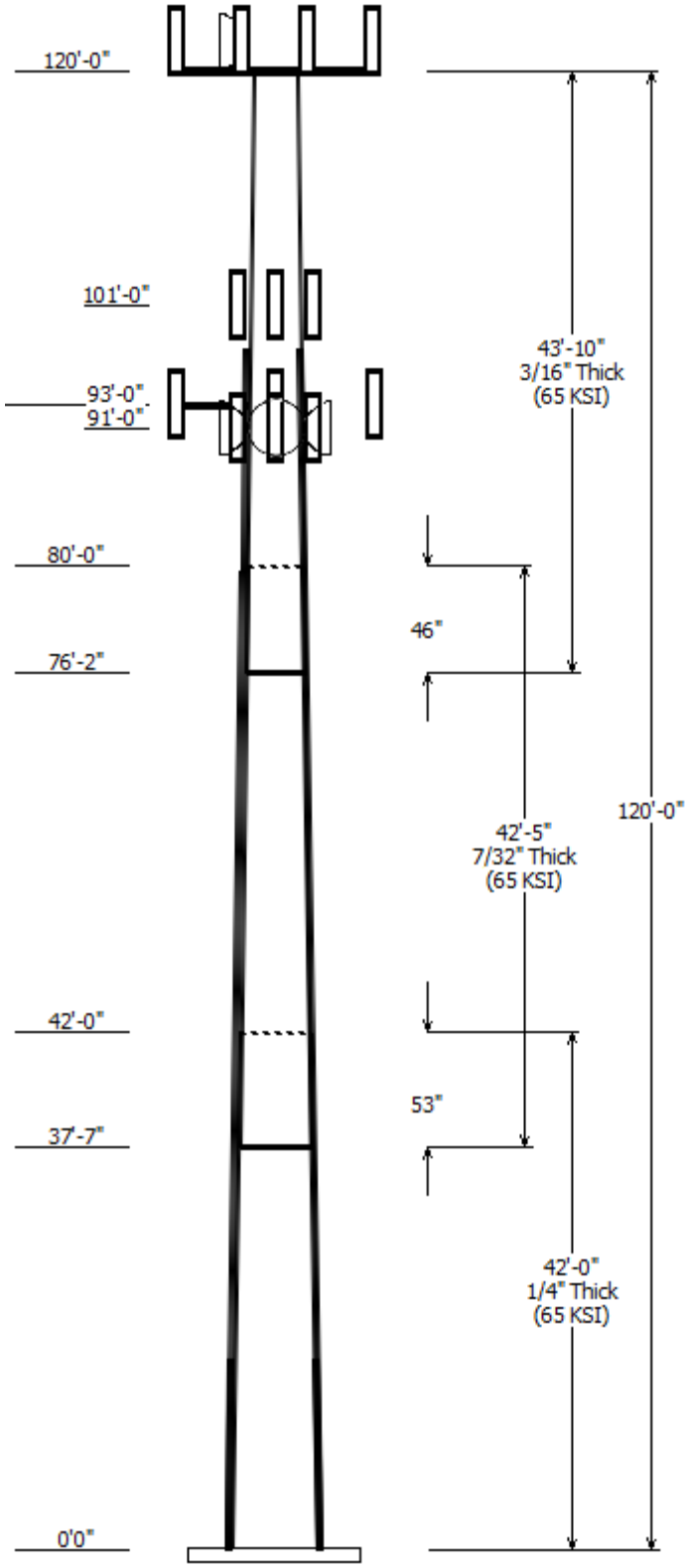

Job Information

Pole :	302500	Code:	ANSI/TIA-222-G
Description :	120' Valmont Monopole		
Client :	AT&T Mobility	Struct Class :	II
Location :	Brst - Bristol, CT		
Shape :	12 Sides	Exposure :	B
Height :	120.00 (ft)	Topo :	3
Base Elev (ft):	0.00		
Taper:	0.145033 (in/ft)		

Sections Properties

Shaft Section	Length (ft)	Diameter (in) Accross Flats Top	Bottom	Thick (in)	Joint Type	Overlap Length (in)	Taper (in/ft)	Steel Grade (ksi)
1	42.000	24.90	31.00	0.250		0.000	0.145000	65
2	42.417	19.83	25.98	0.219	Slip Joint	53.000	0.145000	65
3	43.833	14.41	20.76	0.188	Slip Joint	46.000	0.145000	65

Discrete Appurtenance

Attach Elev (ft)	Force Elev (ft)	Qty	Description
120.000	124.000	3	Ericsson RRUS 32 B2
120.000	124.000	6	Powerwave LGP21401
120.000	124.000	6	CCI TPX-070821
120.000	124.000	3	Powerwave Allgon 7770.00
120.000	124.000	2	CCI TPA-65R-LCUUUU-H8
120.000	124.000	2	Andrew SBNH-1D6565C (60.8
120.000	124.000	1	Quintel QS66512-3 (112 lbs.)
120.000	124.000	1	KMW AM-X-CD-16-65-00T-RET
120.000	124.000	3	Ericsson RRUS 32 (50.8 lbs)
120.000	124.000	3	Ericsson RRUS A2
120.000	124.000	1	2' Std. Dish
120.000	124.000	2	Raycap DC6-48-60-18-8F
120.000	124.000	3	Ericsson RRUS-11 1900 MHz
120.000	120.000	1	Flat Platform w/ Handrails
101.000	101.000	3	RFS APXV18-206517S-C
93.000	93.000	1	Side Arms
93.000	93.000	3	Argus LLPX310R
91.000	91.000	3	DragonWave A-ANT-11G-2.5-C
91.000	91.000	1	DragonWave A-ANT-18G-2-C
91.000	91.000	3	NextNet BTS-2500
91.000	91.000	4	Horizon Compact

Linear Appurtenance

Elev (ft) From	To	Description	Exposed To Wind
92.000	102.0	#20	Yes
22.500	92.000	#20	Yes
7.000	101.0	1 5/8" Coax	Yes
7.000	90.000	2" Conduit	Yes
7.000	90.000	5/16" Coax	Yes
7.000	91.000	1/2" Coax	Yes
7.000	120.0	0.39" Fiber Trunk	No
7.000	120.0	0.78" 8 AWG 6	No
7.000	120.0	1 1/4" Coax	No
7.000	120.0	3" Conduit	No
7.000	120.0	7/8" Coax	No
0.000	22.500	#20	Yes

Load Cases

1.2D + 1.6W 93 mph with No Ice

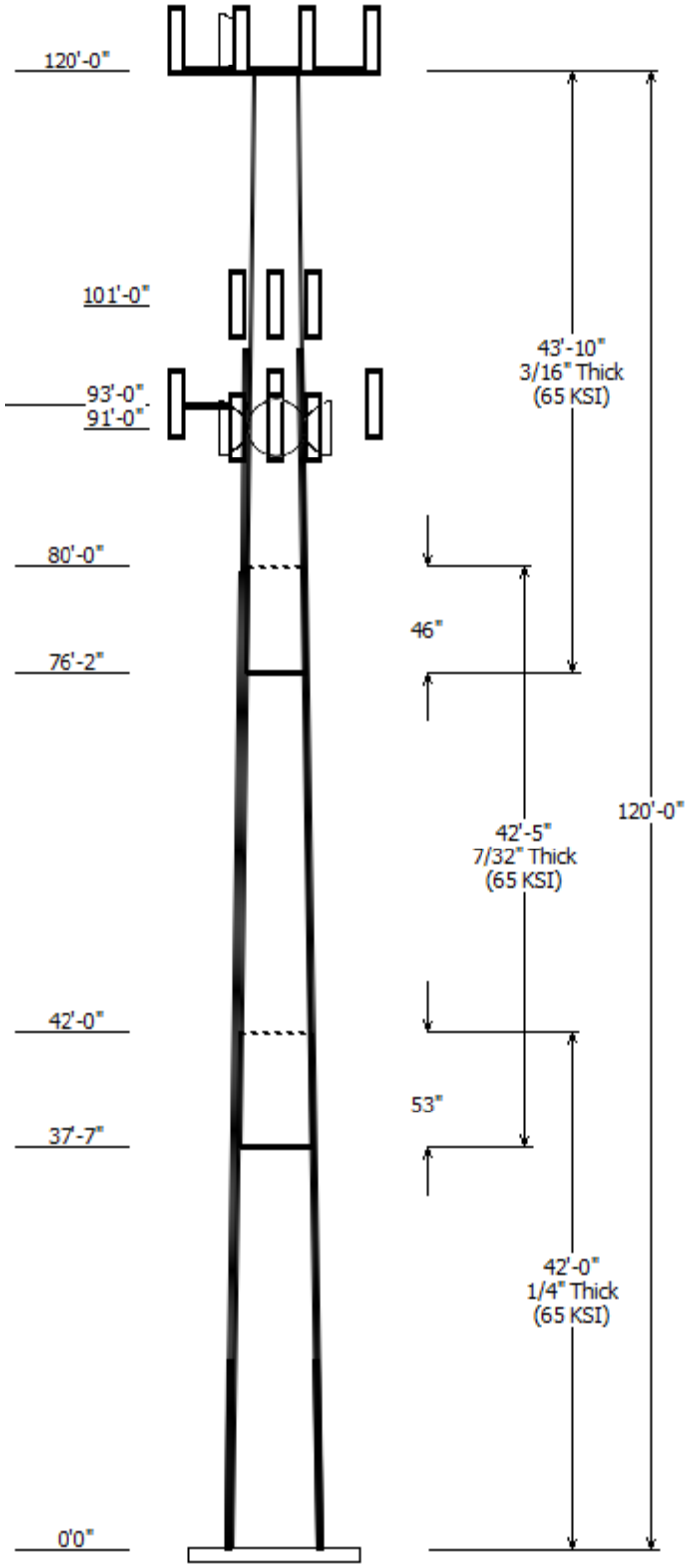

0.9D + 1.6W	93 mph with No Ice (Reduced DL)
1.2D + 1.0Di + 1.0Wi	50 mph with 1.00 in Radial Ice
(1.2 + 0.2Sds) * DL + E	Seismic Equivalent Lateral Forces Method
(1.2 + 0.2Sds) * DL + E	Seismic Equivalent Modal Analysis Method
(0.9 - 0.2Sds) * DL + E	Seismic (Reduced DL) Equivalent Lateral
(0.9 - 0.2Sds) * DL + E	Seismic (Reduced DL) Equivalent Modal
1.0D + 1.0W	Serviceability 60 mph

Reactions

Load Case	Moment (kip-ft)	Shear (kip)	Axial (kip)
1.2D + 1.6W	1824.93	24.19	25.92
0.9D + 1.6W	1806.86	24.18	19.43
1.2D + 1.0Di + 1.0Wi	527.98	6.49	54.54
(1.2 + 0.2Sds) * DL + E ELFM	93.60	0.95	26.13
(1.2 + 0.2Sds) * DL + E EMAM	160.25	1.56	26.13
(0.9 - 0.2Sds) * DL + E ELFM	92.38	0.95	18.14
(0.9 - 0.2Sds) * DL + E EMAM	157.98	1.56	18.14
1.0D + 1.0W	482.85	6.49	21.62

Dish Deflections

Load Case	Attach Elev (ft)	Deflection (in)	Rotation (deg)
1.0D + 1.0W	91.00	13.436	1.319
1.0D + 1.0W	91.00	13.436	1.319
1.0D + 1.0W	120.00	22.858	1.769

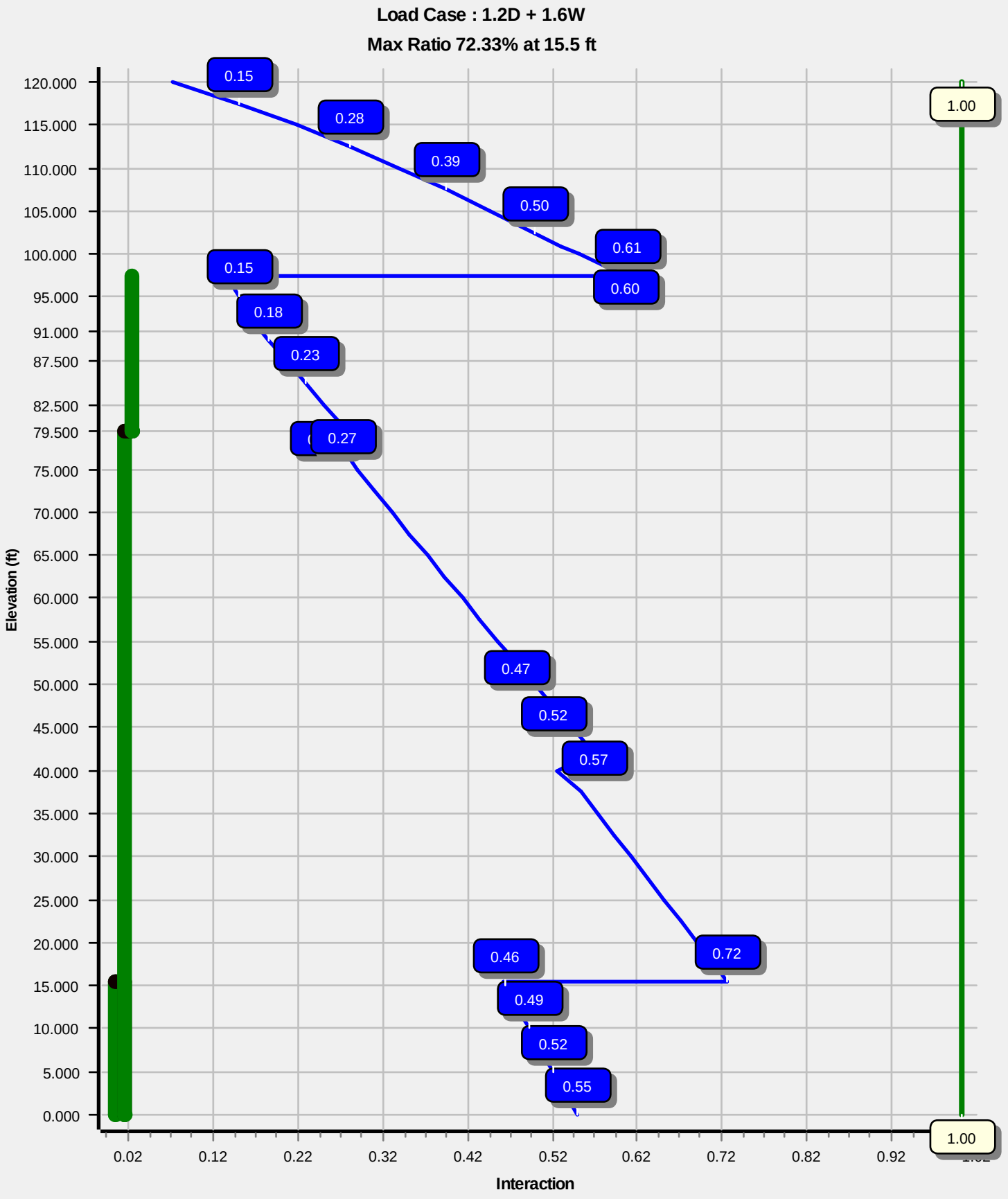
Load Case : 1.2D + 1.6W
Max Ratio 72.33% at 15.5 ft
Elevation (ft)
Interaction
120.000
115.000
110.000
105.000
100.000
95.000
91.000
87.500
82.500
79.500
75.000
70.000
65.000
60.000
55.000
50.000
45.000
40.000
35.000
30.000
25.000
20.000
15.000
10.000
5.000
0.000
0.02
0.12
0.22
0.32
0.42
0.52
0.62
0.72
0.82
0.92
0.15
0.28
0.39
0.50
0.61
0.15
0.60
0.18
0.23
0.27
0.47
0.52
0.57
0.72
0.46
0.49
0.52
0.55
1.00
1.00

Site Number:	302500	Code: ANSI/TIA-222-G	© 2007 - 2016 by ATC IP LLC. All rights reserved.
Site Name:	Brst - Bristol, CT	Engineering Number:OAA686853_C3_02	12/27/2016 3:03:25 PM
Customer:	AT&T Mobility		

Analysis Parameters

Location:	Hartford County, CT		
Code:	ANSI/TIA-222-G	Height (ft):	120
Shape:	12 Sides	Base Diameter (in):	31.00
Pole Type:	Taper	Top Diameter (in):	14.41
Pole Manfacturer:	Valmont	Taper (in/ft) :	0.145

Ice & Wind Parameters

Structure Class:	II	Design Wind Speed Without Ice:	93 mph
Exposure Category:	B	Design Wind Speed With Ice:	50 mph
Topographic Category:	3	Operational Wind Speed:	60 mph
Crest Height:	197.5 ft	Design Ice Thickness:	1.00 in

Seismic Parameters

Analysis Method:	Equivalent Modal Analysis & Equivalent Lateral Force Methods				
Site Class:	D - Stiff Soil				
Period Based on Rayleigh Method (sec):		2.02			
T_L (sec):	6	p:	1.3	C_s:	0.034
S_s:	0.185	S_1:	0.064	C_s Max:	0.034
F_a:	1.600	F_v :	2.400	C_s Min:	0.030
S_{ds}:	0.197	S_{d1}:	0.102		

Load Cases

1.2D + 1.6W	93 mph with No Ice
0.9D + 1.6W	93 mph with No Ice (Reduced DL)
1.2D + 1.0Di + 1.0Wi	50 mph with 1.00 in Radial Ice
(1.2 + 0.2Sds) * DL + E ELFM	Seismic Equivalent Lateral Forces Method
(1.2 + 0.2Sds) * DL + E EMAM	Seismic Equivalent Modal Analysis Method
(0.9 - 0.2Sds) * DL + E ELFM	Seismic (Reduced DL) Equivalent Lateral Forces Method
(0.9 - 0.2Sds) * DL + E EMAM	Seismic (Reduced DL) Equivalent Modal Analysis Method
1.0D + 1.0W	Serviceability 60 mph

© 2007 - 2016 by ATC IP LLC. All rights reserved.

Shaft Section Properties

Sect Info	Length (ft)	Thick (in)	Fy (ksi)	Joint Type	Slip Joint Len (in)	Weight (lb)	Bottom Dia (in)	Bottom Elev (ft)	Bottom Area (in 2)	Bottom Ix (in 4)	Bottom W/t Ratio	Bottom D/t Ratio	Top Dia (in)	Top Elev (ft)	Top Area (in 2)	Top Ix (in 4)	Top W/t Ratio	Top D/t Ratio	Taper (in/ft)
1-12	42.000	0.2500	65		0.00	3,187	31.00	0.00	24.75	2987.6	30.55	124.00	24.90	42.00	19.85	1540.6	24.02	99.63	0.145033
2-12	42.417	0.2190	65	Slip	53.00	2,310	25.98	37.58	18.17	1540.1	29.12	118.66	19.83	80.00	13.83	679.4	21.59	90.57	0.145033
3-12	43.833	0.1880	65	Slip	46.00	1,571	20.76	76.17	12.46	673.4	26.92	110.46	14.41	120.00	8.61	222.3	17.86	76.65	0.145033
				Shaft Weight		7,068													

Discrete Appurtenance Properties

Attach Elev (ft)	Description	Qty	No Ice Weight (lb)	No Ice EPAa (sf)	No Ice Orientation Factor	Ice Weight (lb)	Ice EPAa (sf)	Ice Orientation Factor	Distance From Face (ft)	Vert Ecc (ft)
120.00	2' Std. Dish	1	14.00	5.230	1.00	93.43	7.450	1.00	0.000	4.000
120.00	Andrew SBNH-1D6565C (60.8	2	60.80	11.450	0.70	467.99	13.849	0.70	0.000	4.000
120.00	CCI TPA-65R-LCUUUU-H8	2	82.10	13.300	0.69	559.63	15.717	0.69	0.000	4.000
120.00	CCI TPX-070821	6	7.50	0.550	0.50	47.28	1.096	0.50	0.000	4.000
120.00	Ericsson RRUS 32 (50.8 lbs)	3	50.80	2.690	0.50	186.18	3.763	0.50	0.000	4.000
120.00	Ericsson RRUS 32 B2	3	53.00	2.740	0.50	192.38	3.823	0.50	0.000	4.000
120.00	Ericsson RRUS A2	3	15.00	1.600	0.50	67.04	2.798	0.50	0.000	4.000
120.00	Ericsson RRUS-11 1900 MHz	3	44.00	2.520	0.50	171.68	3.494	0.50	0.000	4.000
120.00	Flat Platform w/ Handrails	1	2000.00	42.400	1.00	4,037.26	72.464	1.00	0.000	0.000
120.00	KMW AM-X-CD-16-65-00T-	1	48.50	8.020	0.67	342.51	9.925	0.67	0.000	4.000
120.00	Powerwave Allgon 7770.00	3	35.00	5.510	0.65	247.71	7.067	0.65	0.000	4.000
120.00	Powerwave LGP21401	6	14.10	1.100	0.50	70.67	1.798	0.50	0.000	4.000
120.00	Quintel QS66512-3 (112 lbs.)	1	112.00	8.130	0.74	461.97	10.041	0.74	0.000	4.000
120.00	Raycap DC6-48-60-18-8F	2	20.00	1.110	1.00	147.78	2.829	1.00	0.000	4.000
101.00	RFS APXV18-206517S-C	3	26.40	5.170	0.68	216.96	6.984	0.68	0.000	0.000
93.00	Argus LLPX310R	3	28.60	4.290	0.63	199.40	5.618	0.63	0.000	0.000
93.00	Side Arms	1	560.00	8.500	1.00	1,231.93	18.699	1.00	0.000	0.000
91.00	DragonWave A-ANT-11G-2.5-	3	47.60	8.670	1.00	230.62	11.149	1.00	0.000	0.000
91.00	DragonWave A-ANT-18G-2-C	1	27.10	4.690	1.00	167.18	6.519	1.00	0.000	0.000
91.00	Horizon Compact	4	10.60	0.430	0.50	61.72	0.826	0.50	0.000	0.000
91.00	NextNet BTS-2500	3	35.00	1.820	0.50	128.67	2.685	0.50	0.000	0.000
	Totals	55	4265.60			14,561.50			Number of Loadings :	21

Linear Appurtenance Properties

Elev From (ft)	Elev To (ft)	Qty	Description	Coax Diameter (in)	Coax Weight (lb/ft)	Flat	Projected Width (in)	Exposed To Wind	Carrier
7.00	120.00	2	0.39" Fiber Trunk	0.39	0.07	N	0.00	N	AT&T Mobility
7.00	120.00	4	0.78" 8 AWG 6	0.78	0.59	N	0.00	N	AT&T Mobility
7.00	120.00	6	1 1/4" Coax	1.55	0.63	N	0.00	N	AT&T Mobility
7.00	120.00	1	3" Conduit	3.50	7.58	N	0.00	N	AT&T Mobility
7.00	120.00	1	7/8" Coax	1.09	0.33	N	0.00	N	AT&T Mobility
92.00	102.00	4	#20 Reinforcement	2.50	0.00	N	8.00	Y	--
7.00	101.00	6	1 5/8" Coax	1.98	0.82	N	0.00	Y	Metro PCS
22.50	92.00	4	#20 Reinforcement	2.50	0.00	N	8.00	Y	--
7.00	91.00	4	1/2" Coax	0.63	0.15	N	0.00	Y	Clearwire
7.00	90.00	2	2" Conduit	2.38	3.65	N	0.00	Y	Clearwire
7.00	90.00	6	5/16" Coax	0.31	0.05	N	0.00	Y	Clearwire
0.00	22.50	8	#20 Reinforcement	2.50	0.00	N	8.00	Y	--

© 2007 - 2016 by ATC IP LLC. All rights reserved.

Additional Steel

Elev From (ft)	Elev To (ft)	Qty	Description	Fy (ksi)	Offset (in)	Intermediate Connections Description	Spacing (in)	Len (in)	Connectors	Continuation?
0.00	15.48	4	SOL #20 All Thread	80	2.19	6" Angle Bracket	30.0	3.31	5/8" A36 U-Bolt	No
0.00	79.50	4	SOL #20 All Thread	80	2.19	6" Angle Bracket	30.0	3.31	5/8" A36 U-Bolt	Yes
79.50	97.44	4	SOL #20 All Thread	80	2.19	6" Angle Bracket	30.0	3.31	5/8" A36 U-Bolt	Yes

 © 2007 - 2016 by ATC IP LLC. All rights reserved.

Segment Properties (Max Len : 2. ft)

Seg Top Elev (ft)	Description	Thick (in)	Flat Dia (in)	Area (in^2)	Ix (in^4)	W/t Ratio	D/t Ratio	F'y (ksi)	S (in^3)	Z (in^3)	Weight (lb)	Additional Reinforcing Area (in^2)	Additional Reinforcing Ix (in^4)	Additional Reinforcing Weight (lb)
0.00		0.2500	31.000	24.754	2,987.6	30.55	124.00	71.4	186.2	0.0	0.0	39.28	7,139	0.0
2.50		0.2500	30.637	24.462	2,883.1	30.16	122.55	71.8	181.8	0.0	209.3	39.28	7,001	334.0
5.00		0.2500	30.275	24.170	2,781.1	29.77	121.10	72.2	177.5	0.0	206.9	39.28	6,865	334.0
7.50		0.2500	29.912	23.878	2,681.6	29.38	119.65	72.7	173.2	0.0	204.4	39.28	6,731	334.0
10.00		0.2500	29.550	23.586	2,584.5	28.99	118.20	73.1	169.0	0.0	201.9	39.28	6,597	334.0
12.50		0.2500	29.187	23.294	2,489.7	28.60	116.75	73.5	164.8	0.0	199.4	39.28	6,465	334.0
15.00		0.2500	28.825	23.002	2,397.3	28.21	115.30	73.9	160.7	0.0	196.9	39.28	6,335	334.0
15.48	Reinf. Top	0.2500	28.755	22.947	2,379.8	28.14	115.02	74.0	159.9	0.0	37.5	39.28	6,310	64.0
17.50		0.2500	28.462	22.711	2,307.2	27.83	113.85	74.4	156.6	0.0	157.0	19.64	3,073	135.0
20.00		0.2500	28.099	22.419	2,219.4	27.44	112.40	74.8	152.6	0.0	192.0	19.64	3,010	167.0
22.50		0.2500	27.737	22.127	2,133.8	27.05	110.95	75.2	148.6	0.0	189.5	19.64	2,948	167.0
25.00		0.2500	27.374	21.835	2,050.5	26.66	109.50	75.6	144.7	0.0	187.0	19.64	2,887	167.0
27.50		0.2500	27.012	21.543	1,969.3	26.27	108.05	76.1	140.8	0.0	184.5	19.64	2,826	167.0
30.00		0.2500	26.649	21.251	1,890.4	25.88	106.60	76.5	137.0	0.0	182.0	19.64	2,766	167.0
32.50		0.2500	26.286	20.959	1,813.5	25.49	105.15	76.9	133.3	0.0	179.5	19.64	2,707	167.0
35.00		0.2500	25.924	20.667	1,738.8	25.11	103.70	77.3	129.6	0.0	177.1	19.64	2,648	167.0
37.50		0.2500	25.561	20.376	1,666.2	24.72	102.25	77.8	125.9	0.0	174.6	19.64	2,590	167.0
37.58	Bot - Section 2	0.2500	25.549	20.366	1,663.8	24.70	102.20	77.8	125.8	0.0	5.8	19.64	2,588	5.6
40.00		0.2500	25.199	20.084	1,595.6	24.33	100.79	78.2	122.3	0.0	314.7	19.64	2,602	161.4
42.00	Top - Section 1	0.2190	25.347	17.719	1,428.0	28.33	115.74	73.8	108.8	0.0	257.2	19.64	2,556	133.6
42.50		0.2190	25.274	17.668	1,415.7	28.24	115.41	73.9	108.2	0.0	30.1	19.64	2,545	33.4
45.00		0.2190	24.911	17.413	1,355.1	27.80	113.75	74.4	105.1	0.0	149.2	19.64	2,488	167.0
47.50		0.2190	24.549	17.157	1,296.3	27.36	112.10	74.9	102.0	0.0	147.0	19.64	2,432	167.0
50.00		0.2190	24.186	16.901	1,239.2	26.91	110.44	75.4	99.0	0.0	144.9	19.64	2,376	167.0
52.50		0.2190	23.824	16.646	1,183.8	26.47	108.78	75.8	96.0	0.0	142.7	19.64	2,321	167.0
55.00		0.2190	23.461	16.390	1,130.1	26.03	107.13	76.3	93.1	0.0	140.5	19.64	2,267	167.0
57.50		0.2190	23.099	16.134	1,078.0	25.58	105.47	76.8	90.2	0.0	138.3	19.64	2,213	167.0
60.00		0.2190	22.736	15.879	1,027.6	25.14	103.82	77.3	87.3	0.0	136.2	19.64	2,160	167.0
62.50		0.2190	22.373	15.623	978.7	24.69	102.16	77.8	84.5	0.0	134.0	19.64	2,108	167.0
65.00		0.2190	22.011	15.367	931.5	24.25	100.51	78.3	81.8	0.0	131.8	19.64	2,056	167.0
67.50		0.2190	21.648	15.111	885.7	23.81	98.85	78.7	79.0	0.0	129.6	19.64	2,005	167.0
70.00		0.2190	21.286	14.856	841.5	23.36	97.19	79.2	76.4	0.0	127.5	19.64	1,954	167.0
72.50		0.2190	20.923	14.600	798.8	22.92	95.54	79.7	73.8	0.0	125.3	19.64	1,904	167.0
75.00		0.2190	20.561	14.344	757.6	22.48	93.88	80.2	71.2	0.0	123.1	19.64	1,855	167.0
76.17	Bot - Section 3	0.2190	20.391	14.225	738.8	22.27	93.11	80.4	70.0	0.0	56.7	19.64	1,833	77.9
77.50		0.2190	20.198	14.089	717.8	22.03	92.23	80.7	68.7	0.0	120.5	19.64	1,857	89.1
79.50	Reinf. Top Reinf	0.2190	19.908	13.884	687.0	21.68	90.90	81.1	66.7	0.0	178.6	19.64	1,818	133.6
80.00	Top - Section 2	0.1880	20.211	12.121	620.3	26.13	107.51	76.2	59.3	0.0	44.2	19.64	1,809	33.4
82.50		0.1880	19.849	11.902	587.2	25.61	105.58	76.8	57.2	0.0	102.2	19.64	1,761	167.0
85.00		0.1880	19.486	11.682	555.3	25.09	103.65	77.3	55.1	0.0	100.3	19.64	1,713	167.0
87.50		0.1880	19.124	11.463	524.6	24.58	101.72	77.9	53.0	0.0	98.4	19.64	1,667	167.0
90.00		0.1880	18.761	11.243	495.0	24.06	99.79	78.5	51.0	0.0	96.6	19.64	1,621	167.0
91.00		0.1880	18.616	11.156	483.5	23.85	99.02	78.7	50.2	0.0	38.1	19.64	1,603	66.8
92.50		0.1880	18.398	11.024	466.6	23.54	97.86	79.0	49.0	0.0	56.6	19.64	1,575	100.2
93.00		0.1880	18.326	10.980	461.1	23.44	97.48	79.2	48.6	0.0	18.7	19.64	1,566	33.4
95.00		0.1880	18.036	10.804	439.3	23.03	95.94	79.6	47.1	0.0	74.1	19.64	1,531	133.6
97.44	Reinf. Top	0.1880	17.682	10.590	413.7	22.52	94.05	80.2	45.2	0.0	88.7	19.64	1,488	162.8
97.50		0.1880	17.673	10.585	413.1	22.51	94.01	80.2	45.2	0.0	2.3			
100.0		0.1880	17.311	10.365	387.9	21.99	92.08	80.7	43.3	0.0	89.1			
101.0		0.1880	17.166	10.278	378.1	21.79	91.31	81.0	42.6	0.0	35.1			
102.5		0.1880	16.948	10.146	363.8	21.48	90.15	81.3	41.5	0.0	52.1			
105.0		0.1880	16.586	9.926	340.7	20.96	88.22	81.9	39.7	0.0	85.4			
107.5		0.1880	16.223	9.707	318.6	20.44	86.29	81.9	37.9	0.0	83.5			
110.0		0.1880	15.860	9.487	297.4	19.93	84.36	81.9	36.2	0.0	81.6			
112.5		0.1880	15.498	9.268	277.3	19.41	82.43	81.9	34.6	0.0	79.8			
115.0		0.1880	15.135	9.048	258.0	18.89	80.51	81.9	32.9	0.0	77.9			
117.5		0.1880	14.773	8.829	239.7	18.38	78.58	81.9	31.3	0.0	76.0			
120.0		0.1880	14.410	8.609	222.3	17.86	76.65	81.9	29.8	0.0	74.2			

© 2007 - 2016 by ATC IP LLC. All rights reserved.

7,068.1	7,542.8

© 2007 - 2016 by ATC IP LLC. All rights reserved.

Load Case: 1.2D + 1.6W 93 mph with No Ice 27 Iterations

Gust Response Factor :1.10 Wind Importance Factor 1.00
Dead Load Factor :1.20
Wind Load Factor :1.60

Applied Segment Forces Summary

		Shaft Forces		Discrete Forces				Linear Forces		Sum of Forces			
Seg Elev (ft)	Description	Wind FX (lb)	Dead Load (lb)	Wind FX (lb)	Torsion MY (lb-ft)	Moment MZ (lb-ft)	Dead Load (lb)	Wind FX (lb)	Dead Load (lb)	Wind FX (lb)	Dead Load (lb)	Torsion MY (lb-ft)	Moment MZ (lb)
0.00		223.6	0.0					0.0	0.0	223.6	0.0	0.0	0.0
2.50		441.1	251.2					56.1	400.8	497.2	652.0	0.0	0.0
5.00		429.0	248.2					55.2	400.8	484.2	649.0	0.0	0.0
7.50		417.3	245.2					54.3	417.2	471.6	662.4	0.0	0.0
10.00		405.9	242.3					53.5	482.7	459.4	725.0	0.0	0.0
12.50		394.9	239.3					52.7	482.7	447.6	722.0	0.0	0.0
15.00		231.5	236.3					51.9	482.7	283.4	719.0	0.0	0.0
15.48	Reinf. Top	189.5	45.0					9.9	92.5	199.4	137.5	0.0	0.0
17.50		337.2	188.4					41.3	228.2	378.5	416.6	0.0	0.0
20.00		363.9	230.3					50.4	282.3	414.3	512.7	0.0	0.0
22.50		354.2	227.4					49.7	282.3	403.9	509.7	0.0	0.0
25.00		344.8	224.4					49.0	282.3	393.8	506.7	0.0	0.0
27.50		335.7	221.4					48.3	282.3	384.0	503.7	0.0	0.0
30.00		328.8	218.4					47.7	282.3	376.5	500.8	0.0	0.0
32.50		325.7	215.4					47.7	282.3	373.3	497.8	0.0	0.0
35.00		323.9	212.5					48.1	282.3	372.0	494.8	0.0	0.0
37.50		166.8	209.5					48.5	282.3	215.3	491.8	0.0	0.0
37.58	Bot - Section 2	162.9	6.9					1.6	9.4	164.5	16.3	0.0	0.0
40.00		286.9	377.7					47.2	272.9	334.1	650.6	0.0	0.0
42.00	Top - Section 1	161.6	308.6					39.2	225.9	200.8	534.5	0.0	0.0
42.50		192.3	36.1					9.8	56.5	202.1	92.6	0.0	0.0
45.00		318.5	179.1					49.3	282.3	367.8	461.4	0.0	0.0
47.50		315.0	176.4					49.5	282.3	364.5	458.8	0.0	0.0
50.00		311.4	173.8					49.7	282.3	361.1	456.2	0.0	0.0
52.50		307.6	171.2					49.8	282.3	357.4	453.6	0.0	0.0
55.00		303.6	168.6					49.9	282.3	353.6	450.9	0.0	0.0
57.50		299.5	166.0					50.1	282.3	349.5	448.3	0.0	0.0
60.00		295.3	163.4					50.1	282.3	345.4	445.7	0.0	0.0
62.50		291.0	160.8					50.2	282.3	341.2	443.1	0.0	0.0
65.00		286.5	158.2					50.3	282.3	336.8	440.5	0.0	0.0
67.50		282.1	155.6					50.3	282.3	332.4	437.9	0.0	0.0
70.00		277.5	153.0					50.4	282.3	327.9	435.3	0.0	0.0
72.50		272.9	150.3					50.4	282.3	323.3	432.7	0.0	0.0
75.00		197.7	147.7					50.4	282.3	248.1	430.1	0.0	0.0
76.17	Bot - Section 3	134.3	68.0					23.5	131.7	157.8	199.8	0.0	0.0
77.50		178.6	144.6					26.9	150.6	205.5	295.2	0.0	0.0
79.50	Reinf. Top Reinf	133.1	214.3					40.3	225.9	173.4	440.2	0.0	0.0
80.00	Top - Section 2	157.2	53.1					10.1	56.5	167.3	109.5	0.0	0.0
82.50		259.1	122.6					50.4	282.3	309.6	405.0	0.0	0.0
85.00		254.4	120.4					50.4	282.3	304.8	402.7	0.0	0.0
87.50		249.6	118.1					50.4	282.3	300.0	400.5	0.0	0.0
90.00		172.4	115.9					50.4	282.3	222.8	398.2	0.0	0.0
91.00	Appertunance(s)	121.2	45.7	1,692.5	0.0	0.0	380.8	20.2	103.8	1,833.9	530.3	0.0	0.0
92.50		96.4	67.9					30.2	154.6	126.6	222.6	0.0	0.0
93.00	Appertunance(s)	118.8	22.5	755.4	0.0	0.0	775.0	10.1	51.5	884.3	849.0	0.0	0.0
95.00		208.4	89.0					40.3	206.2	248.7	295.1	0.0	0.0
97.44	Reinf. Top	116.4	106.5					49.1	251.3	165.5	357.8	0.0	0.0
97.50		116.9	2.7					1.3	1.4	118.2	4.1	0.0	0.0

© 2007 - 2016 by ATC IP LLC. All rights reserved.

Load Case: 1.2D + 1.6W 93 mph with No Ice 27 Iterations

Gust Response Factor :1.10 Wind Importance Factor 1.00
Dead Load Factor :1.20
Wind Load Factor :1.60

100.00		159.0	106.9					50.4	57.3	209.3	164.3	0.0	0.0
101.00	Appertunance(s)	111.6	42.1	531.1	0.0	0.0	95.0	20.1	22.9	662.9	160.1	0.0	0.0
102.50		157.7	62.5					20.1	25.5	177.8	88.1	0.0	0.0
105.00		180.0	102.5					0.0	42.6	180.0	145.0	0.0	0.0
107.50		176.0	100.2					0.0	42.6	176.0	142.8	0.0	0.0
110.00		172.0	98.0					0.0	42.6	172.0	140.5	0.0	0.0
112.50		168.0	95.7					0.0	42.6	168.0	138.3	0.0	0.0
115.00		164.1	93.5					0.0	42.6	164.1	136.1	0.0	0.0
117.50		160.1	91.2					0.0	42.6	160.1	133.8	0.0	0.0
120.00	Appertunance(s)	79.0	89.0	5,328.9	0.0	12,798.1	3,868.0	0.0	42.6	5,408.0	3,999.5	0.0	0.0
								Totals:		24,385.3	25,948.3	0.00	0.00

 © 2007 - 2016 by ATC IP LLC. All rights reserved.

Load Case: 1.2D + 1.6W 93 mph with No Ice 27 Iterations

Gust Response Factor :1.10 Wind Importance Factor 1.00
Dead Load Factor :1.20
Wind Load Factor :1.60

Calculated Forces

Seg Elev (ft)	Pu FY (-) (kips)	Vu FX (-) (kips)	Tu MY (ft-kips)	Mu MZ (ft-kips)	Mu MX (ft-kips)	Resultant Moment (ft-kips)	phi Pn (kips)	phi Vn (kips)	phi Tn (ft-kips)	phi Mn (ft-kips)	Total Deflect (in)	Rotation (deg)	Ratio
0.00	-25.92	-24.19	0.00	-1,824.93	0.00	1,824.93	1,590.66	795.33	2,018.74	996.98	0.00	0.00	0.547
2.50	-25.22	-23.75	0.00	-1,764.46	0.00	1,764.46	1,581.24	790.62	1,982.92	979.29	0.04	-0.13	0.533
5.00	-24.52	-23.32	0.00	-1,705.09	0.00	1,705.09	1,571.59	785.80	1,947.12	961.61	0.14	-0.25	0.518
7.50	-23.81	-22.89	0.00	-1,646.80	0.00	1,646.80	1,561.72	780.86	1,911.33	943.93	0.30	-0.37	0.504
10.00	-23.04	-22.48	0.00	-1,589.57	0.00	1,589.57	1,551.63	775.81	1,875.57	926.27	0.53	-0.50	0.489
12.50	-22.28	-22.07	0.00	-1,533.38	0.00	1,533.38	1,541.31	770.66	1,839.85	908.63	0.83	-0.62	0.475
15.00	-21.53	-21.80	0.00	-1,478.21	0.00	1,478.21	1,530.78	765.39	1,804.18	891.02	1.18	-0.74	0.461
15.48	-21.38	-21.62	0.00	-1,467.77	0.00	1,467.77	1,528.73	764.37	1,797.35	887.64	1.26	-0.76	0.459
15.48	-21.38	-21.62	0.00	-1,467.77	0.00	1,467.77	1,528.73	764.37	1,797.35	887.64	1.26	-0.76	0.723
17.50	-20.91	-21.29	0.00	-1,424.07	0.00	1,424.07	1,520.01	760.01	1,768.57	873.43	1.60	-0.86	0.707
20.00	-20.34	-20.93	0.00	-1,370.85	0.00	1,370.85	1,509.03	754.52	1,733.02	855.87	2.10	-1.04	0.688
22.50	-19.77	-20.58	0.00	-1,318.52	0.00	1,318.52	1,497.83	748.91	1,697.56	838.36	2.70	-1.22	0.668
25.00	-19.21	-20.24	0.00	-1,267.06	0.00	1,267.06	1,486.40	743.20	1,662.18	820.89	3.39	-1.40	0.648
27.50	-18.66	-19.90	0.00	-1,216.47	0.00	1,216.47	1,474.74	737.37	1,626.91	803.47	4.17	-1.58	0.629
30.00	-18.11	-19.56	0.00	-1,166.73	0.00	1,166.73	1,462.87	731.44	1,591.74	786.10	5.05	-1.76	0.610
32.50	-17.57	-19.23	0.00	-1,117.82	0.00	1,117.82	1,450.77	725.39	1,556.69	768.79	6.02	-1.93	0.590
35.00	-17.03	-18.89	0.00	-1,069.76	0.00	1,069.76	1,438.45	719.23	1,521.78	751.55	7.08	-2.11	0.571
37.50	-16.52	-18.68	0.00	-1,022.54	0.00	1,022.54	1,425.91	712.96	1,487.00	734.37	8.23	-2.28	0.552
37.58	-16.48	-18.54	0.00	-1,020.98	0.00	1,020.98	1,425.49	712.74	1,485.84	733.80	8.27	-2.28	0.551
40.00	-15.80	-18.22	0.00	-976.18	0.00	976.18	1,413.15	706.57	1,452.37	717.27	9.46	-2.44	0.524
42.00	-15.25	-18.02	0.00	-939.74	0.00	939.74	1,177.15	588.58	1,220.08	602.55	10.52	-2.57	0.566
42.50	-15.13	-17.84	0.00	-930.74	0.00	930.74	1,175.29	587.65	1,214.60	599.85	10.79	-2.61	0.562
45.00	-14.64	-17.49	0.00	-886.15	0.00	886.15	1,165.87	582.93	1,187.28	586.35	12.20	-2.77	0.540
47.50	-14.15	-17.14	0.00	-842.43	0.00	842.43	1,156.22	578.11	1,160.01	572.88	13.69	-2.93	0.518
50.00	-13.67	-16.79	0.00	-799.58	0.00	799.58	1,146.35	573.17	1,132.81	559.45	15.27	-3.09	0.496
52.50	-13.19	-16.45	0.00	-757.60	0.00	757.60	1,136.25	568.13	1,105.70	546.06	16.92	-3.24	0.475
55.00	-12.72	-16.10	0.00	-716.49	0.00	716.49	1,125.94	562.97	1,078.67	532.72	18.66	-3.39	0.453
57.50	-12.26	-15.75	0.00	-676.24	0.00	676.24	1,115.40	557.70	1,051.75	519.42	20.47	-3.53	0.432
60.00	-11.80	-15.41	0.00	-636.86	0.00	636.86	1,104.64	552.32	1,024.94	506.18	22.36	-3.68	0.411
62.50	-11.34	-15.07	0.00	-598.33	0.00	598.33	1,093.65	546.83	998.25	493.00	24.32	-3.81	0.390
65.00	-10.89	-14.73	0.00	-560.66	0.00	560.66	1,082.45	541.22	971.69	479.88	26.35	-3.95	0.369
67.50	-10.44	-14.39	0.00	-523.85	0.00	523.85	1,071.02	535.51	945.28	466.84	28.46	-4.08	0.349
70.00	-10.00	-14.05	0.00	-487.88	0.00	487.88	1,059.36	529.68	919.01	453.87	30.62	-4.20	0.328
72.50	-9.57	-13.72	0.00	-452.75	0.00	452.75	1,047.49	523.74	892.91	440.97	32.85	-4.32	0.308
75.00	-9.14	-13.45	0.00	-418.46	0.00	418.46	1,035.39	517.69	866.98	428.17	35.15	-4.43	0.288
76.17	-8.94	-13.28	0.00	-402.77	0.00	402.77	1,029.67	514.83	854.94	422.22	36.24	-4.49	0.278
77.50	-8.65	-13.07	0.00	-385.06	0.00	385.06	1,023.07	511.53	841.23	415.45	37.50	-4.54	0.263
79.50	-8.21	-12.87	0.00	-358.93	0.00	358.93	1,013.05	506.53	820.77	405.35	39.42	-4.63	0.247
79.50	-8.21	-12.87	0.00	-358.93	0.00	358.93	1,013.05	506.53	820.77	405.35	39.42	-4.63	0.247
80.00	-8.10	-12.70	0.00	-352.50	0.00	352.50	831.49	415.75	686.29	338.93	39.90	-4.65	0.270
82.50	-7.70	-12.37	0.00	-320.75	0.00	320.75	822.47	411.24	666.44	329.13	42.36	-4.74	0.248
85.00	-7.31	-12.04	0.00	-289.83	0.00	289.83	813.23	406.62	646.68	319.37	44.87	-4.84	0.226
87.50	-6.92	-11.72	0.00	-259.72	0.00	259.72	803.77	401.88	627.03	309.67	47.42	-4.92	0.205
90.00	-6.53	-11.47	0.00	-230.41	0.00	230.41	794.08	397.04	607.50	300.02	50.02	-5.00	0.183
91.00	-6.15	-9.60	0.00	-218.94	0.00	218.94	790.14	395.07	599.72	296.18	51.07	-5.03	0.175
92.50	-5.94	-9.46	0.00	-204.54	0.00	204.54	784.17	392.08	588.09	290.43	52.66	-5.08	0.164
93.00	-5.17	-8.51	0.00	-199.81	0.00	199.81	782.16	391.08	584.22	288.52	53.19	-5.09	0.160
95.00	-4.89	-8.24	0.00	-182.80	0.00	182.80	774.04	387.02	568.81	280.91	55.33	-5.14	0.148
97.44	-4.54	-8.04	0.00	-162.73	0.00	162.73	763.94	381.97	550.16	271.70	57.97	-5.20	0.133
97.44	-4.54	-8.04	0.00	-162.73	0.00	162.73	763.94	381.97	550.16	271.70	57.97	-5.20	0.605
97.50	-4.53	-7.93	0.00	-162.22	0.00	162.22	763.68	381.84	549.68	271.47	58.04	-5.21	0.604

© 2007 - 2016 by ATC IP LLC. All rights reserved.

Load Case: 1.2D + 1.6W 93 mph with No Ice 27 Iterations

Gust Response Factor :1.10 Wind Importance Factor 1.00
Dead Load Factor :1.20
Wind Load Factor :1.60

100.00	-4.36	-7.72	0.00	-142.39	0.00	142.39	753.10	376.55	530.71	262.10	60.83	-5.47	0.549
101.00	-4.25	-7.06	0.00	-134.67	0.00	134.67	748.81	374.40	523.16	258.37	61.99	-5.57	0.527
102.50	-4.16	-6.89	0.00	-124.08	0.00	124.08	742.30	371.15	511.90	252.81	63.76	-5.72	0.497
105.00	-4.01	-6.71	0.00	-106.86	0.00	106.86	731.28	365.64	493.27	243.61	66.80	-5.94	0.444
107.50	-3.86	-6.53	0.00	-90.09	0.00	90.09	715.50	357.75	471.83	233.02	69.97	-6.15	0.392
110.00	-3.72	-6.36	0.00	-73.77	0.00	73.77	699.32	349.66	450.61	222.54	73.23	-6.33	0.337
112.50	-3.59	-6.18	0.00	-57.88	0.00	57.88	683.14	341.57	429.88	212.30	76.58	-6.49	0.278
115.00	-3.46	-6.01	0.00	-42.42	0.00	42.42	666.96	333.48	409.64	202.31	80.01	-6.62	0.215
117.50	-3.34	-5.84	0.00	-27.40	0.00	27.40	650.78	325.39	389.89	192.55	83.49	-6.71	0.148
120.00	0.00	-5.41	0.00	-12.80	0.00	12.80	634.60	317.30	370.62	183.04	87.02	-6.77	0.070

 © 2007 - 2016 by ATC IP LLC. All rights reserved.

Load Case: 0.9D + 1.6W — 93 mph with No Ice (Reduced DL) — 27 Iterations

Gust Response Factor :1.10
Dead Load Factor :0.90
Wind Load Factor :1.60

Wind Importance Factor 1.00

Applied Segment Forces Summary

Seg Elev (ft)	Description	Shaft Forces Wind FX (lb)	Shaft Forces Dead Load (lb)	Discrete Forces Wind FX (lb)	Discrete Forces Torsion MY (lb-ft)	Discrete Forces Moment MZ (lb-ft)	Discrete Forces Dead Load (lb)	Linear Forces Wind FX (lb)	Linear Forces Dead Load (lb)	Sum of Forces Wind FX (lb)	Sum of Forces Dead Load (lb)	Sum of Forces Torsion MY (lb-ft)	Sum of Forces Moment MZ (lb)
0.00		223.6	0.0					0.0	0.0	223.6	0.0	0.0	0.0
2.50		441.1	188.4					56.1	300.6	497.2	489.0	0.0	0.0
5.00		429.0	186.2					55.2	300.6	484.2	486.8	0.0	0.0
7.50		417.3	183.9					54.3	312.9	471.6	496.8	0.0	0.0
10.00		405.9	181.7					53.5	362.0	459.4	543.7	0.0	0.0
12.50		394.9	179.5					52.7	362.0	447.6	541.5	0.0	0.0
15.00		231.5	177.2					51.9	362.0	283.4	539.3	0.0	0.0
15.48	Reinf. Top	189.5	33.7					9.9	69.4	199.4	103.1	0.0	0.0
17.50		337.2	141.3					41.3	171.2	378.5	312.4	0.0	0.0
20.00		363.9	172.8					50.4	211.7	414.3	384.5	0.0	0.0
22.50		354.2	170.5					49.7	211.7	403.9	382.3	0.0	0.0
25.00		344.8	168.3					49.0	211.7	393.8	380.0	0.0	0.0
27.50		335.7	166.1					48.3	211.7	384.0	377.8	0.0	0.0
30.00		328.8	163.8					47.7	211.7	376.5	375.6	0.0	0.0
32.50		325.7	161.6					47.7	211.7	373.3	373.3	0.0	0.0
35.00		323.9	159.4					48.1	211.7	372.0	371.1	0.0	0.0
37.50		166.8	157.1					48.5	211.7	215.3	368.9	0.0	0.0
37.58	Bot - Section 2	162.9	5.2					1.6	7.1	164.5	12.3	0.0	0.0
40.00		286.9	283.3					47.2	204.7	334.1	487.9	0.0	0.0
42.00	Top - Section 1	161.6	231.5					39.2	169.4	200.8	400.9	0.0	0.0
42.50		192.3	27.1					9.8	42.3	202.1	69.4	0.0	0.0
45.00		318.5	134.3					49.3	211.7	367.8	346.0	0.0	0.0
47.50		315.0	132.3					49.5	211.7	364.5	344.1	0.0	0.0
50.00		311.4	130.4					49.7	211.7	361.1	342.1	0.0	0.0
52.50		307.6	128.4					49.8	211.7	357.4	340.2	0.0	0.0
55.00		303.6	126.5					49.9	211.7	353.6	338.2	0.0	0.0
57.50		299.5	124.5					50.1	211.7	349.5	336.3	0.0	0.0
60.00		295.3	122.5					50.1	211.7	345.4	334.3	0.0	0.0
62.50		291.0	120.6					50.2	211.7	341.2	332.3	0.0	0.0
65.00		286.5	118.6					50.3	211.7	336.8	330.4	0.0	0.0
67.50		282.1	116.7					50.3	211.7	332.4	328.4	0.0	0.0
70.00		277.5	114.7					50.4	211.7	327.9	326.5	0.0	0.0
72.50		272.9	112.8					50.4	211.7	323.3	324.5	0.0	0.0
75.00		197.7	110.8					50.4	211.7	248.1	322.5	0.0	0.0
76.17	Bot - Section 3	134.3	51.0					23.5	98.8	157.8	149.8	0.0	0.0
77.50		178.6	108.4					26.9	112.9	205.5	221.4	0.0	0.0
79.50	Reinf. Top Reinf	133.1	160.7					40.3	169.4	173.4	330.1	0.0	0.0
80.00	Top - Section 2	157.2	39.8					10.1	42.3	167.3	82.2	0.0	0.0
82.50		259.1	92.0					50.4	211.8	309.6	303.7	0.0	0.0
85.00		254.4	90.3					50.4	211.7	304.8	302.0	0.0	0.0
87.50		249.6	88.6					50.4	211.7	300.0	300.3	0.0	0.0
90.00		172.4	86.9					50.4	211.7	222.8	298.7	0.0	0.0
91.00	Appertunance(s)	121.2	34.3	1,692.5	0.0	0.0	285.6	20.2	77.9	1,833.9	397.7	0.0	0.0
92.50		96.4	50.9					30.2	116.0	126.6	166.9	0.0	0.0
93.00	Appertunance(s)	118.8	16.8	755.4	0.0	0.0	581.2	10.1	38.7	884.3	636.7	0.0	0.0
95.00		208.4	66.7					40.3	154.6	248.7	221.4	0.0	0.0
97.44	Reinf. Top	116.4	79.9					49.1	188.5	165.5	268.3	0.0	0.0
97.50		116.9	2.0					1.3	1.1	118.2	3.1	0.0	0.0

© 2007 - 2016 by ATC IP LLC. All rights reserved.

Load Case: 0.9D + 1.6W 93 mph with No Ice (Reduced DL) 27 Iterations

Gust Response Factor :1.10 Wind Importance Factor 1.00
Dead Load Factor :0.90
Wind Load Factor :1.60

100.00		159.0	80.2					50.4	43.0	209.3	123.2	0.0	0.0
101.00	Appertunance(s)	111.6	31.6	531.1	0.0	0.0	71.3	20.1	17.2	662.9	120.1	0.0	0.0
102.50		157.7	46.9					20.1	19.2	177.8	66.1	0.0	0.0
105.00		180.0	76.8					0.0	31.9	180.0	108.8	0.0	0.0
107.50		176.0	75.2					0.0	31.9	176.0	107.1	0.0	0.0
110.00		172.0	73.5					0.0	31.9	172.0	105.4	0.0	0.0
112.50		168.0	71.8					0.0	31.9	168.0	103.7	0.0	0.0
115.00		164.1	70.1					0.0	31.9	164.1	102.0	0.0	0.0
117.50		160.1	68.4					0.0	31.9	160.1	100.4	0.0	0.0
120.00	Appertunance(s)	79.0	66.8	5,328.9	0.0	12,798.1	2,901.0	0.0	31.9	5,408.0	2,999.7	0.0	0.0
									Totals:	24,385.3	19,461.2	0.00	0.00

 © 2007 - 2016 by ATC IP LLC. All rights reserved.

Load Case: 0.9D + 1.6W 93 mph with No Ice (Reduced DL) 27 Iterations

Gust Response Factor :1.10 Wind Importance Factor 1.00
Dead Load Factor :0.90
Wind Load Factor :1.60

Calculated Forces

Seg Elev (ft)	Pu FY (-) (kips)	Vu FX (-) (kips)	Tu MY (ft-kips)	Mu MZ (ft-kips)	Mu MX (ft-kips)	Resultant Moment (ft-kips)	phi Pn (kips)	phi Vn (kips)	phi Tn (ft-kips)	phi Mn (ft-kips)	Total Deflect (in)	Rotation (deg)	Ratio
0.00	-19.43	-24.18	0.00	-1,806.86	0.00	1,806.86	1,590.66	795.33	2,018.74	996.98	0.00	0.00	0.540
2.50	-18.89	-23.73	0.00	-1,746.40	0.00	1,746.40	1,581.24	790.62	1,982.92	979.29	0.03	-0.12	0.526
5.00	-18.36	-23.28	0.00	-1,687.09	0.00	1,687.09	1,571.59	785.80	1,947.12	961.61	0.13	-0.25	0.511
7.50	-17.82	-22.84	0.00	-1,628.89	0.00	1,628.89	1,561.72	780.86	1,911.33	943.93	0.30	-0.37	0.497
10.00	-17.23	-22.42	0.00	-1,571.78	0.00	1,571.78	1,551.63	775.81	1,875.57	926.27	0.53	-0.49	0.483
12.50	-16.65	-22.00	0.00	-1,515.74	0.00	1,515.74	1,541.31	770.66	1,839.85	908.63	0.82	-0.61	0.469
15.00	-16.08	-21.73	0.00	-1,460.74	0.00	1,460.74	1,530.78	765.39	1,804.18	891.02	1.17	-0.73	0.455
15.48	-15.96	-21.54	0.00	-1,450.33	0.00	1,450.33	1,528.73	764.37	1,797.35	887.64	1.25	-0.75	0.452
15.48	-15.96	-21.54	0.00	-1,450.33	0.00	1,450.33	1,528.73	764.37	1,797.35	887.64	1.25	-0.75	0.713
17.50	-15.60	-21.20	0.00	-1,406.79	0.00	1,406.79	1,520.01	760.01	1,768.57	873.43	1.59	-0.85	0.697
20.00	-15.16	-20.83	0.00	-1,353.80	0.00	1,353.80	1,509.03	754.52	1,733.02	855.87	2.08	-1.03	0.677
22.50	-14.72	-20.46	0.00	-1,301.73	0.00	1,301.73	1,497.83	748.91	1,697.56	838.36	2.67	-1.21	0.658
25.00	-14.29	-20.10	0.00	-1,250.58	0.00	1,250.58	1,486.40	743.20	1,662.18	820.89	3.35	-1.39	0.638
27.50	-13.86	-19.75	0.00	-1,200.32	0.00	1,200.32	1,474.74	737.37	1,626.91	803.47	4.12	-1.56	0.619
30.00	-13.44	-19.41	0.00	-1,150.94	0.00	1,150.94	1,462.87	731.44	1,591.74	786.10	4.99	-1.74	0.600
32.50	-13.02	-19.06	0.00	-1,102.42	0.00	1,102.42	1,450.77	725.39	1,556.69	768.79	5.95	-1.91	0.581
35.00	-12.60	-18.71	0.00	-1,054.77	0.00	1,054.77	1,438.45	719.23	1,521.78	751.55	7.00	-2.08	0.561
37.50	-12.22	-18.50	0.00	-1,007.99	0.00	1,007.99	1,425.91	712.96	1,487.00	734.37	8.13	-2.25	0.542
37.58	-12.18	-18.35	0.00	-1,006.45	0.00	1,006.45	1,425.49	712.74	1,485.84	733.80	8.17	-2.25	0.542
40.00	-11.67	-18.03	0.00	-962.10	0.00	962.10	1,413.15	706.57	1,452.37	717.27	9.35	-2.41	0.515
42.00	-11.25	-17.83	0.00	-926.04	0.00	926.04	1,177.15	588.58	1,220.08	602.55	10.39	-2.54	0.556
42.50	-11.16	-17.64	0.00	-917.12	0.00	917.12	1,175.29	587.65	1,214.60	599.85	10.66	-2.57	0.552
45.00	-10.78	-17.29	0.00	-873.02	0.00	873.02	1,165.87	582.93	1,187.28	586.35	12.05	-2.73	0.530
47.50	-10.41	-16.94	0.00	-829.80	0.00	829.80	1,156.22	578.11	1,160.01	572.88	13.52	-2.89	0.509
50.00	-10.04	-16.58	0.00	-787.46	0.00	787.46	1,146.35	573.17	1,132.81	559.45	15.08	-3.05	0.487
52.50	-9.68	-16.23	0.00	-746.00	0.00	746.00	1,136.25	568.13	1,105.70	546.06	16.72	-3.20	0.466
55.00	-9.32	-15.89	0.00	-705.42	0.00	705.42	1,125.94	562.97	1,078.67	532.72	18.43	-3.34	0.445
57.50	-8.97	-15.54	0.00	-665.71	0.00	665.71	1,115.40	557.70	1,051.75	519.42	20.22	-3.49	0.424
60.00	-8.62	-15.19	0.00	-626.86	0.00	626.86	1,104.64	552.32	1,024.94	506.18	22.08	-3.63	0.403
62.50	-8.28	-14.85	0.00	-588.88	0.00	588.88	1,093.65	546.83	998.25	493.00	24.02	-3.76	0.383
65.00	-7.94	-14.51	0.00	-551.75	0.00	551.75	1,082.45	541.22	971.69	479.88	26.02	-3.89	0.362
67.50	-7.60	-14.17	0.00	-515.47	0.00	515.47	1,071.02	535.51	945.28	466.84	28.09	-4.02	0.342
70.00	-7.27	-13.84	0.00	-480.04	0.00	480.04	1,059.36	529.68	919.01	453.87	30.23	-4.14	0.322
72.50	-6.94	-13.51	0.00	-445.44	0.00	445.44	1,047.49	523.74	892.91	440.97	32.43	-4.26	0.302
75.00	-6.62	-13.24	0.00	-411.68	0.00	411.68	1,035.39	517.69	866.98	428.17	34.69	-4.37	0.282
76.17	-6.47	-13.08	0.00	-396.23	0.00	396.23	1,029.67	514.83	854.94	422.22	35.77	-4.42	0.273
77.50	-6.25	-12.87	0.00	-378.79	0.00	378.79	1,023.07	511.53	841.23	415.45	37.01	-4.48	0.257
79.50	-5.93	-12.67	0.00	-353.05	0.00	353.05	1,013.05	506.53	820.77	405.35	38.91	-4.56	0.242
79.50	-5.93	-12.67	0.00	-353.05	0.00	353.05	1,013.05	506.53	820.77	405.35	38.91	-4.56	0.242
80.00	-5.84	-12.51	0.00	-346.72	0.00	346.72	831.49	415.75	686.29	338.93	39.38	-4.58	0.265
82.50	-5.55	-12.18	0.00	-315.45	0.00	315.45	822.47	411.24	666.44	329.13	41.81	-4.68	0.243
85.00	-5.25	-11.86	0.00	-285.00	0.00	285.00	813.23	406.62	646.68	319.37	44.28	-4.77	0.222
87.50	-4.96	-11.54	0.00	-255.35	0.00	255.35	803.77	401.88	627.03	309.67	46.80	-4.85	0.200
90.00	-4.67	-11.30	0.00	-226.49	0.00	226.49	794.08	397.04	607.50	300.02	49.36	-4.93	0.180
91.00	-4.43	-9.44	0.00	-215.19	0.00	215.19	790.14	395.07	599.72	296.18	50.39	-4.96	0.171
92.50	-4.27	-9.30	0.00	-201.03	0.00	201.03	784.17	392.08	588.09	290.43	51.96	-5.00	0.161
93.00	-3.71	-8.37	0.00	-196.38	0.00	196.38	782.16	391.08	584.22	288.52	52.48	-5.02	0.157
95.00	-3.50	-8.11	0.00	-179.64	0.00	179.64	774.04	387.02	568.81	280.91	54.59	-5.07	0.145
97.44	-3.24	-7.92	0.00	-159.88	0.00	159.88	763.94	381.97	550.16	271.70	57.20	-5.13	0.130
97.44	-3.24	-7.92	0.00	-159.88	0.00	159.88	763.94	381.97	550.16	271.70	57.20	-5.13	0.593
97.50	-3.23	-7.81	0.00	-159.39	0.00	159.39	763.68	381.84	549.68	271.47	57.26	-5.13	0.592

© 2007 - 2016 by ATC IP LLC. All rights reserved.

Load Case: 0.9D + 1.6W 93 mph with No Ice (Reduced DL) 27 Iterations

Gust Response Factor :1.10 Wind Importance Factor 1.00
Dead Load Factor :0.90
Wind Load Factor :1.60

100.00	-3.11	-7.60	0.00	-139.87	0.00	139.87	753.10	376.55	530.71	262.10	60.02	-5.39	0.538
101.00	-3.04	-6.93	0.00	-132.27	0.00	132.27	748.81	374.40	523.16	258.37	61.15	-5.49	0.516
102.50	-2.97	-6.76	0.00	-121.87	0.00	121.87	742.30	371.15	511.90	252.81	62.90	-5.63	0.486
105.00	-2.85	-6.58	0.00	-104.97	0.00	104.97	731.28	365.64	493.27	243.61	65.90	-5.85	0.435
107.50	-2.74	-6.40	0.00	-88.53	0.00	88.53	715.50	357.75	471.83	233.02	69.02	-6.06	0.384
110.00	-2.64	-6.23	0.00	-72.52	0.00	72.52	699.32	349.66	450.61	222.54	72.23	-6.24	0.330
112.50	-2.54	-6.06	0.00	-56.95	0.00	56.95	683.14	341.57	429.88	212.30	75.54	-6.39	0.272
115.00	-2.44	-5.89	0.00	-41.81	0.00	41.81	666.96	333.48	409.64	202.31	78.91	-6.52	0.211
117.50	-2.35	-5.72	0.00	-27.10	0.00	27.10	650.78	325.39	389.89	192.55	82.34	-6.61	0.145
120.00	0.00	-5.41	0.00	-12.80	0.00	12.80	634.60	317.30	370.62	183.04	85.82	-6.67	0.070

© 2007 - 2016 by ATC IP LLC. All rights reserved.

Load Case: 1.2D + 1.0Di + 1.0Wi — 50 mph with 1.00 in Radial Ice — 26 Iterations

Gust Response Factor :1.10 — Ice Dead Load Factor 1.00 — Wind Importance Factor 1.00
Dead Load Factor :1.20 — Ice Importance Factor :1.00
Wind Load Factor :1.00

Applied Segment Forces Summary

		Shaft Forces		Discrete Forces				Linear Forces		Sum of Forces			
Seg Elev (ft)	Description	Wind FX (lb)	Dead Load (lb)	Wind FX (lb)	Torsion MY (lb-ft)	Moment MZ (lb-ft)	Dead Load (lb)	Wind FX (lb)	Dead Load (lb)	Wind FX (lb)	Dead Load (lb)	Torsion MY (lb-ft)	Moment MZ (lb)
0.00		45.2	0.0					0.0	0.0	45.2	0.0	0.0	0.0
2.50		89.7	449.9					29.8	495.6	119.5	945.5	0.0	0.0
5.00		88.1	467.7					30.4	506.2	118.5	973.9	0.0	0.0
7.50		86.2	473.0					30.4	558.9	116.6	1,031.9	0.0	0.0
10.00		84.3	474.4					30.2	758.8	114.5	1,233.2	0.0	0.0
12.50		82.3	473.6					30.0	765.5	112.3	1,239.2	0.0	0.0
15.00		48.3	471.7					29.7	770.7	78.0	1,242.4	0.0	0.0
15.48	Reinf. Top	39.7	90.3					5.7	148.2	45.4	238.5	0.0	0.0
17.50		70.8	378.9					23.7	464.6	94.5	843.6	0.0	0.0
20.00		76.6	465.4					29.1	577.8	105.6	1,043.2	0.0	0.0
22.50		74.7	461.5					28.7	580.6	103.5	1,042.1	0.0	0.0
25.00		72.9	457.3					28.4	530.6	101.4	987.9	0.0	0.0
27.50		71.2	452.8					28.1	532.3	99.3	985.1	0.0	0.0
30.00		69.9	448.0					27.7	533.8	97.7	981.8	0.0	0.0
32.50		69.5	443.1					27.8	535.0	97.2	978.1	0.0	0.0
35.00		69.2	438.0					28.1	536.1	97.3	974.0	0.0	0.0
37.50		35.7	432.8					28.3	537.0	64.0	969.7	0.0	0.0
37.58	Bot - Section 2	34.9	14.4					0.9	17.9	35.8	32.3	0.0	0.0
40.00		61.5	594.6					27.6	519.8	89.1	1,114.5	0.0	0.0
42.00	Top - Section 1	34.7	486.7					22.9	430.7	57.6	917.3	0.0	0.0
42.50		41.4	80.6					5.8	107.7	47.1	188.3	0.0	0.0
45.00		68.6	398.6					28.9	539.0	97.5	937.5	0.0	0.0
47.50		68.0	393.4					29.0	539.4	97.0	932.8	0.0	0.0
50.00		67.4	388.1					29.1	539.9	96.5	928.0	0.0	0.0
52.50		66.8	382.9					29.2	540.2	96.0	923.1	0.0	0.0
55.00		66.1	377.5					29.3	540.5	95.4	918.0	0.0	0.0
57.50		65.4	372.1					29.4	540.8	94.8	912.9	0.0	0.0
60.00		64.7	366.7					29.4	541.0	94.1	907.7	0.0	0.0
62.50		63.9	361.3					29.5	541.2	93.4	902.5	0.0	0.0
65.00		63.1	355.9					29.5	541.3	92.6	897.2	0.0	0.0
67.50		62.3	350.4					29.5	541.4	91.9	891.8	0.0	0.0
70.00		61.5	344.9					29.6	541.5	91.1	886.4	0.0	0.0
72.50		60.7	339.4					29.6	541.6	90.3	881.0	0.0	0.0
75.00		44.1	333.9					29.6	541.6	73.7	875.5	0.0	0.0
76.17	Bot - Section 3	30.0	154.3					13.8	252.8	43.8	407.0	0.0	0.0
77.50		39.9	243.9					15.8	288.9	55.7	532.8	0.0	0.0
79.50	Reinf. Top Reinf	29.7	361.4					23.7	433.3	53.4	794.8	0.0	0.0
80.00	Top - Section 2	35.2	89.7					5.9	108.3	41.2	198.1	0.0	0.0
82.50		58.2	303.0					29.6	541.7	87.8	844.7	0.0	0.0
85.00		57.3	297.9					29.6	541.7	87.0	839.5	0.0	0.0
87.50		56.5	292.7					29.6	541.7	86.1	834.3	0.0	0.0
90.00		39.1	287.5					29.6	541.7	68.7	829.1	0.0	0.0
91.00	Appertunance(s)	27.6	113.9	405.4	0.0	0.0	1,319.2	11.8	178.3	444.8	1,611.4	0.0	0.0
92.50		22.0	169.1					17.8	247.4	39.7	416.5	0.0	0.0
93.00	Appertunance(s)	27.2	56.1	247.6	0.0	0.0	1,839.3	5.9	82.5	280.7	1,977.8	0.0	0.0
95.00		47.7	221.5					23.7	329.9	71.4	551.4	0.0	0.0
97.44	Reinf. Top	26.7	265.2					28.8	402.0	55.6	667.2	0.0	0.0
97.50		26.9	6.8					0.7	5.3	27.7	12.1	0.0	0.0

© 2007 - 2016 by ATC IP LLC. All rights reserved.

Load Case: 1.2D + 1.0Di + 1.0Wi 50 mph with 1.00 in Radial Ice 26 Iterations

Gust Response Factor :1.10 Ice Dead Load Factor 1.00 Wind Importance Factor 1.00
Dead Load Factor :1.20 Ice Importance Factor :1.00
Wind Load Factor :1.00

100.00		36.7	266.7					29.6	211.9	66.2	478.6	0.0	0.0
101.00	Appertunance(s)	25.8	105.6	129.6	0.0	0.0	666.7	11.8	84.8	167.3	857.1	0.0	0.0
102.50		40.9	156.6					11.8	54.7	52.7	211.3	0.0	0.0
105.00		50.4	256.3					0.0	42.6	50.4	298.9	0.0	0.0
107.50		49.5	251.1					0.0	42.6	49.5	293.7	0.0	0.0
110.00		48.6	245.9					0.0	42.6	48.6	288.5	0.0	0.0
112.50		47.8	240.7					0.0	42.6	47.8	283.3	0.0	0.0
115.00		46.9	235.5					0.0	42.6	46.9	278.1	0.0	0.0
117.50		46.0	230.3					0.0	42.6	46.0	272.9	0.0	0.0
120.00	Appertunance(s)	22.8	225.1	1,433.0	0.0	3,102.2	10,736.1	0.0	42.6	1,455.8	11,003.8	0.0	0.0
								Totals:		6,518.96	54,539.8	0.00	0.00

 © 2007 - 2016 by ATC IP LLC. All rights reserved.

Load Case: 1.2D + 1.0Di + 1.0Wi 50 mph with 1.00 in Radial Ice 26 Iterations

Gust Response Factor :1.10 Ice Dead Load Factor 1.00 Wind Importance Factor 1.00
Dead Load Factor :1.20 Ice Importance Factor :1.00
Wind Load Factor :1.00

Calculated Forces

Seg Elev (ft)	Pu FY (-) (kips)	Vu FX (-) (kips)	Tu MY (ft-kips)	Mu MZ (ft-kips)	Mu MX (ft-kips)	Resultant Moment (ft-kips)	phi Pn (kips)	phi Vn (kips)	phi Tn (ft-kips)	phi Mn (ft-kips)	Total Deflect (in)	Rotation (deg)	Ratio
0.00	-54.54	-6.49	0.00	-527.98	0.00	527.98	1,590.66	795.33	2,018.74	996.98	0.00	0.00	0.170
2.50	-53.59	-6.41	0.00	-511.75	0.00	511.75	1,581.24	790.62	1,982.92	979.29	0.01	-0.04	0.165
5.00	-52.61	-6.32	0.00	-495.74	0.00	495.74	1,571.59	785.80	1,947.12	961.61	0.04	-0.07	0.161
7.50	-51.57	-6.23	0.00	-479.94	0.00	479.94	1,561.72	780.86	1,911.33	943.93	0.09	-0.11	0.157
10.00	-50.34	-6.15	0.00	-464.36	0.00	464.36	1,551.63	775.81	1,875.57	926.27	0.15	-0.14	0.153
12.50	-49.10	-6.06	0.00	-449.00	0.00	449.00	1,541.31	770.66	1,839.85	908.63	0.24	-0.18	0.149
15.00	-47.85	-6.00	0.00	-433.84	0.00	433.84	1,530.78	765.39	1,804.18	891.02	0.34	-0.21	0.145
15.48	-47.61	-5.96	0.00	-430.97	0.00	430.97	1,528.73	764.37	1,797.35	887.64	0.37	-0.22	0.145
15.48	-47.61	-5.96	0.00	-430.97	0.00	430.97	1,528.73	764.37	1,797.35	887.64	0.37	-0.22	0.227
17.50	-46.76	-5.90	0.00	-418.92	0.00	418.92	1,520.01	760.01	1,768.57	873.43	0.47	-0.25	0.222
20.00	-45.72	-5.83	0.00	-404.17	0.00	404.17	1,509.03	754.52	1,733.02	855.87	0.61	-0.30	0.217
22.50	-44.67	-5.77	0.00	-389.58	0.00	389.58	1,497.83	748.91	1,697.56	838.36	0.79	-0.36	0.211
25.00	-43.68	-5.70	0.00	-375.17	0.00	375.17	1,486.40	743.20	1,662.18	820.89	0.99	-0.41	0.205
27.50	-42.69	-5.63	0.00	-360.93	0.00	360.93	1,474.74	737.37	1,626.91	803.47	1.22	-0.46	0.200
30.00	-41.70	-5.56	0.00	-346.85	0.00	346.85	1,462.87	731.44	1,591.74	786.10	1.48	-0.52	0.194
32.50	-40.72	-5.49	0.00	-332.95	0.00	332.95	1,450.77	725.39	1,556.69	768.79	1.76	-0.57	0.188
35.00	-39.74	-5.42	0.00	-319.21	0.00	319.21	1,438.45	719.23	1,521.78	751.55	2.07	-0.62	0.183
37.50	-38.77	-5.36	0.00	-305.66	0.00	305.66	1,425.91	712.96	1,487.00	734.37	2.41	-0.67	0.177
37.58	-38.74	-5.34	0.00	-305.22	0.00	305.22	1,425.49	712.74	1,485.84	733.80	2.42	-0.67	0.177
40.00	-37.62	-5.27	0.00	-292.30	0.00	292.30	1,413.15	706.57	1,452.37	717.27	2.78	-0.72	0.168
42.00	-36.70	-5.22	0.00	-281.76	0.00	281.76	1,177.15	588.58	1,220.08	602.55	3.09	-0.76	0.182
42.50	-36.51	-5.19	0.00	-279.16	0.00	279.16	1,175.29	587.65	1,214.60	599.85	3.17	-0.77	0.181
45.00	-35.57	-5.10	0.00	-266.19	0.00	266.19	1,165.87	582.93	1,187.28	586.35	3.58	-0.82	0.174
47.50	-34.63	-5.02	0.00	-253.43	0.00	253.43	1,156.22	578.11	1,160.01	572.88	4.02	-0.87	0.168
50.00	-33.70	-4.94	0.00	-240.87	0.00	240.87	1,146.35	573.17	1,132.81	559.45	4.49	-0.91	0.161
52.50	-32.78	-4.85	0.00	-228.53	0.00	228.53	1,136.25	568.13	1,105.70	546.06	4.98	-0.96	0.155
55.00	-31.86	-4.77	0.00	-216.39	0.00	216.39	1,125.94	562.97	1,078.67	532.72	5.50	-1.01	0.148
57.50	-30.94	-4.68	0.00	-204.47	0.00	204.47	1,115.40	557.70	1,051.75	519.42	6.04	-1.05	0.142
60.00	-30.03	-4.59	0.00	-192.77	0.00	192.77	1,104.64	552.32	1,024.94	506.18	6.60	-1.09	0.135
62.50	-29.13	-4.50	0.00	-181.29	0.00	181.29	1,093.65	546.83	998.25	493.00	7.18	-1.13	0.128
65.00	-28.23	-4.41	0.00	-170.04	0.00	170.04	1,082.45	541.22	971.69	479.88	7.79	-1.17	0.122
67.50	-27.34	-4.32	0.00	-159.01	0.00	159.01	1,071.02	535.51	945.28	466.84	8.41	-1.21	0.116
70.00	-26.45	-4.23	0.00	-148.22	0.00	148.22	1,059.36	529.68	919.01	453.87	9.06	-1.25	0.109
72.50	-25.57	-4.13	0.00	-137.65	0.00	137.65	1,047.49	523.74	892.91	440.97	9.72	-1.29	0.103
75.00	-24.70	-4.05	0.00	-127.32	0.00	127.32	1,035.39	517.69	866.98	428.17	10.41	-1.32	0.096
76.17	-24.29	-4.00	0.00	-122.60	0.00	122.60	1,029.67	514.83	854.94	422.22	10.73	-1.34	0.093
77.50	-23.76	-3.94	0.00	-117.26	0.00	117.26	1,023.07	511.53	841.23	415.45	11.11	-1.36	0.088
79.50	-22.96	-3.88	0.00	-109.38	0.00	109.38	1,013.05	506.53	820.77	405.35	11.68	-1.38	0.083
79.50	-22.96	-3.88	0.00	-109.38	0.00	109.38	1,013.05	506.53	820.77	405.35	11.68	-1.38	0.083
80.00	-22.76	-3.84	0.00	-107.44	0.00	107.44	831.49	415.75	686.29	338.93	11.83	-1.39	0.091
82.50	-21.92	-3.74	0.00	-97.84	0.00	97.84	822.47	411.24	666.44	329.13	12.56	-1.42	0.084
85.00	-21.08	-3.64	0.00	-88.49	0.00	88.49	813.23	406.62	646.68	319.37	13.31	-1.44	0.078
87.50	-20.25	-3.55	0.00	-79.38	0.00	79.38	803.77	401.88	627.03	309.67	14.08	-1.47	0.071
90.00	-19.42	-3.46	0.00	-70.52	0.00	70.52	794.08	397.04	607.50	300.02	14.85	-1.50	0.064
91.00	-17.82	-2.98	0.00	-67.06	0.00	67.06	790.14	395.07	599.72	296.18	15.17	-1.50	0.061
92.50	-17.40	-2.93	0.00	-62.59	0.00	62.59	784.17	392.08	588.09	290.43	15.64	-1.52	0.057
93.00	-15.43	-2.60	0.00	-61.13	0.00	61.13	782.16	391.08	584.22	288.52	15.80	-1.52	0.055
95.00	-14.88	-2.52	0.00	-55.93	0.00	55.93	774.04	387.02	568.81	280.91	16.44	-1.54	0.051
97.44	-14.22	-2.45	0.00	-49.79	0.00	49.79	763.94	381.97	550.16	271.70	17.23	-1.56	0.046
97.44	-14.22	-2.45	0.00	-49.79	0.00	49.79	763.94	381.97	550.16	271.70	17.23	-1.56	0.202
97.50	-14.20	-2.43	0.00	-49.64	0.00	49.64	763.68	381.84	549.68	271.47	17.25	-1.56	0.202

© 2007 - 2016 by ATC IP LLC. All rights reserved.

Load Case: 1.2D + 1.0Di + 1.0Wi 50 mph with 1.00 in Radial Ice 26 Iterations

Gust Response Factor :1.10 Ice Dead Load Factor 1.00 Wind Importance Factor 1.00
Dead Load Factor :1.20 Ice Importance Factor :1.00
Wind Load Factor :1.00

100.00	-13.73	-2.36	0.00	-43.57	0.00	43.57	753.10	376.55	530.71	262.10	18.09	-1.64	0.185
101.00	-12.87	-2.18	0.00	-41.21	0.00	41.21	748.81	374.40	523.16	258.37	18.44	-1.67	0.177
102.50	-12.66	-2.13	0.00	-37.94	0.00	37.94	742.30	371.15	511.90	252.81	18.97	-1.71	0.167
105.00	-12.36	-2.09	0.00	-32.61	0.00	32.61	731.28	365.64	493.27	243.61	19.89	-1.78	0.151
107.50	-12.07	-2.04	0.00	-27.39	0.00	27.39	715.50	357.75	471.83	233.02	20.84	-1.85	0.134
110.00	-11.78	-1.99	0.00	-22.29	0.00	22.29	699.32	349.66	450.61	222.54	21.82	-1.90	0.117
112.50	-11.49	-1.94	0.00	-17.31	0.00	17.31	683.14	341.57	429.88	212.30	22.83	-1.95	0.098
115.00	-11.22	-1.89	0.00	-12.45	0.00	12.45	666.96	333.48	409.64	202.31	23.86	-1.99	0.078
117.50	-10.95	-1.84	0.00	-7.71	0.00	7.71	650.78	325.39	389.89	192.55	24.90	-2.01	0.057
120.00	0.00	-1.46	0.00	-3.10	0.00	3.10	634.60	317.30	370.62	183.04	25.96	-2.03	0.017

© 2007 - 2016 by ATC IP LLC. All rights reserved.

Load Case: 1.0D + 1.0W Serviceability 60 mph 25 Iterations

Gust Response Factor :1.10 Wind Importance Factor 1.00
Dead Load Factor :1.00
Wind Load Factor :1.00

Applied Segment Forces Summary

Seg Elev (ft)	Description	Shaft Forces Wind FX (lb)	Shaft Forces Dead Load (lb)	Discrete Forces Wind FX (lb)	Discrete Forces Torsion MY (lb-ft)	Discrete Forces Moment MZ (lb-ft)	Discrete Forces Dead Load (lb)	Linear Forces Wind FX (lb)	Linear Forces Dead Load (lb)	Sum of Forces Wind FX (lb)	Sum of Forces Dead Load (lb)	Sum of Forces Torsion MY (lb-ft)	Sum of Forces Moment MZ (lb)
0.00		58.2	0.0					0.0	0.0	58.2	0.0	0.0	0.0
2.50		114.8	209.3					19.0	334.0	133.7	543.3	0.0	0.0
5.00		111.6	206.9					18.8	334.0	130.4	540.9	0.0	0.0
7.50		108.6	204.4					18.7	347.7	127.2	552.0	0.0	0.0
10.00		105.6	201.9					18.5	402.3	124.1	604.2	0.0	0.0
12.50		102.7	199.4					18.4	402.3	121.1	601.7	0.0	0.0
15.00		60.2	196.9					18.2	402.3	78.5	599.2	0.0	0.0
15.48	Reinf. Top	49.3	37.5					3.5	77.1	52.8	114.6	0.0	0.0
17.50		87.7	157.0					14.6	190.2	102.4	347.2	0.0	0.0
20.00		94.7	192.0					18.0	235.3	112.7	427.2	0.0	0.0
22.50		92.2	189.5					17.9	235.3	110.0	424.7	0.0	0.0
25.00		89.7	187.0					17.7	235.3	107.4	422.3	0.0	0.0
27.50		87.3	184.5					17.6	235.3	104.9	419.8	0.0	0.0
30.00		85.5	182.0					17.5	235.3	103.0	417.3	0.0	0.0
32.50		84.7	179.5					17.5	235.3	102.2	414.8	0.0	0.0
35.00		84.3	177.1					17.6	235.3	101.8	412.3	0.0	0.0
37.50		43.4	174.6					17.6	235.3	61.0	409.8	0.0	0.0
37.58	Bot - Section 2	42.4	5.8					0.6	7.8	43.0	13.6	0.0	0.0
40.00		74.6	314.7					17.1	227.4	91.7	542.2	0.0	0.0
42.00	Top - Section 1	42.0	257.2					14.2	188.2	56.2	445.4	0.0	0.0
42.50		50.0	30.1					3.6	47.1	53.6	77.2	0.0	0.0
45.00		82.9	149.2					17.8	235.3	100.6	384.5	0.0	0.0
47.50		82.0	147.0					17.8	235.3	99.8	382.3	0.0	0.0
50.00		81.0	144.9					17.8	235.3	98.9	380.1	0.0	0.0
52.50		80.0	142.7					17.9	235.3	97.9	378.0	0.0	0.0
55.00		79.0	140.5					17.9	235.3	96.9	375.8	0.0	0.0
57.50		77.9	138.3					17.9	235.3	95.8	373.6	0.0	0.0
60.00		76.8	136.2					17.9	235.3	94.7	371.4	0.0	0.0
62.50		75.7	134.0					17.9	235.3	93.6	369.3	0.0	0.0
65.00		74.5	131.8					18.0	235.3	92.5	367.1	0.0	0.0
67.50		73.4	129.6					18.0	235.3	91.3	364.9	0.0	0.0
70.00		72.2	127.5					18.0	235.3	90.2	362.7	0.0	0.0
72.50		71.0	125.3					18.0	235.3	89.0	360.6	0.0	0.0
75.00		51.4	123.1					18.0	235.3	69.4	358.4	0.0	0.0
76.17	Bot - Section 3	34.9	56.7					8.4	109.8	43.3	166.5	0.0	0.0
77.50		46.5	120.5					9.6	125.5	56.1	246.0	0.0	0.0
79.50	Reinf. Top Reinf	34.6	178.6					14.4	188.2	49.0	366.8	0.0	0.0
80.00	Top - Section 2	40.9	44.2					3.6	47.0	44.5	91.3	0.0	0.0
82.50		67.4	102.2					18.0	235.3	85.4	337.5	0.0	0.0
85.00		66.2	100.3					18.0	235.3	84.2	335.6	0.0	0.0
87.50		64.9	98.4					18.0	235.3	82.9	333.7	0.0	0.0
90.00		44.8	96.6					18.0	235.3	62.8	331.9	0.0	0.0
91.00	Appertunance(s)	31.5	38.1	440.3	0.0	0.0	317.3	7.2	86.5	479.0	441.9	0.0	0.0
92.50		25.1	56.6					10.8	128.9	35.9	185.5	0.0	0.0
93.00	Appertunance(s)	30.9	18.7	196.5	0.0	0.0	645.8	3.6	43.0	231.0	707.5	0.0	0.0
95.00		54.2	74.1					14.4	171.8	68.6	245.9	0.0	0.0
97.44	Reinf. Top	30.3	88.7					17.5	209.4	47.8	298.1	0.0	0.0
97.50		30.4	2.3					0.4	1.2	30.9	3.4	0.0	0.0

© 2007 - 2016 by ATC IP LLC. All rights reserved.

Load Case: 1.0D + 1.0W Serviceability 60 mph 25 Iterations

Gust Response Factor :1.10 Wind Importance Factor 1.00
Dead Load Factor :1.00
Wind Load Factor :1.00

100.00		41.4	89.1					18.0	47.8	59.3	136.9	0.0	0.0
101.00	Appertunance(s)	29.0	35.1	138.2	0.0	0.0	79.2	7.2	19.1	174.4	133.4	0.0	0.0
102.50		41.0	52.1					7.2	21.3	48.2	73.4	0.0	0.0
105.00		46.8	85.4					0.0	35.5	46.8	120.9	0.0	0.0
107.50		45.8	83.5					0.0	35.5	45.8	119.0	0.0	0.0
110.00		44.8	81.6					0.0	35.5	44.8	117.1	0.0	0.0
112.50		43.7	79.8					0.0	35.5	43.7	115.3	0.0	0.0
115.00		42.7	77.9					0.0	35.5	42.7	113.4	0.0	0.0
117.50		41.6	76.0					0.0	35.5	41.6	111.5	0.0	0.0
120.00	Appertunance(s)	20.6	74.2	1,386.3	0.0	3,329.4	3,223.3	0.0	35.5	1,406.9	3,332.9	0.0	0.0
								Totals:		6,542.21	21,623.6	0.00	0.00

© 2007 - 2016 by ATC IP LLC. All rights reserved.

Load Case: 1.0D + 1.0W Serviceability 60 mph 25 Iterations

Gust Response Factor :1.10 Wind Importance Factor 1.00
Dead Load Factor :1.00
Wind Load Factor :1.00

Calculated Forces

Seg Elev (ft)	Pu FY (-) (kips)	Vu FX (-) (kips)	Tu MY (ft-kips)	Mu MZ (ft-kips)	Mu MX (ft-kips)	Resultant Moment (ft-kips)	phi Pn (kips)	phi Vn (kips)	phi Tn (ft-kips)	phi Mn (ft-kips)	Total Deflect (in)	Rotation (deg)	Ratio
0.00	-21.62	-6.49	0.00	-482.85	0.00	482.85	1,590.66	795.33	2,018.74	996.98	0.00	0.00	0.148
2.50	-21.07	-6.37	0.00	-466.63	0.00	466.63	1,581.24	790.62	1,982.92	979.29	0.01	-0.03	0.144
5.00	-20.53	-6.25	0.00	-450.71	0.00	450.71	1,571.59	785.80	1,947.12	961.61	0.04	-0.07	0.140
7.50	-19.97	-6.13	0.00	-435.09	0.00	435.09	1,561.72	780.86	1,911.33	943.93	0.08	-0.10	0.136
10.00	-19.37	-6.02	0.00	-419.76	0.00	419.76	1,551.63	775.81	1,875.57	926.27	0.14	-0.13	0.132
12.50	-18.76	-5.90	0.00	-404.72	0.00	404.72	1,541.31	770.66	1,839.85	908.63	0.22	-0.16	0.128
15.00	-18.16	-5.83	0.00	-389.96	0.00	389.96	1,530.78	765.39	1,804.18	891.02	0.31	-0.19	0.125
15.48	-18.05	-5.78	0.00	-387.17	0.00	387.17	1,528.73	764.37	1,797.35	887.64	0.33	-0.20	0.124
15.48	-18.05	-5.78	0.00	-387.17	0.00	387.17	1,528.73	764.37	1,797.35	887.64	0.33	-0.20	0.195
17.50	-17.70	-5.69	0.00	-375.48	0.00	375.48	1,520.01	760.01	1,768.57	873.43	0.42	-0.23	0.191
20.00	-17.26	-5.59	0.00	-361.26	0.00	361.26	1,509.03	754.52	1,733.02	855.87	0.56	-0.27	0.185
22.50	-16.84	-5.49	0.00	-347.28	0.00	347.28	1,497.83	748.91	1,697.56	838.36	0.71	-0.32	0.180
25.00	-16.41	-5.40	0.00	-333.55	0.00	333.55	1,486.40	743.20	1,662.18	820.89	0.89	-0.37	0.175
27.50	-15.99	-5.30	0.00	-320.07	0.00	320.07	1,474.74	737.37	1,626.91	803.47	1.10	-0.42	0.169
30.00	-15.57	-5.21	0.00	-306.81	0.00	306.81	1,462.87	731.44	1,591.74	786.10	1.33	-0.46	0.164
32.50	-15.15	-5.11	0.00	-293.80	0.00	293.80	1,450.77	725.39	1,556.69	768.79	1.59	-0.51	0.159
35.00	-14.73	-5.02	0.00	-281.01	0.00	281.01	1,438.45	719.23	1,521.78	751.55	1.87	-0.56	0.153
37.50	-14.32	-4.96	0.00	-268.47	0.00	268.47	1,425.91	712.96	1,487.00	734.37	2.17	-0.60	0.148
37.58	-14.31	-4.92	0.00	-268.05	0.00	268.05	1,425.49	712.74	1,485.84	733.80	2.18	-0.60	0.148
40.00	-13.76	-4.83	0.00	-256.16	0.00	256.16	1,413.15	706.57	1,452.37	717.27	2.50	-0.64	0.141
42.00	-13.32	-4.78	0.00	-246.49	0.00	246.49	1,177.15	588.58	1,220.08	602.55	2.77	-0.68	0.152
42.50	-13.24	-4.73	0.00	-244.10	0.00	244.10	1,175.29	587.65	1,214.60	599.85	2.85	-0.69	0.151
45.00	-12.85	-4.63	0.00	-232.28	0.00	232.28	1,165.87	582.93	1,187.28	586.35	3.22	-0.73	0.145
47.50	-12.47	-4.54	0.00	-220.70	0.00	220.70	1,156.22	578.11	1,160.01	572.88	3.61	-0.77	0.139
50.00	-12.08	-4.44	0.00	-209.36	0.00	209.36	1,146.35	573.17	1,132.81	559.45	4.03	-0.81	0.133
52.50	-11.70	-4.35	0.00	-198.25	0.00	198.25	1,136.25	568.13	1,105.70	546.06	4.46	-0.85	0.127
55.00	-11.33	-4.25	0.00	-187.39	0.00	187.39	1,125.94	562.97	1,078.67	532.72	4.92	-0.89	0.122
57.50	-10.95	-4.16	0.00	-176.76	0.00	176.76	1,115.40	557.70	1,051.75	519.42	5.40	-0.93	0.116
60.00	-10.58	-4.06	0.00	-166.37	0.00	166.37	1,104.64	552.32	1,024.94	506.18	5.89	-0.97	0.110
62.50	-10.21	-3.97	0.00	-156.21	0.00	156.21	1,093.65	546.83	998.25	493.00	6.41	-1.00	0.105
65.00	-9.84	-3.88	0.00	-146.29	0.00	146.29	1,082.45	541.22	971.69	479.88	6.94	-1.04	0.099
67.50	-9.48	-3.78	0.00	-136.60	0.00	136.60	1,071.02	535.51	945.28	466.84	7.50	-1.07	0.094
70.00	-9.11	-3.69	0.00	-127.14	0.00	127.14	1,059.36	529.68	919.01	453.87	8.07	-1.10	0.088
72.50	-8.75	-3.60	0.00	-117.91	0.00	117.91	1,047.49	523.74	892.91	440.97	8.65	-1.13	0.083
75.00	-8.39	-3.53	0.00	-108.91	0.00	108.91	1,035.39	517.69	866.98	428.17	9.25	-1.16	0.077
76.17	-8.23	-3.48	0.00	-104.80	0.00	104.80	1,029.67	514.83	854.94	422.22	9.54	-1.18	0.075
77.50	-7.98	-3.42	0.00	-100.15	0.00	100.15	1,023.07	511.53	841.23	415.45	9.87	-1.19	0.070
79.50	-7.62	-3.37	0.00	-93.31	0.00	93.31	1,013.05	506.53	820.77	405.35	10.38	-1.21	0.066
79.50	-7.62	-3.37	0.00	-93.31	0.00	93.31	1,013.05	506.53	820.77	405.35	10.38	-1.21	0.066
80.00	-7.52	-3.32	0.00	-91.62	0.00	91.62	831.49	415.75	686.29	338.93	10.50	-1.22	0.073
82.50	-7.19	-3.23	0.00	-83.31	0.00	83.31	822.47	411.24	666.44	329.13	11.15	-1.24	0.067
85.00	-6.85	-3.15	0.00	-75.22	0.00	75.22	813.23	406.62	646.68	319.37	11.81	-1.27	0.061
87.50	-6.52	-3.06	0.00	-67.36	0.00	67.36	803.77	401.88	627.03	309.67	12.48	-1.29	0.055
90.00	-6.19	-2.99	0.00	-59.71	0.00	59.71	794.08	397.04	607.50	300.02	13.16	-1.31	0.049
91.00	-5.76	-2.50	0.00	-56.72	0.00	56.72	790.14	395.07	599.72	296.18	13.44	-1.32	0.047
92.50	-5.57	-2.46	0.00	-52.97	0.00	52.97	784.17	392.08	588.09	290.43	13.85	-1.33	0.044
93.00	-4.87	-2.22	0.00	-51.74	0.00	51.74	782.16	391.08	584.22	288.52	13.99	-1.33	0.043
95.00	-4.63	-2.14	0.00	-47.31	0.00	47.31	774.04	387.02	568.81	280.91	14.55	-1.35	0.040
97.44	-4.33	-2.09	0.00	-42.09	0.00	42.09	763.94	381.97	550.16	271.70	15.25	-1.36	0.036
97.44	-4.33	-2.09	0.00	-42.09	0.00	42.09	763.94	381.97	550.16	271.70	15.25	-1.36	0.161
97.50	-4.32	-2.06	0.00	-41.96	0.00	41.96	763.68	381.84	549.68	271.47	15.27	-1.36	0.160

© 2007 - 2016 by ATC IP LLC. All rights reserved.

Load Case: 1.0D + 1.0W Serviceability 60 mph 25 Iterations

Gust Response Factor :1.10 Wind Importance Factor 1.00
Dead Load Factor :1.00
Wind Load Factor :1.00

100.00	-4.19	-2.00	0.00	-36.81	0.00	36.81	753.10	376.55	530.71	262.10	16.00	-1.43	0.146
101.00	-4.06	-1.83	0.00	-34.81	0.00	34.81	748.81	374.40	523.16	258.37	16.30	-1.46	0.140
102.50	-3.98	-1.78	0.00	-32.07	0.00	32.07	742.30	371.15	511.90	252.81	16.76	-1.50	0.132
105.00	-3.86	-1.73	0.00	-27.62	0.00	27.62	731.28	365.64	493.27	243.61	17.56	-1.55	0.119
107.50	-3.74	-1.69	0.00	-23.29	0.00	23.29	715.50	357.75	471.83	233.02	18.39	-1.61	0.105
110.00	-3.63	-1.64	0.00	-19.08	0.00	19.08	699.32	349.66	450.61	222.54	19.25	-1.65	0.091
112.50	-3.51	-1.60	0.00	-14.97	0.00	14.97	683.14	341.57	429.88	212.30	20.13	-1.70	0.076
115.00	-3.40	-1.55	0.00	-10.98	0.00	10.98	666.96	333.48	409.64	202.31	21.02	-1.73	0.059
117.50	-3.29	-1.51	0.00	-7.10	0.00	7.10	650.78	325.39	389.89	192.55	21.93	-1.75	0.042
120.00	0.00	-1.41	0.00	-3.33	0.00	3.33	634.60	317.30	370.62	183.04	22.86	-1.77	0.018

© 2007 - 2016 by ATC IP LLC. All rights reserved.

Equivalent Lateral Forces Method Analysis

(Based on ASCE7-10 Chapters 11, 12, 15)

Spectral Response Acceleration for Short Period (S_s):	0.19	
Spectral Response Acceleration at 1.0 Second Period (S_1):	0.06	
Long-Period Transition Period (T_L):	6	
Importance Factor (I_E):	1.00	
Site Coefficient F_a:	1.60	
Site Coeffiecient F_v:	2.40	
Response Modification Coefficient (R):	1.50	
Design Spectral Response Acceleration at Short Period (S_{ds}):	0.20	
Design Spectral Response Acceleration at 1.0 Second Period (S_{d1}):	0.10	
Seismic Response Coefficient (C_s):	0.03	
Upper Limit C_s	0.03	
Lower Limit C_s	0.03	
Period based on Rayleigh Method (sec):	2.02	
Redundancy Factor (p):	1.30	
Seismic Force Distribution Exponent (k):	1.76	
Total Unfactored Dead Load:	21.62	k
Seismic Base Shear (E):	0.95	k

Load Case (1.2 + 0.2Sds) * DL + E ELFM

Seismic Equivalent Lateral Forces Method

Segment	Height Above Base (ft)	Weight (lb)	W_z (lb-ft)	C_{vx}	Horizontal Force (lb)	Vertical Force (lb)
57	118.75	110	489	0.013	12	136
56	116.25	112	479	0.013	12	138
55	113.75	113	469	0.012	12	141
54	111.25	115	459	0.012	11	143
53	108.75	117	448	0.012	11	145
52	106.25	119	437	0.011	11	147
51	103.75	121	425	0.011	11	150
50	101.75	73	250	0.007	6	91
49	100.50	54	180	0.005	5	67
48	98.75	137	442	0.012	11	170
47	97.47	3	11	0.000	0	4
46	96.22	298	919	0.024	23	370
45	94.00	246	728	0.019	18	305
44	92.75	62	178	0.005	4	76
43	91.75	185	526	0.014	13	230
42	90.50	125	345	0.009	9	154
41	88.75	332	887	0.023	22	411
40	86.25	334	849	0.022	21	414
39	83.75	336	810	0.021	20	416
38	81.25	337	773	0.020	19	418
37	79.75	91	202	0.005	5	113
36	78.50	367	790	0.021	20	455
35	76.83	246	510	0.013	13	305

© 2007 - 2016 by ATC IP LLC. All rights reserved.

34	75.58	166	336	0.009	8	206
33	73.75	358	692	0.018	17	444
32	71.25	361	655	0.017	16	447
31	68.75	363	619	0.016	15	450
30	66.25	365	583	0.015	15	452
29	63.75	367	549	0.014	14	455
28	61.25	369	514	0.014	13	458
27	58.75	371	481	0.013	12	460
26	56.25	374	448	0.012	11	463
25	53.75	376	416	0.011	10	466
24	51.25	378	385	0.010	10	468
23	48.75	380	354	0.009	9	471
22	46.25	382	325	0.009	8	474
21	43.75	384	296	0.008	7	477
20	42.25	77	56	0.001	1	96
19	41.00	445	306	0.008	8	552
18	38.79	542	338	0.009	8	672
17	37.54	14	8	0.000	0	17
16	36.25	410	227	0.006	6	508
15	33.75	412	201	0.005	5	511
14	31.25	415	177	0.005	4	514
13	28.75	417	154	0.004	4	517
12	26.25	420	132	0.003	3	520
11	23.75	422	111	0.003	3	523
10	21.25	425	92	0.002	2	526
9	18.75	427	74	0.002	2	530
8	16.49	347	48	0.001	1	430
7	15.24	115	14	0.000	0	142
6	13.75	599	60	0.002	2	743
5	11.25	602	43	0.001	1	746
4	8.75	604	27	0.001	1	749
3	6.25	552	14	0.000	0	684
2	3.75	541	6	0.000	0	670
1	1.25	543	1	0.000	0	673
CCI TPX-070821	120.00	45	205	0.005	5	56
Powerwave LGP21401	120.00	85	385	0.010	10	105
Raycap DC6-48-60-18-	120.00	40	182	0.005	5	50
Ericsson RRUS A2	120.00	45	205	0.005	5	56
Ericsson RRUS-11 190	120.00	132	600	0.016	15	164
Ericsson RRUS 32 (50	120.00	152	693	0.018	17	189
Ericsson RRUS 32 B2	120.00	159	723	0.019	18	197
2' Std. Dish	120.00	14	64	0.002	2	17
Powerwave Allgon 777	120.00	105	477	0.013	12	130
KMW AM-X-CD-16-65-00	120.00	49	221	0.006	6	60
Quintel QS66512-3 (1	120.00	112	509	0.013	13	139
Andrew SBNH-1D6565C	120.00	122	553	0.015	14	151
CCI TPA-65R-LCUUUU-H	120.00	164	747	0.020	19	204
Flat Platform w/ Han	120.00	2,000	9,093	0.239	227	2,479
RFS APXV18-206517S-C	101.00	79	266	0.007	7	98
Argus LLPX310R	93.00	86	249	0.007	6	106
Side Arms	93.00	560	1,626	0.043	41	694
Horizon Compact	91.00	42	118	0.003	3	53
NextNet BTS-2500	91.00	105	293	0.008	7	130
DragonWave A-ANT-18G	91.00	27	76	0.002	2	34
DragonWave A-ANT-11G	91.00	143	399	0.010	10	177
		21,624	38,032	1.000	951	26,802

© 2007 - 2016 by ATC IP LLC. All rights reserved.

Load Case (0.9 - 0.2Sds) * DL + E ELFM

Seismic (Reduced DL) Equivalent Lateral Forces Method

Segment	Height Above Base (ft)	Weight (lb)	W_z (lb-ft)	C_{vx}	Horizontal Force (lb)	Vertical Force (lb)
57	118.75	110	489	0.013	12	94
56	116.25	112	479	0.013	12	96
55	113.75	113	469	0.012	12	98
54	111.25	115	459	0.012	11	99
53	108.75	117	448	0.012	11	101
52	106.25	119	437	0.011	11	102
51	103.75	121	425	0.011	11	104
50	101.75	73	250	0.007	6	63
49	100.50	54	180	0.005	5	47
48	98.75	137	442	0.012	11	118
47	97.47	3	11	0.000	0	3
46	96.22	298	919	0.024	23	257
45	94.00	246	728	0.019	18	212
44	92.75	62	178	0.005	4	53
43	91.75	185	526	0.014	13	160
42	90.50	125	345	0.009	9	107
41	88.75	332	887	0.023	22	286
40	86.25	334	849	0.022	21	287
39	83.75	336	810	0.021	20	289
38	81.25	337	773	0.020	19	290
37	79.75	91	202	0.005	5	79
36	78.50	367	790	0.021	20	316
35	76.83	246	510	0.013	13	212
34	75.58	166	336	0.009	8	143
33	73.75	358	692	0.018	17	308
32	71.25	361	655	0.017	16	310
31	68.75	363	619	0.016	15	312
30	66.25	365	583	0.015	15	314
29	63.75	367	549	0.014	14	316
28	61.25	369	514	0.014	13	318
27	58.75	371	481	0.013	12	320
26	56.25	374	448	0.012	11	322
25	53.75	376	416	0.011	10	323
24	51.25	378	385	0.010	10	325
23	48.75	380	354	0.009	9	327
22	46.25	382	325	0.009	8	329
21	43.75	384	296	0.008	7	331
20	42.25	77	56	0.001	1	66
19	41.00	445	306	0.008	8	383
18	38.79	542	338	0.009	8	467
17	37.54	14	8	0.000	0	12
16	36.25	410	227	0.006	6	353
15	33.75	412	201	0.005	5	355
14	31.25	415	177	0.005	4	357
13	28.75	417	154	0.004	4	359
12	26.25	420	132	0.003	3	361
11	23.75	422	111	0.003	3	363
10	21.25	425	92	0.002	2	366
9	18.75	427	74	0.002	2	368
8	16.49	347	48	0.001	1	299
7	15.24	115	14	0.000	0	99
6	13.75	599	60	0.002	2	516
5	11.25	602	43	0.001	1	518
4	8.75	604	27	0.001	1	520
3	6.25	552	14	0.000	0	475
2	3.75	541	6	0.000	0	465
1	1.25	543	1	0.000	0	468

© 2007 - 2016 by ATC IP LLC. All rights reserved.

CCI TPX-070821	120.00	45	205	0.005	5	39
Powerwave LGP21401	120.00	85	385	0.010	10	73
Raycap DC6-48-60-18-	120.00	40	182	0.005	5	34
Ericsson RRUS A2	120.00	45	205	0.005	5	39
Ericsson RRUS-11 190	120.00	132	600	0.016	15	114
Ericsson RRUS 32 (50	120.00	152	693	0.018	17	131
Ericsson RRUS 32 B2	120.00	159	723	0.019	18	137
2' Std. Dish	120.00	14	64	0.002	2	12
Powerwave Allgon 777	120.00	105	477	0.013	12	90
KMW AM-X-CD-16-65-00	120.00	49	221	0.006	6	42
Quintel QS66512-3 (1	120.00	112	509	0.013	13	96
Andrew SBNH-1D6565C	120.00	122	553	0.015	14	105
CCI TPA-65R-LCUUUU-H	120.00	164	747	0.020	19	141
Flat Platform w/ Han	120.00	2,000	9,093	0.239	227	1,721
RFS APXV18-206517S-C	101.00	79	266	0.007	7	68
Argus LLPX310R	93.00	86	249	0.007	6	74
Side Arms	93.00	560	1,626	0.043	41	482
Horizon Compact	91.00	42	118	0.003	3	36
NextNet BTS-2500	91.00	105	293	0.008	7	90
DragonWave A-ANT-18G	91.00	27	76	0.002	2	23
DragonWave A-ANT-11G	91.00	143	399	0.010	10	123
		21,624	38,032	1.000	951	18,608

 © 2007 - 2016 by ATC IP LLC. All rights reserved.

Load Case (1.2 + 0.2Sds) * DL + E ELFM Seismic Equivalent Lateral Forces Method

Calculated Forces

Seg Elev (ft)	Pu FY (-) (kips)	Vu FX (-) (kips)	Tu MY (ft-kips)	Mu MZ (ft-kips)	Mu MX (ft-kips)	Resultant Moment (ft-kips)	phi Pn (kips)	phi Vn (kips)	phi Tn (ft-kips)	phi Mn (ft-kips)	Total Deflect (in)	Rotation (deg)	Ratio
0.00	-26.13	-0.95	0.00	-93.60	0.00	93.60	1,590.66	795.33	2,018.74	996.98	0.00	0.00	0.034
2.50	-25.46	-0.95	0.00	-91.22	0.00	91.22	1,581.24	790.62	1,982.92	979.29	0.00	-0.01	0.033
5.00	-24.77	-0.96	0.00	-88.83	0.00	88.83	1,571.59	785.80	1,947.12	961.61	0.01	-0.01	0.033
7.50	-24.02	-0.96	0.00	-86.44	0.00	86.44	1,561.72	780.86	1,911.33	943.93	0.02	-0.02	0.032
10.00	-23.28	-0.96	0.00	-84.05	0.00	84.05	1,551.63	775.81	1,875.57	926.27	0.03	-0.03	0.031
12.50	-22.54	-0.96	0.00	-81.65	0.00	81.65	1,541.31	770.66	1,839.85	908.63	0.04	-0.03	0.030
15.00	-22.39	-0.96	0.00	-79.25	0.00	79.25	1,530.78	765.39	1,804.18	891.02	0.06	-0.04	0.030
15.48	-21.96	-0.96	0.00	-78.79	0.00	78.79	1,528.73	764.37	1,797.35	887.64	0.07	-0.04	0.030
15.48	-21.96	-0.96	0.00	-78.79	0.00	78.79	1,528.73	764.37	1,797.35	887.64	0.07	-0.04	0.046
17.50	-21.43	-0.96	0.00	-76.84	0.00	76.84	1,520.01	760.01	1,768.57	873.43	0.08	-0.05	0.045
20.00	-20.91	-0.96	0.00	-74.44	0.00	74.44	1,509.03	754.52	1,733.02	855.87	0.11	-0.06	0.044
22.50	-20.38	-0.96	0.00	-72.04	0.00	72.04	1,497.83	748.91	1,697.56	838.36	0.14	-0.07	0.043
25.00	-19.86	-0.96	0.00	-69.63	0.00	69.63	1,486.40	743.20	1,662.18	820.89	0.18	-0.07	0.042
27.50	-19.35	-0.96	0.00	-67.22	0.00	67.22	1,474.74	737.37	1,626.91	803.47	0.22	-0.08	0.041
30.00	-18.83	-0.96	0.00	-64.82	0.00	64.82	1,462.87	731.44	1,591.74	786.10	0.27	-0.09	0.040
32.50	-18.32	-0.96	0.00	-62.43	0.00	62.43	1,450.77	725.39	1,556.69	768.79	0.32	-0.10	0.039
35.00	-17.81	-0.95	0.00	-60.04	0.00	60.04	1,438.45	719.23	1,521.78	751.55	0.38	-0.11	0.038
37.50	-17.80	-0.95	0.00	-57.65	0.00	57.65	1,425.91	712.96	1,487.00	734.37	0.44	-0.12	0.037
37.58	-17.12	-0.95	0.00	-57.57	0.00	57.57	1,425.49	712.74	1,485.84	733.80	0.44	-0.12	0.037
40.00	-16.57	-0.94	0.00	-55.29	0.00	55.29	1,413.15	706.57	1,452.37	717.27	0.51	-0.13	0.035
42.00	-16.48	-0.94	0.00	-53.41	0.00	53.41	1,177.15	588.58	1,220.08	602.55	0.56	-0.14	0.038
42.50	-16.00	-0.93	0.00	-52.94	0.00	52.94	1,175.29	587.65	1,214.60	599.85	0.58	-0.14	0.038
45.00	-15.52	-0.92	0.00	-50.62	0.00	50.62	1,165.87	582.93	1,187.28	586.35	0.66	-0.15	0.037
47.50	-15.05	-0.92	0.00	-48.31	0.00	48.31	1,156.22	578.11	1,160.01	572.88	0.74	-0.16	0.035
50.00	-14.58	-0.91	0.00	-46.01	0.00	46.01	1,146.35	573.17	1,132.81	559.45	0.82	-0.17	0.034
52.50	-14.12	-0.90	0.00	-43.74	0.00	43.74	1,136.25	568.13	1,105.70	546.06	0.91	-0.18	0.033
55.00	-13.66	-0.89	0.00	-41.50	0.00	41.50	1,125.94	562.97	1,078.67	532.72	1.01	-0.19	0.031
57.50	-13.20	-0.88	0.00	-39.28	0.00	39.28	1,115.40	557.70	1,051.75	519.42	1.11	-0.20	0.030
60.00	-12.74	-0.86	0.00	-37.09	0.00	37.09	1,104.64	552.32	1,024.94	506.18	1.22	-0.20	0.029
62.50	-12.28	-0.85	0.00	-34.93	0.00	34.93	1,093.65	546.83	998.25	493.00	1.32	-0.21	0.027
65.00	-11.83	-0.84	0.00	-32.80	0.00	32.80	1,082.45	541.22	971.69	479.88	1.44	-0.22	0.026
67.50	-11.38	-0.82	0.00	-30.72	0.00	30.72	1,071.02	535.51	945.28	466.84	1.55	-0.23	0.025
70.00	-10.93	-0.80	0.00	-28.67	0.00	28.67	1,059.36	529.68	919.01	453.87	1.68	-0.23	0.023
72.50	-10.49	-0.78	0.00	-26.66	0.00	26.66	1,047.49	523.74	892.91	440.97	1.80	-0.24	0.022
75.00	-10.28	-0.78	0.00	-24.70	0.00	24.70	1,035.39	517.69	866.98	428.17	1.93	-0.25	0.021
76.17	-9.98	-0.76	0.00	-23.79	0.00	23.79	1,029.67	514.83	854.94	422.22	1.99	-0.25	0.020
77.50	-9.52	-0.74	0.00	-22.78	0.00	22.78	1,023.07	511.53	841.23	415.45	2.06	-0.25	0.019
79.50	-9.41	-0.74	0.00	-21.29	0.00	21.29	1,013.05	506.53	820.77	405.35	2.17	-0.26	0.018
79.50	-9.41	-0.74	0.00	-21.29	0.00	21.29	1,013.05	506.53	820.77	405.35	2.17	-0.26	0.018
80.00	-8.99	-0.72	0.00	-20.93	0.00	20.93	831.49	415.75	686.29	338.93	2.20	-0.26	0.020
82.50	-8.58	-0.69	0.00	-19.13	0.00	19.13	822.47	411.24	666.44	329.13	2.33	-0.27	0.018
85.00	-8.16	-0.67	0.00	-17.40	0.00	17.40	813.23	406.62	646.68	319.37	2.47	-0.27	0.017
87.50	-7.75	-0.65	0.00	-15.72	0.00	15.72	803.77	401.88	627.03	309.67	2.62	-0.28	0.016
90.00	-7.60	-0.64	0.00	-14.09	0.00	14.09	794.08	397.04	607.50	300.02	2.77	-0.28	0.014
91.00	-6.97	-0.60	0.00	-13.45	0.00	13.45	790.14	395.07	599.72	296.18	2.82	-0.28	0.014
92.50	-6.90	-0.60	0.00	-12.55	0.00	12.55	784.17	392.08	588.09	290.43	2.91	-0.29	0.013
93.00	-5.79	-0.53	0.00	-12.25	0.00	12.25	782.16	391.08	584.22	288.52	2.94	-0.29	0.012
95.00	-5.42	-0.50	0.00	-11.20	0.00	11.20	774.04	387.02	568.81	280.91	3.07	-0.29	0.011
97.44	-5.42	-0.50	0.00	-9.97	0.00	9.97	763.94	381.97	550.16	271.70	3.22	-0.29	0.010
97.44	-5.42	-0.50	0.00	-9.97	0.00	9.97	763.94	381.97	550.16	271.70	3.22	-0.29	0.044
97.50	-5.25	-0.49	0.00	-9.94	0.00	9.94	763.68	381.84	549.68	271.47	3.22	-0.29	0.044
100.00	-5.18	-0.49	0.00	-8.71	0.00	8.71	753.10	376.55	530.71	262.10	3.38	-0.31	0.040
101.00	-4.99	-0.47	0.00	-8.23	0.00	8.23	748.81	374.40	523.16	258.37	3.44	-0.32	0.039
102.50	-4.84	-0.46	0.00	-7.52	0.00	7.52	742.30	371.15	511.90	252.81	3.54	-0.33	0.036
105.00	-4.70	-0.45	0.00	-6.36	0.00	6.36	731.28	365.64	493.27	243.61	3.72	-0.34	0.033
107.50	-4.55	-0.44	0.00	-5.22	0.00	5.22	715.50	357.75	471.83	233.02	3.90	-0.35	0.029

© 2007 - 2016 by ATC IP LLC. All rights reserved.

110.00	-4.41	-0.43	0.00	-4.12	0.00	4.12	699.32	349.66	450.61	222.54	4.09	-0.36	0.025
112.50	-4.27	-0.42	0.00	-3.04	0.00	3.04	683.14	341.57	429.88	212.30	4.28	-0.37	0.021
115.00	-4.13	-0.41	0.00	-2.00	0.00	2.00	666.96	333.48	409.64	202.31	4.47	-0.38	0.016
117.50	-3.99	-0.39	0.00	-0.98	0.00	0.98	650.78	325.39	389.89	192.55	4.67	-0.38	0.011
120.00	0.00	-0.37	0.00	0.00	0.00	0.00	634.60	317.30	370.62	183.04	4.87	-0.38	0.000

 © 2007 - 2016 by ATC IP LLC. All rights reserved.

Load Case (0.9 - 0.2Sds) * DL + E ELFM Seismic (Reduced DL) Equivalent Lateral Forces Method

Calculated Forces

Seg Elev (ft)	Pu FY (-) (kips)	Vu FX (-) (kips)	Tu MY (ft-kips)	Mu MZ (ft-kips)	Mu MX (ft-kips)	Resultant Moment (ft-kips)	phi Pn (kips)	phi Vn (kips)	phi Tn (ft-kips)	phi Mn (ft-kips)	Total Deflect (in)	Rotation (deg)	Ratio
0.00	-18.14	-0.95	0.00	-92.38	0.00	92.38	1,590.66	795.33	2,018.74	996.98	0.00	0.00	0.032
2.50	-17.67	-0.95	0.00	-90.00	0.00	90.00	1,581.24	790.62	1,982.92	979.29	0.00	-0.01	0.031
5.00	-17.20	-0.95	0.00	-87.62	0.00	87.62	1,571.59	785.80	1,947.12	961.61	0.01	-0.01	0.030
7.50	-16.68	-0.96	0.00	-85.23	0.00	85.23	1,561.72	780.86	1,911.33	943.93	0.02	-0.02	0.030
10.00	-16.16	-0.96	0.00	-82.85	0.00	82.85	1,551.63	775.81	1,875.57	926.27	0.03	-0.03	0.029
12.50	-15.65	-0.96	0.00	-80.46	0.00	80.46	1,541.31	770.66	1,839.85	908.63	0.04	-0.03	0.028
15.00	-15.55	-0.96	0.00	-78.07	0.00	78.07	1,530.78	765.39	1,804.18	891.02	0.06	-0.04	0.028
15.48	-15.25	-0.96	0.00	-77.61	0.00	77.61	1,528.73	764.37	1,797.35	887.64	0.06	-0.04	0.028
15.48	-15.25	-0.96	0.00	-77.61	0.00	77.61	1,528.73	764.37	1,797.35	887.64	0.06	-0.04	0.043
17.50	-14.88	-0.96	0.00	-75.68	0.00	75.68	1,520.01	760.01	1,768.57	873.43	0.08	-0.04	0.042
20.00	-14.52	-0.96	0.00	-73.29	0.00	73.29	1,509.03	754.52	1,733.02	855.87	0.11	-0.05	0.041
22.50	-14.15	-0.95	0.00	-70.90	0.00	70.90	1,497.83	748.91	1,697.56	838.36	0.14	-0.06	0.041
25.00	-13.79	-0.95	0.00	-68.51	0.00	68.51	1,486.40	743.20	1,662.18	820.89	0.18	-0.07	0.040
27.50	-13.43	-0.95	0.00	-66.13	0.00	66.13	1,474.74	737.37	1,626.91	803.47	0.22	-0.08	0.039
30.00	-13.07	-0.95	0.00	-63.75	0.00	63.75	1,462.87	731.44	1,591.74	786.10	0.26	-0.09	0.038
32.50	-12.72	-0.94	0.00	-61.38	0.00	61.38	1,450.77	725.39	1,556.69	768.79	0.31	-0.10	0.037
35.00	-12.37	-0.94	0.00	-59.02	0.00	59.02	1,438.45	719.23	1,521.78	751.55	0.37	-0.11	0.036
37.50	-12.35	-0.94	0.00	-56.67	0.00	56.67	1,425.91	712.96	1,487.00	734.37	0.43	-0.12	0.035
37.58	-11.89	-0.93	0.00	-56.59	0.00	56.59	1,425.49	712.74	1,485.84	733.80	0.43	-0.12	0.034
40.00	-11.50	-0.93	0.00	-54.33	0.00	54.33	1,413.15	706.57	1,452.37	717.27	0.50	-0.13	0.033
42.00	-11.44	-0.93	0.00	-52.48	0.00	52.48	1,177.15	588.58	1,220.08	602.55	0.55	-0.14	0.036
42.50	-11.11	-0.92	0.00	-52.02	0.00	52.02	1,175.29	587.65	1,214.60	599.85	0.57	-0.14	0.035
45.00	-10.78	-0.91	0.00	-49.72	0.00	49.72	1,165.87	582.93	1,187.28	586.35	0.65	-0.15	0.034
47.50	-10.45	-0.90	0.00	-47.44	0.00	47.44	1,156.22	578.11	1,160.01	572.88	0.73	-0.16	0.033
50.00	-10.13	-0.89	0.00	-45.19	0.00	45.19	1,146.35	573.17	1,132.81	559.45	0.81	-0.17	0.032
52.50	-9.80	-0.88	0.00	-42.95	0.00	42.95	1,136.25	568.13	1,105.70	546.06	0.90	-0.18	0.031
55.00	-9.48	-0.87	0.00	-40.74	0.00	40.74	1,125.94	562.97	1,078.67	532.72	0.99	-0.18	0.029
57.50	-9.16	-0.86	0.00	-38.56	0.00	38.56	1,115.40	557.70	1,051.75	519.42	1.09	-0.19	0.028
60.00	-8.84	-0.85	0.00	-36.40	0.00	36.40	1,104.64	552.32	1,024.94	506.18	1.20	-0.20	0.027
62.50	-8.53	-0.84	0.00	-34.28	0.00	34.28	1,093.65	546.83	998.25	493.00	1.30	-0.21	0.026
65.00	-8.21	-0.82	0.00	-32.19	0.00	32.19	1,082.45	541.22	971.69	479.88	1.41	-0.22	0.024
67.50	-7.90	-0.80	0.00	-30.14	0.00	30.14	1,071.02	535.51	945.28	466.84	1.53	-0.22	0.023
70.00	-7.59	-0.79	0.00	-28.13	0.00	28.13	1,059.36	529.68	919.01	453.87	1.65	-0.23	0.022
72.50	-7.28	-0.77	0.00	-26.16	0.00	26.16	1,047.49	523.74	892.91	440.97	1.77	-0.24	0.020
75.00	-7.14	-0.76	0.00	-24.23	0.00	24.23	1,035.39	517.69	866.98	428.17	1.90	-0.24	0.019
76.17	-6.93	-0.75	0.00	-23.34	0.00	23.34	1,029.67	514.83	854.94	422.22	1.96	-0.25	0.019
77.50	-6.61	-0.73	0.00	-22.34	0.00	22.34	1,023.07	511.53	841.23	415.45	2.03	-0.25	0.018
79.50	-6.53	-0.72	0.00	-20.89	0.00	20.89	1,013.05	506.53	820.77	405.35	2.13	-0.26	0.017
79.50	-6.53	-0.72	0.00	-20.89	0.00	20.89	1,013.05	506.53	820.77	405.35	2.13	-0.26	0.017
80.00	-6.24	-0.70	0.00	-20.53	0.00	20.53	831.49	415.75	686.29	338.93	2.16	-0.26	0.018
82.50	-5.95	-0.68	0.00	-18.77	0.00	18.77	822.47	411.24	666.44	329.13	2.30	-0.26	0.017
85.00	-5.67	-0.66	0.00	-17.06	0.00	17.06	813.23	406.62	646.68	319.37	2.43	-0.27	0.016
87.50	-5.38	-0.64	0.00	-15.41	0.00	15.41	803.77	401.88	627.03	309.67	2.58	-0.27	0.014
90.00	-5.27	-0.63	0.00	-13.82	0.00	13.82	794.08	397.04	607.50	300.02	2.72	-0.28	0.013
91.00	-4.84	-0.59	0.00	-13.19	0.00	13.19	790.14	395.07	599.72	296.18	2.78	-0.28	0.013
92.50	-4.79	-0.59	0.00	-12.31	0.00	12.31	784.17	392.08	588.09	290.43	2.87	-0.28	0.012
93.00	-4.02	-0.52	0.00	-12.01	0.00	12.01	782.16	391.08	584.22	288.52	2.90	-0.28	0.011
95.00	-3.76	-0.49	0.00	-10.98	0.00	10.98	774.04	387.02	568.81	280.91	3.02	-0.29	0.010
97.44	-3.76	-0.49	0.00	-9.77	0.00	9.77	763.94	381.97	550.16	271.70	3.16	-0.29	0.010
97.44	-3.76	-0.49	0.00	-9.77	0.00	9.77	763.94	381.97	550.16	271.70	3.16	-0.29	0.041
97.50	-3.64	-0.48	0.00	-9.74	0.00	9.74	763.68	381.84	549.68	271.47	3.17	-0.29	0.041
100.00	-3.60	-0.48	0.00	-8.54	0.00	8.54	753.10	376.55	530.71	262.10	3.32	-0.31	0.037
101.00	-3.47	-0.47	0.00	-8.06	0.00	8.06	748.81	374.40	523.16	258.37	3.39	-0.31	0.036
102.50	-3.36	-0.45	0.00	-7.36	0.00	7.36	742.30	371.15	511.90	252.81	3.49	-0.32	0.034
105.00	-3.26	-0.44	0.00	-6.22	0.00	6.22	731.28	365.64	493.27	243.61	3.66	-0.33	0.030
107.50	-3.16	-0.43	0.00	-5.11	0.00	5.11	715.50	357.75	471.83	233.02	3.84	-0.35	0.026

© 2007 - 2016 by ATC IP LLC. All rights reserved.

110.00	-3.06	-0.42	0.00	-4.03	0.00	4.03	699.32	349.66	450.61	222.54	4.02	-0.36	0.022
112.50	-2.96	-0.41	0.00	-2.98	0.00	2.98	683.14	341.57	429.88	212.30	4.21	-0.36	0.018
115.00	-2.87	-0.40	0.00	-1.95	0.00	1.95	666.96	333.48	409.64	202.31	4.40	-0.37	0.014
117.50	-2.77	-0.38	0.00	-0.96	0.00	0.96	650.78	325.39	389.89	192.55	4.59	-0.37	0.009
120.00	0.00	-0.37	0.00	0.00	0.00	0.00	634.60	317.30	370.62	183.04	4.79	-0.38	0.000

 © 2007 - 2016 by ATC IP LLC. All rights reserved.

Equivalent Modal Forces Analysis

(Based on ASCE7-10 Chapters 11, 12 & 15 and ANSI/TIA-G, section 2.7)

Spectral Response Acceleration for Short Period (S_s):	0.19
Spectral Response Acceleration at 1.0 Second Period (S_1):	0.06
Importance Factor (I_E):	1.00
Site Coefficient F_a:	1.60
Site Coefficient F_v	2.40
Response Modification Coefficient (R):	1.50
Design Spectral Response Acceleration at Short Period (S_{ds}):	0.20
Desing Spectral Response Acceleration at 1.0 Second Period (S_{d1}):	0.10
Period Based on Rayleigh Method (sec):	2.02
Redundancy Factor (p):	1.30

Load Case (1.2 + 0.2Sds) * DL + E EMAM Seismic Equivalent Modal Analysis Method

Segment	Height Above Base (ft)	Weight (lb)	a	b	c	Saz	Horizontal Force (lb)	Vertical Force (lb)
57	118.75	110	1.851	1.780	1.067	0.353	34	136
56	116.25	112	1.774	1.422	0.933	0.304	29	138
55	113.75	113	1.698	1.116	0.812	0.259	25	141
54	111.25	115	1.624	0.856	0.704	0.217	22	143
53	108.75	117	1.552	0.638	0.607	0.178	18	145
52	106.25	119	1.482	0.457	0.521	0.143	15	147
51	103.75	121	1.413	0.308	0.445	0.111	12	150
50	101.75	73	1.359	0.210	0.391	0.088	6	91
49	100.50	54	1.326	0.158	0.359	0.074	3	67
48	98.75	137	1.280	0.094	0.319	0.057	7	170
47	97.47	3	1.247	0.054	0.291	0.045	0	4
46	96.22	298	1.215	0.019	0.266	0.034	9	370
45	94.00	246	1.160	-0.030	0.226	0.017	4	305
44	92.75	62	1.129	-0.052	0.205	0.009	0	76
43	91.75	185	1.105	-0.067	0.190	0.002	0	230
42	90.50	125	1.075	-0.083	0.172	-0.005	-1	154
41	88.75	332	1.034	-0.100	0.149	-0.013	-4	411
40	86.25	334	0.976	-0.115	0.120	-0.023	-7	414
39	83.75	336	0.921	-0.121	0.096	-0.030	-9	416
38	81.25	337	0.866	-0.121	0.075	-0.033	-10	418
37	79.75	91	0.835	-0.117	0.064	-0.034	-3	113
36	78.50	367	0.809	-0.113	0.056	-0.034	-11	455
35	76.83	246	0.775	-0.107	0.047	-0.033	-7	305
34	75.58	166	0.750	-0.101	0.041	-0.031	-4	206
33	73.75	358	0.714	-0.091	0.033	-0.028	-9	444
32	71.25	361	0.666	-0.076	0.024	-0.021	-7	447
31	68.75	363	0.620	-0.060	0.017	-0.013	-4	450
30	66.25	365	0.576	-0.044	0.012	-0.004	-1	452
29	63.75	367	0.533	-0.028	0.009	0.005	2	455
28	61.25	369	0.492	-0.013	0.007	0.014	4	458
27	58.75	371	0.453	0.001	0.006	0.022	7	460
26	56.25	374	0.415	0.013	0.006	0.030	10	463
25	53.75	376	0.379	0.024	0.007	0.036	12	466
24	51.25	378	0.345	0.034	0.009	0.041	13	468

 © 2007 - 2016 by ATC IP LLC. All rights reserved.

23	48.75	380	0.312	0.043	0.011	0.045	15	471
22	46.25	382	0.281	0.049	0.014	0.047	16	474
21	43.75	384	0.251	0.055	0.017	0.049	16	477
20	42.25	77	0.234	0.058	0.019	0.050	3	96
19	41.00	445	0.221	0.060	0.021	0.050	19	552
18	38.79	542	0.198	0.063	0.024	0.050	24	672
17	37.54	14	0.185	0.065	0.025	0.050	1	17
16	36.25	410	0.172	0.066	0.027	0.050	18	508
15	33.75	412	0.150	0.068	0.030	0.049	18	511
14	31.25	415	0.128	0.069	0.033	0.049	18	514
13	28.75	417	0.108	0.071	0.036	0.048	17	517
12	26.25	420	0.090	0.071	0.038	0.047	17	520
11	23.75	422	0.074	0.072	0.040	0.046	17	523
10	21.25	425	0.059	0.072	0.041	0.045	17	526
9	18.75	427	0.046	0.071	0.042	0.044	16	530
8	16.49	347	0.036	0.069	0.041	0.043	13	430
7	15.24	115	0.030	0.068	0.041	0.042	4	142
6	13.75	599	0.025	0.066	0.039	0.041	21	743
5	11.25	602	0.017	0.062	0.036	0.039	20	746
4	8.75	604	0.010	0.055	0.032	0.035	18	749
3	6.25	552	0.005	0.045	0.025	0.030	14	684
2	3.75	541	0.002	0.031	0.017	0.021	10	670
1	1.25	543	0.000	0.012	0.006	0.009	4	673
CCI TPX-070821	120.00	45	1.890	1.980	1.140	0.378	15	56
Powerwave LGP21401	120.00	85	1.890	1.980	1.140	0.378	28	105
Raycap DC6-48-60-18-	120.00	40	1.890	1.980	1.140	0.378	13	50
Ericsson RRUS A2	120.00	45	1.890	1.980	1.140	0.378	15	56
Ericsson RRUS-11 190	120.00	132	1.890	1.980	1.140	0.378	43	164
Ericsson RRUS 32 (50	120.00	152	1.890	1.980	1.140	0.378	50	189
Ericsson RRUS 32 B2	120.00	159	1.890	1.980	1.140	0.378	52	197
2' Std. Dish	120.00	14	1.890	1.980	1.140	0.378	5	17
Powerwave Allgon 777	120.00	105	1.890	1.980	1.140	0.378	34	130
KMW AM-X-CD-16-65-00	120.00	49	1.890	1.980	1.140	0.378	16	60
Quintel QS66512-3 (1	120.00	112	1.890	1.980	1.140	0.378	37	139
Andrew SBNH-1D6565C	120.00	122	1.890	1.980	1.140	0.378	40	151
CCI TPA-65R-LCUUUU-H	120.00	164	1.890	1.980	1.140	0.378	54	204
Flat Platform w/ Han	120.00	2,000	1.890	1.980	1.140	0.378	656	2,479
RFS APXV18-206517S-C	101.00	79	1.339	0.178	0.372	0.079	5	98
Argus LLPX310R	93.00	86	1.135	-0.048	0.209	0.010	1	106
Side Arms	93.00	560	1.135	-0.048	0.209	0.010	5	694
Horizon Compact	91.00	42	1.087	-0.077	0.179	-0.002	0	53
NextNet BTS-2500	91.00	105	1.087	-0.077	0.179	-0.002	0	130
DragonWave A-ANT-18G	91.00	27	1.087	-0.077	0.179	-0.002	0	34
DragonWave A-ANT-11G	91.00	143	1.087	-0.077	0.179	-0.002	0	177
		21,624	71.500	34.598	26.407	8.104	1,561	26,802

Load Case (0.9 - 0.2Sds) * DL + E EMAM Seismic (Reduced DL) Equivalent Modal Analysis Method

Segment	Height Above Base (ft)	Weight (lb)	a	b	c	Saz	Horizontal Force (lb)	Vertical Force (lb)
57	118.75	110	1.851	1.780	1.067	0.353	34	94
56	116.25	112	1.774	1.422	0.933	0.304	29	96
55	113.75	113	1.698	1.116	0.812	0.259	25	98
54	111.25	115	1.624	0.856	0.704	0.217	22	99
53	108.75	117	1.552	0.638	0.607	0.178	18	101
52	106.25	119	1.482	0.457	0.521	0.143	15	102
51	103.75	121	1.413	0.308	0.445	0.111	12	104
50	101.75	73	1.359	0.210	0.391	0.088	6	63
49	100.50	54	1.326	0.158	0.359	0.074	3	47

© 2007 - 2016 by ATC IP LLC. All rights reserved.

48	98.75	137	1.280	0.094	0.319	0.057	7	118
47	97.47	3	1.247	0.054	0.291	0.045	0	3
46	96.22	298	1.215	0.019	0.266	0.034	9	257
45	94.00	246	1.160	-0.030	0.226	0.017	4	212
44	92.75	62	1.129	-0.052	0.205	0.009	0	53
43	91.75	185	1.105	-0.067	0.190	0.002	0	160
42	90.50	125	1.075	-0.083	0.172	-0.005	-1	107
41	88.75	332	1.034	-0.100	0.149	-0.013	-4	286
40	86.25	334	0.976	-0.115	0.120	-0.023	-7	287
39	83.75	336	0.921	-0.121	0.096	-0.030	-9	289
38	81.25	337	0.866	-0.121	0.075	-0.033	-10	290
37	79.75	91	0.835	-0.117	0.064	-0.034	-3	79
36	78.50	367	0.809	-0.113	0.056	-0.034	-11	316
35	76.83	246	0.775	-0.107	0.047	-0.033	-7	212
34	75.58	166	0.750	-0.101	0.041	-0.031	-4	143
33	73.75	358	0.714	-0.091	0.033	-0.028	-9	308
32	71.25	361	0.666	-0.076	0.024	-0.021	-7	310
31	68.75	363	0.620	-0.060	0.017	-0.013	-4	312
30	66.25	365	0.576	-0.044	0.012	-0.004	-1	314
29	63.75	367	0.533	-0.028	0.009	0.005	2	316
28	61.25	369	0.492	-0.013	0.007	0.014	4	318
27	58.75	371	0.453	0.001	0.006	0.022	7	320
26	56.25	374	0.415	0.013	0.006	0.030	10	322
25	53.75	376	0.379	0.024	0.007	0.036	12	323
24	51.25	378	0.345	0.034	0.009	0.041	13	325
23	48.75	380	0.312	0.043	0.011	0.045	15	327
22	46.25	382	0.281	0.049	0.014	0.047	16	329
21	43.75	384	0.251	0.055	0.017	0.049	16	331
20	42.25	77	0.234	0.058	0.019	0.050	3	66
19	41.00	445	0.221	0.060	0.021	0.050	19	383
18	38.79	542	0.198	0.063	0.024	0.050	24	467
17	37.54	14	0.185	0.065	0.025	0.050	1	12
16	36.25	410	0.172	0.066	0.027	0.050	18	353
15	33.75	412	0.150	0.068	0.030	0.049	18	355
14	31.25	415	0.128	0.069	0.033	0.049	18	357
13	28.75	417	0.108	0.071	0.036	0.048	17	359
12	26.25	420	0.090	0.071	0.038	0.047	17	361
11	23.75	422	0.074	0.072	0.040	0.046	17	363
10	21.25	425	0.059	0.072	0.041	0.045	17	366
9	18.75	427	0.046	0.071	0.042	0.044	16	368
8	16.49	347	0.036	0.069	0.041	0.043	13	299
7	15.24	115	0.030	0.068	0.041	0.042	4	99
6	13.75	599	0.025	0.066	0.039	0.041	21	516
5	11.25	602	0.017	0.062	0.036	0.039	20	518
4	8.75	604	0.010	0.055	0.032	0.035	18	520
3	6.25	552	0.005	0.045	0.025	0.030	14	475
2	3.75	541	0.002	0.031	0.017	0.021	10	465
1	1.25	543	0.000	0.012	0.006	0.009	4	468
CCI TPX-070821	120.00	45	1.890	1.980	1.140	0.378	15	39
Powerwave LGP21401	120.00	85	1.890	1.980	1.140	0.378	28	73
Raycap DC6-48-60-18-	120.00	40	1.890	1.980	1.140	0.378	13	34
Ericsson RRUS A2	120.00	45	1.890	1.980	1.140	0.378	15	39
Ericsson RRUS-11 190	120.00	132	1.890	1.980	1.140	0.378	43	114
Ericsson RRUS 32 (50	120.00	152	1.890	1.980	1.140	0.378	50	131
Ericsson RRUS 32 B2	120.00	159	1.890	1.980	1.140	0.378	52	137
2' Std. Dish	120.00	14	1.890	1.980	1.140	0.378	5	12
Powerwave Allgon 777	120.00	105	1.890	1.980	1.140	0.378	34	90
KMW AM-X-CD-16-65-00	120.00	49	1.890	1.980	1.140	0.378	16	42
Quintel QS66512-3 (1	120.00	112	1.890	1.980	1.140	0.378	37	96
Andrew SBNH-1D6565C	120.00	122	1.890	1.980	1.140	0.378	40	105
CCI TPA-65R-LCUUUU-H	120.00	164	1.890	1.980	1.140	0.378	54	141
Flat Platform w/ Han	120.00	2,000	1.890	1.980	1.140	0.378	656	1,721
RFS APXV18-206517S-C	101.00	79	1.339	0.178	0.372	0.079	5	68
Argus LLPX310R	93.00	86	1.135	-0.048	0.209	0.010	1	74

© 2007 - 2016 by ATC IP LLC. All rights reserved.

Side Arms	93.00	560	1.135	-0.048	0.209	0.010	5	482
Horizon Compact	91.00	42	1.087	-0.077	0.179	-0.002	0	36
NextNet BTS-2500	91.00	105	1.087	-0.077	0.179	-0.002	0	90
DragonWave A-ANT-18G	91.00	27	1.087	-0.077	0.179	-0.002	0	23
DragonWave A-ANT-11G	91.00	143	1.087	-0.077	0.179	-0.002	0	123
		21,624	71.500	34.598	26.407	8.104	1,561	18,608

 © 2007 - 2016 by ATC IP LLC. All rights reserved.

Load Case (1.2 + 0.2Sds) * DL + E EMAM Seismic Equivalent Modal Analysis Method

Calculated Forces

Seg Elev (ft)	Pu FY (-) (kips)	Vu FX (-) (kips)	Tu MY (ft-kips)	Mu MZ (ft-kips)	Mu MX (ft-kips)	Resultant Moment (ft-kips)	phi Pn (kips)	phi Vn (kips)	phi Tn (ft-kips)	phi Mn (ft-kips)	Total Deflect (in)	Rotation (deg)	Ratio
0.00	-26.13	-1.56	0.00	-160.25	0.00	160.25	1,590.66	795.33	2,018.74	996.98	0.00	0.00	0.054
2.50	-25.46	-1.55	0.00	-156.36	0.00	156.36	1,581.24	790.62	1,982.92	979.29	0.00	-0.01	0.053
5.00	-24.77	-1.54	0.00	-152.48	0.00	152.48	1,571.59	785.80	1,947.12	961.61	0.01	-0.02	0.052
7.50	-24.02	-1.53	0.00	-148.62	0.00	148.62	1,561.72	780.86	1,911.33	943.93	0.03	-0.03	0.051
10.00	-23.28	-1.51	0.00	-144.80	0.00	144.80	1,551.63	775.81	1,875.57	926.27	0.05	-0.04	0.050
12.50	-22.53	-1.49	0.00	-141.02	0.00	141.02	1,541.31	770.66	1,839.85	908.63	0.07	-0.06	0.049
15.00	-22.39	-1.49	0.00	-137.28	0.00	137.28	1,530.78	765.39	1,804.18	891.02	0.11	-0.07	0.048
15.48	-21.96	-1.48	0.00	-136.57	0.00	136.57	1,528.73	764.37	1,797.35	887.64	0.11	-0.07	0.047
15.48	-21.96	-1.48	0.00	-136.57	0.00	136.57	1,528.73	764.37	1,797.35	887.64	0.11	-0.07	0.074
17.50	-21.43	-1.47	0.00	-133.57	0.00	133.57	1,520.01	760.01	1,768.57	873.43	0.14	-0.08	0.073
20.00	-20.91	-1.46	0.00	-129.90	0.00	129.90	1,509.03	754.52	1,733.02	855.87	0.19	-0.10	0.072
22.50	-20.38	-1.45	0.00	-126.26	0.00	126.26	1,497.83	748.91	1,697.56	838.36	0.24	-0.11	0.070
25.00	-19.86	-1.43	0.00	-122.64	0.00	122.64	1,486.40	743.20	1,662.18	820.89	0.31	-0.13	0.069
27.50	-19.34	-1.42	0.00	-119.05	0.00	119.05	1,474.74	737.37	1,626.91	803.47	0.38	-0.15	0.068
30.00	-18.83	-1.41	0.00	-115.50	0.00	115.50	1,462.87	731.44	1,591.74	786.10	0.46	-0.16	0.066
32.50	-18.32	-1.39	0.00	-111.98	0.00	111.98	1,450.77	725.39	1,556.69	768.79	0.55	-0.18	0.065
35.00	-17.81	-1.38	0.00	-108.49	0.00	108.49	1,438.45	719.23	1,521.78	751.55	0.65	-0.20	0.064
37.50	-17.79	-1.38	0.00	-105.04	0.00	105.04	1,425.91	712.96	1,487.00	734.37	0.76	-0.22	0.062
37.58	-17.12	-1.36	0.00	-104.93	0.00	104.93	1,425.49	712.74	1,485.84	733.80	0.77	-0.22	0.062
40.00	-16.57	-1.34	0.00	-101.64	0.00	101.64	1,413.15	706.57	1,452.37	717.27	0.88	-0.23	0.060
42.00	-16.47	-1.34	0.00	-98.96	0.00	98.96	1,177.15	588.58	1,220.08	602.55	0.98	-0.25	0.065
42.50	-16.00	-1.33	0.00	-98.29	0.00	98.29	1,175.29	587.65	1,214.60	599.85	1.01	-0.25	0.065
45.00	-15.52	-1.31	0.00	-94.98	0.00	94.98	1,165.87	582.93	1,187.28	586.35	1.14	-0.27	0.063
47.50	-15.05	-1.30	0.00	-91.70	0.00	91.70	1,156.22	578.11	1,160.01	572.88	1.29	-0.29	0.062
50.00	-14.58	-1.29	0.00	-88.45	0.00	88.45	1,146.35	573.17	1,132.81	559.45	1.44	-0.30	0.060
52.50	-14.11	-1.28	0.00	-85.23	0.00	85.23	1,136.25	568.13	1,105.70	546.06	1.61	-0.32	0.058
55.00	-13.65	-1.27	0.00	-82.03	0.00	82.03	1,125.94	562.97	1,078.67	532.72	1.78	-0.34	0.057
57.50	-13.19	-1.26	0.00	-78.86	0.00	78.86	1,115.40	557.70	1,051.75	519.42	1.96	-0.35	0.055
60.00	-12.73	-1.26	0.00	-75.70	0.00	75.70	1,104.64	552.32	1,024.94	506.18	2.15	-0.37	0.053
62.50	-12.28	-1.26	0.00	-72.55	0.00	72.55	1,093.65	546.83	998.25	493.00	2.35	-0.39	0.052
65.00	-11.82	-1.26	0.00	-69.40	0.00	69.40	1,082.45	541.22	971.69	479.88	2.55	-0.40	0.050
67.50	-11.37	-1.26	0.00	-66.25	0.00	66.25	1,071.02	535.51	945.28	466.84	2.77	-0.42	0.048
70.00	-10.93	-1.27	0.00	-63.09	0.00	63.09	1,059.36	529.68	919.01	453.87	2.99	-0.44	0.046
72.50	-10.48	-1.28	0.00	-59.91	0.00	59.91	1,047.49	523.74	892.91	440.97	3.23	-0.45	0.044
75.00	-10.28	-1.28	0.00	-56.71	0.00	56.71	1,035.39	517.69	866.98	428.17	3.47	-0.47	0.043
76.17	-9.97	-1.29	0.00	-55.22	0.00	55.22	1,029.67	514.83	854.94	422.22	3.58	-0.47	0.042
77.50	-9.52	-1.30	0.00	-53.50	0.00	53.50	1,023.07	511.53	841.23	415.45	3.71	-0.48	0.040
79.50	-9.40	-1.30	0.00	-50.90	0.00	50.90	1,013.05	506.53	820.77	405.35	3.92	-0.49	0.038
79.50	-9.40	-1.30	0.00	-50.90	0.00	50.90	1,013.05	506.53	820.77	405.35	3.92	-0.49	0.038
80.00	-8.98	-1.31	0.00	-50.25	0.00	50.25	831.49	415.75	686.29	338.93	3.97	-0.50	0.042
82.50	-8.57	-1.32	0.00	-46.98	0.00	46.98	822.47	411.24	666.44	329.13	4.23	-0.51	0.040
85.00	-8.15	-1.32	0.00	-43.69	0.00	43.69	813.23	406.62	646.68	319.37	4.50	-0.52	0.037
87.50	-7.74	-1.32	0.00	-40.39	0.00	40.39	803.77	401.88	627.03	309.67	4.78	-0.54	0.035
90.00	-7.59	-1.32	0.00	-37.08	0.00	37.08	794.08	397.04	607.50	300.02	5.07	-0.55	0.032
91.00	-6.96	-1.32	0.00	-35.76	0.00	35.76	790.14	395.07	599.72	296.18	5.18	-0.55	0.031
92.50	-6.89	-1.32	0.00	-33.78	0.00	33.78	784.17	392.08	588.09	290.43	5.36	-0.56	0.030
93.00	-5.78	-1.30	0.00	-33.12	0.00	33.12	782.16	391.08	584.22	288.52	5.42	-0.56	0.029
95.00	-5.41	-1.29	0.00	-30.53	0.00	30.53	774.04	387.02	568.81	280.91	5.65	-0.57	0.027
97.44	-5.41	-1.29	0.00	-27.39	0.00	27.39	763.94	381.97	550.16	271.70	5.95	-0.58	0.024
97.44	-5.41	-1.29	0.00	-27.39	0.00	27.39	763.94	381.97	550.16	271.70	5.95	-0.58	0.108
97.50	-5.24	-1.28	0.00	-27.31	0.00	27.31	763.68	381.84	549.68	271.47	5.96	-0.58	0.107
100.00	-5.17	-1.28	0.00	-24.11	0.00	24.11	753.10	376.55	530.71	262.10	6.27	-0.63	0.099
101.00	-4.98	-1.27	0.00	-22.83	0.00	22.83	748.81	374.40	523.16	258.37	6.41	-0.64	0.095
102.50	-4.83	-1.26	0.00	-20.93	0.00	20.93	742.30	371.15	511.90	252.81	6.61	-0.67	0.089
105.00	-4.68	-1.24	0.00	-17.79	0.00	17.79	731.28	365.64	493.27	243.61	6.98	-0.71	0.079
107.50	-4.54	-1.23	0.00	-14.68	0.00	14.68	715.50	357.75	471.83	233.02	7.36	-0.74	0.069

© 2007 - 2016 by ATC IP LLC. All rights reserved.

110.00	-4.39	-1.20	0.00	-11.62	0.00	11.62	699.32	349.66	450.61	222.54	7.75	-0.77	0.058
112.50	-4.25	-1.18	0.00	-8.60	0.00	8.60	683.14	341.57	429.88	212.30	8.16	-0.79	0.047
115.00	-4.12	-1.15	0.00	-5.66	0.00	5.66	666.96	333.48	409.64	202.31	8.58	-0.81	0.034
117.50	-3.98	-1.11	0.00	-2.79	0.00	2.79	650.78	325.39	389.89	192.55	9.01	-0.82	0.021
120.00	0.00	-1.06	0.00	0.00	0.00	0.00	634.60	317.30	370.62	183.04	9.45	-0.83	0.000

 © 2007 - 2016 by ATC IP LLC. All rights reserved.

Load Case (0.9 - 0.2Sds) * DL + E EMAM Seismic (Reduced DL) Equivalent Modal Analysis Method

Calculated Forces

Seg Elev (ft)	Pu FY (-) (kips)	Vu FX (-) (kips)	Tu MY (ft-kips)	Mu MZ (ft-kips)	Mu MX (ft-kips)	Resultant Moment (ft-kips)	phi Pn (kips)	phi Vn (kips)	phi Tn (ft-kips)	phi Mn (ft-kips)	Total Deflect (in)	Rotation (deg)	Ratio
0.00	-18.14	-1.56	0.00	-157.98	0.00	157.98	1,590.66	795.33	2,018.74	996.98	0.00	0.00	0.051
2.50	-17.67	-1.55	0.00	-154.08	0.00	154.08	1,581.24	790.62	1,982.92	979.29	0.00	-0.01	0.050
5.00	-17.20	-1.54	0.00	-150.21	0.00	150.21	1,571.59	785.80	1,947.12	961.61	0.01	-0.02	0.049
7.50	-16.68	-1.52	0.00	-146.36	0.00	146.36	1,561.72	780.86	1,911.33	943.93	0.03	-0.03	0.048
10.00	-16.16	-1.51	0.00	-142.55	0.00	142.55	1,551.63	775.81	1,875.57	926.27	0.05	-0.04	0.047
12.50	-15.64	-1.49	0.00	-138.79	0.00	138.79	1,541.31	770.66	1,839.85	908.63	0.07	-0.05	0.046
15.00	-15.55	-1.48	0.00	-135.07	0.00	135.07	1,530.78	765.39	1,804.18	891.02	0.10	-0.07	0.045
15.48	-15.25	-1.47	0.00	-134.36	0.00	134.36	1,528.73	764.37	1,797.35	887.64	0.11	-0.07	0.045
15.48	-15.25	-1.47	0.00	-134.36	0.00	134.36	1,528.73	764.37	1,797.35	887.64	0.11	-0.07	0.071
17.50	-14.88	-1.46	0.00	-131.38	0.00	131.38	1,520.01	760.01	1,768.57	873.43	0.14	-0.08	0.070
20.00	-14.51	-1.45	0.00	-127.73	0.00	127.73	1,509.03	754.52	1,733.02	855.87	0.19	-0.09	0.068
22.50	-14.15	-1.43	0.00	-124.12	0.00	124.12	1,497.83	748.91	1,697.56	838.36	0.24	-0.11	0.067
25.00	-13.79	-1.42	0.00	-120.54	0.00	120.54	1,486.40	743.20	1,662.18	820.89	0.30	-0.13	0.066
27.50	-13.43	-1.40	0.00	-116.99	0.00	116.99	1,474.74	737.37	1,626.91	803.47	0.37	-0.14	0.065
30.00	-13.07	-1.39	0.00	-113.48	0.00	113.48	1,462.87	731.44	1,591.74	786.10	0.45	-0.16	0.063
32.50	-12.72	-1.38	0.00	-110.00	0.00	110.00	1,450.77	725.39	1,556.69	768.79	0.54	-0.18	0.062
35.00	-12.36	-1.36	0.00	-106.56	0.00	106.56	1,438.45	719.23	1,521.78	751.55	0.64	-0.20	0.061
37.50	-12.35	-1.36	0.00	-103.16	0.00	103.16	1,425.91	712.96	1,487.00	734.37	0.75	-0.21	0.059
37.58	-11.88	-1.34	0.00	-103.05	0.00	103.05	1,425.49	712.74	1,485.84	733.80	0.75	-0.21	0.059
40.00	-11.50	-1.32	0.00	-99.82	0.00	99.82	1,413.15	706.57	1,452.37	717.27	0.87	-0.23	0.057
42.00	-11.43	-1.32	0.00	-97.18	0.00	97.18	1,177.15	588.58	1,220.08	602.55	0.96	-0.24	0.062
42.50	-11.10	-1.30	0.00	-96.52	0.00	96.52	1,175.29	587.65	1,214.60	599.85	0.99	-0.25	0.062
45.00	-10.77	-1.29	0.00	-93.26	0.00	93.26	1,165.87	582.93	1,187.28	586.35	1.12	-0.26	0.060
47.50	-10.45	-1.28	0.00	-90.04	0.00	90.04	1,156.22	578.11	1,160.01	572.88	1.27	-0.28	0.059
50.00	-10.12	-1.26	0.00	-86.85	0.00	86.85	1,146.35	573.17	1,132.81	559.45	1.42	-0.30	0.057
52.50	-9.80	-1.25	0.00	-83.70	0.00	83.70	1,136.25	568.13	1,105.70	546.06	1.58	-0.31	0.056
55.00	-9.48	-1.24	0.00	-80.56	0.00	80.56	1,125.94	562.97	1,078.67	532.72	1.75	-0.33	0.054
57.50	-9.16	-1.24	0.00	-77.46	0.00	77.46	1,115.40	557.70	1,051.75	519.42	1.93	-0.35	0.053
60.00	-8.84	-1.23	0.00	-74.36	0.00	74.36	1,104.64	552.32	1,024.94	506.18	2.11	-0.36	0.051
62.50	-8.52	-1.23	0.00	-71.28	0.00	71.28	1,093.65	546.83	998.25	493.00	2.31	-0.38	0.049
65.00	-8.21	-1.23	0.00	-68.20	0.00	68.20	1,082.45	541.22	971.69	479.88	2.51	-0.40	0.048
67.50	-7.89	-1.24	0.00	-65.12	0.00	65.12	1,071.02	535.51	945.28	466.84	2.72	-0.41	0.046
70.00	-7.58	-1.24	0.00	-62.02	0.00	62.02	1,059.36	529.68	919.01	453.87	2.94	-0.43	0.044
72.50	-7.28	-1.25	0.00	-58.91	0.00	58.91	1,047.49	523.74	892.91	440.97	3.17	-0.44	0.042
75.00	-7.13	-1.26	0.00	-55.78	0.00	55.78	1,035.39	517.69	866.98	428.17	3.41	-0.46	0.041
76.17	-6.92	-1.26	0.00	-54.31	0.00	54.31	1,029.67	514.83	854.94	422.22	3.52	-0.47	0.040
77.50	-6.60	-1.27	0.00	-52.63	0.00	52.63	1,023.07	511.53	841.23	415.45	3.65	-0.47	0.038
79.50	-6.52	-1.28	0.00	-50.08	0.00	50.08	1,013.05	506.53	820.77	405.35	3.85	-0.48	0.037
79.50	-6.52	-1.28	0.00	-50.08	0.00	50.08	1,013.05	506.53	820.77	405.35	3.85	-0.48	0.037
80.00	-6.23	-1.28	0.00	-49.45	0.00	49.45	831.49	415.75	686.29	338.93	3.90	-0.49	0.040
82.50	-5.95	-1.29	0.00	-46.24	0.00	46.24	822.47	411.24	666.44	329.13	4.16	-0.50	0.038
85.00	-5.66	-1.30	0.00	-43.01	0.00	43.01	813.23	406.62	646.68	319.37	4.43	-0.51	0.036
87.50	-5.37	-1.30	0.00	-39.77	0.00	39.77	803.77	401.88	627.03	309.67	4.70	-0.53	0.033
90.00	-5.26	-1.30	0.00	-36.52	0.00	36.52	794.08	397.04	607.50	300.02	4.98	-0.54	0.031
91.00	-4.83	-1.30	0.00	-35.22	0.00	35.22	790.14	395.07	599.72	296.18	5.09	-0.54	0.030
92.50	-4.78	-1.30	0.00	-33.27	0.00	33.27	784.17	392.08	588.09	290.43	5.27	-0.55	0.028
93.00	-4.01	-1.28	0.00	-32.63	0.00	32.63	782.16	391.08	584.22	288.52	5.33	-0.55	0.028
95.00	-3.75	-1.27	0.00	-30.07	0.00	30.07	774.04	387.02	568.81	280.91	5.56	-0.56	0.026
97.44	-3.75	-1.27	0.00	-26.97	0.00	26.97	763.94	381.97	550.16	271.70	5.85	-0.57	0.023
97.44	-3.75	-1.27	0.00	-26.97	0.00	26.97	763.94	381.97	550.16	271.70	5.85	-0.57	0.104
97.50	-3.63	-1.26	0.00	-26.90	0.00	26.90	763.68	381.84	549.68	271.47	5.86	-0.57	0.104
100.00	-3.59	-1.26	0.00	-23.74	0.00	23.74	753.10	376.55	530.71	262.10	6.17	-0.62	0.095
101.00	-3.45	-1.25	0.00	-22.48	0.00	22.48	748.81	374.40	523.16	258.37	6.30	-0.63	0.092
102.50	-3.35	-1.24	0.00	-20.60	0.00	20.60	742.30	371.15	511.90	252.81	6.50	-0.66	0.086
105.00	-3.25	-1.22	0.00	-17.51	0.00	17.51	731.28	365.64	493.27	243.61	6.86	-0.70	0.076
107.50	-3.15	-1.21	0.00	-14.45	0.00	14.45	715.50	357.75	471.83	233.02	7.23	-0.73	0.066

© 2007 - 2016 by ATC IP LLC. All rights reserved.

110.00	-3.05	-1.19	0.00	-11.43	0.00	11.43	699.32	349.66	450.61	222.54	7.62	-0.76	0.056
112.50	-2.95	-1.16	0.00	-8.46	0.00	8.46	683.14	341.57	429.88	212.30	8.02	-0.78	0.044
115.00	-2.85	-1.13	0.00	-5.56	0.00	5.56	666.96	333.48	409.64	202.31	8.44	-0.80	0.032
117.50	-2.76	-1.10	0.00	-2.74	0.00	2.74	650.78	325.39	389.89	192.55	8.86	-0.81	0.018
120.00	0.00	-1.06	0.00	0.00	0.00	0.00	634.60	317.30	370.62	183.04	9.29	-0.81	0.000

© 2007 - 2016 by ATC IP LLC. All rights reserved.

Analysis Summary

Load Case	Reactions Shear FX (kips)	Shear FZ (kips)	Axial FY (kips)	Moment MX (ft-kips)	Moment MY (ft-kips)	Moment MZ (ft-kips)	Max Usage Elev (ft)	Interaction Ratio
1.2D + 1.6W	24.19	0.00	25.92	0.00	0.00	1824.93	15.48	0.72
0.9D + 1.6W	24.18	0.00	19.43	0.00	0.00	1806.86	15.48	0.71
1.2D + 1.0Di + 1.0Wi	6.49	0.00	54.54	0.00	0.00	527.98	15.48	0.23
(1.2 + 0.2Sds) * DL + E ELFM	0.95	0.00	26.13	0.00	0.00	93.60	15.48	0.05
(1.2 + 0.2Sds) * DL + E EMAM	1.56	0.00	26.13	0.00	0.00	160.25	97.44	0.11
(0.9 - 0.2Sds) * DL + E ELFM	0.95	0.00	18.14	0.00	0.00	92.38	15.48	0.04
(0.9 - 0.2Sds) * DL + E EMAM	1.56	0.00	18.14	0.00	0.00	157.98	97.44	0.10
1.0D + 1.0W	6.49	0.00	21.62	0.00	0.00	482.85	15.48	0.20

Additional Steel Summary

Elev From (ft)	Elev To (ft)	Member	Intermediate Connectors VQ/I (lb/in)	Shear Applied (kips)	Shear phiVn (kips)	Upper Termination Connectors MQ/I (kips)	phiVn (kips)	Num Reqd	Num Actual	Lower Termination Connectors MQ/I (kips)	phiVn (kips)	Num Reqd	Num Actual	Max Member Pu (kip)	phiPn (kip)	Ratio
0.00	15.4	(4) SOL-#20 All Thre	224.6	6.7	16.8	179.0	12.0	15	20	0.0	12.0	0	0	205.3	330.5	0.621
0.00	79.5	(4) SOL-#20 All Thre	355.4	10.7	16.8	0.0	12.0	0	12	0.0	12.0	0	0	282.4	330.5	0.854
79.5	97.4	(4) SOL-#20 All Thre	345.6	10.4	16.8	61.9	12.0	6	12	0.0	12.0	0	0	115.8	330.5	0.350

Base/Flange Plate	Plate Type	***Baseplate***	
	Pole Diameter	31	in
	Pole Thickness	0.25	in
	Plate Diameter	44.59	in
	Plate Thickness	2.125	in
	Plate Fy	60	ksi
	Weld Length	0.25	in
	ϕ_s Resistance	787.68	k-in
	Applied	271.83	k-in
Stiffeners	#	***8***	***Show***
	Thickness	0.375	in
	Length	3	in
	Height	3	in
	Chamfer	0	in
	Offset Angle	12.5	°
	Fy	36	ksi

Bolts	#	***8***	
	Bolt Circle	38.59	in
	(R)adial / (S)quare	R	
	Diameter	2.25	in
	Hole Diameter	2.625	in
	Type	18J	
	Fy	75	ksi
	Fu	100	ksi
	ϕ_s Resistance	259.82	k
	Applied	121.76	k
Reinforcement ●	#	***8***	
	DYW. Circle	37	in
	Offset Angle	22.5	°
	Type	#20	
	Diameter	2.5	in
	Fu	100	ksi
	ϕ_s Resistance	269.98	k
	Applied	158.68	k
Extra Bolts O	#	***0***	

Code Rev.	***G***
Moment	1824.9 k-ft
Axial	25.9 k

Date	12/27/2016
Engineer	C. Poe
Site #	302500
Carrier	AT&T Mobility

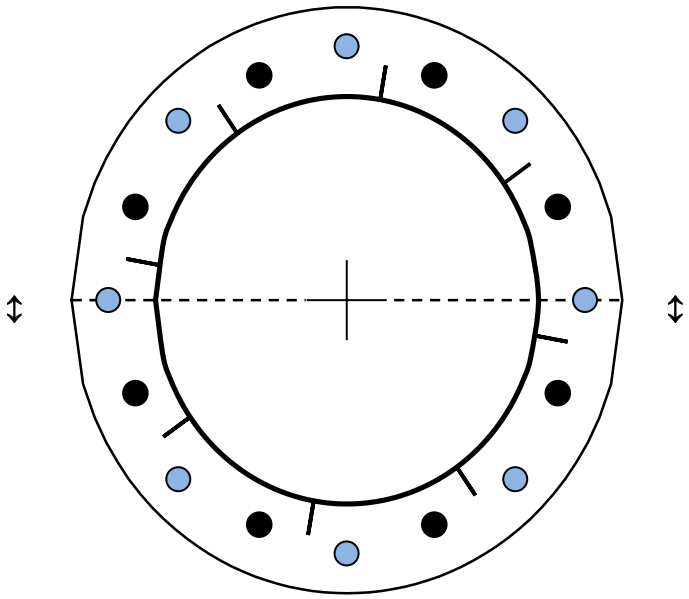

Plate Stress Ratio:
0.35 (Pass)

Bolt Stress Ratio:
0.47 (Pass)

Reinforcement Stress Ratio:
0.59 (Pass)

Site Name:	Brst - Bristol	*Program Last Updated:*	*11/15/2012*
Site Number:	302500		
Engineering Number:	OAA686853_C3_02		
Engineer:	C. Poe		
Date:	12/27/16		
Tower Type:	MP		

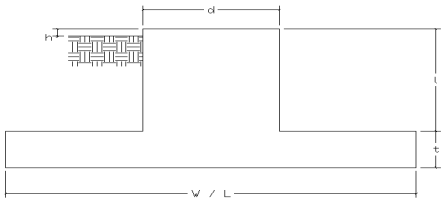

Design Loads (Factored) - Analysis per TIA-222-G Standards

Design / Analysis / Mapping:	Mapping	
Compression/Leg:	25.9	k
Uplift/Leg:		k
Total Shear:	24.2	k
Moment:	1824.9	k-ft
Tower + Appurtenance Weight:	21.6	k
Depth to Base of Foundation (l + t - h):	6.50	ft
Diameter of Pier (d):	6.00	ft
Height of Pier above Ground (h):	2.70	
Width of Pad (W):	17.50	ft
Length of Pad (L):	18.40	ft
Thickness of Pad (t):	2.50	ft
Tower Leg Center to Center:	0.00	ft
Number of Tower Legs:	1.0	(1 if MP or GT)
Tower Center from Mat Center:	0.00	ft
Depth Below Ground Surface to Water Table:	99.00	ft
Unit Weight of Concrete:	150.0	pcf
Unit Weight of Soil Above Water Table:	115.0	pcf
Unit Weight of Water:	62.4	pcf
Unit Weight of Soil Below Water Table:	50.0	pcf
Friction Angle of Uplift:	15.0	Degrees
Ultimate Coefficient of Shear Friction:	0.50	
Ultimate Compressive Bearing Pressure:	40000.0	psf
Ultimate Passive Pressure on Pad Face:	2000.0	psf
$\phi_{\text{Soil and Concrete Weight}}$:	0.9	
ϕ_{Soil}:	0.75	

Overturning Moment Usage

Design OTM:	2047.5	k-ft
OTM Resistance:	2668.6	k-ft
Design OTM / OTM Resistance:	0.77	Result: OK

Soil Bearing Pressure Usage

Net Bearing Pressure:	3866	psf
Factored Nominal Bearing Pressure:	30000	psf
Net Bearing Pressure/Factored Nominal Bearing Pressure:	0.13	Result: OK
Load Direction Controling Design Bearing Pressure:	Diagonal to Pad Edge	

Sliding Factor of Safety

Total Factored Sliding Resistance:	175.5	k
Sliding Design / Sliding Resistance:	0.14	Result: OK