PROJECT INFORMATION

SCOPE OF WORK:

ITEMS TO BE MOUNTED ON THE EXISTING TOWER:
(3) RRUS–32 TO REPLACE EXISTING (3) RRUS–11 & (3) A2 MODULES

ITEMS TO BE INSTALLED INSIDE THE EXISTING AT&T EQUIPMENT AREA:
(1) XMU, (1) IDL2, (3) RRUS–11, (1) DUS, (1) SURGE ARRESTOR & (1) EQUIPMENT RACK

ITEMS TO REMAIN:
(9) AT&T ANTENNAS, (6) RRH'S, (3) TMA'S, (2) SURGE SUPPRESSORS, (4) DC POWER, (2) FIBER LINE, & (12) LINES 1–5/8" COAX

ITEMS TO BE REMOVED:
(3) RRUS–11, & (3) A2 MODULES

PTN(4C): 2051A070X1 PTN(MULTI): 2051A06YA2
RFDS REVISION(4C): FINAL DATE: 07/21/2016
RFDS REVISION (MULTI): FINAL DATE: 10/04/2016

SITE ADDRESS:	1 WILLIS STREET BRISTOL, CT 06010
LATITUDE:	41.649075° N, 41° 38' 56.67" N
LONGITUDE:	72.948027° W, 72° 56' 52.89" W
USID:	59357
LANDLORD:	AMERICAN TOWER CORP.
TYPE OF SITE:	MONOPOLE
TOWER HEIGHT:	120'–0"
RAD CENTER:	124'–0"
CURRENT USE:	TELECOMMUNICATIONS FACILITY
PROPOSED USE:	TELECOMMUNICATIONS FACILITY

FA NUMBER: 10035029
SITE NUMBER: CTL01055
SITE NAME: BRISTOL
AMERICAN TOWER SITE ID: 302500
1 WILLIS STREET
BRISTOL, CT 06010
PACE ID(4C): MRCTB019449
PACE ID(MULTI): MRCTB019367
PROJECT: LTE 4C/MULTI CARRIER

PROJECT TEAM

CLIENT REPRESENTATIVE

COMPANY:	SMARTLINK, LLC
ADDRESS:	1997 ANNAPOLIS EXCHANGE PARKWAY, SUITE 200
CITY, STATE, ZIP:	ANNAPOLIS, MD 21401
CONTACT:	TIM BOYCE
PHONE:	(908) 333–3640
E–MAIL:	tboyce@smartlinkllc.com

RF ENGINEER

COMPANY:	AT&T MOBILITY – NEW ENGLAND
ADDRESS:	550 COCHITUATE ROAD SUITE 550 13 AND 14
CITY, STATE, ZIP:	FRAMINGHAM, MA 01701
CONTACT:	CAMERON SYME
PHONE:	(508) 596–7146
E–MAIL:	cs6970@att.com

SITE ACQUISITION

COMPANY:	SMARTLINK, LLC
ADDRESS:	85 RANGEWAY RD, SUITE 102
CITY, STATE, ZIP:	BILLERICA, MA 01862
CONTACT:	SHARON R. KEEFE
PHONE:	(978) 930–3918
E–MAIL:	sharon.keefe@smartlinkllc.com

CONSTRUCTION MANAGER

COMPANY:	SMARTLINK, LLC.
ADDRESS:	85 RANGEWAY RD, SUITE 102
CITY, STATE, ZIP:	BILLERICA, MA 01862
CONTACT:	MARK J. DONNELLY
PHONE:	(617) 515–2080
E–MAIL:	mark.donnelly@smartlinkllc.com

ENGINEERING

COMPANY:	HUDSON DESIGN GROUP, LLC.
ADDRESS:	1600 OSGOOD STREET BUILDING 20 NORTH, SUITE 3090
CITY, STATE, ZIP:	NORTH ANDOVER, MA 01845
CONTACT:	DANIEL P. HAMM, PE
PHONE:	(978) 557–5553
E–MAIL:	info@hudsondesigngroupllc.com

DRAWING INDEX

SHEET NO.	DESCRIPTION	REV.
T–1	TITLE SHEET	1
GN–1	GENERAL NOTES	1
A–1	COMPOUND & EQUIPMENT PLANS	1
A–2	ANTENNA LAYOUTS & ELEVATION	1
A–3	DETAILS	1
S–1	MOUNT MODIFICATION DETAILS	1
RF–1	RF PLUMBING DIAGRAM	1
G–1	GROUNDING DETAILS	1

VICINITY MAP

DIRECTIONS TO SITE:

DEPART ENTERPRISE DR TOWARD CAPITOL BLVD. 0.4 MI. TURN LEFT ONTO CAPITOL BLVD. 0.2 MI. TURN LEFT ONTO WEST ST. 0.3 MI. TAKE RAMP LEFT FOR I–91 S. 1.7 MI. AT EXIT 22N, TAKE RAMP RIGHT FOR CT–9 NORTH TOWARD NEW BRITAIN. 6.6 MI. AT EXIT 28, TAKE RAMP LEFT FOR CT–72 WEST TOWARD BRISTOL. 3.2 MI. KEEP STRAIGHT ONTO I–84 W / CT–72 W. 0.3 MI. AT EXIT 33, TAKE RAMP RIGHT FOR CT–72 WEST TOWARD BRISTOL. 2.7 MI. KEEP STRAIGHT TO STAY ON CT–72 W. 1.8 MI. KEEP STRAIGHT ONTO PINE ST. 0.1 MI. ROAD NAME CHANGES TO MOUNTAIN RD. 0.3 MI. KEEP STRAIGHT ONTO SOUTH ST. 0.6 MI. TURN LEFT ONTO WILLIS ST. 1.5 MI.

ARRIVE AT ENTRANCE TO SITE ON THE RIGHT.

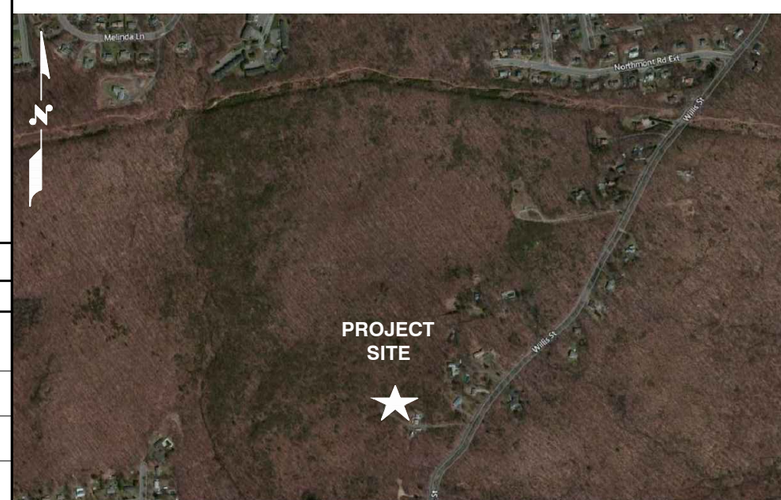

GENERAL NOTES

1. THIS DOCUMENT IS THE CREATION, DESIGN, PROPERTY AND COPYRIGHTED WORK OF AT&T. ANY DUPLICATION OR USE WITHOUT EXPRESS WRITTEN CONSENT IS STRICTLY PROHIBITED. DUPLICATION AND USE BY GOVERNMENT AGENCIES FOR THE PURPOSES OF CONDUCTING THEIR LAWFULLY AUTHORIZED REGULATORY AND ADMINISTRATIVE FUNCTIONS IS SPECIFICALLY ALLOWED.
2. THE FACILITY IS AN UNMANNED PRIVATE AND SECURED EQUIPMENT INSTALLATION. IT IS ONLY ACCESSED BY TRAINED TECHNICIANS FOR PERIODIC ROUTINE MAINTENANCE AND THEREFORE DOES NOT REQUIRE ANY WATER OR SANITARY SEWER SERVICE. THE FACILITY IS NOT GOVERNED BY REGULATIONS REQUIRING PUBLIC ACCESS PER ADA REQUIREMENTS.
3. CONTRACTOR SHALL VERIFY ALL PLANS AND EXISTING DIMENSIONS AND CONDITIONS ON THE JOB SITE AND SHALL IMMEDIATELY NOTIFY THE AT&T MOBILITY REPRESENTATIVE IN WRITING OF DISCREPANCIES BEFORE PROCEEDING WITH THE WORK OR BE RESPONSIBLE FOR SAME.

72 HOURS

CALL
BEFORE YOU DIG
CALL TOLL FREE 1–800–922–4455
OR CALL 811

UNDERGROUND SERVICE ALERT

APPROVALS

DISCIPLINE:	SIGNATURE:	DATE:
THE FOLLOWING PARTIES HEREBY APPROVE AND ACCEPT THESE DOCUMENTS & AUTHORIZE THE SUBCONTRACTOR TO PROCEED WITH CONSTRUCTION DESCRIBED HEREIN. ALL DOCUMENTS ARE SUBJECT TO REVIEW BY THE LOCAL BUILDING DEPARTMENT & MAY IMPOSE CHANGES OR MODIFICATIONS.		
SMARTLINK SITE ACQUISITION:		
SMARTLINK CONSTRUCTION MANAGER:		
AT&T PROJECT MANAGER:		

Hudson Design Group LLC
1600 OSGOOD STREET
BUILDING 20 NORTH, SUITE 3090
N. ANDOVER, MA 01845
TEL: (978) 557-5553
FAX: (978) 336-5586

smartlink
1997 ANNAPOLIS EXCHANGE PKWY
SUITE 200
ANNAPOLIS, MD 21401

SITE NUMBER: CTL01055
SITE NAME: BRISTOL
AMERICAN TOWER SITE ID: 302500
1 WILLIS STREET
BRISTOL, CT 06010
HARTFORD COUNTY

at&t
500 ENTERPRISE DRIVE, SUITE 3A
ROCKY HILL, CT 06067

NO.	DATE	REVISIONS	BY	CHK	APP'D
1	02/17/17	ISSUED FOR REVIEW	RP	JC	DPH
0	01/13/17	ISSUED FOR REVIEW	SB	HC	DPH

SCALE: AS SHOWN DESIGNED BY: HC DRAWN BY: RP

STATE OF CONNECTICUT · DANIEL PAUL HAMM · 18,256 · LICENSED PROFESSIONAL ENGINEER

AT&T

TITLE SHEET
4C / MULTI CARRIER

SITE NUMBER	DRAWING NUMBER	REV
CTL01055	T–1	1

GROUNDING NOTES

1. THE SUBCONTRACTOR SHALL REVIEW AND INSPECT THE EXISTING FACILITY GROUNDING SYSTEM AND LIGHTNING PROTECTION SYSTEM (AS DESIGNED AND INSTALLED) FOR STRICT COMPLIANCE WITH THE NEC (AS ADOPTED BY THE AHJ), THE SITE-SPECIFIC (UL, LPI, OR NFPA) LIGHTING PROTECTION CODE, AND GENERAL COMPLIANCE WITH TELCORDIA AND TIA GROUNDING STANDARDS. THE SUBCONTRACTOR SHALL REPORT ANY VIOLATIONS OR ADVERSE FINDINGS TO THE CONTRACTOR FOR RESOLUTION.

2. ALL GROUND ELECTRODE SYSTEMS (INCLUDING TELECOMMUNICATION, RADIO, LIGHTNING PROTECTION, AND AC POWER GES'S) SHALL BE BONDED TOGETHER, AT OR BELOW GRADE, BY TWO OR MORE COPPER BONDING CONDUCTORS IN ACCORDANCE WITH THE NEC.

3. THE SUBCONTRACTOR SHALL PERFORM IEEE FALL-OF-POTENTIAL RESISTANCE TO EARTH TESTING (PER IEEE 1100 AND 81) FOR NEW GROUND ELECTRODE SYSTEMS. THE SUBCONTRACTOR SHALL FURNISH AND INSTALL SUPPLEMENTAL GROUND ELECTRODES AS NEEDED TO ACHIEVE A TEST RESULT OF 5 OHMS OR LESS.

4. METAL RACEWAY SHALL NOT BE USED AS THE NEC REQUIRED EQUIPMENT GROUND CONDUCTOR. STRANDED COPPER CONDUCTORS WITH GREEN INSULATION, SIZED IN ACCORDANCE WITH THE NEC, SHALL BE FURNISHED AND INSTALLED WITH THE POWER CIRCUITS TO BTS EQUIPMENT.

5. EACH BTS CABINET FRAME SHALL BE DIRECTLY CONNECTED TO THE MASTER GROUND BAR WITH GREEN INSULATED SUPPLEMENTAL EQUIPMENT GROUND WIRES, 6 AWG STRANDED COPPER OR LARGER FOR INDOOR BTS 2 AWG STRANDED COPPER FOR OUTDOOR BTS.

6. EXOTHERMIC WELDS SHALL BE USED FOR ALL GROUNDING CONNECTIONS BELOW GRADE.

7. APPROVED ANTIOXIDANT COATINGS (I.E., CONDUCTIVE GEL OR PASTE) SHALL BE USED ON ALL COMPRESSION AND BOLTED GROUND CONNECTIONS.

8. ICE BRIDGE BONDING CONDUCTORS SHALL BE EXOTHERMICALLY BONDED OR BOLTED TO GROUND BAR.

9. ALUMINUM CONDUCTOR OR COPPER CLAD STEEL CONDUCTOR SHALL NOT BE USED FOR GROUNDING CONNECTIONS.

10. MISCELLANEOUS ELECTRICAL AND NON-ELECTRICAL METAL BOXES, FRAMES AND SUPPORTS SHALL BE BONDED TO THE GROUND RING, IN ACCORDANCE WITH THE NEC.

11. METAL CONDUIT SHALL BE MADE ELECTRICALLY CONTINUOUS WITH LISTED BONDING FITTINGS OR BY BONDING ACROSS THE DISCONTINUITY WITH 6 AWS COPPER WIRE UL APPROVED GROUNDING TYPE CONDUIT CLAMPS.

12. ALL NEW STRUCTURES WITH A FOUNDATION AND/OR FOOTING HAVING 20 FT. OR MORE OF 1/2 IN. OR GREATER ELECTRICALLY CONDUCTIVE REINFORCING STEEL MUST HAVE IT BONDED TO THE GROUND RING USING AN EXOTHERMIC WELD CONNECTION USING #2 AWG SOLID BARE TINNED COPPER GROUND WIRE, PER NEC 250.50

GENERAL NOTES

1. FOR THE PURPOSE OF CONSTRUCTION DRAWING, THE FOLLOWING DEFINITIONS SHALL APPLY:

   CONTRACTOR – SMARTLINK
   SUBCONTRACTOR – GENERAL CONTRACTOR (CONSTRUCTION)
   OWNER – AT&T MOBILITY

2. PRIOR TO THE SUBMISSION OF BIDS, THE BIDDING SUBCONTRACTOR SHALL VISIT THE CELL SITE TO FAMILIARIZE WITH THE EXISTING CONDITIONS AND TO CONFIRM THAT THE WORK CAN BE ACCOMPLISHED AS SHOWN ON THE CONSTRUCTION DRAWINGS. ANY DISCREPANCY FOUND SHALL BE BROUGHT TO THE ATTENTION OF CONTRACTOR.

3. ALL MATERIALS FURNISHED AND INSTALLED SHALL BE IN STRICT ACCORDANCE WITH ALL APPLICABLE CODES, REGULATIONS, AND ORDINANCES. SUBCONTRACTOR SHALL ISSUE ALL APPROPRIATE NOTICES AND COMPLY WITH ALL LAWS, ORDINANCES, RULES, REGULATIONS, AND LAWFUL ORDERS OF ANY PUBLIC AUTHORITY REGARDING THE PERFORMANCE OF THE WORK. ALL WORK CARRIED OUT SHALL COMPLY WITH ALL APPLICABLE MUNICIPAL AND UTILITY COMPANY SPECIFICATIONS AND LOCAL JURISDICTIONAL CODES, ORDINANCES AND APPLICABLE REGULATIONS.

4. DRAWINGS PROVIDED HERE ARE NOT TO BE SCALED AND ARE INTENDED TO SHOW OUTLINE ONLY.

5. UNLESS NOTED OTHERWISE, THE WORK SHALL INCLUDE FURNISHING MATERIALS, EQUIPMENT, APPURTENANCES, AND LABOR NECESSARY TO COMPLETE ALL INSTALLATIONS AS INDICATED ON THE DRAWINGS.

6. "KITTING LIST" SUPPLIED WITH THE BID PACKAGE IDENTIFIES ITEMS THAT WILL BE SUPPLIED BY CONTRACTOR. ITEMS NOT INCLUDED IN THE BILL OF MATERIALS AND KITTING LIST SHALL BE SUPPLIED BY THE SUBCONTRACTOR.

7. THE SUBCONTRACTOR SHALL INSTALL ALL EQUIPMENT AND MATERIALS IN ACCORDANCE WITH MANUFACTURER'S RECOMMENDATIONS UNLESS SPECIFICALLY STATED OTHERWISE.

8. IF THE SPECIFIED EQUIPMENT CANNOT BE INSTALLED AS SHOWN ON THESE DRAWINGS, THE SUBCONTRACTOR SHALL PROPOSE AN ALTERNATIVE INSTALLATION SPACE FOR APPROVAL BY THE CONTRACTOR.

9. SUBCONTRACTOR SHALL DETERMINE ACTUAL ROUTING OF CONDUIT, POWER AND T1 CABLES, GROUNDING CABLES AS SHOWN ON THE POWER, GROUNDING AND TELCO PLAN DRAWING. SUBCONTRACTOR SHALL UTILIZE EXISTING TRAYS AND/OR SHALL ADD NEW TRAYS AS NECESSARY. SUBCONTRACTOR SHALL CONFIRM THE ACTUAL ROUTING WITH THE CONTRACTOR.

10. THE SUBCONTRACTOR SHALL PROTECT EXISTING IMPROVEMENTS, PAVEMENTS, CURBS, LANDSCAPING AND STRUCTURES. ANY DAMAGED PART SHALL BE REPAIRED AT SUBCONTRACTOR'S EXPENSE TO THE SATISFACTION OF OWNER.

11. SUBCONTRACTOR SHALL LEGALLY AND PROPERLY DISPOSE OF ALL SCRAP MATERIALS SUCH AS COAXIAL CABLES AND OTHER ITEMS REMOVED FROM THE EXISTING FACILITY. ANTENNAS REMOVED SHALL BE RETURNED TO THE OWNER'S DESIGNATED LOCATION.

12. SUBCONTRACTOR SHALL LEAVE PREMISES IN CLEAN CONDITION.

13. ALL CONCRETE REPAIR WORK SHALL BE DONE IN ACCORDANCE WITH AMERICAN CONCRETE INSTITUTE (ACI) 301.

14. ANY NEW CONCRETE NEEDED FOR THE CONSTRUCTION SHALL BE AIR-ENTRAINED AND SHALL HAVE 4000 PSI STRENGTH AT 28 DAYS. ALL CONCRETE WORK SHALL BE DONE IN ACCORDANCE WITH ACI 318 CODE REQUIREMENTS.

15. ALL STRUCTURAL STEEL WORK SHALL BE DETAILED, FABRICATED AND ERECTED IN ACCORDANCE WITH AISC SPECIFICATIONS. ALL STRUCTURAL STEEL SHALL BE ASTM A36 (Fy = 36 ksi) UNLESS OTHERWISE NOTED. PIPES SHALL BE ASTM A53 TYPE E (Fy = 36 ksi). ALL STEEL EXPOSED TO WEATHER SHALL BE HOT DIPPED GALVANIZED. TOUCHUP ALL SCRATCHES AND OTHER MARKS IN THE FIELD AFTER STEEL IS ERECTED USING A COMPATIBLE ZINC RICH PAINT.

16. CONSTRUCTION SHALL COMPLY WITH SPECIFICATIONS AND "GENERAL CONSTRUCTION SERVICES FOR CONSTRUCTION OF AT&T SITES."

17. SUBCONTRACTOR SHALL VERIFY ALL EXISTING DIMENSIONS AND CONDITIONS PRIOR TO COMMENCING ANY WORK. ALL DIMENSIONS OF EXISTING CONSTRUCTION SHOWN ON THE DRAWINGS MUST BE VERIFIED. SUBCONTRACTOR SHALL NOTIFY THE CONTRACTOR OF ANY DISCREPANCIES PRIOR TO ORDERING MATERIAL OR PROCEEDING WITH CONSTRUCTION.

18. THE EXISTING CELL SITE IS IN FULL COMMERCIAL OPERATION. ANY CONSTRUCTION WORK BY SUBCONTRACTOR SHALL NOT DISRUPT THE EXISTING NORMAL OPERATION. ANY WORK ON EXISTING EQUIPMENT MUST BE COORDINATED WITH CONTRACTOR. ALSO, WORK SHOULD BE SCHEDULED FOR AN APPROPRIATE MAINTENANCE WINDOW USUALLY IN LOW TRAFFIC PERIODS AFTER MIDNIGHT.

19. SINCE THE CELL SITE IS ACTIVE, ALL SAFETY PRECAUTIONS MUST BE TAKEN WHEN WORKING AROUND HIGH LEVELS OF ELECTROMAGNETIC RADIATION. EQUIPMENT SHOULD BE SHUTDOWN PRIOR TO PERFORMING ANY WORK THAT COULD EXPOSE THE WORKERS TO DANGER. PERSONAL RF EXPOSURE MONITORS ARE ADVISED TO BE WORN TO ALERT OF ANY DANGEROUS EXPOSURE LEVELS.

20. APPLICABLE BUILDING CODES:
    SUBCONTRACTOR'S WORK SHALL COMPLY WITH ALL APPLICABLE NATIONAL, STATE, AND LOCAL CODES AS ADOPTED BY THE LOCAL AUTHORITY HAVING JURISDICTION (AHJ) FOR THE LOCATION. THE EDITION OF THE AHJ ADOPTED CODES AND STANDARDS IN EFFECT ON THE DATE OF CONTRACT AWARD SHALL GOVERN THE DESIGN.
    BUILDING CODE: IBC 2012 WITH 2016 CT STATE BUILDING CODE AMENDMENTS
    ELECTRICAL CODE: REFER TO ELECTRICAL DRAWINGS
    LIGHTENING CODE: REFER TO ELECTRICAL DRAWINGS

    SUBCONTRACTOR'S WORK SHALL COMPLY WITH THE LATEST EDITION OF THE FOLLOWING STANDARDS:

    AMERICAN CONCRETE INSTITUTE (ACI) 318; BUILDING CODE REQUIREMENTS FOR STRUCTURAL CONCRETE;

    AMERICAN INSTITUTE OF STEEL CONSTRUCTION (AISC)

    MANUAL OF STEEL CONSTRUCTION, ASD, FOURTEENTH EDITION;

    TELECOMMUNICATIONS INDUSTRY ASSOCIATION (TIA) 222-G, STRUCTURAL STANDARDS FOR STEEL

    EQUIPMENT AND ANTENNA SUPPORTING STRUCTURES; REFER TO ELECTRICAL DRAWINGS FOR SPECIFIC ELECTRICAL STANDARDS.

FOR ANY CONFLICTS BETWEEN SECTIONS OF LISTED CODES AND STANDARDS REGARDING MATERIAL, METHODS OF CONSTRUCTION, OR OTHER REQUIREMENTS, THE MOST RESTRICTIVE REQUIREMENT SHALL GOVERN. WHERE THERE IS CONFLICT BETWEEN A GENERAL REQUIREMENT AND A SPECIFIC REQUIREMENT, THE SPECIFIC REQUIREMENT SHALL GOVERN.

ABBREVIATIONS

AGL	ABOVE GRADE LEVEL	EQ	EQUAL	REQ	REQUIRED
AWG	AMERICAN WIRE GAUGE	GC	GENERAL CONTRACTOR	RF	RADIO FREQUENCY
BBU	BATTERY BACKUP UNIT	GRC	GALVANIZED RIGID CONDUIT	TBD	TO BE DETERMINED
BTCW	BARE TINNED SOLID COPPER WIRE	MGB	MASTER GROUND BAR	TBR	TO BE REMOVED
BGR	BURIED GROUND RING	MIN	MINIMUM	TBRR	TO BE REMOVED AND REPLACED
BTS	BASE TRANSCEIVER STATION	P	PROPOSED	TYP	TYPICAL
E	EXISTING	NTS	NOT TO SCALE	UG	UNDER GROUND
EGB	EQUIPMENT GROUND BAR	RAD	RADIATION CENTER LINE (ANTENNA)	VIF	VERIFY IN FIELD
EGR	EQUIPMENT GROUND RING	REF	REFERENCE		

STATE OF CONNECTICUT
DEREK J. CREASEY
No. 25[illegible]
LICENSED PROFESSIONAL ENGINEER

Hudson Design Group LLC
1600 OSGOOD STREET
BUILDING 20 NORTH, SUITE 3090
N. ANDOVER, MA 01845
TEL: (978) 557-5553
FAX: (978) 336-5586

smartlink
1997 ANNAPOLIS EXCHANGE PKWY
SUITE 200
ANNAPOLIS, MD 21401

SITE NUMBER: CTL01055
SITE NAME: BRISTOL
AMERICAN TOWER SITE ID: 302500
1 WILLIS STREET
BRISTOL, CT 06010
HARTFORD COUNTY

at&t
500 ENTERPRISE DRIVE, SUITE 3A
ROCKY HILL, CT 06067

NO.	DATE	REVISIONS	BY	CHK	APP'D
1	02/17/17	ISSUED FOR REVIEW	RP	JC	DPH
0	01/13/17	ISSUED FOR REVIEW	SB	HC	DPH

SCALE: AS SHOWN | DESIGNED BY: HC | DRAWN BY: RP

AT&T

GENERAL NOTES
4C / MULTI CARRIER

SITE NUMBER	DRAWING NUMBER	REV
CTL01055	GN-1	1

NOTE:
REFER TO THE FINAL RF DATA SHEET FOR FINAL ANTENNA SETTINGS.

NOTE:

AN ANALYSIS FOR THE CAPACITY OF THE EXISTING STRUCTURES TO SUPPORT THE PROPOSED EQUIPMENT SHALL BE DETERMINED PRIOR TO CONSTRUCTION.

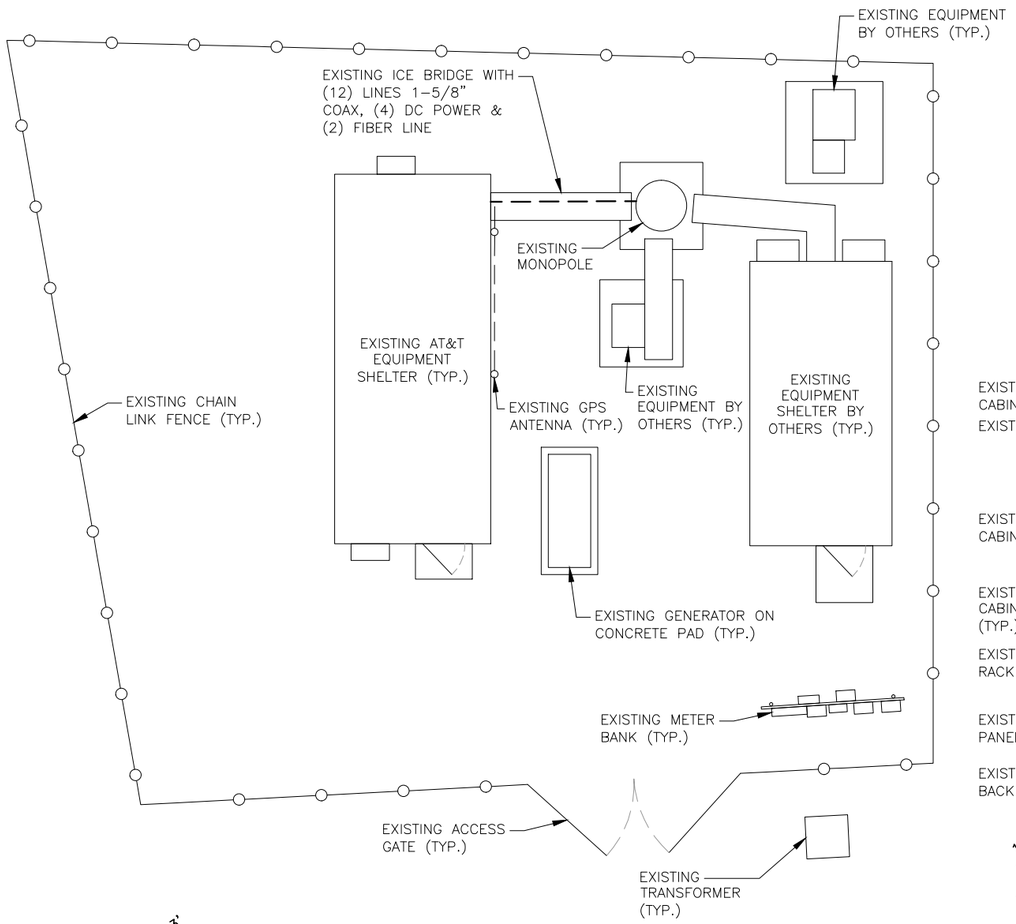

COMPOUND PLAN (1 / A-1)
22x34 SCALE: 3/16"=1'-0"
11x17 SCALE: 3/32"=1'-0"

0 2'-8" 5'-4" 10'-8" 16'-0"

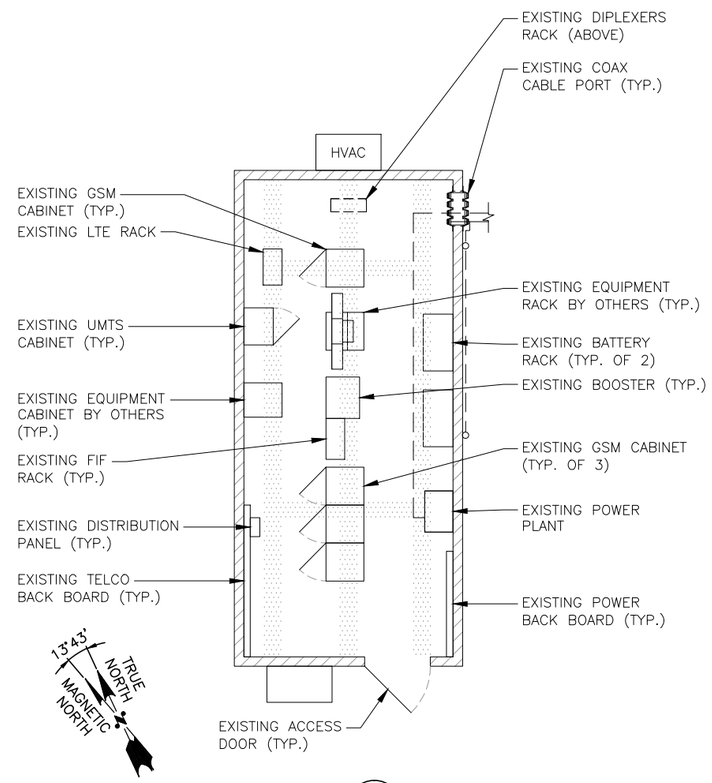

EXISTING EQUIPMENT PLAN (2 / A-1)
22x34 SCALE: 1/4"=1'-0"
11x17 SCALE: 1/8"=1'-0"

0 2'-0" 4'-0" 8'-0" 12'-0"

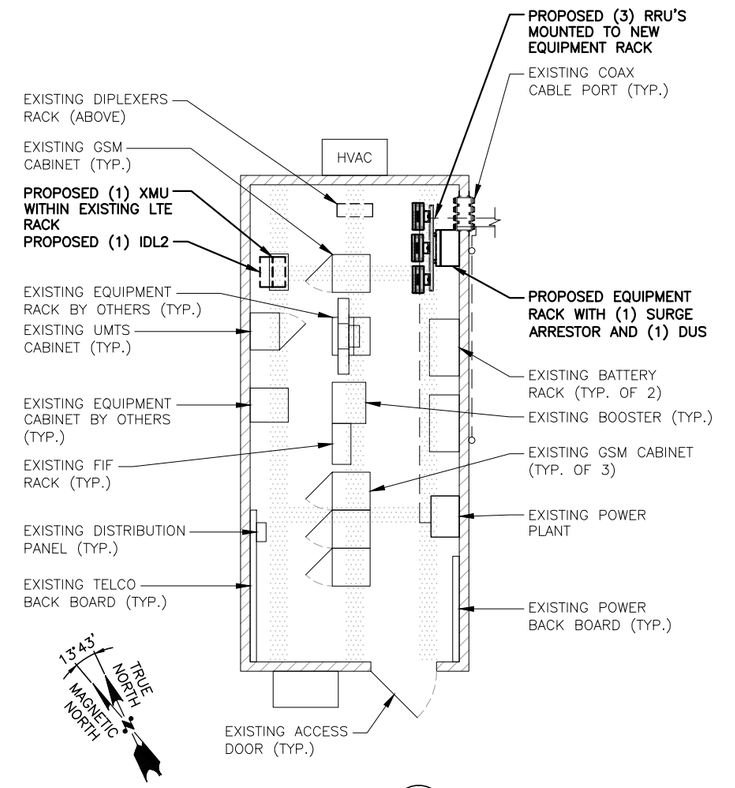

PROPOSED EQUIPMENT PLAN (3 / A-1)
22x34 SCALE: 1/4"=1'-0"
11x17 SCALE: 1/8"=1'-0"

0 2'-0" 4'-0" 8'-0" 12'-0"

Hudson Design Group LLC
1600 OSGOOD STREET
BUILDING 20 NORTH, SUITE 3090
N. ANDOVER, MA 01845
TEL: (978) 557-5553
FAX: (978) 336-5586

smartlink
1997 ANNAPOLIS EXCHANGE PKWY
SUITE 200
ANNAPOLIS, MD 21401

SITE NUMBER: CTL01055
SITE NAME: BRISTOL
AMERICAN TOWER SITE ID: 302500
1 WILLIS STREET
BRISTOL, CT 06010
HARTFORD COUNTY

at&t
500 ENTERPRISE DRIVE, SUITE 3A
ROCKY HILL, CT 06067

NO.	DATE	REVISIONS	BY	CHK	APP'D
1	02/17/17	ISSUED FOR REVIEW	RP	JC	DPH
0	01/13/17	ISSUED FOR REVIEW	SB	HC	DPH

SCALE: AS SHOWN | DESIGNED BY: HC | DRAWN BY: RP

STATE OF CONNECTICUT
DEREK J. CREASEY
16,235
LICENSED PROFESSIONAL ENGINEER

AT&T
COMPOUND & EQUIPMENT PLANS
4C / MULTI CARRIER

SITE NUMBER	DRAWING NUMBER	REV
CTL01055	A-1	1

NOTE:
AN ANALYSIS FOR THE CAPACITY OF THE EXISTING ANTENNA MOUNT TO SUPPORT THE PROPOSED LOADING HAS BEEN COMPLETED BY HUDSON DESIGN GROUP, LLC. DATED: JANUARY 12, 2017

NOTE:
REFER TO THE FINAL RF DATA SHEET FOR FINAL ANTENNA SETTINGS.

NOTE:
AN ANALYSIS FOR THE CAPACITY OF THE EXISTING STRUCTURES TO SUPPORT THE PROPOSED EQUIPMENT SHALL BE DETERMINED PRIOR TO CONSTRUCTION.

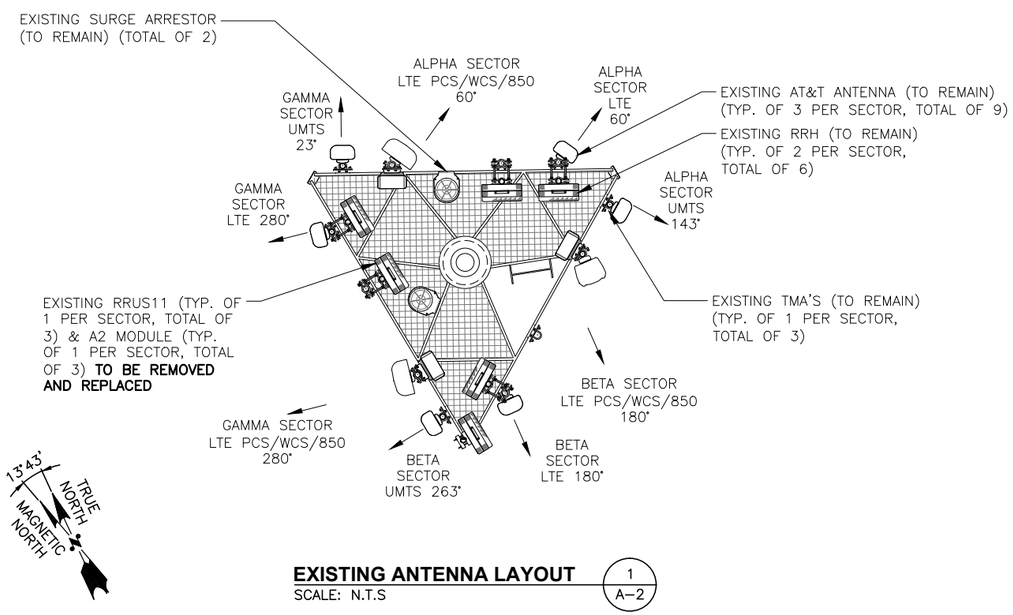

EXISTING ANTENNA LAYOUT (1 / A–2)
SCALE: N.T.S

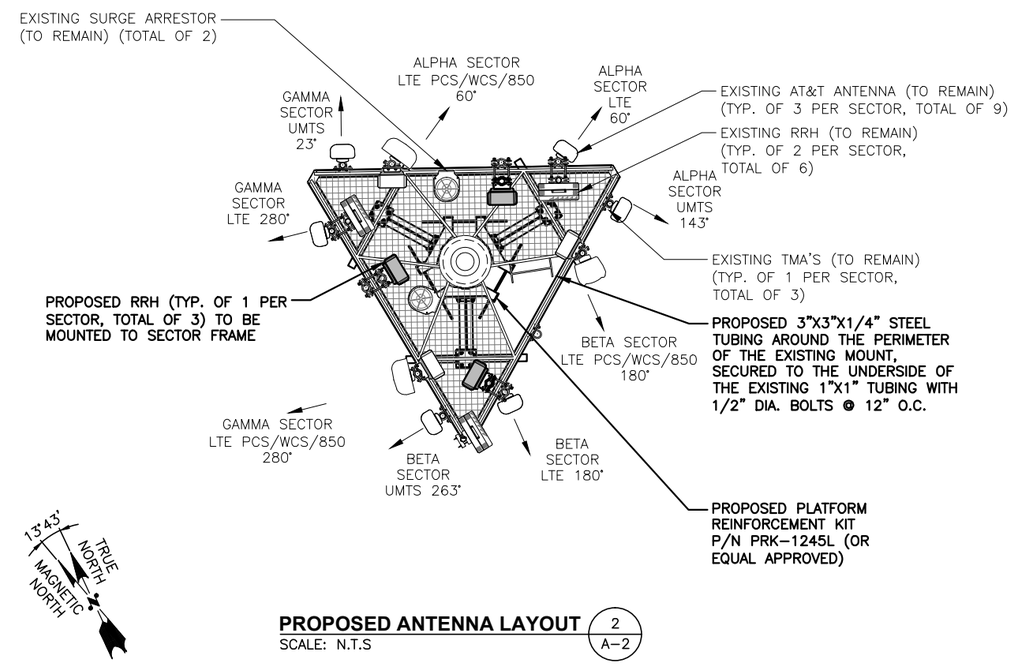

PROPOSED ANTENNA LAYOUT (2 / A–2)
SCALE: N.T.S

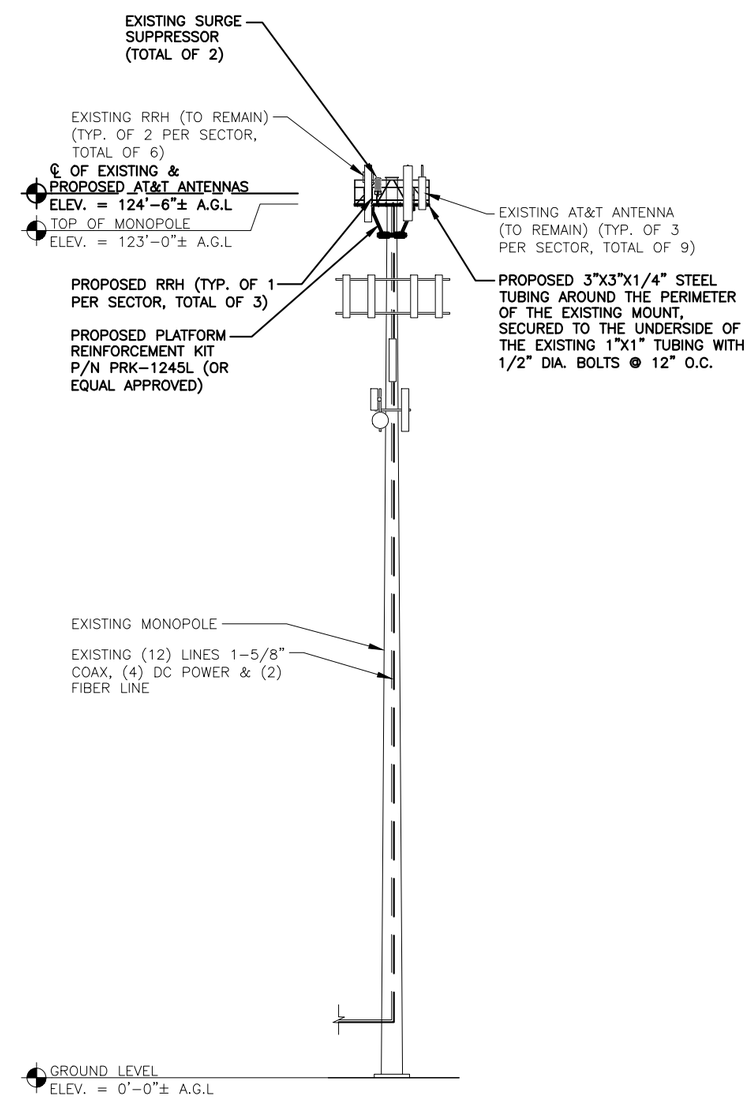

PROPOSED NORTH ELEVATION (3 / A–2)
22x34 SCALE: 3/16"=1'–0"
11x17 SCALE: 3/32"=1'–0"
0 5'–4" 10'–8" 21'–4" 32'–0"

STATE OF CONNECTICUT · DEREK J. CREASEY · LICENSED PROFESSIONAL ENGINEER

Hudson Design Group LLC
1600 OSGOOD STREET
BUILDING 20 NORTH, SUITE 3090
N. ANDOVER, MA 01845
TEL: (978) 557-5553
FAX: (978) 336-5586

smartlink
1997 ANNAPOLIS EXCHANGE PKWY
SUITE 200
ANNAPOLIS, MD 21401

SITE NUMBER: CTL01055
SITE NAME: BRISTOL
AMERICAN TOWER SITE ID: 302500
1 WILLIS STREET
BRISTOL, CT 06010
HARTFORD COUNTY

at&t
500 ENTERPRISE DRIVE, SUITE 3A
ROCKY HILL, CT 06067

NO.	DATE	REVISIONS	BY	CHK	APP'D
1	02/17/17	ISSUED FOR REVIEW	RP	JC	DPH
0	01/13/17	ISSUED FOR REVIEW	SB	HC	DPH

SCALE: AS SHOWN | DESIGNED BY: HC | DRAWN BY: RP

AT&T
ANTENNA LAYOUTS & ELEVATION
4C / MULTI CARRIER

SITE NUMBER	DRAWING NUMBER	REV
CTL01055	A–2	1

NOTE:
REFER TO THE FINAL RF DATA SHEET FOR FINAL ANTENNA SETTINGS.

NOTE:

AN ANALYSIS FOR THE CAPACITY OF THE EXISTING STRUCTURES TO SUPPORT THE PROPOSED EQUIPMENT SHALL BE DETERMINED PRIOR TO CONSTRUCTION.

NOTE:
AN ANALYSIS FOR THE CAPACITY OF THE EXISTING ANTENNA MOUNT TO SUPPORT THE PROPOSED LOADING HAS BEEN COMPLETED BY HUDSON DESIGN GROUP, LLC. DATED: JANUARY 12, 2017

EXISTING & EXISTING ANTENNA SCHEDULE

SECTOR	TECHNOLOGY	EXISTING/EXISTING	RAD CENTER	AZIMUTH	MAKE	MODEL#	SIZE (INCHES) (L x W x D)
ALPHA	UMTS	EXISTING	124'–0"±	143°	POWERWAVE	7770	55.0x11.0x5.0
	LTE 3C	EXISTING	124'–0"±	60°	CCI	TPA–65R–LCUUUU–H8	96.0x14.4x8.6
	LTE 2C	EXISTING	124'–0"±	60°	ANDREW	SBNH–1D6565C	96.4x11.9x7.1
BETA	UMTS	EXISTING	124'–0"±	263°	POWERWAVE	7770	55.0x11.0x5.0
	LTE 3C	EXISTING	124'–0"±	180°	QUINTEL	QS66512–3	72.0x12.0x9.6
	LTE 2C	EXISTING	124'–0"±	180°	KMW	AM–X–CD–16–65–00T–RET	72.0x11.8x5.9
GAMMA	UMTS	EXISTING	124'–0"±	23°	POWERWAVE	7770	55.0x11.0x5.0
	LTE 3C	EXISTING	124'–0"±	280°	CCI	TPA–65R–LCUUUU–H8	96.0x14.4x8.6
	LTE 2C	EXISTING	124'–0"±	280°	ANDREW	SBNH–1D6565C	96.4x11.9x7.1

EXISTING & PROPOSED RRU SCHEDULE

SECTOR	EXISTING/PROPOSED	MAKE	MODEL#	SIZE (INCHES) (L x W x D)
ALPHA				
	EXISTING PROPOSED (ON TOWER) PROPOSED (IN EQUIPMENT ROOM)	ERICSSON	RRUS–32 RRUS–32 RRUS–11	27.2x12.1x7.0 27.2x12.1x7.0 19.7x17.0x7.2
	EXISTING	ERICSSON	RRUS–11	19.7x17.0x7.2
BETA				
	EXISTING PROPOSED (ON TOWER) PROPOSED (IN EQUIPMENT ROOM)	ERICSSON	RRUS–32 RRUS–32 RRUS–11	27.2x12.1x7.0 27.2x12.1x7.0 19.7x17.0x7.2
	EXISTING	ERICSSON	RRUS–11	19.7x17.0x7.2
GAMMA				
	EXISTING PROPOSED (ON TOWER) PROPOSED (IN EQUIPMENT ROOM)	ERICSSON	RRUS–32 RRUS–32 RRUS–11	27.2x12.1x7.0 27.2x12.1x7.0 19.7x17.0x7.2
	EXISTING	ERICSSON	RRUS–11	19.7x17.0x7.2

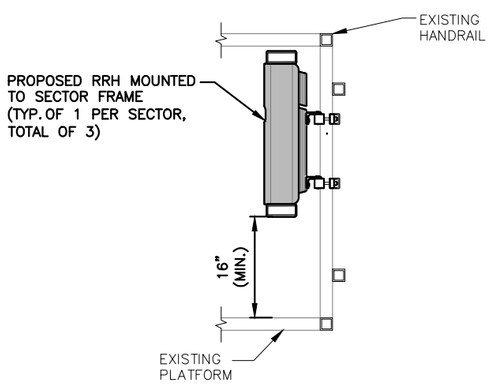

PROPOSED RRH MOUNTING DETAIL (1 / A–3)
SCALE: N.T.S

NOTE:

SEE RFDS FOR RRH FREQUENCY AND MODEL NUMBER

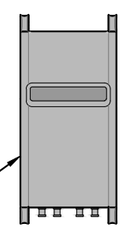

PROPOSED RRH REFER TO THE FINAL RFDS AND CHART FOR QUANTITY, MODEL AND DIMENSIONS

NOTE:
MOUNT PER MANUFACTURER'S SPECIFICATIONS.

PROPOSED RRH DETAIL (2 / A–3)
SCALE: N.T.S

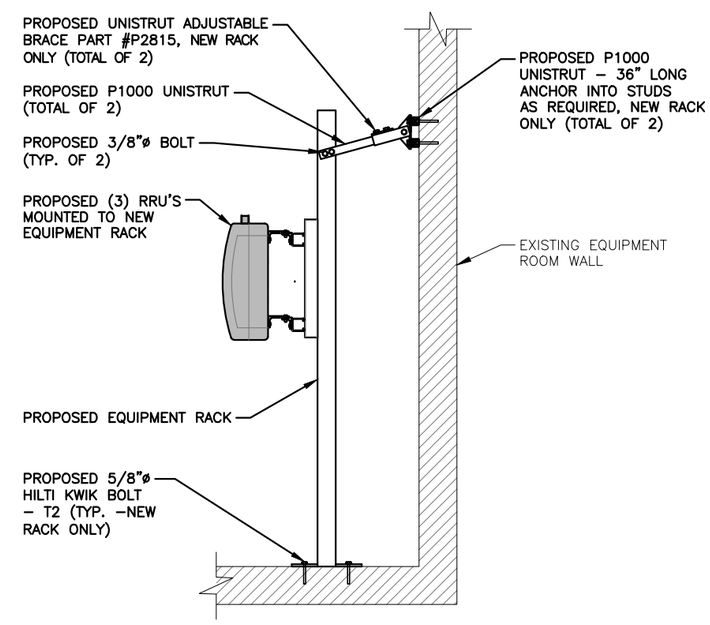

PROPOSED EQUIPMENT RACK DETAIL (3 / A–3)
SCALE: N.T.S

Hudson Design Group LLC
1600 OSGOOD STREET
BUILDING 20 NORTH, SUITE 3090
N. ANDOVER, MA 01845
TEL: (978) 557-5553
FAX: (978) 336-5586

smartlink
1997 ANNAPOLIS EXCHANGE PKWY
SUITE 200
ANNAPOLIS, MD 21401

SITE NUMBER: CTL01055
SITE NAME: BRISTOL
AMERICAN TOWER SITE ID: 302500
1 WILLIS STREET
BRISTOL, CT 06010
HARTFORD COUNTY

at&t
500 ENTERPRISE DRIVE, SUITE 3A
ROCKY HILL, CT 06067

NO.	DATE	REVISIONS	BY	CHK	APP'D
1	02/17/17	ISSUED FOR REVIEW	RP	JC	DPH
0	01/13/17	ISSUED FOR REVIEW	SB	HC	DPH

SCALE: AS SHOWN | DESIGNED BY: HC | DRAWN BY: RP

STATE OF CONNECTICUT · DEREK J. CREASEY · No. 28581 · LICENSED PROFESSIONAL ENGINEER

AT&T

DETAILS
4C / MULTI CARRIER

SITE NUMBER	DRAWING NUMBER	REV
CTL01055	A–3	1

STRUCTURAL NOTES:

1. DESIGN REQUIREMENTS ARE PER MA STATE BUILDING CODE AND APPLICABLE SUPPLEMENTS, IBC 2009, ASCE 7–05, EIA/TIA–222–G STRUCTURAL STANDARDS FOR STEEL ANTENNA, TOWERS AND ANTENNA SUPPORTING STRUCTURES.

2. CONTRACTOR SHALL VERIFY ALL DIMENSIONS AND CONDITIONS IN THE FIELD PRIOR TO FABRICATION AND ERECTION OF ANY MATERIAL. ANY UNUSUAL CONDITIONS SHALL BE REPORTED TO THE ATTENTION OF THE CONSTRUCTION MANAGER AND ENGINEER OF RECORD.

3. DESIGN AND CONSTRUCTION OF STRUCTURAL STEEL SHALL CONFORM TO THE AMERICAN INSTITUTE OF STEEL CONSTRUCTION "SPECIFICATION FOR THE DESIGN, FABRICATION AND ERECTION OF STRUCTURAL STEEL FOR BUILDINGS".

4. STRUCTURAL STEEL SHALL CONFORM TO ASTM A992 (Fy=50 ksi), MISCELLANEOUS STEEL SHALL CONFORM TO ASTM A36 UNLESS OTHERWISE INDICATED.

5. STEEL PIPE SHALL CONFORM TO ASTM A500 "COLD–FORMED WELDED & SEAMLESS CARBON STEEL STRUCTURAL TUBING", GRADE B, OR ASTM A53 PIPE STEEL BLACK AND HOT–DIPPED ZINC–COATED WELDED AND SEAMLESS TYPE E OR S, GRADE B. PIPE SIZES INDICATED ARE NOMINAL. ACTUAL OUTSIDE DIAMETER IS LARGER.

6. STRUCTURAL CONNECTION BOLTS SHALL BE HIGH STRENGTH BOLTS (BEARING TYPE) AND CONFORM TO ASTM A325 "HIGH STRENGTH BOLTS FOR STRUCTURAL JOINTS, INCLUDING SUITABLE NUTS AND PLAIN HARDENED WASHERS". ALL BOLTS SHALL BE 3/4" DIA UON.

7. ALL STEEL MATERIALS SHALL BE GALVANIZED AFTER FABRICATION IN ACCORDANCE WITH ASTM A123 "ZINC (HOT–DIP GALVANIZED) COATINGS ON IRON AND STEEL PRODUCTS", UNLESS OTHERWISE NOTED.

8. ALL BOLTS, ANCHORS AND MISCELLANEOUS HARDWARE SHALL BE GALVANIZED IN ACCORDANCE WITH ASTM A153 "ZINC–COATING (HOT–DIP) ON IRON AND STEEL HARDWARE", UNLESS OTHERWISE NOTED.

9. FIELD WELDS, DRILL HOLES, SAW CUTS AND ALL DAMAGED GALVANIZED SURFACES SHALL BE REPAIRED WITH AN ORGANIC ZINC REPAIR PAINT COMPLYING WITH REQUIREMENTS OF ASTM A780. GALVANIZING REPAIR PAINT SHALL HAVE 65 PERCENT ZINC BY WEIGHT, ZIRP BY DUNCAN GALVANIZING, GALVA BRIGHT PREMIUM BY CROWN OR EQUAL. THICKNESS OF APPLIED GALVANIZING REPAIR PAINT SHALL BE NOT NOT LESS THAN 4 COATS (ALLOW TIME TO DRY BETWEEN COATS) WITH A RESULTING COATING THICKNESS REQUIRED BY ASTM A123 OR A153 AS APPLICABLE.

10. CONTRACTOR SHALL COMPLY WITH AWS CODE FOR PROCEDURES, APPEARANCE AND QUALITY OF WELDS, AND FOR METHODS USED IN CORRECTING WELDING. ALL WELDERS AND WELDING PROCESSES SHALL BE QUALIFIED IN ACCORDANCE WITH AWS "STANDARD QUALIFICATION PROCEDURES". ALL WELDING SHALL BE DONE USING E70XX ELECTRODES AND WELDING SHALL CONFORM TO AISC AND DI.I. WHERE FILLET WELD SIZES ARE NOT SHOWN, PROVIDE THE MINIMUM SIZE PER TABLE J2.4 IN THE AISC "MANUAL OF STEEL CONSTRUCTION". 9TH EDITION.

11. INCORRECTLY FABRICATED, DAMAGED OR OTHERWISE MISFITTING OR NON–CONFORMING MATERIALS OR CONDITIONS SHALL BE REPORTED TO THE CONSTRUCTION MANAGER PRIOR TO REMEDIAL OR CORRECTIVE ACTION. ANY SUCH ACTION SHALL REQUIRE CONSTRUCTION MANAGER APPROVAL.

12. UNISTRUTS SHALL BE FORMED STEEL CHANNEL STRUT FRAMING AS MANUFACTURED BY UNISTRUT CORP., WAYNE, MI OR EQUAL. STRUT MEMBERS SHALL BE 1 5/8"x1 5/8"x12GA, UNLESS OTHERWISE NOTED, AND SHALL BE HOT–DIP GALVANIZED AFTER FABRICATION.

13. EPOXY ANCHOR ASSEMBLY SHALL CONSIST OF STAINLESS STEEL ANCHOR ROD WITH NUTS & WASHERS. AN INTERNALLY THREADED INSERT, A SCREEN TUBE AND A EPOXY ADHESIVE. THE ANCHORING SYSTEM SHALL BE THE HILTI–HIT HY–20 AND OR HY–150 SYSTEMS (AS SPECIFIED IN DWG.) OR ENGINEERS APPROVED EQUAL.

14. EXPANSION BOLTS SHALL CONFORM TO FEDERAL SPECIFICATION FF–S–325, GROUP II, TYPE 4, CLASS I, HILTI KWIK BOLT III OR APPROVED EQUAL. INSTALLATION SHALL BE IN ACCORDANCE WITH THE MANUFACTURER'S RECOMMENDATIONS.

15. LUMBER SHALL COMPLY WITH THE REQUIREMENTS OF THE AMERICAN INSTITUTE OF TIMBER CONSTRUCTION AND THE NATIONAL FOREST PRODUCTS ASSOCIATION'S NATIONAL DESIGN SPECIFICATION FOR WOOD CONSTRUCTION. ALL LUMBER SHALL BE PRESSURE TREATED AND SHALL BE STRUCTURAL GRADE NO. 2 OR BETTER.

16. WHERE ROOF PENETRATIONS ARE REQUIRED, THE CONTRACTOR SHALL CONTACT AND COORDINATE RELATED WORK WITH THE BUILDING OWNER AND THE EXISTING ROOF INSTALLER. WORK SHALL BE PERFORMED IN SUCH A MANNER AS TO NOT VOID THE EXISTING ROOF WARRANTY. ROOF SHALL BE WATERTIGHT.

17. ALL FIBERGLASS MEMBERS USED ARE AS MANUFACTURED BY STRONGWELL COMPANY OF BRISTOL, VA 24203. ALL DESIGN CRITERIA FOR THESE MEMBERS IS BASED ON INFORMATION PROVIDED IN THE DESIGN MANUAL. ALL REQUIREMENTS PUBLISHED IN SAID MANUAL MUST BE STRICTLY ADHERED TO.

18. NO MATERIALS TO BE ORDERED AND NO WORK TO BE COMPLETED UNTIL SHOP DRAWINGS HAVE BEEN REVIEWED AND APPROVED IN WRITING.

19. SUBCONTRACTOR SHALL FIREPROOF ALL STEEL TO PRE–EXISTING CONDITIONS.

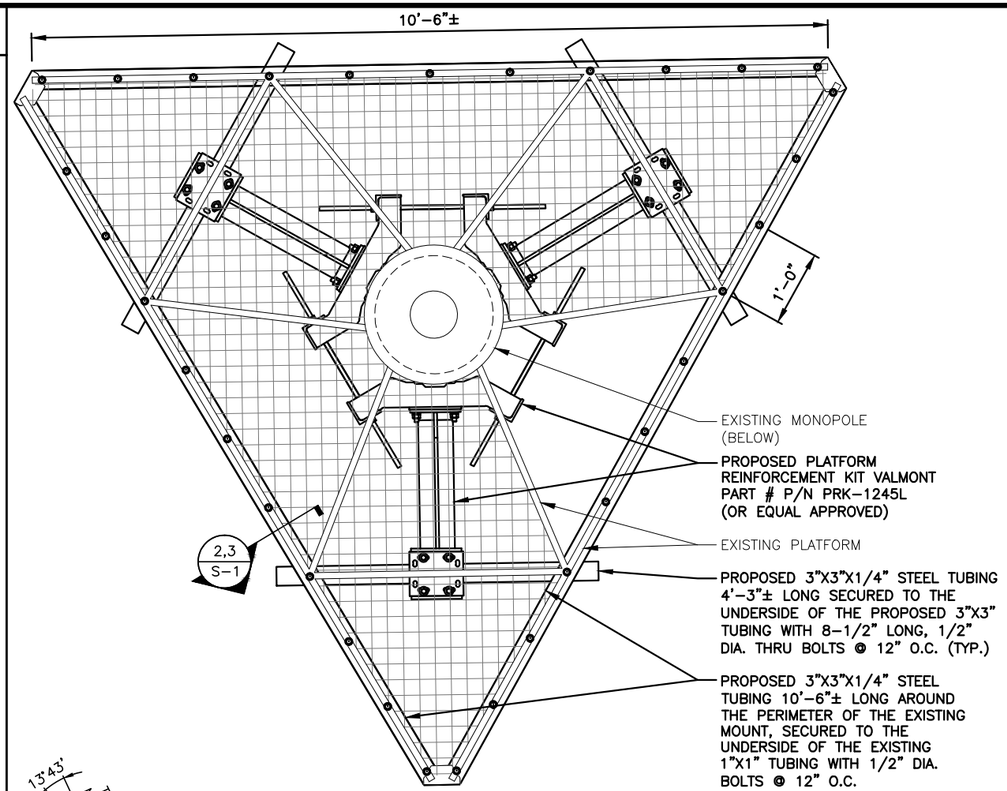

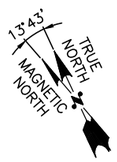

PROPOSED PLATFORM REINFORCEMENT DETAIL (1 / S–1)
22x34 SCALE: 1"=1'–0"
11x17 SCALE: 1/2"=1'–0"

GRAPHIC SCALE: 0 .5 1 2 3 FEET

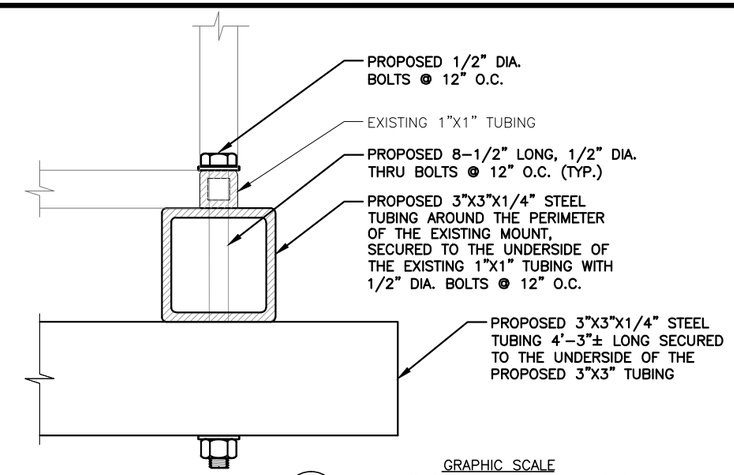

PROPOSED CONNECTION DETAIL (3 / S–1)
22x34 SCALE: 6"=1'–0"
11x17 SCALE: 3"=1'–0"

GRAPHIC SCALE: 0 0'–1" 0'–2" 0'–4" 0'–6"

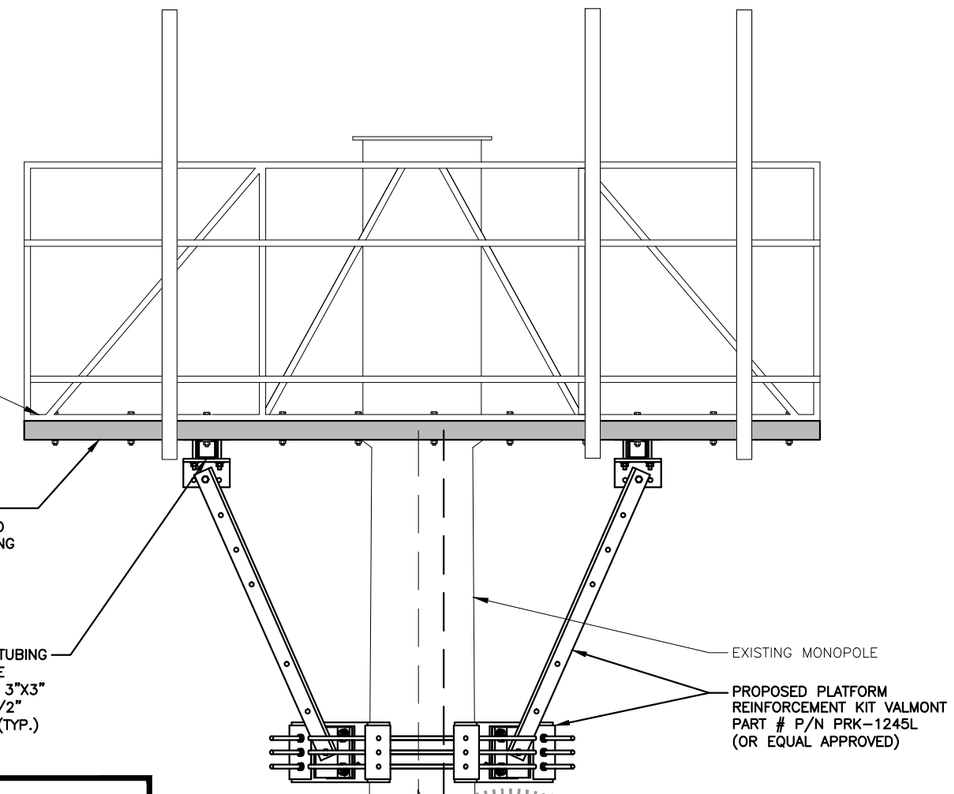

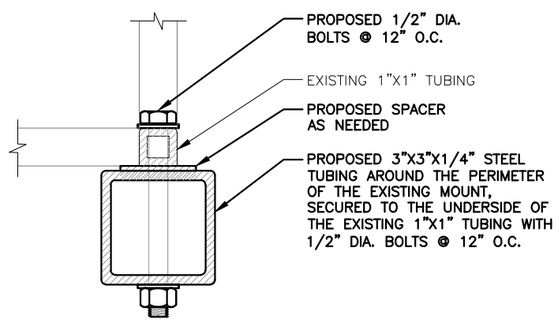

PROPOSED CONNECTION DETAIL (2 / S–1)
22x34 SCALE: 6"=1'–0"
11x17 SCALE: 3"=1'–0"

GRAPHIC SCALE: 0 0'–1" 0'–2" 0'–4" 0'–6"

NOTE:
AN ANALYSIS FOR THE CAPACITY OF THE EXISTING ANTENNA MOUNT TO SUPPORT THE PROPOSED LOADING HAS BEEN COMPLETED BY HUDSON DESIGN GROUP, LLC. DATED: JANUARY 12, 2017

PROPOSED PLATFORM REINFORCEMENT DETAIL (4 / S–1)
22x34 SCALE: 1"=1'–0"
11x17 SCALE: 1/2"=1'–0"

GRAPHIC SCALE: 0 .5 1 2 3 FEET

Hudson Design Group LLC
1600 OSGOOD STREET
BUILDING 20 NORTH, SUITE 3090
N. ANDOVER, MA 01845
TEL: (978) 557-5553
FAX: (978) 336-5586

smartlink
1997 ANNAPOLIS EXCHANGE PKWY
SUITE 200
ANNAPOLIS, MD 21401

SITE NUMBER: CTL01055
SITE NAME: BRISTOL
AMERICAN TOWER SITE ID: 302500
1 WILLIS STREET
BRISTOL, CT 06010
HARTFORD COUNTY

at&t
500 ENTERPRISE DRIVE, SUITE 3A
ROCKY HILL, CT 06067

NO.	DATE	REVISIONS	BY	CHK	APP'D
1	02/17/17	ISSUED FOR REVIEW	RP	JC	DPM
0	01/13/17	ISSUED FOR REVIEW	SB	HC	DPM

SCALE: AS SHOWN | DESIGNED BY: HC | DRAWN BY: RP

STATE OF CONNECTICUT — THIS DOCUMENT WAS PREPARED OR APPROVED BY ME AND THAT I AM A DULY LICENSED PROFESSIONAL ENGINEER UNDER THE LAWS OF THE STATE OF CONNECTICUT

AT&T
MOUNT MODIFICATION DETAILS
4C / MULTI CARRIER

SITE NUMBER	DRAWING NUMBER	REV
CTL01055	S–1	1

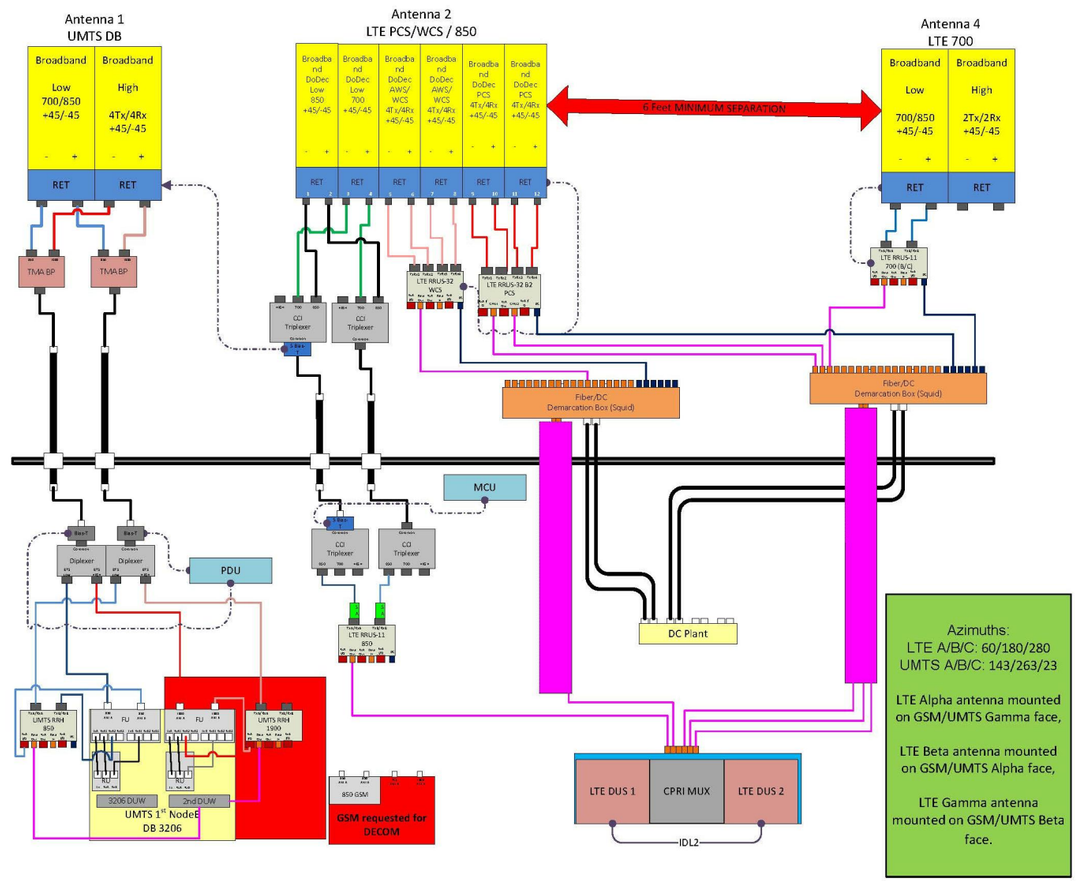

RF PLUMBING DIAGRAM (1 / RF–1)

SCALE: N.T.S

NOTE:
1. CONTRACTOR TO CONFIRM ALL PARTS.
2. INSTALL ALL EQUIPMENT TO MANUFACTURER'S RECOMMENDATIONS

NOTE:
REFER TO THE FINAL RF DATA SHEET FOR FINAL ANTENNA SETTINGS.

STATE OF CONNECTICUT · DEREK J. CREASEY · LICENSED PROFESSIONAL ENGINEER

Hudson Design Group LLC
1600 OSGOOD STREET
BUILDING 20 NORTH, SUITE 3090
N. ANDOVER, MA 01845
TEL: (978) 557-5553
FAX: (978) 336-5586

smartlink
1997 ANNAPOLIS EXCHANGE PKWY
SUITE 200
ANNAPOLIS, MD 21401

SITE NUMBER: CTL01055
SITE NAME: BRISTOL
AMERICAN TOWER SITE ID: 302500
1 WILLIS STREET
BRISTOL, CT 06010
HARTFORD COUNTY

at&t
500 ENTERPRISE DRIVE, SUITE 3A
ROCKY HILL, CT 06067

NO.	DATE	REVISIONS	BY	CHK	APP'D
1	02/17/17	ISSUED FOR REVIEW	RP	JC	DPM
0	01/13/17	ISSUED FOR REVIEW	SB	HC	DPM

SCALE: AS SHOWN | DESIGNED BY: HC | DRAWN BY: RP

AT&T

RF PLUMBING DIAGRAM
4C / MULTI CARRIER

SITE NUMBER	DRAWING NUMBER	REV
CTL01055	RF–1	1

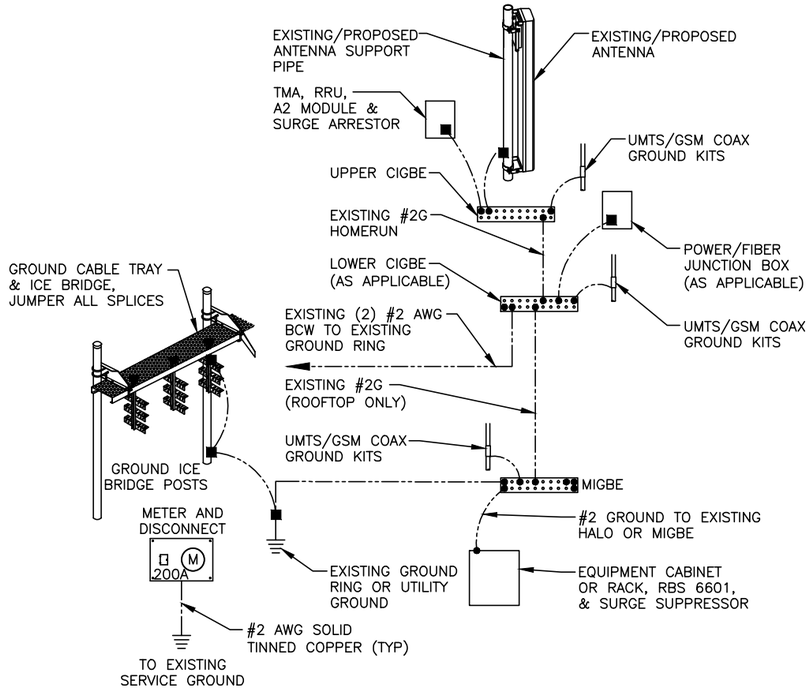

GROUNDING RISER DIAGRAM (1 / G–1)
SCALE: N.T.S

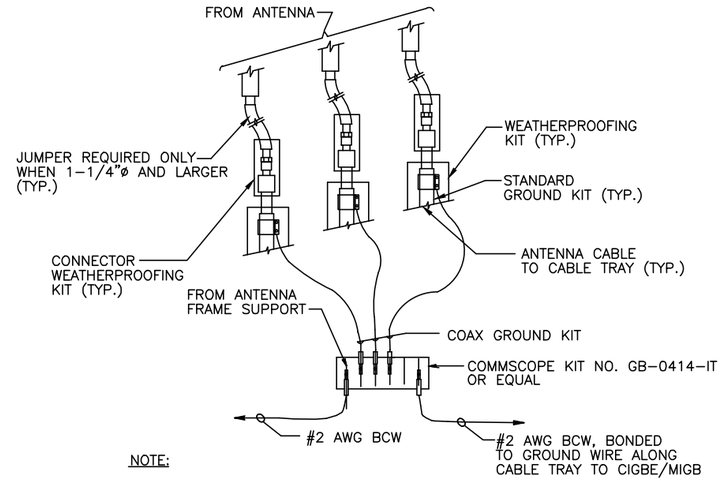

NOTE:

1. DO NOT INSTALL CABLE GROUND KIT AT A BEND AND ALWAYS DIRECT GROUND WIRE DOWN TO CIGBE.

GROUND WIRE TO GROUND BAR CONNECTION DETAIL (2 / G–1)
SCALE: N.T.S

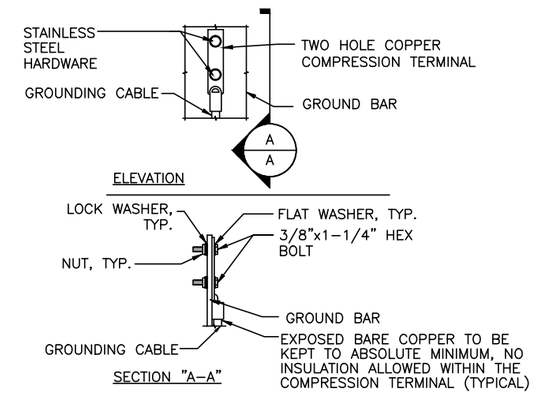

NOTE:

1. "DOUBLING UP" OR "STACKING" OF CONNECTION IS NOT PERMITTED.
2. OXIDE INHIBITING COMPOUND TO BE USED AT ALL LOCATION.
3. CADWELD DOWNLEADS FROM UPPER EGB, LOWER EGB, AND MGB

TYPICAL GROUND BAR CONNECTION DETAIL (3 / G–1)
SCALE: N.T.S

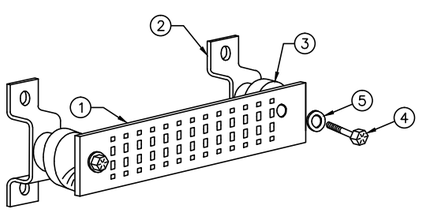

GROUND BAR - DETAIL (4 / G–1)
SCALE: N.T.S

EACH GROUND CONDUCTOR TERMINATING ON ANY GROUND BAR SHALL HAVE AN IDENTIFICATION TAG ATTACHED AT EACH END THAT WILL IDENTIFY ITS ORIGIN AND DESTINATION.

SECTION "P" – SURGE PRODUCERS

CABLE ENTRY PORTS (HATCH PLATES) (#2)
GENERATOR FRAMEWORK (IF AVAILABLE) (#2)
TELCO GROUND BAR
COMMERCIAL POWER COMMON NEUTRAL/GROUND BOND (#2)
+24V POWER SUPPLY RETURN BAR (#2)
–48V POWER SUPPLY RETURN BAR (#2)
RECTIFIER FRAMES.

SECTION "A" – SURGE ABSORBERS

INTERIOR GROUND RING (#2)
EXTERNAL EARTH GROUND FIELD (BURIED GROUND RING) (#2)
METALLIC COLD WATER PIPE (IF AVAILABLE) (#2)
BUILDING STEEL (IF AVAILABLE) (#2)

Hudson Design Group LLC
1600 OSGOOD STREET
BUILDING 20 NORTH, SUITE 3090
N. ANDOVER, MA 01845
TEL: (978) 557-5553
FAX: (978) 336-5586

smartlink
1997 ANNAPOLIS EXCHANGE PKWY
SUITE 200
ANNAPOLIS, MD 21401

SITE NUMBER: CTL01055
SITE NAME: BRISTOL
AMERICAN TOWER SITE ID: 302500
1 WILLIS STREET
BRISTOL, CT 06010
HARTFORD COUNTY

at&t
500 ENTERPRISE DRIVE, SUITE 3A
ROCKY HILL, CT 06067

NO.	DATE	REVISIONS	BY	CHK	APP'D
1	02/17/17	ISSUED FOR REVIEW	RP	JC	DPM
0	01/13/17	ISSUED FOR REVIEW	SB	HC	DPM

SCALE: AS SHOWN | DESIGNED BY: HC | DRAWN BY: RP

STATE OF CONNECTICUT · DEREK J. CREASEY · 18,255 · LICENSED PROFESSIONAL ENGINEER

AT&T

GROUNDING DETAILS
4C / MULTI CARRIER

SITE NUMBER	DRAWING NUMBER	REV
CTL01055	G–1	1