AMERICAN TOWER®
CORPORATION

Post Modification Structural Analysis Report

Structure	:	**120 ft Monopole**
ATC Site Name	:	**Brst - Bristol, CT**
ATC Site Number	:	**302500**
Engineering Number	:	**644903Z9**
Proposed Carrier	:	**AT&T Mobility**
Carrier Site Name	:	**Bristol**
Carrier Site Number	:	**CTL01055/FA#10035029**
Site Location	:	**790 Willis Street** **Bristol, CT 06010-7269** **41.649083,-72.948000**
County	:	**Hartford**
Date	:	**May 24, 2016**
Max Usage	:	**99%**
Result	:	**Pass – Pending Modifications**

Reviewed by:
Scott Wirgau, PE
Structural Team Leader

Prepared By:
Emily M. Basile, E.I.
Structural Engineer I

STATE OF CONNECTICUT
SCOTT A. WIRGAU
30575
LICENSED
PROFESSIONAL ENGINEER

May 24 2016 3:24 PM

COA: PEC.0001553

Table of Contents

Introduction 1

Supporting Documents 1

Analysis 1

Conclusion 1

Existing and Reserved Equipment 2

Equipment to be Removed 2

Proposed Equipment 2

Structure Usages 3

Foundations 3

Deflection, Twist, and Sway 3

Standard Conditions 4

Calculations ..... Attached

Introduction

The purpose of this report is to summarize results of a structural analysis performed on the 120 ft monopole to reflect the change in loading by AT&T Mobility.

Supporting Documents

Tower Drawings	Valmont Drawing #DC1671Z, dated December 29, 1995
Foundation Drawing	FDH Project #01-0612, dated June 23, 2001
Geotechnical Report	Johnson Soils Job #15220-B, dated May 21, 2002
Modifications	Spectrasite Site #CT-0036, dated June 12, 2002 ATC Project #64490338, dated May 5, 2016 [Pending]

Analysis

The tower was analyzed using American Tower Corporation's tower analysis software. This program considers an elastic three-dimensional model and second-order effects per ANSI/TIA-222.

Basic Wind Speed:	95 mph (3-Second Gust)
Basic Wind Speed w/ Ice:	50 mph (3-Second Gust) w/ 1" radial ice concurrent
Code:	ANSI/TIA-222-G / 2003 IBC w/ 2005 CT Supplement & 2009 CT Amendment
Structure Class:	II
Exposure Category:	B
Topographic Category:	3
Crest Height:	198 ft
Spectral Response:	$Ss = 0.19$, $S_1 = 0.06$
Site Class:	D - Stiff Soil

Conclusion

Based on the analysis results, the structure meets the requirements per the applicable codes listed above. The tower and foundation can support the equipment as described in this report once the pending modifications have been installed. Failure to install the modifications listed will void the results of this analysis.

If you have any questions or require additional information, please contact American Tower via email at Engineering@americantower.com. Please include the American Tower site name, site number, and engineering number in the subject line for any questions.

Existing and Reserved Equipment

Elevation[1] (ft)		Qty	Antenna	Mount Type	Lines	Carrier
Mount	RAD					
120.0	124.0	6	Ericsson RRUS-11 1900MHz	Platform w/ Handrails	(2) 0.78" 8 AWG 6 (6) 1 1/4" Coax (1) 0.39" Fiber Trunk (1) 7/8" Coax	AT&T Mobility
		1	2' Std. Dish			
		3	Powerwave 7770.00			
		1	KMW AM-X-CD-16-65-00T-RET			
		2	Andrew SBNH-1D6565C (60.8 lbs)			
110.0	110.0	8	Andrew DB844H90E-XY	T-Arm w/ Working Platform	(4) 1 1/4" Coax (4) 7/8" Coax	Sprint Nextel
98.0	101.0	3	RFS APXV18-206517S-C	Flush	(6) 1 5/8" Coax	Metro PCS
90.0	93.0	3	Argus LLPX310R	Side Arms	(6) 5/16" Coax (4) 1/2" Coax (2) 2" Conduit	Clearwire
	91.0	4	Horizon Compact			
		3	NextNet BTS-2500			
		1	DragonWave A-ANT-18G-2-C			
		3	DragonWave A-ANT-11G-2.5-C			

Equipment to be Removed

Elevation[1] (ft)		Qty	Antenna	Mount Type	Lines	Carrier
Mount	RAD					
120.0	124.0	3	Powerwave 7770.00	-	(6) 1 1/4" Coax	AT&T Mobility
		6	Powerwave LGP2140X			
		1	Raycap DC6-48-60-18-8F.			

Proposed Equipment

Elevation[1] (ft)		Qty	Antenna	Mount Type	Lines	Carrier
Mount	RAD					
120.0	124.0	3	CCI DTMABP7819VG12A	Platform w/ Handrails	(2) 0.78" 8 AWG 6 (1) 0.39" Fiber Trunk (1) 3" Conduit	AT&T Mobility
		2	Raycap DC6-48-60-18-8F			
		3	Ericsson RRUS A2			
		3	Ericsson RRUS 32 (50.8 lbs)			
		1	Quintel QS66512-3 (112 lbs.)			
		2	CCI TPA-65R-LCUUUU-H8			

[1]Mount elevation is defined as height above bottom of steel structure to the bottom of mount, RAD elevation is defined as center of antenna above ground level (AGL).

Install proposed coax inside the pole shaft.

Structure Usages

Structural Component	Controlling Usage	Pass/Fail
Anchor Bolts	54%	Pass
Shaft	84%	Pass
Base Plate	40%	Pass
Reinforcement	99%	Pass

Foundations

Reaction Component	Analysis Reactions	% of Usage
Moment (Kips-Ft)	2,095.5	87%
Axial (Kips)	58.3	16%
Shear (Kips)	26.9	15%

The structure base reactions resulting from this analysis were found to be acceptable through analysis based on geotechnical and foundation information, therefore no modification or reinforcement of the foundation will be required.

Deflection and Sway*

Antenna Elevation (ft)	Antenna	Carrier	Deflection (ft)	Sway (Rotation) (°)
120.0	CCI DTMABP7819VG12A	AT&T Mobility	2.116	2.938
	Raycap DC6-48-60-18-8F			
	Ericsson RRUS A2			
	Ericsson RRUS 32 (50.8 lbs)			
	2' Std. Dish			
	Quintel QS66512-3 (112 lbs.)			
	CCI TPA-65R-LCUUUU-H8			
90.0	DragonWave A-ANT-18G-2-C	Clearwire	1.221	1.468
	DragonWave A-ANT-11G-2.5-C			

***Deflection and Sway was evaluated considering a design wind speed of 60 mph (3-Second Gust) per ANSI/TIA-222-G**

AMERICAN TOWER®
CORPORATION

Standard Conditions

All engineering services are performed on the basis that the information used is current and correct. This information may consist of, but is not necessary limited, to:

-- Information supplied by the client regarding the structure itself, antenna, mounts and feed line loading on the structure and its components, or other relevant information.

-- Information from drawings in the possession of American Tower Corporation, or generated by field inspections or measurements of the structure.

It is the responsibility of the client to ensure that the information provided to A.T. Engineering Service, PLLC and used in the performance of our engineering services is correct and complete. In the absence of information to the contrary, we assume that all structures were constructed in accordance with the drawings and specifications and that their capacity has not significantly changed from the "as new" condition.

Unless explicitly agreed by both the client and American Tower Corporation, all services will be performed in accordance with the current revision of ANSI/TIA -222. The design basic wind speed will be determined based on the minimum basic wind speed as prescribed in ANSI/TIA-222. Although every effort is taken to ensure that the loading considered is adequate to meet the requirements of all applicable regulatory entities, we can provide no assurance to meet any other local and state codes or requirements. If wind and ice loads or other relevant parameters are to be different from the minimum values recommended by the codes, the client shall specify the exact requirement.

All services are performed, results obtained, and recommendations made in accordance with generally accepted engineering principles and practices. A.T. Engineering Service, PLLC is not responsible for the conclusions, opinions and recommendations made by others based on the information we supply.

© 2007 - 2016 by ATC IP LLC. All rights reserved.

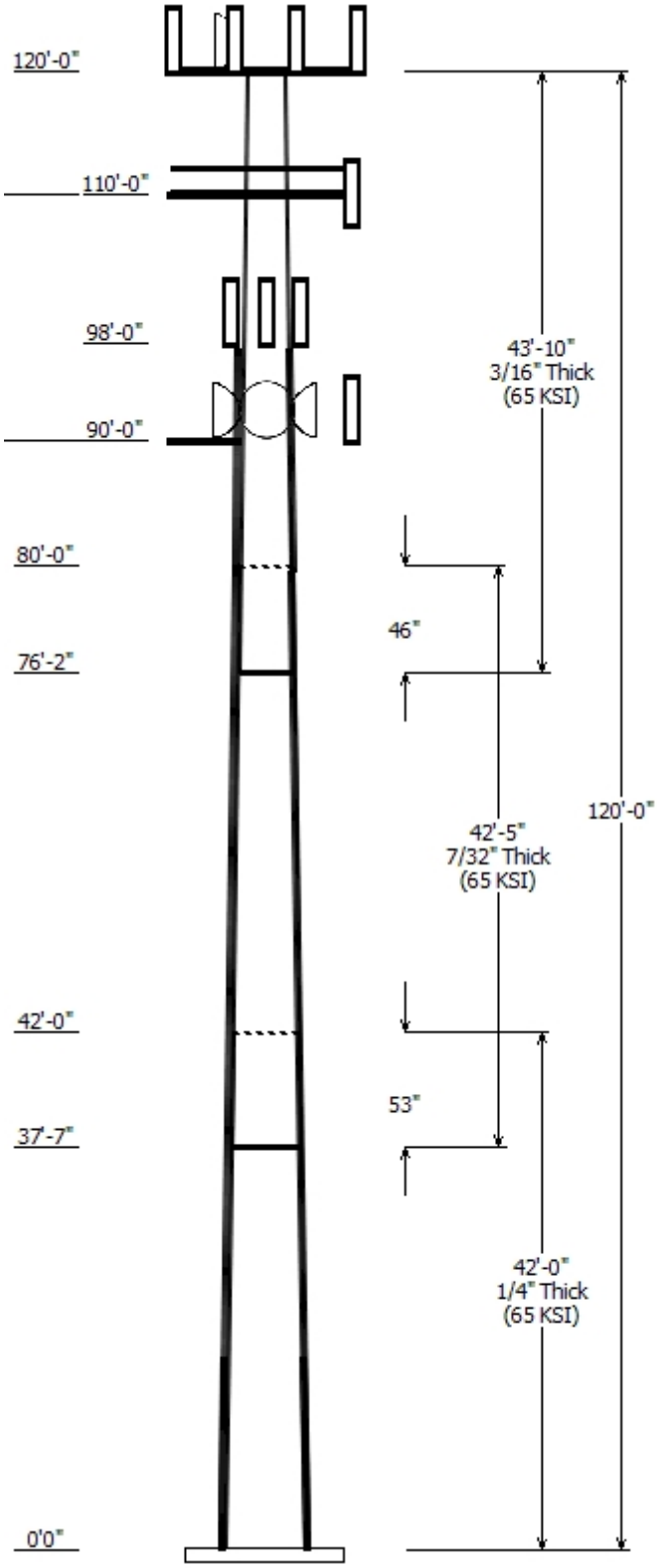

Job Information

Pole :	302500	Code:	ANSI/TIA-222-G
Description :	120' Valmont Monopole		
Client :	AT&T MOBILITY	Struct Class :	II
Location :	Brst - Bristol, CT		
Shape :	12 Sides	Exposure :	B
Height :	120.00 (ft)	Topo :	3
Base Elev (ft):	0.00		
Taper:	0.14503:(in/ft)		

Sections Properties

Shaft Section	Length (ft)	Diameter (in) Accross Flats Top	Bottom	Thick (in)	Joint Type	Overlap Length (in)	Taper (in/ft)	Steel Grade (ksi)
1	42.000	24.90	31.00	0.250		0.000	0.145000	65
2	42.417	19.83	25.98	0.219	Slip Joint	53.000	0.145000	65
3	43.833	14.41	20.76	0.188	Slip Joint	46.000	0.145000	65

Discrete Appurtenance

Attach Elev (ft)	Force Elev (ft)	Qty	Description
120.000	124.000	3	CCI DTMABP7819VG12A
120.000	124.000	3	Powerwave Allgon 7770.00
120.000	124.000	2	CCI TPA-65R-LCUUUU-H8
120.000	124.000	2	Andrew SBNH-1D6565C (60.8
120.000	124.000	1	Quintel QS66512-3 (112 lbs.)
120.000	124.000	1	KMW AM-X-CD-16-65-00T-RET
120.000	124.000	3	Ericsson RRUS 32 (50.8 lbs)
120.000	124.000	3	Ericsson RRUS A2
120.000	124.000	1	2' Std. Dish
120.000	124.000	2	Raycap DC6-48-60-18-8F
120.000	124.000	6	Ericsson RRUS-11 1900 MHz
120.000	120.000	1	Flat Platform w/ Handrails
110.000	110.000	1	T-Arm w/ Working Platform
110.000	110.000	2	Round T-Arm
110.000	110.000	8	Andrew DB844H90E-XY
98.000	101.000	3	RFS APXV18-206517S-C
90.000	91.000	3	DragonWave A-ANT-11G-2.5-C
90.000	90.000	1	Side Arms
90.000	93.000	3	Argus LLPX310R
90.000	91.000	3	NextNet BTS-2500
90.000	91.000	4	Horizon Compact
90.000	91.000	1	DragonWave A-ANT-18G-2-C

Linear Appurtenance

Elev (ft) From	To	Description	Exposed To Wind
92.000	102.0	#20	Yes
22.500	92.000	#20	Yes
7.000	98.000	1 5/8" Coax	Yes
7.000	90.000	1/2" Coax	Yes
7.000	90.000	2" Conduit	Yes
7.000	90.000	5/16" Coax	Yes
7.000	110.0	1 1/4" Coax	No
7.000	110.0	7/8" Coax	No
7.000	120.0	0.39" Fiber Trunk	No
7.000	120.0	0.39" Fiber Trunk	No
7.000	120.0	0.78" 8 AWG 6	No
7.000	120.0	0.78" 8 AWG 6	No
7.000	120.0	1 1/4" Coax	No
7.000	120.0	3" Conduit	No

7.000	120.0	7/8"	Coax	No
0.000	22.500	#20		Yes

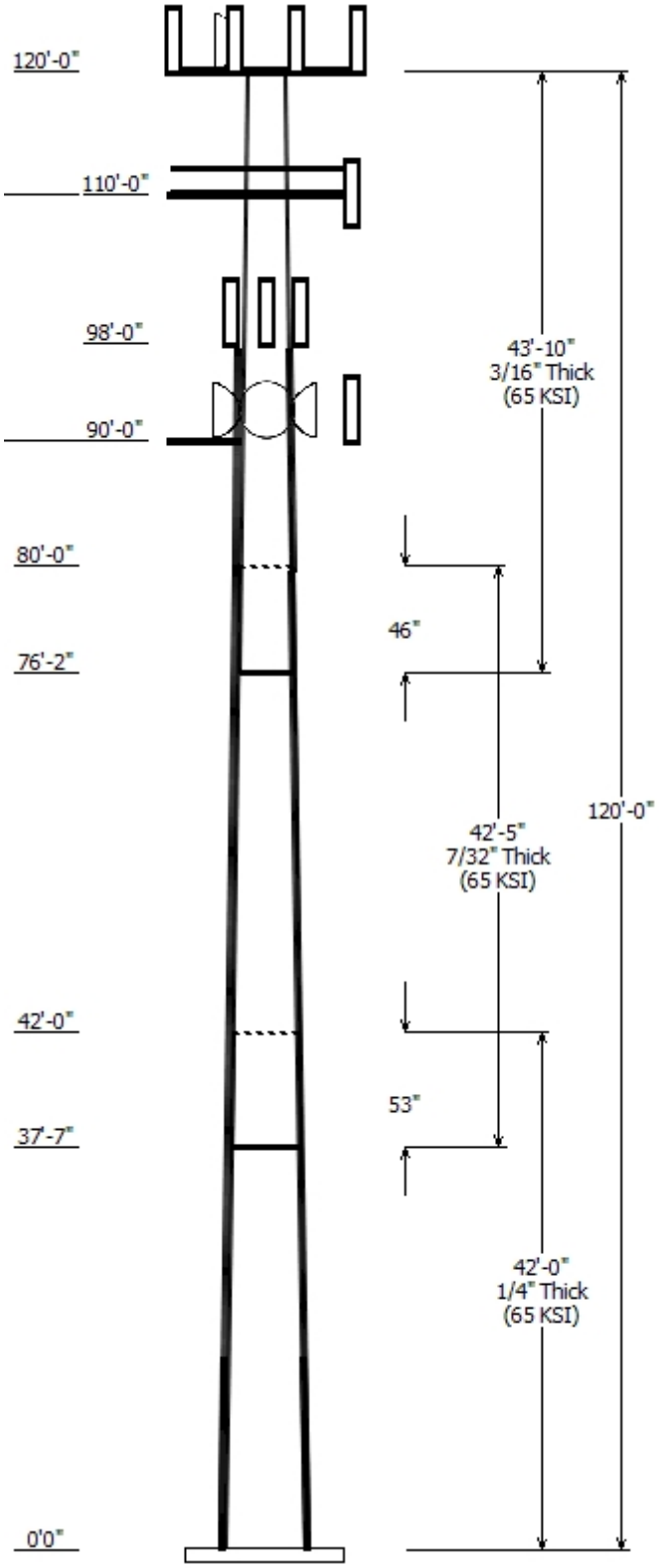

Load Cases

1.2D + 1.6W	95 mph with No Ice
0.9D + 1.6W	95 mph with No Ice (Reduced DL)
1.2D + 1.0Di + 1.0Wi	50 mph with 1.00 in Radial Ice
(1.2 + 0.2Sds) * DL + E	Seismic Equivalent Lateral Forces Method
(1.2 + 0.2Sds) * DL + E	Seismic Equivalent Modal Analysis Method
(0.9 - 0.2Sds) * DL + E	Seismic (Reduced DL) Equivalent Lateral
(0.9 - 0.2Sds) * DL + E	Seismic (Reduced DL) Equivalent Modal
1.0D + 1.0W	Serviceability 60 mph

Reactions

Load Case	Moment (kip-ft)	Shear (kip)	Axial (kip)
1.2D + 1.6W	2095.45	26.89	27.35
0.9D + 1.6W	2072.43	26.88	20.50
1.2D + 1.0Di + 1.0Wi	600.84	7.03	58.34
(1.2 + 0.2Sds) * DL + E ELFM	95.59	0.96	27.61
(1.2 + 0.2Sds) * DL + E EMAM	172.30	1.66	27.61
(0.9 - 0.2Sds) * DL + E ELFM	94.22	0.96	19.17
(0.9 - 0.2Sds) * DL + E EMAM	169.61	1.66	19.17
1.0D + 1.0W	530.31	6.90	22.82

Dish Deflections

Load Case	Attach Elev (ft)	Deflection (in)	Rotation (deg)
1.0D + 1.0W	90.00	14.657	1.468
1.0D + 1.0W	90.00	14.657	1.468
1.0D + 1.0W	120.00	25.396	1.938

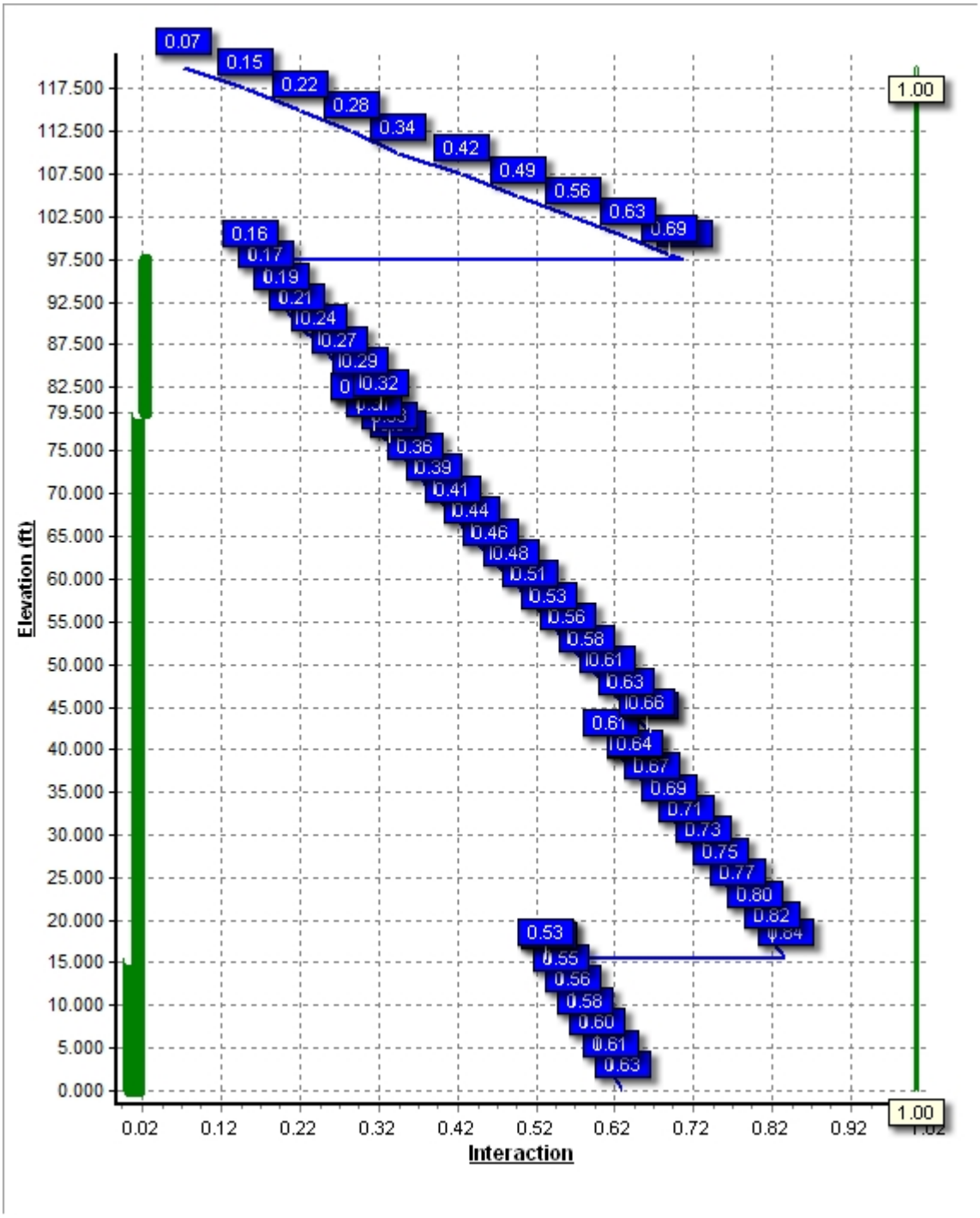
Elevation (ft)
Interaction
117.500
112.500
107.500
102.500
97.500
92.500
87.500
82.500
79.500
75.000
70.000
65.000
60.000
55.000
50.000
45.000
40.000
35.000
30.000
25.000
20.000
15.000
10.000
5.000
0.000
0.02
0.12
0.22
0.32
0.42
0.52
0.62
0.72
0.82
0.92
1.00
1.00

Site Number:	**302500**	**Code:**	**ANSI/TIA-222-G**	*© 2007 - 2016 by ATC IP LLC. All rights reserved.*
Site Name:	**Brst - Bristol, CT**	**Engineering Number:**	**644903Z9**	**5/24/2016 11:09:02 AM**
Customer:	**AT&T MOBILITY**			

Analysis Parameters

Location:	**Hartford County, CT**		
Code:	**ANSI/TIA-222-G**	**Height (ft):**	**120**
Shape:	**12 Sides**	**Base Diameter (in):**	**31.00**
Pole Type:	**Taper**	**Top Diameter (in):**	**14.41**
Pole Manfacturer:	**Valmont**	**Taper (in/ft) :**	**0.145**

Ice & Wind Parameters

Structure Class:	**II**	**Design Wind Speed Without Ice:**	**95 mph**
Exposure Category:	**B**	**Design Wind Speed With Ice:**	**50 mph**
Topographic Category:	**3**	**Operational Wind Speed:**	**60 mph**
Crest Height:	**197.5 ft**	**Design Ice Thickness:**	**1.00 in**

Seismic Parameters

Analysis Method: **Equivalent Modal Analysis & Equivalent Lateral Force Methods**

Site Class: **D - Stiff Soil**

Period Based on Rayleigh Method (sec): **2.12**

T_L (sec):	**6**	**p:**	**1.3**	**C_s:**	**0.032**
S_s:	**0.185**	**S_1:**	**0.064**	**C_s Max:**	**0.032**
F_a:	**1.600**	**F_v:**	**2.400**	**C_s Min:**	**0.030**
S_{ds}:	**0.197**	**S_{d1}:**	**0.102**		

Load Cases

1.2D + 1.6W	**95 mph with No Ice**
0.9D + 1.6W	**95 mph with No Ice (Reduced DL)**
1.2D + 1.0Di + 1.0Wi	**50 mph with 1.00 in Radial Ice**
(1.2 + 0.2Sds) * DL + E ELFM	**Seismic Equivalent Lateral Forces Method**
(1.2 + 0.2Sds) * DL + E EMAM	**Seismic Equivalent Modal Analysis Method**
(0.9 - 0.2Sds) * DL + E ELFM	**Seismic (Reduced DL) Equivalent Lateral Forces Method**
(0.9 - 0.2Sds) * DL + E EMAM	**Seismic (Reduced DL) Equivalent Modal Analysis Method**
1.0D + 1.0W	**Serviceability 60 mph**

Site Number:	**302500**	**Code: ANSI/TIA-222-G**	*© 2007 - 2016 by ATC IP LLC. All rights reserved.*
Site Name:	**Brst - Bristol, CT**	**Engineering Number: 644903Z9**	**5/24/2016 11:09:02 AM**
Customer:	**AT&T MOBILITY**		

Shaft Section Properties

							Bottom						Top						
Sect Info	Length (ft)	Thick (in)	Fy (ksi)	Joint Type	Slip Joint Len (in)	Weight (lb)	Dia (in)	Elev (ft)	Area (in^2)	Ix (in^4)	W/t Ratio	D/t Ratio	Dia (in)	Elev (ft)	Area (in^2)	Ix (in^4)	W/t Ratio	D/t Ratio	Taper (in/ft)
1-12	42.000	0.2500	65		0.00	3,187	31.00	0.00	24.75	2987.6	30.55	124.00	24.90	42.00	19.85	1540.6	24.02	99.63	0.145033
2-12	42.417	0.2190	65	Slip	53.00	2,310	25.98	37.58	18.17	1540.1	29.12	118.66	19.83	80.00	13.83	679.4	21.59	90.57	0.145033
3-12	43.833	0.1880	65	Slip	46.00	1,571	20.76	76.17	12.46	673.4	26.92	110.46	14.41	120.00	8.61	222.3	17.86	76.65	0.145033
				Shaft Weight		7,068													

Discrete Appurtenance Properties

Attach Elev (ft)	Description	Qty	No Ice Weight (lb)	No Ice EPAa (sf)	No Ice Orientation Factor	Ice Weight (lb)	Ice EPAa (sf)	Ice Orientation Factor	Distance From Face (ft)	Vert Ecc (ft)
120.00	2' Std. Dish	1	14.00	5.230	1.00	93.43	7.450	1.00	0.000	4.000
120.00	Andrew SBNH-1D6565C (60.8	2	60.80	11.450	0.70	467.99	13.849	0.70	0.000	4.000
120.00	CCI DTMABP7819VG12A	3	19.20	0.970	0.50	75.78	1.612	0.50	0.000	4.000
120.00	CCI TPA-65R-LCUUUU-H8	2	82.10	13.300	0.69	559.63	15.717	0.69	0.000	4.000
120.00	Ericsson RRUS 32 (50.8 lbs)	3	50.80	2.690	0.50	186.18	3.763	0.50	0.000	4.000
120.00	Ericsson RRUS A2	3	15.00	1.600	0.50	67.04	2.798	0.50	0.000	4.000
120.00	Ericsson RRUS-11 1900 MHz	6	44.00	2.520	0.50	171.68	3.494	0.50	0.000	4.000
120.00	Flat Platform w/ Handrails	1	2000.00	42.400	1.00	4,037.26	72.464	1.00	0.000	0.000
120.00	KMW AM-X-CD-16-65-00T-	1	48.50	8.020	0.67	342.51	9.925	0.67	0.000	4.000
120.00	Powerwave Allgon 7770.00	3	35.00	5.510	0.65	247.71	7.067	0.65	0.000	4.000
120.00	Quintel QS66512-3 (112 lbs.)	1	112.00	8.130	0.74	461.97	10.041	0.74	0.000	4.000
120.00	Raycap DC6-48-60-18-8F	2	20.00	1.110	1.00	147.78	2.829	1.00	0.000	4.000
110.00	Andrew DB844H90E-XY	8	14.00	3.610	0.74	189.69	4.943	0.74	0.000	0.000
110.00	Round T-Arm	2	250.00	9.700	0.67	549.75	21.524	0.67	0.000	0.000
110.00	T-Arm w/ Working Platform	1	300.00	14.400	0.67	827.56	38.140	0.67	0.000	0.000
98.00	RFS APXV18-206517S-C	3	26.40	5.170	0.68	217.00	6.985	0.68	0.000	3.000
90.00	Argus LLPX310R	3	28.60	4.290	0.63	199.42	5.618	0.63	0.000	3.000
90.00	DragonWave A-ANT-11G-2.5-	3	47.60	8.670	1.00	230.63	11.150	1.00	0.000	1.000
90.00	DragonWave A-ANT-18G-2-C	1	27.10	4.690	1.00	167.18	6.519	1.00	0.000	1.000
90.00	Horizon Compact	4	10.60	0.430	0.50	61.72	0.826	0.50	0.000	1.000
90.00	NextNet BTS-2500	3	35.00	1.820	0.50	128.67	2.685	0.50	0.000	1.000
90.00	Side Arms	1	560.00	8.500	1.00	1,232.01	18.700	1.00	0.000	0.000
	Totals	57	5078.60			17,464.00			Number of Loadings :	22

Linear Appurtenance Properties

Elev From (ft)	Elev To (ft)	Qty	Description	Coax Diameter (in)	Coax Weight (lb/ft)	Flat	Projected Width (in)	Exposed To Wind	Carrier
7.00	120.00	1	0.39" Fiber Trunk	0.39	0.07	N	0.00	N	AT&T Mobility
7.00	120.00	1	0.39" Fiber Trunk	0.39	0.07	N	0.00	N	AT&T Mobility
7.00	120.00	2	0.78" 8 AWG 6	0.78	0.59	N	0.00	N	AT&T Mobility
7.00	120.00	2	0.78" 8 AWG 6	0.78	0.59	N	0.00	N	AT&T Mobility
7.00	120.00	6	1 1/4" Coax	1.55	0.63	N	0.00	N	AT&T Mobility
7.00	120.00	1	3" Conduit	3.50	7.58	N	0.00	N	AT&T Mobility
7.00	120.00	1	7/8" Coax	1.09	0.33	N	0.00	N	AT&T Mobility
7.00	110.00	4	1 1/4" Coax	1.55	0.63	N	0.00	N	Sprint Nextel
7.00	110.00	4	7/8" Coax	1.09	0.33	N	0.00	N	Sprint Nextel
92.00	102.00	4	#20 Reinforcement	2.50	0.00	N	8.00	Y	--
7.00	98.00	6	1 5/8" Coax	1.98	0.82	N	0.00	Y	Metro PCS
22.50	92.00	4	#20 Reinforcement	2.50	0.00	N	8.00	Y	--
7.00	90.00	4	1/2" Coax	0.63	0.15	N	0.00	Y	Clearwire

© 2007 - 2016 by ATC IP LLC. All rights reserved.

7.00	90.00	2	2" Conduit	2.38	3.65	N	0.00	Y	Clearwire
7.00	90.00	6	5/16" Coax	0.31	0.05	N	0.00	Y	Clearwire
0.00	22.50	8	#20 Reinforcement	2.50	0.00	N	8.00	Y	--

Additional Steel

Elev From (ft)	Elev To (ft)	Qty	Description	Fy (ksi)	Offset (in)	— Intermediate Connections — Description	Spacing (in)	Len (in)	Connectors	Continuation?
0.00	15.50	4	SOL #20 All Thread	80	2.19	6" Angle Bracket	30.0	3.31	5/8" A36 U-Bolt	No
0.00	79.50	4	SOL #20 All Thread	80	2.19	6" Angle Bracket	30.0	3.31	5/8" A36 U-Bolt	Yes
79.50	97.50	4	SOL #20 All Thread	80	2.19	6" Angle Bracket	30.0	3.31	5/8" A36 U-Bolt	Yes

 © 2007 - 2016 by ATC IP LLC. All rights reserved.

Segment Properties (Max Len : 2. ft)

Seg Top Elev (ft)	Description	Thick (in)	Flat Dia (in)	Area (in^2)	Ix (in^4)	W/t Ratio	D/t Ratio	Fy (ksi)	S (in^3)	Z (in^3)	Weight (lb)	Additional Reinforcing Area (in^2)	Additional Reinforcing Ix (in^4)	Additional Reinforcing Weight (lb)
0.00		0.2500	31.000	24.754	2,987.6	30.55	124.00	71.4	186.2	0.0	0.0	39.28	7,139	0.0
2.50		0.2500	30.637	24.462	2,883.1	30.16	122.55	71.8	181.8	0.0	209.3	39.28	7,001	334.0
5.00		0.2500	30.275	24.170	2,781.1	29.77	121.10	72.2	177.5	0.0	206.9	39.28	6,865	334.0
7.50		0.2500	29.912	23.878	2,681.6	29.38	119.65	72.7	173.2	0.0	204.4	39.28	6,731	334.0
10.00		0.2500	29.550	23.586	2,584.5	28.99	118.20	73.1	169.0	0.0	201.9	39.28	6,597	334.0
12.50		0.2500	29.187	23.294	2,489.7	28.60	116.75	73.5	164.8	0.0	199.4	39.28	6,465	334.0
15.00		0.2500	28.825	23.002	2,397.3	28.21	115.30	73.9	160.7	0.0	196.9	39.28	6,335	334.0
15.50	Reinf. Top	0.2500	28.752	22.944	2,379.1	28.14	115.01	74.0	159.9	0.0	39.1	39.28	6,309	66.8
17.50		0.2500	28.462	22.711	2,307.2	27.83	113.85	74.4	156.6	0.0	155.4	19.64	3,073	133.6
20.00		0.2500	28.099	22.419	2,219.4	27.44	112.40	74.8	152.6	0.0	192.0	19.64	3,010	167.0
22.50		0.2500	27.737	22.127	2,133.8	27.05	110.95	75.2	148.6	0.0	189.5	19.64	2,948	167.0
25.00		0.2500	27.374	21.835	2,050.5	26.66	109.50	75.6	144.7	0.0	187.0	19.64	2,887	167.0
27.50		0.2500	27.012	21.543	1,969.3	26.27	108.05	76.1	140.8	0.0	184.5	19.64	2,826	167.0
30.00		0.2500	26.649	21.251	1,890.4	25.88	106.60	76.5	137.0	0.0	182.0	19.64	2,766	167.0
32.50		0.2500	26.286	20.959	1,813.5	25.49	105.15	76.9	133.3	0.0	179.5	19.64	2,707	167.0
35.00		0.2500	25.924	20.667	1,738.8	25.11	103.70	77.3	129.6	0.0	177.1	19.64	2,648	167.0
37.50		0.2500	25.561	20.376	1,666.2	24.72	102.25	77.8	125.9	0.0	174.6	19.64	2,590	167.0
37.58	Bot - Section 2	0.2500	25.549	20.366	1,663.8	24.70	102.20	77.8	125.8	0.0	5.8	19.64	2,588	5.6
40.00		0.2500	25.199	20.084	1,595.6	24.33	100.79	78.2	122.3	0.0	314.7	19.64	2,602	161.4
42.00	Top - Section 1	0.2190	25.347	17.719	1,428.0	28.33	115.74	73.8	108.8	0.0	257.2	19.64	2,556	133.6
42.50		0.2190	25.274	17.668	1,415.7	28.24	115.41	73.9	108.2	0.0	30.1	19.64	2,545	33.4
45.00		0.2190	24.911	17.413	1,355.1	27.80	113.75	74.4	105.1	0.0	149.2	19.64	2,488	167.0
47.50		0.2190	24.549	17.157	1,296.3	27.36	112.10	74.9	102.0	0.0	147.0	19.64	2,432	167.0
50.00		0.2190	24.186	16.901	1,239.2	26.91	110.44	75.4	99.0	0.0	144.9	19.64	2,376	167.0
52.50		0.2190	23.824	16.646	1,183.8	26.47	108.78	75.8	96.0	0.0	142.7	19.64	2,321	167.0
55.00		0.2190	23.461	16.390	1,130.1	26.03	107.13	76.3	93.1	0.0	140.5	19.64	2,267	167.0
57.50		0.2190	23.099	16.134	1,078.0	25.58	105.47	76.8	90.2	0.0	138.3	19.64	2,213	167.0
60.00		0.2190	22.736	15.879	1,027.6	25.14	103.82	77.3	87.3	0.0	136.2	19.64	2,160	167.0
62.50		0.2190	22.373	15.623	978.7	24.69	102.16	77.8	84.5	0.0	134.0	19.64	2,108	167.0
65.00		0.2190	22.011	15.367	931.5	24.25	100.51	78.3	81.8	0.0	131.8	19.64	2,056	167.0
67.50		0.2190	21.648	15.111	885.7	23.81	98.85	78.7	79.0	0.0	129.6	19.64	2,005	167.0
70.00		0.2190	21.286	14.856	841.5	23.36	97.19	79.2	76.4	0.0	127.5	19.64	1,954	167.0
72.50		0.2190	20.923	14.600	798.8	22.92	95.54	79.7	73.8	0.0	125.3	19.64	1,904	167.0
75.00		0.2190	20.561	14.344	757.6	22.48	93.88	80.2	71.2	0.0	123.1	19.64	1,855	167.0
76.17	Bot - Section 3	0.2190	20.391	14.225	738.8	22.27	93.11	80.4	70.0	0.0	56.7	19.64	1,833	77.9
77.50		0.2190	20.198	14.089	717.8	22.03	92.23	80.7	68.7	0.0	120.5	19.64	1,857	89.1
79.50	Reinf. Top Reinf	0.2190	19.908	13.884	687.0	21.68	90.90	81.1	66.7	0.0	178.6	19.64	1,818	133.6
80.00	Top - Section 2	0.1880	20.211	12.121	620.3	26.13	107.51	76.2	59.3	0.0	44.2	19.64	1,809	33.4
82.50		0.1880	19.849	11.902	587.2	25.61	105.58	76.8	57.2	0.0	102.2	19.64	1,761	167.0
85.00		0.1880	19.486	11.682	555.3	25.09	103.65	77.3	55.1	0.0	100.3	19.64	1,713	167.0
87.50		0.1880	19.124	11.463	524.6	24.58	101.72	77.9	53.0	0.0	98.4	19.64	1,667	167.0
90.00		0.1880	18.761	11.243	495.0	24.06	99.79	78.5	51.0	0.0	96.6	19.64	1,621	167.0
92.50		0.1880	18.398	11.024	466.6	23.54	97.86	79.0	49.0	0.0	94.7	19.64	1,575	167.0
95.00		0.1880	18.036	10.804	439.3	23.03	95.94	79.6	47.1	0.0	92.8	19.64	1,531	167.0
97.50	Reinf. Top	0.1880	17.673	10.585	413.1	22.51	94.01	80.2	45.2	0.0	91.0	19.64	1,487	167.0
98.00		0.1880	17.601	10.541	407.9	22.41	93.62	80.3	44.8	0.0	18.0			
100.0		0.1880	17.311	10.365	387.9	21.99	92.08	80.7	43.3	0.0	71.1			
102.5		0.1880	16.948	10.146	363.8	21.48	90.15	81.3	41.5	0.0	87.2			
105.0		0.1880	16.586	9.926	340.7	20.96	88.22	81.9	39.7	0.0	85.4			
107.5		0.1880	16.223	9.707	318.6	20.44	86.29	81.9	37.9	0.0	83.5			
110.0		0.1880	15.860	9.487	297.4	19.93	84.36	81.9	36.2	0.0	81.6			
112.5		0.1880	15.498	9.268	277.3	19.41	82.43	81.9	34.6	0.0	79.8			
115.0		0.1880	15.135	9.048	258.0	18.89	80.51	81.9	32.9	0.0	77.9			
117.5		0.1880	14.773	8.829	239.7	18.38	78.58	81.9	31.3	0.0	76.0			
120.0		0.1880	14.410	8.609	222.3	17.86	76.65	81.9	29.8	0.0	74.2			
											7,068.1			7,548.4

Site Number: 302500 | Code: ANSI/TIA-222-G | © 2007 - 2016 by ATC IP LLC. All rights reserved.

Site Name: Brst - Bristol, CT | Engineering Number: 644903Z9 | 5/24/2016 11:09:02 AM

Customer: AT&T MOBILITY

Load Case: 1.2D + 1.6W | 95 mph with No Ice | 26 Iterations

Gust Response Factor : 1.10
Dead Load Factor : 1.20
Wind Load Factor : 1.60

Wind Importance Factor : 1.00

Applied Segment Forces Summary

		Shaft Forces		Discrete Forces				Linear Forces		Sum of Forces			
Seg Elev (ft)	Description	Wind FX (lb)	Dead Load (lb)	Wind FX (lb)	Torsion MY (lb-ft)	Moment MZ (lb-ft)	Dead Load (lb)	Wind FX (lb)	Dead Load (lb)	Wind FX (lb)	Dead Load (lb)	Torsion MY (lb-ft)	Moment MZ (lb)
0.00		233.4	0.0					0.0	0.0	233.4	0.0	0.0	0.0
2.50		460.3	251.2					58.5	400.8	518.8	652.0	0.0	0.0
5.00		447.7	248.2					57.6	400.8	505.2	649.0	0.0	0.0
7.50		435.4	245.2					56.7	419.5	492.1	664.7	0.0	0.0
10.00		423.6	242.3					55.8	494.2	479.4	736.5	0.0	0.0
12.50		412.1	239.3					55.0	494.2	467.1	733.5	0.0	0.0
15.00		243.2	236.3					54.1	494.2	297.4	730.6	0.0	0.0
15.50	Reinf. Top	197.8	46.9					10.7	98.8	208.5	145.8	0.0	0.0
17.50		350.2	186.4					42.6	235.1	392.8	421.5	0.0	0.0
20.00		379.8	230.3					52.6	293.8	432.3	524.2	0.0	0.0
22.50		369.6	227.4					51.8	293.8	421.5	521.2	0.0	0.0
25.00		359.8	224.4					51.1	293.8	410.9	518.2	0.0	0.0
27.50		350.2	221.4					50.4	293.8	400.7	515.3	0.0	0.0
30.00		343.1	218.4					49.8	293.8	392.9	512.3	0.0	0.0
32.50		339.8	215.4					49.7	293.8	389.6	509.3	0.0	0.0
35.00		338.0	212.5					50.2	293.8	388.1	506.3	0.0	0.0
37.50		174.1	209.5					50.6	293.8	224.6	503.3	0.0	0.0
37.58	Bot - Section 2	170.0	6.9					1.7	9.8	171.7	16.7	0.0	0.0
40.00		299.4	377.7					49.2	284.1	348.6	661.7	0.0	0.0
42.00	Top - Section 1	168.6	308.6					40.9	235.1	209.6	543.7	0.0	0.0
42.50		200.6	36.1					10.3	58.8	210.9	94.9	0.0	0.0
45.00		332.3	179.1					51.4	293.8	383.8	472.9	0.0	0.0
47.50		328.7	176.4					51.7	293.8	380.4	470.3	0.0	0.0
50.00		324.9	173.8					51.8	293.8	376.8	467.7	0.0	0.0
52.50		321.0	171.2					52.0	293.8	372.9	465.1	0.0	0.0
55.00		316.8	168.6					52.1	293.8	368.9	462.5	0.0	0.0
57.50		312.5	166.0					52.2	293.8	364.7	459.9	0.0	0.0
60.00		308.1	163.4					52.3	293.8	360.4	457.2	0.0	0.0
62.50		303.6	160.8					52.4	293.8	356.0	454.6	0.0	0.0
65.00		299.0	158.2					52.5	293.8	351.5	452.0	0.0	0.0
67.50		294.3	155.6					52.5	293.8	346.8	449.4	0.0	0.0
70.00		289.6	153.0					52.6	293.8	342.1	446.8	0.0	0.0
72.50		284.8	150.3					52.6	293.8	337.4	444.2	0.0	0.0
75.00		206.3	147.7					52.6	293.8	258.9	441.6	0.0	0.0
76.17	Bot - Section 3	140.1	68.0					24.6	137.1	164.7	205.2	0.0	0.0
77.50		186.4	144.6					28.1	156.7	214.4	301.3	0.0	0.0
79.50	Reinf. Top Reinf	138.9	214.3					42.1	235.1	181.0	449.4	0.0	0.0
80.00	Top - Section 2	164.0	53.1					10.5	58.8	174.5	111.8	0.0	0.0
82.50		270.4	122.6					52.6	293.9	323.0	416.5	0.0	0.0
85.00		265.4	120.4					52.6	293.8	318.1	414.2	0.0	0.0
87.50		260.5	118.1					52.6	293.8	313.1	412.0	0.0	0.0
90.00	Appertunance(s)	255.5	115.9	2,554.5	0.0	2,789.6	1,155.7	52.6	293.8	2,862.6	1,565.5	0.0	0.0
92.50		250.5	113.7					52.6	269.2	303.1	382.9	0.0	0.0
95.00		245.5	111.4					52.6	269.2	298.1	380.7	0.0	0.0
97.50	Reinf. Top	145.5	109.2					52.6	269.2	198.1	378.4	0.0	0.0
98.00	Appertunance(s)	119.0	21.6	554.2	0.0	1,662.6	95.0	10.5	13.8	683.7	130.4	0.0	0.0
100.00		211.5	85.4					42.0	43.3	253.5	128.6	0.0	0.0
102.50		211.4	104.7					42.0	54.1	253.5	158.8	0.0	0.0

© 2007 - 2016 by ATC IP LLC. All rights reserved.

Load Case: 1.2D + 1.6W 95 mph with No Ice 26 Iterations

Gust Response Factor : 1.10
Dead Load Factor : 1.20
Wind Load Factor : 1.60

Wind Importance Factor : 1.00

105.00		187.9	102.5					0.0	54.1	187.9	156.5	0.0	0.0
107.50		183.7	100.2					0.0	54.1	183.7	154.3	0.0	0.0
110.00	Appertunance(s)	179.5	98.0	1,788.5	0.0	0.0	1,094.4	0.0	54.1	1,968.0	1,246.5	0.0	0.0
112.50		175.3	95.7					0.0	42.6	175.3	138.3	0.0	0.0
115.00		171.2	93.5					0.0	42.6	171.2	136.1	0.0	0.0
117.50		167.0	91.2					0.0	42.6	167.0	133.8	0.0	0.0
120.00	Appertunance(s)	82.5	89.0	5,410.3	0.0	12,753.5	3,749.2	0.0	42.6	5,492.8	3,880.7	0.0	0.0
								Totals:		27,083.8	27,386.8	0.00	0.00

© 2007 - 2016 by ATC IP LLC. All rights reserved.

Load Case: 1.2D + 1.6W 95 mph with No Ice 26 Iterations

Gust Response Factor : 1.10
Dead Load Factor : 1.20
Wind Load Factor : 1.60

Wind Importance Factor : 1.00

Calculated Forces

Seg Elev (ft)	Pu FY (-) (kips)	Vu FX (-) (kips)	Tu MY (ft-kips)	Mu MZ (ft-kips)	Mu MX (ft-kips)	Resultant Moment (ft-kips)	phi Pn (kips)	phi Vn (kips)	phi Tn (ft-kips)	phi Mn (ft-kips)	Total Deflect (in)	Rotation (deg)	Ratio
0.00	-27.35	-26.89	0.00	-2,095.45	0.00	2,095.45	1,590.66	795.33	2,018.74	996.98	0.00	0.00	0.628
2.50	-26.63	-26.43	0.00	-2,028.23	0.00	2,028.23	1,581.24	790.62	1,982.92	979.29	0.04	-0.14	0.612
5.00	-25.92	-25.99	0.00	-1,962.15	0.00	1,962.15	1,571.59	785.80	1,947.12	961.61	0.16	-0.29	0.596
7.50	-25.20	-25.56	0.00	-1,897.18	0.00	1,897.18	1,561.72	780.86	1,911.33	943.93	0.35	-0.43	0.580
10.00	-24.40	-25.13	0.00	-1,833.29	0.00	1,833.29	1,551.63	775.81	1,875.57	926.27	0.61	-0.57	0.564
12.50	-23.61	-24.71	0.00	-1,770.46	0.00	1,770.46	1,541.31	770.66	1,839.85	908.63	0.95	-0.71	0.548
15.00	-22.85	-24.44	0.00	-1,708.68	0.00	1,708.68	1,530.78	765.39	1,804.18	891.02	1.36	-0.85	0.533
15.50	-22.68	-24.25	0.00	-1,696.47	0.00	1,696.47	1,528.64	764.32	1,797.05	887.50	1.45	-0.88	0.530
15.50	-22.68	-24.25	0.00	-1,696.47	0.00	1,696.47	1,528.64	764.32	1,797.05	887.50	1.45	-0.88	0.835
17.50	-22.20	-23.92	0.00	-1,647.96	0.00	1,647.96	1,520.01	760.01	1,768.57	873.43	1.84	-0.99	0.818
20.00	-21.60	-23.56	0.00	-1,588.16	0.00	1,588.16	1,509.03	754.52	1,733.02	855.87	2.42	-1.20	0.796
22.50	-21.00	-23.20	0.00	-1,529.28	0.00	1,529.28	1,497.83	748.91	1,697.56	838.36	3.11	-1.41	0.774
25.00	-20.41	-22.85	0.00	-1,471.28	0.00	1,471.28	1,486.40	743.20	1,662.18	820.89	3.90	-1.62	0.752
27.50	-19.82	-22.51	0.00	-1,414.15	0.00	1,414.15	1,474.74	737.37	1,626.91	803.47	4.81	-1.83	0.731
30.00	-19.25	-22.16	0.00	-1,357.89	0.00	1,357.89	1,462.87	731.44	1,591.74	786.10	5.82	-2.04	0.709
32.50	-18.68	-21.82	0.00	-1,302.48	0.00	1,302.48	1,450.77	725.39	1,556.69	768.79	6.94	-2.24	0.687
35.00	-18.11	-21.48	0.00	-1,247.93	0.00	1,247.93	1,438.45	719.23	1,521.78	751.55	8.17	-2.44	0.665
37.50	-17.58	-21.26	0.00	-1,194.24	0.00	1,194.24	1,425.91	712.96	1,487.00	734.37	9.50	-2.64	0.644
37.58	-17.54	-21.12	0.00	-1,192.46	0.00	1,192.46	1,425.49	712.74	1,485.84	733.80	9.55	-2.64	0.643
40.00	-16.83	-20.79	0.00	-1,141.43	0.00	1,141.43	1,413.15	706.57	1,452.37	717.27	10.94	-2.83	0.612
42.00	-16.26	-20.58	0.00	-1,099.85	0.00	1,099.85	1,177.15	588.58	1,220.08	602.55	12.16	-2.98	0.662
42.50	-16.14	-20.40	0.00	-1,089.56	0.00	1,089.56	1,175.29	587.65	1,214.60	599.85	12.47	-3.02	0.657
45.00	-15.62	-20.04	0.00	-1,038.57	0.00	1,038.57	1,165.87	582.93	1,187.28	586.35	14.11	-3.21	0.632
47.50	-15.11	-19.68	0.00	-988.47	0.00	988.47	1,156.22	578.11	1,160.01	572.88	15.84	-3.40	0.607
50.00	-14.60	-19.32	0.00	-939.27	0.00	939.27	1,146.35	573.17	1,132.81	559.45	17.67	-3.59	0.582
52.50	-14.11	-18.96	0.00	-890.97	0.00	890.97	1,136.25	568.13	1,105.70	546.06	19.60	-3.77	0.558
55.00	-13.61	-18.61	0.00	-843.55	0.00	843.55	1,125.94	562.97	1,078.67	532.72	21.61	-3.94	0.533
57.50	-13.13	-18.25	0.00	-797.04	0.00	797.04	1,115.40	557.70	1,051.75	519.42	23.72	-4.11	0.509
60.00	-12.64	-17.89	0.00	-751.41	0.00	751.41	1,104.64	552.32	1,024.94	506.18	25.92	-4.28	0.485
62.50	-12.17	-17.54	0.00	-706.68	0.00	706.68	1,093.65	546.83	998.25	493.00	28.21	-4.44	0.460
65.00	-11.70	-17.18	0.00	-662.84	0.00	662.84	1,082.45	541.22	971.69	479.88	30.57	-4.60	0.436
67.50	-11.24	-16.83	0.00	-619.88	0.00	619.88	1,071.02	535.51	945.28	466.84	33.02	-4.75	0.412
70.00	-10.78	-16.48	0.00	-577.80	0.00	577.80	1,059.36	529.68	919.01	453.87	35.55	-4.90	0.388
72.50	-10.33	-16.13	0.00	-536.60	0.00	536.60	1,047.49	523.74	892.91	440.97	38.15	-5.04	0.365
75.00	-9.88	-15.85	0.00	-496.28	0.00	496.28	1,035.39	517.69	866.98	428.17	40.83	-5.18	0.341
76.17	-9.68	-15.68	0.00	-477.79	0.00	477.79	1,029.67	514.83	854.94	422.22	42.10	-5.24	0.330
77.50	-9.37	-15.45	0.00	-456.88	0.00	456.88	1,023.07	511.53	841.23	415.45	43.57	-5.31	0.311
79.50	-8.93	-15.24	0.00	-425.98	0.00	425.98	1,013.05	506.53	820.77	405.35	45.81	-5.41	0.293
79.50	-8.93	-15.24	0.00	-425.98	0.00	425.98	1,013.05	506.53	820.77	405.35	45.81	-5.41	0.293
80.00	-8.81	-15.06	0.00	-418.37	0.00	418.37	831.49	415.75	686.29	338.93	46.38	-5.43	0.321
82.50	-8.40	-14.72	0.00	-380.70	0.00	380.70	822.47	411.24	666.44	329.13	49.25	-5.54	0.294
85.00	-7.99	-14.38	0.00	-343.91	0.00	343.91	813.23	406.62	646.68	319.37	52.18	-5.65	0.268
87.50	-7.59	-14.04	0.00	-307.96	0.00	307.96	803.77	401.88	627.03	309.67	55.17	-5.76	0.243
90.00	-6.30	-11.04	0.00	-270.08	0.00	270.08	794.08	397.04	607.50	300.02	58.21	-5.85	0.214
92.50	-5.94	-10.71	0.00	-242.48	0.00	242.48	784.17	392.08	588.09	290.43	61.29	-5.94	0.194
95.00	-5.58	-10.38	0.00	-215.70	0.00	215.70	774.04	387.02	568.81	280.91	64.42	-6.02	0.174
97.50	-5.22	-10.15	0.00	-189.75	0.00	189.75	763.68	381.84	549.68	271.47	67.58	-6.09	0.155
97.50	-5.22	-10.15	0.00	-189.75	0.00	189.75	763.68	381.84	549.68	271.47	67.58	-6.09	0.707
98.00	-5.14	-9.47	0.00	-183.02	0.00	183.02	761.58	380.79	545.87	269.59	68.22	-6.10	0.686
100.00	-4.99	-9.22	0.00	-164.08	0.00	164.08	753.10	376.55	530.71	262.10	70.82	-6.35	0.633
102.50	-4.82	-8.98	0.00	-141.03	0.00	141.03	742.30	371.15	511.90	252.81	74.22	-6.63	0.565

© 2007 - 2016 by ATC IP LLC. All rights reserved.

Load Case: 1.2D + 1.6W 95 mph with No Ice 26 Iterations

Gust Response Factor : 1.10
Dead Load Factor : 1.20
Wind Load Factor : 1.60
Wind Importance Factor : 1.00

105.00	-4.65	-8.79	0.00	-118.59	0.00	118.59	731.28	365.64	493.27	243.61	77.75	-6.88	0.494
107.50	-4.49	-8.61	0.00	-96.61	0.00	96.61	715.50	357.75	471.83	233.02	81.40	-7.10	0.421
110.00	-3.48	-6.51	0.00	-75.10	0.00	75.10	699.32	349.66	450.61	222.54	85.17	-7.30	0.343
112.50	-3.35	-6.32	0.00	-58.83	0.00	58.83	683.14	341.57	429.88	212.30	89.02	-7.46	0.282
115.00	-3.23	-6.14	0.00	-43.02	0.00	43.02	666.96	333.48	409.64	202.31	92.95	-7.59	0.218
117.50	-3.11	-5.96	0.00	-27.66	0.00	27.66	650.78	325.39	389.89	192.55	96.94	-7.68	0.149
120.00	0.00	-5.49	0.00	-12.75	0.00	12.75	634.60	317.30	370.62	183.04	100.97	-7.74	0.070

© 2007 - 2016 by ATC IP LLC. All rights reserved.

Load Case: 0.9D + 1.6W — 95 mph with No Ice (Reduced DL) — 26 Iterations

Gust Response Factor : 1.10
Dead Load Factor : 0.90
Wind Load Factor : 1.60

Wind Importance Factor : 1.00

Applied Segment Forces Summary

		Shaft Forces		Discrete Forces				Linear Forces		Sum of Forces			
Seg Elev (ft)	Description	Wind FX (lb)	Dead Load (lb)	Wind FX (lb)	Torsion MY (lb-ft)	Moment MZ (lb-ft)	Dead Load (lb)	Wind FX (lb)	Dead Load (lb)	Wind FX (lb)	Dead Load (lb)	Torsion MY (lb-ft)	Moment MZ (lb)
0.00		233.4	0.0					0.0	0.0	233.4	0.0	0.0	0.0
2.50		460.3	188.4					58.5	300.6	518.8	489.0	0.0	0.0
5.00		447.7	186.2					57.6	300.6	505.2	486.8	0.0	0.0
7.50		435.4	183.9					56.7	314.6	492.1	498.5	0.0	0.0
10.00		423.6	181.7					55.8	370.7	479.4	552.4	0.0	0.0
12.50		412.1	179.5					55.0	370.7	467.1	550.1	0.0	0.0
15.00		243.2	177.2					54.1	370.7	297.4	547.9	0.0	0.0
15.50	Reinf. Top	197.8	35.2					10.7	74.1	208.5	109.3	0.0	0.0
17.50		350.2	139.8					42.6	176.3	392.8	316.1	0.0	0.0
20.00		379.8	172.8					52.6	220.4	432.3	393.1	0.0	0.0
22.50		369.6	170.5					51.8	220.4	421.5	390.9	0.0	0.0
25.00		359.8	168.3					51.1	220.4	410.9	388.7	0.0	0.0
27.50		350.2	166.1					50.4	220.4	400.7	386.4	0.0	0.0
30.00		343.1	163.8					49.8	220.4	392.9	384.2	0.0	0.0
32.50		339.8	161.6					49.7	220.4	389.6	382.0	0.0	0.0
35.00		338.0	159.4					50.2	220.4	388.1	379.7	0.0	0.0
37.50		174.1	157.1					50.6	220.4	224.6	377.5	0.0	0.0
37.58	Bot - Section 2	170.0	5.2					1.7	7.3	171.7	12.5	0.0	0.0
40.00		299.4	283.3					49.2	213.0	348.6	496.3	0.0	0.0
42.00	Top - Section 1	168.6	231.5					40.9	176.3	209.6	407.8	0.0	0.0
42.50		200.6	27.1					10.3	44.1	210.9	71.2	0.0	0.0
45.00		332.3	134.3					51.4	220.4	383.8	354.7	0.0	0.0
47.50		328.7	132.3					51.7	220.4	380.4	352.7	0.0	0.0
50.00		324.9	130.4					51.8	220.4	376.8	350.8	0.0	0.0
52.50		321.0	128.4					52.0	220.4	372.9	348.8	0.0	0.0
55.00		316.8	126.5					52.1	220.4	368.9	346.8	0.0	0.0
57.50		312.5	124.5					52.2	220.4	364.7	344.9	0.0	0.0
60.00		308.1	122.5					52.3	220.4	360.4	342.9	0.0	0.0
62.50		303.6	120.6					52.4	220.4	356.0	341.0	0.0	0.0
65.00		299.0	118.6					52.5	220.4	351.5	339.0	0.0	0.0
67.50		294.3	116.7					52.5	220.4	346.8	337.1	0.0	0.0
70.00		289.6	114.7					52.6	220.4	342.1	335.1	0.0	0.0
72.50		284.8	112.8					52.6	220.4	337.4	333.1	0.0	0.0
75.00		206.3	110.8					52.6	220.4	258.9	331.2	0.0	0.0
76.17	Bot - Section 3	140.1	51.0					24.6	102.8	164.7	153.9	0.0	0.0
77.50		186.4	108.4					28.1	117.5	214.4	226.0	0.0	0.0
79.50	Reinf. Top Reinf	138.9	160.7					42.1	176.3	181.0	337.0	0.0	0.0
80.00	Top - Section 2	164.0	39.8					10.5	44.1	174.5	83.9	0.0	0.0
82.50		270.4	92.0					52.6	220.4	323.0	312.4	0.0	0.0
85.00		265.4	90.3					52.6	220.4	318.1	310.7	0.0	0.0
87.50		260.5	88.6					52.6	220.4	313.1	309.0	0.0	0.0
90.00	Appertunance(s)	255.5	86.9	2,554.5	0.0	2,789.6	866.8	52.6	220.4	2,862.6	1,174.1	0.0	0.0
92.50		250.5	85.2					52.6	201.9	303.1	287.2	0.0	0.0
95.00		245.5	83.6					52.6	201.9	298.1	285.5	0.0	0.0
97.50	Reinf. Top	145.5	81.9					52.6	201.9	198.1	283.8	0.0	0.0
98.00	Appertunance(s)	119.0	16.2	554.2	0.0	1,662.6	71.3	10.5	10.3	683.7	97.8	0.0	0.0
100.00		211.5	64.0					42.0	32.5	253.5	96.5	0.0	0.0
102.50		211.4	78.5					42.0	40.6	253.5	119.1	0.0	0.0

© 2007 - 2016 by ATC IP LLC. All rights reserved.

Load Case: 0.9D + 1.6W — 95 mph with No Ice (Reduced DL) — 26 Iterations

Gust Response Factor : 1.10
Dead Load Factor : 0.90
Wind Load Factor : 1.60

Wind Importance Factor : 1.00

105.00		187.9	76.8					0.0	40.6	187.9	117.4	0.0	0.0
107.50		183.7	75.2					0.0	40.6	183.7	115.7	0.0	0.0
110.00	Appertunance(s)	179.5	73.5	1,788.5	0.0	0.0	820.8	0.0	40.6	1,968.0	934.8	0.0	0.0
112.50		175.3	71.8					0.0	31.9	175.3	103.7	0.0	0.0
115.00		171.2	70.1					0.0	31.9	171.2	102.0	0.0	0.0
117.50		167.0	68.4					0.0	31.9	167.0	100.4	0.0	0.0
120.00	Appertunance(s)	82.5	66.8	5,410.3	0.0	12,753.5	2,811.9	0.0	31.9	5,492.8	2,910.6	0.0	0.0
								Totals:		27,083.8	20,540.1	0.00	0.00

© 2007 - 2016 by ATC IP LLC. All rights reserved.

Load Case: 0.9D + 1.6W 95 mph with No Ice (Reduced DL) 26 Iterations

Gust Response Factor : 1.10
Dead Load Factor : 0.90
Wind Load Factor : 1.60

Wind Importance Factor : 1.00

Calculated Forces

Seg Elev (ft)	Pu FY (-) (kips)	Vu FX (-) (kips)	Tu MY (ft-kips)	Mu MZ (ft-kips)	Mu MX (ft-kips)	Resultant Moment (ft-kips)	phi Pn (kips)	phi Vn (kips)	phi Tn (ft-kips)	phi Mn (ft-kips)	Total Deflect (in)	Rotation (deg)	Ratio
0.00	-20.50	-26.88	0.00	-2,072.43	0.00	2,072.43	1,590.66	795.33	2,018.74	996.98	0.00	0.00	0.619
2.50	-19.95	-26.41	0.00	-2,005.24	0.00	2,005.24	1,581.24	790.62	1,982.92	979.29	0.04	-0.14	0.603
5.00	-19.40	-25.95	0.00	-1,939.22	0.00	1,939.22	1,571.59	785.80	1,947.12	961.61	0.15	-0.29	0.587
7.50	-18.84	-25.50	0.00	-1,874.36	0.00	1,874.36	1,561.72	780.86	1,911.33	943.93	0.34	-0.43	0.571
10.00	-18.24	-25.06	0.00	-1,810.61	0.00	1,810.61	1,551.63	775.81	1,875.57	926.27	0.60	-0.56	0.556
12.50	-17.63	-24.63	0.00	-1,747.96	0.00	1,747.96	1,541.31	770.66	1,839.85	908.63	0.94	-0.70	0.540
15.00	-17.05	-24.35	0.00	-1,686.40	0.00	1,686.40	1,530.78	765.39	1,804.18	891.02	1.35	-0.84	0.525
15.50	-16.92	-24.16	0.00	-1,674.22	0.00	1,674.22	1,528.64	764.32	1,797.05	887.50	1.43	-0.87	0.522
15.50	-16.92	-24.16	0.00	-1,674.22	0.00	1,674.22	1,528.64	764.32	1,797.05	887.50	1.43	-0.87	0.823
17.50	-16.54	-23.81	0.00	-1,625.91	0.00	1,625.91	1,520.01	760.01	1,768.57	873.43	1.82	-0.97	0.805
20.00	-16.07	-23.42	0.00	-1,566.40	0.00	1,566.40	1,509.03	754.52	1,733.02	855.87	2.39	-1.19	0.783
22.50	-15.61	-23.05	0.00	-1,507.84	0.00	1,507.84	1,497.83	748.91	1,697.56	838.36	3.07	-1.39	0.762
25.00	-15.15	-22.68	0.00	-1,450.21	0.00	1,450.21	1,486.40	743.20	1,662.18	820.89	3.85	-1.60	0.740
27.50	-14.69	-22.33	0.00	-1,393.50	0.00	1,393.50	1,474.74	737.37	1,626.91	803.47	4.75	-1.81	0.718
30.00	-14.25	-21.97	0.00	-1,337.69	0.00	1,337.69	1,462.87	731.44	1,591.74	786.10	5.75	-2.01	0.697
32.50	-13.80	-21.61	0.00	-1,282.76	0.00	1,282.76	1,450.77	725.39	1,556.69	768.79	6.86	-2.21	0.675
35.00	-13.37	-21.26	0.00	-1,228.72	0.00	1,228.72	1,438.45	719.23	1,521.78	751.55	8.07	-2.41	0.654
37.50	-12.96	-21.04	0.00	-1,175.58	0.00	1,175.58	1,425.91	712.96	1,487.00	734.37	9.38	-2.60	0.632
37.58	-12.92	-20.89	0.00	-1,173.83	0.00	1,173.83	1,425.49	712.74	1,485.84	733.80	9.43	-2.61	0.631
40.00	-12.38	-20.55	0.00	-1,123.35	0.00	1,123.35	1,413.15	706.57	1,452.37	717.27	10.80	-2.79	0.600
42.00	-11.95	-20.34	0.00	-1,082.24	0.00	1,082.24	1,177.15	588.58	1,220.08	602.55	12.00	-2.94	0.650
42.50	-11.85	-20.15	0.00	-1,072.07	0.00	1,072.07	1,175.29	587.65	1,214.60	599.85	12.31	-2.98	0.645
45.00	-11.46	-19.79	0.00	-1,021.69	0.00	1,021.69	1,165.87	582.93	1,187.28	586.35	13.92	-3.17	0.620
47.50	-11.06	-19.42	0.00	-972.22	0.00	972.22	1,156.22	578.11	1,160.01	572.88	15.63	-3.35	0.596
50.00	-10.68	-19.06	0.00	-923.66	0.00	923.66	1,146.35	573.17	1,132.81	559.45	17.43	-3.53	0.571
52.50	-10.30	-18.70	0.00	-876.01	0.00	876.01	1,136.25	568.13	1,105.70	546.06	19.33	-3.71	0.547
55.00	-9.92	-18.34	0.00	-829.27	0.00	829.27	1,125.94	562.97	1,078.67	532.72	21.32	-3.88	0.523
57.50	-9.55	-17.98	0.00	-783.44	0.00	783.44	1,115.40	557.70	1,051.75	519.42	23.40	-4.05	0.499
60.00	-9.18	-17.62	0.00	-738.50	0.00	738.50	1,104.64	552.32	1,024.94	506.18	25.57	-4.22	0.475
62.50	-8.82	-17.26	0.00	-694.46	0.00	694.46	1,093.65	546.83	998.25	493.00	27.82	-4.38	0.451
65.00	-8.47	-16.91	0.00	-651.30	0.00	651.30	1,082.45	541.22	971.69	479.88	30.15	-4.53	0.428
67.50	-8.12	-16.55	0.00	-609.04	0.00	609.04	1,071.02	535.51	945.28	466.84	32.56	-4.68	0.404
70.00	-7.77	-16.21	0.00	-567.65	0.00	567.65	1,059.36	529.68	919.01	453.87	35.05	-4.83	0.380
72.50	-7.43	-15.86	0.00	-527.14	0.00	527.14	1,047.49	523.74	892.91	440.97	37.61	-4.97	0.357
75.00	-7.10	-15.58	0.00	-487.49	0.00	487.49	1,035.39	517.69	866.98	428.17	40.25	-5.10	0.334
76.17	-6.94	-15.41	0.00	-469.31	0.00	469.31	1,029.67	514.83	854.94	422.22	41.50	-5.16	0.323
77.50	-6.71	-15.19	0.00	-448.76	0.00	448.76	1,023.07	511.53	841.23	415.45	42.95	-5.23	0.305
79.50	-6.38	-14.98	0.00	-418.38	0.00	418.38	1,013.05	506.53	820.77	405.35	45.16	-5.32	0.286
79.50	-6.38	-14.98	0.00	-418.38	0.00	418.38	1,013.05	506.53	820.77	405.35	45.16	-5.32	0.286
80.00	-6.29	-14.81	0.00	-410.89	0.00	410.89	831.49	415.75	686.29	338.93	45.72	-5.35	0.314
82.50	-5.98	-14.47	0.00	-373.86	0.00	373.86	822.47	411.24	666.44	329.13	48.55	-5.46	0.288
85.00	-5.68	-14.14	0.00	-337.68	0.00	337.68	813.23	406.62	646.68	319.37	51.43	-5.57	0.263
87.50	-5.38	-13.80	0.00	-302.34	0.00	302.34	803.77	401.88	627.03	309.67	54.37	-5.67	0.237
90.00	-4.48	-10.84	0.00	-265.05	0.00	265.05	794.08	397.04	607.50	300.02	57.36	-5.76	0.209
92.50	-4.21	-10.52	0.00	-237.94	0.00	237.94	784.17	392.08	588.09	290.43	60.40	-5.84	0.190
95.00	-3.94	-10.20	0.00	-211.64	0.00	211.64	774.04	387.02	568.81	280.91	63.47	-5.92	0.170
97.50	-3.67	-9.98	0.00	-186.14	0.00	186.14	763.68	381.84	549.68	271.47	66.59	-5.99	0.151
97.50	-3.67	-9.98	0.00	-186.14	0.00	186.14	763.68	381.84	549.68	271.47	66.59	-5.99	0.691
98.00	-3.63	-9.29	0.00	-179.49	0.00	179.49	761.58	380.79	545.87	269.59	67.22	-6.01	0.671
100.00	-3.52	-9.05	0.00	-160.91	0.00	160.91	753.10	376.55	530.71	262.10	69.78	-6.25	0.619
102.50	-3.39	-8.80	0.00	-138.29	0.00	138.29	742.30	371.15	511.90	252.81	73.12	-6.52	0.552

© 2007 - 2016 by ATC IP LLC. All rights reserved.

Load Case: 0.9D + 1.6W 95 mph with No Ice (Reduced DL) 26 Iterations

Gust Response Factor : 1.10
Dead Load Factor : 0.90
Wind Load Factor : 1.60
Wind Importance Factor : 1.00

105.00	-3.26	-8.61	0.00	-116.30	0.00	116.30	731.28	365.64	493.27	243.61	76.60	-6.77	0.482
107.50	-3.14	-8.43	0.00	-94.77	0.00	94.77	715.50	357.75	471.83	233.02	80.19	-6.99	0.412
110.00	-2.43	-6.36	0.00	-73.71	0.00	73.71	699.32	349.66	450.61	222.54	83.90	-7.18	0.335
112.50	-2.34	-6.18	0.00	-57.80	0.00	57.80	683.14	341.57	429.88	212.30	87.69	-7.33	0.276
115.00	-2.24	-6.00	0.00	-42.34	0.00	42.34	666.96	333.48	409.64	202.31	91.55	-7.46	0.213
117.50	-2.16	-5.83	0.00	-27.33	0.00	27.33	650.78	325.39	389.89	192.55	95.48	-7.56	0.146
120.00	0.00	-5.49	0.00	-12.75	0.00	12.75	634.60	317.30	370.62	183.04	99.44	-7.62	0.070

© 2007 - 2016 by ATC IP LLC. All rights reserved.

Load Case: 1.2D + 1.0Di + 1.0Wi 50 mph with 1.00 in Radial Ice 26 Iterations

Gust Response Factor : 1.10
Dead Load Factor : 1.20
Wind Load Factor : 1.00

Ice Dead Load Factor : 1.00

Wind Importance Factor : 1.00
Ice Importance Factor : 1.00

Applied Segment Forces Summary

		Shaft Forces		Discrete Forces				Linear Forces		Sum of Forces			
Seg Elev (ft)	Description	Wind FX (lb)	Dead Load (lb)	Wind FX (lb)	Torsion MY (lb-ft)	Moment MZ (lb-ft)	Dead Load (lb)	Wind FX (lb)	Dead Load (lb)	Wind FX (lb)	Dead Load (lb)	Torsion MY (lb-ft)	Moment MZ (lb)
0.00		45.2	0.0					0.0	0.0	45.2	0.0	0.0	0.0
2.50		89.7	449.9					29.8	495.6	119.5	945.5	0.0	0.0
5.00		88.1	467.7					30.4	506.2	118.5	973.9	0.0	0.0
7.50		86.2	473.0					30.4	561.2	116.6	1,034.2	0.0	0.0
10.00		84.3	474.4					30.2	770.3	114.5	1,244.7	0.0	0.0
12.50		82.3	473.6					30.0	777.1	112.3	1,250.7	0.0	0.0
15.00		48.7	471.7					29.7	782.2	78.4	1,253.9	0.0	0.0
15.50	Reinf. Top	39.7	94.2					5.9	157.0	45.6	251.2	0.0	0.0
17.50		70.4	375.0					23.5	469.1	93.9	844.1	0.0	0.0
20.00		76.6	465.4					29.1	589.3	105.6	1,054.7	0.0	0.0
22.50		74.7	461.5					28.7	592.1	103.5	1,053.6	0.0	0.0
25.00		72.9	457.3					28.4	542.1	101.4	999.4	0.0	0.0
27.50		71.2	452.8					28.1	543.8	99.3	996.6	0.0	0.0
30.00		69.9	448.0					27.7	545.3	97.7	993.3	0.0	0.0
32.50		69.5	443.1					27.8	546.5	97.2	989.6	0.0	0.0
35.00		69.2	438.0					28.1	547.6	97.3	985.6	0.0	0.0
37.50		35.7	432.8					28.3	548.5	64.0	981.2	0.0	0.0
37.58	Bot - Section 2	34.9	14.4					0.9	18.3	35.8	32.7	0.0	0.0
40.00		61.5	594.6					27.6	531.0	89.1	1,125.6	0.0	0.0
42.00	Top - Section 1	34.7	486.7					22.9	439.9	57.6	926.5	0.0	0.0
42.50		41.4	80.6					5.8	110.0	47.1	190.6	0.0	0.0
45.00		68.6	398.6					28.9	550.5	97.5	949.1	0.0	0.0
47.50		68.0	393.4					29.0	551.0	97.0	944.4	0.0	0.0
50.00		67.4	388.1					29.1	551.4	96.5	939.5	0.0	0.0
52.50		66.8	382.9					29.2	551.7	96.0	934.6	0.0	0.0
55.00		66.1	377.5					29.3	552.0	95.4	929.6	0.0	0.0
57.50		65.4	372.1					29.4	552.3	94.8	924.4	0.0	0.0
60.00		64.7	366.7					29.4	552.5	94.1	919.3	0.0	0.0
62.50		63.9	361.3					29.5	552.7	93.4	914.0	0.0	0.0
65.00		63.1	355.9					29.5	552.8	92.6	908.7	0.0	0.0
67.50		62.3	350.4					29.5	552.9	91.9	903.3	0.0	0.0
70.00		61.5	344.9					29.6	553.0	91.1	897.9	0.0	0.0
72.50		60.7	339.4					29.6	553.1	90.3	892.5	0.0	0.0
75.00		44.1	333.9					29.6	553.1	73.7	887.0	0.0	0.0
76.17	Bot - Section 3	30.0	154.3					13.8	258.1	43.8	412.4	0.0	0.0
77.50		39.9	243.9					15.8	295.0	55.7	539.0	0.0	0.0
79.50	Reinf. Top Reinf	29.7	361.4					23.7	442.6	53.4	804.0	0.0	0.0
80.00	Top - Section 2	35.2	89.7					5.9	110.6	41.2	200.4	0.0	0.0
82.50		58.2	303.0					29.6	553.2	87.8	856.3	0.0	0.0
85.00		57.3	297.9					29.6	553.2	87.0	851.1	0.0	0.0
87.50		56.5	292.7					29.6	553.2	86.1	845.9	0.0	0.0
90.00	Appertunance(s)	55.6	287.5	653.1	0.0	637.5	3,158.7	29.6	553.2	738.3	3,999.3	0.0	0.0
92.50		54.7	282.3					29.6	423.9	84.3	706.2	0.0	0.0
95.00		53.9	277.1					29.6	423.9	83.5	701.0	0.0	0.0
97.50	Reinf. Top	32.0	271.9					29.6	423.9	61.6	695.8	0.0	0.0
98.00	Appertunance(s)	26.3	54.0	129.6	0.0	388.9	666.8	5.9	44.7	161.8	765.5	0.0	0.0
100.00		46.8	213.2					23.7	101.6	70.5	314.8	0.0	0.0
102.50		51.3	261.5					23.6	112.4	74.9	373.9	0.0	0.0

© 2007 - 2016 by ATC IP LLC. All rights reserved.

Load Case: 1.2D + 1.0Di + 1.0Wi 50 mph with 1.00 in Radial Ice 26 Iterations

Gust Response Factor : 1.10 Ice Dead Load Factor : 1.00 Wind Importance Factor : 1.00
Dead Load Factor : 1.20 Ice Importance Factor : 1.00
Wind Load Factor : 1.00

105.00		50.4	256.3					0.0	54.1	50.4	310.4	0.0	0.0
107.50		49.5	251.1					0.0	54.1	49.5	305.2	0.0	0.0
110.00	Appertunance(s)	48.6	245.9	583.3	0.0	0.0	4,012.0	0.0	54.1	632.0	4,312.0	0.0	0.0
112.50		47.8	240.7					0.0	42.6	47.8	283.3	0.0	0.0
115.00		46.9	235.5					0.0	42.6	46.9	278.1	0.0	0.0
117.50		46.0	230.3					0.0	42.6	46.0	272.9	0.0	0.0
120.00	Appertunance(s)	22.8	225.1	1,387.0	0.0	2,918.4	10,173.9	0.0	42.6	1,409.8	10,441.6	0.0	0.0
								Totals:		7,056.41	58,340.6	0.00	0.00

© 2007 - 2016 by ATC IP LLC. All rights reserved.

Load Case: 1.2D + 1.0Di + 1.0Wi 50 mph with 1.00 in Radial Ice 26 Iterations

Gust Response Factor : 1.10
Dead Load Factor : 1.20
Wind Load Factor : 1.00

Ice Dead Load Factor : 1.00

Wind Importance Factor : 1.00
Ice Importance Factor : 1.00

Calculated Forces

Seg Elev (ft)	Pu FY (-) (kips)	Vu FX (-) (kips)	Tu MY (ft-kips)	Mu MZ (ft-kips)	Mu MX (ft-kips)	Resultant Moment (ft-kips)	phi Pn (kips)	phi Vn (kips)	phi Tn (ft-kips)	phi Mn (ft-kips)	Total Deflect (in)	Rotation (deg)	Ratio
0.00	-58.34	-7.03	0.00	-600.84	0.00	600.84	1,590.66	795.33	2,018.74	996.98	0.00	0.00	0.192
2.50	-57.39	-6.95	0.00	-583.25	0.00	583.25	1,581.24	790.62	1,982.92	979.29	0.01	-0.04	0.188
5.00	-56.41	-6.88	0.00	-565.87	0.00	565.87	1,571.59	785.80	1,947.12	961.61	0.04	-0.08	0.183
7.50	-55.37	-6.80	0.00	-548.68	0.00	548.68	1,561.72	780.86	1,911.33	943.93	0.10	-0.12	0.179
10.00	-54.12	-6.72	0.00	-531.69	0.00	531.69	1,551.63	775.81	1,875.57	926.27	0.18	-0.16	0.175
12.50	-52.87	-6.64	0.00	-514.90	0.00	514.90	1,541.31	770.66	1,839.85	908.63	0.27	-0.21	0.170
15.00	-51.61	-6.58	0.00	-498.30	0.00	498.30	1,530.78	765.39	1,804.18	891.02	0.39	-0.25	0.166
15.50	-51.36	-6.55	0.00	-495.01	0.00	495.01	1,528.64	764.32	1,797.05	887.50	0.42	-0.25	0.165
15.50	-51.36	-6.55	0.00	-495.01	0.00	495.01	1,528.64	764.32	1,797.05	887.50	0.42	-0.25	0.259
17.50	-50.51	-6.49	0.00	-481.92	0.00	481.92	1,520.01	760.01	1,768.57	873.43	0.53	-0.29	0.254
20.00	-49.45	-6.43	0.00	-465.69	0.00	465.69	1,509.03	754.52	1,733.02	855.87	0.70	-0.35	0.248
22.50	-48.39	-6.38	0.00	-449.60	0.00	449.60	1,497.83	748.91	1,697.56	838.36	0.90	-0.41	0.242
25.00	-47.38	-6.32	0.00	-433.66	0.00	433.66	1,486.40	743.20	1,662.18	820.89	1.13	-0.47	0.236
27.50	-46.38	-6.26	0.00	-417.87	0.00	417.87	1,474.74	737.37	1,626.91	803.47	1.39	-0.53	0.230
30.00	-45.38	-6.20	0.00	-402.22	0.00	402.22	1,462.87	731.44	1,591.74	786.10	1.69	-0.59	0.224
32.50	-44.38	-6.14	0.00	-386.72	0.00	386.72	1,450.77	725.39	1,556.69	768.79	2.02	-0.65	0.218
35.00	-43.39	-6.07	0.00	-371.38	0.00	371.38	1,438.45	719.23	1,521.78	751.55	2.38	-0.71	0.211
37.50	-42.41	-6.02	0.00	-356.19	0.00	356.19	1,425.91	712.96	1,487.00	734.37	2.77	-0.77	0.205
37.58	-42.38	-6.01	0.00	-355.69	0.00	355.69	1,425.49	712.74	1,485.84	733.80	2.78	-0.78	0.205
40.00	-41.25	-5.94	0.00	-341.18	0.00	341.18	1,413.15	706.57	1,452.37	717.27	3.19	-0.83	0.196
42.00	-40.32	-5.89	0.00	-329.30	0.00	329.30	1,177.15	588.58	1,220.08	602.55	3.55	-0.88	0.212
42.50	-40.12	-5.86	0.00	-326.36	0.00	326.36	1,175.29	587.65	1,214.60	599.85	3.64	-0.89	0.211
45.00	-39.17	-5.79	0.00	-311.71	0.00	311.71	1,165.87	582.93	1,187.28	586.35	4.12	-0.95	0.203
47.50	-38.22	-5.71	0.00	-297.25	0.00	297.25	1,156.22	578.11	1,160.01	572.88	4.63	-1.00	0.196
50.00	-37.28	-5.63	0.00	-282.97	0.00	282.97	1,146.35	573.17	1,132.81	559.45	5.17	-1.06	0.188
52.50	-36.34	-5.55	0.00	-268.89	0.00	268.89	1,136.25	568.13	1,105.70	546.06	5.74	-1.11	0.181
55.00	-35.41	-5.47	0.00	-255.01	0.00	255.01	1,125.94	562.97	1,078.67	532.72	6.34	-1.16	0.174
57.50	-34.48	-5.39	0.00	-241.33	0.00	241.33	1,115.40	557.70	1,051.75	519.42	6.96	-1.22	0.166
60.00	-33.56	-5.30	0.00	-227.86	0.00	227.86	1,104.64	552.32	1,024.94	506.18	7.61	-1.27	0.159
62.50	-32.64	-5.22	0.00	-214.60	0.00	214.60	1,093.65	546.83	998.25	493.00	8.29	-1.32	0.151
65.00	-31.73	-5.13	0.00	-201.56	0.00	201.56	1,082.45	541.22	971.69	479.88	8.99	-1.36	0.144
67.50	-30.83	-5.04	0.00	-188.74	0.00	188.74	1,071.02	535.51	945.28	466.84	9.72	-1.41	0.136
70.00	-29.93	-4.95	0.00	-176.14	0.00	176.14	1,059.36	529.68	919.01	453.87	10.47	-1.46	0.129
72.50	-29.04	-4.86	0.00	-163.76	0.00	163.76	1,047.49	523.74	892.91	440.97	11.24	-1.50	0.122
75.00	-28.15	-4.78	0.00	-151.62	0.00	151.62	1,035.39	517.69	866.98	428.17	12.04	-1.54	0.114
76.17	-27.74	-4.73	0.00	-146.05	0.00	146.05	1,029.67	514.83	854.94	422.22	12.42	-1.56	0.111
77.50	-27.20	-4.67	0.00	-139.74	0.00	139.74	1,023.07	511.53	841.23	415.45	12.86	-1.58	0.105
79.50	-26.39	-4.60	0.00	-130.39	0.00	130.39	1,013.05	506.53	820.77	405.35	13.53	-1.61	0.099
79.50	-26.39	-4.60	0.00	-130.39	0.00	130.39	1,013.05	506.53	820.77	405.35	13.53	-1.61	0.099
80.00	-26.19	-4.57	0.00	-128.09	0.00	128.09	831.49	415.75	686.29	338.93	13.70	-1.62	0.109
82.50	-25.34	-4.47	0.00	-116.67	0.00	116.67	822.47	411.24	666.44	329.13	14.55	-1.65	0.100
85.00	-24.49	-4.37	0.00	-105.50	0.00	105.50	813.23	406.62	646.68	319.37	15.43	-1.69	0.092
87.50	-23.64	-4.27	0.00	-94.56	0.00	94.56	803.77	401.88	627.03	309.67	16.32	-1.72	0.084
90.00	-19.66	-3.42	0.00	-83.24	0.00	83.24	794.08	397.04	607.50	300.02	17.23	-1.75	0.074
92.50	-18.96	-3.33	0.00	-74.68	0.00	74.68	784.17	392.08	588.09	290.43	18.15	-1.77	0.068
95.00	-18.26	-3.23	0.00	-66.36	0.00	66.36	774.04	387.02	568.81	280.91	19.09	-1.80	0.061
97.50	-17.57	-3.15	0.00	-58.29	0.00	58.29	763.68	381.84	549.68	271.47	20.04	-1.82	0.055
97.50	-17.57	-3.15	0.00	-58.29	0.00	58.29	763.68	381.84	549.68	271.47	20.04	-1.82	0.238
98.00	-16.80	-2.98	0.00	-56.32	0.00	56.32	761.58	380.79	545.87	269.59	20.23	-1.82	0.231
100.00	-16.49	-2.92	0.00	-50.37	0.00	50.37	753.10	376.55	530.71	262.10	21.01	-1.90	0.214
102.50	-16.11	-2.85	0.00	-43.08	0.00	43.08	742.30	371.15	511.90	252.81	22.02	-1.98	0.192

© 2007 - 2016 by ATC IP LLC. All rights reserved.

Load Case: 1.2D + 1.0Di + 1.0Wi 50 mph with 1.00 in Radial Ice 26 Iterations

Gust Response Factor : 1.10 Ice Dead Load Factor : 1.00 Wind Importance Factor : 1.00
Dead Load Factor : 1.20 Ice Importance Factor : 1.00
Wind Load Factor : 1.00

105.00	-15.80	-2.81	0.00	-35.94	0.00	35.94	731.28	365.64	493.27	243.61	23.09	-2.06	0.169
107.50	-15.49	-2.77	0.00	-28.91	0.00	28.91	715.50	357.75	471.83	233.02	24.18	-2.13	0.146
110.00	-11.21	-1.98	0.00	-21.99	0.00	21.99	699.32	349.66	450.61	222.54	25.31	-2.19	0.115
112.50	-10.92	-1.93	0.00	-17.03	0.00	17.03	683.14	341.57	429.88	212.30	26.47	-2.23	0.096
115.00	-10.65	-1.88	0.00	-12.20	0.00	12.20	666.96	333.48	409.64	202.31	27.65	-2.27	0.076
117.50	-10.38	-1.83	0.00	-7.49	0.00	7.49	650.78	325.39	389.89	192.55	28.85	-2.30	0.055
120.00	0.00	-1.41	0.00	-2.92	0.00	2.92	634.60	317.30	370.62	183.04	30.06	-2.31	0.016

© 2007 - 2016 by ATC IP LLC. All rights reserved.

Load Case: 1.0D + 1.0W Serviceability 60 mph 25 Iterations

Gust Response Factor : 1.10
Dead Load Factor : 1.00
Wind Load Factor : 1.00
Wind Importance Factor : 1.00

Applied Segment Forces Summary

		Shaft Forces		Discrete Forces				Linear Forces		Sum of Forces			
Seg Elev (ft)	Description	Wind FX (lb)	Dead Load (lb)	Wind FX (lb)	Torsion MY (lb-ft)	Moment MZ (lb-ft)	Dead Load (lb)	Wind FX (lb)	Dead Load (lb)	Wind FX (lb)	Dead Load (lb)	Torsion MY (lb-ft)	Moment MZ (lb)
0.00		58.2	0.0					0.0	0.0	58.2	0.0	0.0	0.0
2.50		114.8	209.3					19.0	334.0	133.7	543.3	0.0	0.0
5.00		111.6	206.9					18.8	334.0	130.4	540.9	0.0	0.0
7.50		108.6	204.4					18.7	349.6	127.2	553.9	0.0	0.0
10.00		105.6	201.9					18.5	411.9	124.1	613.8	0.0	0.0
12.50		102.7	199.4					18.4	411.9	121.1	611.3	0.0	0.0
15.00		60.6	196.9					18.2	411.9	78.9	608.8	0.0	0.0
15.50	Reinf. Top	49.3	39.1					3.6	82.4	52.9	121.5	0.0	0.0
17.50		87.3	155.4					14.5	195.9	101.8	351.3	0.0	0.0
20.00		94.7	192.0					18.0	244.9	112.7	436.8	0.0	0.0
22.50		92.2	189.5					17.9	244.9	110.0	434.3	0.0	0.0
25.00		89.7	187.0					17.7	244.9	107.4	431.9	0.0	0.0
27.50		87.3	184.5					17.6	244.9	104.9	429.4	0.0	0.0
30.00		85.5	182.0					17.5	244.9	103.0	426.9	0.0	0.0
32.50		84.7	179.5					17.5	244.9	102.2	424.4	0.0	0.0
35.00		84.3	177.1					17.6	244.9	101.8	421.9	0.0	0.0
37.50		43.4	174.6					17.6	244.9	61.0	419.4	0.0	0.0
37.58	Bot - Section 2	42.4	5.8					0.6	8.2	43.0	13.9	0.0	0.0
40.00		74.6	314.7					17.1	236.7	91.7	551.4	0.0	0.0
42.00	Top - Section 1	42.0	257.2					14.2	195.9	56.2	453.1	0.0	0.0
42.50		50.0	30.1					3.6	49.0	53.6	79.1	0.0	0.0
45.00		82.9	149.2					17.8	244.9	100.6	394.1	0.0	0.0
47.50		82.0	147.0					17.8	244.9	99.8	391.9	0.0	0.0
50.00		81.0	144.9					17.8	244.9	98.9	389.7	0.0	0.0
52.50		80.0	142.7					17.9	244.9	97.9	387.6	0.0	0.0
55.00		79.0	140.5					17.9	244.9	96.9	385.4	0.0	0.0
57.50		77.9	138.3					17.9	244.9	95.8	383.2	0.0	0.0
60.00		76.8	136.2					17.9	244.9	94.7	381.0	0.0	0.0
62.50		75.7	134.0					17.9	244.9	93.6	378.9	0.0	0.0
65.00		74.5	131.8					18.0	244.9	92.5	376.7	0.0	0.0
67.50		73.4	129.6					18.0	244.9	91.3	374.5	0.0	0.0
70.00		72.2	127.5					18.0	244.9	90.2	372.3	0.0	0.0
72.50		71.0	125.3					18.0	244.9	89.0	370.2	0.0	0.0
75.00		51.4	123.1					18.0	244.9	69.4	368.0	0.0	0.0
76.17	Bot - Section 3	34.9	56.7					8.4	114.3	43.3	171.0	0.0	0.0
77.50		46.5	120.5					9.6	130.6	56.1	251.1	0.0	0.0
79.50	Reinf. Top Reinf	34.6	178.6					14.4	195.9	49.0	374.5	0.0	0.0
80.00	Top - Section 2	40.9	44.2					3.6	49.0	44.5	93.2	0.0	0.0
82.50		67.4	102.2					18.0	244.9	85.4	347.1	0.0	0.0
85.00		66.2	100.3					18.0	244.9	84.2	345.2	0.0	0.0
87.50		64.9	98.4					18.0	244.9	82.9	343.3	0.0	0.0
90.00	Appertunance(s)	63.7	96.6	636.9	0.0	695.5	963.1	18.0	244.9	718.5	1,304.6	0.0	0.0
92.50		62.4	94.7					18.0	224.4	80.4	319.1	0.0	0.0
95.00		61.2	92.8					18.0	224.4	79.2	317.2	0.0	0.0
97.50	Reinf. Top	36.3	91.0					18.0	224.4	54.2	315.4	0.0	0.0
98.00	Appertunance(s)	29.7	18.0	138.2	0.0	414.5	79.2	3.6	11.5	171.4	108.6	0.0	0.0
100.00		52.7	71.1					14.4	36.1	67.1	107.2	0.0	0.0
102.50		52.7	87.2					14.4	45.1	67.1	132.3	0.0	0.0

© 2007 - 2016 by ATC IP LLC. All rights reserved.

Load Case: 1.0D + 1.0W Serviceability 60 mph 25 Iterations

Gust Response Factor : 1.10
Dead Load Factor : 1.00
Wind Load Factor : 1.00
Wind Importance Factor : 1.00

105.00		46.8	85.4					0.0	45.1	46.8	130.5	0.0	0.0
107.50		45.8	83.5					0.0	45.1	45.8	128.6	0.0	0.0
110.00	Appertunance(s)	44.8	81.6	445.9	0.0	0.0	912.0	0.0	45.1	490.6	1,038.7	0.0	0.0
112.50		43.7	79.8					0.0	35.5	43.7	115.3	0.0	0.0
115.00		42.7	77.9					0.0	35.5	42.7	113.4	0.0	0.0
117.50		41.6	76.0					0.0	35.5	41.6	111.5	0.0	0.0
120.00	Appertunance(s)	20.6	74.2	1,348.8	0.0	3,179.5	3,124.3	0.0	35.5	1,369.4	3,233.9	0.0	0.0
								Totals:		6,950.67	22,822.3	0.00	0.00

© 2007 - 2016 by ATC IP LLC. All rights reserved.

Load Case: 1.0D + 1.0W Serviceability 60 mph 25 Iterations

Gust Response Factor : 1.10 Wind Importance Factor : 1.00
Dead Load Factor : 1.00
Wind Load Factor : 1.00

Calculated Forces

Seg Elev (ft)	Pu FY (-) (kips)	Vu FX (-) (kips)	Tu MY (ft-kips)	Mu MZ (ft-kips)	Mu MX (ft-kips)	Resultant Moment (ft-kips)	phi Pn (kips)	phi Vn (kips)	phi Tn (ft-kips)	phi Mn (ft-kips)	Total Deflect (in)	Rotation (deg)	Ratio
0.00	-22.82	-6.90	0.00	-530.31	0.00	530.31	1,590.66	795.33	2,018.74	996.98	0.00	0.00	0.163
2.50	-22.27	-6.78	0.00	-513.06	0.00	513.06	1,581.24	790.62	1,982.92	979.29	0.01	-0.04	0.158
5.00	-21.73	-6.66	0.00	-496.11	0.00	496.11	1,571.59	785.80	1,947.12	961.61	0.04	-0.07	0.154
7.50	-21.17	-6.55	0.00	-479.45	0.00	479.45	1,561.72	780.86	1,911.33	943.93	0.09	-0.11	0.150
10.00	-20.55	-6.43	0.00	-463.09	0.00	463.09	1,551.63	775.81	1,875.57	926.27	0.15	-0.14	0.146
12.50	-19.94	-6.32	0.00	-447.00	0.00	447.00	1,541.31	770.66	1,839.85	908.63	0.24	-0.18	0.142
15.00	-19.33	-6.25	0.00	-431.19	0.00	431.19	1,530.78	765.39	1,804.18	891.02	0.34	-0.21	0.138
15.50	-19.20	-6.20	0.00	-428.07	0.00	428.07	1,528.64	764.32	1,797.05	887.50	0.37	-0.22	0.137
15.50	-19.20	-6.20	0.00	-428.07	0.00	428.07	1,528.64	764.32	1,797.05	887.50	0.37	-0.22	0.215
17.50	-18.85	-6.11	0.00	-415.66	0.00	415.66	1,520.01	760.01	1,768.57	873.43	0.47	-0.25	0.211
20.00	-18.41	-6.02	0.00	-400.38	0.00	400.38	1,509.03	754.52	1,733.02	855.87	0.61	-0.30	0.205
22.50	-17.97	-5.92	0.00	-385.34	0.00	385.34	1,497.83	748.91	1,697.56	838.36	0.78	-0.36	0.199
25.00	-17.53	-5.83	0.00	-370.54	0.00	370.54	1,486.40	743.20	1,662.18	820.89	0.99	-0.41	0.194
27.50	-17.10	-5.73	0.00	-355.98	0.00	355.98	1,474.74	737.37	1,626.91	803.47	1.21	-0.46	0.188
30.00	-16.67	-5.64	0.00	-341.65	0.00	341.65	1,462.87	731.44	1,591.74	786.10	1.47	-0.51	0.182
32.50	-16.24	-5.55	0.00	-327.55	0.00	327.55	1,450.77	725.39	1,556.69	768.79	1.75	-0.56	0.177
35.00	-15.81	-5.46	0.00	-313.68	0.00	313.68	1,438.45	719.23	1,521.78	751.55	2.06	-0.62	0.171
37.50	-15.39	-5.40	0.00	-300.04	0.00	300.04	1,425.91	712.96	1,487.00	734.37	2.40	-0.66	0.165
37.58	-15.38	-5.36	0.00	-299.59	0.00	299.59	1,425.49	712.74	1,485.84	733.80	2.41	-0.67	0.165
40.00	-14.82	-5.27	0.00	-286.63	0.00	286.63	1,413.15	706.57	1,452.37	717.27	2.76	-0.71	0.157
42.00	-14.37	-5.22	0.00	-276.08	0.00	276.08	1,177.15	588.58	1,220.08	602.55	3.07	-0.75	0.170
42.50	-14.29	-5.17	0.00	-273.47	0.00	273.47	1,175.29	587.65	1,214.60	599.85	3.15	-0.76	0.169
45.00	-13.89	-5.08	0.00	-260.55	0.00	260.55	1,165.87	582.93	1,187.28	586.35	3.56	-0.81	0.162
47.50	-13.49	-4.98	0.00	-247.86	0.00	247.86	1,156.22	578.11	1,160.01	572.88	4.00	-0.86	0.156
50.00	-13.10	-4.89	0.00	-235.40	0.00	235.40	1,146.35	573.17	1,132.81	559.45	4.46	-0.90	0.150
52.50	-12.71	-4.79	0.00	-223.19	0.00	223.19	1,136.25	568.13	1,105.70	546.06	4.94	-0.95	0.143
55.00	-12.33	-4.70	0.00	-211.21	0.00	211.21	1,125.94	562.97	1,078.67	532.72	5.45	-0.99	0.137
57.50	-11.94	-4.61	0.00	-199.46	0.00	199.46	1,115.40	557.70	1,051.75	519.42	5.98	-1.03	0.131
60.00	-11.56	-4.51	0.00	-187.95	0.00	187.95	1,104.64	552.32	1,024.94	506.18	6.54	-1.08	0.124
62.50	-11.18	-4.42	0.00	-176.67	0.00	176.67	1,093.65	546.83	998.25	493.00	7.11	-1.12	0.118
65.00	-10.80	-4.33	0.00	-165.62	0.00	165.62	1,082.45	541.22	971.69	479.88	7.71	-1.16	0.112
67.50	-10.42	-4.23	0.00	-154.81	0.00	154.81	1,071.02	535.51	945.28	466.84	8.32	-1.19	0.106
70.00	-10.05	-4.14	0.00	-144.22	0.00	144.22	1,059.36	529.68	919.01	453.87	8.96	-1.23	0.100
72.50	-9.68	-4.05	0.00	-133.87	0.00	133.87	1,047.49	523.74	892.91	440.97	9.61	-1.27	0.094
75.00	-9.31	-3.98	0.00	-123.74	0.00	123.74	1,035.39	517.69	866.98	428.17	10.29	-1.30	0.088
76.17	-9.14	-3.93	0.00	-119.10	0.00	119.10	1,029.67	514.83	854.94	422.22	10.61	-1.32	0.085
77.50	-8.89	-3.87	0.00	-113.86	0.00	113.86	1,023.07	511.53	841.23	415.45	10.98	-1.33	0.080
79.50	-8.52	-3.82	0.00	-106.11	0.00	106.11	1,013.05	506.53	820.77	405.35	11.54	-1.36	0.075
79.50	-8.52	-3.82	0.00	-106.11	0.00	106.11	1,013.05	506.53	820.77	405.35	11.54	-1.36	0.075
80.00	-8.42	-3.77	0.00	-104.20	0.00	104.20	831.49	415.75	686.29	338.93	11.68	-1.36	0.082
82.50	-8.08	-3.68	0.00	-94.76	0.00	94.76	822.47	411.24	666.44	329.13	12.41	-1.39	0.076
85.00	-7.73	-3.60	0.00	-85.55	0.00	85.55	813.23	406.62	646.68	319.37	13.14	-1.42	0.069
87.50	-7.39	-3.51	0.00	-76.56	0.00	76.56	803.77	401.88	627.03	309.67	13.89	-1.45	0.063
90.00	-6.10	-2.76	0.00	-67.10	0.00	67.10	794.08	397.04	607.50	300.02	14.66	-1.47	0.055
92.50	-5.78	-2.67	0.00	-60.20	0.00	60.20	784.17	392.08	588.09	290.43	15.43	-1.49	0.050
95.00	-5.47	-2.59	0.00	-53.53	0.00	53.53	774.04	387.02	568.81	280.91	16.22	-1.51	0.045
97.50	-5.15	-2.52	0.00	-47.06	0.00	47.06	763.68	381.84	549.68	271.47	17.01	-1.53	0.040
97.50	-5.15	-2.52	0.00	-47.06	0.00	47.06	763.68	381.84	549.68	271.47	17.01	-1.53	0.180
98.00	-5.05	-2.35	0.00	-45.38	0.00	45.38	761.58	380.79	545.87	269.59	17.17	-1.53	0.175
100.00	-4.94	-2.29	0.00	-40.68	0.00	40.68	753.10	376.55	530.71	262.10	17.83	-1.59	0.162
102.50	-4.81	-2.22	0.00	-34.96	0.00	34.96	742.30	371.15	511.90	252.81	18.68	-1.66	0.145

© 2007 - 2016 by ATC IP LLC. All rights reserved.

Load Case: 1.0D + 1.0W Serviceability 60 mph 25 Iterations

Gust Response Factor : 1.10
Dead Load Factor : 1.00
Wind Load Factor : 1.00
Wind Importance Factor : 1.00

105.00	-4.68	-2.18	0.00	-29.40	0.00	29.40	731.28	365.64	493.27	243.61	19.57	-1.72	0.127
107.50	-4.55	-2.13	0.00	-23.95	0.00	23.95	715.50	357.75	471.83	233.02	20.48	-1.78	0.109
110.00	-3.52	-1.61	0.00	-18.62	0.00	18.62	699.32	349.66	450.61	222.54	21.43	-1.83	0.089
112.50	-3.41	-1.57	0.00	-14.59	0.00	14.59	683.14	341.57	429.88	212.30	22.40	-1.87	0.074
115.00	-3.30	-1.52	0.00	-10.68	0.00	10.68	666.96	333.48	409.64	202.31	23.38	-1.90	0.058
117.50	-3.19	-1.48	0.00	-6.87	0.00	6.87	650.78	325.39	389.89	192.55	24.38	-1.92	0.041
120.00	0.00	-1.37	0.00	-3.18	0.00	3.18	634.60	317.30	370.62	183.04	25.40	-1.94	0.017

© 2007 - 2016 by ATC IP LLC. All rights reserved.

Equivalent Lateral Forces Method Analysis

(Based on ASCE7-10 Chapters 11, 12, 15)

Spectral Response Acceleration for Short Period (S_s):	0.19	
Spectral Response Acceleration at 1.0 Second Period (S_1):	0.06	
Long-Period Transition Period (T_L):	6	
Importance Factor (I_E):	1.00	
Site Coefficient F_a:	1.60	
Site Coeffiecient F_v:	2.40	
Response Modification Coefficient (R):	1.50	
Design Spectral Response Acceleration at Short Period (S_{ds}):	0.20	
Design Spectral Response Acceleration at 1.0 Second Period (S_{d1}):	0.10	
Seismic Response Coefficient (C_s):	0.03	
Upper Limit C_s	0.03	
Lower Limit C_s	0.03	
Period based on Rayleigh Method (sec):	2.12	
Redundancy Factor (p):	1.30	
Seismic Force Distribution Exponent (k):	1.81	
Total Unfactored Dead Load:	22.82	k
Seismic Base Shear (E):	0.96	k

Load Case (1.2 + 0.2Sds) * DL + E ELFM — **Seismic Equivalent Lateral Forces Method**

Segment	Height Above Base (ft)	Weight (lb)	W_z (lb-ft)	C_{vx}	Horizontal Force (lb)	Vertical Force (lb)
54	118.75	110	621	0.012	11	136
53	116.25	112	608	0.012	11	138
52	113.75	113	594	0.011	11	141
51	111.25	115	580	0.011	11	143
50	108.75	127	612	0.012	11	157
49	106.25	129	596	0.011	11	159
48	103.75	130	579	0.011	11	162
47	101.25	132	562	0.011	10	164
46	99.00	107	437	0.008	8	133
45	97.75	29	117	0.002	2	36
44	96.25	315	1,222	0.023	22	391
43	93.75	317	1,172	0.023	22	393
42	91.25	319	1,122	0.022	21	395
41	88.75	341	1,142	0.022	21	423
40	86.25	343	1,091	0.021	20	426
39	83.75	345	1,040	0.020	19	428
38	81.25	347	990	0.019	18	430
37	79.75	93	257	0.005	5	116
36	78.50	374	1,003	0.019	18	464
35	76.83	251	647	0.012	12	311
34	75.58	171	428	0.008	8	212
33	73.75	368	881	0.017	16	456
32	71.25	370	832	0.016	15	459

 © 2007 - 2016 by ATC IP LLC. All rights reserved.

31	68.75	372	785	0.015	14	461
30	66.25	375	738	0.014	14	464
29	63.75	377	693	0.013	13	467
28	61.25	379	648	0.012	12	470
27	58.75	381	604	0.012	11	472
26	56.25	383	562	0.011	10	475
25	53.75	385	520	0.010	10	478
24	51.25	388	480	0.009	9	480
23	48.75	390	441	0.008	8	483
22	46.25	392	403	0.008	7	486
21	43.75	394	367	0.007	7	488
20	42.25	79	69	0.001	1	98
19	41.00	453	375	0.007	7	562
18	38.79	551	413	0.008	8	683
17	37.54	14	10	0.000	0	17
16	36.25	419	278	0.005	5	520
15	33.75	422	245	0.005	5	523
14	31.25	424	215	0.004	4	526
13	28.75	427	186	0.004	3	529
12	26.25	429	159	0.003	3	532
11	23.75	432	133	0.003	2	535
10	21.25	434	109	0.002	2	538
9	18.75	437	88	0.002	2	541
8	16.50	351	56	0.001	1	435
7	15.25	121	17	0.000	0	151
6	13.75	609	70	0.001	1	755
5	11.25	611	49	0.001	1	758
4	8.75	614	31	0.001	1	761
3	6.25	554	15	0.000	0	687
2	3.75	541	6	0.000	0	670
1	1.25	543	1	0.000	0	673
CCI DTMABP7819VG12A	120.00	58	333	0.006	6	71
Raycap DC6-48-60-18-	120.00	40	231	0.004	4	50
Ericsson RRUS A2	120.00	45	260	0.005	5	56
Ericsson RRUS-11 190	120.00	264	1,524	0.029	28	327
Ericsson RRUS 32 (50	120.00	152	880	0.017	16	189
2' Std. Dish	120.00	14	81	0.002	1	17
Powerwave Allgon 777	120.00	105	606	0.012	11	130
KMW AM-X-CD-16-65-00	120.00	49	280	0.005	5	60
Quintel QS66512-3 (1	120.00	112	647	0.012	12	139
Andrew SBNH-1D6565C	120.00	122	702	0.013	13	151
CCI TPA-65R-LCUUUU-H	120.00	164	948	0.018	17	204
Flat Platform w/ Han	120.00	2,000	11,547	0.222	212	2,479
Andrew DB844H90E-XY	110.00	112	552	0.011	10	139
Round T-Arm	110.00	500	2,466	0.047	45	620
T-Arm w/ Working Pla	110.00	300	1,480	0.028	27	372
RFS APXV18-206517S-C	98.00	79	317	0.006	6	98
Horizon Compact	90.00	42	145	0.003	3	53
NextNet BTS-2500	90.00	105	360	0.007	7	130
Argus LLPX310R	90.00	86	294	0.006	5	106
DragonWave A-ANT-18G	90.00	27	93	0.002	2	34
Side Arms	90.00	560	1,921	0.037	35	694
DragonWave A-ANT-11G	90.00	143	490	0.009	9	177
		22,822	52,056	1.000	956	28,288

Load Case (0.9 - 0.2Sds) * DL + E ELFM **Seismic (Reduced DL) Equivalent Lateral Forces Method**

Segment	Height Above Base (ft)	Weight (lb)	W_z (lb-ft)	C_{vx}	Horizontal Force (lb)	Vertical Force (lb)
54	118.75	110	621	0.012	11	94

© 2007 - 2016 by ATC IP LLC. All rights reserved.

53	116.25	112	608	0.012	11	96
52	113.75	113	594	0.011	11	98
51	111.25	115	580	0.011	11	99
50	108.75	127	612	0.012	11	109
49	106.25	129	596	0.011	11	111
48	103.75	130	579	0.011	11	112
47	101.25	132	562	0.011	10	114
46	99.00	107	437	0.008	8	92
45	97.75	29	117	0.002	2	25
44	96.25	315	1,222	0.023	22	271
43	93.75	317	1,172	0.023	22	273
42	91.25	319	1,122	0.022	21	275
41	88.75	341	1,142	0.022	21	294
40	86.25	343	1,091	0.021	20	295
39	83.75	345	1,040	0.020	19	297
38	81.25	347	990	0.019	18	299
37	79.75	93	257	0.005	5	80
36	78.50	374	1,003	0.019	18	322
35	76.83	251	647	0.012	12	216
34	75.58	171	428	0.008	8	147
33	73.75	368	881	0.017	16	317
32	71.25	370	832	0.016	15	319
31	68.75	372	785	0.015	14	320
30	66.25	375	738	0.014	14	322
29	63.75	377	693	0.013	13	324
28	61.25	379	648	0.012	12	326
27	58.75	381	604	0.012	11	328
26	56.25	383	562	0.011	10	330
25	53.75	385	520	0.010	10	332
24	51.25	388	480	0.009	9	334
23	48.75	390	441	0.008	8	335
22	46.25	392	403	0.008	7	337
21	43.75	394	367	0.007	7	339
20	42.25	79	69	0.001	1	68
19	41.00	453	375	0.007	7	390
18	38.79	551	413	0.008	8	475
17	37.54	14	10	0.000	0	12
16	36.25	419	278	0.005	5	361
15	33.75	422	245	0.005	5	363
14	31.25	424	215	0.004	4	365
13	28.75	427	186	0.004	3	367
12	26.25	429	159	0.003	3	369
11	23.75	432	133	0.003	2	372
10	21.25	434	109	0.002	2	374
9	18.75	437	88	0.002	2	376
8	16.50	351	56	0.001	1	302
7	15.25	121	17	0.000	0	105
6	13.75	609	70	0.001	1	524
5	11.25	611	49	0.001	1	526
4	8.75	614	31	0.001	1	528
3	6.25	554	15	0.000	0	477
2	3.75	541	6	0.000	0	465
1	1.25	543	1	0.000	0	468
CCI DTMABP7819VG12A	120.00	58	333	0.006	6	50
Raycap DC6-48-60-18-	120.00	40	231	0.004	4	34
Ericsson RRUS A2	120.00	45	260	0.005	5	39
Ericsson RRUS-11 190	120.00	264	1,524	0.029	28	227
Ericsson RRUS 32 (50	120.00	152	880	0.017	16	131
2' Std. Dish	120.00	14	81	0.002	1	12
Powerwave Allgon 777	120.00	105	606	0.012	11	90
KMW AM-X-CD-16-65-00	120.00	49	280	0.005	5	42
Quintel QS66512-3 (1	120.00	112	647	0.012	12	96
Andrew SBNH-1D6565C	120.00	122	702	0.013	13	105
CCI TPA-65R-LCUUUU-H	120.00	164	948	0.018	17	141

© 2007 - 2016 by ATC IP LLC. All rights reserved.

Flat Platform w/ Han	120.00	2,000	11,547	0.222	212	1,721
Andrew DB844H90E-XY	110.00	112	552	0.011	10	96
Round T-Arm	110.00	500	2,466	0.047	45	430
T-Arm w/ Working Pla	110.00	300	1,480	0.028	27	258
RFS APXV18-206517S-C	98.00	79	317	0.006	6	68
Horizon Compact	90.00	42	145	0.003	3	36
NextNet BTS-2500	90.00	105	360	0.007	7	90
Argus LLPX310R	90.00	86	294	0.006	5	74
DragonWave A-ANT-18G	90.00	27	93	0.002	2	23
Side Arms	90.00	560	1,921	0.037	35	482
DragonWave A-ANT-11G	90.00	143	490	0.009	9	123
		22,822	52,056	1.000	956	19,639

© 2007 - 2016 by ATC IP LLC. All rights reserved.

Load Case (1.2 + 0.2Sds) * DL + E ELFM **Seismic Equivalent Lateral Forces Method**

Calculated Forces

Seg Elev (ft)	Pu FY (-) (kips)	Vu FX (-) (kips)	Tu MY (ft-kips)	Mu MZ (ft-kips)	Mu MX (ft-kips)	Resultant Moment (ft-kips)	phi Pn (kips)	phi Vn (kips)	phi Tn (ft-kips)	phi Mn (ft-kips)	Total Deflect (in)	Rotation (deg)	Ratio
0.00	-27.61	-0.96	0.00	-95.59	0.00	95.59	1,590.66	795.33	2,018.74	996.98	0.00	0.00	0.035
2.50	-26.94	-0.96	0.00	-93.20	0.00	93.20	1,581.24	790.62	1,982.92	979.29	0.00	-0.01	0.034
5.00	-26.26	-0.96	0.00	-90.80	0.00	90.80	1,571.59	785.80	1,947.12	961.61	0.01	-0.01	0.034
7.50	-25.50	-0.96	0.00	-88.40	0.00	88.40	1,561.72	780.86	1,911.33	943.93	0.02	-0.02	0.033
10.00	-24.74	-0.97	0.00	-85.99	0.00	85.99	1,551.63	775.81	1,875.57	926.27	0.03	-0.03	0.032
12.50	-23.98	-0.97	0.00	-83.58	0.00	83.58	1,541.31	770.66	1,839.85	908.63	0.04	-0.03	0.031
15.00	-23.83	-0.97	0.00	-81.16	0.00	81.16	1,530.78	765.39	1,804.18	891.02	0.06	-0.04	0.031
15.50	-23.40	-0.97	0.00	-80.67	0.00	80.67	1,528.64	764.32	1,797.05	887.50	0.07	-0.04	0.031
15.50	-23.40	-0.97	0.00	-80.67	0.00	80.67	1,528.64	764.32	1,797.05	887.50	0.07	-0.04	0.048
17.50	-22.86	-0.97	0.00	-78.74	0.00	78.74	1,520.01	760.01	1,768.57	873.43	0.09	-0.05	0.047
20.00	-22.32	-0.97	0.00	-76.32	0.00	76.32	1,509.03	754.52	1,733.02	855.87	0.11	-0.06	0.046
22.50	-21.78	-0.97	0.00	-73.89	0.00	73.89	1,497.83	748.91	1,697.56	838.36	0.14	-0.07	0.045
25.00	-21.25	-0.97	0.00	-71.46	0.00	71.46	1,486.40	743.20	1,662.18	820.89	0.18	-0.08	0.044
27.50	-20.72	-0.97	0.00	-69.03	0.00	69.03	1,474.74	737.37	1,626.91	803.47	0.23	-0.09	0.043
30.00	-20.19	-0.97	0.00	-66.61	0.00	66.61	1,462.87	731.44	1,591.74	786.10	0.27	-0.10	0.042
32.50	-19.67	-0.97	0.00	-64.18	0.00	64.18	1,450.77	725.39	1,556.69	768.79	0.33	-0.11	0.040
35.00	-19.15	-0.96	0.00	-61.76	0.00	61.76	1,438.45	719.23	1,521.78	751.55	0.39	-0.12	0.039
37.50	-19.13	-0.97	0.00	-59.35	0.00	59.35	1,425.91	712.96	1,487.00	734.37	0.45	-0.13	0.038
37.58	-18.45	-0.96	0.00	-59.27	0.00	59.27	1,425.49	712.74	1,485.84	733.80	0.45	-0.13	0.038
40.00	-17.89	-0.95	0.00	-56.95	0.00	56.95	1,413.15	706.57	1,452.37	717.27	0.52	-0.14	0.037
42.00	-17.79	-0.95	0.00	-55.04	0.00	55.04	1,177.15	588.58	1,220.08	602.55	0.58	-0.14	0.040
42.50	-17.30	-0.95	0.00	-54.57	0.00	54.57	1,175.29	587.65	1,214.60	599.85	0.59	-0.15	0.039
45.00	-16.82	-0.94	0.00	-52.20	0.00	52.20	1,165.87	582.93	1,187.28	586.35	0.67	-0.16	0.038
47.50	-16.33	-0.93	0.00	-49.85	0.00	49.85	1,156.22	578.11	1,160.01	572.88	0.76	-0.16	0.037
50.00	-15.85	-0.93	0.00	-47.51	0.00	47.51	1,146.35	573.17	1,132.81	559.45	0.84	-0.17	0.036
52.50	-15.37	-0.92	0.00	-45.19	0.00	45.19	1,136.25	568.13	1,105.70	546.06	0.94	-0.18	0.034
55.00	-14.90	-0.91	0.00	-42.90	0.00	42.90	1,125.94	562.97	1,078.67	532.72	1.04	-0.19	0.033
57.50	-14.43	-0.90	0.00	-40.63	0.00	40.63	1,115.40	557.70	1,051.75	519.42	1.14	-0.20	0.031
60.00	-13.96	-0.89	0.00	-38.38	0.00	38.38	1,104.64	552.32	1,024.94	506.18	1.25	-0.21	0.030
62.50	-13.49	-0.87	0.00	-36.17	0.00	36.17	1,093.65	546.83	998.25	493.00	1.36	-0.22	0.029
65.00	-13.03	-0.86	0.00	-33.98	0.00	33.98	1,082.45	541.22	971.69	479.88	1.48	-0.23	0.027
67.50	-12.56	-0.85	0.00	-31.83	0.00	31.83	1,071.02	535.51	945.28	466.84	1.60	-0.23	0.026
70.00	-12.11	-0.83	0.00	-29.71	0.00	29.71	1,059.36	529.68	919.01	453.87	1.72	-0.24	0.025
72.50	-11.65	-0.81	0.00	-27.64	0.00	27.64	1,047.49	523.74	892.91	440.97	1.85	-0.25	0.023
75.00	-11.44	-0.81	0.00	-25.60	0.00	25.60	1,035.39	517.69	866.98	428.17	1.98	-0.26	0.022
76.17	-11.13	-0.79	0.00	-24.66	0.00	24.66	1,029.67	514.83	854.94	422.22	2.04	-0.26	0.021
77.50	-10.66	-0.77	0.00	-23.60	0.00	23.60	1,023.07	511.53	841.23	415.45	2.12	-0.26	0.020
79.50	-10.55	-0.77	0.00	-22.06	0.00	22.06	1,013.05	506.53	820.77	405.35	2.23	-0.27	0.019
79.50	-10.55	-0.77	0.00	-22.06	0.00	22.06	1,013.05	506.53	820.77	405.35	2.23	-0.27	0.019
80.00	-10.12	-0.75	0.00	-21.67	0.00	21.67	831.49	415.75	686.29	338.93	2.26	-0.27	0.021
82.50	-9.69	-0.73	0.00	-19.80	0.00	19.80	822.47	411.24	666.44	329.13	2.40	-0.27	0.019
85.00	-9.26	-0.71	0.00	-17.98	0.00	17.98	813.23	406.62	646.68	319.37	2.54	-0.28	0.018
87.50	-8.84	-0.69	0.00	-16.20	0.00	16.20	803.77	401.88	627.03	309.67	2.69	-0.29	0.017
90.00	-7.25	-0.60	0.00	-14.49	0.00	14.49	794.08	397.04	607.50	300.02	2.84	-0.29	0.015
92.50	-6.86	-0.57	0.00	-13.00	0.00	13.00	784.17	392.08	588.09	290.43	3.00	-0.30	0.013
95.00	-6.47	-0.55	0.00	-11.56	0.00	11.56	774.04	387.02	568.81	280.91	3.15	-0.30	0.012
97.50	-6.43	-0.55	0.00	-10.18	0.00	10.18	763.68	381.84	549.68	271.47	3.31	-0.30	0.011
97.50	-6.43	-0.55	0.00	-10.18	0.00	10.18	763.68	381.84	549.68	271.47	3.31	-0.30	0.046
98.00	-6.20	-0.53	0.00	-9.91	0.00	9.91	761.58	380.79	545.87	269.59	3.34	-0.30	0.045
100.00	-6.04	-0.52	0.00	-8.84	0.00	8.84	753.10	376.55	530.71	262.10	3.47	-0.32	0.042
102.50	-5.87	-0.51	0.00	-7.53	0.00	7.53	742.30	371.15	511.90	252.81	3.64	-0.33	0.038
105.00	-5.71	-0.50	0.00	-6.24	0.00	6.24	731.28	365.64	493.27	243.61	3.82	-0.35	0.033
107.50	-5.56	-0.49	0.00	-4.98	0.00	4.98	715.50	357.75	471.83	233.02	4.00	-0.36	0.029
110.00	-4.28	-0.39	0.00	-3.75	0.00	3.75	699.32	349.66	450.61	222.54	4.19	-0.37	0.023
112.50	-4.14	-0.38	0.00	-2.77	0.00	2.77	683.14	341.57	429.88	212.30	4.39	-0.37	0.019
115.00	-4.01	-0.37	0.00	-1.82	0.00	1.82	666.96	333.48	409.64	202.31	4.59	-0.38	0.015

© 2007 - 2016 by ATC IP LLC. All rights reserved.

117.50	-3.87	-0.36	0.00	-0.89	0.00	0.89	650.78	325.39	389.89	192.55	4.79	-0.38	0.011
120.00	0.00	-0.33	0.00	0.00	0.00	0.00	634.60	317.30	370.62	183.04	4.99	-0.39	0.000

© 2007 - 2016 by ATC IP LLC. All rights reserved.

Load Case (0.9 - 0.2Sds) * DL + E ELFM **Seismic (Reduced DL) Equivalent Lateral Forces Method**

Calculated Forces

Seg Elev (ft)	Pu FY (-) (kips)	Vu FX (-) (kips)	Tu MY (ft-kips)	Mu MZ (ft-kips)	Mu MX (ft-kips)	Resultant Moment (ft-kips)	phi Pn (kips)	phi Vn (kips)	phi Tn (ft-kips)	phi Mn (ft-kips)	Total Deflect (in)	Rotation (deg)	Ratio
0.00	-19.17	-0.96	0.00	-94.22	0.00	94.22	1,590.66	795.33	2,018.74	996.98	0.00	0.00	0.033
2.50	-18.71	-0.96	0.00	-91.83	0.00	91.83	1,581.24	790.62	1,982.92	979.29	0.00	-0.01	0.032
5.00	-18.23	-0.96	0.00	-89.44	0.00	89.44	1,571.59	785.80	1,947.12	961.61	0.01	-0.01	0.031
7.50	-17.70	-0.96	0.00	-87.04	0.00	87.04	1,561.72	780.86	1,911.33	943.93	0.02	-0.02	0.031
10.00	-17.18	-0.96	0.00	-84.64	0.00	84.64	1,551.63	775.81	1,875.57	926.27	0.03	-0.03	0.030
12.50	-16.65	-0.96	0.00	-82.23	0.00	82.23	1,541.31	770.66	1,839.85	908.63	0.04	-0.03	0.029
15.00	-16.55	-0.96	0.00	-79.83	0.00	79.83	1,530.78	765.39	1,804.18	891.02	0.06	-0.04	0.029
15.50	-16.24	-0.96	0.00	-79.35	0.00	79.35	1,528.64	764.32	1,797.05	887.50	0.07	-0.04	0.028
15.50	-16.24	-0.96	0.00	-79.35	0.00	79.35	1,528.64	764.32	1,797.05	887.50	0.07	-0.04	0.044
17.50	-15.87	-0.96	0.00	-77.42	0.00	77.42	1,520.01	760.01	1,768.57	873.43	0.08	-0.05	0.044
20.00	-15.49	-0.96	0.00	-75.02	0.00	75.02	1,509.03	754.52	1,733.02	855.87	0.11	-0.06	0.043
22.50	-15.12	-0.96	0.00	-72.61	0.00	72.61	1,497.83	748.91	1,697.56	838.36	0.14	-0.07	0.042
25.00	-14.75	-0.96	0.00	-70.20	0.00	70.20	1,486.40	743.20	1,662.18	820.89	0.18	-0.08	0.041
27.50	-14.39	-0.96	0.00	-67.80	0.00	67.80	1,474.74	737.37	1,626.91	803.47	0.22	-0.09	0.040
30.00	-14.02	-0.96	0.00	-65.39	0.00	65.39	1,462.87	731.44	1,591.74	786.10	0.27	-0.10	0.039
32.50	-13.66	-0.96	0.00	-63.00	0.00	63.00	1,450.77	725.39	1,556.69	768.79	0.32	-0.11	0.038
35.00	-13.30	-0.95	0.00	-60.61	0.00	60.61	1,438.45	719.23	1,521.78	751.55	0.38	-0.11	0.037
37.50	-13.28	-0.95	0.00	-58.23	0.00	58.23	1,425.91	712.96	1,487.00	734.37	0.44	-0.12	0.036
37.58	-12.81	-0.95	0.00	-58.15	0.00	58.15	1,425.49	712.74	1,485.84	733.80	0.44	-0.12	0.036
40.00	-12.42	-0.94	0.00	-55.86	0.00	55.86	1,413.15	706.57	1,452.37	717.27	0.51	-0.13	0.034
42.00	-12.35	-0.94	0.00	-53.99	0.00	53.99	1,177.15	588.58	1,220.08	602.55	0.57	-0.14	0.037
42.50	-12.01	-0.93	0.00	-53.52	0.00	53.52	1,175.29	587.65	1,214.60	599.85	0.58	-0.14	0.037
45.00	-11.67	-0.93	0.00	-51.18	0.00	51.18	1,165.87	582.93	1,187.28	586.35	0.66	-0.15	0.035
47.50	-11.34	-0.92	0.00	-48.87	0.00	48.87	1,156.22	578.11	1,160.01	572.88	0.74	-0.16	0.034
50.00	-11.00	-0.91	0.00	-46.57	0.00	46.57	1,146.35	573.17	1,132.81	559.45	0.83	-0.17	0.033
52.50	-10.67	-0.90	0.00	-44.29	0.00	44.29	1,136.25	568.13	1,105.70	546.06	0.92	-0.18	0.032
55.00	-10.34	-0.89	0.00	-42.04	0.00	42.04	1,125.94	562.97	1,078.67	532.72	1.02	-0.19	0.030
57.50	-10.02	-0.88	0.00	-39.81	0.00	39.81	1,115.40	557.70	1,051.75	519.42	1.12	-0.20	0.029
60.00	-9.69	-0.87	0.00	-37.60	0.00	37.60	1,104.64	552.32	1,024.94	506.18	1.23	-0.21	0.028
62.50	-9.37	-0.86	0.00	-35.43	0.00	35.43	1,093.65	546.83	998.25	493.00	1.34	-0.21	0.027
65.00	-9.04	-0.84	0.00	-33.28	0.00	33.28	1,082.45	541.22	971.69	479.88	1.45	-0.22	0.025
67.50	-8.72	-0.83	0.00	-31.17	0.00	31.17	1,071.02	535.51	945.28	466.84	1.57	-0.23	0.024
70.00	-8.40	-0.81	0.00	-29.10	0.00	29.10	1,059.36	529.68	919.01	453.87	1.69	-0.24	0.023
72.50	-8.09	-0.80	0.00	-27.06	0.00	27.06	1,047.49	523.74	892.91	440.97	1.82	-0.24	0.021
75.00	-7.94	-0.79	0.00	-25.07	0.00	25.07	1,035.39	517.69	866.98	428.17	1.95	-0.25	0.020
76.17	-7.72	-0.78	0.00	-24.15	0.00	24.15	1,029.67	514.83	854.94	422.22	2.01	-0.25	0.020
77.50	-7.40	-0.76	0.00	-23.11	0.00	23.11	1,023.07	511.53	841.23	415.45	2.08	-0.26	0.019
79.50	-7.32	-0.75	0.00	-21.59	0.00	21.59	1,013.05	506.53	820.77	405.35	2.19	-0.26	0.018
79.50	-7.32	-0.75	0.00	-21.59	0.00	21.59	1,013.05	506.53	820.77	405.35	2.19	-0.26	0.018
80.00	-7.02	-0.73	0.00	-21.22	0.00	21.22	831.49	415.75	686.29	338.93	2.22	-0.26	0.019
82.50	-6.73	-0.71	0.00	-19.38	0.00	19.38	822.47	411.24	666.44	329.13	2.36	-0.27	0.018
85.00	-6.43	-0.69	0.00	-17.60	0.00	17.60	813.23	406.62	646.68	319.37	2.50	-0.28	0.016
87.50	-6.14	-0.67	0.00	-15.86	0.00	15.86	803.77	401.88	627.03	309.67	2.64	-0.28	0.015
90.00	-5.03	-0.59	0.00	-14.18	0.00	14.18	794.08	397.04	607.50	300.02	2.79	-0.29	0.013
92.50	-4.76	-0.56	0.00	-12.72	0.00	12.72	784.17	392.08	588.09	290.43	2.94	-0.29	0.012
95.00	-4.49	-0.54	0.00	-11.31	0.00	11.31	774.04	387.02	568.81	280.91	3.10	-0.29	0.011
97.50	-4.46	-0.54	0.00	-9.96	0.00	9.96	763.68	381.84	549.68	271.47	3.25	-0.30	0.010
97.50	-4.46	-0.54	0.00	-9.96	0.00	9.96	763.68	381.84	549.68	271.47	3.25	-0.30	0.043
98.00	-4.30	-0.52	0.00	-9.69	0.00	9.69	761.58	380.79	545.87	269.59	3.28	-0.30	0.042
100.00	-4.19	-0.51	0.00	-8.64	0.00	8.64	753.10	376.55	530.71	262.10	3.41	-0.31	0.039
102.50	-4.08	-0.50	0.00	-7.36	0.00	7.36	742.30	371.15	511.90	252.81	3.58	-0.33	0.035
105.00	-3.97	-0.49	0.00	-6.10	0.00	6.10	731.28	365.64	493.27	243.61	3.75	-0.34	0.030
107.50	-3.86	-0.48	0.00	-4.87	0.00	4.87	715.50	357.75	471.83	233.02	3.93	-0.35	0.026
110.00	-2.97	-0.38	0.00	-3.66	0.00	3.66	699.32	349.66	450.61	222.54	4.12	-0.36	0.021
112.50	-2.88	-0.37	0.00	-2.71	0.00	2.71	683.14	341.57	429.88	212.30	4.31	-0.37	0.017
115.00	-2.78	-0.36	0.00	-1.77	0.00	1.77	666.96	333.48	409.64	202.31	4.50	-0.37	0.013

© 2007 - 2016 by ATC IP LLC. All rights reserved.

117.50	-2.69	-0.35	0.00	-0.87	0.00	0.87	650.78	325.39	389.89	192.55	4.70	-0.38	0.009
120.00	0.00	-0.33	0.00	0.00	0.00	0.00	634.60	317.30	370.62	183.04	4.90	-0.38	0.000

© 2007 - 2016 by ATC IP LLC. All rights reserved.

Equivalent Modal Forces Analysis

(Based on ASCE7-10 Chapters 11, 12 & 15 and ANSI/TIA-G, section 2.7)

Spectral Response Acceleration for Short Period (S_s):	0.19
Spectral Response Acceleration at 1.0 Second Period (S_1):	0.06
Importance Factor (I_E):	1.00
Site Coefficient F_a:	1.60
Site Coefficient F_v	2.40
Response Modification Coefficient (R):	1.50
Design Spectral Response Acceleration at Short Period (S_{ds}):	0.20
Desing Spectral Response Acceleration at 1.0 Second Period (S_{d1}):	0.10
Period Based on Rayleigh Method (sec):	2.12
Redundancy Factor (p):	1.30

Load Case (1.2 + 0.2Sds) * DL + E EMAM **Seismic Equivalent Modal Analysis Method**

Segment	Height Above Base (ft)	Weight (lb)	a	b	c	Saz	Horizontal Force (lb)	Vertical Force (lb)
54	118.75	110	1.851	1.780	1.067	0.351	33	136
53	116.25	112	1.774	1.422	0.933	0.303	29	138
52	113.75	113	1.698	1.116	0.812	0.257	25	141
51	111.25	115	1.624	0.856	0.704	0.215	22	143
50	108.75	127	1.552	0.638	0.607	0.177	19	157
49	106.25	129	1.482	0.457	0.521	0.141	16	159
48	103.75	130	1.413	0.308	0.445	0.109	12	162
47	101.25	132	1.346	0.189	0.378	0.080	9	164
46	99.00	107	1.286	0.102	0.324	0.057	5	133
45	97.75	29	1.254	0.062	0.297	0.045	1	36
44	96.25	315	1.216	0.020	0.267	0.032	9	391
43	93.75	317	1.154	-0.035	0.222	0.013	4	393
42	91.25	319	1.093	-0.074	0.182	-0.003	-1	395
41	88.75	341	1.034	-0.100	0.149	-0.016	-5	423
40	86.25	343	0.976	-0.115	0.120	-0.026	-8	426
39	83.75	345	0.921	-0.121	0.096	-0.033	-10	428
38	81.25	347	0.866	-0.121	0.075	-0.037	-11	430
37	79.75	93	0.835	-0.117	0.064	-0.038	-3	116
36	78.50	374	0.809	-0.113	0.056	-0.038	-12	464
35	76.83	251	0.775	-0.107	0.047	-0.036	-8	311
34	75.58	171	0.750	-0.101	0.041	-0.035	-5	212
33	73.75	368	0.714	-0.091	0.033	-0.031	-10	456
32	71.25	370	0.666	-0.076	0.024	-0.025	-8	459
31	68.75	372	0.620	-0.060	0.017	-0.016	-5	461
30	66.25	375	0.576	-0.044	0.012	-0.007	-2	464
29	63.75	377	0.533	-0.028	0.009	0.003	1	467
28	61.25	379	0.492	-0.013	0.007	0.012	4	470
27	58.75	381	0.453	0.001	0.006	0.021	7	472
26	56.25	383	0.415	0.013	0.006	0.029	10	475
25	53.75	385	0.379	0.024	0.007	0.036	12	478
24	51.25	388	0.345	0.034	0.009	0.041	14	480
23	48.75	390	0.312	0.043	0.011	0.045	15	483
22	46.25	392	0.281	0.049	0.014	0.048	16	486
21	43.75	394	0.251	0.055	0.017	0.050	17	488

 © 2007 - 2016 by ATC IP LLC. All rights reserved.

20	42.25	79	0.234	0.058	0.019	0.051	3	98
19	41.00	453	0.221	0.060	0.021	0.051	20	562
18	38.79	551	0.198	0.063	0.024	0.051	24	683
17	37.54	14	0.185	0.065	0.025	0.051	1	17
16	36.25	419	0.172	0.066	0.027	0.051	19	520
15	33.75	422	0.150	0.068	0.030	0.051	18	523
14	31.25	424	0.128	0.069	0.033	0.050	18	526
13	28.75	427	0.108	0.071	0.036	0.049	18	529
12	26.25	429	0.090	0.071	0.038	0.048	18	532
11	23.75	432	0.074	0.072	0.040	0.047	18	535
10	21.25	434	0.059	0.072	0.041	0.047	18	538
9	18.75	437	0.046	0.071	0.042	0.046	17	541
8	16.50	351	0.036	0.069	0.041	0.044	14	435
7	15.25	121	0.031	0.068	0.041	0.044	5	151
6	13.75	609	0.025	0.066	0.039	0.042	22	755
5	11.25	611	0.017	0.062	0.036	0.040	21	758
4	8.75	614	0.010	0.055	0.032	0.036	19	761
3	6.25	554	0.005	0.045	0.025	0.031	15	687
2	3.75	541	0.002	0.031	0.017	0.022	10	670
1	1.25	543	0.000	0.012	0.006	0.009	4	673
CCI DTMABP7819VG12A	120.00	58	1.890	1.980	1.140	0.377	19	71
Raycap DC6-48-60-18-	120.00	40	1.890	1.980	1.140	0.377	13	50
Ericsson RRUS A2	120.00	45	1.890	1.980	1.140	0.377	15	56
Ericsson RRUS-11 190	120.00	264	1.890	1.980	1.140	0.377	86	327
Ericsson RRUS 32 (50	120.00	152	1.890	1.980	1.140	0.377	50	189
2' Std. Dish	120.00	14	1.890	1.980	1.140	0.377	5	17
Powerwave Allgon 777	120.00	105	1.890	1.980	1.140	0.377	34	130
KMW AM-X-CD-16-65-00	120.00	49	1.890	1.980	1.140	0.377	16	60
Quintel QS66512-3 (1	120.00	112	1.890	1.980	1.140	0.377	37	139
Andrew SBNH-1D6565C	120.00	122	1.890	1.980	1.140	0.377	40	151
CCI TPA-65R-LCUUUU-H	120.00	164	1.890	1.980	1.140	0.377	54	204
Flat Platform w/ Han	120.00	2,000	1.890	1.980	1.140	0.377	654	2,479
Andrew DB844H90E-XY	110.00	112	1.588	0.742	0.654	0.196	19	139
Round T-Arm	110.00	500	1.588	0.742	0.654	0.196	85	620
T-Arm w/ Working Pla	110.00	300	1.588	0.742	0.654	0.196	51	372
RFS APXV18-206517S-C	98.00	79	1.261	0.069	0.302	0.048	3	98
Horizon Compact	90.00	42	1.063	-0.088	0.165	-0.010	0	53
NextNet BTS-2500	90.00	105	1.063	-0.088	0.165	-0.010	-1	130
Argus LLPX310R	90.00	86	1.063	-0.088	0.165	-0.010	-1	106
DragonWave A-ANT-18G	90.00	27	1.063	-0.088	0.165	-0.010	0	34
Side Arms	90.00	560	1.063	-0.088	0.165	-0.010	-5	694
DragonWave A-ANT-11G	90.00	143	1.063	-0.088	0.165	-0.010	-1	177
		22,822	68.621	32.591	25.127	7.685	1,666	28,288

Load Case (0.9 - 0.2Sds) * DL + E EMAM **Seismic (Reduced DL) Equivalent Modal Analysis Method**

Segment	Height Above Base (ft)	Weight (lb)	a	b	c	Saz	Horizontal Force (lb)	Vertical Force (lb)
54	118.75	110	1.851	1.780	1.067	0.351	33	94
53	116.25	112	1.774	1.422	0.933	0.303	29	96
52	113.75	113	1.698	1.116	0.812	0.257	25	98
51	111.25	115	1.624	0.856	0.704	0.215	22	99
50	108.75	127	1.552	0.638	0.607	0.177	19	109
49	106.25	129	1.482	0.457	0.521	0.141	16	111
48	103.75	130	1.413	0.308	0.445	0.109	12	112
47	101.25	132	1.346	0.189	0.378	0.080	9	114
46	99.00	107	1.286	0.102	0.324	0.057	5	92
45	97.75	29	1.254	0.062	0.297	0.045	1	25
44	96.25	315	1.216	0.020	0.267	0.032	9	271

© 2007 - 2016 by ATC IP LLC. All rights reserved.

43	93.75	317	1.154	-0.035	0.222	0.013	4	273
42	91.25	319	1.093	-0.074	0.182	-0.003	-1	275
41	88.75	341	1.034	-0.100	0.149	-0.016	-5	294
40	86.25	343	0.976	-0.115	0.120	-0.026	-8	295
39	83.75	345	0.921	-0.121	0.096	-0.033	-10	297
38	81.25	347	0.866	-0.121	0.075	-0.037	-11	299
37	79.75	93	0.835	-0.117	0.064	-0.038	-3	80
36	78.50	374	0.809	-0.113	0.056	-0.038	-12	322
35	76.83	251	0.775	-0.107	0.047	-0.036	-8	216
34	75.58	171	0.750	-0.101	0.041	-0.035	-5	147
33	73.75	368	0.714	-0.091	0.033	-0.031	-10	317
32	71.25	370	0.666	-0.076	0.024	-0.025	-8	319
31	68.75	372	0.620	-0.060	0.017	-0.016	-5	320
30	66.25	375	0.576	-0.044	0.012	-0.007	-2	322
29	63.75	377	0.533	-0.028	0.009	0.003	1	324
28	61.25	379	0.492	-0.013	0.007	0.012	4	326
27	58.75	381	0.453	0.001	0.006	0.021	7	328
26	56.25	383	0.415	0.013	0.006	0.029	10	330
25	53.75	385	0.379	0.024	0.007	0.036	12	332
24	51.25	388	0.345	0.034	0.009	0.041	14	334
23	48.75	390	0.312	0.043	0.011	0.045	15	335
22	46.25	392	0.281	0.049	0.014	0.048	16	337
21	43.75	394	0.251	0.055	0.017	0.050	17	339
20	42.25	79	0.234	0.058	0.019	0.051	3	68
19	41.00	453	0.221	0.060	0.021	0.051	20	390
18	38.79	551	0.198	0.063	0.024	0.051	24	475
17	37.54	14	0.185	0.065	0.025	0.051	1	12
16	36.25	419	0.172	0.066	0.027	0.051	19	361
15	33.75	422	0.150	0.068	0.030	0.051	18	363
14	31.25	424	0.128	0.069	0.033	0.050	18	365
13	28.75	427	0.108	0.071	0.036	0.049	18	367
12	26.25	429	0.090	0.071	0.038	0.048	18	369
11	23.75	432	0.074	0.072	0.040	0.047	18	372
10	21.25	434	0.059	0.072	0.041	0.047	18	374
9	18.75	437	0.046	0.071	0.042	0.046	17	376
8	16.50	351	0.036	0.069	0.041	0.044	14	302
7	15.25	121	0.031	0.068	0.041	0.044	5	105
6	13.75	609	0.025	0.066	0.039	0.042	22	524
5	11.25	611	0.017	0.062	0.036	0.040	21	526
4	8.75	614	0.010	0.055	0.032	0.036	19	528
3	6.25	554	0.005	0.045	0.025	0.031	15	477
2	3.75	541	0.002	0.031	0.017	0.022	10	465
1	1.25	543	0.000	0.012	0.006	0.009	4	468
CCI DTMABP7819VG12A	120.00	58	1.890	1.980	1.140	0.377	19	50
Raycap DC6-48-60-18-	120.00	40	1.890	1.980	1.140	0.377	13	34
Ericsson RRUS A2	120.00	45	1.890	1.980	1.140	0.377	15	39
Ericsson RRUS-11 190	120.00	264	1.890	1.980	1.140	0.377	86	227
Ericsson RRUS 32 (50	120.00	152	1.890	1.980	1.140	0.377	50	131
2' Std. Dish	120.00	14	1.890	1.980	1.140	0.377	5	12
Powerwave Allgon 777	120.00	105	1.890	1.980	1.140	0.377	34	90
KMW AM-X-CD-16-65-00	120.00	49	1.890	1.980	1.140	0.377	16	42
Quintel QS66512-3 (1	120.00	112	1.890	1.980	1.140	0.377	37	96
Andrew SBNH-1D6565C	120.00	122	1.890	1.980	1.140	0.377	40	105
CCI TPA-65R-LCUUUU-H	120.00	164	1.890	1.980	1.140	0.377	54	141
Flat Platform w/ Han	120.00	2,000	1.890	1.980	1.140	0.377	654	1,721
Andrew DB844H90E-XY	110.00	112	1.588	0.742	0.654	0.196	19	96
Round T-Arm	110.00	500	1.588	0.742	0.654	0.196	85	430
T-Arm w/ Working Pla	110.00	300	1.588	0.742	0.654	0.196	51	258
RFS APXV18-206517S-C	98.00	79	1.261	0.069	0.302	0.048	3	68
Horizon Compact	90.00	42	1.063	-0.088	0.165	-0.010	0	36
NextNet BTS-2500	90.00	105	1.063	-0.088	0.165	-0.010	-1	90
Argus LLPX310R	90.00	86	1.063	-0.088	0.165	-0.010	-1	74
DragonWave A-ANT-18G	90.00	27	1.063	-0.088	0.165	-0.010	0	23
Side Arms	90.00	560	1.063	-0.088	0.165	-0.010	-5	482

© 2007 - 2016 by ATC IP LLC. All rights reserved.

DragonWave	A-ANT-11G	90.00	143	1.063	-0.088	0.165	-0.010	-1	123
			22,822	68.621	32.591	25.127	7.685	1,666	19,639

© 2007 - 2016 by ATC IP LLC. All rights reserved.

Load Case (1.2 + 0.2Sds) * DL + E EMAM **Seismic Equivalent Modal Analysis Method**

Calculated Forces

Seg Elev (ft)	Pu FY (-) (kips)	Vu FX (-) (kips)	Tu MY (ft-kips)	Mu MZ (ft-kips)	Mu MX (ft-kips)	Resultant Moment (ft-kips)	phi Pn (kips)	phi Vn (kips)	phi Tn (ft-kips)	phi Mn (ft-kips)	Total Deflect (in)	Rotation (deg)	Ratio
0.00	-27.61	-1.66	0.00	-172.30	0.00	172.30	1,590.66	795.33	2,018.74	996.98	0.00	0.00	0.058
2.50	-26.94	-1.66	0.00	-168.14	0.00	168.14	1,581.24	790.62	1,982.92	979.29	0.00	-0.01	0.057
5.00	-26.26	-1.65	0.00	-163.99	0.00	163.99	1,571.59	785.80	1,947.12	961.61	0.01	-0.02	0.056
7.50	-25.50	-1.64	0.00	-159.87	0.00	159.87	1,561.72	780.86	1,911.33	943.93	0.03	-0.04	0.054
10.00	-24.74	-1.62	0.00	-155.78	0.00	155.78	1,551.63	775.81	1,875.57	926.27	0.05	-0.05	0.053
12.50	-23.98	-1.60	0.00	-151.74	0.00	151.74	1,541.31	770.66	1,839.85	908.63	0.08	-0.06	0.052
15.00	-23.83	-1.60	0.00	-147.74	0.00	147.74	1,530.78	765.39	1,804.18	891.02	0.11	-0.07	0.051
15.50	-23.40	-1.59	0.00	-146.94	0.00	146.94	1,528.64	764.32	1,797.05	887.50	0.12	-0.07	0.051
15.50	-23.40	-1.59	0.00	-146.94	0.00	146.94	1,528.64	764.32	1,797.05	887.50	0.12	-0.07	0.080
17.50	-22.85	-1.57	0.00	-143.76	0.00	143.76	1,520.01	760.01	1,768.57	873.43	0.15	-0.08	0.079
20.00	-22.32	-1.56	0.00	-139.83	0.00	139.83	1,509.03	754.52	1,733.02	855.87	0.20	-0.10	0.077
22.50	-21.78	-1.55	0.00	-135.92	0.00	135.92	1,497.83	748.91	1,697.56	838.36	0.26	-0.12	0.076
25.00	-21.25	-1.54	0.00	-132.04	0.00	132.04	1,486.40	743.20	1,662.18	820.89	0.33	-0.14	0.074
27.50	-20.72	-1.53	0.00	-128.19	0.00	128.19	1,474.74	737.37	1,626.91	803.47	0.41	-0.16	0.073
30.00	-20.19	-1.51	0.00	-124.37	0.00	124.37	1,462.87	731.44	1,591.74	786.10	0.50	-0.18	0.071
32.50	-19.67	-1.50	0.00	-120.59	0.00	120.59	1,450.77	725.39	1,556.69	768.79	0.59	-0.20	0.070
35.00	-19.15	-1.49	0.00	-116.84	0.00	116.84	1,438.45	719.23	1,521.78	751.55	0.70	-0.21	0.068
37.50	-19.13	-1.49	0.00	-113.12	0.00	113.12	1,425.91	712.96	1,487.00	734.37	0.82	-0.23	0.067
37.58	-18.45	-1.46	0.00	-113.00	0.00	113.00	1,425.49	712.74	1,485.84	733.80	0.82	-0.23	0.067
40.00	-17.88	-1.45	0.00	-109.46	0.00	109.46	1,413.15	706.57	1,452.37	717.27	0.95	-0.25	0.064
42.00	-17.79	-1.45	0.00	-106.57	0.00	106.57	1,177.15	588.58	1,220.08	602.55	1.06	-0.27	0.071
42.50	-17.30	-1.43	0.00	-105.85	0.00	105.85	1,175.29	587.65	1,214.60	599.85	1.08	-0.27	0.070
45.00	-16.81	-1.42	0.00	-102.27	0.00	102.27	1,165.87	582.93	1,187.28	586.35	1.23	-0.29	0.068
47.50	-16.33	-1.40	0.00	-98.73	0.00	98.73	1,156.22	578.11	1,160.01	572.88	1.39	-0.31	0.067
50.00	-15.85	-1.39	0.00	-95.22	0.00	95.22	1,146.35	573.17	1,132.81	559.45	1.55	-0.33	0.065
52.50	-15.37	-1.38	0.00	-91.74	0.00	91.74	1,136.25	568.13	1,105.70	546.06	1.73	-0.34	0.063
55.00	-14.89	-1.37	0.00	-88.28	0.00	88.28	1,125.94	562.97	1,078.67	532.72	1.91	-0.36	0.061
57.50	-14.42	-1.37	0.00	-84.85	0.00	84.85	1,115.40	557.70	1,051.75	519.42	2.11	-0.38	0.059
60.00	-13.95	-1.37	0.00	-81.42	0.00	81.42	1,104.64	552.32	1,024.94	506.18	2.31	-0.40	0.058
62.50	-13.48	-1.37	0.00	-78.01	0.00	78.01	1,093.65	546.83	998.25	493.00	2.53	-0.42	0.056
65.00	-13.02	-1.37	0.00	-74.59	0.00	74.59	1,082.45	541.22	971.69	479.88	2.75	-0.43	0.054
67.50	-12.56	-1.37	0.00	-71.17	0.00	71.17	1,071.02	535.51	945.28	466.84	2.98	-0.45	0.052
70.00	-12.10	-1.38	0.00	-67.73	0.00	67.73	1,059.36	529.68	919.01	453.87	3.22	-0.47	0.050
72.50	-11.64	-1.39	0.00	-64.28	0.00	64.28	1,047.49	523.74	892.91	440.97	3.47	-0.49	0.048
75.00	-11.43	-1.40	0.00	-60.80	0.00	60.80	1,035.39	517.69	866.98	428.17	3.73	-0.50	0.046
76.17	-11.12	-1.40	0.00	-59.16	0.00	59.16	1,029.67	514.83	854.94	422.22	3.85	-0.51	0.045
77.50	-10.65	-1.41	0.00	-57.29	0.00	57.29	1,023.07	511.53	841.23	415.45	4.00	-0.52	0.043
79.50	-10.54	-1.42	0.00	-54.46	0.00	54.46	1,013.05	506.53	820.77	405.35	4.22	-0.53	0.041
79.50	-10.54	-1.42	0.00	-54.46	0.00	54.46	1,013.05	506.53	820.77	405.35	4.22	-0.53	0.041
80.00	-10.11	-1.43	0.00	-53.75	0.00	53.75	831.49	415.75	686.29	338.93	4.27	-0.53	0.045
82.50	-9.68	-1.44	0.00	-50.19	0.00	50.19	822.47	411.24	666.44	329.13	4.56	-0.55	0.043
85.00	-9.25	-1.44	0.00	-46.60	0.00	46.60	813.23	406.62	646.68	319.37	4.85	-0.56	0.040
87.50	-8.83	-1.44	0.00	-43.00	0.00	43.00	803.77	401.88	627.03	309.67	5.15	-0.58	0.037
90.00	-7.24	-1.44	0.00	-39.39	0.00	39.39	794.08	397.04	607.50	300.02	5.45	-0.59	0.034
92.50	-6.85	-1.43	0.00	-35.79	0.00	35.79	784.17	392.08	588.09	290.43	5.76	-0.60	0.031
95.00	-6.45	-1.42	0.00	-32.21	0.00	32.21	774.04	387.02	568.81	280.91	6.08	-0.61	0.029
97.50	-6.42	-1.42	0.00	-28.66	0.00	28.66	763.68	381.84	549.68	271.47	6.41	-0.63	0.026
97.50	-6.42	-1.42	0.00	-28.66	0.00	28.66	763.68	381.84	549.68	271.47	6.41	-0.63	0.114
98.00	-6.19	-1.41	0.00	-27.95	0.00	27.95	761.58	380.79	545.87	269.59	6.47	-0.63	0.112
100.00	-6.02	-1.40	0.00	-25.12	0.00	25.12	753.10	376.55	530.71	262.10	6.75	-0.66	0.104
102.50	-5.86	-1.39	0.00	-21.61	0.00	21.61	742.30	371.15	511.90	252.81	7.11	-0.71	0.093
105.00	-5.70	-1.38	0.00	-18.13	0.00	18.13	731.28	365.64	493.27	243.61	7.49	-0.75	0.082
107.50	-5.54	-1.36	0.00	-14.68	0.00	14.68	715.50	357.75	471.83	233.02	7.89	-0.78	0.071
110.00	-4.27	-1.17	0.00	-11.27	0.00	11.27	699.32	349.66	450.61	222.54	8.30	-0.81	0.057
112.50	-4.13	-1.14	0.00	-8.35	0.00	8.35	683.14	341.57	429.88	212.30	8.73	-0.83	0.045
115.00	-3.99	-1.11	0.00	-5.48	0.00	5.48	666.96	333.48	409.64	202.31	9.18	-0.85	0.033

© 2007 - 2016 by ATC IP LLC. All rights reserved.

117.50	-3.86	-1.08	0.00	-2.70	0.00	2.70	650.78	325.39	389.89	192.55	9.63	-0.86	0.020
120.00	0.00	-1.02	0.00	0.00	0.00	0.00	634.60	317.30	370.62	183.04	10.08	-0.87	0.000

© 2007 - 2016 by ATC IP LLC. All rights reserved.

Load Case (0.9 - 0.2Sds) * DL + E EMAM **Seismic (Reduced DL) Equivalent Modal Analysis Method**

Calculated Forces

Seg Elev (ft)	Pu FY (-) (kips)	Vu FX (-) (kips)	Tu MY (ft-kips)	Mu MZ (ft-kips)	Mu MX (ft-kips)	Resultant Moment (ft-kips)	phi Pn (kips)	phi Vn (kips)	phi Tn (ft-kips)	phi Mn (ft-kips)	Total Deflect (in)	Rotation (deg)	Ratio
0.00	-19.17	-1.66	0.00	-169.61	0.00	169.61	1,590.66	795.33	2,018.74	996.98	0.00	0.00	0.055
2.50	-18.71	-1.66	0.00	-165.45	0.00	165.45	1,581.24	790.62	1,982.92	979.29	0.00	-0.01	0.054
5.00	-18.23	-1.65	0.00	-161.31	0.00	161.31	1,571.59	785.80	1,947.12	961.61	0.01	-0.02	0.053
7.50	-17.70	-1.63	0.00	-157.20	0.00	157.20	1,561.72	780.86	1,911.33	943.93	0.03	-0.04	0.052
10.00	-17.17	-1.61	0.00	-153.12	0.00	153.12	1,551.63	775.81	1,875.57	926.27	0.05	-0.05	0.051
12.50	-16.65	-1.59	0.00	-149.10	0.00	149.10	1,541.31	770.66	1,839.85	908.63	0.08	-0.06	0.050
15.00	-16.55	-1.59	0.00	-145.12	0.00	145.12	1,530.78	765.39	1,804.18	891.02	0.11	-0.07	0.049
15.50	-16.24	-1.58	0.00	-144.32	0.00	144.32	1,528.64	764.32	1,797.05	887.50	0.12	-0.07	0.048
15.50	-16.24	-1.58	0.00	-144.32	0.00	144.32	1,528.64	764.32	1,797.05	887.50	0.12	-0.07	0.076
17.50	-15.87	-1.56	0.00	-141.17	0.00	141.17	1,520.01	760.01	1,768.57	873.43	0.15	-0.08	0.075
20.00	-15.49	-1.55	0.00	-137.26	0.00	137.26	1,509.03	754.52	1,733.02	855.87	0.20	-0.10	0.074
22.50	-15.12	-1.54	0.00	-133.39	0.00	133.39	1,497.83	748.91	1,697.56	838.36	0.26	-0.12	0.072
25.00	-14.75	-1.52	0.00	-129.55	0.00	129.55	1,486.40	743.20	1,662.18	820.89	0.32	-0.14	0.071
27.50	-14.38	-1.51	0.00	-125.74	0.00	125.74	1,474.74	737.37	1,626.91	803.47	0.40	-0.16	0.069
30.00	-14.02	-1.49	0.00	-121.97	0.00	121.97	1,462.87	731.44	1,591.74	786.10	0.49	-0.17	0.068
32.50	-13.65	-1.48	0.00	-118.24	0.00	118.24	1,450.77	725.39	1,556.69	768.79	0.58	-0.19	0.067
35.00	-13.29	-1.46	0.00	-114.55	0.00	114.55	1,438.45	719.23	1,521.78	751.55	0.69	-0.21	0.065
37.50	-13.28	-1.46	0.00	-110.89	0.00	110.89	1,425.91	712.96	1,487.00	734.37	0.80	-0.23	0.064
37.58	-12.81	-1.44	0.00	-110.77	0.00	110.77	1,425.49	712.74	1,485.84	733.80	0.81	-0.23	0.064
40.00	-12.41	-1.42	0.00	-107.29	0.00	107.29	1,413.15	706.57	1,452.37	717.27	0.93	-0.25	0.061
42.00	-12.35	-1.42	0.00	-104.45	0.00	104.45	1,177.15	588.58	1,220.08	602.55	1.04	-0.26	0.067
42.50	-12.01	-1.40	0.00	-103.74	0.00	103.74	1,175.29	587.65	1,214.60	599.85	1.06	-0.27	0.067
45.00	-11.67	-1.39	0.00	-100.23	0.00	100.23	1,165.87	582.93	1,187.28	586.35	1.21	-0.28	0.065
47.50	-11.33	-1.38	0.00	-96.76	0.00	96.76	1,156.22	578.11	1,160.01	572.88	1.36	-0.30	0.063
50.00	-11.00	-1.36	0.00	-93.32	0.00	93.32	1,146.35	573.17	1,132.81	559.45	1.52	-0.32	0.062
52.50	-10.67	-1.35	0.00	-89.92	0.00	89.92	1,136.25	568.13	1,105.70	546.06	1.70	-0.34	0.060
55.00	-10.34	-1.34	0.00	-86.54	0.00	86.54	1,125.94	562.97	1,078.67	532.72	1.88	-0.36	0.058
57.50	-10.01	-1.34	0.00	-83.18	0.00	83.18	1,115.40	557.70	1,051.75	519.42	2.07	-0.37	0.056
60.00	-9.68	-1.33	0.00	-79.83	0.00	79.83	1,104.64	552.32	1,024.94	506.18	2.27	-0.39	0.055
62.50	-9.36	-1.33	0.00	-76.49	0.00	76.49	1,093.65	546.83	998.25	493.00	2.48	-0.41	0.053
65.00	-9.04	-1.34	0.00	-73.16	0.00	73.16	1,082.45	541.22	971.69	479.88	2.70	-0.43	0.051
67.50	-8.72	-1.34	0.00	-69.81	0.00	69.81	1,071.02	535.51	945.28	466.84	2.93	-0.44	0.049
70.00	-8.40	-1.35	0.00	-66.46	0.00	66.46	1,059.36	529.68	919.01	453.87	3.16	-0.46	0.047
72.50	-8.08	-1.36	0.00	-63.08	0.00	63.08	1,047.49	523.74	892.91	440.97	3.41	-0.48	0.046
75.00	-7.93	-1.37	0.00	-59.68	0.00	59.68	1,035.39	517.69	866.98	428.17	3.66	-0.49	0.044
76.17	-7.72	-1.37	0.00	-58.09	0.00	58.09	1,029.67	514.83	854.94	422.22	3.78	-0.50	0.043
77.50	-7.39	-1.38	0.00	-56.26	0.00	56.26	1,023.07	511.53	841.23	415.45	3.92	-0.51	0.041
79.50	-7.31	-1.39	0.00	-53.49	0.00	53.49	1,013.05	506.53	820.77	405.35	4.14	-0.52	0.039
79.50	-7.31	-1.39	0.00	-53.49	0.00	53.49	1,013.05	506.53	820.77	405.35	4.14	-0.52	0.039
80.00	-7.01	-1.40	0.00	-52.80	0.00	52.80	831.49	415.75	686.29	338.93	4.19	-0.52	0.043
82.50	-6.72	-1.41	0.00	-49.31	0.00	49.31	822.47	411.24	666.44	329.13	4.47	-0.54	0.041
85.00	-6.42	-1.41	0.00	-45.79	0.00	45.79	813.23	406.62	646.68	319.37	4.76	-0.55	0.038
87.50	-6.13	-1.42	0.00	-42.27	0.00	42.27	803.77	401.88	627.03	309.67	5.05	-0.57	0.035
90.00	-5.02	-1.41	0.00	-38.73	0.00	38.73	794.08	397.04	607.50	300.02	5.35	-0.58	0.033
92.50	-4.75	-1.41	0.00	-35.19	0.00	35.19	784.17	392.08	588.09	290.43	5.66	-0.59	0.030
95.00	-4.48	-1.40	0.00	-31.67	0.00	31.67	774.04	387.02	568.81	280.91	5.97	-0.60	0.027
97.50	-4.45	-1.40	0.00	-28.17	0.00	28.17	763.68	381.84	549.68	271.47	6.29	-0.61	0.025
97.50	-4.45	-1.40	0.00	-28.17	0.00	28.17	763.68	381.84	549.68	271.47	6.29	-0.61	0.110
98.00	-4.29	-1.39	0.00	-27.47	0.00	27.47	761.58	380.79	545.87	269.59	6.35	-0.62	0.108
100.00	-4.18	-1.38	0.00	-24.69	0.00	24.69	753.10	376.55	530.71	262.10	6.62	-0.65	0.100
102.50	-4.06	-1.37	0.00	-21.24	0.00	21.24	742.30	371.15	511.90	252.81	6.97	-0.69	0.090
105.00	-3.95	-1.36	0.00	-17.81	0.00	17.81	731.28	365.64	493.27	243.61	7.35	-0.73	0.079
107.50	-3.84	-1.34	0.00	-14.42	0.00	14.42	715.50	357.75	471.83	233.02	7.74	-0.77	0.067
110.00	-2.96	-1.15	0.00	-11.08	0.00	11.08	699.32	349.66	450.61	222.54	8.15	-0.79	0.054
112.50	-2.86	-1.13	0.00	-8.20	0.00	8.20	683.14	341.57	429.88	212.30	8.57	-0.82	0.043
115.00	-2.77	-1.10	0.00	-5.39	0.00	5.39	666.96	333.48	409.64	202.31	9.01	-0.84	0.031

© 2007 - 2016 by ATC IP LLC. All rights reserved.

117.50	-2.67	-1.06	0.00	-2.65	0.00	2.65	650.78	325.39	389.89	192.55	9.45	-0.85	0.018
120.00	0.00	-1.02	0.00	0.00	0.00	0.00	634.60	317.30	370.62	183.04	9.89	-0.85	0.000

© 2007 - 2016 by ATC IP LLC. All rights reserved.

Analysis Summary

Load Case	Reactions Shear FX (kips)	Shear FZ (kips)	Axial FY (kips)	Moment MX (ft-kips)	Moment MY (ft-kips)	Moment MZ (ft-kips)	Max Usage Elev (ft)	Interaction Ratio
1.2D + 1.6W	26.89	0.00	27.35	0.00	0.00	2095.45	15.50	0.84
0.9D + 1.6W	26.88	0.00	20.50	0.00	0.00	2072.43	15.50	0.82
1.2D + 1.0Di + 1.0Wi	7.03	0.00	58.34	0.00	0.00	600.84	15.50	0.26
(1.2 + 0.2Sds) * DL + E ELFM	0.96	0.00	27.61	0.00	0.00	95.59	15.50	0.05
(1.2 + 0.2Sds) * DL + E EMAM	1.66	0.00	27.61	0.00	0.00	172.30	97.50	0.11
(0.9 - 0.2Sds) * DL + E ELFM	0.96	0.00	19.17	0.00	0.00	94.22	15.50	0.04
(0.9 - 0.2Sds) * DL + E EMAM	1.66	0.00	19.17	0.00	0.00	169.61	97.50	0.11
1.0D + 1.0W	6.90	0.00	22.82	0.00	0.00	530.31	15.50	0.22

Additional Steel Summary

Elev From (ft)	Elev To (ft)	Member	Intermediate Connectors VQ/I (lb/in)	Shear Applied (kips)	Shear phiVn (kips)	Upper Termination Connectors MQ/I (kips)	phiVn (kips)	Num Reqd	Num Actual	Lower Termination Connectors MQ/I (kips)	phiVn (kips)	Num Reqd	Num Actual	Max Member Pu (kip)	phiPn (kip)	Ratio
0.00	15.5	(4) SOL-#20 All Thre	249.7	7.5	16.8	207.0	12.0	18	20	0.0	12.0	0	0	235.6	330.5	0.713
0.00	79.5	(4) SOL-#20 All Thre	408.5	12.3	16.8	0.0	12.0	0	12	0.0	12.0	0	0	326.2	330.5	0.987
79.5	97.5	(4) SOL-#20 All Thre	411.3	12.3	16.8	72.2	12.0	7	12	0.0	12.0	0	0	137.3	330.5	0.416

Base/Flange Plate	Plate Type	***Baseplate***	
	Pole Diameter	31	in
	Pole Thickness	0.25	in
	Plate Diameter	44.59	in
	Plate Thickness	2.125	in
	Plate Fy	60	ksi
	Weld Length	0.25	in
	ϕ_s Resistance	787.68	k-in
	Applied	311.45	k-in
Stiffeners	#	***8***	***Show***
	Thickness	0.375	in
	Length	3	in
	Height	3	in
	Chamfer	0	in
	Offset Angle	12.5	°
	Fy	36	ksi

Bolts ●	#	***8***	
	Bolt Circle	38.59	in
	(R)adial / (S)quare	R	
	Diameter	2.25	in
	Hole Diameter	2.625	in
	Type	18J	
	Fy	75	ksi
	Fu	100	ksi
	ϕ_s Resistance	259.82	k
	Applied	139.51	k
Reinforcement ●	#	***8***	
	DYW. Circle	37	in
	Offset Angle	22.5	°
	Type	#20	
	Diameter	2.5	in
	Fu	100	ksi
	ϕ_s Resistance	269.98	k
	Applied	182.21	k
Extra Bolts O	#	***0***	

Code Rev.	***G***
Moment	2095.5 k-ft
Axial	27.4 k

Date	5/24/2016
Engineer	Emily M. Basile, EI
Site #	302500
Carrier	AT&T Mobility

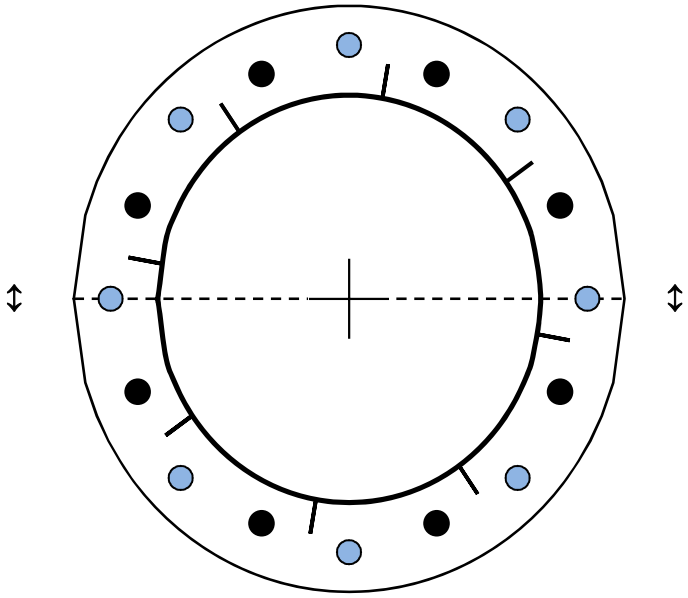

Plate Stress Ratio:
0.40 (Pass)

Bolt Stress Ratio:
0.54 (Pass)

Reinforcement Stress Ratio:
0.67 (Pass)

Site Name:	Brst - Bristol	*Program Last Updated:* *11/15/2012*
Site Number:	302500	
Engineering Number:	644903Z9	
Engineer:	Emily M. Basile, EI	
Date:	05/24/16	
Tower Type:	MP	

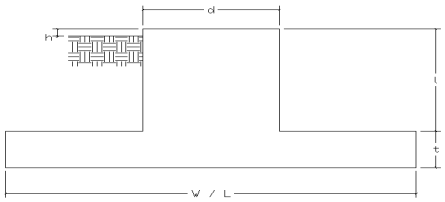

Design Loads (Factored) - Analysis per TIA-222-G Standards

Design / Analysis / Mapping:	Mapping	
Compression/Leg:	58.3	k
Uplift/Leg:		k
Total Shear:	26.9	k
Moment:	2095.5	k-ft
Tower + Appurtenance Weight:	26.5	k
Depth to Base of Foundation (l + t - h):	6.50	ft
Diameter of Pier (d):	6.00	ft
Height of Pier above Ground (h):	2.70	
Width of Pad (W):	17.50	ft
Length of Pad (L):	18.40	ft
Thickness of Pad (t):	2.50	ft
Tower Leg Center to Center:	0.00	ft
Number of Tower Legs:	1.0	(1 if MP or GT)
Tower Center from Mat Center:	0.00	ft
Depth Below Ground Surface to Water Table:	99.00	ft
Unit Weight of Concrete:	150.0	pcf
Unit Weight of Soil Above Water Table:	115.0	pcf
Unit Weight of Water:	62.4	pcf
Unit Weight of Soil Below Water Table:	50.0	pcf
Friction Angle of Uplift:	15.0	Degrees
Ultimate Coefficient of Shear Friction:	0.50	
Ultimate Compressive Bearing Pressure:	40000.0	psf
Ultimate Passive Pressure on Pad Face:	2000.0	psf
$\phi_{\text{Soil and Concrete Weight}}$:	0.9	
ϕ_{Soil}:	0.75	

Overturning Moment Usage

Design OTM:	2342.8	k-ft
OTM Resistance:	2700.9	k-ft
Design OTM / OTM Resistance:	0.87	Result: OK

Soil Bearing Pressure Usage

Net Bearing Pressure:	4665	psf
Factored Nominal Bearing Pressure:	30000	psf
Net Bearing Pressure/Factored Nominal Bearing Pressure:	0.16	Result: OK
Load Direction Controling Design Bearing Pressure:	Diagonal to Pad Edge	

Sliding Factor of Safety

Total Factored Sliding Resistance:	177.0	k
Sliding Design / Sliding Resistance:	0.15	Result: OK