PROJECT INFORMATION

SCOPE OF WORK:

ITEMS TO BE MOUNTED ON THE EXISTING TOWER:
(3) LTE 3C ANTENNAS, (3) RRH'S, (3) A2 MODULES, (6) TRIPLEXERS, (1) SURGE SUPPRESSOR, (2) DC POWER & (1) FIBER LINE

ITEMS TO BE INSTALLED INSIDE THE EXISTING AT&T EQUIPMENT AREA:
(1) DUS41 WITH XMU, (1) DUS & (1) DC POWER PLANT

ITEMS TO REMAIN:
(3) UMTS ANTENNAS, (3) LTE ANTENNAS, (6) RRH'S, (6) TMA'S, (1) SURGE SUPPRESSOR, (2) DC POWER, (1) FIBER LINE, & (12) LINES 1-5/8" COAX

ITEMS TO BE REMOVED:
(3) GSM ANTENNAS, (6) DIPLEXERS

PTN: 2051585176

SITE ADDRESS:	1 WILLIS STREET BRISTOL, CT 06010
LATITUDE:	41.649°N, 41°,38',56.67"N
LONGITUDE:	-72.948°W, -72°,56',52.897"W
USID:	59357
LANDLORD:	AMERICAN TOWER CORP.
TYPE OF SITE:	MONOPOLE
TOWER HEIGHT:	120'-0"
RAD CENTER:	124'-0"
CURRENT USE:	TELECOMMUNICATIONS FACILITY
PROPOSED USE:	TELECOMMUNICATIONS FACILITY

FA NUMBER: 10035029
SITE NUMBER: CTL01055
SITE NAME: BRISTOL
AMERICAN TOWER SITE ID: 302500
1 WILLIS STREET
BRISTOL, CT 06010
PROJECT: LTE 3C

PROJECT TEAM

CLIENT REPRESENTATIVE

COMPANY:	SMARTLINK, LLC
ADDRESS:	1997 ANNAPOLIS EXCHANGE PARKWAY, SUITE 200
CITY, STATE, ZIP:	ANNAPOLIS, MD 21401
CONTACT:	TIM BOYCE
PHONE:	(908) 333-3640
E-MAIL:	tboyce@smartlinkllc.com

RF ENGINEER

COMPANY:	AT&T MOBILITY - NEW ENGLAND
ADDRESS:	550 COCHITUATE ROAD SUITE 550 13 AND 14
CITY, STATE, ZIP:	FRAMINGHAM, MA 01701
CONTACT:	CAMERON SYME
PHONE:	(508) 596-7146
E-MAIL:	cs6970@att.com

SITE ACQUISITION

COMPANY:	SMARTLINK, LLC
ADDRESS:	33 BOSTON POST ROAD WEST SUITE 210
CITY, STATE, ZIP:	MARLBOROUGH, MA 01752
CONTACT:	TODD OLIVER
PHONE:	(774) 369-3618
E-MAIL:	todd.oliver@smartlink.com

CONSTRUCTION MANAGER

COMPANY:	SMARTLINK, LLC.
ADDRESS:	33 BOSTON POST ROAD WEST SUITE 210
CITY, STATE, ZIP:	MARLBOROUGH, MA 01752
CONTACT:	ROBERT PICARD
PHONE:	(774) 369-3618
E-MAIL:	robert.picard@smartlinkllc.com

ENGINEERING

COMPANY:	HUDSON DESIGN GROUP, LLC.
ADDRESS:	1600 OSGOOD STREET BUILDING 20 NORTH, SUITE 3090
CITY, STATE, ZIP:	NORTH ANDOVER, MA 01845
CONTACT:	DANIEL P. HAMM, PE
PHONE:	(978) 557-5553
E-MAIL:	info@hudsondesigngroupllc.com

DRAWING INDEX

SHEET NO.	DESCRIPTION	REV.
T-1	TITLE SHEET	1
GN-1	GENERAL NOTES	1
A-1	COMPOUND & EQUIPMENT PLANS	1
A-2	ANTENNA LAYOUTS & ELEVATION	1
A-3	DETAILS	1
RF-1	RF PLUMBING DIAGRAM	1
G-1	GROUNDING DETAILS	1

VICINITY MAP

DIRECTIONS TO SITE:

TURN LEFT ONTO LEGGAT MCCALL CONN 0.1MI. CONTINUE ONTO BURR ST 446FT. TURN RIGHT ONTO COCHITUATE RD 0.8MI. CONTINUE STRAIGHT TO STAY ON COCHITUATE RD 0.5MI. SLIGHT RIGHT ONTO WORCESTER RD 0.5MI. TURN RIGHT ONTO MAYNARD RD 0.1MI. TURN LEFT ONTO MA-30 W/PLEASANT ST (CONTINUE FOLLOWING MA-30 W) 3.2MI. SLIGHT LEFT ONTO WILLOW ST 0.2MI. TURN RIGHT ONTO MA-9 W 3.3MI. SLIGHT RIGHT TO MERGE ONTO I-495 N TOWARD LOWELL 0.3MI. MERGE ONTO I-495N 5.3MI. TAKE EXIT 25B FOR I-290 W TOWARD WORCESTER 0.4MI. CONTINUE ONTO I-290 W 20.2MI. TAKE EXIT 6B TO MERGE ONTO US-20 W TOWARD STURBRIDGE 0.3MI. USE THE LEFT LANE TO TAKE I-84 W RAMP TO HARTFORD CT 0.2MI. MERGE ONTO I-84 (ENTERING CONNECTICUT) 40.9MI. KEEP RIGHT TO STAY ON I-84 2.1MI. KEEP LEFT TO STAY ON I-84 11.7MI. TAKE EXIT 33 FOR CONNECTICUT 72 W TOWARD BRISTOL 0.3MI. KEEP LEFT TO CONTINUE ON CT-72 W 4.1MI. CONTINUE ONTO PINE ST 0.1MI. CONTINUE STRAIGHT ONTO MOUNTAIN RD 0.3MI. KEEP LEFT TO STAY ON MOUNTAIN RD 0.1MI. CONTINUE ONTO SOUTH ST 0.6MI. TURN LEFT ONTO WILLIS ST 1.5MI. DESTINATION WILL BE ON THE RIGHT.

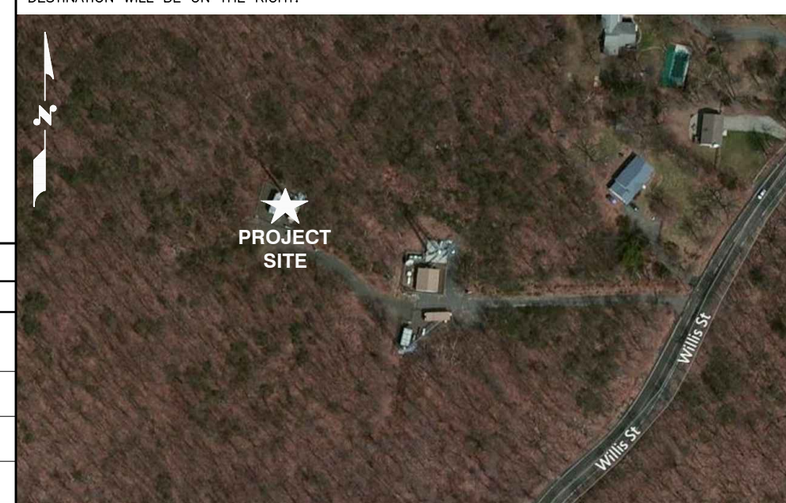

GENERAL NOTES

1. THIS DOCUMENT IS THE CREATION, DESIGN, PROPERTY AND COPYRIGHTED WORK OF AT&T. ANY DUPLICATION OR USE WITHOUT EXPRESS WRITTEN CONSENT IS STRICTLY PROHIBITED. DUPLICATION AND USE BY GOVERNMENT AGENCIES FOR THE PURPOSES OF CONDUCTING THEIR LAWFULLY AUTHORIZED REGULATORY AND ADMINISTRATIVE FUNCTIONS IS SPECIFICALLY ALLOWED.
2. THE FACILITY IS AN UNMANNED PRIVATE AND SECURED EQUIPMENT INSTALLATION. IT IS ONLY ACCESSED BY TRAINED TECHNICIANS FOR PERIODIC ROUTINE MAINTENANCE AND THEREFORE DOES NOT REQUIRE ANY WATER OR SANITARY SEWER SERVICE. THE FACILITY IS NOT GOVERNED BY REGULATIONS REQUIRING PUBLIC ACCESS PER ADA REQUIREMENTS.
3. CONTRACTOR SHALL VERIFY ALL PLANS AND EXISTING DIMENSIONS AND CONDITIONS ON THE JOB SITE AND SHALL IMMEDIATELY NOTIFY THE AT&T MOBILITY REPRESENTATIVE IN WRITING OF DISCREPANCIES BEFORE PROCEEDING WITH THE WORK OR BE RESPONSIBLE FOR SAME.

72 HOURS

CALL
BEFORE YOU DIG
CALL TOLL FREE 1-800-922-4455
OR CALL 811

UNDERGROUND SERVICE ALERT

APPROVALS

DISCIPLINE:	SIGNATURE:	DATE:
THE FOLLOWING PARTIES HEREBY APPROVE AND ACCEPT THESE DOCUMENTS & AUTHORIZE THE SUBCONTRACTOR TO PROCEED WITH CONSTRUCTION DESCRIBED HEREIN. ALL DOCUMENTS ARE SUBJECT TO REVIEW BY THE LOCAL BUILDING DEPARTMENT & MAY IMPOSE CHANGES OR MODIFICATIONS.		
SMARTLINK SITE ACQUISITION:		
SMARTLINK CONSTRUCTION MANAGER:		
AT&T PROJECT MANAGER:		

Hudson Design Group LLC
1600 OSGOOD STREET
BUILDING 20 NORTH, SUITE 3090
N. ANDOVER, MA 01845
TEL: (978) 557-5553
FAX: (978) 336-5586

smartlink
1997 ANNAPOLIS EXCHANGE PKWY
SUITE 200
ANNAPOLIS, MD 21401

SITE NUMBER: CTL01055
SITE NAME: BRISTOL
AMERICAN TOWER SITE ID: 302500
1 WILLIS STREET
BRISTOL, CT 06010
HARTFORD COUNTY

at&t
550 COCHITUATE ROAD
FRAMINGHAM, MA 01701

NO.	DATE	REVISIONS	BY	CHK	APP'D
1	02/17/16	ISSUED FOR PERMITTING	MC	HC	DPH
0	02/03/16	ISSUED FOR REVIEW	MC	HC	DPH

SCALE: AS SHOWN | DESIGNED BY: HC | DRAWN BY: MC

STATE OF CONNECTICUT · DEREK J. CREASER · LICENSED PROFESSIONAL ENGINEER

AT&T

TITLE SHEET
(LTE 3C)

SITE NUMBER	DRAWING NUMBER	REV
CTL01055	T-1	1

GROUNDING NOTES

1. THE SUBCONTRACTOR SHALL REVIEW AND INSPECT THE EXISTING FACILITY GROUNDING SYSTEM AND LIGHTNING PROTECTION SYSTEM (AS DESIGNED AND INSTALLED) FOR STRICT COMPLIANCE WITH THE NEC (AS ADOPTED BY THE AHJ), THE SITE–SPECIFIC (UL, LPI, OR NFPA) LIGHTING PROTECTION CODE, AND GENERAL COMPLIANCE WITH TELCORDIA AND TIA GROUNDING STANDARDS. THE SUBCONTRACTOR SHALL REPORT ANY VIOLATIONS OR ADVERSE FINDINGS TO THE CONTRACTOR FOR RESOLUTION.

2. ALL GROUND ELECTRODE SYSTEMS (INCLUDING TELECOMMUNICATION, RADIO, LIGHTNING PROTECTION, AND AC POWER GES'S) SHALL BE BONDED TOGETHER, AT OR BELOW GRADE, BY TWO OR MORE COPPER BONDING CONDUCTORS IN ACCORDANCE WITH THE NEC.

3. THE SUBCONTRACTOR SHALL PERFORM IEEE FALL–OF–POTENTIAL RESISTANCE TO EARTH TESTING (PER IEEE 1100 AND 81) FOR NEW GROUND ELECTRODE SYSTEMS. THE SUBCONTRACTOR SHALL FURNISH AND INSTALL SUPPLEMENTAL GROUND ELECTRODES AS NEEDED TO ACHIEVE A TEST RESULT OF 5 OHMS OR LESS.

4. METAL RACEWAY SHALL NOT BE USED AS THE NEC REQUIRED EQUIPMENT GROUND CONDUCTOR. STRANDED COPPER CONDUCTORS WITH GREEN INSULATION, SIZED IN ACCORDANCE WITH THE NEC, SHALL BE FURNISHED AND INSTALLED WITH THE POWER CIRCUITS TO BTS EQUIPMENT.

5. EACH BTS CABINET FRAME SHALL BE DIRECTLY CONNECTED TO THE MASTER GROUND BAR WITH GREEN INSULATED SUPPLEMENTAL EQUIPMENT GROUND WIRES, 6 AWG STRANDED COPPER OR LARGER FOR INDOOR BTS 2 AWG STRANDED COPPER FOR OUTDOOR BTS.

6. EXOTHERMIC WELDS SHALL BE USED FOR ALL GROUNDING CONNECTIONS BELOW GRADE.

7. APPROVED ANTIOXIDANT COATINGS (I.E., CONDUCTIVE GEL OR PASTE) SHALL BE USED ON ALL COMPRESSION AND BOLTED GROUND CONNECTIONS.

8. ICE BRIDGE BONDING CONDUCTORS SHALL BE EXOTHERMICALLY BONDED OR BOLTED TO GROUND BAR.

9. ALUMINUM CONDUCTOR OR COPPER CLAD STEEL CONDUCTOR SHALL NOT BE USED FOR GROUNDING CONNECTIONS.

10. MISCELLANEOUS ELECTRICAL AND NON–ELECTRICAL METAL BOXES, FRAMES AND SUPPORTS SHALL BE BONDED TO THE GROUND RING, IN ACCORDANCE WITH THE NEC.

11. METAL CONDUIT SHALL BE MADE ELECTRICALLY CONTINUOUS WITH LISTED BONDING FITTINGS OR BY BONDING ACROSS THE DISCONTINUITY WITH 6 AWS COPPER WIRE UL APPROVED GROUNDING TYPE CONDUIT CLAMPS.

12. ALL NEW STRUCTURES WITH A FOUNDATION AND/OR FOOTING HAVING 20 FT. OR MORE OF 1/2 IN. OR GREATER ELECTRICALLY CONDUCTIVE REINFORCING STEEL MUST HAVE IT BONDED TO THE GROUND RING USING AN EXOTHERMIC WELD CONNECTION USING #2 AWG SOLID BARE TINNED COPPER GROUND WIRE, PER NEC 250.50

GENERAL NOTES

1. FOR THE PURPOSE OF CONSTRUCTION DRAWING, THE FOLLOWING DEFINITIONS SHALL APPLY:

   CONTRACTOR – SMARTLINK
   SUBCONTRACTOR – GENERAL CONTRACTOR (CONSTRUCTION)
   OWNER – AT&T MOBILITY

2. PRIOR TO THE SUBMISSION OF BIDS, THE BIDDING SUBCONTRACTOR SHALL VISIT THE CELL SITE TO FAMILIARIZE WITH THE EXISTING CONDITIONS AND TO CONFIRM THAT THE WORK CAN BE ACCOMPLISHED AS SHOWN ON THE CONSTRUCTION DRAWINGS. ANY DISCREPANCY FOUND SHALL BE BROUGHT TO THE ATTENTION OF CONTRACTOR.

3. ALL MATERIALS FURNISHED AND INSTALLED SHALL BE IN STRICT ACCORDANCE WITH ALL APPLICABLE CODES, REGULATIONS, AND ORDINANCES. SUBCONTRACTOR SHALL ISSUE ALL APPROPRIATE NOTICES AND COMPLY WITH ALL LAWS, ORDINANCES, RULES, REGULATIONS, AND LAWFUL ORDERS OF ANY PUBLIC AUTHORITY REGARDING THE PERFORMANCE OF THE WORK. ALL WORK CARRIED OUT SHALL COMPLY WITH ALL APPLICABLE MUNICIPAL AND UTILITY COMPANY SPECIFICATIONS AND LOCAL JURISDICTIONAL CODES, ORDINANCES AND APPLICABLE REGULATIONS.

4. DRAWINGS PROVIDED HERE ARE NOT TO BE SCALED AND ARE INTENDED TO SHOW OUTLINE ONLY.

5. UNLESS NOTED OTHERWISE, THE WORK SHALL INCLUDE FURNISHING MATERIALS, EQUIPMENT, APPURTENANCES, AND LABOR NECESSARY TO COMPLETE ALL INSTALLATIONS AS INDICATED ON THE DRAWINGS.

6. "KITTING LIST" SUPPLIED WITH THE BID PACKAGE IDENTIFIES ITEMS THAT WILL BE SUPPLIED BY CONTRACTOR. ITEMS NOT INCLUDED IN THE BILL OF MATERIALS AND KITTING LIST SHALL BE SUPPLIED BY THE SUBCONTRACTOR.

7. THE SUBCONTRACTOR SHALL INSTALL ALL EQUIPMENT AND MATERIALS IN ACCORDANCE WITH MANUFACTURER'S RECOMMENDATIONS UNLESS SPECIFICALLY STATED OTHERWISE.

8. IF THE SPECIFIED EQUIPMENT CANNOT BE INSTALLED AS SHOWN ON THESE DRAWINGS, THE SUBCONTRACTOR SHALL PROPOSE AN ALTERNATIVE INSTALLATION SPACE FOR APPROVAL BY THE CONTRACTOR.

9. SUBCONTRACTOR SHALL DETERMINE ACTUAL ROUTING OF CONDUIT, POWER AND T1 CABLES, GROUNDING CABLES AS SHOWN ON THE POWER, GROUNDING AND TELCO PLAN DRAWING. SUBCONTRACTOR SHALL UTILIZE EXISTING TRAYS AND/OR SHALL ADD NEW TRAYS AS NECESSARY. SUBCONTRACTOR SHALL CONFIRM THE ACTUAL ROUTING WITH THE CONTRACTOR.

10. THE SUBCONTRACTOR SHALL PROTECT EXISTING IMPROVEMENTS, PAVEMENTS, CURBS, LANDSCAPING AND STRUCTURES. ANY DAMAGED PART SHALL BE REPAIRED AT SUBCONTRACTOR'S EXPENSE TO THE SATISFACTION OF OWNER.

11. SUBCONTRACTOR SHALL LEGALLY AND PROPERLY DISPOSE OF ALL SCRAP MATERIALS SUCH AS COAXIAL CABLES AND OTHER ITEMS REMOVED FROM THE EXISTING FACILITY. ANTENNAS REMOVED SHALL BE RETURNED TO THE OWNER'S DESIGNATED LOCATION.

12. SUBCONTRACTOR SHALL LEAVE PREMISES IN CLEAN CONDITION.

13. ALL CONCRETE REPAIR WORK SHALL BE DONE IN ACCORDANCE WITH AMERICAN CONCRETE INSTITUTE (ACI) 301.

14. ANY NEW CONCRETE NEEDED FOR THE CONSTRUCTION SHALL BE AIR–ENTRAINED AND SHALL HAVE 4000 PSI STRENGTH AT 28 DAYS. ALL CONCRETE WORK SHALL BE DONE IN ACCORDANCE WITH ACI 318 CODE REQUIREMENTS.

15. ALL STRUCTURAL STEEL WORK SHALL BE DETAILED, FABRICATED AND ERECTED IN ACCORDANCE WITH AISC SPECIFICATIONS. ALL STRUCTURAL STEEL SHALL BE ASTM A36 (Fy = 36 ksi) UNLESS OTHERWISE NOTED. PIPES SHALL BE ASTM A53 TYPE E (Fy = 36 ksi). ALL STEEL EXPOSED TO WEATHER SHALL BE HOT DIPPED GALVANIZED. TOUCHUP ALL SCRATCHES AND OTHER MARKS IN THE FIELD AFTER STEEL IS ERECTED USING A COMPATIBLE ZINC RICH PAINT.

16. CONSTRUCTION SHALL COMPLY WITH SPECIFICATIONS AND "GENERAL CONSTRUCTION SERVICES FOR CONSTRUCTION OF AT&T SITES."

17. SUBCONTRACTOR SHALL VERIFY ALL EXISTING DIMENSIONS AND CONDITIONS PRIOR TO COMMENCING ANY WORK. ALL DIMENSIONS OF EXISTING CONSTRUCTION SHOWN ON THE DRAWINGS MUST BE VERIFIED. SUBCONTRACTOR SHALL NOTIFY THE CONTRACTOR OF ANY DISCREPANCIES PRIOR TO ORDERING MATERIAL OR PROCEEDING WITH CONSTRUCTION.

18. THE EXISTING CELL SITE IS IN FULL COMMERCIAL OPERATION. ANY CONSTRUCTION WORK BY SUBCONTRACTOR SHALL NOT DISRUPT THE EXISTING NORMAL OPERATION. ANY WORK ON EXISTING EQUIPMENT MUST BE COORDINATED WITH CONTRACTOR. ALSO, WORK SHOULD BE SCHEDULED FOR AN APPROPRIATE MAINTENANCE WINDOW USUALLY IN LOW TRAFFIC PERIODS AFTER MIDNIGHT.

19. SINCE THE CELL SITE IS ACTIVE, ALL SAFETY PRECAUTIONS MUST BE TAKEN WHEN WORKING AROUND HIGH LEVELS OF ELECTROMAGNETIC RADIATION. EQUIPMENT SHOULD BE SHUTDOWN PRIOR TO PERFORMING ANY WORK THAT COULD EXPOSE THE WORKERS TO DANGER. PERSONAL RF EXPOSURE MONITORS ARE ADVISED TO BE WORN TO ALERT OF ANY DANGEROUS EXPOSURE LEVELS.

20. APPLICABLE BUILDING CODES:
    SUBCONTRACTOR'S WORK SHALL COMPLY WITH ALL APPLICABLE NATIONAL, STATE, AND LOCAL CODES AS ADOPTED BY THE LOCAL AUTHORITY HAVING JURISDICTION (AHJ) FOR THE LOCATION. THE EDITION OF THE AHJ ADOPTED CODES AND STANDARDS IN EFFECT ON THE DATE OF CONTRACT AWARD SHALL GOVERN THE DESIGN.
    BUILDING CODE: 2003 IBC WITH 2005 CT SUPPLEMENT, + 2009 & 2013 CT AMENDMENTS
    ELECTRICAL CODE: REFER TO ELECTRICAL DRAWINGS
    LIGHTENING CODE: REFER TO ELECTRICAL DRAWINGS

    SUBCONTRACTOR'S WORK SHALL COMPLY WITH THE LATEST EDITION OF THE FOLLOWING STANDARDS:

    AMERICAN CONCRETE INSTITUTE (ACI) 318; BUILDING CODE REQUIREMENTS FOR STRUCTURAL CONCRETE;

    AMERICAN INSTITUTE OF STEEL CONSTRUCTION (AISC)

    MANUAL OF STEEL CONSTRUCTION, ASD, FOURTEENTH EDITION;

    TELECOMMUNICATIONS INDUSTRY ASSOCIATION (TIA) 222–F, STRUCTURAL STANDARDS FOR STEEL

    EQUIPMENT AND ANTENNA SUPPORTING STRUCTURES; REFER TO ELECTRICAL DRAWINGS FOR SPECIFIC ELECTRICAL STANDARDS.

FOR ANY CONFLICTS BETWEEN SECTIONS OF LISTED CODES AND STANDARDS REGARDING MATERIAL, METHODS OF CONSTRUCTION, OR OTHER REQUIREMENTS, THE MOST RESTRICTIVE REQUIREMENT SHALL GOVERN. WHERE THERE IS CONFLICT BETWEEN A GENERAL REQUIREMENT AND A SPECIFIC REQUIREMENT, THE SPECIFIC REQUIREMENT SHALL GOVERN.

ABBREVIATIONS

AGL	ABOVE GRADE LEVEL	EQ	EQUAL	REQ	REQUIRED
AWG	AMERICAN WIRE GAUGE	GC	GENERAL CONTRACTOR	RF	RADIO FREQUENCY
BBU	BATTERY BACKUP UNIT	GRC	GALVANIZED RIGID CONDUIT	TBD	TO BE DETERMINED
BTCW	BARE TINNED SOLID COPPER WIRE	MGB	MASTER GROUND BAR	TBR	TO BE REMOVED
BGR	BURIED GROUND RING	MIN	MINIMUM	TBRR	TO BE REMOVED AND REPLACED
BTS	BASE TRANSCEIVER STATION	P	PROPOSED	TYP	TYPICAL
E	EXISTING	NTS	NOT TO SCALE	UG	UNDER GROUND
EGB	EQUIPMENT GROUND BAR	RAD	RADIATION CENTER LINE (ANTENNA)	VIF	VERIFY IN FIELD
EGR	EQUIPMENT GROUND RING	REF	REFERENCE		

Hudson Design Group LLC
1600 OSGOOD STREET
BUILDING 20 NORTH, SUITE 3090
N. ANDOVER, MA 01845
TEL: (978) 557-5553
FAX: (978) 336-5586

smartlink
1997 ANNAPOLIS EXCHANGE PKWY
SUITE 200
ANNAPOLIS, MD 21401

SITE NUMBER: CTL01055
SITE NAME: BRISTOL
AMERICAN TOWER SITE ID: 302500
1 WILLIS STREET
BRISTOL, CT 06010
HARTFORD COUNTY

at&t
550 COCHITUATE ROAD
FRAMINGHAM, MA 01701

NO.	DATE	REVISIONS	BY	CHK	APP'D
1	02/17/16	ISSUED FOR PERMITTING	MC	HC	DPH
0	02/03/16	ISSUED FOR REVIEW	MC	HC	DPH

SCALE: AS SHOWN | DESIGNED BY: HC | DRAWN BY: MC

STATE OF CONNECTICUT · DERRICK J. CRESSER · No. 23557 · LICENSED PROFESSIONAL ENGINEER

AT&T

GENERAL NOTES
(LTE 3C)

SITE NUMBER	DRAWING NUMBER	REV
CTL01055	GN–1	1

NOTE:
ALL LINES AND ANTENNAS TO BE INSTALLED IN ACCORDANCE WITH PASSING STRUCTURAL ANALYSIS PROVIDED BY AMERICAN TOWER AND AT&T ANTENNA DESIGN SHEET RECOMMENDATION.

NOTE:
REFER TO THE FINAL RF DATA SHEET FOR FINAL ANTENNA SETTINGS.

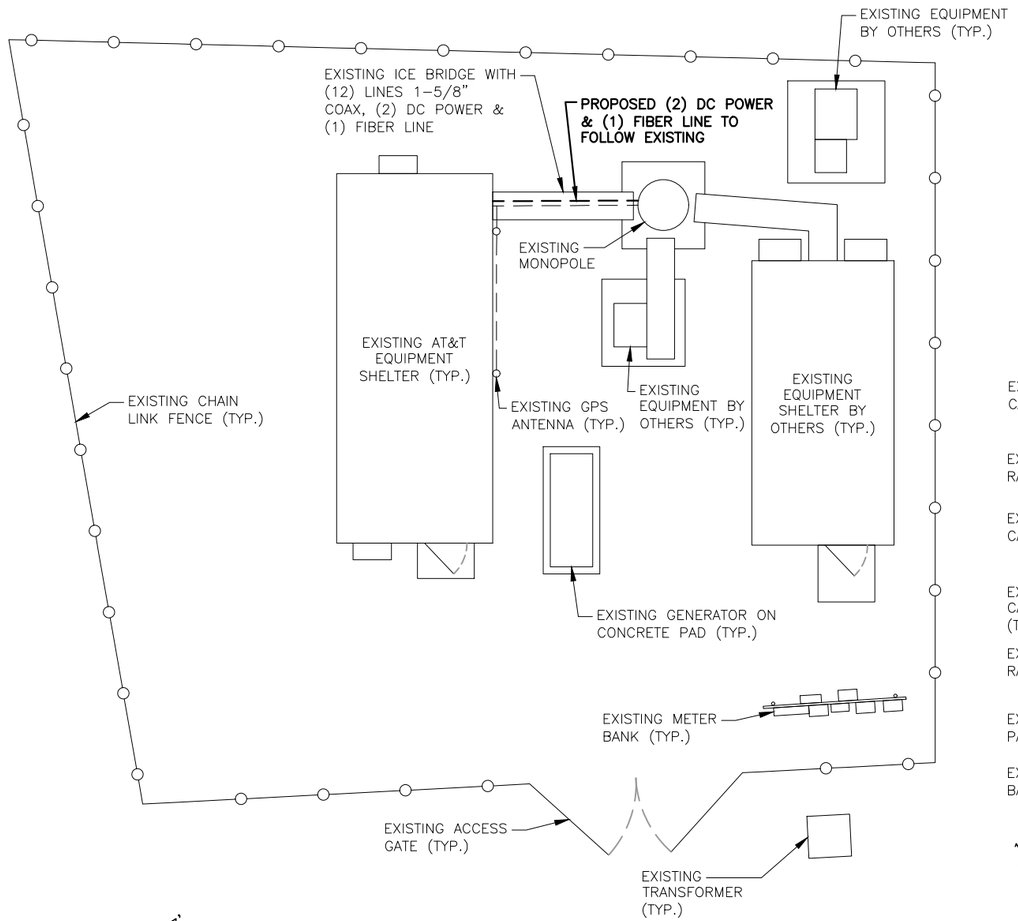

COMPOUND PLAN (1 / A-1)
22x34 SCALE: 1/16"=1'-0"
11x17 SCALE: 1/32"=1'-0"

0 8'-0" 16'-0" 32'-0" 48'-0"

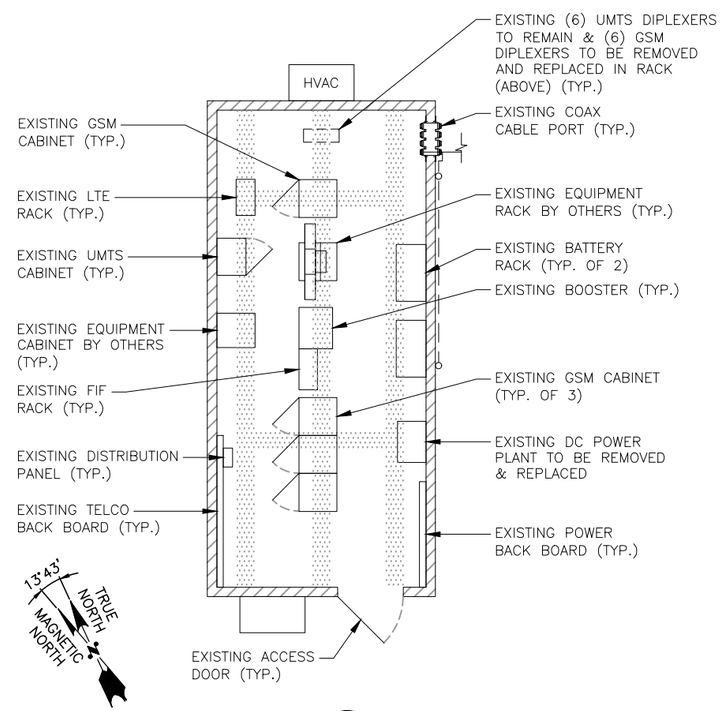

EXISTING EQUIPMENT PLAN (2 / A-1)
22x34 SCALE: 1/4"=1'-0"
11x17 SCALE: 1/8"=1'-0"

0 2'-0" 4'-0" 8'-0" 12'-0"

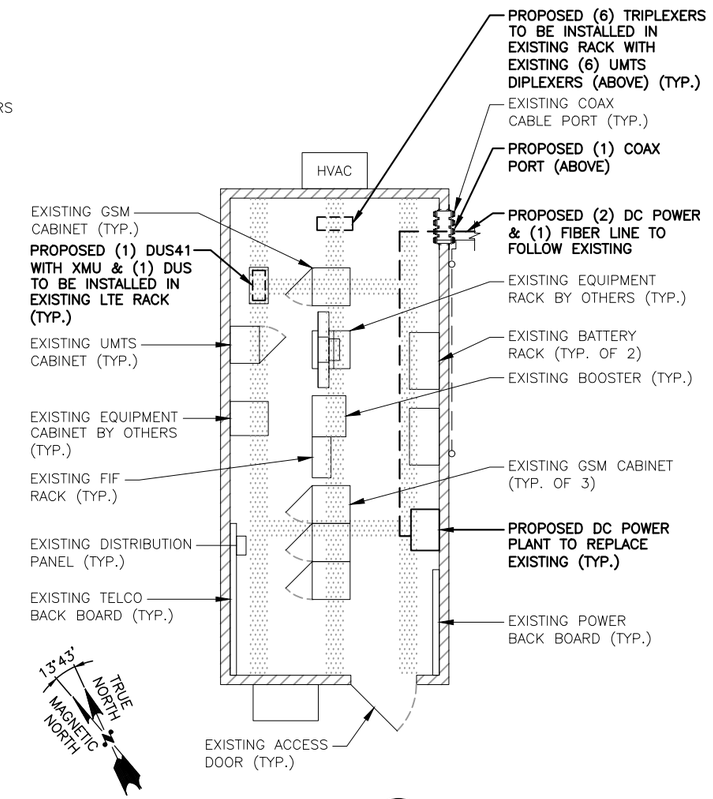

PROPOSED EQUIPMENT PLAN (3 / A-1)
22x34 SCALE: 1/4"=1'-0"
11x17 SCALE: 1/8"=1'-0"

0 2'-0" 4'-0" 8'-0" 12'-0"

Hudson Design Group LLC
1600 OSGOOD STREET
BUILDING 20 NORTH, SUITE 3090
N. ANDOVER, MA 01845
TEL: (978) 557-5553
FAX: (978) 336-5586

smartlink
1997 ANNAPOLIS EXCHANGE PKWY
SUITE 200
ANNAPOLIS, MD 21401

SITE NUMBER: CTL01055
SITE NAME: BRISTOL
AMERICAN TOWER SITE ID: 302500
1 WILLIS STREET
BRISTOL, CT 06010
HARTFORD COUNTY

at&t
550 COCHITUATE ROAD
FRAMINGHAM, MA 01701

NO.	DATE	REVISIONS	BY	CHK	APP'D
1	02/17/16	ISSUED FOR PERMITTING	MC	HC	DPH
0	02/03/16	ISSUED FOR REVIEW	MC	HC	DPH

SCALE: AS SHOWN | DESIGNED BY: HC | DRAWN BY: MC

STATE OF CONNECTICUT · DERRICK J. CREASER · No. 23551 · LICENSED PROFESSIONAL ENGINEER

AT&T

COMPOUND & EQUIPMENT PLANS
(LTE 3C)

SITE NUMBER	DRAWING NUMBER	REV
CTL01055	A-1	1

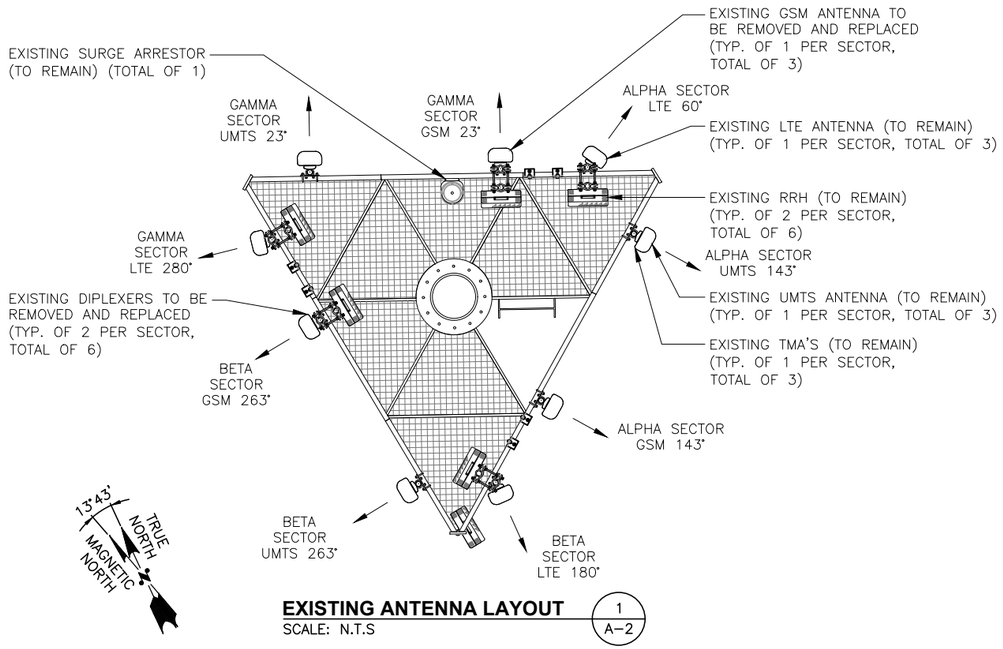

EXISTING ANTENNA LAYOUT (1 / A–2)
SCALE: N.T.S

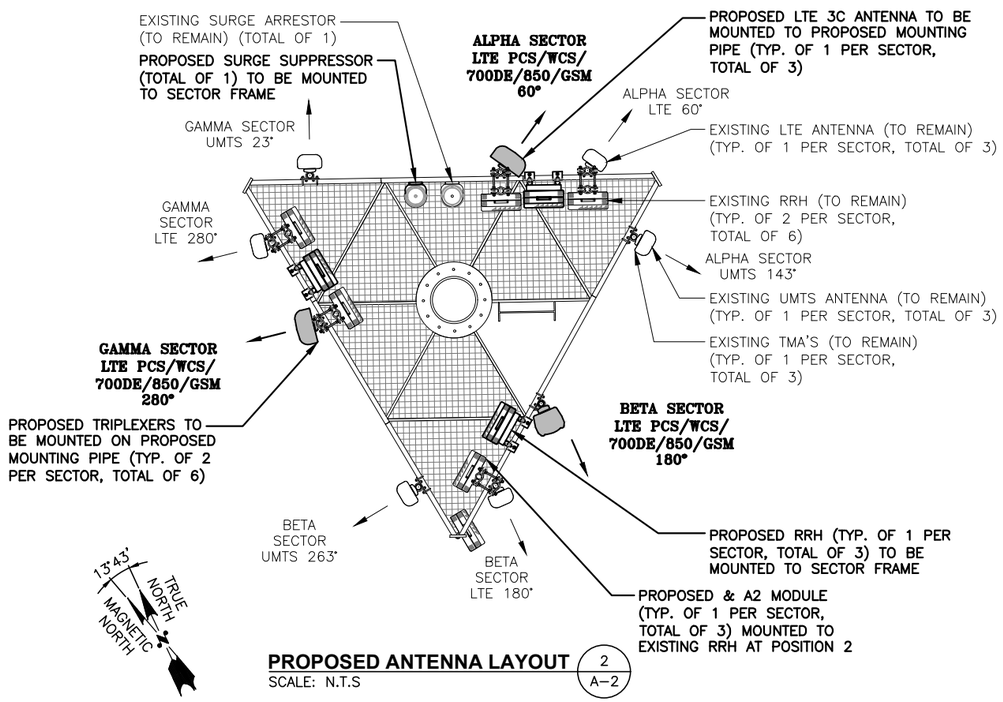

PROPOSED ANTENNA LAYOUT (2 / A–2)
SCALE: N.T.S

NOTE:
REFER TO THE FINAL RF DATA SHEET FOR FINAL ANTENNA SETTINGS.

NOTE:
ALL LINES AND ANTENNAS TO BE INSTALLED IN ACCORDANCE WITH PASSING STRUCTURAL ANALYSIS PROVIDED BY AMERICAN TOWER AND AT&T ANTENNA DESIGN SHEET RECOMMENDATION.

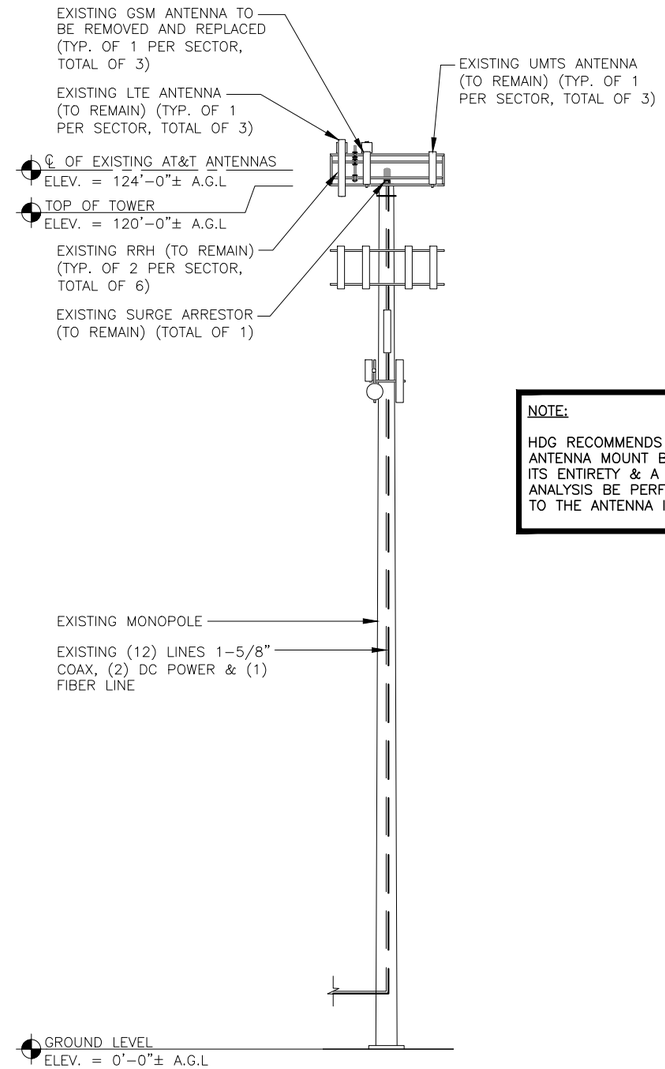

EXISTING NORTH ELEVATION (3 / A–2)
22x34 SCALE: 3/32"=1'–0"
11x17 SCALE: 3/64"=1'–0"
0 5'–4" 10'–8" 21'–4" 32'–0"

NOTE:
HDG RECOMMENDS THE EXISTING ANTENNA MOUNT BE MAPPED IN ITS ENTIRETY & A STRUCTURAL ANALYSIS BE PERFORMED PRIOR TO THE ANTENNA INSTALLATION.

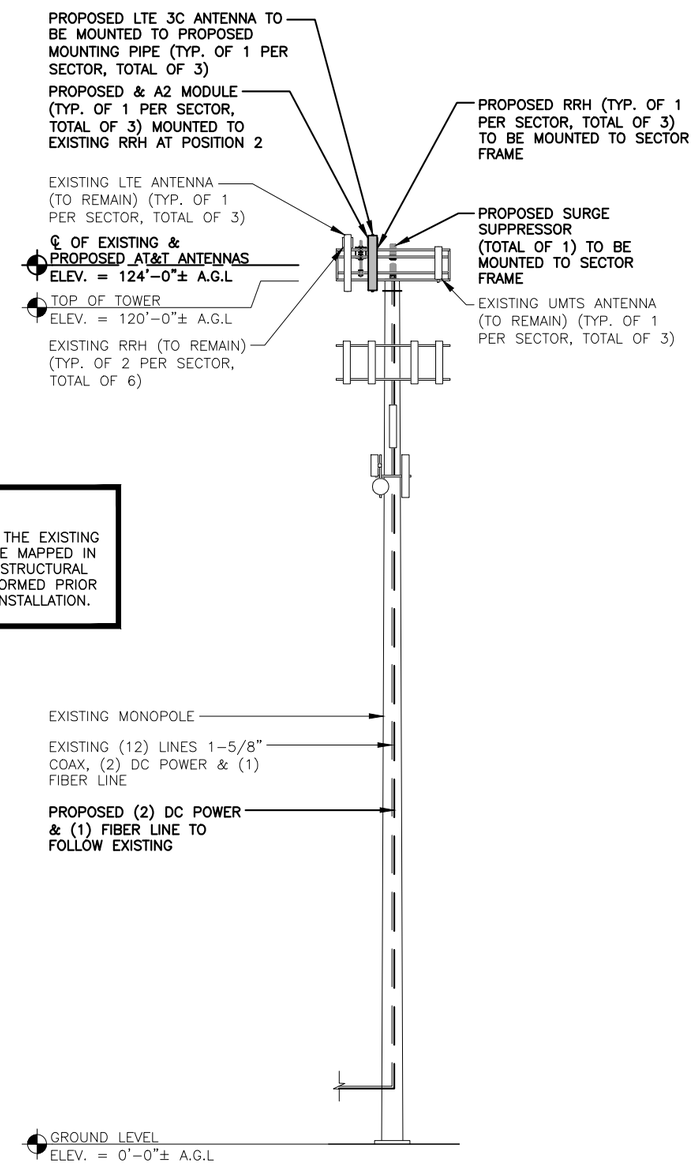

PROPOSED NORTH ELEVATION (4 / A–2)
22x34 SCALE: 3/16"=1'–0"
11x17 SCALE: 3/32"=1'–0"
0 5'–4" 10'–8" 21'–4" 32'–0"

Hudson Design Group LLC
1600 OSGOOD STREET
BUILDING 20 NORTH, SUITE 3090
N. ANDOVER, MA 01845
TEL: (978) 557-5553
FAX: (978) 336-5586

smartlink
1997 ANNAPOLIS EXCHANGE PKWY
SUITE 200
ANNAPOLIS, MD 21401

SITE NUMBER: CTL01055
SITE NAME: BRISTOL
AMERICAN TOWER SITE ID: 302500
1 WILLIS STREET
BRISTOL, CT 06010
HARTFORD COUNTY

at&t
550 COCHITUATE ROAD
FRAMINGHAM, MA 01701

NO.	DATE	REVISIONS	BY	CHK	APP'D
1	02/17/16	ISSUED FOR PERMITTING	MC	HC	DPH
0	02/03/16	ISSUED FOR REVIEW	MC	HC	DPH

SCALE: AS SHOWN | DESIGNED BY: HC | DRAWN BY: MC

STATE OF CONNECTICUT · DEREK J. PHELAN · 16.25651 · LICENSED PROFESSIONAL ENGINEER

AT&T

ANTENNA LAYOUTS & ELEVATION (LTE 3C)

SITE NUMBER	DRAWING NUMBER	REV
CTL01055	A–2	1

NOTE:
ALL LINES AND ANTENNAS TO BE INSTALLED IN ACCORDANCE WITH PASSING STRUCTURAL ANALYSIS PROVIDED BY AMERICAN TOWER AND AT&T ANTENNA DESIGN SHEET RECOMMENDATION.

NOTE:
REFER TO THE FINAL RF DATA SHEET FOR FINAL ANTENNA SETTINGS.

EXISTING & PROPOSED ANTENNA SCHEDULE

SECTOR	TECHNOLOGY	EXISTING/PROPOSED	RAD CENTER	AZIMUTH	MAKE	MODEL#	SIZE (INCHES) (L x W x D)
ALPHA	UMTS	EXISTING	124'-0"±	143°	POWERWAVE	7770	55.0x11.0x5.0
	LTE 3C	PROPOSED	124'-0"±	60°	CCI	TPA-65R-LCUUUU-H8	96.0x14.4x8.6
	LTE 2C	EXISTING	124'-0"±	60°	ANDREW	SBNH-1D6565C	96.4x11.9x7.1
BETA	UMTS	EXISTING	124'-0"±	263°	POWERWAVE	7770	55.0x11.0x5.0
	LTE 3C	PROPOSED	124'-0"±	180°	QUINTEL	QS66512-3	72.0x12.0x9.6
	LTE 2C	EXISTING	124'-0"±	180°	KMW	AM-X-CD-16-65-00T-RET	72.0x11.8x5.9
GAMMA	UMTS	EXISTING	124'-0"±	23°	POWERWAVE	7770	55.0x11.0x5.0
	LTE 3C	PROPOSED	124'-0"±	280°	CCI	TPA-65R-LCUUUU-H8	96.0x14.4x8.6
	LTE 2C	EXISTING	124'-0"±	280°	ANDREW	SBNH-1D6565C	96.4x11.9x7.1

EXISTING & PROPOSED RRU SCHEDULE

SECTOR	EXISTING/PROPOSED	MAKE	MODEL#	SIZE (INCHES) (L x W x D)
ALPHA				
	PROPOSED	ERICSSON ERICSSON	RRUS-32 A2	26.7x12.1x6.7 16.4x15.2x3.4
	EXISTING	ERICSSON	(2)RRUS-11	19.7x17.0x7.2
BETA				
	PROPOSED	ERICSSON ERICSSON	RRUS-32 A2	26.7x12.1x6.7 16.4x15.2x3.4
	EXISTING	ERICSSON	(2)RRUS-11	19.7x17.0x7.2
GAMMA				
	PROPOSED	ERICSSON ERICSSON	RRUS-32 A2	26.7x12.1x6.7 16.4x15.2x3.4
	EXISTING	ERICSSON	(2)RRUS-11	19.7x17.0x7.2

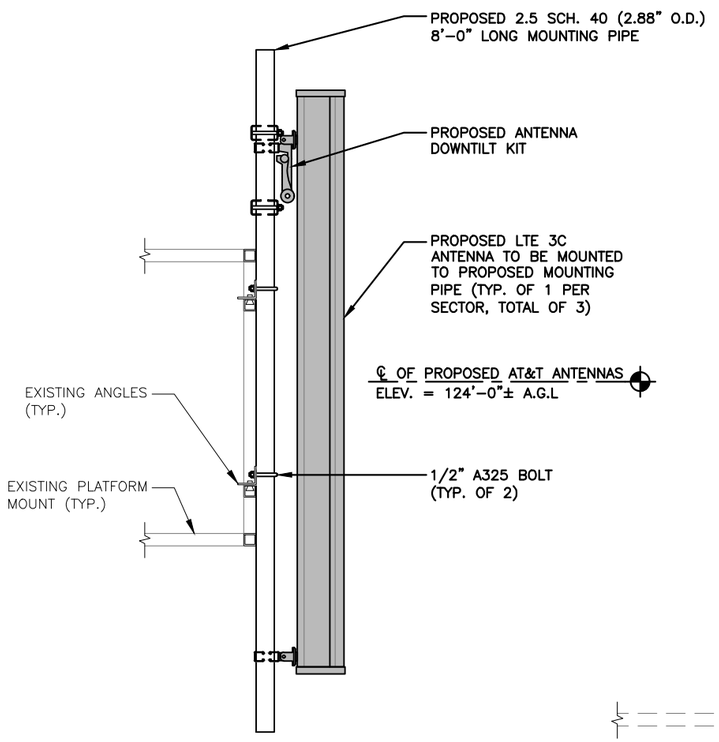

PROPOSED LTE ANTENNA MOUNTING DETAIL (1 / A-3)
SCALE: N.T.S

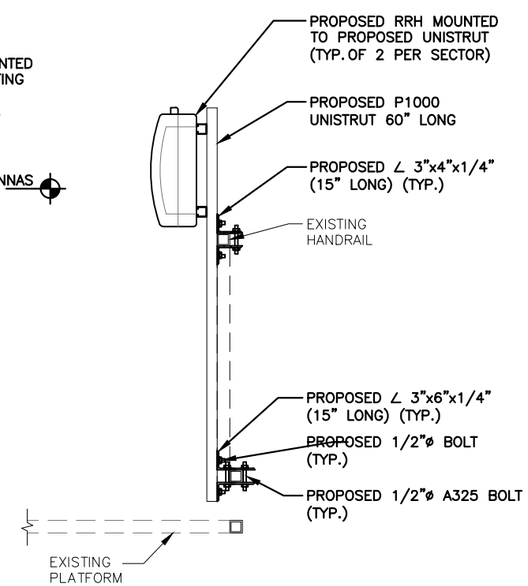

PROPOSED RRH MOUNTING DETAIL (2 / A-3)
SCALE: N.T.S

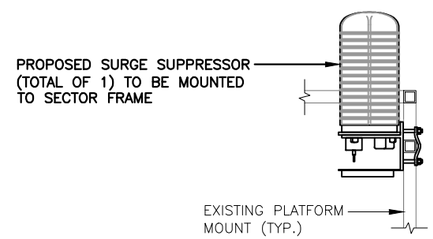

PROPOSED RRH MOUNTING DETAIL (3 / A-3)
SCALE: N.T.S

NOTES:

1. REFER TO RF CONFIG & SECTOR SCHEMATICS FOR MODEL, TYPE & QUANTITY REQUIRED PER SECTOR

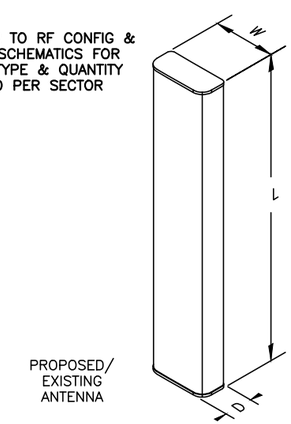

PROPOSED ANTENNA DETAIL (4 / A-3)
SCALE: N.T.S

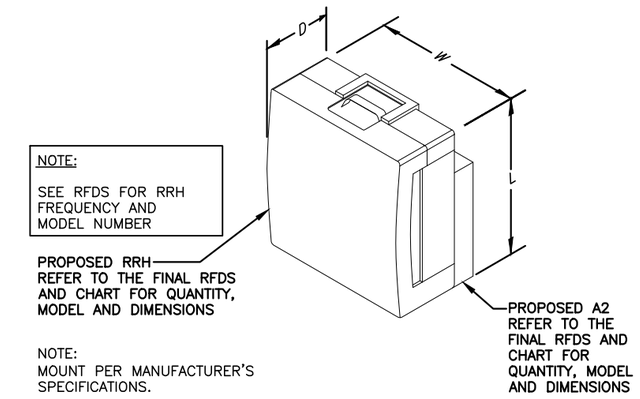

NOTE:
SEE RFDS FOR RRH FREQUENCY AND MODEL NUMBER

PROPOSED RRH REFER TO THE FINAL RFDS AND CHART FOR QUANTITY, MODEL AND DIMENSIONS

NOTE:
MOUNT PER MANUFACTURER'S SPECIFICATIONS.

PROPOSED RRH DETAIL (5 / A-3)
SCALE: N.T.S

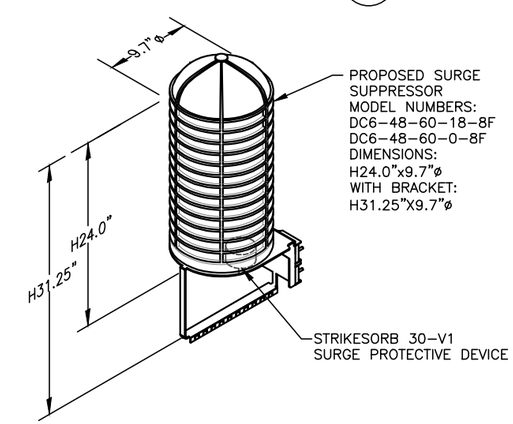

NOTE:
MOUNT PER MANUFACTURER'S SPECIFICATIONS.

DC SURGE SUPPRESSOR DETAIL (6 / A-3)
SCALE: N.T.S

Hudson Design Group LLC
1600 OSGOOD STREET
BUILDING 20 NORTH, SUITE 3090
N. ANDOVER, MA 01845
TEL: (978) 557-5553
FAX: (978) 336-5586

smartlink
1997 ANNAPOLIS EXCHANGE PKWY
SUITE 200
ANNAPOLIS, MD 21401

SITE NUMBER: CTL01055
SITE NAME: BRISTOL
AMERICAN TOWER SITE ID: 302500
1 WILLIS STREET
BRISTOL, CT 06010
HARTFORD COUNTY

at&t
550 COCHITUATE ROAD
FRAMINGHAM, MA 01701

NO.	DATE	REVISIONS	BY	CHK	APP'D
1	02/17/16	ISSUED FOR PERMITTING	MC	HC	DPH
0	02/03/16	ISSUED FOR REVIEW	MC	HC	DPH

SCALE: AS SHOWN | DESIGNED BY: HC | DRAWN BY: MC

STATE OF CONNECTICUT · DEREK J. CREASER · LICENSED PROFESSIONAL ENGINEER

AT&T

DETAILS
(LTE 3C)

SITE NUMBER	DRAWING NUMBER	REV
CTL01055	A-3	1

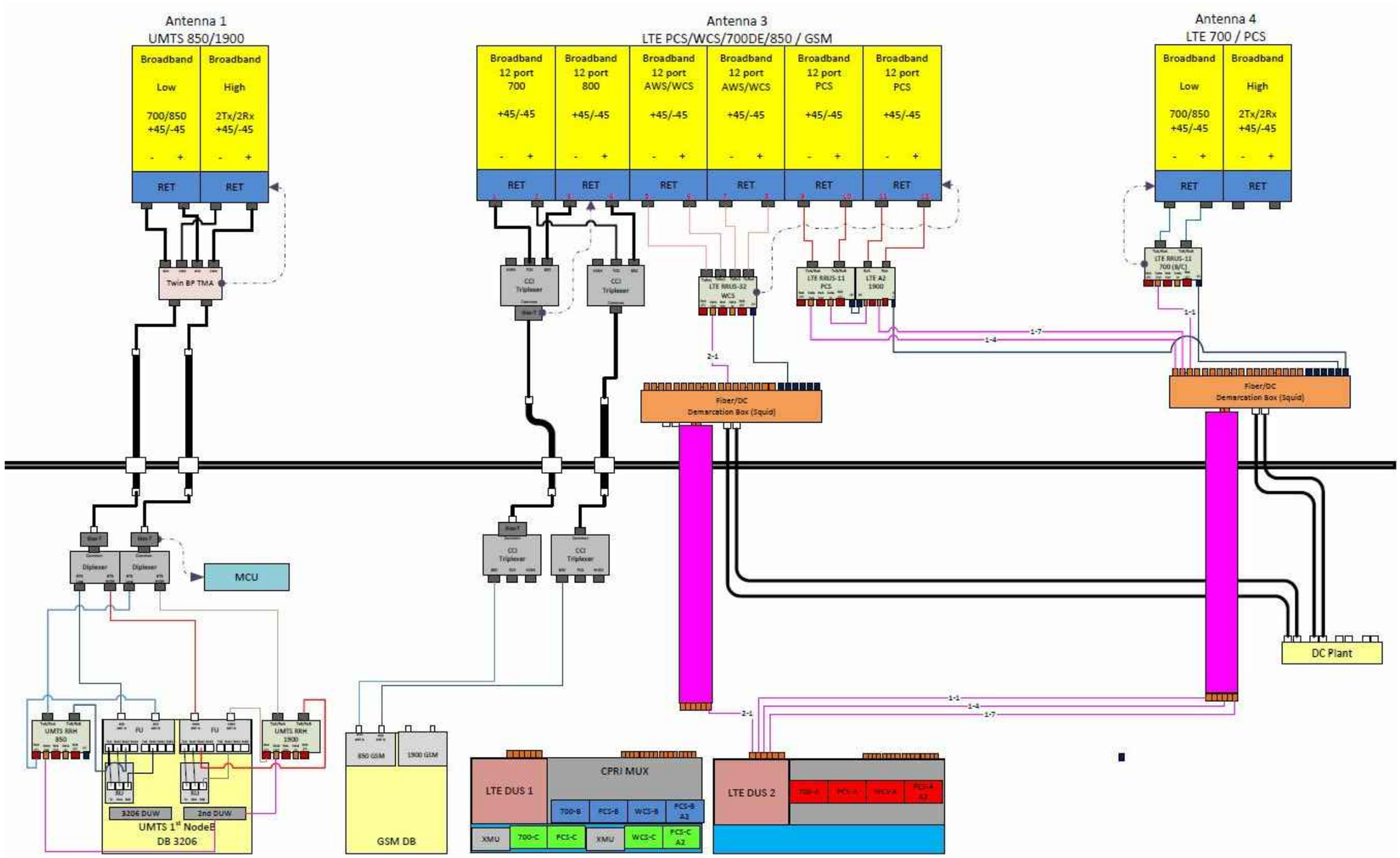

RF PLUMBING DIAGRAM (1 / RF–1)

SCALE: N.T.S

NOTE:
1. CONTRACTOR TO CONFIRM ALL PARTS.
2. INSTALL ALL EQUIPMENT TO MANUFACTURER'S RECOMMENDATIONS

NOTE:
REFER TO THE FINAL RF DATA SHEET FOR FINAL ANTENNA SETTINGS.

Hudson Design Group LLC
1600 OSGOOD STREET
BUILDING 20 NORTH, SUITE 3090
N. ANDOVER, MA 01845
TEL: (978) 557-5553
FAX: (978) 336-5586

smartlink
1997 ANNAPOLIS EXCHANGE PKWY
SUITE 200
ANNAPOLIS, MD 21401

SITE NUMBER: CTL01055
SITE NAME: BRISTOL
AMERICAN TOWER SITE ID: 302500

1 WILLIS STREET
BRISTOL, CT 06010
HARTFORD COUNTY

at&t
550 COCHITUATE ROAD
FRAMINGHAM, MA 01701

NO.	DATE	REVISIONS	BY	CHK	APP'D
1	02/17/16	ISSUED FOR PERMITTING	MC	HC	DPH
0	02/03/16	ISSUED FOR REVIEW	MC	HC	DPH

SCALE: AS SHOWN | DESIGNED BY: HC | DRAWN BY: MC

STATE OF CONNECTICUT · DEREK J. CREASER · 16,295 · LICENSED PROFESSIONAL ENGINEER

AT&T

RF PLUMBING DIAGRAM
(LTE 3C)

SITE NUMBER	DRAWING NUMBER	REV
CTL01055	RF–1	1

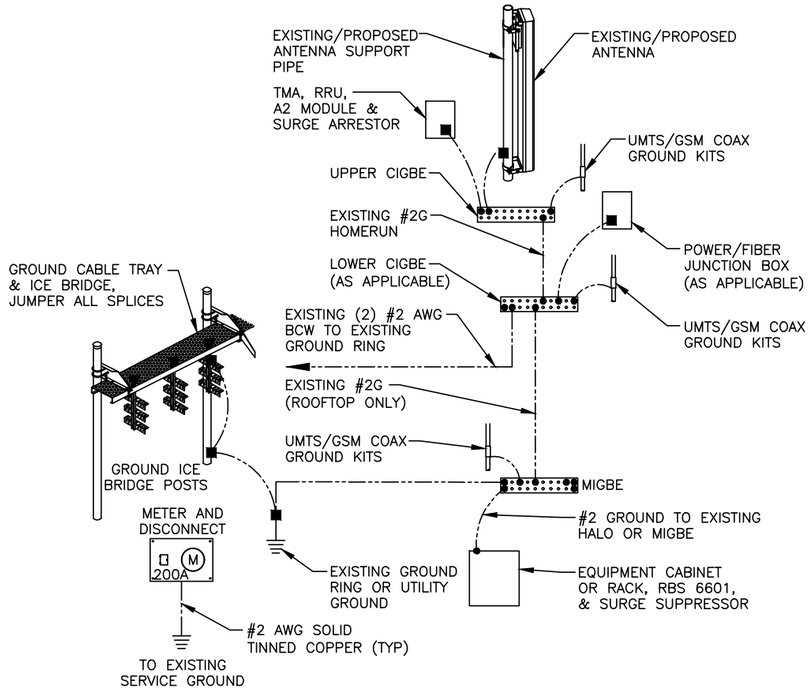

GROUNDING RISER DIAGRAM (1 / G–1)
SCALE: N.T.S

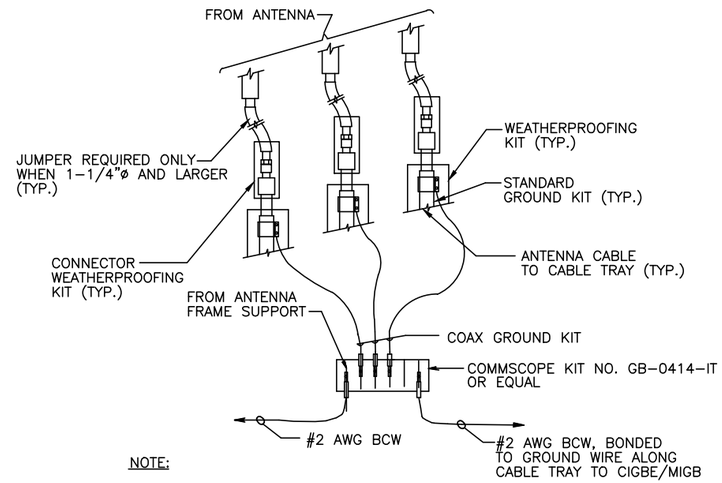

NOTE:

1. DO NOT INSTALL CABLE GROUND KIT AT A BEND AND ALWAYS DIRECT GROUND WIRE DOWN TO CIGBE.

GROUND WIRE TO GROUND BAR CONNECTION DETAIL (2 / G–1)
SCALE: N.T.S

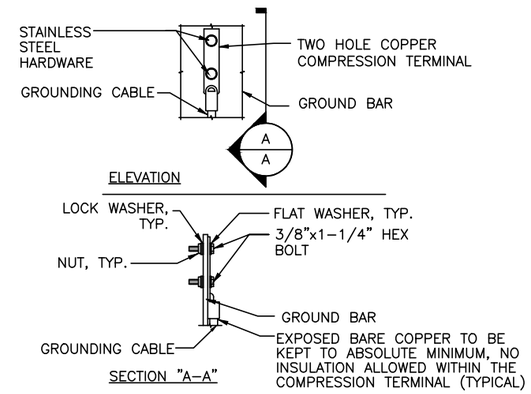

NOTE:

1. "DOUBLING UP" OR "STACKING" OF CONNECTION IS NOT PERMITTED.
2. OXIDE INHIBITING COMPOUND TO BE USED AT ALL LOCATION.
3. CADWELD DOWNLEADS FROM UPPER EGB, LOWER EGB, AND MGB

TYPICAL GROUND BAR CONNECTION DETAIL (3 / G–1)
SCALE: N.T.S

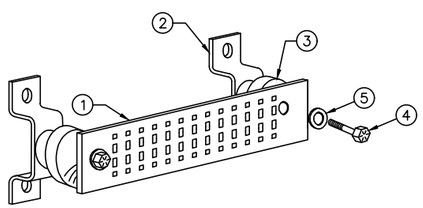

GROUND BAR - DETAIL (4 / G–1)
SCALE: N.T.S

EACH GROUND CONDUCTOR TERMINATING ON ANY GROUND BAR SHALL HAVE AN IDENTIFICATION TAG ATTACHED AT EACH END THAT WILL IDENTIFY ITS ORIGIN AND DESTINATION.

SECTION "P" – SURGE PRODUCERS

CABLE ENTRY PORTS (HATCH PLATES) (#2)
GENERATOR FRAMEWORK (IF AVAILABLE) (#2)
TELCO GROUND BAR
COMMERCIAL POWER COMMON NEUTRAL/GROUND BOND (#2)
+24V POWER SUPPLY RETURN BAR (#2)
–48V POWER SUPPLY RETURN BAR (#2)
RECTIFIER FRAMES.

SECTION "A" – SURGE ABSORBERS

INTERIOR GROUND RING (#2)
EXTERNAL EARTH GROUND FIELD (BURIED GROUND RING) (#2)
METALLIC COLD WATER PIPE (IF AVAILABLE) (#2)
BUILDING STEEL (IF AVAILABLE) (#2)

Hudson Design Group LLC
1600 OSGOOD STREET
BUILDING 20 NORTH, SUITE 3090
N. ANDOVER, MA 01845
TEL: (978) 557-5553
FAX: (978) 336-5586

smartlink
1997 ANNAPOLIS EXCHANGE PKWY
SUITE 200
ANNAPOLIS, MD 21401

SITE NUMBER: CTL01055
SITE NAME: BRISTOL
AMERICAN TOWER SITE ID: 302500
1 WILLIS STREET
BRISTOL, CT 06010
HARTFORD COUNTY

at&t
550 COCHITUATE ROAD
FRAMINGHAM, MA 01701

NO.	DATE	REVISIONS	BY	CHK	APP'D
1	02/17/16	ISSUED FOR PERMITTING	MC	HC	DPH
0	02/03/16	ISSUED FOR REVIEW	MC	HC	DPH

SCALE: AS SHOWN | DESIGNED BY: HC | DRAWN BY: MC

STATE OF CONNECTICUT · DEREK J. CREASER · No. 28255 · LICENSED PROFESSIONAL ENGINEER

AT&T

GROUNDING DETAILS
(LTE 3C)

SITE NUMBER	DRAWING NUMBER	REV
CTL01055	G–1	1