Tower Engineering Solutions
Phone (972) 483-0607, Fax (972) 975-9615
8445 Freeport Parkway, Suite 375, Irving, Texas 75063

Structural Analysis Report

Existing 176 ft EEI Monopole

Customer Name: SBA Communications Corp

Customer Site Number: CT13611-A

Customer Site Name: BSA

Carrier Name: AT&T

Carrier Site ID / Name: CTL05702

Site Location: 229-231 Ashford Center Rd

Ashford, Connecticut

Windham County

Latitude: 41.880444

Longitude: -72.128499

STATE OF CONNECTICUT
JAIME REYES
No. 17534
LICENSED
PROFESSIONAL ENGINEER
8/12/16

Analysis Result:

Max Structural Usage: 70.5% [Pass]

Max Foundation Usage: 44.0% [Pass]

Report Prepared by: Tawfeeq Alajaj

Tower Engineering Solutions
Phone (972) 483-0607, Fax (972) 975-9615
8445 Freeport Parkway, Suite 375, Irving, Texas 75063

Structural Analysis Report

Existing 176 ft EEI Monopole

Customer Name: SBA Communications Corp

Customer Site Number: CT13611-A

Customer Site Name: BSA

Carrier Name: AT&T

Carrier Site ID / Name: CTL05702

Site Location: 229-231 Ashford Center Rd

Ashford, Connecticut

Windham County

Latitude: 41.880444

Longitude: -72.128499

Analysis Result:

Max Structural Usage: 70.5% [Pass]

Max Foundation Usage: 44.0% [Pass]

Report Prepared by: Tawfeeq Alajaj

Introduction

The purpose of this report is to summarize the analysis results on the 176 ft EEI Monopole to support the proposed antennas and transmission lines in addition to those currently installed. Any modification listed under Sources of Information was assumed completed and was included in this analysis.

Sources of Information

Tower Drawings	EEI (Job No. 11863-E01) original design drawings dated August 21, 2003.
Foundation Drawing	EEI (Job No. 11863-E01) original design drawings dated August 21, 2003.
Geotechnical Report	Jaworski Geotech, Inc. (Project No. 02130G) Geotechnical Evaluation dated February 7, 2002.
Modification Drawings	N/A

Analysis Criteria

The analysis was performed in accordance with the requirements and stipulations of the ANSI/TIA/EIA 222-F**.** In accordance with this standard, the structure was analyzed using **TESPoles,** a proprietary analysis software. The program considers the structure as an elastic 3-D model with second-order effects and temperature effects incorporated in the analysis. The analysis was performed using multiple wind directions.

Wind Speed Used in the Analysis:	85.0 mph (fastest mile)
Wind Speed with Ice:	(fastest mile) with 1” radial ice concurrent
Operational Wind Speed:	50 mph + 0” Radial ice
Standard/Codes:	ANSI/TIA/EIA 222-F / 2012 IBC / 2005 Connecticut State Building Code
Exposure Category:	C

Existing Antennas, Mounts and Transmission Lines

The table below summarizes the antennas, mounts and transmission lines that were considered in the analysis as existing on the tower.

Items	Elevation (ft)	Qty.	Antenna Descriptions	Mount Type & Qty.	Transmission Lines	Owner
-	167.0	6	Powerwave Allgon - 7770.00 - Panel	Low Profile Platform	(12) 1 5/8" (1) 3" (2) 3/4" DC (1) 7/16" Fiber	AT&T
-		2	KMW - AM-X-CD-17-65-00T-RET - Panel			
-		1	Powerwave P65-17-XLH-RR			
-		6	Powerwave LGP21401 TMAs			
-		6	Ericsson RRUS-11			
-		6	Powerwave 782-10250 Diplexers			
-		1	Raycap DC6-48-60-18-8F DC Surge			

Proposed Carrier's Final Configuration of Antennas, Mounts and Transmission Lines

Information pertaining to the proposed carrier's final configuration of antennas and transmission lines was provided by SBA Communications Corp. The proposed antennas and lines are listed below.

Items	Elevation (ft)	Qty.	Antenna Descriptions	Mount Type & Qty.	Transmission Lines	Owner
1	167.0	6	Powerwave Allgon - 7770.00 - Panel	Low Profile Platform	(12) 1 5/8" (1) 3" (2) 3/4" DC (1) 7/16" Fiber	AT&T
2		3	KMW - AM-X-CD-17-65-00T-RET - Panel			
3		6	Powerwave LGP21401 TMA			
4		6	Ericsson RRUS-11			
5		6	Ericsson LGP 21901			
6		1	Raycap DC6-48-60-18-8F DC Surge			

3 lines (2) 3/4" DC and (1) 7/16" Fiber housed in 3" conduit.

Analysis Results

The results of the structural analysis, performed for the wind and ice loading and antenna equipment as defined above, are summarized as the following:

	Pole shafts	Anchor Bolts	Base Plate
Max. Usage:	**55.3%**	**45.8%**	**70.5%**
Pass/Fail	**Pass**	**Pass**	**Pass**

Foundations

	Moment (Kip-Ft)	Shear (Kips)
Original Design Reactions	3414.0	27.0
Analysis Reactions	2161.8	19.8
% of Design Reactions	63.3%	73.4%

The foundation has been investigated using the supplied documents and soils report and was found adequate. Therefore, no modification to the foundation will be required.

Operational Condition (Rigidity):

Operational characteristics of the tower are found to be within the limits prescribed by ANSI/TIA/EIA 222-F for the installed antennas. The maximum twist/sway at the elevation of the proposed equipment is 1.3352 degrees under the operational wind speed as specified in the Analysis Criteria.

Conclusions

Based on the analysis results, the existing structure and its foundation were found to be adequate to safely support the existing and proposed equipment and meet the minimum requirements per the ANSI/TIA/EIA 222-F Standard under the design basic wind speed as specified in the Analysis Criteria.

Standard Conditions

1. This analysis was performed based on the information supplied to **(TES) Tower Engineering Solutions, LLC.** Verification of the information provided was not included in the Scope of Work for **TES**. The accuracy of the analysis is dependent on the accuracy of the information provided.

2. The analysis is based on the presumption that the tower members and components along with any existing reinforcement items have been correctly and properly designed, manufactured, installed and maintained.

3. All the existing structural members were assumed to be in good condition with no physical damage or deterioration associated with corrosion.

4. An initial tension of 10% of the break strength on all the existing guy wires was assumed in all the structural analyses of guyed towers unless different values were provided by the client. **TES** cannot take responsibility for the deviations in the analysis results because of differences in the initial tension forces of the existing guy wires.

5. Secondary component or connection secondary components, welds and bolts are assumed to be able to carry their intended original design loads. **TES** cannot take responsibility for verification of the adequacy on the connections, bolts and welds present in the structure.

6. The analyses will be performed based on the codes as specified by the client or based on the best knowledge of the engineering staff of **TES**. In the absence of information to the contrary, all work will be performed in accordance with the latest relevant revision of ANSI/TIA-222. If wind speed and/or ice loads are different from the minimum values recommended by the EIA/TIA-222 standard or other codes, **TES** should be notified in writing and the applicable minimum values provided by the client.

7. The configuration of the existing mounts, antennas, coax and other appurtenances were supplied by the customer for the current structural analysis. **TES** has not visited the tower site to verify the adequacy of the information provided. If there is any discrepancy found in the report regarding the existing conditions, **TES** should be notified immediately to evaluate the effect of the discrepancy on the analysis results.

8. The client will assume responsibility for rework associated with the differences in initially provided information, including tower and foundation information, existing and/or proposed equipment and transmission lines.

9. If a feasibility analysis was performed, final acceptance of changed conditions shall be based upon a rigorous structural analysis.

Usage Diagram - Max Stress 55.3% at 0.0ft

Structure:	CT13611-A-SBA	**Code:**	EIA/TIA-222-F	8/12/2016
Site Name:	BSA	**Exposure:**	C	
Height:	176.00 (ft)	**Gh:**	1.69	
Base Elev:	0.000 (ft)			Page: 1

Tower Engineering Solutions

Dead Load Factor: 1.00

Wind Load Factor: 1.00

52 Alllowable Stress

29 Resulting Stress

Load Case : 85 mph Wind with 0 in Ice

Iterations: 26

Copyright © 2016 by Tower Engineering Solutions, LLC. All rights reserved.

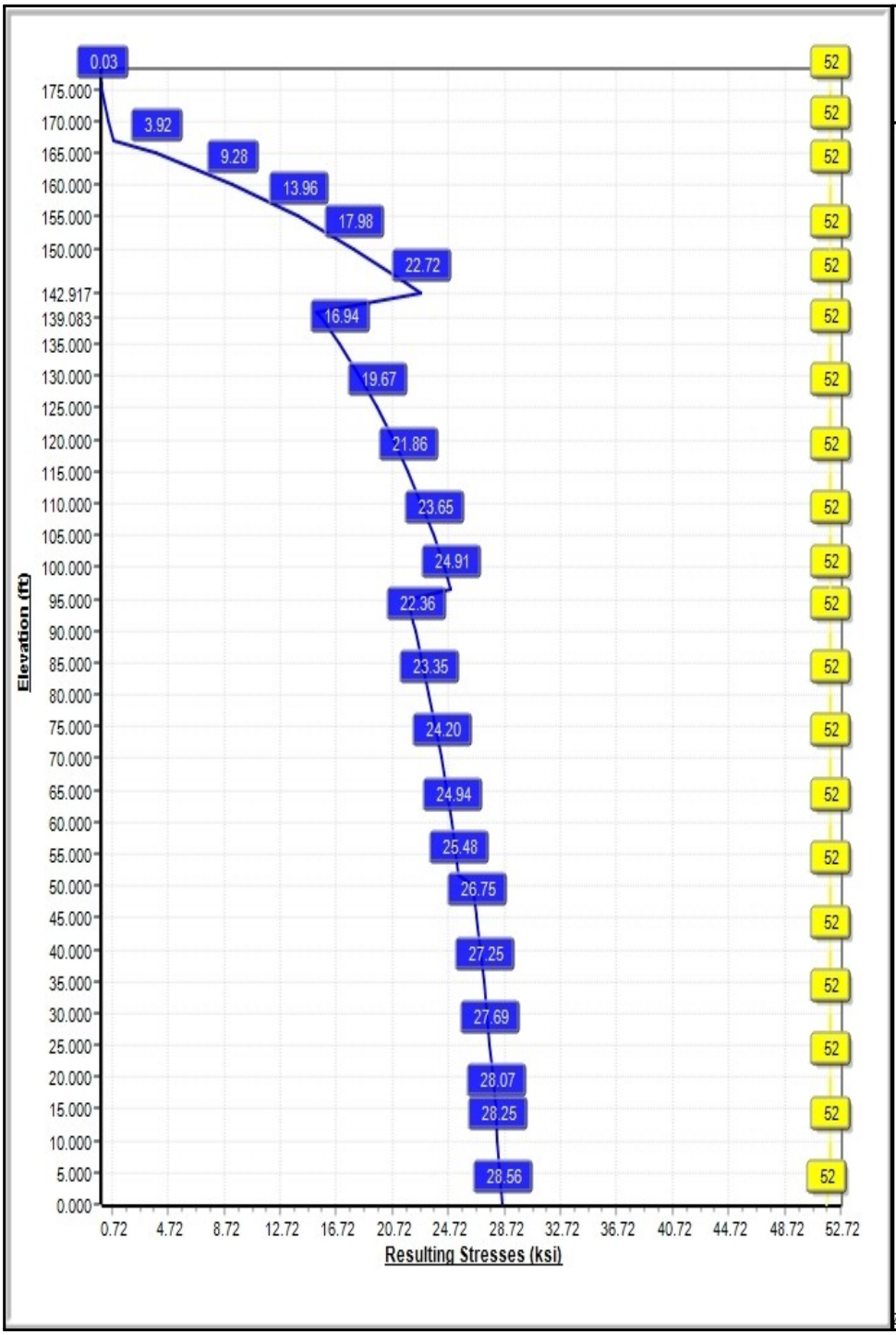

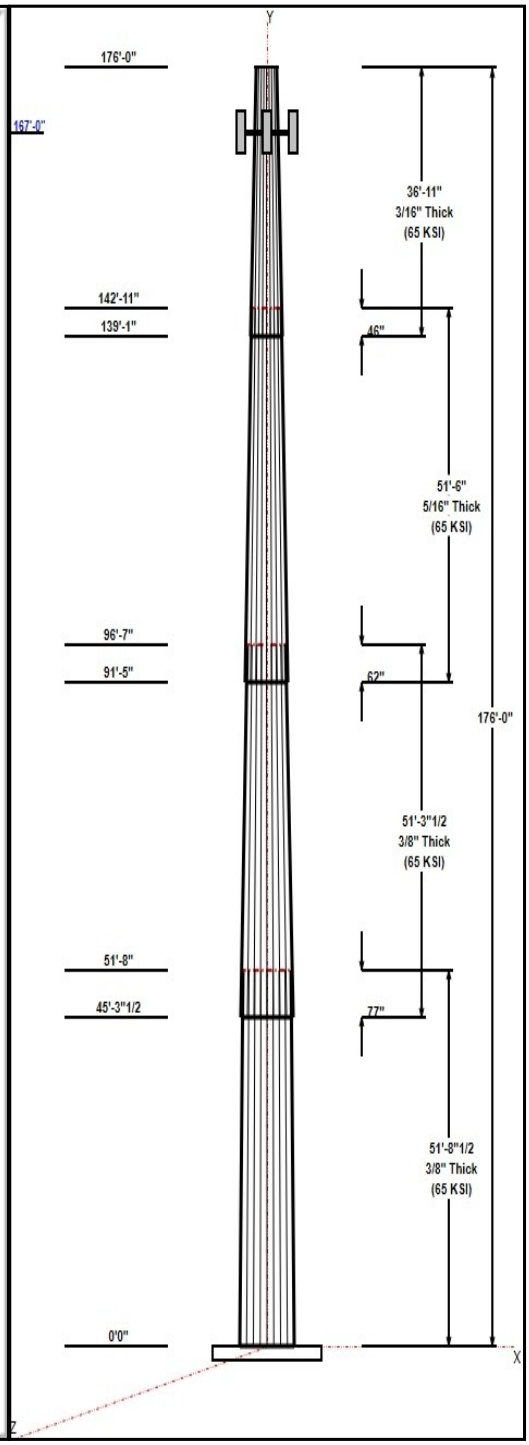

Structure: CT13611-A-SBA

Type:	Tapered	**Base Shape:**	18 Sided	8/12/2016
Site Name:	BSA	**Taper:**	0.23153	
Height:	176.00 (ft)			
Base Elev:	0.00 (ft)			Page: 2

Tower Engineering Solutions

Shaft Properties

Seq	Length (ft)	Top (in)	Bottom (in)	Thick (in)	Joint Type	Taper	Grade (ksi)
1	51.71	44.53	56.50	0.375		0.23153	65
2	51.29	34.89	46.76	0.375	Slip	0.23153	65
3	51.50	24.78	36.71	0.313	Slip	0.23153	65
4	36.92	17.50	26.05	0.188	Slip	0.23153	65

Discrete Appurtenances

Attach Elev (ft)	Force Elev (ft)	Qty	Description	Carrier
167.00	167.00	6	7770.00	AT&T
167.00	167.00	3	AM-X-CD-17-65-00T-RET	AT&T
167.00	167.00	6	Powerwave LGP21401	AT&T
167.00	167.00	6	Ericsson RRUS-11	AT&T
167.00	167.00	6	Ericsson LGP 21901	AT&T
167.00	167.00	1	Raycap DC6-48-60-18-8F	AT&T
167.00	167.00	1	Low Profile Platform	AT&T

Linear Appurtenances

Elev From (ft)	Elev To (ft)	Placement	Description	Carrier
0.00	167.00	Inside	1 5/8" Coax	AT&T
0.00	167.00	Inside	3" Coax	AT&T
0.00	167.00	Inside	3/4" DC	AT&T
0.00	167.00	Inside	7/16" Fiber	AT&T

Anchor Bolts

Qty	Specifications	Grade (ksi)	Arrangement
18	2.25" 18J	75.0	Radial

Base Plate

Thickness (in)	Specifications (in)	Grade (ksi)	Geometry
2.0000	72.0	60.0	Round

Reactions

Load Case	Moment	Shear	Axial
85 mph Wind with 0" Ice	2161.8	19.8	36.9
73.61 mph Wind with 0.5" Ice	1586.8	14.6	32.7
50 mph Wind with 0" Ice	674.9	6.3	28.3

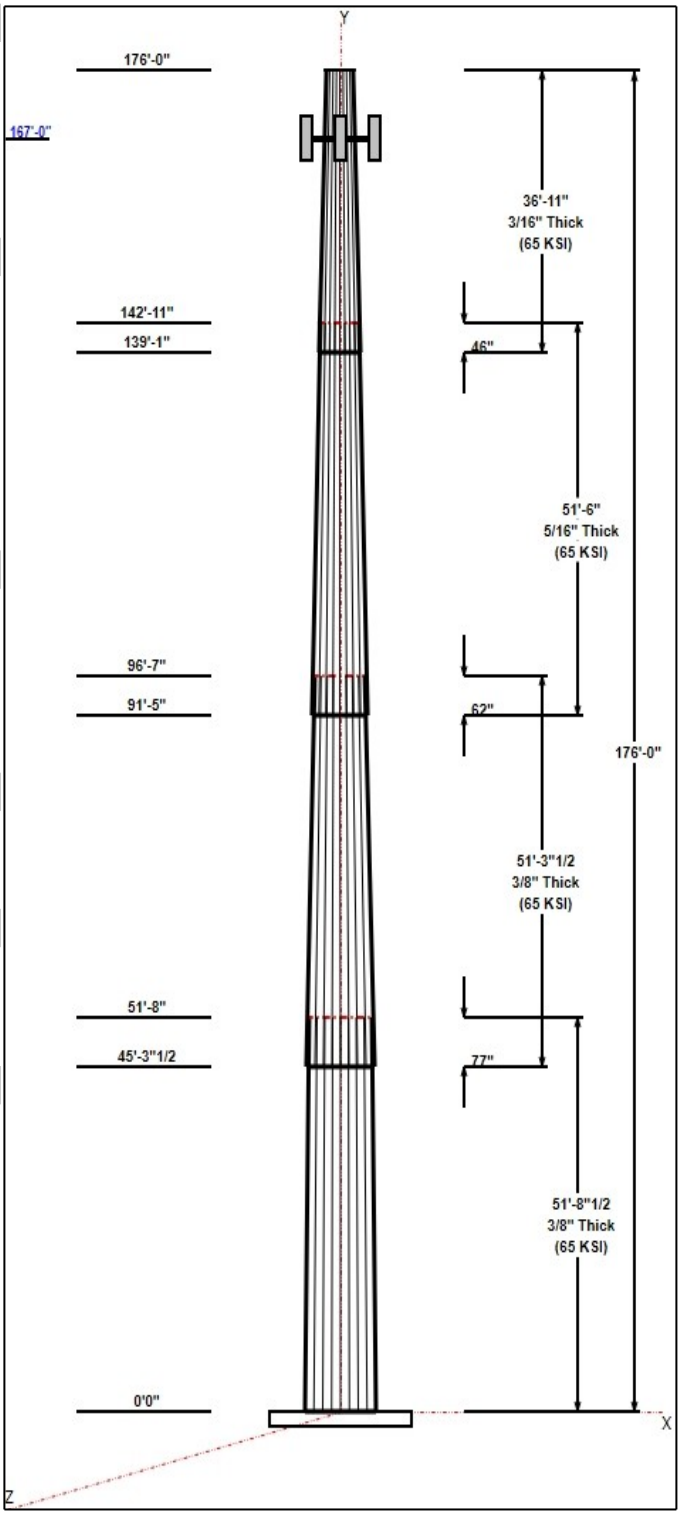

Copyright © 2016 by Tower Engineering Solutions, LLC. All rights reserved.

Structure: CT13611-A-SBA - Coax Line Placement

Type: Monopole
Site Name: BSA
Height: 176.00 (ft)

8/12/2016

Tower Engineering Solutions

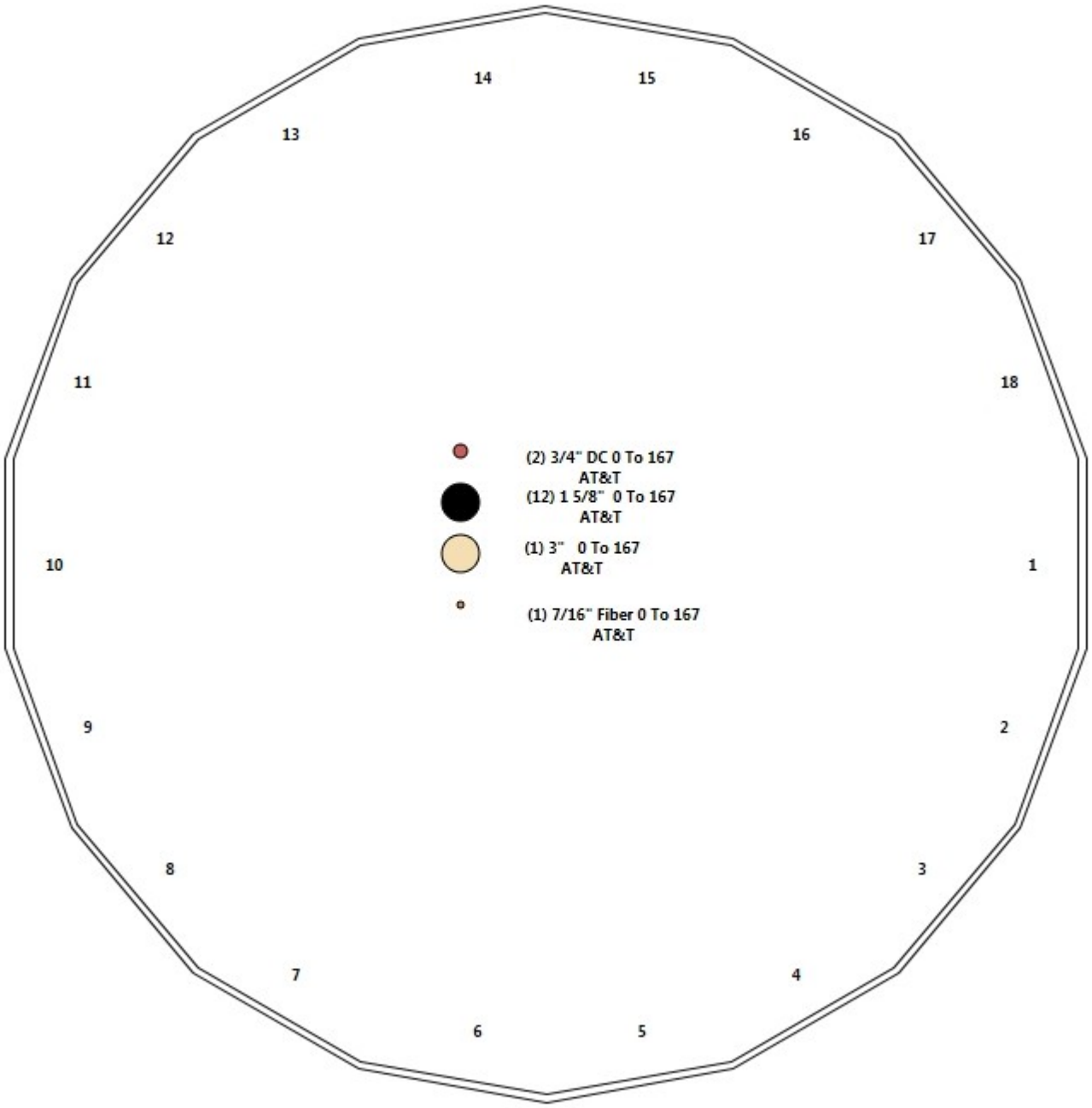

Copyright © 2016 by Tower Engineering Solutions, LLC. All rights reserved.

Shaft Properties

Structure:	CT13611-A-SBA	**Code:**	EIA/TIA-222-F	8/12/2016	
Site Name:	BSA	**Exposure:**	C		
Height:	176.00 (ft)	**Gh:**	1.69		
Base Elev:	0.000 (ft)	**Struct Class:**	II	Page: 4	

Sec. No.	Shape	Length (ft)	Thick (in)	Fy (ksi)	Joint Type	Overlap (in)	Weight (lb)
1	18	51.710	0.3750	65		0.00	10,500
2	18	51.290	0.3750	65	Slip	77.00	8,403
3	18	51.500	0.3125	65	Slip	62.00	5,290
4	18	36.917	0.1875	65	Slip	46.00	1,614
					Total Shaft Weight:		**25,807**

	Bottom						Top						
Sec. No.	**Dia (in)**	**Elev (ft)**	**Area (sqin)**	**Ix (in^4)**	**W/t Ratio**	**D/t Ratio**	**Dia (in)**	**Elev (ft)**	**Area (sqin)**	**Ix (in^4)**	**W/t Ratio**	**D/t Ratio**	**Taper**
1	56.50	0.00	66.80	26585.49	25.16	150.67	44.53	51.71	52.55	12943.0	19.53	118.74	0.231534
2	46.76	45.29	55.21	15010.46	20.58	124.70	34.89	96.58	41.08	6181.75	14.99	93.03	0.231534
3	36.71	91.42	36.10	6041.86	19.30	117.47	24.78	142.9	24.27	1836.64	12.57	79.31	0.231534
4	26.05	139.0	15.39	1300.26	23.08	138.92	17.50	176.0	10.30	390.14	15.05	93.33	0.231534

Copyright © 2016 by Tower Engineering Solutions, LLC. All rights reserved.

Loading Summary

Structure:	CT13611-A-SBA	**Code:**	EIA/TIA-222-F	8/12/2016	
Site Name:	BSA	**Exposure:**	C		
Height:	176.00 (ft)	**Gh:**	1.69		
Base Elev:	0.000 (ft)	**Struct Class:**	II	Page: 5	

Tower Engineering Solutions

Discrete Appurtenances

				No Ice			Ice				
No.	**Elev (ft)**	**Description**	**Qty**	**Weight (lb)**	**CaAa (sf)**	**CaAa Factor**	**Weight (lb)**	**CaAa (sf)**	**CaAa Factor**	**Hor. Ecc. (ft)**	**Vert Ecc (ft)**
1	167.00	7770.00	6	35.00	5.88	0.73	0.00	6.530	0.73	0.00	0.00
2	167.00	AM-X-CD-17-65-00T-RET	3	41.80	8.26	0.75	88.30	9.080	0.75	0.00	0.00
3	167.00	Powerwave LGP21401 TMA	6	14.10	1.29	1.00	21.20	1.530	1.00	0.00	0.00
4	167.00	Ericsson RRUS-11	6	44.00	2.99	0.73	58.60	3.190	0.73	0.00	0.00
5	167.00	Ericsson LGP 21901	6	5.50	0.23	0.75	7.70	0.340	0.75	0.00	0.00
6	167.00	Raycap DC6-48-60-18-8F DC Surg	1	31.80	1.47	1.00	49.50	1.670	1.00	0.00	0.00
7	167.00	Low Profile Platform	1	1200.00	25.00	1.00	1500.00	31.000	1.00	0.00	0.00
		Totals:	**29**	**1,948.80**			**2,339.40**				

Linear Appurtenances

			No Ice		Ice		
Bottom Elev. (ft)	**Top Elev. (ft)**	**Description**	**Weight (lb/ft)**	**CaAa (sf/ft)**	**Weight (lb/ft)**	**CaAa (sf/ft)**	**Exposed**
0.00	167.00	(12) 1 5/8" Coax	1.04	0.00	0.00	0.00	Inside
0.00	167.00	(1) 3" Coax	1.61	0.00	0.00	0.00	Inside
0.00	167.00	(2) 3/4" DC	0.80	0.00	0.00	0.00	Inside
0.00	167.00	(1) 7/16" Fiber	0.08	0.00	0.00	0.00	Inside
		Totals:	**589.51**		**0.00**		

Copyright © 2016 by Tower Engineering Solutions, LLC. All rights reserved.

Shaft Section Properties

Structure:	CT13611-A-SBA	**Code:**	EIA/TIA-222-F	8/12/2016	
Site Name:	BSA	**Exposure:**	C		
Height:	176.00 (ft)	**Gh:**	1.69		
Base Elev:	0.000 (ft)	**Struct Class:**	II	Page: 6	

Tower Engineering Solutions

Increment Length: **5 (ft)**

Elev (ft)	Description	Thick (in)	Dia (in)	Area (in^2)	Ix (in^4)	W/t Ratio	D/t Ratio	Fy (ksi)	Fb (ksi)	Weight (lb)
0.00		0.3750	56.500	66.800	26585.5	25.16	150.67	65	52	0.0
5.00		0.3750	55.342	65.423	24974.1	24.61	147.58	65	52	1124.8
10.00		0.3750	54.185	64.045	23429.1	24.07	144.49	65	52	1101.4
15.00		0.3750	53.027	62.667	21949.3	23.52	141.41	65	52	1077.9
20.00		0.3750	51.869	61.289	20533.1	22.98	138.32	65	52	1054.5
25.00		0.3750	50.712	59.911	19179.1	22.43	135.23	65	52	1031.0
30.00		0.3750	49.554	58.533	17886.0	21.89	132.14	65	52	1007.6
35.00		0.3750	48.396	57.155	16652.4	21.35	129.06	65	52	984.2
40.00		0.3750	47.239	55.777	15476.9	20.80	125.97	65	52	960.7
45.00		0.3750	46.081	54.400	14358.0	20.26	122.88	65	52	937.3
45.29	Bot - Section 2	0.3750	46.013	54.319	14294.1	20.22	122.70	65	52	54.3
50.00		0.3750	44.923	53.022	13294.4	19.71	119.80	65	52	1733.4
51.71	Top - Section 1	0.3750	45.277	53.443	13613.9	19.88	120.74	65	52	619.5
55.00		0.3750	44.516	52.536	12932.8	19.52	118.71	65	52	593.2
60.00		0.3750	43.358	51.159	11941.7	18.98	115.62	65	52	882.1
65.00		0.3750	42.200	49.781	11002.5	18.43	112.53	65	52	858.7
70.00		0.3750	41.043	48.403	10114.0	17.89	109.45	65	52	835.2
75.00		0.3750	39.885	47.025	9274.6	17.34	106.36	65	52	811.8
80.00		0.3750	38.727	45.647	8483.0	16.80	103.27	65	52	788.4
85.00		0.3750	37.570	44.269	7737.8	16.25	100.19	65	52	764.9
90.00		0.3750	36.412	42.891	7037.5	15.71	97.10	65	52	741.5
91.42	Bot - Section 3	0.3750	36.084	42.501	6847.1	15.56	96.22	65	52	205.8
95.00		0.3750	35.254	41.514	6380.8	15.17	94.01	65	52	947.4
96.58	Top - Section 2	0.3125	35.513	34.913	5465.5	18.63	113.64	65	52	411.6
100.00		0.3125	34.722	34.128	5105.2	18.18	111.11	65	52	401.3
105.00		0.3125	33.564	32.980	4607.1	17.53	107.40	65	52	570.9
110.00		0.3125	32.406	31.832	4142.4	16.87	103.70	65	52	551.4
115.00		0.3125	31.249	30.684	3710.1	16.22	100.00	65	52	531.8
120.00		0.3125	30.091	29.535	3309.0	15.57	96.29	65	52	512.3
125.00		0.3125	28.933	28.387	2937.9	14.91	92.59	65	52	492.7
130.00		0.3125	27.776	27.239	2595.6	14.26	88.88	65	52	473.2
135.00		0.3125	26.618	26.091	2281.0	13.61	85.18	65	52	453.7
139.08	Bot - Section 4	0.3125	25.672	25.153	2043.8	13.07	82.15	65	52	356.0
140.00		0.3125	25.460	24.943	1992.9	12.96	81.47	65	52	125.9
142.92	Top - Section 3	0.1875	25.160	14.861	1170.9	22.25	134.19	65	52	393.7
145.00		0.1875	24.678	14.574	1104.4	21.80	131.61	65	52	104.3
150.00		0.1875	23.520	13.885	955.0	20.71	125.44	65	52	242.1
155.00		0.1875	22.362	13.196	819.8	19.62	119.27	65	52	230.4
160.00		0.1875	21.205	12.507	698.0	18.53	113.09	65	52	218.7
165.00		0.1875	20.047	11.818	588.9	17.44	106.92	65	52	206.9
167.00		0.1875	19.584	11.543	548.7	17.01	104.45	65	52	79.5
170.00		0.1875	18.889	11.129	491.8	16.35	100.74	65	52	115.7
175.00		0.1875	17.732	10.441	406.0	15.26	94.57	65	52	183.5
176.00		0.1875	17.500	10.303	390.1	15.05	93.33	65	52	35.3
										25806.5

Copyright © 2016 by Tower Engineering Solutions, LLC. All rights reserved.

Wind Loading - Shaft

Structure:	CT13611-A-SBA	**Code:**	EIA/TIA-222-F	8/12/2016	
Site Name:	BSA	**Exposure:**	C		
Height:	176.00 (ft)	**Gh:**	1.69		
Base Elev:	0.000 (ft)	**Struct Class:**	II	Page: 7	

Tower Engineering Solutions

Load Case: 85 mph Wind with 0" Ice

Dead Load Factor 1.00

Wind Load Factor 1.00

Iterations: 26

Elev (ft)	Description	Kzt	Kz	qz (psf)	qzGh (psf)	C (mph-ft)	Cf	Ice Thick (in)	Tributary (ft)	Aa (sf)	CfAa (sf)	Wind Force X (lb)	Dead Load Ice (lb)	Tot Dead Load (lb)
0.00		0.00	1.00	18.496	31.26	400.21	0.650	1.000	0.00	0.000	0.00	0.0	0.0	0.0
5.00		0.00	1.00	18.496	31.26	392.01	0.650	1.000	5.00	24.134	15.69	490.3	347.7	1472.5
10.00		0.00	1.00	18.496	31.26	383.81	0.650	1.000	5.00	23.651	15.37	480.5	340.6	1441.9
15.00		0.00	1.00	18.496	31.26	375.61	0.650	1.000	5.00	23.169	15.06	470.7	333.4	1411.4
20.00		0.00	1.00	18.496	31.26	367.41	0.650	1.000	5.00	22.687	14.75	460.9	326.3	1380.8
25.00		0.00	1.00	18.496	31.26	359.21	0.650	1.000	5.00	22.204	14.43	451.1	319.1	1350.2
30.00		0.00	1.00	18.496	31.26	351.01	0.650	1.000	5.00	21.722	14.12	441.3	312.0	1319.6
35.00		0.00	1.02	18.810	31.79	345.70	0.650	1.000	5.00	21.240	13.81	438.9	304.8	1289.0
40.00		0.00	1.06	19.541	33.02	343.93	0.650	1.000	5.00	20.757	13.49	445.6	297.7	1258.4
45.00		0.00	1.09	20.210	34.15	341.19	0.650	1.000	5.00	20.275	13.18	450.1	290.6	1227.8
45.29	Bot - Section 2	0.00	1.09	20.247	34.22	341.01	0.650	1.000	0.29	1.174	0.76	26.1	17.0	71.3
50.00		0.00	1.13	20.827	35.20	337.67	0.650	1.000	4.71	18.912	12.29	432.7	271.1	2004.6
51.71	Top - Section 1	0.00	1.14	21.029	35.54	336.30	0.650	1.000	1.71	6.765	4.40	156.3	97.7	717.2
55.00		0.00	1.16	21.402	36.17	339.19	0.650	1.000	3.29	12.857	8.36	302.3	184.8	778.1
60.00		0.00	1.19	21.941	37.08	334.50	0.650	1.000	5.00	19.140	12.44	461.3	273.8	1155.9
65.00		0.00	1.21	22.449	37.94	329.31	0.650	1.000	5.00	18.658	12.13	460.1	266.6	1125.3
70.00		0.00	1.24	22.929	38.75	323.69	0.650	1.000	5.00	18.176	11.81	457.8	259.5	1094.7
75.00		0.00	1.26	23.386	39.52	317.67	0.650	1.000	5.00	17.693	11.50	454.5	252.3	1064.1
80.00		0.00	1.29	23.821	40.26	311.31	0.650	1.000	5.00	17.211	11.19	450.4	245.2	1033.5
85.00		0.00	1.31	24.237	40.96	304.63	0.650	1.000	5.00	16.729	10.87	445.4	238.0	1002.9
90.00		0.00	1.33	24.636	41.63	297.67	0.650	1.000	5.00	16.246	10.56	439.7	230.9	972.4
91.42	Bot - Section 3	0.00	1.34	24.746	41.82	295.64	0.650	1.000	1.42	4.515	2.93	122.7	64.8	270.7
95.00		0.00	1.35	25.020	42.28	290.44	0.650	1.000	3.58	11.435	7.43	314.3	163.1	1110.5
96.58	Top - Section 2	0.00	1.36	25.138	42.48	288.10	0.650	1.000	1.58	4.974	3.23	137.3	71.4	482.9
100.00		0.00	1.37	25.389	42.91	288.15	0.650	1.000	3.42	10.568	6.87	294.7	150.6	552.0
105.00		0.00	1.39	25.745	43.51	280.49	0.650	1.000	5.00	15.059	9.79	425.9	213.3	784.2
110.00		0.00	1.41	26.090	44.09	272.62	0.650	1.000	5.00	14.577	9.48	417.8	206.2	757.5
115.00		0.00	1.43	26.423	44.66	264.56	0.650	1.000	5.00	14.095	9.16	409.1	199.0	730.8
120.00		0.00	1.45	26.747	45.20	256.31	0.650	1.000	5.00	13.612	8.85	399.9	191.9	704.2
125.00		0.00	1.46	27.060	45.73	247.89	0.650	1.000	5.00	13.130	8.53	390.3	184.7	677.5
130.00		0.00	1.48	27.365	46.25	239.31	0.650	1.000	5.00	12.648	8.22	380.2	177.6	650.8
135.00		0.00	1.50	27.662	46.75	230.58	0.650	1.000	5.00	12.165	7.91	369.7	170.4	624.1
139.08	Bot - Section 4	0.00	1.51	27.899	47.15	223.34	0.650	1.000	4.08	9.577	6.23	293.5	134.4	490.4
140.00		0.00	1.51	27.951	47.24	221.70	0.650	1.000	0.92	2.134	1.39	65.5	30.4	156.3
142.92	Top - Section 3	0.00	1.52	28.116	47.52	216.45	0.650	1.000	2.92	6.683	4.34	206.4	94.2	487.9
145.00		0.00	1.53	28.233	47.71	215.96	0.650	1.000	2.08	4.673	3.04	144.9	66.0	170.4
150.00		0.00	1.54	28.507	48.18	206.83	0.650	1.000	5.00	10.874	7.07	340.5	151.3	393.4
155.00		0.00	1.56	28.776	48.63	197.57	0.650	1.000	5.00	10.392	6.75	328.5	144.2	374.6
160.00		0.00	1.57	29.038	49.07	188.20	0.650	1.000	5.00	9.910	6.44	316.1	137.0	355.7
165.00		0.00	1.58	29.294	49.51	178.71	0.650	1.000	5.00	9.427	6.13	303.4	129.9	336.8
167.00	Appurtenance(s)	0.00	1.59	29.395	49.68	174.88	0.650	1.000	2.00	3.636	2.36	117.4	50.8	130.3
170.00		0.00	1.60	29.545	49.93	169.10	0.650	1.000	3.00	5.309	3.45	172.3	73.6	189.4
175.00		0.00	1.61	29.791	50.35	159.40	0.650	1.000	5.00	8.463	5.50	276.9	115.6	299.1
176.00		0.00	1.61	29.840	50.43	157.45	0.650	1.000	1.00	1.635	1.06	53.6	22.8	58.1
								Totals:	**176.00**			**14,497.3**		**33,959.0**

Copyright © 2016 by Tower Engineering Solutions, LLC. All rights reserved.

Discrete Appurtenance Forces

Structure:	CT13611-A-SB	**Code:**	EIA/TIA-222-F	8/12/2016	
Site Name:	BSA	**Exposure:**	C		
Height:	176.00 (ft)	**Gh:**	1.69		
Base Elev:	0.000 (ft)	**Struct Class:**	II	Page: 8	

Load Case: 85 mph Wind with 0" Ice

Dead Load Factor 1.00

Wind Load Factor 1.00

Iterations: 26

No.	Elev (ft)	Description	Qty	qz (psf)	qzGh (psf)	CaAa Factor	Total CaAa (sf)	Dead Load (lb)	Horiz Ecc (ft)	Vert Ecc (ft)	Wind FX (lb)	Mom Y (lb-ft)	Mom Z (lb-ft)
1	167.00	7770.00	6	29.395	49.678	0.73	28.60	0.00	0.000	0.000	1420.86	0.00	0.00
2	167.00	AM-X-CD-17-65-00T-RET	3	29.395	49.678	0.75	20.43	264.90	0.000	0.000	1014.92	0.00	0.00
3	167.00	Powerwave LGP21401 TMA	6	29.395	49.678	1.00	9.18	127.20	0.000	0.000	456.05	0.00	0.00
4	167.00	Ericsson RRUS-11	6	29.395	49.678	0.73	13.97	351.60	0.000	0.000	694.11	0.00	0.00
5	167.00	Ericsson LGP 21901	6	29.395	49.678	0.75	1.53	46.20	0.000	0.000	76.01	0.00	0.00
6	167.00	Raycap DC6-48-60-18-8F DC	1	29.395	49.678	1.00	1.67	49.50	0.000	0.000	82.96	0.00	0.00
7	167.00	Low Profile Platform	1	29.395	49.678	1.00	31.00	1500.00	0.000	0.000	1540.02	0.00	0.00
						Totals:		**2,339.40**			**5,284.94**		

Copyright © 2016 by Tower Engineering Solutions, LLC. All rights reserved.

Total Applied Force Summary

Structure:	CT13611-A-SB	**Code:**	EIA/TIA-222-F	8/12/2016	
Site Name:	BSA	**Exposure:**	C		
Height:	176.00 (ft)	**Gh:**	1.69		
Base Elev:	0.000 (ft)	**Struct Class:**	II	Page: 9	

Load Case: 85 mph Wind with 0" Ice

Dead Load Factor 1.00

Wind Load Factor 1.00

Iterations: 26

Elev (ft)	Description	Lateral FX (-) (lb)	Axial FY (-) (lb)	Torsion MY (lb-ft)	Moment MZ (lb-ft)
0.00		0.00	0.00	0.00	0.00
5.00		490.35	1490.18	0.00	0.00
10.00		480.55	1459.59	0.00	0.00
15.00		470.75	1429.00	0.00	0.00
20.00		460.95	1398.41	0.00	0.00
25.00		451.15	1367.83	0.00	0.00
30.00		441.34	1337.24	0.00	0.00
35.00		438.86	1306.65	0.00	0.00
40.00		445.57	1276.06	0.00	0.00
45.00		450.11	1245.48	0.00	0.00
45.29		26.12	72.32	0.00	0.00
50.00		432.69	2021.19	0.00	0.00
51.71		156.28	723.20	0.00	0.00
55.00		302.29	789.67	0.00	0.00
60.00		461.33	1173.53	0.00	0.00
65.00		460.10	1142.94	0.00	0.00
70.00		457.80	1112.36	0.00	0.00
75.00		454.52	1081.77	0.00	0.00
80.00		450.36	1051.18	0.00	0.00
85.00		445.39	1020.59	0.00	0.00
90.00		439.67	990.01	0.00	0.00
91.42		122.75	275.67	0.00	0.00
95.00		314.28	1123.12	0.00	0.00
96.58		137.35	488.51	0.00	0.00
100.00		294.74	564.05	0.00	0.00
105.00		425.90	801.85	0.00	0.00
110.00		417.78	775.17	0.00	0.00
115.00		409.11	748.49	0.00	0.00
120.00		399.95	721.81	0.00	0.00
125.00		390.30	695.13	0.00	0.00
130.00		380.20	668.45	0.00	0.00
135.00		369.66	641.76	0.00	0.00
139.08		293.51	504.85	0.00	0.00
140.00		65.54	159.53	0.00	0.00
142.92		206.42	498.18	0.00	0.00
145.00		144.94	177.72	0.00	0.00
150.00		340.54	411.07	0.00	0.00
155.00		328.50	392.21	0.00	0.00
160.00		316.10	373.34	0.00	0.00
165.00		303.37	354.48	0.00	0.00
167.00	(29) appurtenances	5402.34	2476.77	0.00	0.00
170.00		172.31	189.37	0.00	0.00
175.00		276.94	299.10	0.00	0.00
176.00		53.58	58.13	0.00	0.00
	Totals:	**19,782.27**	**36,887.94**	**0.00**	**0.00**

Copyright © 2016 by Tower Engineering Solutions, LLC. All rights reserved.

Resulting Forces and Deflections

Structure:	CT13611-A-SB	**Code:**	EIA/TIA-222-F	8/12/2016	
Site Name:	BSA	**Exposure:**	C		
Height:	176.00 (ft)	**Gh:**	1.69		
Base Elev:	0.000 (ft)	**Struct Class:**	II	Page: 10	

Load Case: 85 mph Wind with 0" Ice

Dead Load Factor 1.00

Wind Load Factor 1.00

Iterations: 26

Elev (ft)	Lateral FX (-) (kips)	Axial FY (-) (kips)	Lateral FZ (kips)	Moment MX (ft-kips)	Torsion MY (ft-kips)	Moment MZ (ft-kips)	Deflect X (in)	Deflect Z (in)	Deflect Resultant (in)	Rotation Sway (deg)	Rotation Twist (deg)
0.00	-19.818	-36.868	0.000	0.000	0.000	-2161.831	0.000	0.000	0.000	0.000	0.000
5.00	-19.397	-35.340	0.000	0.000	0.000	-2062.742	-0.061	0.000	0.061	-0.113	0.000
10.00	-18.980	-33.843	0.000	0.000	0.000	-1965.760	-0.241	0.000	0.241	-0.228	0.000
15.00	-18.569	-32.379	0.000	0.000	0.000	-1870.862	-0.542	0.000	0.542	-0.344	0.000
20.00	-18.162	-30.946	0.000	0.000	0.000	-1778.021	-0.966	0.000	0.966	-0.462	0.000
25.00	-17.761	-29.545	0.000	0.000	0.000	-1687.212	-1.515	0.000	1.515	-0.583	0.000
30.00	-17.365	-28.175	0.000	0.000	0.000	-1598.409	-2.191	0.000	2.191	-0.704	0.000
35.00	-16.967	-26.838	0.000	0.000	0.000	-1511.586	-2.995	0.000	2.995	-0.828	0.000
40.00	-16.558	-25.533	0.000	0.000	0.000	-1426.753	-3.930	0.000	3.930	-0.954	0.000
45.00	-16.114	-24.276	0.000	0.000	0.000	-1343.964	-4.997	0.000	4.997	-1.081	0.000
45.29	-16.114	-24.186	0.000	0.000	0.000	-1339.237	-5.063	0.000	5.063	-1.089	0.000
50.00	-15.673	-22.151	0.000	0.000	0.000	-1263.394	-6.198	0.000	6.198	-1.211	0.000
51.71	-15.527	-21.414	0.000	0.000	0.000	-1236.593	-6.640	0.000	6.640	-1.256	0.000
55.00	-15.245	-20.603	0.000	0.000	0.000	-1185.511	-7.537	0.000	7.537	-1.344	0.000
60.00	-14.798	-19.408	0.000	0.000	0.000	-1109.287	-9.012	0.000	9.012	-1.470	0.000
65.00	-14.348	-18.246	0.000	0.000	0.000	-1035.298	-10.620	0.000	10.620	-1.598	0.000
70.00	-13.897	-17.116	0.000	0.000	0.000	-963.557	-12.363	0.000	12.363	-1.727	0.000
75.00	-13.446	-16.018	0.000	0.000	0.000	-894.071	-14.242	0.000	14.242	-1.858	0.000
80.00	-12.995	-14.952	0.000	0.000	0.000	-826.842	-16.258	0.000	16.258	-1.990	0.000
85.00	-12.546	-13.919	0.000	0.000	0.000	-761.867	-18.413	0.000	18.413	-2.123	0.000
90.00	-12.088	-12.928	0.000	0.000	0.000	-699.137	-20.708	0.000	20.708	-2.257	0.000
91.42	-11.970	-12.643	0.000	0.000	0.000	-682.012	-21.383	0.000	21.383	-2.297	0.000
95.00	-11.624	-11.520	0.000	0.000	0.000	-639.120	-23.145	0.000	23.145	-2.395	0.000
96.58	-11.480	-11.023	0.000	0.000	0.000	-620.715	-23.946	0.000	23.946	-2.440	0.000
100.00	-11.184	-10.448	0.000	0.000	0.000	-581.493	-25.727	0.000	25.727	-2.534	0.000
105.00	-10.748	-9.638	0.000	0.000	0.000	-525.574	-28.463	0.000	28.463	-2.688	0.000
110.00	-10.317	-8.856	0.000	0.000	0.000	-471.835	-31.360	0.000	31.360	-2.842	0.000
115.00	-9.892	-8.103	0.000	0.000	0.000	-420.251	-34.418	0.000	34.418	-2.995	0.000
120.00	-9.473	-7.379	0.000	0.000	0.000	-370.792	-37.636	0.000	37.636	-3.147	0.000
125.00	-9.062	-6.683	0.000	0.000	0.000	-323.426	-41.011	0.000	41.011	-3.296	0.000
130.00	-8.658	-6.017	0.000	0.000	0.000	-278.118	-44.540	0.000	44.540	-3.442	0.000
135.00	-8.262	-5.381	0.000	0.000	0.000	-234.828	-48.219	0.000	48.219	-3.582	0.000
139.08	-7.942	-4.887	0.000	0.000	0.000	-201.093	-51.331	0.000	51.331	-3.694	0.000
140.00	-7.871	-4.725	0.000	0.000	0.000	-193.813	-52.042	0.000	52.042	-3.719	0.000
142.92	-7.637	-4.232	0.000	0.000	0.000	-170.856	-54.336	0.000	54.336	-3.795	0.000
145.00	-7.489	-4.049	0.000	0.000	0.000	-154.946	-56.003	0.000	56.003	-3.847	0.000
150.00	-7.131	-3.642	0.000	0.000	0.000	-117.501	-60.127	0.000	60.127	-4.023	0.000
155.00	-6.783	-3.259	0.000	0.000	0.000	-81.844	-64.420	0.000	64.420	-4.171	0.000
160.00	-6.445	-2.900	0.000	0.000	0.000	-47.928	-68.850	0.000	68.850	-4.284	0.000
165.00	-6.117	-2.566	0.000	0.000	0.000	-15.703	-73.374	0.000	73.374	-4.349	0.000
167.00	-0.543	-0.507	0.000	0.000	0.000	-3.468	-75.196	0.000	75.196	-4.358	0.000
170.00	-0.357	-0.331	0.000	0.000	0.000	-1.841	-77.933	0.000	77.933	-4.362	0.000
175.00	-0.058	-0.054	0.000	0.000	0.000	-0.058	-82.499	0.000	82.499	-4.365	0.000
176.00	-0.053	0.000	0.000	0.000	0.000	0.000	0.000	0.000	83.412	-4.365	0.000

Copyright © 2016 by Tower Engineering Solutions, LLC. All rights reserved.

Resulting Stresses

Structure:	CT13611-A-SBA	**Code:**	EIA/TIA-222-F	8/12/2016	
Site Name:	BSA	**Exposure:**	C		
Height:	176.00 (ft)	**Gh:**	1.69		
Base Elev:	0.000 (ft)	**Struct Class:**	II	Page: 11	

Load Case: 85 mph Wind with 0" Ice

Iterations: 26

Dead Load Factor 1.00

Wind Load Factor 1.00

Applied Stresses

Elev (ft)	fa Axial (Y) (ksi)	fvx Shear (X) (ksi)	fvz Shear (Z) (ksi)	fvt Torsion (ksi)	fbx Bending (X) (ksi)	fbz Bending (Z) (ksi)	fb Combined (ksi)	Fb Allow Stress (ksi)	f/Fb Stress Ratio
0.00	0.55	0.60	0.00	0.00	0.00	27.99	28.56	51.7	0.553
5.00	0.54	0.60	0.00	0.00	0.00	27.85	28.41	52.0	0.547
10.00	0.53	0.60	0.00	0.00	0.00	27.70	28.25	52.0	0.543
15.00	0.52	0.60	0.00	0.00	0.00	27.54	28.07	52.0	0.540
20.00	0.50	0.60	0.00	0.00	0.00	27.36	27.89	52.0	0.537
25.00	0.49	0.60	0.00	0.00	0.00	27.18	27.69	52.0	0.533
30.00	0.48	0.60	0.00	0.00	0.00	26.98	27.48	52.0	0.529
35.00	0.47	0.60	0.00	0.00	0.00	26.77	27.25	52.0	0.524
40.00	0.46	0.60	0.00	0.00	0.00	26.53	27.01	52.0	0.520
45.00	0.45	0.60	0.00	0.00	0.00	26.28	26.75	52.0	0.515
45.29	0.45	0.60	0.00	0.00	0.00	26.27	26.73	52.0	0.514
50.00	0.42	0.60	0.00	0.00	0.00	26.01	26.45	52.0	0.509
51.71	0.40	0.59	0.00	0.00	0.00	25.06	25.48	52.0	0.490
55.00	0.39	0.58	0.00	0.00	0.00	24.86	25.27	52.0	0.486
60.00	0.38	0.58	0.00	0.00	0.00	24.54	24.94	52.0	0.480
65.00	0.37	0.58	0.00	0.00	0.00	24.19	24.58	52.0	0.473
70.00	0.35	0.58	0.00	0.00	0.00	23.82	24.20	52.0	0.466
75.00	0.34	0.58	0.00	0.00	0.00	23.43	23.79	52.0	0.458
80.00	0.33	0.57	0.00	0.00	0.00	23.00	23.35	52.0	0.449
85.00	0.31	0.57	0.00	0.00	0.00	22.54	22.87	52.0	0.440
90.00	0.30	0.57	0.00	0.00	0.00	22.04	22.36	52.0	0.430
91.42	0.30	0.57	0.00	0.00	0.00	21.90	22.22	52.0	0.427
95.00	0.28	0.56	0.00	0.00	0.00	21.51	21.81	52.0	0.420
96.58	0.32	0.66	0.00	0.00	0.00	24.57	24.91	52.0	0.479
100.00	0.31	0.66	0.00	0.00	0.00	24.10	24.43	52.0	0.470
105.00	0.29	0.66	0.00	0.00	0.00	23.33	23.65	52.0	0.455
110.00	0.28	0.65	0.00	0.00	0.00	22.49	22.79	52.0	0.439
115.00	0.26	0.65	0.00	0.00	0.00	21.56	21.86	52.0	0.421
120.00	0.25	0.65	0.00	0.00	0.00	20.54	20.82	52.0	0.401
125.00	0.24	0.64	0.00	0.00	0.00	19.41	19.67	52.0	0.378
130.00	0.22	0.64	0.00	0.00	0.00	18.13	18.39	52.0	0.354
135.00	0.21	0.64	0.00	0.00	0.00	16.70	16.94	52.0	0.326
139.08	0.19	0.64	0.00	0.00	0.00	15.39	15.62	52.0	0.301
140.00	0.19	0.64	0.00	0.00	0.00	15.09	15.31	52.0	0.295
142.92	0.28	1.04	0.00	0.00	0.00	22.37	22.72	52.0	0.437
145.00	0.28	1.04	0.00	0.00	0.00	21.09	21.45	52.0	0.413
150.00	0.26	1.04	0.00	0.00	0.00	17.63	17.98	52.0	0.346
155.00	0.25	1.04	0.00	0.00	0.00	13.60	13.96	52.0	0.269
160.00	0.23	1.04	0.00	0.00	0.00	8.87	9.28	52.0	0.179
165.00	0.22	1.04	0.00	0.00	0.00	3.26	3.92	52.0	0.075
167.00	0.04	0.09	0.00	0.00	0.00	0.75	0.81	52.0	0.016
170.00	0.03	0.06	0.00	0.00	0.00	0.43	0.47	52.0	0.009
175.00	0.01	0.01	0.00	0.00	0.00	0.02	0.03	52.0	0.001
176.00	0.00	0.01	0.00	0.00	0.00	0.00	0.02	52.0	0.000

Copyright © 2016 by Tower Engineering Solutions, LLC. All rights reserved.

Wind Loading - Shaft

Structure:	CT13611-A-SBA	**Code:**	EIA/TIA-222-F	8/12/2016	
Site Name:	BSA	**Exposure:**	C		
Height:	176.00 (ft)	**Gh:**	1.69		
Base Elev:	0.000 (ft)	**Struct Class:**	II	Page: 12	

Tower Engineering Solutions

Load Case: 73.61 mph Wind with 0.5" Ice

Dead Load Factor 1.00

Wind Load Factor 1.00

Iterations: 26

Elev (ft)	Description	Kzt	Kz	qz (psf)	qzGh (psf)	C (mph-ft)	Cf	Ice Thick (in)	Tributary (ft)	Aa (sf)	CfAa (sf)	Wind Force X (lb)	Dead Load Ice (lb)	Tot Dead Load (lb)
0.00		0.00	1.00	13.871	23.44	346.58	0.650	0.500	0.00	0.000	0.00	0.0	0.0	0.0
5.00		0.00	1.00	13.871	23.44	339.48	0.650	0.500	5.00	23.717	15.42	361.4	172.3	1297.1
10.00		0.00	1.00	13.871	23.44	332.38	0.650	0.500	5.00	23.235	15.10	354.0	168.7	1270.1
15.00		0.00	1.00	13.871	23.44	325.28	0.650	0.500	5.00	22.752	14.79	346.7	165.2	1243.1
20.00		0.00	1.00	13.871	23.44	318.18	0.650	0.500	5.00	22.270	14.48	339.3	161.6	1216.1
25.00		0.00	1.00	13.871	23.44	311.07	0.650	0.500	5.00	21.788	14.16	332.0	158.0	1189.1
30.00		0.00	1.00	13.871	23.44	303.97	0.650	0.500	5.00	21.305	13.85	324.6	154.5	1162.1
35.00		0.00	1.02	14.106	23.84	299.38	0.650	0.500	5.00	20.823	13.53	322.7	150.9	1135.0
40.00		0.00	1.06	14.655	24.77	297.84	0.650	0.500	5.00	20.341	13.22	327.5	147.3	1108.0
45.00		0.00	1.09	15.156	25.61	295.47	0.650	0.500	5.00	19.858	12.91	330.6	143.7	1081.0
45.29	Bot - Section 2	0.00	1.09	15.185	25.66	295.31	0.650	0.500	0.29	1.150	0.75	19.2	8.4	62.7
50.00		0.00	1.13	15.620	26.40	292.42	0.650	0.500	4.71	18.520	12.04	317.8	134.1	1867.6
51.71	Top - Section 1	0.00	1.14	15.770	26.65	291.24	0.650	0.500	1.71	6.623	4.30	114.7	48.3	667.8
55.00		0.00	1.16	16.051	27.13	293.74	0.650	0.500	3.29	12.583	8.18	221.9	91.4	684.6
60.00		0.00	1.19	16.455	27.81	289.68	0.650	0.500	5.00	18.724	12.17	338.4	135.3	1017.5
65.00		0.00	1.21	16.836	28.45	285.19	0.650	0.500	5.00	18.241	11.86	337.4	131.8	990.4
70.00		0.00	1.24	17.196	29.06	280.31	0.650	0.500	5.00	17.759	11.54	335.5	128.2	963.4
75.00		0.00	1.26	17.538	29.64	275.11	0.650	0.500	5.00	17.277	11.23	332.8	124.6	936.4
80.00		0.00	1.29	17.865	30.19	269.60	0.650	0.500	5.00	16.794	10.92	329.6	121.0	909.4
85.00		0.00	1.31	18.177	30.72	263.81	0.650	0.500	5.00	16.312	10.60	325.7	117.5	882.4
90.00		0.00	1.33	18.476	31.22	257.78	0.650	0.500	5.00	15.829	10.29	321.3	113.9	855.4
91.42	Bot - Section 3	0.00	1.34	18.559	31.36	256.03	0.650	0.500	1.42	4.397	2.86	89.6	32.0	237.8
95.00		0.00	1.35	18.764	31.71	251.52	0.650	0.500	3.58	11.136	7.24	229.5	80.5	1027.8
96.58	Top - Section 2	0.00	1.36	18.852	31.86	249.49	0.650	0.500	1.58	4.842	3.15	100.3	35.2	446.8
100.00		0.00	1.37	19.041	32.18	249.54	0.650	0.500	3.42	10.283	6.68	215.1	74.3	475.6
105.00		0.00	1.39	19.308	32.63	242.91	0.650	0.500	5.00	14.643	9.52	310.6	105.1	676.0
110.00		0.00	1.41	19.566	33.07	236.09	0.650	0.500	5.00	14.160	9.20	304.4	101.5	652.9
115.00		0.00	1.43	19.816	33.49	229.11	0.650	0.500	5.00	13.678	8.89	297.7	98.0	629.8
120.00		0.00	1.45	20.059	33.90	221.97	0.650	0.500	5.00	13.196	8.58	290.8	94.4	606.7
125.00		0.00	1.46	20.294	34.30	214.67	0.650	0.500	5.00	12.713	8.26	283.4	90.8	583.6
130.00		0.00	1.48	20.523	34.68	207.24	0.650	0.500	5.00	12.231	7.95	275.7	87.3	560.5
135.00		0.00	1.50	20.745	35.06	199.68	0.650	0.500	5.00	11.749	7.64	267.7	83.7	537.4
139.08	Bot - Section 4	0.00	1.51	20.923	35.36	193.41	0.650	0.500	4.08	9.237	6.00	212.3	66.0	422.0
140.00		0.00	1.51	20.962	35.43	191.99	0.650	0.500	0.92	2.058	1.34	47.4	14.9	140.8
142.92	Top - Section 3	0.00	1.52	21.086	35.64	187.45	0.650	0.500	2.92	6.440	4.19	149.2	46.2	439.9
145.00		0.00	1.53	21.173	35.78	187.02	0.650	0.500	2.08	4.500	2.92	104.7	32.4	136.7
150.00		0.00	1.54	21.379	36.13	179.11	0.650	0.500	5.00	10.458	6.80	245.6	74.1	316.2
155.00		0.00	1.56	21.581	36.47	171.10	0.650	0.500	5.00	9.975	6.48	236.5	70.5	300.9
160.00		0.00	1.57	21.777	36.80	162.98	0.650	0.500	5.00	9.493	6.17	227.1	67.0	285.6
165.00		0.00	1.58	21.969	37.13	154.76	0.650	0.500	5.00	9.011	5.86	217.5	63.4	270.3
167.00	Appurtenance(s)	0.00	1.59	22.045	37.26	151.44	0.650	0.500	2.00	3.469	2.25	84.0	24.8	104.3
170.00		0.00	1.60	22.158	37.45	146.44	0.650	0.500	3.00	5.059	3.29	123.1	35.9	151.6
175.00		0.00	1.61	22.342	37.76	138.04	0.650	0.500	5.00	8.046	5.23	197.5	56.3	239.8
176.00		0.00	1.61	22.378	37.82	136.35	0.650	0.500	1.00	1.551	1.01	38.1	11.1	46.4
								Totals:	**176.00**			**10,580.8**		**29,828.5**

Copyright © 2016 by Tower Engineering Solutions, LLC. All rights reserved.

Discrete Appurtenance Forces

Structure:	CT13611-A-SB	**Code:**	EIA/TIA-222-F	8/12/2016	
Site Name:	BSA	**Exposure:**	C		
Height:	176.00 (ft)	**Gh:**	1.69		
Base Elev:	0.000 (ft)	**Struct Class:**	II	Page: 13	

Load Case: 73.61 mph Wind with 0.5" Ice

Dead Load Factor 1.00

Wind Load Factor 1.00

Iterations: 26

No.	Elev (ft)	Description	Qty	qz (psf)	qzGh (psf)	CaAa Factor	Total CaAa (sf)	Dead Load (lb)	Horiz Ecc (ft)	Vert Ecc (ft)	Wind FX (lb)	Mom Y (lb-ft)	Mom Z (lb-ft)
1	167.00	7770.00	6	22.045	37.256	0.73	28.60	0.00	0.000	0.000	1065.59	0.00	0.00
2	167.00	AM-X-CD-17-65-00T-RET	3	22.045	37.256	0.75	20.43	264.90	0.000	0.000	761.15	0.00	0.00
3	167.00	Powerwave LGP21401 TMA	6	22.045	37.256	1.00	9.18	127.20	0.000	0.000	342.01	0.00	0.00
4	167.00	Ericsson RRUS-11	6	22.045	37.256	0.73	13.97	351.60	0.000	0.000	520.55	0.00	0.00
5	167.00	Ericsson LGP 21901	6	22.045	37.256	0.75	1.53	46.20	0.000	0.000	57.00	0.00	0.00
6	167.00	Raycap DC6-48-60-18-8F DC	1	22.045	37.256	1.00	1.67	49.50	0.000	0.000	62.22	0.00	0.00
7	167.00	Low Profile Platform	1	22.045	37.256	1.00	31.00	1500.00	0.000	0.000	1154.95	0.00	0.00
						Totals:		**2,339.40**			**3,963.47**		

Copyright © 2016 by Tower Engineering Solutions, LLC. All rights reserved.

Total Applied Force Summary

Structure:	CT13611-A-SB	**Code:**	EIA/TIA-222-F	8/12/2016	
Site Name:	BSA	**Exposure:**	C		
Height:	176.00 (ft)	**Gh:**	1.69		
Base Elev:	0.000 (ft)	**Struct Class:**	II	Page: 14	

Load Case: 73.61 mph Wind with 0.5" Ice

Dead Load Factor 1.00

Wind Load Factor 1.00

Iterations: 26

Elev (ft)	Description	Lateral FX (-) (lb)	Axial FY (-) (lb)	Torsion MY (lb-ft)	Moment MZ (lb-ft)
0.00		0.00	0.00	0.00	0.00
5.00		361.39	1314.78	0.00	0.00
10.00		354.04	1287.76	0.00	0.00
15.00		346.69	1260.75	0.00	0.00
20.00		339.34	1233.73	0.00	0.00
25.00		331.99	1206.72	0.00	0.00
30.00		324.64	1179.70	0.00	0.00
35.00		322.67	1152.69	0.00	0.00
40.00		327.45	1125.67	0.00	0.00
45.00		330.63	1098.66	0.00	0.00
45.29		19.18	63.71	0.00	0.00
50.00		317.77	1884.17	0.00	0.00
51.71		114.73	673.84	0.00	0.00
55.00		221.87	696.24	0.00	0.00
60.00		338.44	1035.11	0.00	0.00
65.00		337.35	1008.10	0.00	0.00
70.00		335.46	981.08	0.00	0.00
75.00		332.84	954.07	0.00	0.00
80.00		329.57	927.05	0.00	0.00
85.00		325.70	900.04	0.00	0.00
90.00		321.27	873.02	0.00	0.00
91.42		89.65	242.81	0.00	0.00
95.00		229.54	1040.46	0.00	0.00
96.58		100.27	452.35	0.00	0.00
100.00		215.09	487.67	0.00	0.00
105.00		310.57	693.65	0.00	0.00
110.00		304.36	670.54	0.00	0.00
115.00		297.75	647.43	0.00	0.00
120.00		290.76	624.32	0.00	0.00
125.00		283.42	601.22	0.00	0.00
130.00		275.74	578.11	0.00	0.00
135.00		267.74	555.00	0.00	0.00
139.08		212.30	436.38	0.00	0.00
140.00		47.39	144.07	0.00	0.00
142.92		149.18	450.20	0.00	0.00
145.00		104.66	144.06	0.00	0.00
150.00		245.60	333.87	0.00	0.00
155.00		236.48	318.58	0.00	0.00
160.00		227.10	303.28	0.00	0.00
165.00		217.46	287.99	0.00	0.00
167.00	(29) appurtenances	4047.48	2450.74	0.00	0.00
170.00		123.14	151.62	0.00	0.00
175.00		197.47	239.75	0.00	0.00
176.00		38.14	46.40	0.00	0.00
	Totals:	**14,544.31**	**32,757.37**	**0.00**	**0.00**

Copyright © 2016 by Tower Engineering Solutions, LLC. All rights reserved.

Resulting Forces and Deflections

Structure:	CT13611-A-SB	**Code:**	EIA/TIA-222-F	8/12/2016	
Site Name:	BSA	**Exposure:**	C		
Height:	176.00 (ft)	**Gh:**	1.69		
Base Elev:	0.000 (ft)	**Struct Class:**	II	Page: 15	

Load Case: 73.61 mph Wind with 0.5" Ice

Dead Load Factor 1.00

Wind Load Factor 1.00

Iterations: 26

Elev (ft)	Lateral FX (-) (kips)	Axial FY (-) (kips)	Lateral FZ (kips)	Moment MX (ft-kips)	Torsion MY (ft-kips)	Moment MZ (ft-kips)	Deflect X (in)	Deflect Z (in)	Deflect Resultant (in)	Rotation Sway (deg)	Rotation Twist (deg)
0.00	-14.568	-32.747	0.000	0.000	0.000	-1586.766	0.000	0.000	0.000	0.000	0.000
5.00	-14.251	-31.411	0.000	0.000	0.000	-1513.929	-0.045	0.000	0.045	-0.083	0.000
10.00	-13.939	-30.104	0.000	0.000	0.000	-1442.674	-0.177	0.000	0.177	-0.167	0.000
15.00	-13.631	-28.824	0.000	0.000	0.000	-1372.981	-0.398	0.000	0.398	-0.253	0.000
20.00	-13.327	-27.571	0.000	0.000	0.000	-1304.828	-0.709	0.000	0.709	-0.339	0.000
25.00	-13.028	-26.347	0.000	0.000	0.000	-1238.193	-1.112	0.000	1.112	-0.427	0.000
30.00	-12.733	-25.150	0.000	0.000	0.000	-1173.054	-1.608	0.000	1.608	-0.517	0.000
35.00	-12.437	-23.981	0.000	0.000	0.000	-1109.389	-2.198	0.000	2.198	-0.608	0.000
40.00	-12.134	-22.839	0.000	0.000	0.000	-1047.202	-2.884	0.000	2.884	-0.700	0.000
45.00	-11.808	-21.735	0.000	0.000	0.000	-986.532	-3.667	0.000	3.667	-0.793	0.000
45.29	-11.806	-21.661	0.000	0.000	0.000	-983.069	-3.716	0.000	3.716	-0.799	0.000
50.00	-11.482	-19.770	0.000	0.000	0.000	-927.502	-4.549	0.000	4.549	-0.888	0.000
51.71	-11.373	-19.088	0.000	0.000	0.000	-907.869	-4.874	0.000	4.874	-0.922	0.000
55.00	-11.164	-18.380	0.000	0.000	0.000	-870.454	-5.532	0.000	5.532	-0.986	0.000
60.00	-10.836	-17.334	0.000	0.000	0.000	-814.632	-6.615	0.000	6.615	-1.079	0.000
65.00	-10.505	-16.315	0.000	0.000	0.000	-760.455	-7.795	0.000	7.795	-1.173	0.000
70.00	-10.175	-15.325	0.000	0.000	0.000	-707.929	-9.074	0.000	9.074	-1.268	0.000
75.00	-9.844	-14.362	0.000	0.000	0.000	-657.056	-10.453	0.000	10.453	-1.364	0.000
80.00	-9.515	-13.427	0.000	0.000	0.000	-607.836	-11.934	0.000	11.934	-1.461	0.000
85.00	-9.187	-12.520	0.000	0.000	0.000	-560.262	-13.516	0.000	13.516	-1.559	0.000
90.00	-8.854	-11.647	0.000	0.000	0.000	-514.328	-15.201	0.000	15.201	-1.657	0.000
91.42	-8.768	-11.399	0.000	0.000	0.000	-501.785	-15.698	0.000	15.698	-1.687	0.000
95.00	-8.516	-10.358	0.000	0.000	0.000	-470.368	-16.991	0.000	16.991	-1.759	0.000
96.58	-8.411	-9.902	0.000	0.000	0.000	-456.884	-17.580	0.000	17.580	-1.792	0.000
100.00	-8.196	-9.408	0.000	0.000	0.000	-428.146	-18.888	0.000	18.888	-1.861	0.000
105.00	-7.879	-8.709	0.000	0.000	0.000	-387.168	-20.898	0.000	20.898	-1.975	0.000
110.00	-7.567	-8.035	0.000	0.000	0.000	-347.772	-23.027	0.000	23.027	-2.088	0.000
115.00	-7.260	-7.385	0.000	0.000	0.000	-309.936	-25.275	0.000	25.275	-2.201	0.000
120.00	-6.958	-6.759	0.000	0.000	0.000	-273.636	-27.640	0.000	27.640	-2.313	0.000
125.00	-6.662	-6.158	0.000	0.000	0.000	-238.846	-30.121	0.000	30.121	-2.423	0.000
130.00	-6.372	-5.580	0.000	0.000	0.000	-205.537	-32.717	0.000	32.717	-2.531	0.000
135.00	-6.087	-5.028	0.000	0.000	0.000	-173.679	-35.423	0.000	35.423	-2.635	0.000
139.08	-5.859	-4.597	0.000	0.000	0.000	-148.823	-37.712	0.000	37.712	-2.717	0.000
140.00	-5.808	-4.451	0.000	0.000	0.000	-143.452	-38.236	0.000	38.236	-2.736	0.000
142.92	-5.640	-4.004	0.000	0.000	0.000	-126.513	-39.924	0.000	39.924	-2.792	0.000
145.00	-5.535	-3.857	0.000	0.000	0.000	-114.763	-41.151	0.000	41.151	-2.831	0.000
150.00	-5.280	-3.525	0.000	0.000	0.000	-87.090	-44.187	0.000	44.187	-2.961	0.000
155.00	-5.032	-3.211	0.000	0.000	0.000	-60.691	-47.348	0.000	47.348	-3.071	0.000
160.00	-4.793	-2.915	0.000	0.000	0.000	-35.528	-50.611	0.000	50.611	-3.154	0.000
165.00	-4.561	-2.637	0.000	0.000	0.000	-11.565	-53.944	0.000	53.944	-3.202	0.000
167.00	-0.383	-0.417	0.000	0.000	0.000	-2.444	-55.287	0.000	55.287	-3.209	0.000
170.00	-0.251	-0.272	0.000	0.000	0.000	-1.296	-57.303	0.000	57.303	-3.212	0.000
175.00	-0.041	-0.044	0.000	0.000	0.000	-0.041	-60.666	0.000	60.666	-3.214	0.000
176.00	-0.038	0.000	0.000	0.000	0.000	0.000	0.000	0.000	61.339	-3.214	0.000

Copyright © 2016 by Tower Engineering Solutions, LLC. All rights reserved.

Resulting Stresses

Structure:	CT13611-A-SBA	**Code:**	EIA/TIA-222-F	8/12/2016	
Site Name:	BSA	**Exposure:**	C		
Height:	176.00 (ft)	**Gh:**	1.69		
Base Elev:	0.000 (ft)	**Struct Class:**	II	Page: 16	

Load Case: 73.61 mph Wind with 0.5" Ice

Iterations: 26

Dead Load Factor 1.00

Wind Load Factor 1.00

Applied Stresses

Elev (ft)	fa Axial (Y) (ksi)	fvx Shear (X) (ksi)	fvz Shear (Z) (ksi)	fvt Torsion (ksi)	fbx Bending (X) (ksi)	fbz Bending (Z) (ksi)	fb Combined (ksi)	Fb Allow Stress (ksi)	f/Fb Stress Ratio
0.00	0.49	0.44	0.00	0.00	0.00	20.55	21.05	51.7	0.407
5.00	0.48	0.44	0.00	0.00	0.00	20.44	20.93	52.0	0.403
10.00	0.47	0.44	0.00	0.00	0.00	20.33	20.81	52.0	0.400
15.00	0.46	0.44	0.00	0.00	0.00	20.21	20.68	52.0	0.398
20.00	0.45	0.44	0.00	0.00	0.00	20.08	20.55	52.0	0.395
25.00	0.44	0.44	0.00	0.00	0.00	19.95	20.40	52.0	0.392
30.00	0.43	0.44	0.00	0.00	0.00	19.80	20.24	52.0	0.389
35.00	0.42	0.44	0.00	0.00	0.00	19.64	20.08	52.0	0.386
40.00	0.41	0.44	0.00	0.00	0.00	19.47	19.90	52.0	0.383
45.00	0.40	0.44	0.00	0.00	0.00	19.29	19.70	52.0	0.379
45.29	0.40	0.44	0.00	0.00	0.00	19.28	19.69	52.0	0.379
50.00	0.37	0.44	0.00	0.00	0.00	19.09	19.48	52.0	0.375
51.71	0.36	0.43	0.00	0.00	0.00	18.40	18.77	52.0	0.361
55.00	0.35	0.43	0.00	0.00	0.00	18.25	18.62	52.0	0.358
60.00	0.34	0.43	0.00	0.00	0.00	18.02	18.37	52.0	0.353
65.00	0.33	0.43	0.00	0.00	0.00	17.77	18.11	52.0	0.348
70.00	0.32	0.42	0.00	0.00	0.00	17.50	17.83	52.0	0.343
75.00	0.31	0.42	0.00	0.00	0.00	17.22	17.54	52.0	0.337
80.00	0.29	0.42	0.00	0.00	0.00	16.91	17.22	52.0	0.331
85.00	0.28	0.42	0.00	0.00	0.00	16.57	16.87	52.0	0.325
90.00	0.27	0.42	0.00	0.00	0.00	16.21	16.50	52.0	0.317
91.42	0.27	0.42	0.00	0.00	0.00	16.11	16.40	52.0	0.315
95.00	0.25	0.41	0.00	0.00	0.00	15.83	16.10	52.0	0.310
96.58	0.28	0.49	0.00	0.00	0.00	18.09	18.39	52.0	0.354
100.00	0.28	0.48	0.00	0.00	0.00	17.74	18.04	52.0	0.347
105.00	0.26	0.48	0.00	0.00	0.00	17.18	17.47	52.0	0.336
110.00	0.25	0.48	0.00	0.00	0.00	16.58	16.85	52.0	0.324
115.00	0.24	0.48	0.00	0.00	0.00	15.90	16.17	52.0	0.311
120.00	0.23	0.47	0.00	0.00	0.00	15.16	15.41	52.0	0.296
125.00	0.22	0.47	0.00	0.00	0.00	14.33	14.57	52.0	0.280
130.00	0.20	0.47	0.00	0.00	0.00	13.40	13.63	52.0	0.262
135.00	0.19	0.47	0.00	0.00	0.00	12.35	12.57	52.0	0.242
139.08	0.18	0.47	0.00	0.00	0.00	11.39	11.60	52.0	0.223
140.00	0.18	0.47	0.00	0.00	0.00	11.17	11.37	52.0	0.219
142.92	0.27	0.76	0.00	0.00	0.00	16.56	16.88	52.0	0.325
145.00	0.26	0.77	0.00	0.00	0.00	15.62	15.94	52.0	0.307
150.00	0.25	0.77	0.00	0.00	0.00	13.07	13.39	52.0	0.258
155.00	0.24	0.77	0.00	0.00	0.00	10.09	10.41	52.0	0.200
160.00	0.23	0.77	0.00	0.00	0.00	6.58	6.94	52.0	0.133
165.00	0.22	0.78	0.00	0.00	0.00	2.40	2.95	52.0	0.057
167.00	0.04	0.07	0.00	0.00	0.00	0.53	0.58	52.0	0.011
170.00	0.02	0.05	0.00	0.00	0.00	0.30	0.34	52.0	0.006
175.00	0.00	0.01	0.00	0.00	0.00	0.01	0.02	52.0	0.000
176.00	0.00	0.01	0.00	0.00	0.00	0.00	0.01	52.0	0.000

Copyright © 2016 by Tower Engineering Solutions, LLC. All rights reserved.

Wind Loading - Shaft

Structure:	CT13611-A-SBA	**Code:**	EIA/TIA-222-F	8/12/2016	
Site Name:	BSA	**Exposure:**	C		
Height:	176.00 (ft)	**Gh:**	1.69		
Base Elev:	0.000 (ft)	**Struct Class:**	II	Page: 17	

Load Case: 50 mph Wind with 0" Ice

Dead Load Factor 1.00

Wind Load Factor 1.00

Iterations: 25

Elev (ft)	Description	Kzt	Kz	qz (psf)	qzGh (psf)	C (mph-ft)	Cf	Ice Thick (in)	Tributary (ft)	Aa (sf)	CfAa (sf)	Wind Force X (lb)	Dead Load Ice (lb)	Tot Dead Load (lb)
0.00		0.00	1.00	6.400	10.82	235.42	0.650	0.000	0.00	0.000	0.00	0.0	0.0	0.0
5.00		0.00	1.00	6.400	10.82	230.59	0.650	0.000	5.00	23.300	15.15	163.8	0.0	1124.8
10.00		0.00	1.00	6.400	10.82	225.77	0.650	0.000	5.00	22.818	14.83	160.4	0.0	1101.4
15.00		0.00	1.00	6.400	10.82	220.95	0.650	0.000	5.00	22.336	14.52	157.0	0.0	1077.9
20.00		0.00	1.00	6.400	10.82	216.12	0.650	0.000	5.00	21.853	14.20	153.6	0.0	1054.5
25.00		0.00	1.00	6.400	10.82	211.30	0.650	0.000	5.00	21.371	13.89	150.2	0.0	1031.0
30.00		0.00	1.00	6.400	10.82	206.47	0.650	0.000	5.00	20.889	13.58	146.9	0.0	1007.6
35.00		0.00	1.02	6.509	11.00	203.35	0.650	0.000	5.00	20.406	13.26	145.9	0.0	984.2
40.00		0.00	1.06	6.762	11.43	202.31	0.650	0.000	5.00	19.924	12.95	148.0	0.0	960.7
45.00		0.00	1.09	6.993	11.82	200.70	0.650	0.000	5.00	19.442	12.64	149.3	0.0	937.3
45.29	Bot - Section 2	0.00	1.09	7.006	11.84	200.59	0.650	0.000	0.29	1.126	0.73	8.7	0.0	54.3
50.00		0.00	1.13	7.207	12.18	198.63	0.650	0.000	4.71	18.128	11.78	143.5	0.0	1733.4
51.71	Top - Section 1	0.00	1.14	7.276	12.30	197.83	0.650	0.000	1.71	6.480	4.21	51.8	0.0	619.5
55.00		0.00	1.16	7.406	12.52	199.52	0.650	0.000	3.29	12.309	8.00	100.1	0.0	593.2
60.00		0.00	1.19	7.592	12.83	196.77	0.650	0.000	5.00	18.307	11.90	152.7	0.0	882.1
65.00		0.00	1.21	7.768	13.13	193.71	0.650	0.000	5.00	17.825	11.59	152.1	0.0	858.7
70.00		0.00	1.24	7.934	13.41	190.41	0.650	0.000	5.00	17.342	11.27	151.1	0.0	835.2
75.00		0.00	1.26	8.092	13.68	186.87	0.650	0.000	5.00	16.860	10.96	149.9	0.0	811.8
80.00		0.00	1.29	8.242	13.93	183.12	0.650	0.000	5.00	16.378	10.65	148.3	0.0	788.4
85.00		0.00	1.31	8.387	14.17	179.20	0.650	0.000	5.00	15.895	10.33	146.4	0.0	764.9
90.00		0.00	1.33	8.525	14.41	175.10	0.650	0.000	5.00	15.413	10.02	144.3	0.0	741.5
91.42	Bot - Section 3	0.00	1.34	8.563	14.47	173.91	0.650	0.000	1.42	4.279	2.78	40.3	0.0	205.8
95.00		0.00	1.35	8.657	14.63	170.84	0.650	0.000	3.58	10.838	7.04	103.1	0.0	947.4
96.58	Top - Section 2	0.00	1.36	8.698	14.70	169.47	0.650	0.000	1.58	4.710	3.06	45.0	0.0	411.6
100.00		0.00	1.37	8.785	14.85	169.50	0.650	0.000	3.42	9.999	6.50	96.5	0.0	401.3
105.00		0.00	1.39	8.908	15.06	165.00	0.650	0.000	5.00	14.226	9.25	139.2	0.0	570.9
110.00		0.00	1.41	9.028	15.26	160.37	0.650	0.000	5.00	13.744	8.93	136.3	0.0	551.4
115.00		0.00	1.43	9.143	15.45	155.62	0.650	0.000	5.00	13.261	8.62	133.2	0.0	531.8
120.00		0.00	1.45	9.255	15.64	150.77	0.650	0.000	5.00	12.779	8.31	129.9	0.0	512.3
125.00		0.00	1.46	9.363	15.82	145.82	0.650	0.000	5.00	12.297	7.99	126.5	0.0	492.7
130.00		0.00	1.48	9.469	16.00	140.77	0.650	0.000	5.00	11.814	7.68	122.9	0.0	473.2
135.00		0.00	1.50	9.572	16.18	135.63	0.650	0.000	5.00	11.332	7.37	119.1	0.0	453.7
139.08	Bot - Section 4	0.00	1.51	9.653	16.31	131.37	0.650	0.000	4.08	8.897	5.78	94.3	0.0	356.0
140.00		0.00	1.51	9.672	16.35	130.41	0.650	0.000	0.92	1.982	1.29	21.1	0.0	125.9
142.92	Top - Section 3	0.00	1.52	9.729	16.44	127.33	0.650	0.000	2.92	6.197	4.03	66.2	0.0	393.7
145.00		0.00	1.53	9.769	16.51	127.04	0.650	0.000	2.08	4.326	2.81	46.4	0.0	104.3
150.00		0.00	1.54	9.864	16.67	121.66	0.650	0.000	5.00	10.041	6.53	108.8	0.0	242.1
155.00		0.00	1.56	9.957	16.83	116.22	0.650	0.000	5.00	9.559	6.21	104.6	0.0	230.4
160.00		0.00	1.57	10.048	16.98	110.70	0.650	0.000	5.00	9.076	5.90	100.2	0.0	218.7
165.00		0.00	1.58	10.136	17.13	105.12	0.650	0.000	5.00	8.594	5.59	95.7	0.0	206.9
167.00	Appurtenance(s)	0.00	1.59	10.171	17.19	102.87	0.650	0.000	2.00	3.303	2.15	36.9	0.0	79.5
170.00		0.00	1.60	10.223	17.28	99.47	0.650	0.000	3.00	4.809	3.13	54.0	0.0	115.7
175.00		0.00	1.61	10.308	17.42	93.76	0.650	0.000	5.00	7.629	4.96	86.4	0.0	183.5
176.00		0.00	1.61	10.325	17.45	92.62	0.650	0.000	1.00	1.468	0.95	16.7	0.0	35.3
								Totals:	**176.00**			**4,747.4**		**25,806.5**

Copyright © 2016 by Tower Engineering Solutions, LLC. All rights reserved.

Discrete Appurtenance Forces

Structure:	CT13611-A-SB	**Code:**	EIA/TIA-222-F	8/12/2016	
Site Name:	BSA	**Exposure:**	C		
Height:	176.00 (ft)	**Gh:**	1.69		
Base Elev:	0.000 (ft)	**Struct Class:**	II	Page: 18	

Load Case: 50 mph Wind with 0" Ice

Dead Load Factor 1.00

Wind Load Factor 1.00

Iterations: 25

No.	Elev (ft)	Description	Qty	qz (psf)	qzGh (psf)	CaAa Factor	Total CaAa (sf)	Dead Load (lb)	Horiz Ecc (ft)	Vert Ecc (ft)	Wind FX (lb)	Mom Y (lb-ft)	Mom Z (lb-ft)
1	167.00	7770.00	6	10.171	17.190	0.73	25.75	210.00	0.000	0.000	442.71	0.00	0.00
2	167.00	AM-X-CD-17-65-00T-RET	3	10.171	17.190	0.75	18.59	125.40	0.000	0.000	319.47	0.00	0.00
3	167.00	Powerwave LGP21401 TMA	6	10.171	17.190	1.00	7.74	84.60	0.000	0.000	133.05	0.00	0.00
4	167.00	Ericsson RRUS-11	6	10.171	17.190	0.73	13.10	264.00	0.000	0.000	225.12	0.00	0.00
5	167.00	Ericsson LGP 21901	6	10.171	17.190	0.75	1.04	33.00	0.000	0.000	17.79	0.00	0.00
6	167.00	Raycap DC6-48-60-18-8F DC	1	10.171	17.190	1.00	1.47	31.80	0.000	0.000	25.27	0.00	0.00
7	167.00	Low Profile Platform	1	10.171	17.190	1.00	25.00	1200.00	0.000	0.000	429.74	0.00	0.00
						Totals:		**1,948.80**			**1,593.15**		

Copyright © 2016 by Tower Engineering Solutions, LLC. All rights reserved.

Total Applied Force Summary

Structure:	CT13611-A-SB	**Code:**	EIA/TIA-222-F	8/12/2016	
Site Name:	BSA	**Exposure:**	C		
Height:	176.00 (ft)	**Gh:**	1.69		
Base Elev:	0.000 (ft)	**Struct Class:**	II	Page: 19	

Load Case: 50 mph Wind with 0" Ice

Dead Load Factor 1.00

Wind Load Factor 1.00

Iterations: 25

Elev (ft)	Description	Lateral FX (-) (lb)	Axial FY (-) (lb)	Torsion MY (lb-ft)	Moment MZ (lb-ft)
0.00		0.00	0.00	0.00	0.00
5.00		163.81	1142.46	0.00	0.00
10.00		160.42	1119.02	0.00	0.00
15.00		157.03	1095.58	0.00	0.00
20.00		153.64	1072.13	0.00	0.00
25.00		150.25	1048.69	0.00	0.00
30.00		146.86	1025.25	0.00	0.00
35.00		145.90	1001.81	0.00	0.00
40.00		147.99	978.36	0.00	0.00
45.00		149.35	954.92	0.00	0.00
45.29		8.66	55.29	0.00	0.00
50.00		143.51	1750.05	0.00	0.00
51.71		51.80	625.53	0.00	0.00
55.00		100.14	604.84	0.00	0.00
60.00		152.68	899.78	0.00	0.00
65.00		152.09	876.34	0.00	0.00
70.00		151.15	852.89	0.00	0.00
75.00		149.87	829.45	0.00	0.00
80.00		148.29	806.01	0.00	0.00
85.00		146.44	782.56	0.00	0.00
90.00		144.33	759.12	0.00	0.00
91.42		40.25	210.82	0.00	0.00
95.00		103.07	960.01	0.00	0.00
96.58		45.00	417.16	0.00	0.00
100.00		96.49	413.40	0.00	0.00
105.00		139.22	588.54	0.00	0.00
110.00		136.30	569.00	0.00	0.00
115.00		133.19	549.47	0.00	0.00
120.00		129.92	529.93	0.00	0.00
125.00		126.48	510.39	0.00	0.00
130.00		122.89	490.86	0.00	0.00
135.00		119.15	471.32	0.00	0.00
139.08		94.34	370.42	0.00	0.00
140.00		21.05	129.17	0.00	0.00
142.92		66.23	404.01	0.00	0.00
145.00		46.43	111.69	0.00	0.00
150.00		108.80	259.75	0.00	0.00
155.00		104.55	248.03	0.00	0.00
160.00		100.18	236.31	0.00	0.00
165.00		95.69	224.59	0.00	0.00
167.00	(29) appurtenances	1630.05	2035.35	0.00	0.00
170.00		54.01	115.72	0.00	0.00
175.00		86.39	183.49	0.00	0.00
176.00		16.65	35.29	0.00	0.00
	Totals:	**6,340.52**	**28,344.81**	**0.00**	**0.00**

Copyright © 2016 by Tower Engineering Solutions, LLC. All rights reserved.

Resulting Forces and Deflections

Structure:	CT13611-A-SB	**Code:**	EIA/TIA-222-F	8/12/2016	
Site Name:	BSA	**Exposure:**	C		
Height:	176.00 (ft)	**Gh:**	1.69		
Base Elev:	0.000 (ft)	**Struct Class:**	II	Page: 20	

Tower Engineering Solutions

Load Case: 50 mph Wind with 0" Ice

Dead Load Factor 1.00

Wind Load Factor 1.00

Iterations: 25

Elev (ft)	Lateral FX (-) (kips)	Axial FY (-) (kips)	Lateral FZ (kips)	Moment MX (ft-kips)	Torsion MY (ft-kips)	Moment MZ (ft-kips)	Deflect X (in)	Deflect Z (in)	Deflect Resultant (in)	Rotation Sway (deg)	Rotation Twist (deg)
0.00	-6.348	-28.343	0.000	0.000	0.000	-674.947	0.000	0.000	0.000	0.000	0.000
5.00	-6.201	-27.197	0.000	0.000	0.000	-643.206	-0.019	0.000	0.019	-0.035	0.000
10.00	-6.056	-26.074	0.000	0.000	0.000	-612.202	-0.075	0.000	0.075	-0.071	0.000
15.00	-5.913	-24.975	0.000	0.000	0.000	-581.923	-0.169	0.000	0.169	-0.107	0.000
20.00	-5.772	-23.899	0.000	0.000	0.000	-552.358	-0.301	0.000	0.301	-0.144	0.000
25.00	-5.634	-22.847	0.000	0.000	0.000	-523.496	-0.472	0.000	0.472	-0.181	0.000
30.00	-5.498	-21.819	0.000	0.000	0.000	-495.325	-0.682	0.000	0.682	-0.219	0.000
35.00	-5.362	-20.814	0.000	0.000	0.000	-467.835	-0.932	0.000	0.932	-0.257	0.000
40.00	-5.223	-19.833	0.000	0.000	0.000	-441.024	-1.223	0.000	1.223	-0.296	0.000
45.00	-5.075	-18.877	0.000	0.000	0.000	-414.909	-1.554	0.000	1.554	-0.336	0.000
45.29	-5.073	-18.820	0.000	0.000	0.000	-413.420	-1.575	0.000	1.575	-0.338	0.000
50.00	-4.926	-17.069	0.000	0.000	0.000	-389.545	-1.927	0.000	1.927	-0.376	0.000
51.71	-4.876	-16.442	0.000	0.000	0.000	-381.121	-2.064	0.000	2.064	-0.390	0.000
55.00	-4.781	-15.835	0.000	0.000	0.000	-365.079	-2.342	0.000	2.342	-0.417	0.000
60.00	-4.631	-14.933	0.000	0.000	0.000	-341.175	-2.800	0.000	2.800	-0.455	0.000
65.00	-4.482	-14.055	0.000	0.000	0.000	-318.018	-3.298	0.000	3.298	-0.495	0.000
70.00	-4.332	-13.200	0.000	0.000	0.000	-295.610	-3.837	0.000	3.837	-0.534	0.000
75.00	-4.183	-12.370	0.000	0.000	0.000	-273.949	-4.418	0.000	4.418	-0.574	0.000
80.00	-4.035	-11.562	0.000	0.000	0.000	-253.035	-5.042	0.000	5.042	-0.615	0.000
85.00	-3.887	-10.779	0.000	0.000	0.000	-232.862	-5.708	0.000	5.708	-0.656	0.000
90.00	-3.738	-10.020	0.000	0.000	0.000	-213.427	-6.416	0.000	6.416	-0.697	0.000
91.42	-3.699	-9.808	0.000	0.000	0.000	-208.131	-6.625	0.000	6.625	-0.709	0.000
95.00	-3.587	-8.848	0.000	0.000	0.000	-194.875	-7.168	0.000	7.168	-0.739	0.000
96.58	-3.540	-8.430	0.000	0.000	0.000	-189.195	-7.416	0.000	7.416	-0.752	0.000
100.00	-3.444	-8.016	0.000	0.000	0.000	-177.100	-7.965	0.000	7.965	-0.781	0.000
105.00	-3.302	-7.426	0.000	0.000	0.000	-159.883	-8.808	0.000	8.808	-0.828	0.000
110.00	-3.163	-6.857	0.000	0.000	0.000	-143.372	-9.700	0.000	9.700	-0.875	0.000
115.00	-3.026	-6.307	0.000	0.000	0.000	-127.557	-10.642	0.000	10.642	-0.921	0.000
120.00	-2.892	-5.777	0.000	0.000	0.000	-112.426	-11.632	0.000	11.632	-0.967	0.000
125.00	-2.761	-5.267	0.000	0.000	0.000	-97.964	-12.669	0.000	12.669	-1.013	0.000
130.00	-2.633	-4.776	0.000	0.000	0.000	-84.158	-13.754	0.000	13.754	-1.057	0.000
135.00	-2.508	-4.306	0.000	0.000	0.000	-70.993	-14.883	0.000	14.883	-1.099	0.000
139.08	-2.408	-3.936	0.000	0.000	0.000	-60.752	-15.838	0.000	15.838	-1.133	0.000
140.00	-2.385	-3.807	0.000	0.000	0.000	-58.545	-16.057	0.000	16.057	-1.140	0.000
142.92	-2.312	-3.404	0.000	0.000	0.000	-51.588	-16.760	0.000	16.760	-1.163	0.000
145.00	-2.266	-3.292	0.000	0.000	0.000	-46.771	-17.272	0.000	17.272	-1.179	0.000
150.00	-2.154	-3.032	0.000	0.000	0.000	-35.443	-18.536	0.000	18.536	-1.232	0.000
155.00	-2.046	-2.785	0.000	0.000	0.000	-24.673	-19.852	0.000	19.852	-1.277	0.000
160.00	-1.942	-2.550	0.000	0.000	0.000	-14.443	-21.209	0.000	21.209	-1.311	0.000
165.00	-1.841	-2.328	0.000	0.000	0.000	-4.734	-22.594	0.000	22.594	-1.330	0.000
167.00	-0.165	-0.331	0.000	0.000	0.000	-1.051	-23.152	0.000	23.152	-1.333	0.000
170.00	-0.108	-0.216	0.000	0.000	0.000	-0.557	-23.990	0.000	23.990	-1.334	0.000
175.00	-0.017	-0.035	0.000	0.000	0.000	-0.017	-25.388	0.000	25.388	-1.335	0.000
176.00	-0.017	0.000	0.000	0.000	0.000	0.000	0.000	0.000	25.667	-1.335	0.000

Copyright © 2016 by Tower Engineering Solutions, LLC. All rights reserved.

Resulting Stresses

Structure:	CT13611-A-SBA	**Code:**	EIA/TIA-222-F	8/12/2016	
Site Name:	BSA	**Exposure:**	C		
Height:	176.00 (ft)	**Gh:**	1.69		
Base Elev:	0.000 (ft)	**Struct Class:**	II	Page: 21	

Load Case: 50 mph Wind with 0" Ice

Iterations: 25

Dead Load Factor 1.00

Wind Load Factor 1.00

Applied Stresses

Elev (ft)	fa Axial (Y) (ksi)	fvx Shear (X) (ksi)	fvz Shear (Z) (ksi)	fvt Torsion (ksi)	fbx Bending (X) (ksi)	fbz Bending (Z) (ksi)	fb Combined (ksi)	Fb Allow Stress (ksi)	f/Fb Stress Ratio
0.00	0.42	0.19	0.00	0.00	0.00	8.74	9.17	51.7	0.177
5.00	0.42	0.19	0.00	0.00	0.00	8.68	9.11	52.0	0.175
10.00	0.41	0.19	0.00	0.00	0.00	8.63	9.04	52.0	0.174
15.00	0.40	0.19	0.00	0.00	0.00	8.57	8.97	52.0	0.173
20.00	0.39	0.19	0.00	0.00	0.00	8.50	8.90	52.0	0.171
25.00	0.38	0.19	0.00	0.00	0.00	8.43	8.82	52.0	0.170
30.00	0.37	0.19	0.00	0.00	0.00	8.36	8.74	52.0	0.168
35.00	0.36	0.19	0.00	0.00	0.00	8.28	8.65	52.0	0.166
40.00	0.36	0.19	0.00	0.00	0.00	8.20	8.56	52.0	0.165
45.00	0.35	0.19	0.00	0.00	0.00	8.11	8.47	52.0	0.163
45.29	0.35	0.19	0.00	0.00	0.00	8.11	8.46	52.0	0.163
50.00	0.32	0.19	0.00	0.00	0.00	8.02	8.35	52.0	0.161
51.71	0.31	0.18	0.00	0.00	0.00	7.72	8.04	52.0	0.155
55.00	0.30	0.18	0.00	0.00	0.00	7.66	7.96	52.0	0.153
60.00	0.29	0.18	0.00	0.00	0.00	7.55	7.85	52.0	0.151
65.00	0.28	0.18	0.00	0.00	0.00	7.43	7.72	52.0	0.149
70.00	0.27	0.18	0.00	0.00	0.00	7.31	7.59	52.0	0.146
75.00	0.26	0.18	0.00	0.00	0.00	7.18	7.45	52.0	0.143
80.00	0.25	0.18	0.00	0.00	0.00	7.04	7.30	52.0	0.140
85.00	0.24	0.18	0.00	0.00	0.00	6.89	7.14	52.0	0.137
90.00	0.23	0.18	0.00	0.00	0.00	6.73	6.97	52.0	0.134
91.42	0.23	0.18	0.00	0.00	0.00	6.68	6.92	52.0	0.133
95.00	0.21	0.17	0.00	0.00	0.00	6.56	6.78	52.0	0.130
96.58	0.24	0.20	0.00	0.00	0.00	7.49	7.74	52.0	0.149
100.00	0.23	0.20	0.00	0.00	0.00	7.34	7.58	52.0	0.146
105.00	0.23	0.20	0.00	0.00	0.00	7.10	7.33	52.0	0.141
110.00	0.22	0.20	0.00	0.00	0.00	6.83	7.06	52.0	0.136
115.00	0.21	0.20	0.00	0.00	0.00	6.55	6.76	52.0	0.130
120.00	0.20	0.20	0.00	0.00	0.00	6.23	6.43	52.0	0.124
125.00	0.19	0.20	0.00	0.00	0.00	5.88	6.07	52.0	0.117
130.00	0.18	0.19	0.00	0.00	0.00	5.49	5.67	52.0	0.109
135.00	0.17	0.19	0.00	0.00	0.00	5.05	5.22	52.0	0.100
139.08	0.16	0.19	0.00	0.00	0.00	4.65	4.82	52.0	0.093
140.00	0.15	0.19	0.00	0.00	0.00	4.56	4.72	52.0	0.091
142.92	0.23	0.31	0.00	0.00	0.00	6.75	7.00	52.0	0.135
145.00	0.23	0.31	0.00	0.00	0.00	6.37	6.62	52.0	0.127
150.00	0.22	0.31	0.00	0.00	0.00	5.32	5.56	52.0	0.107
155.00	0.21	0.31	0.00	0.00	0.00	4.10	4.35	52.0	0.084
160.00	0.20	0.31	0.00	0.00	0.00	2.67	2.93	52.0	0.056
165.00	0.20	0.31	0.00	0.00	0.00	0.98	1.30	52.0	0.025
167.00	0.03	0.03	0.00	0.00	0.00	0.23	0.26	52.0	0.005
170.00	0.02	0.02	0.00	0.00	0.00	0.13	0.15	52.0	0.003
175.00	0.00	0.00	0.00	0.00	0.00	0.00	0.01	52.0	0.000
176.00	0.00	0.00	0.00	0.00	0.00	0.00	0.01	52.0	0.000

Copyright © 2016 by Tower Engineering Solutions, LLC. All rights reserved.

Final Analysis Summary

Structure:	CT13611-A-SBA	**Code:**	EIA/TIA-222-F	8/12/2016
Site Name:	BSA	**Exposure:**	C	
Height:	176.00 (ft)	**Gh:**	1.69	
Base Elev:	0.000 (ft)	**Struct Class:**	II	Page: 22

Tower Engineering Solutions

Reactions

Load Case	Shear FX (kips)	Shear FZ (kips)	Axial FY (kips)	Moment MX (ft-kips)	Moment MY (ft-kips)	Moment MZ (ft-kips)
85 mph Wind with 0" Ice	19.8	0.00	36.87	0.00	0.00	2161.83
73.61 mph Wind with 0.5" Ice	14.6	0.00	32.75	0.00	0.00	1586.77
50 mph Wind with 0" Ice	6.3	0.00	28.34	0.00	0.00	674.95

Max Stresses

Load Case	fa Axial (Y) (ksi)	fvx Shear (X) (ksi)	fvz Shear (Z) (ksi)	fvt Torsion (ksi)	fbx Bending (X) (ksi)	fbz Bending (Z) (ksi)	Combined Stress (ksi)	Allowable Stress (ksi)	Elev (ft)	Stress Ratio
85 mph Wind with 0" Ice	0.55	0.60	0.00	0.00	0.00	27.99	28.56	51.7	0.00	0.553
73.61 mph Wind with 0.5" Ice	0.49	0.44	0.00	0.00	0.00	20.55	21.05	51.7	0.00	0.407
50 mph Wind with 0" Ice	0.42	0.19	0.00	0.00	0.00	8.74	9.17	51.7	0.00	0.177

Copyright © 2016 by Tower Engineering Solutions, LLC. All rights reserved.

Base Plate Summary

Structure:	CT13611-A-SB	**Code:**	EIA/TIA-222-F	8/12/2016	
Site Name:	BSA	**Exposure:**	C		
Height:	176.00 (ft)	**Gh:**	1.69		
Base Elev:	0.000 (ft)	**Struct Class:**	II	Page: 23	

Tower Engineering Solutions

Reactions		Base Plate		Anchor Bolts	
Original Design		**Yield (ksi):**	60.00	**Bolt Circle:**	66.00
Moment (kip-ft):	3414.00	**Width (in):**	72.00	**Number Bolts:**	18.00
Axial (kip):	36.00	**Style:**	Round	**Bolt Type:**	2.25" 18J
Shear (kip):	27.00	**Polygon Sides:**	0.00	**Bolt Diameter (in):**	2.25
		Clip Length (in):	0.00	**Yield (ksi):**	75.00
Analysis				**Ultimate (ksi):**	100.00
Moment (kip-ft):	2161.83	**Effective Len (in):**	15.05	**Arrangement:**	Radial
Axial (kip):	36.87	**Moment (kip-in):**	424.63	**Cluster Dist (in):**	0.00
Shear (kip):	19.82	**Allow Stress (ksi):**	60.00	**Start Angle (deg):**	0.00
		Applied Stress (ksi):	42.32	Compression	
Moment Design %:	63.32	**Stress Ratio:**	0.71	**Force (kip):**	89.39
				Allowable (kip):	195.00
				Ratio:	0.46
				Tension	
				Force (kip):	85.30
				Allowable (kip):	195.00
				Ratio:	0.44

Copyright © 2016 by Tower Engineering Solutions, LLC. All rights reserved.

Monopole Mat Foundation Design

			Date
			8/12/2016
Customer Name:	AT&T	**EIA/TIA Standard:**	EIA-222-F
Site Name:		**Structure Height (Ft.):**	176
Site Number:	CT13611-A-SBA	**Engineer Name:**	T. Alajaj
Engr. Number:	25258	**Engineer Login ID:**	

Foundation Info Obtained from: Drawings/Calculations

Structure Type: Monopole

Analysis or Design? Analysis

Base Reactions (Unfactored)

Axial Load (Kips):	36.9	Shear Force (Kips):	19.8
Uplift Force (Kips):	0.0	Moment (Kips-ft):	2161.8
Allowable overstress %:	5.0%		

Foundation Geometries:

		Mods required -Yes/No ?:	No
Diameter of Pier (ft.):	8.0	Depth of Base BG (ft.):	8.0
Pier Height A. G. (ft.):	0.50	Thickness of Pad (ft):	3.00
Length of Pad (ft.):	24.5	Width of Pad (ft.):	24.5
Final Length of pad (ft)	24.5	Final width of pad (ft):	24.5
Control Value for Cell D18:	0	Control Value for Cell F18:	0

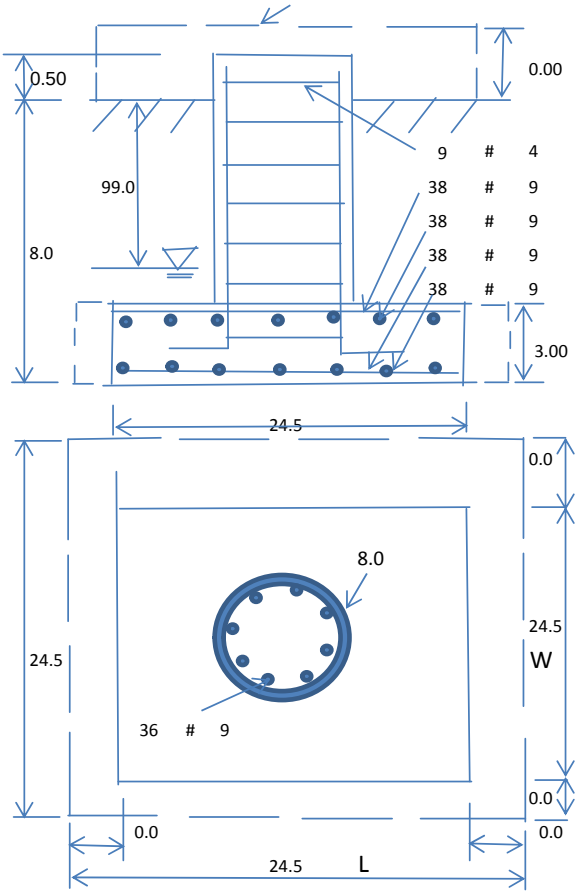

Material Properties and Reabr Info:

Concrete Strength (psi):	3000	Steel Elastic Modulus:	29000	ksi
Vertical bar yield (ksi)	60	Tie steel yield (ksi):	60	
Vertical Rebar Size #:	9	Tie / Stirrup Size #:	4	
Qty. of Vertical Rebars:	36	Tie Spacing (in):	12.0	
Pad Rebar Yield (Ksi):	60	Pad Steel Rebar Size (#):	9	
Concrete Cover (in.):	4	Unit Weight of Concrete:	150.0	pcf

Rebar at the bottom of the concrete pad:

Qty. of Rebar in Pad (L):	38	Qty. of Rebar in Pad (W):	38

Rebar at the top of the concrete pad:

Qty. of Rebar in Pad (L):	38	Qty. of Rebar in Pad (W):	38
Apply 1.35 factor for e/w Per G:	1.35		

Soil Design Parameters:

Soil Unit Weight (pcf):	110.0	Soil Buoyant Weight:	50.0	Pcf		
Water Table B.G.S. (ft):	99.0	Unit Weight of Water:	62.4	pcf	Angle from Top of Pad:	30
Allowable Net Soil Bearing (psf):	10000	Allowable Skin Friction:	175	Psf	Angle from Bottm of Pad:	25
Consider Friction for O.T.M. (Y/N):	No	Consider Friction for bearing (Y/N):	No		Angle from Bottm of Pad:	25
Consider soil hor. resist. for OTM.:	No	Reduction factor on the maximum soil bearing pressure:			1.00	

Foundation Analysis and Design:

Total Dry Soil Volume (cu. Ft.):	2749.92	Total Dry Soil Weight (Kips):	302.49
Total Buoyant Soil Volume (cu. Ft.):	0.00	Total Buoyant Soil Weight (Kips):	0.00
Total Effective Soil Weight (Kips):	302.49	Weight from the Concrete Block at Top (K):	0.00
Total Dry Concrete Volume (cu. Ft.):	2077.21	Total Dry Concrete Weight (Kips):	311.58
Total Buoyant Concrete Volume (cu. Ft.):	0.00	Total Buoyant Concrete Weight (Kips):	0.00
Total Effective Concrete Weight (Kips):	311.58	Total Vertical Load on Base (Kips):	650.97

Check Soil Capacities:

					Load/ Capacity Ratio	
Calculated Maxium Net Soil Pressure under the base (psf):	1517	<	Allowable Soil Bearing (psf):	10000	0.15	OK!
Allowable Foundation Overturning Resistance (SF=1.5, kips-ft.):	5316.3	>	Applied Momont (kips-ft):	2330	0.44	OK!
Factor of Safety Against Overturning (O. R. Moment/Design Moment):	3.42	OK!				

Check the capacities of Reinforceing Concrete:

Strength reduction factor (Flexure and axial tension):	0.90	Strength reduction factor (Shear):	0.75
Strength reduction factor (Axial compresion):	0.65	Wind Load Factor on Concrete Design:	1.30

(1) Concrete Pier:

					Load/ Capacity Ratio	
Vertical Steel Rebar Area (sq. in./each):	1.00		Tie / Stirrup Area (sq. in./each):	0.20		
Calculated Moment Capacity (Mn,Kips-Ft):	6972.8	>	Design Factored Moment (Mu, Kips-F	2270.7	0.33	OK!
Calculated Shear Capacity (Kips):	748.3	>	Design Factored Shear (Kips):	25.7	0.03	OK!
Calculated Tension Capacity (Tn, Kips):	1944.0	>	Design Factored Tension (Tu Kips):	0.0	0.00	OK!
Calculated Compression Capacity (Pn, Kips):	9550.2	>	Design Factored Axial Load (Pu Kips):	48.0	0.01	OK!
Moment & Axial Strength Combination:	0.33	OK!	Check Tie Spacing (Design/Required):		1	OK!
Pier Reinforcement Ratio:	0.005	Reinforcement Ratio is satisfied per ACI				

(2).Concrete Pad:

One-Way Design Shear Capacity (L-Direction, Kips):	759.4	>	One-Way Factored Shear (L-D. Kips):	164.1	0.22	OK!
One-Way Design Shear Capacity (W-Direction, Kips):	759.4	>	One-Way Factored Shear (W-D., Kips)	164.1	0.22	OK!
One-Way Design Shear Capacity (Corner-Corner. Kips):	825.9	>	One-Way Factored Shear (C-C, Kips):	144.7	0.18	OK!
Lower Steel Pad Reinforcement Ratio (L-Direct.):	0.0041	OK!	Lower Steel Pad Reinf. Ratio (W-Direc	0.0041		
Lower Steel Pad Moment Capacity (L-Direction. Kips-ft):	5115.8	>	Moment at Bottom (L-Direct. K-Ft):	355.3	0.07	OK!
Lower Steel Pad Moment Capacity (W-Direction. Kips-ft):	5115.8	>	Moment at Bottom (W-Direct. K-Ft):	355.3	0.07	OK!
Lower Steel Pad Moment Capacity (Corner-Corner,K-ft):	7124.4	>	Moment at Bottom (C-C Dir. K-Ft):	502.5	0.07	OK!
Upper Steel Pad Reinforcement Ratio (L-Direct.):	0.0041	OK!	Upper Steel Reinf. Ratio (W-Direct.):	0.0041		
Upper Steel Pad Moment Capacity (L-Direction. Kips-ft):	5115.8	>	Moment at the top (L-Dir Kips-Ft):	164.4	0.03	OK!
Upper Steel Pad Moment Capacity (W-Direction. Kips-ft):	5115.8	>	Moment at the top (W-Dir Kips-Ft):	164.4	0.03	OK!
Upper Steel Pad Moment Capacity (Corner-Corner. K-ft):	7124.4	>	Moment at the top (C-C Direc. K-Ft):	449.3	0.06	OK!