CENTEK engineering

Centered on Solutions℠

# Structural Analysis Report

164-ft Existing EEI Monopole

Proposed AT&T Mobility
Antenna Upgrade

AT&T Site Ref: CT2102

5 Perryridge Road
Greenwich, CT

CENTEK Project No. 17004.68

Date: February 22, 2018

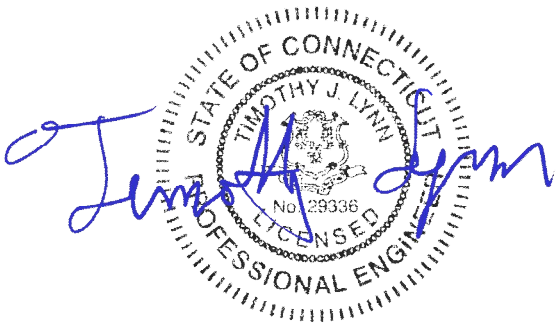


**Prepared for:**

AT&T Mobility
500 Enterprise Drive, Suite 3A
Rocky Hill, CT 06067

63-2 North Branford Road, Branford, CT 06405 203.488.0580 Fax 203.488.8587 www.CentekEng.com

# Table of Contents

**SECTION 1 - REPORT**

- INTRODUCTION
- ANTENNA AND APPURTENANCE SUMMARY
- PRIMARY ASSUMPTIONS USED IN THE ANALYSIS
- ANALYSIS
- TOWER LOADING
- TOWER CAPACITY
- FOUNDATION AND ANCHORS
- CONCLUSION

**SECTION 2 – CONDITIONS & SOFTWARE**

- STANDARD ENGINEERING CONDITIONS
- GENERAL DESCRIPTION OF STRUCTURAL ANALYSIS PROGRAM

**SECTION 3 – CALCULATIONS**

- tnxTower INPUT/OUTPUT SUMMARY
- tnxTower DETAILED OUTPUT
- FLANGE BOLT AND FLANGE PLATE ANALYSIS
- ANCHOR BOLT AND BASE PLATE ANALYSIS
- MathCAD CAISSON FOUNDATION ANALYSIS
- L-PILE CAISSON ANALYSIS
- L-PILE LATERAL DEFLECTION vs. DEPTH
- L-PILE BENDING MOMENT vs. DEPTH
- L-PILE SHEAR FORCE vs. DEPTH

**SECTION 4 – REFERENCE MATERIAL**

- RF DATA SHEET
- EQUIPMENT CUT SHEETS

## Introduction

The purpose of this report is to summarize the results of the non-linear, P-Δ structural analysis of the antenna upgrade proposed by AT&T on the existing monopole (tower) owned and operated by Greenwich Hospital located in Greenwich, Connecticut.

The host tower is a 164-ft tall, five-section, eighteen sided, tapered monopole, originally designed and manufactured by Engineered Endeavors Incorporated (EEI); project no. 11030 dated August 21, 2002. The tower geometry, structure member sizes and foundation system information were obtained from the original manufacturers design documents.

Antenna and appurtenance information were obtained a previous structural analysis report prepared by Centek; job no; 17099.00, dated September 15, 2017 and information provided by AT&T.

The tower is made up of five (5) tapered vertical sections consisting of A572-65 pole sections. The bottom four (4) vertical tower sections are slip joint connected while the top section is flange connected. The diameter of the pole (flat-flat) is 47.0-in at the top and 76.0-in at the base.

## Antenna and Appurtenance Summary

The existing, proposed and future loads considered in this analysis consist of the following:

- TOWN (EXISTING TO REMAIN):
  Antennas: Four (4) 12-ft Omni-directional whip antennas, one (1) Sinclair SC229-SFXLDF Omni-directional whip antenna, two (2) Sinclair SC479-HF1LDF Omni-directional whip antennas, one (1) Bird 432E-83I-01-T tower top amplifier and one (1) camera mounted on a PiROD 13-ft low profile platform with an elevation of 164-ft above grade level.
  Coax Cables: Two (2) 1/2"∅, two (2) 7/8"∅, six (6) 1-1/4" ∅ and one (1) 1-5/8" ∅ coax cables running on the inside of the existing tower.
- TOWN (EXISTING):
  Antennas: Two (2) 4-ft Dishes and one (1) 2-ft Dish mounted on three 4'x4" pipes with a RAD center elevation of 160-ft above grade level.
  Coax Cables: Three (3) 1-1/4" ∅ coax cables running on the inside of the existing tower.
- CLEARWIRE (EXISTING):
  Antennas: Three (3) Argus LLPX310R panel antennas, three (3) Samsung FDD-R6-RRH, two (2) Dragonwave Horizon ODU's and two (2) Dragonwave A-ANT-23-G-2-C dishes mounted on the Sprint 13-ft low profile platform with a RAD center elevation of 154-ft above the existing tower base plate.
  Coax Cables: Two (2) 2" ∅ conduits and two (2) 5/8" ∅ coax cables running on the inside of the existing tower.

- SPRINT (EXISTING):
  Antennas: Two (2) RFS APXVSPP18-C-A20 panel antennas, one (1) Powerwave P40-16-XLPP-RR-A panel antennas, three (3) RFS APXVTM14 panel antennas and one (1) GPS antenna mounted to a low profile platform with a RAD center elevation of 154-ft above the existing tower base plate. Three (3) ALU 1900 MHz RRH's, three (3) ALU 800 MHz RRH's and three (3) ALU TD-RRH-820 remote radio heads mounted on a universal tr-bracket below the existing low profile platform.
  Coax Cables: Six (6) 1-5/8" ∅ Hybriflex cables and one (1) 1/2" ∅ coax cable running on the inside of the existing tower.
- T-MOBILE (EXISTING):
  Antennas: Three (3) RFS APX16PV-16PVL panel antennas, three (3) Andrew LNX-6515DS panel antennas, nine (9) TMA's and three (3) Bias Tee's mounted on a PiROD 13-ft low profile platform with a RAD center elevation of 144-ft above grade level.
  Coax Cables: Twelve (12) 1-5/8" ∅ coax cables inside the monopole and six (6) 1-5/8" ∅ cables on the exterior of the existing tower.
- EVERSOURCE ENERGY (EXISTING):
  Antennas: Two (2) Decibel DB586-Y omni-directional whips (one upright and one inverted), one (1) Telewave ANT150F2 omni-directional whip, one (1) Comprod 531-70HD dipole and one (1) tower top amplifier mounted on a PiROD 13-ft low profile platform with an elevation of 114-ft above grade level.
  Coax Cables: Two (2) 1-5/8" ∅, two (2) 7/8" ∅ and one (1) 1/2" ∅ coax cables running on the inside of the existing tower on the inside of the existing tower.
- UNKNOWN (EXISTING):
  Antennas: Three GPS antennas mounted on three (3) standoffs with a RAD center elevation of 50-ft above grade level.
  Coax Cables: Three (3) 7/8" ∅ coax cables running on the exterior of the existing tower.
- VERIZON (EXISTING):
  Antennas: Six (6) Decibel DB844H65E-XY panel antennas, three (3) RYMSA MG D3-800T0 panel antennas, six (6) Andrew SBNHH-1D65B panel antennas, three (3) Alcatel-Lucent RRH2x60-700 remote radio heads, three (3) Alcatel-Lucent RRH2x60-PCS remote radio heads, three (3) Alcatel-Lucent RRH4x45/2x90-AWS remote radio heads, six (6) RFS FD9R6004/2C-3L Diplexers and two (2) Raycap RC2DC-3315-PF-48 main distribution boxes mounted on a 13-ft low profile platform with a RAD center elevation of 124-ft above grade level.
  Coax Cables: Six (6) 1-5/8" ∅ coax cables and two (2) 1-5/8" ∅ fiber cables running inside the monopole.

- AT&T (EXISTING TO REMAIN):
  Antennas: Three (3) Powerwave 7770.00 panel antennas, three (3) Quintel QS66512 panel antennas, six (6) LGP21401 TMA's, six (6) CCI TPX-070821 triplexers and three (3) Ericsson RRUS-32-B2 remote radio heads mounted on a 16-ft low profile platform with a RAD center elevation of 134-ft above grade level. Three (3) Ericsson RRUS-11 remote radio heads, three (3) Ericsson RRUS-32 remote radio heads and two (2) Raycap DC6-48-60-18-8F surge arrestor mounted to one (1) universal ring mount with a RAD center elevation of 138-ft above grade level.
  Cables: Twelve (12) 1-5/8" ∅ coax cables, two (2) fiber cable and four (4) dc control cables running on the inside of the existing tower.
- AT&T (EXISTING TO REMOVE):
  Antennas: Three (3) Powerwave P65-16-XLH-RR panel antennas mounted on a 16-ft low profile platform with a RAD center elevation of 134-ft above grade level.
- **AT&T (PROPOSED):**
  **Antennas: Three (3) Kathrein 80010965 panel antennas, three (3) CCI HPA-65R-BUU-H6 panel antennas, three (3) Ericsson RRUS-32-B66 remote radio heads, three (3) Ericsson B14 4478 remote radio heads and one (1) Raycap DC6-48-60-18-8F surge arrestor mounted on a 16-ft low profile platform with a RAD center elevation of 134-ft above grade level.**
  **Cables: Two (2) dc control cables running on the inside of the existing tower**

## *Primary Assumptions Used in the Analysis*

- The tower structure's theoretical capacity not including any assessment of the condition of the tower.
- The tower carries the horizontal and vertical loads due to the weight of antennas, ice load and wind.
- Tower is properly installed and maintained.
- Tower is in plumb condition.
- Tower loading for antennas and mounts as listed in this report.
- All bolts are appropriately tightened providing the necessary connection continuity.
- All welds are fabricated with ER-70S-6 electrodes.
- All members are assumed to be as specified in the original tower design documents or reinforcement drawings.
- All members are "hot dipped" galvanized in accordance with ASTM A123 and ASTM A153 Standards.
- All member protective coatings are in good condition.
- All tower members were properly designed, detailed, fabricated, installed and have been properly maintained since erection.
- Any deviation from the analyzed antenna loading will require a new analysis for verification of structural adequacy.
- All coax cables to be installed as indicated in this report.

## *Analysis*

The existing tower was analyzed using a comprehensive computer program entitled tnxTower. The program analyzes the tower, considering the worst case loading condition. The tower is considered as loaded by concentric forces along the tower, and the model assumes that the tower members are subjected to bending, axial, and shear forces.

The existing tower was analyzed for the controlling basic wind speed (3-second gust) with no ice and the applicable wind and ice combination to determine stresses in members as per guidelines of TIA-222-G-2005 entitled "Structural Standard for Antenna Support Structures and Antennas", the American Institute of Steel Construction (AISC) and the Manual of Steel Construction; Load and Resistance Factor Design (LRFD).

The controlling wind speed is determined by evaluating the local available wind speed data as provided in Appendix N of the CSBC[1] and the wind speed data available in the TIA-222-G-2005 Standard.

## *Tower Loading*

Tower loading was determined by the basic wind speed as applied to projected surface areas with modification factors per TIA-222-G-2005, gravity loads of the tower structure and its components, and the application of 0.75" radial ice on the tower structure and its components.

| | | |
|---|---|---|
| Basic Wind Speed: | Fairfield; v = 90-110 mph | *[Annex B of TIA-222-G-2005]* |
| | Greenwich; v = 93 mph | *[Appendix N of the 2016 CT Building Code]* |
| Load Cases: | Load Case 1; 93 mph wind speed w/ no ice plus gravity load – used in calculation of tower stresses and rotation. | *[Appendix N of the 2016 CT Building Code]* |
| | Load Case 2; 50 mph wind speed w/ 0.75" radial ice plus gravity load – used in calculation of tower stresses. | *[Annex B of TIA-222-G-2005]* |

[1] The 2012 International Building Code as amended by the 2016 Connecticut State Building Code (CSBC).

## Tower Capacity

Tower stresses were calculated utilizing the structural analysis software tnxTower. Allowable stresses were determined based on Table 4-8 of the TIA code.

- Calculated stresses were found to be within allowable limits. In Load Case 1, per tnxTower "Section Capacity Table", this tower was found to be at **44.6%** of its total capacity.

| Tower Section | Elevation | Stress Ratio (percentage of capacity) | Result |
|---|---|---|---|
| Pole Shaft (L5) | 1.50'-39.88' | 44.6% | **PASS** |

## Foundation and Anchors

The existing foundation consists of a 9.0 ∅ x 28.0-ft long reinforced concrete caisson. The sub-grade conditions used in the analysis of the existing foundation were obtained from the aforementioned EEI design report; project no. 11030 dated August 21, 2002. The base of the tower is connected to the foundation by means of (30) 2.25"∅, ASTM A615-75 anchor bolts embedded approximately 7-ft into the concrete foundation structure.

- The tower base reactions developed from the governing Load Case 1 were used in the verification of the foundation and its anchors:

| Location | Vector | Proposed Reactions |
|---|---|---|
| Base | Shear | 54 kips |
| | Compression | 101 kips |
| | Moment | 6049 kip-ft |

- The foundation was found to be within allowable limits.

| Foundation | Design Limit | Proposed Loading | Result |
|---|---|---|---|
| Reinforced Concrete Caisson | Moment Capacity | 55.6% | **PASS** |
| | Lateral Deflection | 0.22 in.(1) | **PASS** |

(1) Lateral deflection limited to 0.75 in under service load combination per TIA-222-G section 9.5.

- The flange bolts and plate were found to be within allowable limits.

| Tower Component | Design Limit | Stress Ratio (percentage of capacity) | Result |
|---|---|---|---|
| Flange Bolts | Tension | 48.1% | **PASS** |
| Flange Plate | Bending | 40.3% | **PASS** |

- The anchor bolts and base plate were found to be within allowable limits.

| Tower Component | Design Limit | Stress Ratio (percentage of capacity) | Result |
|---|---|---|---|
| Anchor Bolts | Combined Axial and Bending | 46.0% | **PASS** |
| Base Plate | Bending | 34.5% | **PASS** |

## *Conclusion*

This analysis shows that the subject tower **is adequate** to support the proposed modified antenna configuration.

The analysis is based, in part, on the information provided to this office by AT&T Mobilty. If the existing conditions are different than the information in this report, Centek Engineering, Inc. must be contacted for resolution of any potential issues.

Please feel free to call with any questions or comments.

Respectfully Submitted by:

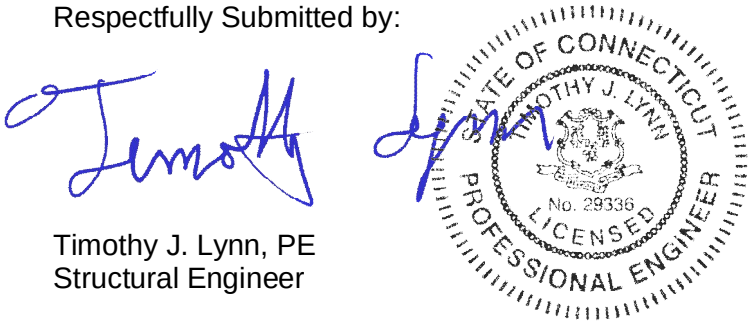


Timothy J. Lynn, PE
Structural Engineer

## Standard Conditions for Furnishing of Professional Engineering Services on Existing Structures

All engineering services are performed on the basis that the information used is current and correct. This information may consist of, but is not necessarily limited to:

- Information supplied by the client regarding the structure itself, its foundations, the soil conditions, the antenna and feed line loading on the structure and its components, or other relevant information.
- Information from the field and/or drawings in the possession of Centek Engineering, Inc. or generated by field inspections or measurements of the structure.
- It is the responsibility of the client to ensure that the information provided to Centek Engineering, Inc. and used in the performance of our engineering services is correct and complete. In the absence of information to the contrary, we assume that all structures were constructed in accordance with the drawings and specifications and are in an un-corroded condition and have not deteriorated. It is therefore assumed that its capacity has not significantly changed from the “as new” condition.
- All services will be performed to the codes specified by the client, and we do not imply to meet any other codes or requirements unless explicitly agreed in writing. If wind and ice loads or other relevant parameters are to be different from the minimum values recommended by the codes, the client shall specify the exact requirement. In the absence of information to the contrary, all work will be performed in accordance with the latest revision of ANSI/ASCE10 & ANSI/EIA-222
- All services performed, results obtained, and recommendations made are in accordance with generally accepted engineering principles and practices. Centek Engineering, Inc. is not responsible for the conclusions, opinions and recommendations made by others based on the information we supply.

## GENERAL DESCRIPTION OF STRUCTURAL ANALYSIS PROGRAM

tnxTower, is an integrated structural analysis and design software package for Designed specifically for the telecommunications industry, tnxTower, formerly ERITower, automates much of the tower analysis and design required by the TIA/EIA 222 Standard.

tnxTower Features:

- tnxTower can analyze and design 3- and 4-sided guyed towers, 3- and 4-sided self-supporting towers and either round or tapered ground mounted poles with or without guys.
- The program analyzes towers using the TIA-222-G (2005) standard or any of the previous TIA/EIA standards back to RS-222 (1959). Steel design is checked using the AISC ASD 9th Edition or the AISC LRFD specifications.
- Linear and non-linear (P-delta) analyses can be used in determining displacements and forces in the structure. Wind pressures and forces are automatically calculated.
- Extensive graphics plots include material take-off, shear-moment, leg compression, displacement, twist, feed line, guy anchor and stress plots.
- tnxTower contains unique features such as True Cable behavior, hog rod take-up, foundation stiffness and much more.

| Section | Length (ft) | Number of Sides | Thickness (in) | Socket Length (ft) | Top Dia (in) | Bot Dia (in) | Grade | Weight (K) |
|---|---|---|---|---|---|---|---|---|
| 1 | 32.50 | 18 | 0.3125 | | 47.0000 | 53.4200 | | 5.5 |
| 2 | 12.21 | 18 | 0.3750 | 6.00 | 53.4200 | 56.1500 | | 2.7 |
| 3 | 46.50 | 18 | 0.4375 | 8.42 | 54.0585 | 62.9700 | A572-65 | 12.8 |
| 4 | 47.33 | 18 | 0.5625 | 9.25 | 60.4813 | 69.6600 | | 18.5 |
| 5 | 47.63 | 18 | 0.5625 | | 66.7412 | 76.0000 | | 20.5 |
| | | | | | | | | 60.0 |

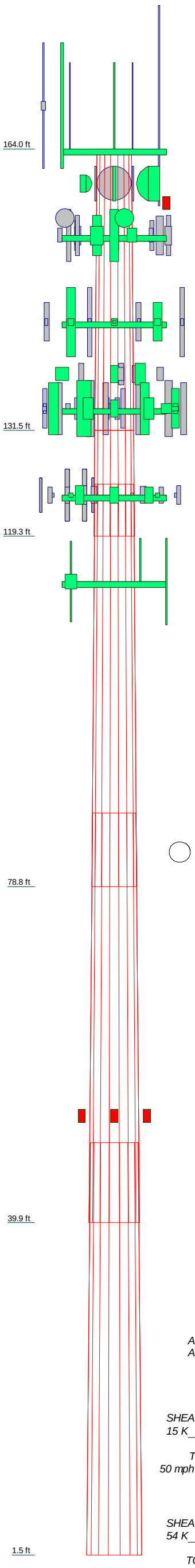


*ALL REACTIONS ARE FACTORED*

*AXIAL 166 K*

*SHEAR 15 K* *MOMENT 1706 kip-ft*

*TORQUE 4 kip-ft*
*50 mph WIND - 0.7500 in ICE*

*AXIAL 101 K*

*SHEAR 54 K* *MOMENT 6049 kip-ft*

*TORQUE 17 kip-ft*
*REACTIONS - 93 mph WIND*

## DESIGNED APPURTENANCE LOADING

| TYPE | ELEVATION | TYPE | ELEVATION |
|---|---|---|---|
| 12' x 3" Dia Omni (Town Existing) | 164 | QS66512-2 (AT⌶ Existing) | 134 |
| 12' x 3" Dia Omni (Town Existing) | 164 | 80010965 (AT⌶ Proposed) | 134 |
| 12' x 3" Dia Omni (Town Existing) | 164 | HPA-65R-BUU-H6 (AT⌶ Proposed) | 134 |
| 12' x 3" Dia Omni (Town Existing) | 164 | 7770.00 (AT⌶ Existing) | 134 |
| Camera (Town Existing) | 164 | QS66512-2 (AT⌶ Existing) | 134 |
| SC479-HF1LDF (Town Existing) | 164 | 80010965 (AT⌶ Proposed) | 134 |
| TX/RX 432E-83I-01T (Town Existing) | 164 | HPA-65R-BUU-H6 (AT⌶ Proposed) | 134 |
| SC229-SFXLDF (Town Existing) | 164 | (2) LGP21401 TMA (AT⌶ Existing) | 134 |
| SC479-HF1LDF (Town Existing) | 164 | (2) LGP21401 TMA (AT⌶ Existing) | 134 |
| Low Profile Platform (Town Existing) | 164 | (2) LGP21401 TMA (AT⌶ Existing) | 134 |
| 4'x4" Pipe Mount (Town Existing) | 160 | (2) TPX-070821 (AT⌶ Existing) | 134 |
| 4'x4" Pipe Mount (Town Existing) | 160 | (2) TPX-070821 (AT⌶ Existing) | 134 |
| 4'x4" Pipe Mount (Town Existing) | 160 | (2) TPX-070821 (AT⌶ Existing) | 134 |
| 4 FT DISH (Town Existing) | 160 | RRUS-32 (AT⌶ Existing) | 134 |
| 4 FT DISH (Town Existing) | 160 | RRUS-32 (AT⌶ Existing) | 134 |
| 2 FT DISH (Town Existing) | 160 | RRUS-32 (AT⌶ Existing) | 134 |
| Horizon ODU (Clearwire Existing) | 154 | RRUS-32 (AT⌶ Proposed) | 134 |
| Horizon ODU (Clearwire Existing) | 154 | RRUS-32 (AT⌶ Proposed) | 134 |
| APXVSPP18-C-A20 (Sprint Existing) | 154 | RRUS-32 (AT⌶ Proposed) | 134 |
| P40-16-XLPP-RR-A (Sprint Existing) | 154 | B14 4478 (AT⌶ Proposed) | 134 |
| APXVSPP18-C-A20 (Sprint Existing) | 154 | B14 4478 (AT⌶ Proposed) | 134 |
| FD-RRH 4x45 1900 (Sprint Existing) | 154 | B14 4478 (AT⌶ Proposed) | 134 |
| FD-RRH 4x45 1900 (Sprint Existing) | 154 | DC6-48-60-18-8F Surge Arrestor (AT⌶ Proposed) | 134 |
| FD-RRH 4x45 1900 (Sprint Existing) | 154 | EEI 16-ft Low Profile Platform (AT⌶ Existing) | 134 |
| FD-RRH 2x50 800 (Sprint Existing) | 154 | 7770.00 (AT⌶ Existing) | 134 |
| FD-RRH 2x50 800 (Sprint Existing) | 154 | QS66512-2 (AT⌶ Existing) | 134 |
| FD-RRH 2x50 800 (Sprint Existing) | 154 | 80010965 (AT⌶ Proposed) | 134 |
| GPS (Sprint Existing) | 154 | HPA-65R-BUU-H6 (AT⌶ Proposed) | 134 |
| APXVTM14 (Sprint Existing) | 154 | 7770.00 (AT⌶ Existing) | 134 |
| APXVTM14 (Sprint Existing) | 154 | DB844H65E-XY (Verizon Existing) | 124 |
| APXVTM14 (Sprint Existing) | 154 | MG D3-800TX (Verizon Existing) | 124 |
| TD-RRH8x20-25 (Sprint Existing) | 154 | SBNHH-1D65B (Verizon Existing) | 124 |
| TD-RRH8x20-25 (Sprint Existing) | 154 | SBNHH-1D65B (Verizon Existing) | 124 |
| TD-RRH8x20-25 (Sprint Existing) | 154 | DB844H65E-XY (Verizon Existing) | 124 |
| Low Profile Platform (Sprint Existing) | 154 | DB844H65E-XY (Verizon Existing) | 124 |
| LLPX310R (Clearwire Existing) | 154 | MG D3-800TX (Verizon Existing) | 124 |
| LLPX310R (Clearwire Existing) | 154 | SBNHH-1D65B (Verizon Existing) | 124 |
| LLPX310R (Clearwire Existing) | 154 | SBNHH-1D65B (Verizon Existing) | 124 |
| A-Ant-23G-2-C (Clearwire Existing) | 154 | DB844H65E-XY (Verizon Existing) | 124 |
| A-Ant-23G-2-C (Clearwire Existing) | 154 | (2) FD9R6004/2C-3L Diplexer (Verizon Existing) | 124 |
| Remote Radio Head FD R6 RRH (Clearwire Existing) | 151.5 | (2) FD9R6004/2C-3L Diplexer (Verizon Existing) | 124 |
| | | (2) FD9R6004/2C-3L Diplexer (Verizon Existing) | 124 |
| Remote Radio Head FD R6 RRH (Clearwire Existing) | 151.5 | RRH4x45/2x90-AWS (Verizon Existing) | 124 |
| | | RRH4x45/2x90-AWS (Verizon Existing) | 124 |
| Valmont Uni-Tri Bracket (Sprint Existing) | 151.5 | RRH4x45/2x90-AWS (Verizon Existing) | 124 |
| Remote Radio Head FD R6 RRH (Clearwire Existing) | 151.5 | RRH4x30-B13 (Verizon Existing) | 124 |
| | | RRH4x30-B13 (Verizon Existing) | 124 |
| LNX-6515DS (T-Mobile Existing) | 144 | RRH4x30-B13 (Verizon Existing) | 124 |
| (3) TMA 10"x8"x3" (T-Mobile Existing) | 144 | RRH2x60-PCS (Verizon Existing) | 124 |
| (3) TMA 10"x8"x3" (T-Mobile Existing) | 144 | RRH2x60-PCS (Verizon Existing) | 124 |
| (3) TMA 10"x8"x3" (T-Mobile Existing) | 144 | RRH2x60-PCS (Verizon Existing) | 124 |
| Smart Bias T (T-Mobile Existing) | 144 | RC2DC-3315-PF-48 (Verizon Existing) | 124 |
| Smart Bias T (T-Mobile Existing) | 144 | RC2DC-3315-PF-48 (Verizon Existing) | 124 |
| Smart Bias T (T-Mobile Existing) | 144 | Low Profile Platform (Verizon Existing) | 124 |
| Low Profile Platform (T-Mobile Existing) | 144 | DB844H65E-XY (Verizon Existing) | 124 |
| LNX-6515DS (T-Mobile Existing) | 144 | MG D3-800TX (Verizon Existing) | 124 |
| APX16PV-16PVL-E (T-Mobile Existing) | 144 | SBNHH-1D65B (Verizon Existing) | 124 |
| LNX-6515DS (T-Mobile Existing) | 144 | SBNHH-1D65B (Verizon Existing) | 124 |
| APX16PV-16PVL-E (T-Mobile Existing) | 144 | DB844H65E-XY (Verizon Existing) | 124 |
| APX16PV-16PVL-E (T-Mobile Existing) | 144 | Low Profile Platform | 114 |
| RRUS-32 (AT⌶ Existing) | 138 | 531-70HD (Eversource Existing) | 114 |
| RRUS-32 (AT⌶ Existing) | 138 | DB586-Y (Eversource Existing) | 114 |
| RRUS-32 (AT⌶ Existing) | 138 | DB586-Y (Eversource Existing) | 114 |
| Valmont Uni-Tri Bracket (AT⌶ Existing) | 138 | ANT150F2 (Eversource Existing) | 114 |
| DC6-48-60-18-8F Surge Arrestor (AT⌶ Existing) | 138 | Tower Top Amplifier (Eversource Existing) | 114 |
| DC6-48-60-18-8F Surge Arrestor (AT⌶ Existing) | 138 | GPS | 51.5 |
| RRUS-11 (AT⌶ Existing) | 138 | GPS | 51.5 |
| RRUS-11 (AT⌶ Existing) | 138 | GPS | 51.5 |
| RRUS-11 (AT⌶ Existing) | 138 | | |

## MATERIAL STRENGTH

| GRADE | Fy | Fu | GRADE | Fy | Fu |
|---|---|---|---|---|---|
| A572-65 | 65 ksi | 80 ksi | | | |

## TOWER DESIGN NOTES

1. Tower designed for Exposure C to the TIA-222-G Standard.
2. Tower designed for a 93 mph basic wind in accordance with the TIA-222-G Standard.
3. Tower is also designed for a 50 mph basic wind with 0.75 in ice. Ice is considered to increase in thickness with height.
4. Deflections are based upon a 60 mph wind.
5. Tower Structure Class III.
6. Topographic Category 1 with Crest Height of 0.00 ft
7. Tower members are "hot dipped" galvanized in accordance with ASTM A123 and ASTM A153 Standards.
8. Welds are fabricated with ER-70S-6 electrodes.
9. TOWER RATING: 44.6%


**Centek Engineering Inc.**
63-2 North Branford Rd.
Branford, CT 06405
Phone: (203) 488-0580
FAX: (203) 488-8587


| | | | |
|---|---|---|---|
| Job: **17004.68 - CT2102** | | | |
| Project: **164' EEI Monopole - 5 Perryridge Rd., Greenwich, CT** | | | |
| Client: AT&T | Drawn by: TJL | App'd: | |
| Code: TIA-222-G | Date: 02/22/18 | Scale: NTS | |
| Path: | | Dwg No. E-1 | |

# Tower Input Data

There is a pole section.
This tower is designed using the TIA-222-G standard.
The following design criteria apply:

Basic wind speed of 93 mph.
Structure Class III.
Exposure Category C.
Topographic Category 1.
Crest Height 0.00 ft.
Nominal ice thickness of 0.7500 in.
Ice thickness is considered to increase with height.
Ice density of 56 pcf.
A wind speed of 50 mph is used in combination with ice.
Temperature drop of 50 °F.
Deflections calculated using a wind speed of 60 mph.
Tower members are "hot dipped" galvanized in accordance with ASTM A123 and ASTM A153 Standards..
Welds are fabricated with ER-70S-6 electrodes..
A non-linear (P-delta) analysis was used.
Pressures are calculated at each section.
Stress ratio used in pole design is 1.
Local bending stresses due to climbing loads, feed line supports, and appurtenance mounts are not considered.

# Options

Consider Moments - Legs
Consider Moments - Horizontals
Consider Moments - Diagonals
Use Moment Magnification
√ Use Code Stress Ratios
√ Use Code Safety Factors - Guys
Escalate Ice
Always Use Max Kz
Use Special Wind Profile
Include Bolts In Member Capacity
Leg Bolts Are At Top Of Section
Secondary Horizontal Braces Leg
Use Diamond Inner Bracing (4 Sided)
SR Members Have Cut Ends
SR Members Are Concentric

Distribute Leg Loads As Uniform
Assume Legs Pinned
√ Assume Rigid Index Plate
Use Clear Spans For Wind Area
Use Clear Spans For KL/r
Retension Guys To Initial Tension
Bypass Mast Stability Checks
Use Azimuth Dish Coefficients
√ Project Wind Area of Appurt.
Autocalc Torque Arm Areas
Add IBC .6D+W Combination
√ Sort Capacity Reports By Component
Triangulate Diamond Inner Bracing
Treat Feed Line Bundles As Cylinder

Use ASCE 10 X-Brace Ly Rules
Calculate Redundant Bracing Forces
Ignore Redundant Members in FEA
SR Leg Bolts Resist Compression
All Leg Panels Have Same Allowable
Offset Girt At Foundation
√ Consider Feed Line Torque
Include Angle Block Shear Check
Use TIA-222-G Bracing Resist. Exemption
Use TIA-222-G Tension Splice Exemption

Poles

Include Shear-Torsion Interaction
Always Use Sub-Critical Flow
Use Top Mounted Sockets

# Tapered Pole Section Geometry

| *Section* | *Elevation* *ft* | *Section Length* *ft* | *Splice Length* *ft* | *Number of Sides* | *Top Diameter* *in* | *Bottom Diameter* *in* | *Wall Thickness* *in* | *Bend Radius* *in* | *Pole Grade* |
|---|---|---|---|---|---|---|---|---|---|
| L1 | 164.00-131.50 | 32.50 | 0.00 | 18 | 47.0000 | 53.4200 | 0.3125 | 1.2500 | A572-65 (65 ksi) |
| L2 | 131.50-119.29 | 12.21 | 6.00 | 18 | 53.4200 | 56.1500 | 0.3750 | 1.5000 | A572-65 |

| Section | Elevation<br>ft | Section Length<br>ft | Splice Length<br>ft | Number of Sides | Top Diameter<br>in | Bottom Diameter<br>in | Wall Thickness<br>in | Bend Radius<br>in | Pole Grade |
|---|---|---|---|---|---|---|---|---|---|
| | | | | | | | | | (65 ksi) |
| L3 | 119.29-78.79 | 46.50 | 8.42 | 18 | 54.0585 | 62.9700 | 0.4375 | 1.7500 | A572-65 (65 ksi) |
| L4 | 78.79-39.88 | 47.33 | 9.25 | 18 | 60.4813 | 69.6600 | 0.5625 | 2.2500 | A572-65 (65 ksi) |
| L5 | 39.88-1.50 | 47.63 | | 18 | 66.7412 | 76.0000 | 0.5625 | 2.2500 | A572-65 (65 ksi) |

## Tapered Pole Properties

| Section | Tip Dia.<br>in | Area<br>$in^2$ | I<br>$in^4$ | r<br>in | C<br>in | I/C<br>$in^3$ | J<br>$in^4$ | It/Q<br>$in^2$ | w<br>in | w/t |
|---|---|---|---|---|---|---|---|---|---|---|
| L1 | 47.7251 | 46.3082 | 12752.5270 | 16.5741 | 23.8760 | 534.1149 | 25521.8341 | 23.1585 | 7.7220 | 24.71 |
| | 54.2441 | 52.6760 | 18769.9004 | 18.8532 | 27.1374 | 691.6627 | 37564.4987 | 26.3430 | 8.8519 | 28.326 |
| L2 | 54.2441 | 63.1368 | 22444.4518 | 18.8310 | 27.1374 | 827.0684 | 44918.4365 | 31.5744 | 8.7419 | 23.312 |
| | 57.0162 | 66.3862 | 26091.2194 | 19.8001 | 28.5242 | 914.7047 | 52216.7704 | 33.1994 | 9.2224 | 24.593 |
| L3 | 56.0600 | 74.4594 | 27047.4669 | 19.0354 | 27.4617 | 984.9157 | 54130.5236 | 37.2368 | 8.7443 | 19.987 |
| | 63.9414 | 86.8342 | 42898.2727 | 22.1990 | 31.9888 | 1341.0421 | 85852.9920 | 43.4253 | 10.3127 | 23.572 |
| L4 | 63.0724 | 106.9776 | 48524.0652 | 21.2712 | 30.7245 | 1579.3269 | 97111.9796 | 53.4990 | 9.6547 | 17.164 |
| | 70.7346 | 123.3649 | 74413.8720 | 24.5296 | 35.3873 | 2102.8424 | 148925.6597 | 61.6942 | 11.2702 | 20.036 |
| L5 | 69.5966 | 118.1537 | 65376.3617 | 23.4934 | 33.9045 | 1928.2498 | 130838.7474 | 59.0881 | 10.7564 | 19.123 |
| | 77.1724 | 134.6842 | 96834.1984 | 26.7803 | 38.6080 | 2508.1382 | 193795.8137 | 67.3549 | 12.3860 | 22.02 |

| Tower Elevation<br>ft | Gusset Area (per face)<br>$ft^2$ | Gusset Thickness<br>in | Gusset Grade | Adjust. Factor $A_f$ | Adjust. Factor $A_r$ | Weight Mult. | Double Angle Stitch Bolt Spacing Diagonals<br>in | Double Angle Stitch Bolt Spacing Horizontals<br>in | Double Angle Stitch Bolt Spacing Redundants<br>in |
|---|---|---|---|---|---|---|---|---|---|
| L1 164.00-131.50 | | | | 1 | 1 | 1 | | | |
| L2 131.50-119.29 | | | | 1 | 1 | 1 | | | |
| L3 119.29-78.79 | | | | 1 | 1 | 1 | | | |
| L4 78.79-39.88 | | | | 1 | 1 | 1 | | | |
| L5 39.88-1.50 | | | | 1 | 1 | 1 | | | |

## Feed Line/Linear Appurtenances - Entered As Round Or Flat

| Description | Sector | Component Type | Placement<br>ft | Total Number | Number Per Row | Start/End Position | Width or Diameter<br>in | Perimeter<br>in | Weight<br>plf |
|---|---|---|---|---|---|---|---|---|---|
| 7/8 | B | Surface Ar (CaAa) | 51.50 - 4.50 | 3 | 3 | 0.000<br>0.000 | 1.1100 | | 0.54 |
| 1 5/8 (T-Mobile - Existing) | B | Surface Ar (CaAa) | 144.00 - 7.50 | 6 | 6 | 0.000<br>0.000 | 1.9800 | | 1.04 |

# Feed Line/Linear Appurtenances - Entered As Area

| Description | Face or Leg | Allow Shield | Component Type | Placement ft | Total Number | | $C_AA_A$ $ft^2/ft$ | Weight plf |
|---|---|---|---|---|---|---|---|---|
| 1/2 | A | No | Inside Pole | 164.00 - 4.50 | 1 | No Ice | 0.00 | 0.25 |
| (Town Existing) | | | | | | 1/2" Ice | 0.00 | 0.25 |
| | | | | | | 1" Ice | 0.00 | 0.25 |
| 1 1/4 | A | No | Inside Pole | 164.00 - 4.50 | 6 | No Ice | 0.00 | 0.66 |
| (Town Existing) | | | | | | 1/2" Ice | 0.00 | 0.66 |
| | | | | | | 1" Ice | 0.00 | 0.66 |
| 1/2 | B | No | Inside Pole | 154.00 - 7.50 | 1 | No Ice | 0.00 | 0.25 |
| (Sprint Existing) | | | | | | 1/2" Ice | 0.00 | 0.25 |
| | | | | | | 1" Ice | 0.00 | 0.25 |
| 2" Rigid Conduit | B | No | Inside Pole | 154.00 - 7.50 | 2 | No Ice | 0.00 | 2.80 |
| (Clearwire Existing) | | | | | | 1/2" Ice | 0.00 | 2.80 |
| | | | | | | 1" Ice | 0.00 | 2.80 |
| LDF4.5-50 (5/8 FOAM) | B | No | Inside Pole | 154.00 - 7.50 | 2 | No Ice | 0.00 | 0.15 |
| (Clearwire Existing) | | | | | | 1/2" Ice | 0.00 | 0.15 |
| | | | | | | 1" Ice | 0.00 | 0.15 |
| 1 5/8 | B | No | Inside Pole | 144.00 - 4.50 | 12 | No Ice | 0.00 | 1.04 |
| (T-Mobile Existing) | | | | | | 1/2" Ice | 0.00 | 1.04 |
| | | | | | | 1" Ice | 0.00 | 1.04 |
| 1 5/8 | A | No | Inside Pole | 134.00 - 11.50 | 12 | No Ice | 0.00 | 1.04 |
| (AT&T Existing) | | | | | | 1/2" Ice | 0.00 | 1.04 |
| | | | | | | 1" Ice | 0.00 | 1.04 |
| 1 5/8 | C | No | Inside Pole | 124.00 - 7.50 | 6 | No Ice | 0.00 | 1.04 |
| (Verizon Existing) | | | | | | 1/2" Ice | 0.00 | 1.04 |
| | | | | | | 1" Ice | 0.00 | 1.04 |
| RG6-Fiber | A | No | Inside Pole | 134.00 - 11.50 | 2 | No Ice | 0.00 | 0.00 |
| (AT&T Existing) | | | | | | 1/2" Ice | 0.00 | 0.00 |
| | | | | | | 1" Ice | 0.00 | 0.00 |
| #8 AWG Copper WIre | A | No | Inside Pole | 134.00 - 11.50 | 4 | No Ice | 0.00 | 0.00 |
| (AT&T Existing) | | | | | | 1/2" Ice | 0.00 | 0.00 |
| | | | | | | 1" Ice | 0.00 | 0.00 |
| HYBRIFLEX 1-5/8" | B | No | Inside Pole | 154.00 - 7.50 | 6 | No Ice | 0.00 | 1.90 |
| (Sprint Existing) | | | | | | 1/2" Ice | 0.00 | 1.90 |
| | | | | | | 1" Ice | 0.00 | 1.90 |
| HYBRIFLEX 1-5/8" | C | No | Inside Pole | 124.00 - 7.50 | 2 | No Ice | 0.00 | 1.90 |
| (Verizon Existing) | | | | | | 1/2" Ice | 0.00 | 1.90 |
| | | | | | | 1" Ice | 0.00 | 1.90 |
| 7/8 | C | No | Inside Pole | 114.00 - 1.50 | 2 | No Ice | 0.00 | 0.54 |
| (Eversource Existing) | | | | | | 1/2" Ice | 0.00 | 0.54 |
| | | | | | | 1" Ice | 0.00 | 0.54 |
| 1 5/8 | C | No | Inside Pole | 114.00 - 1.50 | 2 | No Ice | 0.00 | 1.04 |
| (Eversource Existing) | | | | | | 1/2" Ice | 0.00 | 1.04 |
| | | | | | | 1" Ice | 0.00 | 1.04 |
| 1/2 | C | No | Inside Pole | 114.00 - 1.50 | 1 | No Ice | 0.00 | 0.25 |
| (Eversource Existing) | | | | | | 1/2" Ice | 0.00 | 0.25 |
| | | | | | | 1" Ice | 0.00 | 0.25 |
| 1 5/8 | A | No | Inside Pole | 164.00 - 4.50 | 1 | No Ice | 0.00 | 1.04 |
| (Town Existing) | | | | | | 1/2" Ice | 0.00 | 1.04 |
| | | | | | | 1" Ice | 0.00 | 1.04 |
| 7/8 | A | No | Inside Pole | 164.00 - 4.50 | 2 | No Ice | 0.00 | 0.54 |
| (Town Existing) | | | | | | 1/2" Ice | 0.00 | 0.54 |
| | | | | | | 1" Ice | 0.00 | 0.54 |
| 1/2 | A | No | Inside Pole | 164.00 - 4.50 | 1 | No Ice | 0.00 | 0.25 |
| (Town Existing) | | | | | | 1/2" Ice | 0.00 | 0.25 |
| | | | | | | 1" Ice | 0.00 | 0.25 |
| #8 AWG Copper WIre | A | No | Inside Pole | 134.00 - 11.50 | 2 | No Ice | 0.00 | 0.05 |
| (AT&T Proposed) | | | | | | 1/2" Ice | 0.00 | 0.05 |
| | | | | | | 1" Ice | 0.00 | 0.05 |

## Feed Line/Linear Appurtenances Section Areas

| Tower Section | Tower Elevation ft | Face | $A_R$ $ft^2$ | $A_F$ $ft^2$ | $C_AA_A$ In Face $ft^2$ | $C_AA_A$ Out Face $ft^2$ | Weight K |
|---|---|---|---|---|---|---|---|
| L1 | 164.00-131.50 | A | 0.000 | 0.000 | 0.000 | 0.000 | 0.25 |
| | | B | 0.000 | 0.000 | 14.850 | 0.000 | 0.63 |
| | | C | 0.000 | 0.000 | 0.000 | 0.000 | 0.00 |
| L2 | 131.50-119.29 | A | 0.000 | 0.000 | 0.000 | 0.000 | 0.23 |
| | | B | 0.000 | 0.000 | 14.505 | 0.000 | 0.44 |
| | | C | 0.000 | 0.000 | 0.000 | 0.000 | 0.05 |
| L3 | 119.29-78.79 | A | 0.000 | 0.000 | 0.000 | 0.000 | 0.78 |
| | | B | 0.000 | 0.000 | 48.114 | 0.000 | 1.47 |
| | | C | 0.000 | 0.000 | 0.000 | 0.000 | 0.53 |
| L4 | 78.79-39.88 | A | 0.000 | 0.000 | 0.000 | 0.000 | 0.75 |
| | | B | 0.000 | 0.000 | 50.095 | 0.000 | 1.43 |
| | | C | 0.000 | 0.000 | 0.000 | 0.000 | 0.52 |
| L5 | 39.88-1.50 | A | 0.000 | 0.000 | 0.000 | 0.000 | 0.59 |
| | | B | 0.000 | 0.000 | 50.249 | 0.000 | 1.27 |
| | | C | 0.000 | 0.000 | 0.000 | 0.000 | 0.46 |

## Feed Line/Linear Appurtenances Section Areas - With Ice

| Tower Section | Tower Elevation ft | Face or Leg | Ice Thickness in | $A_R$ $ft^2$ | $A_F$ $ft^2$ | $C_AA_A$ In Face $ft^2$ | $C_AA_A$ Out Face $ft^2$ | Weight K |
|---|---|---|---|---|---|---|---|---|
| L1 | 164.00-131.50 | A | 2.178 | 0.000 | 0.000 | 0.000 | 0.000 | 0.25 |
| | | B | | 0.000 | 0.000 | 25.368 | 0.000 | 1.00 |
| | | C | | 0.000 | 0.000 | 0.000 | 0.000 | 0.00 |
| L2 | 131.50-119.29 | A | 2.143 | 0.000 | 0.000 | 0.000 | 0.000 | 0.23 |
| | | B | | 0.000 | 0.000 | 24.672 | 0.000 | 0.80 |
| | | C | | 0.000 | 0.000 | 0.000 | 0.000 | 0.05 |
| L3 | 119.29-78.79 | A | 2.092 | 0.000 | 0.000 | 0.000 | 0.000 | 0.78 |
| | | B | | 0.000 | 0.000 | 81.837 | 0.000 | 2.64 |
| | | C | | 0.000 | 0.000 | 0.000 | 0.000 | 0.53 |
| L4 | 78.79-39.88 | A | 1.988 | 0.000 | 0.000 | 0.000 | 0.000 | 0.75 |
| | | B | | 0.000 | 0.000 | 89.050 | 0.000 | 2.67 |
| | | C | | 0.000 | 0.000 | 0.000 | 0.000 | 0.52 |
| L5 | 39.88-1.50 | A | 1.793 | 0.000 | 0.000 | 0.000 | 0.000 | 0.59 |
| | | B | | 0.000 | 0.000 | 96.491 | 0.000 | 2.52 |
| | | C | | 0.000 | 0.000 | 0.000 | 0.000 | 0.46 |

## Feed Line Center of Pressure

| Section | Elevation ft | $CP_X$ in | $CP_Z$ in | $CP_X$ Ice in | $CP_Z$ Ice in |
|---|---|---|---|---|---|
| L1 | 164.00-131.50 | 0.5694 | -0.3287 | 0.8034 | -0.4638 |
| L2 | 131.50-119.29 | 1.2535 | -0.7237 | 1.5926 | -0.9195 |
| L3 | 119.29-78.79 | 1.2692 | -0.7328 | 1.6369 | -0.9450 |
| L4 | 78.79-39.88 | 1.3810 | -0.7973 | 1.8373 | -1.0608 |
| L5 | 39.88-1.50 | 1.4036 | -0.8104 | 1.9652 | -1.1346 |

## Shielding Factor Ka

| Tower Section | Feed Line Record No. | Description | Feed Line Segment Elev. | $K_a$ No Ice | $K_a$ Ice |
|---|---|---|---|---|---|
| L1 | 17 | 1 5/8 | 131.50 - 144.00 | 1.0000 | 1.0000 |
| L2 | 17 | 1 5/8 | 119.29 - 131.50 | 1.0000 | 1.0000 |
| L3 | 11 | 7/8 | 78.79 - 51.50 | 1.0000 | 1.0000 |
| L3 | 17 | 1 5/8 | 78.79 - 119.29 | 1.0000 | 1.0000 |
| L4 | 11 | 7/8 | 39.88 - 51.50 | 1.0000 | 1.0000 |
| L4 | 17 | 1 5/8 | 39.88 - 78.79 | 1.0000 | 1.0000 |

## Discrete Tower Loads

| Description | Face or Leg | Offset Type | Offsets: Horz Lateral Vert<br>ft<br>ft<br>ft | Azimuth Adjustment<br>° | Placement<br>ft | | $C_AA_A$ Front<br>$ft^2$ | $C_AA_A$ Side<br>$ft^2$ | Weight<br>K |
|---|---|---|---|---|---|---|---|---|---|
| 4'x4" Pipe Mount | A | From Face | 0.50 | 0.0000 | 160.00 | No Ice | 1.10 | 1.10 | 0.04 |
| (Town Existing) | | | 0.00 | | | 1/2" Ice | 1.58 | 1.58 | 0.06 |
| | | | 0.00 | | | 1" Ice | 1.84 | 1.84 | 0.07 |
| 4'x4" Pipe Mount | B | From Face | 0.50 | 0.0000 | 160.00 | No Ice | 1.10 | 1.10 | 0.04 |
| (Town Existing) | | | 0.00 | | | 1/2" Ice | 1.58 | 1.58 | 0.06 |
| | | | 0.00 | | | 1" Ice | 1.84 | 1.84 | 0.07 |
| 4'x4" Pipe Mount | C | From Face | 0.50 | 0.0000 | 160.00 | No Ice | 1.10 | 1.10 | 0.04 |
| (Town Existing) | | | 0.00 | | | 1/2" Ice | 1.58 | 1.58 | 0.06 |
| | | | 0.00 | | | 1" Ice | 1.84 | 1.84 | 0.07 |
| 12' x 3" Dia Omni | A | From Face | 4.00 | 0.0000 | 164.00 | No Ice | 3.60 | 3.60 | 0.04 |
| (Town Existing) | | | 0.00 | | | 1/2" Ice | 4.83 | 4.83 | 0.06 |
| | | | 5.00 | | | 1" Ice | 6.08 | 6.08 | 0.09 |
| 12' x 3" Dia Omni | B | From Face | 4.00 | 0.0000 | 164.00 | No Ice | 3.60 | 3.60 | 0.04 |
| (Town Existing) | | | -6.00 | | | 1/2" Ice | 4.83 | 4.83 | 0.06 |
| | | | 5.00 | | | 1" Ice | 6.08 | 6.08 | 0.09 |
| 12' x 3" Dia Omni | C | From Face | 4.00 | 0.0000 | 164.00 | No Ice | 3.60 | 3.60 | 0.04 |
| (Town Existing) | | | 6.00 | | | 1/2" Ice | 4.83 | 4.83 | 0.06 |
| | | | 5.00 | | | 1" Ice | 6.08 | 6.08 | 0.09 |
| 12' x 3" Dia Omni | C | From Face | 4.00 | 0.0000 | 164.00 | No Ice | 3.60 | 3.60 | 0.04 |
| (Town Existing) | | | 0.00 | | | 1/2" Ice | 4.83 | 4.83 | 0.06 |
| | | | 5.00 | | | 1" Ice | 6.08 | 6.08 | 0.09 |
| Camera | B | From Face | 4.00 | 0.0000 | 164.00 | No Ice | 3.00 | 3.00 | 0.10 |
| (Town Existing) | | | -6.00 | | | 1/2" Ice | 4.00 | 4.00 | 0.15 |
| | | | 2.00 | | | 1" Ice | 5.00 | 5.00 | 0.20 |
| SC479-HF1LDF | A | From Face | 4.00 | 0.0000 | 164.00 | No Ice | 4.70 | 4.70 | 0.03 |
| (Town Existing) | | | -6.00 | | | 1/2" Ice | 6.54 | 6.54 | 0.07 |
| | | | 5.00 | | | 1" Ice | 8.04 | 8.04 | 0.11 |
| TX/RX 432E-83I-01T | A | From Face | 4.00 | 0.0000 | 164.00 | No Ice | 1.20 | 0.75 | 0.03 |
| (Town Existing) | | | -6.00 | | | 1/2" Ice | 1.34 | 0.86 | 0.04 |
| | | | 5.00 | | | 1" Ice | 1.48 | 0.98 | 0.05 |

| Description | Face or Leg | Offset Type | Offsets: Horz Lateral Vert<br>ft<br>ft<br>ft | Azimuth Adjustment<br>° | Placement<br>ft | | $C_AA_A$ Front<br>$ft^2$ | $C_AA_A$ Side<br>$ft^2$ | Weight<br>K |
|---|---|---|---|---|---|---|---|---|---|
| SC229-SFXLDF | B | From Face | 4.00 | 0.0000 | 164.00 | No Ice | 6.67 | 6.67 | 0.03 |
| (Town Existing) | | | 0.00 | | | 1/2" Ice | 9.02 | 9.02 | 0.08 |
| | | | 5.00 | | | 1" Ice | 11.39 | 11.39 | 0.14 |
| SC479-HF1LDF | C | From Face | 4.00 | 0.0000 | 164.00 | No Ice | 4.70 | 4.70 | 0.03 |
| (Town Existing) | | | 6.00 | | | 1/2" Ice | 6.54 | 6.54 | 0.07 |
| | | | 5.00 | | | 1" Ice | 8.04 | 8.04 | 0.11 |
| Low Profile Platform | C | None | | 0.0000 | 164.00 | No Ice | 15.70 | 15.70 | 1.30 |
| (Town Existing) | | | | | | 1/2" Ice | 20.10 | 20.10 | 1.76 |
| | | | | | | 1" Ice | 24.50 | 24.50 | 2.23 |
| LLPX310R | A | From Face | 3.00 | 0.0000 | 154.00 | No Ice | 4.30 | 1.95 | 0.03 |
| (Clearwire Existing) | | | 0.00 | | | 1/2" Ice | 4.60 | 2.21 | 0.05 |
| | | | 0.00 | | | 1" Ice | 4.90 | 2.49 | 0.08 |
| LLPX310R | B | From Face | 3.00 | 0.0000 | 154.00 | No Ice | 4.30 | 1.95 | 0.03 |
| (Clearwire Existing) | | | 0.00 | | | 1/2" Ice | 4.60 | 2.21 | 0.05 |
| | | | 0.00 | | | 1" Ice | 4.90 | 2.49 | 0.08 |
| LLPX310R | C | From Face | 3.00 | 0.0000 | 154.00 | No Ice | 4.30 | 1.95 | 0.03 |
| (Clearwire Existing) | | | 0.00 | | | 1/2" Ice | 4.60 | 2.21 | 0.05 |
| | | | 0.00 | | | 1" Ice | 4.90 | 2.49 | 0.08 |
| Remote Radio Head FD R6 | A | From Face | 3.00 | 0.0000 | 151.50 | No Ice | 1.80 | 0.78 | 0.03 |
| RRH | | | 0.00 | | | 1/2" Ice | 1.99 | 0.92 | 0.04 |
| (Clearwire Existing) | | | 0.00 | | | 1" Ice | 2.18 | 1.07 | 0.06 |
| Remote Radio Head FD R6 | B | From Face | 3.00 | 0.0000 | 151.50 | No Ice | 1.80 | 0.78 | 0.03 |
| RRH | | | 0.00 | | | 1/2" Ice | 1.99 | 0.92 | 0.04 |
| (Clearwire Existing) | | | 0.00 | | | 1" Ice | 2.18 | 1.07 | 0.06 |
| Remote Radio Head FD R6 | C | From Face | 3.00 | 0.0000 | 151.50 | No Ice | 1.80 | 0.78 | 0.03 |
| RRH | | | 0.00 | | | 1/2" Ice | 1.99 | 0.92 | 0.04 |
| (Clearwire Existing) | | | 0.00 | | | 1" Ice | 2.18 | 1.07 | 0.06 |
| Horizon ODU | A | None | | 0.0000 | 154.00 | No Ice | 0.68 | 0.16 | 0.00 |
| (Clearwire Existing) | | | | | | 1/2" Ice | 0.78 | 0.22 | 0.00 |
| | | | | | | 1" Ice | 0.89 | 0.29 | 0.01 |
| Horizon ODU | C | None | | 0.0000 | 154.00 | No Ice | 0.68 | 0.16 | 0.00 |
| (Clearwire Existing) | | | | | | 1/2" Ice | 0.78 | 0.22 | 0.00 |
| | | | | | | 1" Ice | 0.89 | 0.29 | 0.01 |
| APXVSPP18-C-A20 | A | From Face | 4.00 | 0.0000 | 154.00 | No Ice | 8.02 | 5.28 | 0.06 |
| (Sprint Existing) | | | 0.00 | | | 1/2" Ice | 8.48 | 5.74 | 0.11 |
| | | | 0.00 | | | 1" Ice | 8.94 | 6.20 | 0.16 |
| P40-16-XLPP-RR-A | B | From Face | 4.00 | 0.0000 | 154.00 | No Ice | 9.07 | 3.52 | 0.05 |
| (Sprint Existing) | | | 0.00 | | | 1/2" Ice | 9.47 | 3.87 | 0.11 |
| | | | 0.00 | | | 1" Ice | 9.87 | 4.22 | 0.16 |
| APXVSPP18-C-A20 | C | From Face | 4.00 | 0.0000 | 154.00 | No Ice | 8.02 | 5.28 | 0.06 |
| (Sprint Existing) | | | 0.00 | | | 1/2" Ice | 8.48 | 5.74 | 0.11 |
| | | | 0.00 | | | 1" Ice | 8.94 | 6.20 | 0.16 |
| FD-RRH 4x45 1900 | A | From Face | 4.00 | 0.0000 | 154.00 | No Ice | 2.32 | 2.38 | 0.06 |
| (Sprint Existing) | | | 2.00 | | | 1/2" Ice | 2.52 | 2.59 | 0.08 |
| | | | 0.00 | | | 1" Ice | 2.74 | 2.80 | 0.11 |
| FD-RRH 4x45 1900 | B | From Face | 4.00 | 0.0000 | 154.00 | No Ice | 2.32 | 2.38 | 0.06 |
| (Sprint Existing) | | | 2.00 | | | 1/2" Ice | 2.52 | 2.59 | 0.08 |
| | | | 0.00 | | | 1" Ice | 2.74 | 2.80 | 0.11 |
| FD-RRH 4x45 1900 | C | From Face | 4.00 | 0.0000 | 154.00 | No Ice | 2.32 | 2.38 | 0.06 |
| (Sprint Existing) | | | 2.00 | | | 1/2" Ice | 2.52 | 2.59 | 0.08 |
| | | | 0.00 | | | 1" Ice | 2.74 | 2.80 | 0.11 |
| FD-RRH 2x50 800 | A | From Face | 4.00 | 0.0000 | 154.00 | No Ice | 2.06 | 1.93 | 0.06 |
| (Sprint Existing) | | | -2.00 | | | 1/2" Ice | 2.24 | 2.11 | 0.09 |
| | | | 0.00 | | | 1" Ice | 2.43 | 2.29 | 0.11 |
| FD-RRH 2x50 800 | B | From Face | 4.00 | 0.0000 | 154.00 | No Ice | 2.06 | 1.93 | 0.06 |
| (Sprint Existing) | | | -2.00 | | | 1/2" Ice | 2.24 | 2.11 | 0.09 |
| | | | 0.00 | | | 1" Ice | 2.43 | 2.29 | 0.11 |

| Description | Face or Leg | Offset Type | Offsets: Horz Lateral Vert<br>ft<br>ft<br>ft | Azimuth Adjustment<br>° | Placement<br>ft | | $C_AA_A$ Front<br>$ft^2$ | $C_AA_A$ Side<br>$ft^2$ | Weight<br>K |
|---|---|---|---|---|---|---|---|---|---|
| FD-RRH 2x50 800 | C | From Face | 4.00 | 0.0000 | 154.00 | No Ice | 2.06 | 1.93 | 0.06 |
| (Sprint Existing) | | | -2.00 | | | 1/2" Ice | 2.24 | 2.11 | 0.09 |
| | | | 0.00 | | | 1" Ice | 2.43 | 2.29 | 0.11 |
| GPS | C | From Face | 4.00 | 0.0000 | 154.00 | No Ice | 1.00 | 1.00 | 0.01 |
| (Sprint Existing) | | | -6.00 | | | 1/2" Ice | 1.50 | 1.50 | 0.01 |
| | | | 3.00 | | | 1" Ice | 2.00 | 2.00 | 0.02 |
| APXVTM14 | A | From Face | 4.00 | 0.0000 | 154.00 | No Ice | 6.34 | 3.61 | 0.06 |
| (Sprint Existing) | | | 2.00 | | | 1/2" Ice | 6.72 | 3.97 | 0.10 |
| | | | 0.00 | | | 1" Ice | 7.10 | 4.33 | 0.14 |
| APXVTM14 | B | From Face | 4.00 | 0.0000 | 154.00 | No Ice | 6.34 | 3.61 | 0.06 |
| (Sprint Existing) | | | 2.00 | | | 1/2" Ice | 6.72 | 3.97 | 0.10 |
| | | | 0.00 | | | 1" Ice | 7.10 | 4.33 | 0.14 |
| APXVTM14 | C | From Face | 4.00 | 0.0000 | 154.00 | No Ice | 6.34 | 3.61 | 0.06 |
| (Sprint Existing) | | | 2.00 | | | 1/2" Ice | 6.72 | 3.97 | 0.10 |
| | | | 0.00 | | | 1" Ice | 7.10 | 4.33 | 0.14 |
| TD-RRH8x20-25 | A | From Face | 4.00 | 0.0000 | 154.00 | No Ice | 4.05 | 1.53 | 0.07 |
| (Sprint Existing) | | | 2.00 | | | 1/2" Ice | 4.30 | 1.71 | 0.10 |
| | | | 0.00 | | | 1" Ice | 4.56 | 1.90 | 0.13 |
| TD-RRH8x20-25 | B | From Face | 4.00 | 0.0000 | 154.00 | No Ice | 4.05 | 1.53 | 0.07 |
| (Sprint Existing) | | | 2.00 | | | 1/2" Ice | 4.30 | 1.71 | 0.10 |
| | | | 0.00 | | | 1" Ice | 4.56 | 1.90 | 0.13 |
| TD-RRH8x20-25 | C | From Face | 4.00 | 0.0000 | 154.00 | No Ice | 4.05 | 1.53 | 0.07 |
| (Sprint Existing) | | | 2.00 | | | 1/2" Ice | 4.30 | 1.71 | 0.10 |
| | | | 0.00 | | | 1" Ice | 4.56 | 1.90 | 0.13 |
| Valmont Uni-Tri Bracket | A | None | | 0.0000 | 151.50 | No Ice | 1.75 | 1.75 | 0.29 |
| (Sprint Existing) | | | | | | 1/2" Ice | 1.94 | 1.94 | 0.31 |
| | | | | | | 1" Ice | 2.13 | 2.13 | 0.32 |
| Low Profile Platform | C | None | | 0.0000 | 154.00 | No Ice | 15.70 | 15.70 | 1.30 |
| (Sprint Existing) | | | | | | 1/2" Ice | 20.10 | 20.10 | 1.76 |
| | | | | | | 1" Ice | 24.50 | 24.50 | 2.23 |
| APX16PV-16PVL-E | A | From Face | 4.00 | 0.0000 | 144.00 | No Ice | 6.04 | 1.98 | 0.05 |
| (T-Mobile Existing) | | | -5.00 | | | 1/2" Ice | 6.39 | 2.30 | 0.08 |
| | | | 0.00 | | | 1" Ice | 6.76 | 2.63 | 0.12 |
| LNX-6515DS | A | From Face | 4.00 | 0.0000 | 144.00 | No Ice | 11.45 | 7.70 | 0.06 |
| (T-Mobile Existing) | | | 5.00 | | | 1/2" Ice | 12.06 | 8.29 | 0.12 |
| | | | 0.00 | | | 1" Ice | 12.69 | 8.89 | 0.19 |
| APX16PV-16PVL-E | B | From Face | 4.00 | 0.0000 | 144.00 | No Ice | 6.04 | 1.98 | 0.05 |
| (T-Mobile Existing) | | | -5.00 | | | 1/2" Ice | 6.39 | 2.30 | 0.08 |
| | | | 0.00 | | | 1" Ice | 6.76 | 2.63 | 0.12 |
| LNX-6515DS | B | From Face | 4.00 | 0.0000 | 144.00 | No Ice | 11.45 | 7.70 | 0.06 |
| (T-Mobile Existing) | | | 5.00 | | | 1/2" Ice | 12.06 | 8.29 | 0.12 |
| | | | 0.00 | | | 1" Ice | 12.69 | 8.89 | 0.19 |
| APX16PV-16PVL-E | C | From Face | 4.00 | 0.0000 | 144.00 | No Ice | 6.04 | 1.98 | 0.05 |
| (T-Mobile Existing) | | | -5.00 | | | 1/2" Ice | 6.39 | 2.30 | 0.08 |
| | | | 0.00 | | | 1" Ice | 6.76 | 2.63 | 0.12 |
| LNX-6515DS | C | From Face | 4.00 | 0.0000 | 144.00 | No Ice | 11.45 | 7.70 | 0.06 |
| (T-Mobile Existing) | | | 5.00 | | | 1/2" Ice | 12.06 | 8.29 | 0.12 |
| | | | 0.00 | | | 1" Ice | 12.69 | 8.89 | 0.19 |
| (3) TMA 10"x8"x3" | A | From Face | 4.00 | 0.0000 | 144.00 | No Ice | 0.67 | 0.26 | 0.02 |
| (T-Mobile Existing) | | | 0.00 | | | 1/2" Ice | 0.77 | 0.33 | 0.02 |
| | | | 0.00 | | | 1" Ice | 0.88 | 0.41 | 0.03 |
| (3) TMA 10"x8"x3" | B | From Face | 4.00 | 0.0000 | 144.00 | No Ice | 0.67 | 0.26 | 0.02 |
| (T-Mobile Existing) | | | 0.00 | | | 1/2" Ice | 0.77 | 0.33 | 0.02 |
| | | | 0.00 | | | 1" Ice | 0.88 | 0.41 | 0.03 |
| (3) TMA 10"x8"x3" | C | From Face | 4.00 | 0.0000 | 144.00 | No Ice | 0.67 | 0.26 | 0.02 |
| (T-Mobile Existing) | | | 0.00 | | | 1/2" Ice | 0.77 | 0.33 | 0.02 |
| | | | 0.00 | | | 1" Ice | 0.88 | 0.41 | 0.03 |

| Description | Face or Leg | Offset Type | Offsets: Horz Lateral Vert<br>ft<br>ft<br>ft | Azimuth Adjustment<br>° | Placement<br>ft | | $C_AA_A$ Front<br>$ft^2$ | $C_AA_A$ Side<br>$ft^2$ | Weight<br>K |
|---|---|---|---|---|---|---|---|---|---|
| Smart Bias T | A | From Face | 4.00 | 0.0000 | 144.00 | No Ice | 0.13 | 0.07 | 0.00 |
| (T-Mobile Existing) | | | 0.00 | | | 1/2" Ice | 0.18 | 0.10 | 0.00 |
| | | | 0.00 | | | 1" Ice | 0.24 | 0.15 | 0.01 |
| Smart Bias T | B | From Face | 4.00 | 0.0000 | 144.00 | No Ice | 0.13 | 0.07 | 0.00 |
| (T-Mobile Existing) | | | 0.00 | | | 1/2" Ice | 0.18 | 0.10 | 0.00 |
| | | | 0.00 | | | 1" Ice | 0.24 | 0.15 | 0.01 |
| Smart Bias T | C | From Face | 4.00 | 0.0000 | 144.00 | No Ice | 0.13 | 0.07 | 0.00 |
| (T-Mobile Existing) | | | 0.00 | | | 1/2" Ice | 0.18 | 0.10 | 0.00 |
| | | | 0.00 | | | 1" Ice | 0.24 | 0.15 | 0.01 |
| Low Profile Platform | C | None | | 0.0000 | 144.00 | No Ice | 15.70 | 15.70 | 1.30 |
| (T-Mobile Existing) | | | | | | 1/2" Ice | 20.10 | 20.10 | 1.76 |
| | | | | | | 1" Ice | 24.50 | 24.50 | 2.23 |
| DC6-48-60-18-8F Surge | B | From Face | 0.50 | 0.0000 | 138.00 | No Ice | 1.91 | 1.91 | 0.02 |
| Arrestor | | | 0.00 | | | 1/2" Ice | 2.10 | 2.10 | 0.04 |
| (AT&T Existing) | | | 0.00 | | | 1" Ice | 2.29 | 2.29 | 0.06 |
| DC6-48-60-18-8F Surge | C | From Face | 0.50 | 0.0000 | 138.00 | No Ice | 1.91 | 1.91 | 0.02 |
| Arrestor | | | 0.00 | | | 1/2" Ice | 2.10 | 2.10 | 0.04 |
| (AT&T Existing) | | | 0.00 | | | 1" Ice | 2.29 | 2.29 | 0.06 |
| RRUS-11 | A | From Face | 0.50 | 0.0000 | 138.00 | No Ice | 2.57 | 1.07 | 0.05 |
| (AT&T Existing) | | | 6.00 | | | 1/2" Ice | 2.76 | 1.21 | 0.07 |
| | | | 0.00 | | | 1" Ice | 2.97 | 1.36 | 0.09 |
| RRUS-11 | B | From Face | 0.50 | 0.0000 | 138.00 | No Ice | 2.57 | 1.07 | 0.05 |
| (AT&T Existing) | | | 6.00 | | | 1/2" Ice | 2.76 | 1.21 | 0.07 |
| | | | 0.00 | | | 1" Ice | 2.97 | 1.36 | 0.09 |
| RRUS-11 | C | From Face | 0.50 | 0.0000 | 138.00 | No Ice | 2.57 | 1.07 | 0.05 |
| (AT&T Existing) | | | 6.00 | | | 1/2" Ice | 2.76 | 1.21 | 0.07 |
| | | | 0.00 | | | 1" Ice | 2.97 | 1.36 | 0.09 |
| RRUS-32 | A | From Face | 0.50 | 0.0000 | 138.00 | No Ice | 3.31 | 2.42 | 0.08 |
| (AT&T Existing) | | | -3.00 | | | 1/2" Ice | 3.56 | 2.64 | 0.10 |
| | | | 0.00 | | | 1" Ice | 3.81 | 2.86 | 0.14 |
| RRUS-32 | B | From Face | 0.50 | 0.0000 | 138.00 | No Ice | 3.31 | 2.42 | 0.08 |
| (AT&T Existing) | | | -3.00 | | | 1/2" Ice | 3.56 | 2.64 | 0.10 |
| | | | 0.00 | | | 1" Ice | 3.81 | 2.86 | 0.14 |
| RRUS-32 | C | From Face | 0.50 | 0.0000 | 138.00 | No Ice | 3.31 | 2.42 | 0.08 |
| (AT&T Existing) | | | -3.00 | | | 1/2" Ice | 3.56 | 2.64 | 0.10 |
| | | | 0.00 | | | 1" Ice | 3.81 | 2.86 | 0.14 |
| Valmont Uni-Tri Bracket | C | None | | 0.0000 | 138.00 | No Ice | 1.75 | 1.75 | 0.29 |
| (AT&T Existing) | | | | | | 1/2" Ice | 1.94 | 1.94 | 0.31 |
| | | | | | | 1" Ice | 2.13 | 2.13 | 0.32 |
| 7770.00 | A | From Face | 3.00 | 0.0000 | 134.00 | No Ice | 5.51 | 2.93 | 0.04 |
| (AT&T Existing) | | | -7.00 | | | 1/2" Ice | 5.87 | 3.27 | 0.07 |
| | | | 0.00 | | | 1" Ice | 6.23 | 3.63 | 0.11 |
| QS66512-2 | A | From Face | 3.00 | 0.0000 | 134.00 | No Ice | 8.13 | 6.80 | 0.11 |
| (AT&T Existing) | | | -3.50 | | | 1/2" Ice | 8.59 | 7.27 | 0.17 |
| | | | 0.00 | | | 1" Ice | 9.05 | 7.72 | 0.23 |
| 80010965 | A | From Face | 3.00 | 0.0000 | 134.00 | No Ice | 13.81 | 5.83 | 0.11 |
| (AT&T Proposed) | | | 3.50 | | | 1/2" Ice | 14.35 | 6.32 | 0.19 |
| | | | 0.00 | | | 1" Ice | 14.89 | 6.82 | 0.27 |
| HPA-65R-BUU-H6 | A | From Face | 3.00 | 0.0000 | 134.00 | No Ice | 9.66 | 6.45 | 0.05 |
| (AT&T Proposed) | | | 7.00 | | | 1/2" Ice | 10.13 | 6.91 | 0.11 |
| | | | 0.00 | | | 1" Ice | 10.61 | 7.38 | 0.18 |
| 7770.00 | B | From Face | 3.00 | 0.0000 | 134.00 | No Ice | 5.51 | 2.93 | 0.04 |
| (AT&T Existing) | | | -7.00 | | | 1/2" Ice | 5.87 | 3.27 | 0.07 |
| | | | 0.00 | | | 1" Ice | 6.23 | 3.63 | 0.11 |
| QS66512-2 | B | From Face | 3.00 | 0.0000 | 134.00 | No Ice | 8.13 | 6.80 | 0.11 |
| (AT&T Existing) | | | -3.50 | | | 1/2" Ice | 8.59 | 7.27 | 0.17 |
| | | | 0.00 | | | 1" Ice | 9.05 | 7.72 | 0.23 |

| Description | Face or Leg | Offset Type | Offsets: Horz Lateral Vert<br>ft<br>ft<br>ft | Azimuth Adjustment<br>° | Placement<br>ft | | $C_AA_A$ Front<br>$ft^2$ | $C_AA_A$ Side<br>$ft^2$ | Weight<br>K |
|---|---|---|---|---|---|---|---|---|---|
| 80010965 | B | From Face | 3.00 | 0.0000 | 134.00 | No Ice | 13.81 | 5.83 | 0.11 |
| (AT&T Proposed) | | | 3.50 | | | 1/2" Ice | 14.35 | 6.32 | 0.19 |
| | | | 0.00 | | | 1" Ice | 14.89 | 6.82 | 0.27 |
| HPA-65R-BUU-H6 | B | From Face | 3.00 | 0.0000 | 134.00 | No Ice | 9.66 | 6.45 | 0.05 |
| (AT&T Proposed) | | | 7.00 | | | 1/2" Ice | 10.13 | 6.91 | 0.11 |
| | | | 0.00 | | | 1" Ice | 10.61 | 7.38 | 0.18 |
| 7770.00 | C | From Face | 3.00 | 0.0000 | 134.00 | No Ice | 5.51 | 2.93 | 0.04 |
| (AT&T Existing) | | | -7.00 | | | 1/2" Ice | 5.87 | 3.27 | 0.07 |
| | | | 0.00 | | | 1" Ice | 6.23 | 3.63 | 0.11 |
| QS66512-2 | C | From Face | 3.00 | 0.0000 | 134.00 | No Ice | 8.13 | 6.80 | 0.11 |
| (AT&T Existing) | | | -3.50 | | | 1/2" Ice | 8.59 | 7.27 | 0.17 |
| | | | 0.00 | | | 1" Ice | 9.05 | 7.72 | 0.23 |
| 80010965 | C | From Face | 3.00 | 0.0000 | 134.00 | No Ice | 13.81 | 5.83 | 0.11 |
| (AT&T Proposed) | | | 3.50 | | | 1/2" Ice | 14.35 | 6.32 | 0.19 |
| | | | 0.00 | | | 1" Ice | 14.89 | 6.82 | 0.27 |
| HPA-65R-BUU-H6 | C | From Face | 3.00 | 0.0000 | 134.00 | No Ice | 9.66 | 6.45 | 0.05 |
| (AT&T Proposed) | | | 7.00 | | | 1/2" Ice | 10.13 | 6.91 | 0.11 |
| | | | 0.00 | | | 1" Ice | 10.61 | 7.38 | 0.18 |
| (2) LGP21401 TMA | A | From Face | 3.00 | 0.0000 | 134.00 | No Ice | 0.82 | 0.35 | 0.02 |
| (AT&T Existing) | | | -2.00 | | | 1/2" Ice | 0.94 | 0.44 | 0.02 |
| | | | 0.00 | | | 1" Ice | 1.06 | 0.54 | 0.03 |
| (2) LGP21401 TMA | B | From Face | 3.00 | 0.0000 | 134.00 | No Ice | 0.82 | 0.35 | 0.02 |
| (AT&T Existing) | | | -2.00 | | | 1/2" Ice | 0.94 | 0.44 | 0.02 |
| | | | 0.00 | | | 1" Ice | 1.06 | 0.54 | 0.03 |
| (2) LGP21401 TMA | C | From Face | 3.00 | 0.0000 | 134.00 | No Ice | 0.82 | 0.35 | 0.02 |
| (AT&T Existing) | | | -2.00 | | | 1/2" Ice | 0.94 | 0.44 | 0.02 |
| | | | 0.00 | | | 1" Ice | 1.06 | 0.54 | 0.03 |
| (2) TPX-070821 | A | From Face | 3.00 | 0.0000 | 134.00 | No Ice | 0.47 | 0.10 | 0.01 |
| (AT&T Existing) | | | -2.00 | | | 1/2" Ice | 0.56 | 0.15 | 0.01 |
| | | | 0.00 | | | 1" Ice | 0.66 | 0.20 | 0.02 |
| (2) TPX-070821 | B | From Face | 3.00 | 0.0000 | 134.00 | No Ice | 0.47 | 0.10 | 0.01 |
| (AT&T Existing) | | | -2.00 | | | 1/2" Ice | 0.56 | 0.15 | 0.01 |
| | | | 0.00 | | | 1" Ice | 0.66 | 0.20 | 0.02 |
| (2) TPX-070821 | C | From Face | 3.00 | 0.0000 | 134.00 | No Ice | 0.47 | 0.10 | 0.01 |
| (AT&T Existing) | | | -2.00 | | | 1/2" Ice | 0.56 | 0.15 | 0.01 |
| | | | 0.00 | | | 1" Ice | 0.66 | 0.20 | 0.02 |
| RRUS-32 | A | From Face | 0.50 | 0.0000 | 134.00 | No Ice | 3.31 | 2.42 | 0.08 |
| (AT&T Existing) | | | 3.00 | | | 1/2" Ice | 3.56 | 2.64 | 0.10 |
| | | | 0.00 | | | 1" Ice | 3.81 | 2.86 | 0.14 |
| RRUS-32 | B | From Face | 0.50 | 0.0000 | 134.00 | No Ice | 3.31 | 2.42 | 0.08 |
| (AT&T Existing) | | | 3.00 | | | 1/2" Ice | 3.56 | 2.64 | 0.10 |
| | | | 0.00 | | | 1" Ice | 3.81 | 2.86 | 0.14 |
| RRUS-32 | C | From Face | 0.50 | 0.0000 | 134.00 | No Ice | 3.31 | 2.42 | 0.08 |
| (AT&T Existing) | | | 3.00 | | | 1/2" Ice | 3.56 | 2.64 | 0.10 |
| | | | 0.00 | | | 1" Ice | 3.81 | 2.86 | 0.14 |
| RRUS-32 | A | From Face | 0.50 | 0.0000 | 134.00 | No Ice | 3.31 | 2.42 | 0.08 |
| (AT&T Proposed) | | | -4.00 | | | 1/2" Ice | 3.56 | 2.64 | 0.10 |
| | | | 0.00 | | | 1" Ice | 3.81 | 2.86 | 0.14 |
| RRUS-32 | B | From Face | 0.50 | 0.0000 | 134.00 | No Ice | 3.31 | 2.42 | 0.08 |
| (AT&T Proposed) | | | -4.00 | | | 1/2" Ice | 3.56 | 2.64 | 0.10 |
| | | | 0.00 | | | 1" Ice | 3.81 | 2.86 | 0.14 |
| RRUS-32 | C | From Face | 0.50 | 0.0000 | 134.00 | No Ice | 3.31 | 2.42 | 0.08 |
| (AT&T Proposed) | | | -4.00 | | | 1/2" Ice | 3.56 | 2.64 | 0.10 |
| | | | 0.00 | | | 1" Ice | 3.81 | 2.86 | 0.14 |
| B14 4478 | A | From Face | 0.50 | 0.0000 | 134.00 | No Ice | 1.63 | 0.91 | 0.06 |
| (AT&T Proposed) | | | -6.00 | | | 1/2" Ice | 1.79 | 1.03 | 0.07 |
| | | | 0.00 | | | 1" Ice | 1.95 | 1.17 | 0.09 |

| Description | Face or Leg | Offset Type | Offsets: Horz Lateral Vert<br>ft ft ft | Azimuth Adjustment<br>° | Placement<br>ft | | $C_AA_A$ Front<br>$ft^2$ | $C_AA_A$ Side<br>$ft^2$ | Weight<br>K |
|---|---|---|---|---|---|---|---|---|---|
| B14 4478 | B | From Face | 0.50 | 0.0000 | 134.00 | No Ice | 1.63 | 0.91 | 0.06 |
| (AT&T Proposed) | | | -6.00 | | | 1/2" Ice | 1.79 | 1.03 | 0.07 |
| | | | 0.00 | | | 1" Ice | 1.95 | 1.17 | 0.09 |
| B14 4478 | C | From Face | 0.50 | 0.0000 | 134.00 | No Ice | 1.63 | 0.91 | 0.06 |
| (AT&T Proposed) | | | -6.00 | | | 1/2" Ice | 1.79 | 1.03 | 0.07 |
| | | | 0.00 | | | 1" Ice | 1.95 | 1.17 | 0.09 |
| DC6-48-60-18-8F Surge | C | From Face | 0.50 | 0.0000 | 134.00 | No Ice | 1.91 | 1.91 | 0.02 |
| Arrestor | | | 0.00 | | | 1/2" Ice | 2.10 | 2.10 | 0.04 |
| (AT&T Proposed) | | | 0.00 | | | 1" Ice | 2.29 | 2.29 | 0.06 |
| EEI 16-ft Low Profile | C | None | | 0.0000 | 134.00 | No Ice | 21.00 | 21.00 | 2.00 |
| Platform | | | | | | 1/2" Ice | 26.00 | 26.00 | 2.40 |
| (AT&T Existing) | | | | | | 1" Ice | 31.00 | 31.00 | 2.80 |
| DB844H65E-XY | A | From Face | 4.00 | 0.0000 | 124.00 | No Ice | 2.87 | 3.98 | 0.01 |
| (Verizon Existing) | | | -6.00 | | | 1/2" Ice | 3.18 | 4.29 | 0.04 |
| | | | 0.00 | | | 1" Ice | 3.49 | 4.61 | 0.07 |
| MG D3-800TX | A | From Face | 4.00 | 0.0000 | 124.00 | No Ice | 3.45 | 2.22 | 0.00 |
| (Verizon Existing) | | | -4.00 | | | 1/2" Ice | 3.80 | 2.55 | 0.02 |
| | | | 0.00 | | | 1" Ice | 4.16 | 2.89 | 0.04 |
| SBNHH-1D65B | A | From Face | 4.00 | 0.0000 | 124.00 | No Ice | 8.08 | 5.34 | 0.04 |
| (Verizon Existing) | | | 0.00 | | | 1/2" Ice | 8.53 | 5.79 | 0.09 |
| | | | 0.00 | | | 1" Ice | 9.00 | 6.26 | 0.15 |
| SBNHH-1D65B | A | From Face | 4.00 | 0.0000 | 124.00 | No Ice | 8.08 | 5.34 | 0.04 |
| (Verizon Existing) | | | 4.00 | | | 1/2" Ice | 8.53 | 5.79 | 0.09 |
| | | | 0.00 | | | 1" Ice | 9.00 | 6.26 | 0.15 |
| DB844H65E-XY | A | From Face | 4.00 | 0.0000 | 124.00 | No Ice | 2.87 | 3.98 | 0.01 |
| (Verizon Existing) | | | 6.00 | | | 1/2" Ice | 3.18 | 4.29 | 0.04 |
| | | | 0.00 | | | 1" Ice | 3.49 | 4.61 | 0.07 |
| DB844H65E-XY | A | From Face | 4.00 | 0.0000 | 124.00 | No Ice | 2.87 | 3.98 | 0.01 |
| (Verizon Existing) | | | -6.00 | | | 1/2" Ice | 3.18 | 4.29 | 0.04 |
| | | | 0.00 | | | 1" Ice | 3.49 | 4.61 | 0.07 |
| MG D3-800TX | A | From Face | 4.00 | 0.0000 | 124.00 | No Ice | 3.45 | 2.22 | 0.00 |
| (Verizon Existing) | | | -4.00 | | | 1/2" Ice | 3.80 | 2.55 | 0.02 |
| | | | 0.00 | | | 1" Ice | 4.16 | 2.89 | 0.04 |
| SBNHH-1D65B | A | From Face | 4.00 | 0.0000 | 124.00 | No Ice | 8.08 | 5.34 | 0.04 |
| (Verizon Existing) | | | 0.00 | | | 1/2" Ice | 8.53 | 5.79 | 0.09 |
| | | | 0.00 | | | 1" Ice | 9.00 | 6.26 | 0.15 |
| SBNHH-1D65B | A | From Face | 4.00 | 0.0000 | 124.00 | No Ice | 8.08 | 5.34 | 0.04 |
| (Verizon Existing) | | | 4.00 | | | 1/2" Ice | 8.53 | 5.79 | 0.09 |
| | | | 0.00 | | | 1" Ice | 9.00 | 6.26 | 0.15 |
| DB844H65E-XY | A | From Face | 4.00 | 0.0000 | 124.00 | No Ice | 2.87 | 3.98 | 0.01 |
| (Verizon Existing) | | | 6.00 | | | 1/2" Ice | 3.18 | 4.29 | 0.04 |
| | | | 0.00 | | | 1" Ice | 3.49 | 4.61 | 0.07 |
| DB844H65E-XY | A | From Face | 4.00 | 0.0000 | 124.00 | No Ice | 2.87 | 3.98 | 0.01 |
| (Verizon Existing) | | | -6.00 | | | 1/2" Ice | 3.18 | 4.29 | 0.04 |
| | | | 0.00 | | | 1" Ice | 3.49 | 4.61 | 0.07 |
| MG D3-800TX | A | From Face | 4.00 | 0.0000 | 124.00 | No Ice | 3.45 | 2.22 | 0.00 |
| (Verizon Existing) | | | -4.00 | | | 1/2" Ice | 3.80 | 2.55 | 0.02 |
| | | | 0.00 | | | 1" Ice | 4.16 | 2.89 | 0.04 |
| SBNHH-1D65B | A | From Face | 4.00 | 0.0000 | 124.00 | No Ice | 8.08 | 5.34 | 0.04 |
| (Verizon Existing) | | | 0.00 | | | 1/2" Ice | 8.53 | 5.79 | 0.09 |
| | | | 0.00 | | | 1" Ice | 9.00 | 6.26 | 0.15 |
| SBNHH-1D65B | A | From Face | 4.00 | 0.0000 | 124.00 | No Ice | 8.08 | 5.34 | 0.04 |
| (Verizon Existing) | | | 4.00 | | | 1/2" Ice | 8.53 | 5.79 | 0.09 |
| | | | 0.00 | | | 1" Ice | 9.00 | 6.26 | 0.15 |
| DB844H65E-XY | A | From Face | 4.00 | 0.0000 | 124.00 | No Ice | 2.87 | 3.98 | 0.01 |
| (Verizon Existing) | | | 6.00 | | | 1/2" Ice | 3.18 | 4.29 | 0.04 |
| | | | 0.00 | | | 1" Ice | 3.49 | 4.61 | 0.07 |

| Description | Face or Leg | Offset Type | Offsets: Horz Lateral Vert<br>ft<br>ft<br>ft | Azimuth Adjustment<br>° | Placement<br>ft | | $C_AA_A$ Front<br>$ft^2$ | $C_AA_A$ Side<br>$ft^2$ | Weight<br>K |
|---|---|---|---|---|---|---|---|---|---|
| (2) FD9R6004/2C-3L | B | From Face | 3.00 | 0.0000 | 124.00 | No Ice | 0.31 | 0.08 | 0.00 |
| Diplexer | | | 0.00 | | | 1/2" Ice | 0.39 | 0.12 | 0.01 |
| (Verizon Existing) | | | 0.00 | | | 1" Ice | 0.47 | 0.17 | 0.01 |
| (2) FD9R6004/2C-3L | C | From Face | 3.00 | 0.0000 | 124.00 | No Ice | 0.31 | 0.08 | 0.00 |
| Diplexer | | | 0.00 | | | 1/2" Ice | 0.39 | 0.12 | 0.01 |
| (Verizon Existing) | | | 0.00 | | | 1" Ice | 0.47 | 0.17 | 0.01 |
| (2) FD9R6004/2C-3L | A | From Face | 3.00 | 0.0000 | 124.00 | No Ice | 0.31 | 0.08 | 0.00 |
| Diplexer | | | 0.00 | | | 1/2" Ice | 0.39 | 0.12 | 0.01 |
| (Verizon Existing) | | | 0.00 | | | 1" Ice | 0.47 | 0.17 | 0.01 |
| RRH4x45/2x90-AWS | A | From Face | 4.00 | 0.0000 | 124.00 | No Ice | 2.58 | 1.69 | 0.08 |
| (Verizon Existing) | | | 4.00 | | | 1/2" Ice | 2.79 | 1.87 | 0.10 |
| | | | 0.00 | | | 1" Ice | 3.01 | 2.06 | 0.12 |
| RRH4x45/2x90-AWS | B | From Face | 4.00 | 0.0000 | 124.00 | No Ice | 2.58 | 1.69 | 0.08 |
| (Verizon Existing) | | | 4.00 | | | 1/2" Ice | 2.79 | 1.87 | 0.10 |
| | | | 0.00 | | | 1" Ice | 3.01 | 2.06 | 0.12 |
| RRH4x45/2x90-AWS | C | From Face | 4.00 | 0.0000 | 124.00 | No Ice | 2.58 | 1.69 | 0.08 |
| (Verizon Existing) | | | 4.00 | | | 1/2" Ice | 2.79 | 1.87 | 0.10 |
| | | | 0.00 | | | 1" Ice | 3.01 | 2.06 | 0.12 |
| RRH4x30-B13 | A | From Face | 4.00 | 0.0000 | 124.00 | No Ice | 2.16 | 1.62 | 0.06 |
| (Verizon Existing) | | | 0.00 | | | 1/2" Ice | 2.35 | 1.79 | 0.08 |
| | | | 0.00 | | | 1" Ice | 2.55 | 1.97 | 0.10 |
| RRH4x30-B13 | B | From Face | 4.00 | 0.0000 | 124.00 | No Ice | 2.16 | 1.62 | 0.06 |
| (Verizon Existing) | | | 0.00 | | | 1/2" Ice | 2.35 | 1.79 | 0.08 |
| | | | 0.00 | | | 1" Ice | 2.55 | 1.97 | 0.10 |
| RRH4x30-B13 | C | From Face | 4.00 | 0.0000 | 124.00 | No Ice | 2.16 | 1.62 | 0.06 |
| (Verizon Existing) | | | 0.00 | | | 1/2" Ice | 2.35 | 1.79 | 0.08 |
| | | | 0.00 | | | 1" Ice | 2.55 | 1.97 | 0.10 |
| RRH2x60-PCS | A | From Face | 4.00 | 0.0000 | 124.00 | No Ice | 2.15 | 1.35 | 0.06 |
| (Verizon Existing) | | | -4.00 | | | 1/2" Ice | 2.34 | 1.50 | 0.07 |
| | | | 0.00 | | | 1" Ice | 2.54 | 1.67 | 0.09 |
| RRH2x60-PCS | B | From Face | 4.00 | 0.0000 | 124.00 | No Ice | 2.15 | 1.35 | 0.06 |
| (Verizon Existing) | | | -4.00 | | | 1/2" Ice | 2.34 | 1.50 | 0.07 |
| | | | 0.00 | | | 1" Ice | 2.54 | 1.67 | 0.09 |
| RRH2x60-PCS | C | From Face | 4.00 | 0.0000 | 124.00 | No Ice | 2.15 | 1.35 | 0.06 |
| (Verizon Existing) | | | -4.00 | | | 1/2" Ice | 2.34 | 1.50 | 0.07 |
| | | | 0.00 | | | 1" Ice | 2.54 | 1.67 | 0.09 |
| RC2DC-3315-PF-48 | A | From Face | 1.00 | 0.0000 | 124.00 | No Ice | 3.01 | 1.96 | 0.03 |
| (Verizon Existing) | | | 1.00 | | | 1/2" Ice | 3.23 | 2.15 | 0.05 |
| | | | 0.00 | | | 1" Ice | 3.46 | 2.35 | 0.08 |
| RC2DC-3315-PF-48 | B | From Face | 1.00 | 0.0000 | 124.00 | No Ice | 3.01 | 1.96 | 0.03 |
| (Verizon Existing) | | | 1.00 | | | 1/2" Ice | 3.23 | 2.15 | 0.05 |
| | | | 0.00 | | | 1" Ice | 3.46 | 2.35 | 0.08 |
| Low Profile Platform | C | None | | 0.0000 | 124.00 | No Ice | 15.70 | 15.70 | 1.30 |
| (Verizon Existing) | | | | | | 1/2" Ice | 20.10 | 20.10 | 1.76 |
| | | | | | | 1" Ice | 24.50 | 24.50 | 2.23 |
| 531-70HD | C | From Face | 3.00 | 0.0000 | 114.00 | No Ice | 6.00 | 6.00 | 0.04 |
| (Eversource Existing) | | | -6.00 | | | 1/2" Ice | 6.90 | 6.90 | 0.05 |
| | | | 0.00 | | | 1" Ice | 7.80 | 7.80 | 0.06 |
| DB586-Y | C | From Face | 3.00 | 0.0000 | 114.00 | No Ice | 1.01 | 1.01 | 0.01 |
| (Eversource Existing) | | | 5.00 | | | 1/2" Ice | 1.28 | 1.28 | 0.02 |
| | | | 2.50 | | | 1" Ice | 1.56 | 1.56 | 0.03 |
| DB586-Y | C | From Face | 3.00 | 0.0000 | 114.00 | No Ice | 1.01 | 1.01 | 0.01 |
| (Eversource Existing) | | | 5.00 | | | 1/2" Ice | 1.28 | 1.28 | 0.02 |
| | | | -2.50 | | | 1" Ice | 1.56 | 1.56 | 0.03 |
| ANT150F2 | C | From Face | 3.00 | 0.0000 | 114.00 | No Ice | 1.29 | 1.29 | 0.02 |
| (Eversource Existing) | | | -3.00 | | | 1/2" Ice | 1.60 | 1.60 | 0.03 |
| | | | 2.50 | | | 1" Ice | 1.91 | 1.91 | 0.04 |

| Description | Face or Leg | Offset Type | Offsets: Horz Lateral Vert<br>ft<br>ft<br>ft | Azimuth Adjustment<br>° | Placement<br>ft | | $C_AA_A$ Front<br>$ft^2$ | $C_AA_A$ Side<br>$ft^2$ | Weight<br>K |
|---|---|---|---|---|---|---|---|---|---|
| Tower Top Amplifier | C | From Face | 3.00 | 0.0000 | 114.00 | No Ice | 2.67 | 1.03 | 0.04 |
| (Eversource Existing) | | | 5.00 | | | 1/2" Ice | 2.87 | 1.17 | 0.06 |
| | | | 0.00 | | | 1" Ice | 3.08 | 1.32 | 0.08 |
| Low Profile Platform | C | None | | 0.0000 | 114.00 | No Ice | 15.70 | 15.70 | 1.30 |
| | | | | | | 1/2" Ice | 20.10 | 20.10 | 1.76 |
| | | | | | | 1" Ice | 24.50 | 24.50 | 2.23 |
| GPS | A | From Face | 1.50 | 0.0000 | 51.50 | No Ice | 1.00 | 1.00 | 0.01 |
| | | | 0.00 | | | 1/2" Ice | 1.50 | 1.50 | 0.01 |
| | | | 0.00 | | | 1" Ice | 2.00 | 2.00 | 0.02 |
| GPS | B | From Face | 1.50 | 0.0000 | 51.50 | No Ice | 1.00 | 1.00 | 0.01 |
| | | | 0.00 | | | 1/2" Ice | 1.50 | 1.50 | 0.01 |
| | | | 0.00 | | | 1" Ice | 2.00 | 2.00 | 0.02 |
| GPS | C | From Face | 1.50 | 0.0000 | 51.50 | No Ice | 1.00 | 1.00 | 0.01 |
| | | | 0.00 | | | 1/2" Ice | 1.50 | 1.50 | 0.01 |
| | | | 0.00 | | | 1" Ice | 2.00 | 2.00 | 0.02 |

## Dishes

| Description | Face or Leg | Dish Type | Offset Type | Offsets: Horz Lateral Vert<br>ft | Azimuth Adjustment<br>° | 3 dB Beam Width<br>° | Elevation<br>ft | Outside Diameter<br>ft | | Aperture Area<br>$ft^2$ | Weight<br>K |
|---|---|---|---|---|---|---|---|---|---|---|---|
| 4 FT DISH | A | Paraboloid | From | 1.00 | Worst | | 160.00 | 4.00 | No Ice | 12.56 | 0.17 |
| (Town Existing) | | w/Shroud (HP) | Leg | 0.00 | | | | | 1/2" Ice | 13.09 | 0.24 |
| | | | | 0.00 | | | | | 1" Ice | 13.62 | 0.30 |
| 4 FT DISH | B | Paraboloid | From | 1.00 | Worst | | 160.00 | 4.00 | No Ice | 12.56 | 0.17 |
| (Town Existing) | | w/Shroud (HP) | Leg | 0.00 | | | | | 1/2" Ice | 13.09 | 0.24 |
| | | | | 0.00 | | | | | 1" Ice | 13.62 | 0.30 |
| 2 FT DISH | C | Paraboloid | From | 1.00 | Worst | | 160.00 | 2.00 | No Ice | 3.14 | 0.03 |
| (Town Existing) | | w/Shroud (HP) | Leg | 0.00 | | | | | 1/2" Ice | 3.41 | 0.04 |
| | | | | 0.00 | | | | | 1" Ice | 3.67 | 0.06 |
| A-Ant-23G-2-C | A | Paraboloid | From | 3.10 | Worst | | 154.00 | 2.17 | No Ice | 3.72 | 0.03 |
| (Clearwire Existing) | | w/Radome | Face | -2.52 | | | | | 1/2" Ice | 4.01 | 0.05 |
| | | | | 2.00 | | | | | 1" Ice | 4.30 | 0.07 |
| A-Ant-23G-2-C | C | Paraboloid | From | 3.80 | Worst | | 154.00 | 2.17 | No Ice | 3.72 | 0.03 |
| (Clearwire Existing) | | w/Radome | Face | -1.24 | | | | | 1/2" Ice | 4.01 | 0.05 |
| | | | | 2.00 | | | | | 1" Ice | 4.30 | 0.07 |

## Tower Pressures - No Ice

$G_H = 1.100$

| Section Elevation<br>ft | z<br>ft | $K_Z$ | $q_z$<br>psf | $A_G$<br>$ft^2$ | Face | $A_F$<br>$ft^2$ | $A_R$<br>$ft^2$ | $A_{leg}$<br>$ft^2$ | Leg %<br> | $C_AA_A$ In Face<br>$ft^2$ | $C_AA_A$ Out Face<br>$ft^2$ |
|---|---|---|---|---|---|---|---|---|---|---|---|

| Section Elevation ft | z ft | $K_Z$ | $q_z$ psf | $A_G$ $ft^2$ | Face | $A_F$ $ft^2$ | $A_R$ $ft^2$ | $A_{leg}$ $ft^2$ | Leg % | $C_AA_A$ In Face $ft^2$ | $C_AA_A$ Out Face $ft^2$ |
|---|---|---|---|---|---|---|---|---|---|---|---|
| L1 | 147.50 | 1.374 | 33 | 138.083 | A | 0.000 | 138.083 | 138.083 | 100.00 | 0.000 | 0.000 |
| 164.00-131.50 | | | | | B | 0.000 | 138.083 | | 100.00 | 14.850 | 0.000 |
| | | | | | C | 0.000 | 138.083 | | 100.00 | 0.000 | 0.000 |
| L2 | 125.34 | 1.327 | 32 | 56.604 | A | 0.000 | 56.604 | 56.604 | 100.00 | 0.000 | 0.000 |
| 131.50-119.29 | | | | | B | 0.000 | 56.604 | | 100.00 | 14.505 | 0.000 |
| | | | | | C | 0.000 | 56.604 | | 100.00 | 0.000 | 0.000 |
| L3 | 98.82 | 1.262 | 30 | 202.502 | A | 0.000 | 202.502 | 202.502 | 100.00 | 0.000 | 0.000 |
| 119.29-78.79 | | | | | B | 0.000 | 202.502 | | 100.00 | 48.114 | 0.000 |
| | | | | | C | 0.000 | 202.502 | | 100.00 | 0.000 | 0.000 |
| L4 78.79-39.88 | 59.30 | 1.134 | 27 | 216.935 | A | 0.000 | 216.935 | 216.935 | 100.00 | 0.000 | 0.000 |
| | | | | | B | 0.000 | 216.935 | | 100.00 | 50.095 | 0.000 |
| | | | | | C | 0.000 | 216.935 | | 100.00 | 0.000 | 0.000 |
| L5 39.88-1.50 | 21.06 | 0.912 | 22 | 234.708 | A | 0.000 | 234.708 | 234.708 | 100.00 | 0.000 | 0.000 |
| | | | | | B | 0.000 | 234.708 | | 100.00 | 50.249 | 0.000 |
| | | | | | C | 0.000 | 234.708 | | 100.00 | 0.000 | 0.000 |

## Tower Pressure - With Ice

$G_H$ = 1.100

| Section Elevation ft | z ft | $K_Z$ | $q_z$ psf | $t_Z$ in | $A_G$ $ft^2$ | Face | $A_F$ $ft^2$ | $A_R$ $ft^2$ | $A_{leg}$ $ft^2$ | Leg % | $C_AA_A$ In Face $ft^2$ | $C_AA_A$ Out Face $ft^2$ |
|---|---|---|---|---|---|---|---|---|---|---|---|---|
| L1 | 147.50 | 1.374 | 8 | 2.1779 | 149.880 | A | 0.000 | 149.880 | 149.880 | 100.00 | 0.000 | 0.000 |
| 164.00-131.50 | | | | | | B | 0.000 | 149.880 | | 100.00 | 25.368 | 0.000 |
| | | | | | | C | 0.000 | 149.880 | | 100.00 | 0.000 | 0.000 |
| L2 | 125.34 | 1.327 | 8 | 2.1427 | 60.964 | A | 0.000 | 60.964 | 60.964 | 100.00 | 0.000 | 0.000 |
| 131.50-119.29 | | | | | | B | 0.000 | 60.964 | | 100.00 | 24.672 | 0.000 |
| | | | | | | C | 0.000 | 60.964 | | 100.00 | 0.000 | 0.000 |
| L3 119.29-78.79 | 98.82 | 1.262 | 8 | 2.0923 | 216.966 | A | 0.000 | 216.966 | 216.966 | 100.00 | 0.000 | 0.000 |
| | | | | | | B | 0.000 | 216.966 | | 100.00 | 81.837 | 0.000 |
| | | | | | | C | 0.000 | 216.966 | | 100.00 | 0.000 | 0.000 |
| L4 78.79-39.88 | 59.30 | 1.134 | 7 | 1.9882 | 230.504 | A | 0.000 | 230.504 | 230.504 | 100.00 | 0.000 | 0.000 |
| | | | | | | B | 0.000 | 230.504 | | 100.00 | 89.050 | 0.000 |
| | | | | | | C | 0.000 | 230.504 | | 100.00 | 0.000 | 0.000 |
| L5 39.88-1.50 | 21.06 | 0.912 | 6 | 1.7926 | 247.426 | A | 0.000 | 247.426 | 247.426 | 100.00 | 0.000 | 0.000 |
| | | | | | | B | 0.000 | 247.426 | | 100.00 | 96.491 | 0.000 |
| | | | | | | C | 0.000 | 247.426 | | 100.00 | 0.000 | 0.000 |

## Tower Pressure - Service

$G_H$ = 1.100

| Section Elevation ft | z ft | $K_Z$ | $q_z$ psf | $A_G$ $ft^2$ | Face | $A_F$ $ft^2$ | $A_R$ $ft^2$ | $A_{leg}$ $ft^2$ | Leg % | $C_AA_A$ In Face $ft^2$ | $C_AA_A$ Out Face $ft^2$ |
|---|---|---|---|---|---|---|---|---|---|---|---|
| L1 | 147.50 | 1.374 | 11 | 138.083 | A | 0.000 | 138.083 | 138.083 | 100.00 | 0.000 | 0.000 |
| 164.00-131.50 | | | | | B | 0.000 | 138.083 | | 100.00 | 14.850 | 0.000 |
| | | | | | C | 0.000 | 138.083 | | 100.00 | 0.000 | 0.000 |
| L2 | 125.34 | 1.327 | 10 | 56.604 | A | 0.000 | 56.604 | 56.604 | 100.00 | 0.000 | 0.000 |

| Section Elevation ft | z ft | $K_Z$ | $q_z$ psf | $A_G$ $ft^2$ | Face | $A_F$ $ft^2$ | $A_R$ $ft^2$ | $A_{leg}$ $ft^2$ | Leg % | $C_AA_A$ In Face $ft^2$ | $C_AA_A$ Out Face $ft^2$ |
|---|---|---|---|---|---|---|---|---|---|---|---|
| 131.50-119.29 | | | | | B | 0.000 | 56.604 | | 100.00 | 14.505 | 0.000 |
| | | | | | C | 0.000 | 56.604 | | 100.00 | 0.000 | 0.000 |
| L3 | 98.82 | 1.262 | 10 | 202.502 | A | 0.000 | 202.502 | 202.502 | 100.00 | 0.000 | 0.000 |
| 119.29-78.79 | | | | | B | 0.000 | 202.502 | | 100.00 | 48.114 | 0.000 |
| | | | | | C | 0.000 | 202.502 | | 100.00 | 0.000 | 0.000 |
| L4 78.79-39.88 | 59.30 | 1.134 | 9 | 216.935 | A | 0.000 | 216.935 | 216.935 | 100.00 | 0.000 | 0.000 |
| | | | | | B | 0.000 | 216.935 | | 100.00 | 50.095 | 0.000 |
| | | | | | C | 0.000 | 216.935 | | 100.00 | 0.000 | 0.000 |
| L5 39.88-1.50 | 21.06 | 0.912 | 7 | 234.708 | A | 0.000 | 234.708 | 234.708 | 100.00 | 0.000 | 0.000 |
| | | | | | B | 0.000 | 234.708 | | 100.00 | 50.249 | 0.000 |
| | | | | | C | 0.000 | 234.708 | | 100.00 | 0.000 | 0.000 |

## Tower Forces - No Ice - Wind Normal To Face

| Section Elevation ft | Add Weight K | Self Weight K | Face | e | $C_F$ | $q_z$ psf | $D_F$ | $D_R$ | $A_E$ $ft^2$ | F K | w plf | Ctrl. Face |
|---|---|---|---|---|---|---|---|---|---|---|---|---|
| L1 | 0.87 | 5.47 | A | 1 | 0.65 | 33 | 1 | 1 | 138.083 | 3.28 | 100.89 | C |
| 164.00-131.50 | | | B | 1 | 0.65 | | 1 | 1 | 138.083 | | | |
| | | | C | 1 | 0.65 | | 1 | 1 | 138.083 | | | |
| L2 | 0.72 | 2.69 | A | 1 | 0.65 | 32 | 1 | 1 | 56.604 | 1.30 | 106.42 | C |
| 131.50-119.29 | | | B | 1 | 0.65 | | 1 | 1 | 56.604 | | | |
| | | | C | 1 | 0.65 | | 1 | 1 | 56.604 | | | |
| L3 | 2.77 | 12.76 | A | 1 | 0.65 | 30 | 1 | 1 | 202.502 | 4.42 | 109.03 | C |
| 119.29-78.79 | | | B | 1 | 0.65 | | 1 | 1 | 202.502 | | | |
| | | | C | 1 | 0.65 | | 1 | 1 | 202.502 | | | |
| L4 | 2.70 | 18.55 | A | 1 | 0.65 | 27 | 1 | 1 | 216.935 | 4.24 | 108.95 | C |
| 78.79-39.88 | | | B | 1 | 0.65 | | 1 | 1 | 216.935 | | | |
| | | | C | 1 | 0.65 | | 1 | 1 | 216.935 | | | |
| L5 39.88-1.50 | 2.32 | 20.49 | A | 1 | 0.65 | 22 | 1 | 1 | 234.708 | 3.71 | 96.79 | C |
| | | | B | 1 | 0.65 | | 1 | 1 | 234.708 | | | |
| | | | C | 1 | 0.65 | | 1 | 1 | 234.708 | | | |
| Sum Weight: | 9.38 | 59.96 | | | | | | OTM | 1387.05 kip-ft | 16.95 | | |

## Tower Forces - No Ice - Wind 60 To Face

| Section Elevation ft | Add Weight K | Self Weight K | Face | e | $C_F$ | $q_z$ psf | $D_F$ | $D_R$ | $A_E$ $ft^2$ | F K | w plf | Ctrl. Face |
|---|---|---|---|---|---|---|---|---|---|---|---|---|
| L1 | 0.87 | 5.47 | A | 1 | 0.65 | 33 | 1 | 1 | 138.083 | 3.28 | 100.89 | C |
| 164.00-131.50 | | | B | 1 | 0.65 | | 1 | 1 | 138.083 | | | |
| | | | C | 1 | 0.65 | | 1 | 1 | 138.083 | | | |
| L2 | 0.72 | 2.69 | A | 1 | 0.65 | 32 | 1 | 1 | 56.604 | 1.30 | 106.42 | C |
| 131.50-119.29 | | | B | 1 | 0.65 | | 1 | 1 | 56.604 | | | |
| | | | C | 1 | 0.65 | | 1 | 1 | 56.604 | | | |
| L3 | 2.77 | 12.76 | A | 1 | 0.65 | 30 | 1 | 1 | 202.502 | 4.42 | 109.03 | C |
| 119.29-78.79 | | | B | 1 | 0.65 | | 1 | 1 | 202.502 | | | |
| | | | C | 1 | 0.65 | | 1 | 1 | 202.502 | | | |

| Section Elevation ft | Add Weight K | Self Weight K | Face | e | $C_F$ | $q_z$ psf | $D_F$ | $D_R$ | $A_E$ $ft^2$ | F K | w plf | Ctrl. Face |
|---|---|---|---|---|---|---|---|---|---|---|---|---|
| L4 | 2.70 | 18.55 | A | 1 | 0.65 | 27 | 1 | 1 | 216.935 | 4.24 | 108.95 | C |
| 78.79-39.88 | | | B | 1 | 0.65 | | 1 | 1 | 216.935 | | | |
| | | | C | 1 | 0.65 | | 1 | 1 | 216.935 | | | |
| L5 39.88-1.50 | 2.32 | 20.49 | A | 1 | 0.65 | 22 | 1 | 1 | 234.708 | 3.71 | 96.79 | C |
| | | | B | 1 | 0.65 | | 1 | 1 | 234.708 | | | |
| | | | C | 1 | 0.65 | | 1 | 1 | 234.708 | | | |
| Sum Weight: | 9.38 | 59.96 | | | | | | OTM | 1387.05 kip-ft | 16.95 | | |

## Tower Forces - No Ice - Wind 90 To Face

| Section Elevation ft | Add Weight K | Self Weight K | Face | e | $C_F$ | $q_z$ psf | $D_F$ | $D_R$ | $A_E$ $ft^2$ | F K | w plf | Ctrl. Face |
|---|---|---|---|---|---|---|---|---|---|---|---|---|
| L1 | 0.87 | 5.47 | A | 1 | 0.65 | 33 | 1 | 1 | 138.083 | 3.28 | 100.89 | C |
| 164.00-131.50 | | | B | 1 | 0.65 | | 1 | 1 | 138.083 | | | |
| | | | C | 1 | 0.65 | | 1 | 1 | 138.083 | | | |
| L2 | 0.72 | 2.69 | A | 1 | 0.65 | 32 | 1 | 1 | 56.604 | 1.30 | 106.42 | C |
| 131.50-119.29 | | | B | 1 | 0.65 | | 1 | 1 | 56.604 | | | |
| | | | C | 1 | 0.65 | | 1 | 1 | 56.604 | | | |
| L3 | 2.77 | 12.76 | A | 1 | 0.65 | 30 | 1 | 1 | 202.502 | 4.42 | 109.03 | C |
| 119.29-78.79 | | | B | 1 | 0.65 | | 1 | 1 | 202.502 | | | |
| | | | C | 1 | 0.65 | | 1 | 1 | 202.502 | | | |
| L4 | 2.70 | 18.55 | A | 1 | 0.65 | 27 | 1 | 1 | 216.935 | 4.24 | 108.95 | C |
| 78.79-39.88 | | | B | 1 | 0.65 | | 1 | 1 | 216.935 | | | |
| | | | C | 1 | 0.65 | | 1 | 1 | 216.935 | | | |
| L5 39.88-1.50 | 2.32 | 20.49 | A | 1 | 0.65 | 22 | 1 | 1 | 234.708 | 3.71 | 96.79 | C |
| | | | B | 1 | 0.65 | | 1 | 1 | 234.708 | | | |
| | | | C | 1 | 0.65 | | 1 | 1 | 234.708 | | | |
| Sum Weight: | 9.38 | 59.96 | | | | | | OTM | 1387.05 kip-ft | 16.95 | | |

## Tower Forces - With Ice - Wind Normal To Face

| Section Elevation ft | Add Weight K | Self Weight K | Face | e | $C_F$ | $q_z$ psf | $D_F$ | $D_R$ | $A_E$ $ft^2$ | F K | w plf | Ctrl. Face |
|---|---|---|---|---|---|---|---|---|---|---|---|---|
| L1 | 1.24 | 10.05 | A | 1 | 1.2 | 8 | 1 | 1 | 149.880 | 1.65 | 50.82 | C |
| 164.00-131.50 | | | B | 1 | 1.2 | | 1 | 1 | 149.880 | | | |
| | | | C | 1 | 1.2 | | 1 | 1 | 149.880 | | | |
| L2 | 1.08 | 4.53 | A | 1 | 1.2 | 8 | 1 | 1 | 60.964 | 0.65 | 53.19 | C |
| 131.50-119.29 | | | B | 1 | 1.2 | | 1 | 1 | 60.964 | | | |
| | | | C | 1 | 1.2 | | 1 | 1 | 60.964 | | | |
| L3 | 3.94 | 19.16 | A | 1 | 1.2 | 8 | 1 | 1 | 216.966 | 2.20 | 54.21 | C |
| 119.29-78.79 | | | B | 1 | 1.2 | | 1 | 1 | 216.966 | | | |
| | | | C | 1 | 1.2 | | 1 | 1 | 216.966 | | | |
| L4 | 3.93 | 25.03 | A | 1 | 1.2 | 7 | 1 | 1 | 230.504 | 2.09 | 53.72 | C |

| Section Elevation ft | Add Weight K | Self Weight K | Face | e | $C_F$ | $q_z$ psf | $D_F$ | $D_R$ | $A_E$ $ft^2$ | F K | w plf | Ctrl. Face |
|---|---|---|---|---|---|---|---|---|---|---|---|---|
| 78.79-39.88 | | | B | 1 | 1.2 | | 1 | 1 | 230.504 | | | |
| | | | C | 1 | 1.2 | | 1 | 1 | 230.504 | | | |
| L5 39.88-1.50 | 3.57 | 26.78 | A | 1 | 1.2 | 6 | 1 | 1 | 247.426 | 1.82 | 47.35 | C |
| | | | B | 1 | 1.2 | | 1 | 1 | 247.426 | | | |
| | | | C | 1 | 1.2 | | 1 | 1 | 247.426 | | | |
| Sum Weight: | 13.77 | 85.55 | | | | | | OTM | 691.54 kip-ft | 8.40 | | |

## Tower Forces - With Ice - Wind 60 To Face

| Section Elevation ft | Add Weight K | Self Weight K | Face | e | $C_F$ | $q_z$ psf | $D_F$ | $D_R$ | $A_E$ $ft^2$ | F K | w plf | Ctrl. Face |
|---|---|---|---|---|---|---|---|---|---|---|---|---|
| L1 | 1.24 | 10.05 | A | 1 | 1.2 | 8 | 1 | 1 | 149.880 | 1.65 | 50.82 | C |
| 164.00-131.50 | | | B | 1 | 1.2 | | 1 | 1 | 149.880 | | | |
| | | | C | 1 | 1.2 | | 1 | 1 | 149.880 | | | |
| L2 | 1.08 | 4.53 | A | 1 | 1.2 | 8 | 1 | 1 | 60.964 | 0.65 | 53.19 | C |
| 131.50-119.29 | | | B | 1 | 1.2 | | 1 | 1 | 60.964 | | | |
| | | | C | 1 | 1.2 | | 1 | 1 | 60.964 | | | |
| L3 | 3.94 | 19.16 | A | 1 | 1.2 | 8 | 1 | 1 | 216.966 | 2.20 | 54.21 | C |
| 119.29-78.79 | | | B | 1 | 1.2 | | 1 | 1 | 216.966 | | | |
| | | | C | 1 | 1.2 | | 1 | 1 | 216.966 | | | |
| L4 | 3.93 | 25.03 | A | 1 | 1.2 | 7 | 1 | 1 | 230.504 | 2.09 | 53.72 | C |
| 78.79-39.88 | | | B | 1 | 1.2 | | 1 | 1 | 230.504 | | | |
| | | | C | 1 | 1.2 | | 1 | 1 | 230.504 | | | |
| L5 39.88-1.50 | 3.57 | 26.78 | A | 1 | 1.2 | 6 | 1 | 1 | 247.426 | 1.82 | 47.35 | C |
| | | | B | 1 | 1.2 | | 1 | 1 | 247.426 | | | |
| | | | C | 1 | 1.2 | | 1 | 1 | 247.426 | | | |
| Sum Weight: | 13.77 | 85.55 | | | | | | OTM | 691.54 kip-ft | 8.40 | | |

## Tower Forces - With Ice - Wind 90 To Face

| Section Elevation ft | Add Weight K | Self Weight K | Face | e | $C_F$ | $q_z$ psf | $D_F$ | $D_R$ | $A_E$ $ft^2$ | F K | w plf | Ctrl. Face |
|---|---|---|---|---|---|---|---|---|---|---|---|---|
| L1 | 1.24 | 10.05 | A | 1 | 1.2 | 8 | 1 | 1 | 149.880 | 1.65 | 50.82 | C |
| 164.00-131.50 | | | B | 1 | 1.2 | | 1 | 1 | 149.880 | | | |
| | | | C | 1 | 1.2 | | 1 | 1 | 149.880 | | | |
| L2 | 1.08 | 4.53 | A | 1 | 1.2 | 8 | 1 | 1 | 60.964 | 0.65 | 53.19 | C |
| 131.50-119.29 | | | B | 1 | 1.2 | | 1 | 1 | 60.964 | | | |
| | | | C | 1 | 1.2 | | 1 | 1 | 60.964 | | | |
| L3 | 3.94 | 19.16 | A | 1 | 1.2 | 8 | 1 | 1 | 216.966 | 2.20 | 54.21 | C |
| 119.29-78.79 | | | B | 1 | 1.2 | | 1 | 1 | 216.966 | | | |
| | | | C | 1 | 1.2 | | 1 | 1 | 216.966 | | | |
| L4 | 3.93 | 25.03 | A | 1 | 1.2 | 7 | 1 | 1 | 230.504 | 2.09 | 53.72 | C |
| 78.79-39.88 | | | B | 1 | 1.2 | | 1 | 1 | 230.504 | | | |

| Section Elevation ft | Add Weight K | Self Weight K | Face | e | $C_F$ | $q_z$ psf | $D_F$ | $D_R$ | $A_E$ $ft^2$ | F K | w plf | Ctrl. Face |
|---|---|---|---|---|---|---|---|---|---|---|---|---|
| | | | C | 1 | 1.2 | | 1 | 1 | 230.504 | | | |
| L5 39.88-1.50 | 3.57 | 26.78 | A | 1 | 1.2 | 6 | 1 | 1 | 247.426 | 1.82 | 47.35 | C |
| | | | B | 1 | 1.2 | | 1 | 1 | 247.426 | | | |
| | | | C | 1 | 1.2 | | 1 | 1 | 247.426 | | | |
| Sum Weight: | 13.77 | 85.55 | | | | | | OTM | 691.54 kip-ft | 8.40 | | |

## Tower Forces - Service - Wind Normal To Face

| Section Elevation ft | Add Weight K | Self Weight K | Face | e | $C_F$ | $q_z$ psf | $D_F$ | $D_R$ | $A_E$ $ft^2$ | F K | w plf | Ctrl. Face |
|---|---|---|---|---|---|---|---|---|---|---|---|---|
| L1 | 0.87 | 5.47 | A | 1 | 0.65 | 11 | 1 | 1 | 138.083 | 1.06 | 32.67 | C |
| 164.00-131.50 | | | B | 1 | 0.65 | | 1 | 1 | 138.083 | | | |
| | | | C | 1 | 0.65 | | 1 | 1 | 138.083 | | | |
| L2 | 0.72 | 2.69 | A | 1 | 0.65 | 10 | 1 | 1 | 56.604 | 0.42 | 34.46 | C |
| 131.50-119.29 | | | B | 1 | 0.65 | | 1 | 1 | 56.604 | | | |
| | | | C | 1 | 0.65 | | 1 | 1 | 56.604 | | | |
| L3 | 2.77 | 12.76 | A | 1 | 0.65 | 10 | 1 | 1 | 202.502 | 1.43 | 35.31 | C |
| 119.29-78.79 | | | B | 1 | 0.65 | | 1 | 1 | 202.502 | | | |
| | | | C | 1 | 0.65 | | 1 | 1 | 202.502 | | | |
| L4 | 2.70 | 18.55 | A | 1 | 0.65 | 9 | 1 | 1 | 216.935 | 1.37 | 35.28 | C |
| 78.79-39.88 | | | B | 1 | 0.65 | | 1 | 1 | 216.935 | | | |
| | | | C | 1 | 0.65 | | 1 | 1 | 216.935 | | | |
| L5 39.88-1.50 | 2.32 | 20.49 | A | 1 | 0.65 | 7 | 1 | 1 | 234.708 | 1.20 | 31.34 | C |
| | | | B | 1 | 0.65 | | 1 | 1 | 234.708 | | | |
| | | | C | 1 | 0.65 | | 1 | 1 | 234.708 | | | |
| Sum Weight: | 9.38 | 59.96 | | | | | | OTM | 449.19 kip-ft | 5.49 | | |

## Tower Forces - Service - Wind 60 To Face

| Section Elevation ft | Add Weight K | Self Weight K | Face | e | $C_F$ | $q_z$ psf | $D_F$ | $D_R$ | $A_E$ $ft^2$ | F K | w plf | Ctrl. Face |
|---|---|---|---|---|---|---|---|---|---|---|---|---|
| L1 | 0.87 | 5.47 | A | 1 | 0.65 | 11 | 1 | 1 | 138.083 | 1.06 | 32.67 | C |
| 164.00-131.50 | | | B | 1 | 0.65 | | 1 | 1 | 138.083 | | | |
| | | | C | 1 | 0.65 | | 1 | 1 | 138.083 | | | |
| L2 | 0.72 | 2.69 | A | 1 | 0.65 | 10 | 1 | 1 | 56.604 | 0.42 | 34.46 | C |
| 131.50-119.29 | | | B | 1 | 0.65 | | 1 | 1 | 56.604 | | | |
| | | | C | 1 | 0.65 | | 1 | 1 | 56.604 | | | |
| L3 | 2.77 | 12.76 | A | 1 | 0.65 | 10 | 1 | 1 | 202.502 | 1.43 | 35.31 | C |
| 119.29-78.79 | | | B | 1 | 0.65 | | 1 | 1 | 202.502 | | | |
| | | | C | 1 | 0.65 | | 1 | 1 | 202.502 | | | |
| L4 | 2.70 | 18.55 | A | 1 | 0.65 | 9 | 1 | 1 | 216.935 | 1.37 | 35.28 | C |
| 78.79-39.88 | | | B | 1 | 0.65 | | 1 | 1 | 216.935 | | | |
| | | | C | 1 | 0.65 | | 1 | 1 | 216.935 | | | |

| Section Elevation ft | Add Weight K | Self Weight K | Face | e | $C_F$ | $q_z$ psf | $D_F$ | $D_R$ | $A_E$ $ft^2$ | F K | w plf | Ctrl. Face |
|---|---|---|---|---|---|---|---|---|---|---|---|---|
| L5 39.88-1.50 | 2.32 | 20.49 | A | 1 | 0.65 | 7 | 1 | 1 | 234.708 | 1.20 | 31.34 | C |
| | | | B | 1 | 0.65 | | 1 | 1 | 234.708 | | | |
| | | | C | 1 | 0.65 | | 1 | 1 | 234.708 | | | |
| Sum Weight: | 9.38 | 59.96 | | | | | | OTM | 449.19 kip-ft | 5.49 | | |

## Tower Forces - Service - Wind 90 To Face

| Section Elevation ft | Add Weight K | Self Weight K | Face | e | $C_F$ | $q_z$ psf | $D_F$ | $D_R$ | $A_E$ $ft^2$ | F K | w plf | Ctrl. Face |
|---|---|---|---|---|---|---|---|---|---|---|---|---|
| L1 | 0.87 | 5.47 | A | 1 | 0.65 | 11 | 1 | 1 | 138.083 | 1.06 | 32.67 | C |
| 164.00-131.50 | | | B | 1 | 0.65 | | 1 | 1 | 138.083 | | | |
| | | | C | 1 | 0.65 | | 1 | 1 | 138.083 | | | |
| L2 | 0.72 | 2.69 | A | 1 | 0.65 | 10 | 1 | 1 | 56.604 | 0.42 | 34.46 | C |
| 131.50-119.29 | | | B | 1 | 0.65 | | 1 | 1 | 56.604 | | | |
| | | | C | 1 | 0.65 | | 1 | 1 | 56.604 | | | |
| L3 | 2.77 | 12.76 | A | 1 | 0.65 | 10 | 1 | 1 | 202.502 | 1.43 | 35.31 | C |
| 119.29-78.79 | | | B | 1 | 0.65 | | 1 | 1 | 202.502 | | | |
| | | | C | 1 | 0.65 | | 1 | 1 | 202.502 | | | |
| L4 | 2.70 | 18.55 | A | 1 | 0.65 | 9 | 1 | 1 | 216.935 | 1.37 | 35.28 | C |
| 78.79-39.88 | | | B | 1 | 0.65 | | 1 | 1 | 216.935 | | | |
| | | | C | 1 | 0.65 | | 1 | 1 | 216.935 | | | |
| L5 39.88-1.50 | 2.32 | 20.49 | A | 1 | 0.65 | 7 | 1 | 1 | 234.708 | 1.20 | 31.34 | C |
| | | | B | 1 | 0.65 | | 1 | 1 | 234.708 | | | |
| | | | C | 1 | 0.65 | | 1 | 1 | 234.708 | | | |
| Sum Weight: | 9.38 | 59.96 | | | | | | OTM | 449.19 kip-ft | 5.49 | | |

## Force Totals

| Load Case | Vertical Forces K | Sum of Forces X K | Sum of Forces Z K | Sum of Overturning Moments, $M_x$ kip-ft | Sum of Overturning Moments, $M_z$ kip-ft | Sum of Torques kip-ft |
|---|---|---|---|---|---|---|
| Leg Weight | 59.96 | | | | | |
| Bracing Weight | 0.00 | | | | | |
| Total Member Self-Weight | 59.96 | | | -2.55 | -0.48 | |
| Total Weight | 84.31 | | | -2.55 | -0.48 | |
| Wind 0 deg - No Ice | | -0.14 | -33.31 | -3678.27 | 15.39 | -9.95 |
| Wind 30 deg - No Ice | | 16.64 | -28.78 | -3177.88 | -1838.70 | -10.90 |
| Wind 60 deg - No Ice | | 28.96 | -16.54 | -1826.66 | -3200.25 | -8.92 |
| Wind 90 deg - No Ice | | 33.52 | 0.14 | 13.32 | -3704.42 | -4.55 |
| Wind 120 deg - No Ice | | 29.10 | 16.77 | 1849.06 | -3216.12 | 1.03 |
| Wind 150 deg - No Ice | | 16.88 | 28.91 | 3188.65 | -1866.20 | 6.34 |
| Wind 180 deg - No Ice | | 0.14 | 33.31 | 3673.17 | -16.36 | 9.95 |
| Wind 210 deg - No Ice | | -16.64 | 28.78 | 3172.78 | 1837.74 | 10.90 |
| Wind 240 deg - No Ice | | -28.96 | 16.54 | 1821.56 | 3199.28 | 8.92 |

| Load Case | Vertical Forces K | Sum of Forces X K | Sum of Forces Z K | Sum of Overturning Moments, $M_x$ kip-ft | Sum of Overturning Moments, $M_z$ kip-ft | Sum of Torques kip-ft |
|---|---|---|---|---|---|---|
| Wind 270 deg - No Ice | | -33.52 | -0.14 | -18.42 | 3703.45 | 4.55 |
| Wind 300 deg - No Ice | | -29.10 | -16.77 | -1854.16 | 3215.15 | -1.03 |
| Wind 330 deg - No Ice | | -16.88 | -28.91 | -3193.75 | 1865.23 | -6.34 |
| Member Ice | 25.59 | | | | | |
| Total Weight Ice | 144.99 | | | -17.55 | 7.01 | |
| Wind 0 deg - Ice | | -0.03 | -15.01 | -1636.64 | 11.06 | -3.95 |
| Wind 30 deg - Ice | | 7.50 | -12.98 | -1417.70 | -802.68 | -4.05 |
| Wind 60 deg - Ice | | 13.03 | -7.48 | -823.59 | -1399.46 | -3.06 |
| Wind 90 deg - Ice | | 15.06 | 0.03 | -13.51 | -1619.38 | -1.25 |
| Wind 120 deg - Ice | | 13.06 | 7.54 | 795.49 | -1403.51 | 0.89 |
| Wind 150 deg - Ice | | 7.56 | 13.02 | 1386.64 | -809.69 | 2.79 |
| Wind 180 deg - Ice | | 0.03 | 15.01 | 1601.53 | 2.96 | 3.95 |
| Wind 210 deg - Ice | | -7.50 | 12.98 | 1382.59 | 816.70 | 4.05 |
| Wind 240 deg - Ice | | -13.03 | 7.48 | 788.48 | 1413.48 | 3.06 |
| Wind 270 deg - Ice | | -15.06 | -0.03 | -21.60 | 1633.40 | 1.25 |
| Wind 300 deg - Ice | | -13.06 | -7.54 | -830.60 | 1417.53 | -0.89 |
| Wind 330 deg - Ice | | -7.56 | -13.02 | -1421.75 | 823.71 | -2.79 |
| Total Weight | 84.31 | | | -2.55 | -0.48 | |
| Wind 0 deg - Service | | -0.04 | -10.79 | -1191.64 | 6.85 | -3.22 |
| Wind 30 deg - Service | | 5.39 | -9.32 | -1029.59 | -593.58 | -3.53 |
| Wind 60 deg - Service | | 9.38 | -5.36 | -592.01 | -1034.51 | -2.89 |
| Wind 90 deg - Service | | 10.85 | 0.04 | 3.86 | -1197.78 | -1.47 |
| Wind 120 deg - Service | | 9.42 | 5.43 | 598.35 | -1039.65 | 0.33 |
| Wind 150 deg - Service | | 5.47 | 9.36 | 1032.16 | -602.49 | 2.05 |
| Wind 180 deg - Service | | 0.04 | 10.79 | 1189.07 | -3.43 | 3.22 |
| Wind 210 deg - Service | | -5.39 | 9.32 | 1027.02 | 597.01 | 3.53 |
| Wind 240 deg - Service | | -9.38 | 5.36 | 589.44 | 1037.93 | 2.89 |
| Wind 270 deg - Service | | -10.85 | -0.04 | -6.42 | 1201.20 | 1.47 |
| Wind 300 deg - Service | | -9.42 | -5.43 | -600.91 | 1043.07 | -0.33 |
| Wind 330 deg - Service | | -5.47 | -9.36 | -1034.73 | 605.91 | -2.05 |

## Load Combinations

| Comb. No. | Description |
|---|---|
| 1 | Dead Only |
| 2 | 1.2 Dead+1.6 Wind 0 deg - No Ice |
| 3 | 0.9 Dead+1.6 Wind 0 deg - No Ice |
| 4 | 1.2 Dead+1.6 Wind 30 deg - No Ice |
| 5 | 0.9 Dead+1.6 Wind 30 deg - No Ice |
| 6 | 1.2 Dead+1.6 Wind 60 deg - No Ice |
| 7 | 0.9 Dead+1.6 Wind 60 deg - No Ice |
| 8 | 1.2 Dead+1.6 Wind 90 deg - No Ice |
| 9 | 0.9 Dead+1.6 Wind 90 deg - No Ice |
| 10 | 1.2 Dead+1.6 Wind 120 deg - No Ice |
| 11 | 0.9 Dead+1.6 Wind 120 deg - No Ice |
| 12 | 1.2 Dead+1.6 Wind 150 deg - No Ice |
| 13 | 0.9 Dead+1.6 Wind 150 deg - No Ice |
| 14 | 1.2 Dead+1.6 Wind 180 deg - No Ice |
| 15 | 0.9 Dead+1.6 Wind 180 deg - No Ice |
| 16 | 1.2 Dead+1.6 Wind 210 deg - No Ice |
| 17 | 0.9 Dead+1.6 Wind 210 deg - No Ice |
| 18 | 1.2 Dead+1.6 Wind 240 deg - No Ice |
| 19 | 0.9 Dead+1.6 Wind 240 deg - No Ice |
| 20 | 1.2 Dead+1.6 Wind 270 deg - No Ice |
| 21 | 0.9 Dead+1.6 Wind 270 deg - No Ice |

| Comb. No. | Description |
|---|---|
| 22 | 1.2 Dead+1.6 Wind 300 deg - No Ice |
| 23 | 0.9 Dead+1.6 Wind 300 deg - No Ice |
| 24 | 1.2 Dead+1.6 Wind 330 deg - No Ice |
| 25 | 0.9 Dead+1.6 Wind 330 deg - No Ice |
| 26 | 1.2 Dead+1.0 Ice+1.0 Temp |
| 27 | 1.2 Dead+1.0 Wind 0 deg+1.0 Ice+1.0 Temp |
| 28 | 1.2 Dead+1.0 Wind 30 deg+1.0 Ice+1.0 Temp |
| 29 | 1.2 Dead+1.0 Wind 60 deg+1.0 Ice+1.0 Temp |
| 30 | 1.2 Dead+1.0 Wind 90 deg+1.0 Ice+1.0 Temp |
| 31 | 1.2 Dead+1.0 Wind 120 deg+1.0 Ice+1.0 Temp |
| 32 | 1.2 Dead+1.0 Wind 150 deg+1.0 Ice+1.0 Temp |
| 33 | 1.2 Dead+1.0 Wind 180 deg+1.0 Ice+1.0 Temp |
| 34 | 1.2 Dead+1.0 Wind 210 deg+1.0 Ice+1.0 Temp |
| 35 | 1.2 Dead+1.0 Wind 240 deg+1.0 Ice+1.0 Temp |
| 36 | 1.2 Dead+1.0 Wind 270 deg+1.0 Ice+1.0 Temp |
| 37 | 1.2 Dead+1.0 Wind 300 deg+1.0 Ice+1.0 Temp |
| 38 | 1.2 Dead+1.0 Wind 330 deg+1.0 Ice+1.0 Temp |
| 39 | Dead+Wind 0 deg - Service |
| 40 | Dead+Wind 30 deg - Service |
| 41 | Dead+Wind 60 deg - Service |
| 42 | Dead+Wind 90 deg - Service |
| 43 | Dead+Wind 120 deg - Service |
| 44 | Dead+Wind 150 deg - Service |
| 45 | Dead+Wind 180 deg - Service |
| 46 | Dead+Wind 210 deg - Service |
| 47 | Dead+Wind 240 deg - Service |
| 48 | Dead+Wind 270 deg - Service |
| 49 | Dead+Wind 300 deg - Service |
| 50 | Dead+Wind 330 deg - Service |

## Maximum Member Forces

| Section No. | Elevation ft | Component Type | Condition | Gov. Load Comb. | Axial K | Major Axis Moment kip-ft | Minor Axis Moment kip-ft |
|---|---|---|---|---|---|---|---|
| L1 | 164 - 131.5 | Pole | Max Tension | 1 | 0.00 | 0.00 | 0.00 |
| | | | Max. Compression | 26 | -48.25 | 2.39 | 1.06 |
| | | | Max. Mx | 20 | -20.38 | 427.55 | -0.10 |
| | | | Max. My | 2 | -20.39 | -0.55 | 425.88 |
| | | | Max. Vy | 20 | -25.74 | 427.55 | -0.10 |
| | | | Max. Vx | 2 | -25.66 | -0.55 | 425.88 |
| | | | Max. Torque | 2 | | | 3.97 |
| L2 | 131.5 - 119.29 | Pole | Max Tension | 1 | 0.00 | 0.00 | 0.00 |
| | | | Max. Compression | 26 | -51.43 | 1.97 | 1.37 |
| | | | Max. Mx | 20 | -22.44 | 590.66 | -0.29 |
| | | | Max. My | 2 | -22.44 | -0.88 | 588.61 |
| | | | Max. Vy | 20 | -26.83 | 590.66 | -0.29 |
| | | | Max. Vx | 2 | -26.74 | -0.88 | 588.61 |
| | | | Max. Torque | 4 | | | 11.38 |
| L3 | 119.29 - 78.79 | Pole | Max Tension | 1 | 0.00 | 0.00 | 0.00 |
| | | | Max. Compression | 26 | -89.37 | 16.05 | 13.60 |
| | | | Max. Mx | 20 | -43.80 | 1970.79 | 9.01 |
| | | | Max. My | 2 | -43.81 | 8.02 | 1955.35 |
| | | | Max. Vy | 20 | -40.19 | 1970.79 | 9.01 |
| | | | Max. Vx | 2 | -39.84 | 8.02 | 1955.35 |
| | | | Max. Torque | 4 | | | 19.78 |
| L4 | 78.79 - 39.88 | Pole | Max Tension | 1 | 0.00 | 0.00 | 0.00 |
| | | | Max. Compression | 26 | -122.09 | 12.53 | 15.75 |
| | | | Max. Mx | 20 | -67.84 | 3629.91 | 17.92 |

| Section No. | Elevation ft | Component Type | Condition | Gov. Load Comb. | Axial K | Major Axis Moment kip-ft | Minor Axis Moment kip-ft |
|---|---|---|---|---|---|---|---|
| | | | Max. My | 2 | -67.84 | 15.82 | 3602.41 |
| | | | Max. Vy | 8 | 46.95 | -3629.03 | -12.86 |
| | | | Max. Vx | 2 | -46.61 | 15.82 | 3602.41 |
| | | | Max. Torque | 4 | | | 17.45 |
| L5 | 39.88 - 1.5 | Pole | Max Tension | 1 | 0.00 | 0.00 | 0.00 |
| | | | Max. Compression | 26 | -165.72 | 7.47 | 18.67 |
| | | | Max. Mx | 8 | -101.16 | -6037.47 | -22.72 |
| | | | Max. My | 2 | -101.16 | 25.27 | 5994.04 |
| | | | Max. Vy | 8 | 53.66 | -6037.47 | -22.72 |
| | | | Max. Vx | 2 | -53.32 | 25.27 | 5994.04 |
| | | | Max. Torque | 4 | | | 17.45 |

## Maximum Reactions

| Location | Condition | Gov. Load Comb. | Vertical K | Horizontal, X K | Horizontal, Z K |
|---|---|---|---|---|---|
| Pole | Max. Vert | 26 | 165.72 | 0.00 | 0.00 |
| | Max. $H_x$ | 20 | 101.17 | 53.63 | 0.22 |
| | Max. $H_z$ | 2 | 101.17 | 0.22 | 53.29 |
| | Max. $M_x$ | 2 | 5994.04 | 0.22 | 53.29 |
| | Max. $M_z$ | 8 | 6037.47 | -53.63 | -0.22 |
| | Max. Torsion | 4 | 17.44 | -26.63 | 46.04 |
| | Min. Vert | 17 | 75.88 | 26.63 | -46.04 |
| | Min. $H_x$ | 8 | 101.17 | -53.63 | -0.22 |
| | Min. $H_z$ | 14 | 101.17 | -0.22 | -53.29 |
| | Min. $M_x$ | 14 | -5987.76 | -0.22 | -53.29 |
| | Min. $M_z$ | 20 | -6036.34 | 53.63 | 0.22 |
| | Min. Torsion | 16 | -17.44 | 26.63 | -46.04 |

## Tower Mast Reaction Summary

| Load Combination | Vertical K | $Shear_x$ K | $Shear_z$ K | Overturning Moment, $M_x$ kip-ft | Overturning Moment, $M_z$ kip-ft | Torque kip-ft |
|---|---|---|---|---|---|---|
| Dead Only | 84.31 | 0.00 | 0.00 | -2.55 | -0.48 | 0.00 |
| 1.2 Dead+1.6 Wind 0 deg - No Ice | 101.17 | -0.22 | -53.29 | -5994.04 | 25.27 | -15.94 |
| 0.9 Dead+1.6 Wind 0 deg - No Ice | 75.88 | -0.22 | -53.29 | -5965.12 | 25.29 | -15.93 |
| 1.2 Dead+1.6 Wind 30 deg - No Ice | 101.17 | 26.63 | -46.04 | -5178.48 | -2996.66 | -17.44 |
| 0.9 Dead+1.6 Wind 30 deg - No Ice | 75.88 | 26.63 | -46.04 | -5153.39 | -2982.44 | -17.44 |
| 1.2 Dead+1.6 Wind 60 deg - No Ice | 101.17 | 46.34 | -26.46 | -2976.19 | -5215.77 | -14.27 |
| 0.9 Dead+1.6 Wind 60 deg - No Ice | 75.88 | 46.34 | -26.46 | -2961.43 | -5191.14 | -14.27 |
| 1.2 Dead+1.6 Wind 90 deg - No Ice | 101.17 | 53.63 | 0.22 | 22.72 | -6037.47 | -7.28 |
| 0.9 Dead+1.6 Wind 90 deg - No Ice | 75.88 | 53.63 | 0.22 | 23.40 | -6008.99 | -7.28 |
| 1.2 Dead+1.6 Wind 120 deg - | 101.17 | 46.55 | 26.83 | 3014.69 | -5241.61 | 1.67 |

| Load Combination | Vertical<br>K | $Shear_x$<br>K | $Shear_z$<br>K | Overturning Moment, $M_x$<br>kip-ft | Overturning Moment, $M_z$<br>kip-ft | Torque<br>kip-ft |
|---|---|---|---|---|---|---|
| No Ice | | | | | | |
| 0.9 Dead+1.6 Wind 120 deg - No Ice | 75.88 | 46.55 | 26.83 | 3001.33 | -5216.86 | 1.67 |
| 1.2 Dead+1.6 Wind 150 deg - No Ice | 101.17 | 27.00 | 46.26 | 5198.05 | -3041.42 | 10.17 |
| 0.9 Dead+1.6 Wind 150 deg - No Ice | 75.88 | 27.00 | 46.26 | 5174.44 | -3027.01 | 10.16 |
| 1.2 Dead+1.6 Wind 180 deg - No Ice | 101.17 | 0.22 | 53.29 | 5987.76 | -26.44 | 15.94 |
| 0.9 Dead+1.6 Wind 180 deg - No Ice | 75.88 | 0.22 | 53.29 | 5960.44 | -26.18 | 15.94 |
| 1.2 Dead+1.6 Wind 210 deg - No Ice | 101.17 | -26.63 | 46.04 | 5172.22 | 2995.49 | 17.44 |
| 0.9 Dead+1.6 Wind 210 deg - No Ice | 75.88 | -26.63 | 46.04 | 5148.72 | 2981.56 | 17.44 |
| 1.2 Dead+1.6 Wind 240 deg - No Ice | 101.17 | -46.34 | 26.46 | 2969.94 | 5214.62 | 14.27 |
| 0.9 Dead+1.6 Wind 240 deg - No Ice | 75.88 | -46.34 | 26.46 | 2956.77 | 5190.27 | 14.26 |
| 1.2 Dead+1.6 Wind 270 deg - No Ice | 101.17 | -53.63 | -0.22 | -28.98 | 6036.34 | 7.27 |
| 0.9 Dead+1.6 Wind 270 deg - No Ice | 75.88 | -53.63 | -0.22 | -28.07 | 6008.13 | 7.27 |
| 1.2 Dead+1.6 Wind 300 deg - No Ice | 101.17 | -46.55 | -26.83 | -3020.97 | 5240.47 | -1.67 |
| 0.9 Dead+1.6 Wind 300 deg - No Ice | 75.88 | -46.55 | -26.83 | -3006.01 | 5216.00 | -1.66 |
| 1.2 Dead+1.6 Wind 330 deg - No Ice | 101.17 | -27.00 | -46.26 | -5204.33 | 3040.26 | -10.16 |
| 0.9 Dead+1.6 Wind 330 deg - No Ice | 75.88 | -27.00 | -46.26 | -5179.12 | 3026.13 | -10.16 |
| 1.2 Dead+1.0 Ice+1.0 Temp | 165.72 | -0.00 | -0.00 | -18.67 | 7.47 | -0.00 |
| 1.2 Dead+1.0 Wind 0 deg+1.0 Ice+1.0 Temp | 165.72 | -0.03 | -15.01 | -1698.75 | 11.88 | -3.99 |
| 1.2 Dead+1.0 Wind 30 deg+1.0 Ice+1.0 Temp | 165.72 | 7.50 | -12.98 | -1471.61 | -832.34 | -4.07 |
| 1.2 Dead+1.0 Wind 60 deg+1.0 Ice+1.0 Temp | 165.72 | 13.03 | -7.48 | -855.25 | -1451.47 | -3.07 |
| 1.2 Dead+1.0 Wind 90 deg+1.0 Ice+1.0 Temp | 165.72 | 15.06 | 0.03 | -14.83 | -1679.63 | -1.24 |
| 1.2 Dead+1.0 Wind 120 deg+1.0 Ice+1.0 Temp | 165.72 | 13.06 | 7.54 | 824.46 | -1455.67 | 0.92 |
| 1.2 Dead+1.0 Wind 150 deg+1.0 Ice+1.0 Temp | 165.72 | 7.56 | 13.02 | 1437.75 | -839.61 | 2.83 |
| 1.2 Dead+1.0 Wind 180 deg+1.0 Ice+1.0 Temp | 165.72 | 0.03 | 15.01 | 1660.69 | 3.49 | 3.99 |
| 1.2 Dead+1.0 Wind 210 deg+1.0 Ice+1.0 Temp | 165.72 | -7.50 | 12.98 | 1433.56 | 847.71 | 4.07 |
| 1.2 Dead+1.0 Wind 240 deg+1.0 Ice+1.0 Temp | 165.72 | -13.03 | 7.48 | 817.20 | 1466.85 | 3.07 |
| 1.2 Dead+1.0 Wind 270 deg+1.0 Ice+1.0 Temp | 165.72 | -15.06 | -0.03 | -23.22 | 1695.00 | 1.24 |
| 1.2 Dead+1.0 Wind 300 deg+1.0 Ice+1.0 Temp | 165.72 | -13.06 | -7.54 | -862.52 | 1471.04 | -0.92 |
| 1.2 Dead+1.0 Wind 330 deg+1.0 Ice+1.0 Temp | 165.72 | -7.56 | -13.02 | -1475.81 | 854.97 | -2.83 |
| Dead+Wind 0 deg - Service | 84.31 | -0.04 | -10.79 | -1211.55 | 4.74 | -3.23 |
| Dead+Wind 30 deg - Service | 84.31 | 5.39 | -9.32 | -1046.97 | -605.07 | -3.53 |
| Dead+Wind 60 deg - Service | 84.31 | 9.38 | -5.36 | -602.56 | -1052.88 | -2.89 |
| Dead+Wind 90 deg - Service | 84.31 | 10.85 | 0.04 | 2.61 | -1218.70 | -1.47 |
| Dead+Wind 120 deg - Service | 84.31 | 9.42 | 5.43 | 606.39 | -1058.10 | 0.34 |

| Load Combination | Vertical K | $Shear_x$ K | $Shear_z$ K | Overturning Moment, $M_x$ kip-ft | Overturning Moment, $M_z$ kip-ft | Torque kip-ft |
|---|---|---|---|---|---|---|
| Dead+Wind 150 deg - Service | 84.31 | 5.47 | 9.36 | 1046.98 | -614.11 | 2.06 |
| Dead+Wind 180 deg - Service | 84.31 | 0.04 | 10.79 | 1206.34 | -5.69 | 3.23 |
| Dead+Wind 210 deg - Service | 84.31 | -5.39 | 9.32 | 1041.76 | 604.12 | 3.53 |
| Dead+Wind 240 deg - Service | 84.31 | -9.38 | 5.36 | 597.35 | 1051.93 | 2.89 |
| Dead+Wind 270 deg - Service | 84.31 | -10.85 | -0.04 | -7.82 | 1217.75 | 1.47 |
| Dead+Wind 300 deg - Service | 84.31 | -9.42 | -5.43 | -611.60 | 1057.15 | -0.34 |
| Dead+Wind 330 deg - Service | 84.31 | -5.47 | -9.36 | -1052.19 | 613.16 | -2.06 |

## Solution Summary

| | Sum of Applied Forces | | | Sum of Reactions | | | |
|---|---|---|---|---|---|---|---|
| Load Comb. | PX K | PY K | PZ K | PX K | PY K | PZ K | % Error |
| 1 | 0.00 | -84.31 | 0.00 | 0.00 | 84.31 | 0.00 | 0.000% |
| 2 | -0.22 | -101.17 | -53.29 | 0.22 | 101.17 | 53.29 | 0.000% |
| 3 | -0.22 | -75.88 | -53.29 | 0.22 | 75.88 | 53.29 | 0.000% |
| 4 | 26.63 | -101.17 | -46.04 | -26.63 | 101.17 | 46.04 | 0.000% |
| 5 | 26.63 | -75.88 | -46.04 | -26.63 | 75.88 | 46.04 | 0.000% |
| 6 | 46.34 | -101.17 | -26.46 | -46.34 | 101.17 | 26.46 | 0.000% |
| 7 | 46.34 | -75.88 | -26.46 | -46.34 | 75.88 | 26.46 | 0.000% |
| 8 | 53.63 | -101.17 | 0.22 | -53.63 | 101.17 | -0.22 | 0.000% |
| 9 | 53.63 | -75.88 | 0.22 | -53.63 | 75.88 | -0.22 | 0.000% |
| 10 | 46.55 | -101.17 | 26.83 | -46.55 | 101.17 | -26.83 | 0.000% |
| 11 | 46.55 | -75.88 | 26.83 | -46.55 | 75.88 | -26.83 | 0.000% |
| 12 | 27.00 | -101.17 | 46.26 | -27.00 | 101.17 | -46.26 | 0.000% |
| 13 | 27.00 | -75.88 | 46.26 | -27.00 | 75.88 | -46.26 | 0.000% |
| 14 | 0.22 | -101.17 | 53.29 | -0.22 | 101.17 | -53.29 | 0.000% |
| 15 | 0.22 | -75.88 | 53.29 | -0.22 | 75.88 | -53.29 | 0.000% |
| 16 | -26.63 | -101.17 | 46.04 | 26.63 | 101.17 | -46.04 | 0.000% |
| 17 | -26.63 | -75.88 | 46.04 | 26.63 | 75.88 | -46.04 | 0.000% |
| 18 | -46.34 | -101.17 | 26.46 | 46.34 | 101.17 | -26.46 | 0.000% |
| 19 | -46.34 | -75.88 | 26.46 | 46.34 | 75.88 | -26.46 | 0.000% |
| 20 | -53.63 | -101.17 | -0.22 | 53.63 | 101.17 | 0.22 | 0.000% |
| 21 | -53.63 | -75.88 | -0.22 | 53.63 | 75.88 | 0.22 | 0.000% |
| 22 | -46.55 | -101.17 | -26.83 | 46.55 | 101.17 | 26.83 | 0.000% |
| 23 | -46.55 | -75.88 | -26.83 | 46.55 | 75.88 | 26.83 | 0.000% |
| 24 | -27.00 | -101.17 | -46.26 | 27.00 | 101.17 | 46.26 | 0.000% |
| 25 | -27.00 | -75.88 | -46.26 | 27.00 | 75.88 | 46.26 | 0.000% |
| 26 | 0.00 | -165.72 | 0.00 | 0.00 | 165.72 | 0.00 | 0.000% |
| 27 | -0.03 | -165.72 | -15.01 | 0.03 | 165.72 | 15.01 | 0.000% |
| 28 | 7.50 | -165.72 | -12.98 | -7.50 | 165.72 | 12.98 | 0.000% |
| 29 | 13.03 | -165.72 | -7.48 | -13.03 | 165.72 | 7.48 | 0.000% |
| 30 | 15.06 | -165.72 | 0.03 | -15.06 | 165.72 | -0.03 | 0.000% |
| 31 | 13.06 | -165.72 | 7.54 | -13.06 | 165.72 | -7.54 | 0.000% |
| 32 | 7.56 | -165.72 | 13.02 | -7.56 | 165.72 | -13.02 | 0.000% |
| 33 | 0.03 | -165.72 | 15.01 | -0.03 | 165.72 | -15.01 | 0.000% |
| 34 | -7.50 | -165.72 | 12.98 | 7.50 | 165.72 | -12.98 | 0.000% |
| 35 | -13.03 | -165.72 | 7.48 | 13.03 | 165.72 | -7.48 | 0.000% |
| 36 | -15.06 | -165.72 | -0.03 | 15.06 | 165.72 | 0.03 | 0.000% |
| 37 | -13.06 | -165.72 | -7.54 | 13.06 | 165.72 | 7.54 | 0.000% |
| 38 | -7.56 | -165.72 | -13.02 | 7.56 | 165.72 | 13.02 | 0.000% |
| 39 | -0.04 | -84.31 | -10.79 | 0.04 | 84.31 | 10.79 | 0.000% |
| 40 | 5.39 | -84.31 | -9.32 | -5.39 | 84.31 | 9.32 | 0.000% |
| 41 | 9.38 | -84.31 | -5.36 | -9.38 | 84.31 | 5.36 | 0.000% |
| 42 | 10.85 | -84.31 | 0.04 | -10.85 | 84.31 | -0.04 | 0.000% |
| 43 | 9.42 | -84.31 | 5.43 | -9.42 | 84.31 | -5.43 | 0.000% |
| 44 | 5.47 | -84.31 | 9.36 | -5.47 | 84.31 | -9.36 | 0.000% |
| 45 | 0.04 | -84.31 | 10.79 | -0.04 | 84.31 | -10.79 | 0.000% |

| | Sum of Applied Forces | | | Sum of Reactions | | | |
|---|---|---|---|---|---|---|---|
| Load Comb. | PX K | PY K | PZ K | PX K | PY K | PZ K | % Error |
| 46 | -5.39 | -84.31 | 9.32 | 5.39 | 84.31 | -9.32 | 0.000% |
| 47 | -9.38 | -84.31 | 5.36 | 9.38 | 84.31 | -5.36 | 0.000% |
| 48 | -10.85 | -84.31 | -0.04 | 10.85 | 84.31 | 0.04 | 0.000% |
| 49 | -9.42 | -84.31 | -5.43 | 9.42 | 84.31 | 5.43 | 0.000% |
| 50 | -5.47 | -84.31 | -9.36 | 5.47 | 84.31 | 9.36 | 0.000% |

## Non-Linear Convergence Results

| Load Combination | Converged? | Number of Cycles | Displacement Tolerance | Force Tolerance |
|---|---|---|---|---|
| 1 | Yes | 4 | 0.00000001 | 0.00000001 |
| 2 | Yes | 4 | 0.00000001 | 0.00081909 |
| 3 | Yes | 4 | 0.00000001 | 0.00054831 |
| 4 | Yes | 5 | 0.00000001 | 0.00002405 |
| 5 | Yes | 4 | 0.00000001 | 0.00073934 |
| 6 | Yes | 5 | 0.00000001 | 0.00003676 |
| 7 | Yes | 5 | 0.00000001 | 0.00001809 |
| 8 | Yes | 4 | 0.00000001 | 0.00036392 |
| 9 | Yes | 4 | 0.00000001 | 0.00024194 |
| 10 | Yes | 5 | 0.00000001 | 0.00002770 |
| 11 | Yes | 4 | 0.00000001 | 0.00084965 |
| 12 | Yes | 5 | 0.00000001 | 0.00002357 |
| 13 | Yes | 4 | 0.00000001 | 0.00072155 |
| 14 | Yes | 4 | 0.00000001 | 0.00079504 |
| 15 | Yes | 4 | 0.00000001 | 0.00053253 |
| 16 | Yes | 5 | 0.00000001 | 0.00003929 |
| 17 | Yes | 5 | 0.00000001 | 0.00001940 |
| 18 | Yes | 5 | 0.00000001 | 0.00002306 |
| 19 | Yes | 4 | 0.00000001 | 0.00070746 |
| 20 | Yes | 4 | 0.00000001 | 0.00038698 |
| 21 | Yes | 4 | 0.00000001 | 0.00025730 |
| 22 | Yes | 5 | 0.00000001 | 0.00002600 |
| 23 | Yes | 4 | 0.00000001 | 0.00079537 |
| 24 | Yes | 5 | 0.00000001 | 0.00003370 |
| 25 | Yes | 5 | 0.00000001 | 0.00001650 |
| 26 | Yes | 4 | 0.00000001 | 0.00002558 |
| 27 | Yes | 5 | 0.00000001 | 0.00005715 |
| 28 | Yes | 5 | 0.00000001 | 0.00005883 |
| 29 | Yes | 5 | 0.00000001 | 0.00005862 |
| 30 | Yes | 5 | 0.00000001 | 0.00005522 |
| 31 | Yes | 5 | 0.00000001 | 0.00005730 |
| 32 | Yes | 5 | 0.00000001 | 0.00005715 |
| 33 | Yes | 5 | 0.00000001 | 0.00005523 |
| 34 | Yes | 5 | 0.00000001 | 0.00005854 |
| 35 | Yes | 5 | 0.00000001 | 0.00005863 |
| 36 | Yes | 5 | 0.00000001 | 0.00005687 |
| 37 | Yes | 5 | 0.00000001 | 0.00006004 |
| 38 | Yes | 5 | 0.00000001 | 0.00006033 |
| 39 | Yes | 4 | 0.00000001 | 0.00003566 |
| 40 | Yes | 4 | 0.00000001 | 0.00003698 |
| 41 | Yes | 4 | 0.00000001 | 0.00004007 |
| 42 | Yes | 4 | 0.00000001 | 0.00001914 |
| 43 | Yes | 4 | 0.00000001 | 0.00002108 |
| 44 | Yes | 4 | 0.00000001 | 0.00002532 |
| 45 | Yes | 4 | 0.00000001 | 0.00003526 |
| 46 | Yes | 4 | 0.00000001 | 0.00004564 |

| | | | | |
|---|---|---|---|---|
| 47 | Yes | 4 | 0.00000001 | 0.00003127 |
| 48 | Yes | 4 | 0.00000001 | 0.00001933 |
| 49 | Yes | 4 | 0.00000001 | 0.00001949 |
| 50 | Yes | 4 | 0.00000001 | 0.00003305 |

## Maximum Tower Deflections - Service Wind

| Section No. | Elevation ft | Horz. Deflection in | Gov. Load Comb. | Tilt ° | Twist ° |
|---|---|---|---|---|---|
| L1 | 164 - 131.5 | 7.449 | 49 | 0.3458 | 0.0033 |
| L2 | 131.5 - 119.29 | 5.134 | 49 | 0.3274 | 0.0029 |
| L3 | 125.29 - 78.79 | 4.713 | 49 | 0.3197 | 0.0028 |
| L4 | 87.21 - 39.88 | 2.418 | 49 | 0.2425 | 0.0015 |
| L5 | 49.13 - 1.5 | 0.815 | 49 | 0.1478 | 0.0007 |

## Critical Deflections and Radius of Curvature - Service Wind

| Elevation ft | Appurtenance | Gov. Load Comb. | Deflection in | Tilt ° | Twist ° | Radius of Curvature ft |
|---|---|---|---|---|---|---|
| 164.00 | 12' x 3" Dia Omni | 49 | 7.449 | 0.3458 | 0.0033 | 322416 |
| 160.00 | 4 FT DISH | 49 | 7.159 | 0.3446 | 0.0032 | 322416 |
| 156.00 | A-Ant-23G-2-C | 49 | 6.870 | 0.3433 | 0.0032 | 201510 |
| 154.00 | LLPX310R | 49 | 6.725 | 0.3426 | 0.0031 | 161208 |
| 151.50 | Remote Radio Head FD R6 RRH | 49 | 6.545 | 0.3416 | 0.0031 | 128966 |
| 144.00 | APX16PV-16PVL-E | 49 | 6.008 | 0.3378 | 0.0030 | 80604 |
| 138.00 | DC6-48-60-18-8F Surge Arrestor | 49 | 5.585 | 0.3336 | 0.0029 | 62003 |
| 134.00 | 7770.00 | 49 | 5.307 | 0.3300 | 0.0029 | 53693 |
| 124.00 | DB844H65E-XY | 49 | 4.627 | 0.3178 | 0.0028 | 39740 |
| 114.00 | 531-70HD | 49 | 3.978 | 0.3010 | 0.0026 | 34977 |
| 51.50 | GPS | 49 | 0.887 | 0.1543 | 0.0007 | 15971 |

## Maximum Tower Deflections - Design Wind

| Section No. | Elevation ft | Horz. Deflection in | Gov. Load Comb. | Tilt ° | Twist ° |
|---|---|---|---|---|---|
| L1 | 164 - 131.5 | 36.859 | 22 | 1.7094 | 0.0162 |
| L2 | 131.5 - 119.29 | 25.415 | 22 | 1.6195 | 0.0143 |
| L3 | 125.29 - 78.79 | 23.333 | 22 | 1.5812 | 0.0141 |
| L4 | 87.21 - 39.88 | 11.973 | 22 | 1.2006 | 0.0072 |
| L5 | 49.13 - 1.5 | 4.036 | 22 | 0.7323 | 0.0034 |

## Critical Deflections and Radius of Curvature - Design Wind

| Elevation<br>ft | Appurtenance | Gov. Load Comb. | Deflection<br>in | Tilt<br>° | Twist<br>° | Radius of Curvature<br>ft |
|---|---|---|---|---|---|---|
| 164.00 | 12' x 3" Dia Omni | 22 | 36.859 | 1.7094 | 0.0162 | 65581 |
| 160.00 | 4 FT DISH | 22 | 35.425 | 1.7036 | 0.0159 | 65581 |
| 156.00 | A-Ant-23G-2-C | 22 | 33.993 | 1.6972 | 0.0156 | 40988 |
| 154.00 | LLPX310R | 22 | 33.279 | 1.6938 | 0.0154 | 32790 |
| 151.50 | Remote Radio Head FD R6 RRH | 22 | 32.389 | 1.6890 | 0.0153 | 26232 |
| 144.00 | APX16PV-16PVL-E | 22 | 29.736 | 1.6706 | 0.0148 | 16394 |
| 138.00 | DC6-48-60-18-8F Surge Arrestor | 22 | 27.643 | 1.6499 | 0.0145 | 12611 |
| 134.00 | 7770.00 | 22 | 26.266 | 1.6324 | 0.0143 | 10920 |
| 124.00 | DB844H65E-XY | 22 | 22.907 | 1.5721 | 0.0140 | 8085 |
| 114.00 | 531-70HD | 22 | 19.694 | 1.4892 | 0.0127 | 7110 |
| 51.50 | GPS | 22 | 4.392 | 0.7644 | 0.0036 | 3226 |

## *Compression Checks*

## Pole Design Data

| Section No. | Elevation<br>ft | Size | L<br>ft | $L_u$<br>ft | Kl/r | A<br>$in^2$ | $P_u$<br>K | $\phi P_n$<br>K | Ratio $\frac{P_u}{\phi P_n}$ |
|---|---|---|---|---|---|---|---|---|---|
| L1 | 164 - 131.5 (1) | TP53.42x47x0.3125 | 32.50 | 162.50 | 103.4 | 52.6760 | -20.39 | 1112.38 | 0.018 |
| L2 | 131.5 - 119.29 (2) | TP56.15x53.42x0.375 | 12.21 | 162.50 | 100.9 | 64.7894 | -22.44 | 1437.35 | 0.016 |
| L3 | 119.29 - 78.79 (3) | TP62.97x54.0585x0.4375 | 46.50 | 162.50 | 90.2 | 84.5934 | -43.79 | 2338.92 | 0.019 |
| L4 | 78.79 - 39.88 (4) | TP69.66x60.4813x0.5625 | 47.33 | 162.50 | 81.6 | 120.1620 | -67.83 | 3951.81 | 0.017 |
| L5 | 39.88 - 1.5 (5) | TP76x66.7412x0.5625 | 47.63 | 162.50 | 72.8 | 134.6840 | -101.16 | 5096.65 | 0.020 |

## Pole Bending Design Data

| Section No. | Elevation<br>ft | Size | $M_{ux}$<br>kip-ft | $\phi M_{nx}$<br>kip-ft | Ratio $\frac{M_{ux}}{\phi M_{nx}}$ | $M_{uy}$<br>kip-ft | $\phi M_{ny}$<br>kip-ft | Ratio $\frac{M_{uy}}{\phi M_{ny}}$ |
|---|---|---|---|---|---|---|---|---|
| L1 | 164 - 131.5 (1) | TP53.42x47x0.3125 | 427.59 | 3531.85 | 0.121 | 0.00 | 3531.85 | 0.000 |
| L2 | 131.5 - 119.29 (2) | TP56.15x53.42x0.375 | 591.01 | 4783.28 | 0.124 | 0.00 | 4783.28 | 0.000 |
| L3 | 119.29 - 78.79 (3) | TP62.97x54.0585x0.4375 | 1973.63 | 7104.26 | 0.278 | 0.00 | 7104.26 | 0.000 |
| L4 | 78.79 - 39.88 (4) | TP69.66x60.4813x0.5625 | 3637.05 | 11742.75 | 0.310 | 0.00 | 11742.75 | 0.000 |
| L5 | 39.88 - 1.5 (5) | TP76x66.7412x0.5625 | 6048.87 | 14202.67 | 0.426 | 0.00 | 14202.67 | 0.000 |

## Pole Shear Design Data

| Section No. | Elevation ft | Size | Actual $V_u$ K | $\phi V_n$ K | Ratio $\frac{V_u}{\phi V_n}$ | Actual $T_u$ kip-ft | $\phi T_n$ kip-ft | Ratio $\frac{T_u}{\phi T_n}$ |
|---|---|---|---|---|---|---|---|---|
| L1 | 164 - 131.5 (1) | TP53.42x47x0.3125 | 25.76 | 1613.88 | 0.016 | 0.58 | 7072.34 | 0.000 |
| L2 | 131.5 - 119.29 (2) | TP56.15x53.42x0.375 | 26.84 | 2134.62 | 0.013 | 0.58 | 9578.25 | 0.000 |
| L3 | 119.29 - 78.79 (3) | TP62.97x54.0585x0.4375 | 40.30 | 2833.69 | 0.014 | 1.67 | 14225.92 | 0.000 |
| L4 | 78.79 - 39.88 (4) | TP69.66x60.4813x0.5625 | 47.06 | 4244.46 | 0.011 | 1.67 | 23514.17 | 0.000 |
| L5 | 39.88 - 1.5 (5) | TP76x66.7412x0.5625 | 53.77 | 4576.00 | 0.012 | 1.67 | 28440.08 | 0.000 |

## Pole Interaction Design Data

| Section No. | Elevation ft | Ratio $\frac{P_u}{\phi P_n}$ | Ratio $\frac{M_{ux}}{\phi M_{nx}}$ | Ratio $\frac{M_{uy}}{\phi M_{ny}}$ | Ratio $\frac{V_u}{\phi V_n}$ | Ratio $\frac{T_u}{\phi T_n}$ | Comb. Stress Ratio | Allow. Stress Ratio | Criteria |
|---|---|---|---|---|---|---|---|---|---|
| L1 | 164 - 131.5 (1) | 0.018 | 0.121 | 0.000 | 0.016 | 0.000 | 0.140 ✔ | 1.000 | 4.8.2 ✔ |
| L2 | 131.5 - 119.29 (2) | 0.016 | 0.124 | 0.000 | 0.013 | 0.000 | 0.139 ✔ | 1.000 | 4.8.2 ✔ |
| L3 | 119.29 - 78.79 (3) | 0.019 | 0.278 | 0.000 | 0.014 | 0.000 | 0.297 ✔ | 1.000 | 4.8.2 ✔ |
| L4 | 78.79 - 39.88 (4) | 0.017 | 0.310 | 0.000 | 0.011 | 0.000 | 0.327 ✔ | 1.000 | 4.8.2 ✔ |
| L5 | 39.88 - 1.5 (5) | 0.020 | 0.426 | 0.000 | 0.012 | 0.000 | 0.446 ✔ | 1.000 | 4.8.2 ✔ |

## Section Capacity Table

| Section No. | Elevation ft | Component Type | Size | Critical Element | P K | $\phi P_{allow}$ K | % Capacity | Pass Fail |
|---|---|---|---|---|---|---|---|---|
| L1 | 164 - 131.5 | Pole | TP53.42x47x0.3125 | 1 | -20.39 | 1112.38 | 14.0 | Pass |
| L2 | 131.5 - 119.29 | Pole | TP56.15x53.42x0.375 | 2 | -22.44 | 1437.35 | 13.9 | Pass |
| L3 | 119.29 - 78.79 | Pole | TP62.97x54.0585x0.4375 | 3 | -43.79 | 2338.92 | 29.7 | Pass |
| L4 | 78.79 - 39.88 | Pole | TP69.66x60.4813x0.5625 | 4 | -67.83 | 3951.81 | 32.7 | Pass |
| L5 | 39.88 - 1.5 | Pole | TP76x66.7412x0.5625 | 5 | -101.16 | 5096.65 | 44.6 | Pass |
| | | | | | | | Summary | |
| | | | | | | Pole (L5) | 44.6 | Pass |
| | | | | | | **RATING =** | **44.6** | **Pass** |

## Flange Bolt and Flange Plate Analysis:

### Input Data:

Tower Reactions:

| | | |
|---|---|---|
| Overturning Moment = | $OM := 428 \cdot ft \cdot kips$ | (Input From tnxTower) |
| Shear Force = | $Shear := 26 \cdot kips$ | (Input From tnxTower) |
| Axial Force = | $Axial := 48.3 \cdot kips$ | (Input From tnxTower) |

Flange Bolt Data:

Use AST MA325

| | | |
|---|---|---|
| Number of Flange Bolts = | $N := 12$ | (User Input) |
| Diameter of Bolt Circle = | $D_{bc} := 58 \cdot in$ | (User Input) |
| Bolt Minimum Tensile Strength = | $F_{ub} := 120 \cdot ksi$ | (User Input) |
| Bolt Modulus = | $E := 29000 \cdot ksi$ | (User Input) |
| Diameter of Flange Bolts = | $D := 1.00 \cdot in$ | (User Input) |
| Threads per Inch = | $n := 8$ | (User Input) |

Flange Plate Data:

Use AST MA36

| | | |
|---|---|---|
| Plate Yield Strength = | $Fy_{bp} := 36 \cdot ksi$ | (User Input) |
| Flange Plate Thickness = | $t_{bp} := 1.0 \cdot in$ | (User Input) |
| Flange Plate Diameter = | $D_{bp} := 61.0 \cdot in$ | (User Input) |
| Outer Pole Diameter = | $D_{pole} := 53.42 \cdot in$ | (User Input) |

## Geometric Layout Data:

Distance from Bolts to Centroid of Pole:

Radius of Bolt Circle =: $R_{bc} := \frac{D_{bc}}{2} = 29 \cdot in$

Distance to Bolts = $i := 1 .. N$

$$d_i := \left\| \begin{array}{l} \theta \leftarrow 2 \cdot \pi \cdot \left(\frac{i}{N}\right) \\ d \leftarrow R_{bc} \cdot \sin(\theta) \end{array} \right.$$

$d_1 = 14.50 \cdot in$ $d_7 = -14.50 \cdot in$

$d_2 = 25.11 \cdot in$ $d_8 = -25.11 \cdot in$

$d_3 = 29.00 \cdot in$ $d_9 = -29.00 \cdot in$

$d_4 = 25.11 \cdot in$ $d_{10} = -25.11 \cdot in$

$d_5 = 14.50 \cdot in$ $d_{11} = -14.50 \cdot in$

$d_6 = 0.00 \cdot in$ $d_{12} = -0.00 \cdot in$

Critical Distances For Bending in Plate:

Outer Pole Radius = $R_{pole} := \frac{D_{pole}}{2} = 26.71 \cdot in$

Moment Arms of Bolts about Neutral Axis = $MA_i := if\left(d_i \geq R_{pole}, d_i - R_{pole}, 0in\right)$

$MA_1 = 0.00 \cdot in$ $MA_7 = 0.00 \cdot in$

$MA_2 = 0.00 \cdot in$ $MA_8 = 0.00 \cdot in$

$MA_3 = 2.29 \cdot in$ $MA_9 = 0.00 \cdot in$

$MA_4 = 0.00 \cdot in$ $MA_{10} = 0.00 \cdot in$

$MA_5 = 0.00 \cdot in$ $MA_{11} = 0.00 \cdot in$

$MA_6 = 0.00 \cdot in$ $MA_{12} = 0.00 \cdot in$

Effective Width of Flangeplate for Bending = $B_{eff} := .8 \cdot 2 \cdot \sqrt{\left(\frac{D_{bp}}{2}\right)^2 - \left(\frac{D_{pole}}{2}\right)^2} = 23.6 \cdot in$

## Flange Bolt Analysis:

Calculated Flange Bolt Properties:

Polar Moment of Inertia = $I_p := \sum_i \left(d_i\right)^2 = 5.046 \times 10^3 \cdot in^2$

Gross Area of Bolt = $A_g := \frac{\pi}{4} \cdot D^2 = 0.785 \cdot in^2$

Net Area of Bolt = $A_n := \frac{\pi}{4} \cdot \left(D - \frac{0.9743 \cdot in}{n}\right)^2 = 0.606 \cdot in^2$

Net Diameter = $D_n := \frac{2 \cdot \sqrt{A_n}}{\sqrt{\pi}} = 0.878 \cdot in$

Radius of Gyration of Bolt = $r := \frac{D_n}{4} = 0.22 \cdot in$

Section Modulus of Bolt = $S_x := \frac{\pi \cdot D_n^3}{32} = 0.066 \cdot in^3$

Check Flange Bolt Tension Force:

Maximum Tensile Force = $T_{Max} := OM \cdot \frac{R_{bc}}{I_p} - \frac{Axial}{N} = 25.5 \cdot kips$

Maximum Shear Force = $V_{Max} := \frac{Shear}{N} = 2.2 \cdot kips$

Design Tensile Strength = $\Phi R_{nt} := \left(0.75 \cdot F_{ub} \cdot 0.75 \cdot A_g\right) = 53 \cdot kips$

Bolt Tension % of Capacity = $\frac{T_{Max}}{\Phi R_{nt}} = 48.09 \cdot \%$

Condition1 = $Condition1 := if\left(\frac{T_{Max}}{\Phi R_{nt}} \le 1.00, \text{"OK"}, \text{"Overstressed"}\right)$

Condition1 = "OK"

Design Shear Strength = $\Phi R_{nv} := \left(0.75 \cdot 0.45 \cdot F_{ub} \cdot A_g\right) = 31.8 \cdot kips$

Condition2 = $Condition2 := if\left[\left(\frac{V_{Max}}{\Phi R_{nv}}\right)^2 + \left(\frac{T_{Max}}{\Phi R_{nt}}\right)^2 \le 1.00, \text{"OK"}, \text{"Overstressed"}\right]$

Condition2 = "OK"

**Flange Plate Analysis:**

Force from Bolts = $C_i := \frac{OM \cdot d_i}{I_p} + \frac{Axial}{N}$

$C_1 = 18.8 \cdot kips$

$C_2 = 29.6 \cdot kips$

$C_3 = 33.5 \cdot kips$

$C_4 = 29.6 \cdot kips$

$C_5 = 18.8 \cdot kips$

$C_6 = 4.0 \cdot kips$

$C_7 = -10.7 \cdot kips$

$C_8 = -21.5 \cdot kips$

$C_9 = -25.5 \cdot kips$

$C_{10} = -21.5 \cdot kips$

$C_{11} = -10.7 \cdot kips$

$C_{12} = 4.0 \cdot kips$

Maximum Bending Stress in Plate =

$$f_{bp} := \sum_i \frac{4 \cdot C_i \cdot MA_i}{\left(B_{eff} \cdot t_{bp}^2\right)} = 13 \cdot ksi$$

Allowable Bending Stress in Plate = $F_{bp} := 0.9 \cdot Fy_{bp} = 32.4 \cdot ksi$

Plate Bending Stress % of Capacity = $\frac{f_{bp}}{F_{bp}} = 40.3 \cdot \%$

Condition3 = $Condition3 := if\left(\frac{f_{bp}}{F_{bp}} < 1.00, \text{"Ok"}, \text{"Overstressed"}\right)$

Condition3 = "Ok"

## Anchor Bolt and Base Plate Analysis:

### Input Data:

Tower Reactions:

| | | |
|---|---|---|
| Overturning Moment = | $OM := 6049 \cdot ft \cdot kips$ | (Input From tnxTower) |
| Shear Force = | $Shear := 54 \cdot kips$ | (Input From tnxTower) |
| Axial Force = | $Axial := 101 \cdot kips$ | (Input From tnxTower) |

Anchor Bolt Data:

ASTM A615 Grade 75

| | | |
|---|---|---|
| Number of Anchor Bolts = | $N := 30$ | (User Input) |
| Diameter of Bolt Circle = | $D_{bc} := 86 \cdot in$ | (User Input) |
| Bolt Ultimate Strength = | $F_u := 100 \cdot ksi$ | (User Input) |
| Bolt Yield Strength = | $F_y := 75 \cdot ksi$ | (User Input) |
| Bolt Modulus = | $E := 29000 \cdot ksi$ | (User Input) |
| Diameter of Anchor Bolts = | $D := 2.25 \cdot in$ | (User Input) |
| Threads per Inch = | $n := 4.5$ | (User Input) |
| Top of Concrete to Bot Leveling Nut = | $l_{ar} := 2 \cdot in$ | (User Input) |

Base Plate Data:

Use AST M572 Grade 60

| | | |
|---|---|---|
| Plate Yield Strength = | $Fy_{bp} := 60 \cdot ksi$ | (User Input) |
| Base Plate Thickness = | $t_{bp} := 3.0 \cdot in$ | (User Input) |
| Base Plate Diameter = | $D_{bp} := 92.0 \cdot in$ | (User Input) |
| Outer Pole Diameter = | $D_{pole} := 76.0 \cdot in$ | (User Input) |
| | $\eta := 0.5$ | For Ungrouted Base Plate per TIA-222-G Section 4.9.9 |

## Geometric Layout Data:

Distance from Bolts to Centroid of Pole:

Radius of Bolt Circle =: $R_{bc} := \frac{D_{bc}}{2} = 43 \cdot in$

Distance to Bolts = $i := 1 .. N$

$$d_i := \left\| \begin{array}{l} \theta \leftarrow 2 \cdot \pi \cdot \left(\frac{i}{N}\right) \\ d \leftarrow R_{bc} \cdot \sin(\theta) \end{array} \right.$$

$d_1 = 8.94 \cdot in$

$d_2 = 17.49 \cdot in$

$d_3 = 25.27 \cdot in$

$d_4 = 31.96 \cdot in$

$d_5 = 37.24 \cdot in$

$d_6 = 40.90 \cdot in$

$d_7 = 42.76 \cdot in$

$d_8 = 42.76 \cdot in$

Critical Distances For Bending in Plate:

Outer Pole Radius = $R_{pole} := \frac{D_{pole}}{2} = 38 \cdot in$

Moment Arms of Bolts about Neutral Axis = $MA_i := if\left(d_i \geq R_{pole}, d_i - R_{pole}, 0in\right)$

$MA_1 = 0.00 \cdot in$

$MA_2 = 0.00 \cdot in$

$MA_3 = 0.00 \cdot in$

$MA_4 = 0.00 \cdot in$

$MA_5 = 0.00 \cdot in$

$MA_6 = 2.90 \cdot in$

$MA_7 = 4.76 \cdot in$

$MA_8 = 4.76 \cdot in$

Effective Width of Baseplate for Bending = $B_{eff} := .8 \cdot 2 \cdot \sqrt{\left(\frac{D_{bp}}{2}\right)^2 - \left(\frac{D_{pole}}{2}\right)^2} = 41.5 \cdot in$

## Anchor Bolt Analysis:

Calculated Anchor Bolt Properties:

Polar Moment of Inertia = $I_p := \sum_i \left(d_i\right)^2 = 2.773 \times 10^4 \cdot in^2$

Gross Area of Bolt = $A_g := \frac{\pi}{4} \cdot D^2 = 3.976 \cdot in^2$

Net Area of Bolt = $A_n := \frac{\pi}{4} \cdot \left(D - \frac{0.9743 \cdot in}{n}\right)^2 = 3.248 \cdot in^2$

Net Diameter = $D_n := \frac{2 \cdot \sqrt{A_n}}{\sqrt{\pi}} = 2.033 \cdot in$

Radius of Gyration of Bolt = $r := \frac{D_n}{4} = 0.508 \cdot in$

Section Modulus of Bolt = $S_x := \frac{\pi \cdot D_n^3}{32} = 0.826 \cdot in^3$

Tensile Root Diameter = $d_{rt} := D - \frac{0.9743 \cdot in}{n} = 2.033 \cdot in$

Plastic Section Modulus = $Z := \frac{d_{rt}^3}{6} = 1.401 \cdot in^3$

Check Anchor Bolt Tension Force:

Maximum Tensile Force = $T_{Max} := OM \cdot \frac{R_{bc}}{I_p} - \frac{Axial}{N} = 109.2 \cdot kips$

Maximum Compressive Force = $P_u := OM \cdot \frac{R_{bc}}{I_p} + \frac{Axial}{N} = 115.9 \cdot kips$

Maximum Shear Force = $V_u := \frac{Shear}{N} = 1.8 \cdot kips$

Design Tensile Strength = $\Phi R_{nt} := 0.8 \cdot F_u \cdot A_n = 259.815 \cdot k$

Bolt % of Capacity = $\frac{\left(P_u + \frac{V_u}{\eta}\right)}{\Phi R_{nt}} \cdot 100 = 46$

Condition1 = $Condition1 := \text{if}\left[\frac{\left(P_u + \frac{V_u}{\eta}\right)}{\Phi R_{nt}} \le 1.00, \text{"OK"}, \text{"Overstressed"}\right]$

Condition1 = "OK"

Design Shear Strength = $\Phi R_{nv} := 0.75 \cdot 0.45 \cdot F_u \cdot A_g = 134.193 \cdot k$

Design Flexural Strength = $\Phi R_{nm} := 0.9 \cdot F_y \cdot Z = 94.597 \cdot in \cdot k$

$$M_u := \begin{cases} 0 & \text{if } l_{ar} < D \\ 0.65 \cdot l_{ar} \cdot V_u & \text{otherwise} \end{cases} = 0 \cdot in \cdot k$$

Bolt % of Capacity = $\left[\left(\frac{V_u}{\Phi R_{nv}}\right)^2 + \left(\frac{P_u}{\Phi R_{nt}} + \frac{M_u}{\Phi R_{nm}}\right)^2\right] \cdot 100 = 19.9$

Condition2 = $\text{Condition2} := \text{if}\left[\left(\frac{V_u}{\Phi R_{nv}}\right)^2 + \left(\frac{P_u}{\Phi R_{nt}} + \frac{M_u}{\Phi R_{nm}}\right)^2 \le 1.00, \text{"OK"}, \text{"Overstressed"}\right]$

Condition2 = "OK"

**Base Plate Analysis:**

Force from Bolts = $C_i := \frac{OM \cdot d_i}{I_p} + \frac{Axial}{N}$

$C_1 = 26.8 \cdot kips$

$C_2 = 49.1 \cdot kips$

$C_3 = 69.5 \cdot kips$

$C_4 = 87.0 \cdot kips$

$C_5 = 100.8 \cdot kips$

$C_6 = 110.4 \cdot kips$

$C_7 = 115.3 \cdot kips$

$C_8 = 115.3 \cdot kips$

Maximum Bending Stress in Plate = $f_{bp} := \sum_i \frac{4 \cdot C_i \cdot MA_i}{\left(B_{eff} \cdot t_{bp}^2\right)} = 18.6 \cdot ksi$

Allowable Bending Stress in Plate = $F_{bp} := 0.9 \cdot Fy_{bp} = 54 \cdot ksi$

Plate Bending Stress % of Capacity = $\frac{f_{bp}}{F_{bp}} = 34.5 \cdot \%$

Condition2 = $Condition2 := if\left(\frac{f_{bp}}{F_{bp}} < 1.00, \text{"Ok"}, \text{"Overstressed"}\right)$

Condition2 = "Ok"

## Caisson Foundation:

Input Data:

| | | |
|---|---|---|
| Shear Force = | $S := 54k$ | *USER INPUT-FROM tnxTower* |
| Overturning Moment = | $M := 6049ft \cdot k$ | *USER INPUT-FROM tnxTower* |
| Applied Axial Load = | $A1 := 101k$ | *USER INPUT-FROM tnxTower* |
| Bending Moment = | $Mu := 6337ft \cdot k$ | *USER INPUT--FROM LPILE* |
| Moment Capacity = | $Mn := 12372ft \cdot k$ | *USER INPUT--FROM LPILE* |
| Foundation Diameter = | $d := 9.0ft$ | *USER INPUT* |
| Overall Length of Caisson = | $L_c := 28.0ft$ | *USER INPUT* |
| Depth From Top of Caisson to Grade = | $L_{pag} := 1.0ft$ | *USER INPUT* |
| Number of Rebar = | $n := 33$ | *USER INPUT* |
| Area of Rebar = | $Ar := 1.560in^2$ | *USER INPUT* |
| Rebar Yield Strength = | $fy := 60ksi$ | *USER INPUT* |
| Concrete Comp Strength = | $f'c := 3ksi$ | *USER INPUT* |

Check Moment Capacity:

Factor of Safety = $FS := \frac{0.9 \cdot Mn}{Mu} = 1.8$

Factor of Safety Required = $FS_{reqd} := 1$

$FOSCheck := if(FS \geq FS_{reqd}, "OK", "NO GOOD")$

$FOSCheck = "OK"$

==========

LPILE Plus for Windows, Version 5.0 (5.0.47)

Analysis of Individual Piles and Drilled Shafts
Subjected to Lateral Loading Using the p-y Method

(c) 1985-2010 by Ensoft, Inc.
All Rights Reserved

==========

This program is licensed to:

TJL
Centek Engineering

---

## Files Used for Analysis

---

Path to file locations: J:\Jobs\1700400.WI\68_Greenwich Perryridge CT2102\04_Structural\Backup Documentation\Foundation\
Name of input data file: Greenwich Hospital Caisson Analysis.lpd
Name of output file: Greenwich Hospital Caisson Analysis.lpo
Name of plot output file: Greenwich Hospital Caisson Analysis.lpp
Name of runtime file: Greenwich Hospital Caisson Analysis.lpr

---

## Time and Date of Analysis

---

Date: February 22, 2018 Time: 10:04:12

---

## Problem Title

---

17004.68 - CT2102 Greenwich Hospital

---

## Program Options

---

Units Used in Computations - US Customary Units: Inches, Pounds

Basic Program Options:

Analysis Type 3:
- Computation of Nonlinear Bending Stiffness and Ultimate Bending Moment Capacity with Pile Response Computed Using Nonlinear EI

Computation Options:
- Only internally-generated p-y curves used in analysis
- Analysis does not use p-y multipliers (individual pile or shaft action only)
- Analysis assumes no shear resistance at pile tip
- Analysis for fixed-length pile or shaft only
- Analysis includes computation of foundation stiffness matrix elements
- Output pile response for full length of pile
- Analysis assumes no soil movements acting on pile
- No additional p-y curves to be computed at user-specified depths

Solution Control Parameters:
- Number of pile increments = 100
- Maximum number of iterations allowed = 100
- Deflection tolerance for convergence = 1.0000E-04 in
- Maximum allowable deflection = 1.0000E+02 in

Printing Options:
- Values of pile-head deflection, bending moment, shear force, and soil reaction are printed for full length of pile.
- Printing Increment (spacing of output points) = 8

---

Pile Structural Properties and Geometry

---

Pile Length = 336.00 in

Depth of ground surface below top of pile = 12.00 in

Slope angle of ground surface = 0.00 deg.

Structural properties of pile defined using 2 points

| Point No. | Point Depth in | Pile Diameter in | Moment of Inertia in**4 | Pile Area Sq.in | Modulus of Elasticity lbs/Sq.in |
|---|---|---|---|---|---|
| 1 | 0.0000 | 108.00000 | 6678285. | 9160.9000 | 3600000. |
| 2 | 336.0000 | 108.00000 | 6678285. | 9160.9000 | 3600000. |

Please note that because this analysis makes computations of ultimate moment capacity and pile response using nonlinear bending stiffness

that the above values of moment of inertia and modulus of are not used
for any computations other than total stress due to combined axial
loading and bending.

---

## Soil and Rock Layering Information

---

The soil profile is modelled using 4 layers

Layer 1 is sand, p-y criteria by Reese et al., 1974
Distance from top of pile to top of layer = 12.000 in
Distance from top of pile to bottom of layer = 48.000 in
p-y subgrade modulus k for top of soil layer = 20.000 lbs/in**3
p-y subgrade modulus k for bottom of layer = 20.000 lbs/in**3

Layer 2 is sand, p-y criteria by Reese et al., 1974
Distance from top of pile to top of layer = 48.000 in
Distance from top of pile to bottom of layer = 72.000 in
p-y subgrade modulus k for top of soil layer = 90.000 lbs/in**3
p-y subgrade modulus k for bottom of layer = 90.000 lbs/in**3

Layer 3 is sand, p-y criteria by Reese et al., 1974
Distance from top of pile to top of layer = 72.000 in
Distance from top of pile to bottom of layer = 132.000 in
p-y subgrade modulus k for top of soil layer = 150.000 lbs/in**3
p-y subgrade modulus k for bottom of layer = 150.000 lbs/in**3

Layer 4 is sand, p-y criteria by Reese et al., 1974
Distance from top of pile to top of layer = 132.000 in
Distance from top of pile to bottom of layer = 360.000 in
p-y subgrade modulus k for top of soil layer = 250.000 lbs/in**3
p-y subgrade modulus k for bottom of layer = 250.000 lbs/in**3

(Depth of lowest layer extends 24.00 in below pile tip)

---

## Effective Unit Weight of Soil vs. Depth

---

Effective unit weight of soil with depth defined using 8 points

| Point No. | Depth X in | Eff. Unit Weight lbs/in**3 |
|---|---|---|
| 1 | 12.00 | 0.05800 |

| | | |
|---|---|---|
| 2 | 48.00 | 0.05800 |
| 3 | 48.00 | 0.06900 |
| 4 | 72.00 | 0.06900 |
| 5 | 72.00 | 0.06900 |
| 6 | 132.00 | 0.06900 |
| 7 | 132.00 | 0.07500 |
| 8 | 360.00 | 0.07500 |

---

## Shear Strength of Soils

---

Shear strength parameters with depth defined using 8 points

| Point No. | Depth X in | Cohesion c lbs/in**2 | Angle of Friction Deg. | E50 or k_rm | RQD % |
|---|---|---|---|---|---|
| 1 | 12.000 | 0.00000 | 20.00 | ------ | ------ |
| 2 | 48.000 | 0.00000 | 20.00 | ------ | ------ |
| 3 | 48.000 | 0.00000 | 30.00 | ------ | ------ |
| 4 | 72.000 | 0.00000 | 30.00 | ------ | ------ |
| 5 | 72.000 | 0.00000 | 35.00 | ------ | ------ |
| 6 | 132.000 | 0.00000 | 35.00 | ------ | ------ |
| 7 | 132.000 | 0.00000 | 42.00 | ------ | ------ |
| 8 | 360.000 | 0.00000 | 42.00 | ------ | ------ |

Notes:

(1) Cohesion = uniaxial compressive strength for rock materials.
(2) Values of E50 are reported for clay strata.
(3) Default values will be generated for E50 when input values are 0.
(4) RQD and k_rm are reported only for weak rock strata.

---

## Loading Type

---

Static loading criteria was used for computation of p-y curves.

---

## Pile-head Loading and Pile-head Fixity Conditions

---

```
Number of loads specified =  2

Load Case Number  1

Pile-head boundary conditions are Shear and Moment (BC Type 1)
Shear force at pile head    =       54000.000 lbs
Bending moment at pile head =    72576000.000 in-lbs
Axial load at pile head     =      101000.000 lbs

Non-zero moment at pile head for this load case indicates the pile-head
may rotate under the applied pile-head loading, but is not a free-head
(zero moment) condition.

Load Case Number  2

Pile-head boundary conditions are Shear and Moment (BC Type 1)
Shear force at pile head    =       22000.000 lbs
Bending moment at pile head =    30288000.000 in-lbs
Axial load at pile head     =      101000.000 lbs

Non-zero moment at pile head for this load case indicates the pile-head
may rotate under the applied pile-head loading, but is not a free-head
(zero moment) condition.



-------------------------------------------------------------------------------
   Computations of Nominal Moment Capacity and Nonlinear Bending Stiffness
-------------------------------------------------------------------------------

Number of sections =  1



Pile Section No.  1

The sectional shape is a circular drilled shaft (bored pile).

Outside Diameter                        =     108.0000 in

Material Properties:

Compressive Strength of Concrete        =        3.000 kip/in**2
Yield Stress of Reinforcement           =          60. kip/in**2
Modulus of Elasticity of Reinforcement  =       29000. kip/in**2
Number of Reinforcing Bars              =           33
Area of Single Bar                      =      1.56000 in**2
Number of Rows of Reinforcing Bars      =           33
```

```
Area of Steel                          =       51.480 in**2
Area of Shaft                          =     9160.884 in**2
Percentage of Steel Reinforcement      =        0.562 percent
Cover Thickness (edge to bar center)   =        4.000 in

Unfactored Axial Squash Load Capacity  =     26317.78 kip
```

Distribution and Area of Steel Reinforcement

| Row Number | Area of Reinforcement in**2 | Distance to Centroidal Axis in |
|---|---|---|
| 1 | 1.560 | 49.943 |
| 2 | 1.560 | 49.491 |
| 3 | 1.560 | 48.591 |
| 4 | 1.560 | 47.250 |
| 5 | 1.560 | 45.482 |
| 6 | 1.560 | 43.301 |
| 7 | 1.560 | 40.729 |
| 8 | 1.560 | 37.787 |
| 9 | 1.560 | 34.504 |
| 10 | 1.560 | 30.908 |
| 11 | 1.560 | 27.032 |
| 12 | 1.560 | 22.911 |
| 13 | 1.560 | 18.583 |
| 14 | 1.560 | 14.087 |
| 15 | 1.560 | 9.463 |
| 16 | 1.560 | 4.753 |
| 17 | 1.560 | 0.000 |
| 18 | 1.560 | -4.753 |
| 19 | 1.560 | -9.463 |
| 20 | 1.560 | -14.087 |
| 21 | 1.560 | -18.583 |
| 22 | 1.560 | -22.911 |
| 23 | 1.560 | -27.032 |
| 24 | 1.560 | -30.908 |
| 25 | 1.560 | -34.504 |
| 26 | 1.560 | -37.787 |
| 27 | 1.560 | -40.729 |
| 28 | 1.560 | -43.301 |
| 29 | 1.560 | -45.482 |
| 30 | 1.560 | -47.250 |
| 31 | 1.560 | -48.591 |
| 32 | 1.560 | -49.491 |
| 33 | 1.560 | -49.943 |

```
Axial Thrust Force =    101000.00  lbs
```

| Bending Moment in-lbs | Bending Stiffness lb-in2 | Bending Curvature rad/in | Maximum Strain in/in | Neutral Axis Position inches | Max. Concrete Stress psi | Max. Steel Stress psi |
|---|---|---|---|---|---|---|
| 11415879. | 2.283176E+13 | 5.000000E-07 | 0.00003047 | 60.93044561 | 93.65401174 | 824.67028 |
| 22713550. | 2.271355E+13 | 0.00000100 | 0.00005760 | 57.59720117 | 175.43650 | 1552.67648 |
| 33889409. | 2.259294E+13 | 0.00000150 | 0.00008469 | 56.46098524 | 255.72176 | 2279.58932 |
| 44945744. | 2.247287E+13 | 0.00000200 | 0.00011179 | 55.89270991 | 334.62536 | 3006.49246 |
| 55888086. | 2.235523E+13 | 0.00000250 | 0.00013898 | 55.59004408 | 412.42440 | 3736.17230 |
| 55888086. | 1.862936E+13 | 0.00000300 | 0.00008723 | 29.07688433 | 259.27283 | 6513.38399 |
| 55888086. | 1.596802E+13 | 0.00000350 | 0.00009974 | 28.49592429 | 295.11599 | 7657.91543 |
| 55888086. | 1.397202E+13 | 0.00000400 | 0.00011198 | 27.99528891 | 329.91354 | 8809.97705 |
| 55888086. | 1.241957E+13 | 0.00000450 | 0.00012424 | 27.60912162 | 364.48269 | 9961.61902 |
| 55888086. | 1.117762E+13 | 0.00000500 | 0.00013652 | 27.30309230 | 398.82259 | 11112.83983 |
| 55888086. | 1.016147E+13 | 0.00000550 | 0.00014880 | 27.05536884 | 432.93261 | 12263.63570 |
| 55888086. | 9.314681E+12 | 0.00000600 | 0.00016148 | 26.91392523 | 467.87995 | 13403.12286 |
| 55888086. | 8.598167E+12 | 0.00000650 | 0.00017374 | 26.72955447 | 501.34966 | 14554.80365 |
| 55888086. | 7.984012E+12 | 0.00000700 | 0.00018602 | 26.57378465 | 534.59252 | 15706.02521 |
| 55888086. | 7.451745E+12 | 0.00000750 | 0.00019831 | 26.44091552 | 567.60785 | 16856.78319 |
| 55888086. | 6.986011E+12 | 0.00000800 | 0.00021061 | 26.32666308 | 600.39476 | 18007.07530 |
| 55888086. | 6.575069E+12 | 0.00000850 | 0.00022294 | 26.22776037 | 632.95256 | 19156.89702 |
| 55888086. | 6.209787E+12 | 0.00000900 | 0.00023527 | 26.14165825 | 665.28036 | 20306.24597 |
| 55888086. | 5.882956E+12 | 0.00000950 | 0.00024763 | 26.06634504 | 697.37726 | 21455.11954 |
| 55888086. | 5.588809E+12 | 0.00001000 | 0.00026000 | 26.00022107 | 729.24263 | 22603.51231 |

| | | | | | | |
|---|---|---|---|---|---|---|
| 55888086. | 5.322675E+12 | 0.00001050 | 0.00027239 | 25.94197959 | 760.87547 | 23751.42245 |
| 55888086. | 5.080735E+12 | 0.00001100 | 0.00028480 | 25.89056164 | 792.27508 | 24898.84490 |
| 55888086. | 4.859834E+12 | 0.00001150 | 0.00029722 | 25.84508210 | 823.44045 | 26045.77800 |
| 55888086. | 4.657341E+12 | 0.00001200 | 0.00030966 | 25.80481356 | 854.37084 | 27192.21658 |
| 55888086. | 4.471047E+12 | 0.00001250 | 0.00032211 | 25.76913804 | 885.06530 | 28338.15798 |
| 55888086. | 4.299084E+12 | 0.00001300 | 0.00033459 | 25.73753732 | 915.52302 | 29483.59777 |
| 55888086. | 4.139858E+12 | 0.00001350 | 0.00034708 | 25.70956725 | 945.74306 | 30628.53259 |
| 57440964. | 4.102926E+12 | 0.00001400 | 0.00035959 | 25.68484801 | 975.72453 | 31772.95869 |
| 59351250. | 4.093190E+12 | 0.00001450 | 0.00037211 | 25.66305453 | 1005.46658 | 32916.87138 |
| 61259338. | 4.083956E+12 | 0.00001500 | 0.00038466 | 25.64390033 | 1034.96820 | 34060.26798 |
| 63165210. | 4.075175E+12 | 0.00001550 | 0.00039722 | 25.62713760 | 1064.22841 | 35203.14510 |
| 65068871. | 4.066804E+12 | 0.00001600 | 0.00040980 | 25.61255711 | 1093.24652 | 36345.49577 |
| 66970288. | 4.058805E+12 | 0.00001650 | 0.00042240 | 25.59996253 | 1122.02131 | 37487.31902 |
| 68869456. | 4.051144E+12 | 0.00001700 | 0.00043502 | 25.58918971 | 1150.55195 | 38628.60938 |
| 70766370. | 4.043793E+12 | 0.00001750 | 0.00044765 | 25.58009380 | 1178.83758 | 39769.36113 |
| 72660994. | 4.036722E+12 | 0.00001800 | 0.00046031 | 25.57253641 | 1206.87694 | 40909.57355 |
| 74553328. | 4.029910E+12 | 0.00001850 | 0.00047298 | 25.56640488 | 1234.66920 | 42049.24016 |
| 76443362. | 4.023335E+12 | 0.00001900 | 0.00048567 | 25.56159621 | 1262.21344 | 43188.35568 |
| 78331071. | 4.016978E+12 | 0.00001950 | 0.00049838 | 25.55801386 | 1289.50853 | 44326.91718 |
| 82099471. | 4.004852E+12 | 0.00002050 | 0.00052386 | 25.55420297 | 1343.34725 | 46602.35799 |
| 85858396. | 3.993414E+12 | 0.00002150 | 0.00054942 | 25.55438966 | 1396.17689 | 48875.52735 |
| 89607728. | 3.982566E+12 | 0.00002250 | 0.00057506 | 25.55810076 | 1447.98896 | 51146.38619 |
| 93347336. | 3.972227E+12 | 0.00002350 | 0.00060078 | 25.56494361 | 1498.77469 | 53414.89551 |
| 97077097. | 3.962330E+12 | 0.00002450 | 0.00062658 | 25.57459313 | 1548.52517 | 55681.01381 |
| 1.007969E+08 | 3.952818E+12 | 0.00002550 | 0.00065246 | 25.58677250 | 1597.23104 | |

| | | | | | | |
|---|---|---|---|---|---|---|
| 57944.70160 | | | | | | |
| 1.044811E+08 | 3.942681E+12 | 0.00002650 | 0.00067838 | 25.59909028 | 1644.77541 | 60000.00000 |
| 1.074189E+08 | 3.906141E+12 | 0.00002750 | 0.00070269 | 25.55242628 | 1688.18082 | 60000.00000 |
| 1.098613E+08 | 3.854783E+12 | 0.00002850 | 0.00072593 | 25.47105879 | 1728.58628 | 60000.00000 |
| 1.119926E+08 | 3.796360E+12 | 0.00002950 | 0.00074847 | 25.37179559 | 1766.81668 | 60000.00000 |
| 1.138795E+08 | 3.733754E+12 | 0.00003050 | 0.00077045 | 25.26075858 | 1803.18600 | 60000.00000 |
| 1.158936E+08 | 3.679162E+12 | 0.00003150 | 0.00079380 | 25.20000011 | 1840.95386 | 60000.00000 |
| 1.172114E+08 | 3.606504E+12 | 0.00003250 | 0.00081588 | 25.10387832 | 1875.68521 | 60000.00000 |
| 1.185920E+08 | 3.540061E+12 | 0.00003350 | 0.00083630 | 24.96417278 | 1906.93389 | 60000.00000 |
| 1.199315E+08 | 3.476275E+12 | 0.00003450 | 0.00085665 | 24.83037990 | 1937.32480 | 60000.00000 |
| 1.210862E+08 | 3.410880E+12 | 0.00003550 | 0.00087643 | 24.68817347 | 1966.12704 | 60000.00000 |
| 1.222375E+08 | 3.348972E+12 | 0.00003650 | 0.00089625 | 24.55489236 | 1994.29668 | 60000.00000 |
| 1.232339E+08 | 3.286237E+12 | 0.00003750 | 0.00091557 | 24.41521257 | 2021.04360 | 60000.00000 |
| 1.242058E+08 | 3.226125E+12 | 0.00003850 | 0.00093485 | 24.28178984 | 2047.07706 | 60000.00000 |
| 1.251350E+08 | 3.167976E+12 | 0.00003950 | 0.00095401 | 24.15219086 | 2072.29576 | 60000.00000 |
| 1.259478E+08 | 3.109821E+12 | 0.00004050 | 0.00097277 | 24.01894194 | 2096.32529 | 60000.00000 |
| 1.267576E+08 | 3.054401E+12 | 0.00004150 | 0.00099156 | 23.89298648 | 2119.78155 | 60000.00000 |
| 1.275511E+08 | 3.001203E+12 | 0.00004250 | 0.00101033 | 23.77245766 | 2142.58845 | 60000.00000 |
| 1.282220E+08 | 2.947632E+12 | 0.00004350 | 0.00102862 | 23.64650863 | 2164.19034 | 60000.00000 |
| 1.288903E+08 | 2.896411E+12 | 0.00004450 | 0.00104695 | 23.52698725 | 2185.24448 | 60000.00000 |
| 1.295560E+08 | 2.847384E+12 | 0.00004550 | 0.00106531 | 23.41347831 | 2205.74787 | 60000.00000 |
| 1.302336E+08 | 2.800722E+12 | 0.00004650 | 0.00108810 | 23.39999861 | 2230.60863 | 60000.00000 |
| 1.308274E+08 | 2.754262E+12 | 0.00004750 | 0.00110584 | 23.28088599 | 2249.10510 | 60000.00000 |
| 1.313581E+08 | 2.708415E+12 | 0.00004850 | 0.00112317 | 23.15815884 | 2266.61589 | 60000.00000 |
| 1.318866E+08 | 2.664376E+12 | 0.00004950 | 0.00114053 | 23.04103857 | 2283.63443 | 60000.00000 |

| | | | | | | |
|---|---|---|---|---|---|---|
| 1.324130E+08 | 2.622039E+12 | 0.00005050 | 0.00115792 | 22.92919689 | 2300.15788 | 60000.00000 |
| 1.328860E+08 | 2.580311E+12 | 0.00005150 | 0.00117505 | 22.81644434 | 2315.89414 | 60000.00000 |
| 1.333101E+08 | 2.539240E+12 | 0.00005250 | 0.00119192 | 22.70326692 | 2330.88986 | 60000.00000 |
| 1.337323E+08 | 2.499669E+12 | 0.00005350 | 0.00120883 | 22.59489173 | 2345.41654 | 60000.00000 |
| 1.341525E+08 | 2.461513E+12 | 0.00005450 | 0.00122576 | 22.49105161 | 2359.47120 | 60000.00000 |
| 1.345707E+08 | 2.424696E+12 | 0.00005550 | 0.00124273 | 22.39150840 | 2373.05132 | 60000.00000 |
| 1.349868E+08 | 2.389148E+12 | 0.00005650 | 0.00125973 | 22.29603678 | 2386.15412 | 60000.00000 |
| 1.353382E+08 | 2.353708E+12 | 0.00005750 | 0.00127633 | 22.19706649 | 2398.45205 | 60000.00000 |
| 1.356700E+08 | 2.319146E+12 | 0.00005850 | 0.00129285 | 22.09994692 | 2410.20416 | 60000.00000 |
| 1.360001E+08 | 2.285716E+12 | 0.00005950 | 0.00130939 | 22.00658351 | 2421.50271 | 60000.00000 |
| 1.366547E+08 | 2.222027E+12 | 0.00006150 | 0.00134257 | 21.83040744 | 2442.72903 | 60000.00000 |
| 1.373019E+08 | 2.162234E+12 | 0.00006350 | 0.00137587 | 21.66722506 | 2462.11086 | 60000.00000 |
| 1.386452E+08 | 2.116721E+12 | 0.00006550 | 0.00141480 | 21.60000032 | 2482.48043 | 60000.00000 |
| 1.386452E+08 | 2.054003E+12 | 0.00006750 | 0.00144828 | 21.45600432 | 2497.73984 | 60000.00000 |
| 1.389312E+08 | 1.999010E+12 | 0.00006950 | 0.00147953 | 21.28825468 | 2510.17569 | 60000.00000 |
| 1.393988E+08 | 1.949634E+12 | 0.00007150 | 0.00151090 | 21.13148385 | 2520.96270 | 60000.00000 |
| 1.398473E+08 | 1.902685E+12 | 0.00007350 | 0.00154225 | 20.98297209 | 2530.04387 | 60000.00000 |
| 1.401993E+08 | 1.856944E+12 | 0.00007550 | 0.00157275 | 20.83114189 | 2537.23963 | 60000.00000 |
| 1.405457E+08 | 1.813492E+12 | 0.00007750 | 0.00160336 | 20.68856210 | 2542.85140 | 60000.00000 |
| 1.408863E+08 | 1.772155E+12 | 0.00007950 | 0.00163409 | 20.55455679 | 2546.86098 | 60000.00000 |
| 1.412213E+08 | 1.732776E+12 | 0.00008150 | 0.00166492 | 20.42851764 | 2549.24965 | 60000.00000 |
| 1.415499E+08 | 1.695208E+12 | 0.00008350 | 0.00169588 | 20.30989105 | 2549.75945 | 60000.00000 |
| 1.418490E+08 | 1.659053E+12 | 0.00008550 | 0.00172674 | 20.19576734 | 2544.66175 | 60000.00000 |
| 1.420846E+08 | 1.623824E+12 | 0.00008750 | 0.00175693 | 20.07916206 | 2540.53141 | 60000.00000 |
| 1.423176E+08 | 1.590141E+12 | 0.00008950 | 0.00178723 | 19.96901983 | 2544.70719 | |

| | | | | | | |
|---|---|---|---|---|---|---|
| 60000.00000 | | | | | | |
| 1.425481E+08 | 1.557903E+12 | 0.00009150 | 0.00181764 | 19.86493510 | 2547.68789 | |
| 60000.00000 | | | | | | |
| 1.425481E+08 | 1.524578E+12 | 0.00009350 | 0.00185130 | 19.79999882 | 2549.59126 | |
| 60000.00000 | | | | | | |
| 1.428175E+08 | 1.495471E+12 | 0.00009550 | 0.00189090 | 19.79999882 | 2547.59774 | |
| 60000.00000 | | | | | | |
| 1.433425E+08 | 1.470179E+12 | 0.00009750 | 0.00192427 | 19.73614722 | 2542.69083 | |
| 60000.00000 | | | | | | |
| 1.435465E+08 | 1.442679E+12 | 0.00009950 | 0.00195384 | 19.63654608 | 2538.45266 | |
| 60000.00000 | | | | | | |
| 1.437491E+08 | 1.416247E+12 | 0.00010150 | 0.00198349 | 19.54176968 | 2541.65921 | |
| 60000.00000 | | | | | | |
| 1.438940E+08 | 1.390281E+12 | 0.00010350 | 0.00201213 | 19.44087464 | 2544.82182 | |
| 60000.00000 | | | | | | |
| 1.440363E+08 | 1.365273E+12 | 0.00010550 | 0.00204083 | 19.34433764 | 2547.23999 | |
| 60000.00000 | | | | | | |
| 1.441773E+08 | 1.341184E+12 | 0.00010750 | 0.00206961 | 19.25218767 | 2548.90919 | |
| 60000.00000 | | | | | | |
| 1.443170E+08 | 1.317964E+12 | 0.00010950 | 0.00209848 | 19.16419941 | 2549.81958 | |
| 60000.00000 | | | | | | |
| 1.444546E+08 | 1.295557E+12 | 0.00011150 | 0.00212748 | 19.08054668 | 2548.88153 | |
| 60000.00000 | | | | | | |
| 1.445894E+08 | 1.273915E+12 | 0.00011350 | 0.00215664 | 19.00127131 | 2545.34475 | |
| 60000.00000 | | | | | | |
| 1.447235E+08 | 1.253017E+12 | 0.00011550 | 0.00218587 | 18.92526931 | 2541.79727 | |
| 60000.00000 | | | | | | |
| 1.448568E+08 | 1.232824E+12 | 0.00011750 | 0.00221515 | 18.85238296 | 2538.23890 | |
| 60000.00000 | | | | | | |
| 1.449893E+08 | 1.213300E+12 | 0.00011950 | 0.00224450 | 18.78245777 | 2534.66960 | |
| 60000.00000 | | | | | | |
| 1.451211E+08 | 1.194412E+12 | 0.00012150 | 0.00227392 | 18.71535534 | 2538.04297 | |
| 60000.00000 | | | | | | |
| 1.452506E+08 | 1.176118E+12 | 0.00012350 | 0.00230335 | 18.65062505 | 2541.39829 | |
| 60000.00000 | | | | | | |
| 1.453416E+08 | 1.158101E+12 | 0.00012550 | 0.00233188 | 18.58072239 | 2544.06515 | |
| 60000.00000 | | | | | | |
| 1.454320E+08 | 1.140643E+12 | 0.00012750 | 0.00236047 | 18.51347512 | 2546.24569 | |
| 60000.00000 | | | | | | |
| 1.455218E+08 | 1.123720E+12 | 0.00012950 | 0.00238912 | 18.44876736 | 2547.93451 | |
| 60000.00000 | | | | | | |
| 1.456109E+08 | 1.107307E+12 | 0.00013150 | 0.00241782 | 18.38648647 | 2549.12601 | |
| 60000.00000 | | | | | | |
| 1.456994E+08 | 1.091381E+12 | 0.00013350 | 0.00244659 | 18.32652944 | 2549.81456 | |
| 60000.00000 | | | | | | |
| 1.457868E+08 | 1.075918E+12 | 0.00013550 | 0.00247544 | 18.26895422 | 2549.57222 | |
| 60000.00000 | | | | | | |
| 1.458720E+08 | 1.060887E+12 | 0.00013750 | 0.00250446 | 18.21428865 | 2546.69180 | |
| 60000.00000 | | | | | | |

| | | | | | | |
|---|---|---|---|---|---|---|
| 1.459569E+08 | 1.046286E+12 | 0.00013950 | 0.00253352 | 18.16146415 | 2543.80468 | 60000.00000 |
| 1.461256E+08 | 1.018297E+12 | 0.00014350 | 0.00259176 | 18.06103259 | 2538.01031 | 60000.00000 |
| 1.466286E+08 | 9.940921E+11 | 0.00014750 | 0.00265500 | 18.00000054 | 2531.33751 | 60000.00000 |
| 1.476109E+08 | 9.743296E+11 | 0.00015150 | 0.00272700 | 18.00000054 | 2536.11274 | 60000.00000 |
| 1.484654E+08 | 9.547614E+11 | 0.00015550 | 0.00279900 | 18.00000054 | 2543.79153 | 60000.00000 |
| 1.484654E+08 | 9.308175E+11 | 0.00015950 | 0.00286657 | 17.97219783 | 2548.05376 | 60000.00000 |
| 1.484654E+08 | 9.080452E+11 | 0.00016350 | 0.00292331 | 17.87956506 | 2549.59559 | 60000.00000 |
| 1.484654E+08 | 8.863606E+11 | 0.00016750 | 0.00298054 | 17.79424506 | 2549.22268 | 60000.00000 |
| 1.484654E+08 | 8.656874E+11 | 0.00017150 | 0.00303955 | 17.72334462 | 2544.55378 | 60000.00000 |
| 1.484654E+08 | 8.459567E+11 | 0.00017550 | 0.00309869 | 17.65636128 | 2539.86379 | 60000.00000 |
| 1.484654E+08 | 8.271053E+11 | 0.00017950 | 0.00315795 | 17.59305364 | 2535.15207 | 60000.00000 |
| 1.484654E+08 | 8.090757E+11 | 0.00018350 | 0.00321734 | 17.53319317 | 2530.41822 | 60000.00000 |
| 1.484654E+08 | 7.918154E+11 | 0.00018750 | 0.00327686 | 17.47657710 | 2525.66167 | 60000.00000 |
| 1.484654E+08 | 7.752762E+11 | 0.00019150 | 0.00333651 | 17.42301553 | 2520.88197 | 60000.00000 |
| 1.484654E+08 | 7.594138E+11 | 0.00019550 | 0.00339666 | 17.37422723 | 2525.68068 | 60000.00000 |
| 1.484654E+08 | 7.441874E+11 | 0.00019950 | 0.00345818 | 17.33421618 | 2531.95383 | 60000.00000 |
| 1.484654E+08 | 7.295597E+11 | 0.00020350 | 0.00351987 | 17.29667705 | 2537.33360 | 60000.00000 |
| 1.484654E+08 | 7.154959E+11 | 0.00020750 | 0.00358176 | 17.26149720 | 2541.79752 | 60000.00000 |
| 1.484654E+08 | 7.019640E+11 | 0.00021150 | 0.00364384 | 17.22857684 | 2545.32195 | 60000.00000 |
| 1.484654E+08 | 6.889345E+11 | 0.00021550 | 0.00370419 | 17.18881685 | 2547.70195 | 60000.00000 |
| 1.484654E+08 | 6.763799E+11 | 0.00021950 | 0.00376422 | 17.14907938 | 2549.22781 | 60000.00000 |
| 1.484654E+08 | 6.642747E+11 | 0.00022350 | 0.00382443 | 17.11152738 | 2549.94424 | 60000.00000 |

Unfactored (Nominal) Moment Capacity at Concrete Strain of 0.003 = 148465.39377 in-kip

Axial Thrust Force = 101000.00 lbs

| Bending Moment in-lbs | Bending Stiffness lb-in2 | Bending Curvature rad/in | Maximum Strain in/in | Neutral Axis Position inches | Max. Concrete Stress psi | Max. Steel Stress psi |
|---|---|---|---|---|---|---|
| 11415879. | 2.283176E+13 | 5.000000E-07 | 0.00003047 | 60.93044561 | 93.65401174 | 824.67028 |
| 22713550. | 2.271355E+13 | 0.00000100 | 0.00005760 | 57.59720117 | 175.43650 | 1552.67648 |
| 33889409. | 2.259294E+13 | 0.00000150 | 0.00008469 | 56.46098524 | 255.72176 | 2279.58932 |
| 44945744. | 2.247287E+13 | 0.00000200 | 0.00011179 | 55.89270991 | 334.62536 | 3006.49246 |
| 55888086. | 2.235523E+13 | 0.00000250 | 0.00013898 | 55.59004408 | 412.42440 | 3736.17230 |
| 55888086. | 1.862936E+13 | 0.00000300 | 0.00008723 | 29.07688433 | 259.27283 | 6513.38399 |
| 55888086. | 1.596802E+13 | 0.00000350 | 0.00009974 | 28.49592429 | 295.11599 | 7657.91543 |
| 55888086. | 1.397202E+13 | 0.00000400 | 0.00011198 | 27.99528891 | 329.91354 | 8809.97705 |
| 55888086. | 1.241957E+13 | 0.00000450 | 0.00012424 | 27.60912162 | 364.48269 | 9961.61902 |
| 55888086. | 1.117762E+13 | 0.00000500 | 0.00013652 | 27.30309230 | 398.82259 | 11112.83983 |
| 55888086. | 1.016147E+13 | 0.00000550 | 0.00014880 | 27.05536884 | 432.93261 | 12263.63570 |
| 55888086. | 9.314681E+12 | 0.00000600 | 0.00016148 | 26.91392523 | 467.87995 | 13403.12286 |
| 55888086. | 8.598167E+12 | 0.00000650 | 0.00017374 | 26.72955447 | 501.34966 | 14554.80365 |
| 55888086. | 7.984012E+12 | 0.00000700 | 0.00018602 | 26.57378465 | 534.59252 | 15706.02521 |
| 55888086. | 7.451745E+12 | 0.00000750 | 0.00019831 | 26.44091552 | 567.60785 | 16856.78319 |
| 55888086. | 6.986011E+12 | 0.00000800 | 0.00021061 | 26.32666308 | 600.39476 | 18007.07530 |
| 55888086. | 6.575069E+12 | 0.00000850 | 0.00022294 | 26.22776037 | 632.95256 | 19156.89702 |
| 55888086. | 6.209787E+12 | 0.00000900 | 0.00023527 | 26.14165825 | 665.28036 | 20306.24597 |
| 55888086. | 5.882956E+12 | 0.00000950 | 0.00024763 | 26.06634504 | 697.37726 | |

| | | | | | | |
|---|---|---|---|---|---|---|
| 55888086. | 5.588809E+12 | 0.00001000 | 0.00026000 | 26.00022107 | 729.24263 | 21455.11954 |
| 55888086. | 5.322675E+12 | 0.00001050 | 0.00027239 | 25.94197959 | 760.87547 | 22603.51231 |
| 55888086. | 5.080735E+12 | 0.00001100 | 0.00028480 | 25.89056164 | 792.27508 | 23751.42245 |
| 55888086. | 4.859834E+12 | 0.00001150 | 0.00029722 | 25.84508210 | 823.44045 | 24898.84490 |
| 55888086. | 4.657341E+12 | 0.00001200 | 0.00030966 | 25.80481356 | 854.37084 | 26045.77800 |
| 55888086. | 4.471047E+12 | 0.00001250 | 0.00032211 | 25.76913804 | 885.06530 | 27192.21658 |
| 55888086. | 4.299084E+12 | 0.00001300 | 0.00033459 | 25.73753732 | 915.52302 | 28338.15798 |
| 55888086. | 4.139858E+12 | 0.00001350 | 0.00034708 | 25.70956725 | 945.74306 | 29483.59777 |
| 57440964. | 4.102926E+12 | 0.00001400 | 0.00035959 | 25.68484801 | 975.72453 | 30628.53259 |
| 59351250. | 4.093190E+12 | 0.00001450 | 0.00037211 | 25.66305453 | 1005.46658 | 31772.95869 |
| 61259338. | 4.083956E+12 | 0.00001500 | 0.00038466 | 25.64390033 | 1034.96820 | 32916.87138 |
| 63165210. | 4.075175E+12 | 0.00001550 | 0.00039722 | 25.62713760 | 1064.22841 | 34060.26798 |
| 65068871. | 4.066804E+12 | 0.00001600 | 0.00040980 | 25.61255711 | 1093.24652 | 35203.14510 |
| 66970288. | 4.058805E+12 | 0.00001650 | 0.00042240 | 25.59996253 | 1122.02131 | 36345.49577 |
| 68869456. | 4.051144E+12 | 0.00001700 | 0.00043502 | 25.58918971 | 1150.55195 | 37487.31902 |
| 70766370. | 4.043793E+12 | 0.00001750 | 0.00044765 | 25.58009380 | 1178.83758 | 38628.60938 |
| 72660994. | 4.036722E+12 | 0.00001800 | 0.00046031 | 25.57253641 | 1206.87694 | 39769.36113 |
| 74553328. | 4.029910E+12 | 0.00001850 | 0.00047298 | 25.56640488 | 1234.66920 | 40909.57355 |
| 76443362. | 4.023335E+12 | 0.00001900 | 0.00048567 | 25.56159621 | 1262.21344 | 42049.24016 |
| 78331071. | 4.016978E+12 | 0.00001950 | 0.00049838 | 25.55801386 | 1289.50853 | 43188.35568 |
| 82099471. | 4.004852E+12 | 0.00002050 | 0.00052386 | 25.55420297 | 1343.34725 | 44326.91718 |
| 85858396. | 3.993414E+12 | 0.00002150 | 0.00054942 | 25.55438966 | 1396.17689 | 46602.35799 |
| 89607728. | 3.982566E+12 | 0.00002250 | 0.00057506 | 25.55810076 | 1447.98896 | 48875.52735 |
| 93347336. | 3.972227E+12 | 0.00002350 | 0.00060078 | 25.56494361 | 1498.77469 | 51146.38619 |
| | | | | | | 53414.89551 |

| | | | | | | |
|---|---|---|---|---|---|---|
| 97077097. | 3.962330E+12 | 0.00002450 | 0.00062658 | 25.57459313 | 1548.52517 | 55681.01381 |
| 1.007969E+08 | 3.952818E+12 | 0.00002550 | 0.00065246 | 25.58677250 | 1597.23104 | 57944.70160 |
| 1.044811E+08 | 3.942681E+12 | 0.00002650 | 0.00067838 | 25.59909028 | 1644.77541 | 60000.00000 |
| 1.074189E+08 | 3.906141E+12 | 0.00002750 | 0.00070269 | 25.55242628 | 1688.18082 | 60000.00000 |
| 1.098613E+08 | 3.854783E+12 | 0.00002850 | 0.00072593 | 25.47105879 | 1728.58628 | 60000.00000 |
| 1.119926E+08 | 3.796360E+12 | 0.00002950 | 0.00074847 | 25.37179559 | 1766.81668 | 60000.00000 |
| 1.138795E+08 | 3.733754E+12 | 0.00003050 | 0.00077045 | 25.26075858 | 1803.18600 | 60000.00000 |
| 1.158936E+08 | 3.679162E+12 | 0.00003150 | 0.00079380 | 25.20000011 | 1840.95386 | 60000.00000 |
| 1.172114E+08 | 3.606504E+12 | 0.00003250 | 0.00081588 | 25.10387832 | 1875.68521 | 60000.00000 |
| 1.185920E+08 | 3.540061E+12 | 0.00003350 | 0.00083630 | 24.96417278 | 1906.93389 | 60000.00000 |
| 1.199315E+08 | 3.476275E+12 | 0.00003450 | 0.00085665 | 24.83037990 | 1937.32480 | 60000.00000 |
| 1.210862E+08 | 3.410880E+12 | 0.00003550 | 0.00087643 | 24.68817347 | 1966.12704 | 60000.00000 |
| 1.222375E+08 | 3.348972E+12 | 0.00003650 | 0.00089625 | 24.55489236 | 1994.29668 | 60000.00000 |
| 1.232339E+08 | 3.286237E+12 | 0.00003750 | 0.00091557 | 24.41521257 | 2021.04360 | 60000.00000 |
| 1.242058E+08 | 3.226125E+12 | 0.00003850 | 0.00093485 | 24.28178984 | 2047.07706 | 60000.00000 |
| 1.251350E+08 | 3.167976E+12 | 0.00003950 | 0.00095401 | 24.15219086 | 2072.29576 | 60000.00000 |
| 1.259478E+08 | 3.109821E+12 | 0.00004050 | 0.00097277 | 24.01894194 | 2096.32529 | 60000.00000 |
| 1.267576E+08 | 3.054401E+12 | 0.00004150 | 0.00099156 | 23.89298648 | 2119.78155 | 60000.00000 |
| 1.275511E+08 | 3.001203E+12 | 0.00004250 | 0.00101033 | 23.77245766 | 2142.58845 | 60000.00000 |
| 1.282220E+08 | 2.947632E+12 | 0.00004350 | 0.00102862 | 23.64650863 | 2164.19034 | 60000.00000 |
| 1.288903E+08 | 2.896411E+12 | 0.00004450 | 0.00104695 | 23.52698725 | 2185.24448 | 60000.00000 |
| 1.295560E+08 | 2.847384E+12 | 0.00004550 | 0.00106531 | 23.41347831 | 2205.74787 | 60000.00000 |
| 1.302336E+08 | 2.800722E+12 | 0.00004650 | 0.00108810 | 23.39999861 | 2230.60863 | 60000.00000 |
| 1.308274E+08 | 2.754262E+12 | 0.00004750 | 0.00110584 | 23.28088599 | 2249.10510 | 60000.00000 |
| 1.313581E+08 | 2.708415E+12 | 0.00004850 | 0.00112317 | 23.15815884 | 2266.61589 | |

| | | | | | | |
|---|---|---|---|---|---|---|
| 60000.00000 | | | | | | |
| 1.318866E+08 | 2.664376E+12 | 0.00004950 | 0.00114053 | 23.04103857 | 2283.63443 | |
| 60000.00000 | | | | | | |
| 1.324130E+08 | 2.622039E+12 | 0.00005050 | 0.00115792 | 22.92919689 | 2300.15788 | |
| 60000.00000 | | | | | | |
| 1.328860E+08 | 2.580311E+12 | 0.00005150 | 0.00117505 | 22.81644434 | 2315.89414 | |
| 60000.00000 | | | | | | |
| 1.333101E+08 | 2.539240E+12 | 0.00005250 | 0.00119192 | 22.70326692 | 2330.88986 | |
| 60000.00000 | | | | | | |
| 1.337323E+08 | 2.499669E+12 | 0.00005350 | 0.00120883 | 22.59489173 | 2345.41654 | |
| 60000.00000 | | | | | | |
| 1.341525E+08 | 2.461513E+12 | 0.00005450 | 0.00122576 | 22.49105161 | 2359.47120 | |
| 60000.00000 | | | | | | |
| 1.345707E+08 | 2.424696E+12 | 0.00005550 | 0.00124273 | 22.39150840 | 2373.05132 | |
| 60000.00000 | | | | | | |
| 1.349868E+08 | 2.389148E+12 | 0.00005650 | 0.00125973 | 22.29603678 | 2386.15412 | |
| 60000.00000 | | | | | | |
| 1.353382E+08 | 2.353708E+12 | 0.00005750 | 0.00127633 | 22.19706649 | 2398.45205 | |
| 60000.00000 | | | | | | |
| 1.356700E+08 | 2.319146E+12 | 0.00005850 | 0.00129285 | 22.09994692 | 2410.20416 | |
| 60000.00000 | | | | | | |
| 1.360001E+08 | 2.285716E+12 | 0.00005950 | 0.00130939 | 22.00658351 | 2421.50271 | |
| 60000.00000 | | | | | | |
| 1.366547E+08 | 2.222027E+12 | 0.00006150 | 0.00134257 | 21.83040744 | 2442.72903 | |
| 60000.00000 | | | | | | |
| 1.373019E+08 | 2.162234E+12 | 0.00006350 | 0.00137587 | 21.66722506 | 2462.11086 | |
| 60000.00000 | | | | | | |
| 1.386452E+08 | 2.116721E+12 | 0.00006550 | 0.00141480 | 21.60000032 | 2482.48043 | |
| 60000.00000 | | | | | | |
| 1.386452E+08 | 2.054003E+12 | 0.00006750 | 0.00144828 | 21.45600432 | 2497.73984 | |
| 60000.00000 | | | | | | |
| 1.389312E+08 | 1.999010E+12 | 0.00006950 | 0.00147953 | 21.28825468 | 2510.17569 | |
| 60000.00000 | | | | | | |
| 1.393988E+08 | 1.949634E+12 | 0.00007150 | 0.00151090 | 21.13148385 | 2520.96270 | |
| 60000.00000 | | | | | | |
| 1.398473E+08 | 1.902685E+12 | 0.00007350 | 0.00154225 | 20.98297209 | 2530.04387 | |
| 60000.00000 | | | | | | |
| 1.401993E+08 | 1.856944E+12 | 0.00007550 | 0.00157275 | 20.83114189 | 2537.23963 | |
| 60000.00000 | | | | | | |
| 1.405457E+08 | 1.813492E+12 | 0.00007750 | 0.00160336 | 20.68856210 | 2542.85140 | |
| 60000.00000 | | | | | | |
| 1.408863E+08 | 1.772155E+12 | 0.00007950 | 0.00163409 | 20.55455679 | 2546.86098 | |
| 60000.00000 | | | | | | |
| 1.412213E+08 | 1.732776E+12 | 0.00008150 | 0.00166492 | 20.42851764 | 2549.24965 | |
| 60000.00000 | | | | | | |
| 1.415499E+08 | 1.695208E+12 | 0.00008350 | 0.00169588 | 20.30989105 | 2549.75945 | |
| 60000.00000 | | | | | | |
| 1.418490E+08 | 1.659053E+12 | 0.00008550 | 0.00172674 | 20.19576734 | 2544.66175 | |
| 60000.00000 | | | | | | |

| | | | | | | |
|---|---|---|---|---|---|---|
| 1.420846E+08 | 1.623824E+12 | 0.00008750 | 0.00175693 | 20.07916206 | 2540.53141 | 60000.00000 |
| 1.423176E+08 | 1.590141E+12 | 0.00008950 | 0.00178723 | 19.96901983 | 2544.70719 | 60000.00000 |
| 1.425481E+08 | 1.557903E+12 | 0.00009150 | 0.00181764 | 19.86493510 | 2547.68789 | 60000.00000 |
| 1.425481E+08 | 1.524578E+12 | 0.00009350 | 0.00185130 | 19.79999882 | 2549.59126 | 60000.00000 |
| 1.428175E+08 | 1.495471E+12 | 0.00009550 | 0.00189090 | 19.79999882 | 2547.59774 | 60000.00000 |
| 1.433425E+08 | 1.470179E+12 | 0.00009750 | 0.00192427 | 19.73614722 | 2542.69083 | 60000.00000 |
| 1.435465E+08 | 1.442679E+12 | 0.00009950 | 0.00195384 | 19.63654608 | 2538.45266 | 60000.00000 |
| 1.437491E+08 | 1.416247E+12 | 0.00010150 | 0.00198349 | 19.54176968 | 2541.65921 | 60000.00000 |
| 1.438940E+08 | 1.390281E+12 | 0.00010350 | 0.00201213 | 19.44087464 | 2544.82182 | 60000.00000 |
| 1.440363E+08 | 1.365273E+12 | 0.00010550 | 0.00204083 | 19.34433764 | 2547.23999 | 60000.00000 |
| 1.441773E+08 | 1.341184E+12 | 0.00010750 | 0.00206961 | 19.25218767 | 2548.90919 | 60000.00000 |
| 1.443170E+08 | 1.317964E+12 | 0.00010950 | 0.00209848 | 19.16419941 | 2549.81958 | 60000.00000 |
| 1.444546E+08 | 1.295557E+12 | 0.00011150 | 0.00212748 | 19.08054668 | 2548.88153 | 60000.00000 |
| 1.445894E+08 | 1.273915E+12 | 0.00011350 | 0.00215664 | 19.00127131 | 2545.34475 | 60000.00000 |
| 1.447235E+08 | 1.253017E+12 | 0.00011550 | 0.00218587 | 18.92526931 | 2541.79727 | 60000.00000 |
| 1.448568E+08 | 1.232824E+12 | 0.00011750 | 0.00221515 | 18.85238296 | 2538.23890 | 60000.00000 |
| 1.449893E+08 | 1.213300E+12 | 0.00011950 | 0.00224450 | 18.78245777 | 2534.66960 | 60000.00000 |
| 1.451211E+08 | 1.194412E+12 | 0.00012150 | 0.00227392 | 18.71535534 | 2538.04297 | 60000.00000 |
| 1.452506E+08 | 1.176118E+12 | 0.00012350 | 0.00230335 | 18.65062505 | 2541.39829 | 60000.00000 |
| 1.453416E+08 | 1.158101E+12 | 0.00012550 | 0.00233188 | 18.58072239 | 2544.06515 | 60000.00000 |
| 1.454320E+08 | 1.140643E+12 | 0.00012750 | 0.00236047 | 18.51347512 | 2546.24569 | 60000.00000 |
| 1.455218E+08 | 1.123720E+12 | 0.00012950 | 0.00238912 | 18.44876736 | 2547.93451 | 60000.00000 |
| 1.456109E+08 | 1.107307E+12 | 0.00013150 | 0.00241782 | 18.38648647 | 2549.12601 | 60000.00000 |
| 1.456994E+08 | 1.091381E+12 | 0.00013350 | 0.00244659 | 18.32652944 | 2549.81456 | 60000.00000 |
| 1.457868E+08 | 1.075918E+12 | 0.00013550 | 0.00247544 | 18.26895422 | 2549.57222 | |

| | | | | | |
|---|---|---|---|---|---|
| 60000.00000 | | | | | |
| 1.458720E+08 | 1.060887E+12 | 0.00013750 | 0.00250446 | 18.21428865 | 2546.69180 |
| 60000.00000 | | | | | |
| 1.459569E+08 | 1.046286E+12 | 0.00013950 | 0.00253352 | 18.16146415 | 2543.80468 |
| 60000.00000 | | | | | |
| 1.461256E+08 | 1.018297E+12 | 0.00014350 | 0.00259176 | 18.06103259 | 2538.01031 |
| 60000.00000 | | | | | |
| 1.466286E+08 | 9.940921E+11 | 0.00014750 | 0.00265500 | 18.00000054 | 2531.33751 |
| 60000.00000 | | | | | |
| 1.476109E+08 | 9.743296E+11 | 0.00015150 | 0.00272700 | 18.00000054 | 2536.11274 |
| 60000.00000 | | | | | |
| 1.484654E+08 | 9.547614E+11 | 0.00015550 | 0.00279900 | 18.00000054 | 2543.79153 |
| 60000.00000 | | | | | |
| 1.484654E+08 | 9.308175E+11 | 0.00015950 | 0.00286657 | 17.97219783 | 2548.05376 |
| 60000.00000 | | | | | |
| 1.484654E+08 | 9.080452E+11 | 0.00016350 | 0.00292331 | 17.87956506 | 2549.59559 |
| 60000.00000 | | | | | |
| 1.484654E+08 | 8.863606E+11 | 0.00016750 | 0.00298054 | 17.79424506 | 2549.22268 |
| 60000.00000 | | | | | |
| 1.484654E+08 | 8.656874E+11 | 0.00017150 | 0.00303955 | 17.72334462 | 2544.55378 |
| 60000.00000 | | | | | |
| 1.484654E+08 | 8.459567E+11 | 0.00017550 | 0.00309869 | 17.65636128 | 2539.86379 |
| 60000.00000 | | | | | |
| 1.484654E+08 | 8.271053E+11 | 0.00017950 | 0.00315795 | 17.59305364 | 2535.15207 |
| 60000.00000 | | | | | |
| 1.484654E+08 | 8.090757E+11 | 0.00018350 | 0.00321734 | 17.53319317 | 2530.41822 |
| 60000.00000 | | | | | |
| 1.484654E+08 | 7.918154E+11 | 0.00018750 | 0.00327686 | 17.47657710 | 2525.66167 |
| 60000.00000 | | | | | |
| 1.484654E+08 | 7.752762E+11 | 0.00019150 | 0.00333651 | 17.42301553 | 2520.88197 |
| 60000.00000 | | | | | |
| 1.484654E+08 | 7.594138E+11 | 0.00019550 | 0.00339666 | 17.37422723 | 2525.68068 |
| 60000.00000 | | | | | |
| 1.484654E+08 | 7.441874E+11 | 0.00019950 | 0.00345818 | 17.33421618 | 2531.95383 |
| 60000.00000 | | | | | |
| 1.484654E+08 | 7.295597E+11 | 0.00020350 | 0.00351987 | 17.29667705 | 2537.33360 |
| 60000.00000 | | | | | |
| 1.484654E+08 | 7.154959E+11 | 0.00020750 | 0.00358176 | 17.26149720 | 2541.79752 |
| 60000.00000 | | | | | |
| 1.484654E+08 | 7.019640E+11 | 0.00021150 | 0.00364384 | 17.22857684 | 2545.32195 |
| 60000.00000 | | | | | |
| 1.484654E+08 | 6.889345E+11 | 0.00021550 | 0.00370419 | 17.18881685 | 2547.70195 |
| 60000.00000 | | | | | |
| 1.484654E+08 | 6.763799E+11 | 0.00021950 | 0.00376422 | 17.14907938 | 2549.22781 |
| 60000.00000 | | | | | |
| 1.484654E+08 | 6.642747E+11 | 0.00022350 | 0.00382443 | 17.11152738 | 2549.94424 |
| 60000.00000 | | | | | |

Unfactored (Nominal) Moment Capacity at Concrete Strain of 0.003 =  148465.39377

in-kip

---

Computed Values of Load Distribution and Deflection
for Lateral Loading for Load Case Number 1

---

Pile-head boundary conditions are Shear and Moment (Pile-head Condition Type 1)
Specified shear force at pile head = 54000.000 lbs
Specified moment at pile head = 72576000.000 in-lbs
Specified axial load at pile head = 101000.000 lbs

| Depth X in | Deflect. y in | Moment M lbs-in | Shear V lbs | Slope S Rad. | Total Stress lbs/in**2 | Flx. Rig. EI lbs-in**2 | Soil Res. p lbs/in | Es*h F/L |
|---|---|---|---|---|---|---|---|---|
| 0.000 | 0.768866 | 7.26E+07 | 54000. | -0.005278 | 597.868 | 4.04E+12 | 0.000 | 0.000 |
| 26.880 | 0.633523 | 7.40E+07 | 52527. | -0.004790 | 609.657 | 4.03E+12 | -188.537 | 999.936 |
| 53.760 | 0.511447 | 7.54E+07 | 41679. | -0.004292 | 620.325 | 4.03E+12 | -940.193 | 6176.695 |
| 80.640 | 0.402879 | 7.60E+07 | 3199.086 | -0.003786 | 625.855 | 4.02E+12 | -2040.314 | 17016. |
| 107.520 | 0.307940 | 7.53E+07 | -66263. | -0.003279 | 619.618 | 4.03E+12 | -3107.565 | 33907. |
| 134.400 | 0.226468 | 7.23E+07 | -1.62E+05 | -0.002786 | 595.382 | 4.04E+12 | -4772.867 | 70813. |
| 161.280 | 0.157879 | 6.62E+07 | -2.86E+05 | -0.002325 | 546.575 | 4.06E+12 | -4388.281 | 93392. |
| 188.160 | 0.101023 | 5.71E+07 | -3.93E+05 | -0.001930 | 472.366 | 9.23E+12 | -3486.817 | 1.16E+05 |
| 215.040 | 0.050172 | 4.54E+07 | -4.69E+05 | -0.001862 | 378.027 | 2.25E+13 | -2068.839 | 1.39E+05 |
| 241.920 | 0.000777 | 3.23E+07 | -4.99E+05 | -0.001816 | 271.894 | 2.26E+13 | -37.263 | 1.61E+05 |
| 268.800 | -0.047586 | 1.91E+07 | -4.65E+05 | -0.001785 | 165.834 | 2.27E+13 | 2601.770 | 1.84E+05 |
| 295.680 | -0.095335 | 7.94E+06 | -3.53E+05 | -0.001770 | 75.266 | 2.28E+13 | 5853.123 | 2.06E+05 |
| 322.560 | -0.142822 | 1.01E+06 | -1.45E+05 | -0.001765 | 19.193 | 2.28E+13 | 9728.338 | 2.29E+05 |

Please note that because this analysis makes computations of ultimate moment capacity and pile response using nonlinear bending stiffness that the above values of total stress due to combined axial stress and bending may not be representative of actual conditions.

Output Verification:

Computed forces and moments are within specified convergence limits.

Output Summary for Load Case No. 1:

```
Pile-head deflection             =     0.76886577 in
Computed slope at pile head      =    -0.00527838
Maximum bending moment           =      76037739. lbs-in
Maximum shear force              =  -498622.48455 lbs
Depth of maximum bending moment  =    84.00000000 in
Depth of maximum shear force     =      241.92000 in
Number of iterations             =             41
Number of zero deflection points =              1
```

---

Computed Values of Load Distribution and Deflection
for Lateral Loading for Load Case Number 2

---

Pile-head boundary conditions are Shear and Moment (Pile-head Condition Type 1)
Specified shear force at pile head = 22000.000 lbs
Specified moment at pile head = 30288000.000 in-lbs
Specified axial load at pile head = 101000.000 lbs

| Depth X in | Deflect. y in | Moment M lbs-in | Shear V lbs | Slope S Rad. | Total Stress lbs/in**2 | Flx. Rig. EI lbs-in**2 | Soil Res. p lbs/in | Es*h F/L |
|---|---|---|---|---|---|---|---|---|
| 0.000 | 0.214277 | 3.03E+07 | 22000. | -0.001045 | 255.931 | 2.26E+13 | 0.000 | 0.000 |
| 26.880 | 0.186682 | 3.09E+07 | 21571. | -0.001008 | 260.718 | 2.26E+13 | -55.557 | 999.936 |
| 53.760 | 0.160073 | 3.14E+07 | 17382. | -0.000971 | 265.157 | 2.26E+13 | -468.885 | 9842.069 |
| 80.640 | 0.134468 | 3.17E+07 | -1269.323 | -0.000934 | 267.241 | 2.26E+13 | -1032.227 | |

| | | | | | | | | |
|---|---|---|---|---|---|---|---|---|
| 25793. | | | | | | | | |
| 107.520 | 0.109873 | 3.12E+07 | -32848. | -0.000896 | 263.681 | 2.26E+13 | -1286.437 | 39340. |
| 134.400 | 0.086274 | 2.99E+07 | -69552. | -0.000860 | 252.692 | 2.26E+13 | -1818.247 | 70813. |
| 161.280 | 0.063627 | 2.74E+07 | -1.18E+05 | -0.000826 | 232.262 | 2.27E+13 | -1768.517 | 93392. |
| 188.160 | 0.041849 | 2.36E+07 | -1.62E+05 | -0.000795 | 201.630 | 2.27E+13 | -1444.411 | 1.16E+05 |
| 215.040 | 0.020818 | 1.88E+07 | -1.94E+05 | -0.000770 | 162.684 | 2.27E+13 | -858.437 | 1.39E+05 |
| 241.920 | 0.000382 | 1.33E+07 | -2.06E+05 | -0.000751 | 118.845 | 2.28E+13 | -18.317 | 1.61E+05 |
| 268.800 | -0.019631 | 7.91E+06 | -1.92E+05 | -0.000739 | 75.018 | 2.28E+13 | 1073.355 | 1.84E+05 |
| 295.680 | -0.039392 | 3.28E+06 | -1.46E+05 | -0.000732 | 37.583 | 2.28E+13 | 2418.506 | 2.06E+05 |
| 322.560 | -0.059045 | 4.18E+05 | -60033. | -0.000730 | 14.402 | 2.28E+13 | 4021.853 | 2.29E+05 |

Please note that because this analysis makes computations of ultimate moment capacity and pile response using nonlinear bending stiffness that the above values of total stress due to combined axial stress and bending may not be representative of actual conditions.

Output Verification:

Computed forces and moments are within specified convergence limits.

Output Summary for Load Case No.  2:

```
Pile-head deflection             =     0.21427748 in
Computed slope at pile head      =    -0.00104472
Maximum bending moment           =      31686719. lbs-in
Maximum shear force              =  -206007.41770 lbs
Depth of maximum bending moment  =    80.64000000 in
Depth of maximum shear force     =      241.92000 in
Number of iterations             =              5
Number of zero deflection points =              1
```

---

Summary of Pile Response(s)

---

Definition of Symbols for Pile-Head Loading Conditions:

Type 1 = Shear and Moment, y = pile-head displacment in
Type 2 = Shear and Slope, M = Pile-head Moment lbs-in
Type 3 = Shear and Rot. Stiffness, V = Pile-head Shear Force lbs
Type 4 = Deflection and Moment, S = Pile-head Slope, radians
Type 5 = Deflection and Slope, R = Rot. Stiffness of Pile-head in-lbs/rad

| Load Type | Pile-Head Condition 1 | Pile-Head Condition 2 | Axial Load lbs | Pile-Head Deflection in | Maximum Moment in-lbs | Maximum Shear lbs |
|---|---|---|---|---|---|---|
| 1 | V= 54000. | M= 7.26E+07 | 101000. | 0.7688658 | 7.6038E+07 | -498622. |
| 1 | V= 22000. | M= 3.03E+07 | 101000. | 0.2142775 | 3.1687E+07 | -206007. |

Computed Pile-head Stiffness Matrix Members
K22, K23, K32, K33 for Superstructure

| Top y in | Shear React. lbs | Mom. React. in-lbs | K22 lbs/in | K32 in-lbs/in |
|---|---|---|---|---|
| 0.00139523 | 5400.00008 | 1079558. | 3870343. | 7.737521E+08 |
| 0.00420005 | 16255.61977 | 3249795. | 3870343. | 7.737521E+08 |
| 0.00665692 | 25764.54775 | 5150803. | 3870343. | 7.737521E+08 |
| 0.00840009 | 32511.23953 | 6499589. | 3870343. | 7.737521E+08 |
| 0.00975221 | 37744.38023 | 7545789. | 3870343. | 7.737521E+08 |
| 0.01085696 | 42020.16752 | 8400597. | 3870343. | 7.737521E+08 |
| 0.01179102 | 45635.29416 | 9123327. | 3870343. | 7.737521E+08 |
| 0.01260014 | 48766.85930 | 9749384. | 3870343. | 7.737521E+08 |
| 0.01331383 | 51529.09551 | 10301605. | 3870343. | 7.737521E+08 |
| 0.01395225 | 54000.00000 | 10795584. | 3870343. | 7.737521E+08 |

| Top Rota. rad | Shear React. lbs | Mom. React. in-lbs | K23 lbs/rad | K33 in-lbs/rad |
|---|---|---|---|---|
| 0.00003861 | 29876.46919 | 7257600. | 7.737521E+08 | 1.879601E+11 |
| 0.00011647 | 89944.37982 | 21847553. | 7.722613E+08 | 1.875828E+11 |
| 0.00018512 | 142582.45725 | 34627552. | 7.702169E+08 | 1.870548E+11 |
| 0.00023410 | 179942.86397 | 43695106. | 7.686647E+08 | 1.866531E+11 |
| 0.00027223 | 208929.40922 | 50728447. | 7.674623E+08 | 1.863413E+11 |
| 0.00030349 | 232618.07439 | 56475105. | 7.664777E+08 | 1.860858E+11 |
| 0.00034062 | 252699.68305 | 61333835. | 7.418781E+08 | 1.800645E+11 |
| 0.00065990 | 272900.93685 | 65542659. | 4.135501E+08 | 9.932238E+10 |
| 0.00082843 | 291661.23546 | 69255104. | 3.520633E+08 | 8.359760E+10 |
| 0.00096065 | 308932.22454 | 72576000. | 3.215882E+08 | 7.554920E+10 |

```
K22 = abs(Shear Reaction/Top y)
K23 = abs(Shear Reaction/Top Rotation)
K32 = abs(Moment Reaction/Top y)
K33 = abs(Moment Reaction/Top Rotation)
```

The analysis ended normally.

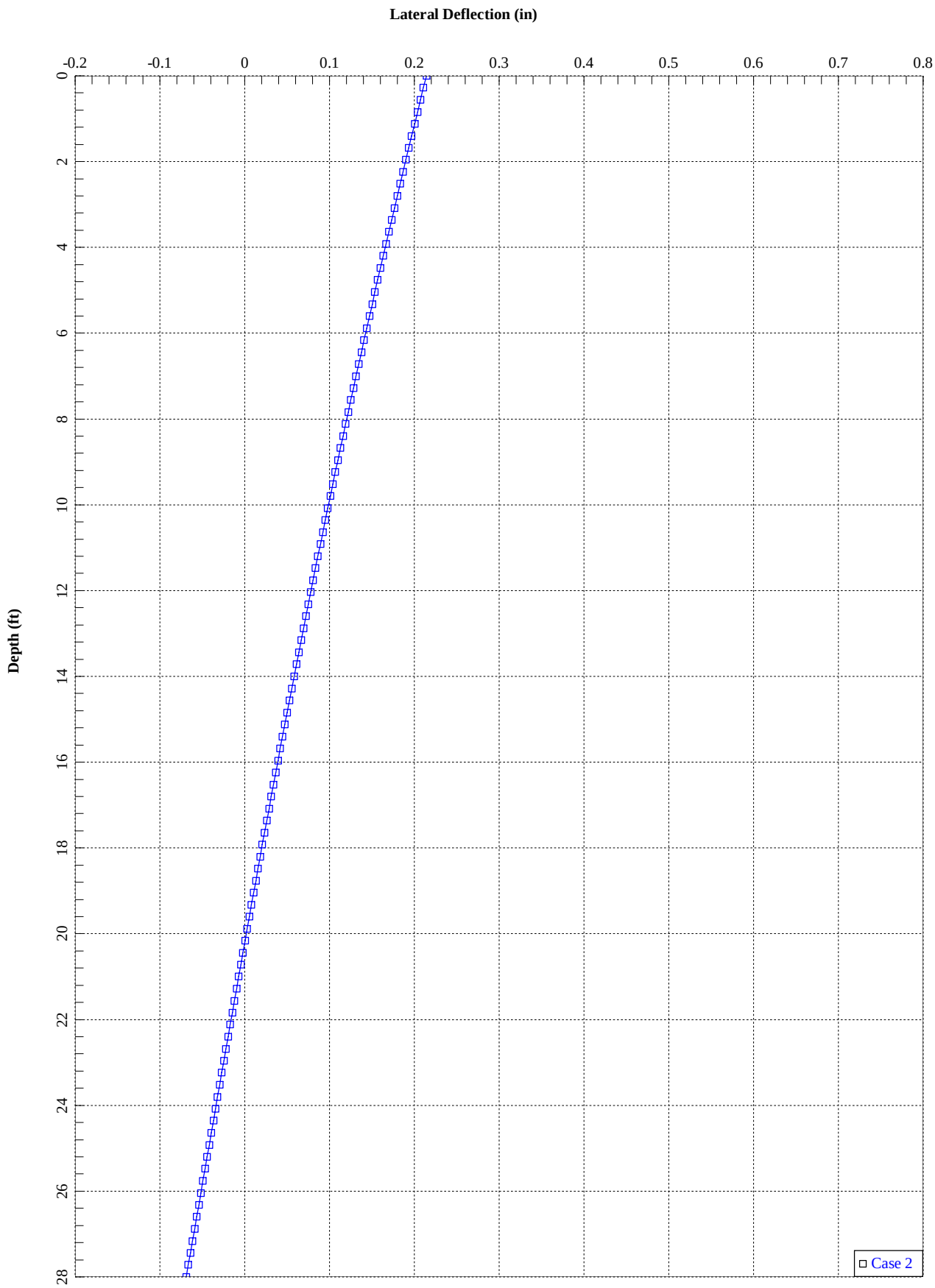
Lateral Deflection (in)
-0.2
-0.1
0
0.1
0.2
0.3
0.4
0.5
0.6
0.7
0.8
Depth (ft)
0
2
4
6
8
10
12
14
16
18
20
22
24
26
28
Case 2

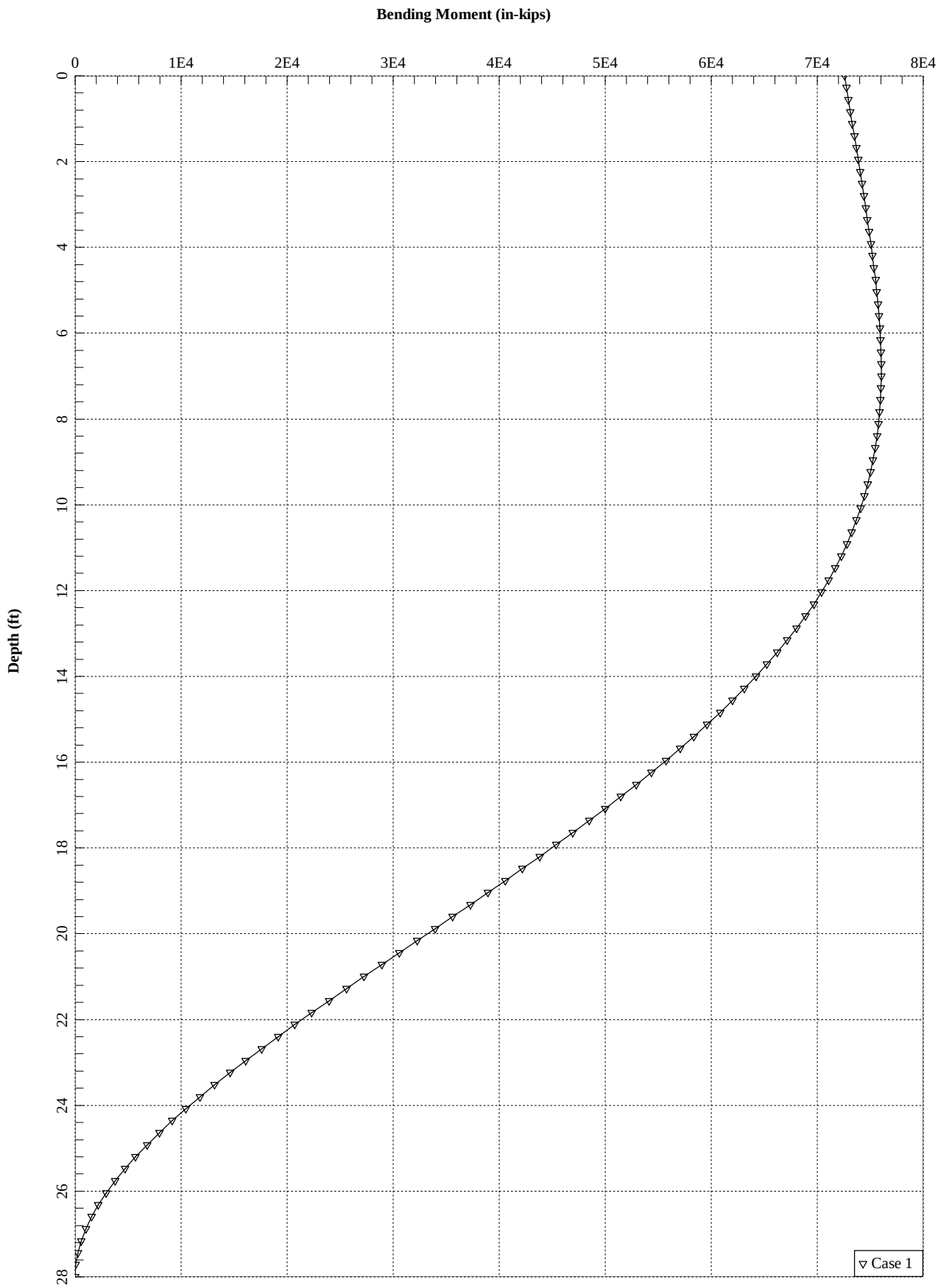
Bending Moment (in-kips)
0
1E4
2E4
3E4
4E4
5E4
6E4
7E4
8E4
Depth (ft)
0
2
4
6
8
10
12
14
16
18
20
22
24
26
28
Case 1

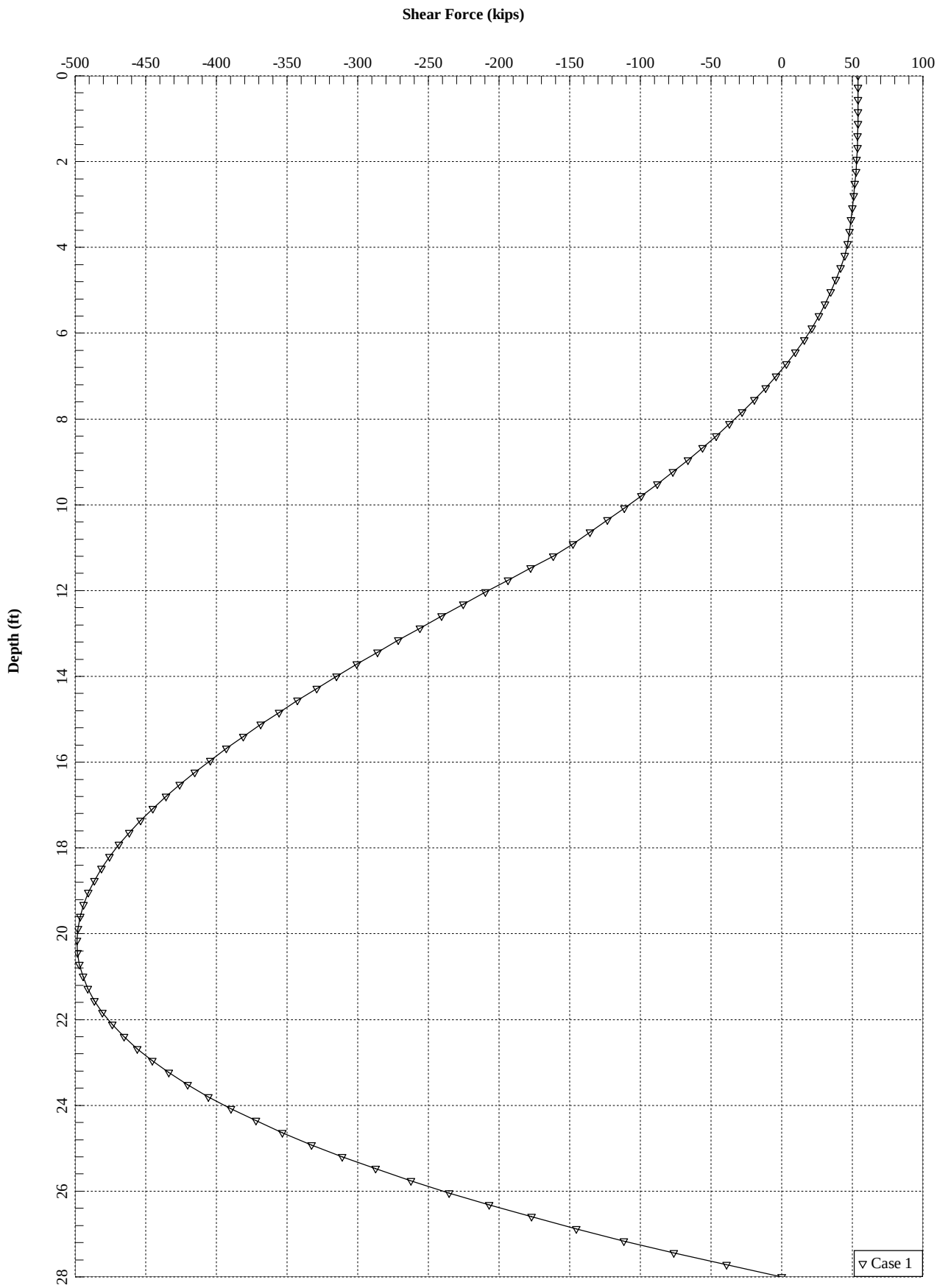
Shear Force (kips)
-500
-450
-400
-350
-300
-250
-200
-150
-100
-50
0
50
100
Depth (ft)
0
2
4
6
8
10
12
14
16
18
20
22
24
26
28
Case 1

## Section 1 - RFDS GENERAL INFORMATION

| | | | | | |
|---|---|---|---|---|---|
| RFDS NAME: | CTL02102 | DATE: | 05/11/2017 | RF DESIGN ENG: | Mohammad Minhaj Hussain |
| ISSUE: | Bronze Standard | Approved? (Y/N): | Yes | RF DESIGN PHONE: | 510-493-3024 |
| REVISION: | Final | RF MANAGER: | John Benedetto | RF DESIGN EMAIL: | mh705r@att.com |
| INITIATIVE /PROJECT: | Add LTE 4C[850 B], LTE 5C [AWS J], LTE 6C [700 DE] & LTE 7C [700 UPPER D].<br><br>9-27-2017: RFDS Pull back to add new additional carrier of LTE 6C&7C. | | | | |

| | | | | | |
|---|---|---|---|---|---|
| RF PERF ENG: | | RFDS PROGRAM TYPE: | 2018 LTE Next Carrier | | |
| RF PERF PHONE: | | RFDS TECHNOLOGY: | LTE | | |
| RF PERF EMAIL: | | STATE/STATUS: | Final/Approved | | |
| RFDS VERSION: | 2.00 | RFDS ID: | 1765190 | | |
| GSM FREQUENCY: | | Created By: | ak975u | Updated By: | ak6376 |
| UMTS FREQUENCY: | 850 | Date Created: | 5/11/2017 2:27:48 PM | Date Updated: | 11/28/2017 5:18:05 PM |
| LTE FREQUENCY: | 700, 850, 1900, AWS, WCS | | | | |
| I-PLAN JOB # 1: | NER-RCTB-17-00855 | IPLAN PRD GRP \|\| SUB GRP #1: | LTE Next Carrier \|\| LTE 4C | | |
| I-PLAN JOB # 2: | NER-RCTB-17-03550 | IPLAN PRD GRP \|\| SUB GRP #2: | LTE Next Carrier \|\| LTE 5C | | |
| I-PLAN JOB # 3: | NER-RCTB-17-06870 | IPLAN PRD GRP \|\| SUB GRP #3: | LTE Next Carrier \|\| LTE 6C | | |
| I-PLAN JOB # 4: | NER-RCTB-17-06883 | IPLAN PRD GRP \|\| SUB GRP #4: | LTE Next Carrier \|\| LTE 7C | | |
| I-PLAN JOB # 5: | | IPLAN PRD GRP \|\| SUB GRP #5: | | | |
| I-PLAN JOB # 6: | | IPLAN PRD GRP \|\| SUB GRP #6: | | | |
| I-PLAN JOB # 7: | | IPLAN PRD GRP \|\| SUB GRP #7: | | | |
| I-PLAN JOB # 8: | | IPLAN PRD GRP \|\| SUB GRP #8: | | | |

## Section 2 - LOCATION INFORMATION

| | | | | | |
|---|---|---|---|---|---|
| USID: | 100184 | FA LOCATION CODE: | 10128691 | LOCATION NAME: | GREENWICH PERRYRIDGE RD TWR |
| REGION: | NORTHEAST | MARKET CLUSTER: | NEW ENGLAND | MARKET: | CONNECTICUT |
| ADDRESS: | 5 PERRYRIDGE ROAD DUP | CITY: | GREENWICH | STATE: | CT |
| ZIP CODE: | 06830 | COUNTY: | FAIRFIELD | LONG (DEC. DEG.): | -73.6308333 |
| LATITUDE (D-M-S): | 41d 2m 2.16996s | LONGITUDE (D-M-S): | -73d -37m -50.99988s | LAT (DEC. DEG.): | 41.0339361 |
| DIRECTIONS, ACCESS AND EQUIPMENT LOCATION: | CTL02102 FROM ROUTE 15, MERRITT PARKWAY: EXIT 31 NORTH STREET, SOUTH (GREENWICH), TAKE NORTH STREET TO END, APPROX. 4 MILES. TURN RIGHT ON MAPLE AND IMMEDIATE LEFT ON PATTERSON AVE. TAKE 3RD LEFT ONTO PERRYRIDGE ROAD. HOSPITAL ON RIGHT (LESS THEN 1/2 MILE). ACCESS ESCALATION CONTACT: STEVE CARBERY - FACILITIES DIRECTOR (203) 863-3000.WEEKEND SECURITY # 860-863-3230 | | | | |

| | | | | | |
|---|---|---|---|---|---|
| ORACLE PTN # 1: | 2051A0ACK1 | PACE JOB # 1: | MRCTB022780 | | |
| ORACLE PTN # 2: | 2051A0B8ML | PACE JOB # 2: | MRCTB024044 | | |
| ORACLE PTN # 3: | | PACE JOB # 3: | | | |
| ORACLE PTN # 4: | | PACE JOB # 4: | | | |
| ORACLE PTN # 5: | | PACE JOB # 5: | | | |
| ORACLE PTN # 6: | | PACE JOB # 6: | | | |
| ORACLE PTN # 7: | | PACE JOB # 7: | | | |
| ORACLE PTN # 8: | | PACE JOB # 8: | | | |
| BORDER CELL WITH CONTOUR COORD: | | SEARCH RING NAME: | | | |
| AM STUDY REQ'D (Y/N): | No | SEARCH_RING_ID: | | | |
| FREQ COORD: | | BTA: | | MSA / RSA: | |
| OPS DISTRICT: | CT-South | LAC(GSM): | | | |
| OPS ZONE: | NE_CT_S_FRFD_SW_CS | LAC(UMTS): | 05999 | | |
| RF DISTRICT: | NPO Triage | BSC(GSM): | | | |
| RF ZONE: | Hotseat | RNC(UMTS): | BRPTCT04RNC001 | | |
| PARENT NAME(GSM): | | MME POOL ID(LTE): | FF01 | | |
| PARENT NAME(UMTS): | BRIDGEPORT CT RNC001 | | | | |

## Section 3 - LICENSE COVERAGE/FILING INFORMATION

| | | | | | |
|---|---|---|---|---|---|
| CGSA - NO FILING TRIGGERED (Yes/No): | No | CGSA LOSS: | | PCS REDUCED - UPS ZIP: | |
| CGSA - MINOR FILING NEEDED (Yes/No):: | No | CGSA EXT AGMT NEEDED: | | PCS POPS REDUCED: | |
| CGSA - MAJOR FILING NEEDED (Yes/No): | Yes | CGSA SCORECARD UPDATED: | | | |

| | |
|---|---|
| CGSA CALL SIGNS: | |

## Section 4 - TOWER/REGULATORY INFORMATION

| | | | | | |
|---|---|---|---|---|---|
| STRUCTURE AT&T OWNED?: | Yes | GROUND ELEVATION (ft): | 0 | STRUCTURE TYPE: | MONOPOLE |
| ADDITIONAL REGULATORY?: | Yes | HEIGHT OVERALL (ft): | 170.00 | FCC ASR NUMBER: | |
| SUB-LEASE RIGHTS?: | Yes | STRUCTURE HEIGHT (ft): | 170.00 | | |
| LIGHTING TYPE: | NOT REQUIRED | | | | |

| | | | |
|---|---|---|---|
| MARKET LOCATION 700 MHz Band: | | | |
| MARKET LOCATION 850 MHz Band: | | | |
| MARKET LOCATION 1900 MHz Band: | | | |
| MARKET LOCATION AWS Band: | | | |
| MARKET LOCATION WCS Band: | | | |
| MARKET LOCATION Future Band: | | | |

## Section 5 - E-911 INFORMATION - existing

| | PSAP NAME: | PSAP ID: | E911 PHASE: | MPC SVC PROVIDER: | LMU REQUIRED: | ESRN: | DATE LIVE PH1: | DATE LIVE PH2: | | |
|---|---|---|---|---|---|---|---|---|---|---|
| SECTOR A E-911 | CONNECTICUT STATE POLICE-G TROOP | 1319 | | INTRADO | | 0 | | | | |
| SECTOR B | | | | | | 0 | | | | |
| SECTOR C | | | | | | 0 | | | | |
| SECTOR D | | | | | | | | | | |
| SECTOR E | | | | | | | | | | |
| SECTOR F | | | | | | | | | | |
| OMNI | | | | | | | | | | |

## Section 5 - E-911 INFORMATION - final

| | PSAP NAME: | PSAP ID: | E911 PHASE: | MPC SVC PROVIDER: | LMU REQUIRED: | ESRN: | DATE LIVE PH1: | DATE LIVE PH2: | | |
|---|---|---|---|---|---|---|---|---|---|---|
| SECTOR A E-911 | CONNECTICUT STATE POLICE-G TROOP | 1319 | | INTRADO | | 0 | | | | |
| SECTOR B | | | | | | 0 | | | | |
| SECTOR C | | | | | | 0 | | | | |
| SECTOR D | | | | | | | | | | |
| SECTOR E | | | | | | | | | | |
| SECTOR F | | | | | | | | | | |
| OMNI | | | | | | | | | | |

## Section 6 - RBS GENERAL INFORMATION - existing

| | UMTS 1ST RBS | UMTS 2ND RBS | UMTS 3RD RBS | UMTS 4TH RBS | LTE 1ST RBS | LTE 2ND RBS | | | | | | |
|---|---|---|---|---|---|---|---|---|---|---|---|---|
| **RBS ID:** | 243929 | 243930 | 324314 | 379812 | 362930 | 559493 | | | | | | |
| **CTS COMMON ID:** | CTU2102 | CTV2102 | CTU6102 | CTV6102 | CTL02102 | CTL00802R | | | | | | |
| **CELL ID / BCF:** | CTU2102 | CTU2102 | CTU2102 | CTU6102 | CTL02102 | CTL00802R | | | | | | |
| **BTA/TID:** | 321V | 321U | 321W | 321W | 321L | 321L | | | | | | |
| **4-9 DIGIT SITE ID:** | 8102 | 2102 | 9102 | 06102 | 02102 | 00802 | | | | | | |
| **COW OR TOY?:** | No | No | No | No | No | No | | | | | | |
| **CELL SITE TYPE:** | SECTORIZED | SECTORIZED | SECTORIZED | SECTORIZED | SECTORIZED | SECTORIZED | | | | | | |
| **SITE TYPE:** | MACRO-CONVENTIONAL | MACRO-CONVENTIONAL | MACRO-CONVENTIONAL | MACRO-CONVENTIONAL | MACRO-CONVENTIONAL | MACRO-CONVENTIONAL | | | | | | |
| **BTS LOCATION ID:** | INTERNAL | INTERNAL | INTERNAL | INTERNAL | INTERNAL | INTERNAL | | | | | | |
| **BASE STATION TYPE:** | OVERLAY | OVERLAY | OVERLAY | OVERLAY | BASE | BASE | | | | | | |
| **EQUIPMENT NAME:** | GREENWICH HOSP MACRO | GREENWICH HOSP MACRO | GREENWICH PERRYRIDGE RD TWR | NM RELO 2557 GREENWICH | GREENWICH PERRYRIDGE RD TWR | GREENWICH PERRYRIDGE RD TWR | | | | | | |
| **DISASTER PRIORITY:** | 0 | 0 | 3 | 3 | 3 | 3 | | | | | | |

## Section 6 - RBS GENERAL INFORMATION - final

| | UMTS 1ST RBS | UMTS 2ND RBS | UMTS 3RD RBS | UMTS 4TH RBS | LTE 1ST RBS | LTE 2ND RBS | | | | | | |
|---|---|---|---|---|---|---|---|---|---|---|---|---|
| **RBS ID:** | 243930 | | | | 362930 | 559493 | | | | | | |
| **CTS COMMON ID:** | CTV2102 | | | | CTL02102 | CTL00802R | | | | | | |
| **CELL ID / BCF:** | CTU2102 | | | | CTL02102 | CTL00802R | | | | | | |
| **BTA/TID:** | 321U | | | | 321L | 321L | | | | | | |
| **4-9 DIGIT SITE ID:** | 2102 | | | | 02102 | 00802 | | | | | | |
| **COW OR TOY?:** | No | | | | No | No | | | | | | |
| **CELL SITE TYPE:** | SECTORIZED | | | | SECTORIZED | SECTORIZED | | | | | | |
| **SITE TYPE:** | MACRO-CONVENTIONAL | | | | MACRO-CONVENTIONAL | MACRO-CONVENTIONAL | | | | | | |
| **BTS LOCATION ID:** | INTERNAL | | | | INTERNAL | INTERNAL | | | | | | |
| **BASE STATION TYPE:** | OVERLAY | | | | BASE | BASE | | | | | | |
| **EQUIPMENT NAME:** | GREENWICH HOSP MACRO | | | | GREENWICH PERRYRIDGE RD TWR | GREENWICH PERRYRIDGE RD TWR | | | | | | |
| **DISASTER PRIORITY:** | 0 | | | | 3 | 3 | | | | | | |

## Section 7 - RBS SPECIFIC INFORMATION - existing

| | UMTS 1ST RBS | UMTS 2ND RBS | UMTS 3RD RBS | UMTS 4TH RBS | LTE 1ST RBS | LTE 2ND RBS | | | | | | |
|---|---|---|---|---|---|---|---|---|---|---|---|---|
| RAC: | | | | | | | | | | | | |
| EQUIPMENT VENDOR: | ERICSSON | ERICSSON | ERICSSON | ERICSSON | ERICSSON | ERICSSON | | | | | | |
| EQUIPMENT TYPE: | 3206 INDOOR | 3206 INDOOR | 3206 INDOOR | 3206 INDOOR | 6601 INDOOR MU | 6601 INDOOR MU | | | | | | |
| BASEBAND CONFIGURATION: | | | | | | | | | | | | |
| LOCATION: | | | | | | | | | | | | |
| CABINET LOCATION: | | | | | | | | | | | | |
| MARKET STATE CODE: | | | | | CT | CT | | | | | | |
| AGPS: | Yes | Yes | Yes | Yes | Yes | Yes | | | | | | |
| NODE B NUMBER: | 0 | 0 | 0 | 0 | 2102 | 802 | | | | | | |

## Section 7 - RBS SPECIFIC INFORMATION - final

| | UMTS 1ST RBS | UMTS 2ND RBS | UMTS 3RD RBS | UMTS 4TH RBS | LTE 1ST RBS | LTE 2ND RBS | | | | | | |
|---|---|---|---|---|---|---|---|---|---|---|---|---|
| RAC: | | | | | | | | | | | | |
| EQUIPMENT VENDOR: | ERICSSON | | | | ERICSSON | ERICSSON | | | | | | |
| EQUIPMENT TYPE: | 3206 INDOOR | | | | 6601 INDOOR MU | 6601 INDOOR MU | | | | | | |
| BASEBAND CONFIGURATION: | | | | | 2x6601 / 2x5216 / 2xXMU03 + IDLe | | | | | | | |
| LOCATION: | | | | | | | | | | | | |
| CABINET LOCATION: | | | | | | | | | | | | |
| MARKET STATE CODE: | | | | | CT | CT | | | | | | |
| AGPS: | Yes | | | | Yes | Yes | | | | | | |
| NODE B NUMBER: | 0 | | | | 2102 | 802 | | | | | | |

## Section 8 - RBS/SECTOR ASSOCIATION - existing

| | UMTS 1ST RBS | UMTS 2ND RBS | UMTS 3RD RBS | UMTS 4TH RBS | LTE 1ST RBS | LTE 2ND RBS | | | | | | | | | | | | | |
|---|---|---|---|---|---|---|---|---|---|---|---|---|---|---|---|---|---|---|---|
| **CTS Common ID** | CTU2102 | CTV2102 | CTU6102 | CTV6102 | CTL02102 | CTL00802R | | | | | | | | | | | | | |
| **Soft Sector IDs** | CTU21027 | CTV21021 | CTU61024 | CTV2102A | CTL02102_3A_1 | CTL00802_3B_1 | | | | | | | | | | | | | |
| | CTU21028 | CTV21022 | CTU61025 | CTV2102B | CTL02102_3B_1 | CTL00802_7B_1 | | | | | | | | | | | | | |
| | CTU21029 | CTV21023 | CTU61026 | CTV2102C | CTL02102_3C_1 | CTL00802_9B_1 | | | | | | | | | | | | | |
| | | | CTU61027 | | CTL02102_7A_1 | | | | | | | | | | | | | | |
| | | | CTU61028 | | CTL02102_7B_1 | | | | | | | | | | | | | | |
| | | | CTU61029 | | CTL02102_7C_1 | | | | | | | | | | | | | | |
| | | | | | CTL02102_9A_1 | | | | | | | | | | | | | | |
| | | | | | CTL02102_9A_2 | | | | | | | | | | | | | | |
| | | | | | CTL02102_9B_1 | | | | | | | | | | | | | | |
| | | | | | CTL02102_9B_2 | | | | | | | | | | | | | | |
| | | | | | CTL02102_9C_1 | | | | | | | | | | | | | | |
| | | | | | CTL02102_9C_2 | | | | | | | | | | | | | | |

## Section 8 - RBS/SECTOR ASSOCIATION - final

| | UMTS 1ST RBS | UMTS 2ND RBS | UMTS 3RD RBS | UMTS 4TH RBS | LTE 1ST RBS | LTE 2ND RBS | | | | | | | | | | | | | |
|---|---|---|---|---|---|---|---|---|---|---|---|---|---|---|---|---|---|---|---|
| **CTS Common ID** | CTV2102 | | | | CTL02102 | CTL00802R | | | | | | | | | | | | | |
| **Soft Sector IDs** | CTV21021 | | | | CTL02102_3A_1 | CTL00802_2A_2 | | | | | | | | | | | | | |
| | CTV21022 | | | | CTL02102_3B_1 | CTL00802_2B_2 | | | | | | | | | | | | | |
| | CTV21023 | | | | CTL02102_3C_1 | CTL00802_2C_2 | | | | | | | | | | | | | |
| | | | | | CTL02102_7A_1 | CTL00802_7A_2_E | | | | | | | | | | | | | |
| | | | | | CTL02102_7B_1 | CTL00802_7A_3_F | | | | | | | | | | | | | |
| | | | | | CTL02102_7C_1 | CTL00802_7B_2_E | | | | | | | | | | | | | |
| | | | | | CTL02102_9A_1 | CTL00802_7B_3_F | | | | | | | | | | | | | |
| | | | | | CTL02102_9A_2 | CTL00802_7C_2_E | | | | | | | | | | | | | |
| | | | | | CTL02102_9B_1 | CTL00802_7C_3_F | | | | | | | | | | | | | |
| | | | | | CTL02102_9B_2 | CTL00802_8A_1 | | | | | | | | | | | | | |
| | | | | | CTL02102_9C_1 | CTL00802_8B_1 | | | | | | | | | | | | | |
| | | | | | CTL02102_9C_2 | CTL00802_8C_1 | | | | | | | | | | | | | |

## Section 9 - SOFT SECTOR ID - existing

| | UMTS 1ST 850 | UMTS 1ST 1900 | UMTS 2ND 850 | UMTS 2ND 1900 | UMTS 3RD 850 | UMTS 3RD 1900 | LTE 1ST 700 | LTE 1ST 850 | LTE 1ST 1900 | LTE 1ST WCS | LTE 2ND 700 | LTE 2ND 1900 | LTE 2ND WCS | LTE 3RD 1900 | LTE 4TH 700 | LTE 4TH 1900 | LTE 4TH AWS | LTE 5TH 700 | | | | | | | | |
|---|---|---|---|---|---|---|---|---|---|---|---|---|---|---|---|---|---|---|---|---|---|---|---|---|---|---|
| **USEID (excluding Hard Sector)** | 100184.850.3G.1 | 100184.1900.3G.1 | 100184.850.3G.2 | 100184.1900.3G.3 | 100184.850.3G.3 | 100184.1900.3G.4 | | | | | | | | | | | | | | | | | | | | |
| **SECTOR A SOFT SECTOR ID** | CTV21021 | CTU21027 | CTV2102A | CTU61024 | | CTU61027 | CTL02102_7A_1 | | CTL02102_9A_1 | CTL02102_3A_1 | | CTL02102_9A_2 | | | | | | | | | | | | | | |
| **SECTOR B** | CTV21022 | CTU21028 | | CTU61025 | CTV2102B | CTU61028 | CTL02102_7B_1 | | CTL02102_9B_1 | CTL02102_3B_1 | CTL00802_7B_1 | CTL02102_9B_2 | CTL00802_3B_1 | CTL00802_9B_1 | | | | | | | | | | | | |
| **SECTOR C** | CTV21023 | CTU21029 | | CTU61026 | CTV2102C | CTU61029 | CTL02102_7C_1 | | CTL02102_9C_1 | CTL02102_3C_1 | | CTL02102_9C_2 | | | | | | | | | | | | | | |
| **SECTOR D** | | | | | | | | | | | | | | | | | | | | | | | | | | |
| **SECTOR E** | | | | | | | | | | | | | | | | | | | | | | | | | | |
| **SECTOR F** | | | | | | | | | | | | | | | | | | | | | | | | | | |
| **OMNI** | | | | | | | | | | | | | | | | | | | | | | | | | | |

## Section 9 - SOFT SECTOR ID - final

| | UMTS 1ST 850 | UMTS 1ST 1900 | UMTS 2ND 850 | UMTS 2ND 1900 | UMTS 3RD 850 | UMTS 3RD 1900 | LTE 1ST 700 | LTE 1ST 850 | LTE 1ST 1900 | LTE 1ST WCS | LTE 2ND 700 | LTE 2ND 1900 | LTE 2ND WCS | LTE 3RD 1900 | LTE 4TH 700 | LTE 4TH 1900 | LTE 4TH AWS | LTE 5TH 700 | | | | | | | | |
|---|---|---|---|---|---|---|---|---|---|---|---|---|---|---|---|---|---|---|---|---|---|---|---|---|---|---|
| **USEID (excluding Hard Sector)** | 100184.850.3G.1 | | | | | | | | | | | | | | | | | | | | | | | | | |
| **SECTOR A SOFT SECTOR ID** | CTV21021 | | | | | | CTL02102_7A_1 | CTL00802_8A_1 | CTL02102_9A_1 | CTL02102_3A_1 | | | | | CTL00802_7A_2_E | CTL02102_9A_2 | CTL00802_2A_2 | CTL00802_7A_3_F | | | | | | | | |
| **SECTOR B** | CTV21022 | | | | | | CTL02102_7B_1 | CTL00802_8B_1 | CTL02102_9B_1 | CTL02102_3B_1 | | | | | CTL00802_7B_2_E | CTL02102_9B_2 | CTL00802_2B_2 | CTL00802_7B_3_F | | | | | | | | |
| **SECTOR C** | CTV21023 | | | | | | CTL02102_7C_1 | CTL00802_8C_1 | CTL02102_9C_1 | CTL02102_3C_1 | | | | | CTL00802_7C_2_E | CTL02102_9C_2 | CTL00802_2C_2 | CTL00802_7C_3_F | | | | | | | | |
| **SECTOR D** | | | | | | | | | | | | | | | | | | | | | | | | | | |
| **SECTOR E** | | | | | | | | | | | | | | | | | | | | | | | | | | |
| **SECTOR F** | | | | | | | | | | | | | | | | | | | | | | | | | | |
| **OMNI** | | | | | | | | | | | | | | | | | | | | | | | | | | |

## Section 9 - Cell Number - existing

| | UMTS 1ST 850 | UMTS 1ST 1900 | UMTS 2ND 850 | UMTS 2ND 1900 | UMTS 3RD 850 | UMTS 3RD 1900 | LTE 1ST 700 | LTE 1ST 850 | LTE 1ST 1900 | LTE 1ST WCS | LTE 2ND 700 | LTE 2ND 1900 | LTE 2ND WCS | LTE 3RD 1900 | LTE 4TH 700 | LTE 4TH 1900 | LTE 4TH AWS | LTE 5TH 700 | | | | | | | | |
|---|---|---|---|---|---|---|---|---|---|---|---|---|---|---|---|---|---|---|---|---|---|---|---|---|---|---|
| **USEID (excluding Hard Sector)** | 100184.850.3G.1 | 100184.1900.3G.1 | 100184.850.3G.2 | 100184.1900.3G.3 | 100184.850.3G.3 | 100184.1900.3G.4 | | | | | | | | | | | | | | | | | | | | |
| **SECTOR A CELL NUMBER** | | | | | | | 15 | | 8 | 149 | | 178 | | | | | | | | | | | | | | |
| **SECTOR B** | | | | | | | 16 | | 9 | 150 | 16 | 179 | 150 | 9 | | | | | | | | | | | | |
| **SECTOR C** | | | | | | | 17 | | 10 | 151 | | 180 | | | | | | | | | | | | | | |
| **SECTOR D** | | | | | | | | | | | | | | | | | | | | | | | | | | |
| **SECTOR E** | | | | | | | | | | | | | | | | | | | | | | | | | | |
| **SECTOR F** | | | | | | | | | | | | | | | | | | | | | | | | | | |
| **OMNI** | | | | | | | | | | | | | | | | | | | | | | | | | | |

## Section 9 - Cell Number - final

| | UMTS 1ST 850 | UMTS 1ST 1900 | UMTS 2ND 850 | UMTS 2ND 1900 | UMTS 3RD 850 | UMTS 3RD 1900 | LTE 1ST 700 | LTE 1ST 850 | LTE 1ST 1900 | LTE 1ST WCS | LTE 2ND 700 | LTE 2ND 1900 | LTE 2ND WCS | LTE 3RD 1900 | LTE 4TH 700 | LTE 4TH 1900 | LTE 4TH AWS | LTE 5TH 700 | | | | | | | | |
|---|---|---|---|---|---|---|---|---|---|---|---|---|---|---|---|---|---|---|---|---|---|---|---|---|---|---|
| **USEID (excluding Hard Sector)** | 100184.850.3G.1 | | | | | | | | | | | | | | | | | | | | | | | | | |
| **SECTOR A CELL NUMBER** | | | | | | | 15 | 1 | 8 | 149 | | | | | 185 | 178 | 192 | 171 | | | | | | | | |
| **SECTOR B** | | | | | | | 16 | 2 | 9 | 150 | | | | | 186 | 179 | 193 | 172 | | | | | | | | |
| **SECTOR C** | | | | | | | 17 | 3 | 10 | 151 | | | | | 187 | 180 | 194 | 173 | | | | | | | | |
| **SECTOR D** | | | | | | | | | | | | | | | | | | | | | | | | | | |
| **SECTOR E** | | | | | | | | | | | | | | | | | | | | | | | | | | |
| **SECTOR F** | | | | | | | | | | | | | | | | | | | | | | | | | | |
| **OMNI** | | | | | | | | | | | | | | | | | | | | | | | | | | |

## Section 10 - CID/SAC - existing

| | UMTS 1ST 850 | UMTS 1ST 1900 | UMTS 2ND 850 | UMTS 2ND 1900 | UMTS 3RD 850 | UMTS 3RD 1900 | LTE 1ST 700 | LTE 1ST 850 | LTE 1ST 1900 | LTE 1ST WCS | LTE 2ND 700 | LTE 2ND 1900 | LTE 2ND WCS | LTE 3RD 1900 | LTE 4TH 700 | LTE 4TH 1900 | LTE 4TH AWS | LTE 5TH 700 | | | | | | | | | |
|---|---|---|---|---|---|---|---|---|---|---|---|---|---|---|---|---|---|---|---|---|---|---|---|---|---|---|---|
| SECTOR A CID/SAC | 21021 | 21027 | 21024 | 61024 | | 61027 | | | | | | | | | | | | | | | | | | | | | |
| SECTOR B | 21022 | 21028 | | 61025 | 21025 | 61028 | | | | | | | | | | | | | | | | | | | | | |
| SECTOR C | 21023 | 21029 | | 61026 | 21026 | 61029 | | | | | | | | | | | | | | | | | | | | | |
| SECTOR D | | | | | | | | | | | | | | | | | | | | | | | | | | | |
| SECTOR E | | | | | | | | | | | | | | | | | | | | | | | | | | | |
| SECTOR F | | | | | | | | | | | | | | | | | | | | | | | | | | | |
| OMNI | | | | | | | | | | | | | | | | | | | | | | | | | | | |

## Section 10 - CID/SAC - final

| | UMTS 1ST 850 | UMTS 1ST 1900 | UMTS 2ND 850 | UMTS 2ND 1900 | UMTS 3RD 850 | UMTS 3RD 1900 | LTE 1ST 700 | LTE 1ST 850 | LTE 1ST 1900 | LTE 1ST WCS | LTE 2ND 700 | LTE 2ND 1900 | LTE 2ND WCS | LTE 3RD 1900 | LTE 4TH 700 | LTE 4TH 1900 | LTE 4TH AWS | LTE 5TH 700 | | | | | | | | | |
|---|---|---|---|---|---|---|---|---|---|---|---|---|---|---|---|---|---|---|---|---|---|---|---|---|---|---|---|
| SECTOR A CID/SAC | 21021 | | | | | | | | | | | | | | | | | | | | | | | | | | |
| SECTOR B | 21022 | | | | | | | | | | | | | | | | | | | | | | | | | | |
| SECTOR C | 21023 | | | | | | | | | | | | | | | | | | | | | | | | | | |
| SECTOR D | | | | | | | | | | | | | | | | | | | | | | | | | | | |
| SECTOR E | | | | | | | | | | | | | | | | | | | | | | | | | | | |
| SECTOR F | | | | | | | | | | | | | | | | | | | | | | | | | | | |
| OMNI | | | | | | | | | | | | | | | | | | | | | | | | | | | |

# Section 15A - CURRENT TOWER CONFIGURATION - SECTOR A (OR OMNI)

| ANTENNA POSITION is LEFT to RIGHT from BACK OF ANTENNA (unless otherwise specified) | ANTENNA POSITION 1 | | ANTENNA POSITION 2 | | ANTENNA POSITION 3 | | ANTENNA POSITION 4 | | ANTENNA POSITION 5 | | ANTENNA POSITION 6 | | ANTENNA POSITION 7 | |
|---|---|---|---|---|---|---|---|---|---|---|---|---|---|---|
| ANTENNA MAKE - MODEL | 7770 | | QS66512-2 | | | | P65-16-XLH-RR | | | | | | | |
| ANTENNA VENDOR | Powerwave | | Quintel | | | | Powerwave | | | | | | | |
| ANTENNA SIZE (H x W x D) | 55X11X5 | | 72X12X9.6 | | | | 72X12X6 | | | | | | | |
| ANTENNA WEIGHT | 35 | | 111 | | | | 64 | | | | | | | |
| AZIMUTH | 0 | | 30 | | | | 30 | | | | | | | |
| MAGNETIC DECLINATION | | | | | | | | | | | | | | |
| RADIATION CENTER (feet) | 134 | | 134 | | | | 134 | | | | | | | |
| ANTENNA TIP HEIGHT | 136 | | 137 | | | | 137 | | | | | | | |
| MECHANICAL DOWNTILT | 0 | | 0 | | | | 0 | | | | | | | |
| FEEDER AMOUNT | 2 | | Fiber + 2 Coax | | | | | | | | | | | |
| VERTICAL SEPARATION from ANTENNA ABOVE (TIP to TIP) | | | | | | | | | | | | | | |
| VERTICAL SEPARATION from ANTENNA BELOW (TIP to TIP) | | | | | | | | | | | | | | |
| HORIZONTAL SEPARATION from CLOSEST ANTENNA to LEFT (CENTERLINE to CENTERLINE) | | | | | | | | | | | | | | |
| HORIZONTAL SEPARATION from CLOSEST ANTENNA to RIGHT (CENTERLINE to CENTERLINE) | | | | | | | | | | | | | | |
| HORIZONTAL SEPARATION from ANOTHER ANTENNA (which antenna # / # of inches) | | | | | | | | | | | | | | |
| Antenna RET Motor (QTY/MODEL) | 2 | Powerwave 7020 (DB) | | Built-in | | | | Internal | | | | | | |
| SURGE ARRESTOR (QTY/MODEL) | | | 1 | DC Fiber Squid | | | 1 | DC Fiber Squid | | | | | | |
| DIPLEXER (QTY/MODEL) | 2 | Powerwave/LGP 21901 | 4 | CCi triplexer TPX-070821 | | | | | | | | | | |
| DUPLEXER (QTY/MODEL) | | | | | | | | | | | | | | |
| Antenna RET CONTROL UNIT (QTY/MODEL) | 1 | Kathrein / 860-10006 | | RRH Conrtolled | | | | LTE RRH | | | | | | |
| DC BLOCK (QTY/MODEL) | | | | | | | | | | | | | | |
| TMA/LNA (QTY/MODEL) | 2 | Pwav LGP21401 Single 1900 w/ 850BP | | | | | | | | | | | | |
| CURRENT INJECTORS FOR TMA (QTY/MODEL) | 2 | Polyphaser 1000860 | | | | | | | | | | | | |
| PDU FOR TMAS (QTY/MODEL) | 1 | LGP12104 | | | | | | | | | | | | |
| FILTER (QTY/MODEL) | | | | | | | | | | | | | | |
| SQUID (QTY/MODEL) | | | | | | | | | | | | | | |
| FIBER TRUNK (QTY/MODEL) | | | | | | | | | | | | | | |
| DC TRUNK (QTY/MODEL) | | | | | | | | | | | | | | |
| REPEATER (QTY/MODEL) | | | | | | | | | | | | | | |
| RRH - 700 band (QTY/MODEL) | | | | | | | 1 | RRUS-11 | | | | | | |
| RRH - 850 band (QTY/MODEL) | | | | | | | | | | | | | | |
| RRH - 1900 band (QTY/MODEL) | | | 1 | RRUS-32 B2 | | | | | | | | | | |
| RRH - AWS band (QTY/MODEL) | | | | | | | | | | | | | | |
| RRH - WCS band (QTY/MODEL) | | | 1 | RRUS-32 | | | | | | | | | | |
| Additional RRH #1 - any band (QTY/MODEL) | | | | | | | | | | | | | | |
| Additional RRH #2 - any band (QTY/MODEL) | | | | | | | | | | | | | | |
| Additional Component 1 (QTY/MODEL) | | | | | | | | | | | | | | |
| Additional Component 2 (QTY/MODEL) | | | | | | | | | | | | | | |
| Additional Component 3 (QTY/MODEL) | | | | | | | | | | | | | | |
| Local Market Note 1 | | | | | | | | | | | | | | |
| Local Market Note 2 | | | | | | | | | | | | | | |
| Local Market Note 3 | | | | | | | | | | | | | | |

| PORT SPECIFIC FIELDS | PORT NUMBER | USEID (CSSng) | USEID (Atoll) | ATOLL TXID | ATOLL CELL ID | TX/RX ? | TECHNOLOGY/FREQUENCY | ANTENNA ATOLL | ANTENNA GAIN | ELECTRICAL AZIMUTH | ELECTRICAL TILT | RRH LOCATION (Top/Bottom/Integrated/None) | FEEDERS TYPE | FEEDER LENGTH (feet) | RXAIT KIT MODULE? | TRIPLEXER or LLC (QTY) | TRIPLEXER or LLC (MODEL) | SCPA/MCPA MODULE? | HATCHPLATE POWER (Watts) | ERP (Watts) | Antenna RET Name | CABLE NUMBER | CABLE ID (CSSNG) |
|---|---|---|---|---|---|---|---|---|---|---|---|---|---|---|---|---|---|---|---|---|---|---|---|
| ANTENNA POSITION 1 | PORT 1 | | | CTV21021 | CTV21021 | | UMTS 850 | 7770.00.850.02 | 13.5 | 0 | 2 | None | Commscope 1-5/8 | 160 | | | | | | 303.39 | | | |
| | PORT 2 | | | CTV2102A | CTV2102A | | UMTS 850 | 7770.00.850.02 | 13.5 | 0 | 2 | None | Commscope 1-5/8 | 160 | | | | | | 303.39 | | | |
| | PORT 3 | | | CTU61027 | CTU61027 | | UMTS 1900 | 7770.00.1900.00 | 15.5 | 0 | 0 | None | Commscope 1-5/8 | 160 | | | | | | 345.94 | | | |
| | PORT 4 | | | CTU61024 | CTU61024 | DECOM | UMTS 1900 | 7770.00.1900.00 | 15.5 | 0 | 0 | None | Commscope 1-5/8 | 160 | | | | | | 345.94 | | | |
| ANTENNA POSITION 2 | PORT 1 | | | 321G21021 | 321G21021 | | GSM 850 | QS66512-2_840MHz_02DT | 13.5 | 30 | 2 | None | Commscope 1-5/8 | 160 | | | | | | 111.42 | | | |
| | PORT 3 | | | CTL02102_9A_1 | CTL02102_9A_1 | | LTE 1900 | QS66512- | 16 | 30 | 3 | Top | Fiber | 0 | | | | | | 3664.3757 | | | |

| | | | | | | | | | | | | | | | | | | | | | | | |
|---|---|---|---|---|---|---|---|---|---|---|---|---|---|---|---|---|---|---|---|---|---|---|---|
| | | | | | | | | 2_1930MHz_03DT | | | | | | | | | | | | | | | |
| | PORT 4 | | | CTL02102_3A_1 | CTL02102_3A_1 | | LTE WCS | QS66512-2_2355MHz_02DT | 17 | 30 | 2 | Top | Fiber | 0 | | | | | | 1285.2866 | | | |
| | PORT 7 | | | CTL02102_9A_2 | CTL02102_9A_2 | | LTE 1900 | QS66512-2_1930MHz_03DT | 16 | 30 | 3 | Top | Fiber | 0 | | | | | | 3664.3757 | | | |
| | | | | | | | | | | | | | | | | | | | | | | | |
| **ANTENNA POSITION 4** | **PORT 1** | | | CTL02102_7A_1 | CTL02102_7A_1 | | LTE 700 | P65-16-XLH-RR_716MHz_02DT | 14.8 | 30 | 2 | Top | Fiber | 0 | | | | | | 1475.7065 | | | |

# Section 15B - CURRENT TOWER CONFIGURATION - SECTOR B

| ANTENNA POSITION is LEFT to RIGHT from BACK OF ANTENNA (unless otherwise specified) | ANTENNA POSITION 1 | | ANTENNA POSITION 2 | | ANTENNA POSITION 3 | | ANTENNA POSITION 4 | | ANTENNA POSITION 5 | | ANTENNA POSITION 6 | | ANTENNA POSITION 7 | |
|---|---|---|---|---|---|---|---|---|---|---|---|---|---|---|
| ANTENNA MAKE - MODEL | 7770 | | QS66512-2 | | | | P65-16-XLH-RR | | | | | | | |
| ANTENNA VENDOR | Powerwave | | Quintel | | | | Powerwave | | | | | | | |
| ANTENNA SIZE (H x W x D) | 55X11X5 | | 72X12X9.6 | | | | 72X12X6 | | | | | | | |
| ANTENNA WEIGHT | 35 | | 111 | | | | 64 | | | | | | | |
| AZIMUTH | 100 | | 150 | | | | 150 | | | | | | | |
| MAGNETIC DECLINATION | | | | | | | | | | | | | | |
| RADIATION CENTER (feet) | 134 | | 134 | | | | 134 | | | | | | | |
| ANTENNA TIP HEIGHT | 136 | | 137 | | | | 137 | | | | | | | |
| MECHANICAL DOWNTILT | 0 | | 0 | | | | 0 | | | | | | | |
| FEEDER AMOUNT | 2 | | Fiber + 2 Coax | | | | | | | | | | | |
| VERTICAL SEPARATION from ANTENNA ABOVE (TIP to TIP) | | | | | | | | | | | | | | |
| VERTICAL SEPARATION from ANTENNA BELOW (TIP to TIP) | | | | | | | | | | | | | | |
| HORIZONTAL SEPARATION from CLOSEST ANTENNA to LEFT (CENTERLINE to CENTERLINE) | | | | | | | | | | | | | | |
| HORIZONTAL SEPARATION from CLOSEST ANTENNA to RIGHT (CENTERLINE to CENTERLINE) | | | | | | | | | | | | | | |
| HORIZONTAL SEPARATION from ANOTHER ANTENNA (which antenna # / # of inches) | | | | | | | | | | | | | | |
| Antenna RET Motor (QTY/MODEL) | 2 | Powerwave 7020 (DB) | | Built-in | | | | Internal | | | | | | |
| SURGE ARRESTOR (QTY/MODEL) | | | | | | | | | | | | | | |
| DIPLEXER (QTY/MODEL) | 2 | Powerwave/LGP 21901 | 4 | CCi triplexer TPX-070821 | | | | | | | | | | |
| DUPLEXER (QTY/MODEL) | | | | | | | | | | | | | | |
| Antenna RET CONTROL UNIT (QTY/MODEL) | | | | RRH Conrtolled | | | | LTE RRH | | | | | | |
| DC BLOCK (QTY/MODEL) | | | | | | | | | | | | | | |
| TMA/LNA (QTY/MODEL) | 2 | Pwav LGP21401 Single 1900 w/ 850BP | | | | | | | | | | | | |
| CURRENT INJECTORS FOR TMA (QTY/MODEL) | 2 | Polyphaser 1000860 | | | | | | | | | | | | |
| PDU FOR TMAS (QTY/MODEL) | | | | | | | | | | | | | | |
| FILTER (QTY/MODEL) | | | | | | | | | | | | | | |
| SQUID (QTY/MODEL) | | | | | | | | | | | | | | |
| FIBER TRUNK (QTY/MODEL) | | | | | | | | | | | | | | |
| DC TRUNK (QTY/MODEL) | | | | | | | | | | | | | | |
| REPEATER (QTY/MODEL) | | | | | | | | | | | | | | |
| RRH - 700 band (QTY/MODEL) | | | | | | | 1 | RRUS-11 | | | | | | |
| RRH - 850 band (QTY/MODEL) | | | | | | | | | | | | | | |
| RRH - 1900 band (QTY/MODEL) | | | 1 | RRUS-32 B2 | | | | | | | | | | |
| RRH - AWS band (QTY/MODEL) | | | | | | | | | | | | | | |
| RRH - WCS band (QTY/MODEL) | | | 1 | RRUS-32 | | | | | | | | | | |
| Additional RRH #1 - any band (QTY/MODEL) | | | | | | | | | | | | | | |
| Additional RRH #2 - any band (QTY/MODEL) | | | | | | | | | | | | | | |
| Additional Component 1 (QTY/MODEL) | | | | | | | | | | | | | | |
| Additional Component 2 (QTY/MODEL) | | | | | | | | | | | | | | |
| Additional Component 3 (QTY/MODEL) | | | | | | | | | | | | | | |
| Local Market Note 1 | | | | | | | | | | | | | | |
| Local Market Note 2 | | | | | | | | | | | | | | |
| Local Market Note 3 | | | | | | | | | | | | | | |

| PORT SPECIFIC FIELDS | PORT NUMBER | USEID (CSSng) | USEID (Atoll) | ATOLL TXID | ATOLL CELL ID | TX/RX ? | TECHNOLOGY/FREQUENCY | ANTENNA ATOLL | ANTENNA GAIN | ELECTRICAL AZIMUTH | ELECTRICAL TILT | RRH LOCATION (Top/Bottom/Integrated/None) | FEEDERS TYPE | FEEDER LENGTH (feet) | RXAIT KIT MODULE? | TRIPLEXER or LLC (QTY) | TRIPLEXER or LLC (MODEL) | SCPA/MCPA MODULE? | HATCHPLATE POWER (Watts) | ERP (Watts) | Antenna RET Name | CABLE NUMBER | CABLE ID (CSSNG) |
|---|---|---|---|---|---|---|---|---|---|---|---|---|---|---|---|---|---|---|---|---|---|---|---|
| ANTENNA POSITION 1 | PORT 1 | | | CTV21022 | CTV21022 | | UMTS 850 | 7770.00.850.04 | 13.5 | 100 | 4 | None | Commscope 1-5/8 | 160 | | | | | | 303.39 | | | |
| | PORT 2 | | | CTV2102B | CTV2102B | | UMTS 850 | 7770.00.850.04 | 13.5 | 100 | 4 | None | Commscope 1-5/8 | 160 | | | | | | 303.39 | | | |
| | PORT 3 | | | CTU61028 | CTU61028 | | UMTS 1900 | 7770.00.1900.02 | 15.5 | 100 | 2 | None | Commscope 1-5/8 | 160 | | | | | | 345.94 | | | |
| | PORT 4 | | | CTU61025 | CTU61025 | DECOM | UMTS 1900 | 7770.00.1900.02 | 15.5 | 100 | 2 | None | Commscope 1-5/8 | 160 | | | | | | 345.94 | | | |
| ANTENNA POSITION 2 | PORT 1 | | | 321G21022 | 321G21022 | | GSM 850 | QS66512-2_840MHz_04DT | 13.5 | 150 | 4 | None | Commscope 1-5/8 | 160 | | | | | | 111.42 | | | |
| | PORT 3 | | | CTL00802_9B_1 | CTL00802_9B_1 | | LTE 1900 | QS66512- | 16 | 150 | 3 | Top | Fiber | 0 | | | | | | 3664.3757 | | | |

| | | | | | | | | | | | | | | | | | | | | | | | |
|---|---|---|---|---|---|---|---|---|---|---|---|---|---|---|---|---|---|---|---|---|---|---|---|
| | | | | | | | | 2_1930MHz_03DT | | | | | | | | | | | | | | | |
| | PORT 4 | | | CTL00802_3B_1 | CTL00802_3B_1 | | LTE WCS | QS66512-2_2355MHz_02DT | 17 | 150 | 2 | Top | Fiber | 0 | | | | | | 1285.2866 | | | |
| | PORT 7 | | | CTL00802_9B_2 | CTL00802_9B_2 | | LTE 1900 | QS66512-2_1930MHz_03DT | 16 | 150 | 3 | Top | Fiber | 0 | | | | | | 3664.3757 | | | |
| | | | | | | | | | | | | | | | | | | | | | | | |
| **ANTENNA POSITION 4** | **PORT 1** | | | CTL00802_7B_1 | CTL00802_7B_1 | | LTE 700 | P65-16-XLH-RR_716MHz_08DT | 14.8 | 150 | 8 | Top | Fiber | 0 | | | | | | 1475.7065 | | | |

# Section 15C - CURRENT TOWER CONFIGURATION - SECTOR C

| ANTENNA POSITION is LEFT to RIGHT from BACK OF ANTENNA (unless otherwise specified) | ANTENNA POSITION 1 | | ANTENNA POSITION 2 | | ANTENNA POSITION 3 | | ANTENNA POSITION 4 | | ANTENNA POSITION 5 | | ANTENNA POSITION 6 | | ANTENNA POSITION 7 | |
|---|---|---|---|---|---|---|---|---|---|---|---|---|---|---|
| ANTENNA MAKE - MODEL | 7770 | | QS66512-2 | | | | P65-16-XLH-RR | | | | | | | |
| ANTENNA VENDOR | Powerwave | | Quintel | | | | Powerwave | | | | | | | |
| ANTENNA SIZE (H x W x D) | 55X11X5 | | 72X12X9.6 | | | | 72X12X6 | | | | | | | |
| ANTENNA WEIGHT | 35 | | 111 | | | | 64 | | | | | | | |
| AZIMUTH | 250 | | 270 | | | | 270 | | | | | | | |
| MAGNETIC DECLINATION | | | | | | | | | | | | | | |
| RADIATION CENTER (feet) | 134 | | 134 | | | | 134 | | | | | | | |
| ANTENNA TIP HEIGHT | 136 | | 137 | | | | 137 | | | | | | | |
| MECHANICAL DOWNTILT | 0 | | 0 | | | | 0 | | | | | | | |
| FEEDER AMOUNT | 2 | | Fiber + 2 Coax | | | | | | | | | | | |
| VERTICAL SEPARATION from ANTENNA ABOVE (TIP to TIP) | | | | | | | | | | | | | | |
| VERTICAL SEPARATION from ANTENNA BELOW (TIP to TIP) | | | | | | | | | | | | | | |
| HORIZONTAL SEPARATION from CLOSEST ANTENNA to LEFT (CENTERLINE to CENTERLINE) | | | | | | | | | | | | | | |
| HORIZONTAL SEPARATION from CLOSEST ANTENNA to RIGHT (CENTERLINE to CENTERLINE) | | | | | | | | | | | | | | |
| HORIZONTAL SEPARATION from ANOTHER ANTENNA (which antenna # / # of inches) | | | | | | | | | | | | | | |
| Antenna RET Motor (QTY/MODEL) | 2 | Powerwave 7020 (DB) | 2 | Built-in | | | | Internal | | | | | | |
| SURGE ARRESTOR (QTY/MODEL) | | | | | | | | | | | | | | |
| DIPLEXER (QTY/MODEL) | 2 | Powerwave/LGP 21901 | 4 | CCi triplexer TPX-070821 | | | | | | | | | | |
| DUPLEXER (QTY/MODEL) | | | | | | | | | | | | | | |
| Antenna RET CONTROL UNIT (QTY/MODEL) | | | | RRH Conrtolled | | | | LTE RRH | | | | | | |
| DC BLOCK (QTY/MODEL) | | | | | | | | | | | | | | |
| TMA/LNA (QTY/MODEL) | 2 | Pwav LGP21401 Single 1900 w/ 850BP | | | | | | | | | | | | |
| CURRENT INJECTORS FOR TMA (QTY/MODEL) | 2 | Polyphaser 1000860 | | | | | | | | | | | | |
| PDU FOR TMAS (QTY/MODEL) | | | | | | | | | | | | | | |
| FILTER (QTY/MODEL) | | | | | | | | | | | | | | |
| SQUID (QTY/MODEL) | | | | | | | | | | | | | | |
| FIBER TRUNK (QTY/MODEL) | | | | | | | | | | | | | | |
| DC TRUNK (QTY/MODEL) | | | | | | | | | | | | | | |
| REPEATER (QTY/MODEL) | | | | | | | | | | | | | | |
| RRH - 700 band (QTY/MODEL) | | | | | | | 1 | RRUS-11 | | | | | | |
| RRH - 850 band (QTY/MODEL) | | | | | | | | | | | | | | |
| RRH - 1900 band (QTY/MODEL) | | | 1 | RRUS-32 B2 | | | | | | | | | | |
| RRH - AWS band (QTY/MODEL) | | | | | | | | | | | | | | |
| RRH - WCS band (QTY/MODEL) | | | 1 | RRUS-32 | | | | | | | | | | |
| Additional RRH #1 - any band (QTY/MODEL) | | | | | | | | | | | | | | |
| Additional RRH #2 - any band (QTY/MODEL) | | | | | | | | | | | | | | |
| Additional Component 1 (QTY/MODEL) | | | | | | | | | | | | | | |
| Additional Component 2 (QTY/MODEL) | | | | | | | | | | | | | | |
| Additional Component 3 (QTY/MODEL) | | | | | | | | | | | | | | |
| Local Market Note 1 | | | | | | | | | | | | | | |
| Local Market Note 2 | | | | | | | | | | | | | | |
| Local Market Note 3 | | | | | | | | | | | | | | |

| PORT SPECIFIC FIELDS | PORT NUMBER | USEID (CSSng) | USEID (Atoll) | ATOLL TXID | ATOLL CELL ID | TX/RX ? | TECHNOLOGY/FREQUENCY | ANTENNA ATOLL | ANTENNA GAIN | ELECTRICAL AZIMUTH | ELECTRICAL TILT | RRH LOCATION (Top/Bottom/Integrated/None) | FEEDERS TYPE | FEEDER LENGTH (feet) | RXAIT KIT MODULE? | TRIPLEXER or LLC (QTY) | TRIPLEXER or LLC (MODEL) | SCPA/MCPA MODULE? | HATCHPLATE POWER (Watts) | ERP (Watts) | Antenna RET Name | CABLE NUMBER | CABLE ID (CSSNG) |
|---|---|---|---|---|---|---|---|---|---|---|---|---|---|---|---|---|---|---|---|---|---|---|---|
| ANTENNA POSITION 1 | PORT 1 | | | CTV21023 | CTV21023 | | UMTS 850 | 7770.00.850.07 | 13.5 | 250 | 7 | None | Commscope 1-5/8 | 160 | | | | | | 303.39 | | | |
| | PORT 2 | | | CTV2102C | CTV2102C | | UMTS 850 | 7770.00.850.07 | 13.5 | 250 | 7 | None | Commscope 1-5/8 | 160 | | | | | | 303.39 | | | |
| | PORT 3 | | | CTU61029 | CTU61029 | | UMTS 1900 | 7770.00.1900.04 | 15.5 | 250 | 4 | None | Commscope 1-5/8 | 160 | | | | | | 345.94 | | | |
| | PORT 4 | | | CTU61026 | CTU61026 | DECOM | UMTS 1900 | 7770.00.1900.04 | 15.5 | 250 | 4 | None | Commscope 1-5/8 | 160 | | | | | | 345.94 | | | |
| ANTENNA POSITION 2 | PORT 1 | | | 321G21023 | 321G21023 | | GSM 850 | QS66512-2_840MHz_07DT | 13.5 | 270 | 7 | None | Commscope 1-5/8 | 160 | | | | | | 111.42 | | | |
| | PORT 3 | | | CTL02102_9C_1 | CTL02102_9C_1 | | LTE 1900 | QS66512- | 16 | 270 | 3 | Top | Fiber | 0 | | | | | | 3664.3757 | | | |

| | | | | | | | | | | | | | | | | | | | | | | | |
|---|---|---|---|---|---|---|---|---|---|---|---|---|---|---|---|---|---|---|---|---|---|---|---|
| | | | | | | | | 2_1930MHz_03DT | | | | | | | | | | | | | | | |
| | PORT 4 | | | CTL02102_3C_1 | CTL02102_3C_1 | | LTE WCS | QS66512-2_2355MHz_02DT | 17 | 270 | 2 | Top | Fiber | 0 | | | | | | 1285.2866 | | | |
| | PORT 7 | | | CTL02102_9C_2 | CTL02102_9C_2 | | LTE 1900 | QS66512-2_1930MHz_03DT | 16 | 270 | 3 | Top | Fiber | 0 | | | | | | 3664.3757 | | | |
| | | | | | | | | | | | | | | | | | | | | | | | |
| **ANTENNA POSITION 4** | **PORT 1** | | | CTL02102_7C_1 | CTL02102_7C_1 | | LTE 700 | P65-16-XLH-RR_716MHz_03DT | 14.8 | 270 | 3 | Top | Fiber | 0 | | | | | | 1475.7065 | | | |

# Section 16A - PLANNED/PROPOSED TOWER CONFIGURATION - SECTOR A (OR OMNI)

| ANTENNA POSITION is LEFT to RIGHT from BACK OF ANTENNA (unless otherwise specified) | ANTENNA POSITION 1 | | ANTENNA POSITION 2 | | ANTENNA POSITION 3 | | ANTENNA POSITION 4 | | ANTENNA POSITION 5 | | ANTENNA POSITION 6 | | ANTENNA POSITION 7 | |
|---|---|---|---|---|---|---|---|---|---|---|---|---|---|---|
| Existing Antenna? | | | Yes | | | | | | | | | | | |
| ANTENNA MAKE - MODEL | | | | | 80010965 | | | | | | | | | |
| ANTENNA VENDOR | | | | | Kathrien | | | | | | | | | |
| ANTENNA SIZE (H x W x D) | | | | | 78.7X20X6.9 | | | | | | | | | |
| ANTENNA WEIGHT | | | | | 108.6 | | | | | | | | | |
| AZIMUTH | | | | | 30 | | | | | | | | | |
| MAGNETIC DECLINATION | | | | | | | | | | | | | | |
| RADIATION CENTER (feet) | | | | | 134 | | | | | | | | | |
| ANTENNA TIP HEIGHT | | | | | 137 | | | | | | | | | |
| MECHANICAL DOWNTILT | | | | | 0 | | | | | | | | | |
| FEEDER AMOUNT | | | | | | | | | | | | | | |
| VERTICAL SEPARATION from ANTENNA ABOVE (TIP to TIP) | | | | | | | | | | | | | | |
| VERTICAL SEPARATION from ANTENNA BELOW (TIP to TIP) | | | | | | | | | | | | | | |
| HORIZONTAL SEPARATION from CLOSEST ANTENNA to LEFT (CENTERLINE to CENTERLINE) | | | | | | | | | | | | | | |
| HORIZONTAL SEPARATION from CLOSEST ANTENNA to RIGHT (CENTERLINE to CENTERLINE) | | | | | | | | | | | | | | |
| HORIZONTAL SEPARATION from ANOTHER ANTENNA (which antenna # / # of inches) | | | | | | | | | | | | | | |
| Antenna RET Motor (QTY/MODEL) | | | | | | Internal | | | | | | | | |
| SURGE ARRESTOR (QTY/MODEL) | | | 4 | APTDC-BDFDM-DB | 1 | DC Squid Only | | | | | | | | |
| DIPLEXER (QTY/MODEL) | | | | | | | | | | | | | | |
| DUPLEXER (QTY/MODEL) | | | | | | | | | | | | | | |
| Antenna RET CONTROL UNIT (QTY/MODEL) | | | | | | LTE RRH | | | | | | | | |
| DC BLOCK (QTY/MODEL) | | | | | | | | | | | | | | |
| TMA/LNA (QTY/MODEL) | | | | | | | | | | | | | | |
| CURRENT INJECTORS FOR TMA (QTY/MODEL) | | | | | | | | | | | | | | |
| PDU FOR TMAS (QTY/MODEL) | | | | | | | | | | | | | | |
| FILTER (QTY/MODEL) | | | | | | | | | | | | | | |
| SQUID (QTY/MODEL) | | | | | | | | | | | | | | |
| FIBER TRUNK (QTY/MODEL) | | | | | | | | | | | | | | |
| DC TRUNK (QTY/MODEL) | | | | | | | | | | | | | | |
| REPEATER (QTY/MODEL) | | | | | | | | | | | | | | |
| RRH - 700 band (QTY/MODEL) | | | 1 | RRUS-E2 | 1 | B14 4478 | | | | | | | | |
| RRH - 850 band (QTY/MODEL) | | | 1 | RRUS-12 | | | | | | | | | | |
| RRH - 1900 band (QTY/MODEL) | | | | | | | | | | | | | | |
| RRH - AWS band (QTY/MODEL) | | | | | 1 | RRUS-32 B66 | | | | | | | | |
| RRH - WCS band (QTY/MODEL) | | | | | | | | | | | | | | |
| Additional RRH #1 - any band (QTY/MODEL) | | | | | | | | | | | | | | |
| Additional RRH #2 - any band (QTY/MODEL) | | | | | | | | | | | | | | |
| Additional Component 1 (QTY/MODEL) | | | | | | | | | | | | | | |
| Additional Component 2 (QTY/MODEL) | | | | | | | | | | | | | | |
| Additional Component 3 (QTY/MODEL) | | | | | | | | | | | | | | |
| Local Market Note 1 | SOW:// Add LTE 850 and 700 DE RRU at existing antenna Pos-2 Bottom along with Surge Arrestors.// Add New Octo Antenna at Pos-3.// Add LTE 700 B14 and AWS RRU.// Add 1 new DC Squid Only.// Add 2nd XMU.// Replace existing 2xDUSs with 2x5216.// Replace IDL2 with IDLe. | | | | | | | | | | | | | |
| Local Market Note 2 | | | | | | | | | | | | | | |
| Local Market Note 3 | 2x5216+2xXMU+IDLe | | | | | | | | | | | | | |

| PORT SPECIFIC FIELDS | PORT NUMBER | USEID (CSSng) | USEID (Atoll) | ATOLL TXID | ATOLL CELL ID | TX/RX ? | TECHNOLOGY/FREQUENCY | ANTENNA ATOLL | ANTENNA GAIN | ELECTRICAL AZIMUTH | ELECTRICAL TILT | RRH LOCATION (Top/Bottom/Integrated/None) | FEEDERS TYPE | FEEDER LENGTH (feet) | RXAIT KIT MODULE? | TRIPLEXER or LLC (QTY) | TRIPLEXER or LLC (MODEL) | SCPA/MCPA MODULE? | HATCHPLATE POWER (Watts) | ERP (Watts) | Antenna RET Name | CABLE NUMBER | CABLE ID (CSSNG) |
|---|---|---|---|---|---|---|---|---|---|---|---|---|---|---|---|---|---|---|---|---|---|---|---|
| ANTENNA POSITION 2 | PORT 1 | | | CTL02102_7A_2_E | | | LTE 700 | QS66512-2_722MHz_03DT | 13.5 | 30 | 3 | Bottom | Commscope 1-5/8 | 160 | | | | | | 1475.7065 | | 3 | |
| | PORT 2 | | | CTL02102_8A_1 | CTL02102_8A_1 | | LTE 850 | QS66512-2_850MHz_02DT | 13.2 | 30 | 2 | Bottom | Commscope 1-5/8 | 160 | | | | | | 1000 | | 3 | |
| ANTENNA POSITION 3 | PORT 1 | | | CTL02102_7A_3_F | | | LTE 700 | 80010965_777MHz_02DT | 15.3 | 30 | 2 | Top | Fiber | 0 | | | | | | 2951.413 | | 5 | |
| | PORT 3 | | | CTL02102_2A_1 | CTL02102_2A_2 | | LTE AWS | 80010965_2170MHz_03DT | 18.5 | 30 | 3 | Top | Fiber | 0 | | | | | | 5070.2572 | | 6 | |

# Section 16B - PLANNED/PROPOSED TOWER CONFIGURATION - SECTOR B

| ANTENNA POSITION is LEFT to RIGHT from BACK OF ANTENNA (unless otherwise specified) | ANTENNA POSITION 1 | | ANTENNA POSITION 2 | | ANTENNA POSITION 3 | | ANTENNA POSITION 4 | | ANTENNA POSITION 5 | | ANTENNA POSITION 6 | | ANTENNA POSITION 7 | |
|---|---|---|---|---|---|---|---|---|---|---|---|---|---|---|
| Existing Antenna? | | | Yes | | | | | | | | | | | |
| ANTENNA MAKE - MODEL | | | | | 80010965 | | | | | | | | | |
| ANTENNA VENDOR | | | | | Kathrien | | | | | | | | | |
| ANTENNA SIZE (H x W x D) | | | | | 78.7X20X6.9 | | | | | | | | | |
| ANTENNA WEIGHT | | | | | 108.6 | | | | | | | | | |
| AZIMUTH | | | | | 150 | | | | | | | | | |
| MAGNETIC DECLINATION | | | | | | | | | | | | | | |
| RADIATION CENTER (feet) | | | | | 134 | | | | | | | | | |
| ANTENNA TIP HEIGHT | | | | | 137 | | | | | | | | | |
| MECHANICAL DOWNTILT | | | | | 0 | | | | | | | | | |
| FEEDER AMOUNT | | | | | | | | | | | | | | |
| VERTICAL SEPARATION from ANTENNA ABOVE (TIP to TIP) | | | | | | | | | | | | | | |
| VERTICAL SEPARATION from ANTENNA BELOW (TIP to TIP) | | | | | | | | | | | | | | |
| HORIZONTAL SEPARATION from CLOSEST ANTENNA to LEFT (CENTERLINE to CENTERLINE) | | | | | | | | | | | | | | |
| HORIZONTAL SEPARATION from CLOSEST ANTENNA to RIGHT (CENTERLINE to CENTERLINE) | | | | | | | | | | | | | | |
| HORIZONTAL SEPARATION from ANOTHER ANTENNA (which antenna # / # of inches) | | | | | | | | | | | | | | |
| Antenna RET Motor (QTY/MODEL) | | | | | | Internal | | | | | | | | |
| SURGE ARRESTOR (QTY/MODEL) | | | 4 | APTDC-BDFDM-DB | 1 | DC Squid Only | | | | | | | | |
| DIPLEXER (QTY/MODEL) | | | | | | | | | | | | | | |
| DUPLEXER (QTY/MODEL) | | | | | | | | | | | | | | |
| Antenna RET CONTROL UNIT (QTY/MODEL) | | | | | | LTE RRH | | | | | | | | |
| DC BLOCK (QTY/MODEL) | | | | | | | | | | | | | | |
| TMA/LNA (QTY/MODEL) | | | | | | | | | | | | | | |
| CURRENT INJECTORS FOR TMA (QTY/MODEL) | | | | | | | | | | | | | | |
| PDU FOR TMAS (QTY/MODEL) | | | | | | | | | | | | | | |
| FILTER (QTY/MODEL) | | | | | | | | | | | | | | |
| SQUID (QTY/MODEL) | | | | | | | | | | | | | | |
| FIBER TRUNK (QTY/MODEL) | | | | | | | | | | | | | | |
| DC TRUNK (QTY/MODEL) | | | | | | | | | | | | | | |
| REPEATER (QTY/MODEL) | | | | | | | | | | | | | | |
| RRH - 700 band (QTY/MODEL) | | | 1 | RRUS-E2 | 1 | B14 4478 | | | | | | | | |
| RRH - 850 band (QTY/MODEL) | | | 1 | RRUS-12 | | | | | | | | | | |
| RRH - 1900 band (QTY/MODEL) | | | | | | | | | | | | | | |
| RRH - AWS band (QTY/MODEL) | | | | | 1 | RRUS-32 B66 | | | | | | | | |
| RRH - WCS band (QTY/MODEL) | | | | | | | | | | | | | | |
| Additional RRH #1 - any band (QTY/MODEL) | | | | | | | | | | | | | | |
| Additional RRH #2 - any band (QTY/MODEL) | | | | | | | | | | | | | | |
| Additional Component 1 (QTY/MODEL) | | | | | | | | | | | | | | |
| Additional Component 2 (QTY/MODEL) | | | | | | | | | | | | | | |
| Additional Component 3 (QTY/MODEL) | | | | | | | | | | | | | | |
| Local Market Note 1 | SOW:// Add LTE 850 and 700 DE RRU at existing antenna Pos-2 Bottom along with Surge Arrestors.// Add New Octo Antenna at Pos-3.// Add LTE 700 B14 and AWS RRU.// Add 1 new DC Squid Only.// Add 2nd XMU.// Replace existing 2xDUSs with 2x5216.// Replace IDL2 with IDLe. | | | | | | | | | | | | | |
| Local Market Note 2 | | | | | | | | | | | | | | |
| Local Market Note 3 | 2x5216+2xXMU+IDLe | | | | | | | | | | | | | |

| PORT SPECIFIC FIELDS | PORT NUMBER | USEID (CSSng) | USEID (Atoll) | ATOLL TXID | ATOLL CELL ID | TX/RX ? | TECHNOLOGY/FREQUENCY | ANTENNA ATOLL | ANTENNA GAIN | ELECTRICAL AZIMUTH | ELECTRICAL TILT | RRH LOCATION (Top/Bottom/Integrated/None) | FEEDERS TYPE | FEEDER LENGTH (feet) | RXAIT KIT MODULE? | TRIPLEXER or LLC (QTY) | TRIPLEXER or LLC (MODEL) | SCPA/MCPA MODULE? | HATCHPLATE POWER (Watts) | ERP (Watts) | Antenna RET Name | CABLE NUMBER | CABLE ID (CSSNG) |
|---|---|---|---|---|---|---|---|---|---|---|---|---|---|---|---|---|---|---|---|---|---|---|---|
| ANTENNA POSITION 2 | PORT 1 | | | CTL02102_7B_2_E | | | LTE 700 | QS66512-2_722MHz_03DT | 13.5 | 150 | 3 | Bottom | Commscope 1-5/8 | 160 | | | | | | 1475.7065 | | 11 | |
| | PORT 2 | | | CTL02102_8B_1 | CTL02102_8B_1 | | LTE 850 | QS66512-2_850MHz_08DT | 13.4 | 150 | 8 | Bottom | Commscope 1-5/8 | 160 | | | | | | 1000 | | 11 | |
| ANTENNA POSITION 3 | PORT 1 | | | CTL02102_7B_3_F | | | LTE 700 | 80010965_777MHz_08DT | 15.3 | 150 | 8 | Top | Fiber | 0 | | | | | | 2951.413 | | 13 | |
| | PORT 3 | | | CTL02102_2B_1 | CTL02102_2B_2 | | LTE AWS | 80010965_2170MHz_06DT | 18.5 | 150 | 6 | Top | Fiber | 0 | | | | | | 5070.2572 | | 14 | |

# Section 16C - PLANNED/PROPOSED TOWER CONFIGURATION - SECTOR C

| ANTENNA POSITION is LEFT to RIGHT from BACK OF ANTENNA (unless otherwise specified) | ANTENNA POSITION 1 | | ANTENNA POSITION 2 | | ANTENNA POSITION 3 | | ANTENNA POSITION 4 | | ANTENNA POSITION 5 | | ANTENNA POSITION 6 | | ANTENNA POSITION 7 | |
|---|---|---|---|---|---|---|---|---|---|---|---|---|---|---|
| Existing Antenna? | | | Yes | | | | | | | | | | | |
| ANTENNA MAKE - MODEL | | | | | 80010965 | | | | | | | | | |
| ANTENNA VENDOR | | | | | Kathrien | | | | | | | | | |
| ANTENNA SIZE (H x W x D) | | | | | 78.7X20X6.9 | | | | | | | | | |
| ANTENNA WEIGHT | | | | | 108.6 | | | | | | | | | |
| AZIMUTH | | | | | 270 | | | | | | | | | |
| MAGNETIC DECLINATION | | | | | | | | | | | | | | |
| RADIATION CENTER (feet) | | | | | 134 | | | | | | | | | |
| ANTENNA TIP HEIGHT | | | | | 137 | | | | | | | | | |
| MECHANICAL DOWNTILT | | | | | 0 | | | | | | | | | |
| FEEDER AMOUNT | | | | | | | | | | | | | | |
| VERTICAL SEPARATION from ANTENNA ABOVE (TIP to TIP) | | | | | | | | | | | | | | |
| VERTICAL SEPARATION from ANTENNA BELOW (TIP to TIP) | | | | | | | | | | | | | | |
| HORIZONTAL SEPARATION from CLOSEST ANTENNA to LEFT (CENTERLINE to CENTERLINE) | | | | | | | | | | | | | | |
| HORIZONTAL SEPARATION from CLOSEST ANTENNA to RIGHT (CENTERLINE to CENTERLINE) | | | | | | | | | | | | | | |
| HORIZONTAL SEPARATION from ANOTHER ANTENNA (which antenna # / # of inches) | | | | | | | | | | | | | | |
| Antenna RET Motor (QTY/MODEL) | | | | | | Internal | | | | | | | | |
| SURGE ARRESTOR (QTY/MODEL) | | | 4 | APTDC-BDFDM-DB | 1 | DC Squid Only | | | | | | | | |
| DIPLEXER (QTY/MODEL) | | | | | | | | | | | | | | |
| DUPLEXER (QTY/MODEL) | | | | | | | | | | | | | | |
| Antenna RET CONTROL UNIT (QTY/MODEL) | | | | | | LTE RRH | | | | | | | | |
| DC BLOCK (QTY/MODEL) | | | | | | | | | | | | | | |
| TMA/LNA (QTY/MODEL) | | | | | | | | | | | | | | |
| CURRENT INJECTORS FOR TMA (QTY/MODEL) | | | | | | | | | | | | | | |
| PDU FOR TMAS (QTY/MODEL) | | | | | | | | | | | | | | |
| FILTER (QTY/MODEL) | | | | | | | | | | | | | | |
| SQUID (QTY/MODEL) | | | | | | | | | | | | | | |
| FIBER TRUNK (QTY/MODEL) | | | | | | | | | | | | | | |
| DC TRUNK (QTY/MODEL) | | | | | | | | | | | | | | |
| REPEATER (QTY/MODEL) | | | | | | | | | | | | | | |
| RRH - 700 band (QTY/MODEL) | | | 1 | RRUS-E2 | 1 | B14 4478 | | | | | | | | |
| RRH - 850 band (QTY/MODEL) | | | 1 | RRUS-12 | | | | | | | | | | |
| RRH - 1900 band (QTY/MODEL) | | | | | | | | | | | | | | |
| RRH - AWS band (QTY/MODEL) | | | | | 1 | RRUS-32 B66 | | | | | | | | |
| RRH - WCS band (QTY/MODEL) | | | | | | | | | | | | | | |
| Additional RRH #1 - any band (QTY/MODEL) | | | | | | | | | | | | | | |
| Additional RRH #2 - any band (QTY/MODEL) | | | | | | | | | | | | | | |
| Additional Component 1 (QTY/MODEL) | | | | | | | | | | | | | | |
| Additional Component 2 (QTY/MODEL) | | | | | | | | | | | | | | |
| Additional Component 3 (QTY/MODEL) | | | | | | | | | | | | | | |
| Local Market Note 1 | SOW:// Add LTE 850 and 700 DE RRU at existing antenna Pos-2 Bottom along with Surge Arrestors.// Add New Octo Antenna at Pos-3.// Add LTE 700 B14 and AWS RRU.// Add 1 new DC Squid Only.// Add 2nd XMU.// Replace existing 2xDUSs with 2x5216.// Replace IDL2 with IDLe. | | | | | | | | | | | | | |
| Local Market Note 2 | | | | | | | | | | | | | | |
| Local Market Note 3 | 2x5216+2xXMU+IDLe | | | | | | | | | | | | | |

| PORT SPECIFIC FIELDS | PORT NUMBER | USEID (CSSng) | USEID (Atoll) | ATOLL TXID | ATOLL CELL ID | TX/RX ? | TECHNOLOGY/FREQUENCY | ANTENNA ATOLL | ANTENNA GAIN | ELECTRICAL AZIMUTH | ELECTRICAL TILT | RRH LOCATION (Top/Bottom/Integrated/None) | FEEDERS TYPE | FEEDER LENGTH (feet) | RXAIT KIT MODULE? | TRIPLEXER or LLC (QTY) | TRIPLEXER or LLC (MODEL) | SCPA/MCPA MODULE? | HATCHPLATE POWER (Watts) | ERP (Watts) | Antenna RET Name | CABLE NUMBER | CABLE ID (CSSNG) |
|---|---|---|---|---|---|---|---|---|---|---|---|---|---|---|---|---|---|---|---|---|---|---|---|
| ANTENNA POSITION 2 | PORT 1 | | | CTL02102_7C_2_E | | | LTE 700 | QS66512-2_722MHz_03DT | 13.5 | 270 | 3 | Bottom | Commscope 1-5/8 | 160 | | | | | | 1475.7065 | | 19 | |
| | PORT 2 | | | CTL02102_8C_1 | CTL02102_8C_1 | | LTE 850 | QS66512-2_850MHz_03DT | 13.5 | 270 | 3 | Bottom | Commscope 1-5/8 | 160 | | | | | | 1000 | | 19 | |
| ANTENNA POSITION 3 | PORT 1 | | | CTL02102_7C_3_F | | | LTE 700 | 80010965_777MHz_03DT | 15.3 | 270 | 3 | Top | Fiber | 0 | | | | | | 2951.413 | | 21 | |
| | PORT 3 | | | CTL02102_2C_1 | CTL02102_2C_2 | | LTE AWS | 80010965_2170MHz_03DT | 18.5 | 270 | 3 | Top | Fiber | 0 | | | | | | 5070.2572 | | 22 | |

# Section 17A - FINAL TOWER CONFIGURATION - SECTOR A (OR OMNI)

| ANTENNA POSITION is LEFT to RIGHT from BACK OF ANTENNA (unless otherwise specified) | ANTENNA POSITION 1 | | ANTENNA POSITION 2 | | ANTENNA POSITION 3 | | ANTENNA POSITION 4 | | ANTENNA POSITION 5 | | ANTENNA POSITION 6 | | ANTENNA POSITION 7 | |
|---|---|---|---|---|---|---|---|---|---|---|---|---|---|---|
| ANTENNA MAKE - MODEL | 7770 | | QS66512-2 | | 80010965 | | HPA-65R-BUU-H6 | | | | | | | |
| ANTENNA VENDOR | Powerwave | | Quintel | | Kathrien | | CCI Products | | | | | | | |
| ANTENNA SIZE (H x W x D) | 55X11X5 | | 72X12X9.6 | | 78.7X20X6.9 | | 72X14.8X9 | | | | | | | |
| ANTENNA WEIGHT | 35 | | 111 | | 108.6 | | 51 | | | | | | | |
| AZIMUTH | 0 | | 30 | | 30 | | 30 | | | | | | | |
| MAGNETIC DECLINATION | | | | | | | | | | | | | | |
| RADIATION CENTER (feet) | 134 | | 134 | | 134 | | 134 | | | | | | | |
| ANTENNA TIP HEIGHT | 136 | | 137 | | 137 | | 137 | | | | | | | |
| MECHANICAL DOWNTILT | 0 | | 0 | | 0 | | 0 | | | | | | | |
| FEEDER AMOUNT | 2 | | Fiber + 2 Coax | | | | | | | | | | | |
| VERTICAL SEPARATION from ANTENNA ABOVE (TIP to TIP) | | | | | | | | | | | | | | |
| VERTICAL SEPARATION from ANTENNA BELOW (TIP to TIP) | | | | | | | | | | | | | | |
| HORIZONTAL SEPARATION from CLOSEST ANTENNA to LEFT (CENTERLINE to CENTERLINE) | | | | | | | | | | | | | | |
| HORIZONTAL SEPARATION from CLOSEST ANTENNA to RIGHT (CENTERLINE to CENTERLINE) | | | | | | | | | | | | | | |
| HORIZONTAL SEPARATION from ANOTHER ANTENNA (which antenna # / # of inches) | | | | | | | | | | | | | | |
| Antenna RET Motor (QTY/MODEL) | 2 | Powerwave 7020 (DB) | | Built-in | | Internal | | Internal | | | | | | |
| SURGE ARRESTOR (QTY/MODEL) | | | 4 | APTDC-BDFDM-DB | 1 | DC Squid Only | 2 | DC Fiber Squid | | | | | | |
| DIPLEXER (QTY/MODEL) | 2 | Powerwave/LGP 21901 | 4 | CCi triplexer TPX-070821 | | | | | | | | | | |
| DUPLEXER (QTY/MODEL) | | | | | | | | | | | | | | |
| Antenna RET CONTROL UNIT (QTY/MODEL) | 1 | Kathrein / 860-10006 | | RRH Conrtolled | | LTE RRH | | LTE RRH | | | | | | |
| DC BLOCK (QTY/MODEL) | | | | | | | | | | | | | | |
| TMA/LNA (QTY/MODEL) | 2 | Pwav LGP21401 Single 1900 w/ 850BP | | | | | | | | | | | | |
| CURRENT INJECTORS FOR TMA (QTY/MODEL) | 2 | Polyphaser 1000860 | | | | | | | | | | | | |
| PDU FOR TMAS (QTY/MODEL) | 1 | LGP12104 | | | | | | | | | | | | |
| FILTER (QTY/MODEL) | | | | | | | | | | | | | | |
| SQUID (QTY/MODEL) | | | | | | | | | | | | | | |
| FIBER TRUNK (QTY/MODEL) | | | | | | | | | | | | | | |
| DC TRUNK (QTY/MODEL) | | | | | | | | | | | | | | |
| REPEATER (QTY/MODEL) | | | | | | | | | | | | | | |
| RRH - 700 band (QTY/MODEL) | | | 1 | RRUS-E2 | 1 | B14 4478 | 1 | RRUS-11 | | | | | | |
| RRH - 850 band (QTY/MODEL) | | | 1 | RRUS-12 | | | | | | | | | | |
| RRH - 1900 band (QTY/MODEL) | | | 1 | RRUS-32 B2 | | | | | | | | | | |
| RRH - AWS band (QTY/MODEL) | | | | | 1 | RRUS-32 B66 | | | | | | | | |
| RRH - WCS band (QTY/MODEL) | | | 1 | RRUS-32 | | | | | | | | | | |
| Additional RRH #1 - any band (QTY/MODEL) | | | | | | | | | | | | | | |
| Additional RRH #2 - any band (QTY/MODEL) | | | | | | | | | | | | | | |
| Additional Component 1 (QTY/MODEL) | | | | | | | | | | | | | | |
| Additional Component 2 (QTY/MODEL) | | | | | | | | | | | | | | |
| Additional Component 3 (QTY/MODEL) | | | | | | | | | | | | | | |
| Local Market Note 1 | SOW:// Add LTE 850 and 700 DE RRU at existing antenna Pos-2 Bottom along with Surge Arrestors.// Add New Octo Antenna at Pos-3.// Add LTE 700 B14 and AWS RRU.// Add 1 new DC Squid Only.// Add 2nd XMU.// Replace existing 2xDUSs with 2x5216.// Replace IDL2 with IDLe. | | | | | | | | | | | | | |
| Local Market Note 2 | | | | | | | | | | | | | | |
| Local Market Note 3 | 2x5216+2xXMU+IDLe | | | | | | | | | | | | | |

| PORT SPECIFIC FIELDS | PORT NUMBER | USEID (CSSng) | USEID (Atoll) | ATOLL TXID | ATOLL CELL ID | TX/RX ? | TECHNOLOGY/FREQUENCY | ANTENNA ATOLL | ANTENNA GAIN | ELECTRICAL AZIMUTH | ELECTRICAL TILT | RRH LOCATION (Top/Bottom/Integrated/None) | FEEDERS TYPE | FEEDER LENGTH (feet) | RXAIT KIT MODULE? | TRIPLEXER or LLC (QTY) | TRIPLEXER or LLC (MODEL) | SCPA/MCPA MODULE? | HATCHPLATE POWER (Watts) | ERP (Watts) | Antenna RET Name | CABLE NUMBER | CABLE ID (CSSNG) |
|---|---|---|---|---|---|---|---|---|---|---|---|---|---|---|---|---|---|---|---|---|---|---|---|
| ANTENNA POSITION 1 | PORT 1 | 100184.A.850.3G.1 | | CTV21021 | CTV21021 | | UMTS 850 | 7770.00.850.02 | 13.5 | 0 | 2 | None | Commscope 1-5/8 | 160 | | | | | | 303.39 | | 1 | |
| | | | | | | | | | | | | | | | | | | | | | | | |
| ANTENNA POSITION 2 | PORT 1 | 100184.A.700.4G.4 | | CTL00802_7A_2_E | CTL00802_7A_2_E | | LTE 700 | QS66512-2_722MHz_03DT | 13.5 | 30 | 3 | Bottom | Commscope 1-5/8 | 160 | | | | | | 1475.7065 | | 3 | |
| | PORT 2 | 100184.A.850.4G.1 | | CTL00802_8A_1 | CTL00802_8A_1 | | LTE 850 | QS66512-2_850MHz_02DT | 13.2 | 30 | 2 | Bottom | Commscope 1-5/8 | 160 | | | | | | 1000 | | 3 | |
| | PORT 3 | 100184.A.1900.4G.1 | | CTL02102_9A_1 | CTL02102_9A_1 | | LTE 1900 | QS66512-2_1930MHz_03DT | 15.9 | 30 | 3 | Top | Fiber | 0 | | | | | | 4842.058 | | 4 | |
| | PORT 4 | 100184.A.WCS.4G.1 | | CTL02102_3A_1 | CTL02102_3A_1 | | LTE WCS | QS66512- | 16.8 | 30 | 2 | Top | Fiber | 0 | | | | | | 1285.2866 | | 4 | |

| | | | | | | | | | | | | | | | | | | | | | | | |
|---|---|---|---|---|---|---|---|---|---|---|---|---|---|---|---|---|---|---|---|---|---|---|---|
| | | | | | | | | 2_2355MHz_02DT | | | | | | | | | | | | | | | |
| | PORT 7 | 100184.A.1900.4G.3 | | CTL02102_9A_2 | CTL02102_9A_2 | | LTE 1900 | QS66512-2_1930MHz_03DT | 15.9 | 30 | 3 | Top | Fiber | 0 | | | | | | 4842.058 | | 4 | |
| | | | | | | | | | | | | | | | | | | | | | | | |
| **ANTENNA POSITION 3** | **PORT 1** | 100184.A.700.4G.5 | | CTL00802_7A_3_F | CTL00802_7A_3_F | | LTE 700 | 80010965_777MHz_02DT | 15.3 | 30 | 2 | Top | Fiber | 0 | | | | | | 2951.413 | | 5 | |
| | PORT 3 | 100184.A.AWS.4G.4 | | CTL00802_2A_2 | CTL00802_2A_2 | | LTE AWS | 80010965_2170MHz_03DT | 18.5 | 30 | 3 | Top | Fiber | 0 | | | | | | 5070.2572 | | 6 | |
| | | | | | | | | | | | | | | | | | | | | | | | |
| **ANTENNA POSITION 4** | **PORT 1** | 100184.A.700.4G.1 | | CTL02102_7A_1 | CTL02102_7A_1 | | LTE 700 | HPA-65R-BUU-H6_719MHz_02DT | 14.28 | 30 | 2 | Top | Fiber | 0 | | | | | | 1475.7065 | | 7 | |

# Section 17B - FINAL TOWER CONFIGURATION - SECTOR B

| ANTENNA POSITION is LEFT to RIGHT from BACK OF ANTENNA (unless otherwise specified) | ANTENNA POSITION 1 | | ANTENNA POSITION 2 | | ANTENNA POSITION 3 | | ANTENNA POSITION 4 | | ANTENNA POSITION 5 | | ANTENNA POSITION 6 | | ANTENNA POSITION 7 | |
|---|---|---|---|---|---|---|---|---|---|---|---|---|---|---|
| ANTENNA MAKE - MODEL | 7770 | | QS66512-2 | | 80010965 | | HPA-65R-BUU-H6 | | | | | | | |
| ANTENNA VENDOR | Powerwave | | Quintel | | Kathrien | | CCI Products | | | | | | | |
| ANTENNA SIZE (H x W x D) | 55X11X5 | | 72X12X9.6 | | 78.7X20X6.9 | | 72X14.8X9 | | | | | | | |
| ANTENNA WEIGHT | 35 | | 111 | | 108.6 | | 51 | | | | | | | |
| AZIMUTH | 100 | | 150 | | 150 | | 150 | | | | | | | |
| MAGNETIC DECLINATION | | | | | | | | | | | | | | |
| RADIATION CENTER (feet) | 134 | | 134 | | 134 | | 134 | | | | | | | |
| ANTENNA TIP HEIGHT | 136 | | 137 | | 137 | | 137 | | | | | | | |
| MECHANICAL DOWNTILT | 0 | | 0 | | 0 | | 0 | | | | | | | |
| FEEDER AMOUNT | 2 | | Fiber + 2 Coax | | | | | | | | | | | |
| VERTICAL SEPARATION from ANTENNA ABOVE (TIP to TIP) | | | | | | | | | | | | | | |
| VERTICAL SEPARATION from ANTENNA BELOW (TIP to TIP) | | | | | | | | | | | | | | |
| HORIZONTAL SEPARATION from CLOSEST ANTENNA to LEFT (CENTERLINE to CENTERLINE) | | | | | | | | | | | | | | |
| HORIZONTAL SEPARATION from CLOSEST ANTENNA to RIGHT (CENTERLINE to CENTERLINE) | | | | | | | | | | | | | | |
| HORIZONTAL SEPARATION from ANOTHER ANTENNA (which antenna # / # of inches) | | | | | | | | | | | | | | |
| Antenna RET Motor (QTY/MODEL) | 2 | Powerwave 7020 (DB) | | Built-in | | Internal | | Internal | | | | | | |
| SURGE ARRESTOR (QTY/MODEL) | | | 4 | APTDC-BDFDM-DB | 1 | DC Squid Only | 2 | DC Fiber Squid | | | | | | |
| DIPLEXER (QTY/MODEL) | 2 | Powerwave/LGP 21901 | 4 | CCi triplexer TPX-070821 | | | | | | | | | | |
| DUPLEXER (QTY/MODEL) | | | | | | | | | | | | | | |
| Antenna RET CONTROL UNIT (QTY/MODEL) | | | | RRH Conrtolled | | LTE RRH | | LTE RRH | | | | | | |
| DC BLOCK (QTY/MODEL) | | | | | | | | | | | | | | |
| TMA/LNA (QTY/MODEL) | 2 | Pwav LGP21401 Single 1900 w/ 850BP | | | | | | | | | | | | |
| CURRENT INJECTORS FOR TMA (QTY/MODEL) | 2 | Polyphaser 1000860 | | | | | | | | | | | | |
| PDU FOR TMAS (QTY/MODEL) | | | | | | | | | | | | | | |
| FILTER (QTY/MODEL) | | | | | | | | | | | | | | |
| SQUID (QTY/MODEL) | | | | | | | | | | | | | | |
| FIBER TRUNK (QTY/MODEL) | | | | | | | | | | | | | | |
| DC TRUNK (QTY/MODEL) | | | | | | | | | | | | | | |
| REPEATER (QTY/MODEL) | | | | | | | | | | | | | | |
| RRH - 700 band (QTY/MODEL) | | | 1 | RRUS-E2 | 1 | B14 4478 | 1 | RRUS-11 | | | | | | |
| RRH - 850 band (QTY/MODEL) | | | 1 | RRUS-12 | | | | | | | | | | |
| RRH - 1900 band (QTY/MODEL) | | | 1 | RRUS-32 B2 | | | | | | | | | | |
| RRH - AWS band (QTY/MODEL) | | | | | 1 | RRUS-32 B66 | | | | | | | | |
| RRH - WCS band (QTY/MODEL) | | | 1 | RRUS-32 | | | | | | | | | | |
| Additional RRH #1 - any band (QTY/MODEL) | | | | | | | | | | | | | | |
| Additional RRH #2 - any band (QTY/MODEL) | | | | | | | | | | | | | | |
| Additional Component 1 (QTY/MODEL) | | | | | | | | | | | | | | |
| Additional Component 2 (QTY/MODEL) | | | | | | | | | | | | | | |
| Additional Component 3 (QTY/MODEL) | | | | | | | | | | | | | | |
| Local Market Note 1 | SOW:// Add LTE 850 and 700 DE RRU at existing antenna Pos-2 Bottom along with Surge Arrestors.// Add New Octo Antenna at Pos-3.// Add LTE 700 B14 and AWS RRU.// Add 1 new DC Squid Only.// Add 2nd XMU.// Replace existing 2xDUSs with 2x5216.// Replace IDL2 with IDLe. | | | | | | | | | | | | | |
| Local Market Note 2 | | | | | | | | | | | | | | |
| Local Market Note 3 | 2x5216+2xXMU+IDLe | | | | | | | | | | | | | |

| PORT SPECIFIC FIELDS | PORT NUMBER | USEID (CSSng) | USEID (Atoll) | ATOLL TXID | ATOLL CELL ID | TX/RX ? | TECHNOLOGY/FREQUENCY | ANTENNA ATOLL | ANTENNA GAIN | ELECTRICAL AZIMUTH | ELECTRICAL TILT | RRH LOCATION (Top/Bottom/Integrated/None) | FEEDERS TYPE | FEEDER LENGTH (feet) | RXAIT KIT MODULE? | TRIPLEXER or LLC (QTY) | TRIPLEXER or LLC (MODEL) | SCPA/MCPA MODULE? | HATCHPLATE POWER (Watts) | ERP (Watts) | Antenna RET Name | CABLE NUMBER | CABLE ID (CSSNG) |
|---|---|---|---|---|---|---|---|---|---|---|---|---|---|---|---|---|---|---|---|---|---|---|---|
| ANTENNA POSITION 1 | PORT 1 | 100184.B.850.3G.1 | | CTV21022 | CTV21022 | | UMTS 850 | 7770.00.850.04 | 13.5 | 100 | 4 | None | Commscope 1-5/8 | 160 | | | | | | 303.39 | | 9 | |
| ANTENNA POSITION 2 | PORT 1 | 100184.B.700.4G.4 | | CTL00802_7B_2_E | CTL00802_7B_2_E | | LTE 700 | QS66512-2_722MHz_03DT | 13.5 | 150 | 3 | Bottom | Commscope 1-5/8 | 160 | | | | | | 1475.7065 | | 11 | |
| | PORT 2 | 100184.B.850.4G.1 | | CTL00802_8B_1 | CTL00802_8B_1 | | LTE 850 | QS66512-2_850MHz_08DT | 13.4 | 150 | 8 | Bottom | Commscope 1-5/8 | 160 | | | | | | 1000 | | 11 | |
| | PORT 3 | 100184.B.1900.4G.1 | | CTL02102_9B_1 | CTL02102_9B_1 | | LTE 1900 | QS66512-2_1930MHz_06DT | 15.9 | 150 | 6 | Top | Fiber | 0 | | | | | | 4842.058 | | 12 | |
| | PORT 4 | 100184.B.WCS.4G.1 | | CTL02102_3B_1 | CTL02102_3B_1 | | LTE WCS | QS66512- | 16.8 | 150 | 2 | Top | Fiber | 0 | | | | | | 1285.2866 | | 12 | |

| | | | | | | | | | | | | | | | | | | | | | | | |
|---|---|---|---|---|---|---|---|---|---|---|---|---|---|---|---|---|---|---|---|---|---|---|---|
| | | | | | | | | 2_2355MHz_02DT | | | | | | | | | | | | | | | |
| | PORT 7 | 100184.B.1900.4G.3 | | CTL02102_9B_2 | CTL02102_9B_2 | | LTE 1900 | QS66512-2_1930MHz_06DT | 15.9 | 150 | 6 | Top | Fiber | 0 | | | | | | 4842.058 | | 12 | |
| | | | | | | | | | | | | | | | | | | | | | | | |
| **ANTENNA POSITION 3** | **PORT 1** | 100184.B.700.4G.5 | | CTL00802_7B_3_F | CTL00802_7B_3_F | | LTE 700 | 80010965_777MHz_08DT | 15.3 | 150 | 8 | Top | Fiber | 0 | | | | | | 2951.413 | | 13 | |
| | PORT 3 | 100184.B.AWS.4G.4 | | CTL00802_2B_2 | CTL00802_2B_2 | | LTE AWS | 80010965_2170MHz_06DT | 18.5 | 150 | 6 | Top | Fiber | 0 | | | | | | 5070.2572 | | 14 | |
| | | | | | | | | | | | | | | | | | | | | | | | |
| **ANTENNA POSITION 4** | **PORT 1** | 100184.B.700.4G.1 | | CTL02102_7B_1 | CTL02102_7B_1 | | LTE 700 | HPA-65R-BUU-H6_719MHz_08DT | 13.97 | 150 | 8 | Top | Fiber | 0 | | | | | | 1475.7065 | | 15 | |

# Section 17C - FINAL TOWER CONFIGURATION - SECTOR C

| ANTENNA POSITION is LEFT to RIGHT from BACK OF ANTENNA (unless otherwise specified) | ANTENNA POSITION 1 | | ANTENNA POSITION 2 | | ANTENNA POSITION 3 | | ANTENNA POSITION 4 | | ANTENNA POSITION 5 | | ANTENNA POSITION 6 | | ANTENNA POSITION 7 | |
|---|---|---|---|---|---|---|---|---|---|---|---|---|---|---|
| ANTENNA MAKE - MODEL | 7770 | | QS66512-2 | | 80010965 | | HPA-65R-BUU-H6 | | | | | | | |
| ANTENNA VENDOR | Powerwave | | Quintel | | Kathrien | | CCI Products | | | | | | | |
| ANTENNA SIZE (H x W x D) | 55X11X5 | | 72X12X9.6 | | 78.7X20X6.9 | | 72X14.8X9 | | | | | | | |
| ANTENNA WEIGHT | 35 | | 111 | | 108.6 | | 51 | | | | | | | |
| AZIMUTH | 250 | | 270 | | 270 | | 270 | | | | | | | |
| MAGNETIC DECLINATION | | | | | | | | | | | | | | |
| RADIATION CENTER (feet) | 134 | | 134 | | 134 | | 134 | | | | | | | |
| ANTENNA TIP HEIGHT | 136 | | 137 | | 137 | | 137 | | | | | | | |
| MECHANICAL DOWNTILT | 0 | | 0 | | 0 | | 0 | | | | | | | |
| FEEDER AMOUNT | 2 | | Fiber + 2 Coax | | | | | | | | | | | |
| VERTICAL SEPARATION from ANTENNA ABOVE (TIP to TIP) | | | | | | | | | | | | | | |
| VERTICAL SEPARATION from ANTENNA BELOW (TIP to TIP) | | | | | | | | | | | | | | |
| HORIZONTAL SEPARATION from CLOSEST ANTENNA to LEFT (CENTERLINE to CENTERLINE) | | | | | | | | | | | | | | |
| HORIZONTAL SEPARATION from CLOSEST ANTENNA to RIGHT (CENTERLINE to CENTERLINE) | | | | | | | | | | | | | | |
| HORIZONTAL SEPARATION from ANOTHER ANTENNA (which antenna # / # of inches) | | | | | | | | | | | | | | |
| Antenna RET Motor (QTY/MODEL) | 2 | Powerwave 7020 (DB) | | Built-in | | Internal | | Internal | | | | | | |
| SURGE ARRESTOR (QTY/MODEL) | | | 4 | APTDC-BDFDM-DB | 1 | DC Squid Only | 2 | DC Fiber Squid | | | | | | |
| DIPLEXER (QTY/MODEL) | 2 | Powerwave/LGP 21901 | 4 | CCi triplexer TPX-070821 | | | | | | | | | | |
| DUPLEXER (QTY/MODEL) | | | | | | | | | | | | | | |
| Antenna RET CONTROL UNIT (QTY/MODEL) | | | | RRH Conrtolled | | LTE RRH | | LTE RRH | | | | | | |
| DC BLOCK (QTY/MODEL) | | | | | | | | | | | | | | |
| TMA/LNA (QTY/MODEL) | 2 | Pwav LGP21401 Single 1900 w/ 850BP | | | | | | | | | | | | |
| CURRENT INJECTORS FOR TMA (QTY/MODEL) | 2 | Polyphaser 1000860 | | | | | | | | | | | | |
| PDU FOR TMAS (QTY/MODEL) | | | | | | | | | | | | | | |
| FILTER (QTY/MODEL) | | | | | | | | | | | | | | |
| SQUID (QTY/MODEL) | | | | | | | | | | | | | | |
| FIBER TRUNK (QTY/MODEL) | | | | | | | | | | | | | | |
| DC TRUNK (QTY/MODEL) | | | | | | | | | | | | | | |
| REPEATER (QTY/MODEL) | | | | | | | | | | | | | | |
| RRH - 700 band (QTY/MODEL) | | | 1 | RRUS-E2 | 1 | B14 4478 | 1 | RRUS-11 | | | | | | |
| RRH - 850 band (QTY/MODEL) | | | 1 | RRUS-12 | | | | | | | | | | |
| RRH - 1900 band (QTY/MODEL) | | | 1 | RRUS-32 B2 | | | | | | | | | | |
| RRH - AWS band (QTY/MODEL) | | | | | 1 | RRUS-32 B66 | | | | | | | | |
| RRH - WCS band (QTY/MODEL) | | | 1 | RRUS-32 | | | | | | | | | | |
| Additional RRH #1 - any band (QTY/MODEL) | | | | | | | | | | | | | | |
| Additional RRH #2 - any band (QTY/MODEL) | | | | | | | | | | | | | | |
| Additional Component 1 (QTY/MODEL) | | | | | | | | | | | | | | |
| Additional Component 2 (QTY/MODEL) | | | | | | | | | | | | | | |
| Additional Component 3 (QTY/MODEL) | | | | | | | | | | | | | | |
| Local Market Note 1 | SOW:// Add LTE 850 and 700 DE RRU at existing antenna Pos-2 Bottom along with Surge Arrestors.// Add New Octo Antenna at Pos-3.// Add LTE 700 B14 and AWS RRU.// Add 1 new DC Squid Only.// Add 2nd XMU.// Replace existing 2xDUSs with 2x5216.// Replace IDL2 with IDLe. | | | | | | | | | | | | | |
| Local Market Note 2 | | | | | | | | | | | | | | |
| Local Market Note 3 | 2x5216+2xXMU+IDLe | | | | | | | | | | | | | |

| PORT SPECIFIC FIELDS | PORT NUMBER | USEID (CSSng) | USEID (Atoll) | ATOLL TXID | ATOLL CELL ID | TX/RX ? | TECHNOLOGY/FREQUENCY | ANTENNA ATOLL | ANTENNA GAIN | ELECTRICAL AZIMUTH | ELECTRICAL TILT | RRH LOCATION (Top/Bottom/Integrated/None) | FEEDERS TYPE | FEEDER LENGTH (feet) | RXAIT KIT MODULE? | TRIPLEXER or LLC (QTY) | TRIPLEXER or LLC (MODEL) | SCPA/MCPA MODULE? | HATCHPLATE POWER (Watts) | ERP (Watts) | Antenna RET Name | CABLE NUMBER | CABLE ID (CSSNG) |
|---|---|---|---|---|---|---|---|---|---|---|---|---|---|---|---|---|---|---|---|---|---|---|---|
| ANTENNA POSITION 1 | PORT 1 | 100184.C.850.3G.1 | | CTV21023 | CTV21023 | | UMTS 850 | 7770.00.850.07 | 13.5 | 250 | 7 | None | Commscope 1-5/8 | 160 | | | | | | 303.39 | | 17 | |
| ANTENNA POSITION 2 | PORT 1 | 100184.C.700.4G.4 | | CTL00802_7C_2_E | CTL00802_7C_2_E | | LTE 700 | QS66512-2_722MHz_03DT | 13.5 | 270 | 3 | Bottom | Commscope 1-5/8 | 160 | | | | | | 1475.7065 | | 19 | |
| | PORT 2 | 100184.C.850.4G.1 | | CTL00802_8C_1 | CTL00802_8C_1 | | LTE 850 | QS66512-2_850MHz_03DT | 13.5 | 270 | 3 | Bottom | Commscope 1-5/8 | 160 | | | | | | 1000 | | 19 | |
| | PORT 3 | 100184.C.1900.4G.1 | | CTL02102_9C_1 | CTL02102_9C_1 | | LTE 1900 | QS66512-2_1930MHz_03DT | 15.9 | 270 | 3 | Top | Fiber | 0 | | | | | | 4842.058 | | 20 | |
| | PORT 4 | 100184.C.WCS.4G.1 | | CTL02102_3C_1 | CTL02102_3C_1 | | LTE WCS | QS66512- | 16.8 | 270 | 2 | Top | Fiber | 0 | | | | | | 1285.2866 | | 20 | |

| | | | | | | | | | | | | | | | | | | | | | | | |
|---|---|---|---|---|---|---|---|---|---|---|---|---|---|---|---|---|---|---|---|---|---|---|---|
| | | | | | | | | 2_2355MHz_02DT | | | | | | | | | | | | | | | |
| | PORT 7 | 100184.C.1900.4G.4 | | CTL02102_9C_2 | CTL02102_9C_2 | | LTE 1900 | QS66512-2_1930MHz_03DT | 15.9 | 270 | 3 | Top | Fiber | 0 | | | | | | 4842.058 | | 20 | |
| | | | | | | | | | | | | | | | | | | | | | | | |
| **ANTENNA POSITION 3** | **PORT 1** | 100184.C.700.4G.5 | | CTL00802_7C_3_F | CTL00802_7C_3_F | | LTE 700 | 80010965_777MHz_03DT | 15.3 | 270 | 3 | Top | Fiber | 0 | | | | | | 2951.413 | | 21 | |
| | PORT 3 | 100184.C.AWS.4G.4 | | CTL00802_2C_2 | CTL00802_2C_2 | | LTE AWS | 80010965_2170MHz_03DT | 18.5 | 270 | 3 | Top | Fiber | 0 | | | | | | 5070.2572 | | 22 | |
| | | | | | | | | | | | | | | | | | | | | | | | |
| **ANTENNA POSITION 4** | **PORT 1** | 100184.C.700.4G.1 | | CTL02102_7C_1 | CTL02102_7C_1 | | LTE 700 | HPA-65R-BUU-H6_719MHz_03DT | 14.22 | 270 | 3 | Top | Fiber | 0 | | | | | | 1475.7065 | | 23 | |

| | | | | | | | |
|---|---|---|---|---|---|---|---|
| Diagram - Sector | A | Diagram File Name - FN_CT2102_ABC_LTE_Rev.1.0.vsd | | | | | |
| Atoll Site Name - | CTL02102 | Location Name - | GREENWICH PERRYRIDGE RD TWR | Market - | CONNECTICUT | Market Cluster - | NEW ENGLAND |

Comments: "Important Note: For detailed radio to antenna wiring refer to the latest 4T4R Antenna/ radio Port connections Field Notice (RF-HW-2016-265)"

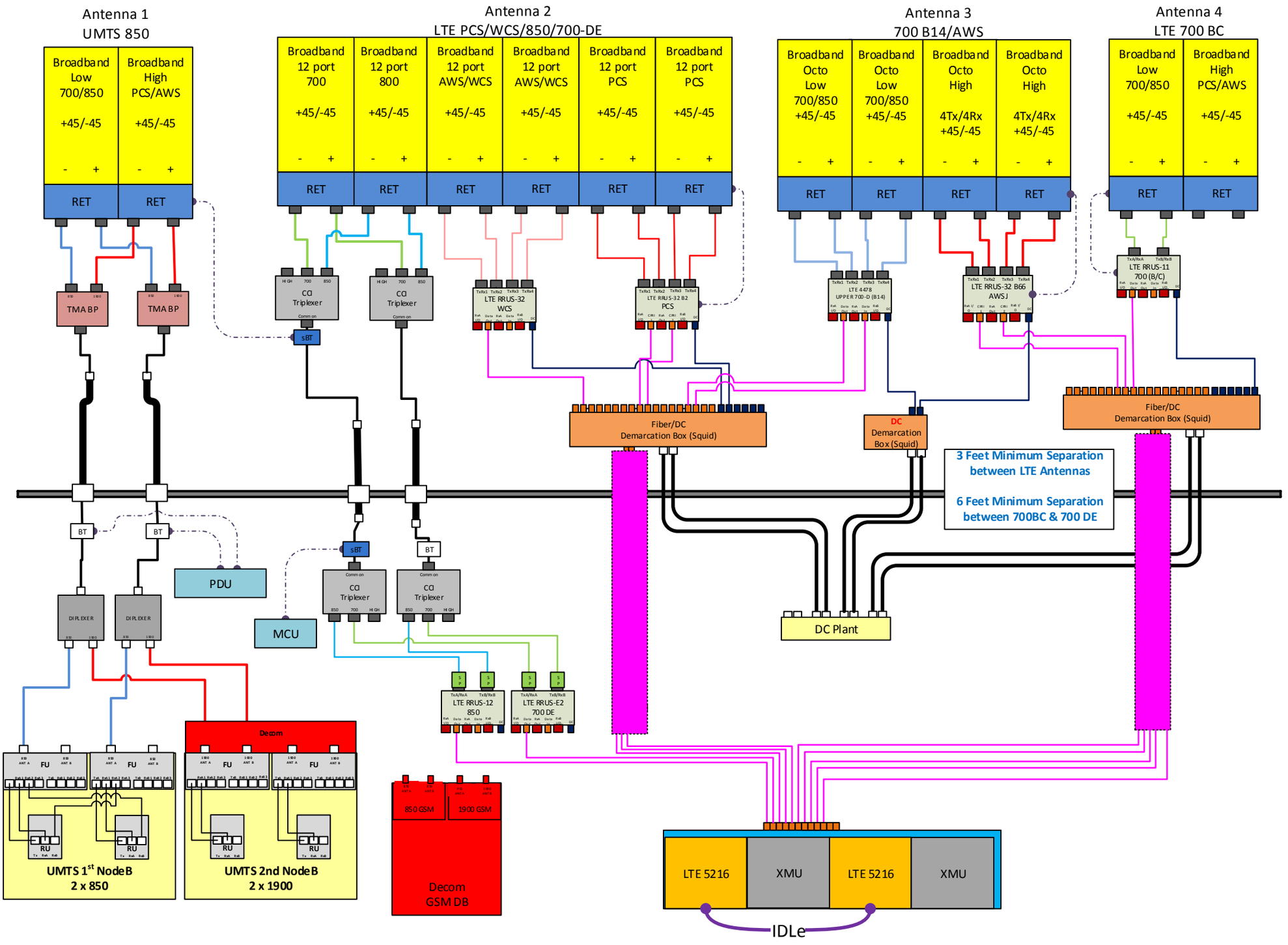

| | | | | | | | |
|---|---|---|---|---|---|---|---|
| Diagram - Sector | B | Diagram File Name - FN_CT2102_ABC_LTE_Rev.1.0.vsd | | | | | |
| Atoll Site Name - | CTL02102 | Location Name - | GREENWICH PERRYRIDGE RD TWR | Market - | CONNECTICUT | Market Cluster - | NEW ENGLAND |

Comments: "Important Note: For detailed radio to antenna wiring refer to the latest 4T4R Antenna/ radio Port connections Field Notice (RF-HW-2016-265)"

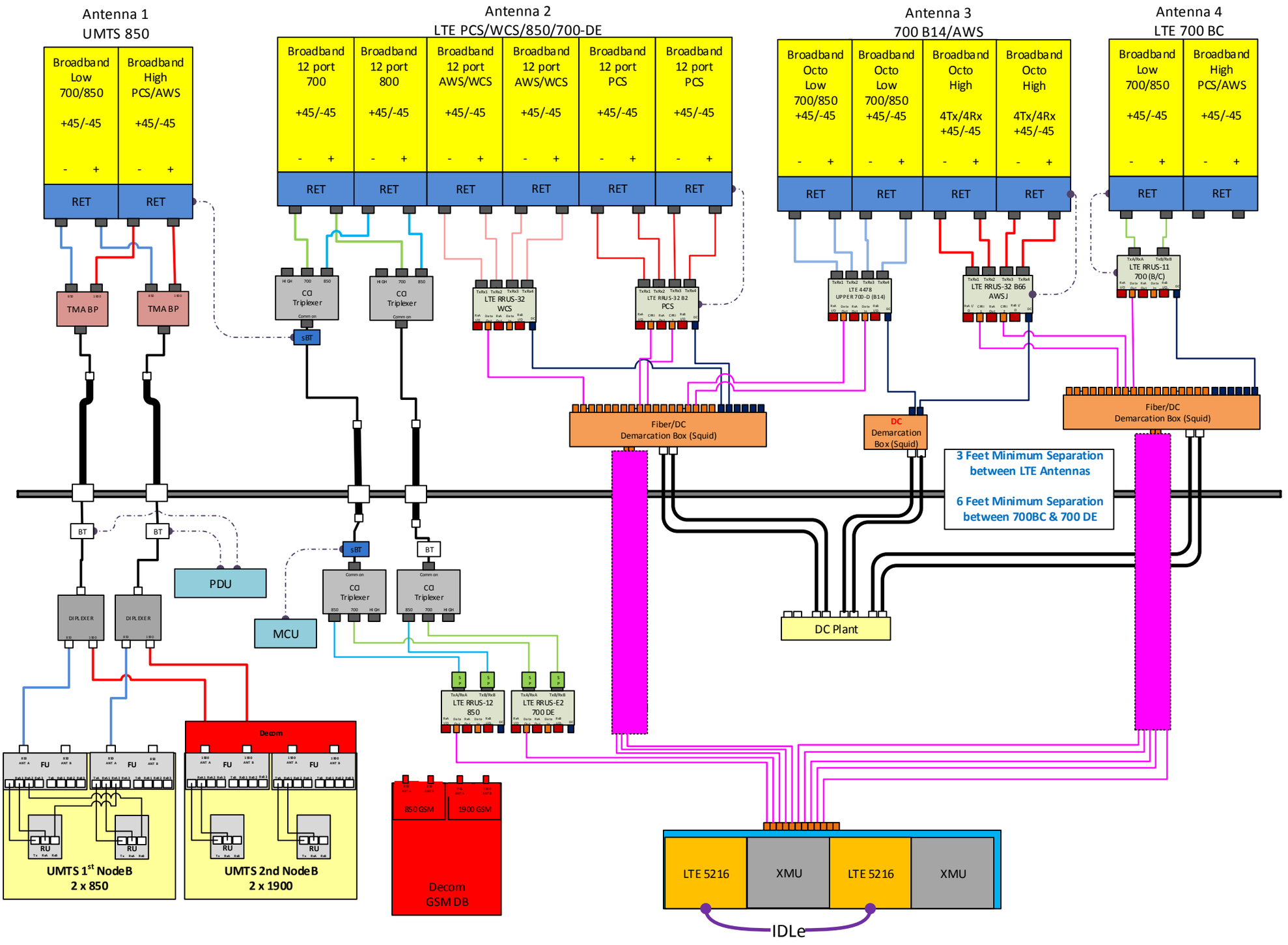

| | | | | | | | |
|---|---|---|---|---|---|---|---|
| Diagram - Sector | C | Diagram File Name - FN_CT2102_ABC_LTE_Rev.1.0.vsd | | | | | |
| Atoll Site Name - | CTL02102 | Location Name - | GREENWICH PERRYRIDGE RD TWR | Market - | CONNECTICUT | Market Cluster - | NEW ENGLAND |

Comments: "Important Note: For detailed radio to antenna wiring refer to the latest 4T4R Antenna/ radio Port connections Field Notice (RF-HW-2016-265)"

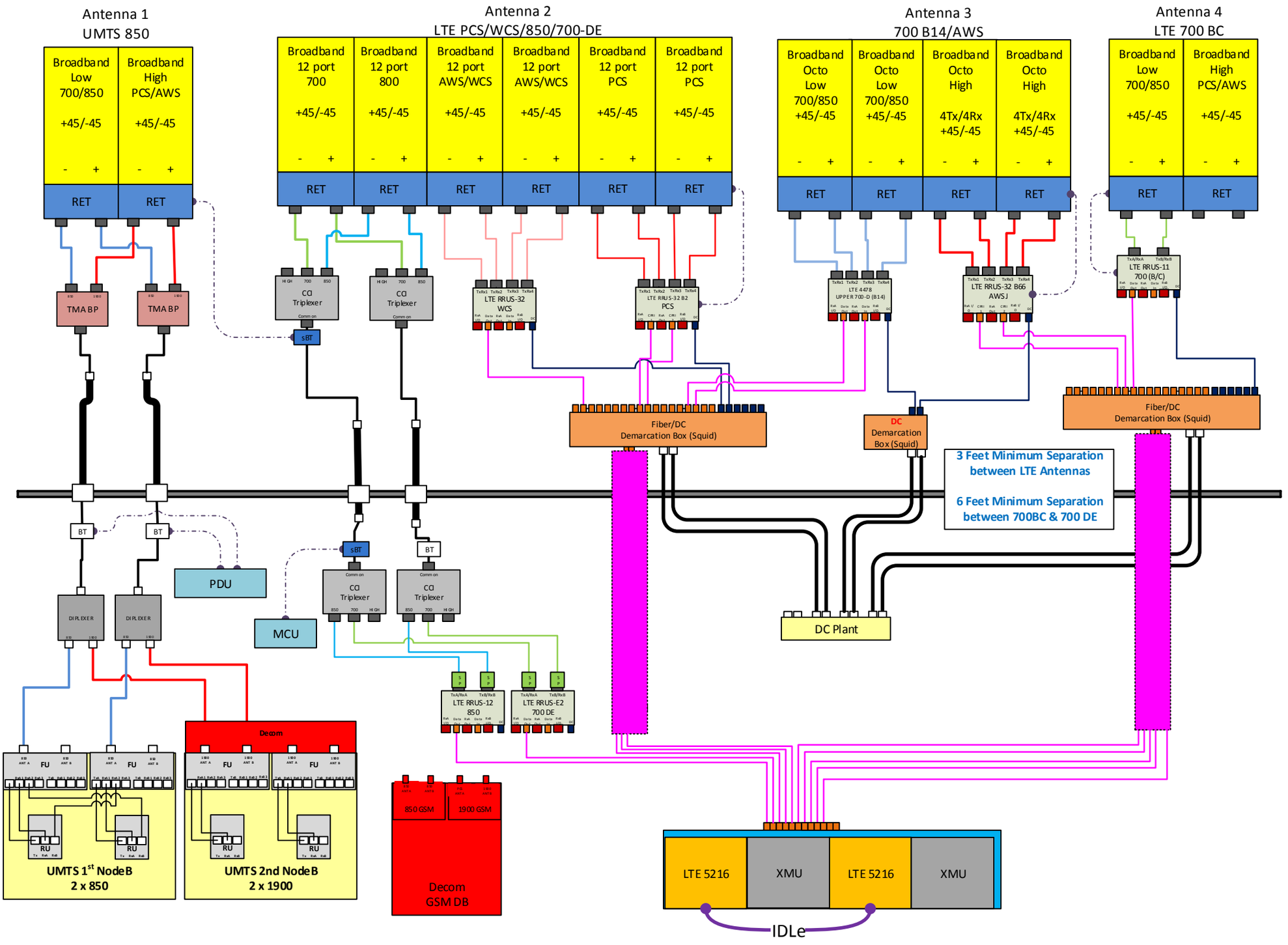

| NOTES | | | |
|---|---|---|---|
| Date Time (Central) | Version | ATTUID | Note |
| 9/27/2017 9:20:22 AM | 2.00 | mh705r | RFDS VERSION incremented. |
| 9/27/2017 10:59:25 AM | 2.00 | mh705r | 9-27-2017: RFDS Pull back to add new additional carrier of LTE 6C&7C. |

| WORKFLOW SUMMARY | | | | | | | |
|---|---|---|---|---|---|---|---|
| Date | FROM State / Status | FROM ATTUID | TO State / Status | TO ATTUID | Operation | Comments | PACE Status |
| 05/27/2017 | Preliminary In Progress | ak975u | Preliminary In Progress | OM636A | Reassign | Successfully Reassigned | |
| 05/27/2017 | Preliminary In Progress | OM636A | Preliminary Submitted for Approval | RC475S | Promote | LTE Preliminary RFDS | NER-RCTB-17-00855 FAILURE 05/27/2017 5:52:41 PM<br>NER-RCTB-17-03550 PENDING 05/27/2017 5:52:41 PM |
| 05/30/2017 | Preliminary Submitted for Approval | RC475S | Preliminary In Progress | ak975u | Pull Back | LTE 4C,5C. | |
| 05/30/2017 | Preliminary In Progress | ak975u | Preliminary Submitted for Approval | RC475S | Promote | LTE PRELIMINARY. | NER-RCTB-17-00855 FAILURE 05/30/2017 5:18:51 PM<br>NER-RCTB-17-03550 PENDING 05/30/2017 5:18:51 PM |
| 07/13/2017 | Preliminary Submitted for Approval | RC475S | Preliminary Approved | DC5778 | Promote | | |
| 09/27/2017 | Preliminary Approved | DC5778 | Preliminary In Progress | mh705r | Pull Back | To add additional carriers | |
| 10/06/2017 | Preliminary In Progress | mh705r | Preliminary In Progress | rx855w | Reassign | | |
| 10/09/2017 | Preliminary In Progress | rx855w | Preliminary Submitted for Approval | RC475S | Promote | Preliminary RFDS. | NER-RCTB-17-00855 FAILURE 10/09/2017 1:47:07 PM<br>NER-RCTB-17-03550 MRCTB024044 SUCCESS 10/09/2017 1:47:07 PM<br>NER-RCTB-17-06870 PENDING 10/09/2017 1:47:07 PM<br>NER-RCTB-17-06883 PENDING 10/09/2017 1:47:07 PM |
| 10/09/2017 | Preliminary Submitted for Approval | RC475S | Preliminary Approved | DC5778 | Promote | | |
| 11/20/2017 | Preliminary Approved | DC5778 | Final RF Approval | OM636A | Promote | Promote to final, change RRUS-11 to RRUS-12, please add PACE ID and PYN for 6C | |
| 11/27/2017 | Final RF Approval | OM636A | Final RF Approval | AK6376 | Reassign | Update RFDS as per Promotion comments and RAN tracker | |
| 11/28/2017 | Final RF Approval | AK6376 | Final Approved | DC5778 | Promote | Final | NER-RCTB-17-00855 MRCTB022780 SUCCESS 11/28/2017 5:49:55 PM<br>NER-RCTB-17-03550 MRCTB024044 SUCCESS 11/28/2017 5:49:55 PM<br>NER-RCTB-17-06870 MRCTB026668 SUCCESS 11/28/2017 5:49:55 PM<br>NER-RCTB-17-06883 MRCTB026597 SUCCESS 11/28/2017 5:49:55 PM |

| 8-Port Antenna | R1 | R2 | Y1 | Y2 |
|---|---|---|---|---|
| Frequency Range | 698–960 | 698–960 | 1695–2690 | 1695–2690 |
| Dual Polarization | X | X | X | X |
| HPBW | 65° | 65° | 65° | 65° |
| Adjust. Electr. DT set by *FlexRET* | 2°–12° | 2°–12° | 2.5°–12° | 2.5°–12° |

KATHREIN

AISG Antenna Interface Standards Group

**8-Port Antenna 698–960/698–960/1695–2690/1695–2690 65°/65°/65°/65° 15.5/15.5/18/18dBi 2°–12°/2°–12°/2.5°–12°/2.5°–12°T**

| Type No. | | 80010965 | | | |
|---|---|---|---|---|---|
| **Left side, lowband** | | R1, connector 1–2 | | | |
| | | 698–960 | | | |
| Frequency Range | MHz | 698 – 806 | 790 – 862 | 824 – 894 | 880 – 960 |
| Gain at mid Tilt | dBi | 14.8 | 15.4 | 15.6 | 15.9 |
| Gain over all Tilts | dBi | 14.8 ± 0.6 | 15.4 ± 0.4 | 15.6 ± 0.2 | 15.8 ± 0.2 |
| **Horizontal Pattern:** | | | | | |
| Azimuth Beamwidth | ° | 62 ± 3.9 | 61 ± 3.2 | 60 ± 2.7 | 60 ± 2.1 |
| Front-to-Back Ratio, Total Power, ± 30° | dB | > 22 | > 25 | > 27 | > 25 |
| **Vertical Pattern:** | | | | | |
| Elevation Beamwidth | ° | 11.9 ± 0.8 | 11.0 ± 0.8 | 10.5 ± 0.4 | 10.2 ± 0.4 |
| Electrical Downtilt continuously adjustable | ° | 2.0 – 12.0 | | | |
| Tilt Accuracy | ° | < 0.7 | < 0.7 | < 0.7 | < 0.7 |
| First Upper Side Lobe Suppression | dB | > 14 | > 14 | > 15 | > 14 |
| Cross Polar Isolation | dB | > 30 | | | |
| Port to Port Isolation | dB | > 27 (R1 // R2)<br>> 30 (R1 // Y1, Y2) | | | |
| Max. Effective Power per Port | W | 400 (at 50 °C ambient temperature) | | | |
| Max. Effective Power Port 1–2 | W | 800 (at 50 °C ambient temperature) | | | |

Values based on NGMN-P-BASTA (version 9.6) requirements.

936.5306/b.1 ngmn 04.24.02.03 Subject to alteration.



Kathrein USA Greenway Plaza II, 2400 Lakeside Blvd., Suite 650, Richardson TX 75082
Phone: 214.238.8800 Fax: 214.238.8801 Email: info@kathrein.com

KATHREIN

| Electrical specifications, all systems | | |
|---|---|---|
| Impedance | Ω | 50 |
| VSWR | | < 1.5 |
| Return Loss | dB | > 14 |
| Interband Isolation | dB | > 27 |
| Passive Intermodulation | dBc | < –153 (2 x 43 dBm carrier) |
| Polarization | ° | +45, –45 |
| Max. Effective Power for the Antenna | W | 1200 (at 50 °C ambient temperature) |

Values based on NGMN-P-BASTA (version 9.6) requirements.

| Mechanical specifications | | |
|---|---|---|
| Input | | 8 x 4.3-10 female |
| Connector Position | | bottom |
| Adjustment Mechanism | | FlexRET, continuously adjustable |
| Wind load (at Rated Wind Speed: 150 km/h) (93 mph) | N \| lbf | Frontal: 1130 \| 254<br>Maximal: 1140 \| 256 |
| Max. Wind Velocity | km/h<br>mph | 241<br>150 |
| Height / Width / Depth | mm<br>inches | 1999 / 508 / 175<br>78.7 / 20.0 / 6.9 |
| Category of Mounting Hardware | | XH (X-Heavy) |
| Weight | kg<br>lb | 44.3 / 49.3 (clamps incl.)<br>97.6 / 108.6 (clamps incl.) |
| Packing Size | mm<br>inches | 2200 / 542 / 268<br>86.6 / 21.3 / 10.6 |
| **Scope of Supply** | | Panel, FlexRET and clamps for 55–115 mm \| 2.2–4.5 inches diameter |

## **Accessories** (order separately if required)

| Type No. | Description | Remarks mm \| inches | Weight approx. kg \| lb | Units per antenna |
|---|---|---|---|---|
| 85010097 | 2 clamps | Mast diameter: 110 – 220 \| 4.3 – 8.7 | 9.4 \| 20.7 | 1 |
| 85010099 | 1 downtilt kit | Downtilt angle: 0° – 13° | 10.6 \| 23.4 | 1 |
| 86010154 | Site Sharing Adapter | 3-way (see figure below) | 0.7 \| 1.5 | |
| 86010155 | Site Sharing Adapter | 6-way (see figure below) | 1.4 \| 3.1 | |
| 86010162 | Gender Adapter | Solely to be used in combination with the FlexRET module 86010153V01 | 0.045 \| 0.099 | 1 |
| 86010163 | Port Extender | | 0.16 \| 0.35 | 1 |

## **Accessories** (included in the scope of supply)

| | | | | |
|---|---|---|---|---|
| 85010096 | 2 clamps | Mast diameter: 55 – 115 \| 2.2 – 4.5 | 5.0 \| 11.0 | 1 |
| 86010153V01 | FlexRET | | | 1 |

For downtilt mounting use the clamps for an appropriate mast diameter together with the downtilt kit.
Wall mounting: No additional mounting kit needed.

**Material:** **Reflector screen:** Aluminum.
**Fiberglass housing:** It covers totally the internal antenna components. The special design reduces the sealing areas to a minimum and guarantees the best weather protection. Fiberglass material guarantees optimum performance with regards to stability, stiffness, UV resistance and painting. The color of the radome is light grey.
**All nuts and bolts:** Stainless steel or hot-dip galvanized steel.

**Grounding:** The metal parts of the antenna including the mounting kit and the inner conductors are DC grounded.

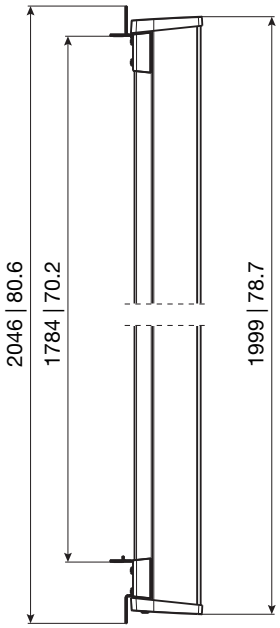


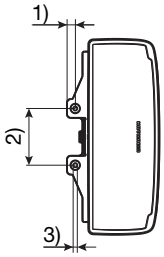


1) 22 | 0.9
2) 150 | 5.9
3) ∅ 11 | 0.4

All dimensions in mm | inches

**Configuration example with Site Sharing Adapter 86010154**

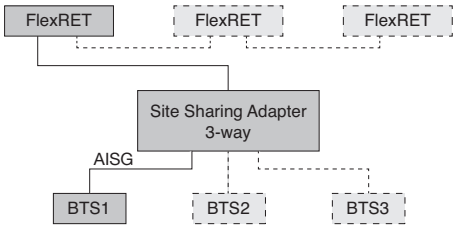


**Configuration example with Site Sharing Adapter 86010155**

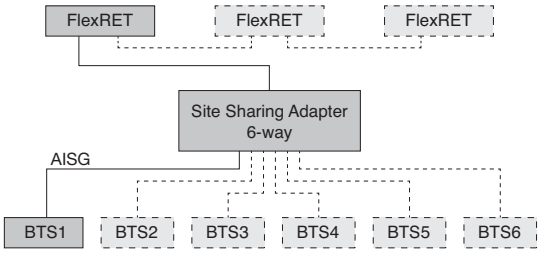


For more information please refer to the respective data sheets.



936.5306/b.1 ngmn 04.24.02.03 Subject to alteration.

# HexPort Multi-Band Antenna

## Model HPA-65R-BUU-H6

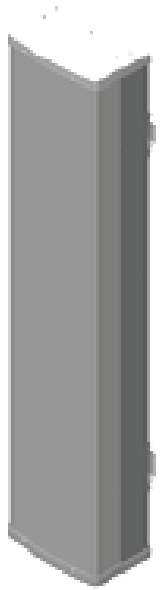

**Hexport Multi-Band Antenna Array**

The CCI Hexport Multi-Band Antenna Array is an industry first 6-port antenna with full WCS Band Coverage. With four high band ports and two low band ports, our hexport antenna is ready for 4X4 high band MIMO.

Modern networks demand high performance, consequently CCI has incorporated several new and innovative design techniques to provide an antenna with excellent side-lobe performance, sharp elevation beams, and high front to back ratio.

Multiple networks can now be connected to a single antenna, reducing tower loading and leasing expense, while decreasing deployment time and installation cost.

Full band capability for 700 MHz , Cellular 850 MHz, PCS 1900 MHz, AWS 1710/2170 MHz and WCS 2300 MHz coverage in a single enclosure.

## Benefits

- **Includes WCS Band**
- **Reduces tower loading**
- **Frees up space for tower mounted E-nodes**
- **Single radome with six ports**
- **All Band design simplifies radio assignments**
- **Sharp elevation beam eases network planning**

## Features

- High Band Ports include WCS Band
- Four High Band ports with two Low Band ports in one antenna
- Sharp elevation beam
- Excellent elevation side-lobe performance
- Excellent MIMO performance due to array spacing
- Excellent PIM Performance
- A multi-network solution in one radome

## Applications

- 4x4 MIMO on High Band and 2x2 MIMO on Low Band
- Adding additional capacity without adding additional antennas
- Adding WCS Band without increasing antenna count

ISO 9001:2008
Quality Management Systems
Système de Qualité
www.ca.sgs.com

# HexPort Multi-Band Antenna

## Model HPA-65R-BUU-H6

### HPA-65R Multi-Band Antenna

### Electrical Specifications

| Frequency Range | 2 X Low Band Ports which cover the full range from 698-894 MHz | | 4 X High Band Ports which cover the full range from 1710-2360 MHz | | | |
|---|---|---|---|---|---|---|
| | 698-806 MHz | 824-894 MHz | 1850-1990 MHz | 1710-1755/2110-2170 MHz | | 2305-2360 MHz |
| Gain | 14.1 dBi | 14.8 dBi | 16.9 dBi | 16.3 dBi | 17.2 dBi | 17.4 dBi |
| Azimuth Beamwidth (-3dB) | 66° | 65° | 61° | 66° | 62° | 57° |
| Elevation Beamwidth (-3dB) | 12.5° | 10.5° | 5.7° | 6.3° | 5.1° | 4.5° |
| Electrical Downtilt | 0° to 10° | 0° to 10° | 0° to 8° | 0° to 8° | 0° to 8° | 0° to 8° |
| Elevation Sidelobes (1st Upper) | < -17 dB | < -19 dB | < -19 dB | < -18 dB | < -18 dB | < -17 dB |
| Front-to-Back Ratio @180° | > 30 dB | > 30 dB | > 30 dB | > 30 dB | > 30 dB | > 30 dB |
| Front-to-Back Ratio over ± 20° | > 30 dB | > 30 dB | > 30 dB | > 30 dB | > 30 dB | > 30 dB |
| Cross-Polar Discrimination (at Peak) | > 25 dB | > 20 dB | > 25 dB | > 25 dB | > 25 dB | > 25 dB |
| Cross-Polar Discrimination (at ± 60°) | > 17 dB | > 14 dB | > 17 dB | > 17 dB | > 17 dB | > 17 dB |
| Cross-Polar Port-to-Port Isolation | > 25 dB | > 25 dB | > 26 dB | > 25 dB | > 26 dB | > 26 dB |
| VSWR | < 1.5:1 | < 1.5:1 | < 1.5:1 | < 1.5:1 | < 1.5:1 | < 1.5:1 |
| Passive Intermodulation (2x20W) | ≤ -150dBc | ≤ -150dBc | ≤ -150dBc | ≤ -150dBc | ≤ -150dBc | ≤ -150dBc |
| Input Power | 500 Watts CW | 500 Watts CW | 300 Watts CW | 300 Watts CW | 300 Watts CW | 300 Watts CW |
| Polarization | Dual Pol 45° | Dual Pol 45° | Dual Pol 45° | Dual Pol 45° | Dual Pol 45° | Dual Pol 45° |
| Input Impedance | 50 Ohms | 50 Ohms | 50 Ohms | 50 Ohms | 50 Ohms | 50 Ohms |
| Lightning Protection | DC Ground | DC Ground | DC Ground | DC Ground | DC Ground | DC Ground |

### Mechanical Specifications

| | |
|---|---|
| Dimensions (LxWxD) | 72.0 x 14.8 x 9.0 inches (1828 x 376 x 229 mm) |
| Survival Wind Speed | > 150 mph |
| Front Wind Load | 247 lbs (1099 N) @ 100 mph (161 kph) |
| Side Wind Load | 165 lbs (735 N) @ 100 mph (161 kph) |
| Equivalent Flat Plate Area | 9.7 $ft^2$ (0.90 $m^2$) |
| Weight (without Mounting) | 51 lbs (23 kg) |
| RET System Weight | 5.0 lbs (2.3 kg) |
| Connector | 6; 7-16 DIN female long neck |
| Mounting Pole | 2-5 inches (5-12 cm) |

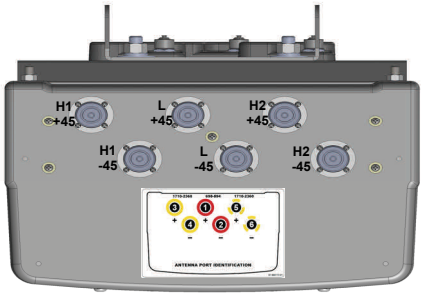


Bottom View

Rear View

### Antenna Patterns*

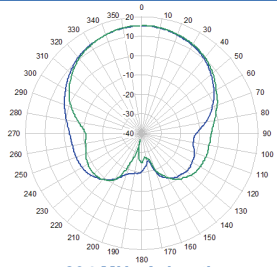


894 MHz Azimuth

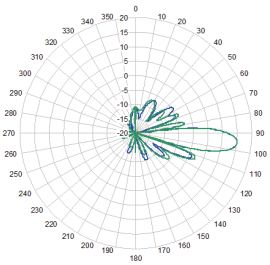

Elevation 5°

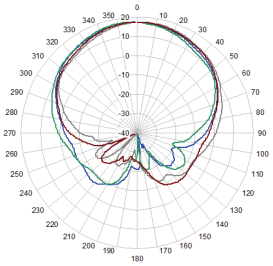


1920 MHz Azimuth

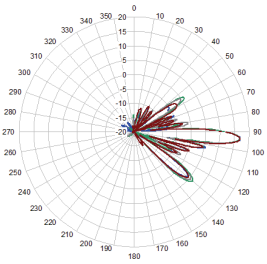

Elevation 4°

*Typical antenna patterns. For detail information on antenna pattern, please contact us at info@cciproducts.com. All specifications are subject to change without notice.

# RRUS 4478 B14 DATA SHEET

For Turf Vendors

2017-04-06 Rev A

# RRUS 4478 B14

- B14
  - TX = 758 – 768 MHz
  - RX = 788 – 798 MHz
- CPRI 2 ports x 2.5/4.9/9.8/10.1 Gbps. Install 1 SFP and connect 1 fiber pair to the RRUS 4478 during initial install.
- Only use Ericsson supplied and approved SFPs RDH10265/25
- 2 external alarm inputs
- Max wind load @ 50m/sec = 260N
- Breaker size = 25A, DC Power Consumption = 670 W (for dimensioning)
- 200mm horizontal separation required for side by side mounting
- 200mm separation required from antenna backplane to radio
- 400mm vertical outdoor/indoor separation required between 2 radios
- 500mm vertical separation below antenna
- Min, Max DC cable size from squid to radio = 10,8 AWG
  - Adapter is required for 2-wire connection
  - Shielded DC cable is required
- Ground cable size = 2AWG
- Dimensions (incl. handles, feet and sunshield, w/o fan unit)
  - Height: 16.5” (420 mm)
  - Width: 13.4” (340 mm)
  - Depth: 7.7” (196 mm)
- Weight, excl. mounting hardware = 59.9 lbs (27.2 kg)