# WIRELESS COMMUNICATIONS FACILITY
# CT2102 - LTE 4C/5C/6C/7C FIRSTNET (RETROFIT)
# GREENWICH PERRYRIDGE RD TWR
# 5 PERRYRIDGE ROAD
# GREENWICH, CT 06830

## GENERAL NOTES

1. ALL WORK SHALL BE IN ACCORDANCE WITH THE 2012 INTERNATIONAL BUILDING CODE AS MODIFIED BY THE 2016 CONNECTICUT STATE BUILDING CODE, INCLUDING THE TIA-222 REVISION "G" STRUCTURAL STANDARDS FOR STEEL ANTENNA TOWERS AND SUPPORTING STRUCTURES, 2016 CONNECTICUT FIRE SAFETY CODE AND, NATIONAL ELECTRICAL CODE AND LOCAL CODES.
2. THE COMPOUND, TOWER, PRIMARY GROUND RING, ELECTRICAL SERVICE TO THE METER BANK AND TELEPHONE SERVICE TO THE DEMARCATION POINT ARE PROVIDED BY SITE OWNER. AS BUILT FIELD CONDITIONS REGARDING THESE ITEMS SHALL BE CONFIRMED BY THE CONTRACTOR. SHOULD ANY FIELD CONDITIONS PRECLUDE COMPLIANCE WITH THE DRAWINGS, THE CONTRACTOR SHALL IMMEDIATELY NOTIFY THE ENGINEER AND SHALL NOT PROCEED WITH ANY AFFECTED WORK.
3. CONTRACTOR SHALL REVIEW ALL DRAWINGS AND SPECIFICATIONS IN THE CONTRACT DOCUMENT SET. CONTRACTOR SHALL COORDINATE ALL WORK SHOWN IN THE SET OF DRAWINGS. THE CONTRACTOR SHALL PROVIDE A COMPLETE SET OF DRAWINGS TO ALL SUBCONTRACTORS AND ALL RELATED PARTIES. THE SUBCONTRACTORS SHALL EXAMINE ALL THE DRAWINGS AND SPECIFICATIONS FOR THE INFORMATION THAT AFFECTS THEIR WORK.
4. CONTRACTOR SHALL PROVIDE A COMPLETE BUILD-OUT WITH ALL FINISHES, STRUCTURAL, MECHANICAL, AND ELECTRICAL COMPONENTS AND PROVIDE ALL ITEMS AS SHOWN OR INDICATED ON THE DRAWINGS OR IN THE WRITTEN SPECIFICATIONS.
5. CONTRACTOR SHALL FURNISH ALL MATERIAL, LABOR AND EQUIPMENT TO COMPLETE THE WORK AND FURNISH A COMPLETED JOB ALL IN ACCORDANCE WITH LOCAL AND STATE GOVERNING AUTHORITIES AND OTHER AUTHORITIES HAVING LAWFUL JURISDICTION OVER THE WORK.
6. CONTRACTOR SHALL SECURE AND PAY FOR ALL PERMITS AND ALL INSPECTIONS REQUIRED AND SHALL ALSO PAY FEES REQUIRED FOR THE GENERAL CONSTRUCTION, PLUMBING, ELECTRICAL AND HVAC. PERMITS SHALL BE PAID FOR BY THE RESPECTIVE SUBCONTRACTORS.
7. CONTRACTOR SHALL MAINTAIN A CURRENT SET OF DRAWINGS AND SPECIFICATIONS ON SITE AT ALL TIMES AND INSURE DISTRIBUTION OF NEW DRAWINGS TO SUBCONTRACTORS AND OTHER RELEVANT PARTIES AS SOON AS THEY ARE MADE AVAILABLE. ALL OLD DRAWINGS SHALL BE MARKED VOID AND REMOVED FROM THE CONTRACT AREA. THE CONTRACTOR SHALL FURNISH AN 'AS-BUILT' SET OF DRAWINGS TO OWNER UPON COMPLETION OF PROJECT.
8. LOCATION OF EQUIPMENT, AND WORK SUPPLIED BY OTHERS THAT IS DIAGRAMMATICALLY INDICATED ON THE DRAWINGS SHALL BE DETERMINED BY THE CONTRACTOR. THE CONTRACTOR SHALL DETERMINE LOCATIONS AND DIMENSIONS SUBJECT TO STRUCTURAL CONDITIONS AND WORK OF THE SUBCONTRACTORS.
9. THE CONTRACTOR IS SOLELY RESPONSIBLE TO DETERMINE CONSTRUCTION PROCEDURE AND SEQUENCE, AND TO ENSURE THE SAFETY OF THE EXISTING STRUCTURES AND ITS COMPONENT PARTS DURING CONSTRUCTION. THIS INCLUDES THE ADDITION OF WHATEVER SHORING, BRACING, UNDERPINNING, ETC. THAT MAY BE NECESSARY. MAINTAIN EXISTING BUILDING'S/PROPERTY'S OPERATIONS, COORDINATE WORK WITH BUILDING/PROPERTY OWNER.
10. DRAWINGS INDICATE THE MINIMUM STANDARDS, BUT IF ANY WORK SHOULD BE INDICATED TO BE SUBSTANDARD TO ANY ORDINANCES, LAWS, CODES, RULES, OR REGULATIONS BEARING ON THE WORK, THE CONTRACTOR SHALL INCLUDE IN HIS WORK AND SHALL EXECUTE THE WORK CORRECTLY IN ACCORDANCE WITH SUCH ORDINANCES, LAWS, CODES, RULES OR REGULATIONS WITH NO INCREASE IN COSTS.
11. ALL UTILITY WORK SHALL BE IN ACCORDANCE WITH LOCAL UTILITY COMPANY REQUIREMENTS AND SPECIFICATIONS.
12. ALL EQUIPMENT AND PRODUCTS PURCHASED ARE TO BE REVIEWED BY CONTRACTOR AND ALL APPLICABLE SUBCONTRACTORS FOR ANY CONDITION PER MFR.'S RECOMMENDATIONS. CONTRACTOR TO SUPPLY THESE ITEMS AT NO COST TO OWNER OR CONSTRUCTION MANAGER.
13. ANY AND ALL ERRORS, DISCREPANCIES, AND 'MISSED" ITEMS ARE TO BE BROUGHT TO THE ATTENTION OF THE AT&T CONSTRUCTION MANAGER DURING THE BIDDING PROCESS BY THE CONTRACTOR. ALL THESE ITEMS ARE TO BE INCLUDED IN THE BID. NO 'EXTRA' WILL BE ALLOWED FOR MISSED ITEMS.
14. CONTRACTOR SHALL BE RESPONSIBLE FOR ALL ON-SITE SAFETY FROM THE TIME THE JOB IS AWARDED UNTIL ALL WORK IS COMPLETE AND ACCEPTED BY THE OWNER.
15. CONTRACTOR TO REVIEW ALL SHOP DRAWINGS AND SUBMIT COPY TO ENGINEER FOR APPROVAL. DRAWINGS MUST BEAR THE CHECKER'S INITIALS BEFORE SUBMITTING TO THE CONSTRUCTION MANAGER FOR REVIEW.
16. THE CONTRACTOR SHALL FIELD VERIFY ALL DIMENSIONS, ELEVATIONS, ANGLES, AND EXISTING CONDITIONS AT THE SITE, PRIOR TO FABRICATION AND/OR INSTALLATION OF ANY WORK IN THE CONTRACT AREA.
17. COORDINATION, LAYOUT, FURNISHING AND INSTALLATION OF CONDUIT AND ALL APPURTENANCES REQUIRED FOR PROPER INSTALLATION OF ELECTRICAL AND TELECOMMUNICATION SERVICE SHALL BE THE SOLE RESPONSIBILITY OF THE CONTRACTOR.
18. ALL EQUIPMENT AND PRODUCTS PURCHASED ARE TO BE REVIEWED BY CONTRACTOR AND ALL APPLICABLE SUB-CONTRACTORS FOR ANY CONDITION PER THE MANUFACTURER'S RECOMMENDATIONS. CONTRACTOR TO SUPPLY THESE ITEMS AT NO COST TO OWNER OR CONSTRUCTION MANAGER.
19. ALL DAMAGE CAUSED TO ANY EXISTING STRUCTURE SHALL BE THE SOLE RESPONSIBILITY OF THE CONTRACTOR. THE CONTRACTOR WILL BE HELD LIABLE FOR ALL REPAIRS REQUIRED FOR EXISTING STRUCTURES IF DAMAGED DURING CONSTRUCTION ACTIVITIES.
20. THE CONTRACTOR SHALL CONTACT "CALL BEFORE YOU DIG" AT LEAST 48 HOURS PRIOR TO ANY EXCAVATIONS AT 1-800-922-4455. ALL UTILITIES SHALL BE IDENTIFIED AND CLEARLY MARKED PRIOR TO ANY EXCAVATION WORK. CONTRACTOR SHALL MAINTAIN AND PROTECT MARKED UTILITIES THROUGHOUT PROJECT COMPLETION.
21. CONTRACTOR SHALL COMPLY WITH OWNERS ENVIRONMENTAL ENGINEER ON ALL METHODS AND PROVISIONS FOR ALL EXCAVATION ACTIVITIES INCLUDING SOIL DISPOSAL. ALL BACKFILL MATERIALS TO BE PROVIDED BY THE CONTRACTOR.

## SITE DIRECTIONS

FROM: 500 ENTERPRISE DRIVE
ROCKY HILL, CONNECTICUT

TO: 5 PERRYRIDGE ROAD DUP
GREENWICH, CONNECTICUT

| | | |
|---|---|---|
| 1. | HEAD NORTHEAST ON ENTERPRISE DR TOWARD CAPITAL BLVD. | 0.36 MI |
| 2. | TURN LEFT ONTO CAPITAL BLVD. | 0.27 MI |
| 3. | TURN LEFT ONTO WEST ST. | 0.30 MI |
| 4. | TURN LEFT TO MERGE ONTO I-91 S TOWARD NEW HAVEN. | 29.02 MI |
| 5. | KEEP RIGHT TOWARD NY CITY. | 0.08 MI |
| 6. | MERGE ONTO I-95 S TOWARD NY CITY/N Y CITY. | 45.17 MI |
| 7. | TAKE THE ARCH ST EXIT, EXIT 3. | 0.15 MI |
| 8. | TURN RIGHT ONTO ARCH ST. | 0.14 MI |
| 9. | STAY STRAIGHT TO GO ONTO SOUND VIEW DR. | 0.21 MI |
| 10. | TURN RIGHT ONTO FIELD POINT RD. | 0.23 MI |
| 11. | TAKE THE 3RD LEFT TO STAY ON FIELD POINT RD. | 0.12 MI |
| 12. | FIELD POINT RD BECOMES DEARFIELD DR. | 0.34 MI |
| 13. | ENTER NEXT ROUNDABOUT AND TAKE THE 1ST EXIT ONTO LAKE AVE. | 0.20 MI |
| 14. | ENTER NEXT ROUNDABOUT AND TAKE THE 3RD EXIT ONTO PERRYRIDGE RD. | 0.10 MI |
| 15. | 5 PERRYRIDGE RD, GREENWICH, CT 06830-4608, 5 PERRYRIDGE RD IS ON THE LEFT. | |

## VICINITY MAP

SCALE: 1" = 1000'

NORTH

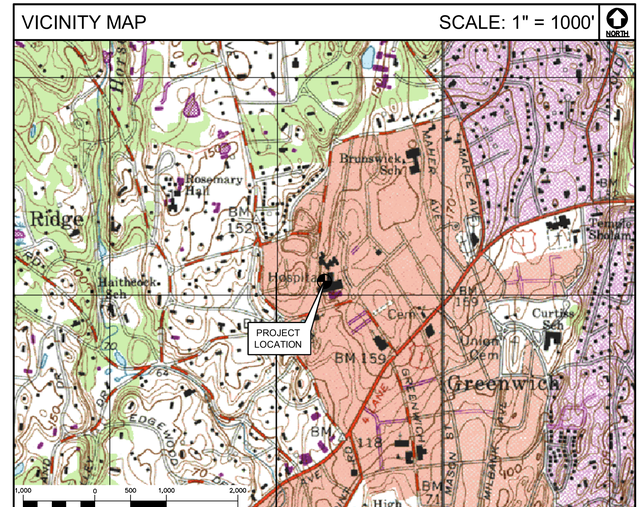


## PROJECT SUMMARY

1. THE PROPOSED SCOPE OF WORK CONSISTS OF A MODIFICATION TO THE EXISTING UNMANNED TELECOMMUNICATIONS FACILITY INCLUDING THE FOLLOWING:

A. AT EACH ANTENNA SECTOR:
- INSTALL (1) KATHREIN (800-10965) ANTENNA (TOTAL OF 3)
- INSTALL (1) B14 4478 (TOTAL OF 3)
- INSTALL (1) RRUS-32 B66 (TOTAL OF 3)
- REPLACE EXISTING POS.4 ANTENNA WITH (1) CCI (HPA-654-BUU-H6) ANTENNA (TOTAL OF 3)
- INSTALL (1) DC SQUID. (2) DC TRUNK LINES

B. AT THE EQUIPMENT SHELTER
- IN LTE RACK, INSTALL 2nd XMU
- REPLACE EXISTING (2) DUS WITH (2) 5216
- REPLACE EXISTING IDL2 WITH IDLe
- INSTALL (3) RRUS-E2 (1 PER SECTOR)
- INSTALL (3) RRUS-12 (1 PER SECTOR)
- INSTALL (12) SURGE ARRESTORS (2 PER RRU)
- INSTALL RRU RACK TO HOLD PROPOSED RRU EQUIPMENT
- DECOMMISSION AND REMOVE (2) GSM CABINETS

## PROJECT INFORMATION

| | |
|---|---|
| AT&T SITE NUMBER: | CT2102 |
| AT&T SITE NAME: | GREENWICH PERRYRIDGE RD TWR |
| SITE ADDRESS: | 5 PERRYRIDGE ROAD<br>GREENWICH, CT 06830 |
| LESSEE/APPLICANT: | AT&T MOBILITY<br>500 ENTERPRISE DRIVE, SUITE 3A<br>ROCKY HILL, CT 06067 |
| AT&T PACE ID NUMBER: | PACE JOB 1 - MRCTB022780<br>PACE JOB 2 - MRCTB024044 |
| AT&T FA LOCATION CODE: | 10128691 |
| ENGINEER: | CENTEK ENGINEERING, INC.<br>63-2 NORTH BRANFORD RD.<br>BRANFORD, CT 06405 |
| PROJECT COORDINATES: | LATITUDE: 41°-02'-03.13" N<br>LONGITUDE: 73°-37'-51.02" W<br>GROUND ELEVATION: ±340' AMSL<br>SITE COORDINATES AND GROUND ELEVATION REFERENCED FROM GOOGLE EARTH. |

## SHEET INDEX


| SHT. NO. | DESCRIPTION | REV. |
|---|---|---|
| T-1 | TITLE SHEET | 0 |
| N-1 | NOTES, SPECIFICATIONS AND ANTENNA SCHEDULE | 0 |
| | | |
| C-1 | PLANS AND ELEVATION | 0 |
| C-2 | ANTENNA CONFIGURATION DETAILS | 0 |
| C-3 | DETAILS | 0 |
| C-4 | DETAILS | 0 |
| | | |
| E-1 | SCHEMATIC DIAGRAM AND NOTES | 0 |
| E-2 | WIRING DIAGRAM | 0 |
| E-3 | TYPICAL ELECTRICAL DETAILS | 0 |


| REV. | DATE | DRAWN BY | CHK'D BY | DESCRIPTION |
|---|---|---|---|---|
| 0 | 03/18/18 | TJR | DMD | CONSTRUCTION DRAWINGS - ISSUED FOR CONSTRUCTION |

PROFESSIONAL ENGINEER SEAL

STATE OF CONNECTICUT · CARLOS A. CRUZ-VIERA · 27517 · LICENSED PROFESSIONAL ENGINEER

EMPIRE telecom


CENTEK engineering
Centered on Solutions™
(203) 488-0580
(203) 488-8587 Fax
63-2 North Branford Road
Branford, CT 06405
www.CentekEng.com


AT&T MOBILITY

WIRELESS COMMUNICATIONS FACILITY

GREENWICH PERRYRIDGE RD TWR

CT2102 - LTE 4C/5C/6C/7C FIRSTNET (RETROFIT)

5 PERRYRIDGE ROAD
GREENWICH, CT 06830

DATE: 01/20/18
SCALE: AS NOTED
JOB NO. 17004.68

TITLE SHEET

T-1

Sheet No. 1 of 9

# NOTES AND SPECIFICATIONS

## DESIGN BASIS:

GOVERNING CODE: 2012 INTERNATIONAL BUILDING (IBC) AS MODIFIED BY THE 2016 CT STATE BUILDING CODE AND AMENDMENTS.

1. DESIGN CRITERIA:

- RISK CATEGORY: II (BASED ON IBC APPENDIX N)
- ULTIMATE DESIGN SPEED (BUILDING): 120 MPH (Vasd) (EXPOSURE C/IMPORTANCE FACTOR 1.0 BASED ON ASCE 7–10) PER 2012 INTERNATIONAL BUILDING CODE (IBC) AS MODIFIED BY THE 2016 CONNECTICUT STATE BUILDING CODE.
- SEISMIC LOAD (DOES NOT CONTROL): PER ASCE 7–10 MINIMUM DESIGN LOADS FOR BUILDING AND OTHER STRUCTURES.

## GENERAL NOTES:

1. ALL CONSTRUCTION SHALL BE IN COMPLIANCE WITH THE GOVERNING BUILDING CODE.
2. DRAWINGS INDICATE THE MINIMUM STANDARDS, BUT IF ANY WORK SHOULD BE INDICATED TO BE SUBSTANDARD TO ANY ORDINANCES, LAWS, CODES, RULES, OR REGULATIONS BEARING ON THE WORK, THE CONTRACTOR SHALL INCLUDE IN HIS WORK AND SHALL EXECUTE THE WORK CORRECTLY IN ACCORDANCE WITH SUCH ORDINANCES, LAWS, CODES, RULES OR REGULATIONS WITH NO INCREASE IN COSTS.
3. BEFORE BEGINNING THE WORK, THE CONTRACTOR IS RESPONSIBLE FOR MAKING SUCH INVESTIGATIONS CONCERNING PHYSICAL CONDITIONS (SURFACE AND SUBSURFACE) AT OR CONTIGUOUS TO THE SITE WHICH MAY AFFECT PERFORMANCE AND COST OF THE WORK.
4. DIMENSIONS AND DETAILS SHALL BE CHECKED AGAINST EXISTING FIELD CONDITIONS.
5. THE CONTRACTOR SHALL VERIFY AND COORDINATE THE SIZE AND LOCATION OF ALL OPENINGS, SLEEVES AND ANCHOR BOLTS AS REQUIRED BY ALL TRADES.
6. ALL DIMENSIONS, ELEVATIONS, AND OTHER REFERENCES TO EXISTING STRUCTURES, SURFACE, AND SUBSURFACE CONDITIONS ARE APPROXIMATE. NO GUARANTEE IS MADE FOR THE ACCURACY OR COMPLETENESS OF THE INFORMATION SHOWN. THE CONTRACTOR SHALL VERIFY AND COORDINATE ALL DIMENSIONS, ELEVATIONS, ANGLES WITH EXISTING CONDITIONS AND WITH ARCHITECTURAL AND SITE DRAWINGS BEFORE PROCEEDING WITH ANY WORK.
7. AS THE WORK PROGRESSES, THE CONTRACTOR SHALL NOTIFY THE OWNER OF ANY CONDITIONS WHICH ARE IN CONFLICT OR OTHERWISE NOT CONSISTENT WITH THE CONSTRUCTION DOCUMENTS AND SHALL NOT PROCEED WITH SUCH WORK UNTIL THE CONFLICT IS SATISFACTORILY RESOLVED.
8. THE CONTRACTOR SHALL COMPLY WITH ALL APPLICABLE SAFETY CODES AND REGULATIONS DURING ALL PHASES OF CONSTRUCTION. THE CONTRACTOR IS SOLELY RESPONSIBLE FOR PROVIDING AND MAINTAINING ADEQUATE SHORING, BRACING, AND BARRICADES AS MAY BE REQUIRED FOR THE PROTECTION OF EXISTING PROPERTY, CONSTRUCTION WORKERS, AND FOR PUBLIC SAFETY.
9. THE CONTRACTOR IS SOLELY RESPONSIBLE TO DETERMINE CONSTRUCTION PROCEDURE AND SEQUENCE, AND TO ENSURE THE SAFETY OF THE EXISTING STRUCTURES AND ITS COMPONENT PARTS DURING CONSTRUCTION. THIS INCLUDES THE ADDITION OF WHATEVER SHORING, BRACING, UNDERPINNING, ETC. THAT MAY BE NECESSARY. MAINTAIN EXISTING SITE OPERATIONS, COORDINATE WORK WITH NORTHEAST UTILITIES
10. THE STRUCTURE IS DESIGNED TO BE SELF–SUPPORTING AND STABLE AFTER FOUNDATION REMEDIATION WORK IS COMPLETE. IT IS THE CONTRACTOR'S SOLE RESPONSIBILITY TO DETERMINE ERECTION PROCEDURE AND SEQUENCE AND TO ENSURE THE SAFETY OF THE STRUCTURE AND ITS COMPONENT PARTS DURING ERECTION. THIS INCLUDES THE ADDITION OF WHATEVER SHORING, TEMPORARY BRACING, GUYS OR TIEDOWNS, WHICH MIGHT BE NECESSARY.
11. ALL DAMAGE CAUSED TO ANY EXISTING STRUCTURE SHALL BE THE SOLE RESPONSIBILITY OF THE CONTRACTOR. THE CONTRACTOR WILL BE HELD LIABLE FOR ALL REPAIRS REQUIRED FOR EXISTING STRUCTURES IF DAMAGED DURING CONSTRUCTION ACTIVITIES.
12. SHOP DRAWINGS, CONCRETE MIX DESIGNS, TEST REPORTS, AND OTHER SUBMITTALS PERTAINING TO STRUCTURAL WORK SHALL BE FORWARDED TO THE OWNER FOR REVIEW BEFORE FABRICATION AND/OR INSTALLATION IS MADE. SHOP DRAWINGS SHALL INCLUDE ERECTION DRAWINGS AND COMPLETE DETAILS OF CONNECTIONS AS WELL AS MANUFACTURER'S SPECIFICATION DATA WHERE APPROPRIATE. SHOP DRAWINGS SHALL BE CHECKED BY THE CONTRACTOR AND BEAR THE CHECKER'S INITIALS BEFORE BEING SUBMITTED FOR REVIEW.
13. NO DRILLING WELDING OR TAPING ON EVERSOURCE OWNED EQUIPMENT.
14. REFER TO DRAWING T1 FOR ADDITIONAL NOTES AND REQUIREMENTS.

## STRUCTURAL STEEL

1. ALL STRUCTURAL STEEL IS DESIGNED BY ALLOWABLE STRESS DESIGN (ASD)

   A. STRUCTURAL STEEL (W SHAPES)---ASTM A992 (FY = 50 KSI)
   B. STRUCTURAL STEEL (OTHER SHAPES)---ASTM A36 (FY = 36 KSI)
   C. STRUCTURAL HSS (RECTANGULAR SHAPES)---ASTM A500 GRADE B, (FY = 46 KSI)
   D. STRUCTURAL HSS (ROUND SHAPES)---ASTM A500 GRADE B, (FY = 42 KSI)
   E. PIPE---ASTM A53 (FY = 35 KSI)
   F. CONNECTION BOLTS---ASTM A325–N
   G. U–BOLTS---ASTM A36
   H. ANCHOR RODS---ASTM F 1554
   I. WELDING ELECTRODE---ASTM E 70XX

2. CONTRACTOR TO REVIEW ALL SHOP DRAWINGS AND SUBMIT COPY TO ENGINEER FOR APPROVAL. DRAWINGS MUST BEAR THE CHECKER'S INITIALS BEFORE SUBMITTING TO THE ENGINEER FOR REVIEW. SHOP DRAWINGS SHALL INCLUDE THE FOLLOWING: SECTION PROFILES, SIZES, CONNECTION ATTACHMENTS, REINFORCING, ANCHORAGE, SIZE AND TYPE OF FASTENERS AND ACCESSORIES. INCLUDE ERECTION DRAWINGS, ELEVATIONS AND DETAILS.
3. STRUCTURAL STEEL SHALL BE DETAILED, FABRICATED AND ERECTED IN ACCORDANCE WITH THE LATEST PROVISIONS OF AISC MANUAL OF STEEL CONSTRUCTION.
4. PROVIDE ALL PLATES, CLIP ANGLES, CLOSURE PIECES, STRAP ANCHORS, MISCELLANEOUS PIECES AND HOLES REQUIRED TO COMPLETE THE STRUCTURE.
5. FIT AND SHOP ASSEMBLE FABRICATIONS IN THE LARGEST PRACTICAL SECTIONS FOR DELIVERY TO SITE.
6. INSTALL FABRICATIONS PLUMB AND LEVEL, ACCURATELY FITTED, AND FREE FROM DISTORTIONS OR DEFECTS.
7. AFTER ERECTION OF STRUCTURES, TOUCHUP ALL WELDS, ABRASIONS AND NON–GALVANIZED SURFACES WITH A 95% ORGANIC ZINC RICH PAINT IN ACCORDANCE WITH ASTM 780.
8. ALL STEEL MATERIAL (EXPOSED TO WEATHER) SHALL BE GALVANIZED AFTER FABRICATION IN ACCORDANCE WITH ASTM A123 "ZINC (HOT DIPPED GALVANIZED) COATINGS" ON IRONS AND STEEL PRODUCTS.
9. ALL BOLTS, ANCHORS AND MISCELLANEOUS HARDWARE SHALL BE GALVANIZED IN ACCORDANCE WITH ASTM A153 "ZINC COATING (HOT–DIP) ON IRON AND STEEL HARDWARE".
10. THE ENGINEER SHALL BE NOTIFIED OF ANY INCORRECTLY FABRICATED, DAMAGED OR OTHERWISE MISFITTING OR NON CONFORMING MATERIALS OR CONDITIONS TO REMEDIAL OR CORRECTIVE ACTION. ANY SUCH ACTION SHALL REQUIRE ENGINEER REVIEW.
11. CONNECTION ANGLES SHALL HAVE A MINIMUM THICKNESS OF 1/4 INCHES.
12. STRUCTURAL CONNECTION BOLTS SHALL CONFORM TO ASTM A325. ALL BOLTS SHALL BE 3/4" DIAMETER MINIMUM AND SHALL HAVE A MINIMUM OF TWO BOLTS, UNLESS OTHERWISE ON THE DRAWINGS.
13. LOCK WASHER ARE NOT PERMITTED FOR A325 STEEL ASSEMBLIES.
14. SHOP CONNECTIONS SHALL BE WELDED OR HIGH STRENGTH BOLTED.
15. MILL BEARING ENDS OF COLUMNS, STIFFENERS, AND OTHER BEARING SURFACES TO TRANSFER LOAD OVER ENTIRE CROSS SECTION.
16. FABRICATE BEAMS WITH MILL CAMBER UP.
17. LEVEL AND PLUMB INDIVIDUAL MEMBERS OF THE STRUCTURE TO AN ACCURACY OF 1:500, BUT NOT TO EXCEED 1/4" IN THE FULL HEIGHT OF THE COLUMN.
18. COMMENCEMENT OF STRUCTURAL STEEL WORK WITHOUT NOTIFYING THE ENGINEER OF ANY DISCREPANCIES WILL BE CONSIDERED ACCEPTANCE OF PRECEDING WORK.
19. INSPECTION AND TESTING OF ALL WELDING AND HIGH STRENGTH BOLTING SHALL BE PERFORMED BY AN INDEPENDENT TESTING LABORATORY.
20. FOUR COPIES OF ALL INSPECTION TEST REPORTS SHALL BE SUBMITTED TO THE ENGINEER WITHIN TEN (10) WORKING DAYS OF THE DATE OF INSPECTION.

## PAINT NOTES

**PAINTING SCHEDULE:**

1. ANTENNA PANELS:
   A. SHERWIN WILLIAMS POLANE–B
   B. COLOR TO BE MATCHED WITH EXISTING TOWER STRUCTURE.
2. COAXIAL CABLES:
   A. ONE COAT OF DTM BONDING PRIMER (2–5 MILS. DRY FINISH)
   B. TWO COATS OF DTM ACRYLIC PRIMER/FINISH (2.5–5 MILS. DRY FINISH)
   C. COLOR TO BE FIELD MATCHED WITH EXISTING STRUCTURE.

**EXAMINATION AND PREPARATION:**

1. DO NOT APPLY PAINT IN SNOW, RAIN, FOG OR MIST OR WHEN RELATIVE HUMIDITY EXCEEDS 85%. DO NOT APPLY PAINT TO DAMP OR WET SURFACES.
2. VERIFY THAT SUBSTRATE CONDITIONS ARE READY TO RECEIVE WORK. EXAMINE SURFACE SCHEDULED TO BE FINISHED PRIOR TO COMMENCEMENT OF WORK. REPORT ANY CONDITION THAT MAY POTENTIALLY AFFECT PROPER APPLICATION.
3. TEST SHOP APPLIED PRIMER FOR COMPATIBILITY WITH SUBSEQUENT COVER MATERIALS.
4. PERFORM PREPARATION AND CLEANING PROCEDURE IN STRICT ACCORDANCE WITH COATING MANUFACTURER'S INSTRUCTIONS FOR EACH SUBSTRATE CONDITION.
5. CORRECT DEFECTS AND CLEAN SURFACES WHICH AFFECT WORK OF THIS SECTION. REMOVE EXISTING COATINGS THAT EXHIBIT LOOSE SURFACE DEFECTS.
6. IMPERVIOUS SURFACE: REMOVE MILDEW BY SCRUBBING WITH SOLUTION OF TRI–SODIUM PHOSPHATE AND BLEACH. RINSE WITH CLEAN WATER AND ALLOW SURFACE TO DRY.
7. ALUMINUM SURFACE SCHEDULED FOR PAINT FINISH: REMOVE SURFACE CONTAMINATION BY STEAM OR HIGH–PRESSURE WATER. REMOVE OXIDATION WITH ACID ETCH AND SOLVENT WASHING. APPLY ETCHING PRIMER IMMEDIATELY FOLLOWING CLEANING.
8. FERROUS METALS: CLEAN UNGALVANIZED FERROUS METAL SURFACES THAT HAVE NOT BEEN SHOP COATED; REMOVE OIL, GREASE, DIRT, LOOSE MILL SCALE, AND OTHER FOREIGN SUBSTANCES. USE SOLVENT OR MECHANICAL CLEANING METHODS THAT COMPLY WITH THE STEEL STRUCTURES PAINTING COUNCIL'S (SSPC) RECOMMENDATIONS. TOUCH UP BARE AREAS AND SHOP APPLIED PRIME COATS THAT HAVE BEEN DAMAGED. WIRE BRUSH, CLEAN WITH SOLVENTS RECOMMENDED BY PAINT MANUFACTURER, AND TOUCH UP WITH THE SAME PRIMER AS THE SHOP COAT.
9. GALVANIZED SURFACES: CLEAN GALVANIZED SURFACES WITH NON–PETROLEUM–BASED SOLVENTS SO SURFACE IS FREE OF OIL AND SURFACE CONTAMINANTS. REMOVE PRETREATMENT FROM GALVANIZED SHEET METAL FABRICATED FROM COIL STOCK BY MECHANICAL METHODS.
10. ANTENNA PANELS: REMOVE ALL OIL, DUST, GREASE, DIRT, AND OTHER FOREIGN MATERIAL TO ENSURE ADEQUATE ADHESION. PANELS MUST BE WIPED WITH METHYL ETHYL KETONE (MEK).
11. COAXIAL CABLES: REMOVE ALL OIL, DUST, GREASE. DIRT, AND OTHER FOREIGN MATERIAL TO ENSURE ADEQUATE ADHESION.

**CLEANING:**

1. COLLECT WASTE MATERIAL, WHICH MAY CONSTITUTE A FIRE HAZARD, PLACE IN CLOSED METAL CONTAINERS AND REMOVE DAILY FROM SITE.

**APPLICATION:**

1. APPLY PRODUCTS IN ACCORDANCE WITH MANUFACTURER'S INSTRUCTIONS.
2. DO NOT APPLY FINISHES TO SURFACES THAT ARE NOT DRY.
3. APPLY EACH COAT TO UNIFORM FINISH.
4. APPLY EACH COAT OF PAINT SLIGHTLY DARKER THAN PRECEDING COAT UNLESS OTHERWISE APPROVED.
5. SAND METAL LIGHTLY BETWEEN COATS TO ACHIEVE REQUIRED FINISH.
6. VACUUM CLEAN SURFACES FREE OF LOOSE PARTICLES. USE TACK CLOTH JUST PRIOR TO APPLYING NEXT COAT.
7. ALLOW APPLIED COAT TO DRY BEFORE NEXT COAT IS APPLIED.

**COMPLETED WORK:**

1. SAMPLES: PREPARE 24" X 24" SAMPLE AREA FOR REVIEW.
2. MATCH APPROVED SAMPLES FOR COLOR, TEXTURE AND COVERAGE. REMOVE REFINISH OR REPAINT WORK NOT IN COMPLIANCE WITH SPECIFIED REQUIREMENTS.

## PROPOSED ANTENNA AND APPURTENANCE SCHEDULE

| ANTENNAS | | | | | | | | APPURTENANCES | | | |
|---|---|---|---|---|---|---|---|---|---|---|---|
| SECTOR | POSITION | AZIMUTH | DOWNTILT (M) | MAKE & MODEL | RAD CENTER (AGL) | TECHNOLOGY | STATUS | TMA (QTY) | DIPLEXER/TRIPLEXER (QTY) | RRU (QTY) | FEEDER TYPE |
| ALPHA | POS. 1 | 0° | 0° | POWERWAVE (7770) | 134' | UMTS 850 | REMAIN | PWAV: LGP21401 SINGLE 1900 W/ 850BP (2) | PWAV: LGP21901 (2) | | 1⅝ø COAX (2) |
| ALPHA | POS. 2 | 30° | 0° | QUINTEL (QS66512–2) | 134' | LTE PCS/WCS/850/700 DE | REMAIN | | CCI: TPX–070821 (4) | RRUS–E2(1), RRUS–12(1), RUUS–32 B2(1), RRUS–32(1) | FEEDER AND DC POWER, 1⅝ø COAX |
| ALPHA | POS. 3 | 30° | 0° | KATHREIN (800–10965) | 134' | 700 B14/AWS | NEW | | | B14 4478(1), RRUS–32 B66(1) | FEEDER AND DC POWER |
| ALPHA | POS. 4 | 30° | 0° | CCI (HPA–65R–BUU–H6) | 134' | LTE 700 BC | NEW | | | RRUS–11(1) | FEEDER AND DC POWER |
| | | | | | | | | | | | |
| BETA | POS. 1 | 100° | 0° | POWERWAVE (7770) | 134' | UMTS 850 | REMAIN | PWAV: LGP21401 SINGLE 1900 W/ 850BP (2) | PWAV: LGP21901 (2) | | 1⅝ø COAX (2) |
| BETA | POS. 2 | 150° | 0° | QUINTEL (QS66512–2) | 134' | LTE PCS/WCS/850/700 DE | REMAIN | | CCI: TPX–070821 (4) | RRUS–E2(1), RRUS–12(1), RUUS–32 B2(1), RRUS–32(1) | FEEDER AND DC POWER, 1⅝ø COAX |
| BETA | POS. 3 | 150° | 0° | KATHREIN (800–10965) | 134' | 700 B14/AWS | NEW | | | B14 4478(1), RRUS–32 B66(1) | FEEDER AND DC POWER |
| BETA | POS. 4 | 150° | 0° | CCI (HPA–65R–BUU–H6) | 134' | LTE 700 BC | NEW | | | RRUS–11(1) | FEEDER AND DC POWER |
| | | | | | | | | | | | |
| GAMMA | POS. 1 | 250° | 0° | POWERWAVE (7770) | 134' | UMTS 850 | REMAIN | PWAV: LGP21401 SINGLE 1900 W/ 850BP (2) | PWAV: LGP21901 (2) | | 1⅝ø COAX (2) |
| GAMMA | POS. 2 | 270° | 0° | QUINTEL (QS66512–2) | 134' | LTE PCS/WCS/850/700 DE | REMAIN | | CCI: TPX–070821 (4) | RRUS–E2(1), RRUS–12(1), RUUS–32 B2(1), RRUS–32(1) | FEEDER AND DC POWER, 1⅝ø COAX |
| GAMMA | POS. 3 | 270° | 0° | KATHREIN (800–10965) | 134' | 700 B14/AWS | NEW | | | B14 4478(1), RRUS–32 B66(1) | FEEDER AND DC POWER |
| GAMMA | POS. 4 | 270° | 0° | CCI (HPA–65R–BUU–H6) | 134' | LTE 700 BC | NEW | | | RRUS–11(1) | FEEDER AND DC POWER |

| REV. | DATE | DRAWN BY | CHK'D BY | DESCRIPTION |
|---|---|---|---|---|
| 0 | 03/18/18 | TJR | DMD | CONSTRUCTION DRAWINGS – ISSUED FOR CONSTRUCTION |

PROFESSIONAL ENGINEER SEAL

STATE OF CONNECTICUT LICENSED PROFESSIONAL ENGINEER 27517

at&t

EMPIRE telecom

CENTEK engineering
Centered on Solutions™
(203) 488-0580
(203) 488-8587 Fax
63-2 North Branford Road
Branford, CT 06405
www.CentekEng.com

AT&T MOBILITY

WIRELESS COMMUNICATIONS FACILITY

GREENWICH PERRYRIDGE RD TWR

CT2102 - LTE 4C/5C/6C/7C FIRSTNET (RETROFIT)

5 PERRYRIDGE ROAD
GREENWICH, CT 06830

DATE: 01/20/18
SCALE: AS NOTED
JOB NO. 17004.68

NOTES, SPECIFICATIONS AND ANTENNA SCHEDULE

N-1

Sheet No. 2 of 9

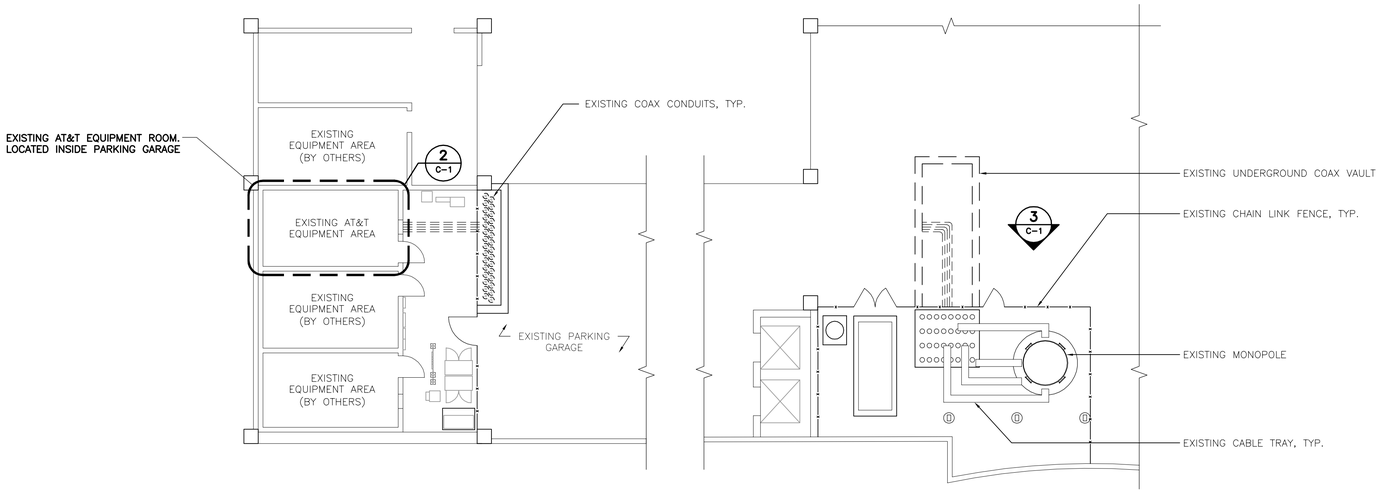


1 C-1 **PARTIAL SITE PLAN**
SCALE: 1" = 10'- 0"

NORTH

GRAPHIC SCALE
10 0 5 10 20 40
( IN FEET )
1 inch = 10 ft.

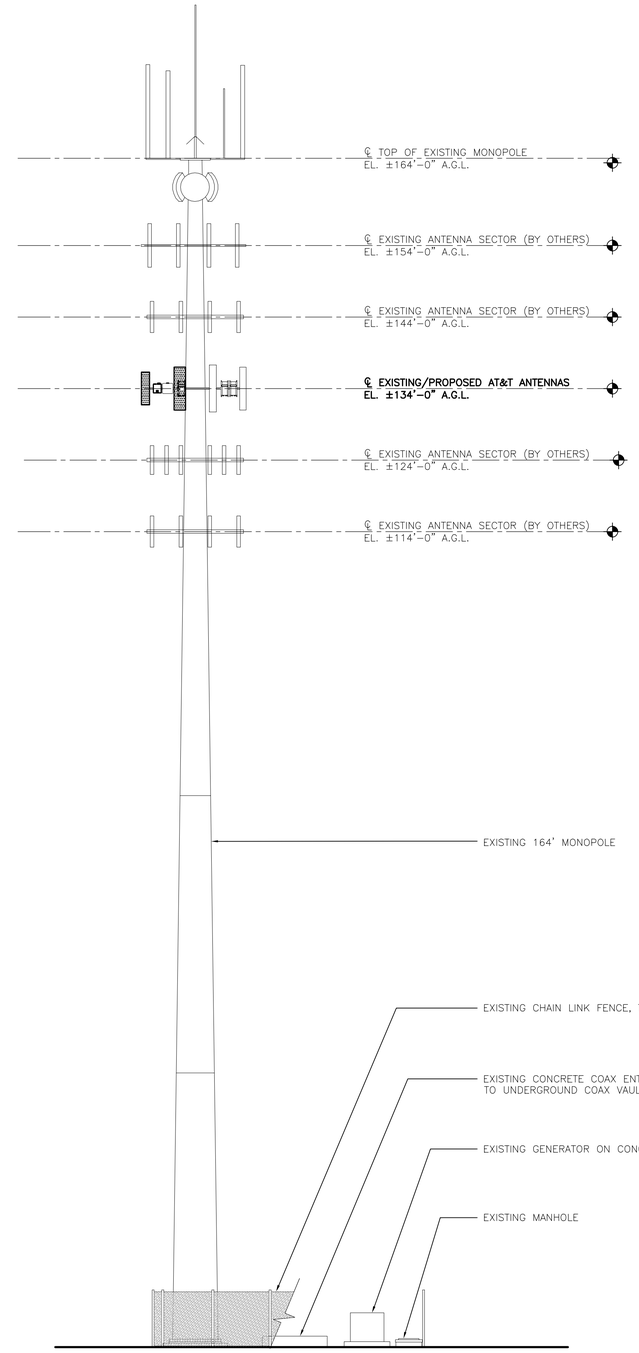


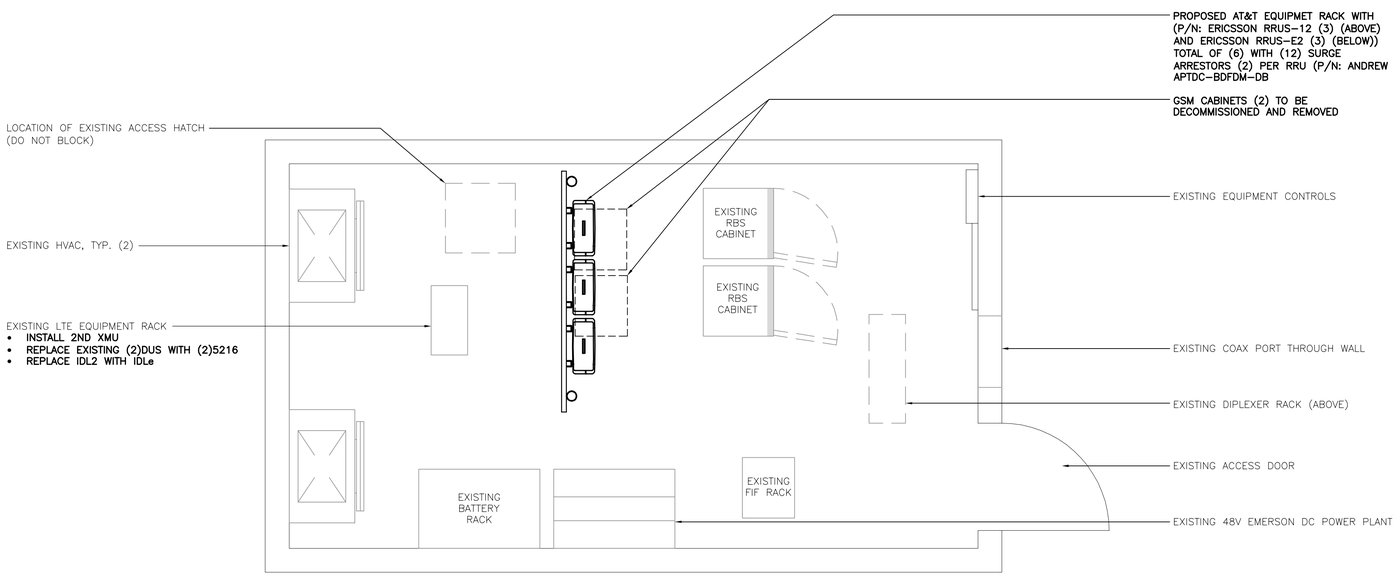


2 C-1 **EQUIPMENT LAYOUT PLAN**
SCALE: 1" = 2'-0"

TRUE NORTH

2 0 1 2 4 8
( IN FEET )
1 inch = 2 ft.

3 C-1 **PARTIAL EAST ELEVATION**
SCALE: 1" = 10'

GRAPHIC SCALE
10 0 5 10 20 40
( IN FEET )
1 inch = 10 ft.

| REV. | DATE | DRAWN BY | CHK'D BY | DESCRIPTION |
|---|---|---|---|---|
| 0 | 03/18/18 | TJR | DMD | CONSTRUCTION DRAWINGS – ISSUED FOR CONSTRUCTION |

PROFESSIONAL ENGINEER SEAL

STATE OF CONNECTICUT · DAVID M. DEMATTEIS · 27597 · LICENSED PROFESSIONAL ENGINEER

at&t

EMPIRE telecom


CENTEK engineering
Centered on Solutions
(203) 488-0580
(203) 488-8587 Fax
63-2 North Branford Road
Branford, CT 06405
www.CentekEng.com


AT&T MOBILITY
WIRELESS COMMUNICATIONS FACILITY

**GREENWICH PERRYRIDGE RD TWR**
**CT2102 - LTE 4C/5C/6C/7C FIRSTNET (RETROFIT)**
**5 PERRYRIDGE ROAD**
**GREENWICH, CT 06830**

DATE: 01/20/18
SCALE: AS NOTED
JOB NO. 17004.68

PLANS AND ELEVATION

C-1

Sheet No. 3 of 9

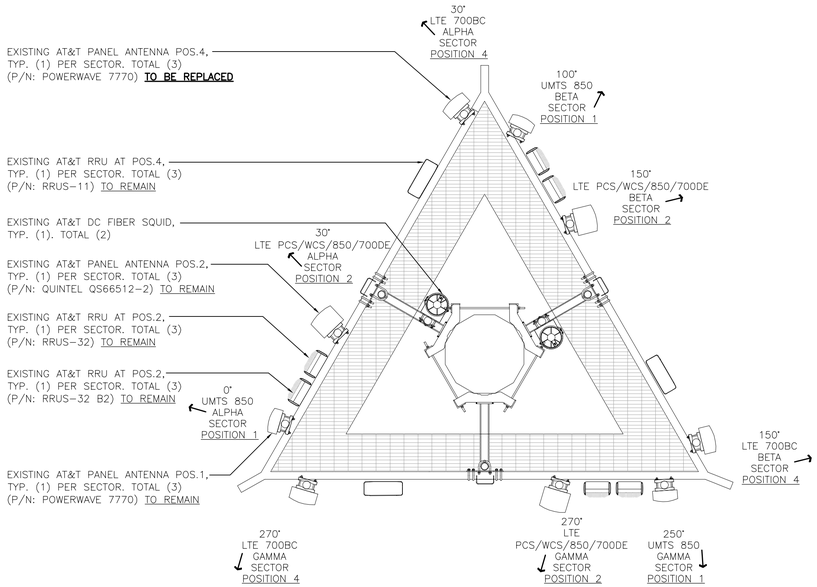


1 / C-2 **EXISTING ANTENNA PLAN**
SCALE: 3/8" = 1'-0"

TRUE NORTH

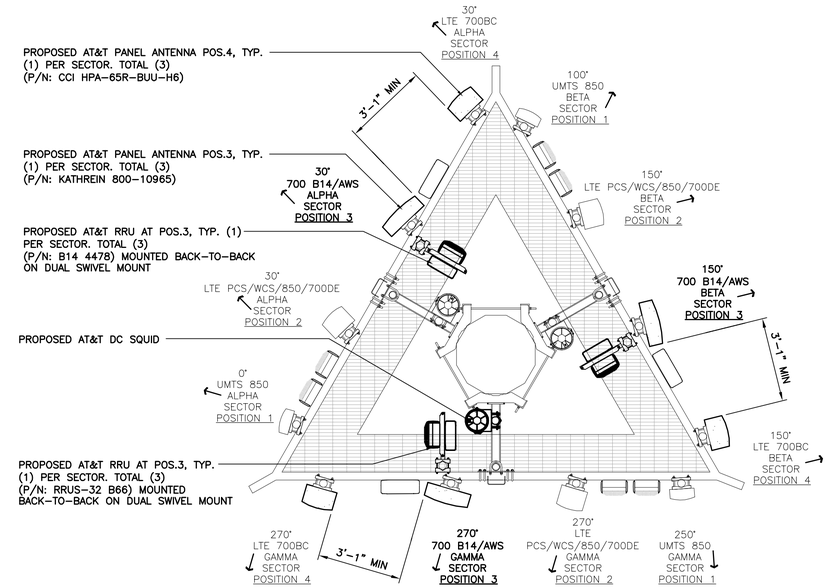


2 / C-2 **PROPOSED ANTENNA PLAN**
SCALE: 3/8" = 1'-0"

TRUE NORTH

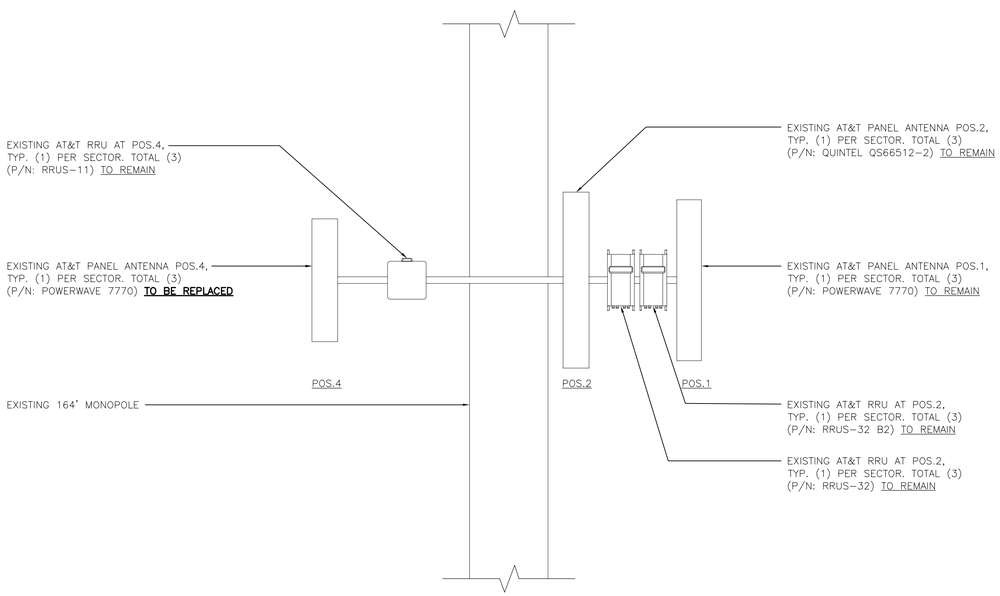


TYPICAL SECTOR

1A / C-2 **EXISTING ANTENNA ELEVATION**
SCALE: 3/8" = 1'-0"

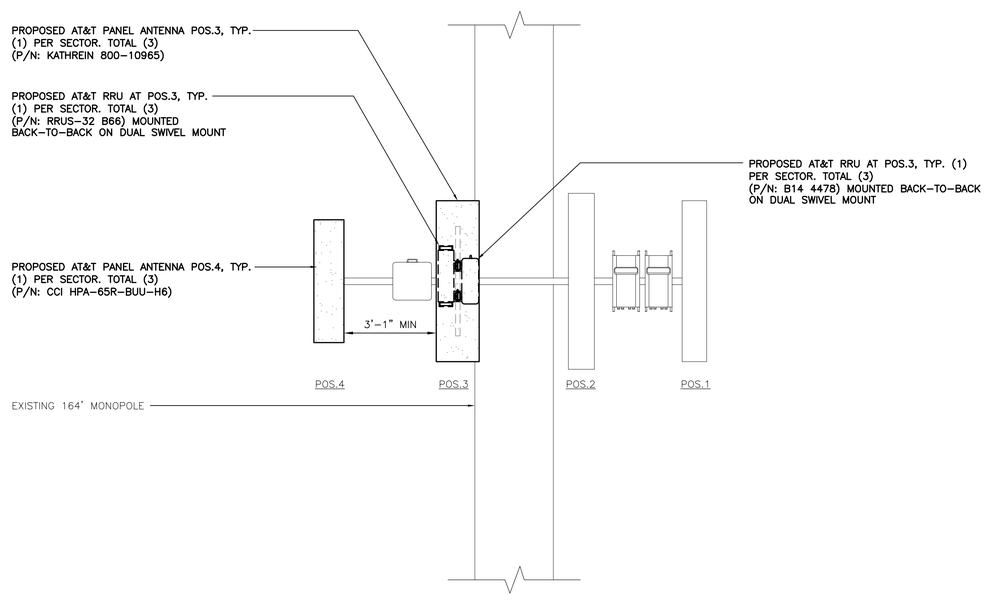


TYPICAL SECTOR

2A / C-2 **PROPOSED ANTENNA ELEVATION**
SCALE: 3/8" = 1'-0"

| REV. | DATE | DRAWN BY | CHK'D BY | DESCRIPTION |
|---|---|---|---|---|
| 0 | 03/18/18 | TJR | DMD | CONSTRUCTION DRAWINGS – ISSUED FOR CONSTRUCTION |

PROFESSIONAL ENGINEER SEAL

STATE OF CONNECTICUT · DAVID M. DIGILIO · 27757 · LICENSED PROFESSIONAL ENGINEER

at&t

EMPIRE telecom


CENTEK engineering
Centered on Solutions™
(203) 488-0580
(203) 488-8587 Fax
63-2 North Branford Road
Branford, CT 06405
www.CentekEng.com


AT&T MOBILITY
WIRELESS COMMUNICATIONS FACILITY

**GREENWICH PERRYRIDGE RD TWR**
**CT2102 - LTE 4C/5C/6C/7C FIRSTNET (RETROFIT)**
**5 PERRYRIDGE ROAD**
**GREENWICH, CT 06830**

DATE: 01/20/18
SCALE: AS NOTED
JOB NO. 17004.68

ANTENNA CONFIGURATION DETAILS

C-2

Sheet No. 4 of 9

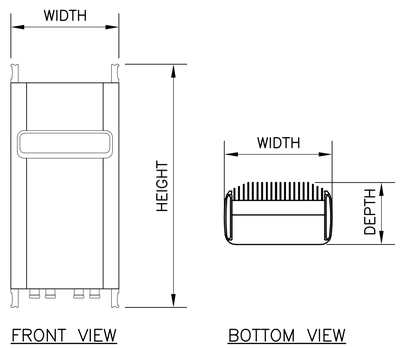


| RRU (REMOTE RADIO UNIT) | | | |
|---|---|---|---|
| EQUIPMENT | DIMENSIONS | WEIGHT | CLEARANCES |
| MAKE: ERICSSON<br>MODEL: RRUS-32 B66 | 27.17"L x 12.05"W x 7.01"D | 52.91 LBS. | ABOVE: 16" MIN.<br>BELOW: 12" MIN.<br>FRONT: 36" MIN. |

1 / C-3 **ERICSSON RRUS-32 B66 MOUNTING DETAILS**
NOT TO SCALE

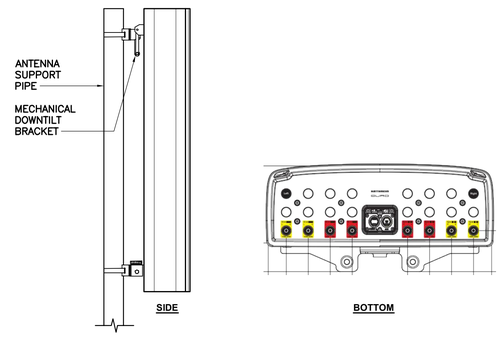


| ALPHA/BETA/GAMMA ANTENNA | | |
|---|---|---|
| EQUIPMENT | DIMENSIONS | WEIGHT |
| MAKE: KATHREIN<br>MODEL: 800-10965 | 78.7"L x 20"W x 6.9"D | 108.6 LBS. |

2 / C-3 **PROPOSED ANTENNA DETAIL**
NOT TO SCALE

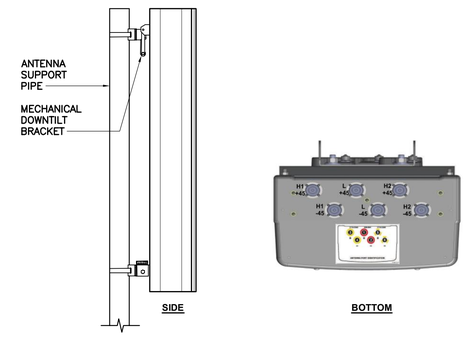


| ALPHA/BETA/GAMMA ANTENNA | | |
|---|---|---|
| EQUIPMENT | DIMENSIONS | WEIGHT |
| MAKE: CCI<br>MODEL: HPA-65R-BUU-H6 | 72"L x 14.8"W x 9"D | 51 LBS. |

3 / C-3 **PROPOSED ANTENNA DETAIL**
NOT TO SCALE

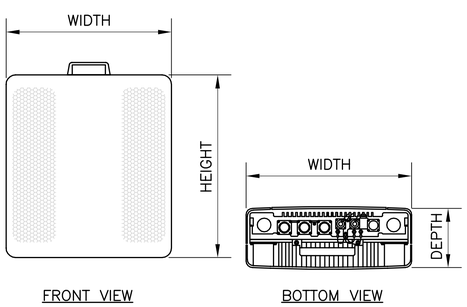


| RRU (REMOTE RADIO UNIT) | | | |
|---|---|---|---|
| EQUIPMENT | DIMENSIONS | WEIGHT | CLEARANCES |
| MAKE: ERICSSON<br>MODEL: RRUS-12 | 20.4"L x 18.5"W x 7.5"D | 59.52 LBS. | ABOVE: 16" MIN.<br>BELOW: 12" MIN.<br>FRONT: 36" MIN. |
| MAKE: ERICSSON<br>MODEL: RRUS-E2 | 20.4"L x 18.5"W x 7.5"D | 50 LBS. | ABOVE: 16" MIN.<br>BELOW: 12" MIN.<br>FRONT: 36" MIN. |

NOTES:
1. CONTRACTOR TO COORDINATE FINAL EQUIPMENT MODEL SELECTION WITH AT&T CONSTRUCTION MANAGER PRIOR TO ORDERING.

4 / C-3 **ERICSSON RRUS 12 AND E2 DETAIL**
NOT TO SCALE

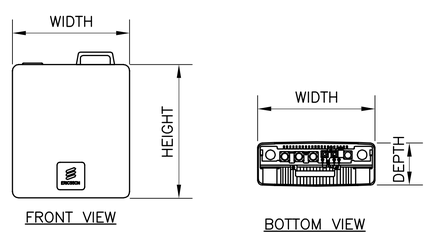


| RRU (REMOTE RADIO UNIT) | | | |
|---|---|---|---|
| EQUIPMENT | DIMENSIONS | WEIGHT | CLEARANCES |
| MAKE: ERICSSON<br>MODEL: B14 4478 | 14.9"L x 13.1"W x 7.3"D | 60 LBS. | ABOVE: 16" MIN.<br>BELOW: 12" MIN.<br>FRONT: 36" MIN. |

NOTES:
1. CONTRACTOR TO COORDINATE FINAL EQUIPMENT MODEL SELECTION WITH AT&T CONSTRUCTION MANAGER PRIOR TO ORDERING.

5 / C-3 **ERICSSON B14 4478 DETAIL**
NOT TO SCALE

| SURGE ARESSTOR | | |
|---|---|---|
| EQUIPMENT | DIMENSIONS | WEIGHT |
| MAKE: ANDREW<br>MODEL: APTDC-BDFDM-DB | 3.46"H x 3.46"W x 1.65"D | 1.32 LBS. |

NOTES:
1. CONTRACTOR TO COORDINATE FINAL EQUIPMENT MODEL SELECTION WITH AT&T CONSTRUCTION MANAGER PRIOR TO ORDERING.

6 / C-3 **ANDREW APTDC-BDFDM-DB DETAIL**
NOT TO SCALE

| REV. | DATE | DRAWN BY | CHK'D BY | DESCRIPTION |
|---|---|---|---|---|
| 0 | 03/18/18 | TJR | DMD | CONSTRUCTION DRAWINGS – ISSUED FOR CONSTRUCTION |

PROFESSIONAL ENGINEER SEAL

at&t

EMPIRE telecom

CENTEK engineering
Centered on Solutions™
(203) 488-0580
(203) 488-8587 Fax
63-2 North Branford Road
Branford, CT 06405
www.CentekEng.com

AT&T MOBILITY
WIRELESS COMMUNICATIONS FACILITY
GREENWICH PERRYRIDGE RD TWR
CT2102 - LTE 4C/5C/6C/7C FIRSTNET (RETROFIT)
5 PERRYRIDGE ROAD
GREENWICH, CT 06830

DATE: 01/20/18
SCALE: AS NOTED
JOB NO. 17004.68

DETAILS

C-3

Sheet No. 5 of 9

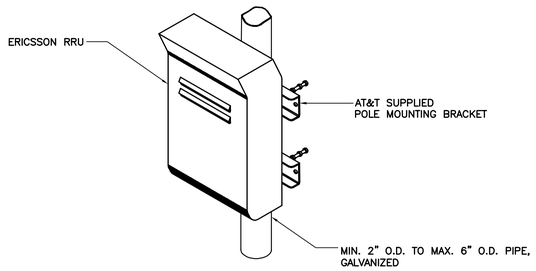


ISOMETRIC VIEW

NOTES:

1. AT&T SHALL SUPPLY RRU, AND RRU POLE–MOUNTING BRACKET. CONTRACTOR SHALL SUPPLY POLE/PIPE AND INSTALL ALL MOUNTING HARDWARE INCLUDING ERICSSON RRU POLE–MOUNTING BRACKET. CONTRACTOR SHALL INSTALLS RRU AND MAKES CABLE TERMINATIONS.
2. NO PAINTING OF THE RRU OR SOLAR SHIELD IS ALLOWED.

## 1 / C–4 TYPICAL RRU MOUNTING DETAIL

SCALE: NTS

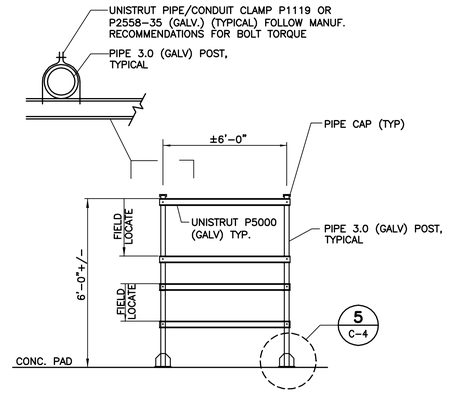


## 2 / C–4 EQUIPMENT FRAME MOUNTING DETAIL

NOT TO SCALE

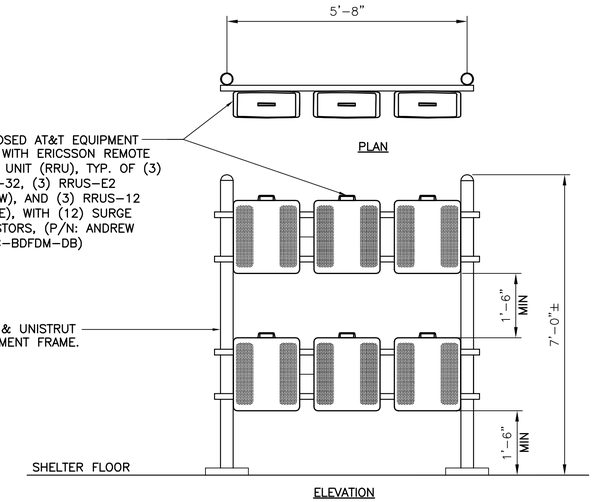


## 3 / C–4 PROPOSED EQUIPMENT RACK DETAIL

NOT TO SCALE

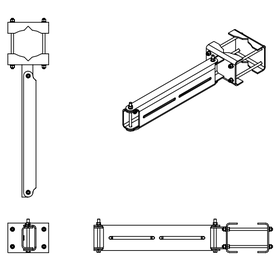

| RRU DUAL SWIVEL MOUNT | | |
|---|---|---|
| EQUIPMENT | DIMENSIONS | WEIGHT |
| MAKE: SITE PRO 1<br>PART NO.: RRUDSM | 27.75"L x 6.5"W x 4.7"D | 39.4 LBS. |

## 4 / C–4 RRH DUAL SWIVEL MOUNT DETAIL

NOT TO SCALE

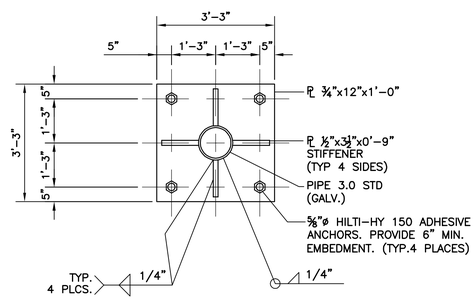


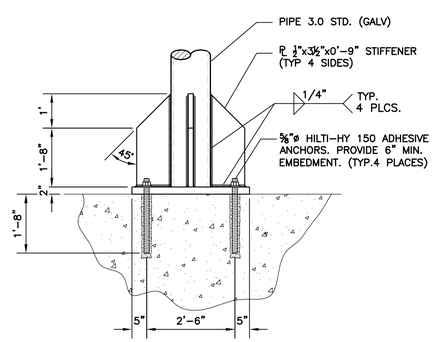


## 5 / C–4 FRAME TO CONCRETE DETAIL

NOT TO SCALE

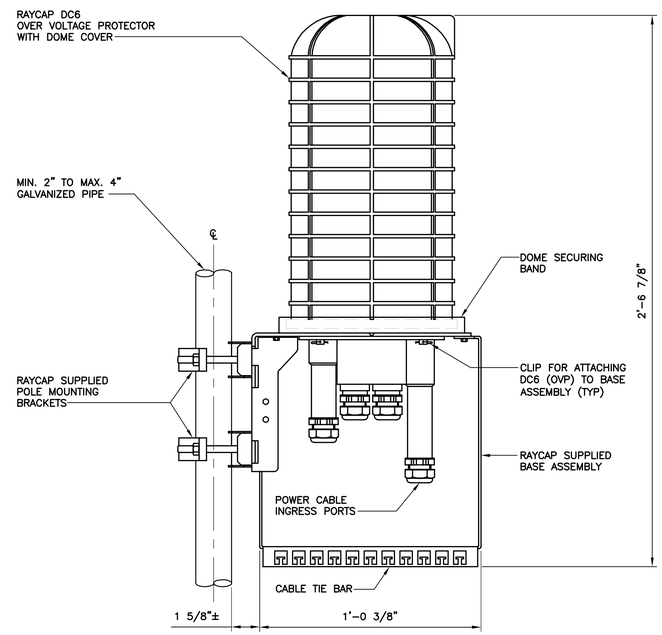


| SITE TYPE | ARRESTOR MAKE/MODEL | QTY REQUIRED | ARRESTOR LOCATION | WEIGHT |
|---|---|---|---|---|
| | MAKE: RAYCAP (SQUID)<br>MODEL: DC6–48–60–18–8F | (1) PER SITE | TOWER, ADJACENT TO AT&T ANTENNAS AND RRUs. | 20 LBS. (WITHOUT MOUNT) |

NOTES:

1. CONTRACTOR TO COORDINATE FINAL SURGE ARRESTOR MODEL SELECTION(S) WITH AT&T CONSTRUCTION MANAGER PRIOR TO ORDERING.
2. CONTRACTOR TO INSTALL ARRESTOR IN CONFORMANCE WITH MANUFACTURERS RECOMMENDATIONS.
3. RAYCAP VIA AT&T SUPPLIES THE DC6 OVER VOLTAGE PROTECTOR AND PIPE MOUNTING BRACKETS. SUBCONTRACTOR SHALL SUPPLY THE PIPE.

## 6 / C–4 TYPICAL DC FIBER SQUID DETAIL

NOT TO SCALE

| REV. | DATE | DRAWN BY | CHK'D BY | DESCRIPTION |
|---|---|---|---|---|
| 0 | 03/18/18 | TJR | DMD | CONSTRUCTION DRAWINGS – ISSUED FOR CONSTRUCTION |

PROFESSIONAL ENGINEER SEAL


CENTEK engineering
Centered on Solutions™
(203) 488-0580
(203) 488-8587 Fax
63-2 North Branford Road
Branford, CT 06405
www.CentekEng.com


AT&T MOBILITY

WIRELESS COMMUNICATIONS FACILITY

GREENWICH PERRYRIDGE RD TWR

CT2102 - LTE 4C/5C/6C/7C FIRSTNET (RETROFIT)

5 PERRYRIDGE ROAD
GREENWICH, CT 06830

DATE: 01/20/18
SCALE: AS NOTED
JOB NO. 17004.68

DETAILS

C–4

Sheet No. 6 of 9

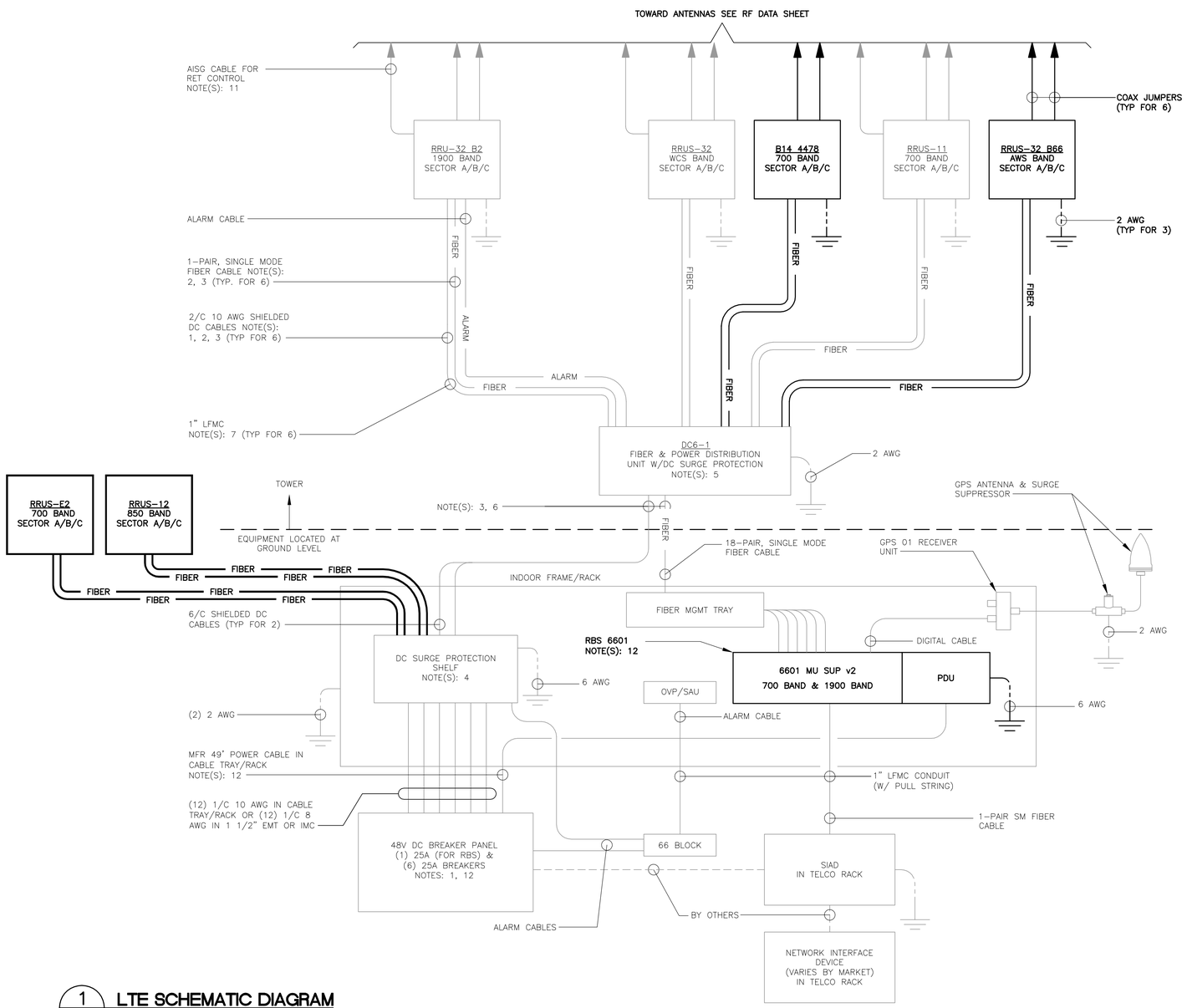


1 / E–1

## LTE SCHEMATIC DIAGRAM

NOT TO SCALE

### LTE SCHEMATIC DIAGRAM NOTES:

1. BREAKERS TO BE TAGGED AND LOCKED OUT. A 20A (MIN.) OR 30A (MAX.) BREAKER FOR RRUs MAY BE SUBSTITUTED FOR THE RECOMMENDED 25A BREAKER. SIZE 12 CONDUCTORS MAY BE USED ONLY WITH 20A BREAKERS.
2. LEAVE COILED AND PROTECTED UNTIL TERMINATED.
3. DC AND FIBER CABLE SHALL BE ROUTED WITH THE EXISTING COAX CABLE.
4. DC SURGE PROTECTION SHELF SHALL BE RAYCAP DCx–48–60–RM.
5. FIBER & DC DISTRIBUTION BOX W/DC SURGE PROTECTION SHALL BE RAYCAP DC6–48–60–18–8F.
6. SUPPORT FIBER & DC POWER CABLES WITH SNAP–IN HANGERS SPACED NO GREATER THAN 3 FEET APART ON TOWER. SUPPORT FIBER AND DC POWER CABLES INSIDE MONOPOLE WITH CABLE HOISTING GRIPS AT 250 FT MAXIMUM INTERVALS. DRESS CABLES TO PREVENT CONTACT WITH ENTRANCE AND EXIT OPENINGS.
7. CONDUIT TO BE USED ON A TOWER IF THE RRU IS MORE THAN 10' FROM THE DISTRIBUTION UNITS. MAX CABLE LENGTH IS 16 FEET.
8. SINGLE–CONDUCTOR DC POWER CABLES SHALL BE TELCOFLEX® OR KS24194™, COPPER, UL LISTED RHH NON–HALOGEN, LOW SMOKE WITH BRAIDED COVER, TYPE TC (1/0 AND LARGER). UNLESS OTHERWISE NOTED, STRANDING SHALL BE CLASS B (TYPE III) FOR CABLES SIZES 14, 12 & 10 AWG AND CLASS I (TYPE IV) FOR SIZES 8 AWG AND LARGER. CABLES SHALL BE COLOR CODED RED FOR +24V, BLUE FOR –48V AND GRAY FOR 24V AND 48V RETURN CONDUCTORS. MULTI–CONDUCTOR DC POWER CABLES SHALL BE COPPER, CLASS B STRANDING WITH FLAME RETARDANT PVC JACKET, TYPE TC, UL LISTED FOR 90°C DRY/ 75°C WET INSTALLATION.
9. GROUNDING WIRES SHALL BE COPPER, GREEN THHN/THWN UL LISTED FOR 90°C DRY/75°C WET INSTALLATION. MINIMUM SIZE IS 6 AWG UNLESS NOTED OTHERWISE.
10. FIBER OPTIC CABLES SHALL BE INSTALLED IN FLEXIBLE CONDUIT AS SCOPED BY MARKET.
11. RET CONTROL FROM THE RRU IS AN OPTIONAL METHOD OF CONNECTION. REFER TO RF DATA SHEET FOR APPLICABILITY.
12. RBS 6601 VARIANT 2 REQUIRES A 25A BREAKER AND 10 AWG (MIN.) CONDUCTORS. REPLACE EXISTING 15A OR 20A BREAKERS AND 12 AWG CONDUCTORS WHEN UPGRADING AN EXISTING RBS 6601 VARIANT 1.

## ELECTRICAL NOTES

1. PRIOR TO START OF CONSTRUCTION CONTRACTOR SHALL COORDINATE WITH OWNER FOR ALL CONSTRUCTION STANDARDS AND SPECIFICATIONS, AND ALL MANUFACTURER DOCUMENTATION FOR ALL EQUIPMENT TO BE INSTALLED.
2. INSTALL ALL EQUIPMENT IN ACCORDANCE WITH LOCAL BUILDING CODE, NATIONAL ELECTRIC CODE, OWNER AND MANUFACTURER'S SPECIFICATIONS.
3. CONNECT ALL NEW EQUIPMENT TO EXISTING TELCO AS REQUIRED BY MANUFACTURER.
4. MAINTAIN ALL CLEARANCES REQUIRED BY NEC AND EQUIPMENT MANUFACTURER.
5. PRIOR TO INSTALLATION CONTRACTOR SHALL MEASURE EXISTING ELECTRICAL LOAD AND VERIFY EXISTING AVAILABLE CAPACITY FOR PROPOSED INSTALLATION. IF INADEQUATE CAPACITY IS AVAILABLE, CONTRACTOR SHALL COORDINATE WITH LOCAL ELECTRIC UTILITY COMPANY TO UPGRADE EXISTING ELECTRIC SERVICE.
6. CONTRACTOR SHALL INSPECT EXISTING GROUNDING AND LIGHTNING PROTECTION SYSTEM AND ENSURE THAT IT IS IN COMPLIANCE WITH NEC, AND SITE OWNER'S SPECIFICATIONS. THE RESULTS OF THIS INSPECTION SHALL BE PRESENTED TO OWNERS REPRESENTATIVE, AND ANY DEFICIENCIES SHALL BE CORRECTED.
7. ALL TRANSMISSION TOWER SITES CONTAIN AN EXTENSIVE BURIED GROUNDING SYSTEM. ALL GROUNDING WORK MUST BE COORDINATED WITH, AND APPROVED BY, THE TOWER OWNER'S SITE REPRESENTATIVE. ALL OF THE TOWER OWNER'S SPECIFICATIONS MUST BE STRICTLY FOLLOWED.
8. PROVIDE AND INSTALL GROUND KITS FOR ALL NEW COAXIAL CABLES AND BOND TO EXISTING OWNERS GROUNDING SYSTEM PER OWNERS SPECIFICATIONS AND NEC.
9. ALL CONDUCTORS SHALL BE TYPE THWN (INT. APPLICATION) AND XHHW (EXT. APPLICATION), 75 DEGREE C, 600 VOLT INSULATION, SOFT ANNEALED STRANDED COPPER. #10 AWG AND SMALLER SHALL BE SPLICED USING ACCEPTABLE SOLDERLESS PRESSURE CONNECTORS. #8 AWG AND LARGER SHALL BE SPLICED USING COMPRESSION SPLIT–BOLT TYPE CONNECTORS, #12 AWG SHALL BE THE MINIMUM SIZE CONDUCTOR FOR LINE VOLTAGE BRANCH CIRCUITS. REFER TO PANEL SCHEDULE FOR BRANCH CIRCUIT CONDUCTOR SIZE(S). CONDUCTORS SHALL BE COLOR CODED FOR CONSISTENT PHASE IDENTIFICATION:
10. MINIMUM BENDING RADIUS FOR CONDUCTORS SHALL BE 12 TIMES THE LARGEST DIAMETER OF BRANCH CIRCUIT CONDUCTOR.
11. THE ENTIRE ELECTRICAL INSTALLATION SHALL BE MADE IN STRICT ACCORDANCE WITH ALL LOCAL, STATE AND NATIONAL CODES AND REGULATIONS WHICH MAY APPLY AND NOTHING IN THE DRAWINGS OR SPECIFICATIONS SHALL BE INTERPRETED AS AN INFRINGEMENT OF SUCH CODES OR REGULATIONS.
12. THE ELECTRICAL CONTRACTOR IS TO BE RESPONSIBLE FOR THE COMPLETE INSTALLATION AND COORDINATION OF THE ENTIRE ELECTRICAL SERVICE. ALL ACTIVITIES TO BE COORDINATED THROUGH OWNER'S REPRESENTATIVE, DESIGN ENGINEER AND OTHER AUTHORITIES HAVING JURISDICTION OF TRADES.
13. THE CONTRACTOR SHALL BE RESPONSIBLE FOR OBTAINING ALL PERMITS AND PAY ALL FEES AS MAY BE REQUIRED FOR THE ELECTRICAL WORK AND FOR SCHEDULING OF ALL INSPECTIONS AS MAY BE REQUIRED BY THE LOCAL AUTHORITY.
14. THE CONTRACTOR SHALL BE RESPONSIBLE FOR COORDINATION WITH THE SITE AND/OR BUILDING OWNER FOR NEW AND/OR DEMOLITION WORK INVOLVED.
15. THE CONTRACTOR SHALL GUARANTEE ALL NEW WORK FOR A PERIOD OF ONE YEAR FROM THE ACCEPTANCE DATE BY THE OWNER. THE CONTRACTOR SHALL BE RESPONSIBLE FOR OBTAINING WARRANTIES FROM ALL EQUIPMENT MANUFACTURERS FOR SUBMISSION TO THE OWNER.
16. DRAWINGS INDICATE GENERAL ARRANGEMENT OF WORK INCLUDED IN CONTRACT. CONTRACTOR SHALL WITHOUT EXTRA CHARGE, MAKE MODIFICATIONS TO THE LAYOUT OF THE WORK TO PREVENT CONFLICT WITH WORK OF OTHER TRADES AND FOR THE PROPER INSTALLATION OF WORK. CHECK ALL DRAWINGS AND VISIT JOB SITE TO VERIFY SPACE AND TYPE OF EXISTING CONDITIONS IN WHICH WORK WILL BE DONE, PRIOR TO SUBMITTAL OF BID.
17. ALL NON–CURRENT CARRYING PARTS OF THE ELECTRICAL AND TELEPHONE CONDUIT SYSTEMS SHALL BE MECHANICALLY AND ELECTRICALLY CONNECTED TO PROVIDE AN INDEPENDENT RETURN PATH TO THE EQUIPMENT GROUNDING SOURCES.
18. GROUNDING SYSTEM WILL BE IN ACCORDANCE WITH THE LATEST ACCEPTABLE EDITION OF THE NATIONAL ELECTRICAL CODE AND REQUIREMENTS PER LOCAL INSPECTOR HAVING JURISDICTION.
19. EACH EQUIPMENT GROUND CONDUCTOR SHALL BE SIZED IN ACCORDANCE WITH THE N.E.C. ARTICLE 250–122. (MIN. #12 AWG).
20. CONTRACTOR SHALL PROVIDE A CELLULAR GROUNDING SYSTEM WITH THE MAXIMUM AC RESISTANCE TO GROUND OF 5 OHM BETWEEN ANY POINT ON THE GROUNDING SYSTEM AS MEASURED BY 3–POINT GROUNDING TEST. (REFER TO SECTION 16960).

### TESTS BY INDEPENDENT ELECTRICAL TESTING FIRM

A. CONTRACTOR SHALL RETAIN THE SERVICES OF A LOCAL INDEPENDENT ELECTRICAL TESTING FIRM (WITH MINIMUM 5 YEARS COMMERCIAL EXPERIENCE IN THE ELECTRICAL TESTING INDUSTRY) AS SPECIFIED BY OWNER TO PERFORM:

TEST 1: RESISTANCE TO GROUND TEST ON THE CELLULAR GROUNDING SYSTEM.

THE TESTING FIRM SHALL INCLUDE THE FOLLOWING INFORMATION WITH THE REPORT:

1. TESTING PROCEDURE INCLUDING THE MAKE AND MODEL OF TEST EQUIPMENT.
2. CERTIFICATION OF TESTING EQUIPMENT CALIBRATION WITHIN SIX (6) MONTHS OF DATE OF TESTING. INCLUDE CERTIFICATION LAB ADDRESS AND TELEPHONE NUMBER.
3. GRAPHICAL DESCRIPTION OF TESTING METHOD ACTUALLY IMPLEMENTED.

B. TESTING SHALL BE PERFORMED IN THE PRESENCE AND TO THE SATISFACTION OF OWNERS CONSTRUCTION REPRESENTATIVE. TESTING DATA SHALL BE INITIALED AND DATED BY THE CONSTRUCTION AND INCLUDED WITH THE WRITTEN REPORT/ANALYSIS.

C. THE CONTRACTOR SHALL FORWARD SIX (6) COPIES OF THE INDEPENDENT ELECTRICAL TESTING FIRM REPORT/ANALYSIS TO ENGINEER A MINIMUM OF TEN (10) WORKING DAYS PRIOR TO THE JOB TURNOVER.

D. CONTRACTOR TO PROVIDE A MINIMUM OF ONE (1) WEEK NOTICE TO OWNER AND ENGINEER FOR ALL TESTS REQUIRING WITNESSING.

| REV. | DATE | DRAWN BY | CHK'D BY | DESCRIPTION |
|---|---|---|---|---|
| 0 | 03/18/18 | TJR | DMD | CONSTRUCTION DRAWINGS – ISSUED FOR CONSTRUCTION |

PROFESSIONAL ENGINEER SEAL

STATE OF CONNECTICUT CAMPBELL ENGINEERING, LLC 27317 LICENSED PROFESSIONAL ENGINEER

at&t

EMPIRE telecom

CENTEK engineering
Centered on Solutions™
(203) 488-0580
(203) 488-8587 Fax
63-2 North Branford Road
Branford, CT 06405
www.CentekEng.com

AT&T MOBILITY

WIRELESS COMMUNICATIONS FACILITY

GREENWICH PERRYRIDGE RD TWR

CT2102 – LTE 4C/5C/6C/7C FIRSTNET (RETROFIT)

5 PERRYRIDGE ROAD
GREENWICH, CT 06830

DATE: 01/20/18
SCALE: AS NOTED
JOB NO. 17004.68

SCHEMATIC DIAGRAM AND NOTES

E–1

Sheet No. 7 of 9

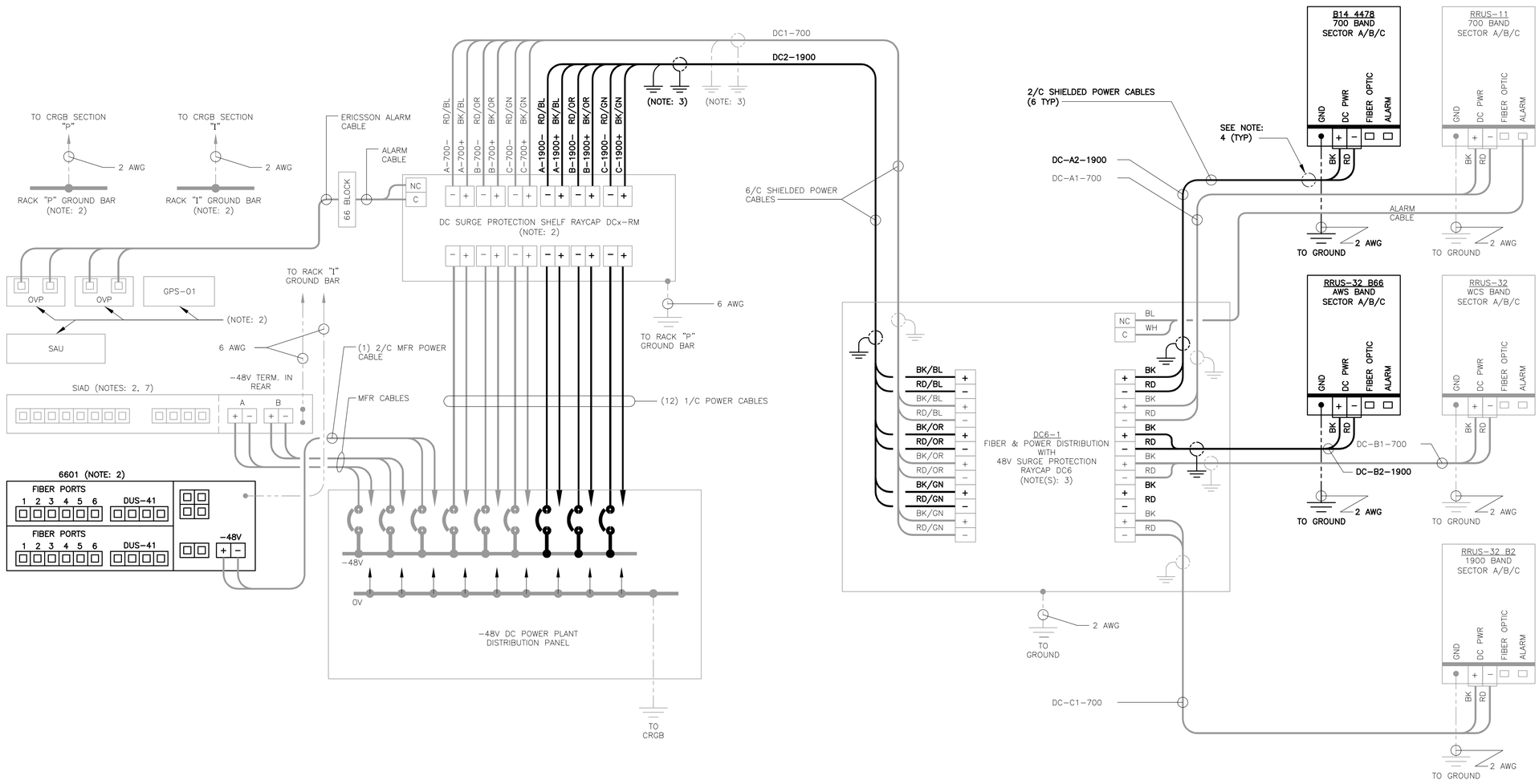


**LTE WIRING DIAGRAM NOTES:**

1. LABEL THE DC POWER CABLES AT BOTH ENDS OF EVERY WIRE AND IN ANY PULL BOX IF USED. LABEL SHALL BE DURABLE, SELF ADHESIVE, WRAPPED LONGITUDINALLY ALONG THE CABLE AND STATE THE SECTOR, FREQUENCY BAND AND POLARITY; I.E. "A-1900+". CABLE AND WIRE LABELS SHOWN ARE REPRESENTATIVE AND MAY BE MODIFIED AS DIRECTED BY AT&T.
2. INSTALL ON BASEBAND EQUIPMENT RACK.
3. THE BARE GROUND WIRE OF EACH MULTI-CONDUCTOR CABLE SHALL BE CONNECTED TO THE "P" GROUND BAR ON THE RACK. WHEN A SHIELDED CABLE IS USED, THE DRAIN WIRE ALSO SHALL BE CONNECTED TO THE "P" GROUND BAR.
4. CABLE GROUND WIRE AND SHIELD DRAIN WIRE TO BE LEFT UN-TERMINATED AT RRU AND DC POWER PLANT.
5. SEE LTE SCHEMATIC DIAGRAM DETAIL 1/E-1 FOR BREAKER RATING.

1 / E-2 **LTE WIRING DIAGRAM**
NOT TO SCALE

| REV. | DATE | DRAWN BY | CHK'D BY | DESCRIPTION |
|---|---|---|---|---|
| 0 | 03/18/18 | TJR | DMD | CONSTRUCTION DRAWINGS – ISSUED FOR CONSTRUCTION |

PROFESSIONAL ENGINEER SEAL

at&t

EMPIRE telecom

CENTEK engineering
Centered on Solutions™
(203) 488-0580
(203) 488-8587 Fax
63-2 North Branford Road
Branford, CT 06405
www.CentekEng.com

AT&T MOBILITY
WIRELESS COMMUNICATIONS FACILITY
GREENWICH PERRYRIDGE RD TWR
CT2102 - LTE 4C/5C/6C/7C FIRSTNET (RETROFIT)
5 PERRYRIDGE ROAD
GREENWICH, CT 06830

DATE: 01/20/18
SCALE: AS NOTED
JOB NO. 17004.68

WIRING DIAGRAM

E-2

Sheet No. 8 of 9

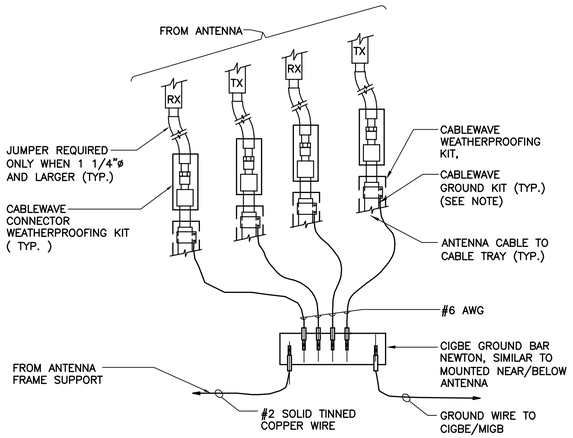


**NOTE:**

1. DO NOT INSTALL CABLE GROUND KIT AT A BEND AND ALWAYS DIRECT GROUND WIRE DOWN TO CIGBE

## 1 / E-3 CONNECTION OF GROUND WIRES TO GROUND BAR

NOT TO SCALE

EACH RRH CABINET SHALL BE GROUNDED IN THE FOLLOWING MANNER:

1. AT TOP OF THE CABINET
2. AT RIGHT SIDE OF THE CABINET.

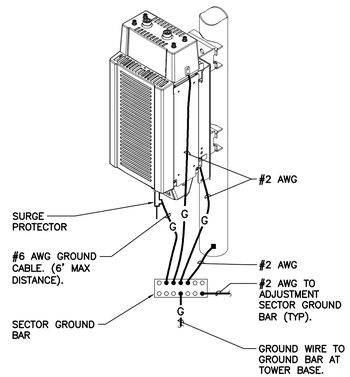


## 2 / E-3 RRU POLE MOUNT GROUNDING

NOT TO SCALE

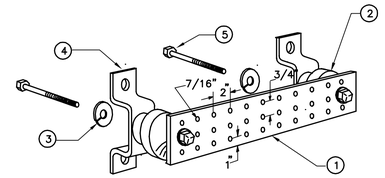


## LEGEND

1. TINNED COPPER GROUND BAR, 1/4"x 4"x 20", NEWTON INSTRUMENT CO. HOLE CENTERS TO MATCH NEMA DOUBLE LUG .
2. INSULATORS, NEWTON INSTRUMENT CAT. NO. 2. 3061-4.
3. 3. 5/8" LOCK WASHERS, NEWTON INSTRUMENT CO. CAT. NO. 3015-8.
4. WALL MOUNTING BRACKET, NEWTON INSTRUMENT CO. 4. CAT NO. A-6056.
5. STAINLESS STEEL SECURITY SCREWS.

## 3 / E-3 GROUND BAR DETAIL

NOT TO SCALE

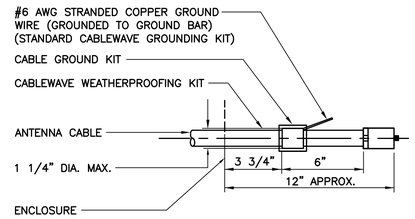


**NOTE:**

1. DO NOT INSTALL CABLE GROUND KIT AT A BEND AND ALWAYS DIRECT GROUND WIRE DOWN TO GROUND BAR.

## 4 / E-3 ANTENNA CABLE GROUNDING DETAIL

NOT TO SCALE

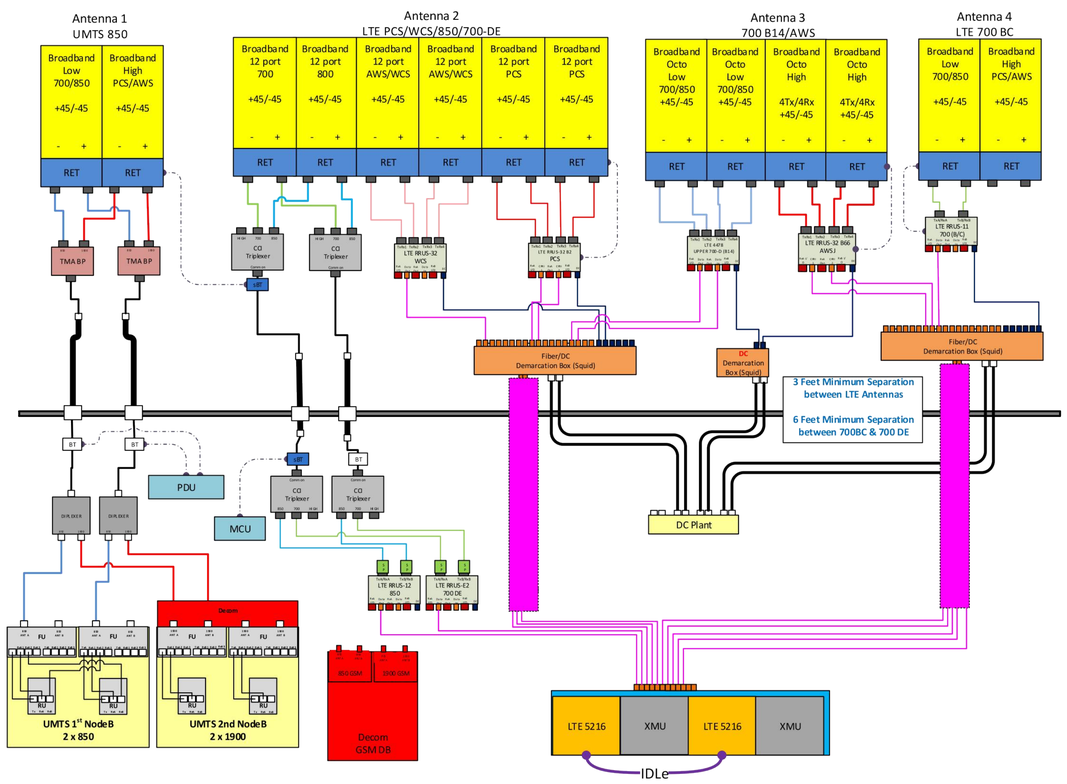


## 5 / E-3 RF PLUMBING DIAGRAM

NOT TO SCALE

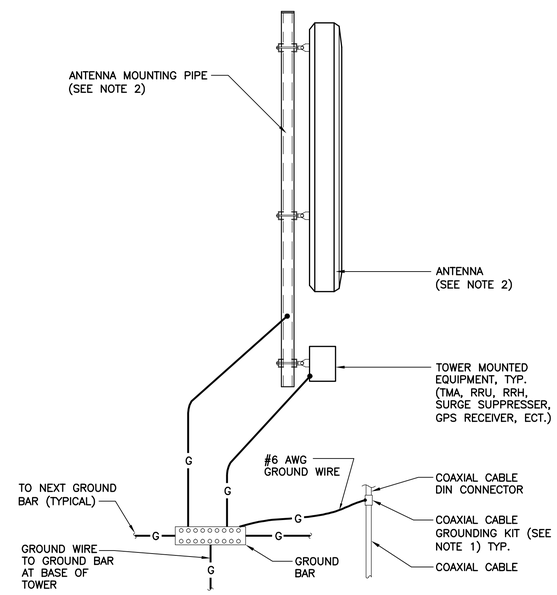


NOTES:

1. BOND COAXIAL CABLE GROUND KITS TO EACH OWNER'S GROUND BAR ALONG ENTIRE COAX RUN FROM ANTENNA TO SHELTER.
2. BOND ALL EQUIPMENT TO GROUND PER NEC AND MANUFACTURERS SPECIFICATIONS.
3. DETAIL IS TYPICAL FOR ALL ANTENNA SECTORS, INCLUDING GPS ANTENNA.

## 6 / E-3 TYPICAL ANTENNA GROUNDING DETAIL

NOT TO SCALE

| REV. | DATE | DRAWN BY | CHK'D BY | DESCRIPTION |
|---|---|---|---|---|
| 0 | 03/18/18 | TJR | DMD | CONSTRUCTION DRAWINGS – ISSUED FOR CONSTRUCTION |

PROFESSIONAL ENGINEER SEAL

at&t

EMPIRE telecom


CENTEK engineering
Centered on Solutions™
(203) 488-0580
(203) 488-8587 Fax
63-2 North Branford Road
Branford, CT 06405
www.CentekEng.com


AT&T MOBILITY

WIRELESS COMMUNICATIONS FACILITY

GREENWICH PERRYRIDGE RD TWR

CT2102 - LTE 4C/5C/6C/7C FIRSTNET (RETROFIT)

5 PERRYRIDGE ROAD
GREENWICH, CT 06830

DATE: 01/20/18
SCALE: AS NOTED
JOB NO. 17004.68

TYPICAL ELECTRICAL DETAILS

E-3

Sheet No. 9 of 9