CENTEK engineering

Centered on Solutions℠

Structural Analysis Report

164-ft Existing EEI Monopole

Proposed AT&T Mobility
Antenna Upgrade

AT&T Site Ref: CT2102

5 Perryridge Road
Greenwich, CT

CENTEK Project No. 16071.84

Date: December 8, 2016

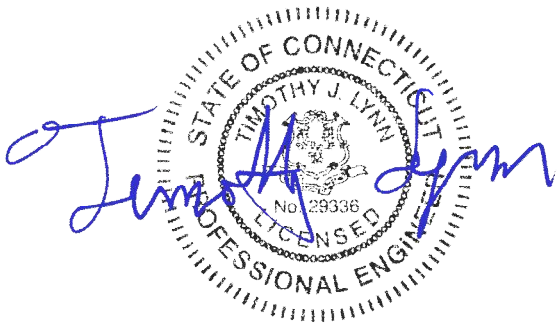

Prepared for:

AT&T Mobility
500 Enterprise Drive, Suite 3A
Rocky Hill, CT 06067

Table of Contents

SECTION 1 - REPORT

- INTRODUCTION
- ANTENNA AND APPURTENANCE SUMMARY
- PRIMARY ASSUMPTIONS USED IN THE ANALYSIS
- ANALYSIS
- TOWER LOADING
- TOWER CAPACITY
- FOUNDATION AND ANCHORS
- CONCLUSION

SECTION 2 – CONDITIONS & SOFTWARE

- STANDARD ENGINEERING CONDITIONS
- GENERAL DESCRIPTION OF STRUCTURAL ANALYSIS PROGRAM

SECTION 3 – CALCULATIONS

- tnxTower INPUT/OUTPUT SUMMARY
- tnxTower DETAILED OUTPUT
- FLANGE BOLT AND FLANGE PLATE ANALYSIS
- ANCHOR BOLT AND BASE PLATE ANALYSIS
- MathCAD CAISSON FOUNDATION ANALYSIS
- L-PILE CAISSON ANALYSIS
- L-PILE LATERAL DEFLECTION vs. DEPTH
- L-PILE BENDING MOMENT vs. DEPTH
- L-PILE SHEAR FORCE vs. DEPTH

SECTION 4 – REFERENCE MATERIAL

- RF DATA SHEET

Introduction

The purpose of this report is to summarize the results of the non-linear, P-Δ structural analysis of the antenna upgrade proposed by AT&T Mobility on the existing monopole (tower) owned and operated by Greenwich Hospital located in Greenwich, Connecticut.

The host tower is a 164-ft tall, five-section, eighteen sided, tapered monopole, originally designed and manufactured by Engineered Endeavors Incorporated (EEI); project no. 11030 dated August 21, 2002. The tower geometry, structure member sizes and foundation system information were obtained from the original manufacturers design documents.

Antenna and appurtenance information were obtained a previous structural analysis report prepared by Centek; job no; 16002.005, dated January 21, 2016 and an AT&T RF data sheet.

The tower is made up of five (5) tapered vertical sections consisting of A572-65 pole sections. The bottom four (4) vertical tower sections are slip joint connected while the top section is flange connected. The diameter of the pole (flat-flat) is 47.0-in at the top and 76.0-in at the base.

AT&T proposes the removal of three (3) remote radio heads and the installation of three (3) remote radio heads mounted to the existing low profile platform. Refer to the Antenna and Appurtenance Summary below for a detailed description of the proposed antenna and appurtenance configuration.

Antenna and Appurtenance Summary

The existing, proposed and future loads considered in this analysis consist of the following:

- TOWN (EXISTING):
  Antennas: One (1) 12-ft Omni-directional whip antenna, two (2) 10-ft Omni-directional whip antennas, two (2) 8-ft Omni-directional whip antennas, one Kathrein Scala 2' square panel and one (1) camera mounted on a PiROD 13-ft low profile platform with an elevation of 164-ft above grade level.
  Coax Cables: Six (6) 1/2"∅, one (1) 5/8"∅, three (3) 7/8" ∅ and two (2) 1-1/4" ∅ coax cables running on the inside of the existing tower.
- TOWN (EXISTING):
  Antennas: Two (2) 4-ft Dishes and one (1) 2-ft Dish mounted on three 4'x4" pipes with a RAD center elevation of 160-ft above grade level.
  Coax Cables: Three (3) 1-1/4" ∅ coax cables running on the inside of the existing tower.
- CLEARWIRE (EXISTING):
  Antennas: Three (3) Argus LLPX310R panel antennas, three (3) Samsung FDD-R6-RRH, two (2) Dragonwave Horizon ODU's and two (2) Dragonwave A-ANT-23-G-2-C dishes mounted on the Sprint 13-ft low profile platform with a RAD center elevation of 154-ft above the existing tower base plate.
  Coax Cables: Two (2) 2" ∅ conduits and two (2) 5/8" ∅ coax cables running on the inside of the existing tower.

- SPRINT (EXISTING):
  Antennas: Two (2) RFS APXVSPP18-C-A20 panel antennas, one (1) Powerwave P40-16-XLPP-RR-A panel antennas, three (3) RFS APXVTM14 panel antennas and one (1) GPS antenna mounted to a low profile platform with a RAD center elevation of 154-ft above the existing tower base plate. Three (3) ALU 1900 MHz RRH's, three (3) ALU 800 MHz RRH's and three (3) ALU TD-RRH-820 remote radio heads mounted on a universal tr-bracket below the existing low profile platform.
  Coax Cables: Six (6) 1-5/8" ∅ Hybriflex cables and one (1) 1/2" ∅ coax cable running on the inside of the existing tower.
- T-MOBILE (EXISTING):
  Antennas: Three (3) RFS APX16PV-16PVL panel antennas, three (3) Andrew LNX-6515DS panel antennas, nine (9) TMA's and three (3) Bias Tee's mounted on a PiROD 13-ft low profile platform with a RAD center elevation of 144-ft above grade level.
  Coax Cables: Twelve (12) 1-5/8" ∅ coax cables inside the monopole and six (6) 1-5/8" ∅ cables on the exterior of the existing tower.
- EVERSOURCE ENERGY (EXISTING):
  Antennas: Two (2) Decibel DB586-Y omni-directional whips (one upright and one inverted), one (1) Telewave ANT150F2 omni-directional whip, one (1) Comprod 531-70HD dipole and one (1) tower top amplifier mounted on a PiROD 13-ft low profile platform with an elevation of 114-ft above grade level.
  Coax Cables: Two (2) 1-5/8" ∅, two (2) 7/8" ∅ and one (1) 1/2" ∅ coax cables running on the inside of the existing tower on the inside of the existing tower.
- UNKNOWN (EXISTING):
  Antennas: Three GPS antennas mounted on three (3) standoffs with a RAD center elevation of 50-ft above grade level.
  Coax Cables: Three (3) 7/8" ∅ coax cables running on the exterior of the existing tower.
- VERIZON (EXISTING):
  Antennas: Six (6) Decibel DB844H65E-XY panel antennas, three (3) RYMSA MG D3-800T0 panel antennas, six (6) Andrew SBNHH-1D65B panel antennas, three (3) Alcatel-Lucent RRH2x60-700 remote radio heads, three (3) Alcatel-Lucent RRH2x60-PCS remote radio heads, three (3) Alcatel-Lucent RRH4x45/2x90-AWS remote radio heads, six (6) RFS FD9R6004/2C-3L Diplexers and two (2) Raycap RC2DC-3315-PF-48 main distribution boxes mounted on a 13-ft low profile platform with a RAD center elevation of 124-ft above grade level.
  Coax Cables: Six (6) 1-5/8" ∅ coax cables and two (2) 1-5/8" ∅ fiber cables running inside the monopole.

- AT&T (EXISTING TO REMAIN):
  Antennas: Three (3) Powerwave 7770.00 panel antennas, three (3) Powerwave P65-16-XLH-RR panel antennas, three (3) Quintel QS66512 panel antennas, six (6) LGP21401 TMA's and six (6) CCI TPX-070821 triplexers mounted on a PiROD 13-ft low profile platform with a RAD center elevation of 134-ft above grade level. Three (3) Ericsson RRUS-11 remote radio heads, three (3) Ericsson RRUS-32 remote radio heads and two (2) Raycap DC6-48-60-18-8F surge arrestor mounted to one (1) universal ring mount with a RAD center elevation of 138-ft above grade level.
  Cables: Twelve (12) 1-5/8" ∅ coax cables, two (2) fiber cable and four (4) dc control cables running on the inside of the existing tower
- AT&T (EXISTING TO REMOVE):
  Antennas: Three (3) Ericsson RRUS-12 remote radio heads and three (3) Ericsson A2 units mounted on a PiROD 13-ft low profile platform with a RAD center elevation of 134-ft
- **AT&T (PROPOSED):**
  Antennas: Three (3) Ericsson RRUS-32 remote radio heads mounted on a PiROD 13-ft low profile platform with a RAD center elevation of 134-ft

Primary Assumptions Used in the Analysis

- The tower structure's theoretical capacity not including any assessment of the condition of the tower.
- The tower carries the horizontal and vertical loads due to the weight of antennas, ice load and wind.
- Tower is properly installed and maintained.
- Tower is in plumb condition.
- Tower loading for antennas and mounts as listed in this report.
- All bolts are appropriately tightened providing the necessary connection continuity.
- All welds are fabricated with ER-70S-6 electrodes.
- All members are assumed to be as specified in the original tower design documents or reinforcement drawings.
- All members are "hot dipped" galvanized in accordance with ASTM A123 and ASTM A153 Standards.
- All member protective coatings are in good condition.
- All tower members were properly designed, detailed, fabricated, installed and have been properly maintained since erection.
- Any deviation from the analyzed antenna loading will require a new analysis for verification of structural adequacy.
- All coax cables to be installed as indicated in this report.

Analysis

The existing tower was analyzed using a comprehensive computer program entitled tnxTower. The program analyzes the tower, considering the worst case loading condition. The tower is considered as loaded by concentric forces along the tower, and the model assumes that the tower members are subjected to bending, axial, and shear forces.

The existing tower was analyzed for the controlling basic wind speed (3-second gust) with no ice and the applicable wind and ice combination to determine stresses in members as per guidelines of TIA-222-G-2005 entitled "Structural Standard for Antenna Support Structures and Antennas", the American Institute of Steel Construction (AISC) and the Manual of Steel Construction; Load and Resistance Factor Design (LRFD).

The controlling wind speed is determined by evaluating the local available wind speed data as provided in Appendix N of the CSBC[1] and the wind speed data available in the TIA-222-G-2005 Standard.

Tower Loading

Tower loading was determined by the basic wind speed as applied to projected surface areas with modification factors per TIA-222-G-2005, gravity loads of the tower structure and its components, and the application of 0.75" radial ice on the tower structure and its components.

Basic Wind Speed:	Fairfield; v = 90-110 mph	*[Annex B of TIA-222-G-2005]*
	Greenwich; v = 93 mph	*[Appendix N of the 2016 CT Building Code]*
Load Cases:	Load Case 1; 93 mph wind speed w/ no ice plus gravity load – used in calculation of tower stresses and rotation.	*[Appendix N of the 2016 CT Building Code]*
	Load Case 2; 50 mph wind speed w/ 0.75" radial ice plus gravity load – used in calculation of tower stresses.	*[Annex B of TIA-222-G-2005]*

[1] The 2012 International Building Code as amended by the 2016 Connecticut State Building Code (CSBC).

Tower Capacity

Tower stresses were calculated utilizing the structural analysis software tnxTower. Allowable stresses were determined based on Table 4-8 of the TIA code.

- Calculated stresses were found to be within allowable limits. In Load Case 1, per tnxTower "Section Capacity Table", this tower was found to be at **41.1%** of its total capacity.

Tower Section	Elevation	Stress Ratio (percentage of capacity)	Result
Pole Shaft (L5)	1.50'-39.88'	41.1%	**PASS**

Foundation and Anchors

The existing foundation consists of a 9.0 ∅ x 28.0-ft long reinforced concrete caisson. The sub-grade conditions used in the analysis of the existing foundation were obtained from the aforementioned EEI design report; project no. 11030 dated August 21, 2002. The base of the tower is connected to the foundation by means of (30) 2.25"∅, ASTM A615-75 anchor bolts embedded approximately 7-ft into the concrete foundation structure.

- The tower base reactions developed from the governing Load Case 1 were used in the verification of the foundation and its anchors:

Location	Vector	Proposed Reactions
Base	Shear	50 kips
	Compression	99 kips
	Moment	5561 kip-ft

- The foundation was found to be within allowable limits.

Foundation	Design Limit	Proposed Loading	Result
Reinforced Concrete Caisson	Moment Capacity	52.6%	**PASS**
	Lateral Deflection	0.2 in.(1)	**PASS**

(1) Lateral deflection limited to 0.75 in under service load combination per TIA-222-G section 9.5.

- The flange bolts and plate were found to be within allowable limits.

Tower Component	Design Limit	Stress Ratio (percentage of capacity)	Result
Flange Bolts	Tension	43.6%	**PASS**
Flange Plate	Bending	36.5%	**PASS**

- The anchor bolts and base plate were found to be within allowable limits.

Tower Component	Design Limit	Stress Ratio (percentage of capacity)	Result
Anchor Bolts	Combined Axial and Bending	42.4%	**PASS**
Base Plate	Bending	31.8%	**PASS**

Conclusion

This analysis shows that the subject tower **is adequate** to support the proposed modified antenna configuration.

The analysis is based, in part, on the information provided to this office by AT&T Mobilty. If the existing conditions are different than the information in this report, Centek Engineering, Inc. must be contacted for resolution of any potential issues.

Please feel free to call with any questions or comments.

Respectfully Submitted by:

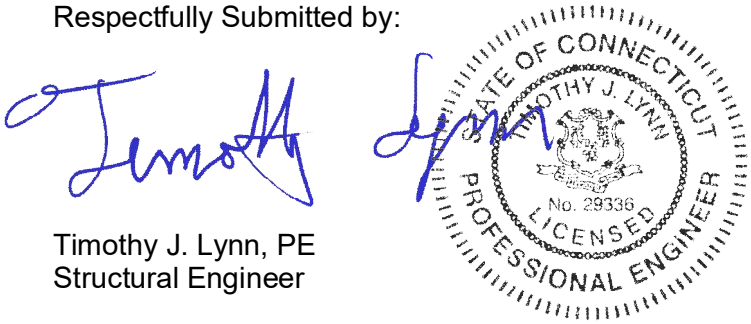

Timothy J. Lynn, PE
Structural Engineer

Standard Conditions for Furnishing of Professional Engineering Services on Existing Structures

All engineering services are performed on the basis that the information used is current and correct. This information may consist of, but is not necessarily limited to:

- Information supplied by the client regarding the structure itself, its foundations, the soil conditions, the antenna and feed line loading on the structure and its components, or other relevant information.
- Information from the field and/or drawings in the possession of Centek Engineering, Inc. or generated by field inspections or measurements of the structure.
- It is the responsibility of the client to ensure that the information provided to Centek Engineering, Inc. and used in the performance of our engineering services is correct and complete. In the absence of information to the contrary, we assume that all structures were constructed in accordance with the drawings and specifications and are in an un-corroded condition and have not deteriorated. It is therefore assumed that its capacity has not significantly changed from the “as new” condition.
- All services will be performed to the codes specified by the client, and we do not imply to meet any other codes or requirements unless explicitly agreed in writing. If wind and ice loads or other relevant parameters are to be different from the minimum values recommended by the codes, the client shall specify the exact requirement. In the absence of information to the contrary, all work will be performed in accordance with the latest revision of ANSI/ASCE10 & ANSI/EIA-222
- All services performed, results obtained, and recommendations made are in accordance with generally accepted engineering principles and practices. Centek Engineering, Inc. is not responsible for the conclusions, opinions and recommendations made by others based on the information we supply.

GENERAL DESCRIPTION OF STRUCTURAL ANALYSIS PROGRAM

tnxTower, is an integrated structural analysis and design software package for Designed specifically for the telecommunications industry, tnxTower, formerly ERITower, automates much of the tower analysis and design required by the TIA/EIA 222 Standard.

tnxTower Features:

- tnxTower can analyze and design 3- and 4-sided guyed towers, 3- and 4-sided self-supporting towers and either round or tapered ground mounted poles with or without guys.
- The program analyzes towers using the TIA-222-G (2005) standard or any of the previous TIA/EIA standards back to RS-222 (1959). Steel design is checked using the AISC ASD 9th Edition or the AISC LRFD specifications.
- Linear and non-linear (P-delta) analyses can be used in determining displacements and forces in the structure. Wind pressures and forces are automatically calculated.
- Extensive graphics plots include material take-off, shear-moment, leg compression, displacement, twist, feed line, guy anchor and stress plots.
- tnxTower contains unique features such as True Cable behavior, hog rod take-up, foundation stiffness and much more.

Section	Length (ft)	Number of Sides	Thickness (in)	Socket Length (ft)	Top Dia (in)	Bot Dia (in)	Grade	Weight (K)
1	32.50	18	0.3125		47.0000	53.4200		5.5
2	12.21	18	0.3750	6.00	53.4200	56.1500		2.7
3	46.50	18	0.4375	8.42	54.0585	62.9700	A572-65	12.8
4	47.33	18	0.5625	9.25	60.4813	69.6600		18.5
5	47.63	18	0.5625		66.7412	76.0000		20.5
								60.0

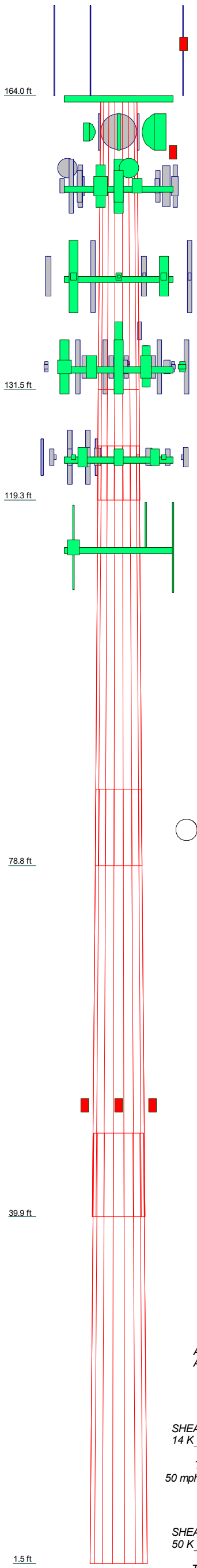

ALL REACTIONS ARE FACTORED

AXIAL 161 K

SHEAR 14 K — *MOMENT 1561 kip-ft*

TORQUE 3 kip-ft

50 mph WIND - 0.7500 in ICE

AXIAL 99 K

SHEAR 50 K — *MOMENT 5561 kip-ft*

TORQUE 15 kip-ft

REACTIONS - 93 mph WIND

DESIGNED APPURTENANCE LOADING

TYPE	ELEVATION	TYPE	ELEVATION
12' x 3" Dia Omni (Town Existing)	164	QS66512 (AT⌶ Existing)	134
8' x 3" Dia Omni (Town Existing)	164	P65-16-XLH-RR (AT⌶ Existing)	134
2'x2' Panel (Town Existing)	164	(2) LGP21401 TMA (AT⌶ Existing)	134
10' x 3" Dia Omni (Town Existing)	164	(2) LGP21401 TMA (AT⌶ Existing)	134
10' x 3" Dia Omni (Town Existing)	164	(2) LGP21401 TMA (AT⌶ Existing)	134
8' x 3" Dia Omni (Town Existing)	164	(2) TPX-070821 (AT⌶ Existing)	134
Camera (Town Existing)	164	(2) TPX-070821 (AT⌶ Existing)	134
Low Profile Platform (Town Existing)	164	(2) TPX-070821 (AT⌶ Existing)	134
4'x4" Pipe Mount (Town Existing)	160	RRUS-11 (AT⌶ Existing)	134
4'x4" Pipe Mount (Town Existing)	160	RRUS-11 (AT⌶ Existing)	134
4'x4" Pipe Mount (Town Existing)	160	RRUS-11 (AT⌶ Existing)	134
4 FT DISH (Town Existing)	160	RRUS-32 (AT⌶ Existing)	134
4 FT DISH (Town Existing)	160	RRUS-32 (AT⌶ Existing)	134
2 FT DISH (Town Existing)	160	RRUS-32 (AT⌶ Existing)	134
Horizon ODU (Clearwire Existing)	154	RRUS-32 (AT⌶ Existing)	134
Horizon ODU (Clearwire Existing)	154	RRUS-32 (AT⌶ Existing)	134
APXVSPP18-C-A20 (Sprint Existing)	154	RRUS-32 (AT⌶ Existing)	134
P40-16-XLPP-RR-A (Sprint Existing)	154	Low Profile Platform (AT⌶ Existing)	134
APXVSPP18-C-A20 (Sprint Existing)	154	P65-16-XLH-RR (AT⌶ Existing)	134
FD-RRH 4x45 1900 (Sprint Existing)	154	7770.00 (AT⌶ Existing)	134
FD-RRH 4x45 1900 (Sprint Existing)	154	QS66512 (AT⌶ Existing)	134
FD-RRH 4x45 1900 (Sprint Existing)	154	7770.00 (AT⌶ Existing)	134
FD-RRH 2x50 800 (Sprint Existing)	154	QS66512 (AT⌶ Existing)	134
FD-RRH 2x50 800 (Sprint Existing)	154	DB844H65E-XY (Verizon Existing)	124
FD-RRH 2x50 800 (Sprint Existing)	154	MG D3-800TX (Verizon Existing)	124
GPS (Sprint Existing)	154	SBNHH-1D65B (Verizon Existing)	124
APXVTM14 (Sprint Existing)	154	SBNHH-1D65B (Verizon Existing)	124
APXVTM14 (Sprint Existing)	154	DB844H65E-XY (Verizon Existing)	124
APXVTM14 (Sprint Existing)	154	DB844H65E-XY (Verizon Existing)	124
TD-RRH8x20-25 (Sprint Existing)	154	MG D3-800TX (Verizon Existing)	124
TD-RRH8x20-25 (Sprint Existing)	154	SBNHH-1D65B (Verizon Existing)	124
TD-RRH8x20-25 (Sprint Existing)	154	SBNHH-1D65B (Verizon Existing)	124
Low Profile Platform (Sprint Existing)	154	DB844H65E-XY (Verizon Existing)	124
LLPX310R (Clearwire Existing)	154	(2) FD9R6004/2C-3L Diplexer (Verizon Existing)	124
LLPX310R (Clearwire Existing)	154	(2) FD9R6004/2C-3L Diplexer (Verizon Existing)	124
LLPX310R (Clearwire Existing)	154	(2) FD9R6004/2C-3L Diplexer (Verizon Existing)	124
A-Ant-23G-2-C (Clearwire Existing)	154	RRH4x45/2x90-AWS (Verizon Existing)	124
A-Ant-23G-2-C (Clearwire Existing)	154	RRH4x45/2x90-AWS (Verizon Existing)	124
Remote Radio Head FD R6 RRH (Clearwire Existing)	151.5	RRH4x45/2x90-AWS (Verizon Existing)	124
Remote Radio Head FD R6 RRH (Clearwire Existing)	151.5	RRH4x30-B13 (Verizon Existing)	124
Valmont Uni-Tri Bracket (Sprint Existing)	151.5	RRH4x30-B13 (Verizon Existing)	124
Remote Radio Head FD R6 RRH (Clearwire Existing)	151.5	RRH4x30-B13 (Verizon Existing)	124
LNX-6515DS (T-Mobile Existing)	144	RRH2x60-PCS (Verizon Existing)	124
(3) TMA 10"x8"x3" (T-Mobile Existing)	144	RRH2x60-PCS (Verizon Existing)	124
(3) TMA 10"x8"x3" (T-Mobile Existing)	144	RRH2x60-PCS (Verizon Existing)	124
(3) TMA 10"x8"x3" (T-Mobile Existing)	144	RC2DC-3315-PF-48 (Verizon Existing)	124
Smart Bias T (T-Mobile Existing)	144	RC2DC-3315-PF-48 (Verizon Existing)	124
Smart Bias T (T-Mobile Existing)	144	Low Profile Platform (Verizon Existing)	124
Smart Bias T (T-Mobile Existing)	144	DB844H65E-XY (Verizon Existing)	124
Low Profile Platform (T-Mobile Existing)	144	MG D3-800TX (Verizon Existing)	124
LNX-6515DS (T-Mobile Existing)	144	SBNHH-1D65B (Verizon Existing)	124
APX16PV-16PVL-E (T-Mobile Existing)	144	SBNHH-1D65B (Verizon Existing)	124
LNX-6515DS (T-Mobile Existing)	144	DB844H65E-XY (Verizon Existing)	124
APX16PV-16PVL-E (T-Mobile Existing)	144	Low Profile Platform	114
APX16PV-16PVL-E (T-Mobile Existing)	144	531-70HD (Eversource Existing)	114
DC6-48-60-18-8F Surge Arrestor (AT⌶ Existing)	138	DB586-Y (Eversource Existing)	114
DC6-48-60-18-8F Surge Arrestor (AT⌶ Existing)	138	DB586-Y (Eversource Existing)	114
Valmont Uni-Tri Bracket (AT⌶ Existing)	138	ANT150F2 (Eversource Existing)	114
P65-16-XLH-RR (AT⌶ Existing)	134	Tower Top Amplifier (Eversource Existing)	114
7770.00 (AT⌶ Existing)	134	GPS	51.5
		GPS	51.5
		GPS	51.5

MATERIAL STRENGTH

GRADE	Fy	Fu	GRADE	Fy	Fu
A572-65	65 ksi	80 ksi			

TOWER DESIGN NOTES

1. Tower designed for Exposure C to the TIA-222-G Standard.
2. Tower designed for a 93 mph basic wind in accordance with the TIA-222-G Standard.
3. Tower is also designed for a 50 mph basic wind with 0.75 in ice. Ice is considered to increase in thickness with height.
4. Deflections are based upon a 60 mph wind.
5. Tower Structure Class III.
6. Topographic Category 1 with Crest Height of 0.00 ft
7. Tower members are "hot dipped" galvanized in accordance with ASTM A123 and ASTM A153 Standards.
8. Welds are fabricated with ER-70S-6 electrodes.
9. TOWER RATING: 41.1%

Centek Engineering Inc.
63-2 North Branford Rd.
Branford, CT 06405
Phone: (203) 488-0580
FAX: (203) 488-8587

Job: ***16071.84 - CT2102***			
Project: ***164' EEI Monopole - 5 Perryridge Rd., Greenwich, CT***			
Client: AT&T Mobilty	Drawn by: TJL	App'd:	
Code: TIA-222-G	Date: 12/08/16	Scale: NTS	
Path:		Dwg No. E-1	

Tower Input Data

There is a pole section.
This tower is designed using the TIA-222-G standard.
The following design criteria apply:

Basic wind speed of 93 mph.
Structure Class III.
Exposure Category C.
Topographic Category 1.
Crest Height 0.00 ft.
Nominal ice thickness of 0.7500 in.
Ice thickness is considered to increase with height.
Ice density of 56 pcf.
A wind speed of 50 mph is used in combination with ice.
Temperature drop of 50 °F.
Deflections calculated using a wind speed of 60 mph.
Tower members are "hot dipped" galvanized in accordance with ASTM A123 and ASTM A153 Standards..
Welds are fabricated with ER-70S-6 electrodes..
A non-linear (P-delta) analysis was used.
Pressures are calculated at each section.
Stress ratio used in pole design is 1.
Local bending stresses due to climbing loads, feed line supports, and appurtenance mounts are not considered.

Options

Consider Moments - Legs
Consider Moments - Horizontals
Consider Moments - Diagonals
Use Moment Magnification
√ Use Code Stress Ratios
√ Use Code Safety Factors - Guys
Escalate Ice
Always Use Max Kz
Use Special Wind Profile
Include Bolts In Member Capacity
Leg Bolts Are At Top Of Section
Secondary Horizontal Braces Leg
Use Diamond Inner Bracing (4 Sided)
SR Members Have Cut Ends
SR Members Are Concentric

Distribute Leg Loads As Uniform
Assume Legs Pinned
√ Assume Rigid Index Plate
Use Clear Spans For Wind Area
Use Clear Spans For KL/r
Retension Guys To Initial Tension
Bypass Mast Stability Checks
Use Azimuth Dish Coefficients
√ Project Wind Area of Appurt.
Autocalc Torque Arm Areas
Add IBC .6D+W Combination
√ Sort Capacity Reports By Component
Triangulate Diamond Inner Bracing
Treat Feed Line Bundles As Cylinder

Use ASCE 10 X-Brace Ly Rules
Calculate Redundant Bracing Forces
Ignore Redundant Members in FEA
SR Leg Bolts Resist Compression
All Leg Panels Have Same Allowable
Offset Girt At Foundation
√ Consider Feed Line Torque
Include Angle Block Shear Check
Use TIA-222-G Bracing Resist. Exemption
Use TIA-222-G Tension Splice Exemption

Poles

Include Shear-Torsion Interaction
Always Use Sub-Critical Flow
Use Top Mounted Sockets

Tapered Pole Section Geometry

Section	Elevation ft	Section Length ft	Splice Length ft	Number of Sides	Top Diameter in	Bottom Diameter in	Wall Thickness in	Bend Radius in	Pole Grade
L1	164.00-131.50	32.50	0.00	18	47.0000	53.4200	0.3125	1.2500	A572-65 (65 ksi)
L2	131.50-119.29	12.21	6.00	18	53.4200	56.1500	0.3750	1.5000	A572-65

Section	Elevation ft	Section Length ft	Splice Length ft	Number of Sides	Top Diameter in	Bottom Diameter in	Wall Thickness in	Bend Radius in	Pole Grade
									(65 ksi)
L3	119.29-78.79	46.50	8.42	18	54.0585	62.9700	0.4375	1.7500	A572-65 (65 ksi)
L4	78.79-39.88	47.33	9.25	18	60.4813	69.6600	0.5625	2.2500	A572-65 (65 ksi)
L5	39.88-1.50	47.63		18	66.7412	76.0000	0.5625	2.2500	A572-65 (65 ksi)

Tapered Pole Properties

Section	Tip Dia. in	Area in^2	I in^4	r in	C in	I/C in^3	J in^4	It/Q in^2	w in	w/t
L1	47.7251	46.3082	12752.5270	16.5741	23.8760	534.1149	25521.8341	23.1585	7.7220	24.71
	54.2441	52.6760	18769.9004	18.8532	27.1374	691.6627	37564.4987	26.3430	8.8519	28.326
L2	54.2441	63.1368	22444.4518	18.8310	27.1374	827.0684	44918.4365	31.5744	8.7419	23.312
	57.0162	66.3862	26091.2194	19.8001	28.5242	914.7047	52216.7704	33.1994	9.2224	24.593
L3	56.0600	74.4594	27047.4669	19.0354	27.4617	984.9157	54130.5236	37.2368	8.7443	19.987
	63.9414	86.8342	42898.2727	22.1990	31.9888	1341.0421	85852.9920	43.4253	10.3127	23.572
L4	63.0724	106.9776	48524.0652	21.2712	30.7245	1579.3269	97111.9796	53.4990	9.6547	17.164
	70.7346	123.3649	74413.8720	24.5296	35.3873	2102.8424	148925.6597	61.6942	11.2702	20.036
L5	69.5966	118.1537	65376.3617	23.4934	33.9045	1928.2498	130838.7474	59.0881	10.7564	19.123
	77.1724	134.6842	96834.1984	26.7803	38.6080	2508.1382	193795.8137	67.3549	12.3860	22.02

Tower Elevation ft	Gusset Area (per face) ft^2	Gusset Thickness in	Gusset Grade	Adjust. Factor A_f	Adjust. Factor A_r	Weight Mult.	Double Angle Stitch Bolt Spacing Diagonals in	Double Angle Stitch Bolt Spacing Horizontals in	Double Angle Stitch Bolt Spacing Redundants in
L1 164.00-131.50				1	1	1			
L2 131.50-119.29				1	1	1			
L3 119.29-78.79				1	1	1			
L4 78.79-39.88				1	1	1			
L5 39.88-1.50				1	1	1			

Feed Line/Linear Appurtenances - Entered As Round Or Flat

Description	Sector	Component Type	Placement ft	Total Number	Number Per Row	Start/End Position	Width or Diameter in	Perimeter in	Weight plf
7/8	B	Surface Ar (CaAa)	51.50 - 4.50	3	3	0.000 0.000	1.1100		0.54
1 5/8 (T-Mobile - Existing)	B	Surface Ar (CaAa)	144.00 - 7.50	6	6	0.000 0.000	1.9800		1.04

Feed Line/Linear Appurtenances - Entered As Area

Description	Face or Leg	Allow Shield	Component Type	Placement ft	Total Number		C_AA_A ft^2/ft	Weight plf
1/2	A	No	Inside Pole	164.00 - 4.50	6	No Ice	0.00	0.25
(Town Existing)						1/2" Ice	0.00	0.25
						1" Ice	0.00	0.25
5/8	A	No	Inside Pole	164.00 - 4.50	1	No Ice	0.00	0.40
(Town Existing)						1/2" Ice	0.00	0.40
						1" Ice	0.00	0.40
7/8	A	No	Inside Pole	164.00 - 4.50	3	No Ice	0.00	0.54
(Town Existing)						1/2" Ice	0.00	0.54
						1" Ice	0.00	0.54
1 1/4	A	No	Inside Pole	164.00 - 4.50	5	No Ice	0.00	0.66
(Town Existing)						1/2" Ice	0.00	0.66
						1" Ice	0.00	0.66
1/2	B	No	Inside Pole	154.00 - 7.50	1	No Ice	0.00	0.25
(Sprint Existing)						1/2" Ice	0.00	0.25
						1" Ice	0.00	0.25
2" Rigid Conduit	B	No	Inside Pole	154.00 - 7.50	2	No Ice	0.00	2.80
(Clearwire Existing)						1/2" Ice	0.00	2.80
						1" Ice	0.00	2.80
LDF4.5-50 (5/8 FOAM)	B	No	Inside Pole	154.00 - 7.50	2	No Ice	0.00	0.15
(Clearwire Existing)						1/2" Ice	0.00	0.15
						1" Ice	0.00	0.15
1 5/8	B	No	Inside Pole	144.00 - 4.50	12	No Ice	0.00	1.04
(T-Mobile Existing)						1/2" Ice	0.00	1.04
						1" Ice	0.00	1.04
1 5/8	A	No	Inside Pole	134.00 - 11.50	12	No Ice	0.00	1.04
(AT&T Existing)						1/2" Ice	0.00	1.04
						1" Ice	0.00	1.04
1 5/8	C	No	Inside Pole	124.00 - 7.50	6	No Ice	0.00	1.04
(Verizon Existing)						1/2" Ice	0.00	1.04
						1" Ice	0.00	1.04
RG6-Fiber	A	No	Inside Pole	134.00 - 11.50	2	No Ice	0.00	0.00
(AT&T Existing)						1/2" Ice	0.00	0.00
						1" Ice	0.00	0.00
#8 AWG Copper WIre	A	No	Inside Pole	134.00 - 11.50	4	No Ice	0.00	0.00
(AT&T Existing)						1/2" Ice	0.00	0.00
						1" Ice	0.00	0.00
HYBRIFLEX 1-5/8"	B	No	Inside Pole	154.00 - 7.50	6	No Ice	0.00	1.90
(Sprint Existing)						1/2" Ice	0.00	1.90
						1" Ice	0.00	1.90
HYBRIFLEX 1-5/8"	C	No	Inside Pole	124.00 - 7.50	2	No Ice	0.00	1.90
(Verizon Existing)						1/2" Ice	0.00	1.90
						1" Ice	0.00	1.90
7/8	C	No	Inside Pole	114.00 - 1.50	2	No Ice	0.00	0.54
(Eversource Existing)						1/2" Ice	0.00	0.54
						1" Ice	0.00	0.54
1 5/8	C	No	Inside Pole	114.00 - 1.50	2	No Ice	0.00	1.04
(Eversource Existing)						1/2" Ice	0.00	1.04
						1" Ice	0.00	1.04
1/2	C	No	Inside Pole	114.00 - 1.50	1	No Ice	0.00	0.25
(Eversource Existing)						1/2" Ice	0.00	0.25
						1" Ice	0.00	0.25

Feed Line/Linear Appurtenances Section Areas

Tower Section	Tower Elevation ft	Face	A_R ft^2	A_F ft^2	C_AA_A In Face ft^2	C_AA_A Out Face ft^2	Weight K
L1	164.00-131.50	A	0.000	0.000	0.000	0.000	0.25
		B	0.000	0.000	14.850	0.000	0.63
		C	0.000	0.000	0.000	0.000	0.00
L2	131.50-119.29	A	0.000	0.000	0.000	0.000	0.24
		B	0.000	0.000	14.505	0.000	0.44
		C	0.000	0.000	0.000	0.000	0.05
L3	119.29-78.79	A	0.000	0.000	0.000	0.000	0.78
		B	0.000	0.000	48.114	0.000	1.47
		C	0.000	0.000	0.000	0.000	0.53
L4	78.79-39.88	A	0.000	0.000	0.000	0.000	0.75
		B	0.000	0.000	50.095	0.000	1.43
		C	0.000	0.000	0.000	0.000	0.52
L5	39.88-1.50	A	0.000	0.000	0.000	0.000	0.60
		B	0.000	0.000	50.249	0.000	1.27
		C	0.000	0.000	0.000	0.000	0.46

Feed Line/Linear Appurtenances Section Areas - With Ice

Tower Section	Tower Elevation ft	Face or Leg	Ice Thickness in	A_R ft^2	A_F ft^2	C_AA_A In Face ft^2	C_AA_A Out Face ft^2	Weight K
L1	164.00-131.50	A	2.178	0.000	0.000	0.000	0.000	0.25
		B		0.000	0.000	25.368	0.000	1.00
		C		0.000	0.000	0.000	0.000	0.00
L2	131.50-119.29	A	2.143	0.000	0.000	0.000	0.000	0.24
		B		0.000	0.000	24.672	0.000	0.80
		C		0.000	0.000	0.000	0.000	0.05
L3	119.29-78.79	A	2.092	0.000	0.000	0.000	0.000	0.78
		B		0.000	0.000	81.837	0.000	2.64
		C		0.000	0.000	0.000	0.000	0.53
L4	78.79-39.88	A	1.988	0.000	0.000	0.000	0.000	0.75
		B		0.000	0.000	89.050	0.000	2.67
		C		0.000	0.000	0.000	0.000	0.52
L5	39.88-1.50	A	1.793	0.000	0.000	0.000	0.000	0.60
		B		0.000	0.000	96.491	0.000	2.52
		C		0.000	0.000	0.000	0.000	0.46

Feed Line Center of Pressure

Section	Elevation ft	CP_X in	CP_Z in	CP_X Ice in	CP_Z Ice in
L1	164.00-131.50	0.5694	-0.3287	0.8034	-0.4638
L2	131.50-119.29	1.2535	-0.7237	1.5926	-0.9195
L3	119.29-78.79	1.2692	-0.7328	1.6369	-0.9450
L4	78.79-39.88	1.3810	-0.7973	1.8373	-1.0608
L5	39.88-1.50	1.4036	-0.8104	1.9652	-1.1346

Shielding Factor Ka

Tower Section	Feed Line Record No.	Description	Feed Line Segment Elev.	K_a No Ice	K_a Ice
L1	21	1 5/8	131.50 - 144.00	1.0000	1.0000
L2	21	1 5/8	119.29 - 131.50	1.0000	1.0000
L3	15	7/8	78.79 - 51.50	1.0000	1.0000
L3	21	1 5/8	78.79 - 119.29	1.0000	1.0000
L4	15	7/8	39.88 - 51.50	1.0000	1.0000
L4	21	1 5/8	39.88 - 78.79	1.0000	1.0000

Discrete Tower Loads

Description	Face or Leg	Offset Type	Offsets: Horz Lateral Vert ft ft ft	Azimuth Adjustment °	Placement ft		C_AA_A Front ft^2	C_AA_A Side ft^2	Weight K
4'x4" Pipe Mount	A	From Face	0.50	0.0000	160.00	No Ice	1.10	1.10	0.04
(Town Existing)			0.00			1/2" Ice	1.58	1.58	0.06
			0.00			1" Ice	1.84	1.84	0.07
4'x4" Pipe Mount	B	From Face	0.50	0.0000	160.00	No Ice	1.10	1.10	0.04
(Town Existing)			0.00			1/2" Ice	1.58	1.58	0.06
			0.00			1" Ice	1.84	1.84	0.07
4'x4" Pipe Mount	C	From Face	0.50	0.0000	160.00	No Ice	1.10	1.10	0.04
(Town Existing)			0.00			1/2" Ice	1.58	1.58	0.06
			0.00			1" Ice	1.84	1.84	0.07
12' x 3" Dia Omni	A	From Face	4.00	0.0000	164.00	No Ice	3.60	3.60	0.04
(Town Existing)			-4.00			1/2" Ice	4.83	4.83	0.06
			5.00			1" Ice	6.08	6.08	0.09
8' x 3" Dia Omni	A	From Face	4.00	0.0000	164.00	No Ice	2.40	2.40	0.03
(Town Existing)			4.00			1/2" Ice	3.19	3.19	0.04
			5.00			1" Ice	3.67	3.67	0.07
2'x2' Panel	B	From Face	4.00	0.0000	164.00	No Ice	4.80	0.72	0.02
(Town Existing)			4.00			1/2" Ice	5.07	0.87	0.05
			5.00			1" Ice	5.35	1.03	0.07
10' x 3" Dia Omni	B	From Face	4.00	0.0000	164.00	No Ice	3.00	3.00	0.03
(Town Existing)			4.00			1/2" Ice	4.03	4.03	0.05
			5.00			1" Ice	5.03	5.03	0.08
10' x 3" Dia Omni	A	From Face	4.00	0.0000	164.00	No Ice	3.00	3.00	0.03
(Town Existing)			-4.00			1/2" Ice	4.03	4.03	0.05
			5.00			1" Ice	5.03	5.03	0.08
8' x 3" Dia Omni	A	From Face	4.00	0.0000	164.00	No Ice	2.40	2.40	0.03
(Town Existing)			4.00			1/2" Ice	3.19	3.19	0.04
			5.00			1" Ice	3.67	3.67	0.07
Camera	C	From Face	4.00	0.0000	164.00	No Ice	3.00	3.00	0.10
(Town Existing)			-4.00			1/2" Ice	4.00	4.00	0.15
			2.00			1" Ice	5.00	5.00	0.20
Low Profile Platform	C	None		0.0000	164.00	No Ice	15.70	15.70	1.30
(Town Existing)						1/2" Ice	20.10	20.10	1.76
						1" Ice	24.50	24.50	2.23
LLPX310R	A	From Face	3.00	0.0000	154.00	No Ice	4.30	1.95	0.03

Description	Face or Leg	Offset Type	Offsets: Horz Lateral Vert ft ft ft	Azimuth Adjustment °	Placement ft		C_AA_A Front ft^2	C_AA_A Side ft^2	Weight K
(Clearwire Existing)			0.00			1/2" Ice	4.60	2.21	0.05
			0.00			1" Ice	4.90	2.49	0.08
LLPX310R	B	From Face	3.00	0.0000	154.00	No Ice	4.30	1.95	0.03
(Clearwire Existing)			0.00			1/2" Ice	4.60	2.21	0.05
			0.00			1" Ice	4.90	2.49	0.08
LLPX310R	C	From Face	3.00	0.0000	154.00	No Ice	4.30	1.95	0.03
(Clearwire Existing)			0.00			1/2" Ice	4.60	2.21	0.05
			0.00			1" Ice	4.90	2.49	0.08
Remote Radio Head FD R6	A	From Face	3.00	0.0000	151.50	No Ice	1.80	0.78	0.03
RRH			0.00			1/2" Ice	1.99	0.92	0.04
(Clearwire Existing)			0.00			1" Ice	2.18	1.07	0.06
Remote Radio Head FD R6	B	From Face	3.00	0.0000	151.50	No Ice	1.80	0.78	0.03
RRH			0.00			1/2" Ice	1.99	0.92	0.04
(Clearwire Existing)			0.00			1" Ice	2.18	1.07	0.06
Remote Radio Head FD R6	C	From Face	3.00	0.0000	151.50	No Ice	1.80	0.78	0.03
RRH			0.00			1/2" Ice	1.99	0.92	0.04
(Clearwire Existing)			0.00			1" Ice	2.18	1.07	0.06
Horizon ODU	A	None		0.0000	154.00	No Ice	0.68	0.16	0.00
(Clearwire Existing)						1/2" Ice	0.78	0.22	0.00
						1" Ice	0.89	0.29	0.01
Horizon ODU	C	None		0.0000	154.00	No Ice	0.68	0.16	0.00
(Clearwire Existing)						1/2" Ice	0.78	0.22	0.00
						1" Ice	0.89	0.29	0.01
APXVSPP18-C-A20	A	From Face	4.00	0.0000	154.00	No Ice	8.02	5.28	0.06
(Sprint Existing)			0.00			1/2" Ice	8.48	5.74	0.11
			0.00			1" Ice	8.94	6.20	0.16
P40-16-XLPP-RR-A	B	From Face	4.00	0.0000	154.00	No Ice	9.07	3.52	0.05
(Sprint Existing)			0.00			1/2" Ice	9.47	3.87	0.11
			0.00			1" Ice	9.87	4.22	0.16
APXVSPP18-C-A20	C	From Face	4.00	0.0000	154.00	No Ice	8.02	5.28	0.06
(Sprint Existing)			0.00			1/2" Ice	8.48	5.74	0.11
			0.00			1" Ice	8.94	6.20	0.16
FD-RRH 4x45 1900	A	From Face	4.00	0.0000	154.00	No Ice	2.32	2.38	0.06
(Sprint Existing)			2.00			1/2" Ice	2.52	2.59	0.08
			0.00			1" Ice	2.74	2.80	0.11
FD-RRH 4x45 1900	B	From Face	4.00	0.0000	154.00	No Ice	2.32	2.38	0.06
(Sprint Existing)			2.00			1/2" Ice	2.52	2.59	0.08
			0.00			1" Ice	2.74	2.80	0.11
FD-RRH 4x45 1900	C	From Face	4.00	0.0000	154.00	No Ice	2.32	2.38	0.06
(Sprint Existing)			2.00			1/2" Ice	2.52	2.59	0.08
			0.00			1" Ice	2.74	2.80	0.11
FD-RRH 2x50 800	A	From Face	4.00	0.0000	154.00	No Ice	2.06	1.93	0.06
(Sprint Existing)			-2.00			1/2" Ice	2.24	2.11	0.09
			0.00			1" Ice	2.43	2.29	0.11
FD-RRH 2x50 800	B	From Face	4.00	0.0000	154.00	No Ice	2.06	1.93	0.06
(Sprint Existing)			-2.00			1/2" Ice	2.24	2.11	0.09
			0.00			1" Ice	2.43	2.29	0.11
FD-RRH 2x50 800	C	From Face	4.00	0.0000	154.00	No Ice	2.06	1.93	0.06
(Sprint Existing)			-2.00			1/2" Ice	2.24	2.11	0.09
			0.00			1" Ice	2.43	2.29	0.11
GPS	C	From Face	4.00	0.0000	154.00	No Ice	1.00	1.00	0.01
(Sprint Existing)			-6.00			1/2" Ice	1.50	1.50	0.01
			3.00			1" Ice	2.00	2.00	0.02
APXVTM14	A	From Face	4.00	0.0000	154.00	No Ice	6.34	3.61	0.06
(Sprint Existing)			2.00			1/2" Ice	6.72	3.97	0.10
			0.00			1" Ice	7.10	4.33	0.14
APXVTM14	B	From Face	4.00	0.0000	154.00	No Ice	6.34	3.61	0.06

Description	Face or Leg	Offset Type	Offsets: Horz Lateral Vert ft ft ft	Azimuth Adjustment °	Placement ft		C_AA_A Front ft^2	C_AA_A Side ft^2	Weight K
(Sprint Existing)			2.00			1/2" Ice	6.72	3.97	0.10
			0.00			1" Ice	7.10	4.33	0.14
APXVTM14	C	From Face	4.00	0.0000	154.00	No Ice	6.34	3.61	0.06
(Sprint Existing)			2.00			1/2" Ice	6.72	3.97	0.10
			0.00			1" Ice	7.10	4.33	0.14
TD-RRH8x20-25	A	From Face	4.00	0.0000	154.00	No Ice	4.05	1.53	0.07
(Sprint Existing)			2.00			1/2" Ice	4.30	1.71	0.10
			0.00			1" Ice	4.56	1.90	0.13
TD-RRH8x20-25	B	From Face	4.00	0.0000	154.00	No Ice	4.05	1.53	0.07
(Sprint Existing)			2.00			1/2" Ice	4.30	1.71	0.10
			0.00			1" Ice	4.56	1.90	0.13
TD-RRH8x20-25	C	From Face	4.00	0.0000	154.00	No Ice	4.05	1.53	0.07
(Sprint Existing)			2.00			1/2" Ice	4.30	1.71	0.10
			0.00			1" Ice	4.56	1.90	0.13
Valmont Uni-Tri Bracket	A	None		0.0000	151.50	No Ice	1.75	1.75	0.29
(Sprint Existing)						1/2" Ice	1.94	1.94	0.31
						1" Ice	2.13	2.13	0.32
Low Profile Platform	C	None		0.0000	154.00	No Ice	15.70	15.70	1.30
(Sprint Existing)						1/2" Ice	20.10	20.10	1.76
						1" Ice	24.50	24.50	2.23
APX16PV-16PVL-E	A	From Face	4.00	0.0000	144.00	No Ice	6.04	1.98	0.05
(T-Mobile Existing)			-5.00			1/2" Ice	6.39	2.30	0.08
			0.00			1" Ice	6.76	2.63	0.12
LNX-6515DS	A	From Face	4.00	0.0000	144.00	No Ice	11.45	7.70	0.06
(T-Mobile Existing)			5.00			1/2" Ice	12.06	8.29	0.12
			0.00			1" Ice	12.69	8.89	0.19
APX16PV-16PVL-E	B	From Face	4.00	0.0000	144.00	No Ice	6.04	1.98	0.05
(T-Mobile Existing)			-5.00			1/2" Ice	6.39	2.30	0.08
			0.00			1" Ice	6.76	2.63	0.12
LNX-6515DS	B	From Face	4.00	0.0000	144.00	No Ice	11.45	7.70	0.06
(T-Mobile Existing)			5.00			1/2" Ice	12.06	8.29	0.12
			0.00			1" Ice	12.69	8.89	0.19
APX16PV-16PVL-E	C	From Face	4.00	0.0000	144.00	No Ice	6.04	1.98	0.05
(T-Mobile Existing)			-5.00			1/2" Ice	6.39	2.30	0.08
			0.00			1" Ice	6.76	2.63	0.12
LNX-6515DS	C	From Face	4.00	0.0000	144.00	No Ice	11.45	7.70	0.06
(T-Mobile Existing)			5.00			1/2" Ice	12.06	8.29	0.12
			0.00			1" Ice	12.69	8.89	0.19
(3) TMA 10"x8"x3"	A	From Face	4.00	0.0000	144.00	No Ice	0.67	0.26	0.02
(T-Mobile Existing)			0.00			1/2" Ice	0.77	0.33	0.02
			0.00			1" Ice	0.88	0.41	0.03
(3) TMA 10"x8"x3"	B	From Face	4.00	0.0000	144.00	No Ice	0.67	0.26	0.02
(T-Mobile Existing)			0.00			1/2" Ice	0.77	0.33	0.02
			0.00			1" Ice	0.88	0.41	0.03
(3) TMA 10"x8"x3"	C	From Face	4.00	0.0000	144.00	No Ice	0.67	0.26	0.02
(T-Mobile Existing)			0.00			1/2" Ice	0.77	0.33	0.02
			0.00			1" Ice	0.88	0.41	0.03
Smart Bias T	A	From Face	4.00	0.0000	144.00	No Ice	0.13	0.07	0.00
(T-Mobile Existing)			0.00			1/2" Ice	0.18	0.10	0.00
			0.00			1" Ice	0.24	0.15	0.01
Smart Bias T	B	From Face	4.00	0.0000	144.00	No Ice	0.13	0.07	0.00
(T-Mobile Existing)			0.00			1/2" Ice	0.18	0.10	0.00
			0.00			1" Ice	0.24	0.15	0.01
Smart Bias T	C	From Face	4.00	0.0000	144.00	No Ice	0.13	0.07	0.00
(T-Mobile Existing)			0.00			1/2" Ice	0.18	0.10	0.00
			0.00			1" Ice	0.24	0.15	0.01
Low Profile Platform	C	None		0.0000	144.00	No Ice	15.70	15.70	1.30

Description	Face or Leg	Offset Type	Offsets: Horz Lateral Vert ft ft ft	Azimuth Adjustment °	Placement ft		C_AA_A Front ft^2	C_AA_A Side ft^2	Weight K
(T-Mobile Existing)						1/2" Ice	20.10	20.10	1.76
						1" Ice	24.50	24.50	2.23
DC6-48-60-18-8F Surge	B	From Face	0.50	0.0000	138.00	No Ice	1.91	1.91	0.02
Arrestor			0.00			1/2" Ice	2.10	2.10	0.04
(AT&T Existing)			0.00			1" Ice	2.29	2.29	0.06
DC6-48-60-18-8F Surge	C	From Face	0.50	0.0000	138.00	No Ice	1.91	1.91	0.02
Arrestor			0.00			1/2" Ice	2.10	2.10	0.04
(AT&T Existing)			0.00			1" Ice	2.29	2.29	0.06
Valmont Uni-Tri Bracket	C	None		0.0000	138.00	No Ice	1.75	1.75	0.29
(AT&T Existing)						1/2" Ice	1.94	1.94	0.31
						1" Ice	2.13	2.13	0.32
7770.00	A	From Face	3.00	0.0000	134.00	No Ice	5.51	2.93	0.04
(AT&T Existing)			-3.00			1/2" Ice	5.87	3.27	0.07
			0.00			1" Ice	6.23	3.63	0.11
QS66512	A	From Face	3.00	0.0000	134.00	No Ice	8.13	6.80	0.11
(AT&T Existing)			0.00			1/2" Ice	8.59	7.27	0.17
			0.00			1" Ice	9.05	7.72	0.23
P65-16-XLH-RR	A	From Face	3.00	0.0000	134.00	No Ice	8.13	4.70	0.06
(AT&T Existing)			6.00			1/2" Ice	8.59	5.15	0.11
			0.00			1" Ice	9.05	5.60	0.16
7770.00	B	From Face	3.00	0.0000	134.00	No Ice	5.51	2.93	0.04
(AT&T Existing)			-3.00			1/2" Ice	5.87	3.27	0.07
			0.00			1" Ice	6.23	3.63	0.11
QS66512	B	From Face	3.00	0.0000	134.00	No Ice	8.13	6.80	0.11
(AT&T Existing)			0.00			1/2" Ice	8.59	7.27	0.17
			0.00			1" Ice	9.05	7.72	0.23
P65-16-XLH-RR	B	From Face	3.00	0.0000	134.00	No Ice	8.13	4.70	0.06
(AT&T Existing)			6.00			1/2" Ice	8.59	5.15	0.11
			0.00			1" Ice	9.05	5.60	0.16
7770.00	C	From Face	3.00	0.0000	134.00	No Ice	5.51	2.93	0.04
(AT&T Existing)			-3.00			1/2" Ice	5.87	3.27	0.07
			0.00			1" Ice	6.23	3.63	0.11
QS66512	C	From Face	3.00	0.0000	134.00	No Ice	8.13	6.80	0.11
(AT&T Existing)			0.00			1/2" Ice	8.59	7.27	0.17
			0.00			1" Ice	9.05	7.72	0.23
P65-16-XLH-RR	C	From Face	3.00	0.0000	134.00	No Ice	8.13	4.70	0.06
(AT&T Existing)			6.00			1/2" Ice	8.59	5.15	0.11
			0.00			1" Ice	9.05	5.60	0.16
(2) LGP21401 TMA	A	From Face	3.00	0.0000	134.00	No Ice	0.82	0.35	0.02
(AT&T Existing)			-2.00			1/2" Ice	0.94	0.44	0.02
			0.00			1" Ice	1.06	0.54	0.03
(2) LGP21401 TMA	B	From Face	3.00	0.0000	134.00	No Ice	0.82	0.35	0.02
(AT&T Existing)			-2.00			1/2" Ice	0.94	0.44	0.02
			0.00			1" Ice	1.06	0.54	0.03
(2) LGP21401 TMA	C	From Face	3.00	0.0000	134.00	No Ice	0.82	0.35	0.02
(AT&T Existing)			-2.00			1/2" Ice	0.94	0.44	0.02
			0.00			1" Ice	1.06	0.54	0.03
(2) TPX-070821	A	From Face	3.00	0.0000	134.00	No Ice	0.47	0.10	0.01
(AT&T Existing)			-2.00			1/2" Ice	0.56	0.15	0.01
			0.00			1" Ice	0.66	0.20	0.02
(2) TPX-070821	B	From Face	3.00	0.0000	134.00	No Ice	0.47	0.10	0.01
(AT&T Existing)			-2.00			1/2" Ice	0.56	0.15	0.01
			0.00			1" Ice	0.66	0.20	0.02
(2) TPX-070821	C	From Face	3.00	0.0000	134.00	No Ice	0.47	0.10	0.01
(AT&T Existing)			-2.00			1/2" Ice	0.56	0.15	0.01
			0.00			1" Ice	0.66	0.20	0.02
RRUS-11	A	From Face	0.50	0.0000	134.00	No Ice	2.57	1.07	0.05

Description	Face or Leg	Offset Type	Offsets: Horz Lateral Vert ft ft ft	Azimuth Adjustment °	Placement ft		C_AA_A Front ft^2	C_AA_A Side ft^2	Weight K
(AT&T Existing)			6.00			1/2" Ice	2.76	1.21	0.07
			0.00			1" Ice	2.97	1.36	0.09
RRUS-11	B	From Face	0.50	0.0000	134.00	No Ice	2.57	1.07	0.05
(AT&T Existing)			6.00			1/2" Ice	2.76	1.21	0.07
			0.00			1" Ice	2.97	1.36	0.09
RRUS-11	C	From Face	0.50	0.0000	134.00	No Ice	2.57	1.07	0.05
(AT&T Existing)			6.00			1/2" Ice	2.76	1.21	0.07
			0.00			1" Ice	2.97	1.36	0.09
RRUS-32	A	From Face	0.50	0.0000	134.00	No Ice	3.31	2.42	0.08
(AT&T Existing)			-3.00			1/2" Ice	3.56	2.64	0.10
			0.00			1" Ice	3.81	2.86	0.14
RRUS-32	B	From Face	0.50	0.0000	134.00	No Ice	3.31	2.42	0.08
(AT&T Existing)			-3.00			1/2" Ice	3.56	2.64	0.10
			0.00			1" Ice	3.81	2.86	0.14
RRUS-32	C	From Face	0.50	0.0000	134.00	No Ice	3.31	2.42	0.08
(AT&T Existing)			-3.00			1/2" Ice	3.56	2.64	0.10
			0.00			1" Ice	3.81	2.86	0.14
RRUS-32	A	From Face	0.50	0.0000	134.00	No Ice	3.31	2.42	0.08
(AT&T Existing)			3.00			1/2" Ice	3.56	2.64	0.10
			0.00			1" Ice	3.81	2.86	0.14
RRUS-32	B	From Face	0.50	0.0000	134.00	No Ice	3.31	2.42	0.08
(AT&T Existing)			3.00			1/2" Ice	3.56	2.64	0.10
			0.00			1" Ice	3.81	2.86	0.14
RRUS-32	C	From Face	0.50	0.0000	134.00	No Ice	3.31	2.42	0.08
(AT&T Existing)			3.00			1/2" Ice	3.56	2.64	0.10
			0.00			1" Ice	3.81	2.86	0.14
Low Profile Platform	C	None		0.0000	134.00	No Ice	15.70	15.70	1.30
(AT&T Existing)						1/2" Ice	20.10	20.10	1.76
						1" Ice	24.50	24.50	2.23
DB844H65E-XY	A	From Face	4.00	0.0000	124.00	No Ice	2.87	3.98	0.01
(Verizon Existing)			-6.00			1/2" Ice	3.18	4.29	0.04
			0.00			1" Ice	3.49	4.61	0.07
MG D3-800TX	A	From Face	4.00	0.0000	124.00	No Ice	3.45	2.22	0.00
(Verizon Existing)			-4.00			1/2" Ice	3.80	2.55	0.02
			0.00			1" Ice	4.16	2.89	0.04
SBNHH-1D65B	A	From Face	4.00	0.0000	124.00	No Ice	8.08	5.34	0.04
(Verizon Existing)			0.00			1/2" Ice	8.53	5.79	0.09
			0.00			1" Ice	9.00	6.26	0.15
SBNHH-1D65B	A	From Face	4.00	0.0000	124.00	No Ice	8.08	5.34	0.04
(Verizon Existing)			4.00			1/2" Ice	8.53	5.79	0.09
			0.00			1" Ice	9.00	6.26	0.15
DB844H65E-XY	A	From Face	4.00	0.0000	124.00	No Ice	2.87	3.98	0.01
(Verizon Existing)			6.00			1/2" Ice	3.18	4.29	0.04
			0.00			1" Ice	3.49	4.61	0.07
DB844H65E-XY	A	From Face	4.00	0.0000	124.00	No Ice	2.87	3.98	0.01
(Verizon Existing)			-6.00			1/2" Ice	3.18	4.29	0.04
			0.00			1" Ice	3.49	4.61	0.07
MG D3-800TX	A	From Face	4.00	0.0000	124.00	No Ice	3.45	2.22	0.00
(Verizon Existing)			-4.00			1/2" Ice	3.80	2.55	0.02
			0.00			1" Ice	4.16	2.89	0.04
SBNHH-1D65B	A	From Face	4.00	0.0000	124.00	No Ice	8.08	5.34	0.04
(Verizon Existing)			0.00			1/2" Ice	8.53	5.79	0.09
			0.00			1" Ice	9.00	6.26	0.15
SBNHH-1D65B	A	From Face	4.00	0.0000	124.00	No Ice	8.08	5.34	0.04
(Verizon Existing)			4.00			1/2" Ice	8.53	5.79	0.09
			0.00			1" Ice	9.00	6.26	0.15
DB844H65E-XY	A	From Face	4.00	0.0000	124.00	No Ice	2.87	3.98	0.01

Description	Face or Leg	Offset Type	Offsets: Horz Lateral Vert ft ft ft	Azimuth Adjustment °	Placement ft		C_AA_A Front ft^2	C_AA_A Side ft^2	Weight K
(Verizon Existing)			6.00			1/2" Ice	3.18	4.29	0.04
			0.00			1" Ice	3.49	4.61	0.07
DB844H65E-XY	A	From Face	4.00	0.0000	124.00	No Ice	2.87	3.98	0.01
(Verizon Existing)			-6.00			1/2" Ice	3.18	4.29	0.04
			0.00			1" Ice	3.49	4.61	0.07
MG D3-800TX	A	From Face	4.00	0.0000	124.00	No Ice	3.45	2.22	0.00
(Verizon Existing)			-4.00			1/2" Ice	3.80	2.55	0.02
			0.00			1" Ice	4.16	2.89	0.04
SBNHH-1D65B	A	From Face	4.00	0.0000	124.00	No Ice	8.08	5.34	0.04
(Verizon Existing)			0.00			1/2" Ice	8.53	5.79	0.09
			0.00			1" Ice	9.00	6.26	0.15
SBNHH-1D65B	A	From Face	4.00	0.0000	124.00	No Ice	8.08	5.34	0.04
(Verizon Existing)			4.00			1/2" Ice	8.53	5.79	0.09
			0.00			1" Ice	9.00	6.26	0.15
DB844H65E-XY	A	From Face	4.00	0.0000	124.00	No Ice	2.87	3.98	0.01
(Verizon Existing)			6.00			1/2" Ice	3.18	4.29	0.04
			0.00			1" Ice	3.49	4.61	0.07
(2) FD9R6004/2C-3L	B	From Face	3.00	0.0000	124.00	No Ice	0.31	0.08	0.00
Diplexer			0.00			1/2" Ice	0.39	0.12	0.01
(Verizon Existing)			0.00			1" Ice	0.47	0.17	0.01
(2) FD9R6004/2C-3L	C	From Face	3.00	0.0000	124.00	No Ice	0.31	0.08	0.00
Diplexer			0.00			1/2" Ice	0.39	0.12	0.01
(Verizon Existing)			0.00			1" Ice	0.47	0.17	0.01
(2) FD9R6004/2C-3L	A	From Face	3.00	0.0000	124.00	No Ice	0.31	0.08	0.00
Diplexer			0.00			1/2" Ice	0.39	0.12	0.01
(Verizon Existing)			0.00			1" Ice	0.47	0.17	0.01
RRH4x45/2x90-AWS	A	From Face	4.00	0.0000	124.00	No Ice	2.58	1.69	0.08
(Verizon Existing)			4.00			1/2" Ice	2.79	1.87	0.10
			0.00			1" Ice	3.01	2.06	0.12
RRH4x45/2x90-AWS	B	From Face	4.00	0.0000	124.00	No Ice	2.58	1.69	0.08
(Verizon Existing)			4.00			1/2" Ice	2.79	1.87	0.10
			0.00			1" Ice	3.01	2.06	0.12
RRH4x45/2x90-AWS	C	From Face	4.00	0.0000	124.00	No Ice	2.58	1.69	0.08
(Verizon Existing)			4.00			1/2" Ice	2.79	1.87	0.10
			0.00			1" Ice	3.01	2.06	0.12
RRH4x30-B13	A	From Face	4.00	0.0000	124.00	No Ice	2.16	1.62	0.06
(Verizon Existing)			0.00			1/2" Ice	2.35	1.79	0.08
			0.00			1" Ice	2.55	1.97	0.10
RRH4x30-B13	B	From Face	4.00	0.0000	124.00	No Ice	2.16	1.62	0.06
(Verizon Existing)			0.00			1/2" Ice	2.35	1.79	0.08
			0.00			1" Ice	2.55	1.97	0.10
RRH4x30-B13	C	From Face	4.00	0.0000	124.00	No Ice	2.16	1.62	0.06
(Verizon Existing)			0.00			1/2" Ice	2.35	1.79	0.08
			0.00			1" Ice	2.55	1.97	0.10
RRH2x60-PCS	A	From Face	4.00	0.0000	124.00	No Ice	2.15	1.35	0.06
(Verizon Existing)			-4.00			1/2" Ice	2.34	1.50	0.07
			0.00			1" Ice	2.54	1.67	0.09
RRH2x60-PCS	B	From Face	4.00	0.0000	124.00	No Ice	2.15	1.35	0.06
(Verizon Existing)			-4.00			1/2" Ice	2.34	1.50	0.07
			0.00			1" Ice	2.54	1.67	0.09
RRH2x60-PCS	C	From Face	4.00	0.0000	124.00	No Ice	2.15	1.35	0.06
(Verizon Existing)			-4.00			1/2" Ice	2.34	1.50	0.07
			0.00			1" Ice	2.54	1.67	0.09
RC2DC-3315-PF-48	A	From Face	1.00	0.0000	124.00	No Ice	3.01	1.96	0.03
(Verizon Existing)			1.00			1/2" Ice	3.23	2.15	0.05
			0.00			1" Ice	3.46	2.35	0.08
RC2DC-3315-PF-48	B	From Face	1.00	0.0000	124.00	No Ice	3.01	1.96	0.03

Description	Face or Leg	Offset Type	Offsets: Horz Lateral Vert ft ft ft	Azimuth Adjustment °	Placement ft		C_AA_A Front ft^2	C_AA_A Side ft^2	Weight K
(Verizon Existing)			1.00			1/2" Ice	3.23	2.15	0.05
			0.00			1" Ice	3.46	2.35	0.08
Low Profile Platform	C	None		0.0000	124.00	No Ice	15.70	15.70	1.30
(Verizon Existing)						1/2" Ice	20.10	20.10	1.76
						1" Ice	24.50	24.50	2.23
531-70HD	C	From Face	3.00	0.0000	114.00	No Ice	6.00	6.00	0.04
(Eversource Existing)			-6.00			1/2" Ice	6.90	6.90	0.05
			0.00			1" Ice	7.80	7.80	0.06
DB586-Y	C	From Face	3.00	0.0000	114.00	No Ice	1.01	1.01	0.01
(Eversource Existing)			5.00			1/2" Ice	1.28	1.28	0.02
			2.50			1" Ice	1.56	1.56	0.03
DB586-Y	C	From Face	3.00	0.0000	114.00	No Ice	1.01	1.01	0.01
(Eversource Existing)			5.00			1/2" Ice	1.28	1.28	0.02
			-2.50			1" Ice	1.56	1.56	0.03
ANT150F2	C	From Face	3.00	0.0000	114.00	No Ice	1.29	1.29	0.02
(Eversource Existing)			-3.00			1/2" Ice	1.60	1.60	0.03
			2.50			1" Ice	1.91	1.91	0.04
Tower Top Amplifier	C	From Face	3.00	0.0000	114.00	No Ice	2.67	1.03	0.04
(Eversource Existing)			5.00			1/2" Ice	2.87	1.17	0.06
			0.00			1" Ice	3.08	1.32	0.08
Low Profile Platform	C	None		0.0000	114.00	No Ice	15.70	15.70	1.30
						1/2" Ice	20.10	20.10	1.76
						1" Ice	24.50	24.50	2.23
GPS	A	From Face	1.50	0.0000	51.50	No Ice	1.00	1.00	0.01
			0.00			1/2" Ice	1.50	1.50	0.01
			0.00			1" Ice	2.00	2.00	0.02
GPS	B	From Face	1.50	0.0000	51.50	No Ice	1.00	1.00	0.01
			0.00			1/2" Ice	1.50	1.50	0.01
			0.00			1" Ice	2.00	2.00	0.02
GPS	C	From Face	1.50	0.0000	51.50	No Ice	1.00	1.00	0.01
			0.00			1/2" Ice	1.50	1.50	0.01
			0.00			1" Ice	2.00	2.00	0.02

Dishes

Description	Face or Leg	Dish Type	Offset Type	Offsets: Horz Lateral Vert ft	Azimuth Adjustment °	3 dB Beam Width °	Elevation ft	Outside Diameter ft		Aperture Area ft^2	Weight K
4 FT DISH	A	Paraboloid	From	1.00	Worst		160.00	4.00	No Ice	12.56	0.17
(Town Existing)		w/Shroud (HP)	Leg	0.00					1/2" Ice	13.09	0.24
				0.00					1" Ice	13.62	0.30
4 FT DISH	B	Paraboloid	From	1.00	Worst		160.00	4.00	No Ice	12.56	0.17
(Town Existing)		w/Shroud (HP)	Leg	0.00					1/2" Ice	13.09	0.24
				0.00					1" Ice	13.62	0.30
2 FT DISH	C	Paraboloid	From	1.00	Worst		160.00	2.00	No Ice	3.14	0.03
(Town Existing)		w/Shroud (HP)	Leg	0.00					1/2" Ice	3.41	0.04
				0.00					1" Ice	3.67	0.06
A-Ant-23G-2-C	A	Paraboloid	From	3.10	Worst		154.00	2.17	No Ice	3.72	0.03
(Clearwire Existing)		w/Radome	Face	-2.52					1/2" Ice	4.01	0.05

Description	Face or Leg	Dish Type	Offset Type	Offsets: Horz Lateral Vert ft	Azimuth Adjustment °	3 dB Beam Width °	Elevation ft	Outside Diameter ft		Aperture Area ft^2	Weight K
				2.00					1" Ice	4.30	0.07
A-Ant-23G-2-C	C	Paraboloid	From	3.80	Worst		154.00	2.17	No Ice	3.72	0.03
(Clearwire Existing)		w/Radome	Face	-1.24					1/2" Ice	4.01	0.05
				2.00					1" Ice	4.30	0.07

Tower Pressures - No Ice

$G_H = 1.100$

Section Elevation ft	z ft	K_Z	q_z psf	A_G ft^2	Face	A_F ft^2	A_R ft^2	A_{leg} ft^2	Leg %	C_AA_A In Face ft^2	C_AA_A Out Face ft^2
L1	147.50	1.374	33	138.083	A	0.000	138.083	138.083	100.00	0.000	0.000
164.00-131.50					B	0.000	138.083		100.00	14.850	0.000
					C	0.000	138.083		100.00	0.000	0.000
L2	125.34	1.327	32	56.604	A	0.000	56.604	56.604	100.00	0.000	0.000
131.50-119.29					B	0.000	56.604		100.00	14.505	0.000
					C	0.000	56.604		100.00	0.000	0.000
L3	98.82	1.262	30	202.502	A	0.000	202.502	202.502	100.00	0.000	0.000
119.29-78.79					B	0.000	202.502		100.00	48.114	0.000
					C	0.000	202.502		100.00	0.000	0.000
L4 78.79-39.88	59.30	1.134	27	216.935	A	0.000	216.935	216.935	100.00	0.000	0.000
					B	0.000	216.935		100.00	50.095	0.000
					C	0.000	216.935		100.00	0.000	0.000
L5 39.88-1.50	21.06	0.912	22	234.708	A	0.000	234.708	234.708	100.00	0.000	0.000
					B	0.000	234.708		100.00	50.249	0.000
					C	0.000	234.708		100.00	0.000	0.000

Tower Pressure - With Ice

$G_H = 1.100$

Section Elevation ft	z ft	K_Z	q_z psf	t_Z in	A_G ft^2	Face	A_F ft^2	A_R ft^2	A_{leg} ft^2	Leg %	C_AA_A In Face ft^2	C_AA_A Out Face ft^2
L1	147.50	1.374	8	2.1779	149.880	A	0.000	149.880	149.880	100.00	0.000	0.000
164.00-131.50						B	0.000	149.880		100.00	25.368	0.000
						C	0.000	149.880		100.00	0.000	0.000
L2	125.34	1.327	8	2.1427	60.964	A	0.000	60.964	60.964	100.00	0.000	0.000
131.50-119.29						B	0.000	60.964		100.00	24.672	0.000
						C	0.000	60.964		100.00	0.000	0.000
L3 119.29-78.79	98.82	1.262	8	2.0923	216.966	A	0.000	216.966	216.966	100.00	0.000	0.000
						B	0.000	216.966		100.00	81.837	0.000
						C	0.000	216.966		100.00	0.000	0.000
L4 78.79-39.88	59.30	1.134	7	1.9882	230.504	A	0.000	230.504	230.504	100.00	0.000	0.000
						B	0.000	230.504		100.00	89.050	0.000
						C	0.000	230.504		100.00	0.000	0.000
L5 39.88-1.50	21.06	0.912	6	1.7926	247.426	A	0.000	247.426	247.426	100.00	0.000	0.000
						B	0.000	247.426		100.00	96.491	0.000
						C	0.000	247.426		100.00	0.000	0.000

Tower Pressure - Service

$G_H = 1.100$

Section Elevation ft	z ft	K_Z	q_z psf	A_G ft²	Face	A_F ft²	A_R ft²	A_{leg} ft²	Leg %	C_AA_A In Face ft²	C_AA_A Out Face ft²
L1	147.50	1.374	11	138.083	A	0.000	138.083	138.083	100.00	0.000	0.000
164.00-131.50					B	0.000	138.083		100.00	14.850	0.000
					C	0.000	138.083		100.00	0.000	0.000
L2	125.34	1.327	10	56.604	A	0.000	56.604	56.604	100.00	0.000	0.000
131.50-119.29					B	0.000	56.604		100.00	14.505	0.000
					C	0.000	56.604		100.00	0.000	0.000
L3	98.82	1.262	10	202.502	A	0.000	202.502	202.502	100.00	0.000	0.000
119.29-78.79					B	0.000	202.502		100.00	48.114	0.000
					C	0.000	202.502		100.00	0.000	0.000
L4 78.79-39.88	59.30	1.134	9	216.935	A	0.000	216.935	216.935	100.00	0.000	0.000
					B	0.000	216.935		100.00	50.095	0.000
					C	0.000	216.935		100.00	0.000	0.000
L5 39.88-1.50	21.06	0.912	7	234.708	A	0.000	234.708	234.708	100.00	0.000	0.000
					B	0.000	234.708		100.00	50.249	0.000
					C	0.000	234.708		100.00	0.000	0.000

Tower Forces - No Ice - Wind Normal To Face

Section Elevation ft	Add Weight K	Self Weight K	Face	e	C_F	q_z psf	D_F	D_R	A_E ft²	F K	w plf	Ctrl. Face
L1	0.88	5.47	A	1	0.65	33	1	1	138.083	3.28	100.89	C
164.00-131.50			B	1	0.65		1	1	138.083			
			C	1	0.65		1	1	138.083			
L2	0.73	2.69	A	1	0.65	32	1	1	56.604	1.30	106.42	C
131.50-119.29			B	1	0.65		1	1	56.604			
			C	1	0.65		1	1	56.604			
L3	2.78	12.76	A	1	0.65	30	1	1	202.502	4.42	109.03	C
119.29-78.79			B	1	0.65		1	1	202.502			
			C	1	0.65		1	1	202.502			
L4	2.70	18.55	A	1	0.65	27	1	1	216.935	4.24	108.95	C
78.79-39.88			B	1	0.65		1	1	216.935			
			C	1	0.65		1	1	216.935			
L5 39.88-1.50	2.32	20.49	A	1	0.65	22	1	1	234.708	3.71	96.79	C
			B	1	0.65		1	1	234.708			
			C	1	0.65		1	1	234.708			
Sum Weight:	9.41	59.96						OTM	1387.05 kip-ft	16.95		

Tower Forces - No Ice - Wind 60 To Face

Section Elevation ft	Add Weight K	Self Weight K	Face	e	C_F	q_z psf	D_F	D_R	A_E ft^2	F K	w plf	Ctrl. Face
L1	0.88	5.47	A	1	0.65	33	1	1	138.083	3.28	100.89	C
164.00-131.50			B	1	0.65		1	1	138.083			
			C	1	0.65		1	1	138.083			
L2	0.73	2.69	A	1	0.65	32	1	1	56.604	1.30	106.42	C
131.50-119.29			B	1	0.65		1	1	56.604			
			C	1	0.65		1	1	56.604			
L3	2.78	12.76	A	1	0.65	30	1	1	202.502	4.42	109.03	C
119.29-78.79			B	1	0.65		1	1	202.502			
			C	1	0.65		1	1	202.502			
L4	2.70	18.55	A	1	0.65	27	1	1	216.935	4.24	108.95	C
78.79-39.88			B	1	0.65		1	1	216.935			
			C	1	0.65		1	1	216.935			
L5 39.88-1.50	2.32	20.49	A	1	0.65	22	1	1	234.708	3.71	96.79	C
			B	1	0.65		1	1	234.708			
			C	1	0.65		1	1	234.708			
Sum Weight:	9.41	59.96						OTM	1387.05 kip-ft	16.95		

Tower Forces - No Ice - Wind 90 To Face

Section Elevation ft	Add Weight K	Self Weight K	Face	e	C_F	q_z psf	D_F	D_R	A_E ft^2	F K	w plf	Ctrl. Face
L1	0.88	5.47	A	1	0.65	33	1	1	138.083	3.28	100.89	C
164.00-131.50			B	1	0.65		1	1	138.083			
			C	1	0.65		1	1	138.083			
L2	0.73	2.69	A	1	0.65	32	1	1	56.604	1.30	106.42	C
131.50-119.29			B	1	0.65		1	1	56.604			
			C	1	0.65		1	1	56.604			
L3	2.78	12.76	A	1	0.65	30	1	1	202.502	4.42	109.03	C
119.29-78.79			B	1	0.65		1	1	202.502			
			C	1	0.65		1	1	202.502			
L4	2.70	18.55	A	1	0.65	27	1	1	216.935	4.24	108.95	C
78.79-39.88			B	1	0.65		1	1	216.935			
			C	1	0.65		1	1	216.935			
L5 39.88-1.50	2.32	20.49	A	1	0.65	22	1	1	234.708	3.71	96.79	C
			B	1	0.65		1	1	234.708			
			C	1	0.65		1	1	234.708			
Sum Weight:	9.41	59.96						OTM	1387.05 kip-ft	16.95		

Tower Forces - With Ice - Wind Normal To Face

Section Elevation ft	Add Weight K	Self Weight K	Face	e	C_F	q_z psf	D_F	D_R	A_E ft^2	F K	w plf	Ctrl. Face
L1	1.25	10.05	A	1	1.2	8	1	1	149.880	1.65	50.82	C

Section Elevation ft	Add Weight K	Self Weight K	Face	e	C_F	q_z psf	D_F	D_R	A_E ft²	F K	w plf	Ctrl. Face
164.00-131.50			B	1	1.2		1	1	149.880			
			C	1	1.2		1	1	149.880			
L2	1.08	4.53	A	1	1.2	8	1	1	60.964	0.65	53.19	C
131.50-119.29			B	1	1.2		1	1	60.964			
			C	1	1.2		1	1	60.964			
L3	3.95	19.16	A	1	1.2	8	1	1	216.966	2.20	54.21	C
119.29-78.79			B	1	1.2		1	1	216.966			
			C	1	1.2		1	1	216.966			
L4	3.94	25.03	A	1	1.2	7	1	1	230.504	2.09	53.72	C
78.79-39.88			B	1	1.2		1	1	230.504			
			C	1	1.2		1	1	230.504			
L5 39.88-1.50	3.58	26.78	A	1	1.2	6	1	1	247.426	1.82	47.35	C
			B	1	1.2		1	1	247.426			
			C	1	1.2		1	1	247.426			
Sum Weight:	13.79	85.55						OTM	691.54 kip-ft	8.40		

Tower Forces - With Ice - Wind 60 To Face

Section Elevation ft	Add Weight K	Self Weight K	Face	e	C_F	q_z psf	D_F	D_R	A_E ft²	F K	w plf	Ctrl. Face
L1	1.25	10.05	A	1	1.2	8	1	1	149.880	1.65	50.82	C
164.00-131.50			B	1	1.2		1	1	149.880			
			C	1	1.2		1	1	149.880			
L2	1.08	4.53	A	1	1.2	8	1	1	60.964	0.65	53.19	C
131.50-119.29			B	1	1.2		1	1	60.964			
			C	1	1.2		1	1	60.964			
L3	3.95	19.16	A	1	1.2	8	1	1	216.966	2.20	54.21	C
119.29-78.79			B	1	1.2		1	1	216.966			
			C	1	1.2		1	1	216.966			
L4	3.94	25.03	A	1	1.2	7	1	1	230.504	2.09	53.72	C
78.79-39.88			B	1	1.2		1	1	230.504			
			C	1	1.2		1	1	230.504			
L5 39.88-1.50	3.58	26.78	A	1	1.2	6	1	1	247.426	1.82	47.35	C
			B	1	1.2		1	1	247.426			
			C	1	1.2		1	1	247.426			
Sum Weight:	13.79	85.55						OTM	691.54 kip-ft	8.40		

Tower Forces - With Ice - Wind 90 To Face

Section Elevation ft	Add Weight K	Self Weight K	Face	e	C_F	q_z psf	D_F	D_R	A_E ft²	F K	w plf	Ctrl. Face
L1	1.25	10.05	A	1	1.2	8	1	1	149.880	1.65	50.82	C
164.00-131.50			B	1	1.2		1	1	149.880			

Section Elevation ft	Add Weight K	Self Weight K	Face	e	C_F	q_z psf	D_F	D_R	A_E ft^2	F K	w plf	Ctrl. Face
			C	1	1.2		1	1	149.880			
L2	1.08	4.53	A	1	1.2	8	1	1	60.964	0.65	53.19	C
131.50-119.29			B	1	1.2		1	1	60.964			
			C	1	1.2		1	1	60.964			
L3	3.95	19.16	A	1	1.2	8	1	1	216.966	2.20	54.21	C
119.29-78.79			B	1	1.2		1	1	216.966			
			C	1	1.2		1	1	216.966			
L4	3.94	25.03	A	1	1.2	7	1	1	230.504	2.09	53.72	C
78.79-39.88			B	1	1.2		1	1	230.504			
			C	1	1.2		1	1	230.504			
L5 39.88-1.50	3.58	26.78	A	1	1.2	6	1	1	247.426	1.82	47.35	C
			B	1	1.2		1	1	247.426			
			C	1	1.2		1	1	247.426			
Sum Weight:	13.79	85.55						OTM	691.54 kip-ft	8.40		

Tower Forces - Service - Wind Normal To Face

Section Elevation ft	Add Weight K	Self Weight K	Face	e	C_F	q_z psf	D_F	D_R	A_E ft^2	F K	w plf	Ctrl. Face
L1	0.88	5.47	A	1	0.65	11	1	1	138.083	1.06	32.67	C
164.00-131.50			B	1	0.65		1	1	138.083			
			C	1	0.65		1	1	138.083			
L2	0.73	2.69	A	1	0.65	10	1	1	56.604	0.42	34.46	C
131.50-119.29			B	1	0.65		1	1	56.604			
			C	1	0.65		1	1	56.604			
L3	2.78	12.76	A	1	0.65	10	1	1	202.502	1.43	35.31	C
119.29-78.79			B	1	0.65		1	1	202.502			
			C	1	0.65		1	1	202.502			
L4	2.70	18.55	A	1	0.65	9	1	1	216.935	1.37	35.28	C
78.79-39.88			B	1	0.65		1	1	216.935			
			C	1	0.65		1	1	216.935			
L5 39.88-1.50	2.32	20.49	A	1	0.65	7	1	1	234.708	1.20	31.34	C
			B	1	0.65		1	1	234.708			
			C	1	0.65		1	1	234.708			
Sum Weight:	9.41	59.96						OTM	449.19 kip-ft	5.49		

Tower Forces - Service - Wind 60 To Face

Section Elevation ft	Add Weight K	Self Weight K	Face	e	C_F	q_z psf	D_F	D_R	A_E ft^2	F K	w plf	Ctrl. Face
L1	0.88	5.47	A	1	0.65	11	1	1	138.083	1.06	32.67	C
164.00-131.50			B	1	0.65		1	1	138.083			
			C	1	0.65		1	1	138.083			

Section Elevation ft	Add Weight K	Self Weight K	Face	e	C_F	q_z psf	D_F	D_R	A_E ft²	F K	w plf	Ctrl. Face
L2	0.73	2.69	A	1	0.65	10	1	1	56.604	0.42	34.46	C
131.50-119.29			B	1	0.65		1	1	56.604			
			C	1	0.65		1	1	56.604			
L3	2.78	12.76	A	1	0.65	10	1	1	202.502	1.43	35.31	C
119.29-78.79			B	1	0.65		1	1	202.502			
			C	1	0.65		1	1	202.502			
L4	2.70	18.55	A	1	0.65	9	1	1	216.935	1.37	35.28	C
78.79-39.88			B	1	0.65		1	1	216.935			
			C	1	0.65		1	1	216.935			
L5 39.88-1.50	2.32	20.49	A	1	0.65	7	1	1	234.708	1.20	31.34	C
			B	1	0.65		1	1	234.708			
			C	1	0.65		1	1	234.708			
Sum Weight:	9.41	59.96						OTM	449.19 kip-ft	5.49		

Tower Forces - Service - Wind 90 To Face

Section Elevation ft	Add Weight K	Self Weight K	Face	e	C_F	q_z psf	D_F	D_R	A_E ft²	F K	w plf	Ctrl. Face
L1	0.88	5.47	A	1	0.65	11	1	1	138.083	1.06	32.67	C
164.00-131.50			B	1	0.65		1	1	138.083			
			C	1	0.65		1	1	138.083			
L2	0.73	2.69	A	1	0.65	10	1	1	56.604	0.42	34.46	C
131.50-119.29			B	1	0.65		1	1	56.604			
			C	1	0.65		1	1	56.604			
L3	2.78	12.76	A	1	0.65	10	1	1	202.502	1.43	35.31	C
119.29-78.79			B	1	0.65		1	1	202.502			
			C	1	0.65		1	1	202.502			
L4	2.70	18.55	A	1	0.65	9	1	1	216.935	1.37	35.28	C
78.79-39.88			B	1	0.65		1	1	216.935			
			C	1	0.65		1	1	216.935			
L5 39.88-1.50	2.32	20.49	A	1	0.65	7	1	1	234.708	1.20	31.34	C
			B	1	0.65		1	1	234.708			
			C	1	0.65		1	1	234.708			
Sum Weight:	9.41	59.96						OTM	449.19 kip-ft	5.49		

Force Totals

Load Case	Vertical Forces K	Sum of Forces X K	Sum of Forces Z K	Sum of Overturning Moments, M_x kip-ft	Sum of Overturning Moments, M_z kip-ft	Sum of Torques kip-ft
Leg Weight	59.96					
Bracing Weight	0.00					
Total Member Self-Weight	59.96			-1.77	-1.21	
Total Weight	82.80			-1.77	-1.21	

Load Case	Vertical Forces K	Sum of Forces X K	Sum of Forces Z K	Sum of Overturning Moments, M_x kip-ft	Sum of Overturning Moments, M_z kip-ft	Sum of Torques kip-ft
Wind 0 deg - No Ice		-0.06	-31.19	-3376.07	2.30	-8.08
Wind 30 deg - No Ice		15.68	-26.98	-2922.25	-1705.15	-9.25
Wind 60 deg - No Ice		27.23	-15.54	-1685.88	-2956.03	-7.94
Wind 90 deg - No Ice		31.48	0.06	1.73	-3415.16	-4.51
Wind 120 deg - No Ice		27.29	15.65	1688.41	-2959.53	0.14
Wind 150 deg - No Ice		15.79	27.05	2922.21	-1711.22	4.74
Wind 180 deg - No Ice		0.06	31.19	3372.52	-4.72	8.08
Wind 210 deg - No Ice		-15.68	26.98	2918.70	1702.73	9.25
Wind 240 deg - No Ice		-27.23	15.54	1682.34	2953.61	7.94
Wind 270 deg - No Ice		-31.48	-0.06	-5.28	3412.74	4.51
Wind 300 deg - No Ice		-27.29	-15.65	-1691.96	2957.11	-0.14
Wind 330 deg - No Ice		-15.79	-27.05	-2925.75	1708.80	-4.74
Member Ice	25.59					
Total Weight Ice	140.86			-16.41	3.09	
Wind 0 deg - Ice		-0.01	-14.13	-1504.78	3.59	-3.01
Wind 30 deg - Ice		7.09	-12.23	-1305.12	-745.92	-3.18
Wind 60 deg - Ice		12.29	-7.05	-760.16	-1294.73	-2.51
Wind 90 deg - Ice		14.20	0.01	-15.91	-1495.79	-1.16
Wind 120 deg - Ice		12.31	7.08	728.21	-1295.23	0.50
Wind 150 deg - Ice		7.11	12.24	1272.80	-746.79	2.02
Wind 180 deg - Ice		0.01	14.13	1471.96	2.59	3.01
Wind 210 deg - Ice		-7.09	12.23	1272.30	752.10	3.18
Wind 240 deg - Ice		-12.29	7.05	727.34	1300.91	2.51
Wind 270 deg - Ice		-14.20	-0.01	-16.91	1501.97	1.16
Wind 300 deg - Ice		-12.31	-7.08	-761.03	1301.41	-0.50
Wind 330 deg - Ice		-7.11	-12.24	-1305.63	752.97	-2.02
Total Weight	82.80			-1.77	-1.21	
Wind 0 deg - Service		-0.02	-10.10	-1093.25	2.12	-2.62
Wind 30 deg - Service		5.08	-8.74	-946.28	-550.82	-3.00
Wind 60 deg - Service		8.82	-5.03	-545.89	-955.91	-2.57
Wind 90 deg - Service		10.19	0.02	0.63	-1104.60	-1.46
Wind 120 deg - Service		8.84	5.07	546.85	-957.05	0.04
Wind 150 deg - Service		5.11	8.76	946.40	-552.79	1.54
Wind 180 deg - Service		0.02	10.10	1092.24	-0.15	2.62
Wind 210 deg - Service		-5.08	8.74	945.27	552.79	3.00
Wind 240 deg - Service		-8.82	5.03	544.88	957.88	2.57
Wind 270 deg - Service		-10.19	-0.02	-1.64	1106.57	1.46
Wind 300 deg - Service		-8.84	-5.07	-547.86	959.02	-0.04
Wind 330 deg - Service		-5.11	-8.76	-947.41	554.76	-1.54

Load Combinations

Comb. No.	Description
1	Dead Only
2	1.2 Dead+1.6 Wind 0 deg - No Ice
3	0.9 Dead+1.6 Wind 0 deg - No Ice
4	1.2 Dead+1.6 Wind 30 deg - No Ice
5	0.9 Dead+1.6 Wind 30 deg - No Ice
6	1.2 Dead+1.6 Wind 60 deg - No Ice
7	0.9 Dead+1.6 Wind 60 deg - No Ice
8	1.2 Dead+1.6 Wind 90 deg - No Ice
9	0.9 Dead+1.6 Wind 90 deg - No Ice
10	1.2 Dead+1.6 Wind 120 deg - No Ice
11	0.9 Dead+1.6 Wind 120 deg - No Ice
12	1.2 Dead+1.6 Wind 150 deg - No Ice

Comb. No.	Description
13	0.9 Dead+1.6 Wind 150 deg - No Ice
14	1.2 Dead+1.6 Wind 180 deg - No Ice
15	0.9 Dead+1.6 Wind 180 deg - No Ice
16	1.2 Dead+1.6 Wind 210 deg - No Ice
17	0.9 Dead+1.6 Wind 210 deg - No Ice
18	1.2 Dead+1.6 Wind 240 deg - No Ice
19	0.9 Dead+1.6 Wind 240 deg - No Ice
20	1.2 Dead+1.6 Wind 270 deg - No Ice
21	0.9 Dead+1.6 Wind 270 deg - No Ice
22	1.2 Dead+1.6 Wind 300 deg - No Ice
23	0.9 Dead+1.6 Wind 300 deg - No Ice
24	1.2 Dead+1.6 Wind 330 deg - No Ice
25	0.9 Dead+1.6 Wind 330 deg - No Ice
26	1.2 Dead+1.0 Ice+1.0 Temp
27	1.2 Dead+1.0 Wind 0 deg+1.0 Ice+1.0 Temp
28	1.2 Dead+1.0 Wind 30 deg+1.0 Ice+1.0 Temp
29	1.2 Dead+1.0 Wind 60 deg+1.0 Ice+1.0 Temp
30	1.2 Dead+1.0 Wind 90 deg+1.0 Ice+1.0 Temp
31	1.2 Dead+1.0 Wind 120 deg+1.0 Ice+1.0 Temp
32	1.2 Dead+1.0 Wind 150 deg+1.0 Ice+1.0 Temp
33	1.2 Dead+1.0 Wind 180 deg+1.0 Ice+1.0 Temp
34	1.2 Dead+1.0 Wind 210 deg+1.0 Ice+1.0 Temp
35	1.2 Dead+1.0 Wind 240 deg+1.0 Ice+1.0 Temp
36	1.2 Dead+1.0 Wind 270 deg+1.0 Ice+1.0 Temp
37	1.2 Dead+1.0 Wind 300 deg+1.0 Ice+1.0 Temp
38	1.2 Dead+1.0 Wind 330 deg+1.0 Ice+1.0 Temp
39	Dead+Wind 0 deg - Service
40	Dead+Wind 30 deg - Service
41	Dead+Wind 60 deg - Service
42	Dead+Wind 90 deg - Service
43	Dead+Wind 120 deg - Service
44	Dead+Wind 150 deg - Service
45	Dead+Wind 180 deg - Service
46	Dead+Wind 210 deg - Service
47	Dead+Wind 240 deg - Service
48	Dead+Wind 270 deg - Service
49	Dead+Wind 300 deg - Service
50	Dead+Wind 330 deg - Service

Maximum Member Forces

Section No.	Elevation ft	Component Type	Condition	Gov. Load Comb.	Axial K	Major Axis Moment kip-ft	Minor Axis Moment kip-ft
L1	164 - 131.5	Pole	Max Tension	1	0.00	0.00	0.00
			Max. Compression	26	-43.80	-1.73	-0.26
			Max. Mx	8	-18.69	-387.91	5.07
			Max. My	14	-18.71	4.74	-381.38
			Max. Vy	20	-22.37	386.68	-5.51
			Max. Vx	2	-22.18	-5.84	380.80
			Max. Torque	25			-1.11
L2	131.5 - 119.29	Pole	Max Tension	1	0.00	0.00	0.00
			Max. Compression	26	-46.98	-2.17	0.04
			Max. Mx	8	-20.75	-530.29	6.16
			Max. My	14	-20.76	5.69	-522.39
			Max. Vy	20	-23.46	528.86	-6.46
			Max. Vx	2	-23.26	-6.93	521.93
			Max. Torque	17			-10.12
L3	119.29 - 78.79	Pole	Max Tension	1	0.00	0.00	0.00

Section No.	Elevation ft	Component Type	Condition	Gov. Load Comb.	Axial K	Major Axis Moment kip-ft	Minor Axis Moment kip-ft
			Max. Compression	26	-84.92	11.78	12.19
			Max. Mx	20	-42.10	1780.04	-1.79
			Max. My	2	-42.12	-2.70	1755.44
			Max. Vy	8	36.81	-1779.48	3.98
			Max. Vx	2	-36.35	-2.70	1755.44
			Max. Torque	17			-17.13
L4	78.79 - 39.88	Pole	Max Tension	1	0.00	0.00	0.00
			Max. Compression	26	-117.65	8.21	14.26
			Max. Mx	8	-66.10	-3311.35	0.67
			Max. My	2	-66.11	0.43	3269.50
			Max. Vy	8	43.59	-3311.35	0.67
			Max. Vx	2	-43.13	0.43	3269.50
			Max. Torque	17			-14.80
L5	39.88 - 1.5	Pole	Max Tension	1	0.00	0.00	0.00
			Max. Compression	26	-161.29	3.15	17.18
			Max. Mx	8	-99.34	-5561.30	-3.46
			Max. My	2	-99.34	4.15	5497.34
			Max. Vy	8	50.39	-5561.30	-3.46
			Max. Vx	2	-49.94	4.15	5497.34
			Max. Torque	17			-14.80

Maximum Reactions

Location	Condition	Gov. Load Comb.	Vertical K	Horizontal, X K	Horizontal, Z K
Pole	Max. Vert	26	161.29	0.00	0.00
	Max. H_x	20	99.36	50.36	0.10
	Max. H_z	2	99.36	0.10	49.91
	Max. M_x	2	5497.34	0.10	49.91
	Max. M_z	8	5561.30	-50.36	-0.10
	Max. Torsion	5	14.77	-25.09	43.18
	Min. Vert	17	74.52	25.09	-43.18
	Min. H_x	8	99.36	-50.36	-0.10
	Min. H_z	14	99.36	-0.10	-49.91
	Min. M_x	14	-5492.99	-0.10	-49.91
	Min. M_z	20	-5558.37	50.36	0.10
	Min. Torsion	17	-14.79	25.09	-43.18

Tower Mast Reaction Summary

Load Combination	Vertical K	$Shear_x$ K	$Shear_z$ K	Overturning Moment, M_x kip-ft	Overturning Moment, M_z kip-ft	Torque kip-ft
Dead Only	82.80	0.00	0.00	-1.77	-1.21	0.00
1.2 Dead+1.6 Wind 0 deg - No Ice	99.36	-0.10	-49.91	-5497.34	4.15	-12.90
0.9 Dead+1.6 Wind 0 deg - No Ice	74.52	-0.10	-49.91	-5472.16	4.52	-12.90
1.2 Dead+1.6 Wind 30 deg - No Ice	99.36	25.09	-43.18	-4758.30	-2776.53	-14.76
0.9 Dead+1.6 Wind 30 deg - No Ice	74.52	25.09	-43.18	-4736.42	-2763.69	-14.77

Load Combination	Vertical K	$Shear_x$ K	$Shear_z$ K	Overturning Moment, M_x kip-ft	Overturning Moment, M_z kip-ft	Torque kip-ft
1.2 Dead+1.6 Wind 60 deg - No Ice	99.36	43.56	-24.87	-2744.86	-4813.62	-12.68
0.9 Dead+1.6 Wind 60 deg - No Ice	74.52	43.56	-24.87	-2732.00	-4791.65	-12.69
1.2 Dead+1.6 Wind 90 deg - No Ice	99.36	50.36	0.10	3.46	-5561.30	-7.19
0.9 Dead+1.6 Wind 90 deg - No Ice	74.52	50.36	0.10	4.01	-5535.99	-7.20
1.2 Dead+1.6 Wind 120 deg - No Ice	99.36	43.66	25.04	2750.28	-4819.24	0.23
0.9 Dead+1.6 Wind 120 deg - No Ice	74.52	43.66	25.04	2738.51	-4797.27	0.23
1.2 Dead+1.6 Wind 150 deg - No Ice	99.36	25.27	43.27	4759.59	-2786.27	7.61
0.9 Dead+1.6 Wind 150 deg - No Ice	74.52	25.27	43.27	4738.81	-2773.43	7.60
1.2 Dead+1.6 Wind 180 deg - No Ice	99.36	0.10	49.91	5492.99	-7.11	12.94
0.9 Dead+1.6 Wind 180 deg - No Ice	74.52	0.10	49.91	5468.92	-6.73	12.94
1.2 Dead+1.6 Wind 210 deg - No Ice	99.36	-25.09	43.18	4753.97	2773.57	14.79
0.9 Dead+1.6 Wind 210 deg - No Ice	74.52	-25.09	43.18	4733.19	2761.47	14.79
1.2 Dead+1.6 Wind 240 deg - No Ice	99.36	-43.56	24.87	2740.54	4810.67	12.67
0.9 Dead+1.6 Wind 240 deg - No Ice	74.52	-43.56	24.87	2728.78	4789.45	12.68
1.2 Dead+1.6 Wind 270 deg - No Ice	99.36	-50.36	-0.10	-7.80	5558.37	7.16
0.9 Dead+1.6 Wind 270 deg - No Ice	74.52	-50.36	-0.10	-7.24	5533.79	7.16
1.2 Dead+1.6 Wind 300 deg - No Ice	99.36	-43.66	-25.04	-2754.62	4816.31	-0.26
0.9 Dead+1.6 Wind 300 deg - No Ice	74.52	-43.66	-25.04	-2741.76	4795.08	-0.25
1.2 Dead+1.6 Wind 330 deg - No Ice	99.36	-25.27	-43.27	-4763.94	2783.33	-7.60
0.9 Dead+1.6 Wind 330 deg - No Ice	74.52	-25.27	-43.27	-4742.06	2771.22	-7.59
1.2 Dead+1.0 Ice+1.0 Temp	161.29	-0.00	-0.00	-17.18	3.15	0.00
1.2 Dead+1.0 Wind 0 deg+1.0 Ice+1.0 Temp	161.29	-0.01	-14.13	-1558.30	3.81	-3.01
1.2 Dead+1.0 Wind 30 deg+1.0 Ice+1.0 Temp	161.29	7.09	-12.23	-1351.64	-772.07	-3.17
1.2 Dead+1.0 Wind 60 deg+1.0 Ice+1.0 Temp	161.29	12.29	-7.05	-787.52	-1340.19	-2.49
1.2 Dead+1.0 Wind 90 deg+1.0 Ice+1.0 Temp	161.29	14.20	0.01	-17.11	-1548.31	-1.14
1.2 Dead+1.0 Wind 120 deg+1.0 Ice+1.0 Temp	161.29	12.31	7.08	753.18	-1340.68	0.52
1.2 Dead+1.0 Wind 150 deg+1.0 Ice+1.0 Temp	161.29	7.11	12.24	1316.94	-772.92	2.04
1.2 Dead+1.0 Wind 180 deg+1.0 Ice+1.0 Temp	161.29	0.01	14.13	1523.11	2.83	3.01
1.2 Dead+1.0 Wind 210 deg+1.0 Ice+1.0 Temp	161.29	-7.09	12.23	1316.45	778.71	3.18
1.2 Dead+1.0 Wind 240 deg+1.0 Ice+1.0 Temp	161.29	-12.29	7.05	752.33	1346.82	2.49
1.2 Dead+1.0 Wind 270 deg+1.0 Ice+1.0 Temp	161.29	-14.20	-0.01	-18.08	1554.95	1.13

Load Combination	Vertical K	$Shear_x$ K	$Shear_z$ K	Overturning Moment, M_x kip-ft	Overturning Moment, M_z kip-ft	Torque kip-ft
1.2 Dead+1.0 Wind 300 deg+1.0 Ice+1.0 Temp	161.29	-12.31	-7.08	-788.37	1347.31	-0.52
1.2 Dead+1.0 Wind 330 deg+1.0 Ice+1.0 Temp	161.29	-7.11	-12.24	-1352.13	779.55	-2.04
Dead+Wind 0 deg - Service	82.80	-0.02	-10.10	-1110.84	-0.08	-2.62
Dead+Wind 30 deg - Service	82.80	5.08	-8.74	-961.69	-561.28	-2.99
Dead+Wind 60 deg - Service	82.80	8.82	-5.03	-555.33	-972.40	-2.57
Dead+Wind 90 deg - Service	82.80	10.19	0.02	-0.67	-1123.30	-1.46
Dead+Wind 120 deg - Service	82.80	8.84	5.07	553.70	-973.54	0.05
Dead+Wind 150 deg - Service	82.80	5.11	8.76	959.22	-563.25	1.54
Dead+Wind 180 deg - Service	82.80	0.02	10.10	1107.23	-2.36	2.62
Dead+Wind 210 deg - Service	82.80	-5.08	8.74	958.08	558.84	2.99
Dead+Wind 240 deg - Service	82.80	-8.82	5.03	551.73	969.96	2.57
Dead+Wind 270 deg - Service	82.80	-10.19	-0.02	-2.94	1120.86	1.45
Dead+Wind 300 deg - Service	82.80	-8.84	-5.07	-557.31	971.10	-0.05
Dead+Wind 330 deg - Service	82.80	-5.11	-8.76	-962.82	560.81	-1.54

Solution Summary

	Sum of Applied Forces			Sum of Reactions			
Load Comb.	PX K	PY K	PZ K	PX K	PY K	PZ K	% Error
1	0.00	-82.80	0.00	0.00	82.80	0.00	0.000%
2	-0.10	-99.36	-49.91	0.10	99.36	49.91	0.000%
3	-0.10	-74.52	-49.91	0.10	74.52	49.91	0.000%
4	25.09	-99.36	-43.18	-25.09	99.36	43.18	0.000%
5	25.09	-74.52	-43.18	-25.09	74.52	43.18	0.000%
6	43.56	-99.36	-24.87	-43.56	99.36	24.87	0.000%
7	43.56	-74.52	-24.87	-43.56	74.52	24.87	0.000%
8	50.36	-99.36	0.10	-50.36	99.36	-0.10	0.000%
9	50.36	-74.52	0.10	-50.36	74.52	-0.10	0.000%
10	43.66	-99.36	25.04	-43.66	99.36	-25.04	0.000%
11	43.66	-74.52	25.04	-43.66	74.52	-25.04	0.000%
12	25.27	-99.36	43.27	-25.27	99.36	-43.27	0.000%
13	25.27	-74.52	43.27	-25.27	74.52	-43.27	0.000%
14	0.10	-99.36	49.91	-0.10	99.36	-49.91	0.000%
15	0.10	-74.52	49.91	-0.10	74.52	-49.91	0.000%
16	-25.09	-99.36	43.18	25.09	99.36	-43.18	0.000%
17	-25.09	-74.52	43.18	25.09	74.52	-43.18	0.000%
18	-43.56	-99.36	24.87	43.56	99.36	-24.87	0.000%
19	-43.56	-74.52	24.87	43.56	74.52	-24.87	0.000%
20	-50.36	-99.36	-0.10	50.36	99.36	0.10	0.000%
21	-50.36	-74.52	-0.10	50.36	74.52	0.10	0.000%
22	-43.66	-99.36	-25.04	43.66	99.36	25.04	0.000%
23	-43.66	-74.52	-25.04	43.66	74.52	25.04	0.000%
24	-25.27	-99.36	-43.27	25.27	99.36	43.27	0.000%
25	-25.27	-74.52	-43.27	25.27	74.52	43.27	0.000%
26	0.00	-161.29	0.00	0.00	161.29	0.00	0.000%
27	-0.01	-161.29	-14.13	0.01	161.29	14.13	0.000%
28	7.09	-161.29	-12.23	-7.09	161.29	12.23	0.000%
29	12.29	-161.29	-7.05	-12.29	161.29	7.05	0.000%
30	14.20	-161.29	0.01	-14.20	161.29	-0.01	0.000%
31	12.31	-161.29	7.08	-12.31	161.29	-7.08	0.000%
32	7.11	-161.29	12.24	-7.11	161.29	-12.24	0.000%
33	0.01	-161.29	14.13	-0.01	161.29	-14.13	0.000%
34	-7.09	-161.29	12.23	7.09	161.29	-12.23	0.000%
35	-12.29	-161.29	7.05	12.29	161.29	-7.05	0.000%
36	-14.20	-161.29	-0.01	14.20	161.29	0.01	0.000%

Load Comb.	Sum of Applied Forces PX K	PY K	PZ K	Sum of Reactions PX K	PY K	PZ K	% Error
37	-12.31	-161.29	-7.08	12.31	161.29	7.08	0.000%
38	-7.11	-161.29	-12.24	7.11	161.29	12.24	0.000%
39	-0.02	-82.80	-10.10	0.02	82.80	10.10	0.000%
40	5.08	-82.80	-8.74	-5.08	82.80	8.74	0.000%
41	8.82	-82.80	-5.03	-8.82	82.80	5.03	0.000%
42	10.19	-82.80	0.02	-10.19	82.80	-0.02	0.000%
43	8.84	-82.80	5.07	-8.84	82.80	-5.07	0.000%
44	5.11	-82.80	8.76	-5.11	82.80	-8.76	0.000%
45	0.02	-82.80	10.10	-0.02	82.80	-10.10	0.000%
46	-5.08	-82.80	8.74	5.08	82.80	-8.74	0.000%
47	-8.82	-82.80	5.03	8.82	82.80	-5.03	0.000%
48	-10.19	-82.80	-0.02	10.19	82.80	0.02	0.000%
49	-8.84	-82.80	-5.07	8.84	82.80	5.07	0.000%
50	-5.11	-82.80	-8.76	5.11	82.80	8.76	0.000%

Non-Linear Convergence Results

Load Combination	Converged?	Number of Cycles	Displacement Tolerance	Force Tolerance
1	Yes	4	0.00000001	0.00000001
2	Yes	4	0.00000001	0.00055911
3	Yes	4	0.00000001	0.00037748
4	Yes	4	0.00000001	0.00083448
5	Yes	4	0.00000001	0.00055212
6	Yes	5	0.00000001	0.00002643
7	Yes	4	0.00000001	0.00085524
8	Yes	4	0.00000001	0.00032320
9	Yes	4	0.00000001	0.00021698
10	Yes	4	0.00000001	0.00090724
11	Yes	4	0.00000001	0.00059780
12	Yes	4	0.00000001	0.00080143
13	Yes	4	0.00000001	0.00052657
14	Yes	4	0.00000001	0.00055886
15	Yes	4	0.00000001	0.00037740
16	Yes	5	0.00000001	0.00002761
17	Yes	4	0.00000001	0.00089472
18	Yes	4	0.00000001	0.00080323
19	Yes	4	0.00000001	0.00052964
20	Yes	4	0.00000001	0.00032289
21	Yes	4	0.00000001	0.00021679
22	Yes	4	0.00000001	0.00090293
23	Yes	4	0.00000001	0.00059468
24	Yes	5	0.00000001	0.00002258
25	Yes	4	0.00000001	0.00072820
26	Yes	4	0.00000001	0.00001784
27	Yes	5	0.00000001	0.00004532
28	Yes	5	0.00000001	0.00004666
29	Yes	5	0.00000001	0.00004658
30	Yes	5	0.00000001	0.00004429
31	Yes	5	0.00000001	0.00004540
32	Yes	5	0.00000001	0.00004515
33	Yes	5	0.00000001	0.00004382
34	Yes	5	0.00000001	0.00004608
35	Yes	5	0.00000001	0.00004635
36	Yes	5	0.00000001	0.00004523
37	Yes	5	0.00000001	0.00004720

38	Yes	5	0.00000001	0.00004728
39	Yes	4	0.00000001	0.00002468
40	Yes	4	0.00000001	0.00002721
41	Yes	4	0.00000001	0.00003042
42	Yes	4	0.00000001	0.00001615
43	Yes	4	0.00000001	0.00001526
44	Yes	4	0.00000001	0.00001772
45	Yes	4	0.00000001	0.00002459
46	Yes	4	0.00000001	0.00003321
47	Yes	4	0.00000001	0.00002412
48	Yes	4	0.00000001	0.00001613
49	Yes	4	0.00000001	0.00001522
50	Yes	4	0.00000001	0.00002249

Maximum Tower Deflections - Service Wind

Section No.	Elevation ft	Horz. Deflection in	Gov. Load Comb.	Tilt °	Twist °
L1	164 - 131.5	6.776	42	0.3131	0.0024
L2	131.5 - 119.29	4.678	42	0.2968	0.0024
L3	125.29 - 78.79	4.297	42	0.2898	0.0024
L4	87.21 - 39.88	2.211	42	0.2210	0.0012
L5	49.13 - 1.5	0.747	42	0.1354	0.0006

Critical Deflections and Radius of Curvature - Service Wind

Elevation ft	Appurtenance	Gov. Load Comb.	Deflection in	Tilt °	Twist °	Radius of Curvature ft
164.00	12' x 3" Dia Omni	42	6.776	0.3131	0.0024	355210
160.00	4 FT DISH	42	6.513	0.3120	0.0024	355210
156.00	A-Ant-23G-2-C	42	6.251	0.3109	0.0024	222006
154.00	LLPX310R	42	6.120	0.3103	0.0024	177605
151.50	Remote Radio Head FD R6 RRH	42	5.957	0.3094	0.0024	142084
144.00	APX16PV-16PVL-E	42	5.470	0.3061	0.0024	88802
138.00	DC6-48-60-18-8F Surge Arrestor	42	5.087	0.3024	0.0024	68309
134.00	7770.00	42	4.834	0.2992	0.0024	59177
124.00	DB844H65E-XY	42	4.219	0.2881	0.0024	44486
114.00	531-70HD	42	3.629	0.2731	0.0022	39165
51.50	GPS	42	0.813	0.1413	0.0006	17511

Maximum Tower Deflections - Design Wind

Section No.	Elevation ft	Horz. Deflection in	Gov. Load Comb.	Tilt °	Twist °
L1	164 - 131.5	33.577	8	1.5510	0.0116
L2	131.5 - 119.29	23.182	8	1.4714	0.0119
L3	125.29 - 78.79	21.290	8	1.4367	0.0119
L4	87.21 - 39.88	10.951	8	1.0952	0.0061

Section No.	Elevation ft	Horz. Deflection in	Gov. Load Comb.	Tilt °	Twist °
L5	49.13 - 1.5	3.700	8	0.6705	0.0029

Critical Deflections and Radius of Curvature - Design Wind

Elevation ft	Appurtenance	Gov. Load Comb.	Deflection in	Tilt °	Twist °	Radius of Curvature ft
164.00	12' x 3" Dia Omni	8	33.577	1.5510	0.0117	72131
160.00	4 FT DISH	8	32.274	1.5460	0.0117	72131
156.00	A-Ant-23G-2-C	8	30.974	1.5406	0.0117	45082
154.00	LLPX310R	8	30.326	1.5376	0.0117	36065
151.50	Remote Radio Head FD R6 RRH	8	29.517	1.5334	0.0117	28852
144.00	APX16PV-16PVL-E	8	27.107	1.5172	0.0117	18032
138.00	DC6-48-60-18-8F Surge Arrestor	8	25.206	1.4987	0.0118	13870
134.00	7770.00	8	23.955	1.4829	0.0118	12014
124.00	DB844H65E-XY	8	20.903	1.4285	0.0119	8991
114.00	531-70HD	8	17.982	1.3541	0.0110	7913
51.50	GPS	8	4.026	0.6998	0.0030	3535

Compression Checks

Pole Design Data

Section No.	Elevation ft	Size	L ft	L_u ft	Kl/r	A in^2	P_u K	ϕP_n K	Ratio $\frac{P_u}{\phi P_n}$
L1	164 - 131.5 (1)	TP53.42x47x0.3125	32.50	162.50	103.4	52.6760	-18.69	1112.38	0.017
L2	131.5 - 119.29 (2)	TP56.15x53.42x0.375	12.21	162.50	100.9	64.7894	-20.75	1437.35	0.014
L3	119.29 - 78.79 (3)	TP62.97x54.0585x0.4375	46.50	162.50	90.2	84.5934	-42.10	2338.92	0.018
L4	78.79 - 39.88 (4)	TP69.66x60.4813x0.5625	47.33	162.50	81.6	120.1620	-66.10	3951.81	0.017
L5	39.88 - 1.5 (5)	TP76x66.7412x0.5625	47.63	162.50	72.8	134.6840	-99.34	5096.65	0.019

Pole Bending Design Data

Section No.	Elevation ft	Size	M_{ux} kip-ft	ϕM_{nx} kip-ft	Ratio $\frac{M_{ux}}{\phi M_{nx}}$	M_{uy} kip-ft	ϕM_{ny} kip-ft	Ratio $\frac{M_{uy}}{\phi M_{ny}}$
L1	164 - 131.5 (1)	TP53.42x47x0.3125	390.72	3531.85	0.111	0.00	3531.85	0.000
L2	131.5 - 119.29 (2)	TP56.15x53.42x0.375	533.69	4783.28	0.112	0.00	4783.28	0.000
L3	119.29 - 78.79 (3)	TP62.97x54.0585x0.4375	1780.04	7104.26	0.251	0.00	7104.26	0.000

Section No.	Elevation ft	Size	M_{ux} kip-ft	ϕM_{nx} kip-ft	Ratio $\frac{M_{ux}}{\phi M_{nx}}$	M_{uy} kip-ft	ϕM_{ny} kip-ft	Ratio $\frac{M_{uy}}{\phi M_{ny}}$
L4	78.79 - 39.88 (4)	TP69.66x60.4813x0.5625	3311.35	11742.75	0.282	0.00	11742.75	0.000
L5	39.88 - 1.5 (5)	TP76x66.7412x0.5625	5561.30	14202.67	0.392	0.00	14202.67	0.000

Pole Shear Design Data

Section No.	Elevation ft	Size	Actual V_u K	ϕV_n K	Ratio $\frac{V_u}{\phi V_n}$	Actual T_u kip-ft	ϕT_n kip-ft	Ratio $\frac{T_u}{\phi T_n}$
L1	164 - 131.5 (1)	TP53.42x47x0.3125	22.47	1613.88	0.014	1.02	7072.34	0.000
L2	131.5 - 119.29 (2)	TP56.15x53.42x0.375	23.55	2134.62	0.011	1.02	9578.25	0.000
L3	119.29 - 78.79 (3)	TP62.97x54.0585x0.4375	36.81	2833.69	0.013	7.16	14225.92	0.001
L4	78.79 - 39.88 (4)	TP69.66x60.4813x0.5625	43.59	4244.46	0.010	7.19	23514.17	0.000
L5	39.88 - 1.5 (5)	TP76x66.7412x0.5625	50.39	4576.00	0.011	7.19	28440.08	0.000

Pole Interaction Design Data

Section No.	Elevation ft	Ratio $\frac{P_u}{\phi P_n}$	Ratio $\frac{M_{ux}}{\phi M_{nx}}$	Ratio $\frac{M_{uy}}{\phi M_{ny}}$	Ratio $\frac{V_u}{\phi V_n}$	Ratio $\frac{T_u}{\phi T_n}$	Comb. Stress Ratio	Allow. Stress Ratio	Criteria
L1	164 - 131.5 (1)	0.017	0.111	0.000	0.014	0.000	0.128 ✔	1.000	4.8.2 ✔
L2	131.5 - 119.29 (2)	0.014	0.112	0.000	0.011	0.000	0.126 ✔	1.000	4.8.2 ✔
L3	119.29 - 78.79 (3)	0.018	0.251	0.000	0.013	0.001	0.269 ✔	1.000	4.8.2 ✔
L4	78.79 - 39.88 (4)	0.017	0.282	0.000	0.010	0.000	0.299 ✔	1.000	4.8.2 ✔
L5	39.88 - 1.5 (5)	0.019	0.392	0.000	0.011	0.000	0.411 ✔	1.000	4.8.2 ✔

Section Capacity Table

Section No.	Elevation ft	Component Type	Size	Critical Element	P K	ϕP_{allow} K	% Capacity	Pass Fail
L1	164 - 131.5	Pole	TP53.42x47x0.3125	1	-18.69	1112.38	12.8	Pass
L2	131.5 - 119.29	Pole	TP56.15x53.42x0.375	2	-20.75	1437.35	12.6	Pass
L3	119.29 - 78.79	Pole	TP62.97x54.0585x0.4375	3	-42.10	2338.92	26.9	Pass
L4	78.79 - 39.88	Pole	TP69.66x60.4813x0.5625	4	-66.10	3951.81	29.9	Pass

Section No.	Elevation ft	Component Type	Size	Critical Element	P K	$øP_{allow}$ K	% Capacity	Pass Fail
L5	39.88 - 1.5	Pole	TP76x66.7412x0.5625	5	-99.34	5096.65	41.1	Pass
							Summary	
						Pole (L5)	41.1	Pass
						RATING =	**41.1**	**Pass**

Flange Bolt and Flange Plate Analysis:

Input Data:

Tower Reactions:

Overturning Moment =	$OM := 388 \cdot ft \cdot kips$	(Input From tnxTower)
Shear Force =	$Shear := 22.5 \cdot kips$	(Input From tnxTower)
Axial Force =	$Axial := 43.8 \cdot kips$	(Input From tnxTower)

Flange Bolt Data:

Use ASTM A325

Number of Flange Bolts =	$N := 12$	(User Input)
Diameter of Bolt Circle =	$D_{bc} := 58 \cdot in$	(User Input)
Bolt Minimum Tensile Strength =	$F_{ub} := 120 \cdot ksi$	(User Input)
Bolt Modulus =	$E := 29000 \cdot ksi$	(User Input)
Diameter of Flange Bolts =	$D := 1.00 \cdot in$	(User Input)
Threads per Inch =	$n := 8$	(User Input)

Flange Plate Data:

Use ASTM A36

Plate Yield Strength =	$Fy_{bp} := 36 \cdot ksi$	(User Input)
Flange Plate Thickness =	$t_{bp} := 1.0 \cdot in$	(User Input)
Flange Plate Diameter =	$D_{bp} := 61.0 \cdot in$	(User Input)
Outer Pole Diameter =	$D_{pole} := 53.42 \cdot in$	(User Input)

Geometric Layout Data:

Distance from Bolts to Centroid of Pole:

Radius of Bolt Circle =: $R_{bc} := \frac{D_{bc}}{2} = 29 \cdot in$

Distance to Bolts = $i := 1 .. N$

$$d_i := \left\| \begin{array}{l} \theta \leftarrow 2 \cdot \pi \cdot \left(\frac{i}{N}\right) \\ d \leftarrow R_{bc} \cdot \sin(\theta) \end{array} \right.$$

$d_1 = 14.50 \cdot in$ $d_7 = -14.50 \cdot in$

$d_2 = 25.11 \cdot in$ $d_8 = -25.11 \cdot in$

$d_3 = 29.00 \cdot in$ $d_9 = -29.00 \cdot in$

$d_4 = 25.11 \cdot in$ $d_{10} = -25.11 \cdot in$

$d_5 = 14.50 \cdot in$ $d_{11} = -14.50 \cdot in$

$d_6 = 0.00 \cdot in$ $d_{12} = -0.00 \cdot in$

Critical Distances For Bending in Plate:

Outer Pole Radius = $R_{pole} := \frac{D_{pole}}{2} = 26.71 \cdot in$

Moment Arms of Bolts about Neutral Axis = $MA_i := if\left(d_i \geq R_{pole}, d_i - R_{pole}, 0in\right)$

$MA_1 = 0.00 \cdot in$ $MA_7 = 0.00 \cdot in$

$MA_2 = 0.00 \cdot in$ $MA_8 = 0.00 \cdot in$

$MA_3 = 2.29 \cdot in$ $MA_9 = 0.00 \cdot in$

$MA_4 = 0.00 \cdot in$ $MA_{10} = 0.00 \cdot in$

$MA_5 = 0.00 \cdot in$ $MA_{11} = 0.00 \cdot in$

$MA_6 = 0.00 \cdot in$ $MA_{12} = 0.00 \cdot in$

Effective Width of Flangeplate for Bending = $B_{eff} := .8 \cdot 2 \cdot \sqrt{\left(\frac{D_{bp}}{2}\right)^2 - \left(\frac{D_{pole}}{2}\right)^2} = 23.6 \cdot in$

Flange Bolt Analysis:

Calculated Flange Bolt Properties:

Polar Moment of Inertia = $I_p := \sum_i \left(d_i\right)^2 = 5.046 \times 10^3 \cdot in^2$

Gross Area of Bolt = $A_g := \frac{\pi}{4} \cdot D^2 = 0.785 \cdot in^2$

Net Area of Bolt = $A_n := \frac{\pi}{4} \cdot \left(D - \frac{0.9743 \cdot in}{n}\right)^2 = 0.606 \cdot in^2$

Net Diameter = $D_n := \frac{2 \cdot \sqrt{A_n}}{\sqrt{\pi}} = 0.878 \cdot in$

Radius of Gyration of Bolt = $r := \frac{D_n}{4} = 0.22 \cdot in$

Section Modulus of Bolt = $S_x := \frac{\pi \cdot D_n^3}{32} = 0.066 \cdot in^3$

Check Flange Bolt Tension Force:

Maximum Tensile Force = $T_{Max} := OM \cdot \frac{R_{bc}}{I_p} - \frac{Axial}{N} = 23.1 \cdot kips$

Maximum Shear Force = $V_{Max} := \frac{Shear}{N} = 1.9 \cdot kips$

Design Tensile Strength = $\Phi R_{nt} := \left(0.75 \cdot F_{ub} \cdot 0.75 \cdot A_g\right) = 53 \cdot kips$

Bolt Tension % of Capacity = $\frac{T_{Max}}{\Phi R_{nt}} = 43.59 \cdot \%$

Condition1 = $Condition1 := if\left(\frac{T_{Max}}{\Phi R_{nt}} \le 1.00, \text{"OK"}, \text{"Overstressed"}\right)$

$Condition1 = \text{"OK"}$

Design Shear Strength = $\Phi R_{nv} := \left(0.75 \cdot 0.45 \cdot F_{ub} \cdot A_g\right) = 31.8 \cdot kips$

Condition2 = $Condition2 := if\left[\left(\frac{V_{Max}}{\Phi R_{nv}}\right)^2 + \left(\frac{T_{Max}}{\Phi R_{nt}}\right)^2 \le 1.00, \text{"OK"}, \text{"Overstressed"}\right]$

$Condition2 = \text{"OK"}$

Flange Plate Analysis:

Force from Bolts = $C_i := \frac{OM \cdot d_i}{I_p} + \frac{Axial}{N}$

$C_1 = 17.0 \cdot kips$

$C_2 = 26.8 \cdot kips$

$C_3 = 30.4 \cdot kips$

$C_4 = 26.8 \cdot kips$

$C_5 = 17.0 \cdot kips$

$C_6 = 3.7 \cdot kips$

$C_7 = -9.7 \cdot kips$

$C_8 = -19.5 \cdot kips$

$C_9 = -23.1 \cdot kips$

$C_{10} = -19.5 \cdot kips$

$C_{11} = -9.7 \cdot kips$

$C_{12} = 3.6 \cdot kips$

Maximum Bending Stress in Plate =

$$f_{bp} := \sum_i \frac{4 \cdot C_i \cdot MA_i}{\left(B_{eff} \cdot t_{bp}^2\right)} = 11.8 \cdot ksi$$

Allowable Bending Stress in Plate = $F_{bp} := 0.9 \cdot Fy_{bp} = 32.4 \cdot ksi$

Plate Bending Stress % of Capacity = $\frac{f_{bp}}{F_{bp}} = 36.5 \cdot \%$

Condition3 = $Condition3 := if\left(\frac{f_{bp}}{F_{bp}} < 1.00, \text{"Ok"}, \text{"Overstressed"}\right)$

Condition3 = "Ok"

Anchor Bolt and Base Plate Analysis:

Input Data:

Tower Reactions:

Overturning Moment =	$OM := 5561 \cdot ft \cdot kips$	(Input From tnxTower)
Shear Force =	$Shear := 50 \cdot kips$	(Input From tnxTower)
Axial Force =	$Axial := 99 \cdot kips$	(Input From tnxTower)

Anchor Bolt Data:

ASTM A615 Grade 75

Number of Anchor Bolts =	$N := 30$	(User Input)
Diameter of Bolt Circle =	$D_{bc} := 86 \cdot in$	(User Input)
Bolt Ultimate Strength =	$F_u := 100 \cdot ksi$	(User Input)
Bolt Yield Strength =	$F_y := 75 \cdot ksi$	(User Input)
Bolt Modulus =	$E := 29000 \cdot ksi$	(User Input)
Diameter of Anchor Bolts =	$D := 2.25 \cdot in$	(User Input)
Threads per Inch =	$n := 4.5$	(User Input)
Top of Concrete to Bot Leveling Nut =	$l_{ar} := 2 \cdot in$	(User Input)

Base Plate Data:

Use ASTM A572 Grade 60

Plate Yield Strength =	$Fy_{bp} := 60 \cdot ksi$	(User Input)
Base Plate Thickness =	$t_{bp} := 3.0 \cdot in$	(User Input)
Base Plate Diameter =	$D_{bp} := 92.0 \cdot in$	(User Input)
Outer Pole Diameter =	$D_{pole} := 76.0 \cdot in$	(User Input)
	$\eta := 0.5$	For Ungrouted Base Plate per TIA-222-G Section 4.9.9

Geometric Layout Data:

Distance from Bolts to Centroid of Pole:

Radius of Bolt Circle =: $R_{bc} := \frac{D_{bc}}{2} = 43 \cdot in$

Distance to Bolts = $i := 1 .. N$

$$d_i := \left\| \begin{array}{l} \theta \leftarrow 2 \cdot \pi \cdot \left(\frac{i}{N}\right) \\ d \leftarrow R_{bc} \cdot \sin(\theta) \end{array} \right.$$

$d_1 = 8.94 \cdot in$

$d_2 = 17.49 \cdot in$

$d_3 = 25.27 \cdot in$

$d_4 = 31.96 \cdot in$

$d_5 = 37.24 \cdot in$

$d_6 = 40.90 \cdot in$

$d_7 = 42.76 \cdot in$

$d_8 = 42.76 \cdot in$

Critical Distances For Bending in Plate:

Outer Pole Radius = $R_{pole} := \frac{D_{pole}}{2} = 38 \cdot in$

Moment Arms of Bolts about Neutral Axis = $MA_i := if\left(d_i \geq R_{pole}, d_i - R_{pole}, 0in\right)$

$MA_1 = 0.00 \cdot in$

$MA_2 = 0.00 \cdot in$

$MA_3 = 0.00 \cdot in$

$MA_4 = 0.00 \cdot in$

$MA_5 = 0.00 \cdot in$

$MA_6 = 2.90 \cdot in$

$MA_7 = 4.76 \cdot in$

$MA_8 = 4.76 \cdot in$

Effective Width of Baseplate for Bending = $B_{eff} := .8 \cdot 2 \cdot \sqrt{\left(\frac{D_{bp}}{2}\right)^2 - \left(\frac{D_{pole}}{2}\right)^2} = 41.5 \cdot in$

Anchor Bolt Analysis:

Calculated Anchor Bolt Properties:

Polar Moment of Inertia = $I_p := \sum_i \left(d_i\right)^2 = 2.773 \times 10^4 \cdot in^2$

Gross Area of Bolt = $A_g := \frac{\pi}{4} \cdot D^2 = 3.976 \cdot in^2$

Net Area of Bolt = $A_n := \frac{\pi}{4} \cdot \left(D - \frac{0.9743 \cdot in}{n}\right)^2 = 3.248 \cdot in^2$

Net Diameter = $D_n := \frac{2 \cdot \sqrt{A_n}}{\sqrt{\pi}} = 2.033 \cdot in$

Radius of Gyration of Bolt = $r := \frac{D_n}{4} = 0.508 \cdot in$

Section Modulus of Bolt = $S_x := \frac{\pi \cdot D_n^3}{32} = 0.826 \cdot in^3$

Tensile Root Diameter = $d_{rt} := D - \frac{0.9743 \cdot in}{n} = 2.033 \cdot in$

Plastic Section Modulus = $Z := \frac{d_{rt}^3}{6} = 1.401 \cdot in^3$

Check Anchor Bolt Tension Force:

Maximum Tensile Force = $T_{Max} := OM \cdot \frac{R_{bc}}{I_p} - \frac{Axial}{N} = 100.2 \cdot kips$

Maximum Compressive Force = $P_u := OM \cdot \frac{R_{bc}}{I_p} + \frac{Axial}{N} = 106.8 \cdot kips$

Maximum Shear Force = $V_u := \frac{Shear}{N} = 1.7 \cdot kips$

Design Tensile Strength = $\Phi R_{nt} := 0.8 \cdot F_u \cdot A_n = 259.815 \cdot k$

Bolt % of Capacity = $\frac{\left(P_u + \frac{V_u}{\eta}\right)}{\Phi R_{nt}} \cdot 100 = 42.4$

Condition1 = $Condition1 := if\left[\frac{\left(P_u + \frac{V_u}{\eta}\right)}{\Phi R_{nt}} \le 1.00, "OK", "Overstressed"\right]$

$Condition1 = "OK"$

Design Shear Strength = $\Phi R_{nv} := 0.75 \cdot 0.45 \cdot F_u \cdot A_g = 134.193 \cdot k$

Design Flexural Strength = $\Phi R_{nm} := 0.9 \cdot F_y \cdot Z = 94.597 \cdot in \cdot k$

$$M_u := \begin{cases} 0 & \text{if } l_{ar} < D \\ 0.65 \cdot l_{ar} \cdot V_u & \text{otherwise} \end{cases} = 0 \cdot in \cdot k$$

Bolt % of Capacity = $\left[\left(\frac{V_u}{\Phi R_{nv}}\right)^2 + \left(\frac{P_u}{\Phi R_{nt}} + \frac{M_u}{\Phi R_{nm}}\right)^2\right] \cdot 100 = 16.9$

Condition2 = $\text{Condition2} := \text{if}\left[\left(\frac{V_u}{\Phi R_{nv}}\right)^2 + \left(\frac{P_u}{\Phi R_{nt}} + \frac{M_u}{\Phi R_{nm}}\right)^2 \le 1.00, \text{"OK"}, \text{"Overstressed"}\right]$

Condition2 = "OK"

Base Plate Analysis:

Force from Bolts = $C_i := \frac{OM \cdot d_i}{I_p} + \frac{Axial}{N}$

$C_1 = 24.8 \cdot kips$

$C_2 = 45.4 \cdot kips$

$C_3 = 64.1 \cdot kips$

$C_4 = 80.2 \cdot kips$

$C_5 = 92.9 \cdot kips$

$C_6 = 101.7 \cdot kips$

$C_7 = 106.2 \cdot kips$

$C_8 = 106.2 \cdot kips$

Maximum Bending Stress in Plate = $f_{bp} := \sum_i \frac{4 \cdot C_i \cdot MA_i}{\left(B_{eff} \cdot t_{bp}^2\right)} = 17.2 \cdot ksi$

Allowable Bending Stress in Plate = $F_{bp} := 0.9 \cdot Fy_{bp} = 54 \cdot ksi$

Plate Bending Stress % of Capacity = $\frac{f_{bp}}{F_{bp}} = 31.8 \cdot \%$

Condition2 = $Condition2 := if\left(\frac{f_{bp}}{F_{bp}} < 1.00, "Ok", "Overstressed"\right)$

Condition2 = "Ok"

Caisson Foundation:

Input Data:

Shear Force =	$S := 50k$	*USER INPUT-FROM tnxTower*
Overturning Moment =	$M := 5561ft \cdot k$	*USER INPUT-FROM tnxTower*
Applied Axial Load =	$A1 := 99k$	*USER INPUT-FROM tnxTower*
Bending Moment =	$Mu := 5828ft \cdot k$	*USER INPUT--FROM LPILE*
Moment Capacity =	$Mn := 12372ft \cdot k$	*USER INPUT--FROM LPILE*
Foundation Diameter =	$d := 9.0ft$	*USER INPUT*
Overall Length of Caisson =	$L_c := 28.0ft$	*USER INPUT*
Depth From Top of Caisson to Grade =	$L_{pag} := 1.0ft$	*USER INPUT*
Number of Rebar =	$n := 33$	*USER INPUT*
Area of Rebar =	$Ar := 1.560in^2$	*USER INPUT*
Rebar Yield Strength =	$fy := 60ksi$	*USER INPUT*
Concrete Comp Strength =	$f'c := 3ksi$	*USER INPUT*

Check Moment Capacity:

Factor of Safety = $FS := \frac{0.9 \cdot Mn}{Mu} = 1.9$

Factor of Safety Required = $FS_{reqd} := 1$

$FOSCheck := if(FS \geq FS_{reqd}, "OK", "NO GOOD")$

$FOSCheck = "OK"$

==========

LPILE Plus for Windows, Version 5.0 (5.0.47)

Analysis of Individual Piles and Drilled Shafts
Subjected to Lateral Loading Using the p-y Method

(c) 1985-2010 by Ensoft, Inc.
All Rights Reserved

==========

This program is licensed to:

TJL
Centek Engineering

Files Used for Analysis

Path to file locations: J:\Jobs\1607100.WI\84_Greenwich Perryridge Rd Tower CT2102\04_Structural\Tower\Backup Documentation\Foundation\
Name of input data file: Greenwich Hospital Caisson Analysis.lpd
Name of output file: Greenwich Hospital Caisson Analysis.lpo
Name of plot output file: Greenwich Hospital Caisson Analysis.lpp
Name of runtime file: Greenwich Hospital Caisson Analysis.lpr

---

Time and Date of Analysis

Date: December 8, 2016 Time: 11:14:52

Problem Title

16071.84 - CT2102

Program Options

Units Used in Computations - US Customary Units: Inches, Pounds

Basic Program Options:

Analysis Type 3:
- Computation of Nonlinear Bending Stiffness and Ultimate Bending Moment Capacity with Pile Response Computed Using Nonlinear EI

Computation Options:
- Only internally-generated p-y curves used in analysis
- Analysis does not use p-y multipliers (individual pile or shaft action only)
- Analysis assumes no shear resistance at pile tip
- Analysis for fixed-length pile or shaft only
- Analysis includes computation of foundation stiffness matrix elements
- Output pile response for full length of pile
- Analysis assumes no soil movements acting on pile
- No additional p-y curves to be computed at user-specified depths

Solution Control Parameters:
- Number of pile increments = 100
- Maximum number of iterations allowed = 100
- Deflection tolerance for convergence = 1.0000E-04 in
- Maximum allowable deflection = 1.0000E+02 in

Printing Options:
- Values of pile-head deflection, bending moment, shear force, and soil reaction are printed for full length of pile.
- Printing Increment (spacing of output points) = 8

Pile Structural Properties and Geometry

Pile Length = 336.00 in

Depth of ground surface below top of pile = 12.00 in

Slope angle of ground surface = 0.00 deg.

Structural properties of pile defined using 2 points

Point No.	Point Depth in	Pile Diameter in	Moment of Inertia in**4	Pile Area Sq.in	Modulus of Elasticity lbs/Sq.in
1	0.0000	108.00000	6678285.	9160.9000	3600000.
2	336.0000	108.00000	6678285.	9160.9000	3600000.

Please note that because this analysis makes computations of ultimate moment capacity and pile response using nonlinear bending stiffness

that the above values of moment of inertia and modulus of are not used
for any computations other than total stress due to combined axial
loading and bending.

Soil and Rock Layering Information

The soil profile is modelled using 4 layers

Layer 1 is sand, p-y criteria by Reese et al., 1974
Distance from top of pile to top of layer = 12.000 in
Distance from top of pile to bottom of layer = 48.000 in
p-y subgrade modulus k for top of soil layer = 20.000 lbs/in**3
p-y subgrade modulus k for bottom of layer = 20.000 lbs/in**3

Layer 2 is sand, p-y criteria by Reese et al., 1974
Distance from top of pile to top of layer = 48.000 in
Distance from top of pile to bottom of layer = 72.000 in
p-y subgrade modulus k for top of soil layer = 90.000 lbs/in**3
p-y subgrade modulus k for bottom of layer = 90.000 lbs/in**3

Layer 3 is sand, p-y criteria by Reese et al., 1974
Distance from top of pile to top of layer = 72.000 in
Distance from top of pile to bottom of layer = 132.000 in
p-y subgrade modulus k for top of soil layer = 150.000 lbs/in**3
p-y subgrade modulus k for bottom of layer = 150.000 lbs/in**3

Layer 4 is sand, p-y criteria by Reese et al., 1974
Distance from top of pile to top of layer = 132.000 in
Distance from top of pile to bottom of layer = 360.000 in
p-y subgrade modulus k for top of soil layer = 250.000 lbs/in**3
p-y subgrade modulus k for bottom of layer = 250.000 lbs/in**3

(Depth of lowest layer extends 24.00 in below pile tip)

Effective Unit Weight of Soil vs. Depth

Effective unit weight of soil with depth defined using 8 points

Point No.	Depth X in	Eff. Unit Weight lbs/in**3
1	12.00	0.05800

2	48.00	0.05800
3	48.00	0.06900
4	72.00	0.06900
5	72.00	0.06900
6	132.00	0.06900
7	132.00	0.07500
8	360.00	0.07500

Shear Strength of Soils

Shear strength parameters with depth defined using 8 points

Point No.	Depth X in	Cohesion c lbs/in**2	Angle of Friction Deg.	E50 or k_rm	RQD %
1	12.000	0.00000	20.00	------	------
2	48.000	0.00000	20.00	------	------
3	48.000	0.00000	30.00	------	------
4	72.000	0.00000	30.00	------	------
5	72.000	0.00000	35.00	------	------
6	132.000	0.00000	35.00	------	------
7	132.000	0.00000	42.00	------	------
8	360.000	0.00000	42.00	------	------

Notes:

(1) Cohesion = uniaxial compressive strength for rock materials.
(2) Values of E50 are reported for clay strata.
(3) Default values will be generated for E50 when input values are 0.
(4) RQD and k_rm are reported only for weak rock strata.

Loading Type

Static loading criteria was used for computation of p-y curves.

Pile-head Loading and Pile-head Fixity Conditions

```
Number of loads specified =  2

Load Case Number  1

Pile-head boundary conditions are Shear and Moment (BC Type 1)
Shear force at pile head    =       50000.000 lbs
Bending moment at pile head =    66732000.000 in-lbs
Axial load at pile head     =       99000.000 lbs

Non-zero moment at pile head for this load case indicates the pile-head
may rotate under the applied pile-head loading, but is not a free-head
(zero moment) condition.

Load Case Number  2

Pile-head boundary conditions are Shear and Moment (BC Type 1)
Shear force at pile head    =       21000.000 lbs
Bending moment at pile head =    27828000.000 in-lbs
Axial load at pile head     =       99000.000 lbs

Non-zero moment at pile head for this load case indicates the pile-head
may rotate under the applied pile-head loading, but is not a free-head
(zero moment) condition.



-------------------------------------------------------------------------------
   Computations of Nominal Moment Capacity and Nonlinear Bending Stiffness
-------------------------------------------------------------------------------

Number of sections =  1



Pile Section No.  1

The sectional shape is a circular drilled shaft (bored pile).

Outside Diameter                       =     108.0000 in

Material Properties:

Compressive Strength of Concrete       =        3.000 kip/in**2
Yield Stress of Reinforcement          =          60. kip/in**2
Modulus of Elasticity of Reinforcement =       29000. kip/in**2
Number of Reinforcing Bars             =           33
Area of Single Bar                     =      1.56000 in**2
Number of Rows of Reinforcing Bars     =           33
```

```
Area of Steel                          =       51.480 in**2
Area of Shaft                          =     9160.884 in**2
Percentage of Steel Reinforcement      =        0.562 percent
Cover Thickness (edge to bar center)   =        4.000 in

Unfactored Axial Squash Load Capacity  =     26317.78 kip
```

Distribution and Area of Steel Reinforcement

Row Number	Area of Reinforcement in**2	Distance to Centroidal Axis in
1	1.560	49.943
2	1.560	49.491
3	1.560	48.591
4	1.560	47.250
5	1.560	45.482
6	1.560	43.301
7	1.560	40.729
8	1.560	37.787
9	1.560	34.504
10	1.560	30.908
11	1.560	27.032
12	1.560	22.911
13	1.560	18.583
14	1.560	14.087
15	1.560	9.463
16	1.560	4.753
17	1.560	0.000
18	1.560	-4.753
19	1.560	-9.463
20	1.560	-14.087
21	1.560	-18.583
22	1.560	-22.911
23	1.560	-27.032
24	1.560	-30.908
25	1.560	-34.504
26	1.560	-37.787
27	1.560	-40.729
28	1.560	-43.301
29	1.560	-45.482
30	1.560	-47.250
31	1.560	-48.591
32	1.560	-49.491
33	1.560	-49.943

```
Axial Thrust Force =     99000.00  lbs
```

Bending Moment in-lbs	Bending Stiffness lb-in2	Bending Curvature rad/in	Maximum Strain in/in	Neutral Axis Position inches	Max. Concrete Stress psi	Max. Steel Stress psi
11415714.	2.283143E+13	5.000000E-07	0.00003040	60.79456383	93.44399995	822.70000
22713537.	2.271354E+13	0.00000100	0.00005753	57.52878553	175.22857	1550.69242
33889398.	2.259293E+13	0.00000150	0.00008462	56.41505510	255.51594	2277.59136
44945736.	2.247287E+13	0.00000200	0.00011172	55.85802251	334.42170	3004.48059
55888160.	2.235526E+13	0.00000250	0.00013891	55.56209975	412.22296	3734.14634
55888160.	1.862939E+13	0.00000300	0.00008696	28.98721272	258.46975	6521.18542
55888160.	1.596805E+13	0.00000350	0.00009945	28.41292173	294.25555	7666.34019
55888160.	1.397204E+13	0.00000400	0.00011169	27.92251199	329.05800	8818.41918
55888160.	1.241959E+13	0.00000450	0.00012395	27.54429477	363.63205	9970.07892
55888160.	1.117763E+13	0.00000500	0.00013622	27.24462873	397.97693	11121.31704
55888160.	1.016148E+13	0.00000550	0.00014851	27.00210661	432.09190	12272.13103
55888160.	9.314693E+12	0.00000600	0.00016117	26.86092693	466.97490	13412.34457
55888160.	8.598179E+12	0.00000650	0.00017342	26.68051833	500.44981	14564.04697
55888160.	7.984023E+12	0.00000700	0.00018570	26.52814418	533.69791	15715.29022
55888160.	7.451755E+12	0.00000750	0.00019799	26.39822012	566.71856	16866.06944
55888160.	6.986020E+12	0.00000800	0.00021029	26.28654259	599.51079	18016.38325
55888160.	6.575078E+12	0.00000850	0.00022261	26.18990904	632.07389	19166.22738
55888160.	6.209796E+12	0.00000900	0.00023495	26.10582179	664.40698	20315.59929
55888160.	5.882964E+12	0.00000950	0.00024731	26.03231746	696.50938	21464.49414
55888160.	5.588816E+12	0.00001000	0.00025968	25.96781570	728.38014	22612.90987

55888160.	5.322682E+12	0.00001050	0.00027207	25.91104513	760.01850	23760.84200
55888160.	5.080742E+12	0.00001100	0.00028447	25.86095971	791.42356	24908.28791
55888160.	4.859840E+12	0.00001150	0.00029689	25.81669682	822.59440	26055.24449
55888160.	4.657347E+12	0.00001200	0.00030933	25.77754515	853.53038	27201.70599
55888160.	4.471053E+12	0.00001250	0.00032179	25.74289638	884.23044	28347.67059
55888160.	4.299089E+12	0.00001300	0.00033426	25.71224195	914.69376	29493.13413
55888160.	4.139864E+12	0.00001350	0.00034675	25.68514735	944.91944	30638.09298
57381495.	4.098678E+12	0.00001400	0.00035926	25.66123921	974.90652	31782.54387
59291863.	4.089094E+12	0.00001450	0.00037178	25.64020211	1004.65429	32926.48082
61200031.	4.080002E+12	0.00001500	0.00038433	25.62175280	1034.16163	34069.90216
63105996.	4.071355E+12	0.00001550	0.00039689	25.60565311	1063.42775	35212.80238
65009733.	4.063108E+12	0.00001600	0.00040947	25.59168738	1092.45155	36355.17932
66911233.	4.055226E+12	0.00001650	0.00042206	25.57967216	1121.23217	37497.02796
68810491.	4.047676E+12	0.00001700	0.00043468	25.56944650	1149.76877	38638.34278
70707485.	4.040428E+12	0.00001750	0.00044732	25.56086236	1178.06023	39779.12108
72602200.	4.033456E+12	0.00001800	0.00045997	25.55379099	1206.10559	40919.35866
74494628.	4.026737E+12	0.00001850	0.00047264	25.54811972	1233.90394	42059.05014
76384742.	4.020250E+12	0.00001900	0.00048533	25.54374236	1261.45411	43198.19315
78272544.	4.013977E+12	0.00001950	0.00049804	25.54057199	1288.75531	44336.78056
82041109.	4.002005E+12	0.00002050	0.00052352	25.53751749	1342.60609	46612.27751
85800218.	3.990708E+12	0.00002150	0.00054908	25.53839296	1395.44816	48885.50129
89549731.	3.979988E+12	0.00002250	0.00057471	25.54272848	1447.27275	51156.41661
93289536.	3.969767E+12	0.00002350	0.00060043	25.55014426	1498.07131	53424.98127
97019483.	3.959979E+12	0.00002450	0.00062623	25.56031519	1547.83464	55691.15828
1.007394E+08	3.950566E+12	0.00002550	0.00065211	25.57297415	1596.55356	

57954.90549						
1.044226E+08	3.940474E+12	0.00002650	0.00067802	25.58562666	1644.10579	60000.00000
1.073567E+08	3.903880E+12	0.00002750	0.00070232	25.53906244	1687.50782	60000.00000
1.097980E+08	3.852561E+12	0.00002850	0.00072555	25.45799428	1727.92060	60000.00000
1.119282E+08	3.794175E+12	0.00002950	0.00074809	25.35901433	1766.15846	60000.00000
1.138139E+08	3.731603E+12	0.00003050	0.00077007	25.24823803	1802.53499	60000.00000
1.158936E+08	3.679162E+12	0.00003150	0.00079380	25.20000011	1840.95386	60000.00000
1.171441E+08	3.604433E+12	0.00003250	0.00081545	25.09062392	1874.98739	60000.00000
1.185235E+08	3.538014E+12	0.00003350	0.00083586	24.95113403	1906.24288	60000.00000
1.198617E+08	3.474253E+12	0.00003450	0.00085621	24.81754714	1936.64115	60000.00000
1.210166E+08	3.408918E+12	0.00003550	0.00087599	24.67565614	1965.45718	60000.00000
1.221679E+08	3.347067E+12	0.00003650	0.00089581	24.54267436	1993.64084	60000.00000
1.231632E+08	3.284352E+12	0.00003750	0.00091512	24.40316194	2020.39520	60000.00000
1.241352E+08	3.224291E+12	0.00003850	0.00093440	24.27001280	2046.44269	60000.00000
1.250634E+08	3.166161E+12	0.00003950	0.00095355	24.14055866	2071.66924	60000.00000
1.258762E+08	3.108053E+12	0.00004050	0.00097231	24.00756079	2095.71277	60000.00000
1.266861E+08	3.052677E+12	0.00004150	0.00099110	23.88184351	2119.18314	60000.00000
1.274786E+08	2.999496E+12	0.00004250	0.00100986	23.76143378	2141.99845	60000.00000
1.281495E+08	2.945967E+12	0.00004350	0.00102815	23.63570684	2163.61451	60000.00000
1.288179E+08	2.894785E+12	0.00004450	0.00104648	23.51639789	2184.68298	60000.00000
1.294837E+08	2.845795E+12	0.00004550	0.00106484	23.40309173	2205.20079	60000.00000
1.302200E+08	2.800431E+12	0.00004650	0.00108800	23.39788073	2230.49885	60000.00000
1.307529E+08	2.752694E+12	0.00004750	0.00110530	23.26940507	2248.51483	60000.00000
1.312837E+08	2.706881E+12	0.00004850	0.00112262	23.14688390	2266.04148	60000.00000
1.318123E+08	2.662876E+12	0.00004950	0.00113998	23.02995998	2283.07594	60000.00000

1.323388E+08	2.620570E+12	0.00005050	0.00115737	22.91830498	2299.61535	60000.00000
1.328107E+08	2.578849E+12	0.00005150	0.00117449	22.80559748	2315.36077	60000.00000
1.332349E+08	2.537808E+12	0.00005250	0.00119136	22.69260031	2330.37257	60000.00000
1.336572E+08	2.498265E+12	0.00005350	0.00120827	22.58439571	2344.91531	60000.00000
1.340774E+08	2.460136E+12	0.00005450	0.00122520	22.48071975	2358.98615	60000.00000
1.344957E+08	2.423346E+12	0.00005550	0.00124216	22.38133425	2372.58254	60000.00000
1.349120E+08	2.387824E+12	0.00005650	0.00125916	22.28602034	2385.70202	60000.00000
1.352624E+08	2.352389E+12	0.00005750	0.00127576	22.18706936	2398.01039	60000.00000
1.355943E+08	2.317851E+12	0.00005850	0.00129227	22.09009463	2409.77883	60000.00000
1.359244E+08	2.284444E+12	0.00005950	0.00130881	21.99687284	2421.09391	60000.00000
1.365792E+08	2.220800E+12	0.00006150	0.00134199	21.82096714	2442.35368	60000.00000
1.372266E+08	2.161049E+12	0.00006350	0.00137529	21.65803260	2461.76923	60000.00000
1.386452E+08	2.116721E+12	0.00006550	0.00141480	21.60000032	2482.48043	60000.00000
1.386452E+08	2.054003E+12	0.00006750	0.00144758	21.44566280	2497.42464	60000.00000
1.388540E+08	1.997899E+12	0.00006950	0.00147883	21.27815455	2509.89894	60000.00000
1.393218E+08	1.948556E+12	0.00007150	0.00151020	21.12161225	2520.72501	60000.00000
1.397694E+08	1.901625E+12	0.00007350	0.00154153	20.97315842	2529.84240	60000.00000
1.401216E+08	1.855915E+12	0.00007550	0.00157203	20.82154065	2537.07762	60000.00000
1.404681E+08	1.812492E+12	0.00007750	0.00160263	20.67916042	2542.72939	60000.00000
1.408090E+08	1.771182E+12	0.00007950	0.00163335	20.54534179	2546.77950	60000.00000
1.411441E+08	1.731829E+12	0.00008150	0.00166419	20.41947967	2549.20933	60000.00000
1.414731E+08	1.694289E+12	0.00008350	0.00169514	20.30102044	2549.88938	60000.00000
1.417714E+08	1.658145E+12	0.00008550	0.00172598	20.18690640	2544.79464	60000.00000
1.420071E+08	1.622938E+12	0.00008750	0.00175617	20.07046205	2540.38475	60000.00000
1.422402E+08	1.589276E+12	0.00008950	0.00178646	19.96047109	2544.59684	

60000.00000						
1.424708E+08	1.557058E+12	0.00009150	0.00181687	19.85652798	2547.61436	
60000.00000						
1.424708E+08	1.523752E+12	0.00009350	0.00185130	19.79999882	2549.59126	
60000.00000						
1.428175E+08	1.495471E+12	0.00009550	0.00189090	19.79999882	2547.59774	
60000.00000						
1.432643E+08	1.469377E+12	0.00009750	0.00192331	19.72627240	2542.85971	
60000.00000						
1.434685E+08	1.441894E+12	0.00009950	0.00195287	19.62681609	2538.62248	
60000.00000						
1.436711E+08	1.415479E+12	0.00010150	0.00198252	19.53218132	2541.48300	
60000.00000						
1.438150E+08	1.389517E+12	0.00010350	0.00201113	19.43120903	2544.67887	
60000.00000						
1.439573E+08	1.364525E+12	0.00010550	0.00203982	19.33480722	2547.13483	
60000.00000						
1.440984E+08	1.340451E+12	0.00010750	0.00206860	19.24278921	2548.84238	
60000.00000						
1.442383E+08	1.317244E+12	0.00010950	0.00209746	19.15492648	2549.79167	
60000.00000						
1.443761E+08	1.294852E+12	0.00011150	0.00212645	19.07132846	2549.06182	
60000.00000						
1.445109E+08	1.273224E+12	0.00011350	0.00215561	18.99218184	2545.52571	
60000.00000						
1.446451E+08	1.252338E+12	0.00011550	0.00218483	18.91630214	2541.97894	
60000.00000						
1.447784E+08	1.232157E+12	0.00011750	0.00221411	18.84353167	2538.42133	
60000.00000						
1.449110E+08	1.212645E+12	0.00011950	0.00224346	18.77371591	2534.85284	
60000.00000						
1.450429E+08	1.193769E+12	0.00012150	0.00227287	18.70672292	2537.81570	
60000.00000						
1.451714E+08	1.175477E+12	0.00012350	0.00230227	18.64188641	2541.19975	
60000.00000						
1.452625E+08	1.157470E+12	0.00012550	0.00233080	18.57209319	2543.89947	
60000.00000						
1.453530E+08	1.140023E+12	0.00012750	0.00235938	18.50494891	2546.11318	
60000.00000						
1.454428E+08	1.123111E+12	0.00012950	0.00238802	18.44034094	2547.83554	
60000.00000						
1.455320E+08	1.106707E+12	0.00013150	0.00241673	18.37815660	2549.06098	
60000.00000						
1.456205E+08	1.090790E+12	0.00013350	0.00244549	18.31829292	2549.78385	
60000.00000						
1.457082E+08	1.075337E+12	0.00013550	0.00247433	18.26073700	2549.76753	
60000.00000						
1.457934E+08	1.060316E+12	0.00013750	0.00250335	18.20617121	2546.88758	
60000.00000						

1.458783E+08	1.045723E+12	0.00013950	0.00253240	18.15344006	2544.00103	60000.00000
1.460471E+08	1.017750E+12	0.00014350	0.00259063	18.05319196	2538.20767	60000.00000
1.466286E+08	9.940921E+11	0.00014750	0.00265500	18.00000054	2531.33751	60000.00000
1.476109E+08	9.743296E+11	0.00015150	0.00272700	18.00000054	2536.11274	60000.00000
1.484654E+08	9.547614E+11	0.00015550	0.00279900	18.00000054	2543.79153	60000.00000
1.484654E+08	9.308175E+11	0.00015950	0.00286480	17.96115786	2547.89753	60000.00000
1.484654E+08	9.080452E+11	0.00016350	0.00292153	17.86869568	2549.52203	60000.00000
1.484654E+08	8.863606E+11	0.00016750	0.00297864	17.78289610	2549.55612	60000.00000
1.484654E+08	8.656874E+11	0.00017150	0.00303764	17.71217591	2544.88976	60000.00000
1.484654E+08	8.459567E+11	0.00017550	0.00309676	17.64536637	2540.20226	60000.00000
1.484654E+08	8.271053E+11	0.00017950	0.00315601	17.58221966	2535.49318	60000.00000
1.484654E+08	8.090757E+11	0.00018350	0.00321538	17.52251047	2530.76207	60000.00000
1.484654E+08	7.918154E+11	0.00018750	0.00327488	17.46603602	2526.00836	60000.00000
1.484654E+08	7.752762E+11	0.00019150	0.00333451	17.41260964	2521.23151	60000.00000
1.484654E+08	7.594138E+11	0.00019550	0.00339455	17.36345118	2525.02842	60000.00000
1.484654E+08	7.441874E+11	0.00019950	0.00345605	17.32354313	2531.38529	60000.00000
1.484654E+08	7.295597E+11	0.00020350	0.00351772	17.28609735	2536.85120	60000.00000
1.484654E+08	7.154959E+11	0.00020750	0.00357958	17.25100118	2541.40388	60000.00000
1.484654E+08	7.019640E+11	0.00021150	0.00364164	17.21815807	2545.01998	60000.00000
1.484654E+08	6.889345E+11	0.00021550	0.00370185	17.17794102	2547.47501	60000.00000
1.484654E+08	6.763799E+11	0.00021950	0.00376186	17.13829368	2549.09261	60000.00000
1.484654E+08	6.642747E+11	0.00022350	0.00382203	17.10081893	2549.90340	60000.00000

Unfactored (Nominal) Moment Capacity at Concrete Strain of 0.003 = 148465.39377 in-kip

Axial Thrust Force = 99000.00 lbs

Bending Moment in-lbs	Bending Stiffness lb-in2	Bending Curvature rad/in	Maximum Strain in/in	Neutral Axis Position inches	Max. Concrete Stress psi	Max. Steel Stress psi
11415714.	2.283143E+13	5.000000E-07	0.00003040	60.79456383	93.44399995	822.70000
22713537.	2.271354E+13	0.00000100	0.00005753	57.52878553	175.22857	1550.69242
33889398.	2.259293E+13	0.00000150	0.00008462	56.41505510	255.51594	2277.59136
44945736.	2.247287E+13	0.00000200	0.00011172	55.85802251	334.42170	3004.48059
55888160.	2.235526E+13	0.00000250	0.00013891	55.56209975	412.22296	3734.14634
55888160.	1.862939E+13	0.00000300	0.00008696	28.98721272	258.46975	6521.18542
55888160.	1.596805E+13	0.00000350	0.00009945	28.41292173	294.25555	7666.34019
55888160.	1.397204E+13	0.00000400	0.00011169	27.92251199	329.05800	8818.41918
55888160.	1.241959E+13	0.00000450	0.00012395	27.54429477	363.63205	9970.07892
55888160.	1.117763E+13	0.00000500	0.00013622	27.24462873	397.97693	11121.31704
55888160.	1.016148E+13	0.00000550	0.00014851	27.00210661	432.09190	12272.13103
55888160.	9.314693E+12	0.00000600	0.00016117	26.86092693	466.97490	13412.34457
55888160.	8.598179E+12	0.00000650	0.00017342	26.68051833	500.44981	14564.04697
55888160.	7.984023E+12	0.00000700	0.00018570	26.52814418	533.69791	15715.29022
55888160.	7.451755E+12	0.00000750	0.00019799	26.39822012	566.71856	16866.06944
55888160.	6.986020E+12	0.00000800	0.00021029	26.28654259	599.51079	18016.38325
55888160.	6.575078E+12	0.00000850	0.00022261	26.18990904	632.07389	19166.22738
55888160.	6.209796E+12	0.00000900	0.00023495	26.10582179	664.40698	20315.59929
55888160.	5.882964E+12	0.00000950	0.00024731	26.03231746	696.50938	

21464.49414						
55888160.	5.588816E+12	0.00001000	0.00025968	25.96781570	728.38014	22612.90987
55888160.	5.322682E+12	0.00001050	0.00027207	25.91104513	760.01850	23760.84200
55888160.	5.080742E+12	0.00001100	0.00028447	25.86095971	791.42356	24908.28791
55888160.	4.859840E+12	0.00001150	0.00029689	25.81669682	822.59440	26055.24449
55888160.	4.657347E+12	0.00001200	0.00030933	25.77754515	853.53038	27201.70599
55888160.	4.471053E+12	0.00001250	0.00032179	25.74289638	884.23044	28347.67059
55888160.	4.299089E+12	0.00001300	0.00033426	25.71224195	914.69376	29493.13413
55888160.	4.139864E+12	0.00001350	0.00034675	25.68514735	944.91944	30638.09298
57381495.	4.098678E+12	0.00001400	0.00035926	25.66123921	974.90652	31782.54387
59291863.	4.089094E+12	0.00001450	0.00037178	25.64020211	1004.65429	32926.48082
61200031.	4.080002E+12	0.00001500	0.00038433	25.62175280	1034.16163	34069.90216
63105996.	4.071355E+12	0.00001550	0.00039689	25.60565311	1063.42775	35212.80238
65009733.	4.063108E+12	0.00001600	0.00040947	25.59168738	1092.45155	36355.17932
66911233.	4.055226E+12	0.00001650	0.00042206	25.57967216	1121.23217	37497.02796
68810491.	4.047676E+12	0.00001700	0.00043468	25.56944650	1149.76877	38638.34278
70707485.	4.040428E+12	0.00001750	0.00044732	25.56086236	1178.06023	39779.12108
72602200.	4.033456E+12	0.00001800	0.00045997	25.55379099	1206.10559	40919.35866
74494628.	4.026737E+12	0.00001850	0.00047264	25.54811972	1233.90394	42059.05014
76384742.	4.020250E+12	0.00001900	0.00048533	25.54374236	1261.45411	43198.19315
78272544.	4.013977E+12	0.00001950	0.00049804	25.54057199	1288.75531	44336.78056
82041109.	4.002005E+12	0.00002050	0.00052352	25.53751749	1342.60609	46612.27751
85800218.	3.990708E+12	0.00002150	0.00054908	25.53839296	1395.44816	48885.50129
89549731.	3.979988E+12	0.00002250	0.00057471	25.54272848	1447.27275	51156.41661
93289536.	3.969767E+12	0.00002350	0.00060043	25.55014426	1498.07131	53424.98127

97019483.	3.959979E+12	0.00002450	0.00062623	25.56031519	1547.83464	55691.15828
1.007394E+08	3.950566E+12	0.00002550	0.00065211	25.57297415	1596.55356	57954.90549
1.044226E+08	3.940474E+12	0.00002650	0.00067802	25.58562666	1644.10579	60000.00000
1.073567E+08	3.903880E+12	0.00002750	0.00070232	25.53906244	1687.50782	60000.00000
1.097980E+08	3.852561E+12	0.00002850	0.00072555	25.45799428	1727.92060	60000.00000
1.119282E+08	3.794175E+12	0.00002950	0.00074809	25.35901433	1766.15846	60000.00000
1.138139E+08	3.731603E+12	0.00003050	0.00077007	25.24823803	1802.53499	60000.00000
1.158936E+08	3.679162E+12	0.00003150	0.00079380	25.20000011	1840.95386	60000.00000
1.171441E+08	3.604433E+12	0.00003250	0.00081545	25.09062392	1874.98739	60000.00000
1.185235E+08	3.538014E+12	0.00003350	0.00083586	24.95113403	1906.24288	60000.00000
1.198617E+08	3.474253E+12	0.00003450	0.00085621	24.81754714	1936.64115	60000.00000
1.210166E+08	3.408918E+12	0.00003550	0.00087599	24.67565614	1965.45718	60000.00000
1.221679E+08	3.347067E+12	0.00003650	0.00089581	24.54267436	1993.64084	60000.00000
1.231632E+08	3.284352E+12	0.00003750	0.00091512	24.40316194	2020.39520	60000.00000
1.241352E+08	3.224291E+12	0.00003850	0.00093440	24.27001280	2046.44269	60000.00000
1.250634E+08	3.166161E+12	0.00003950	0.00095355	24.14055866	2071.66924	60000.00000
1.258762E+08	3.108053E+12	0.00004050	0.00097231	24.00756079	2095.71277	60000.00000
1.266861E+08	3.052677E+12	0.00004150	0.00099110	23.88184351	2119.18314	60000.00000
1.274786E+08	2.999496E+12	0.00004250	0.00100986	23.76143378	2141.99845	60000.00000
1.281495E+08	2.945967E+12	0.00004350	0.00102815	23.63570684	2163.61451	60000.00000
1.288179E+08	2.894785E+12	0.00004450	0.00104648	23.51639789	2184.68298	60000.00000
1.294837E+08	2.845795E+12	0.00004550	0.00106484	23.40309173	2205.20079	60000.00000
1.302200E+08	2.800431E+12	0.00004650	0.00108800	23.39788073	2230.49885	60000.00000
1.307529E+08	2.752694E+12	0.00004750	0.00110530	23.26940507	2248.51483	60000.00000
1.312837E+08	2.706881E+12	0.00004850	0.00112262	23.14688390	2266.04148	

60000.00000					
1.318123E+08	2.662876E+12	0.00004950	0.00113998	23.02995998	2283.07594
60000.00000					
1.323388E+08	2.620570E+12	0.00005050	0.00115737	22.91830498	2299.61535
60000.00000					
1.328107E+08	2.578849E+12	0.00005150	0.00117449	22.80559748	2315.36077
60000.00000					
1.332349E+08	2.537808E+12	0.00005250	0.00119136	22.69260031	2330.37257
60000.00000					
1.336572E+08	2.498265E+12	0.00005350	0.00120827	22.58439571	2344.91531
60000.00000					
1.340774E+08	2.460136E+12	0.00005450	0.00122520	22.48071975	2358.98615
60000.00000					
1.344957E+08	2.423346E+12	0.00005550	0.00124216	22.38133425	2372.58254
60000.00000					
1.349120E+08	2.387824E+12	0.00005650	0.00125916	22.28602034	2385.70202
60000.00000					
1.352624E+08	2.352389E+12	0.00005750	0.00127576	22.18706936	2398.01039
60000.00000					
1.355943E+08	2.317851E+12	0.00005850	0.00129227	22.09009463	2409.77883
60000.00000					
1.359244E+08	2.284444E+12	0.00005950	0.00130881	21.99687284	2421.09391
60000.00000					
1.365792E+08	2.220800E+12	0.00006150	0.00134199	21.82096714	2442.35368
60000.00000					
1.372266E+08	2.161049E+12	0.00006350	0.00137529	21.65803260	2461.76923
60000.00000					
1.386452E+08	2.116721E+12	0.00006550	0.00141480	21.60000032	2482.48043
60000.00000					
1.386452E+08	2.054003E+12	0.00006750	0.00144758	21.44566280	2497.42464
60000.00000					
1.388540E+08	1.997899E+12	0.00006950	0.00147883	21.27815455	2509.89894
60000.00000					
1.393218E+08	1.948556E+12	0.00007150	0.00151020	21.12161225	2520.72501
60000.00000					
1.397694E+08	1.901625E+12	0.00007350	0.00154153	20.97315842	2529.84240
60000.00000					
1.401216E+08	1.855915E+12	0.00007550	0.00157203	20.82154065	2537.07762
60000.00000					
1.404681E+08	1.812492E+12	0.00007750	0.00160263	20.67916042	2542.72939
60000.00000					
1.408090E+08	1.771182E+12	0.00007950	0.00163335	20.54534179	2546.77950
60000.00000					
1.411441E+08	1.731829E+12	0.00008150	0.00166419	20.41947967	2549.20933
60000.00000					
1.414731E+08	1.694289E+12	0.00008350	0.00169514	20.30102044	2549.88938
60000.00000					
1.417714E+08	1.658145E+12	0.00008550	0.00172598	20.18690640	2544.79464
60000.00000					

1.420071E+08	1.622938E+12	0.00008750	0.00175617	20.07046205	2540.38475	60000.00000
1.422402E+08	1.589276E+12	0.00008950	0.00178646	19.96047109	2544.59684	60000.00000
1.424708E+08	1.557058E+12	0.00009150	0.00181687	19.85652798	2547.61436	60000.00000
1.424708E+08	1.523752E+12	0.00009350	0.00185130	19.79999882	2549.59126	60000.00000
1.428175E+08	1.495471E+12	0.00009550	0.00189090	19.79999882	2547.59774	60000.00000
1.432643E+08	1.469377E+12	0.00009750	0.00192331	19.72627240	2542.85971	60000.00000
1.434685E+08	1.441894E+12	0.00009950	0.00195287	19.62681609	2538.62248	60000.00000
1.436711E+08	1.415479E+12	0.00010150	0.00198252	19.53218132	2541.48300	60000.00000
1.438150E+08	1.389517E+12	0.00010350	0.00201113	19.43120903	2544.67887	60000.00000
1.439573E+08	1.364525E+12	0.00010550	0.00203982	19.33480722	2547.13483	60000.00000
1.440984E+08	1.340451E+12	0.00010750	0.00206860	19.24278921	2548.84238	60000.00000
1.442383E+08	1.317244E+12	0.00010950	0.00209746	19.15492648	2549.79167	60000.00000
1.443761E+08	1.294852E+12	0.00011150	0.00212645	19.07132846	2549.06182	60000.00000
1.445109E+08	1.273224E+12	0.00011350	0.00215561	18.99218184	2545.52571	60000.00000
1.446451E+08	1.252338E+12	0.00011550	0.00218483	18.91630214	2541.97894	60000.00000
1.447784E+08	1.232157E+12	0.00011750	0.00221411	18.84353167	2538.42133	60000.00000
1.449110E+08	1.212645E+12	0.00011950	0.00224346	18.77371591	2534.85284	60000.00000
1.450429E+08	1.193769E+12	0.00012150	0.00227287	18.70672292	2537.81570	60000.00000
1.451714E+08	1.175477E+12	0.00012350	0.00230227	18.64188641	2541.19975	60000.00000
1.452625E+08	1.157470E+12	0.00012550	0.00233080	18.57209319	2543.89947	60000.00000
1.453530E+08	1.140023E+12	0.00012750	0.00235938	18.50494891	2546.11318	60000.00000
1.454428E+08	1.123111E+12	0.00012950	0.00238802	18.44034094	2547.83554	60000.00000
1.455320E+08	1.106707E+12	0.00013150	0.00241673	18.37815660	2549.06098	60000.00000
1.456205E+08	1.090790E+12	0.00013350	0.00244549	18.31829292	2549.78385	60000.00000
1.457082E+08	1.075337E+12	0.00013550	0.00247433	18.26073700	2549.76753	

60000.00000					
1.457934E+08	1.060316E+12	0.00013750	0.00250335	18.20617121	2546.88758
60000.00000					
1.458783E+08	1.045723E+12	0.00013950	0.00253240	18.15344006	2544.00103
60000.00000					
1.460471E+08	1.017750E+12	0.00014350	0.00259063	18.05319196	2538.20767
60000.00000					
1.466286E+08	9.940921E+11	0.00014750	0.00265500	18.00000054	2531.33751
60000.00000					
1.476109E+08	9.743296E+11	0.00015150	0.00272700	18.00000054	2536.11274
60000.00000					
1.484654E+08	9.547614E+11	0.00015550	0.00279900	18.00000054	2543.79153
60000.00000					
1.484654E+08	9.308175E+11	0.00015950	0.00286480	17.96115786	2547.89753
60000.00000					
1.484654E+08	9.080452E+11	0.00016350	0.00292153	17.86869568	2549.52203
60000.00000					
1.484654E+08	8.863606E+11	0.00016750	0.00297864	17.78289610	2549.55612
60000.00000					
1.484654E+08	8.656874E+11	0.00017150	0.00303764	17.71217591	2544.88976
60000.00000					
1.484654E+08	8.459567E+11	0.00017550	0.00309676	17.64536637	2540.20226
60000.00000					
1.484654E+08	8.271053E+11	0.00017950	0.00315601	17.58221966	2535.49318
60000.00000					
1.484654E+08	8.090757E+11	0.00018350	0.00321538	17.52251047	2530.76207
60000.00000					
1.484654E+08	7.918154E+11	0.00018750	0.00327488	17.46603602	2526.00836
60000.00000					
1.484654E+08	7.752762E+11	0.00019150	0.00333451	17.41260964	2521.23151
60000.00000					
1.484654E+08	7.594138E+11	0.00019550	0.00339455	17.36345118	2525.02842
60000.00000					
1.484654E+08	7.441874E+11	0.00019950	0.00345605	17.32354313	2531.38529
60000.00000					
1.484654E+08	7.295597E+11	0.00020350	0.00351772	17.28609735	2536.85120
60000.00000					
1.484654E+08	7.154959E+11	0.00020750	0.00357958	17.25100118	2541.40388
60000.00000					
1.484654E+08	7.019640E+11	0.00021150	0.00364164	17.21815807	2545.01998
60000.00000					
1.484654E+08	6.889345E+11	0.00021550	0.00370185	17.17794102	2547.47501
60000.00000					
1.484654E+08	6.763799E+11	0.00021950	0.00376186	17.13829368	2549.09261
60000.00000					
1.484654E+08	6.642747E+11	0.00022350	0.00382203	17.10081893	2549.90340
60000.00000					

Unfactored (Nominal) Moment Capacity at Concrete Strain of 0.003 = 148465.39377

in-kip

Computed Values of Load Distribution and Deflection
for Lateral Loading for Load Case Number 1

Pile-head boundary conditions are Shear and Moment (Pile-head Condition Type 1)
Specified shear force at pile head = 50000.000 lbs
Specified moment at pile head = 66732000.000 in-lbs
Specified axial load at pile head = 99000.000 lbs

Depth X in	Deflect. y in	Moment M lbs-in	Shear V lbs	Slope S Rad.	Total Stress lbs/in**2	Flx. Rig. EI lbs-in**2	Soil Res. p lbs/in	Es*h F/L
0.000	0.676517	6.67E+07	50000.	-0.004680	550.396	4.06E+12	0.000	0.000
26.880	0.556696	6.81E+07	48705.	-0.004233	561.307	4.05E+12	-165.673	999.936
53.760	0.449018	6.93E+07	38797.	-0.003777	571.228	4.05E+12	-907.387	6789.979
80.640	0.353708	6.99E+07	1690.601	-0.003314	576.248	4.04E+12	-1966.609	18682.
107.520	0.270871	6.91E+07	-65245.	-0.002851	569.926	4.05E+12	-2994.447	37144.
134.400	0.200349	6.63E+07	-1.52E+05	-0.002400	546.573	4.06E+12	-4222.397	70813.
161.280	0.141582	6.07E+07	-2.63E+05	-0.001979	501.319	4.08E+12	-3935.294	93392.
188.160	0.092415	5.22E+07	-3.60E+05	-0.001761	433.271	2.24E+13	-3189.736	1.16E+05
215.040	0.045877	4.16E+07	-4.30E+05	-0.001704	346.860	2.25E+13	-1891.741	1.39E+05
241.920	0.000669	2.95E+07	-4.57E+05	-0.001662	249.665	2.26E+13	-32.100	1.61E+05
268.800	-0.043595	1.75E+07	-4.26E+05	-0.001634	152.547	2.27E+13	2383.547	1.84E+05
295.680	-0.087297	7.27E+06	-3.23E+05	-0.001620	69.623	2.28E+13	5359.632	2.06E+05
322.560	-0.130759	9.25E+05	-1.33E+05	-0.001615	18.285	2.28E+13	8906.706	2.29E+05

Please note that because this analysis makes computations of ultimate moment capacity and pile response using nonlinear bending stiffness that the above values of total stress due to combined axial stress and bending may not be representative of actual conditions.

Output Verification:

Computed forces and moments are within specified convergence limits.

Output Summary for Load Case No. 1:

```
Pile-head deflection             =     0.67651743 in
Computed slope at pile head      =    -0.00468033
Maximum bending moment           =      69929212. lbs-in
Maximum shear force              =  -456598.59371 lbs
Depth of maximum bending moment  =    80.64000000 in
Depth of maximum shear force     =      241.92000 in
Number of iterations             =             51
Number of zero deflection points =              1
```

Computed Values of Load Distribution and Deflection
for Lateral Loading for Load Case Number 2

Pile-head boundary conditions are Shear and Moment (Pile-head Condition Type 1)

```
Specified shear force at pile head  =       21000.000 lbs
Specified moment at pile head       =    27828000.000 in-lbs
Specified axial load at pile head   =       99000.000 lbs
```

Depth X in	Deflect. y in	Moment M lbs-in	Shear V lbs	Slope S Rad.	Total Stress lbs/in**2	Flx. Rig. EI lbs-in**2	Soil Res. p lbs/in	Es*h F/L
0.000	0.197999	2.78E+07	21000.	-0.000964	235.821	2.26E+13	0.000	0.000
26.880	0.172525	2.84E+07	20603.	-0.000931	240.390	2.26E+13	-51.343	999.936
53.760	0.147956	2.89E+07	16732.	-0.000897	244.637	2.26E+13	-433.390	9842.069
80.640	0.124309	2.92E+07	-509.227	-0.000862	246.708	2.26E+13	-954.247	

```
25793.
 107.520  0.101593  2.88E+07   -29705. -0.000828   243.561  2.26E+13 -1189.485
39340.
 134.400  0.079792  2.75E+07   -63647. -0.000794   233.544  2.26E+13 -1681.637
70813.
 161.280  0.058868  2.52E+07 -1.09E+05 -0.000763   214.796  2.27E+13 -1636.242
93392.
 188.160  0.038744  2.17E+07 -1.49E+05 -0.000735   186.609  2.27E+13 -1337.258
1.16E+05
 215.040  0.019309  1.73E+07 -1.79E+05 -0.000712   150.724  2.28E+13  -796.222
1.39E+05
 241.920  0.000423  1.23E+07 -1.90E+05 -0.000694   110.300  2.28E+13   -20.265
1.61E+05
 268.800 -0.018074  7.30E+06 -1.78E+05 -0.000683    69.868  2.28E+13   988.215
1.84E+05
 295.680 -0.036338  3.03E+06 -1.35E+05 -0.000677    35.322  2.28E+13  2230.987
2.06E+05
 322.560 -0.054502  3.86E+05   -55419. -0.000675    13.925  2.28E+13  3712.403
2.29E+05
```

Please note that because this analysis makes computations of ultimate moment capacity and pile response using nonlinear bending stiffness that the above values of total stress due to combined axial stress and bending may not be representative of actual conditions.

Output Verification:

Computed forces and moments are within specified convergence limits.

Output Summary for Load Case No. 2:

```
Pile-head deflection             =     0.19799947 in
Computed slope at pile head      =    -0.00096435
Maximum bending moment           =      29174338. lbs-in
Maximum shear force              =  -190007.87177 lbs
Depth of maximum bending moment  =    80.64000000 in
Depth of maximum shear force     =      241.92000 in
Number of iterations             =              5
Number of zero deflection points =              1
```

Summary of Pile Response(s)

Definition of Symbols for Pile-Head Loading Conditions:

Type 1 = Shear and Moment, y = pile-head displacment in
Type 2 = Shear and Slope, M = Pile-head Moment lbs-in
Type 3 = Shear and Rot. Stiffness, V = Pile-head Shear Force lbs
Type 4 = Deflection and Moment, S = Pile-head Slope, radians
Type 5 = Deflection and Slope, R = Rot. Stiffness of Pile-head in-lbs/rad

Load Type	Pile-Head Condition 1	Pile-Head Condition 2	Axial Load lbs	Pile-Head Deflection in	Maximum Moment in-lbs	Maximum Shear lbs
1	V= 50000.	M= 6.67E+07	99000.0000	0.6765174	6.9929E+07	-456599.
1	V= 21000.	M= 2.78E+07	99000.0000	0.1979995	2.9174E+07	-190008.

Computed Pile-head Stiffness Matrix Members
K22, K23, K32, K33 for Superstructure

Top y in	Shear React. lbs	Mom. React. in-lbs	K22 lbs/in	K32 in-lbs/in
0.00129188	5000.00007	999587.04324	3870323.	7.737449E+08
0.00388895	15051.49978	3009057.	3870323.	7.737449E+08
0.00616384	23856.06274	4769242.	3870323.	7.737449E+08
0.00777790	30102.99957	6018114.	3870323.	7.737449E+08
0.00902987	34948.50022	6986813.	3870323.	7.737449E+08
0.01005279	38907.56252	7778299.	3870323.	7.737449E+08
0.01091767	42254.90200	8447490.	3870323.	7.737449E+08
0.01166686	45154.49935	9027170.	3870323.	7.737449E+08
0.01232769	47712.12547	9538484.	3870323.	7.737449E+08
0.01291882	50000.00000	9995870.	3870323.	7.737449E+08

Top Rota. rad	Shear React. lbs	Mom. React. in-lbs	K23 lbs/rad	K33 in-lbs/rad
0.00003550	27470.74521	6673200.	7.737449E+08	1.879583E+11
0.00010705	82700.11595	20088334.	7.725019E+08	1.876452E+11
0.00017011	131096.16686	31839256.	7.706556E+08	1.871687E+11
0.00021507	165444.67458	40176667.	7.692662E+08	1.868090E+11
0.00025007	192093.88516	46643666.	7.681708E+08	1.865250E+11
0.00027875	213871.97590	51927589.	7.672528E+08	1.862871E+11
0.00030305	232288.03296	56395082.	7.664907E+08	1.860893E+11
0.00033093	248269.53716	60265001.	7.502165E+08	1.821077E+11
0.00036522	262458.50760	63678511.	7.186244E+08	1.743549E+11
0.00071124	278697.28023	66732000.	3.918457E+08	9.382456E+10

```
  K22 = abs(Shear Reaction/Top y)
  K23 = abs(Shear Reaction/Top Rotation)
  K32 = abs(Moment Reaction/Top y)
  K33 = abs(Moment Reaction/Top Rotation)
```

The analysis ended normally.

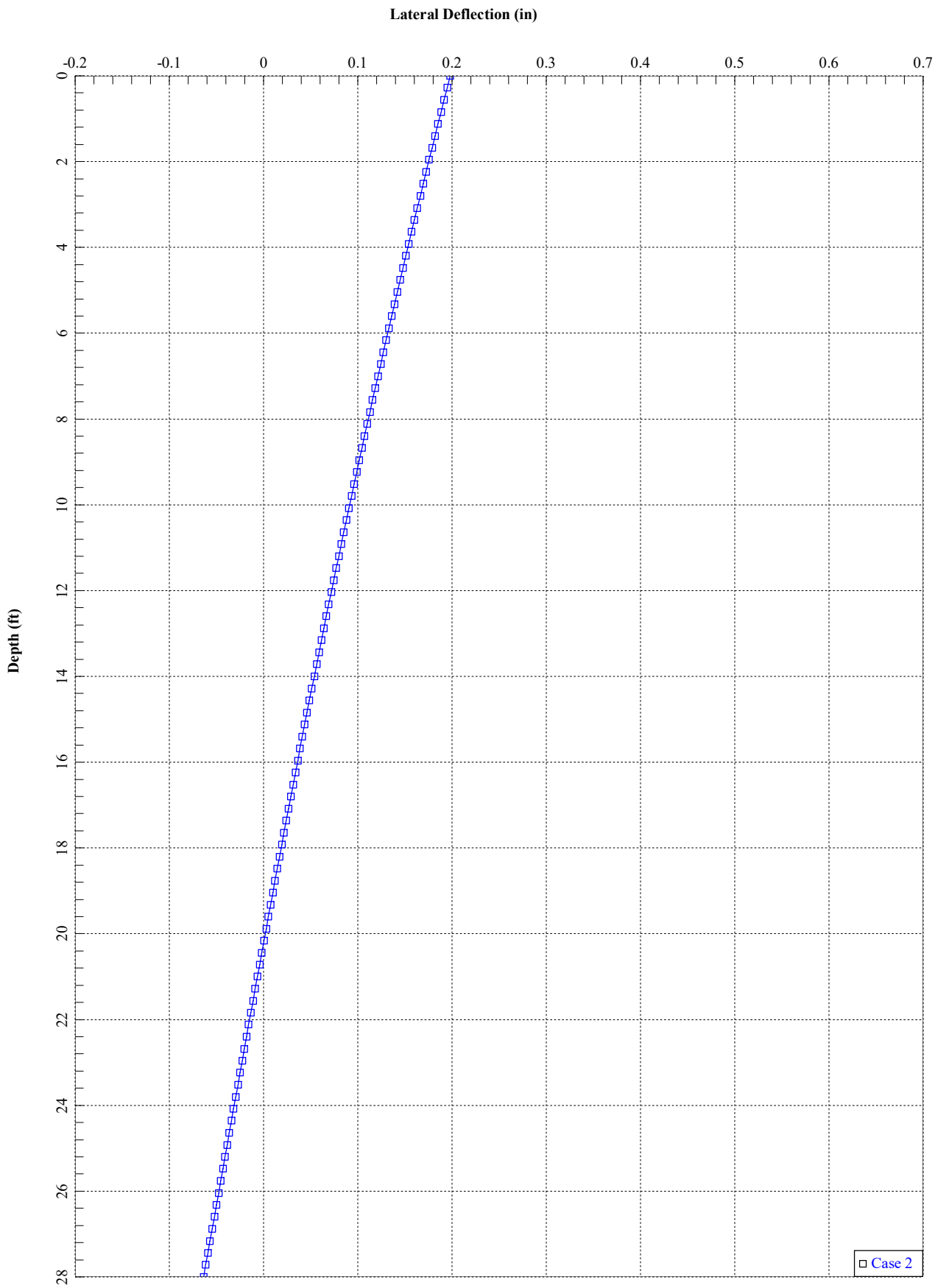
Lateral Deflection (in)
-0.2
-0.1
0
0.1
0.2
0.3
0.4
0.5
0.6
0.7
Depth (ft)
0
2
4
6
8
10
12
14
16
18
20
22
24
26
28
Case 2

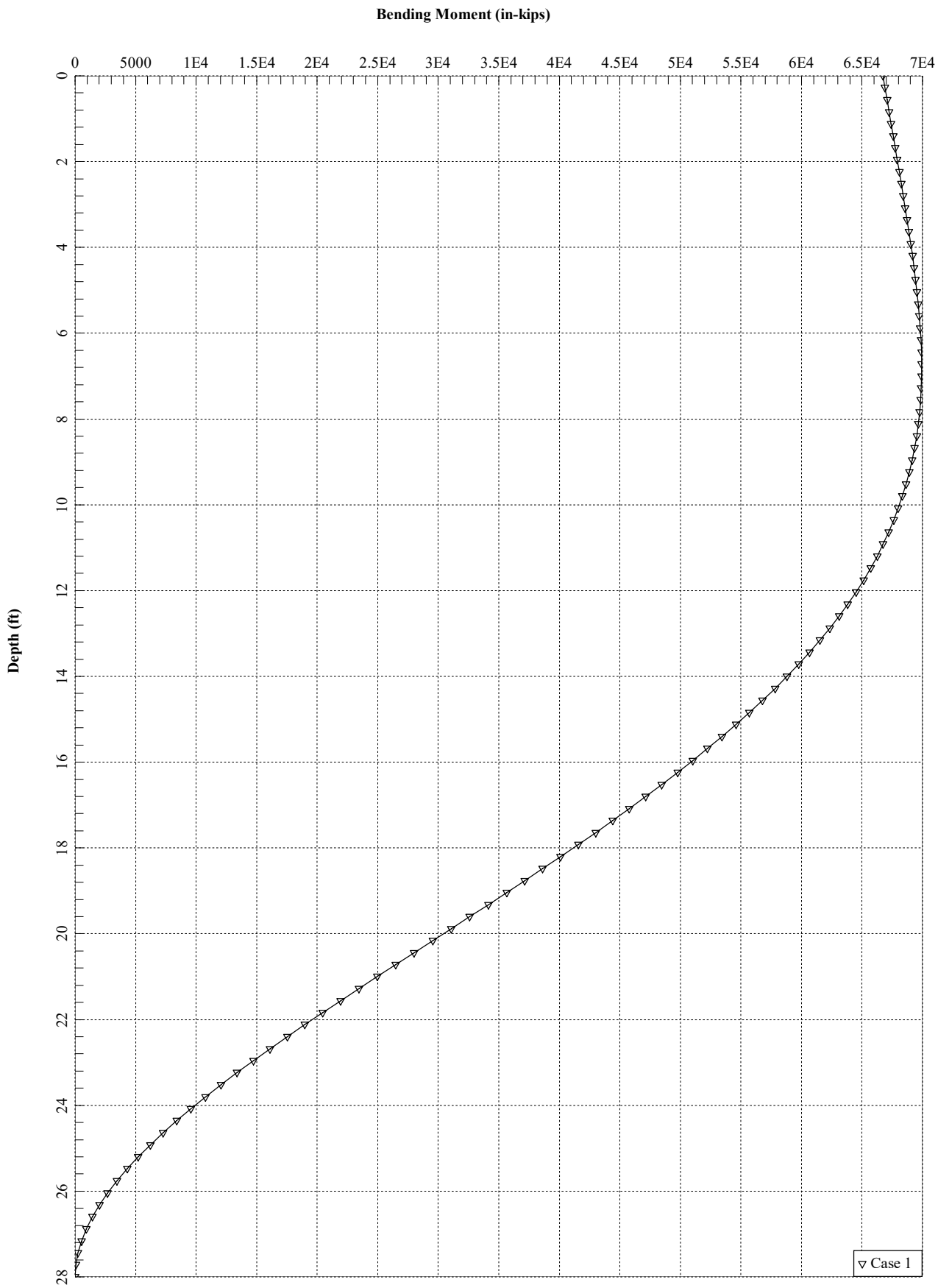
Bending Moment (in-kips)
0
5000
1E4
1.5E4
2E4
2.5E4
3E4
3.5E4
4E4
4.5E4
5E4
5.5E4
6E4
6.5E4
7E4
Depth (ft)
0
2
4
6
8
10
12
14
16
18
20
22
24
26
28
Case 1

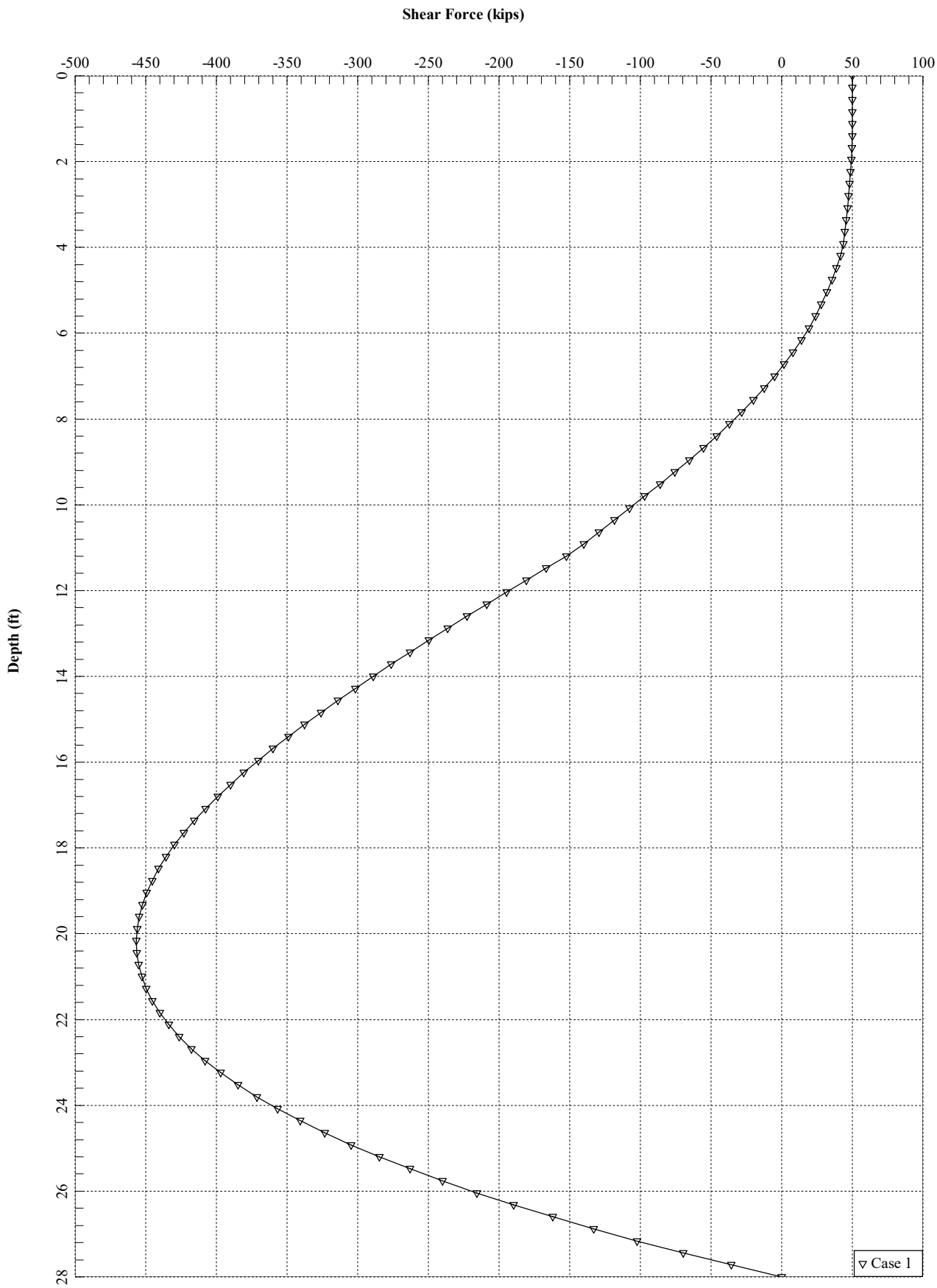
Shear Force (kips)
-500
-450
-400
-350
-300
-250
-200
-150
-100
-50
0
50
100
Depth (ft)
0
2
4
6
8
10
12
14
16
18
20
22
24
26
28
Case 1

Section 1 - RFDS GENERAL INFORMATION

RFDS NAME:	CTU2102	DATE:	04/06/2016	RF DESIGN ENG:	Omair Mohammed
ISSUE:	1xBBU RRH ADD	Approved? (Y/N):	Yes	RF DESIGN PHONE:	860-721-4315
REVISION:	Preliminary	RF MANAGER:	Cameron Syme	RF DESIGN EMAIL:	OM636A@US.ATT.COM
INITIATIVE /PROJECT:	LTE 1xBBU RRH ADD				

RF PERF ENG:		RFDS PROGRAM TYPE:	2017 LTE Multi Carrier
RF PERF PHONE:		RFDS TECHNOLOGY:	1xBBU RRH Add
RF PERF EMAIL:		State:	Final
TRIDENT:		Status:	RF Approval
GSM FREQUENCY:	850	RFDS ID:	1154822
UMTS FREQUENCY:	850, 1900	RFDS Version:	1.00
LTE FREQUENCY:	700, 1900, WCS	Created By:	om636a
		Date Created:	4/6/2016 11:46:23 AM
		Date Updated:	4/7/2016 1:24:46 PM
		Updated By:	om636a
I-PLAN JOB # 1:	NER-RCTB-16-01621	IPLAN PRD GRP || SUB GRP #1:	LTE Next Carrier || LTE 1xBBU RRH ADD
I-PLAN JOB # 2:		IPLAN PRD GRP || SUB GRP #2:	
I-PLAN JOB # 3:		IPLAN PRD GRP || SUB GRP #3:	
I-PLAN JOB # 4:		IPLAN PRD GRP || SUB GRP #4:	

Section 2 - LOCATION INFORMATION

USID:	100184	FA LOCATION CODE:	10128691	LOCATION NAME:	GREENWICH PERRYRIDGE RD TWR
REGION:	NORTHEAST	MARKET CLUSTER:	NEW ENGLAND	MARKET:	CONNECTICUT
ADDRESS:	5 PERRYRIDGE ROAD DUP	CITY:	GREENWICH	STATE:	CT
ZIP CODE:	06830	COUNTY:	FAIRFIELD	MSA / RSA:	
LATITUDE (D-M-S):	41d 2m 2.16996s	LONGITUDE (D-M-S):	-73d -37m -50.99988s	LAT (DEC. DEG.):	41.0339361
DIRECTIONS, ACCESS AND EQUIPMENT LOCATION:	CTL02102 FROM ROUTE 15, MERRITT PARKWAY: EXIT 31 NORTH STREET, SOUTH (GREENWICH), TAKE NORTH STREET TO END, APPROX. 4 MILES. TURN RIGHT ON MAPLE AND IMMEDIATE LEFT ON PATTERSON AVE. TAKE 3RD LEFT ONTO PERRYRIDGE ROAD. HOSPITAL ON RIGHT (LESS THEN 1/2 MILE). ACCESS ESCALATION CONTACT: STEVE CARBERY - FACILITIES DIRECTOR (203) 863-3000. WEEKEND SECURITY # 860-863-3230				

ORACLE PTN # 1:		PACE JOB # 1:	MRCTB018682
ORACLE PTN # 2:		PACE JOB # 2:	
ORACLE PTN # 3:		PACE JOB # 3:	
ORACLE PTN # 4:		PACE JOB # 4:	
SEARCH RING NAME:			
SEARCH RING ID:		CASPR INITIATIVE # 1:	
BTA:		CASPR INITIATIVE # 2:	
LONG (DEC. DEG.):	-73.6308333	CASPR INITIATIVE # 3:	
BORDER CELL WITH CONTOUR COORD:		CASPR INITIATIVE # 4:	
AM STUDY REQ'D (Y/N):	No		
FREQ COORD:			

Section 3 - LICENSE COVERAGE/FILING INFORMATION

CGSA - NO FILING TRIGGERED (Yes/No):	No	CGSA LOSS:		PCS REDUCED - UPS ZIP:	
CGSA - MINOR FILING NEEDED (Yes/No)::	No	CGSA EXT AGMT NEEDED:		PCS POPS REDUCED:	
CGSA - MAJOR FILING NEEDED (Yes/No):	Yes	CGSA SCORECARD UPDATED:			

CGSA CALL SIGNS:	

Section 4 - TOWER/REGULATORY INFORMATION

STRUCTURE AT&T OWNED?:	Yes	GROUND ELEVATION (ft):	0	STRUCTURE TYPE:	MONOPOLE
ADDITIONAL REGULATORY?:	Yes	HEIGHT OVERALL (ft):	170.00	FCC ASR NUMBER:	
SUB-LEASE RIGHTS?:	Yes	STRUCTURE HEIGHT (ft):	170.00		
LIGHTING TYPE:	NOT REQUIRED				

MARKET LOCATION 700 MHz Band:	
MARKET LOCATION 850 MHz Band:	
MARKET LOCATION 1900 MHz Band:	
MARKET LOCATION AWS Band:	
MARKET LOCATION WCS Band:	
MARKET LOCATION Future Band:	

Section 5 - E-911 INFORMATION - existing

	PSAP NAME:	PSAP ID:	E911 PHASE:	MPC SVC PROVIDER:	LMU REQUIRED:	ESRN:	DATE LIVE PH1:	DATE LIVE PH2:
SECTOR A E-911						0		
SECTOR B						0		
SECTOR C						0		
SECTOR D								
SECTOR E								
SECTOR F								
OMNI								

Section 5 - E-911 INFORMATION - final

	PSAP NAME:	PSAP ID:	E911 PHASE:	MPC SVC PROVIDER:	LMU REQUIRED:	ESRN:	DATE LIVE PH1:	DATE LIVE PH2:
SECTOR A E-911						0		
SECTOR B						0		
SECTOR C						0		
SECTOR D								
SECTOR E								
SECTOR F								
OMNI								

Section 6 - RBS GENERAL INFORMATION - existing

	GSM 1ST RBS	GSM 2ND RBS	UMTS 1ST RBS	UMTS 2ND RBS	UMTS 3RD RBS	UMTS 4TH RBS	LTE 1ST RBS	LTE 2ND RBS				
RBS ID:	243927	243928	243929	243930	324314	379812	362930	RFDS_15854035				
CTS COMMON ID:	321D2102	321P2102	CTU2102	CTV2102	CTU6102	CTV6102	CTL02102	CTL00802R				
CELL ID / BCF:	321D2102	321P2102	CTU2102	CTU2102	CTU2102	CTU6102	CTL02102	CTL00802R				
BTA/TID:	321G	321P	321V	321U	321W	321W	321L	321L				
4-DIGIT SITE ID:	2102	2102	8102	2102	9102	06102	02102	0802				
COW OR TOY?:	No	No	No	No	No	No	No	No				
CELL SITE TYPE:												
SITE TYPE:												
BTS LOCATION ID:												
ORIGINATING CO:												
CELLULAR NETWORK:												
OPS DISTRICT:												
RF DISTRICT:												
OPS ZONE:												
RF ZONE:												
BASE STATION TYPE:												
EQUIPMENT NAME:	GREENWICH HOSPITAL - MACRO	GREENWICH HOSP MACRO 1900	GREENWICH HOSP MACRO	GREENWICH HOSP MACRO	GREENWICH PERRYRIDGE RD TWR	NM RELO 2557 GREENWICH	GREENWICH PERRYRIDGE RD TWR	GREENWICH PERRYRIDGE RD TWR				
DISASTER PRIORITY:												

Section 6 - RBS GENERAL INFORMATION - final

	GSM 1ST RBS	GSM 2ND RBS	UMTS 1ST RBS	UMTS 2ND RBS	UMTS 3RD RBS	UMTS 4TH RBS	LTE 1ST RBS	LTE 2ND RBS				
RBS ID:	243927	243928	243929	243930	324314	379812	362930					
CTS COMMON ID:	321D2102	321P2102	CTU2102	CTV2102	CTU6102	CTV6102	CTL02102					
CELL ID / BCF:	321D2102		CTU2102	CTU2102	CTU2102	CTU6102	CTL02102					
BTA/TID:	321G	321P	321V	321U	321W	321W	321L					
4-DIGIT SITE ID:	2102	2102	8102	2102	9102	06102	02102					
COW OR TOY?:	No	No	No	No	No	No	No					
CELL SITE TYPE:	SECTORIZED	SECTORIZED	SECTORIZED	SECTORIZED	SECTORIZED	SECTORIZED	SECTORIZED					
SITE TYPE:	MACRO-CONVENTIONAL	MACRO-CONVENTIONAL	MACRO-CONVENTIONAL	MACRO-CONVENTIONAL	MACRO-CONVENTIONAL	MACRO-CONVENTIONAL	MACRO-CONVENTIONAL					
BTS LOCATION ID:	GROUND	GROUND	INTERNAL	INTERNAL	INTERNAL	INTERNAL	INTERNAL					
ORIGINATING CO:	CINGULAR	CINGULAR	CINGULAR	CINGULAR	CINGULAR	CINGULAR	CINGULAR					
CELLULAR NETWORK:	GOLD	GOLD	GOLD	GOLD	GOLD	GOLD	GOLD					
OPS DISTRICT:	CT-South	CT-South	CT-South	CT-South	CT-South	CT-South	CT-South					
RF DISTRICT:	NPO Triage	NPO Triage	NPO Triage	NPO Triage	NPO Triage	NPO Triage	NPO Triage					
OPS ZONE:	NE_CT_S_FRFD_SW_CS	NE_CT_S_FRFD_SW_CS	NE_CT_S_FRFD_SW_CS	NE_CT_S_FRFD_SW_CS	NE_CT_S_FRFD_SW_CS	NE_CT_S_FRFD_SW_CS	NE_CT_S_FRFD_SW_CS					
RF ZONE:	Hotseat	Hotseat	Hotseat	Hotseat	Hotseat	Hotseat	Hotseat					
BASE STATION TYPE:	BASE	BASE	OVERLAY	OVERLAY	OVERLAY	OVERLAY	BASE					
EQUIPMENT NAME:	GREENWICH HOSPITAL - MACRO	GREENWICH HOSP MACRO 1900	GREENWICH HOSP MACRO	GREENWICH HOSP MACRO	GREENWICH PERRYRIDGE RD TWR	NM RELO 2557 GREENWICH	GREENWICH PERRYRIDGE RD TWR					
DISASTER PRIORITY:	0	0	0	0	3	3	3					

Section 7 - RBS SPECIFIC INFORMATION - existing

	GSM 1ST RBS	GSM 2ND RBS	UMTS 1ST RBS	UMTS 2ND RBS	UMTS 3RD RBS	UMTS 4TH RBS	LTE 1ST RBS	LTE 2ND RBS				
MSC:												
BSC/RNC/MME POOL ID:	BRPTCTBSC01	BRPTCTBSC01	BRPTCT04RNC001	BRPTCT04RNC001	BRPTCT04RNC001	BRPTCT04RNC001	FF01	FF01				
LAC:	05010	05010	05999	05999	05999	05999						
RAC:												
EQUIPMENT VENDOR:												
EQUIPMENT TYPE:	ULTRASITE	ULTRASITE										
BASEBAND CONFIGURATION:												
LOCATION:												
CABINET LOCATION:												
MARKET STATE CODE:												
AGPS:	Yes	Yes	Yes	Yes	Yes	Yes	Yes	Yes				
NODE B NUMBER:	0	0	0	0	0	0	2102	802				
PARENT NAME:	BRPTCTBSC01	BRPTCTBSC01	BRPTCT04RNC001	BRPTCT04RNC001	BRPTCT04RNC001	BRPTCT04RNC001	FF01	FF01				

Section 7 - RBS SPECIFIC INFORMATION - final

	GSM 1ST RBS	GSM 2ND RBS	UMTS 1ST RBS	UMTS 2ND RBS	UMTS 3RD RBS	UMTS 4TH RBS	LTE 1ST RBS	LTE 2ND RBS				
MSC:												
BSC/RNC/MME POOL ID:	BRPTCTBSC01	BRPTCTBSC01	BRPTCT04RNC001	BRPTCT04RNC001	BRPTCT04RNC001	BRPTCT04RNC001	FF01					
LAC:	05010	05010	05999	05999	05999	05999						
RAC:												
EQUIPMENT VENDOR:	NOKIA	NOKIA	ERICSSON	ERICSSON	ERICSSON	ERICSSON	ERICSSON					
EQUIPMENT TYPE:	ULTRASITE	ULTRASITE	3206 INDOOR	3206 INDOOR	3206 INDOOR	3206 INDOOR	6601 INDOOR MU					
BASEBAND CONFIGURATION:												
LOCATION:												
CABINET LOCATION:												
MARKET STATE CODE:							CT					
AGPS:	Yes	Yes	Yes	Yes	Yes	Yes	Yes					
NODE B NUMBER:	0	0	0	0	0	0	2102					
PARENT NAME:	BRIDGEPORT BSC 01	BRIDGEPORT BSC 01	BRIDGEPORT CT RNC001	BRIDGEPORT CT RNC001	BRIDGEPORT CT RNC001	BRIDGEPORT CT RNC001						

Section 8 - RBS/SECTOR ASSOCIATION - existing

	GSM 1ST RBS	GSM 2ND RBS	UMTS 1ST RBS	UMTS 2ND RBS	UMTS 3RD RBS	UMTS 4TH RBS	LTE 1ST RBS	LTE 2ND RBS									
CTS Common ID	321D2102	321P2102	CTU2102	CTV2102	CTU6102	CTV6102	CTL02102	CTL00802R									
Soft Sector IDs	321G21021	321P21022	CTU21027	CTV21021	CTU61024	CTV2102A	CTL02102_3A_1	CTL00802_3B_1									
	321G21022		CTU21028	CTV21022	CTU61025	CTV2102B	CTL02102_3C_1	CTL00802_7B_1									
	321G21023		CTU21029	CTV21023	CTU61026	CTV2102C	CTL02102_7A_1	CTL00802_9B_1									
					CTU61027		CTL02102_7C_1										
					CTU61028		CTL02102_9A_1										
					CTU61029		CTL02102_9C_1										

Section 8 - RBS/SECTOR ASSOCIATION - final

	GSM 1ST RBS	GSM 2ND RBS	UMTS 1ST RBS	UMTS 2ND RBS	UMTS 3RD RBS	UMTS 4TH RBS	LTE 1ST RBS	LTE 2ND RBS									
CTS Common ID	321D2102	321P2102	CTU2102	CTV2102	CTU6102	CTV6102	CTL02102										
Soft Sector IDs	321G21021		CTU21027	CTV21021	CTU61024	CTV2102A	CTL02102_3A_1										
	321G21022		CTU21028	CTV21022	CTU61025	CTV2102B	CTL02102_3B_1										
	321G21023		CTU21029	CTV21023	CTU61026	CTV2102C	CTL02102_3C_1										
					CTU61027		CTL02102_7A_1										
					CTU61028		CTL02102_7B_1										
					CTU61029		CTL02102_7C_1										
							CTL02102_9A_1										
							CTL02102_9B_1										
							CTL02102_9C_1										

Section 9 - SOFT SECTOR ID - existing

	GSM 1ST 850	GSM 1ST 1900	UMTS 1ST 850	UMTS 1ST 1900	UMTS 2ND 850	UMTS 2ND 1900	UMTS 3RD 850	UMTS 3RD 1900	LTE 1ST 700	LTE 1ST 1900	LTE 1ST WCS	LTE 2ND 700	LTE 2ND 1900	LTE 2ND WCS
USEID (excluding Hard Sector)	100184.850.25G.1	100184.1900.25G.1	100184.850.3G.1	100184.1900.3G.1	100184.850.3G.2	100184.1900.3G.3	100184.850.3G.3	100184.1900.3G.4						
SECTOR A SOFT SECTOR ID	321G21021		CTV21021	CTU21027	CTV2102A	CTU61024		CTU61027	CTL02102_7A_1	CTL02102_9A_1	CTL02102_3A_1$G			
SECTOR B	321G21022	321P21022	CTV21022	CTU21028		CTU61025	CTV2102B	CTU61028				CTL00802_7B_1$G	CTL00802_9B_1$G	CTL00802_3B_1$G
SECTOR C	321G21023		CTV21023	CTU21029		CTU61026	CTV2102C	CTU61029	CTL02102_7C_1	CTL02102_9C_1	CTL02102_3C_1$G			
SECTOR D														
SECTOR E														
SECTOR F														
OMNI														

Section 9 - SOFT SECTOR ID - final

	GSM 1ST 850	GSM 1ST 1900	UMTS 1ST 850	UMTS 1ST 1900	UMTS 2ND 850	UMTS 2ND 1900	UMTS 3RD 850	UMTS 3RD 1900	LTE 1ST 700	LTE 1ST 1900	LTE 1ST WCS	LTE 2ND 700	LTE 2ND 1900	LTE 2ND WCS
USEID (excluding Hard Sector)	100184.850.25G.1		100184.850.3G.1	100184.1900.3G.1	100184.850.3G.2	100184.1900.3G.3	100184.850.3G.3	100184.1900.3G.4						
SECTOR A SOFT SECTOR ID	321G21021		CTV21021	CTU21027	CTV2102A	CTU61024		CTU61027	CTL02102_7A_1	CTL02102_9A_1	CTL02102_3A_1			
SECTOR B	321G21022		CTV21022	CTU21028		CTU61025	CTV2102B	CTU61028	CTL02102_7B_1	CTL02102_9B_1	CTL02102_3B_1			
SECTOR C	321G21023		CTV21023	CTU21029		CTU61026	CTV2102C	CTU61029	CTL02102_7C_1	CTL02102_9C_1	CTL02102_3C_1			
SECTOR D														
SECTOR E														
SECTOR F														
OMNI														

Section 9 - Cell Number - existing

	GSM 1ST 850	GSM 1ST 1900	UMTS 1ST 850	UMTS 1ST 1900	UMTS 2ND 850	UMTS 2ND 1900	UMTS 3RD 850	UMTS 3RD 1900	LTE 1ST 700	LTE 1ST 1900	LTE 1ST WCS	LTE 2ND 700	LTE 2ND 1900	LTE 2ND WCS												
USEID (excluding Hard Sector)	100184.850.25G.1	100184.1900.25G.1	100184.850.3G.1	100184.1900.3G.1	100184.850.3G.2	100184.1900.3G.3	100184.850.3G.3	100184.1900.3G.4																		
SECTOR A CELL NUMBER									15	8	149															
SECTOR B												16	9	150												
SECTOR C									17	10	151															
SECTOR D																										
SECTOR E																										
SECTOR F																										
OMNI																										

Section 9 - Cell Number - final

	GSM 1ST 850	GSM 1ST 1900	UMTS 1ST 850	UMTS 1ST 1900	UMTS 2ND 850	UMTS 2ND 1900	UMTS 3RD 850	UMTS 3RD 1900	LTE 1ST 700	LTE 1ST 1900	LTE 1ST WCS	LTE 2ND 700	LTE 2ND 1900	LTE 2ND WCS												
USEID (excluding Hard Sector)	100184.850.25G.1		100184.850.3G.1	100184.1900.3G.1	100184.850.3G.2	100184.1900.3G.3	100184.850.3G.3	100184.1900.3G.4																		
SECTOR A CELL NUMBER									15	8	149															
SECTOR B									16	9	150															
SECTOR C									17	10	151															
SECTOR D																										
SECTOR E																										
SECTOR F																										
OMNI																										

Section 10 - CID/SAC - existing

		GSM 1ST 850	GSM 1ST 1900	UMTS 1ST 850	UMTS 1ST 1900	UMTS 2ND 850	UMTS 2ND 1900	UMTS 3RD 850	UMTS 3RD 1900	LTE 1ST 700	LTE 1ST 1900	LTE 1ST WCS	LTE 2ND 700	LTE 2ND 1900	LTE 2ND WCS												
SECTOR A	CID/SAC	21021		21021	21027	21024	61024		61027																		
SECTOR B		21022	21022	21022	21028		61025	21025	61028																		
SECTOR C		21023		21023	21029		61026	21026	61029																		
SECTOR D																											
SECTOR E																											
SECTOR F																											
OMNI																											

Section 10 - CID/SAC - final

		GSM 1ST 850	GSM 1ST 1900	UMTS 1ST 850	UMTS 1ST 1900	UMTS 2ND 850	UMTS 2ND 1900	UMTS 3RD 850	UMTS 3RD 1900	LTE 1ST 700	LTE 1ST 1900	LTE 1ST WCS	LTE 2ND 700	LTE 2ND 1900	LTE 2ND WCS												
SECTOR A	CID/SAC	21021		21021	21027	21024	61024		61027																		
SECTOR B		21022		21022	21028		61025	21025	61028																		
SECTOR C		21023		21023	21029		61026	21026	61029																		
SECTOR D																											
SECTOR E																											
SECTOR F																											
OMNI																											

Section 15A - CURRENT SECTOR/CELL INFORMATION - SECTOR A (OR OMNI)

ANTENNA COMMON FIELDS	ANTENNA POSITION 1		ANTENNA POSITION 2		ANTENNA POSITION 3		ANTENNA POSITION 4		ANTENNA POSITION 5		ANTENNA POSITION 6		ANTENNA POSITION 7	
ANTENNA MAKE - MODEL	7770		QS66512-2				P65-16-XLH-RR							
ANTENNA VENDOR	Powerwave		Quintel				Powerwave							
ANTENNA SIZE (H x W x D)	55X11X5		72X12X9.6				72X12X6							
ANTENNA WEIGHT	35		111				64							
AZIMUTH	0		30				30							
MAGNETIC DECLINATION														
RADIATION CENTER (feet)	134		134				134							
ANTENNA TIP HEIGHT	136		137				137							
MECHANICAL DOWNTILT	0		0				0							
FEEDER AMOUNT	2		Fiber + 2 Coax											
VERTICAL SEPARATION from ANTENNA ABOVE (TIP to TIP)														
VERTICAL SEPARATION from ANTENNA BELOW (TIP to TIP)														
HORIZONTAL SEPARATION from CLOSEST ANTENNA to LEFT (CENTERLINE to CENTERLINE)														
HORIZONTAL SEPARATION from CLOSEST ANTENNA to RIGHT (CENTERLINE to CENTERLINE)														
HORIZONTAL SEPARATION from ANOTHER ANTENNA (which antenna # / # of inches)														
Antenna RET Motor (QTY/MODEL)	2	Powerwave 7020 (DB)		Built-in				Internal						
SURGE ARRESTOR (QTY/MODEL)			1	DC Fiber Squid			1	DC Fiber Squid						
DIPLEXER (QTY/MODEL)	2	Powerwave/LGP 21901	4	CCi triplexer TPX-070821										
DUPLEXER (QTY/MODEL)														
Antenna RET CONTROL UNIT (QTY/MODEL)	1	Kathrein / 860-10006	1	RRH Conrtolled				LTE RRH						
DC BLOCK (QTY/MODEL)														
TMA/LNA (QTY/MODEL)	2	Pwav LGP21401 Single 1900 w/ 850BP												
CURRENT INJECTORS FOR TMA (QTY/MODEL)	2	Polyphaser 1000860												
PDU FOR TMAS (QTY/MODEL)	1	LGP12104												
FILTER (QTY/MODEL)														
SQUID (QTY/MODEL)														
FIBER TRUNK (QTY/MODEL)														
DC TRUNK (QTY/MODEL)														
RRH - 700 band (QTY/MODEL)							1	RRUS-11						
RRH - 850 band (QTY/MODEL)														
RRH - 1900 band (QTY/MODEL)			1	RRUS-12+RRUS-A2										
RRH - AWS band (QTY/MODEL)														
RRH - WCS band (QTY/MODEL)			1	RRUS-32										
Additional RRH #1 - any band (QTY/MODEL)														
Additional RRH #2 - any band (QTY/MODEL)														
Additional Component 1 (QTY/MODEL)														
Additional Component 2 (QTY/MODEL)														
Additional Component 3 (QTY/MODEL)														
Local Market Note 1														
Local Market Note 2														
Local Market Note 3														

PORT SPECIFIC FIELDS	PORT NUMBER	USEID (CSSng)	USEID (Atoll)	ATOLL TXID	ATOLL CELL ID	TX/RX ?	TECHNOLOGY/FREQUENCY	ANTENNA ATOLL	ANTENNA GAIN	ELECTRICAL AZIMUTH	ELECTRICAL TILT	RRH LOCATION (Top/Bottom/Integrated/None)	FEEDERS TYPE	FEEDER LENGTH (feet)	RXAIT KIT MODULE?	TRIPLEXER or LLC (QTY)	TRIPLEXER or LLC (MODEL)	SCPA/MCPA MODULE?	HATCHPLATE POWER (Watts)	ERP (Watts)	Antenna RET Name	CABLE NUMBER	CABLE ID (CSSNG)
ANTENNA POSITION 1	PORT 1		100184.A.850.3G.1	CTV21021	CTV21021		UMTS 850	7770.00.850.02	13.5	0	2	None	Commscope 1-5/8 (850)	160						303.39		1	
	PORT 2		100184.A.850.3G.2	CTV2102A	CTV2102A		UMTS 850	7770.00.850.02	13.5	0	2	None	Commscope 1-5/8 (850)	160						303.39		1	
	PORT 3		100184.A.1900.3G.1	CTU61027	CTU61027		UMTS 1900	7770.00.1900.00	15.5	0	0	None	Commscope 1-5/8 (1900)	160						345.94		2	
	PORT 4		100184.A.1900.3G.2	CTU61024	CTU61024	Decom	UMTS 1900	7770.00.1900.00	15.5	0	0	None	Commscope 1-5/8 (1900)	160						345.94		2	
ANTENNA POSITION 2	PORT 1		100184.A.850.25G.1	321G21021	321G21021		GSM 850	QS66512-2_840MHz_02DT	13.5	30	2	None	Commscope 1-5/8 (850)	160					12.58	111.42		3	
	PORT 3		100184.A.1900.4G.1	CTL02102_9A_1	CTL02102_9A_1		LTE 1900	QS66512-	16	30	3	Top	Commscope 1-5/8	160						3664.3757		3	

								2_1930MHz_03DT					(850)										
	PORT 4		100184.A.WCS.4G.1	CTL02102_3A_1	CTL02102_3A_1		LTE WCS	QS66512-2_2355MHz_02DT	17	30	2	Top	Commscope 1-5/8 (850)	160						1285.2866		3	
ANTENNA POSITION 4	**PORT 1**		100184.A.700.4G.1	CTL02102_7A_1	CTL02102_7A_1		LTE 700	P65-16-XLH-RR_716MHz_02DT	14.8	30	2	Top	Fiber	0						1475.7065		7	

Section 15B - CURRENT SECTOR/CELL INFORMATION - SECTOR B

ANTENNA COMMON FIELDS	ANTENNA POSITION 1		ANTENNA POSITION 2		ANTENNA POSITION 3		ANTENNA POSITION 4		ANTENNA POSITION 5		ANTENNA POSITION 6		ANTENNA POSITION 7	
ANTENNA MAKE - MODEL	7770		QS66512-2				P65-16-XLH-RR							
ANTENNA VENDOR	Powerwave		Quintel				Powerwave							
ANTENNA SIZE (H x W x D)	55X11X5		72X12X9.6				72X12X6							
ANTENNA WEIGHT	35		111				64							
AZIMUTH	100		150				150							
MAGNETIC DECLINATION														
RADIATION CENTER (feet)	134		134				134							
ANTENNA TIP HEIGHT	136		137				137							
MECHANICAL DOWNTILT	0		0				0							
FEEDER AMOUNT	2		Fiber + 2 Coax											
VERTICAL SEPARATION from ANTENNA ABOVE (TIP to TIP)														
VERTICAL SEPARATION from ANTENNA BELOW (TIP to TIP)														
HORIZONTAL SEPARATION from CLOSEST ANTENNA to LEFT (CENTERLINE to CENTERLINE)														
HORIZONTAL SEPARATION from CLOSEST ANTENNA to RIGHT (CENTERLINE to CENTERLINE)														
HORIZONTAL SEPARATION from ANOTHER ANTENNA (which antenna # / # of inches)														
Antenna RET Motor (QTY/MODEL)	2	Powerwave 7020 (DB)		Built-in				Internal						
SURGE ARRESTOR (QTY/MODEL)														
DIPLEXER (QTY/MODEL)	2	Powerwave/LGP 21901	4	CCi triplexer TPX-070821										
DUPLEXER (QTY/MODEL)														
Antenna RET CONTROL UNIT (QTY/MODEL)			1	RRH Conrtolled				LTE RRH						
DC BLOCK (QTY/MODEL)														
TMA/LNA (QTY/MODEL)	2	Pwav LGP21401 Single 1900 w/ 850BP												
CURRENT INJECTORS FOR TMA (QTY/MODEL)	2	Polyphaser 1000860												
PDU FOR TMAS (QTY/MODEL)														
FILTER (QTY/MODEL)														
SQUID (QTY/MODEL)														
FIBER TRUNK (QTY/MODEL)														
DC TRUNK (QTY/MODEL)														
RRH - 700 band (QTY/MODEL)							1	RRUS-11						
RRH - 850 band (QTY/MODEL)														
RRH - 1900 band (QTY/MODEL)			1	RRUS-12+RRUS-A2										
RRH - AWS band (QTY/MODEL)														
RRH - WCS band (QTY/MODEL)			1	RRUS-32										
Additional RRH #1 - any band (QTY/MODEL)														
Additional RRH #2 - any band (QTY/MODEL)														
Additional Component 1 (QTY/MODEL)														
Additional Component 2 (QTY/MODEL)														
Additional Component 3 (QTY/MODEL)														
Local Market Note 1														
Local Market Note 2														
Local Market Note 3														

PORT SPECIFIC FIELDS	PORT NUMBER	USEID (CSSng)	USEID (Atoll)	ATOLL TXID	ATOLL CELL ID	TX/RX ?	TECHNOLOGY/FREQUENCY	ANTENNA ATOLL	ANTENNA GAIN	ELECTRICAL AZIMUTH	ELECTRICAL TILT	RRH LOCATION (Top/Bottom/Integrated/None)	FEEDERS TYPE	FEEDER LENGTH (feet)	RXAIT KIT MODULE?	TRIPLEXER or LLC (QTY)	TRIPLEXER or LLC (MODEL)	SCPA/MCPA MODULE?	HATCHPLATE POWER (Watts)	ERP (Watts)	Antenna RET Name	CABLE NUMBER	CABLE ID (CSSNG)
ANTENNA POSITION 1	PORT 1		100184.B.850.3G.1	CTV21022	CTV21022		UMTS 850	7770.00.850.04	13.5	100	4	None	Commscope 1-5/8 (850)	160						303.39		9	
	PORT 2		100184.B.850.3G.2	CTV2102B	CTV2102B		UMTS 850	7770.00.850.04	13.5	100	4	None	Commscope 1-5/8 (850)	160						303.39		9	
	PORT 3		100184.B.1900.3G.1	CTU61028	CTU61028		UMTS 1900	7770.00.1900.02	15.5	100	2	None	Commscope 1-5/8 (1900)	160						345.94		10	
	PORT 4		100184.B.1900.3G.2	CTU61025	CTU61025	Decom	UMTS 1900	7770.00.1900.02	15.5	100	2	None	Commscope 1-5/8 (1900)	160						345.94		10	
ANTENNA POSITION 2	PORT 1		100184.B.850.25G.1	321G21022	321G21022		GSM 850	QS66512-2_840MHz_04DT	13.5	150	4	None	Commscope 1-5/8 (850)	160					12.58	111.42		11	
	PORT 3		100184.B.1900.4G.1	CTL00802_9B_1	CTL00802_9B_1		LTE 1900	QS66512-	16	150	3	Top	Commscope 1-5/8	160						3664.3757		11	

								2_1930MHz_03DT					(850)										
	PORT 4		100184.B.WCS.4G.1	CTL00802_3B_1	CTL00802_3B_1		LTE WCS	QS66512-2_2355MHz_02DT	17	150	2	Top	Commscope 1-5/8 (850)	160						1285.2866		11	
ANTENNA POSITION 4	**PORT 1**		100184.B.700.4G.1	CTL00802_7B_1	CTL00802_7B_1		LTE 700	P65-16-XLH-RR_716MHz_08DT	14.8	150	8	Top	Fiber	0						1475.7065		15	

Section 15C - CURRENT SECTOR/CELL INFORMATION - SECTOR C

ANTENNA COMMON FIELDS	ANTENNA POSITION 1		ANTENNA POSITION 2		ANTENNA POSITION 3		ANTENNA POSITION 4		ANTENNA POSITION 5		ANTENNA POSITION 6		ANTENNA POSITION 7	
ANTENNA MAKE - MODEL	7770		QS66512-2				P65-16-XLH-RR							
ANTENNA VENDOR	Powerwave		Quintel				Powerwave							
ANTENNA SIZE (H x W x D)	55X11X5		72X12X9.6				72X12X6							
ANTENNA WEIGHT	35		111				64							
AZIMUTH	250		270				270							
MAGNETIC DECLINATION														
RADIATION CENTER (feet)	134		134				134							
ANTENNA TIP HEIGHT	136		137				137							
MECHANICAL DOWNTILT	0		0				0							
FEEDER AMOUNT	2		Fiber + 2 Coax											
VERTICAL SEPARATION from ANTENNA ABOVE (TIP to TIP)														
VERTICAL SEPARATION from ANTENNA BELOW (TIP to TIP)														
HORIZONTAL SEPARATION from CLOSEST ANTENNA to LEFT (CENTERLINE to CENTERLINE)														
HORIZONTAL SEPARATION from CLOSEST ANTENNA to RIGHT (CENTERLINE to CENTERLINE)														
HORIZONTAL SEPARATION from ANOTHER ANTENNA (which antenna # / # of inches)														
Antenna RET Motor (QTY/MODEL)	2	Powerwave 7020 (DB)	2	Built-in				Internal						
SURGE ARRESTOR (QTY/MODEL)														
DIPLEXER (QTY/MODEL)	2	Powerwave/LGP 21901	4	CCi triplexer TPX-070821										
DUPLEXER (QTY/MODEL)														
Antenna RET CONTROL UNIT (QTY/MODEL)			1	RRH Conrtolled				LTE RRH						
DC BLOCK (QTY/MODEL)														
TMA/LNA (QTY/MODEL)	2	Pwav LGP21401 Single 1900 w/ 850BP												
CURRENT INJECTORS FOR TMA (QTY/MODEL)	2	Polyphaser 1000860												
PDU FOR TMAS (QTY/MODEL)														
FILTER (QTY/MODEL)														
SQUID (QTY/MODEL)														
FIBER TRUNK (QTY/MODEL)														
DC TRUNK (QTY/MODEL)														
RRH - 700 band (QTY/MODEL)							1	RRUS-11						
RRH - 850 band (QTY/MODEL)														
RRH - 1900 band (QTY/MODEL)			1	RRUS-12+RRUS-A2										
RRH - AWS band (QTY/MODEL)														
RRH - WCS band (QTY/MODEL)			1	RRUS-32										
Additional RRH #1 - any band (QTY/MODEL)														
Additional RRH #2 - any band (QTY/MODEL)														
Additional Component 1 (QTY/MODEL)														
Additional Component 2 (QTY/MODEL)														
Additional Component 3 (QTY/MODEL)														
Local Market Note 1														
Local Market Note 2														
Local Market Note 3														

PORT SPECIFIC FIELDS	PORT NUMBER	USEID (CSSng)	USEID (Atoll)	ATOLL TXID	ATOLL CELL ID	TX/RX ?	TECHNOLOGY/FREQUENCY	ANTENNA ATOLL	ANTENNA GAIN	ELECTRICAL AZIMUTH	ELECTRICAL TILT	RRH LOCATION (Top/Bottom/Integrated/None)	FEEDERS TYPE	FEEDER LENGTH (feet)	RXAIT KIT MODULE?	TRIPLEXER or LLC (QTY)	TRIPLEXER or LLC (MODEL)	SCPA/MCPA MODULE?	HATCHPLATE POWER (Watts)	ERP (Watts)	Antenna RET Name	CABLE NUMBER	CABLE ID (CSSNG)
ANTENNA POSITION 1	PORT 1		100184.C.850.3G.1	CTV21023	CTV21023		UMTS 850	7770.00.850.07	13.5	250	7	None	Commscope 1-5/8 (850)	160						303.39		17	
	PORT 2		100184.C.850.3G.2	CTV2102C	CTV2102C		UMTS 850	7770.00.850.07	13.5	250	7	None	Commscope 1-5/8 (850)	160						303.39		17	
	PORT 3		100184.C.1900.3G.1	CTU61029	CTU61029		UMTS 1900	7770.00.1900.04	15.5	250	4	None	Commscope 1-5/8 (1900)	160						345.94		18	
	PORT 4		100184.C.1900.3G.2	CTU61026	CTU61026	Decom	UMTS 1900	7770.00.1900.04	15.5	250	4	None	Commscope 1-5/8 (1900)	160						345.94		18	
ANTENNA POSITION 2	PORT 1		100184.C.850.25G.1	321G21023	321G21023		GSM 850	QS66512-2_840MHz_07DT	13.5	270	7	None	Commscope 1-5/8 (850)	160					12.58	111.42		19	
	PORT 3		100184.C.1900.4G.1	CTL02102_9C_1	CTL02102_9C_1		LTE 1900	QS66512-	16	270	3	Top	Commscope 1-5/8	160						3664.3757		19	

								2_1930MHz_03DT					(850)										
	PORT 4		100184.C.WCS.4G.1	CTL02102_3C_1	CTL02102_3C_1		LTE WCS	QS66512-2_2355MHz_02DT	17	270	2	Top	Commscope 1-5/8 (850)	160						1285.2866		19	
ANTENNA POSITION 4	**PORT 1**		100184.C.700.4G.1	CTL02102_7C_1	CTL02102_7C_1		LTE 700	P65-16-XLH-RR_716MHz_03DT	14.8	270	3	Top	Fiber	0						1475.7065		23	

Section 16A - NEW/PROPOSED SECTOR/CELL INFORMATION - SECTOR A (OR OMNI)

ANTENNA COMMON FIELDS	ANTENNA POSITION 1	ANTENNA POSITION 2	ANTENNA POSITION 3	ANTENNA POSITION 4	ANTENNA POSITION 5	ANTENNA POSITION 6	ANTENNA POSITION 7
Existing Antenna?		Yes					
ANTENNA MAKE - MODEL							
ANTENNA VENDOR							
ANTENNA SIZE (H x W x D)							
ANTENNA WEIGHT							
AZIMUTH							
MAGNETIC DECLINATION							
RADIATION CENTER (feet)							
ANTENNA TIP HEIGHT							
MECHANICAL DOWNTILT							
FEEDER AMOUNT							
VERTICAL SEPARATION from ANTENNA ABOVE (TIP to TIP)							
VERTICAL SEPARATION from ANTENNA BELOW (TIP to TIP)							
HORIZONTAL SEPARATION from CLOSEST ANTENNA to LEFT (CENTERLINE to CENTERLINE)							
HORIZONTAL SEPARATION from CLOSEST ANTENNA to RIGHT (CENTERLINE to CENTERLINE)							
HORIZONTAL SEPARATION from ANOTHER ANTENNA (which antenna # / # of inches)							
Antenna RET Motor (QTY/MODEL)							
SURGE ARRESTOR (QTY/MODEL)							
DIPLEXER (QTY/MODEL)							
DUPLEXER (QTY/MODEL)							
Antenna RET CONTROL UNIT (QTY/MODEL)							
DC BLOCK (QTY/MODEL)							
TMA/LNA (QTY/MODEL)							
CURRENT INJECTORS FOR TMA (QTY/MODEL)							
PDU FOR TMAS (QTY/MODEL)							
FILTER (QTY/MODEL)							
SQUID (QTY/MODEL)							
FIBER TRUNK (QTY/MODEL)							
DC TRUNK (QTY/MODEL)							
RRH - 700 band (QTY/MODEL)							
RRH - 850 band (QTY/MODEL)							
RRH - 1900 band (QTY/MODEL)		1 RRUS-32 B2					
RRH - AWS band (QTY/MODEL)							
RRH - WCS band (QTY/MODEL)							
Additional RRH #1 - any band (QTY/MODEL)							
Additional RRH #2 - any band (QTY/MODEL)							
Additional Component 1 (QTY/MODEL)							
Additional Component 2 (QTY/MODEL)							
Additional Component 3 (QTY/MODEL)							
Local Market Note 1	LTE RRUS-32 add, XMU add- Replace existing LTE RRUS-12+A2 with RRUS-32 B2- Add XMU to DUS-1						
Local Market Note 2							
Local Market Note 3	Baseband Config - 2 DUS + XMU + IDL2DUS-1 - 7A:_:7C:X1P1:X1P2:I2D2 XMU-1 - PA:PA2A:WA:_:PC:PA2C:WC:_:_:_:_:_:_:_:D1E:D1D DUS-2 - 7B:WB:_:PB:PA2B:I2D1						

PORT SPECIFIC FIELDS	PORT NUMBER	USEID (CSSng)	USEID (Atoll)	ATOLL TXID	ATOLL CELL ID	TX/RX ?	TECHNOLOGY/FREQUENCY	ANTENNA ATOLL	ANTENNA GAIN	ELECTRICAL AZIMUTH	ELECTRICAL TILT	RRH LOCATION (Top/Bottom/Integrated/None)	FEEDERS TYPE	FEEDER LENGTH (feet)	RXAIT KIT MODULE?	TRIPLEXER or LLC (QTY)	TRIPLEXER or LLC (MODEL)	SCPA/MCPA MODULE?	HATCHPLATE POWER (Watts)	ERP (Watts)	Antenna RET Name	CABLE NUMBER	CABLE ID (CSSNG)
ANTENNA POSITION 2	PORT 3		100184.A.1900.4G.1	CTL02102_9A_1	CTL02102_9A_1		LTE 1900	QS66512-2_1930MHz_03DT	16	30	3	Top	Fiber	0						3664.3757		3	

Section 16B - NEW/PROPOSED SECTOR/CELL INFORMATION - SECTOR B

ANTENNA COMMON FIELDS	ANTENNA POSITION 1		ANTENNA POSITION 2		ANTENNA POSITION 3		ANTENNA POSITION 4		ANTENNA POSITION 5		ANTENNA POSITION 6		ANTENNA POSITION 7	
Existing Antenna?			Yes											
ANTENNA MAKE - MODEL														
ANTENNA VENDOR														
ANTENNA SIZE (H x W x D)														
ANTENNA WEIGHT														
AZIMUTH														
MAGNETIC DECLINATION														
RADIATION CENTER (feet)														
ANTENNA TIP HEIGHT														
MECHANICAL DOWNTILT														
FEEDER AMOUNT														
VERTICAL SEPARATION from ANTENNA ABOVE (TIP to TIP)														
VERTICAL SEPARATION from ANTENNA BELOW (TIP to TIP)														
HORIZONTAL SEPARATION from CLOSEST ANTENNA to LEFT (CENTERLINE to CENTERLINE)														
HORIZONTAL SEPARATION from CLOSEST ANTENNA to RIGHT (CENTERLINE to CENTERLINE)														
HORIZONTAL SEPARATION from ANOTHER ANTENNA (which antenna # / # of inches)														
Antenna RET Motor (QTY/MODEL)														
SURGE ARRESTOR (QTY/MODEL)														
DIPLEXER (QTY/MODEL)														
DUPLEXER (QTY/MODEL)														
Antenna RET CONTROL UNIT (QTY/MODEL)														
DC BLOCK (QTY/MODEL)														
TMA/LNA (QTY/MODEL)														
CURRENT INJECTORS FOR TMA (QTY/MODEL)														
PDU FOR TMAS (QTY/MODEL)														
FILTER (QTY/MODEL)														
SQUID (QTY/MODEL)														
FIBER TRUNK (QTY/MODEL)														
DC TRUNK (QTY/MODEL)														
RRH - 700 band (QTY/MODEL)														
RRH - 850 band (QTY/MODEL)														
RRH - 1900 band (QTY/MODEL)			1	RRUS-32 B2										
RRH - AWS band (QTY/MODEL)														
RRH - WCS band (QTY/MODEL)														
Additional RRH #1 - any band (QTY/MODEL)														
Additional RRH #2 - any band (QTY/MODEL)														
Additional Component 1 (QTY/MODEL)														
Additional Component 2 (QTY/MODEL)														
Additional Component 3 (QTY/MODEL)														
Local Market Note 1	LTE RRUS-32 add, XMU add- Replace existing LTE RRUS-12+A2 with RRUS-32 B2- Add XMU to DUS-1													
Local Market Note 2														
Local Market Note 3	Baseband Config - 2 DUS + XMU + IDL2DUS-1 - 7A:_:7C:X1P1:X1P2:I2D2 XMU-1 - PA:PA2A:WA:_:PC:PA2C:WC:_:_:_:_:_:_:_:D1E:D1D DUS-2 - 7B:WB:_:PB:PA2B:I2D1													

PORT SPECIFIC FIELDS	PORT NUMBER	USEID (CSSng)	USEID (Atoll)	ATOLL TXID	ATOLL CELL ID	TX/RX ?	TECHNOLOGY/FREQUENCY	ANTENNA ATOLL	ANTENNA GAIN	ELECTRICAL AZIMUTH	ELECTRICAL TILT	RRH LOCATION (Top/Bottom/Integrated/None)	FEEDERS TYPE	FEEDER LENGTH (feet)	RXAIT KIT MODULE?	TRIPLEXER or LLC (QTY)	TRIPLEXER or LLC (MODEL)	SCPA/MCPA MODULE?	HATCHPLATE POWER (Watts)	ERP (Watts)	Antenna RET Name	CABLE NUMBER	CABLE ID (CSSNG)
ANTENNA POSITION 2	PORT 3		100184.B.1900.4G.1	CTL00802_9B_1	CTL00802_9B_1		LTE 1900	QS66512-2_1930MHz_03DT	16	150	3	Top	Fiber	0						3664.3757		11	

Section 16C - NEW/PROPOSED SECTOR/CELL INFORMATION - SECTOR C

ANTENNA COMMON FIELDS	ANTENNA POSITION 1		ANTENNA POSITION 2		ANTENNA POSITION 3		ANTENNA POSITION 4		ANTENNA POSITION 5		ANTENNA POSITION 6		ANTENNA POSITION 7	
Existing Antenna?			Yes											
ANTENNA MAKE - MODEL														
ANTENNA VENDOR														
ANTENNA SIZE (H x W x D)														
ANTENNA WEIGHT														
AZIMUTH														
MAGNETIC DECLINATION														
RADIATION CENTER (feet)														
ANTENNA TIP HEIGHT														
MECHANICAL DOWNTILT														
FEEDER AMOUNT														
VERTICAL SEPARATION from ANTENNA ABOVE (TIP to TIP)														
VERTICAL SEPARATION from ANTENNA BELOW (TIP to TIP)														
HORIZONTAL SEPARATION from CLOSEST ANTENNA to LEFT (CENTERLINE to CENTERLINE)														
HORIZONTAL SEPARATION from CLOSEST ANTENNA to RIGHT (CENTERLINE to CENTERLINE)														
HORIZONTAL SEPARATION from ANOTHER ANTENNA (which antenna # / # of inches)														
Antenna RET Motor (QTY/MODEL)														
SURGE ARRESTOR (QTY/MODEL)														
DIPLEXER (QTY/MODEL)														
DUPLEXER (QTY/MODEL)														
Antenna RET CONTROL UNIT (QTY/MODEL)														
DC BLOCK (QTY/MODEL)														
TMA/LNA (QTY/MODEL)														
CURRENT INJECTORS FOR TMA (QTY/MODEL)														
PDU FOR TMAS (QTY/MODEL)														
FILTER (QTY/MODEL)														
SQUID (QTY/MODEL)														
FIBER TRUNK (QTY/MODEL)														
DC TRUNK (QTY/MODEL)														
RRH - 700 band (QTY/MODEL)														
RRH - 850 band (QTY/MODEL)														
RRH - 1900 band (QTY/MODEL)			1	RRUS-32 B2										
RRH - AWS band (QTY/MODEL)														
RRH - WCS band (QTY/MODEL)														
Additional RRH #1 - any band (QTY/MODEL)														
Additional RRH #2 - any band (QTY/MODEL)														
Additional Component 1 (QTY/MODEL)														
Additional Component 2 (QTY/MODEL)														
Additional Component 3 (QTY/MODEL)														
Local Market Note 1	LTE RRUS-32 add, XMU add- Replace existing LTE RRUS-12+A2 with RRUS-32 B2- Add XMU to DUS-1													
Local Market Note 2														
Local Market Note 3	Baseband Config - 2 DUS + XMU + IDL2DUS-1 - 7A:_:7C:X1P1:X1P2:I2D2 XMU-1 - PA:PA2A:WA:_:PC:PA2C:WC:_:_:_:_:_:_:_:D1E:D1D DUS-2 - 7B:WB:_:PB:PA2B:I2D1													

PORT SPECIFIC FIELDS	PORT NUMBER	USEID (CSSng)	USEID (Atoll)	ATOLL TXID	ATOLL CELL ID	TX/RX ?	TECHNOLOGY/FREQUENCY	ANTENNA ATOLL	ANTENNA GAIN	ELECTRICAL AZIMUTH	ELECTRICAL TILT	RRH LOCATION (Top/Bottom/Integrated/None)	FEEDERS TYPE	FEEDER LENGTH (feet)	RXAIT KIT MODULE?	TRIPLEXER or LLC (QTY)	TRIPLEXER or LLC (MODEL)	SCPA/MCPA MODULE?	HATCHPLATE POWER (Watts)	ERP (Watts)	Antenna RET Name	CABLE NUMBER	CABLE ID (CSSNG)
ANTENNA POSITION 2	PORT 3		100184.C.1900.4G.1	CTL02102_9C_1	CTL02102_9C_1		LTE 1900	QS66512-2_1930MHz_03DT	16	270	3	Top	Fiber	0						3664.3757		19	

Section 17A - FINAL SECTOR/CELL INFORMATION - SECTOR A (OR OMNI)

ANTENNA COMMON FIELDS	ANTENNA POSITION 1		ANTENNA POSITION 2		ANTENNA POSITION 3		ANTENNA POSITION 4		ANTENNA POSITION 5		ANTENNA POSITION 6		ANTENNA POSITION 7	
ANTENNA MAKE - MODEL	7770		QS66512-2				P65-16-XLH-RR							
ANTENNA VENDOR	Powerwave		Quintel				Powerwave							
ANTENNA SIZE (H x W x D)	55X11X5		72X12X9.6				72X12X6							
ANTENNA WEIGHT	35		111				64							
AZIMUTH	0		30				30							
MAGNETIC DECLINATION														
RADIATION CENTER (feet)	134		134				134							
ANTENNA TIP HEIGHT	136		137				137							
MECHANICAL DOWNTILT	0		0				0							
FEEDER AMOUNT	2		Fiber + 2 Coax											
VERTICAL SEPARATION from ANTENNA ABOVE (TIP to TIP)														
VERTICAL SEPARATION from ANTENNA BELOW (TIP to TIP)														
HORIZONTAL SEPARATION from CLOSEST ANTENNA to LEFT (CENTERLINE to CENTERLINE)														
HORIZONTAL SEPARATION from CLOSEST ANTENNA to RIGHT (CENTERLINE to CENTERLINE)														
HORIZONTAL SEPARATION from ANOTHER ANTENNA (which antenna # / # of inches)														
Antenna RET Motor (QTY/MODEL)	2	Powerwave 7020 (DB)		Built-in				Internal						
SURGE ARRESTOR (QTY/MODEL)			1	DC Fiber Squid			1	DC Fiber Squid						
DIPLEXER (QTY/MODEL)	2	Powerwave/LGP 21901	4	CCi triplexer TPX-070821										
DUPLEXER (QTY/MODEL)														
Antenna RET CONTROL UNIT (QTY/MODEL)	1	Kathrein / 860-10006	1	RRH Conrtolled				LTE RRH						
DC BLOCK (QTY/MODEL)														
TMA/LNA (QTY/MODEL)	2	Pwav LGP21401 Single 1900 w/ 850BP												
CURRENT INJECTORS FOR TMA (QTY/MODEL)	2	Polyphaser 1000860												
PDU FOR TMAS (QTY/MODEL)	1	LGP12104												
FILTER (QTY/MODEL)														
SQUID (QTY/MODEL)														
FIBER TRUNK (QTY/MODEL)														
DC TRUNK (QTY/MODEL)														
RRH - 700 band (QTY/MODEL)							1	RRUS-11						
RRH - 850 band (QTY/MODEL)														
RRH - 1900 band (QTY/MODEL)			1	RRUS-32 B2										
RRH - AWS band (QTY/MODEL)														
RRH - WCS band (QTY/MODEL)			1	RRUS-32										
Additional RRH #1 - any band (QTY/MODEL)														
Additional RRH #2 - any band (QTY/MODEL)														
Additional Component 1 (QTY/MODEL)														
Additional Component 2 (QTY/MODEL)														
Additional Component 3 (QTY/MODEL)														
Local Market Note 1	LTE RRUS-32 add, XMU add, IDL2 add- Replace existing LTE RRUS-12+A2 with RRUS-32 B2- Add XMU to DUS-1- Add IDL2 link- Removed 2nd DUS from section 6-10													
Local Market Note 2														
Local Market Note 3	Baseband Config - 2 DUS + XMU + IDL2DUS-1 - 7A:_:7C:X1P1:X1P2:I2D2 XMU-1 - PA:PA2A:WA:_:PC:PA2C:WC:_:_:_:_:_:_:D1E:D1D DUS-2 - 7B:WB:_:PB:PA2B:I2D1													

PORT SPECIFIC FIELDS	PORT NUMBER	USEID (CSSng)	USEID (Atoll)	ATOLL TXID	ATOLL CELL ID	TX/RX ?	TECHNOLOGY/FREQUENCY	ANTENNA ATOLL	ANTENNA GAIN	ELECTRICAL AZIMUTH	ELECTRICAL TILT	RRH LOCATION (Top/Bottom/Integrated/None)	FEEDERS TYPE	FEEDER LENGTH (feet)	RXAIT KIT MODULE?	TRIPLEXER or LLC (QTY)	TRIPLEXER or LLC (MODEL)	SCPA/MCPA MODULE?	HATCHPLATE POWER (Watts)	ERP (Watts)	Antenna RET Name	CABLE NUMBER	CABLE ID (CSSNG)
ANTENNA POSITION 1	**PORT 1**	100184.A.850.3G.1	100184.A.850.3G.1	CTV21021	CTV21021		UMTS 850	7770.00.850.02	13.5	0	2	None	Commscope 1-5/8 (850)	160						303.39		1	
	PORT 2	100184.A.850.3G.2	100184.A.850.3G.2	CTV2102A	CTV2102A		UMTS 850	7770.00.850.02	13.5	0	2	None	Commscope 1-5/8 (850)	160						303.39		1	
	PORT 3	100184.A.1900.3G.1,100184.A.1900.3G.4	100184.A.1900.3G.1	CTU61027	CTU61027		UMTS 1900	7770.00.1900.00	15.5	0	0	None	Commscope 1-5/8 (1900)	160						345.94		2	
	PORT 4	100184.A.1900.3G.3	100184.A.1900.3G.2	CTU61024	CTU61024	Decom	UMTS 1900	7770.00.1900.00	15.5	0	0	None	Commscope 1-5/8 (1900)	160						345.94		2	
ANTENNA POSITION 2	**PORT 1**	100184.A.850.25G.1	100184.A.850.25G.1	321G21021	321G21021		GSM 850	QS66512-2_840MHz_02DT	13.5	30	2	None	Commscope 1-5/8 (850)	160					12.58	111.42		3	
	PORT 3	100184.A.1900.4G.1	100184.A.1900.4G.1	CTL02102_9A_1	CTL02102_9A_1		LTE 1900	QS66512-	16	30	3	Top	Commscope 1-5/8	160						3664.3757		3	

								2_1930MHz_03DT					(850)										
	PORT 4	100184.A.WCS.4G.tmp1	100184.A.WCS.4G.1	CTL02102_3A_1	CTL02102_3A_1		LTE WCS	QS66512-2_2355MHz_02DT	17	30	2	Top	Commscope 1-5/8 (850)	160						1285.2866		3	
ANTENNA POSITION 4	**PORT 1**	100184.A.700.4G.1	100184.A.700.4G.1	CTL02102_7A_1	CTL02102_7A_1		LTE 700	P65-16-XLH-RR_716MHz_02DT	14.8	30	2	Top	Fiber	0						1475.7065		7	

Section 17B - FINAL SECTOR/CELL INFORMATION - SECTOR B

ANTENNA COMMON FIELDS	ANTENNA POSITION 1		ANTENNA POSITION 2		ANTENNA POSITION 3		ANTENNA POSITION 4		ANTENNA POSITION 5		ANTENNA POSITION 6		ANTENNA POSITION 7	
ANTENNA MAKE - MODEL	7770		QS66512-2				P65-16-XLH-RR							
ANTENNA VENDOR	Powerwave		Quintel				Powerwave							
ANTENNA SIZE (H x W x D)	55X11X5		72X12X9.6				72X12X6							
ANTENNA WEIGHT	35		111				64							
AZIMUTH	100		150				150							
MAGNETIC DECLINATION														
RADIATION CENTER (feet)	134		134				134							
ANTENNA TIP HEIGHT	136		137				137							
MECHANICAL DOWNTILT	0		0				0							
FEEDER AMOUNT	2		Fiber + 2 Coax											
VERTICAL SEPARATION from ANTENNA ABOVE (TIP to TIP)														
VERTICAL SEPARATION from ANTENNA BELOW (TIP to TIP)														
HORIZONTAL SEPARATION from CLOSEST ANTENNA to LEFT (CENTERLINE to CENTERLINE)														
HORIZONTAL SEPARATION from CLOSEST ANTENNA to RIGHT (CENTERLINE to CENTERLINE)														
HORIZONTAL SEPARATION from ANOTHER ANTENNA (which antenna # / # of inches)														
Antenna RET Motor (QTY/MODEL)	2	Powerwave 7020 (DB)		Built-in				Internal						
SURGE ARRESTOR (QTY/MODEL)														
DIPLEXER (QTY/MODEL)	2	Powerwave/LGP 21901	4	CCi triplexer TPX-070821										
DUPLEXER (QTY/MODEL)														
Antenna RET CONTROL UNIT (QTY/MODEL)			1	RRH Conrtolled				LTE RRH						
DC BLOCK (QTY/MODEL)														
TMA/LNA (QTY/MODEL)	2	Pwav LGP21401 Single 1900 w/ 850BP												
CURRENT INJECTORS FOR TMA (QTY/MODEL)	2	Polyphaser 1000860												
PDU FOR TMAS (QTY/MODEL)														
FILTER (QTY/MODEL)														
SQUID (QTY/MODEL)														
FIBER TRUNK (QTY/MODEL)														
DC TRUNK (QTY/MODEL)														
RRH - 700 band (QTY/MODEL)							1	RRUS-11						
RRH - 850 band (QTY/MODEL)														
RRH - 1900 band (QTY/MODEL)			1	RRUS-32 B2										
RRH - AWS band (QTY/MODEL)														
RRH - WCS band (QTY/MODEL)			1	RRUS-32										
Additional RRH #1 - any band (QTY/MODEL)														
Additional RRH #2 - any band (QTY/MODEL)														
Additional Component 1 (QTY/MODEL)														
Additional Component 2 (QTY/MODEL)														
Additional Component 3 (QTY/MODEL)														
Local Market Note 1	LTE RRUS-32 add, XMU add, IDL2 add- Replace existing LTE RRUS-12+A2 with RRUS-32 B2- Add XMU to DUS-1- Add IDL2 link- Removed 2nd DUS from section 6-10													
Local Market Note 2														
Local Market Note 3	Baseband Config - 2 DUS + XMU + IDL2DUS-1 - 7A:_:7C:X1P1:X1P2:I2D2 XMU-1 - PA:PA2A:WA:_:PC:PA2C:WC:_:_:_:_:_:_:D1E:D1D DUS-2 - 7B:WB:_:PB:PA2B:I2D1													

PORT SPECIFIC FIELDS	PORT NUMBER	USEID (CSSng)	USEID (Atoll)	ATOLL TXID	ATOLL CELL ID	TX/RX ?	TECHNOLOGY/FREQUENCY	ANTENNA ATOLL	ANTENNA GAIN	ELECTRICAL AZIMUTH	ELECTRICAL TILT	RRH LOCATION (Top/Bottom/Integrated/None)	FEEDERS TYPE	FEEDER LENGTH (feet)	RXAIT KIT MODULE?	TRIPLEXER or LLC (QTY)	TRIPLEXER or LLC (MODEL)	SCPA/MCPA MODULE?	HATCHPLATE POWER (Watts)	ERP (Watts)	Antenna RET Name	CABLE NUMBER	CABLE ID (CSSNG)
ANTENNA POSITION 1	**PORT 1**	100184.B.850.3G.1	100184.B.850.3G.1	CTV21022	CTV21022		UMTS 850	7770.00.850.04	13.5	100	4	None	Commscope 1-5/8 (850)	160						303.39		9	
	PORT 2	100184.B.850.3G.3	100184.B.850.3G.2	CTV2102B	CTV2102B		UMTS 850	7770.00.850.04	13.5	100	4	None	Commscope 1-5/8 (850)	160						303.39		9	
	PORT 3	100184.B.1900.3G.1,100184.B.1900.3G.4	100184.B.1900.3G.1	CTU61028	CTU61028		UMTS 1900	7770.00.1900.02	15.5	100	2	None	Commscope 1-5/8 (1900)	160						345.94		10	
	PORT 4	100184.B.1900.3G.3	100184.B.1900.3G.2	CTU61025	CTU61025	Decom	UMTS 1900	7770.00.1900.02	15.5	100	2	None	Commscope 1-5/8 (1900)	160						345.94		10	
ANTENNA POSITION 2	**PORT 1**	100184.B.850.25G.1	100184.B.850.25G.1	321G21022	321G21022		GSM 850	QS66512-2_840MHz_04DT	13.5	150	4	None	Commscope 1-5/8 (850)	160					12.58	111.42		11	
	PORT 3	100184.B.1900.4G.tmp1	100184.B.1900.4G.1	CTL00802_9B_1	CTL02102_9B_1		LTE 1900	QS66512-	16	150	3	Top	Commscope 1-5/8	160						3664.3757		11	

								2_1930MHz_03DT					(850)										
	PORT 4	100184.B.WCS.4G.tmp1	100184.B.WCS.4G.1	CTL00802_3B_1	CTL02102_3B_1		LTE WCS	QS66512-2_2355MHz_02DT	17	150	2	Top	Commscope 1-5/8 (850)	160						1285.2866		11	
ANTENNA POSITION 4	**PORT 1**	100184.B.700.4G.tmp1	100184.B.700.4G.1	CTL00802_7B_1	CTL02102_7B_1		LTE 700	P65-16-XLH-RR_716MHz_08DT	14.8	150	8	Top	Fiber	0						1475.7065		15	

Section 17C - FINAL SECTOR/CELL INFORMATION - SECTOR C

ANTENNA COMMON FIELDS	ANTENNA POSITION 1		ANTENNA POSITION 2		ANTENNA POSITION 3		ANTENNA POSITION 4		ANTENNA POSITION 5		ANTENNA POSITION 6		ANTENNA POSITION 7	
ANTENNA MAKE - MODEL	7770		QS66512-2				P65-16-XLH-RR							
ANTENNA VENDOR	Powerwave		Quintel				Powerwave							
ANTENNA SIZE (H x W x D)	55X11X5		72X12X9.6				72X12X6							
ANTENNA WEIGHT	35		111				64							
AZIMUTH	250		270				270							
MAGNETIC DECLINATION														
RADIATION CENTER (feet)	134		134				134							
ANTENNA TIP HEIGHT	136		137				137							
MECHANICAL DOWNTILT	0		0				0							
FEEDER AMOUNT	2		Fiber + 2 Coax											
VERTICAL SEPARATION from ANTENNA ABOVE (TIP to TIP)														
VERTICAL SEPARATION from ANTENNA BELOW (TIP to TIP)														
HORIZONTAL SEPARATION from CLOSEST ANTENNA to LEFT (CENTERLINE to CENTERLINE)														
HORIZONTAL SEPARATION from CLOSEST ANTENNA to RIGHT (CENTERLINE to CENTERLINE)														
HORIZONTAL SEPARATION from ANOTHER ANTENNA (which antenna # / # of inches)														
Antenna RET Motor (QTY/MODEL)	2	Powerwave 7020 (DB)	2	Built-in				Internal						
SURGE ARRESTOR (QTY/MODEL)														
DIPLEXER (QTY/MODEL)	2	Powerwave/LGP 21901	4	CCi triplexer TPX-070821										
DUPLEXER (QTY/MODEL)														
Antenna RET CONTROL UNIT (QTY/MODEL)			1	RRH Conrtolled				LTE RRH						
DC BLOCK (QTY/MODEL)														
TMA/LNA (QTY/MODEL)	2	Pwav LGP21401 Single 1900 w/ 850BP												
CURRENT INJECTORS FOR TMA (QTY/MODEL)	2	Polyphaser 1000860												
PDU FOR TMAS (QTY/MODEL)														
FILTER (QTY/MODEL)														
SQUID (QTY/MODEL)														
FIBER TRUNK (QTY/MODEL)														
DC TRUNK (QTY/MODEL)														
RRH - 700 band (QTY/MODEL)							1	RRUS-11						
RRH - 850 band (QTY/MODEL)														
RRH - 1900 band (QTY/MODEL)			1	RRUS-32 B2										
RRH - AWS band (QTY/MODEL)														
RRH - WCS band (QTY/MODEL)			1	RRUS-32										
Additional RRH #1 - any band (QTY/MODEL)														
Additional RRH #2 - any band (QTY/MODEL)														
Additional Component 1 (QTY/MODEL)														
Additional Component 2 (QTY/MODEL)														
Additional Component 3 (QTY/MODEL)														
Local Market Note 1	LTE RRUS-32 add, XMU add, IDL2 add- Replace existing LTE RRUS-12+A2 with RRUS-32 B2- Add XMU to DUS-1- Add IDL2 link- Removed 2nd DUS from section 6-10													
Local Market Note 2														
Local Market Note 3	Baseband Config - 2 DUS + XMU + IDL2DUS-1 - 7A:_:7C:X1P1:X1P2:I2D2 XMU-1 - PA:PA2A:WA:_:PC:PA2C:WC:_:_:_:_:_:_:_:D1E:D1D DUS-2 - 7B:WB:_:PB:PA2B:I2D1													

PORT SPECIFIC FIELDS	PORT NUMBER	USEID (CSSng)	USEID (Atoll)	ATOLL TXID	ATOLL CELL ID	TX/RX ?	TECHNOLOGY/FREQUENCY	ANTENNA ATOLL	ANTENNA GAIN	ELECTRICAL AZIMUTH	ELECTRICAL TILT	RRH LOCATION (Top/Bottom/Integrated/None)	FEEDERS TYPE	FEEDER LENGTH (feet)	RXAIT KIT MODULE?	TRIPLEXER or LLC (QTY)	TRIPLEXER or LLC (MODEL)	SCPA/MCPA MODULE?	HATCHPLATE POWER (Watts)	ERP (Watts)	Antenna RET Name	CABLE NUMBER	CABLE ID (CSSNG)
ANTENNA POSITION 1	**PORT 1**	100184.C.850.3G.1	100184.C.850.3G.1	CTV21023	CTV21023		UMTS 850	7770.00.850.07	13.5	250	7	None	Commscope 1-5/8 (850)	160						303.39		17	
	PORT 2	100184.C.850.3G.3	100184.C.850.3G.2	CTV2102C	CTV2102C		UMTS 850	7770.00.850.07	13.5	250	7	None	Commscope 1-5/8 (850)	160						303.39		17	
	PORT 3	100184.C.1900.3G.1,100184.C.1900.3G.4	100184.C.1900.3G.1	CTU61029	CTU61029		UMTS 1900	7770.00.1900.04	15.5	250	4	None	Commscope 1-5/8 (1900)	160						345.94		18	
	PORT 4	100184.C.1900.3G.3	100184.C.1900.3G.2	CTU61026	CTU61026	Decom	UMTS 1900	7770.00.1900.04	15.5	250	4	None	Commscope 1-5/8 (1900)	160						345.94		18	
ANTENNA POSITION 2	**PORT 1**	100184.C.850.25G.1	100184.C.850.25G.1	321G21023	321G21023		GSM 850	QS66512-2_840MHz_07DT	13.5	270	7	None	Commscope 1-5/8 (850)	160					12.58	111.42		19	
	PORT 3	100184.C.1900.4G.1	100184.C.1900.4G.1	CTL02102_9C_1	CTL02102_9C_1		LTE 1900	QS66512-	16	270	3	Top	Commscope 1-5/8	160						3664.3757		19	

								2_1930MHz_03DT					(850)										
	PORT 4	100184.C.WCS.4G.tmp1	100184.C.WCS.4G.1	CTL02102_3C_1	CTL02102_3C_1		LTE WCS	QS66512-2_2355MHz_02DT	17	270	2	Top	Commscope 1-5/8 (850)	160						1285.2866		19	
ANTENNA POSITION 4	**PORT 1**	100184.C.700.4G.1	100184.C.700.4G.1	CTL02102_7C_1	CTL02102_7C_1		LTE 700	P65-16-XLH-RR_716MHz_03DT	14.8	270	3	Top	Fiber	0						1475.7065		23	

Diagram - Sector	A	Diagram File Name - CT2102_ABC_LTEPCS_BWE_Rev1.vsd					
Atoll Site Name -	CTU2102	Location Name -	GREENWICH PERRYRIDGE RD TWR	Market -	CONNECTICUT	Market Cluster -	NEW ENGLAND
Comments:							

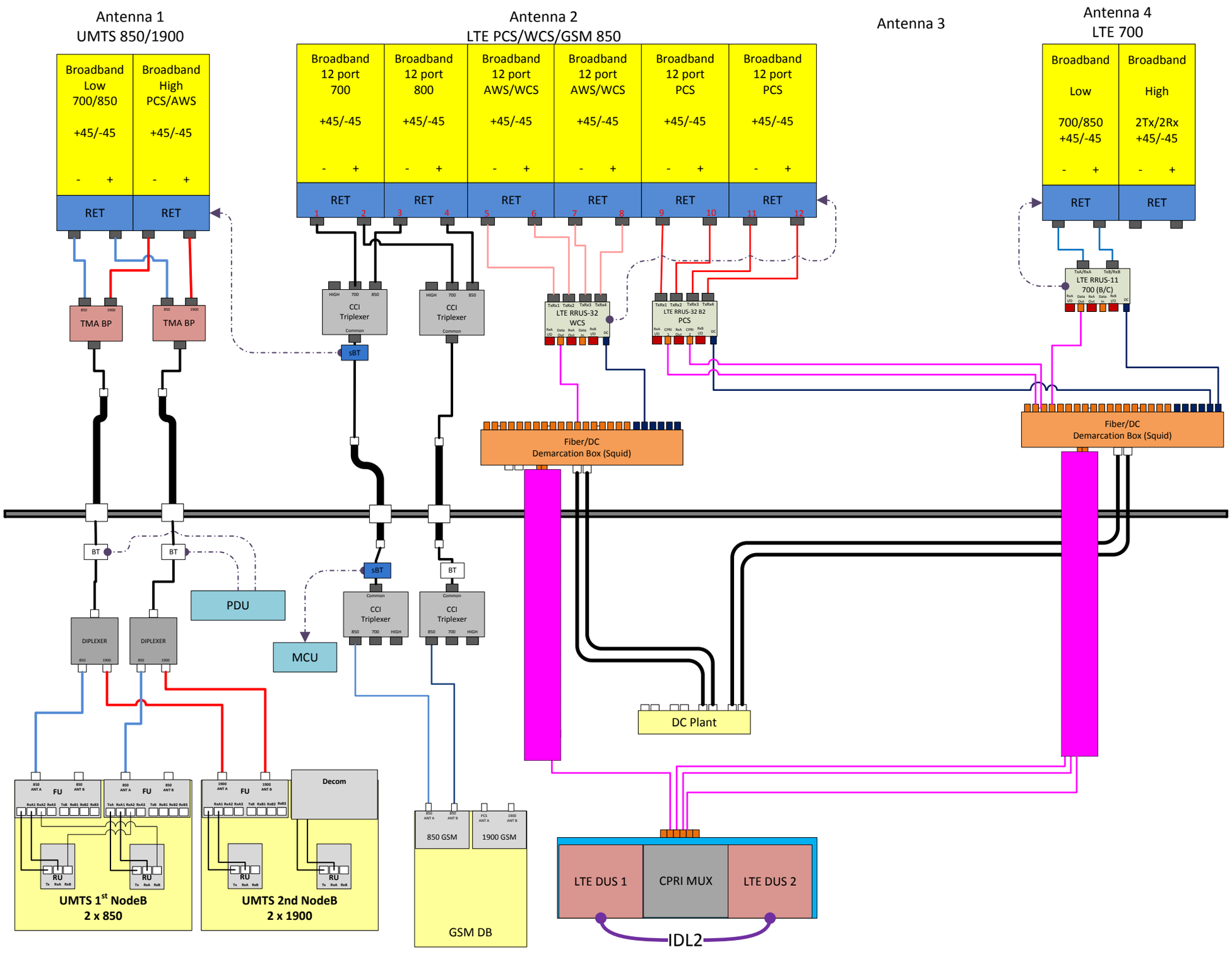

Diagram - Sector	B	Diagram File Name - CT2102_ABC_LTEPCS_BWE_Rev1.vsd					
Atoll Site Name -	CTU2102	Location Name -	GREENWICH PERRYRIDGE RD TWR	Market -	CONNECTICUT	Market Cluster -	NEW ENGLAND
Comments:							

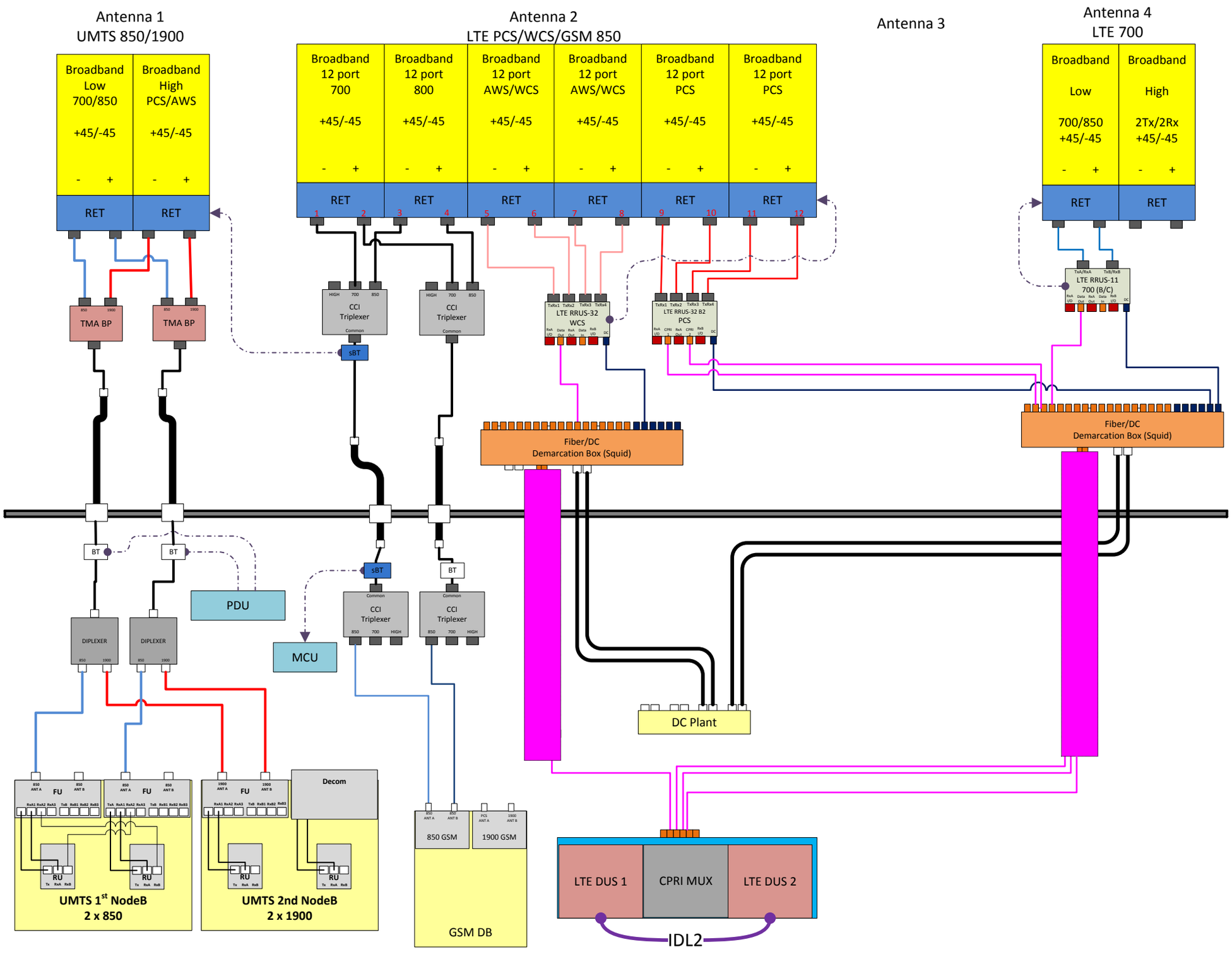

Diagram - Sector	C	Diagram File Name - CT2102_ABC_LTEPCS_BWE_Rev1.vsd					
Atoll Site Name -	CTU2102	Location Name -	GREENWICH PERRYRIDGE RD TWR	Market -	CONNECTICUT	Market Cluster -	NEW ENGLAND
Comments:							

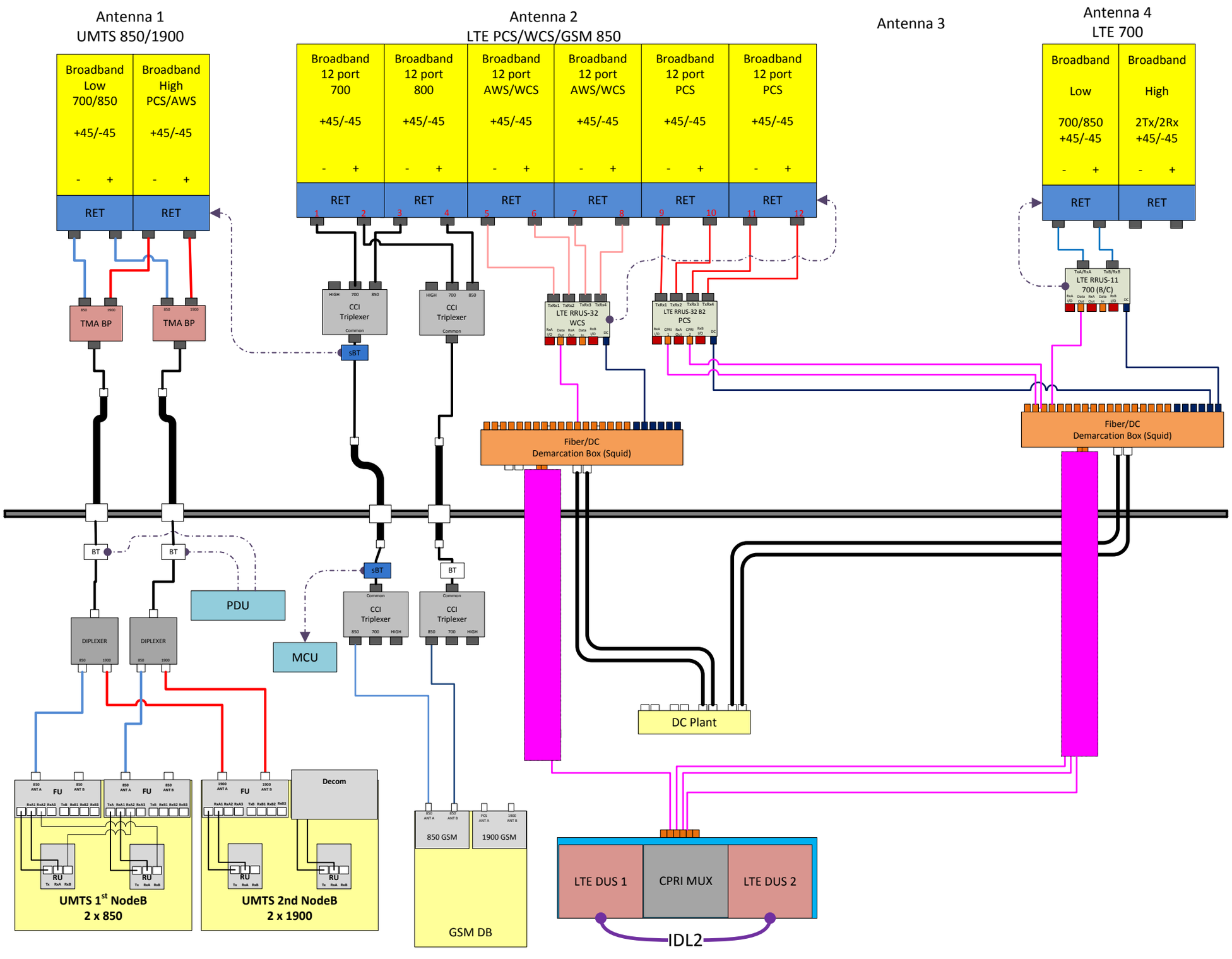

WORKFLOW SUMMARY						
Date	FROM State / Status	FROM ATTUID	TO State / Status	TO ATTUID	Operation	Comments
04/07/2016	Preliminary / In Progress	om636a	Preliminary / Submitted for Approval	AB014M	Promote	LTE Preliminary RFDS
06/06/2016	Preliminary / Submitted for Approval	AB014M	Preliminary / Approved	BG144B	Promote	
10/13/2016	Preliminary / Approved	BG144B	Final / RF Approval	OM636A	Promote	Needs final