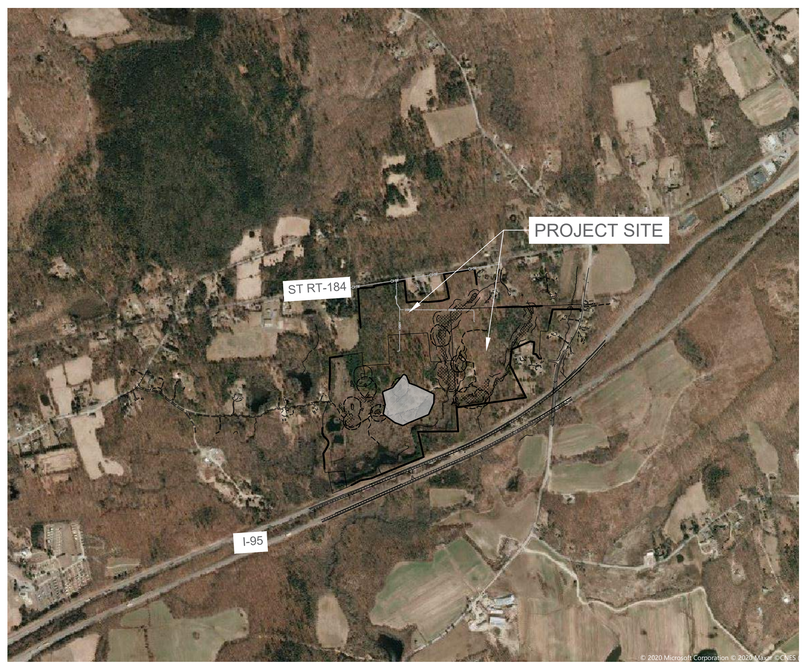

SCALE: 1"=1000'

Contract Drawings For

SR NORTH STONINGTON, LLC

North Stonington Solar

Site Civil Design

41° 25' 58" N, 71° 49' 7" W

HDR Project No.
10243352

North Stonington, Connecticut
ISSUED FOR PERMIT
9/30/2020 PROGRESS SET (Not for Construction)
02/19/2021 REVISION 1 (Not for Construction)
05/28/2021 REVISION 2 (Not for Construction)
06/25/2021 REVISION 3 (Not for Construction)
11/19/2021 REVISION 4 (Not for Construction)
04/22/2022 REVISION 5 (Not for Construction)
09/02/2022 REVISION 6 (Not for Construction)
10/05/2022 REVISION 7 (Not for Construction)
10/18/2022 REVISION 8 (Not for Construction)
11/07/2022 REVISION 9 (Not for Construction)
12/14/2022 REVISION 10 (Not for Construction)

INDEX OF DRAWINGS

CONTACT INFORMATION
OWNER: SILICON RANCH CORPORATION
222 2ND AVE S, SUITE 1900
NASHVILLE, TN 37201

CONTACT: PETER CANDELARIA
BRENDAN.JULIAN@SILICONRANCH.COM
828-484-1946

ENGINEER: HDR ENGINEERING, INC.
4645 VILLAGE SQUARE DRIVE
PADUCAH, KY 42001-7448

CONTACT: MATTHEW BRAWLEY, PE
MATTHEW.BRAWLEY@HDRINC.COM
270-538-1540

GENERAL DEMOLITION NOTES:

1. ALL MATERIAL PRODUCED AS A RESULT OF DEMOLITION TO BE DISPOSED OF OFFSITE IN COMPLIANCE WITH ALL STATE, FEDERAL AND LOCAL ENVIRONMENTAL REGULATIONS.
2. CONTRACTOR TO FIELD VERIFY ALL UTILITIES BEFORE START OF DEMOLITION AND PROTECT AS REQUIRED TO COMPLETE DEMOLITION ACTIVITIES.
3. CONTRACTOR IS RESPONSIBLE FOR COORDINATION OF DEMOLITION OR RELOCATION WITH APPLICABLE UTILITY COMPANIES: GAS, CABLE, POWER, TELEPHONE, WATER, SEWER, ETC.
4. CONTRACTOR TO INSTALL ALL PERIMETER EROSION CONTROLS PRIOR TO COMMENCEMENT OF DEMOLITION.
5. SAW CUT EXISTING ASPHALT TO CLEAN EDGE.
6. DEMOLITION OF FENCING SHALL BE COMPLETED WITH OWNER APPROVAL. TEMPORARY FENCING AND SECURITY FENCING WILL BE REQUIRED. CONTRACTOR IS RESPONSIBLE FOR CONFIRMING TIMING AND REQUIREMENTS OF ALL FENCING ESTABLISHMENT TO ENSURE SITE TEMPORARY WAY FINDING IS UP TO DATE PRIOR TO ACCESS CLOSURES. IF PERIMETER FENCING EXISTS AND IS INTACT, CONTRACTOR TO PRESERVE AS POSSIBLE.
7. ALL UTILITIES SHALL BE DEMOLISHED TO NEAREST JOINT WHERE FEASIBLE. CONFIRM PROPER CONNECTIONS WITH ENGINEER IF PIPING MATERIALS ARE TO BE CUT AND JOINED.
8. DEMOLITION OR REROUTE OF EXISTING UTILITIES TO REMAIN SHALL ALLOW FOR CONTINUOUS USE OF THE SYSTEM(S). CONTRACTOR SHOULD PRESERVE EXISTING WATER SERVICE (IE. WATER TAP OR WELL), AND INSTALL BURIED HDPE PIPE AND FROST FREE HYDRANT DIRECTLY INSIDE MAIN ENTRY GATE.
9. CONTRACTOR, PRIOR TO DEMOLITION, SHALL WALK THE SITE WITH THE OWNER AND SPECIFICALLY NOTE ITEMS THAT SHALL BE REMOVED AND HANDED OVER TO THE OWNER.

SEEDBED PREPARATION NOTES:

1. SURFACE WATER CONTROL MEASURES TO BE INSTALLED ACCORDING TO PLAN.
2. AREAS TO BE SEEDED SHALL BE RIPPED AND SPREAD WITH AVAILABLE TOPSOIL 3" DEEP. TOTAL SEEDBED PREPARED DEPTH SHALL BE 4" TO 6" DEEP.
3. LOOSE ROCKS, ROOTS AND OTHER OBSTRUCTIONS SHALL BE REMOVED FROM THE SURFACE SO THAT THEY WILL NOT INTERFERE WITH ESTABLISHMENT AND MAINTENANCE OF VEGETATION. SURFACE FOR FINAL SEEDBED PREPARATION AT FINISHED GRADES SHOWN SHALL BE REASONABLY SMOOTH AND UNIFORM.
4. SOIL TESTS SHOULD BE TAKEN, AND AMENDMENTS SHOULD BE APPLIED PER SOIL TEST RECOMMENDATIONS.
5. LIME AND FERTILIZER SHALL BE APPLIED UNIFORMLY AND MIXED WITH THE SOIL DURING SEEDBED PREPARATION.
6. ADDITIONAL EROSION CONTROL MEASURES MAY BE REQUIRED DEPENDING ON FIELD CONDITIONS.
7. MULCH TO BE TACKED OR MECHANICALLY TIED DOWN WITHIN TWO DAYS AFTER MULCH IS SPREAD.
8. ALL SLOPES GREATER THAN 2.5:1 SHALL BE STABILIZED WITH JUTE MESH.

EROSION CONTROL NOTES:

1. ALL EROSION CONTROL MEASURES SHALL BE IN STRICT ACCORDANCE WITH CONNECTICUT EROSION AND SEDIMENT CONTROL STANDARDS.
2. NO ON-SITE BURIAL PITS ARE ALLOWED.
3. ANY GRADING BEYOND THE DENUDED LIMITS SHOWN ON THE PLAN IS A VIOLATION OF CONNECTICUT EROSION CONTROL ORDINANCE AND IS SUBJECT TO A FINE.
4. GRADING MORE THAN HALF ACRE ACRE WITHOUT AN APPROVED EROSION CONTROL PLAN IS A VIOLATION OF THE STATE.
5. STABILIZATION IS THE BEST FORM OF EROSION CONTROL. TEMPORARY SEEDING IS NECESSARY TO ACHIEVE EROSION CONTROL ON LARGE DENUDED AREAS AND ESPECIALLY WHEN SPECIFICALLY REQUIRED AS PART OF THE CONSTRUCTION SEQUENCE SHOWN ON THE PLAN.
6. ADDITIONAL MEASURES TO CONTROL EROSION AND SEDIMENT MAY BE REQUIRED DUE TO FIELD CONDITIONS OR AS DIRECTED BY THE CT DEEP INSPECTOR.
7. SLOPES SHALL BE GRADED NO STEEPER THAN 3:1.
8. APPROVAL OF THIS PLAN IS NOT AN AUTHORIZATION TO GRADE ADJACENT PROPERTIES. WHEN FIELD CONDITIONS WARRANT OFF-SITE GRADING, PERMISSION MUST BE OBTAINED FROM THE AFFECTED PROPERTY OWNERS.
9. THE ANGLE FOR GRADED SLOPES AND FILLS SHALL BE NO GREATER THAN THE ANGLE THAT CAN BE RETAINED BY VEGETATIVE COVER OR OTHER ADEQUATE EROSION CONTROL DEVICES OR STRUCTURES.
10. ALL MATERIALS REQUIRED FOR CONSTRUCTION OF SEDIMENTATION AND EROSION CONTROL MEASURES SHALL BE AVAILABLE ON SITE BEFORE ANY LAND-DISTURBING ACTIVITY IS BEGUN.
11. LINEAR TREE PROTECTION SHALL BE ORANGE SAFETY FENCE 3' HIGH. TO PROVIDE ADDITIONAL WORKING ROOM, CONTRACTOR MAY COORDINATE WITH THE INSPECTOR TO UTILIZE COMBINATION SILT FENCE WITH ORANGE STRIP ON TOP.

STONINGTON CIVIL QUANTITIES

ITEM	UNIT	QUANTITY
LIMITS OF DISTURBANCE	ACRES	35.0
PROPERTY AREA	ACRES	125
ROADS	LF	3711
PERIMETER FENCE	LF	7058
SWING GATES	EA	2
BAR GATES	EA	1
TREE REMOVAL	ACRES	35.0
CUT VOLUME	CY	30761
FILL VOLUME*	CY	7899

* 10% SHRINKAGE FACTOR APPLIED

GENERAL NOTES:

1. PROVIDE SILT FENCE AROUND PERIMETER OF ALL STOCKPILES. STABILIZE IMMEDIATELY UPON ESTABLISHMENT OF PILE.
2. GRADING CONTRACTOR SHALL CHECK/ IDENTIFY FOR ALL UNDERGROUND UTILITIES PRIOR TO BEGINNING THE CLEARING / GRADING.
3. ALL EROSION CONTROL DEVICES SHALL BE MAINTAINED DAILY. ALL TEMPORARY SEDIMENT BASINS SHALL BE INSPECTED AT LEAST ONCE A WEEK AND WITHIN 24 HOURS OF THE END OF A STORM WITH A RAINFALL AMOUNT OF 0.5 INCH OR GREATER. THE TEMPORARY SEDIMENT BASINS SHALL BE CLEANED OUT WHEN THE SEDIMENT REACHES 1/2 OF THE SEDIMENT STORAGE CAPACITY. SILT FENCE SHALL BE CLEANED FROM SEDIMENT WHEN THE SEDIMENT LEVEL IS HALF WAY UP THE SILT FENCE FABRIC.
4. THE CONSTRUCTION ENTRANCE MAY REQUIRE ADDITIONAL STONE TO PREVENT TRACKING.
5. THE GRADING CONTRACTOR WILL BE RESPONSIBLE FOR CLEANING ANY TRACKING OF SEDIMENT ONTO PAVED ROAD AS SOON AS POSSIBLE, BUT BEFORE THE END OF THE WORK DAY.
6. ALL DEBRIS STOCK PILES SHALL BE REMOVED AND PROPERLY DISPOSED OF IN A LEGAL LANDFILL (I.E. MULCH AND LOG PILES). CONTRACTOR SHALL COMPLY WITH ALL LOCAL ORDINANCES, SURROUNDING PROPERTIES AND COMMUNICATE WITH LOCAL FIRE DEPARTMENTS FOR THE BURNING OF ANY CLEARING DEBRIS.
7. BOUNDARY SURVEY FOR THE SITE PROVIDED BY PROVOST & ROVERO, INC. FOR SURVEY COMPLETED ON 06/27/2018.
9. GEOTECHNICAL INVESTIGATION PROVIDED BY TERRACON FOR SITE VISIT ON 06/06/2019.

UTILITY/CIVIL LINE SYMBOLOGY

- EXISTING WATER
- EXISTING SANITARY SEWER
- EXISTING ELECTRICAL
- EXISTING GAS LINE
- PIPELINE
- LARGE PIPELINE
- UTILITY OVERHEAD LINE
- PROPERTY LINE
- ADJOINING PROPERTY LINE
- EASEMENT
- RIGHT OF WAY
- EXISTING CONTOUR (MINOR)
- PROPOSED CONTOUR (MINOR)
- EXISTING CONTOUR W/ELEVATION (MAJOR)
- PROPOSED CONTOUR (MAJOR)
- EXISTING TREE LINE
- EXISTING FENCE
- PROPOSED SECURITY FENCE
- FLOOD LIMIT (100 YEAR)
- STREAM/CREEK
- WETLAND BOUNDARY
- LIMITS OF DISTURBANCE
- 100' VERNAL POOL ENVELOPE
- 50' WETLAND BUFFER
- 100' WETLAND BUFFER
- OUTLET PROTECTION
- PIPE CULVERT
- SILT FENCE
- COMPOST FILTER SOCK
- PERMANENT DRAINAGE DITCH
- TREE CLEARING
- ALIGNMENT
- VERNAL POOL
- WETLAND

HDR

SILICON RANCH

NOT FOR CONSTRUCTION

NORTH STONINGTON SOLAR

428, PROVIDENCE-NEW LONDON TURNPIKE
NORTH STONINGTON, CT 06359, USA

LAT: 41.431830°N
LON: 71.821514°W

STATE OF CONNECTICUT · MATTHEW BRAUN · PEN.0034159 · LICENSED PROFESSIONAL ENGINEER

NORTH STONINGTON, CT

REV. NO	DESCRIPTION	DATE
10	FENCE REVISION	12/14/22
9	RE-ISSUED FOR PERMIT	11/07/22
8	RE-ISSUED FOR PERMIT	10/18/22
7	RE-ISSUED FOR PERMIT	10/05/22
6	RE-ISSUED FOR PERMIT	09/02/22
5	RE-ISSUED FOR PERMIT	04/22/22
4	RE-ISSUED FOR PERMIT	11/19/21

SHEET TITLE:

CIVIL NOTES AND ABBREVIATIONS

PROJ. MGR.	PROJ. ENGR.	DATE:
CM	MB	12/14/2022
DRAWN BY: JP	CHECKED BY: CP	SCALE:

DRAWING NO.

C002

ENVIRONMENTAL NOTES – RESOURCE PROTECTION MEASURES

WETLAND, VERNAL POOL, AND RARE SPECIES PROTECTION PROGRAM

The proposed solar facility is located proximate to sensitive habitats including wetland resource areas, vernal pools, and rare species. As a result, the following protective measures shall be followed to help avoid degradation of nearby wetland/watercourses, avoid incidental impact to vernal pool indicator species, and rare species.

In addition, Eastern Box Turtle (Terrapene carolina carolina), Spotted Turtle (Clemmys guttata), Ribbonsnake (Thamnophis saurita saurita), Smooth Green Snake (Opheodrys vernalis), Red Bat (Lasiurus borealis), Hoary Bat (Lasiurus cinereus), and Slimspike Threewn (Aristida longespica), all State Special Concern species afforded protection under the Connecticut Endangered Species Act, are known to occur on or proximity to the proposed facility. These rare species protection measures are similar to protection measures previously approved by the Connecticut Department of Energy and Environmental Protection ("DEEP") Wildlife Division on other similar projects. Details of protection measures to be implemented in association with construction and maintenance of the facility are provided below.

For the solar facility's eastern array, a 12–foot wide access drive would extend from Boombridge Road first starting along an existing dirt road where an existing wetland crossing will be upgraded with replacement of a 36–inch RCP with an open–bottom arch culvert crossing (Culvert C–4) resulting in ±240 square feet of direct wetland impact. The access road then continues along the property boundary off the existing dirt road and crosses through a forested wetland with an open–bottom arch culvert crossing (Culvert C–3) that would require a permanent wetland impact of ±2,092 square feet. Construction would be conducted in accordance with US Army Corps of Engineers best management practices.

In addition, a portion of the proposed solar facility utility interconnection between the eastern and western modules requires overhead utilities through Wetland E resulting in minor permanent and temporary wetland impacts. Permanent wetland impacts of ±50 square feet is associated with the installation of one direct bury wooded distribution pole and temporary wetland impacts of ±2,600 square feet will result from swamp mat installation to access the distribution pole and overhead utility line work areas and secondary impacts of ±4,010 square feet for tree clearing to satisfy electrical line clearance requirements. Protection measures and restoration activities as detailed in the following sections shall be followed to help avoid degradation of wetland resources and ensure proper restoration following work activities.

It is of the utmost importance that the Contractor complies with the requirement for implementation of these protective measures and the education of its employees and subcontractors performing work on the project site. The wetland protection measures shall be implemented and maintained throughout the duration of construction activities until permanent stabilization of site soils has occurred. Vernal pool protection measures should be implemented during peak amphibian movement periods (early spring breeding [March 1st to May 15th] and late summer dispersal [July 15th to September 15th]) if construction cannot be avoided during these periods. The rare species protection measures within this plan shall be implemented in accordance with the plan details below for individual species.

Details of implementation measures to protect these various sensitive resources during construction and maintenance of the solar facility are provided below. The rare species protection measures within this plan shall be implemented in accordance with the plan details below for individual species.

All–Points Technology Corporation, P.C. ("APT") will serve as the Environmental Monitor for this project to ensure that these protection measures are implemented properly. APT will provide an education session for the Contractor prior to the start of construction activities on nearby sensitive wetland resources/vernal pools resources and rare species that may be encountered. The Contractor shall contact Dean Gustafson, Senior Biologist at APT, at least 5 business days prior to the start of any construction activities to schedule a pre–construction meeting. Mr. Gustafson can be reached by phone at (860) 552–2033 or via email at dgustafson@allpointstech.com.

This protection program consists of several components: education of all contractors and sub–contractors prior to initiation of work on the site; protective measures; periodic inspection of the construction project; and, reporting.

1. Contractor Education

a. Prior to work on site, the Contractor shall attend an educational session at the pre–construction meeting with APT. This orientation and educational session will consist of an introductory meeting with APT to emphasize the environmentally sensitive nature of the project, the various wetland, vernal pool and rare species resources, and the requirement to diligently follow the Protective Measures as described in sections below. Workers will also be provided information regarding the identification of other turtles, snakes, and common herpetofauna species that could be encountered. The meeting will further emphasize the non–aggressive nature of these species, the absence of need to destroy such animals and the need to follow Protective Measures as described in following sections. The Contractor will designate one of its workers as the "Project Monitor", who will receive more intense training on the identification and protection of herpetofauna.

b. The importance of protecting nearby wetland and vernal pool resources will also be stressed as part of this educational session.

c. The education session will also focus on means to discriminate between the species of concern and other native species to avoid unnecessary "false alarms". Encounters with any species of turtles, snakes and amphibians will be documented.

d. The Contractor will designate a member of its crew as the Project Monitor to be responsible for the periodic "sweeps" for herpetofauna within the construction zone each morning and for any ground disturbance work. This individual will receive more intense training from APT on the identification and protection of herpetofauna in order to perform sweeps. Any herpetofauna discovered would be translocated outside the work zone in the general direction the animal was oriented.

e. The Contractor will be provided with cell phone and email contacts for APT personnel to immediately report any encounters with any rare species. Educational poster materials will be provided by APT and displayed on the job site to maintain worker awareness as the project progresses.

f. APT will also post Caution Signs throughout the project site for the duration of the construction project providing notice of the environmentally sensitive nature of the work area, the potential for encountering various amphibians and reptiles and precautions to be taken to avoid injury to or mortality of these animals.

g. If any rare species are encountered, the Contractor shall immediately cease all work, avoid any disturbance to the species, and contact APT.

2. Isolation Measures & Sedimentation and Erosion Controls

a. Plastic netting used in a variety of erosion control products (i.e., erosion control blankets, fiber rolls [wattles], reinforced silt fence) has been found to entangle wildlife, including reptiles, amphibians, birds, and small mammals, but particularly snakes. No permanent erosion control products or reinforced silt fence will be used on the project. Temporary erosion control products will use either erosion control blankets and fiber rolls composed of processed fibers mechanically bound together to form a continuous matrix (netless) or netting composed of planar woven natural biodegradable fiber to avoid/minimize wildlife entanglement.

b. Installation of sedimentation and erosion controls, required for erosion control compliance and creation of a barrier to possible migrating/dispersing turtles, shall be performed by the Contractor following clearing activities and prior to any earthwork. The Environmental Monitor will inspect the work zone area prior to and following erosion control barrier installation to ensure the area is free of Eastern Box Turtle (along with other amphibians and reptiles that may be encountered) and document barriers have been satisfactorily installed. The intent of the barrier is to segregate the majority of the work zone and isolate it from nesting/foraging/migrating/dispersing turtles, snakes and other herpetofauna. Oftentimes complete isolation of a work zone is not feasible due to accessibility needs and locations of staging/material storage areas, etc. Although the barriers may not completely isolate the work zone, they will be positioned to deflect migrating/dispersal routes away from the work zone to minimize potential encounters with turtles, snakes and other herpetofauna.

c. Exclusionary fencing shall be at least 20 inches tall and must be secured to and remain in contact with the ground and be regularly maintained by the contractor (at least bi–weekly and after major weather events) to secure any gaps or openings at ground level that may let animal pass through.

d. The Contractor is responsible for daily inspections of the sedimentation and erosion controls for tears or breeches and accumulation levels of sediment, particularly following storm events that generate a discharge, as defined by and in accordance with applicable local, state and federal regulations. The Contractor shall notify the Environmental Monitor within 24 hours of any breeches of the sedimentation and erosion controls and any sediment releases beyond the perimeter controls that impact wetlands, watercourses or within 100 feet of wetlands and watercourses. The Environmental Monitor will provide periodic inspections of the sedimentation and erosion controls throughout the duration of construction activities only as it pertains to their function as isolation measures for the protection of rare species. Such inspections will generally occur once per month. The frequency of monitoring may increase depending upon site conditions, level of construction activities in proximity to sensitive receptors, or at the request of the permittee. If the Compliance Monitor is notified by the Contractor of a sediment release, an inspection will be scheduled specifically to investigate and evaluate possible impacts to wetland and/or watercourse resources.

e. Third party monitoring of sedimentation and erosion controls will be performed by other parties, as necessary, under applicable local, state and/or federal regulations and permit conditions.

f. The extent of the sedimentation and erosion controls will be as shown on the site plans. The Contractor shall have additional sedimentation and erosion controls stockpiled on site should field or construction conditions warrant extending the controls as directed by APT or other regulatory agencies.

g. No equipment, vehicles or construction materials shall be stored outside of the sedimentation and erosion controls within 100 feet of wetlands or watercourses.

h. .All sedimentation and erosion controls shall be removed within 30 days of completion of work and permanent stabilization of site soils so that reptile and amphibian movement between uplands and wetlands is not restricted.

3. Petroleum Materials Storage and Spill Prevention

b. Certain precautions are necessary to store petroleum materials, refuel and contain and properly clean up any inadvertent fuel or petroleum (i.e., oil, hydraulic fluid, etc.) spill to avoid possible impact to nearby resources.

c. Silicon Ranch Corporation has developed and will adhere to a Spill Prevention Control and Countermeasure (SPCC) Plan for this project as per the requirements of 40 CFR 112. Please refer to the SPCC for specific requirements. Basic requirements for petroleum materials storage and spill prevention are provided below. In the event these basic requirements contradict the SPCC, the Contractor shall rely on requirements provided in the SPCC.

d. A spill containment kit consisting of a sufficient supply of absorbent pads and absorbent material will be maintained by the Contractor at the construction site throughout the duration of the project. In addition, a waste drum will be kept on site to contain any used absorbent pads/material for proper and timely disposal off site in accordance with applicable local, state, and federal laws.

e. The following petroleum and hazardous materials storage and refueling restrictions and spill response procedures will be adhered to by the Contractor.

i. Petroleum and Hazardous Materials Storage and Refueling

1. Refueling of vehicles or machinery shall occur a minimum of 100 feet from wetlands or watercourses and shall take place on an impervious pad with secondary containment designed to contain fuels.

2. Any fuel or hazardous materials that must be kept on site shall be stored on an impervious surface utilizing secondary containment a minimum of 100 feet from wetlands or watercourses.

3. The contractor shall inspect all equipment at the beginning and end of each day for any fuel or hydraulic leaks and if discovered shall take immediate steps to make repairs and clean up any discharges as detailed in the following sections.

ii. Initial Spill Response Procedures

1. Stop operations and shut off equipment.

2. Remove any sources of spark or flame.

3. Contain the source of the spill.

4. Determine the approximate volume of the spill.

5. Identify the location of natural flow paths to prevent the release of the spill to sensitive nearby waterways or wetlands.

6. Ensure that fellow workers are notified of the spill.

iii. Spill Clean Up & Containment

1. Obtain spill response materials from the on–site spill response kit. Place absorbent materials directly on the release area.

2. Limit the spread of the spill by placing absorbent materials around the perimeter of the spill.

3. Isolate and eliminate the spill source.

4. Contact the appropriate local, state and/or federal agencies, as necessary.

5. Contact a disposal company to properly dispose of contaminated materials in accordance with all local, state, and federal regulations.

iv. Reporting

1. Complete an incident report.

2. Submit a completed incident report to the Connecticut Siting Council, and other applicable local, state, and federal officials.

4. Herbicide, Pesticide and Salt Restrictions

a. The use of herbicides and pesticides at the facility shall be restricted. In the event herbicides and/or pesticides are required at the facility (i.e., to assist in management of invasive species within habitat enhancement areas), their use will be used in accordance with Integrated Pest Management ("IPM") principles with particular attention to minimize applications within 100 feet of wetland or watercourse resources. No applications of herbicides or pesticides are allowed within actual wetland or watercourse resources.

b. Maintenance of the facility during the winter months shall not include the application of salt or similar products for melting snow or ice.

5. Wetland Crossings, Culvert C–3 & C–4 Installation, Utility Interconnection & Restoration

a. The Contractor shall contact APT a minimum of 5 business days prior to any construction activities associated with the two wetland crossings (both access and overhead utility crossings) in order to monitor construction activities in and adjacent to wetlands and watercourses and in particular the project's two direct wetland impact areas: replacing an existing 36" RCP Culvert along an existing access off Boom Bridge Road with proposed open bottom arch Culvert C–4 and installation of new open bottom arch Culvert C–3.

b. Installation of the open–bottom arch culverts (Culverts C–3 & C–4) shall conform to the project site plans and associated details allowing for slight field adjustments based on existing elevations within the wetland/watercourse systems to ensure that the crossings and culverts will not impede or adversely impact conveyance of existing surface flows through these resources.

c. Culverts C–3 & C–4 shall match existing wetland gradient (slope) and channel profiles.

d. The existing wetland substrates at Culverts C–3 & C–4 shall be preserved and restored as necessary with these open–bottom culvert installations.

e. Any exposed/disturbed wetland soils resulting from any of the wetland/watercourse crossing activities shall be seeded with a New England Wet Seed Mix (New England Wetland Plants, Inc., or approved equivalent) at the manufacturers recommended seed rate. Side slopes at the two wetland crossings shall be seeded with a New England Conservation/Wildlife Seed Mix (New England Wetland Plants, Inc., or approved equivalent) at the manufacturers recommended seed rate. Mulch seeded areas with non–woven natural fiber erosion control blanket or 2 to 3 inches of clean straw mulch, as appropriate.

f. Swamp mats shall be used during the installation of the utility interconnections line within Wetland E. These devices shall be kept free of tracked sediments.

g. A swamp mat bridge shall be constructed over the intermittent watercourse located interior to Wetland E to avoid disturbance to the watercourse or its banks.

h. Trees cleared to facilitate the installation of swamp mats across Wetland E for the utility interconnection shall have the stumps left in place (no grubbing or stump removal shall occur) to minimize wetland soil disturbance and allow for natural revegetation post removal of the matting.

i. Any soil excavated from the utility pole installation in Wetland E shall be placed on the swamp matting and removed from wetland areas and spread/stabilized within upland areas or removed off site.

j. Matting used to access the utility interconnection work shall be removed immediately after completion of all work. Any exposed soils/disturbed areas resulting form matting activities shall be seeded with a new England wet seed mix (New England Wetland Plants, Inc., or approved equivalent) at the manufacturers recommended seed rate. Mulch disturbed wetland areas following seeding with 2 to 3 inches of clean straw mulch.

6. Vernal Pool Protection Measures

a. A thorough cover search of the construction area will be performed by APT's Environmental Monitor for herpetofauna (amphibians and reptiles) prior to and following installation of the silt fencing barrier to remove any species from the work zone prior to the initiation of construction activities. Any herpetofauna discovered would be carefully translocated outside the work zone in the general direction the animal was oriented. Periodic inspections will be performed by APT's Environmental Monitor throughout the duration of the construction.

b. Any stormwater management features, ruts or artificial depressions that could hold water created intentionally or unintentionally by site clearing/construction activities will be properly filled in and permanently stabilized with vegetation to avoid the creation of vernal pool "decoy pools" that could intercept amphibians moving toward the vernal pools. Stormwater management features such as level spreaders will be carefully reviewed in the field to ensure that standing water does not endure for more than a 24–hour period to avoid creation of decoy pools and may be subject to field design changes. Any such proposed design changes will be reviewed by the design engineer to ensure stormwater management functions are maintained.

7. Turtle Protection Measures – Construction Phase

a. Prior to construction and following installation of isolation barriers, the construction area will be swept by APT and any turtles occurring within the work area will be relocated to suitable habitat outside of the isolation barriers.

b. Prior to the start of construction each day, the contractor shall search the entire work area for turtles.

c. If a turtle is found during the active period, it shall be immediately moved, unharmed, by being carefully grasped in both hands, one on each side of the shell, between the turtle's forelimbs and the hind limbs, and placed just outside of the isolation barrier in the same approximate direction it was heading. These animals are protected by law and no turtles should be relocated from the property.

d. Special care shall be taken by the contractor during early morning and evening hours so that possible basking or foraging turtles are not harmed by construction activities.

e. The contractor shall be particularly diligent during the months of May and June when turtles are actively selecting nesting sites which results in an increase in turtle movement activity.

f. No heavy machinery or vehicles may be parked in any turtle habitat.

g. Avoid and limit any equipment use within 100 feet of wetlands and no heavy machinery or vehicles may be parked in any turtle habitat or within 100 feet of wetlands.

h. Special precautions must be taken to avoid degradation of wetland habitats, particularly along an perennial stream riparian corridors.

i. Clearing activities are recommended to occur during the Eastern Box Turtle active period (April 15th through October 15th), if possible, with the understanding that the tree clearing restriction for the listed bat species of August 15th through April 30th takes precedence.

j. If clearing activities are scheduled to commence during the inactive season for Eastern Box Turtles (approx. October 15th though April 15th), these sweeps must occur prior to September 15th. In this case, isolation barriers would need to be installed prior to September 15th so that any turtles found during the seep could be placed outside of the project's limit of clearing.

8. Snake Protection Measures – Construction Phase

a. Installation of artificial plywood cover boards measuring 2 feet wide x 4 feet long, covering a total area of 8 square feet/board. A total of 40 plywood cover boards should be placed around the inside perimeter of the exclusionary barrier. The placement of cover boards, supplied by the Contractor, will be performed by the Compliance Monitor. Cover boards should be checked once weekly in the early morning or late evening hours throughout the snake active season. Cover boards can be left in place throughout the construction phase of the project. All snakes encountered will be photographed, GPS located and placed just outside of the exclusionary barrier.

b. The Contractor shall install orange construction fencing around the construction side of each cover board to prevent unintentional damage by construction equipment. The Compliance Monitor will install caution signage at each cover board location.

c. Monitoring during the removal of any existing anthropogenic cover features (i.e., log piles, rock piles, etc.) already in the construction area will be performed by the Compliance Monitor. All anthropogenic cover features should be removed prior to any construction activities. Ideally these cover objects should be removed just after the placement of the plywood cover boards, increasing the likelihood of snakes using the plywood cover.

9. Turtle Protection Measures – Facility Maintenance (Mowing Recommendations)

a. Perform mowing during the turtle dormant period – November 1st through March 31st when possible.

b. If mowing is required outside of the turtle dormant period, avoid mowing during May 15th through August 30th when turtles may be located within the facility (and away from forested habitat), if possible, understanding that some vegetation maintenance is necessary for operational and electrical safety purposes.

c. Vegetation maintenance within the fenced solar facility may be accomplished through sheep grazing. Should that technique be used, mowing restrictions would not apply; mowing recommendations outside of the fenced facility would still apply.

d. If mowing is required during the turtle active season (April 1st through October 31st), mowing should be performed as follows.

i. Mowing style: Avoid flail mower heads with guide bars that ride along the ground. Sickle bar mowers will have the least impact if mowing every 1–5 years. In areas with more woody vegetation >1–2" diameter Brontosaurus–style mower will likely have the least impact on turtles.

ii. Mowing height: If mowing during active season, retention of mowing stubble to 7–12 inches will reduce mortality, reduce blade wear, and will leave important cover for animals.

iii. Directionality: If mowing during the active season is necessary, start mowing from the center of the field and use a back–and–forth approach, or large circular pattern, to avoid concentrating fleeing animals where they may be killed or stranded. In addition, leave an un–mowed 30 ft strip around the perimeter of the field and mow this area last. Most turtles are found in these areas and this provides time for them to react to the mowing activity and move out of the area.

iv. Mower Speed: Mowing in low gear or at slow speeds will allow turtles to react and move out of the field.

v. Un–mowed Edge: Leaving an un–mowed field edge in high turtle use areas until after September 15th.

10. Rare Bats Site Management Measures (Tree Clearing)

a. Tree clearing is restricted to occur only between August 15th through April 30th, during the bat's non–roosting period, when bats would not be present on the Site.

11. Rare Plant Protection Measures (Slimspike Threewn)

a. Most of the 2.38–acre population of Slimspike threewn is located outside of the proposed solar development area and therefore will be unaffected. A small portion of the population (±347 square feet) is located within the limits of clearing, but outside of any proposed grading. The following measures are recommended to protect this area of the population:

1. Clearing/cutting of woody vegetation as well as competing herbaceous vegetation in and around the Slimspike threewn plants would be beneficial but should be done during the dormant period outside of the growing season if possible.

2. Prior to any work activities, including vegetation clearing, the population of Slimspike threewn will be flagged by a qualified botanist. If clearing activities occur during the growing season, any vegetation clearing work will be performed under the supervision of a qualified botanist.

3. Light soil disturbance would also be beneficial (i.e., disturbance to the topsoil), but large–scale grading or filling should be avoided.

4. If possible, perimeter fencing should not fragment the population of Slimspike threewn.

12. Reporting

a. A Compliance Monitoring Report (brief narrative and applicable photos) documenting each APT inspection will be submitted by APT to the contractor and permittee for compliance verification. Any observations of rare species, vernal pool indicator species, wetland impacts, or corrective actions will be included in the reports.

b. Following completion of the construction project, APT will provide a Final Compliance Monitoring Report to the permittee documenting implementation of this wetland, vernal pool, and rare species protection program, monitoring and any species observations. The permittee shall provide a copy of the Final Compliance Monitoring Report to the Connecticut Siting Council for compliance verification.

c. Any observations of rare species will be reported to DEEP by APT on the appropriate special animal reporting form, with photo–documentation (if possible) and specific information on the location and disposition of the animal.

EARLY SUCCESSIONAL HABITAT ENHANCEMENT & INVASIVE SPECIES CONTROL PLAN

Located south of the proposed solar facility is early successional habitat resulting from a former sand and gravel extraction area that contains invasive plant species, namely autumn olive (Elaeagnus umbellata) and multiflora rose (Rosa multiflora). The goal of this early successional habitat enhancement and invasive species control plan is to target selective removal of these woody invasive shrubs to support habitat that currently supports rare and important native early successional plant species. The proposed enhancement to this existing habitat area will not only benefit documented populations of State–listed Special Concern species slimspike threewn (Aristida longespica) and yellow wild indigo (Baptisia tinctoria), the host plant for the State–listed frosted elfin (Callophrys irus), but will also improve wildlife utilization, including for obligate vernal pool species and State–listed Special Concern species eastern box turtle (Terrapene carolina carolina) and spotted turtle (Clemmys guttata).

The following management techniques, as recommended by the Connecticut Invasive Plant Working Group, shall be followed to control target invasive shrub species located within the habitat enhancement area.

All–Points Technology Corporation, P.C. ("APT") will serve as the Environmental Monitor for this project to ensure that these protection measures are implemented properly. APT will provide an education session for the Contractor prior to the start of construction activities on nearby sensitive wetland resources/vernal pools resources and rare species that may be encountered. The Contractor shall contact Dean Gustafson, Senior Biologist at APT, at least 5 business days prior to the start of any construction activities to schedule a pre–construction meeting. Mr. Gustafson can be reached by phone at (860) 552–2033 or via email at dgustafson@allpointstech.com.

This protection program consists of several components: education of all contractors and sub–contractors prior to initiation of work on the site; protective measures; periodic inspection of the construction project; and reporting.

1. General Early Successional Habitat Enhancement Notes

a. The project biologist with expertise in invasive plant species identification and removal will supervise all invasive shrub removal activities. Dean Gustafson, Senior Biologist with All–Points Technology Corp., P.C. and his staff, will serve as the Environmental Monitor. Mr. Gustafson can be contacted at (860) 552–2033 or dgustafson@allpointstech.com.

b. Existing colonies of slimspike threewn and yellow wild indigo will be identified, flagged, and protected during autumn olive and multiflora rose removal activities.

c. The primary method of target invasive shrubs removal will consist of stump cut and application of an appropriate herbicide resulting in minimal soil disturbance, if any. Therefore, vegetative soil stabilization through application of a seed mix is not anticipated and will be avoided. With the existing populations of slimspike threewn and yellow wild indigo in the early successional habitat enhancement area there is concern about introduction of native plants through application of seed mix which could potentially out compete these important plant populations.

d. To further enhance this early successional habitat area during removal of invasive shrubs, additional select native trees and shrubs shall be cut to further promote the long–term viability of this early successional habitat.

e. Native trees and shrubs removed during this activity will be retained on site and used to construct wildlife brush piles to further enhance the wildlife habitat value of this area. Such wildlife brush piles will be located in areas outside of existing slimspike threewn and yellow wild indigo colonies to avoid impacting these important plants.

f. The use of fertilizer and pesticides in the early successional habitat enhancement rea is prohibited. Herbicide usage shall occur on as necessary for the control of invasive species, as detailed below.

g. A pre–construction meeting shall be held on site between the Environmental Monitor and contractor performing all aspects of the habitat enhancement area plan. The primary intent of the pre–construction meeting to discuss the goals of the early successional habitat enhancement plan, locations of rare plants to avoid impact, implementation elements, and other required elements necessary to achieve the goals of this habitat enhancement plan.

2. Invasive Woody Shrubs Control Plan

a. Invasive woody shrub species dominate portions of the proposed early successional habitat enhancement area, in particular autumn olive and multiflora rose. These target invasive shrubs shall be removed by hand using the following techniques as recommended by the Connecticut Invasive Plant Working Group's Invasive Plant Management Guide.

b. Target woody invasive shrubs shall be treated with a cut–stump treatment method. Invasive shrubs will be cut near the stump level and receive an application of triclopyr herbicide (Renovate 3, Garlon 4), or approved equivalent, using a hand applicator to avoid overspray which could impact nearby State–listed plants, within 15 minutes of cutting to ensure coverage of the entire cambium.

c. Invasive non–native plant materials will be removed from the site and properly disposed of.

3. Herbicide Use Notes

a. All federal, state and local regulations regarding herbicide use, applicator permit and posting requirement shall be followed.

b. All herbicide applications shall be performed by a state licensed individual.

c. Certification, licenses and permits shall be provided to the Environmental Monitor by the licensed applicator prior to the start of work.

d. All herbicides shall be mixed with a dye approved by U.S. EPA for use as an herbicide adjuvant such as Turf Mark® spray indicator dye or equivalent.

e. Only nonionic surfactants shall be added to the specified herbicides, as necessary.

f. Application of herbicides in open water or in wetlands containing standing water shall be avoided. If determined necessary, the licensed application shall secure a Permit Application for Use of Pesticides in State Waters from the Connecticut Department of Energy & Environmental Protection prior to such application.

4. Monitoring and Reporting

a. Monitoring of the early successional habitat enhancement area will be performed by the Environmental Monitor both during target invasive shrub treatment and removal activities and for the first five growing seasons following completion of the invasive shrub treatment.

b. Following completion of the early successional habitat enhancement plan, APT will provide a report to Silicon Ranch documenting implementation of this plan. Silicon Ranch is responsible for providing a copy of the report to the Connecticut Siting Council and DEEP Wildlife Division for compliance verification.

c. The early successional habitat enhancement treatment area will be checked each year to ensure that no more than 20% of the surface area is occupied by the target invasive shrub species. If more than 20% is observed, the treatment procedures noted above will be implemented to continue to suppress recolonization of invasive shrubs.

d. During each subsequent inspection performed during the five–year monitoring period, APT will provide a report to Silicon Ranch documenting the condition of the habitat enhancement area. In particular, any recurrence of target invasive shrub species and follow up treatment activities will be included in the annual monitoring report. Silicon Ranch shall provide a copy of each annual monitoring report to the Connecticut Siting Council and DEEP Wildlife Division for compliance verification.

e. APT will include any observations of rare species in the reports along with reporting to DEEP by APT on the appropriate special animal reporting form, with photo–documentation (if possible) and specific information on the location and disposition of the animal.

HDR

SILICON RANCH

NOT FOR CONSTRUCTION

NORTH STONINGTON SOLAR

428, PROVIDENCE-NEW LONDON TURNPIKE
NORTH STONINGTON, CT 06359, USA

LAT: 41.431830°N
LON: 71.821514°W

STATE OF CONNECTICUT
MATTHEW BRANTLEY
PEN.0034813
LICENSED
PROFESSIONAL ENGINEER

NORTH STONINGTON, CT

REV. NO	DESCRIPTION	DATE
10	FENCE REVISION	12/14/22
9	RE-ISSUED FOR PERMIT	11/07/22
8	RE-ISSUED FOR PERMIT	10/18/22
7	RE-ISSUED FOR PERMIT	10/05/22
6	RE-ISSUED FOR PERMIT	09/02/22
5	RE-ISSUED FOR PERMIT	04/22/22
4	RE-ISSUED FOR PERMIT	11/19/21

SHEET TITLE:

ENVIRONMENTAL NOTES

PROJ. MGR.	PROJ. ENGR.	DATE:
CM	MB	12/14/2022
DRAWN BY: JP	CHECKED BY: CP	SCALE:

DRAWING NO.

C003

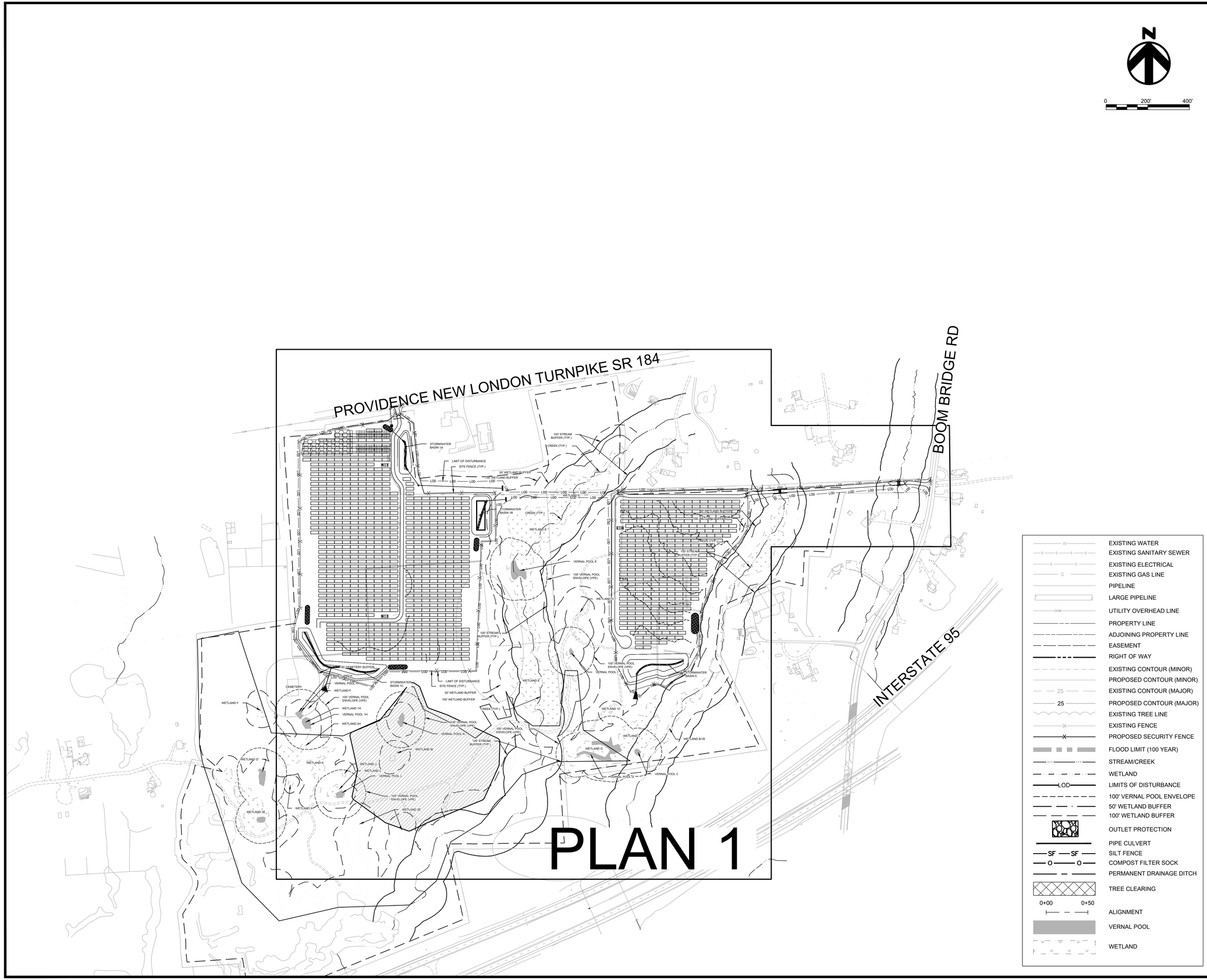

W	EXISTING WATER
S	EXISTING SANITARY SEWER
E	EXISTING ELECTRICAL
G	EXISTING GAS LINE
	PIPELINE
	LARGE PIPELINE
OHW	UTILITY OVERHEAD LINE
	PROPERTY LINE
	ADJOINING PROPERTY LINE
	EASEMENT
	RIGHT OF WAY
	EXISTING CONTOUR (MINOR)
	PROPOSED CONTOUR (MINOR)
25	EXISTING CONTOUR (MAJOR)
25	PROPOSED CONTOUR (MAJOR)
	EXISTING TREE LINE
X	EXISTING FENCE
X	PROPOSED SECURITY FENCE
	FLOOD LIMIT (100 YEAR)
	STREAM/CREEK
	WETLAND
LOD	LIMITS OF DISTURBANCE
	100' VERNAL POOL ENVELOPE
	50' WETLAND BUFFER
	100' WETLAND BUFFER
	OUTLET PROTECTION
	PIPE CULVERT
SF	SILT FENCE
O	COMPOST FILTER SOCK
	PERMANENT DRAINAGE DITCH
	TREE CLEARING
0+00 0+50	ALIGNMENT
	VERNAL POOL
	WETLAND

HDR

SILICON RANCH

NOT FOR CONSTRUCTION

NORTH STONINGTON SOLAR

428, PROVIDENCE-NEW LONDON TURNPIKE
NORTH STONINGTON, CT 06359, USA

LAT: 41.431830°N
LON: 71.821514°W

STATE OF CONNECTICUT
MATTHEW BRAINARD
PEN.0034152
LICENSED
PROFESSIONAL ENGINEER

NORTH STONINGTON, CT

REV. NO	DESCRIPTION	DATE
10	FENCE REVISION	12/14/22
9	RE-ISSUED FOR PERMIT	11/07/22
8	RE-ISSUED FOR PERMIT	10/18/22
7	RE-ISSUED FOR PERMIT	10/05/22
6	RE-ISSUED FOR PERMIT	09/02/22
5	RE-ISSUED FOR PERMIT	04/22/22
4	RE-ISSUED FOR PERMIT	11/19/21

SHEET TITLE:

OVERALL SITE PLAN

PROJ. MGR.	PROJ. ENGR.	DATE:
CM	MB	12/14/2022
DRAWN BY: JP	CHECKED BY: CP	SCALE: 1:200

DRAWING NO.

C101

N

0 100' 200'

GENERAL NOTES :

1. SEE SHEET C101 FOR OVERALL PLAN.
2. ALTA PROVIDED BY PROVOST & ROVERO, INC DATED JUNE 18, 2018.

W	EXISTING WATER
S	EXISTING SANITARY SEWER
E	EXISTING ELECTRICAL
G	EXISTING GAS LINE
	PIPELINE
	LARGE PIPELINE
OHW	UTILITY OVERHEAD LINE
	PROPERTY LINE
	ADJOINING PROPERTY LINE
	EASEMENT
	RIGHT OF WAY
	EXISTING CONTOUR (MINOR)
	PROPOSED CONTOUR (MINOR)
25	EXISTING CONTOUR (MAJOR)
25	PROPOSED CONTOUR (MAJOR)
	EXISTING TREE LINE
X	EXISTING FENCE
X	PROPOSED SECURITY FENCE
	FLOOD LIMIT (100 YEAR)
	STREAM/CREEK
	WETLAND
LOD	LIMITS OF DISTURBANCE
	100' VERNAL POOL ENVELOPE
	50' WETLAND BUFFER
	100' WETLAND BUFFER
	OUTLET PROTECTION
	PIPE CULVERT
SF SF	SILT FENCE
	COMPOST FILTER SOCK
	PERMANENT DRAINAGE DITCH
	TREE CLEARING
0+00 0+50	ALIGNMENT
	VERNAL POOL
	WETLAND
	EARLY SUCCESSIONAL HABITAT ENHANCEMENT AREA

HDR

SILICON RANCH

NOT FOR CONSTRUCTION

NORTH STONINGTON SOLAR

428, PROVIDENCE-NEW LONDON TURNPIKE
NORTH STONINGTON, CT 06359, USA

LAT: 41.431830°N
LON: 71.821514°W

STATE OF CONNECTICUT
MATTHEW BRAINARD
PEN.024159
LICENSED
PROFESSIONAL ENGINEER

NORTH STONINGTON, CT

REV. NO	DESCRIPTION	DATE
10	FENCE REVISION	12/14/22
9	RE-ISSUED FOR PERMIT	11/07/22
8	RE-ISSUED FOR PERMIT	10/18/22
7	RE-ISSUED FOR PERMIT	10/05/22
6	RE-ISSUED FOR PERMIT	09/02/22
5	RE-ISSUED FOR PERMIT	04/22/22
4	RE-ISSUED FOR PERMIT	11/19/21

SHEET TITLE:

EXISTING CONDITIONS PLAN 1

PROJ. MGR.	PROJ. ENGR.	DATE:
CM	MB	12/14/2022
DRAWN BY: JP	CHECKED BY: CP	SCALE: 1:100

DRAWING NO.

C102

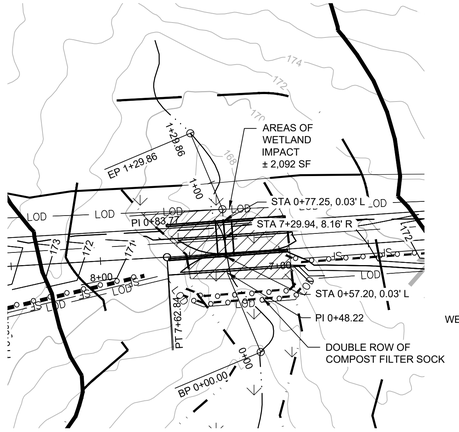

CULVERT C-3

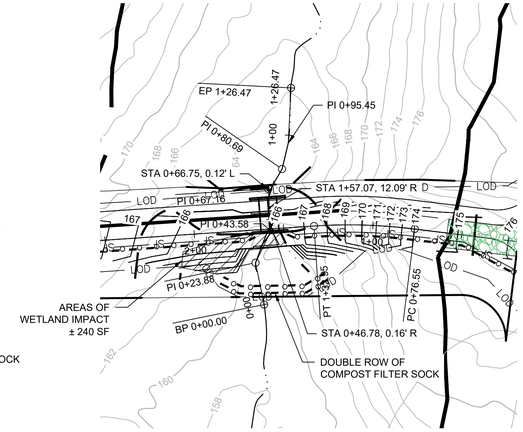

CULVERT C-4

REFER TO GRADING AND DRAINAGE PLAN ON SHEET C401 FOR CULVERT LOCATIONS.

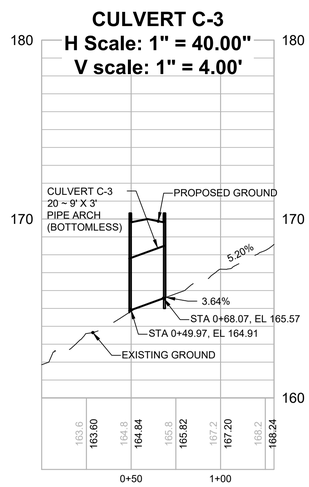

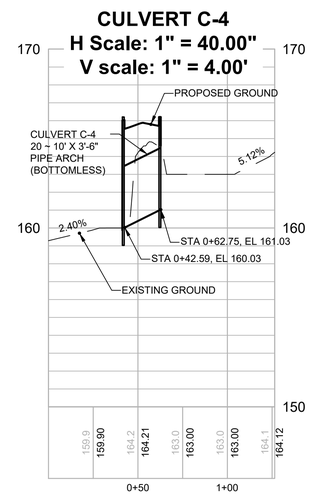

Culvert	Est. Peak FLow Q 50-yr (cfs)	Length (ft)	Shape	Span (ft)	Rise (ft)	Area (sf)	Open Area (sf)	OR (Open Area)/Length
C-3	87.2300	20	Arch (Bottomless)	9	3.0	27.0	27.0	1.35
C-4	104.7800	20	Arch (Bottomless)	10	3.5	35.0	35.0	1.75

PROVIDE PRECAST, 4000 PSI, CLASS IV, CULVERT. SHAPE AND DIMENSIONS PER TABLE ABOVE.

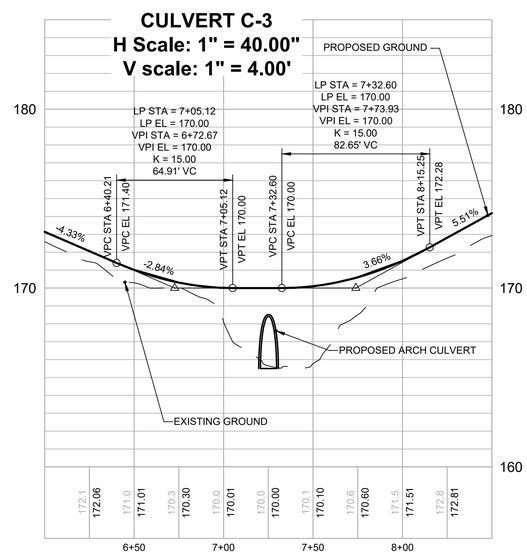

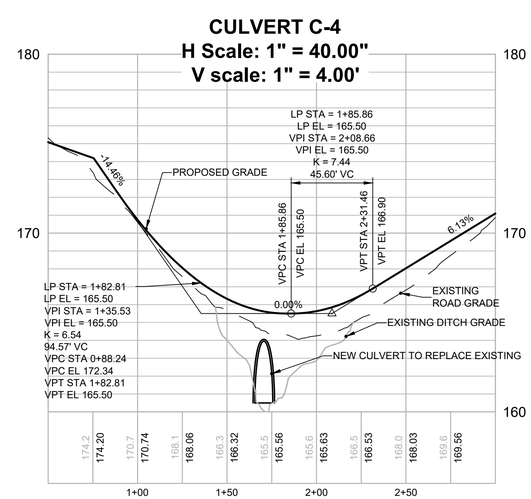

HDR

SILICON RANCH

NOT FOR CONSTRUCTION

NORTH STONINGTON SOLAR

428, PROVIDENCE-NEW LONDON TURNPIKE
NORTH STONINGTON, CT 06359, USA

LAT: 41.431830°N
LON: 71.821514°W

STATE OF CONNECTICUT
MATTHEW BARTLETT
PEN.0034159
LICENSED
PROFESSIONAL ENGINEER

NORTH STONINGTON, CT

REV. NO	DESCRIPTION	DATE
10	FENCE REVISION	12/14/22
9	RE-ISSUED FOR PERMIT	11/07/22
8	RE-ISSUED FOR PERMIT	10/18/22
7	RE-ISSUED FOR PERMIT	10/05/22
6	RE-ISSUED FOR PERMIT	09/02/22
5	RE-ISSUED FOR PERMIT	04/22/22
4	RE-ISSUED FOR PERMIT	11/19/21

SHEET TITLE:

WETLAND CROSSINGS

PROJ. MGR.	PROJ. ENGR.	DATE:
CM	MB	12/14/2022
DRAWN BY: JP	CHECKED BY: CP	SCALE: 1"=40'

DRAWING NO.

C200

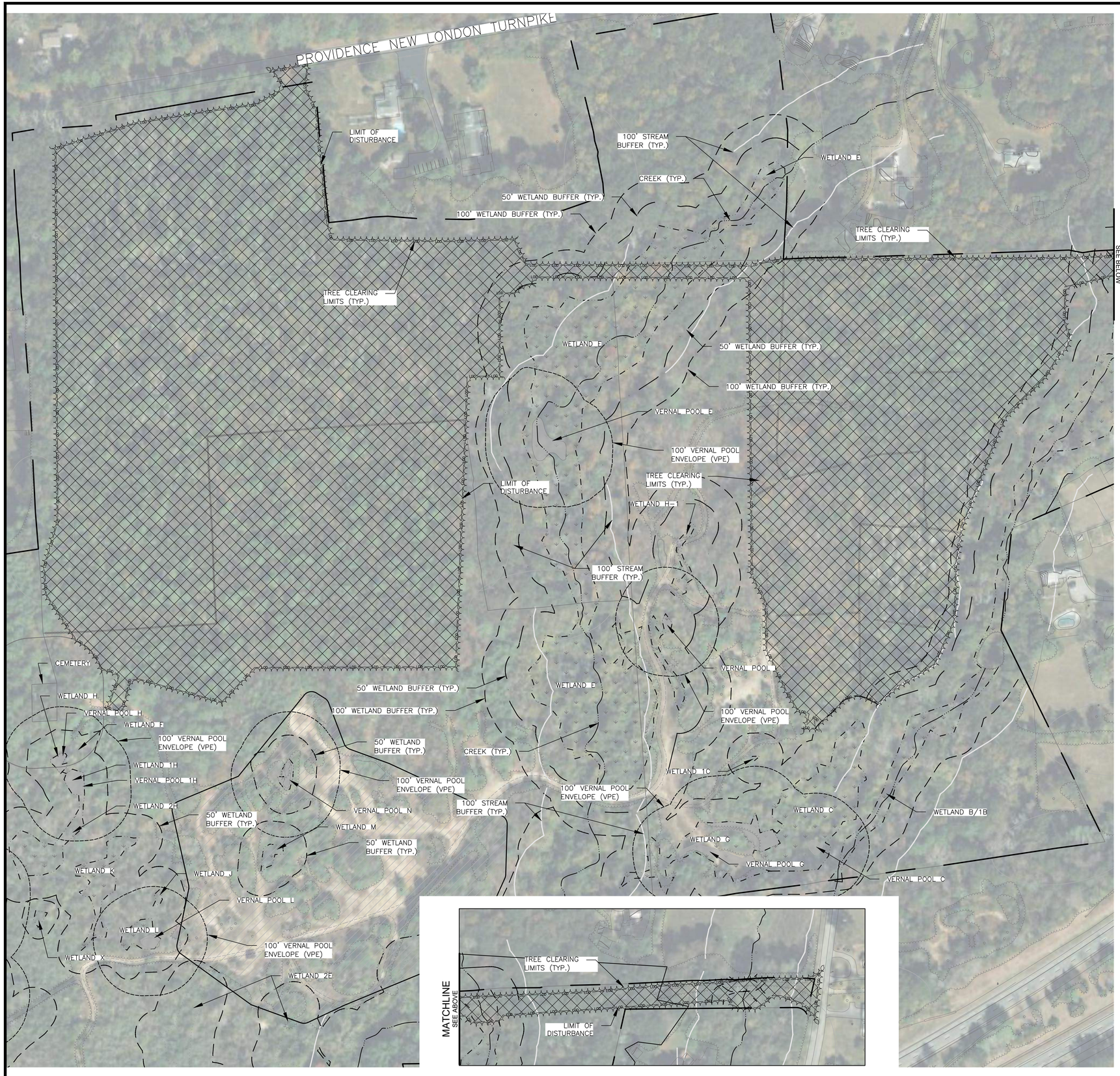

N

0 100' 200'

W	EXISTING WATER
S	EXISTING SANITARY SEWER
E	EXISTING ELECTRICAL
G	EXISTING GAS LINE
	PIPELINE
	LARGE PIPELINE
OHW	UTILITY OVERHEAD LINE
	PROPERTY LINE
	ADJOINING PROPERTY LINE
	EASEMENT
	RIGHT OF WAY
	EXISTING CONTOUR (MINOR)
	PROPOSED CONTOUR (MINOR)
25	EXISTING CONTOUR (MAJOR)
25	PROPOSED CONTOUR (MAJOR)
	EXISTING TREE LINE
X	EXISTING FENCE
X	PROPOSED SECURITY FENCE
	FLOOD LIMIT (100 YEAR)
	STREAM/CREEK
	WETLAND
LOD	LIMITS OF DISTURBANCE
	100' VERNAL POOL ENVELOPE
	50' WETLAND BUFFER
	100' WETLAND BUFFER
	OUTLET PROTECTION
	PIPE CULVERT
SF SF	SILT FENCE
	COMPOST FILTER SOCK
	PERMANENT DRAINAGE DITCH
	TREE CLEARING
0+00 0+50	ALIGNMENT
	VERNAL POOL
	WETLAND

HDR

SILICON RANCH

NOT FOR CONSTRUCTION

NORTH STONINGTON SOLAR

428, PROVIDENCE-NEW LONDON TURNPIKE
NORTH STONINGTON, CT 06359, USA

LAT: 41.431830°N
LON: 71.821514°W

STATE OF CONNECTICUT
MATTHEW BRAUNIUS
PEN.0036159
LICENSED
PROFESSIONAL ENGINEER

NORTH STONINGTON, CT

REV. NO	DESCRIPTION	DATE
10	FENCE REVISION	12/14/22
9	RE-ISSUED FOR PERMIT	11/07/22
8	RE-ISSUED FOR PERMIT	10/18/22
7	RE-ISSUED FOR PERMIT	10/05/22
6	RE-ISSUED FOR PERMIT	09/02/22
5	RE-ISSUED FOR PERMIT	04/22/22
4	RE-ISSUED FOR PERMIT	11/19/21

SHEET TITLE:

TREE CLEARING PLAN 1

PROJ. MGR. CM	PROJ. ENGR. MB	DATE: 12/14/2022
DRAWN BY: JP	CHECKED BY: CP	SCALE: 1:100

DRAWING NO.

C301

N

0 100' 200'

GENERAL NOTES :

1. SEE SHEET C101 FOR OVERALL PLAN.
2. ALL TIE-IN GRADING SLOPES ARE 3H:1V.
3. ALL BASIN SIDE SLOPES ARE 3H:1V.
4. SEE SHEET C200 FOR CULVERT WETLAND CROSSING PROFILES.
5. SEE DETAIL 2, SHEET 505 FOR STORMWATER BASIN.
6. GRADE DITCH BETWEEN PV SYSTEM PILES. ADJUST IN FIELD AS NEEDED.

W	EXISTING WATER
S	EXISTING SANITARY SEWER
E	EXISTING ELECTRICAL
G	EXISTING GAS LINE
	PIPELINE
	LARGE PIPELINE
OHW	UTILITY OVERHEAD LINE
	PROPERTY LINE
	ADJOINING PROPERTY LINE
	EASEMENT
	RIGHT OF WAY
	EXISTING CONTOUR (MINOR)
	PROPOSED CONTOUR (MINOR)
25	EXISTING CONTOUR (MAJOR)
25	PROPOSED CONTOUR (MAJOR)
	EXISTING TREE LINE
X	EXISTING FENCE
X	PROPOSED SECURITY FENCE
	FLOOD LIMIT (100 YEAR)
	STREAM/CREEK
	WETLAND
LOD	LIMITS OF DISTURBANCE
	100' VERNAL POOL ENVELOPE
	50' WETLAND BUFFER
	100' WETLAND BUFFER
	OUTLET PROTECTION
	PIPE CULVERT
SF SF	SILT FENCE
O O	COMPOST FILTER SOCK
	PERMANENT DRAINAGE DITCH
	TREE CLEARING
0+00 0+50	ALIGNMENT
	VERNAL POOL
	WETLAND

HDR

SILICON RANCH

NOT FOR CONSTRUCTION

NORTH STONINGTON SOLAR

428, PROVIDENCE-NEW LONDON TURNPIKE
NORTH STONINGTON, CT 06359, USA

LAT: 41.431830°N
LON: 71.821514°W

STATE OF CONNECTICUT · MATTHEW BRAINARD · PEN.0034159 · LICENSED PROFESSIONAL ENGINEER

NORTH STONINGTON, CT

REV. NO	DESCRIPTION	DATE
10	FENCE REVISION	12/14/22
9	RE-ISSUED FOR PERMIT	11/07/22
8	RE-ISSUED FOR PERMIT	10/18/22
7	RE-ISSUED FOR PERMIT	10/05/22
6	RE-ISSUED FOR PERMIT	09/02/22
5	RE-ISSUED FOR PERMIT	04/22/22
4	RE-ISSUED FOR PERMIT	11/19/21

SHEET TITLE:

ARRAY GRADING AND DRAINAGE 1

PROJ. MGR.	PROJ. ENGR.	DATE:
CM	MB	12/14/2022
DRAWN BY: JP	CHECKED BY: CP	SCALE: 1:100

DRAWING NO.

C401

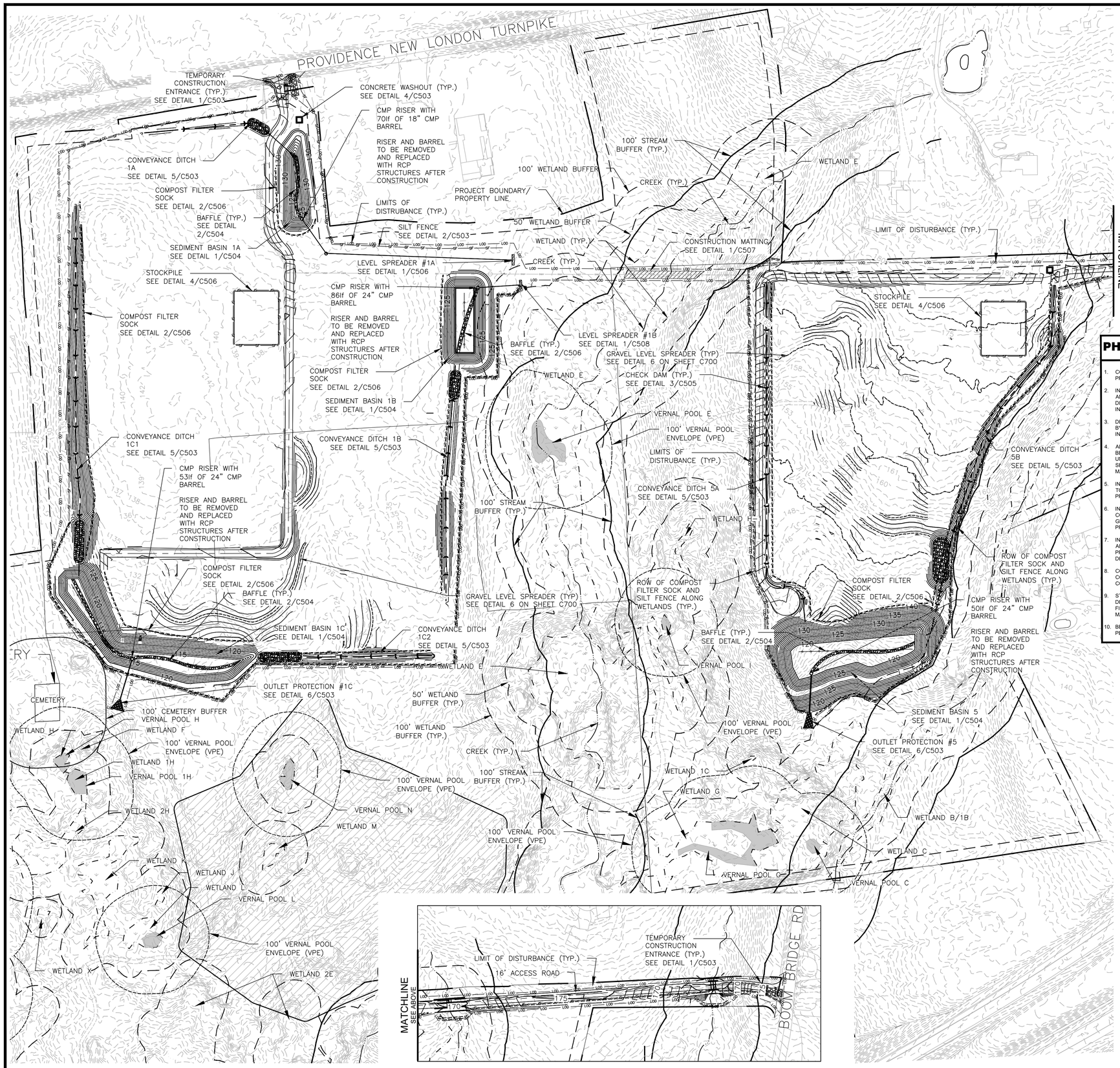

N

0 100' 200'

GENERAL NOTES :

1. SEE SHEET C101 FOR OVERALL PLAN.
2. ALL BASIN SIDE SLOPES ARE 3H:1V.

PHASE 1 CONSTRUCTION SEQUENCE

1. CONTACT THE CT DEEP INSPECTOR TO SCHEDULE AN ON-SITE PRE-CONSTRUCTION CONFERENCE TO DISCUSS EROSION CONTROL MEASURES.
2. INSTALL THE CONSTRUCTION ENTRANCE, TREE PROTECTION FENCE, SILT FENCE AND SILT FENCE STONE OUTLETS AS SHOWN ON PLANS, PRIOR TO ANY SITE DISTURBANCE ACTIVITIES (CLEARING, GRUBBING, GRADING, OR EXCAVATION INCLUDING SKIMMER/SEDIMENT BASINS).
3. DEVIATIONS FROM THE APPROVED PLAN MUST BE SUBMITTED TO AND APPROVED BY CT DEEP. CONTACT THE INSPECTOR FOR AN ON-SITE INSPECTION OF THE INSTALLED TREE PROTECTION FENCE.
4. ALL FIELD NON-WOODED AREAS THAT ARE NOT TO BE GRADED (I.E. FIELDS) SHALL BE MOWED TO FACILITATE PANEL INSTALLATION BUT SHALL BE OTHERWISE LEFT UNDISTURBED TO MAINTAIN EXISTING DRAINAGE PATTERNS WHERE STABLE. ANY SEVERELY ERODED DRAINAGE WAYS SHALL BE GRADED BACK, ROUGHENED, MATTED AND SEEDED.
5. INSTALL BASINS. UPON INSTALLATION OF THE BASINS, INSTALL DIVERSION SWALES TO THE BASIN AS NEEDED, STABILIZE IMMEDIATELY UPON REACHING FINAL GRADE. PROVIDE TEMPORARY CULVERT FOR CROSSING EXISTING DRAINAGE AREAS.
6. INSTALL REMAINING EROSION CONTROL MEASURES AS INDICATED ON CONSTRUCTION DOCUMENTS TO FACILITATE SEDIMENT CONTROL PRIOR TO GRADING, CLEARING ONLY AS NECESSARY TO INSTALL THESE BEST MANAGEMENT PRACTICES (BMPs).
7. INSPECT ALL EROSION CONTROL DEVICES ONCE EVERY CALENDAR WEEK AND AFTER EVERY RAINFALL EXCEEDING 1" TO VERIFY THAT THEY ARE FUNCTIONING PROPERLY. ANY ACCUMULATED SEDIMENT SHALL BE REMOVED AND PLACED IN A DESIGNATED SPOIL DISPOSAL AREA APPROVED BY THE INSPECTOR.
8. CONDUCT PERIODIC INSPECTIONS OF ALL EROSION AND SEDIMENTATION CONTROLS AND MAKE ANY REPAIRS OR MODIFICATIONS NECESSARY TO ASSURE CONTINUED EFFECTIVE OPERATION OF EACH DEVICE.
9. STABILIZE ALL GRADED AREAS WITH TEMPORARY SEEDING PER THE REQUIRED CT DEEP REGULATIONS. PROVIDE PERMANENT SEEDING AS GRADED AREAS ARE FINALIZED. PROVIDE NORTH AMERICAN GREEN S150 OR APPROVED EQUAL MATTING ON ALL FILL SLOPES.
10. BEGIN CLEARING, GRUBBING, DEMOLITION, AND GRADING OF SITE. STABILIZE SITE PER EROSION CONTROL NOTES AS AREAS ARE BROUGHT TO ROUGH GRADES.

HDR

SILICON RANCH

NOT FOR CONSTRUCTION

NORTH STONINGTON SOLAR

428, PROVIDENCE-NEW LONDON TURNPIKE
NORTH STONINGTON, CT 06359, USA

LAT: 41.431830°N
LON: 71.821514°W

STATE OF CONNECTICUT · MATTHEW BRAYLOT · PEN.0038159 · LICENSED PROFESSIONAL ENGINEER

NORTH STONINGTON, CT

REV. NO	DESCRIPTION	DATE
10	FENCE REVISION	12/14/22
9	RE-ISSUED FOR PERMIT	11/07/22
8	RE-ISSUED FOR PERMIT	10/18/22
7	RE-ISSUED FOR PERMIT	10/05/22
6	RE-ISSUED FOR PERMIT	09/02/22
5	RE-ISSUED FOR PERMIT	04/22/22
4	RE-ISSUED FOR PERMIT	11/19/21

SHEET TITLE:

EROSION AND SEDIMENTATION CONTROL PHASE 1 - PLAN 1

PROJ. MGR.	PROJ. ENGR.	DATE:
CM	MB	12/14/2022
DRAWN BY:	CHECKED BY:	SCALE:
JP	CP	1:100

DRAWING NO.

C501

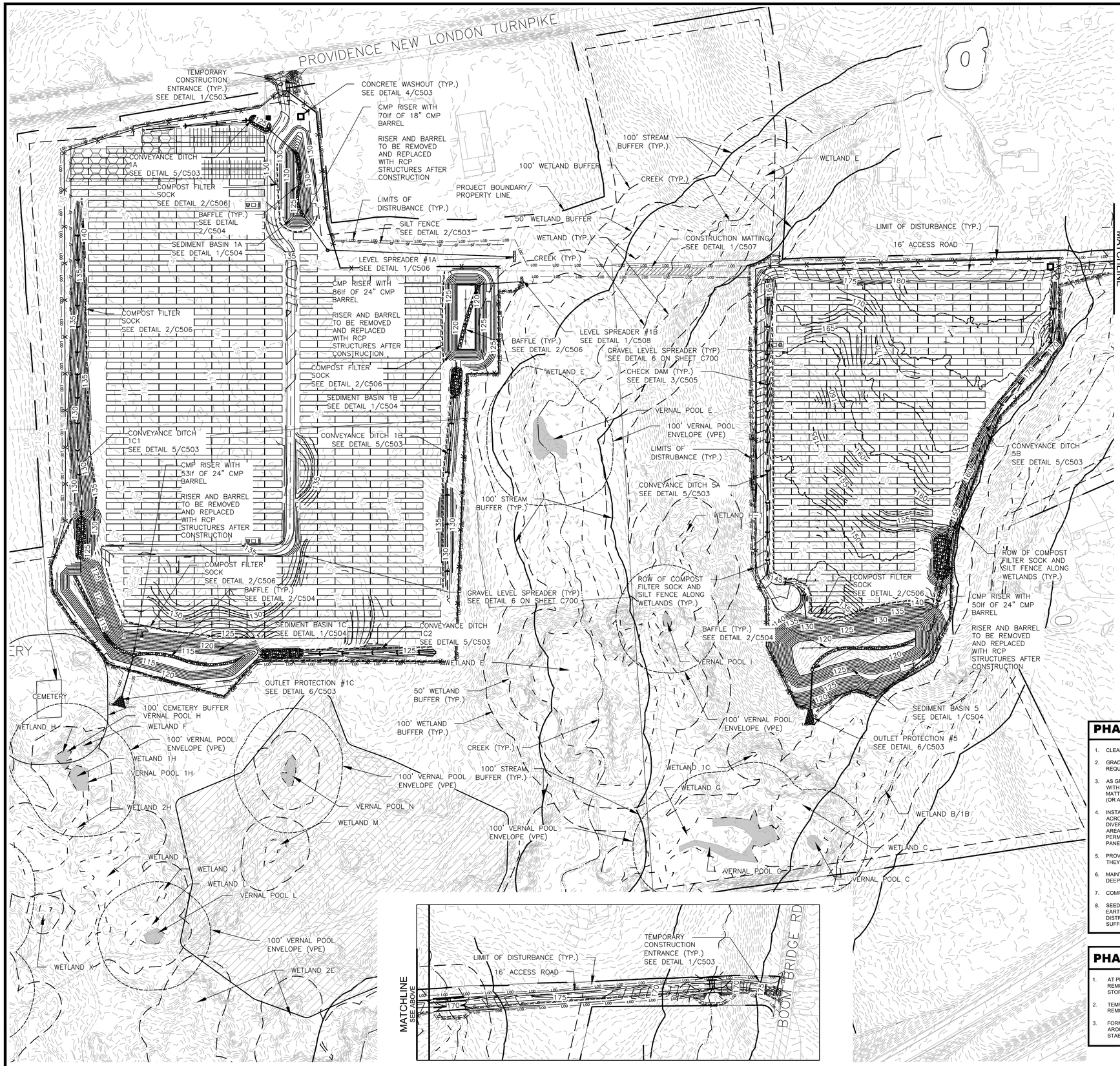

N

0 100' 200'

GENERAL NOTES :

1. SEE SHEET C101 FOR OVERALL PLAN.
2. ALL TIE-IN GRADING SLOPES ARE 3H:1V.
3. ALL BASIN SIDE SLOPES ARE 3H:1V.
4. FOR SLOPES EQUAL TO OR GREATER THAN 8%, EROSION CONTROL BLANKETS, STUMP GRINDINGS, EROSION CONTROL MIX MULCH, OR HYDROSEED WITH TACKIFIER SHALL BE APPLIED WITHIN 72 HOURS OF FINAL GRADING, OR WHEN A RAINFALL OF 0.5 INCHES OR GREATER IS PREDICTED WITHIN 24 HOURS OF FINAL GRADING, WHICHEVER TIME PERIOD IS LESS.

- EXISTING WATER
- EXISTING SANITARY SEWER
- EXISTING ELECTRICAL
- EXISTING GAS LINE
- PIPELINE
- LARGE PIPELINE
- UTILITY OVERHEAD LINE
- PROPERTY LINE
- ADJOINING PROPERTY LINE
- EASEMENT
- RIGHT OF WAY
- EXISTING CONTOUR (MINOR)
- PROPOSED CONTOUR (MINOR)
- EXISTING CONTOUR (MAJOR)
- PROPOSED CONTOUR (MAJOR)
- EXISTING TREE LINE
- EXISTING FENCE
- PROPOSED SECURITY FENCE
- FLOOD LIMIT (100 YEAR)
- STREAM/CREEK
- WETLAND
- LIMITS OF DISTURBANCE
- 100' VERNAL POOL ENVELOPE
- 50' WETLAND BUFFER
- 100' WETLAND BUFFER
- OUTLET PROTECTION
- PIPE CULVERT
- SILT FENCE
- COMPOST FILTER SOCK
- PERMANENT DRAINAGE DITCH
- TREE CLEARING
- ALIGNMENT
- VERNAL POOL
- WETLAND

PHASE 2 CONSTRUCTION SEQUENCE

1. CLEAR AND GRUB REMAINDER OF AREA AS REQUIRED.
2. GRADE THE CONTRACTOR LAYDOWN AREA AND AREAS INDICATED TO ACHIEVE REQUIRED PANEL AREA SLOPES.
3. AS GRADED AREAS ARE BROUGHT TO GRADE, ROUGHEN AND IMMEDIATELY SEED WITH PERMANENT SEEDING TO ESTABLISH COVER. APPLY EROSION CONTROL MATTING AS DETAILED WITHIN THE PLANS CONSISTING OF NORTH AMERICAN GREEN (OR APPROVED EQUAL) ON ALL FILL SLOPES.
4. INSTALL CULVERTS AS ACCESS ROADS ARE CONSTRUCTED TO FACILITATE DRAINAGE ACROSS DRIVES. NOTE THAT SOME CULVERTS MAY NEED TO BLOCKED TO MAINTAIN DIVERSION OF STORMWATER TO BASINS. COORDINATE WITH INSPECTOR WHEN AREAS OF THE SITE ARE STABILIZED AND BASINS CAN BE TRANSITIONED TO PERMANENT PONDS TO FACILITATE SITE STABILIZATION AND INSTALLATION OF FINAL PANELS IN PROXIMITY TO BASINS (SEE PHASE 3 BELOW).
5. PROVIDE INLET & OUTLET PROTECTION FOR EACH CULVERT AND BASIN OUTFALLS AS THEY ARE INSTALLED.
6. MAINTAIN EROSION CONTROL MEASURES DURING CONSTRUCTION ACCORDING TO CT DEEP REQUIREMENTS
7. COMPLETE ANY FINAL, FINE GRADING.
8. SEEDING IS TO BE PERFORMED IMMEDIATELY FOLLOWING THE COMPLETION OF MASS EARTHWORK. NO ELECTRICAL INSTALLATION IS TO BEGIN UNTIL THE CONSERVATION DISTRICT AND/OR SWPCP INSPECTORS AGREE THAT VEGETATION GROWTH IS SUFFICIENT.

PHASE 3 CONSTRUCTION SEQUENCE

1. AT PROJECT END, CONTACT CT DEEP COUNTY FOR REVIEW AND WITH APPROVAL, REMOVE THE SKIMMER AND CONVERT TEMP. SEDIMENT BASINS TO PERMANENT STORMWATER PONDS AS SHOWN IN THE PLANS.
2. TEMPORARY CONVEYANCE DITCHES AND TEMPORARY SEDIMENT PONDS MY BE REMOVED ONCE THE SITE HAS ACHIEVED 80% STABILIZATION.
3. FORMER BASIN AREAS TO BE SEEDED AND STABILIZED. SILT FENCE TO REMAIN AROUND THE LOWER SIDE OF THE FORMER BASIN AREAS UNTIL VEGETATIVE STABILIZATION IS IN PLACE.

HDR

SILICON RANCH

NOT FOR CONSTRUCTION

NORTH STONINGTON SOLAR

428, PROVIDENCE-NEW LONDON TURNPIKE
NORTH STONINGTON, CT 06359, USA

LAT: 41.431830°N
LON: 71.821514°W

STATE OF CONNECTICUT · MATTHEW BRAINARD · PEN.0034159 · LICENSED PROFESSIONAL ENGINEER

NORTH STONINGTON, CT

REV. NO	DESCRIPTION	DATE
10	FENCE REVISION	12/14/22
9	RE-ISSUED FOR PERMIT	11/07/22
8	RE-ISSUED FOR PERMIT	10/18/22
7	RE-ISSUED FOR PERMIT	10/05/22
6	RE-ISSUED FOR PERMIT	09/02/22
5	RE-ISSUED FOR PERMIT	04/22/22
4	RE-ISSUED FOR PERMIT	11/19/21

SHEET TITLE:

EROSION AND SEDIMENTATION CONTROL PHASE 2 - PLAN 1

PROJ. MGR.	PROJ. ENGR.	DATE:
CM	MB	12/14/2022
DRAWN BY: JP	CHECKED BY: CP	SCALE: 1:100

DRAWING NO.

C502

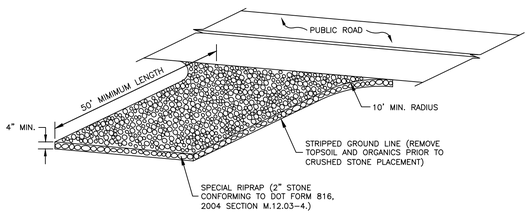

NOT TO SCALE

TOWN OF STONINGTON TECHNICAL STANDARDS	ANTI-TRACKING PAD	DATE:
		REVISED:
		DETAIL NUMBER: ES-2

TEMPORARY CONSTRUCTION ENTRANCE (1)

NOT TO SCALE

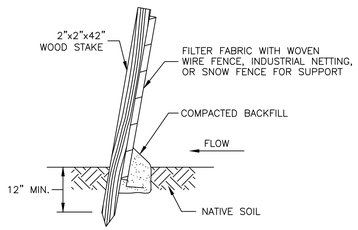

NOT TO SCALE

TOWN OF STONINGTON TECHNICAL STANDARDS	SILT FENCE	DATE:
		REVISED:
		DETAIL NUMBER: ES-1

SILT FENCE (2)

NOT TO SCALE

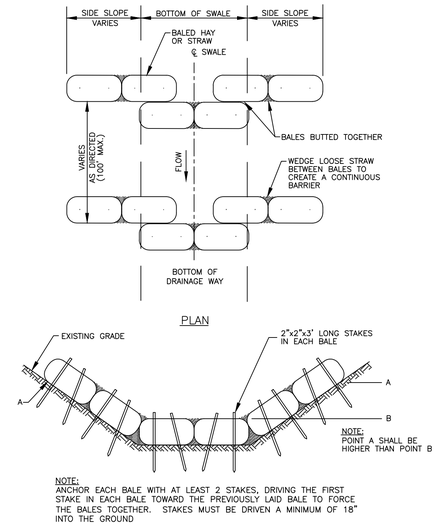

NOT TO SCALE

TOWN OF STONINGTON TECHNICAL STANDARDS	HAYBALE CHECK DAM	DATE:
		REVISED:
		DETAIL NUMBER: ES-5

CHECK DAM (3)

NOT TO SCALE

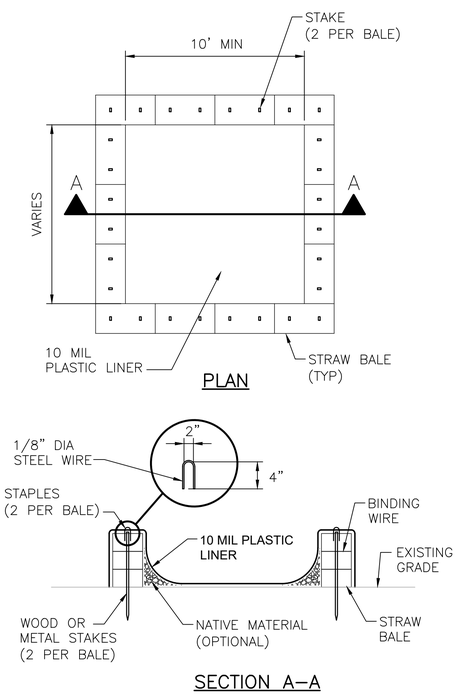

CONCRETE WASHOUT (4)

NOT TO SCALE

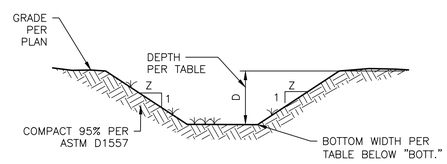

Ditch	Weighted Peak Runoff 100-yr Event (cfs)	Avg. Slope (%)	Shape	Side Slope z:1	Bott. (ft)	Depth (ft)	Top Width (ft)
1A	6.27	0.69%	Trap.	3	1	1.00	7.0
1B	9.03	0.29%	Trap.	3	1.5	1.25	9.0
1C1	10.59	1.77%	Trap.	3	1.5	1.00	7.5
1C2	20.11	1.19%	Trap.	3	2	1.25	9.5
5A	21.64	3.91%	Trap.	3	2	1.00	8.0
5B	7.32	4.99%	Tri.	3	0	1.00	6.0

CONVEYANCE DITCH DETAIL (5)

NOT TO SCALE

Culvert #	Q (cfs)	D_O (ft)	TW (ft)	L_a (ft)	W (ft)	d_{50} (ft)
1C	10.27	2	1.15	22.2	29.7	0.15
5	17.76	2	0.90	26.7	65.3	0.41
D1A	4.58	1	0.84	15.8	9.3	0.18

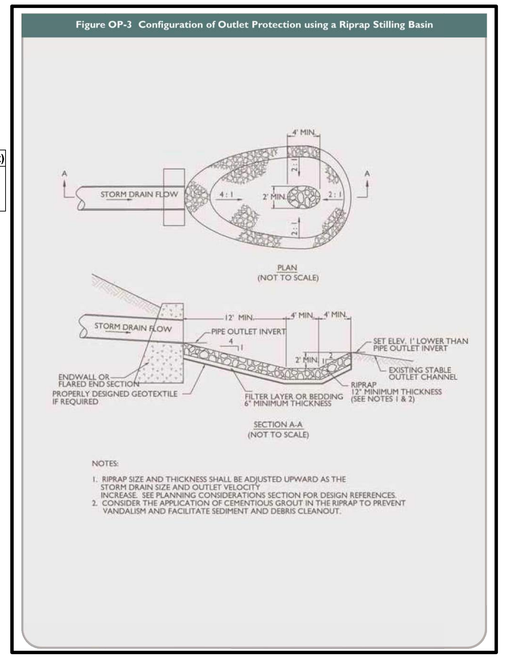

OUTFALL PROTECTION (6)

NOT TO SCALE

HDR

SILICON RANCH

NOT FOR CONSTRUCTION

NORTH STONINGTON SOLAR

428, PROVIDENCE-NEW LONDON TURNPIKE
NORTH STONINGTON, CT 06359, USA

LAT: 41.431830°N
LON: 71.821514°W

STATE OF CONNECTICUT · MATTHEW BRANIZZI · PEN.0038159 · LICENSED · PROFESSIONAL ENGINEER

NORTH STONINGTON, CT

REV. NO	DESCRIPTION	DATE
10	FENCE REVISION	12/14/22
9	RE-ISSUED FOR PERMIT	11/07/22
8	RE-ISSUED FOR PERMIT	10/18/22
7	RE-ISSUED FOR PERMIT	10/05/22
6	RE-ISSUED FOR PERMIT	09/02/22
5	RE-ISSUED FOR PERMIT	04/22/22
4	RE-ISSUED FOR PERMIT	11/19/21

SHEET TITLE:

EROSION AND SEDIMENT CONTROL DETAILS 1

PROJ. MGR. CM	PROJ. ENGR. MB	DATE: 12/14/2022
DRAWN BY: JP	CHECKED BY: CP	SCALE: AS NOTED

DRAWING NO.

C503

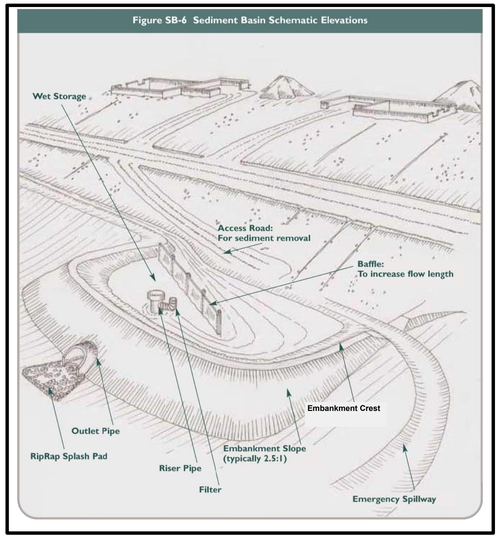

BASIN #	TOTAL DRAINAGE AREA (AC)	DEPTH OF STORAGE VOLUME (FT)	10YR PEAK FLOW (CFS)	RETENTION TIME REQUIRED (MIN)	RETENTION TIME PROVIDED (MIN)	BOTTOM ELEVATION (FT)	RISER CREST ELEVATION (FT)	EMERGENCY SPILLWAY ELEVATION (FT)	TOP OF BERM ELEVATION (FT)	HIGHWATER ELEVATION (10-YR) (FT)	OUTLET PIPE SIZE (INCH)	OUTLET PIPE INVERT IN (FT)	OUTLET PIPE INVERT OUT (FT)	FILTER ORIFICE SIZE (INCH)
1A	4.19	7.00	2.46	600	605	124.00	128.50	130.50	131.00	128.64	18.00	124.00	123.50	4.00
1B	4.57	8.00	3.46	600	605	119.00	121.50	126.00	127.00	121.65	24.00	119.00	118.50	4.00
1C	11.85	6.00	8.22	600	651	114.00	115.50	119.00	120.00	116.81	24.00	114.00	113.50	4.00
5	15.23	8.00	16.27	600	764	120.00	123.00	127.00	128.00	125.12	24.00	120.00	117.00	3.00

SEDIMENT BASIN (1)
NOT TO SCALE

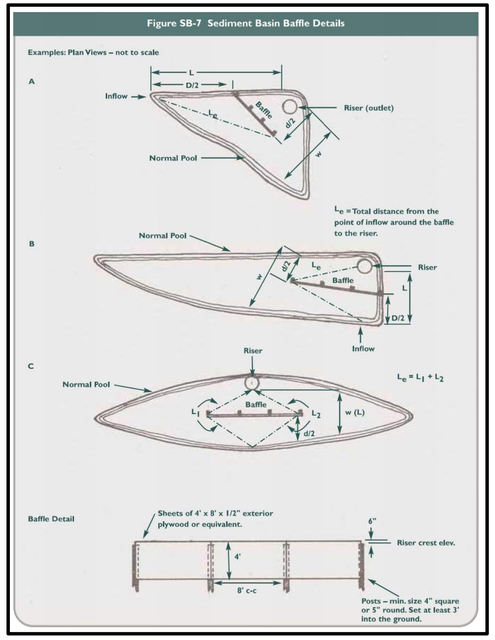

BAFFLES (2)
NOT TO SCALE

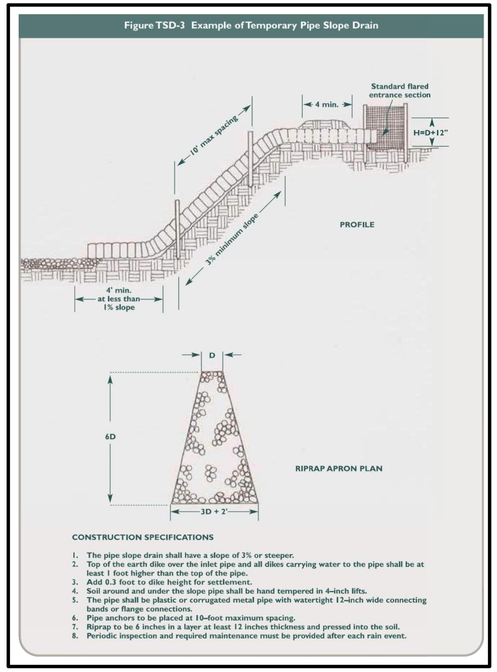

TEMPORARY SLOPE DRAIN (4)
NOT TO SCALE

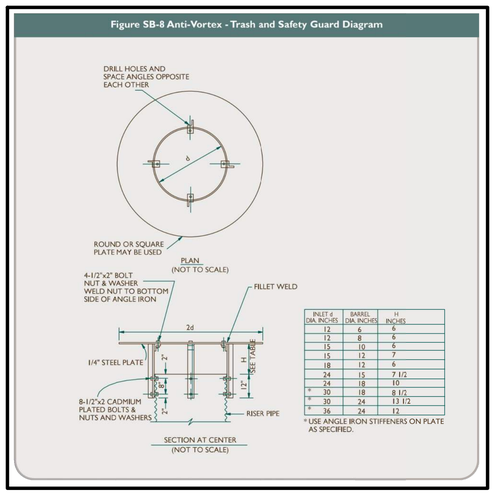

ANTI-VORTEX TRASH GUARD (3)
NOT TO SCALE

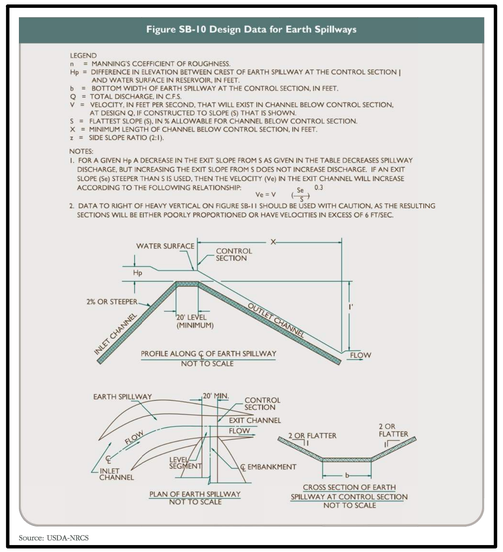

EARTH SPILLWAY (5)
NOT TO SCALE

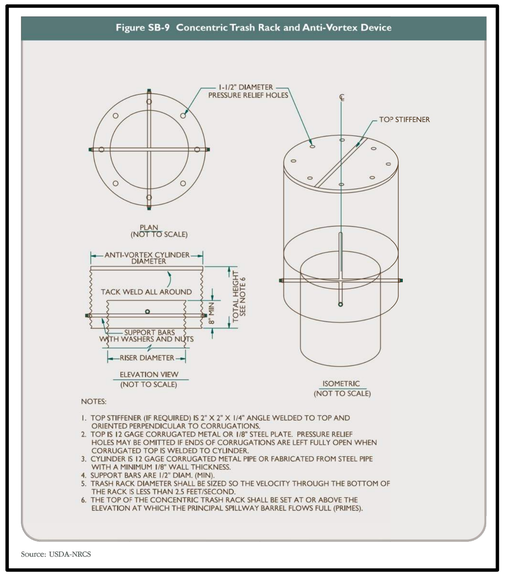

CONCENTRIC TRASH RACK (4)
NOT TO SCALE

NOT FOR CONSTRUCTION

NORTH STONINGTON SOLAR

428, PROVIDENCE-NEW LONDON TURNPIKE
NORTH STONINGTON, CT 06359, USA

LAT: 41.431830°N
LON: 71.821514°W

NORTH STONINGTON, CT

REV. NO	DESCRIPTION	DATE
10	FENCE REVISION	12/14/22
9	RE-ISSUED FOR PERMIT	11/07/22
8	RE-ISSUED FOR PERMIT	10/18/22
7	RE-ISSUED FOR PERMIT	10/05/22
6	RE-ISSUED FOR PERMIT	09/02/22
5	RE-ISSUED FOR PERMIT	04/22/22
4	RE-ISSUED FOR PERMIT	11/19/21

SHEET TITLE:

EROSION AND SEDIMENT CONTROL DETAILS 2

PROJ. MGR.	PROJ. ENGR.	DATE:
CM	MB	12/14/2022
DRAWN BY: JP	CHECKED BY: CP	SCALE: AS NOTED

DRAWING NO.

C504

4-Short Term Non-living Soil Protection

Temporary Erosion Control Blanket (ECB)

Temporary Erosion Control Blanket (ECB)

Definition

A manufactured blanket composed of biodegradable / photodegradable natural or polymer fibers and/or filaments that have been mechanically, structurally or chemically bound together to form a continuous matrix.

Purpose

To provide temporary surface protection to newly seeded and/or disturbed soils to absorb raindrop impact and to reduce sheet and rill erosion and to enhance the establishment of vegetation.

Applicability

- On disturbed soils where slopes are 2:1 or flatter.
- Where wind and traffic generated air flow may dislodge standard, unarmored mulches.
- May be used as a substitute for **Temporary Soil Protection**.
- May be used as a substitute for **Mulch for Seed**.

Planning Considerations

When considering the use of ECB keep in mind the blanket's capability to conform to ground surface irregularities. If the blanket is not capable of developing a continuous contact with the soil then it must be applied to a fine graded surface. Some blankets will soften and when wetted reconform to the ground. Also, when the ground is frozen, proper anchoring can be difficult, if not impossible.

Care must be taken to choose the type of blanket which is most appropriate for the specific need of the project. With the abundance of erosion control blankets available, it is impossible to cover all of the advantages, disadvantages and specifications of all manufactured blankets. There is no substitute for a thorough understanding of the manufacturer's instructions and recommendations in conjunction with a site visit by the erosion and sedimentation plan designer prior to and during installation to verify a product's appropriateness.

The success of temporary erosion control blankets is dependent upon strict adherence to the manufacturer's installation recommendations. As such, a final inspection should be planned to ensure that the lap joints are secure, all edges are properly anchored and all staking/stapling patterns follow the manufacturer's recommendations.

Specifications

Materials

Temporary erosion control blankets shall be composed of fibers and/or filaments that:

- *are biodegradable or photodegradable within two years but without substantial degradation over the period of intended usage (five months maximum);*
- *are mechanically, structurally or chemically bound together to form a continuous matrix of even thickness and distribution that resist raindrop splash and when used with seedings allows vegetation to penetrate the blanket;*
- *are of sufficient structural strength to withstand stretching or movement by wind or water when installed in accordance with the manufacturer's recommendations;*
- *are free of any substance toxic to plant growth and unprotected human skin or which interferes with seed germination;*
- *contain no contaminants that pollute the air or waters of the State when properly applied; and*

- *provide either 80%-95% soil coverage when used as a substitute for* ***Mulch for Seed*** *or 100% initial soil coverage when used as a substitute for* ***Temporary Soil Protection*** *measure.*

Materials shall be selected as appropriate for the specific site conditions in accordance with manufacturer's recommendations. Use of any particular temporary erosion control blanket should be supported by manufacturer's test data that confirms the blanket meets these material specifications and will provide the short term erosion control capabilities necessary for the specific project.

Site Preparation and Installation

(see **Figure ECB-1**)

Prepare the surface, remove protruding objects and install temporary erosion control blankets in accordance with the manufacturer's recommendations. Ensure that the orientation and anchoring of the blanket is appropriate for the site.

The blanket can be laid over areas where sprigged grass seedlings have been inserted into the soil. Where landscape plantings are planned, lay the blanket first and then plant through the blanket in accordance with Landscape Planting measure.

Inspect the installation to insure that all lap joints are secure, all edges are properly anchored and all staking or stapling patterns follow manufacturer's recommendations.

Maintenance

Inspect temporary erosion control blankets at least once a week and within 24 hours of the end of a storm with a rainfall amount of 0.5 inch or greater for failures. Blanket failure has occurred when (1) soils and/or seed have washed away from beneath the blanket and the soil surface can be expected to continue to erode at an accelerated rate, and/or (2) the blanket has become dislodged from the soil surface or is torn.

If washouts or breakouts occur, re-install the blanket after regrading and re-seeding, ensuring that blanket installation still meets design specifications. When repetitive failures occur at the same location, review conditions and limitations for use and determine if diversions, stone check dams or other measures are needed to reduce failure rate.

Repair any dislodged or failed blankets immediately.

When used as a substitute for **Mulch for Seed**, continue to inspect as required by the seeding measure. When used as a substitute for **Temporary Soil Protection**, continue to inspect until it is replaced by other erosion control measures or until work resumes.

Figure ECB-1
Example of Temporary Erosion Control Blanket Installation

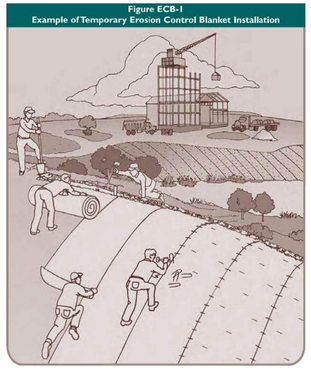

Temporary Erosion Control Blanket (ECB)

TEMPORARY EROSION CONTROL MATTING (1)

NOT TO SCALE

GENERAL NOTES:

1. PRECAST STRUCTURES SHALL CONFORM TO LATEST ASTM C-913 SPECIFICATIONS FOR "REINFORCED CONCRETE WATER AND WASTEWATER STRUCTURES".
2. ALL EXPOSED CONCRETE TO BE CHAMFERED 1".
3. CONCRETE COMPRESSIVE STRENGTH 4000 PSI MINIMUM.
4. SECTION JOINTS TO BE SEALED WITH BUTYL RUBBER SEALANT SUPPLIED BY VENDOR AND INSTALLED BY CONTRACTOR. BARREL CONNECTIONS TO BE SEALED WITH LINK SEAL CONNECTORS SUPPLIED BY VENDOR AND INSTALLED BY CONTRACTOR.
5. CONCRETE PIPE SHALL HAVE 'O' RING SEALS OR WATER TIGHT JOINTS.
6. SHOP DRAWINGS MUST BE SUBMITTED AND APPROVED BY THE ENGINEER BEFORE CONSTRUCTION.
7. GEOTECHNICAL ENGINEER SHALL MONITOR DAM AND OUTLET STRUCTURE INSTALLATION. ALL FILL AREAS SHALL BE COMPACTED TO 100% OF THE MATERIALS MAXIMUM DRY DENSITY UNLESS OTHERWISE DICTATED BY THE GEOTECHNICAL ENGINEER.
8. PROVIDED STEPS 1' ON CENTERS. STEPS SHALL BE EPOXY COATED. MANHOLE OPENING TO ALIGN WITH STEPS.
9. ALL PIPE IN STORM DRAIN STRUCTURE TO BE STRUCK EVEN WITH THE INSIDE WALL, GROUTED AND BRUSHED SMOOTH.

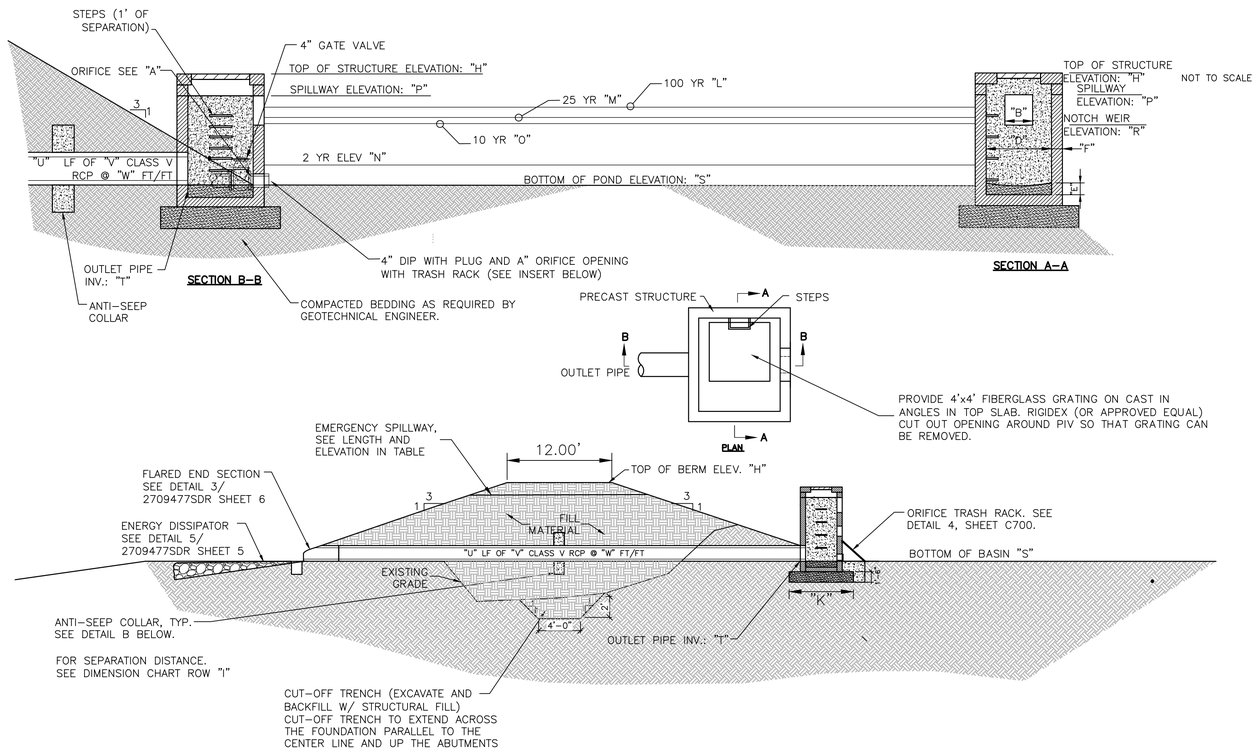

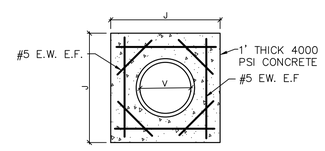

DETAIL – B – ANTI-SEEP COLLAR

DIMENSION CHART

	BASIN	POND 1A	POND 1B	POND 1C	POND 5
A	Orifice Diameter (in)	6	6	10	10
B	Weir Length (ft)	3	3	3	2
C	Emergency Spillway Length (ft)	20	20	30	30
D	Inside Dimension of Outlet Structure (ft) (Square Box)	4	4	4	4
E	Concrete Ballast Depth (in)	8	8	8	8
F	Width of Outlet Structure Walls (in)	6	6	6	6
G	NOT USED	–	–	–	–
H	Top of Berm – Top of Outlet Structure	131.00	127.00	120.00	128.00
I	Anti-seep Collar Separation (ft)	20	20	20	20
J	Anti-seep Collar Length and Width (ft)	4	4	4	4
K	Outlet Structure Base Dimension (ft) (Depth is 18")	6	6	6	6
L	100 Year Water Elevation	130.87	124.15	119.16	126.33
M	25 Year Water Elevation	129.74	122.84	118.04	125.28
N	2 Year Water Elevation	126.83	120.71	116.33	122.91
O	10 Year Water Elevation	128.68	121.96	117.40	124.52
P	Emergency Spillway Elevation	130.90	126.90	119.60	127.90
Q	Weir Elevation	130.50	124.55	116.90	123.50
R	Bottom of Pond Elevation	123.00	119.00	114.00	120.00
S	Outlet Pipe Invert	125.80	120.20	115.70	121.30
T	Linear Feet of Outlet Pipe	402	88	92	82
U	Diameter of Outlet Pipe	24"	15"	18"	24"
V	Outlet Pipe Slope Ft/Ft	0.0050	0.0136	0.0076	0.0742
W	Outlet Pipe FES Invert	123.80	119.00	115.00	115.25

STORMWATER BASIN (2)

NOT TO SCALE

HDR

SILICON RANCH

NOT FOR CONSTRUCTION

NORTH STONINGTON SOLAR

428, PROVIDENCE-NEW LONDON TURNPIKE
NORTH STONINGTON, CT 06359, USA

LAT: 41.431830°N
LON: 71.821514°W

STATE OF CONNECTICUT · MATTHEW BRANTA · PEN.0034159 · LICENSED PROFESSIONAL ENGINEER

NORTH STONINGTON, CT

REV. NO	DESCRIPTION	DATE
10	FENCE REVISION	12/14/22
9	RE-ISSUED FOR PERMIT	11/07/22
8	RE-ISSUED FOR PERMIT	10/18/22
7	RE-ISSUED FOR PERMIT	10/05/22
6	RE-ISSUED FOR PERMIT	09/02/22
5	RE-ISSUED FOR PERMIT	04/22/22
4	RE-ISSUED FOR PERMIT	11/19/21

SHEET TITLE:

EROSION AND SEDIMENT CONTROL DETAILS 3

PROJ. MGR.	PROJ. ENGR.	DATE:
CM	MB	12/14/2022
DRAWN BY: JP	CHECKED BY: CP	SCALE: AS NOTED

DRAWING NO.

C505

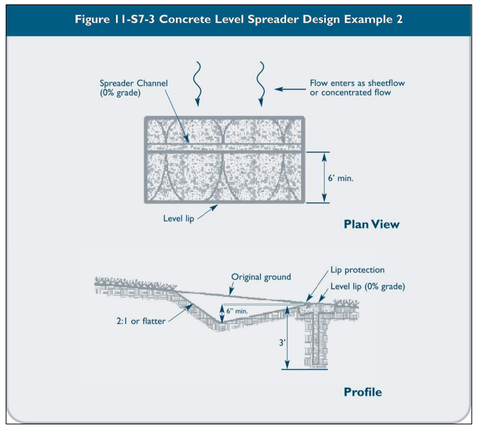

Culvert #	Q (cfs)	Min. Length (ft)	Design Length (ft)	Height of Flow (ft)	Flow Velocity (ft/s)
1A	1.79	23.27	23	0.09	0.85
1B	1.46	18.98	19	0.09	0.84

OUTFALL LEVEL SPREADER (1)

NOT TO SCALE

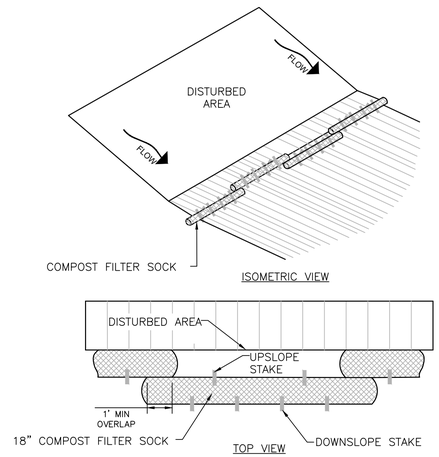

MAINTENANCE:

1. SEDIMENT DEPOSITS SHALL BE CLEANED FROM THE WATTLES WHEN IT REACHES HALF THE HEIGHT OF THE LOG.
2. DAMAGED WATTLES SHALL BE REPLACED WITHIN 24 HOURS OF INSPECTION. A SUPPLY OF WATTLES SHALL BE MAINTAINED ON SITE FOR THIS PURPOSE.

Table 1.	
Slope	Barrier Row Spacing
<2%	100 feet
2 to 5%	75 feet
5 to 10%	50 feet
10 to 33%	25 feet
33 to 50%	20 feet
>50%	Not Permitted

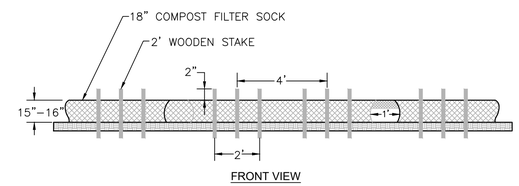

COMPOST FILTER SOCK (2)

NOT TO SCALE

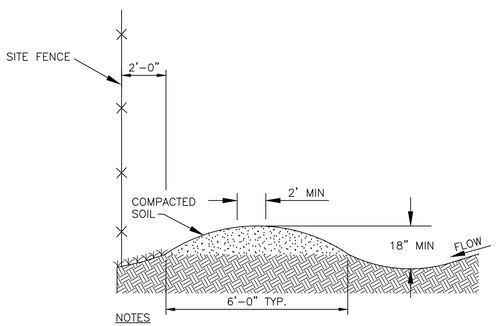

NOTES

1. CONSTRUCT DIVERSION CHANNEL AT A MINIMUM OF 1.0% SLOPE TOWARD OUTLET.
2. SIDE SLOPES SHALL NOT EXCEED A 5:1 (H:V) SLOPE IN AREAS WHERE VEHICLES MUST CROSS, 3:1 SLOPE (MAX.) IN ALL OTHER AREAS.

DIVERSION DITCH DETAIL (3)

NOT TO SCALE

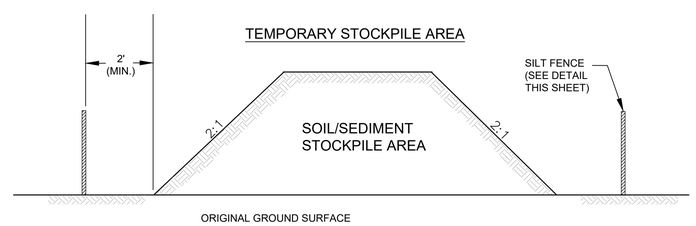

NOTES:

1. SILT FENCE TO EXTEND AROUND ENTIRE PERIMETER OF STOCKPILE, OR IF STOCKPILE AREA IS LOCATED ON/NEAR A SLOPE THE SILT FENCE IS TO EXTEND ALONG CONTOURS OF THE DOWN-GRADIENT AREA.
2. IF STOCKPILE IS TO REMAIN FOR MORE THAN 14 DAYS, TEMPORARY STABILIZATION MEASURES MUST BE IMPLEMENTED.
3. SILT FENCE SHALL BE MAINTAINED UNTIL STOCKPILE AREA HAS EITHER BEEN REMOVED OR PERMANENTLY STABILIZED.
4. THE KEY TO FUNCTIONAL TEMPORARY STOCKPILE AREAS IS WEEKLY INSPECTIONS, ROUTINE MAINTENANCE, AND REGULAR SEDIMENT REMOVAL.
5. WATER TO BE APPLIED BY SPRAYER TO STOCKPILE TO KEEP DUST DOWN. AVOID EXCESS WATER THAT CAN CAUSE EROSION PROBLEMS.

TEMPORARY STOCKPILE DETAIL (4)

NOT TO SCALE

NOT FOR CONSTRUCTION

NORTH STONINGTON SOLAR

428, PROVIDENCE-NEW LONDON TURNPIKE
NORTH STONINGTON, CT 06359, USA

LAT: 41.431830°N
LON: 71.821514°W

NORTH STONINGTON, CT

REV. NO	DESCRIPTION	DATE
10	FENCE REVISION	12/14/22
9	RE-ISSUED FOR PERMIT	11/07/22
8	RE-ISSUED FOR PERMIT	10/18/22
7	RE-ISSUED FOR PERMIT	10/05/22
6	RE-ISSUED FOR PERMIT	09/02/22
5	RE-ISSUED FOR PERMIT	04/22/22
4	RE-ISSUED FOR PERMIT	11/19/21

SHEET TITLE:

EROSION AND SEDIMENT CONTROL DETAILS 4

PROJ. MGR.	PROJ. ENGR.	DATE:
CM	MB	12/14/2022
DRAWN BY: JP	CHECKED BY: CP	SCALE: AS NOTED

DRAWING NO.

C506

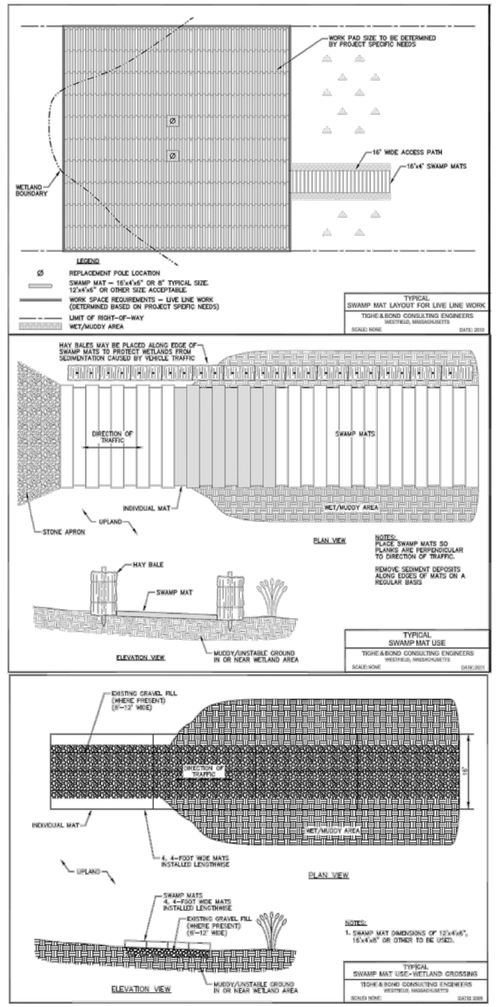

Construction Mat BMPs March 2016

Example Mat Diagrams -

Best Management Practices Manual for Utility Maintenance
In and Adjacent to Wetlands and Waterbodies in New Hampshire
Interim January 2010.

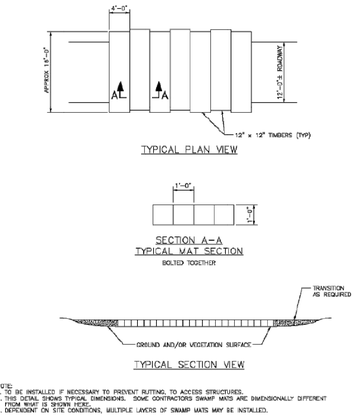

Best Management Practices Manual for Utility Maintenance
In and Adjacent to Wetlands and Waterbodies in New Hampshire
Interim January 2010.

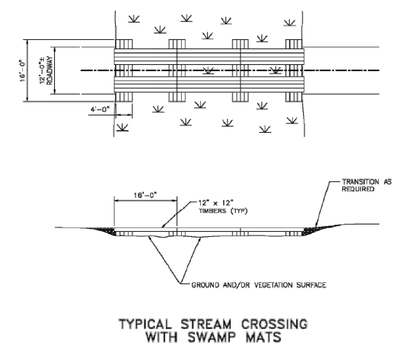

Construction Mat BMPs March 2016

CONSTRUCTION MATTING (1)
NOT TO SCALE

HDR

SILICON RANCH

NOT FOR CONSTRUCTION

NORTH STONINGTON SOLAR

428, PROVIDENCE-NEW LONDON TURNPIKE
NORTH STONINGTON, CT 06359, USA
LAT: 41.431830°N
LON: 71.821514°W

STATE OF CONNECTICUT · MATTHEW BRAINARD · PEN.0036159 · LICENSED PROFESSIONAL ENGINEER

NORTH STONINGTON, CT

REV. NO	DESCRIPTION	DATE
10	FENCE REVISION	12/14/22
9	RE-ISSUED FOR PERMIT	11/07/22
8	RE-ISSUED FOR PERMIT	10/18/22
7	RE-ISSUED FOR PERMIT	10/05/22
6	RE-ISSUED FOR PERMIT	09/02/22
5	RE-ISSUED FOR PERMIT	04/22/22
4	RE-ISSUED FOR PERMIT	11/19/21

SHEET TITLE:

EROSION AND SEDIMENT CONTROL DETAILS 5

PROJ. MGR.	PROJ. ENGR.	DATE:
CM	MB	12/14/2022
DRAWN BY: JP	CHECKED BY: CP	SCALE: AS NOTED

DRAWING NO.

C507

EARTHEN STOCKPILE MANAGEMENT

1. Locate earthen-material stockpile areas at least 50 feet away from storm drain inlets, sediment basins, perimeter sediment controls and surface waters unless it can be shown no other alternatives are reasonably available.
2. Protect stockpile with silt fence installed along toe of slope with a minimum offset of five feet from the toe of stockpile.
3. Provide stable stone access point when feasible.
4. Stabilize stockpile within the timeframes provided on this sheet and in accordance with the approved plan and any additional requirements. Soil stabilization is defined as vegetative, physical or chemical coverage techniques that will restrain accelerated erosion on disturbed soils for temporary or permanent control needs.

HERBICIDES, PESTICIDES AND RODENTICIDES

1. Store and apply herbicides, pesticides and rodenticides in accordance with label restrictions.
2. Store herbicides, pesticides and rodenticides in their original containers with the label, which lists directions for use, ingredients and first aid steps in case of accidental poisoning.
3. Do not store herbicides, pesticides and rodenticides in areas where flooding is possible or where they may spill or leak into wells, stormwater drains, ground water or surface water. If a spill occurs, clean area immediately.
4. Do not stockpile these materials onsite.

HAZARDOUS AND TOXIC WASTE

1. Create designated hazardous waste collection areas on-site.
2. Place hazardous waste containers under cover or in secondary containment.
3. Do not store hazardous chemicals, drums or bagged materials directly on the ground.

EQUIPMENT AND VEHICLE MAINTENANCE

1. Maintain vehicles and equipment to prevent discharge of fluids.
2. Provide drip pans under any stored equipment.
3. Identify leaks and repair as soon as feasible, or remove leaking equipment from the project.
4. Collect all spent fluids, store in separate containers and properly dispose as hazardous waste (recycle when possible).
5. Remove leaking vehicles and construction equipment from service until the problem has been corrected.
6. Bring used fuels, lubricants, coolants, hydraulic fluids and other petroleum products to a recycling or disposal center that handles these materials.

LITTER, BUILDING MATERIAL AND LAND CLEARING WASTE

1. Never bury or burn waste. Place litter and debris in approved waste containers.
2. Provide a sufficient number and size of waste containers (e.g dumpster, trash receptacle) on site to contain construction and domestic wastes.
3. Locate waste containers at least 50 feet away from storm drain inlets and surface waters unless no other alternatives are reasonably available.
4. Locate waste containers on areas that do not receive substantial amounts of runoff from upland areas and does not drain directly to a storm drain, stream or wetland.
5. Cover waste containers at the end of each workday and before storm events or provide secondary containment. Repair or replace damaged waste containers.
6. Anchor all lightweight items in waste containers during times of high winds.
7. Empty waste containers as needed to prevent overflow. Clean up immediately if containers overflow.
8. Dispose waste off-site at an approved disposal facility.
9. On business days, clean up and dispose of waste in designated waste containers.

CONCRETE WASHOUTS

1. Do not discharge concrete or cement slurry from the site.
2. Dispose of, or recycle settled, hardened concrete residue in accordance with local and state solid waste regulations and at an approved facility.
3. Manage washout from mortar mixers in accordance with the above item and in addition place the mixer and associated materials on impervious barrier and within lot perimeter silt fence.
4. Install temporary concrete washouts per local requirements, where applicable. If an alternate method or product is to be used, contact your approval authority for review and approval. If local standard details are not available, use one of the two types of temporary concrete washouts provided on this detail.
5. Do not use concrete washouts for dewatering or storing defective curb or sidewalk sections. Stormwater accumulated within the washout may not be pumped into or discharged to the storm drain system or receiving surface waters. Liquid waste must be pumped out and removed from project.
6. Locate washouts at least 50 feet from storm drain inlets and surface waters unless it can be shown that no other alternatives are reasonably available. At a minimum, install protection of storm drain inlet(s) closest to the washout which could receive spills or overflow.
7. Locate washouts in an easily accessible area, on level ground and install a stone entrance pad in front of the washout. Additional controls may be required by the approving authority.
8. Install at least one sign directing concrete trucks to the washout within the project limits. Post signage on the washout itself to identify this location.
9. Remove leavings from the washout when at approximately 75% capacity to limit overflow events. Replace the tarp, sand bags or other temporary structural components when no longer functional. When utilizing alternative or proprietary products, follow manufacturer's instructions.
10. At the completion of the concrete work, remove remaining leavings and dispose of in an approved disposal facility. Fill pit, if applicable, and stabilize any disturbance caused by removal of washout.

EROSION CONTROL NOTES:

1. If necessary, slopes, which exceed eight (8) vertical feet should be stabilized with synthetic or vegetative mats, in addition to hydroseeding. It may be necessary to install temporary slope drains during construction. Temporary berms may be needed until the slope is brought to grade.

2. Where construction activities have permanently ceased or when final grades are reached in any portion of the site, stabilization and protection practices as specified in Chapter 5 of the Guidelines or as approved by the commissioner or his/ her designated agent shall be implemented within seven days. Areas that will remain disturbed but inactive for at least thirty days will receive temporary seeding or soil protection within seven days in accordance with the Guidelines

3. All sediment and erosion control devices shall be inspected once every calendar week. If periodic inspection or other information indicates that a BMP has been inappropriately, or incorrectly, the Permittee must address the necessary replacement or modification required to correct the BMP within 48 hours of identification. Inspections shall be done in accordance with the SWPCP.

4. Provide silt fence and/or other control devices, as may be required, to control soil erosion during utility construction. All disturbed areas shall be cleaned, graded, and stabilized with grassing immediately after the utility installation. Fill, cover, and temporary seeding at the end of each day are recommended. If water is encountered while trenching, the water should be filtered to remove sediment before being pumped back into any waters of the State.

5. All erosion control devices shall be properly maintained during all phases of construction until the completion of all construction activities and all disturbed areas have been stabilized. Additional control devices may be required during construction in order to control erosion and/or offsite sedimentation. All temporary control devices shall be removed once construction is complete and the site is stabilized.

6. The contractor must take necessary action to minimize the tracking of mud onto paved roadway(s) from construction areas and the generation of dust. The contractor shall daily remove mud/soil from pavement, as may be required.

7. Temporary diversion berms and/or ditches will be provided as needed during construction to protect work areas from upslope runoff and/or to divert sediment-laden water to appropriate traps or stable outlets.

8. All waters of the State (WoS), including wetlands, are to be flagged or otherwise clearly marked in the field. A double row of silt fence is to be installed in all areas where a 25-foot buffer can't be maintained between the disturbed area and all WoS. A 10-foot buffer should be maintained between the last row of silt fence and all WoS.

9. Litter, construction debris, oils, fuels, and building products with significant potential for impact (such as stockpiles of freshly treated lumber) and construction chemicals that could be exposed to storm water must be prevented from becoming a pollutant source in storm water discharges.

10. A copy of the SWPCP, inspections records, and rainfall data must be retained at the construction site or a nearby location easily accessible during normal business hours, from the date of commencement of construction activities to the date that final stabilization is reached.

11. Initiate stabilization measures on any exposed steep slope (3H:1V or greater) where land-disturbing activities have permanently or temporarily ceased, and will not resume for a period of 7 calendar days.

12. Minimize soil compaction and, unless infeasible, preserve topsoil.

13. Minimize the discharge of pollutants from equipment and vehicle washing, wheel wash water, and other wash waters. Wash waters must be treated in a sediment basin or alternative control that provides equivalent or better treatment prior to discharge;

14. Minimize the discharge of pollutants from dewatering of trenches and excavated areas. These discharges are to be routed through appropriate BMPs (sediment basin, filter bag, etc.).

15. The following discharges from sites are prohibited and shall be in compliance with the SWPCP:

- Wastewater from washout of concrete, unless managed by an appropriate control;
- Wastewater from washout and cleanout of stucco, paint, form release oils, curing compounds and other construction materials;
- Fuels, oils, or other pollutants used in vehicle and equipment operation and maintenance; and
- Soaps or solvents used in vehicle and equipment washing.

16. After construction activities begin, inspections must be conducted at a minimum of at least once every calendar week and must be conducted until final stabilization is reached on all areas of the construction site. Inspections shall be done in accordance with the SWPCP.

17. If existing BMPs need to be modified or if additional BMPs are necessary to comply with the requirements of this permit and/or CT's Water Quality Standards, implementation must be completed before the next storm event whenever practicable. If implementation before the next storm event is impracticable, the situation must be documented in the SWPCP inspectoin report and alternative BMPs must be implemented as soon as reasonably possible.

18. A Pre-Construction Conference must be held for each construction site with an approved On-Site SWPCP prior to the implementation of construction activities. For non-linear projects that disturb 10 acres or more this conference must be held on-site unless the Department has approved otherwise.

19. For slopes greater than or equal to 8%, erosion control blankets or stump grindings or erosion control mix mulch or hydroseed with tackifier shall be applied within 72 hours of final grading, or when a rainfall of 0.5 inches or greater is predicted within 24 hours of final grading, whichever time period is less.

GROUND STABILIZATION SPECIFICATION

Stabilize the ground sufficiently so that rain will not dislodge the soil. Use one of the techniques in the table below:

Temporary Stabilization	Permanent Stabilization
• Temporary grass seed covered with straw or other mulches and tackifiers • Hydroseeding • Rolled erosion control products with or without temporary grass seed • Appropriately applied straw or other mulch • Plastic sheeting	• Permanent grass seed covered with straw or other mulches and tackifiers • Geotextile fabrics such as permanent soil reinforcement matting • Hydroseeding • Shrubs or other permanent plantings covered with mulch • Uniform and evenly distributed ground cover sufficient to restrain erosion • Structural methods such as concrete, asphalt or retaining walls • Rolled erosion control products with grass seed

PHASE 1 CONSTRUCTION SEQUENCE

1. CONTACT THE CT DEEP INSPECTOR TO SCHEDULE AN ON-SITE PRE-CONSTRUCTION CONFERENCE TO DISCUSS EROSION CONTROL MEASURES.
2. INSTALL THE CONSTRUCTION ENTRANCE, TREE PROTECTION FENCE, SILT FENCE AND SILT FENCE STONE OUTLETS AS SHOWN ON PLANS, PRIOR TO ANY SITE DISTURBANCE ACTIVITIES (CLEARING, GRUBBING, GRADING, OR EXCAVATION INCLUDING SKIMMER/SEDIMENT BASINS).
3. DEVIATIONS FROM THE APPROVED PLAN MUST BE SUBMITTED TO AND APPROVED BY CT DEEP. CONTACT THE INSPECTOR FOR AN ON-SITE INSPECTION OF THE INSTALLED TREE PROTECTION FENCE.
4. ALL FIELD NON-WOODED AREAS THAT ARE NOT TO BE GRADED (I.E. FIELDS) SHALL BE MOWED TO FACILITATE PANEL INSTALLATION BUT SHALL BE OTHERWISE LEFT UNDISTURBED TO MAINTAIN EXISTING DRAINAGE PATTERNS WHERE STABLE. ANY SEVERELY ERODED DRAINAGE WAYS SHALL BE GRADED BACK, ROUGHENED, MATTED AND SEEDED.
5. INSTALL BASINS. UPON INSTALLATION OF THE BASINS, INSTALL DIVERSION SWALES TO THE BASIN AS NEEDED. STABILIZE IMMEDIATELY UPON REACHING FINAL GRADE. PROVIDE TEMPORARY CULVERT FOR CROSSING EXISTING DRAINAGE AREAS.
6. INSTALL REMAINING EROSION CONTROL MEASURES AS INDICATED ON CONSTRUCTION DOCUMENTS TO FACILITATE SEDIMENT CONTROL PRIOR TO GRADING, CLEARING ONLY AS NECESSARY TO INSTALL THESE BEST MANAGEMENT PRACTICES (BMPs).
7. INSPECT ALL EROSION CONTROL DEVICES ONCE EVERY CALENDAR WEEK AND AFTER EVERY RAINFALL EXCEEDING 0.5" TO VERIFY THAT THEY ARE FUNCTIONING PROPERLY. ANY ACCUMULATED SEDIMENT SHALL BE REMOVED AND PLACED IN A DESIGNATED SPOIL DISPOSAL AREA APPROVED BY THE INSPECTOR.
8. CONDUCT PERIODIC INSPECTIONS OF ALL EROSION AND SEDIMENTATION CONTROLS AND MAKE ANY REPAIRS OR MODIFICATIONS NECESSARY TO ASSURE CONTINUED EFFECTIVE OPERATION OF EACH DEVICE.
9. STABILIZE ALL GRADED AREAS WITH TEMPORARY SEEDING PER THE REQUIRED CT DEEP REGULATIONS. PROVIDE PERMANENT SEEDING AS GRADED AREAS ARE FINALIZED. PROVIDE NORTH AMERICAN GREEN S150 OR APPROVED EQUAL MATTING ON ALL FILL SLOPES.
10. BEGIN CLEARING, GRUBBING, DEMOLITION, AND GRADING OF SITE. STABILIZE SITE PER EROSION CONTROL NOTES AS AREAS ARE BROUGHT TO ROUGH GRADES.

PHASE 2 CONSTRUCTION SEQUENCE

1. CLEAR AND GRUB REMAINDER OF AREA AS REQUIRED.
2. GRADE THE CONTRACTOR LAYDOWN AREA AND AREAS INDICATED TO ACHIEVE REQUIRED PANEL AREA SLOPES.
3. AS GRADED AREAS ARE BROUGHT TO GRADE, ROUGHEN AND IMMEDIATELY SEED WITH PERMANENT SEEDING TO ESTABLISH COVER. APPLY EROSION CONTROL MATTING AS DETAILED WITHIN THE PLANS CONSISTING OF NORTH AMERICAN GREEN (OR APPROVED EQUAL) ON ALL FILL SLOPES.
4. INSTALL CULVERTS AS ACCESS ROADS ARE CONSTRUCTED TO FACILITATE DRAINAGE ACROSS DRIVES. NOTE THAT SOME CULVERTS MAY NEED TO BLOCKED TO MAINTAIN DIVERSION OF STORMWATER TO BASINS. COORDINATE WITH INSPECTOR WHEN AREAS OF THE SITE ARE STABILIZED AND BASINS CAN BE TRANSITIONED TO PERMANENT PONDS TO FACILITATE SITE STABILIZATION AND INSTALLATION OF FINAL PANELS IN PROXIMITY TO BASINS (SEE PHASE 3 BELOW).
5. PROVIDE INLET & OUTLET PROTECTION FOR EACH CULVERT AND BASIN OUTFALLS AS THEY ARE INSTALLED.
6. MAINTAIN EROSION CONTROL MEASURES DURING CONSTRUCTION ACCORDING TO CT DEEP REQUIREMENTS
7. COMPLETE ANY FINAL, FINE GRADING.
8. SEEDING IS TO BE PERFORMED IMMEDIATELY FOLLOWING THE COMPLETION OF MASS EARTHWORK. NO ELECTRICAL INSTALLATION IS TO BEGIN UNTIL THE CONSERVATION DISTRICT AND/OR SWPCP INSPECTORS AGREE THAT VEGETATION GROWTH IS SUFFICIENT.

PHASE 3 CONSTRUCTION SEQUENCE

1. AT PROJECT END, CONTACT CT DEEP COUNTY FOR REVIEW AND WITH APPROVAL, REMOVE THE SKIMMER AND CONVERT TEMP. SEDIMENT BASINS TO PERMANENT STORMWATER PONDS AS SHOWN IN THE PLANS.
2. TEMPORARY DIVERSION DITCHES AND TEMPORARY SEDIMENT PONDS MY BE REMOVED ONCE THE SITE HAS ACHIEVED 80% STABILIZATION.
3. FORMER BASIN AREAS TO BE SEEDED AND STABILIZED. SILT FENCE TO REMAIN AROUND THE LOWER SIDE OF THE FORMER BASIN AREAS UNTIL VEGETATIVE STABILIZATION IS IN PLACE.

US ARMY CORPS OF ENGINEERS CONSTRUCTION MAT (BMPs) NOTES:

US Army Corps of Engineers®
New England District

Construction Mat
Best Management Practices (BMPs)

Installation

- Mats should be in good condition to ensure proper installation, use and removal.
- Operating heavy equipment in wetlands shall be minimized, and such equipment other than fixed equipment (drill rigs, fixed cranes, etc.) shall not be stored, maintained, fueled or repaired in wetlands unless the equipment is broken down and cannot be easily removed.
- An adequate supply of spill containment equipment shall be maintained on site.
- General Permits in New England do not authorize dragging construction mats into position in waters of the U.S.
- Woody vegetation (trees, shrubs, etc.) shall be cut at or above ground level and not uprooted in order to prevent disruption to the wetland soil structure and to allow stump sprouts to revegetate the work area.
- Where feasible, place mats in a location that would minimize the amount needed for the wetlands crossing.
- Minimize impacts to wetland areas during installation, use, and removal.
- Install adequate erosion and sediment controls at approaches to mats to promote a smooth transition to, and minimize sediment tracking onto, swamp mats.
- In most cases, construction mats should be placed along the travel area so that the individual boards are resting perpendicular to the direction of traffic. No gaps should exist between mats. Place mats far enough on either side of the resource area to rest on firm ground.
- Provide standard construction mat BMP details to work crews (examples provided below).

Wetland/Stream Channel Crossing

- At "dry" crossings where no flow is present or anticipated during project construction, the mats may be placed directly onto the ground in order to prevent excessive rutting, provided stream banks and bottoms are not adversely altered.
- Construction mats may be used as a temporary bridge over a stream to allow vehicles access to the work site. Small sections of mat are placed within and along the stream parallel to the flow of water. Mats may then be placed perpendicular to the stream, resting on top of the initial construction mat supports. It may be necessary to place additional reinforcement for extra stability and to minimize the amount of sediment that could fall between the spaces of each timber.
- In areas where wildlife passage or migration is a consideration, mats may be installed in accordance with the diagram "Typical Stream Crossing with Swamp Mats."
- Mats should not be placed so that they restrict the natural flow of the stream.
- Minimize number of stream/wetland crossings. Where feasible, locate crossing site where stream channel is narrow for the shortest possible clear span and where stream banks are stable and well defined. For large wetland complexes, consider accessing structures from opposite sides where possible to avoid crossing the entire wetland.
- More than one layer of mats may be necessary in areas which are inundated or have deep organic wetland soils.

Construction Mat BMPs March 2016

Maintenance

- Matted wetland crossings should be monitored to assure correct functioning of the mats. Inspect mats after use. Look for any defects or structural problems. Mats which become covered with soils or construction debris should be cleaned and the materials removed and disposed of in an upland location. The material should not be scraped and shoveled into the resource area. Mats which become imbedded must be reset or layered to prevent mud from covering them or water passing over them.

Removal

- Matting should be removed by "backing" out of the site, removing mats one at a time. Any rutting or significant indentations identified during mat removal should be regraded immediately, taking care not to compact soils.
- Mats should be cleaned before transport to another wetland location to remove soil and any invasive plant species seed stock or plant material.
- Mats shall be cleaned of soil and any invasive plant species seed stock or plant material from before installation.
- Cleaning methods may include but are not limited to shaking or dropping mats in a controlled manner with a piece of machinery to knock off attached soil and debris, spraying with water or air, and sweeping.
- Crossings should be inspected following mat removal to determine the level of restoration required.

Restoration

- Special precautions should be taken to promptly stabilize areas of disturbed soil located near wetlands and streams. Matted areas within wetlands shall be restored to their original condition and elevation. This may involve natural revegetation from existing root and seed stock of native plant species. Conditions may warrant planting and the broadcast of a wetland seed mix over the matted area to supplement the existing seed and rootstock. Seed mixes and vegetation shall contain only plant species native to New England. The use of mulch in wetlands shall consist of weed-free mulch to mitigate the risk of the spread of invasive plant species.

HDR

SILICON RANCH

NOT FOR CONSTRUCTION

NORTH STONINGTON SOLAR

428, PROVIDENCE-NEW LONDON TURNPIKE
NORTH STONINGTON, CT 06359, USA

LAT: 41.431830°N
LON: 71.821514°W

STATE OF CONNECTICUT · MATTHEW BRAINTON · PEN.0036159 · LICENSED PROFESSIONAL ENGINEER

NORTH STONINGTON, CT

REV. NO	DESCRIPTION	DATE
10	FENCE REVISION	12/14/22
9	RE-ISSUED FOR PERMIT	11/07/22
8	RE-ISSUED FOR PERMIT	10/18/22
7	RE-ISSUED FOR PERMIT	10/05/22
6	RE-ISSUED FOR PERMIT	09/02/22
5	RE-ISSUED FOR PERMIT	04/22/22
4	RE-ISSUED FOR PERMIT	11/19/21

SHEET TITLE:

EROSION AND SEDIMENT CONTROL NOTES

PROJ. MGR.	PROJ. ENGR.	DATE:
CM	MB	12/14/2022
DRAWN BY: JP	CHECKED BY: CP	SCALE: AS NOTED

DRAWING NO.

C508

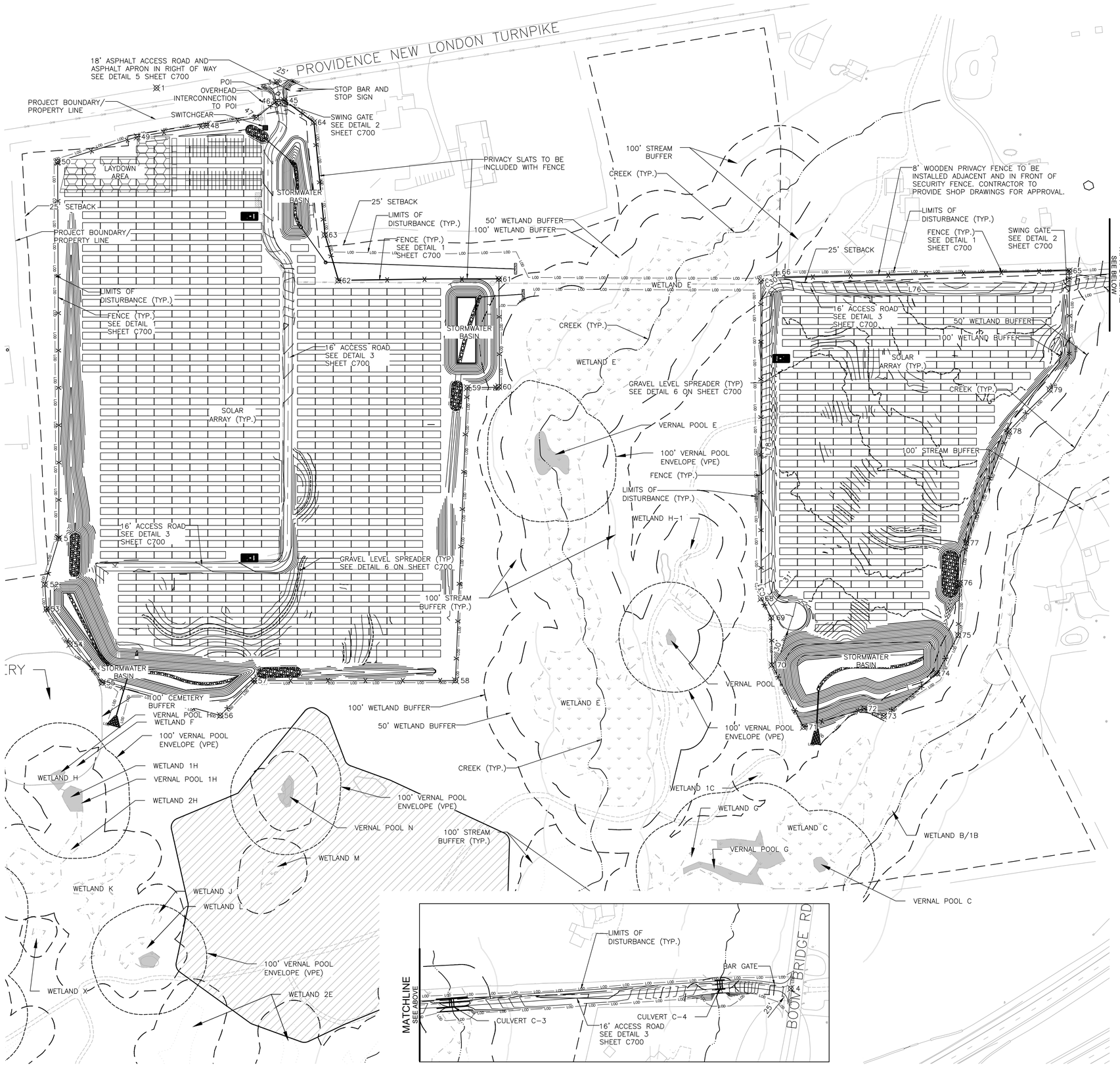

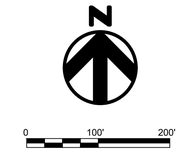

GENERAL NOTES :

1. SEE SHEET C101 FOR OVERALL PLAN.

	EXISTING ROAD
W	EXISTING WATER
S	EXISTING SANITARY SEWER
E	EXISTING ELECTRICAL
G	EXISTING GAS LINE
	PIPELINE
P	LARGE PIPELINE
OHW	UTILITY OVERHEAD LINE
	PROPERTY LINE
	ADJOINING PROPERTY LINE
	25' SETBACK
	RIGHT OF WAY
	EXISTING CONTOUR (MINOR)
	PROPOSED CONTOUR (MINOR)
25	EXISTING CONTOUR (MAJOR)
25	PROPOSED CONTOUR (MAJOR)
	EXISTING TREE LINE
	EXISTING FENCE
	PROPOSED SECURITY FENCE
	FLOOD LIMIT (100 YEAR)
	STREAM/CREEK
	WETLAND
LOD	LIMITS OF DISTURBANCE
	100' VERNAL POOL ENVELOPE
	50' WETLAND BUFFER
	100' WETLAND BUFFER
	OUTLET PROTECTION
	PIPE CULVERT
SF	SILT FENCE
	COMPOST FILTER SOCK
	PERMANENT DRAINAGE DITCH
	TREE CLEARING
0+00 0+50	ALIGNMENT
	VERNAL POOL
	WETLAND

HDR

SILICON RANCH

NOT FOR CONSTRUCTION

NORTH STONINGTON SOLAR

428, PROVIDENCE-NEW LONDON TURNPIKE
NORTH STONINGTON, CT 06359, USA

LAT: 41.431830°N
LON: 71.821514°W

STATE OF CONNECTICUT
MATTHEW BRAINARD
PEN.0024159
LICENSED PROFESSIONAL ENGINEER

NORTH STONINGTON, CT

REV. NO	DESCRIPTION	DATE
10	FENCE REVISION	12/14/22
9	RE-ISSUED FOR PERMIT	11/07/22
8	RE-ISSUED FOR PERMIT	10/18/22
7	RE-ISSUED FOR PERMIT	10/05/22
6	RE-ISSUED FOR PERMIT	09/02/22
5	RE-ISSUED FOR PERMIT	04/22/22
4	RE-ISSUED FOR PERMIT	11/19/21

SHEET TITLE:

SITE PLAN 1

PROJ. MGR.	PROJ. ENGR.	DATE:
CM	MB	12/14/2022
DRAWN BY: JP	CHECKED BY: CP	SCALE: 1:100

DRAWING NO.

C601

Line Table		
Line #	Length	Direction
L76	524.495	S89° 54' 11.51"E
L78	608.163	N0° 13' 13.54"E

Curve Table			
Curve #	Length	Radius	Delta
C30	50.588	51	87.8320
C31	17.406	17	30.2204

POINT TABLE			
POINT NO.	NORTHING	EASTING	DESCRIPTION
1	720802.21	1254261.22	ACCESS ROAD ENTRANCE
2	720995.62	1255412.07	ACCESS ROAD ENTRANCE
3	720815.04	1254516.69	ACCESS ROAD ENTRANCE
4	720433.20	1257078.42	ACCESS ROAD ENTRANCE
45	720775.77	1254532.61	FENCE
46	720772.71	1254514.87	FENCE
47	720739.04	1254473.52	FENCE
48	720722.34	1254367.28	FENCE
49	720698.33	1254220.32	FENCE
50	720645.24	1254050.82	FENCE
51	719843.75	1254053.26	FENCE
52	719745.54	1254023.61	FENCE
53	719693.41	1254027.31	FENCE
54	719618.24	1254077.13	FENCE
55	719536.57	1254146.06	FENCE
56	719466.74	1254396.97	FENCE
57	719540.72	1254468.69	FENCE
58	719540.95	1254897.25	FENCE
59	720164.29	1254922.17	FENCE
60	720166.23	1254989.65	FENCE

POINT TABLE			
POINT NO.	NORTHING	EASTING	DESCRIPTION
61	720395.42	1254989.65	FENCE
62	720392.26	1254647.88	FENCE
63	720489.52	1254619.22	FENCE
64	720728.98	1254595.68	FENCE
65	720413.23	1256202.91	FENCE
66	720397.76	1255575.32	FENCE
67	720390.88	1255546.91	FENCE
68	719715.51	1255547.33	FENCE
69	719674.81	1255569.17	FENCE
70	719574.21	1255570.69	FENCE
71	719442.02	1255637.55	FENCE
72	719481.39	1255766.61	FENCE
73	719465.46	1255808.16	FENCE
74	719556.34	1255921.78	FENCE
75	719637.74	1255966.82	FENCE
76	719749.22	1255969.97	FENCE
77	719833.94	1255983.56	FENCE
78	720071.91	1256074.51	FENCE
79	720160.05	1256161.27	FENCE

HDR

SILICON RANCH

NOT FOR CONSTRUCTION

NORTH STONINGTON SOLAR

428, PROVIDENCE-NEW LONDON TURNPIKE
NORTH STONINGTON, CT 06359, USA

LAT: 41.431830°N
LON: 71.821514°W

STATE OF CONNECTICUT
MATTHEW BRANIZ
PEN.0038159
LICENSED
PROFESSIONAL ENGINEER

NORTH STONINGTON, CT

REV. NO	DESCRIPTION	DATE
10	FENCE REVISION	12/14/22
9	RE-ISSUED FOR PERMIT	11/07/22
8	RE-ISSUED FOR PERMIT	10/18/22
7	RE-ISSUED FOR PERMIT	10/05/22
6	RE-ISSUED FOR PERMIT	09/02/22
5	RE-ISSUED FOR PERMIT	04/22/22
4	RE-ISSUED FOR PERMIT	11/19/21

SHEET TITLE:

SITE PLAN DETAILS

PROJ. MGR.	PROJ. ENGR.	DATE:
CM	MB	12/14/2022
DRAWN BY: JP	CHECKED BY: CP	SCALE: NTS

DRAWING NO.

C602

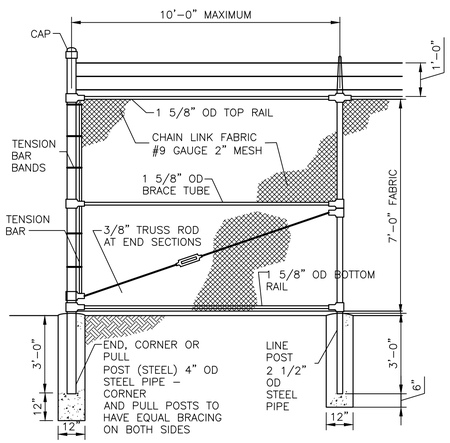

SECURITY FENCE DETAIL (1)
NOT TO SCALE

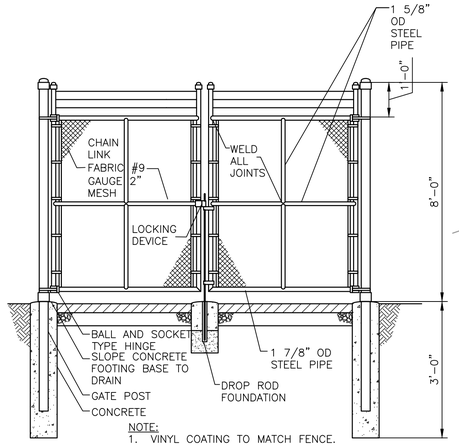

SWING GATE DETAIL (2)
NOT TO SCALE

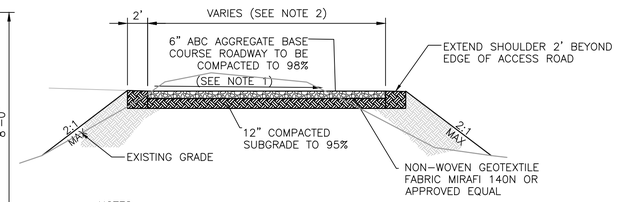

NOTES:

1. ACCESS ROAD SHALL BE INSTALLED PER THE DETAIL. MODIFY EXISTING GRADE AS NEEDED TO ESTABLISH ROAD WITH A CROSS-SLOPE BETWEEN 1% AND 5% TO ENSURE PROPER DRAINAGE.
2. STRAIGHT SECTION ROADS SHALL BE 16' WIDE AND ROAD SECTIONS IN CURVES AND TURNAROUNDS SHALL BE 20' WIDE. SEE SITE LAYOUT PLANS FOR SPECIFIC ROAD WIDTHS.

TYPICAL ROAD SECTION (RIGID LINE CONSTRUCTION) (3)
NOT TO SCALE

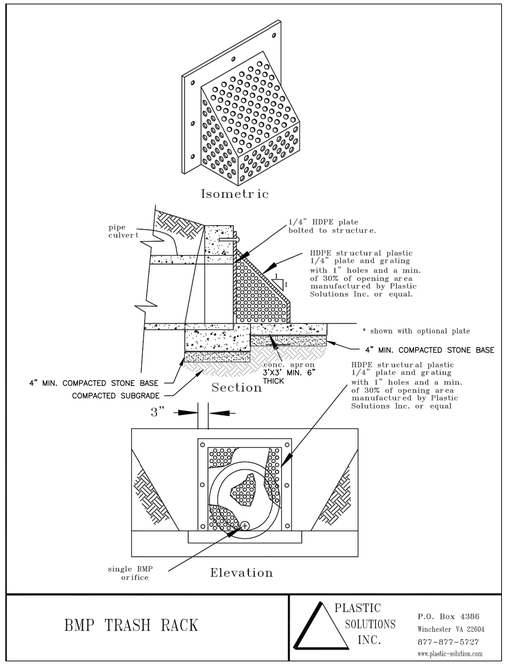

ORIFICE TRASH RACK (4)
NOT TO SCALE

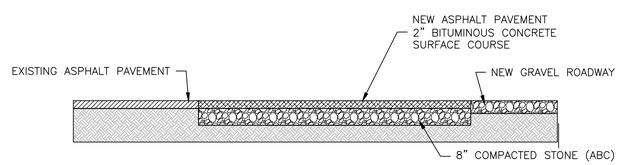

NOTES:

1. ACCESS ROAD SHALL BE INSTALLED PER THE DETAIL. MODIFY EXISTING GRADE AS NEEDED TO ESTABLISH ROAD WITH A CROSS-SLOPE BETWEEN 1% AND 5% TO ENSURE PROPER DRAINAGE.
2. ROAD SECTION WITHIN STATE RIGHT OF WAY TO BE 18' WIDE. SEE SITE LAYOUT PLANS FOR SPECIFIC ROAD WIDTHS.

ROAD SECTION WITHIN RIGHT OF WAY (5)
NOT TO SCALE

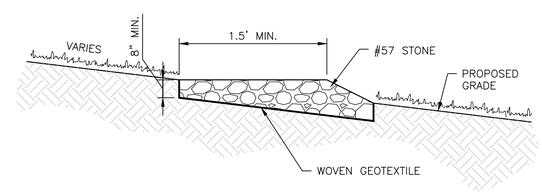

NOTES:

1. LEVEL SPREADERS SHALL BE INSTALLED WHERE GRADE EXCEEDS 8%.
2. INSTALL LEVEL SPREADERS PERPENDICULAR TO THE SLOPE EVERY 100 LINEAR FEET.

GRAVEL LEVEL SPREADER (6)
NOT TO SCALE

HDR

SILICON RANCH

NOT FOR CONSTRUCTION

NORTH STONINGTON SOLAR

428, PROVIDENCE-NEW LONDON TURNPIKE
NORTH STONINGTON, CT 06359, USA

LAT: 41.431830°N
LON: 71.821514°W

STATE OF CONNECTICUT · MATTHEW BRANAGAN · PEN.0034159 · LICENSED PROFESSIONAL ENGINEER

NORTH STONINGTON, CT

REV. NO	DESCRIPTION	DATE
10	FENCE REVISION	12/14/22
9	RE-ISSUED FOR PERMIT	11/07/22
8	RE-ISSUED FOR PERMIT	10/18/22
7	RE-ISSUED FOR PERMIT	10/05/22
6	RE-ISSUED FOR PERMIT	09/02/22
5	RE-ISSUED FOR PERMIT	04/22/22
4	RE-ISSUED FOR PERMIT	11/19/21

SHEET TITLE:

SITE ACCESS PLAN & CIVIL DETAILS

PROJ. MGR.	PROJ. ENGR.	DATE:
CM	MB	12/14/2022
DRAWN BY: JP	CHECKED BY: CP	SCALE: #####

DRAWING NO.

C700