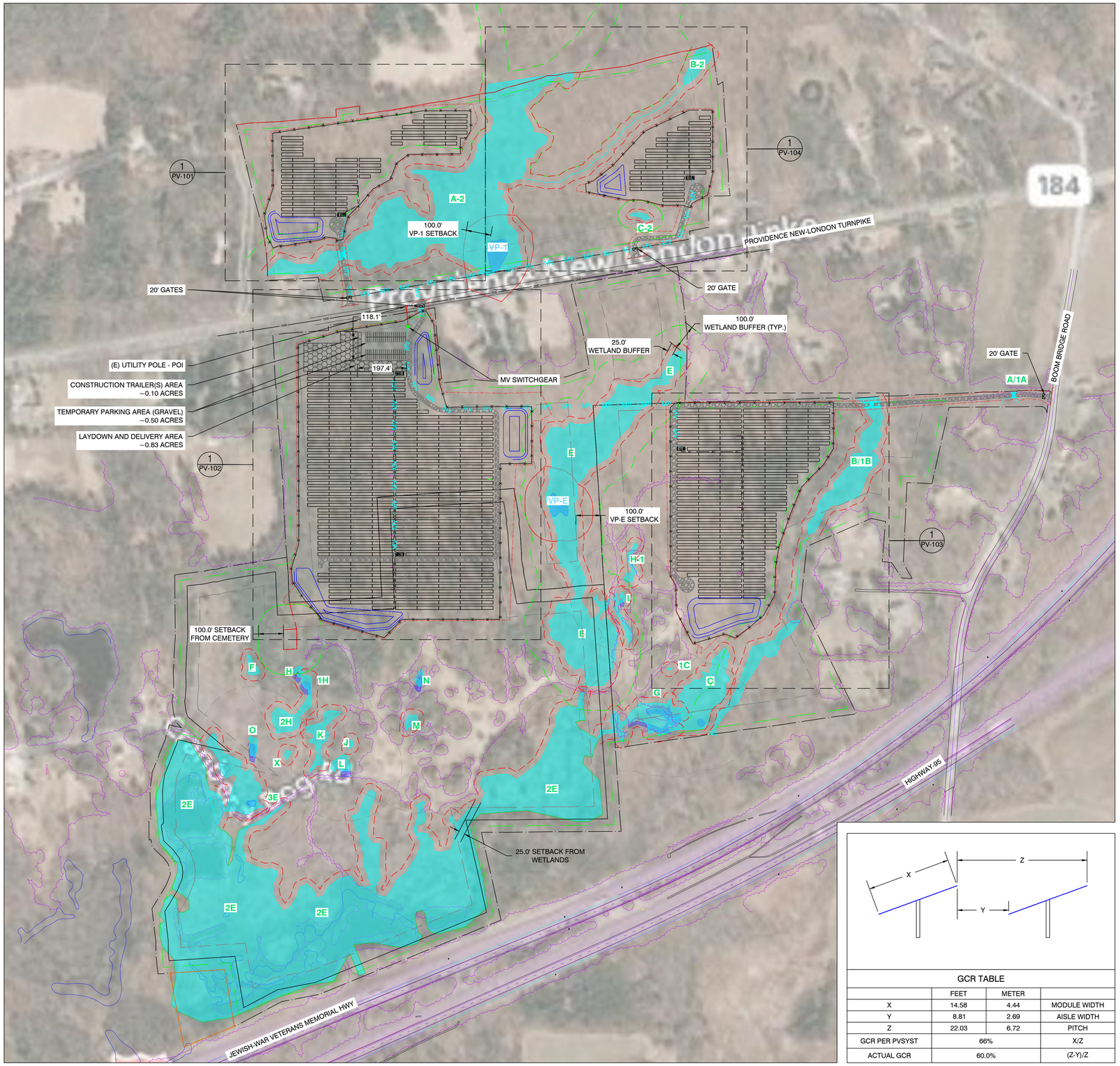

LEGEND

	2P X 25 HANWHA Q-CELLS 475W @25° TILT
	2P X 13 HANWHA Q-CELLS 475W @25° TILT
	EQUIPMENT RACK (TYP. OF 5) (1) LV SWITCHGEAR (1) MV TRANSFORMER
	SUNGROW 250kW INVERTER (TYP. OF 45)
	EQUIPMENT RACK WITH 2 STRING INVERTERS (TYP. OF 2 LOCATION)
	EQUIPMENT RACK WITH 3 STRING INVERTERS (TYP. OF 7 LOCATIONS)
	EQUIPMENT RACK WITH 4 STRING INVERTERS (TYP. OF 5 LOCATIONS)
OVE	OVERHEAD ELECTRICAL
MV MV MV	UNDERGROUND MEDIUM VOLTAGE CABLE
AC AC	UNDERGROUND AC CABLE
X X	FENCE LINE
	16' ACCESS ROADS
	QUARRY
	WETLANDS
	25' WETLAND BUFFER
	100' WETLAND BUFFER
	VERNAL POOL
B/1B	WETLAND ID
VP-1	VERNAL POOL ID
LOD LOD	LINE OF DISTURBANCE
	TREE LINES
	STORMWATER BASIN
	PARCEL BOUNDARY
	LAYDOWN AREA

PROJECT DETAILS

SYSTEM SIZE AC	9,900.00 kW
SYSTEM SIZE DC	14,095.63 kW
DC/AC RATIO	1.42
MODULE MODEL	HANWHA Q CELLS Q.PEAK DUO XL-G10.3/BFG 475W
MODULE RATING	475 W
TOTAL MODULE QTY	29,675
# OF MODULES PER STRINGS	25
TOTAL # OF STRINGS	1,187
INVERTER MODEL	SUNGROW SG250HX
INVERTER RATING	250 kW
TOTAL INVERTER QTY	45
RACKING	GROUND MOUNT FIXED TILT
TILT ANGLE	25°
AZIMUTH	180°
PITCH	22.03'
INTER ROW SPACING	8.81'
GCR	60%
FENCED AREA	40.26 ACRES
PROPERTY AREA	157.36 ACRES
LINE OF DISTURBANCE AREA	44.61 ACRES

GCR TABLE

	FEET	METER	
X	14.58	4.44	MODULE WIDTH
Y	8.81	2.69	AISLE WIDTH
Z	22.03	6.72	PITCH
GCR PER PVSYST	66%		X/Z
ACTUAL GCR	60.0%		(Z-Y)/Z

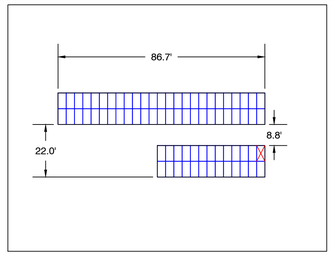

1 PV-100 ARRAY PLAN
Scale: 1"=200'

N

2 PV-100 GCR DETAILS
Scale: NTS

3 PV-100 TYP. MODULE RACKS
Scale: 1"=30'

SOLVIDA
DESIGN + ENGINEERING
1400 Shattuck Avenue, Suite 3
Berkeley, California 94709

SILICON RANCH

MILLER BROS.

STONINGTON SOLAR

428, PROVIDENCE-NEW LONDON TURNPIKE
NORTH STONINGTON, CT 06359, USA

LAT: 41.431830°N
LON: 71.821514°W

REV. NO	DESCRIPTION	DATE
0	PRELIMINARY	05/14/21

SHEET TITLE:

PRELIMINARY LAYOUT

PROJ. MGR.	PROJ. ENGR.	DATE:
	SDE	05/14/21
DRAWN BY: LR	CHECKED BY:	SCALE: AS SHOWN

DRAWING NO.

PV-100

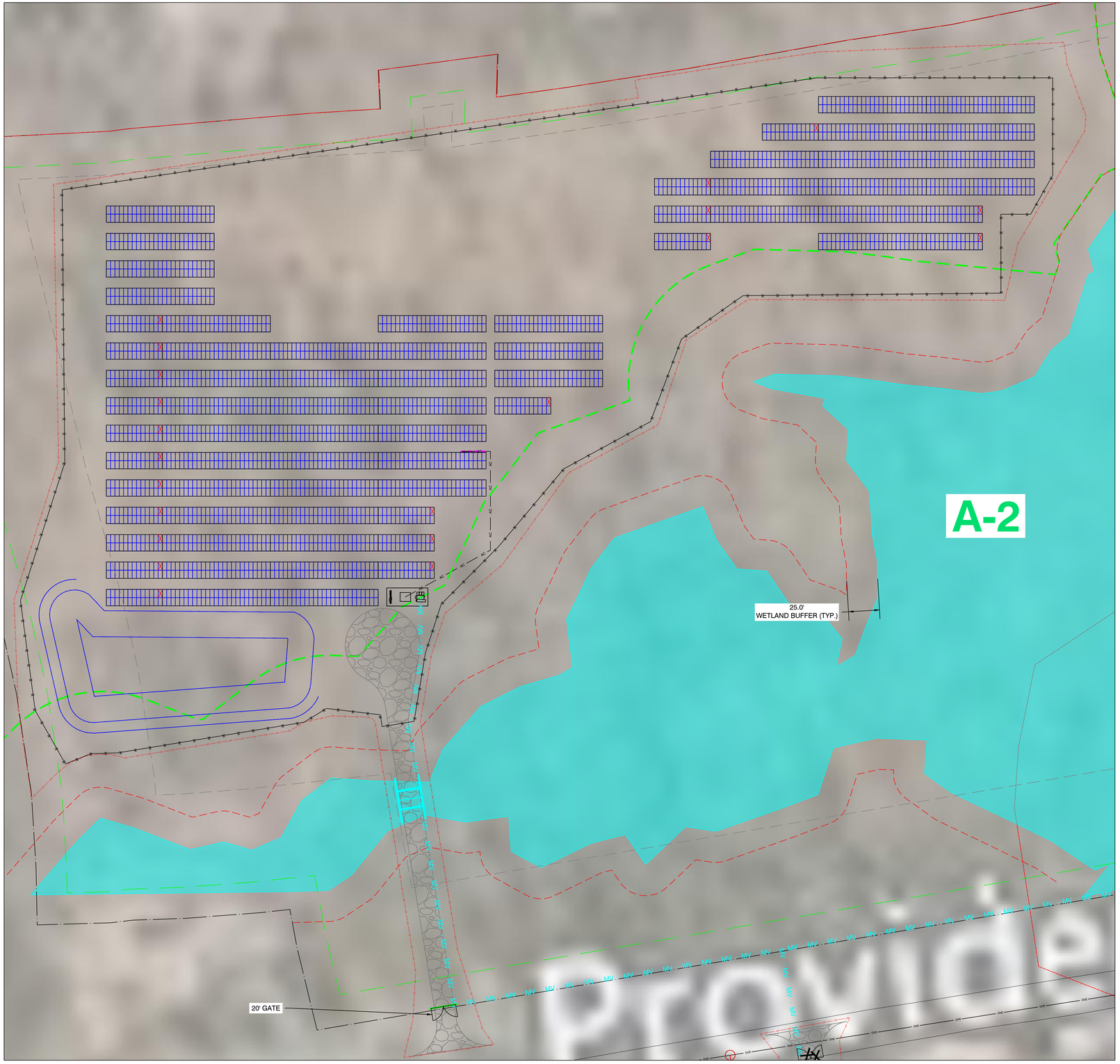

1 PV-101 ARRAY PLAN
Scale: 1"=40'

N

LEGEND

	2P X 25 HANWHA Q-CELLS 475W @25° TILT
	2P X 13 HANWHA Q-CELLS 475W @25° TILT
	EQUIPMENT RACK (1) LV SWITCHGEAR (1) MV TRANSFORMER
	SUNGROW 250kW INVERTER
	EQUIPMENT RACK WITH 2 STRING INVERTERS (TYP. OF 2 LOCATION)
	EQUIPMENT RACK WITH 3 STRING INVERTERS (TYP. OF 7 LOCATIONS)
	EQUIPMENT RACK WITH 4 STRING INVERTERS (TYP. OF 5 LOCATIONS)
OVE	OVERHEAD ELECTRICAL
MV MV MV	UNDERGROUND MEDIUM VOLTAGE CABLE
AC AC	UNDERGROUND AC CABLE
X X	FENCE LINE
	16' ACCESS ROADS
	QUARRY
	WETLANDS
	25' WETLAND BUFFER
	100' WETLAND BUFFER
	VERNAL POOL
B/1B	WETLAND ID
VP-1	VERNAL POOL ID
LOD LOD	LINE OF DISTURBANCE
	TREE LINES
	STORMWATER BASIN
	PARCEL BOUNDARY

SOLVIDA
DESIGN + ENGINEERING
1400 Shattuck Avenue, Suite 3
Berkeley, California 94709

SILICON RANCH

MILLER BROS.

STONINGTON SOLAR

428, PROVIDENCE-NEW LONDON TURNPIKE
NORTH STONINGTON, CT 06359, USA

LAT: 41.431830°N
LON: 71.821514°W

REV. NO	DESCRIPTION	DATE
0	PRELIMINARY	05/14/21

SHEET TITLE:

PRELIMINARY LAYOUT

PROJ. MGR.	PROJ. ENGR. SDE	DATE: 05/14/21
DRAWN BY: LR	CHECKED BY:	SCALE: AS SHOWN

DRAWING NO.

PV-101

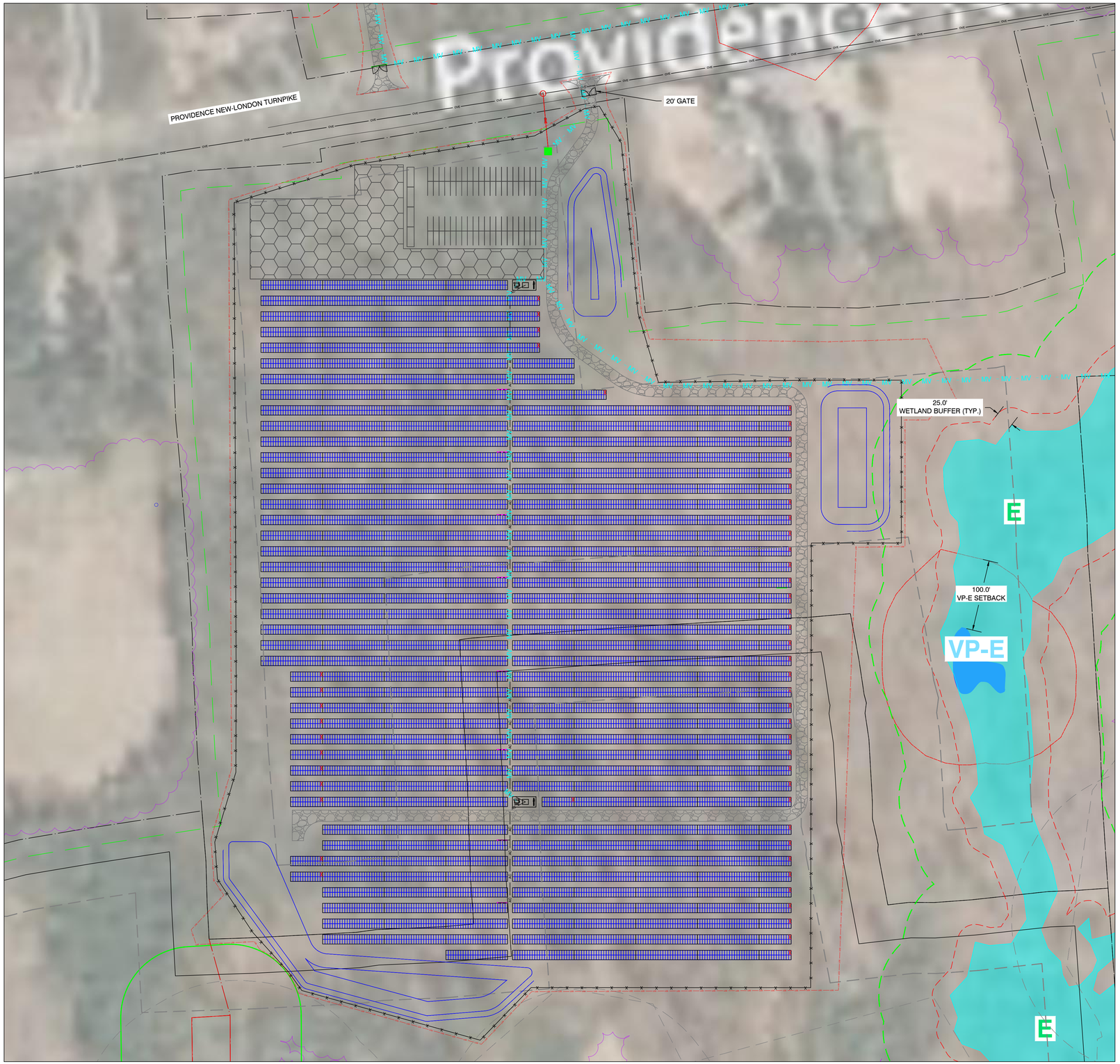

1 PV-102 ARRAY PLAN
Scale: 1"=70'

N

LEGEND

	2P X 25 HANWHA Q-CELLS 475W @25° TILT
	2P X 13 HANWHA Q-CELLS 475W @25° TILT
	EQUIPMENT RACK (1) LV SWITCHGEAR (1) MV TRANSFORMER
	SUNGROW 250kW INVERTER
	EQUIPMENT RACK WITH 2 STRING INVERTERS (TYP. OF 2 LOCATION)
	EQUIPMENT RACK WITH 3 STRING INVERTERS (TYP. OF 7 LOCATIONS)
	EQUIPMENT RACK WITH 4 STRING INVERTERS (TYP. OF 5 LOCATIONS)
OVE	OVERHEAD ELECTRICAL
MV MV MV	UNDERGROUND MEDIUM VOLTAGE CABLE
AC AC	UNDERGROUND AC CABLE
X X	FENCE LINE
	16' ACCESS ROADS
	QUARRY
	WETLANDS
	25' WETLAND BUFFER
	100' WETLAND BUFFER
	VERNAL POOL
B/1B	WETLAND ID
VP-1	VERNAL POOL ID
LOD LOD	LINE OF DISTURBANCE
	TREE LINES
	STORMWATER BASIN
	PARCEL BOUNDARY
	LAYDOWN AREA

SOLVIDA
DESIGN + ENGINEERING
1400 Shattuck Avenue, Suite 3
Berkeley, California 94709

SILICON RANCH

MILLER BROS.

STONINGTON SOLAR

428, PROVIDENCE-NEW LONDON TURNPIKE
NORTH STONINGTON, CT 06359, USA

LAT: 41.431830°N
LON: 71.821514°W

REV. NO	DESCRIPTION	DATE
0	PRELIMINARY	05/14/21

SHEET TITLE:

PRELIMINARY LAYOUT

PROJ. MGR.	PROJ. ENGR. SDE	DATE: 05/14/21
DRAWN BY: LR	CHECKED BY:	SCALE: AS SHOWN

DRAWING NO.

PV-102

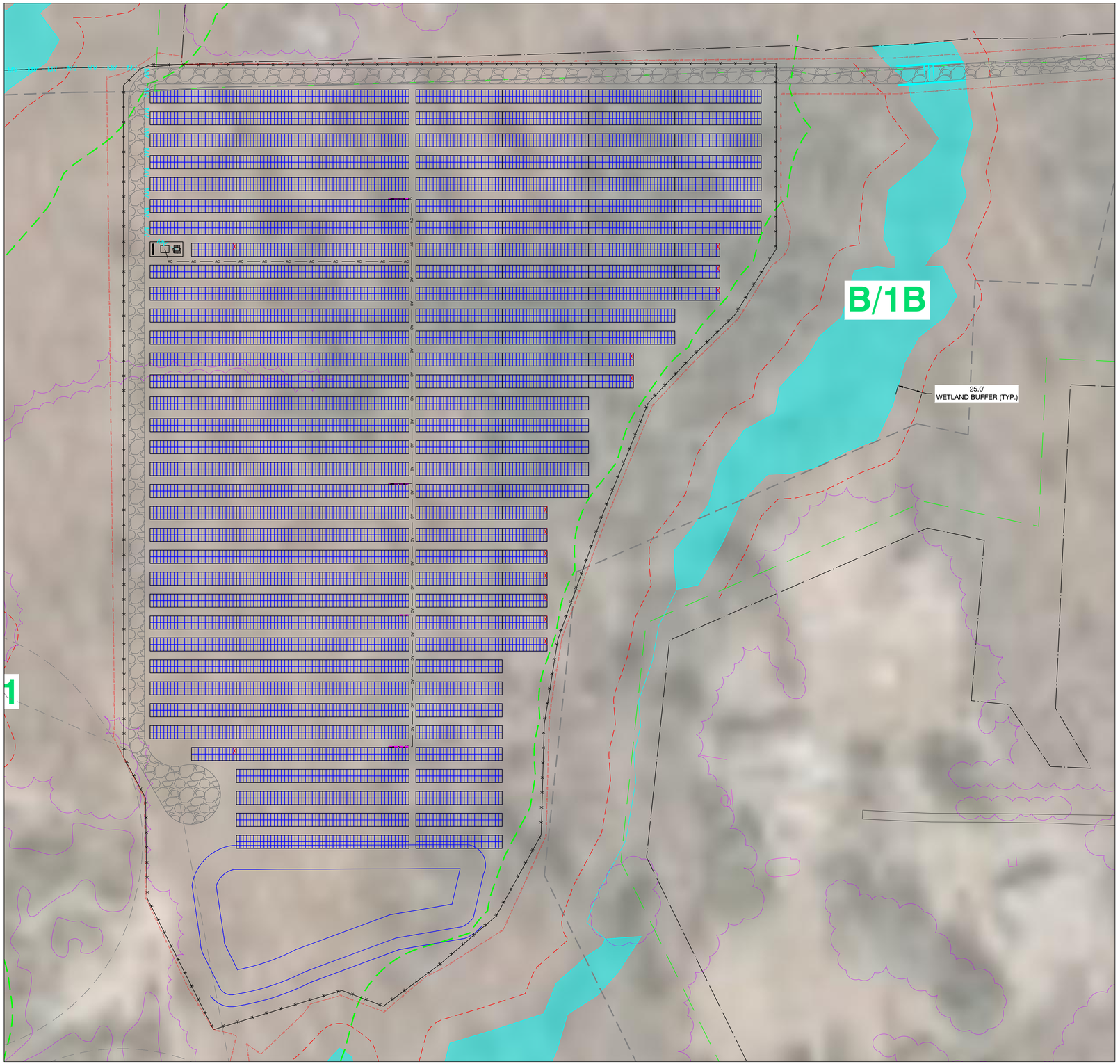

1 PV-103 ARRAY PLAN
Scale: 1"=50'

N

LEGEND

	2P X 25 HANWHA Q-CELLS 475W @25° TILT
	2P X 13 HANWHA Q-CELLS 475W @25° TILT
	EQUIPMENT RACK (1) LV SWITCHGEAR (1) MV TRANSFORMER
	SUNGROW 250kW INVERTER
	EQUIPMENT RACK WITH 2 STRING INVERTERS (TYP. OF 2 LOCATION)
	EQUIPMENT RACK WITH 3 STRING INVERTERS (TYP. OF 7 LOCATIONS)
	EQUIPMENT RACK WITH 4 STRING INVERTERS (TYP. OF 5 LOCATIONS)
OVE	OVERHEAD ELECTRICAL
MV MV MV	UNDERGROUND MEDIUM VOLTAGE CABLE
AC AC	UNDERGROUND AC CABLE
X X	FENCE LINE
	16' ACCESS ROADS
	QUARRY
	WETLANDS
	25' WETLAND BUFFER
	100' WETLAND BUFFER
	VERNAL POOL
B/1B	WETLAND ID
VP-1	VERNAL POOL ID
LOD LOD	LINE OF DISTURBANCE
	TREE LINES
	STORMWATER BASIN
	PARCEL BOUNDARY

SOLVIDA
DESIGN + ENGINEERING
1400 Shattuck Avenue, Suite 3
Berkeley, California 94709

SILICON RANCH

MILLER BROS.

STONINGTON SOLAR

428, PROVIDENCE-NEW LONDON TURNPIKE
NORTH STONINGTON, CT 06359, USA

LAT: 41.431830°N
LON: 71.821514°W

REV. NO	DESCRIPTION	DATE
0	PRELIMINARY	05/14/21

SHEET TITLE:

PRELIMINARY LAYOUT

PROJ. MGR.	PROJ. ENGR. SDE	DATE: 05/14/21
DRAWN BY: LR	CHECKED BY:	SCALE: AS SHOWN

DRAWING NO.

PV-103

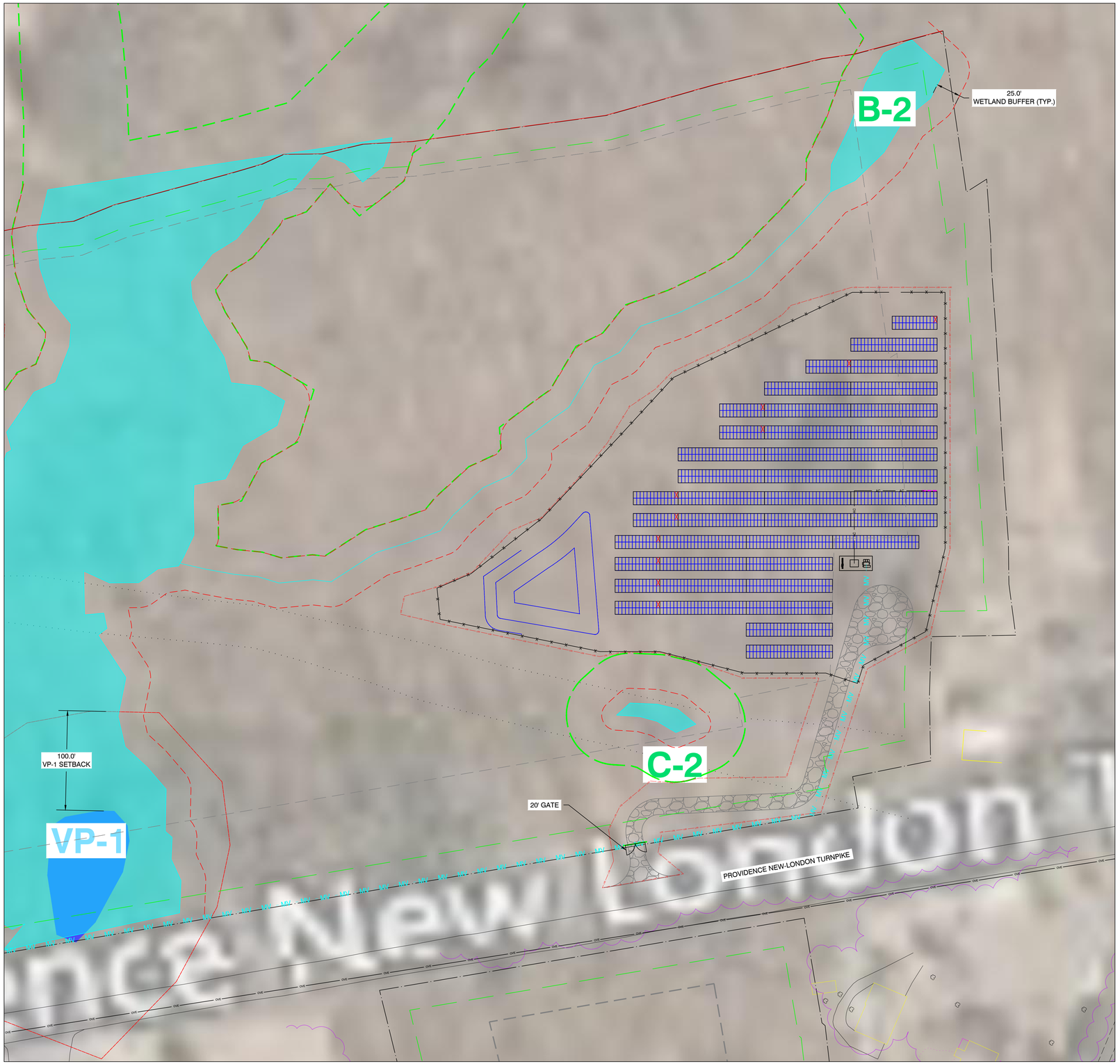

1
PV-104
ARRAY PLAN
Scale: 1"=50'

N

LEGEND

	2P X 27 LONGI SOLAR 455W @25° TILT
	2P X 14 LONGI SOLAR 455W @25° TILT
	EQUIPMENT RACK (1) LV SWITCHGEAR (1) MV TRANSFORMER
	SUNGROW 250kW INVERTER
	EQUIPMENT RACK WITH 1 STRING INVERTER
	EQUIPMENT RACK WITH 2 STRING INVERTERS
	EQUIPMENT RACK WITH 3 STRING INVERTERS
	EQUIPMENT RACK WITH 4 STRING INVERTERS
OVE	OVERHEAD ELECTRICAL
MV MV MV	UNDERGROUND MEDIUM VOLTAGE CABLE
AC AC	UNDERGROUND AC CABLE
	FENCE LINE
	16' ACCESS ROADS
	QUARRY
	WETLANDS
	25' WETLAND BUFFER
	100' WETLAND BUFFER
	VERNAL POOL
B/1B	WETLAND ID
VP-1	VERNAL POOL ID
LOD LOD	LINE OF DISTURBANCE
	TREE LINES
	STORMWATER BASIN
	PARCEL BOUNDARY

SOLVIDA
DESIGN + ENGINEERING
1400 Shattuck Avenue, Suite 3
Berkeley, California 94709

SILICON RANCH

MILLER BROS.

STONINGTON SOLAR

428, PROVIDENCE-NEW LONDON TURNPIKE
NORTH STONINGTON, CT 06359, USA

LAT: 41.431830°N
LON: 71.821514°W

REV. NO	DESCRIPTION	DATE
0	PRELIMINARY	05/14/21

SHEET TITLE:

PRELIMINARY LAYOUT

PROJ. MGR.	PROJ. ENGR. SDE	DATE: 05/14/21
DRAWN BY: LR	CHECKED BY:	SCALE: AS SHOWN

DRAWING NO.

PV-104

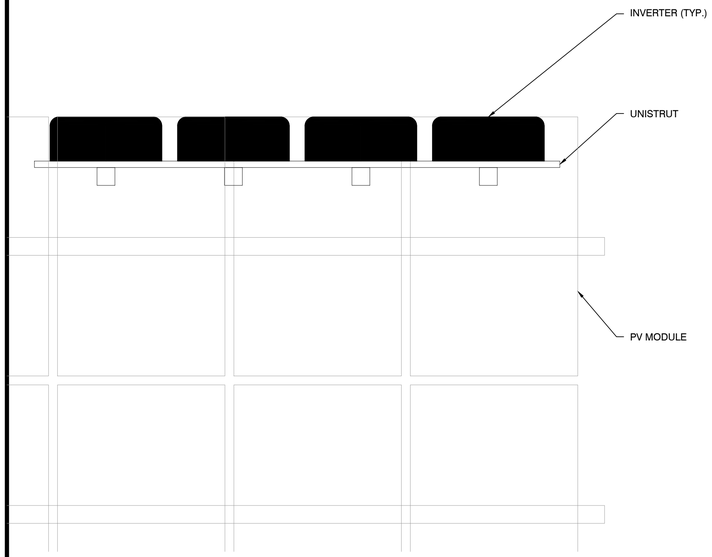

1 PV-105 INVERTER MOUNTING (PLAN VIEW)

Scale: NTS

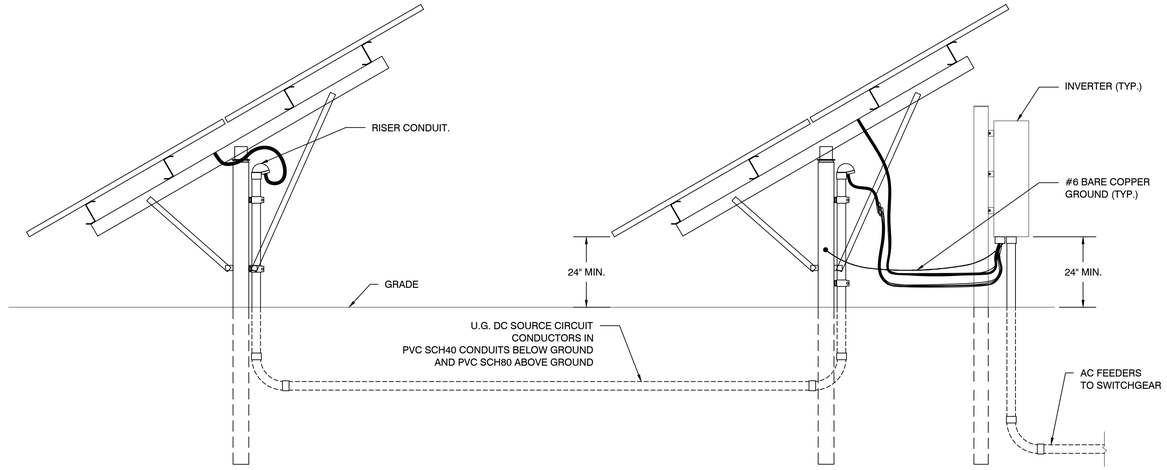

2 PV-105 INVERTER ELEVATION (SIDE VIEW) AND DC SOURCE CIRCUIT (JUMPER) TRENCH DETAIL

Scale: NTS

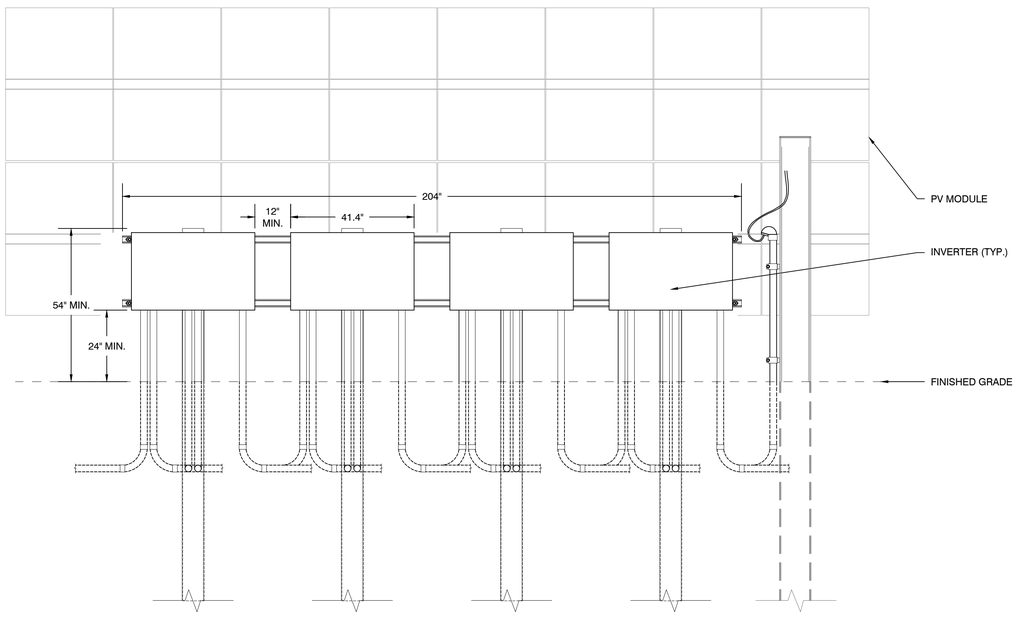

3 PV-105 INVERTER ELEVATION (FRONT VIEW)

Scale: NTS

SOLVIDA
DESIGN + ENGINEERING
1400 Shattuck Avenue, Suite 3
Berkeley, California 94709

SILICON RANCH

MILLER BROS.

STONINGTON
SOLAR

428, PROVIDENCE-NEW LONDON TURNPIKE
NORTH STONINGTON, CT 06359, USA

LAT: 41.431830°N
LON: 71.821514°W

REV. NO	DESCRIPTION	DATE
0	PRELIMINARY	05/14/21

SHEET TITLE:

PRELIMINARY LAYOUT

PROJ. MGR.	PROJ. ENGR. SDE	DATE: 05/14/21
DRAWN BY: LR	CHECKED BY:	SCALE: AS SHOWN

DRAWING NO.

PV-105

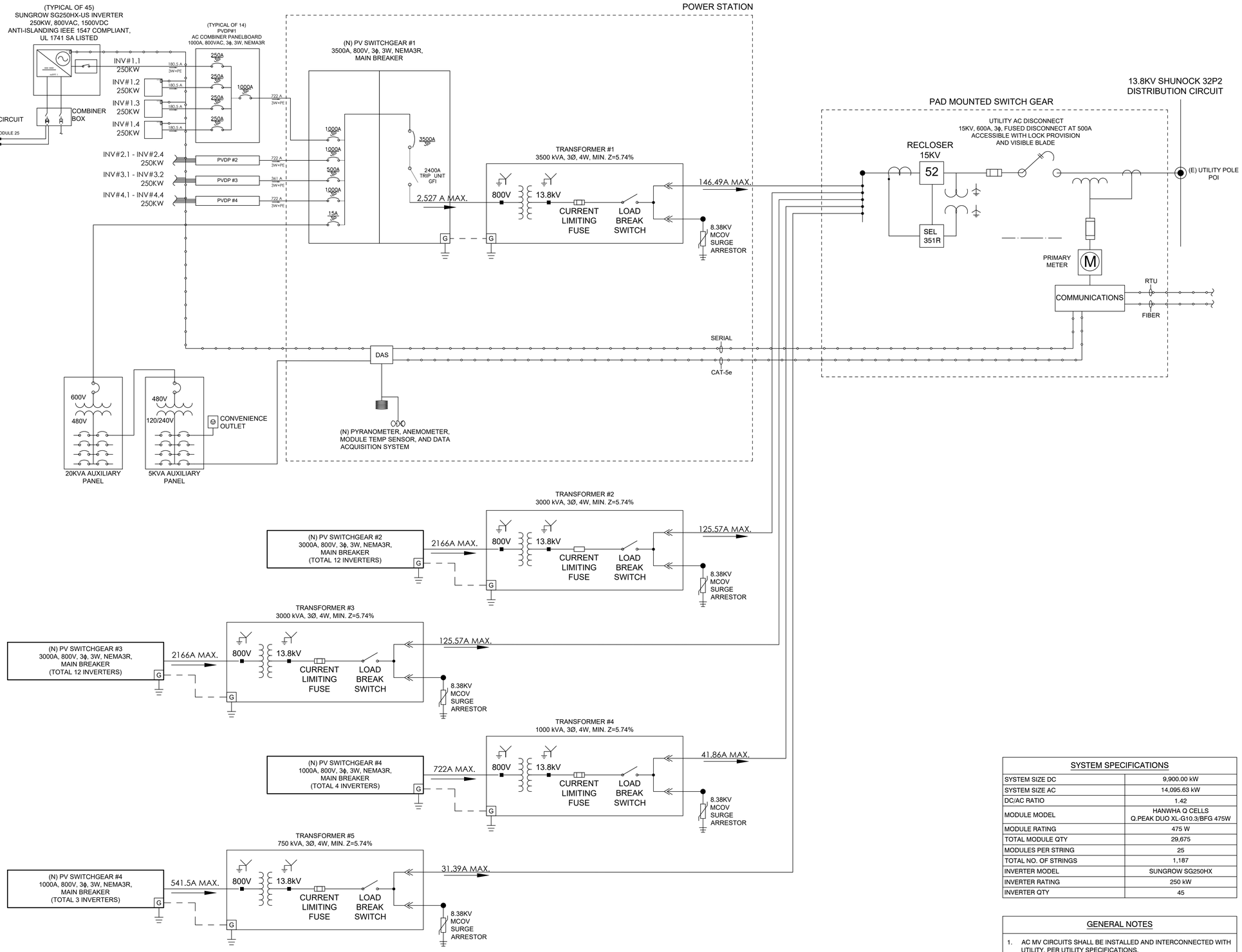

1 STONINGTON SOLAR SINGLE LINE DIAGRAM

SYSTEM SPECIFICATIONS

SYSTEM SIZE DC	9,900.00 kW
SYSTEM SIZE AC	14,095.63 kW
DC/AC RATIO	1.42
MODULE MODEL	HANWHA Q CELLS Q.PEAK DUO XL-G10.3/BFG 475W
MODULE RATING	475 W
TOTAL MODULE QTY	29,675
MODULES PER STRING	25
TOTAL NO. OF STRINGS	1,187
INVERTER MODEL	SUNGROW SG250HX
INVERTER RATING	250 kW
INVERTER QTY	45

GENERAL NOTES

1. AC MV CIRCUITS SHALL BE INSTALLED AND INTERCONNECTED WITH UTILITY, PER UTILITY SPECIFICATIONS.
2. ALL ELECTRICAL WORK SHALL BE IN ACCORDANCE WITH THE 2017 EDITION OF NATIONAL ELECTRIC CODE.
3. ALL DC AND AC EQUIPMENT, WHERE APPLICABLE, SHALL BE LISTED AND LABELED PER RECOGNIZED ELECTRICAL TESTING LABORATORY AND INSTALLED PER THE LISTING REQUIREMENTS, THE MANUFACTURER'S INSTRUCTIONS AND IN ACCORDANCE WITH NEC.
4. RECLOSER CONTROL SETTINGS TO BE COORDINATED WITH UTILITY AND CONTRACTOR.

SOLVIDA
DESIGN + ENGINEERING
1400 Shattuck Avenue, Suite 3
Berkeley, California 94709

SILICON RANCH

MILLER BROS.

STONINGTON SOLAR

428, PROVIDENCE-NEW LONDON TURNPIKE
NORTH STONINGTON, CT 06359, USA

LAT: 41.431830°N
LON: 71.821514°W

REV. NO	DESCRIPTION	DATE
0	PRELIMINARY	05/14/21

SHEET TITLE:

SINGLE LINE DIAGRAM

PROJ. MGR.	PROJ. ENGR. SDE	DATE: 05/14/21
DRAWN BY: LR	CHECKED BY:	SCALE: AS SHOWN

DRAWING NO.

E-100