June 20, 2020

Melanie A. Bachman
Executive Director
Connecticut Siting Council
10 Franklin Square
New Britain, CT 06051

DRW NX
Tower Share Application
215 Coatney Hill Road, Woodstock, CT 06281
Latitude- 41.962264
Longitude- -72.018655

Dear Ms. Bachman,

This letter and the attachments are submitted on behalf of DRW NX ("DRW"). DRW plans to install microwave dishes and related equipment at the tower site located at 215 Coatney Hill Road in Woodstock, Connecticut. This tower facility was approved by the Town of Woodstock's Planning and Zoning Commission on January 19, 2001 under Special Permit SP438-00-11. This approval did not include conditions of approval. Documentation of this from the Town of Woodstock is enclosed.

DRW will install two (2) microwave dishes, four (4) SAF radios, and related equipment at the 157' level of the existing 192' monopole tower. DRW will also install an equipment cabinet and related ground equipment on a proposed equipment platform within the existing ground facility. Included are plans by GPD Engineering and Architecture, dated June 15, 2020, depicting the proposed site and attached as **Exhibit A**. Also included is a structural analysis prepared by Tower Engineering Solutions, dated May 1, 2020, confirming that the existing tower is structurally capable of supporting the proposed equipment. This is attached and detailed in **Exhibit B**. Additionally, an analysis of the proposed mounts is attached and incorporated as **Exhibit C**.

Please accept this letter as notification pursuant to Regulations of Connecticut State Agencies 16-50aa, of DRW's intent to share a telecommunications facility pursuant to R.C.S.A. 16-50j-88. In accordance with R.C.S.A., a copy of this letter is being sent to Jay Swan, First Selectman of the Town of Woodstock, Tina Lajoie, Zoning Enforcement Officer for the Town of Woodstock, and the tower owner, SBA. Please see the attached letter from SBA authorizing the proposed shared use of this facility attached as **Exhibit D**.

The planned modifications of the facility fall squarely within those activities explicitly provided for in R.C.S.A. 16-50j-89.

1. The proposed modification will not result in an increase in the height of the existing structure. The top of the monopole tower is 192'; DRW's proposed equipment will be located at a center line height of 157'.

2. The proposed modifications will not result in the increase of the site boundary, as depicted on the attached site plan.

3. The proposed modifications will not increase noise levels at the facility by six decibels or more, or to levels that exceed local and state criteria. The incremental effect of the proposed changes will be negligible.

4. The operation of the proposed equipment will not increase radio frequency emissions at the facility to a level at or above the Federal Communications Commission safety standard. As indicated in the attached

RF exposure assessment, the site operations will have no measurable effect on RF exposure levels near this facility, as evidenced by **Exhibit E**.

Connecticut General Statutes 16-50aa indicates that the Council must approve the shared use of a telecommunications facility provided it finds the shared use is technically, legally, environmentally, and economically feasible and meets public safety concerns. As demonstrated in this letter, DRW respectfully submits that the shared use of this facility satisfies these criteria.

A. Technical Feasibility. The existing monopole tower has been deemed structurally capable of supporting DRW's proposed loading. The structural analysis is included as **Exhibit B**.
B. Legal Feasibility. As referenced above, C.G.S. 16-50aa has been authorized to issue orders approving the shared use of an existing tower such as this monopole tower in Woodstock. Under the authority granted to the Council, an order of the Council approving the requested shared use would permit DRW to obtain a building permit for the proposed installation. Further, a Letter of Authorization is included as **Exhibit D**, authorizing DRW to file this application for shared use.
C. Environmental Feasibility. The proposed shared use of this facility would have minimal environmental impact. The installation of DRW equipment at the 157' level of the existing 192' tower would have an insignificant visual impact on the area around the tower. DRW's ground equipment would be installed on an equipment platform within the existing facility compound. DRW's shared use would therefore not cause any significant alteration in the physical or environmental characteristics of the existing site. Additionally, as evidenced by **Exhibit E**, the proposed equipment would not increase radio frequency emissions to a level at or above the Federal Communications Commission safety standard.
D. Economic Feasibility. DRW will be entering into an agreement with the owner of this facility to mutually agreeable terms. As previously mentioned, the Letter of Authorization has been provided by the owner to assist DRW with this tower sharing application.
E. Public Safety Concerns. As discussed above, the monopole tower is structurally capable of supporting DRW's proposed loading. DRW is not aware of any public safety concerns relative to the proposed sharing of the existing tower.

Sincerely,

Danielle Petti (o/b/o DRW NX)
201-926-7619
Dpetti111@gmail.com

CC:
Jay Swan- First Selectman, Town of Woodstock
Tina Lajoie- Zoning Enforcement Officer, Town of Woodstock
SBA- Tower Owner
Town of Woodstock- Property Owner

ORIGIN ID:CBZA (201) 926-7619
DANIELLE PETTI
23 DORIAN RD
BOONTON TWP, NJ 07005
UNITED STATES US

SHIP DATE: 25JUN20
ACTWGT: 5.00 LB
CAD: 112900160/INET4220

BILL SENDER

TO JASON SILBERSTEIN
SBA COMMUNICATIONS CORP
8051 CONGRESS AVENUE
BOCA RATON FL 33487
(561) 955-7670
INV:
PO:
REF: US.CT.SBA.08748-A
DEPT:

56BJ1/C7DD/FE4A

J201120042401uv

FedEx Express

FRI - 26 JUN 3:00P
STANDARD OVERNIGHT

TRK# 0201 7708 0694 6610

XH BCTA

33487
FLL
FL-US

After printing this label:
1. Use the 'Print' button on this page to print your label to your laser or inkjet printer.
2. Fold the printed page along the horizontal line.
3. Place label in shipping pouch and affix it to your shipment so that the barcode portion of the label can be read and scanned.

Warning: Use only the printed original label for shipping. Using a photocopy of this label for shipping purposes is fraudulent and could result in additional billing charges, along with the cancellation of your FedEx account number.
Use of this system constitutes your agreement to the service conditions in the current FedEx Service Guide, available on fedex.com.FedEx will not be responsible for any claim in excess of $100 per package, whether the result of loss, damage, delay, non-delivery,misdelivery,or misinformation, unless you declare a higher value, pay an additional charge, document your actual loss and file a timely claim.Limitations found in the current FedEx Service Guide apply. Your right to recover from FedEx for any loss, including intrinsic value of the package, loss of sales, income interest, profit, attorney's fees, costs, and other forms of damage whether direct, incidental,consequential, or special is limited to the greater of $100 or the authorized declared value. Recovery cannot exceed actual documented loss.Maximum for items of extraordinary value is $1,000, e.g. jewelry, precious metals, negotiable instruments and other items listed in our ServiceGuide. Written claims must be filed within strict time limits, see current FedEx Service Guide.

FedEx Express **Package US Airbill**

FedEx Tracking Number 8152 3035 3391

Form ID No. 0200 — Sender's Copy

1 From *Please print and press hard.*

Date 01/24/2020 Sender's FedEx Account Number 94169-2817-8

Sender's Name D PETTI Phone (201,9267619

Company

Address 23 DORIAN ROAD Dept./Floor/Suite/Room

City BOONTON State NJ ZIP 07005

2 Your Internal Billing Reference First 24 characters will appear on invoice. Woodstock SBA

3 To Recipient's Name TINA LAJOIE Phone (860 928 6929

Company TOWN OF WOODSTOCK

Address 415 ROUTE 169 Dept./Floor/Suite/Room
We cannot deliver to P.O. boxes or P.O. ZIP codes.

Address
Use this line for the HOLD location address or for continuation of your shipping address.

City WOODSTOCK State CT ZIP 06281-3039

☐ Hold Weekday — FedEx location address REQUIRED. NOT available for FedEx First Overnight.

☐ Hold Saturday — FedEx location address REQUIRED. Available ONLY for FedEx Priority Overnight and FedEx 2Day to select locations.

4 Express Package Service * To most locations. *Packages up to 150 lbs. For packages over 150 lbs., use the FedEx Express Freight US Airbill.*

Next Business Day

- ☐ FedEx First Overnight — Earliest next business morning delivery to select locations. Friday shipments will be delivered on Monday unless Saturday Delivery is selected.
- ☐ FedEx Priority Overnight — Next business morning.* Friday shipments will be delivered on Monday unless Saturday Delivery is selected.
- ☒ FedEx Standard Overnight — Next business afternoon.* Saturday Delivery NOT available.

2 or 3 Business Days

- ☐ FedEx 2Day A.M. — Second business morning.* Saturday Delivery NOT available.
- ☐ FedEx 2Day — Second business afternoon.* Thursday shipments will be delivered on Monday unless Saturday Delivery is selected.
- ☐ FedEx Express Saver — Third business day.* Saturday Delivery NOT available.

5 Packaging * Declared value limit $500.

☐ FedEx Envelope* ☐ FedEx Pak* ☒ FedEx Box ☐ FedEx Tube ☐ Other

6 Special Handling and Delivery Signature Options Fees may apply. See the FedEx Service Guide.

☐ Saturday Delivery — NOT available for FedEx Standard Overnight, FedEx 2Day A.M., or FedEx Express Saver.

☐ No Signature Required — Package may be left without obtaining a signature for delivery.
☒ Direct Signature — Someone at recipient's address may sign for delivery.
☐ Indirect Signature — If no one is available at recipient's address, someone at a neighboring address may sign for delivery. For residential deliveries only.

Does this shipment contain dangerous goods? One box must be checked.

☒ No ☐ Yes — As per attached Shipper's Declaration. ☐ Yes — Shipper's Declaration not required. ☐ Dry Ice — Dry Ice, 9, UN 1845 ____ x ____ kg

Restrictions apply for dangerous goods — see the current FedEx Service Guide. ☐ Cargo Aircraft Only

7 Payment *Bill to:* Enter FedEx Acct. No. or Credit Card No. below.

☒ Sender — Acct. No. in Section 1 will be billed. ☐ Recipient ☐ Third Party ☐ Credit Card ☐ Cash/Check

FedEx Acct. No. / Credit Card No. Exp. Date

Total Packages Total Weight Total Declared Value†

____ lbs. $ ____ .00

†Our liability is limited to US$100 unless you declare a higher value. See back for details. By using this airbill you agree to the service conditions on the back of this airbill and in the current FedEx Service Guide, including terms that limit our liability.

Rev. Date 3/15 • Part #167001 • ©2012–2015 FedEx • PRINTED IN U.S.A. SRM

644

fedex.com 1.800.GoFedEx 1.800.463.3339

Leave the packing to the pros at FedEx Office.
Go to fedex.com/office.

FedEx Express **Package US Airbill**

FedEx Tracking Number 8152 3035 3406

Form ID No. 0200 — Sender's Copy

1 From *Please print and press hard.*

Date 01/20/2020 Sender's FedEx Account Number 94169-2817-8

Sender's Name D PETTI Phone (201 926 7619

Company

Address 23 DORIAN RD Dept./Floor/Suite/Room

City BOONTON State NJ ZIP 07005

2 Your Internal Billing Reference First 24 characters will appear on invoice. WOODSTOCK SBA

3 To Recipient's Name JAN SWAN Phone (860,928 6929

Company TOWN OF WOODSTOCK

Address 415 ROUTE 169 Dept./Floor/Suite/Room
We cannot deliver to P.O. boxes or P.O. ZIP codes.

Address
Use this line for the HOLD location address or for continuation of your shipping address.

City WOODSTOCK State CT ZIP 06281-3039

☐ Hold Weekday — FedEx location address REQUIRED. NOT available for FedEx First Overnight.

☐ Hold Saturday — FedEx location address REQUIRED. Available ONLY for FedEx Priority Overnight and FedEx 2Day to select locations.

4 Express Package Service * To most locations. *Packages up to 150 lbs. For packages over 150 lbs., use the FedEx Express Freight US Airbill.*

Next Business Day

- ☐ FedEx First Overnight — Earliest next business morning delivery to select locations. Friday shipments will be delivered on Monday unless Saturday Delivery is selected.
- ☐ FedEx Priority Overnight — Next business morning.* Friday shipments will be delivered on Monday unless Saturday Delivery is selected.
- ☒ FedEx Standard Overnight — Next business afternoon.* Saturday Delivery NOT available.

2 or 3 Business Days

- ☐ FedEx 2Day A.M. — Second business morning.* Saturday Delivery NOT available.
- ☐ FedEx 2Day — Second business afternoon.* Thursday shipments will be delivered on Monday unless Saturday Delivery is selected.
- ☐ FedEx Express Saver — Third business day.* Saturday Delivery NOT available.

5 Packaging * Declared value limit $500.

☐ FedEx Envelope* ☐ FedEx Pak* ☒ FedEx Box ☐ FedEx Tube ☐ Other

6 Special Handling and Delivery Signature Options Fees may apply. See the FedEx Service Guide.

☐ Saturday Delivery — NOT available for FedEx Standard Overnight, FedEx 2Day A.M., or FedEx Express Saver.

☐ No Signature Required — Package may be left without obtaining a signature for delivery.
☒ Direct Signature — Someone at recipient's address may sign for delivery.
☐ Indirect Signature — If no one is available at recipient's address, someone at a neighboring address may sign for delivery. For residential deliveries only.

Does this shipment contain dangerous goods? One box must be checked.

☒ No ☐ Yes — As per attached Shipper's Declaration. ☐ Yes — Shipper's Declaration not required. ☐ Dry Ice — Dry Ice, 9, UN 1845 ____ x ____ kg

Restrictions apply for dangerous goods — see the current FedEx Service Guide. ☐ Cargo Aircraft Only

7 Payment *Bill to:* Enter FedEx Acct. No. or Credit Card No. below.

☒ Sender — Acct. No. in Section 1 will be billed. ☐ Recipient ☐ Third Party ☐ Credit Card ☐ Cash/Check

FedEx Acct. No. / Credit Card No. Exp. Date

Total Packages Total Weight Total Declared Value†

____ lbs. $ ____ .00

†Our liability is limited to US$100 unless you declare a higher value. See back for details. By using this airbill you agree to the service conditions on the back of this airbill and in the current FedEx Service Guide, including terms that limit our liability.

Rev. Date 3/15 • Part #167001 • ©2012–2015 FedEx • PRINTED IN U.S.A. SRM

644

fedex.com 1.800.GoFedEx 1.800.463.3339

Ship it. Track it. Pay for it. All online.
Go to fedex.com.

VL318 PG127

000077

NOTICE OF SPECIAL PERMIT

Pursuant to Section 8-3c of the Connecticut General Statutes, notice is hereby given that on January 18, 2001 the Woodstock Planning and Zoning Commission:

1. Description of Premises:
Woodstock, Assessor Map 7276
Block 32 Lot 19A

2. Permit Granted: Special Permit granted on condition maintenance agreement is executed as soon as lease is in effect.

(application No. SP438-00-11

3. Name and address Owner of record: TOWN OF WOODSTOCK
Town Hall
415 Route 169
Woodstock, CT 06281

4. Name and address of applicant: MCF Communications, Inc.
668 Main Street
Suite 114
Wilmington, CT 01887

Dated at Woodstock, Connecticut, this 19th day of January, 2001.

This information certified by:

Terry Bellman
Zoning Enforcement Officer

RECEIVED
TOWN CLERK, WOODSTOCK, CT
01 JAN 19 PM 1:40
Judith A. Gilberts

Permit No 8508

Dept. of Building Inspections
Town of Woodstock

BUILDING PERMIT

ADDRESS 215 Coatney Hill

OWNER Town of Woodstock

DATE June 15, 2001

WORK AUTHORIZED

Construction of Tower Site

Attach this Permit in Clear View

CALL 928-1388 FOR INSPECTIONS

BUILDING OFFICIAL

CERTIFICATE OF USE AND OCCUPANCY

DEPARTMENT OF BUILDING INSPECTIONS

WOODSTOCK, CONNECTICUT

Certificate No. 1286

This is to certify that TOWN OF WOODSTOCK (Owner) Map No. 7276

Located at Street: 215 COATNEY HILL ROAD Block 32

Building Permit No. 8508 Lot No 19A

conforms substantially to the requirements of the Connecticut State Building Code, Sanitation Code, all the Zoning Ordinance of the Town of Woodstock and is hereby approved for occupancy as indicated below:

Type of Construction ..... Use Group: .....

Conditions: .....

.....

.....

Occupancy Load _____

Live Loads _____

Fire Grading _____

Type of Structure CELLULAR TOWER

Date 8-26-01

BUILDING OFFICIAL

Any change or extension of the use herein approved requires a new certificate

WHITE: APPLICANT YELLOW: ASSESSOR PINK: BUILDING OFFICE GOLD: FILE

Neccog GIS Site

Legend

- Town
- Buildings 2012
- Parcels

Notes

Enter Map Description

0.1 0 0.04 0.1 Miles

WGS_1984_Web_Mercator_Auxiliary_Sphere

© Latitude Geographics Group Ltd.

This map is a user generated static output from an Internet mapping site and is for reference only. Data layers that appear on this map may or may not be accurate, current, or otherwise reliable.

THIS MAP IS NOT TO BE USED FOR NAVIGATION

215 COATNEY HILL RD

Location	215 COATNEY HILL RD	**Mblu**	7276/ 32/ 19A/ /
Acct#	W0438400	**Owner**	WOODSTOCK TOWN OF
Assessment	$825,500	**Appraisal**	$1,179,000
PID	4525	**Building Count**	2

Current Value

Appraisal			
Valuation Year	**Improvements**	**Land**	**Total**
2016	$919,500	$259,500	$1,179,000

Assessment			
Valuation Year	**Improvements**	**Land**	**Total**
2016	$643,800	$181,700	$825,500

Owner of Record

Owner	WOODSTOCK TOWN OF	**Sale Price**	$0
Co-Owner	TOWN GARAGE	**Certificate**	1
Address	415 RT 169 WOODSTOCK , CT 06281-3039	**Book & Page**	62/ 315
		Sale Date	09/14/1967

Ownership History

Ownership History				
Owner	**Sale Price**	**Certificate**	**Book & Page**	**Sale Date**
WOODSTOCK TOWN OF	$0	1	62/ 315	09/14/1967

Building Information

Building 1 : Section 1

Year Built:	1970
Living Area:	4,600
Replacement Cost:	$208,028
Building Percent Good:	56
Replacement Cost Less Depreciation:	$116,500

Building Attributes

Field	Description
STYLE	Pre-Eng Garage
MODEL	Commercial
Grade	Average
Stories:	1.00
Occupancy	1
Exterior Wall 1	Pre-finsh Metl
Exterior Wall 2	
Roof Structure	Gable
Roof Cover	Enam Mtl Shing
Interior Wall 1	Minimum
Interior Wall 2	
Interior Floor 1	Vinyl/Asphalt
Interior Floor 2	
Heating Fuel	Gas
Heating Type	Hot Air-No Duc
AC Type	None
Bldg Use	Commercial
Sprinkler Type	
Sprinkler %	
Mezzanine Fin.	
Mezanine Unf.	1120
1st Floor Use:	200
Heat/AC	None
Frame Type	Steel
Baths/Plumbing	Average
Ceiling/Walls	Susp Ceil Only
Rooms/Prtns	Average
Wall Height	14
% Comn Wall	

Building Photo

(http://images.vgsi.com/photos/WoodstockCTPhotos//\00\00\46/96.jpg)

Building Layout

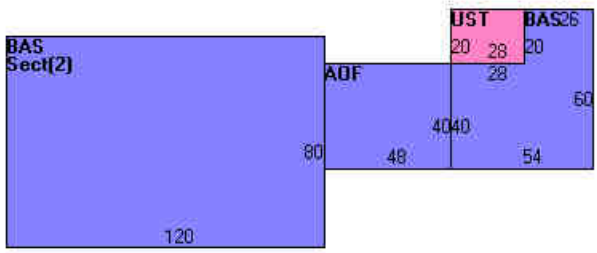

(http://images.vgsi.com/photos/WoodstockCTPhotos//Sketches/4525_4525

Building Sub-Areas (sq ft)			Legend
Code	Description	Gross Area	Living Area
BAS	First Floor	2,680	2,680
AOF	Office Area	1,920	1,920
UST	Utility Storage	560	0
		5,160	4,600

Building 1 : Section 2

Year Built: 2011
Living Area: 9,600
Replacement Cost: $403,200
Building Percent Good: 90
Replacement Cost Less Depreciation: $362,900

Building Attributes : Section 2 of 2	
Field	Description
STYLE	Pre-Eng Garage
MODEL	Commercial

Grade	Average
Stories:	1.00
Occupancy	1
Exterior Wall 1	Pre-finsh Metl
Exterior Wall 2	
Roof Structure	Gable
Roof Cover	Metal/Tin
Interior Wall 1	Minimum
Interior Wall 2	Drywall
Interior Floor 1	Concrete
Interior Floor 2	Carpet
Heating Fuel	Oil
Heating Type	Radiant
AC Type	None
Bldg Use	Commercial
Sprinkler Type	
Sprinkler %	
Mezzanine Fin.	
Mezanine Unf.	800
1st Floor Use:	200
Heat/AC	None
Frame Type	Steel
Baths/Plumbing	Average
Ceiling/Walls	Susp Ceil Only
Rooms/Prtns	Average
Wall Height	14
% Comn Wall	

Building Photo

(http://images.vgsi.com/photos/WoodstockCTPhotos//default.jpg)

Building Layout

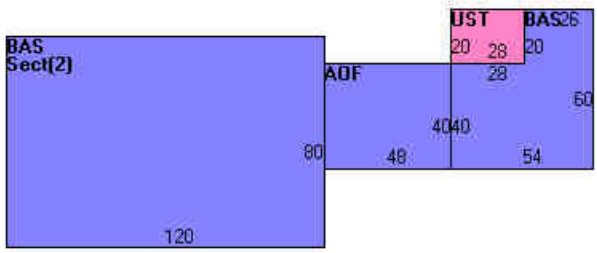

(http://images.vgsi.com/photos/WoodstockCTPhotos//Sketches/4525_4525

Building Sub-Areas (sq ft)			Legend
Code	**Description**	**Gross Area**	**Living Area**
BAS	First Floor	9,600	9,600
		9,600	9,600

Building 2 : Section 1

Year Built: 2011
Living Area: 11,282
Replacement Cost: $315,827
Building Percent Good: 70
Replacement Cost Less Depreciation: $221,100

Building Attributes : Bldg 2 of 2	
Field	**Description**
STYLE	Warehouse
MODEL	Commercial
Grade	Below Average
Stories:	1

Occupancy	1
Exterior Wall 1	Board & Batten
Exterior Wall 2	
Roof Structure	Gable
Roof Cover	Enam Mtl Shing
Interior Wall 1	Minimum
Interior Wall 2	
Interior Floor 1	Vinyl/Asphalt
Interior Floor 2	
Heating Fuel	Oil
Heating Type	None
AC Type	None
Bldg Use	Mun Bldg Com
Sprinkler Type	
Sprinkler %	
Mezzanine Fin.	
Mezanine Unf.	
1st Floor Use:	
Heat/AC	None
Frame Type	Masonry
Baths/Plumbing	Light
Ceiling/Walls	None
Rooms/Prtns	Light
Wall Height	18
% Comn Wall	

Building Photo

(http://images.vgsi.com/photos/WoodstockCTPhotos//default.jpg)

Building Layout

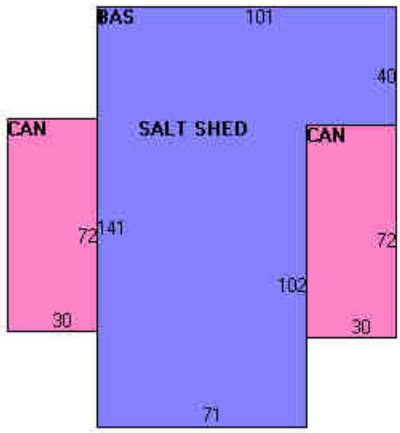

(http://images.vgsi.com/photos/WoodstockCTPhotos//Sketches/4525_1002

Building Sub-Areas (sq ft)			Legend
Code	**Description**	**Gross Area**	**Living Area**
BAS	First Floor	11,282	11,282
CAN	Canopy	4,320	0
		15,602	11,282

Extra Features

Extra Features				Legend
Code	**Description**	**Size**	**Value**	**Bldg #**
	LUMP SUM -	1800	$0	1
XKIT	Addnl. Kitchen	1 UNITS	$1,400	1

Land

Land Use

Use Code 922

Land Line Valuation

Size (Acres) 8.3

Description	Mun Bldg Com	**Frontage**	
Zone		**Depth**	
Neighborhood		**Assessed Value**	$181,700
Alt Land Appr	No	**Appraised Value**	$259,500
Category			

Outbuildings

Outbuildings						Legend
Code	**Description**	**Sub Code**	**Sub Description**	**Size**	**Value**	**Bldg #**
SHD1	Shed	FR	Frame	360 S.F.	$4,100	2
SHD1	Shed	FR	Frame	200 S.F.	$2,300	2
FN3	Fence 6'			316 L.F.	$5,200	2
PAV1	Paving Asph.			68566 S.F.	$119,300	1
CNP	Canopy			576 S.F.	$2,800	1
FN3	Fence 6'			320 L.F.	$2,900	1
SHD2	Pre Cast Cell			360 S.F.	$40,500	1
SHD2	Pre Cast Cell			360 S.F.	$40,500	1

Valuation History

Appraisal			
Valuation Year	**Improvements**	**Land**	**Total**
2019	$919,500	$259,500	$1,179,000
2018	$919,500	$259,500	$1,179,000
2017	$919,500	$259,500	$1,179,000

Assessment			
Valuation Year	**Improvements**	**Land**	**Total**
2019	$643,800	$181,700	$825,500
2018	$643,800	$181,700	$825,500
2017	$643,800	$181,700	$825,500

(c) 2020 Vision Government Solutions, Inc. All rights reserved.

SBA Communications Corporation
8051 Congress Avenue
Boca Raton, FL 33487-1307

T + 561.995.7670
F + 561.995.7626

sbasite.com

LETTER OF AUTHORIZATION

SBA Site ID: CT08748-A, Woodstock 4, CT

Property Located at: 215 Coatney Hill Road, Woodstock, CT, 06281

THE CITY/COUNTY OF: Woodstock / Windham

APPLICATION FOR ZONING/USE/BUILDING PERMIT

This letter authorizes DRW NX LLC and its authorized agents to file for all necessary zoning, planning and building permits (local, state and federal) for the purposes of installing, operating and maintaining a telecommunications facility on the existing tower on the property referenced above on behalf of MCF Communications, Inc..

All approval conditions that may be granted to DRW NX LLC in connection with above referenced facility relating to this specific application are the sole responsibility of DRW NX LLC.

SBA Towers V, LLC

Jason Silberstein

Executive VP, Site Leasing

Date: 6/18/2020

Sublight Engineering PLLC

US.CT.SBA.08748-A RF EXPOSURE ASSESSMENT

GPD Group

Abstract

This installation will have no measurable effect on RF exposure levels near this facility. There are no accessible areas that will exceed the FCC RF exposure limits based on this assessment of the proposed installation.

Matthew J Butcher
Registered Professional Engineer
Commonwealth of Virginia Lic. No.0402 40784

June 17, 2020

Matthew J Butcher
matt@sublight.net

US.CT.SBA.08748-A RF Exposure Assessment

Sublight Engineering PLLC (Sublight) has been asked to assess Radio Frequency (RF) exposure levels near the proposed installation detailed below. GDP Group engaged Sublight and provided information for this report.

DRW NX proposes to add equipment at this location. The new installation will operate in the 6 GHz point-to-point microwave band.

This installation will have no measurable effect on RF exposure levels near this facility. There are no accessible areas that will exceed the FCC RF exposure limits based on this assessment of the proposed installation.

Installation Location

The site is a collocation on an existing SBA owned telecommunications tower in Woodstock, CT.

Address: 215 Coatney Hill Road, Woodstock, CT 06281
Coordinates 41.962042° N, 72.018048° W.
Antenna Height (radiation center): 157 feet above ground level

Figure 1 Overhead View

Antenna and Transmitter Information

The proposed DRW NX installation will add two microwave dish antennas to an existing communications tower.

The antennas proposed are Comscope USX6-6W-6GR and VHLPX3-6W microwave dishes.

USX6-6W-6GR

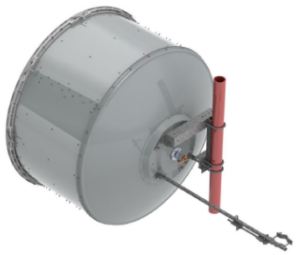

1.8m | 6ft Sentinel® Ultra High Performance, Super High XPD Antenna, dual-polarized, 5.925 – 7.125 GHz, grey, CPR137G flange

VHLPX3-6W-4WH/A

0.9m | 3 ft ValuLine® High Performance Low Profile Antenna, dual-polarized, 5.925–7.125 GHz, PDR70 flange, white antenna, composite broadband grey radome without flash, standard pack—one-piece reflector

The two antennas are to be mounted at 157 feet above ground level and oriented at 66° and 233° relative to true north.

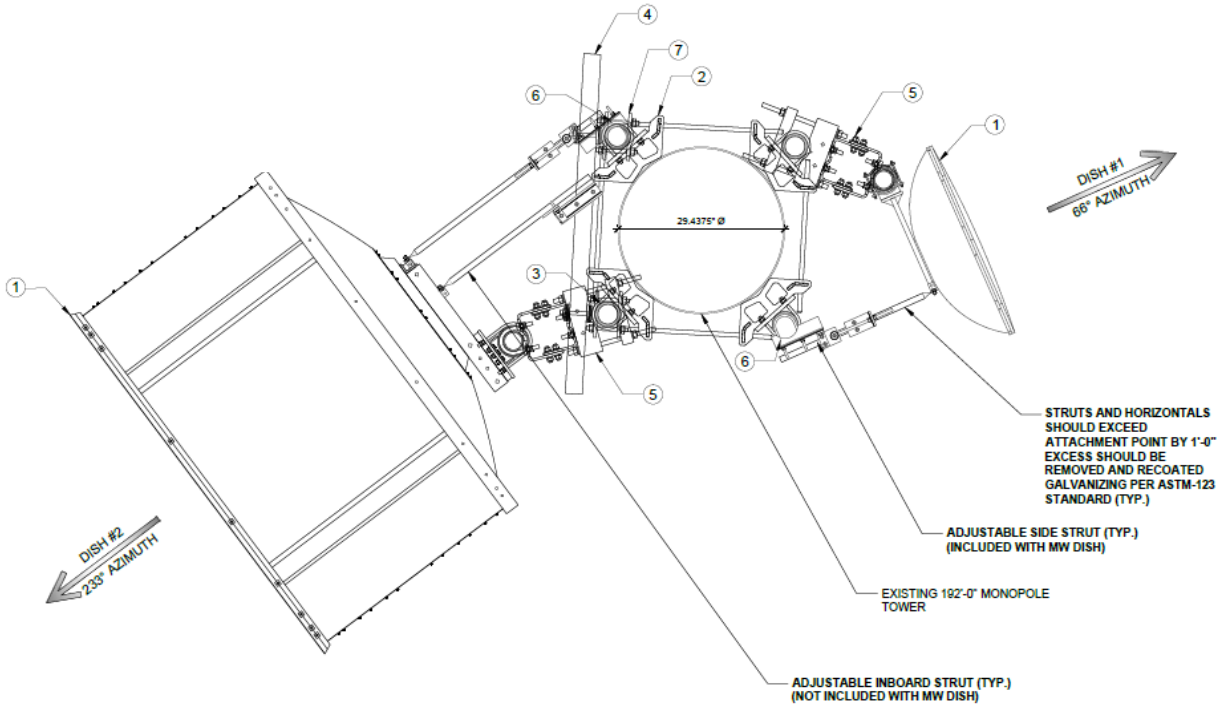

Figure 2 Antenna and Radio Configuration

Each antenna is connected to a microwave radio operating at 5787 MHz with a transmit power of 1.25 W, 1 dB of loss, and an effective isotropic radiated power (EIRP) of 68.8 dBmW for the larger USX6-6W-6GR antenna and 62.7 dBmW for the smaller VHLPX3-6W antenna.

RF Exposure Assessment

This RF Exposure assessment is based on exposure limits set by the Federal Communications Commission (FCC), as addressed most recently in 2019[1], and codified in their rules[2]. The FCC has two limits: one for the General Public and a less conservative or higher limit for Occupational workers. An Occupational worker is defined as someone who through training and notification can understand and control their exposure to RF that they may encounter in the workplace. Everyone else is considered the General Public. In this assessment, both limits are considered but the stricter, General Public, limits are used to determine compliance.

This assessment uses worst-case modelling of maximum transmitter power to the antennas and conservative techniques to determine compliance boundaries. Outside the boundaries, exposure levels will be below the limits.

[1] FCC-19-126 *Proposed Changes in the Commission's Rules Regarding Human Exposure to Radiofrequency Electromagnetic Fields; Reassessment of Federal Communications Commission Radiofrequency Exposure Limits and Policies*

[2] 47 CFR § 1.1310 Radiofrequency radiation exposure limits, US Code of Federal Regulations

FCC plane-wave equivalent power density limits for maximum permissible exposure are derived from the whole-body SAR limits and expressed in milliwatts per square centimeter (mW/cm^2). FCC exposure limits are for continuous exposure spatial-averaged over the whole body and time-averaged, over 6 minutes for Occupational and 30 minutes for General Public limits. To account for changes in absorption relative to frequency, the limits are dependent on the frequency of the RF energy. This graph indicates that frequency relationship.

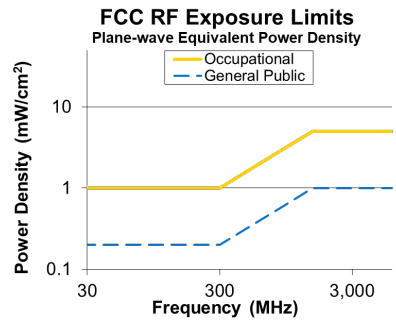

To calculate exposure and compliance boundaries, power density from each source (exposure value by frequency EV_f) is divided by the appropriate exposure limit (EL_f), creating an exposure ratio (ER_f).

$$ER_f = \frac{EV_f}{EL_f}$$

Ratios from each source are combined to determine a total exposure ratio TER. This ratio is used to determine exposure and compliance boundaries.

$$TER = \sum_{i=1}^{n} ER_i$$

RF power density levels are calculated using the IXUS Modeler[3]. IXUS employs a synthetic ray tracing method for panel and omnidirectional antennas and a conservative cylindrical envelope method for microwave dish (parabolic reflector / aperture) antennas.

The ray tracing method is an advanced computation method described in IEC 62232[4]. The power is summed from elemental sources representing the individual components of the antenna. These elemental sources are selected by an analysis of the proposed antennas and their manufacturers datasheets. Ray tracing algorithms typically overestimate RF field strength due to absorption of RF energy in the ground, building walls and other man-made structures.

The conservative cylindrical envelope method for microwave dish antennas from ETSI[5] is used to determine worst-case RF power density. This technique is derived from common configurations and shown to be conservative based on measurement results from real systems. Dish antennas are extremely directional and almost all the RF energy is confined to a cylindrical beam in the direction the antenna is pointed, levels outside the beam are negligible.

---

[3] IXUS EMF Compliance Management Software version 3.8 (0) (Calculator 15.0) provided by Alphawave Mobile Network Products http://www.ixusapp.com.

[4] IEC 62232:2017, Determination of RF field strength and SAR in the vicinity of radiocommunication base stations for the purpose of evaluating human exposure, International Electrotechnical Commission, Geneva.

[5] ETSI TR 102 457. Fixed Radio Systems; Evaluation of the ElectroMagnetic Field (EMF) radiated by Line-of-Sight (LoS) fixed radio stations using parabolic dish directional antennas. V2.1.0 (2018-09)

IXUS combines results from all sources to create graphic 3D compliance boundaries around antennas.

The following depiction graphically shows the worst-case compliance boundaries with respect to surrounding structures. Yellow indicates areas that may exceed the FCC's General Public exposure limits while red indicates areas that may exceed the Occupational limits. Because of the low power to this installation there are no areas that exceed the limits. To show the modeling, light blue indicates areas that exceed 5% or 1/20th of the limit.

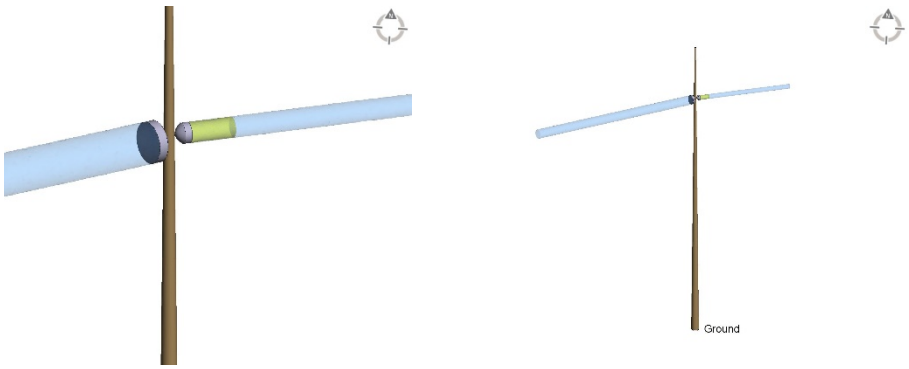

Figure 3 Modeling of Installation – top of tower & whole tower

The graphs below shows the power density estimation (ETSI Envelope) for the proposed antennas in this installation with respect to the FCC Whole Body Limit for the General Public. It also shows 5% or 1/20th of that limit. This indicates that even at zero distance from the USX6-6W-6GR antenna, the exposure levels are below the limit. Only a short, inaccessible region, in front of the VHLPX3-6W antenna, will exceed the FCC's General Public exposure limit.

```
Efficency η 0.57
Gain dBi 38.5
Diameter [m] 1.8
Frequency [MHz] 5878
Power [W, dBm]] 1., 30
ETSI F 13
```

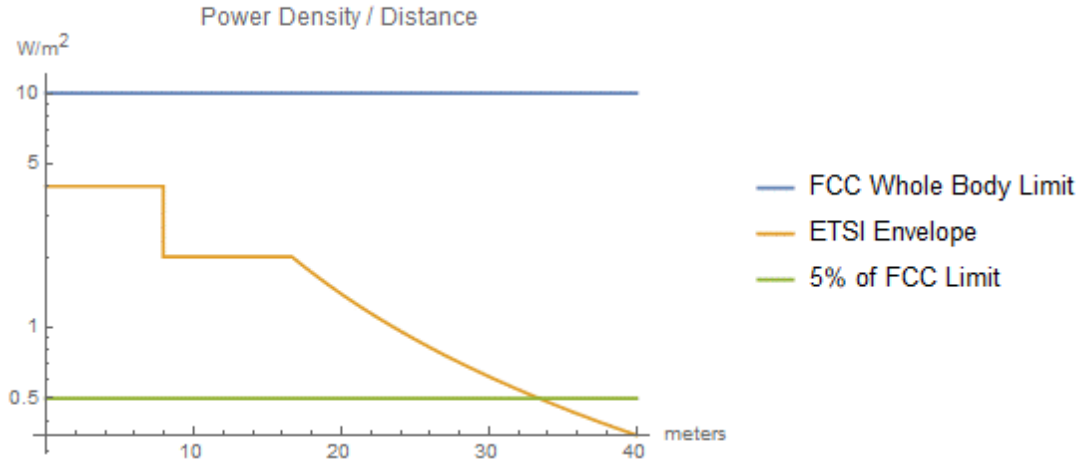

Figure 4 ETSI power density estimation USX6-6W-6GR antenna

```
Efficency η 0.57
Gain dBi 32.4
Diameter [m] 0.9
Frequency [MHz] 5878
Power [W, dBm]] 1., 30
ETSI F 15
```

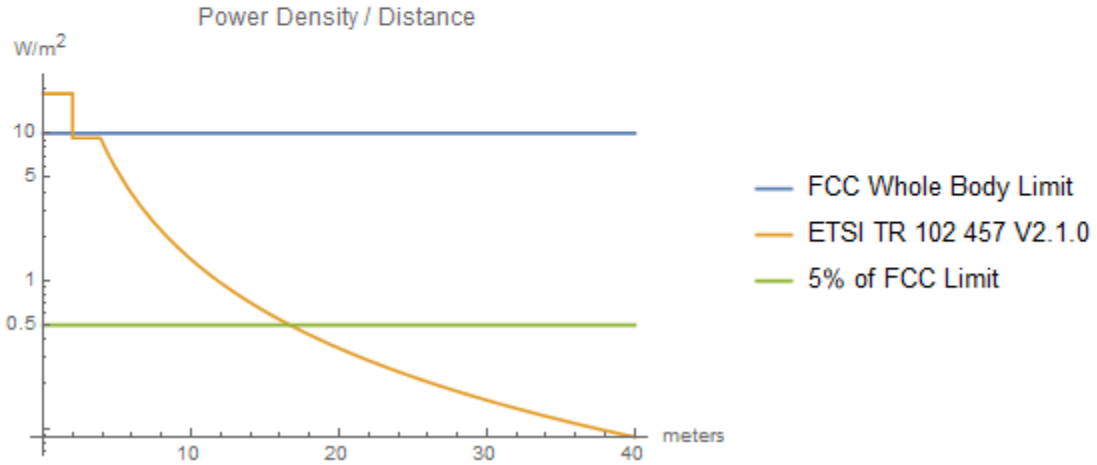

Figure 5 ETSI power density estimation VHLPX3-6W antenna

Because of the low power, installation height, and directionality of the proposed installation, there will be no change to the RF exposure levels on or around this site. RF levels on the ground from this installation will not be measurable.

RF Safety Program

SBA, the tower owner, has an RF Exposure Safety Program for their transmitting sites. Part of this program requires the installation of signs near antennas where workers could access areas that exceed FCC RF exposure limits.

Because this installation will have no effect on RF exposure levels on or around the tower, there will be no need to update the existing RF Exposure Safety Program.

Conclusions

This installation will have no measurable effect on RF exposure levels near this facility. There are no accessible areas that will exceed the FCC RF exposure limits based on this assessment of the proposed installation.

This engineer hereby certifies that this proposed wireless facility, installed by GPD Group, will comply with the RF exposure limits set forth by the FCC and as required by federal law.

If you have any questions on this assessment, please contact Sublight Engineering PLLC.

Engineering Statement

My professional engineer seal on this document certifies and affirms that:

> I am registered as a Professional Engineer.
>
> I am the principal of Sublight Engineering PLLC, in Arlington, Virginia.
>
> I provide RF engineering services.
>
> I am thoroughly familiar with the rules and regulations of the Federal Communications Commission (FCC) as well as the regulations of the Occupational Safety and Health Administration (OSHA), both in general and specifically as they apply to the FCC radiofrequency radiation exposure limits.
>
> That I have prepared this RF Exposure Assessment and believe it to be true and accurate to the best of my knowledge.

June 17, 2020

Tower Engineering Solutions
Phone (972) 483-0607, Fax (972) 975-9615
1320 Greenway Drive, Suite 600, Irving, Texas 75038

Structural Analysis Report

Existing 190 ft Nudd Corporation Monopole

Customer Name: SBA Communications Corp

Customer Site Number: CT08748-A

Customer Site Name: Woodstock 4, CT

Carrier Name: DRW Canada Co. (App#: 133058, V1)

Carrier Site ID / Name: US.CT.SBA.08748-A / Woodstock 4, CT

Site Location: 215 Coatney Hill Road

Woodstock, Connecticut

Windham County

Latitude: 41.962264

Longitude: -72.018655

Exp.01/31/2021

STATE OF CONNECTICUT
MUSTAPHA ASSI
No. 23865
LICENSED
PROFESSIONAL ENGINEER

05/01/2020

Analysis Result:

Max Structural Usage: 67.1% [Pass]

Max Foundation Usage: 38% [Pass]

Additional Usage Caused by New Mount/Mount Modification: N/A

Report Prepared By: Sital Shrestha

Tower Engineering Solutions
Phone (972) 483-0607, Fax (972) 975-9615
1320 Greenway Drive, Suite 600, Irving, Texas 75038

Structural Analysis Report

Existing 190 ft Nudd Corporation Monopole

Customer Name: SBA Communications Corp

Customer Site Number: CT08748-A

Customer Site Name: Woodstock 4, CT

Carrier Name: DRW Canada Co. (App#: 133058, V1)

Carrier Site ID / Name: US.CT.SBA.08748-A / Woodstock 4, CT

Site Location: 215 Coatney Hill Road

Woodstock, Connecticut

Windham County

Latitude: 41.962264

Longitude: -72.018655

Analysis Result:

Max Structural Usage: 67.1% [Pass]

Max Foundation Usage: 38% [Pass]

Additional Usage Caused by New Mount/Mount Modification: N/A

Report Prepared By: Sital Shrestha

Introduction

The purpose of this report is to summarize the analysis results on the 190 ft Nudd Corporation Monopole to support the proposed antennas and transmission lines in addition to those currently installed. Any modification listed under Sources of Information was assumed completed and was included in this analysis.

Sources of Information

Tower Drawings	Fred A. Nudd Corporation, Project No. 01-8280, dated June 10,2001
Foundation Drawing	Fred A. Nudd Corporation, Project No. 01-8280, dated June 10,2001
Geotechnical Report	Fred A. Nudd Corporation, Project No. 01-8280, dated June 10,2001
Modification Drawings	N/A

Analysis Criteria

The rigorous analysis was performed in accordance with the requirements and stipulations of the TIA-222-G-2**.** In accordance with this standard, the structure was analyzed using **TESPoles,** a proprietary analysis software. The program considers the structure as an elastic 3-D model with second-order effects and temperature effects incorporated in the analysis. The analysis was performed using multiple wind directions.

Wind Speed Used in the Analysis:	Ultimate Design Wind Speed V_{ult} = 130.0 mph (3-Sec. Gust)/ Nominal Design Wind Speed V_{asd} = 101.0 mph (3-Sec. Gust)
Wind Speed with Ice:	50 mph (3-Sec. Gust) with 1" radial ice concurrent
Operational Wind Speed:	60 mph + 0" Radial ice
Standard/Codes:	TIA-222-G-2 / 2015 IBC / 2018 Connecticut State Building Code
Exposure Category:	C
Structure Class:	II
Topographic Category:	1
Crest Height:	0 ft
Seismic Parameters:	S_S = 0.172, S_1 = 0.063

This structural analysis is based upon the tower being classified as a Structure Class II; however, if a different classification is required subsequent to the date hereof, the tower classification will be changed to meet such requirement and a new structural analysis will be run.

Existing Antennas, Mounts and Transmission Lines

The table below summarizes the antennas, mounts and transmission lines that were considered in the analysis as existing on the tower.

Items	Elevation (ft.)	Qty.	Antenna Descriptions	Mount Type & Qty.	Transmission Lines	Owner
1	185.0	9	Powerwave 7770.00 - Panel	Low Profile Platform	(12) 1 5/8"	AT&T
2		6	Powerwave LGP21401			
3		6	Powerwave LGP21903			
4		6	ADC CG-1900W800-FULL-DIN			
5	177.0	3	EMS RR90-17-02DPL2 - Panel	Platform w/ Hand Rails	(15) 1 5/8" (3) 1 5/8" Fiber	T-Mobile
6		3	APXV18-206516S-C-A20 - Panel			
7		3	APXVAARR24_43-U-NA20 - Panel			
8		3	Ericsson KRY 112 489/2			
9		3	Ericsson 4449 B71+B12			
10		3	Kathrein 782 11056			
14	150.0	1	ANT450F6 - Whip	(1) Side arm (CommScope DB5004)	(1) 1 1/4"	Connecticut Light & Power
15		1	RFS PAD6-59A - Dish		(1) 1 5/8"	
16	135.0	1	ANT450F6 - Whip	(1) Side arm (CommScope DB5004)	(1) 1 5/8"	
17	110.0	2	Antenex Y1505	Flush Mount	(6) 7/8"	Town of Woodstock*
18		2	Decibel DB212-1			
19		2	Telewave ANT450D6-9			

*Leased but not installed.

Proposed Carrier's Final Configuration of Antennas, Mounts and Transmission Lines

Information pertaining to the proposed carrier's final configuration of antennas and transmission lines was provided by SBA Communications Corp. The proposed antennas and lines are listed below.

Items	Elevation (ft)	Qty.	Antenna Descriptions	Mount Type & Qty.	Transmission Lines	Owner
11	157.0	1	Commscope USX6-6W	(2) Commscope PM-SC4-96 (Pole Mount)	(6) 1/2" Coax (6) 1/4" CAT6 (6) 1/4" Copper Power	DRW Canada Co.
12		1	Commscope VHLPX3-6W			
13		4	SAF SAF			

See the attached coax layout for the line placement considered in the analysis.

Analysis Results

The results of the structural analysis, performed for the wind and ice loading and antenna equipment as defined above, are summarized as the following:

	Pole shafts	Anchor Bolts	Base Plate
Max. Usage:	**67.1%**	**57.7%**	**57.6%**
Pass/Fail	**Pass**	**Pass**	**Pass**

Foundations

	Moment (Kip-Ft)	Shear (Kips)	Axial (Kips)
Analysis Reactions	4848.6	39.4	89.3

.

The foundation has been investigated using the supplied documents and soils report and was found adequate. Therefore, no modification to the foundation will be required.

Operational Condition (Rigidity):

The maximum twist and sway of the microwave dishes under the operational wind speed as specified in the Analysis Criteria are listed in the table below:

Elevation (ft)	Antenna / Dish	Carrier	Twist (deg)	Sway (deg)
157.0	SUX6-65B - Dish	DRW Canada Co.	0.000	1.261
157.0	VHLPX3-6W - Dish	DRW Canada Co.	0.000	1.261

It is recommended that the carriers review the twist and sway values of the microwave dishes.

Conclusions

Based on the analysis results, the existing structure and its foundation were found to be adequate to safely support the existing and proposed equipment and meet the minimum requirements per the ANSI/TIA/EIA 222-G Standard under the design basic wind speed as specified in the Analysis Criteria.

Standard Conditions

1. This analysis was performed based on the information supplied to **(TES) Tower Engineering Solutions, LLC.** Verification of the information provided was not included in the Scope of Work for **TES**. The accuracy of the analysis is dependent on the accuracy of the information provided.

2. The structural analysis was performance based upon the evidence available at the time of this report. All information provided by the client is considered to be accurate.

3. The analyses will be performed based on the codes as specified by the client or based on the best knowledge of the engineering staff of **TES**. In the absence of information to the contrary, all work will be performed in accordance with the latest relevant revision of ANSI/TIA-222. If wind speed and/or ice loads are different from the minimum values recommended by the EIA/TIA-222 standard or other codes, **TES** should be notified in writing and the applicable minimum values provided by the client.

4. The configuration of the existing mounts, antennas, coax and other appurtenances were supplied by the customer for the current structural analysis. **TES** has not visited the tower site to verify the adequacy of the information provided. If there is any discrepancy found in the report regarding the existing conditions, **TES** should be notified immediately to evaluate the effect of the discrepancy on the analysis results.

5. The client will assume responsibility for rework associated with the differences in initially provided information, including tower and foundation information, existing and/or proposed equipment and transmission lines.

6. If a feasibility analysis was performed, final acceptance of changed conditions shall be based upon a rigorous structural analysis.

Usage Diagram - Max Ratio 67.10% at 48.0ft

Structure:	CT08748-A-SBA	**Code:**	EIA/TIA-222-G	4/30/2020
Site Name:	Woodstock 4, CT	**Exposure:**	C	
Height:	190.00 (ft)	**Gh:**	1.1	
Base Elev:	0.000 (ft)			Page: 1

Tower Engineering Solutions

Dead Load Factor: 1.20

Wind Load Factor: 1.60

Load Case : 1.2D + 1.6W 101 mph Wind

Iterations: 25

Copyright © 2020 by Tower Engineering Solutions, LLC. All rights reserved.

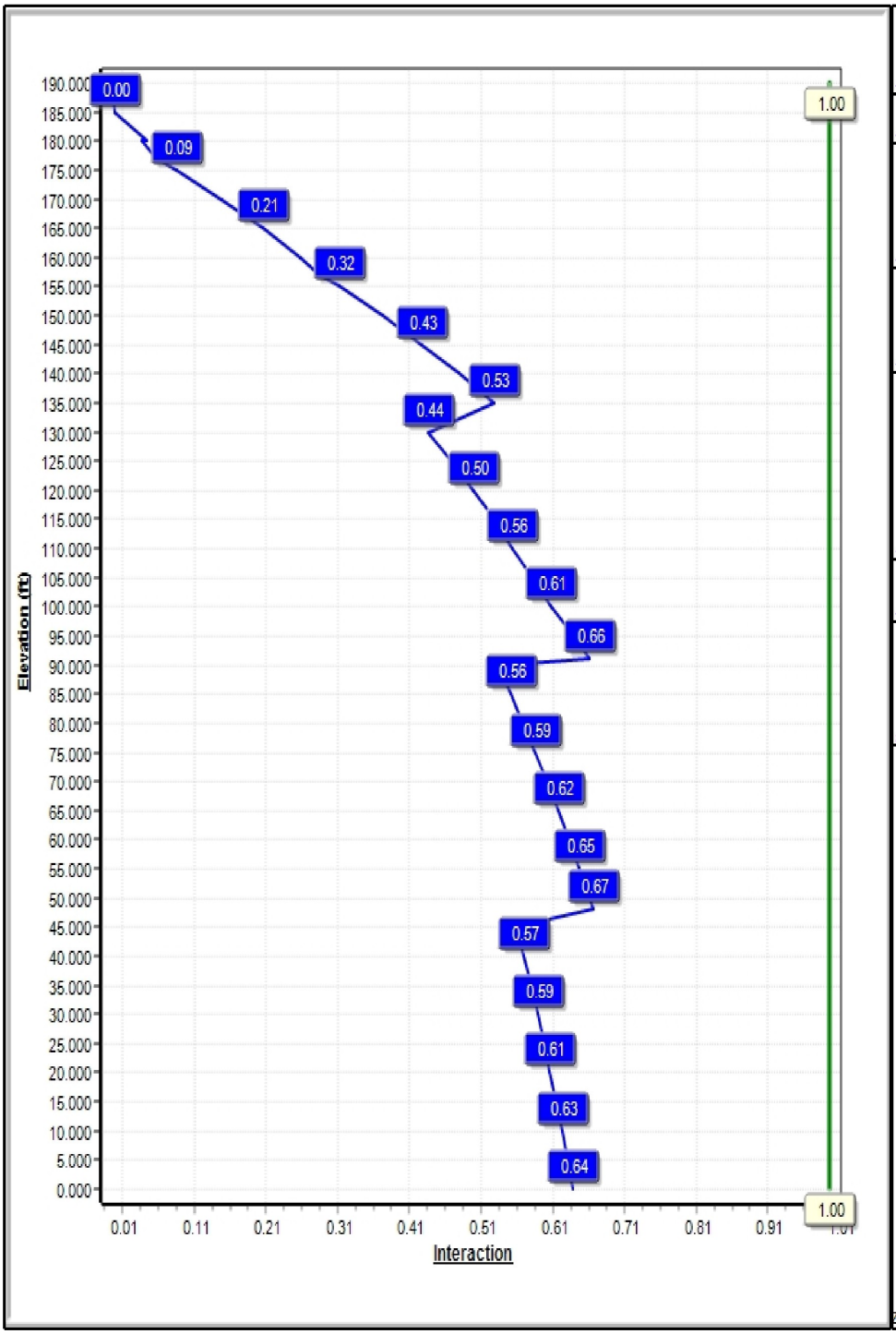

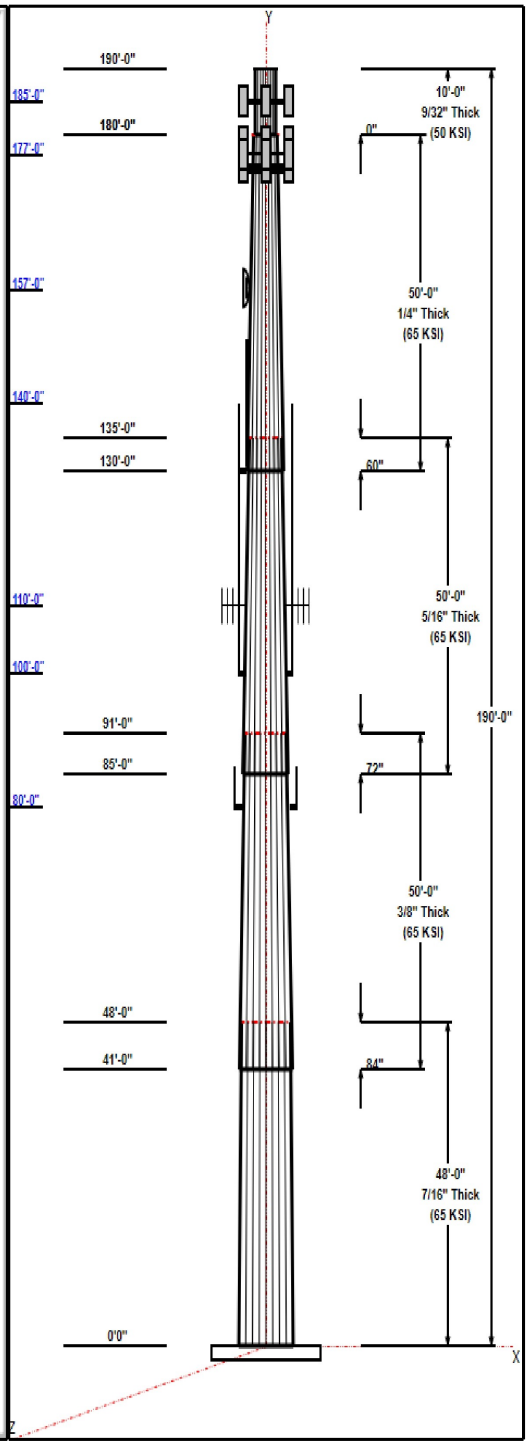

Structure: CT08748-A-SBA

Type:	Custom	**Base Shape:**	18 Sided	4/30/2020
Site Name:	Woodstock 4, CT	**Taper:**	0.23542	
Height:	190.00 (ft)			
Base Elev:	0.00 (ft)			Page: 2

Tower Engineering Solutions

Shaft Properties

Seq	Length (ft)	Top (in)	Bottom (in)	Thick (in)	Joint Type	Taper	Grade (ksi)
1	48.00	53.20	64.50	0.438		0.23542	65
2	50.00	43.83	55.60	0.375	Slip	0.23542	65
3	50.00	34.09	45.86	0.313	Slip	0.23542	65
4	50.00	24.00	35.77	0.250	Slip	0.23542	65
5	10.00	24.00	24.00	0.281	Butt	0.00000	50

Discrete Appurtenances

Attach Elev (ft)	Force Elev (ft)	Qty	Description	Carrier
185.00	185.00	9	Powerwave 7770.00	AT&T
185.00	185.00	6	Powerwave LGP21401	AT&T
185.00	185.00	6	Powerwave LGP21903	AT&T
185.00	185.00	6	ADC	AT&T
185.00	185.00	1	Low Profile Platform	AT&T
177.00	177.00	3	EMS RR90-17-02DPL2	T-Mobile
177.00	177.00	3	Ericsson KRY 112 489/2	T-Mobile
177.00	177.00	1	Platform w/ Hand Rails	T-Mobile
177.00	177.00	3	APXV18-206516S-C-A20	T-Mobile
177.00	177.00	3	APXVAARR24_43-U-NA20	T-Mobile
177.00	177.00	3	4449 B71+B12	T-Mobile
177.00	177.00	3	782 11056	T-Mobile
157.00	157.00	2	Flush Mount	DRW Canada Co.
157.00	157.00	1	SUX6-65B	DRW Canada Co.
157.00	157.00	1	VHLPX3-6W	DRW Canada Co.
157.00	157.00	4	SAF	DRW Canada Co.
140.00	140.00	1	DS4C06F36D-N	Connecticut Light &
130.00	130.00	1	SitePro UQB4	Connecticut Light &
130.00	130.00	1	SitePro SV197-48	Connecticut Light &
110.00	110.00	2	Pipe Mounts	Town of Woodstock
110.00	110.00	2	Antenex Y1505	Town of Woodstock
100.00	120.00	2	Decibel DB212-1	Town of Woodstock
100.00	100.00	2	Standoffs	Town of Woodstock
80.00	80.00	2	Standoffs	Town of Woodstock
80.00	83.00	2	Telewave ANT450D6-9	Town of Woodstock

Linear Appurtenances

Elev From (ft)	Elev To (ft)	Placement	Description	Carrier
0.00	185.00	Inside	1 5/8" Coax	AT&T
0.00	177.00	Inside	1 5/8" Coax	T-Mobile
0.00	177.00	Inside	1 5/8" Fiber	T-Mobile
0.00	157.00	Inside	1/2" Coax	DRW Canada Co.
0.00	157.00	Inside	1/4" CAT6	DRW Canada Co.
0.00	157.00	Inside	1/4" Copper Power	DRW Canada Co.
0.00	140.00	Inside	7/8" Coax	Connecticut Light &
0.00	110.00	Inside	7/8" Coax	Town of Woodstock
0.00	100.00	Inside	7/8" Coax	Town of Woodstock
0.00	80.00	Inside	7/8" Coax	Town of Woodstock

Anchor Bolts

Qty	Specifications	Grade (ksi)	Arrangement
29	2.00" F1554 105	105.0	Radial

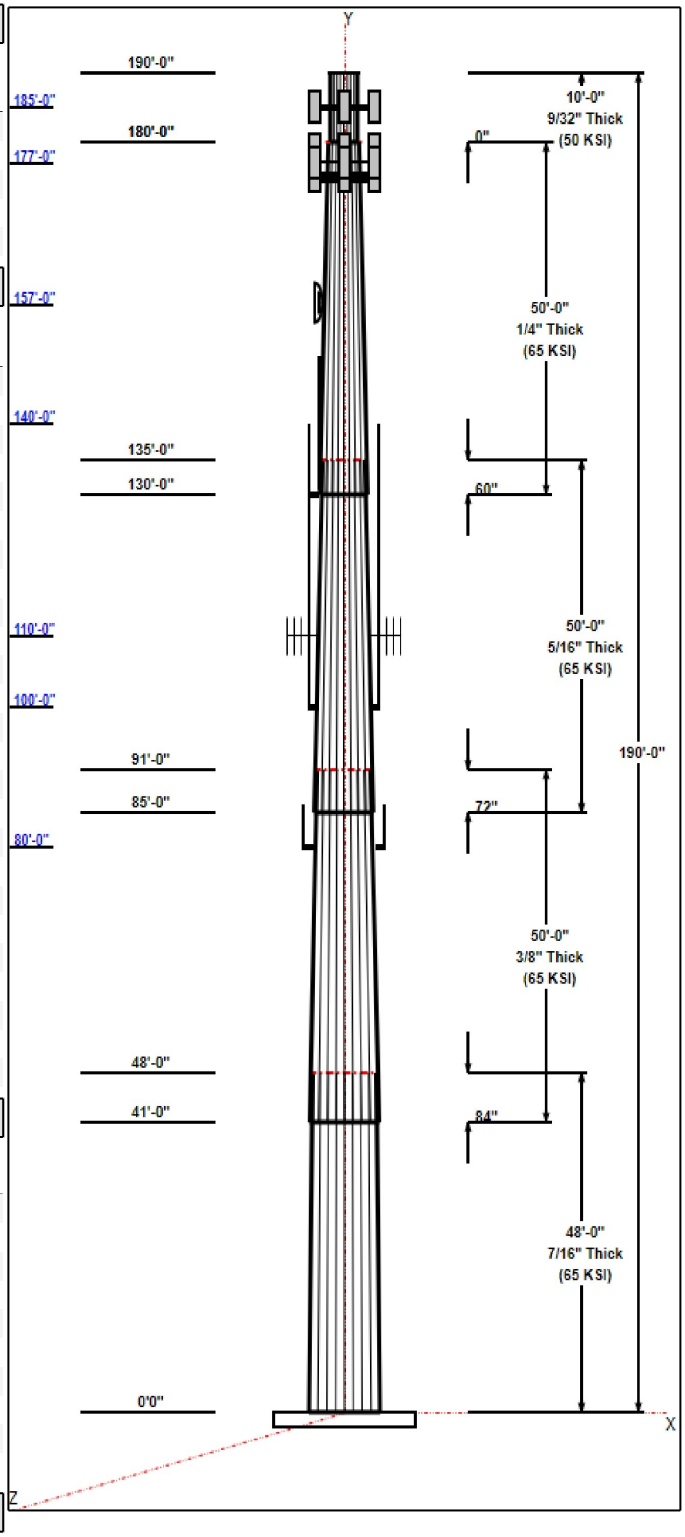

Copyright © 2020 by Tower Engineering Solutions, LLC. All rights reserved.

Base Plate

Thickness (in)	Specifications (in)	Grade (ksi)	Geometry
2.2500	76.1	50.0	Round

Reactions

Load Case	Moment (FT-Kips)	Shear (Kips)	Axial (Kips)
1.2D + 1.6W 101 mph Wind	4848.7	39.4	54.2
0.9D + 1.6W 101 mph Wind	4803.8	39.4	40.6
1.2D + 1.0Di + 1.0Wi 50 mph Wind	1533.2	12.3	89.3
1.2D + 1.0E	231.8	1.8	54.3
0.9D + 1.0E	229.4	1.8	40.7
1.0D + 1.0W 60 mph Wind	1064.2	8.7	45.2

Copyright © 2020 by Tower Engineering Solutions, LLC. All rights reserved.

Structure: CT08748-A-SBA - Coax Line Placement

Type: Monopole
Site Name: Woodstock 4, CT
Height: 190.00 (ft)

4/30/2020

Tower Engineering Solutions

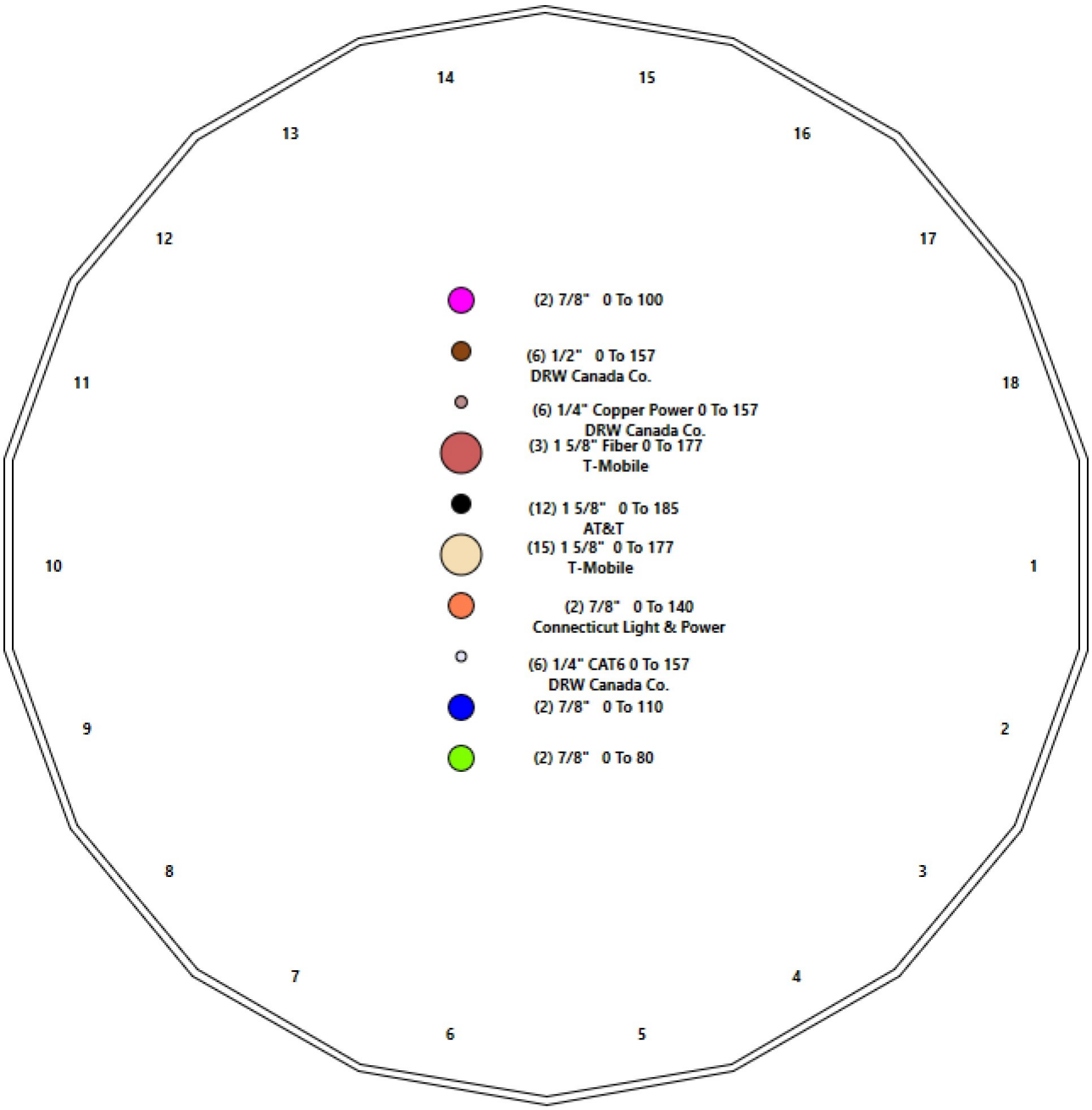

Copyright © 2020 by Tower Engineering Solutions, LLC. All rights reserved.

Shaft Properties

Structure:	CT08748-A-SBA		**Code:**	EIA/TIA-222-G	4/30/2020
Site Name:	Woodstock 4, CT		**Exposure:**	C	
Height:	190.00 (ft)		**Crest Height:**	0.00	
Base Elev:	0.000 (ft)		**Site Class:**	D - Stiff Soil	
Gh:	1.1	**Topography:** 1	**Struct Class:**	II	Page: 5

Tower Engineering Solutions

Sec. No.	Shape	Length (ft)	Thick (in)	Fy (ksi)	Joint Type	Overlap (in)	Weight (lb)
1	18	48.000	0.4375	65		0.00	13,248
2	18	50.000	0.3750	65	Slip	84.00	9,991
3	18	50.000	0.3125	65	Slip	72.00	6,694
4	18	50.000	0.2500	65	Slip	60.00	4,001
5	18	10.000	0.2813	50	Flange	0.00	720
					Total Shaft Weight:		**34,654**

	Bottom						Top						
Sec. No.	**Dia (in)**	**Elev (ft)**	**Area (sqin)**	**Ix (in^4)**	**W/t Ratio**	**D/t Ratio**	**Dia (in)**	**Elev (ft)**	**Area (sqin)**	**Ix (in^4)**	**W/t Ratio**	**D/t Ratio**	**Taper**
1	64.50	0.00	88.96	46124.76	24.59	147.43	53.20	48.00	73.26	25769.0	20.03	121.6	0.235417
2	55.60	41.00	65.73	25324.08	24.73	148.26	43.83	91.00	51.72	12336.9	19.20	116.8	0.235417
3	45.86	85.00	45.18	11844.57	24.47	146.77	34.09	135.00	33.51	4830.83	17.83	109.1	0.235417
4	35.77	130.0	28.18	4492.97	23.82	143.08	24.00	180.00	18.84	1343.00	15.52	96.00	0.235417
5	24.00	180.0	21.17	1504.92	13.64	85.33	24.00	190.00	21.17	1504.92	13.64	85.33	0.000000

Copyright © 2020 by Tower Engineering Solutions, LLC. All rights reserved.

Load Summary

Structure:	CT08748-A-SBA	**Code:**	EIA/TIA-222-G	4/30/2020	
Site Name:	Woodstock 4, CT	**Exposure:**	C		
Height:	190.00 (ft)	**Crest Height:**	0.00		
Base Elev:	0.000 (ft)	**Site Class:**	D - Stiff Soil		
Gh:	1.1 **Topography:** 1	**Struct Class:**	II	Page: 6	

Tower Engineering Solutions

Discrete Appurtenances

No.	Elev (ft)	Description	Qty	No Ice Weight (lb)	No Ice CaAa (sf)	No Ice CaAa Factor	Ice Weight (lb)	Ice CaAa (sf)	Ice CaAa Factor	Hor. Ecc. (ft)	Vert Ecc (ft)
1	185.00	Powerwave 7770.00	9	53.28	5.50	0.84	252.74	6.985	0.87	0.00	0.00
2	185.00	Powerwave LGP21401	6	14.10	1.29	0.64	48.14	2.428	0.67	0.00	0.00
3	185.00	Powerwave LGP21903	6	5.50	0.27	0.74	16.98	0.811	0.77	0.00	0.00
4	185.00	ADC CG-1900W800-FULL-DIN	6	16.00	0.10	0.69	16.15	0.101	0.70	0.00	0.00
5	185.00	Low Profile Platform	1	1250.00	22.00	1.00	2735.17	46.048	1.00	0.00	0.00
6	177.00	EMS RR90-17-02DPL2	3	39.94	4.36	0.87	187.49	5.742	0.91	0.00	0.00
7	177.00	Ericsson KRY 112 489/2	3	15.40	0.65	0.82	39.29	1.480	0.84	0.00	0.00
8	177.00	Platform w/ Hand Rails	1	1588.50	32.00	1.00	4414.56	69.853	1.00	0.00	0.00
9	177.00	APXV18-206516S-C-A20	3	18.70	3.61	0.73	113.69	6.128	0.73	0.00	0.00
10	177.00	APXVAARR24_43-U-NA20	3	128.00	20.24	0.70	720.41	22.850	0.70	0.00	0.00
11	177.00	4449 B71+B12	3	70.00	1.65	0.67	171.22	2.408	0.67	0.00	0.00
12	177.00	782 11056	3	1.30	0.22	0.67	18.55	0.514	0.67	0.00	0.00
13	157.00	Flush Mount	2	350.00	5.00	1.00	742.72	9.675	1.00	0.00	0.00
14	157.00	SUX6-65B	1	209.00	35.67	1.00	1160.12	40.339	1.00	0.00	0.00
15	157.00	VHLPX3-6W	1	53.00	10.68	1.00	344.35	13.246	1.00	0.00	0.00
16	157.00	SAF	4	7.70	1.22	1.00	41.24	2.284	1.00	0.00	0.00
17	140.00	DS4C06F36D-N	1	70.00	5.50	1.00	253.06	14.128	1.00	0.00	0.00
18	130.00	SitePro UQB4	1	285.23	4.50	1.00	808.66	10.694	1.00	0.00	0.00
19	130.00	SitePro SV197-48	1	79.00	7.25	1.00	169.61	18.359	1.00	0.00	0.00
20	110.00	Pipe Mounts	2	40.00	5.00	1.00	83.31	9.512	1.00	0.00	0.00
21	110.00	Antenex Y1505	2	5.00	3.60	1.00	73.97	9.876	1.00	0.00	0.00
22	100.00	Decibel DB212-1	2	31.00	6.50	1.00	346.59	51.508	1.00	0.00	20.00
23	100.00	Standoffs	2	60.00	2.63	1.00	214.18	10.272	1.00	0.00	0.00
24	80.00	Standoffs	2	60.00	2.63	1.00	210.78	10.103	1.00	0.00	0.00
25	80.00	Telewave ANT450D6-9	2	18.00	2.77	1.00	121.34	6.564	1.00	0.00	3.00
		Totals:	**70**	**6,206.67**			**20,150.39**				

Linear Appurtenances

Bottom Elev. (ft)	Top Elev. (ft)	Description	Exposed Width	Exposed
0.00	185.00	(12) 1 5/8" Coax	0.00	Inside
0.00	177.00	(15) 1 5/8" Coax	0.00	Inside
0.00	177.00	(3) 1 5/8" Fiber	0.00	Inside
0.00	157.00	(6) 1/2" Coax	0.00	Inside
0.00	157.00	(6) 1/4" CAT6	0.00	Inside
0.00	157.00	(6) 1/4" Copper Power	0.00	Inside
0.00	140.00	(2) 7/8" Coax	0.00	Inside
0.00	110.00	(2) 7/8" Coax	0.00	Inside
0.00	100.00	(2) 7/8" Coax	0.00	Inside
0.00	80.00	(2) 7/8" Coax	0.00	Inside

Copyright © 2020 by Tower Engineering Solutions, LLC. All rights reserved.

Shaft Section Properties

Structure:	CT08748-A-SBA		**Code:**	EIA/TIA-222-G	4/30/2020
Site Name:	Woodstock 4, CT		**Exposure:**	C	
Height:	190.00 (ft)		**Crest Height:**	0.00	
Base Elev:	0.000 (ft)		**Site Class:**	D - Stiff Soil	
Gh:	1.1	**Topography:** 1	**Struct Class:**	II	Page: 7

TES Tower Engineering Solutions

Increment Length: **5 (ft)**

Elev (ft)	Description	Thick (in)	Dia (in)	Area (in^2)	Ix (in^4)	W/t Ratio	D/t Ratio	Fpy (ksi)	S (in^3)	Weight (lb)
0.00		0.4375	64.500	88.956	46124.8	24.59	147.43	72.5	1408.	0.0
5.00		0.4375	63.323	87.321	43628.7	24.11	144.74	73.0	1357.	1499.6
10.00		0.4375	62.146	85.687	41224.4	23.64	142.05	73.6	1306.	1471.8
15.00		0.4375	60.969	84.052	38910.0	23.16	139.36	74.2	1257.	1444.0
20.00		0.4375	59.792	82.418	36683.9	22.69	136.67	74.7	1208.	1416.2
25.00		0.4375	58.615	80.783	34544.4	22.21	133.98	75.3	1160.	1388.3
30.00		0.4375	57.437	79.149	32489.8	21.74	131.29	75.8	1114.	1360.5
35.00		0.4375	56.260	77.514	30518.3	21.26	128.60	76.4	1068.	1332.7
40.00		0.4375	55.083	75.880	28628.2	20.79	125.90	76.9	1023.	1304.9
41.00	Bot - Section 2	0.4375	54.848	75.553	28259.8	20.69	125.37	77.1	1014.	257.6
45.00		0.4375	53.906	74.245	26817.8	20.32	123.21	77.5	979.9	1906.4
48.00	Top - Section 1	0.3750	53.950	63.765	23124.0	23.96	143.87	0.0	0.0	1408.1
50.00		0.3750	53.479	63.205	22519.6	23.74	142.61	73.5	829.4	432.1
55.00		0.3750	52.302	61.804	21055.1	23.18	139.47	74.1	792.9	1063.4
60.00		0.3750	51.125	60.403	19655.5	22.63	136.33	74.8	757.2	1039.6
65.00		0.3750	49.948	59.002	18319.3	22.08	133.19	75.4	722.4	1015.8
70.00		0.3750	48.771	57.601	17045.1	21.52	130.06	76.1	688.4	991.9
75.00		0.3750	47.594	56.200	15831.4	20.97	126.92	76.7	655.2	968.1
80.00		0.3750	46.417	54.799	14676.7	20.41	123.78	77.4	622.8	944.3
85.00	Bot - Section 3	0.3750	45.240	53.398	13579.6	19.86	120.64	78.0	591.2	920.4
90.00		0.3750	44.062	51.997	12538.5	19.31	117.50	78.7	560.5	1655.4
91.00	Top - Section 2	0.3125	44.452	43.779	10776.5	23.67	142.25	0.0	0.0	325.8
95.00		0.3125	43.510	42.845	10101.4	23.14	139.23	74.2	457.3	589.5
100.00		0.3125	42.333	41.678	9298.0	22.48	135.47	75.0	432.6	719.0
105.00		0.3125	41.156	40.510	8538.3	21.81	131.70	75.7	408.6	699.2
110.00		0.3125	39.979	39.343	7821.2	21.15	127.93	76.5	385.3	679.3
115.00		0.3125	38.802	38.175	7145.4	20.48	124.17	77.3	362.7	659.4
120.00		0.3125	37.625	37.008	6509.6	19.82	120.40	78.1	340.8	639.6
125.00		0.3125	36.448	35.841	5912.8	19.15	116.63	78.9	319.5	619.7
130.00	Bot - Section 4	0.3125	35.271	34.673	5353.6	18.49	112.87	79.7	299.0	599.9
135.00	Top - Section 3	0.2500	34.594	27.251	4060.9	22.99	138.37	0.0	0.0	1051.6
140.00		0.2500	33.417	26.317	3657.5	22.16	133.67	75.3	215.6	455.7
145.00		0.2500	32.240	25.383	3281.8	21.33	128.96	76.3	200.5	439.8
150.00		0.2500	31.062	24.449	2932.7	20.50	124.25	77.3	186.0	423.9
155.00		0.2500	29.885	23.515	2609.3	19.67	119.54	78.3	172.0	408.0
157.00		0.2500	29.415	23.141	2486.9	19.34	117.66	78.7	166.5	158.8
160.00		0.2500	28.708	22.581	2310.5	18.84	114.83	79.2	158.5	233.4
165.00		0.2500	27.531	21.647	2035.5	18.01	110.12	80.2	145.6	376.2
170.00		0.2500	26.354	20.713	1783.3	17.18	105.42	81.2	133.3	360.4
175.00		0.2500	25.177	19.779	1552.7	16.35	100.71	82.2	121.5	344.5
177.00		0.2500	24.706	19.405	1466.4	16.01	98.82	82.5	116.9	133.3
180.00	Top - Section 4	0.2500	24.000	18.845	1343.0	15.52	96.00	82.5	110.2	195.2
180.00	Bot - Section 5	0.2813	24.000	21.173	1504.9	13.79	85.33	63.5	123.5	
185.00		0.2813	24.000	21.173	1504.9	13.64	85.33	63.5	123.5	360.2
190.00		0.2813	24.000	21.173	1504.9	13.64	85.33	63.5	123.5	360.2
										34653.9

Copyright © 2020 by Tower Engineering Solutions, LLC. All rights reserved.

Wind Loading - Shaft

Structure:	CT08748-A-SBA		**Code:**	EIA/TIA-222-G	4/30/2020
Site Name:	Woodstock 4, CT		**Exposure:**	C	
Height:	190.00 (ft)		**Crest Height:**	0.00	
Base Elev:	0.000 (ft)		**Site Class:**	D - Stiff Soil	
Gh:	1.1	**Topography:** 1	**Struct Class:**	II	Page: 8

Tower Engineering Solutions

Load Case: 1.2D + 1.6W 101 mph Wind

Dead Load Factor 1.20

Wind Load Factor 1.60

Iterations 25

Elev (ft)	Description	Kzt	Kz	qz (psf)	qzGh (psf)	C (mph-ft)	Cf	Ice Thick (in)	Tributary (ft)	Aa (sf)	CfAa (sf)	Wind Force X (lb)	Dead Load Ice (lb)	Tot Dead Load (lb)
0.00		1.00	0.85	21.088	23.20	508.23	0.650	0.000	0.00	0.000	0.00	0.0	0.0	0.0
5.00		1.00	0.85	21.088	23.20	498.95	0.650	0.000	5.00	27.041	17.58	652.3	0.0	1799.5
10.00		1.00	0.85	21.088	23.20	489.68	0.650	0.000	5.00	26.543	17.25	640.3	0.0	1766.1
15.00		1.00	0.85	21.088	23.20	480.40	0.650	0.000	5.00	26.045	16.93	628.3	0.0	1732.8
20.00		1.00	0.90	22.375	24.61	485.29	0.650	0.000	5.00	25.547	16.61	653.9	0.0	1699.4
25.00		1.00	0.95	23.451	25.80	487.05	0.650	0.000	5.00	25.049	16.28	672.0	0.0	1666.0
30.00		1.00	0.98	24.369	26.81	486.51	0.650	0.000	5.00	24.550	15.96	684.4	0.0	1632.6
35.00		1.00	1.01	25.172	27.69	484.34	0.650	0.000	5.00	24.052	15.63	692.6	0.0	1599.3
40.00		1.00	1.04	25.890	28.48	480.92	0.650	0.000	5.00	23.554	15.31	697.6	0.0	1565.9
41.00	Bot - Section 2	1.00	1.05	26.025	28.63	480.11	0.650	0.000	1.00	4.651	3.02	138.5	0.0	309.2
45.00		1.00	1.07	26.540	29.19	476.51	0.650	0.000	4.00	18.659	12.13	566.5	0.0	2287.7
48.00	Top - Section 1	1.00	1.08	26.903	29.59	473.48	0.650	0.000	3.00	13.785	8.96	424.3	0.0	1689.8
50.00		1.00	1.09	27.135	29.85	478.01	0.650	0.000	2.00	9.091	5.91	282.2	0.0	518.5
55.00		1.00	1.12	27.685	30.45	472.20	0.650	0.000	5.00	22.378	14.55	708.7	0.0	1276.1
60.00		1.00	1.14	28.197	31.02	465.82	0.650	0.000	5.00	21.880	14.22	705.8	0.0	1247.5
65.00		1.00	1.16	28.676	31.54	458.95	0.650	0.000	5.00	21.382	13.90	701.4	0.0	1218.9
70.00		1.00	1.17	29.127	32.04	451.64	0.650	0.000	5.00	20.884	13.57	695.9	0.0	1190.3
75.00		1.00	1.19	29.553	32.51	443.95	0.650	0.000	5.00	20.386	13.25	689.2	0.0	1161.7
80.00	Appurtenance(s)	1.00	1.21	29.958	32.95	435.93	0.650	0.000	5.00	19.888	12.93	681.6	0.0	1133.1
85.00	Bot - Section 3	1.00	1.22	30.342	33.38	427.59	0.650	0.000	5.00	19.390	12.60	673.0	0.0	1104.5
90.00		1.00	1.24	30.710	33.78	418.98	0.650	0.000	5.00	19.156	12.45	673.0	0.0	1986.4
91.00	Top - Section 2	1.00	1.24	30.781	33.86	417.23	0.650	0.000	1.00	3.771	2.45	132.8	0.0	391.0
95.00		1.00	1.25	31.061	34.17	416.09	0.650	0.000	4.00	14.887	9.68	529.0	0.0	707.4
100.00	Appurtenance(s)	1.00	1.27	31.399	34.54	407.03	0.650	0.000	5.00	18.160	11.80	652.3	0.0	862.8
105.00		1.00	1.28	31.723	34.89	397.75	0.650	0.000	5.00	17.662	11.48	641.0	0.0	839.0
110.00	Appurtenance(s)	1.00	1.29	32.035	35.24	388.27	0.650	0.000	5.00	17.164	11.16	629.0	0.0	815.2
115.00		1.00	1.30	32.336	35.57	378.60	0.650	0.000	5.00	16.666	10.83	616.5	0.0	791.3
120.00		1.00	1.32	32.627	35.89	368.77	0.650	0.000	5.00	16.168	10.51	603.5	0.0	767.5
125.00		1.00	1.33	32.909	36.20	358.77	0.650	0.000	5.00	15.670	10.19	589.9	0.0	743.7
130.00	Bot - Section 4	1.00	1.34	33.182	36.50	348.62	0.650	0.000	5.00	15.172	9.86	575.9	0.0	719.8
135.00	Top - Section 3	1.00	1.35	33.446	36.79	338.33	0.650	0.000	5.00	14.885	9.68	569.6	0.0	1261.9
140.00	Appurtenance(s)	1.00	1.36	33.703	37.07	332.88	0.650	0.000	5.00	14.387	9.35	554.7	0.0	546.8
145.00		1.00	1.37	33.953	37.35	322.34	0.650	0.000	5.00	13.889	9.03	539.5	0.0	527.8
150.00		1.00	1.38	34.196	37.62	311.68	0.650	0.000	5.00	13.391	8.70	523.9	0.0	508.7
155.00		1.00	1.39	34.433	37.88	300.91	0.650	0.000	5.00	12.893	8.38	507.9	0.0	489.6
157.00	Appurtenance(s)	1.00	1.39	34.526	37.98	296.57	0.650	0.000	2.00	5.018	3.26	198.2	0.0	190.5
160.00		1.00	1.40	34.664	38.13	290.02	0.650	0.000	3.00	7.377	4.80	292.6	0.0	280.0
165.00		1.00	1.41	34.890	38.38	279.04	0.650	0.000	5.00	11.897	7.73	474.9	0.0	451.5
170.00		1.00	1.42	35.110	38.62	267.95	0.650	0.000	5.00	11.399	7.41	457.9	0.0	432.4
175.00		1.00	1.42	35.324	38.86	256.76	0.650	0.000	5.00	10.901	7.09	440.5	0.0	413.4
177.00	Appurtenance(s)	1.00	1.43	35.409	38.95	252.26	0.650	0.000	2.00	4.221	2.74	171.0	0.0	160.0
180.00	Top - Section 4	1.00	1.43	35.535	39.09	245.48	0.650	0.000	3.00	6.182	4.02	251.3	0.0	234.3
185.00	Appurtenance(s)	1.00	1.44	35.740	39.31	246.19	0.650	0.000	5.00	10.154	6.60	415.2	0.0	432.3
190.00		1.00	1.45	35.941	39.54	246.88	0.650	0.000	5.00	10.154	6.60	417.5	0.0	432.3
								Totals:	**190.00**			**23,046.2**		**41,584.7**

Copyright © 2020 by Tower Engineering Solutions, LLC. All rights reserved.

Discrete Appurtenance Forces

Structure:	CT08748-A-SBA		**Code:**	EIA/TIA-222-G	4/30/2020
Site Name:	Woodstock 4, CT		**Exposure:**	C	
Height:	190.00 (ft)		**Crest Height:**	0.00	
Base Elev:	0.000 (ft)		**Site Class:**	D - Stiff Soil	
Gh:	1.1	**Topography:** 1	**Struct Class:**	II	Page: 9

Tower Engineering Solutions

Load Case: 1.2D + 1.6W 101 mph Wind

Dead Load Factor 1.20

Wind Load Factor 1.60

Iterations 25

No.	Elev (ft)	Description	Qty	qz (psf)	qzGh (psf)	Orient Factor x Ka	Ka	Total CaAa (sf)	Dead Load (lb)	Horiz Ecc (ft)	Vert Ecc (ft)	Wind FX (lb)	Mom Y (lb-ft)	Mom Z (lb-ft)
1	185.00	ADC	6	35.740	39.314	0.55	0.80	0.33	115.20	0.000	0.000	20.71	0.00	0.00
2	185.00	Powerwave LGP21903	6	35.740	39.314	0.59	0.80	0.96	39.60	0.000	0.000	60.16	0.00	0.00
3	185.00	Powerwave LGP21401	6	35.740	39.314	0.51	0.80	3.97	101.52	0.000	0.000	249.66	0.00	0.00
4	185.00	Powerwave 7770.00	9	35.740	39.314	0.68	0.80	33.46	575.42	0.000	0.000	2104.85	0.00	0.00
5	185.00	Low Profile Platform	1	35.740	39.314	1.00	1.00	22.00	1500.00	0.000	0.000	1383.86	0.00	0.00
6	177.00	Platform w/ Hand Rails	1	35.409	38.950	1.00	1.00	32.00	1906.20	0.000	0.000	1994.24	0.00	0.00
7	177.00	EMS RR90-17-02DPL2	3	35.409	38.950	0.65	0.75	8.52	143.78	0.000	0.000	530.66	0.00	0.00
8	177.00	Ericsson KRY 112 489/2	3	35.409	38.950	0.62	0.75	1.20	55.44	0.000	0.000	75.01	0.00	0.00
9	177.00	782 11056	3	35.409	38.950	0.50	0.75	0.33	4.68	0.000	0.000	20.67	0.00	0.00
10	177.00	APXV18-206516S-C-A20	3	35.409	38.950	0.55	0.75	5.93	67.32	0.000	0.000	369.52	0.00	0.00
11	177.00	APXVAARR24_43-U-NA2	3	35.409	38.950	0.52	0.75	31.88	460.80	0.000	0.000	1986.63	0.00	0.00
12	177.00	4449 B71+B12	3	35.409	38.950	0.50	0.75	2.49	252.00	0.000	0.000	155.01	0.00	0.00
13	157.00	SAF	4	34.526	37.979	1.00	1.00	4.88	36.96	0.000	0.000	296.54	0.00	0.00
14	157.00	VHLPX3-6W	1	34.526	37.979	1.00	1.00	10.68	63.60	0.000	0.000	648.99	0.00	0.00
15	157.00	SUX6-65B	1	34.526	37.979	1.00	1.00	35.67	250.80	0.000	0.000	2167.54	0.00	0.00
16	157.00	Flush Mount	2	34.526	37.979	1.00	1.00	10.00	840.00	0.000	0.000	607.66	0.00	0.00
17	140.00	DS4C06F36D-N	1	33.703	37.074	1.00	1.00	5.50	84.00	0.000	0.000	326.25	0.00	0.00
18	130.00	SitePro UQB4	1	33.182	36.500	1.00	1.00	4.50	342.28	0.000	0.000	262.80	0.00	0.00
19	130.00	SitePro SV197-48	1	33.182	36.500	1.00	1.00	7.25	94.80	0.000	0.000	423.40	0.00	0.00
20	110.00	Antenex Y1505	2	32.035	35.238	1.00	1.00	7.20	12.00	0.000	0.000	405.95	0.00	0.00
21	110.00	Pipe Mounts	2	32.035	35.238	1.00	1.00	10.00	96.00	0.000	0.000	563.81	0.00	0.00
22	100.00	Standoffs	2	31.399	34.538	1.00	1.00	5.26	144.00	0.000	0.000	290.67	0.00	0.00
23	100.00	Decibel DB212-1	2	32.627	35.890	1.00	1.00	13.00	74.40	0.000	20.000	746.51	0.00	14930.18
24	80.00	Telewave ANT450D6-9	2	30.191	33.210	1.00	1.00	5.54	43.20	0.000	3.000	294.37	0.00	883.11
25	80.00	Standoffs	2	29.958	32.953	1.00	1.00	5.26	144.00	0.000	0.000	277.34	0.00	0.00
							Totals:		**7,448.00**			**16,262.81**		

Copyright © 2020 by Tower Engineering Solutions, LLC. All rights reserved.

Total Applied Force Summary

Structure:	CT08748-A-SBA		**Code:**	EIA/TIA-222-G	4/30/2020
Site Name:	Woodstock 4, CT		**Exposure:**	C	
Height:	190.00 (ft)		**Crest Height:**	0.00	
Base Elev:	0.000 (ft)		**Site Class:**	D - Stiff Soil	
Gh:	1.1	**Topography:** 1	**Struct Class:**	II	Page: 10

TES Tower Engineering Solutions

Load Case: 1.2D + 1.6W 101 mph Wind

Dead Load Factor 1.20

Wind Load Factor 1.60

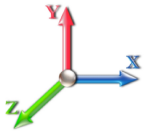

Iterations 25

Elev (ft)	Description	Lateral FX (-) (lb)	Axial FY (-) (lb)	Torsion MY (lb-ft)	Moment MZ (lb-ft)
0.00		0.00	0.00	0.00	0.00
5.00		652.33	1957.47	0.00	0.00
10.00		640.32	1924.10	0.00	0.00
15.00		628.30	1890.73	0.00	0.00
20.00		653.91	1857.36	0.00	0.00
25.00		672.00	1823.99	0.00	0.00
30.00		684.41	1790.62	0.00	0.00
35.00		692.64	1757.25	0.00	0.00
40.00		697.64	1723.88	0.00	0.00
41.00		138.48	340.77	0.00	0.00
45.00		566.53	2414.12	0.00	0.00
48.00		424.27	1784.56	0.00	0.00
50.00		282.20	581.65	0.00	0.00
55.00		708.75	1434.11	0.00	0.00
60.00		705.78	1405.51	0.00	0.00
65.00		701.44	1376.91	0.00	0.00
70.00		695.88	1348.30	0.00	0.00
75.00		689.22	1319.70	0.00	0.00
80.00	(4) attachments	1253.29	1478.30	0.00	883.11
85.00		673.05	1256.25	0.00	0.00
90.00		672.99	2138.16	0.00	0.00
91.00		132.81	421.34	0.00	0.00
95.00		528.98	828.83	0.00	0.00
100.00	(4) attachments	1689.49	1232.98	0.00	14930.18
105.00		640.97	984.51	0.00	0.00
110.00	(4) attachments	1598.78	1068.67	0.00	0.00
115.00		616.52	930.59	0.00	0.00
120.00		603.48	906.76	0.00	0.00
125.00		589.93	882.92	0.00	0.00
130.00	(2) attachments	1262.12	1296.16	0.00	0.00
135.00		569.55	1401.15	0.00	0.00
140.00	(1) attachments	880.98	770.10	0.00	0.00
145.00		539.50	660.79	0.00	0.00
150.00		523.88	641.72	0.00	0.00
155.00		507.89	622.65	0.00	0.00
157.00	(8) attachments	3918.93	1435.08	0.00	0.00
160.00		292.56	355.00	0.00	0.00
165.00		474.87	576.41	0.00	0.00
170.00		457.86	557.34	0.00	0.00
175.00		440.53	538.27	0.00	0.00
177.00	(19) attachments	5302.73	3100.19	0.00	0.00
180.00		251.32	241.19	0.00	0.00
185.00	(28) attachments	4234.42	2775.54	0.00	0.00
190.00		417.51	432.28	0.00	0.00
	Totals:	**39,308.99**	**54,264.23**	**0.00**	**15,813.29**

Copyright © 2020 by Tower Engineering Solutions, LLC. All rights reserved.

Calculated Forces

Structure:	CT08748-A-SBA	**Code:**	EIA/TIA-222-G	4/30/2020	
Site Name:	Woodstock 4, CT	**Exposure:**	C		
Height:	190.00 (ft)	**Crest Height:**	0.00		
Base Elev:	0.000 (ft)	**Site Class:**	D - Stiff Soil		
Gh:	1.1 **Topography:** 1	**Struct Class:**	II	Page: 11	

Tower Engineering Solutions

Load Case: 1.2D + 1.6W 101 mph Wind

Dead Load Factor 1.20

Wind Load Factor 1.60

Iterations 25

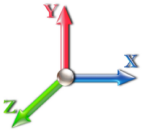

Seg Elev (ft)	Pu FY (-) (kips)	Vu FX (-) (kips)	Tu MY (-) (ft-kips)	Mu MZ (ft-kips)	Mu MX (ft-kips)	Resultant Moment (ft-kips)	phi Pn (kips)	phi Vn (kips)	phi Tn (ft-kips)	phi Mn (ft-kips)	Total Deflect (in)	Rotation Sway (deg)	Rotation Twist (deg)	Stress Ratio
0.00	-54.21	-39.38	0.00	-4848.6	0.00	4848.65	5803.10	2901.55	15291.3	7657.05	0.00	0.000	0.000	0.643
5.00	-52.16	-38.86	0.00	-4651.7	0.00	4651.76	5740.33	2870.16	14846.1	7434.11	0.08	-0.146	0.000	0.635
10.00	-50.13	-38.34	0.00	-4457.4	0.00	4457.47	5675.91	2837.95	14402.8	7212.14	0.31	-0.295	0.000	0.627
15.00	-48.15	-37.83	0.00	-4265.7	0.00	4265.76	5609.85	2804.93	13961.8	6991.28	0.70	-0.446	0.000	0.619
20.00	-46.20	-37.28	0.00	-4076.6	0.00	4076.62	5542.15	2771.07	13523.1	6771.63	1.25	-0.598	0.000	0.611
25.00	-44.28	-36.71	0.00	-3890.2	0.00	3890.22	5472.81	2736.40	13087.2	6553.32	1.96	-0.752	0.000	0.602
30.00	-42.40	-36.12	0.00	-3706.6	0.00	3706.67	5401.82	2700.91	12654.1	6336.48	2.83	-0.909	0.000	0.593
35.00	-40.56	-35.51	0.00	-3526.1	0.00	3526.10	5329.20	2664.60	12224.2	6121.21	3.87	-1.067	0.000	0.584
40.00	-38.79	-34.84	0.00	-3348.5	0.00	3348.58	5254.93	2627.47	11797.7	5907.64	5.07	-1.227	0.000	0.574
41.00	-38.40	-34.75	0.00	-3313.7	0.00	3313.74	5239.88	2619.94	11712.8	5865.14	5.34	-1.261	0.000	0.572
45.00	-35.93	-34.20	0.00	-3174.7	0.00	3174.76	5179.02	2589.51	11374.8	5695.90	6.45	-1.391	0.000	0.564
48.00	-34.11	-33.78	0.00	-3072.1	0.00	3072.17	4202.19	2101.09	9258.62	4636.19	7.35	-1.491	0.000	0.671
50.00	-33.46	-33.55	0.00	-3004.6	0.00	3004.61	4180.07	2090.03	9128.39	4570.98	7.99	-1.558	0.000	0.666
55.00	-31.94	-32.91	0.00	-2836.8	0.00	2836.84	4123.62	2061.81	8804.12	4408.60	9.72	-1.742	0.000	0.651
60.00	-30.46	-32.26	0.00	-2672.3	0.00	2672.31	4065.54	2032.77	8481.93	4247.27	11.65	-1.928	0.000	0.637
65.00	-29.00	-31.60	0.00	-2511.0	0.00	2511.03	4005.81	2002.90	8162.06	4087.10	13.77	-2.116	0.000	0.622
70.00	-27.58	-30.95	0.00	-2353.0	0.00	2353.02	3944.44	1972.22	7844.75	3928.21	16.09	-2.305	0.000	0.606
75.00	-26.19	-30.29	0.00	-2198.2	0.00	2198.29	3881.43	1940.71	7530.24	3770.72	18.60	-2.495	0.000	0.590
80.00	-24.67	-29.05	0.00	-2045.9	0.00	2045.96	3816.78	1908.39	7218.77	3614.75	21.32	-2.685	0.000	0.573
85.00	-23.36	-28.40	0.00	-1900.6	0.00	1900.69	3750.48	1875.24	6910.57	3460.42	24.23	-2.877	0.000	0.556
90.00	-21.20	-27.66	0.00	-1758.7	0.00	1758.70	3682.55	1841.27	6605.90	3307.86	27.35	-3.068	0.000	0.538
91.00	-20.74	-27.54	0.00	-1731.0	0.00	1731.04	2898.33	1449.17	5260.79	2634.30	27.99	-3.108	0.000	0.665
95.00	-19.85	-27.03	0.00	-1620.8	0.00	1620.89	2860.60	1430.30	5080.74	2544.15	30.66	-3.262	0.000	0.644
100.00	-18.63	-25.34	0.00	-1470.8	0.00	1470.82	2811.95	1405.98	4857.28	2432.25	34.20	-3.481	0.000	0.612
105.00	-17.59	-24.71	0.00	-1344.1	0.00	1344.12	2761.66	1380.83	4635.80	2321.34	37.96	-3.697	0.000	0.586
110.00	-16.55	-23.10	0.00	-1220.6	0.00	1220.60	2709.73	1354.87	4416.54	2211.55	41.94	-3.910	0.000	0.558
115.00	-15.58	-22.48	0.00	-1105.1	0.00	1105.10	2656.16	1328.08	4199.76	2103.00	46.15	-4.122	0.000	0.532
120.00	-14.64	-21.86	0.00	-992.71	0.00	992.71	2600.95	1300.48	3985.68	1995.80	50.57	-4.331	0.000	0.503
125.00	-13.73	-21.25	0.00	-883.40	0.00	883.40	2544.10	1272.05	3774.55	1890.08	55.21	-4.535	0.000	0.473
130.00	-12.47	-19.93	0.00	-777.13	0.00	777.13	2485.60	1242.80	3566.61	1785.96	60.07	-4.735	0.000	0.440
135.00	-11.06	-19.29	0.00	-677.46	0.00	677.46	1823.78	911.89	2575.19	1289.51	65.13	-4.928	0.000	0.532
140.00	-10.31	-18.38	0.00	-581.04	0.00	581.04	1784.40	892.20	2432.60	1218.11	70.38	-5.114	0.000	0.483
145.00	-9.64	-17.81	0.00	-489.16	0.00	489.16	1743.38	871.69	2291.70	1147.55	75.84	-5.322	0.000	0.432
150.00	-8.99	-17.26	0.00	-400.10	0.00	400.10	1700.71	850.36	2152.72	1077.96	81.52	-5.515	0.000	0.377
155.00	-8.39	-16.71	0.00	-313.81	0.00	313.81	1656.41	828.20	2015.90	1009.45	87.38	-5.688	0.000	0.316
157.00	-7.33	-12.68	0.00	-280.39	0.00	280.39	1638.23	819.11	1961.83	982.37	89.77	-5.753	0.000	0.290
160.00	-6.98	-12.36	0.00	-242.36	0.00	242.36	1610.46	805.23	1881.48	942.14	93.41	-5.842	0.000	0.262
165.00	-6.44	-11.85	0.00	-180.54	0.00	180.54	1562.88	781.44	1749.71	876.15	99.59	-5.972	0.000	0.210
170.00	-5.91	-11.34	0.00	-121.31	0.00	121.31	1513.65	756.82	1620.81	811.61	105.90	-6.078	0.000	0.154
175.00	-5.42	-10.85	0.00	-64.60	0.00	64.60	1462.77	731.39	1495.04	748.63	112.29	-6.152	0.000	0.090
177.00	-2.90	-5.25	0.00	-42.90	0.00	42.90	1441.72	720.86	1445.41	723.78	114.87	-6.172	0.000	0.061
180.00	-2.69	-4.97	0.00	-27.16	0.00	27.16	1400.09	700.04	1362.73	682.38	118.75	-6.192	0.000	0.042
180.00	-2.69	-4.97	0.00	-27.16	0.00	27.16	1210.02	605.01	1174.63	588.19	118.75	-6.192	0.000	0.048
185.00	-0.38	-0.46	0.00	-2.31	0.00	2.31	1210.02	605.01	1174.63	588.19	125.23	-6.208	0.000	0.004
190.00	0.00	-0.42	0.00	0.00	0.00	0.00	1210.02	605.01	1174.63	588.19	131.72	-6.209	0.000	0.000

Copyright © 2020 by Tower Engineering Solutions, LLC. All rights reserved.

Wind Loading - Shaft

Structure:	CT08748-A-SBA		**Code:**	EIA/TIA-222-G	4/30/2020
Site Name:	Woodstock 4, CT		**Exposure:**	C	
Height:	190.00 (ft)		**Crest Height:**	0.00	
Base Elev:	0.000 (ft)		**Site Class:**	D - Stiff Soil	
Gh:	1.1	**Topography:** 1	**Struct Class:**	II	Page: 12

Tower Engineering Solutions

Load Case: 0.9D + 1.6W 101 mph Wind

Dead Load Factor 0.90

Wind Load Factor 1.60

Iterations 25

Elev (ft)	Description	Kzt	Kz	qz (psf)	qzGh (psf)	C (mph-ft)	Cf	Ice Thick (in)	Tributary (ft)	Aa (sf)	CfAa (sf)	Wind Force X (lb)	Dead Load Ice (lb)	Tot Dead Load (lb)
0.00		1.00	0.85	21.088	23.20	508.23	0.650	0.000	0.00	0.000	0.00	0.0	0.0	0.0
5.00		1.00	0.85	21.088	23.20	498.95	0.650	0.000	5.00	27.041	17.58	652.3	0.0	1349.6
10.00		1.00	0.85	21.088	23.20	489.68	0.650	0.000	5.00	26.543	17.25	640.3	0.0	1324.6
15.00		1.00	0.85	21.088	23.20	480.40	0.650	0.000	5.00	26.045	16.93	628.3	0.0	1299.6
20.00		1.00	0.90	22.375	24.61	485.29	0.650	0.000	5.00	25.547	16.61	653.9	0.0	1274.5
25.00		1.00	0.95	23.451	25.80	487.05	0.650	0.000	5.00	25.049	16.28	672.0	0.0	1249.5
30.00		1.00	0.98	24.369	26.81	486.51	0.650	0.000	5.00	24.550	15.96	684.4	0.0	1224.5
35.00		1.00	1.01	25.172	27.69	484.34	0.650	0.000	5.00	24.052	15.63	692.6	0.0	1199.5
40.00		1.00	1.04	25.890	28.48	480.92	0.650	0.000	5.00	23.554	15.31	697.6	0.0	1174.4
41.00	Bot - Section 2	1.00	1.05	26.025	28.63	480.11	0.650	0.000	1.00	4.651	3.02	138.5	0.0	231.9
45.00		1.00	1.07	26.540	29.19	476.51	0.650	0.000	4.00	18.659	12.13	566.5	0.0	1715.8
48.00	Top - Section 1	1.00	1.08	26.903	29.59	473.48	0.650	0.000	3.00	13.785	8.96	424.3	0.0	1267.3
50.00		1.00	1.09	27.135	29.85	478.01	0.650	0.000	2.00	9.091	5.91	282.2	0.0	388.8
55.00		1.00	1.12	27.685	30.45	472.20	0.650	0.000	5.00	22.378	14.55	708.7	0.0	957.1
60.00		1.00	1.14	28.197	31.02	465.82	0.650	0.000	5.00	21.880	14.22	705.8	0.0	935.6
65.00		1.00	1.16	28.676	31.54	458.95	0.650	0.000	5.00	21.382	13.90	701.4	0.0	914.2
70.00		1.00	1.17	29.127	32.04	451.64	0.650	0.000	5.00	20.884	13.57	695.9	0.0	892.7
75.00		1.00	1.19	29.553	32.51	443.95	0.650	0.000	5.00	20.386	13.25	689.2	0.0	871.3
80.00	Appurtenance(s)	1.00	1.21	29.958	32.95	435.93	0.650	0.000	5.00	19.888	12.93	681.6	0.0	849.8
85.00	Bot - Section 3	1.00	1.22	30.342	33.38	427.59	0.650	0.000	5.00	19.390	12.60	673.0	0.0	828.4
90.00		1.00	1.24	30.710	33.78	418.98	0.650	0.000	5.00	19.156	12.45	673.0	0.0	1489.8
91.00	Top - Section 2	1.00	1.24	30.781	33.86	417.23	0.650	0.000	1.00	3.771	2.45	132.8	0.0	293.2
95.00		1.00	1.25	31.061	34.17	416.09	0.650	0.000	4.00	14.887	9.68	529.0	0.0	530.6
100.00	Appurtenance(s)	1.00	1.27	31.399	34.54	407.03	0.650	0.000	5.00	18.160	11.80	652.3	0.0	647.1
105.00		1.00	1.28	31.723	34.89	397.75	0.650	0.000	5.00	17.662	11.48	641.0	0.0	629.3
110.00	Appurtenance(s)	1.00	1.29	32.035	35.24	388.27	0.650	0.000	5.00	17.164	11.16	629.0	0.0	611.4
115.00		1.00	1.30	32.336	35.57	378.60	0.650	0.000	5.00	16.666	10.83	616.5	0.0	593.5
120.00		1.00	1.32	32.627	35.89	368.77	0.650	0.000	5.00	16.168	10.51	603.5	0.0	575.6
125.00		1.00	1.33	32.909	36.20	358.77	0.650	0.000	5.00	15.670	10.19	589.9	0.0	557.7
130.00	Bot - Section 4	1.00	1.34	33.182	36.50	348.62	0.650	0.000	5.00	15.172	9.86	575.9	0.0	539.9
135.00	Top - Section 3	1.00	1.35	33.446	36.79	338.33	0.650	0.000	5.00	14.885	9.68	569.6	0.0	946.4
140.00	Appurtenance(s)	1.00	1.36	33.703	37.07	332.88	0.650	0.000	5.00	14.387	9.35	554.7	0.0	410.1
145.00		1.00	1.37	33.953	37.35	322.34	0.650	0.000	5.00	13.889	9.03	539.5	0.0	395.8
150.00		1.00	1.38	34.196	37.62	311.68	0.650	0.000	5.00	13.391	8.70	523.9	0.0	381.5
155.00		1.00	1.39	34.433	37.88	300.91	0.650	0.000	5.00	12.893	8.38	507.9	0.0	367.2
157.00	Appurtenance(s)	1.00	1.39	34.526	37.98	296.57	0.650	0.000	2.00	5.018	3.26	198.2	0.0	142.9
160.00		1.00	1.40	34.664	38.13	290.02	0.650	0.000	3.00	7.377	4.80	292.6	0.0	210.0
165.00		1.00	1.41	34.890	38.38	279.04	0.650	0.000	5.00	11.897	7.73	474.9	0.0	338.6
170.00		1.00	1.42	35.110	38.62	267.95	0.650	0.000	5.00	11.399	7.41	457.9	0.0	324.3
175.00		1.00	1.42	35.324	38.86	256.76	0.650	0.000	5.00	10.901	7.09	440.5	0.0	310.0
177.00	Appurtenance(s)	1.00	1.43	35.409	38.95	252.26	0.650	0.000	2.00	4.221	2.74	171.0	0.0	120.0
180.00	Top - Section 4	1.00	1.43	35.535	39.09	245.48	0.650	0.000	3.00	6.182	4.02	251.3	0.0	175.7
185.00	Appurtenance(s)	1.00	1.44	35.740	39.31	246.19	0.650	0.000	5.00	10.154	6.60	415.2	0.0	324.2
190.00		1.00	1.45	35.941	39.54	246.88	0.650	0.000	5.00	10.154	6.60	417.5	0.0	324.2
								Totals:	**190.00**			**23,046.2**		**31,188.5**

Copyright © 2020 by Tower Engineering Solutions, LLC. All rights reserved.

Discrete Appurtenance Forces

Structure:	CT08748-A-SBA		**Code:**	EIA/TIA-222-G	4/30/2020
Site Name:	Woodstock 4, CT		**Exposure:**	C	
Height:	190.00 (ft)		**Crest Height:**	0.00	
Base Elev:	0.000 (ft)		**Site Class:**	D - Stiff Soil	
Gh:	1.1	**Topography:** 1	**Struct Class:**	II	Page: 13

Tower Engineering Solutions

Load Case: 0.9D + 1.6W 101 mph Wind

Dead Load Factor 0.90

Wind Load Factor 1.60

Iterations 25

No.	Elev (ft)	Description	Qty	qz (psf)	qzGh (psf)	Orient Factor x Ka	Ka	Total CaAa (sf)	Dead Load (lb)	Horiz Ecc (ft)	Vert Ecc (ft)	Wind FX (lb)	Mom Y (lb-ft)	Mom Z (lb-ft)
1	185.00	ADC	6	35.740	39.314	0.55	0.80	0.33	86.40	0.000	0.000	20.71	0.00	0.00
2	185.00	Powerwave LGP21903	6	35.740	39.314	0.59	0.80	0.96	29.70	0.000	0.000	60.16	0.00	0.00
3	185.00	Powerwave LGP21401	6	35.740	39.314	0.51	0.80	3.97	76.14	0.000	0.000	249.66	0.00	0.00
4	185.00	Powerwave 7770.00	9	35.740	39.314	0.68	0.80	33.46	431.57	0.000	0.000	2104.85	0.00	0.00
5	185.00	Low Profile Platform	1	35.740	39.314	1.00	1.00	22.00	1125.00	0.000	0.000	1383.86	0.00	0.00
6	177.00	Platform w/ Hand Rails	1	35.409	38.950	1.00	1.00	32.00	1429.65	0.000	0.000	1994.24	0.00	0.00
7	177.00	EMS RR90-17-02DPL2	3	35.409	38.950	0.65	0.75	8.52	107.84	0.000	0.000	530.66	0.00	0.00
8	177.00	Ericsson KRY 112 489/2	3	35.409	38.950	0.62	0.75	1.20	41.58	0.000	0.000	75.01	0.00	0.00
9	177.00	782 11056	3	35.409	38.950	0.50	0.75	0.33	3.51	0.000	0.000	20.67	0.00	0.00
10	177.00	APXV18-206516S-C-A20	3	35.409	38.950	0.55	0.75	5.93	50.49	0.000	0.000	369.52	0.00	0.00
11	177.00	APXVAARR24_43-U-NA2	3	35.409	38.950	0.52	0.75	31.88	345.60	0.000	0.000	1986.63	0.00	0.00
12	177.00	4449 B71+B12	3	35.409	38.950	0.50	0.75	2.49	189.00	0.000	0.000	155.01	0.00	0.00
13	157.00	SAF	4	34.526	37.979	1.00	1.00	4.88	27.72	0.000	0.000	296.54	0.00	0.00
14	157.00	VHLPX3-6W	1	34.526	37.979	1.00	1.00	10.68	47.70	0.000	0.000	648.99	0.00	0.00
15	157.00	SUX6-65B	1	34.526	37.979	1.00	1.00	35.67	188.10	0.000	0.000	2167.54	0.00	0.00
16	157.00	Flush Mount	2	34.526	37.979	1.00	1.00	10.00	630.00	0.000	0.000	607.66	0.00	0.00
17	140.00	DS4C06F36D-N	1	33.703	37.074	1.00	1.00	5.50	63.00	0.000	0.000	326.25	0.00	0.00
18	130.00	SitePro UQB4	1	33.182	36.500	1.00	1.00	4.50	256.71	0.000	0.000	262.80	0.00	0.00
19	130.00	SitePro SV197-48	1	33.182	36.500	1.00	1.00	7.25	71.10	0.000	0.000	423.40	0.00	0.00
20	110.00	Antenex Y1505	2	32.035	35.238	1.00	1.00	7.20	9.00	0.000	0.000	405.95	0.00	0.00
21	110.00	Pipe Mounts	2	32.035	35.238	1.00	1.00	10.00	72.00	0.000	0.000	563.81	0.00	0.00
22	100.00	Standoffs	2	31.399	34.538	1.00	1.00	5.26	108.00	0.000	0.000	290.67	0.00	0.00
23	100.00	Decibel DB212-1	2	32.627	35.890	1.00	1.00	13.00	55.80	0.000	20.000	746.51	0.00	14930.18
24	80.00	Telewave ANT450D6-9	2	30.191	33.210	1.00	1.00	5.54	32.40	0.000	3.000	294.37	0.00	883.11
25	80.00	Standoffs	2	29.958	32.953	1.00	1.00	5.26	108.00	0.000	0.000	277.34	0.00	0.00
							Totals:		**5,586.00**			**16,262.81**		

Copyright © 2020 by Tower Engineering Solutions, LLC. All rights reserved.

Total Applied Force Summary

Structure:	CT08748-A-SBA		**Code:**	EIA/TIA-222-G	4/30/2020
Site Name:	Woodstock 4, CT		**Exposure:**	C	
Height:	190.00 (ft)		**Crest Height:**	0.00	
Base Elev:	0.000 (ft)		**Site Class:**	D - Stiff Soil	
Gh:	1.1	**Topography:** 1	**Struct Class:**	II	Page: 14

Tower Engineering Solutions

Load Case: 0.9D + 1.6W 101 mph Wind

Dead Load Factor 0.90

Wind Load Factor 1.60

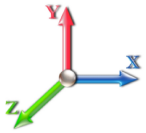

Iterations 25

Elev (ft)	Description	Lateral FX (-) (lb)	Axial FY (-) (lb)	Torsion MY (lb-ft)	Moment MZ (lb-ft)
0.00		0.00	0.00	0.00	0.00
5.00		652.33	1468.10	0.00	0.00
10.00		640.32	1443.08	0.00	0.00
15.00		628.30	1418.05	0.00	0.00
20.00		653.91	1393.02	0.00	0.00
25.00		672.00	1367.99	0.00	0.00
30.00		684.41	1342.96	0.00	0.00
35.00		692.64	1317.94	0.00	0.00
40.00		697.64	1292.91	0.00	0.00
41.00		138.48	255.58	0.00	0.00
45.00		566.53	1810.59	0.00	0.00
48.00		424.27	1338.42	0.00	0.00
50.00		282.20	436.24	0.00	0.00
55.00		708.75	1075.58	0.00	0.00
60.00		705.78	1054.13	0.00	0.00
65.00		701.44	1032.68	0.00	0.00
70.00		695.88	1011.23	0.00	0.00
75.00		689.22	989.78	0.00	0.00
80.00	(4) attachments	1253.29	1108.72	0.00	883.11
85.00		673.05	942.19	0.00	0.00
90.00		672.99	1603.62	0.00	0.00
91.00		132.81	316.01	0.00	0.00
95.00		528.98	621.62	0.00	0.00
100.00	(4) attachments	1689.49	924.74	0.00	14930.18
105.00		640.97	738.38	0.00	0.00
110.00	(4) attachments	1598.78	801.50	0.00	0.00
115.00		616.52	697.95	0.00	0.00
120.00		603.48	680.07	0.00	0.00
125.00		589.93	662.19	0.00	0.00
130.00	(2) attachments	1262.12	972.12	0.00	0.00
135.00		569.55	1050.87	0.00	0.00
140.00	(1) attachments	880.98	577.57	0.00	0.00
145.00		539.50	495.59	0.00	0.00
150.00		523.88	481.29	0.00	0.00
155.00		507.89	466.99	0.00	0.00
157.00	(8) attachments	3918.93	1076.31	0.00	0.00
160.00		292.56	266.25	0.00	0.00
165.00		474.87	432.31	0.00	0.00
170.00		457.86	418.01	0.00	0.00
175.00		440.53	403.71	0.00	0.00
177.00	(19) attachments	5302.73	2325.15	0.00	0.00
180.00		251.32	180.90	0.00	0.00
185.00	(28) attachments	4234.42	2081.65	0.00	0.00
190.00		417.51	324.21	0.00	0.00
	Totals:	**39,308.99**	**40,698.18**	**0.00**	**15,813.29**

Copyright © 2020 by Tower Engineering Solutions, LLC. All rights reserved.

Calculated Forces

Structure:	CT08748-A-SBA	**Code:**	EIA/TIA-222-G	4/30/2020	
Site Name:	Woodstock 4, CT	**Exposure:**	C		
Height:	190.00 (ft)	**Crest Height:**	0.00		
Base Elev:	0.000 (ft)	**Site Class:**	D - Stiff Soil		
Gh:	1.1 **Topography:** 1	**Struct Class:**	II	Page: 15	

Load Case: 0.9D + 1.6W 101 mph Wind

Dead Load Factor 0.90

Wind Load Factor 1.60

Iterations 25

Seg Elev (ft)	Pu FY (-) (kips)	Vu FX (-) (kips)	Tu MY (-) (ft-kips)	Mu MZ (ft-kips)	Mu MX (ft-kips)	Resultant Moment (ft-kips)	phi Pn (kips)	phi Vn (kips)	phi Tn (ft-kips)	phi Mn (ft-kips)	Total Deflect (in)	Rotation Sway (deg)	Rotation Twist (deg)	Stress Ratio
0.00	-40.65	-39.36	0.00	-4803.7	0.00	4803.76	5803.10	2901.55	15291.3	7657.05	0.00	0.000	0.000	0.635
5.00	-39.08	-38.81	0.00	-4606.9	0.00	4606.96	5740.33	2870.16	14846.1	7434.11	0.08	-0.145	0.000	0.627
10.00	-37.54	-38.26	0.00	-4412.9	0.00	4412.93	5675.91	2837.95	14402.8	7212.14	0.31	-0.292	0.000	0.619
15.00	-36.03	-37.71	0.00	-4221.6	0.00	4221.64	5609.85	2804.93	13961.8	6991.28	0.70	-0.441	0.000	0.610
20.00	-34.54	-37.14	0.00	-4033.0	0.00	4033.07	5542.15	2771.07	13523.1	6771.63	1.24	-0.592	0.000	0.602
25.00	-33.09	-36.54	0.00	-3847.3	0.00	3847.37	5472.81	2736.40	13087.2	6553.32	1.94	-0.745	0.000	0.593
30.00	-31.66	-35.92	0.00	-3664.6	0.00	3664.67	5401.82	2700.91	12654.1	6336.48	2.81	-0.899	0.000	0.584
35.00	-30.25	-35.29	0.00	-3485.0	0.00	3485.06	5329.20	2664.60	12224.2	6121.21	3.83	-1.056	0.000	0.575
40.00	-28.92	-34.62	0.00	-3308.6	0.00	3308.60	5254.93	2627.47	11797.7	5907.64	5.02	-1.214	0.000	0.566
41.00	-28.61	-34.51	0.00	-3273.9	0.00	3273.98	5239.88	2619.94	11712.8	5865.14	5.28	-1.247	0.000	0.564
45.00	-26.75	-33.96	0.00	-3135.9	0.00	3135.93	5179.02	2589.51	11374.8	5695.90	6.38	-1.376	0.000	0.556
48.00	-25.37	-33.54	0.00	-3034.0	0.00	3034.06	4202.19	2101.09	9258.62	4636.19	7.28	-1.474	0.000	0.661
50.00	-24.87	-33.30	0.00	-2966.9	0.00	2966.99	4180.07	2090.03	9128.39	4570.98	7.91	-1.541	0.000	0.655
55.00	-23.71	-32.63	0.00	-2800.5	0.00	2800.50	4123.62	2061.81	8804.12	4408.60	9.62	-1.723	0.000	0.641
60.00	-22.58	-31.97	0.00	-2637.3	0.00	2637.33	4065.54	2032.77	8481.93	4247.27	11.53	-1.906	0.000	0.627
65.00	-21.47	-31.30	0.00	-2477.4	0.00	2477.48	4005.81	2002.90	8162.06	4087.10	13.62	-2.091	0.000	0.612
70.00	-20.39	-30.63	0.00	-2320.9	0.00	2320.98	3944.44	1972.22	7844.75	3928.21	15.91	-2.278	0.000	0.596
75.00	-19.33	-29.97	0.00	-2167.8	0.00	2167.81	3881.43	1940.71	7530.24	3770.72	18.40	-2.465	0.000	0.580
80.00	-18.18	-28.73	0.00	-2017.0	0.00	2017.09	3816.78	1908.39	7218.77	3614.75	21.08	-2.653	0.000	0.563
85.00	-17.18	-28.07	0.00	-1873.4	0.00	1873.46	3750.48	1875.24	6910.57	3460.42	23.96	-2.842	0.000	0.546
90.00	-15.56	-27.34	0.00	-1733.1	0.00	1733.13	3682.55	1841.27	6605.90	3307.86	27.04	-3.031	0.000	0.528
91.00	-15.21	-27.22	0.00	-1705.7	0.00	1705.79	2898.33	1449.17	5260.79	2634.30	27.67	-3.070	0.000	0.653
95.00	-14.53	-26.70	0.00	-1596.9	0.00	1596.91	2860.60	1430.30	5080.74	2544.15	30.31	-3.222	0.000	0.633
100.00	-13.61	-25.01	0.00	-1448.4	0.00	1448.47	2811.95	1405.98	4857.28	2432.25	33.80	-3.437	0.000	0.601
105.00	-12.82	-24.38	0.00	-1323.4	0.00	1323.40	2761.66	1380.83	4635.80	2321.34	37.51	-3.649	0.000	0.575
110.00	-12.05	-22.77	0.00	-1201.5	0.00	1201.53	2709.73	1354.87	4416.54	2211.55	41.45	-3.860	0.000	0.548
115.00	-11.31	-22.15	0.00	-1087.6	0.00	1087.67	2656.16	1328.08	4199.76	2103.00	45.60	-4.068	0.000	0.522
120.00	-10.60	-21.54	0.00	-976.92	0.00	976.92	2600.95	1300.48	3985.68	1995.80	49.97	-4.273	0.000	0.494
125.00	-9.91	-20.93	0.00	-869.24	0.00	869.24	2544.10	1272.05	3774.55	1890.08	54.55	-4.475	0.000	0.464
130.00	-8.98	-19.63	0.00	-764.58	0.00	764.58	2485.60	1242.80	3566.61	1785.96	59.34	-4.672	0.000	0.432
135.00	-7.92	-19.00	0.00	-666.45	0.00	666.45	1823.78	911.89	2575.19	1289.51	64.33	-4.862	0.000	0.522
140.00	-7.36	-18.10	0.00	-571.46	0.00	571.46	1784.40	892.20	2432.60	1218.11	69.51	-5.044	0.000	0.474
145.00	-6.85	-17.54	0.00	-480.99	0.00	480.99	1743.38	871.69	2291.70	1147.55	74.90	-5.249	0.000	0.423
150.00	-6.37	-16.99	0.00	-393.30	0.00	393.30	1700.71	850.36	2152.72	1077.96	80.49	-5.438	0.000	0.369
155.00	-5.92	-16.45	0.00	-308.35	0.00	308.35	1656.41	828.20	2015.90	1009.45	86.27	-5.608	0.000	0.309
157.00	-5.22	-12.45	0.00	-275.45	0.00	275.45	1638.23	819.11	1961.83	982.37	88.63	-5.672	0.000	0.284
160.00	-4.96	-12.15	0.00	-238.09	0.00	238.09	1610.46	805.23	1881.48	942.14	92.22	-5.760	0.000	0.256
165.00	-4.55	-11.64	0.00	-177.36	0.00	177.36	1562.88	781.44	1749.71	876.15	98.32	-5.888	0.000	0.206
170.00	-4.17	-11.15	0.00	-119.17	0.00	119.17	1513.65	756.82	1620.81	811.61	104.53	-5.992	0.000	0.150
175.00	-3.80	-10.67	0.00	-63.44	0.00	63.44	1462.77	731.39	1495.04	748.63	110.84	-6.065	0.000	0.088
177.00	-2.05	-5.15	0.00	-42.11	0.00	42.11	1441.72	720.86	1445.41	723.78	113.38	-6.084	0.000	0.060
180.00	-1.90	-4.88	0.00	-26.66	0.00	26.66	1400.09	700.04	1362.73	682.38	117.20	-6.104	0.000	0.040
180.00	-1.90	-4.88	0.00	-26.66	0.00	26.66	1210.02	605.01	1174.63	588.19	117.20	-6.104	0.000	0.047
185.00	-0.28	-0.45	0.00	-2.25	0.00	2.25	1210.02	605.01	1174.63	588.19	123.59	-6.119	0.000	0.004
190.00	0.00	-0.42	0.00	0.00	0.00	0.00	1210.02	605.01	1174.63	588.19	129.99	-6.120	0.000	0.000

Copyright © 2020 by Tower Engineering Solutions, LLC. All rights reserved.

Wind Loading - Shaft

Structure:	CT08748-A-SBA		**Code:**	EIA/TIA-222-G	4/30/2020
Site Name:	Woodstock 4, CT		**Exposure:**	C	
Height:	190.00 (ft)		**Crest Height:**	0.00	
Base Elev:	0.000 (ft)		**Site Class:**	D - Stiff Soil	
Gh:	1.1	**Topography:** 1	**Struct Class:**	II	Page: 16

Tower Engineering Solutions

Load Case: 1.2D + 1.0Di + 1.0Wi 50 mph Wind

Dead Load Factor 1.20

Wind Load Factor 1.00

Iterations 25

Elev (ft)	Description	Kzt	Kz	qz (psf)	qzGh (psf)	C (mph-ft)	Cf	Ice Thick (in)	Tributary (ft)	Aa (sf)	CfAa (sf)	Wind Force X (lb)	Dead Load Ice (lb)	Tot Dead Load (lb)
0.00		1.00	0.85	5.168	5.68	0.00	1.200	0.000	0.00	0.000	0.00	0.0	0.0	0.0
5.00		1.00	0.85	5.168	5.68	0.00	1.200	1.656	5.00	28.421	34.10	193.9	674.1	2473.6
10.00		1.00	0.85	5.168	5.68	0.00	1.200	1.775	5.00	28.022	33.63	191.2	710.7	2476.8
15.00		1.00	0.85	5.168	5.68	0.00	1.200	1.848	5.00	27.585	33.10	188.2	727.3	2460.0
20.00		1.00	0.90	5.483	6.03	0.00	1.200	1.902	5.00	27.132	32.56	196.4	735.1	2434.5
25.00		1.00	0.95	5.747	6.32	0.00	1.200	1.945	5.00	26.670	32.00	202.3	737.9	2403.9
30.00		1.00	0.98	5.972	6.57	0.00	1.200	1.981	5.00	26.201	31.44	206.5	737.3	2369.9
35.00		1.00	1.01	6.169	6.79	0.00	1.200	2.012	5.00	25.729	30.87	209.5	734.3	2333.5
40.00		1.00	1.04	6.345	6.98	0.00	1.200	2.039	5.00	25.253	30.30	211.5	729.4	2295.3
41.00	Bot - Section 2	1.00	1.05	6.378	7.02	0.00	1.200	2.044	1.00	4.992	5.99	42.0	145.7	454.8
45.00		1.00	1.07	6.504	7.15	0.00	1.200	2.063	4.00	20.035	24.04	172.0	586.3	2874.0
48.00	Top - Section 1	1.00	1.08	6.593	7.25	0.00	1.200	2.076	3.00	14.823	17.79	129.0	437.2	2126.9
50.00		1.00	1.09	6.650	7.32	0.00	1.200	2.085	2.00	9.785	11.74	85.9	290.2	808.7
55.00		1.00	1.12	6.785	7.46	0.00	1.200	2.105	5.00	24.132	28.96	216.1	717.2	1993.3
60.00		1.00	1.14	6.910	7.60	0.00	1.200	2.123	5.00	23.649	28.38	215.7	708.1	1955.6
65.00		1.00	1.16	7.028	7.73	0.00	1.200	2.140	5.00	23.165	27.80	214.9	698.2	1917.1
70.00		1.00	1.17	7.138	7.85	0.00	1.200	2.156	5.00	22.681	27.22	213.7	687.7	1878.0
75.00		1.00	1.19	7.243	7.97	0.00	1.200	2.171	5.00	22.195	26.63	212.2	676.6	1838.4
80.00	Appurtenance(s)	1.00	1.21	7.342	8.08	0.00	1.200	2.185	5.00	21.709	26.05	210.4	665.1	1798.2
85.00	Bot - Section 3	1.00	1.22	7.436	8.18	0.00	1.200	2.198	5.00	21.222	25.47	208.3	653.1	1757.6
90.00		1.00	1.24	7.526	8.28	0.00	1.200	2.211	5.00	20.999	25.20	208.6	649.4	2635.8
91.00	Top - Section 2	1.00	1.24	7.544	8.30	0.00	1.200	2.214	1.00	4.140	4.97	41.2	129.4	520.4
95.00		1.00	1.25	7.612	8.37	0.00	1.200	2.223	4.00	16.369	19.64	164.5	509.3	1216.8
100.00	Appurtenance(s)	1.00	1.27	7.695	8.46	0.00	1.200	2.234	5.00	20.022	24.03	203.4	623.6	1486.4
105.00		1.00	1.28	7.774	8.55	0.00	1.200	2.245	5.00	19.533	23.44	200.5	610.2	1449.2
110.00	Appurtenance(s)	1.00	1.29	7.851	8.64	0.00	1.200	2.256	5.00	19.044	22.85	197.4	596.6	1411.8
115.00		1.00	1.30	7.925	8.72	0.00	1.200	2.266	5.00	18.554	22.27	194.1	582.7	1374.0
120.00		1.00	1.32	7.996	8.80	0.00	1.200	2.276	5.00	18.064	21.68	190.7	568.5	1336.0
125.00		1.00	1.33	8.065	8.87	0.00	1.200	2.285	5.00	17.574	21.09	187.1	554.1	1297.8
130.00	Bot - Section 4	1.00	1.34	8.132	8.95	0.00	1.200	2.294	5.00	17.083	20.50	183.4	539.5	1259.3
135.00	Top - Section 3	1.00	1.35	8.197	9.02	0.00	1.200	2.303	5.00	16.804	20.17	181.8	531.9	1793.8
140.00	Appurtenance(s)	1.00	1.36	8.260	9.09	0.00	1.200	2.311	5.00	16.313	19.58	177.9	516.9	1063.7
145.00		1.00	1.37	8.321	9.15	0.00	1.200	2.319	5.00	15.822	18.99	173.8	501.7	1029.5
150.00		1.00	1.38	8.381	9.22	0.00	1.200	2.327	5.00	15.331	18.40	169.6	486.4	995.1
155.00		1.00	1.39	8.439	9.28	0.00	1.200	2.335	5.00	14.839	17.81	165.3	470.9	960.5
157.00	Appurtenance(s)	1.00	1.39	8.462	9.31	0.00	1.200	2.338	2.00	5.797	6.96	64.7	185.8	376.4
160.00		1.00	1.40	8.495	9.34	0.00	1.200	2.342	3.00	8.548	10.26	95.9	273.1	553.2
165.00		1.00	1.41	8.551	9.41	0.00	1.200	2.349	5.00	13.855	16.63	156.4	439.4	890.9
170.00		1.00	1.42	8.604	9.46	0.00	1.200	2.356	5.00	13.363	16.04	151.8	423.4	855.8
175.00		1.00	1.42	8.657	9.52	0.00	1.200	2.363	5.00	12.871	15.44	147.1	407.3	820.7
177.00	Appurtenance(s)	1.00	1.43	8.678	9.55	0.00	1.200	2.366	2.00	5.010	6.01	57.4	160.3	320.3
180.00	Top - Section 4	1.00	1.43	8.709	9.58	0.00	1.200	2.370	3.00	7.367	8.84	84.7	234.6	468.9
185.00	Appurtenance(s)	1.00	1.44	8.759	9.63	0.00	1.200	2.376	5.00	12.134	14.56	140.3	392.2	824.5
190.00		1.00	1.45	8.808	9.69	0.00	1.200	2.383	5.00	12.140	14.57	141.1	393.4	825.7
								Totals:	**190.00**			**7,198.2**		**64,416.6**

Copyright © 2020 by Tower Engineering Solutions, LLC. All rights reserved.

Discrete Appurtenance Forces

Structure:	CT08748-A-SBA		**Code:**	EIA/TIA-222-G	4/30/2020
Site Name:	Woodstock 4, CT		**Exposure:**	C	
Height:	190.00 (ft)		**Crest Height:**	0.00	
Base Elev:	0.000 (ft)		**Site Class:**	D - Stiff Soil	
Gh:	1.1	**Topography:** 1	**Struct Class:**	II	Page: 17

Tower Engineering Solutions

Load Case: 1.2D + 1.0Di + 1.0Wi 50 mph Wind

Dead Load Factor 1.20

Wind Load Factor 1.00

Iterations 25

No.	Elev (ft)	Description	Qty	qz (psf)	qzGh (psf)	Orient Factor x Ka	Ka	Total CaAa (sf)	Dead Load (lb)	Horiz Ecc (ft)	Vert Ecc (ft)	Wind FX (lb)	Mom Y (lb-ft)	Mom Z (lb-ft)
1	185.00	ADC	6	8.759	9.635	0.56	0.80	0.34	79.27	0.000	0.000	3.28	0.00	0.00
2	185.00	Powerwave LGP21903	6	8.759	9.635	0.62	0.80	3.00	99.81	0.000	0.000	28.90	0.00	0.00
3	185.00	Powerwave LGP21401	6	8.759	9.635	0.53	0.80	7.75	270.55	0.000	0.000	74.67	0.00	0.00
4	185.00	Powerwave 7770.00	9	8.759	9.635	0.69	0.80	43.60	2370.52	0.000	0.000	420.10	0.00	0.00
5	185.00	Low Profile Platform	1	8.759	9.635	1.00	1.00	46.05	2753.84	0.000	0.000	443.67	0.00	0.00
6	177.00	Platform w/ Hand Rails	1	8.678	9.546	1.00	1.00	69.85	4291.58	0.000	0.000	666.79	0.00	0.00
7	177.00	EMS RR90-17-02DPL2	3	8.678	9.546	0.68	0.75	11.69	586.42	0.000	0.000	111.61	0.00	0.00
8	177.00	Ericsson KRY 112 489/2	3	8.678	9.546	0.63	0.75	2.80	115.52	0.000	0.000	26.76	0.00	0.00
9	177.00	782 11056	3	8.678	9.546	0.50	0.75	0.77	56.42	0.000	0.000	7.39	0.00	0.00
10	177.00	APXV18-206516S-C-A20	3	8.678	9.546	0.55	0.75	10.06	292.30	0.000	0.000	96.07	0.00	0.00
11	177.00	APXVAARR24_43-U-NA2	3	8.678	9.546	0.52	0.75	35.99	2238.03	0.000	0.000	343.53	0.00	0.00
12	177.00	4449 B71+B12	3	8.678	9.546	0.50	0.75	3.63	555.65	0.000	0.000	34.64	0.00	0.00
13	157.00	SAF	4	8.462	9.308	1.00	1.00	9.14	142.74	0.000	0.000	85.05	0.00	0.00
14	157.00	VHLPX3-6W	1	8.462	9.308	1.00	1.00	13.25	292.65	0.000	0.000	123.29	0.00	0.00
15	157.00	SUX6-65B	1	8.462	9.308	1.00	1.00	40.34	998.52	0.000	0.000	375.47	0.00	0.00
16	157.00	Flush Mount	2	8.462	9.308	1.00	1.00	19.35	1425.43	0.000	0.000	180.11	0.00	0.00
17	140.00	DS4C06F36D-N	1	8.260	9.086	1.00	1.00	14.13	227.46	0.000	0.000	128.36	0.00	0.00
18	130.00	SitePro UQB4	1	8.132	8.945	1.00	1.00	10.69	934.04	0.000	0.000	95.65	0.00	0.00
19	130.00	SitePro SV197-48	1	8.132	8.945	1.00	1.00	18.36	64.41	0.000	0.000	164.23	0.00	0.00
20	110.00	Antenex Y1505	2	7.851	8.636	1.00	1.00	19.75	88.53	0.000	0.000	170.58	0.00	0.00
21	110.00	Pipe Mounts	2	7.851	8.636	1.00	1.00	19.02	142.63	0.000	0.000	164.29	0.00	0.00
22	100.00	Standoffs	2	7.695	8.464	1.00	1.00	20.54	432.36	0.000	0.000	173.89	0.00	0.00
23	100.00	Decibel DB212-1	2	7.996	8.796	1.00	1.00	103.02	564.38	0.000	20.000	906.09	0.00	18121.74
24	80.00	Telewave ANT450D6-9	2	7.399	8.139	1.00	1.00	13.13	202.67	0.000	3.000	106.85	0.00	320.54
25	80.00	Standoffs	2	7.342	8.076	1.00	1.00	20.21	425.56	0.000	0.000	163.19	0.00	0.00
							Totals:		**19,651.26**			**5,094.45**		

Copyright © 2020 by Tower Engineering Solutions, LLC. All rights reserved.

Total Applied Force Summary

Structure:	CT08748-A-SBA		**Code:**	EIA/TIA-222-G	4/30/2020
Site Name:	Woodstock 4, CT		**Exposure:**	C	
Height:	190.00 (ft)		**Crest Height:**	0.00	
Base Elev:	0.000 (ft)		**Site Class:**	D - Stiff Soil	
Gh:	1.1	**Topography:** 1	**Struct Class:**	II	Page: 18

TES Tower Engineering Solutions

Load Case: 1.2D + 1.0Di + 1.0Wi 50 mph Wind

Dead Load Factor 1.20

Wind Load Factor 1.00

Iterations 25

Elev (ft)	Description	Lateral FX (-) (lb)	Axial FY (-) (lb)	Torsion MY (lb-ft)	Moment MZ (lb-ft)
0.00		0.00	0.00	0.00	0.00
5.00		193.88	2631.56	0.00	0.00
10.00		191.16	2634.78	0.00	0.00
15.00		188.18	2618.02	0.00	0.00
20.00		196.38	2592.48	0.00	0.00
25.00		202.32	2561.86	0.00	0.00
30.00		206.55	2527.89	0.00	0.00
35.00		209.52	2491.52	0.00	0.00
40.00		211.51	2453.32	0.00	0.00
41.00		42.03	486.43	0.00	0.00
45.00		172.01	3000.41	0.00	0.00
48.00		129.01	2221.72	0.00	0.00
50.00		85.90	871.87	0.00	0.00
55.00		216.13	2151.33	0.00	0.00
60.00		215.72	2113.57	0.00	0.00
65.00		214.90	2075.10	0.00	0.00
70.00		213.71	2035.99	0.00	0.00
75.00		212.19	1996.34	0.00	0.00
80.00	(4) attachments	480.42	2584.41	0.00	320.54
85.00		208.31	1909.35	0.00	0.00
90.00		208.61	2787.53	0.00	0.00
91.00		41.23	550.71	0.00	0.00
95.00		164.48	1338.15	0.00	0.00
100.00	(4) attachments	1283.35	2634.92	0.00	18121.74
105.00		200.45	1594.74	0.00	0.00
110.00	(4) attachments	532.22	1788.42	0.00	0.00
115.00		194.09	1513.26	0.00	0.00
120.00		190.66	1475.26	0.00	0.00
125.00		187.09	1437.03	0.00	0.00
130.00	(2) attachments	443.26	2397.02	0.00	0.00
135.00		181.82	1933.04	0.00	0.00
140.00	(1) attachments	306.22	1430.45	0.00	0.00
145.00		173.79	1162.51	0.00	0.00
150.00		169.59	1128.09	0.00	0.00
155.00		165.29	1093.51	0.00	0.00
157.00	(8) attachments	828.66	3288.90	0.00	0.00
160.00		95.86	628.12	0.00	0.00
165.00		156.38	1015.78	0.00	0.00
170.00		151.77	980.75	0.00	0.00
175.00		147.08	945.58	0.00	0.00
177.00	(19) attachments	1344.19	8506.21	0.00	0.00
180.00		84.69	475.84	0.00	0.00
185.00	(28) attachments	1110.91	6410.02	0.00	0.00
190.00		141.15	825.65	0.00	0.00
	Totals:	**12,292.64**	**89,299.43**	**0.00**	**18,442.28**

Copyright © 2020 by Tower Engineering Solutions, LLC. All rights reserved.

Calculated Forces

Structure:	CT08748-A-SBA	**Code:**	EIA/TIA-222-G	4/30/2020	
Site Name:	Woodstock 4, CT	**Exposure:**	C		
Height:	190.00 (ft)	**Crest Height:**	0.00		
Base Elev:	0.000 (ft)	**Site Class:**	D - Stiff Soil		
Gh:	1.1 **Topography:** 1	**Struct Class:**	II	Page: 19	

TES Tower Engineering Solutions

Load Case: 1.2D + 1.0Di + 1.0Wi 50 mph Wind

Dead Load Factor 1.20

Wind Load Factor 1.00

Iterations 25

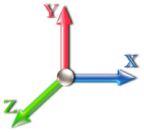

Seg Elev (ft)	Pu FY (-) (kips)	Vu FX (-) (kips)	Tu MY (-) (ft-kips)	Mu MZ (ft-kips)	Mu MX (ft-kips)	Resultant Moment (ft-kips)	phi Pn (kips)	phi Vn (kips)	phi Tn (ft-kips)	phi Mn (ft-kips)	Total Deflect (in)	Rotation Sway (deg)	Rotation Twist (deg)	Stress Ratio
0.00	-89.29	-12.33	0.00	-1533.2	0.00	1533.23	5803.10	2901.55	15291.3	7657.05	0.00	0.000	0.000	0.216
5.00	-86.65	-12.21	0.00	-1471.5	0.00	1471.59	5740.33	2870.16	14846.1	7434.11	0.02	-0.046	0.000	0.213
10.00	-84.01	-12.08	0.00	-1410.5	0.00	1410.56	5675.91	2837.95	14402.8	7212.14	0.10	-0.093	0.000	0.210
15.00	-81.38	-11.95	0.00	-1350.1	0.00	1350.16	5609.85	2804.93	13961.8	6991.28	0.22	-0.141	0.000	0.208
20.00	-78.78	-11.82	0.00	-1290.3	0.00	1290.39	5542.15	2771.07	13523.1	6771.63	0.40	-0.189	0.000	0.205
25.00	-76.21	-11.67	0.00	-1231.3	0.00	1231.31	5472.81	2736.40	13087.2	6553.32	0.62	-0.238	0.000	0.202
30.00	-73.67	-11.52	0.00	-1172.9	0.00	1172.95	5401.82	2700.91	12654.1	6336.48	0.90	-0.288	0.000	0.199
35.00	-71.17	-11.36	0.00	-1115.3	0.00	1115.37	5329.20	2664.60	12224.2	6121.21	1.22	-0.338	0.000	0.196
40.00	-68.71	-11.17	0.00	-1058.5	0.00	1058.59	5254.93	2627.47	11797.7	5907.64	1.61	-0.388	0.000	0.192
41.00	-68.22	-11.15	0.00	-1047.4	0.00	1047.43	5239.88	2619.94	11712.8	5865.14	1.69	-0.399	0.000	0.192
45.00	-65.22	-11.00	0.00	-1002.8	0.00	1002.82	5179.02	2589.51	11374.8	5695.90	2.04	-0.440	0.000	0.189
48.00	-62.99	-10.88	0.00	-969.83	0.00	969.83	4202.19	2101.09	9258.62	4636.19	2.33	-0.472	0.000	0.224
50.00	-62.11	-10.83	0.00	-948.07	0.00	948.07	4180.07	2090.03	9128.39	4570.98	2.53	-0.493	0.000	0.222
55.00	-59.95	-10.66	0.00	-893.91	0.00	893.91	4123.62	2061.81	8804.12	4408.60	3.08	-0.551	0.000	0.217
60.00	-57.83	-10.48	0.00	-840.63	0.00	840.63	4065.54	2032.77	8481.93	4247.27	3.69	-0.609	0.000	0.212
65.00	-55.75	-10.30	0.00	-788.24	0.00	788.24	4005.81	2002.90	8162.06	4087.10	4.36	-0.668	0.000	0.207
70.00	-53.70	-10.12	0.00	-736.75	0.00	736.75	3944.44	1972.22	7844.75	3928.21	5.09	-0.728	0.000	0.201
75.00	-51.70	-9.93	0.00	-686.18	0.00	686.18	3881.43	1940.71	7530.24	3770.72	5.88	-0.787	0.000	0.195
80.00	-49.11	-9.46	0.00	-636.21	0.00	636.21	3816.78	1908.39	7218.77	3614.75	6.74	-0.846	0.000	0.189
85.00	-47.20	-9.28	0.00	-588.90	0.00	588.90	3750.48	1875.24	6910.57	3460.42	7.66	-0.906	0.000	0.183
90.00	-44.41	-9.05	0.00	-542.52	0.00	542.52	3682.55	1841.27	6605.90	3307.86	8.64	-0.965	0.000	0.176
91.00	-43.85	-9.02	0.00	-533.47	0.00	533.47	2898.33	1449.17	5260.79	2634.30	8.84	-0.977	0.000	0.218
95.00	-42.51	-8.88	0.00	-497.39	0.00	497.39	2860.60	1430.30	5080.74	2544.15	9.68	-1.025	0.000	0.210
100.00	-39.89	-7.59	0.00	-434.89	0.00	434.89	2811.95	1405.98	4857.28	2432.25	10.79	-1.092	0.000	0.193
105.00	-38.29	-7.40	0.00	-396.95	0.00	396.95	2761.66	1380.83	4635.80	2321.34	11.97	-1.155	0.000	0.185
110.00	-36.51	-6.87	0.00	-359.95	0.00	359.95	2709.73	1354.87	4416.54	2211.55	13.21	-1.218	0.000	0.176
115.00	-34.99	-6.68	0.00	-325.60	0.00	325.60	2656.16	1328.08	4199.76	2103.00	14.52	-1.281	0.000	0.168
120.00	-33.51	-6.49	0.00	-292.19	0.00	292.19	2600.95	1300.48	3985.68	1995.80	15.90	-1.342	0.000	0.159
125.00	-32.07	-6.30	0.00	-259.73	0.00	259.73	2544.10	1272.05	3774.55	1890.08	17.33	-1.403	0.000	0.150
130.00	-29.68	-5.83	0.00	-228.21	0.00	228.21	2485.60	1242.80	3566.61	1785.96	18.83	-1.461	0.000	0.140
135.00	-27.75	-5.63	0.00	-199.05	0.00	199.05	1823.78	911.89	2575.19	1289.51	20.40	-1.518	0.000	0.170
140.00	-26.32	-5.31	0.00	-170.92	0.00	170.92	1784.40	892.20	2432.60	1218.11	22.01	-1.572	0.000	0.155
145.00	-25.16	-5.13	0.00	-144.38	0.00	144.38	1743.38	871.69	2291.70	1147.55	23.69	-1.634	0.000	0.140
150.00	-24.03	-4.95	0.00	-118.74	0.00	118.74	1700.71	850.36	2152.72	1077.96	25.44	-1.691	0.000	0.124
155.00	-22.94	-4.76	0.00	-94.00	0.00	94.00	1656.41	828.20	2015.90	1009.45	27.24	-1.742	0.000	0.107
157.00	-19.68	-3.84	0.00	-84.47	0.00	84.47	1638.23	819.11	1961.83	982.37	27.97	-1.762	0.000	0.098
160.00	-19.05	-3.74	0.00	-72.94	0.00	72.94	1610.46	805.23	1881.48	942.14	29.09	-1.789	0.000	0.089
165.00	-18.04	-3.56	0.00	-54.24	0.00	54.24	1562.88	781.44	1749.71	876.15	30.98	-1.828	0.000	0.073
170.00	-17.06	-3.39	0.00	-36.43	0.00	36.43	1513.65	756.82	1620.81	811.61	32.91	-1.860	0.000	0.056
175.00	-16.12	-3.21	0.00	-19.49	0.00	19.49	1462.77	731.39	1495.04	748.63	34.87	-1.882	0.000	0.037
177.00	-7.66	-1.59	0.00	-13.07	0.00	13.07	1441.72	720.86	1445.41	723.78	35.66	-1.888	0.000	0.023
180.00	-7.19	-1.49	0.00	-8.30	0.00	8.30	1400.09	700.04	1362.73	682.38	36.85	-1.894	0.000	0.017
180.00	-7.19	-1.49	0.00	-8.30	0.00	8.30	1210.02	605.01	1174.63	588.19	36.85	-1.894	0.000	0.020
185.00	-0.82	-0.17	0.00	-0.84	0.00	0.84	1210.02	605.01	1174.63	588.19	38.84	-1.899	0.000	0.002
190.00	0.00	-0.14	0.00	0.00	0.00	0.00	1210.02	605.01	1174.63	588.19	40.83	-1.899	0.000	0.000

Copyright © 2020 by Tower Engineering Solutions, LLC. All rights reserved.

Seismic Segment Forces (Factored)

Structure:	CT08748-A-SBA		**Code:**	EIA/TIA-222-G	4/30/2020
Site Name:	Woodstock 4, CT		**Exposure:**	C	
Height:	190.00 (ft)		**Crest Height:**	0.00	
Base Elev:	0.000 (ft)		**Site Class:**	D - Stiff Soil	
Gh:	1.1	**Topography:** 1	**Struct Class:**	II	Page: 20

Tower Engineering Solutions

Load Case:	1.2D + 1.0E					**Iterations**	23
Gust Response Factor	1.10			**Sds**	0.18	**Ss**	0.17
Dead Load Factor	1.20	**Seismic Load Factor**	1.00	**Sd1**	0.10	**S1**	0.06
Wind Load Factor	0.00	**Structure Frequency (f1)**	0.35	**SA**	0.04	**Seismic Importance Factor**	1.00

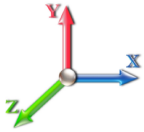

Top Elev (ft)	Description	Wz (lb)	a	b	c	Lateral Fs (lb)
0.00		0.00	0.00	0.00	0.00	0.00
5.00		1499.5	0.00	0.03	0.01	21.87
10.00		1471.7	0.01	0.05	0.03	32.83
15.00		1443.9	0.01	0.06	0.03	38.54
20.00		1416.1	0.02	0.06	0.04	41.41
25.00		1388.3	0.03	0.07	0.04	42.72
30.00		1360.5	0.05	0.07	0.04	43.20
35.00		1332.7	0.06	0.07	0.04	43.31
40.00		1304.9	0.08	0.07	0.04	43.26
41.00	Bot - Section 2	257.65	0.09	0.07	0.04	8.57
45.00		1906.4	0.11	0.07	0.04	64.41
48.00	Top - Section 1	1408.1	0.12	0.07	0.03	48.10
50.00		432.05	0.13	0.07	0.03	14.86
55.00		1063.4	0.16	0.07	0.03	37.11
60.00		1039.6	0.19	0.06	0.02	36.50
65.00		1015.7	0.22	0.06	0.02	35.38
70.00		991.94	0.26	0.05	0.02	33.49
75.00		968.10	0.29	0.05	0.01	30.56
80.00	Appurtenance(s)	1100.2	0.34	0.04	0.01	30.72
85.00	Bot - Section 3	920.43	0.38	0.02	0.01	20.74
90.00		1655.3	0.42	0.01	0.01	25.35
91.00	Top - Section 2	325.83	0.43	0.01	0.01	4.45
95.00		589.53	0.47	-0.01	0.01	3.84
100.00	Appurtenance(s)	901.04	0.52	-0.02	0.01	-2.94
105.00		699.17	0.58	-0.04	0.01	-9.12
110.00	Appurtenance(s)	769.31	0.63	-0.06	0.02	-16.73
115.00		659.45	0.69	-0.08	0.03	-18.76
120.00		639.58	0.75	-0.10	0.04	-20.81
125.00		619.72	0.82	-0.11	0.06	-20.87
130.00	Bot - Section 4	964.09	0.88	-0.12	0.08	-30.60
135.00	Top - Section 3	1051.5	0.95	-0.12	0.11	-28.11
140.00	Appurtenance(s)	525.70	1.03	-0.10	0.14	-9.81
145.00		439.81	1.10	-0.07	0.19	-3.33
150.00		423.92	1.18	-0.02	0.24	2.77
155.00		408.02	1.26	0.07	0.30	9.65
157.00	Appurtenance(s)	1151.5	1.29	0.11	0.33	36.09
160.00		233.37	1.34	0.18	0.37	10.22
165.00		376.24	1.43	0.33	0.46	25.22
170.00		360.35	1.51	0.53	0.56	33.66
175.00		344.46	1.60	0.79	0.67	42.34
177.00	Appurtenance(s)	2541.8	1.64	0.91	0.73	344.74
180.00	Top - Section 4	195.24	1.70	1.11	0.81	30.39
185.00	Appurtenance(s)	2303.3	1.79	1.50	0.96	441.53
190.00		360.23	1.89	1.98	1.14	83.23
	Totals:	**40,860.5**				**1,600.0**

R: 1.50

Total Wind: **39,309.0**

Seismic Base Shear is Less Than 50% of Wind Force - An Analysis is NOT Required

Copyright © 2020 by Tower Engineering Solutions, LLC. All rights reserved.

Calculated Forces

Structure:	CT08748-A-SBA	**Code:**	EIA/TIA-222-G	4/30/2020	
Site Name:	Woodstock 4, CT	**Exposure:**	C		
Height:	190.00 (ft)	**Crest Height:**	0.00		
Base Elev:	0.000 (ft)	**Site Class:**	D - Stiff Soil		
Gh:	1.1	**Topography:** 1	**Struct Class:**	II	Page: 21

Tower Engineering Solutions

Load Case:	1.2D + 1.0E							**Iterations**	23
Gust Response Factor	1.10			**Sds**	0.18			**Ss**	0.17
Dead Load Factor	1.20	**Seismic Load Factor**	1.00	**Sd1**	0.10			**S1**	0.06
Wind Load Factor	0.00	**Structure Frequency (f1)**	0.35	**SA**	0.04	**Seismic Importance Factor**			1.00

Seg Elev (ft)	Pu FY (-) (kips)	Vu FX (-) (kips)	Tu MY (-) (ft-kips)	Mu MZ (ft-kips)	Mu MX (ft-kips)	Resultant Moment (ft-kips)	phi Pn (kips)	phi Vn (kips)	phi Tn (ft-kips)	phi Mn (ft-kips)	Total Deflect (in)	Rotation Sway (deg)	Rotation Twist (deg)	Stress Ratio
0.00	-54.26	-1.76	0.00	-231.82	0.00	231.82	5803.10	2901.55	15291.3	7657.05		0.00	0.00	0.040
5.00	-52.31	-1.75	0.00	-223.00	0.00	223.00	5740.33	2870.16	14846.1	7434.11		0.00	-0.01	0.039
10.00	-50.38	-1.72	0.00	-214.26	0.00	214.26	5675.91	2837.95	14402.8	7212.14		0.01	-0.01	0.039
15.00	-48.49	-1.69	0.00	-205.66	0.00	205.66	5609.85	2804.93	13961.8	6991.28		0.03	-0.02	0.038
20.00	-46.63	-1.65	0.00	-197.21	0.00	197.21	5542.15	2771.07	13523.1	6771.63		0.06	-0.03	0.038
25.00	-44.81	-1.61	0.00	-188.95	0.00	188.95	5472.81	2736.40	13087.2	6553.32		0.09	-0.04	0.037
30.00	-43.02	-1.58	0.00	-180.88	0.00	180.88	5401.82	2700.91	12654.1	6336.48		0.14	-0.04	0.037
35.00	-41.26	-1.54	0.00	-173.00	0.00	173.00	5329.20	2664.60	12224.2	6121.21		0.19	-0.05	0.036
40.00	-39.54	-1.50	0.00	-165.32	0.00	165.32	5254.93	2627.47	11797.7	5907.64		0.24	-0.06	0.036
41.00	-39.20	-1.49	0.00	-163.82	0.00	163.82	5239.88	2619.94	11712.8	5865.14		0.26	-0.06	0.035
45.00	-36.78	-1.43	0.00	-157.87	0.00	157.87	5179.02	2589.51	11374.8	5695.90		0.31	-0.07	0.035
48.00	-35.00	-1.38	0.00	-153.59	0.00	153.59	4202.19	2101.09	9258.62	4636.19		0.36	-0.07	0.041
50.00	-34.42	-1.37	0.00	-150.84	0.00	150.84	4180.07	2090.03	9128.39	4570.98		0.39	-0.08	0.041
55.00	-32.98	-1.33	0.00	-144.01	0.00	144.01	4123.62	2061.81	8804.12	4408.60		0.47	-0.09	0.041
60.00	-31.58	-1.30	0.00	-137.35	0.00	137.35	4065.54	2032.77	8481.93	4247.27		0.57	-0.09	0.040
65.00	-30.20	-1.27	0.00	-130.85	0.00	130.85	4005.81	2002.90	8162.06	4087.10		0.67	-0.10	0.040
70.00	-28.85	-1.24	0.00	-124.52	0.00	124.52	3944.44	1972.22	7844.75	3928.21		0.78	-0.11	0.039
75.00	-27.53	-1.21	0.00	-118.35	0.00	118.35	3881.43	1940.71	7530.24	3770.72		0.91	-0.12	0.038
80.00	-26.05	-1.18	0.00	-112.31	0.00	112.31	3816.78	1908.39	7218.77	3614.75		1.05	-0.13	0.038
85.00	-24.80	-1.16	0.00	-106.43	0.00	106.43	3750.48	1875.24	6910.57	3460.42		1.19	-0.15	0.037
90.00	-22.66	-1.13	0.00	-100.63	0.00	100.63	3682.55	1841.27	6605.90	3307.86		1.35	-0.16	0.037
91.00	-22.24	-1.13	0.00	-99.50	0.00	99.50	2898.33	1449.17	5260.79	2634.30		1.38	-0.16	0.045
95.00	-21.41	-1.12	0.00	-95.00	0.00	95.00	2860.60	1430.30	5080.74	2544.15		1.52	-0.17	0.045
100.00	-20.17	-1.13	0.00	-89.38	0.00	89.38	2811.95	1405.98	4857.28	2432.25		1.70	-0.18	0.044
105.00	-19.19	-1.13	0.00	-83.75	0.00	83.75	2761.66	1380.83	4635.80	2321.34		1.90	-0.19	0.043
110.00	-18.12	-1.13	0.00	-78.12	0.00	78.12	2709.73	1354.87	4416.54	2211.55		2.11	-0.21	0.042
115.00	-17.19	-1.13	0.00	-72.48	0.00	72.48	2656.16	1328.08	4199.76	2103.00		2.33	-0.22	0.041
120.00	-16.28	-1.13	0.00	-66.84	0.00	66.84	2600.95	1300.48	3985.68	1995.80		2.57	-0.23	0.040
125.00	-15.40	-1.13	0.00	-61.20	0.00	61.20	2544.10	1272.05	3774.55	1890.08		2.83	-0.25	0.038
130.00	-14.10	-1.13	0.00	-55.56	0.00	55.56	2485.60	1242.80	3566.61	1785.96		3.09	-0.26	0.037
135.00	-12.70	-1.12	0.00	-49.93	0.00	49.93	1823.78	911.89	2575.19	1289.51		3.38	-0.28	0.046
140.00	-11.93	-1.12	0.00	-44.32	0.00	44.32	1784.40	892.20	2432.60	1218.11		3.67	-0.29	0.043
145.00	-11.27	-1.12	0.00	-38.71	0.00	38.71	1743.38	871.69	2291.70	1147.55		3.99	-0.31	0.040
150.00	-10.63	-1.12	0.00	-33.10	0.00	33.10	1700.71	850.36	2152.72	1077.96		4.32	-0.32	0.037
155.00	-10.00	-1.11	0.00	-27.51	0.00	27.51	1656.41	828.20	2015.90	1009.45		4.66	-0.34	0.033
157.00	-8.57	-1.06	0.00	-25.30	0.00	25.30	1638.23	819.11	1961.83	982.37		4.81	-0.34	0.031
160.00	-8.21	-1.05	0.00	-22.11	0.00	22.11	1610.46	805.23	1881.48	942.14		5.02	-0.35	0.029
165.00	-7.64	-1.02	0.00	-16.85	0.00	16.85	1562.88	781.44	1749.71	876.15		5.40	-0.36	0.024
170.00	-7.08	-0.99	0.00	-11.73	0.00	11.73	1513.65	756.82	1620.81	811.61		5.78	-0.37	0.019
175.00	-6.54	-0.94	0.00	-6.78	0.00	6.78	1462.77	731.39	1495.04	748.63		6.18	-0.38	0.014
177.00	-3.45	-0.58	0.00	-4.90	0.00	4.90	1441.72	720.86	1445.41	723.78		6.34	-0.38	0.009
180.00	-3.20	-0.55	0.00	-3.16	0.00	3.16	1400.09	700.04	1362.73	682.38		6.58	-0.38	0.007
180.00	-3.20	-0.55	0.00	-3.16	0.00	3.16	1210.02	605.01	1174.63	588.19		6.58	-0.38	0.008
185.00	-0.43	-0.09	0.00	-0.43	0.00	0.43	1210.02	605.01	1174.63	588.19		6.98	-0.39	0.001
190.00	0.00	-0.08	0.00	0.00	0.00	0.00	1210.02	605.01	1174.63	588.19		7.39	-0.39	0.000

Copyright © 2020 by Tower Engineering Solutions, LLC. All rights reserved.

Seismic Segment Forces (Factored)

Structure:	CT08748-A-SBA		**Code:**	EIA/TIA-222-G	4/30/2020
Site Name:	Woodstock 4, CT		**Exposure:**	C	
Height:	190.00 (ft)		**Crest Height:**	0.00	
Base Elev:	0.000 (ft)		**Site Class:**	D - Stiff Soil	
Gh:	1.1	**Topography:** 1	**Struct Class:**	II	Page: 22

Tower Engineering Solutions

Load Case:	0.9D + 1.0E					**Iterations**	23
Gust Response Factor	1.10			**Sds**	0.18	**Ss**	0.17
Dead Load Factor	0.90	**Seismic Load Factor**	1.00	**Sd1**	0.10	**S1**	0.06
Wind Load Factor	0.00	**Structure Frequency (f1)**	0.35	**SA**	0.04	**Seismic Importance Factor**	1.00

Top Elev (ft)	Description	Wz (lb)	a	b	c	Lateral Fs (lb)	R: 1.50
0.00		0.00	0.00	0.00	0.00	0.00	
5.00		1499.5	0.00	0.03	0.01	21.87	
10.00		1471.7	0.01	0.05	0.03	32.83	
15.00		1443.9	0.01	0.06	0.03	38.54	
20.00		1416.1	0.02	0.06	0.04	41.41	
25.00		1388.3	0.03	0.07	0.04	42.72	
30.00		1360.5	0.05	0.07	0.04	43.20	
35.00		1332.7	0.06	0.07	0.04	43.31	
40.00		1304.9	0.08	0.07	0.04	43.26	
41.00	Bot - Section 2	257.65	0.09	0.07	0.04	8.57	
45.00		1906.4	0.11	0.07	0.04	64.41	
48.00	Top - Section 1	1408.1	0.12	0.07	0.03	48.10	
50.00		432.05	0.13	0.07	0.03	14.86	
55.00		1063.4	0.16	0.07	0.03	37.11	
60.00		1039.6	0.19	0.06	0.02	36.50	
65.00		1015.7	0.22	0.06	0.02	35.38	
70.00		991.94	0.26	0.05	0.02	33.49	
75.00		968.10	0.29	0.05	0.01	30.56	
80.00	Appurtenance(s)	1100.2	0.34	0.04	0.01	30.72	
85.00	Bot - Section 3	920.43	0.38	0.02	0.01	20.74	
90.00		1655.3	0.42	0.01	0.01	25.35	
91.00	Top - Section 2	325.83	0.43	0.01	0.01	4.45	
95.00		589.53	0.47	-0.01	0.01	3.84	
100.00	Appurtenance(s)	901.04	0.52	-0.02	0.01	-2.94	
105.00		699.17	0.58	-0.04	0.01	-9.12	
110.00	Appurtenance(s)	769.31	0.63	-0.06	0.02	-16.73	
115.00		659.45	0.69	-0.08	0.03	-18.76	
120.00		639.58	0.75	-0.10	0.04	-20.81	
125.00		619.72	0.82	-0.11	0.06	-20.87	
130.00	Bot - Section 4	964.09	0.88	-0.12	0.08	-30.60	
135.00	Top - Section 3	1051.5	0.95	-0.12	0.11	-28.11	
140.00	Appurtenance(s)	525.70	1.03	-0.10	0.14	-9.81	
145.00		439.81	1.10	-0.07	0.19	-3.33	
150.00		423.92	1.18	-0.02	0.24	2.77	
155.00		408.02	1.26	0.07	0.30	9.65	
157.00	Appurtenance(s)	1151.5	1.29	0.11	0.33	36.09	
160.00		233.37	1.34	0.18	0.37	10.22	
165.00		376.24	1.43	0.33	0.46	25.22	
170.00		360.35	1.51	0.53	0.56	33.66	
175.00		344.46	1.60	0.79	0.67	42.34	
177.00	Appurtenance(s)	2541.8	1.64	0.91	0.73	344.74	
180.00	Top - Section 4	195.24	1.70	1.11	0.81	30.39	
185.00	Appurtenance(s)	2303.3	1.79	1.50	0.96	441.53	
190.00		360.23	1.89	1.98	1.14	83.23	
	Totals:	**40,860.5**				**1,600.0**	**Total Wind:** **39,309.0**

Seismic Base Shear is Less Than 50% of Wind Force - An Analysis is NOT Required

Copyright © 2020 by Tower Engineering Solutions, LLC. All rights reserved.

Calculated Forces

Structure:	CT08748-A-SBA		**Code:**	EIA/TIA-222-G	4/30/2020
Site Name:	Woodstock 4, CT		**Exposure:**	C	
Height:	190.00 (ft)		**Crest Height:**	0.00	
Base Elev:	0.000 (ft)		**Site Class:**	D - Stiff Soil	
Gh:	1.1	**Topography:** 1	**Struct Class:**	II	Page: 23

Tower Engineering Solutions

Load Case: 0.9D + 1.0E

Iterations 23

Gust Response Factor	1.10			**Sds**	0.18			**Ss**	0.17
Dead Load Factor	0.90	**Seismic Load Factor**	1.00	**Sd1**	0.10			**S1**	0.06
Wind Load Factor	0.00	**Structure Frequency (f1)**	0.35	**SA**	0.04	**Seismic Importance Factor**			1.00

Seg Elev (ft)	Pu FY (-) (kips)	Vu FX (-) (kips)	Tu MY (-) (ft-kips)	Mu MZ (ft-kips)	Mu MX (ft-kips)	Resultant Moment (ft-kips)	phi Pn (kips)	phi Vn (kips)	phi Tn (ft-kips)	phi Mn (ft-kips)	Total Deflect (in)	Rotation Sway (deg)	Rotation Twist (deg)	Stress Ratio
0.00	-40.70	-1.76	0.00	-229.43	0.00	229.43	5803.10	2901.55	15291.3	7657.05		0.00	0.00	0.037
5.00	-39.23	-1.75	0.00	-220.62	0.00	220.62	5740.33	2870.16	14846.1	7434.11		0.00	-0.01	0.037
10.00	-37.79	-1.72	0.00	-211.89	0.00	211.89	5675.91	2837.95	14402.8	7212.14		0.01	-0.01	0.036
15.00	-36.37	-1.68	0.00	-203.30	0.00	203.30	5609.85	2804.93	13961.8	6991.28		0.03	-0.02	0.036
20.00	-34.98	-1.65	0.00	-194.89	0.00	194.89	5542.15	2771.07	13523.1	6771.63		0.06	-0.03	0.035
25.00	-33.61	-1.61	0.00	-186.66	0.00	186.66	5472.81	2736.40	13087.2	6553.32		0.09	-0.04	0.035
30.00	-32.26	-1.57	0.00	-178.63	0.00	178.63	5401.82	2700.91	12654.1	6336.48		0.13	-0.04	0.034
35.00	-30.95	-1.53	0.00	-170.80	0.00	170.80	5329.20	2664.60	12224.2	6121.21		0.18	-0.05	0.034
40.00	-29.65	-1.48	0.00	-163.16	0.00	163.16	5254.93	2627.47	11797.7	5907.64		0.24	-0.06	0.033
41.00	-29.40	-1.48	0.00	-161.68	0.00	161.68	5239.88	2619.94	11712.8	5865.14		0.25	-0.06	0.033
45.00	-27.59	-1.41	0.00	-155.77	0.00	155.77	5179.02	2589.51	11374.8	5695.90		0.31	-0.07	0.033
48.00	-26.25	-1.37	0.00	-151.53	0.00	151.53	4202.19	2101.09	9258.62	4636.19		0.35	-0.07	0.039
50.00	-25.81	-1.35	0.00	-148.80	0.00	148.80	4180.07	2090.03	9128.39	4570.98		0.38	-0.07	0.039
55.00	-24.74	-1.32	0.00	-142.03	0.00	142.03	4123.62	2061.81	8804.12	4408.60		0.47	-0.08	0.038
60.00	-23.68	-1.28	0.00	-135.44	0.00	135.44	4065.54	2032.77	8481.93	4247.27		0.56	-0.09	0.038
65.00	-22.65	-1.25	0.00	-129.01	0.00	129.01	4005.81	2002.90	8162.06	4087.10		0.66	-0.10	0.037
70.00	-21.64	-1.22	0.00	-122.76	0.00	122.76	3944.44	1972.22	7844.75	3928.21		0.77	-0.11	0.037
75.00	-20.65	-1.19	0.00	-116.66	0.00	116.66	3881.43	1940.71	7530.24	3770.72		0.90	-0.12	0.036
80.00	-19.54	-1.16	0.00	-110.71	0.00	110.71	3816.78	1908.39	7218.77	3614.75		1.03	-0.13	0.036
85.00	-18.60	-1.14	0.00	-104.90	0.00	104.90	3750.48	1875.24	6910.57	3460.42		1.18	-0.14	0.035
90.00	-16.99	-1.11	0.00	-99.20	0.00	99.20	3682.55	1841.27	6605.90	3307.86		1.33	-0.15	0.035
91.00	-16.68	-1.11	0.00	-98.08	0.00	98.08	2898.33	1449.17	5260.79	2634.30		1.37	-0.16	0.043
95.00	-16.05	-1.11	0.00	-93.64	0.00	93.64	2860.60	1430.30	5080.74	2544.15		1.50	-0.17	0.042
100.00	-15.13	-1.11	0.00	-88.10	0.00	88.10	2811.95	1405.98	4857.28	2432.25		1.68	-0.18	0.042
105.00	-14.39	-1.11	0.00	-82.56	0.00	82.56	2761.66	1380.83	4635.80	2321.34		1.87	-0.19	0.041
110.00	-13.59	-1.11	0.00	-77.02	0.00	77.02	2709.73	1354.87	4416.54	2211.55		2.08	-0.20	0.040
115.00	-12.89	-1.11	0.00	-71.47	0.00	71.47	2656.16	1328.08	4199.76	2103.00		2.30	-0.22	0.039
120.00	-12.21	-1.11	0.00	-65.92	0.00	65.92	2600.95	1300.48	3985.68	1995.80		2.54	-0.23	0.038
125.00	-11.55	-1.11	0.00	-60.37	0.00	60.37	2544.10	1272.05	3774.55	1890.08		2.79	-0.25	0.036
130.00	-10.58	-1.11	0.00	-54.82	0.00	54.82	2485.60	1242.80	3566.61	1785.96		3.05	-0.26	0.035
135.00	-9.52	-1.11	0.00	-49.27	0.00	49.27	1823.78	911.89	2575.19	1289.51		3.33	-0.27	0.043
140.00	-8.95	-1.11	0.00	-43.74	0.00	43.74	1784.40	892.20	2432.60	1218.11		3.63	-0.29	0.041
145.00	-8.45	-1.11	0.00	-38.22	0.00	38.22	1743.38	871.69	2291.70	1147.55		3.94	-0.30	0.038
150.00	-7.97	-1.10	0.00	-32.69	0.00	32.69	1700.71	850.36	2152.72	1077.96		4.26	-0.32	0.035
155.00	-7.50	-1.09	0.00	-27.18	0.00	27.18	1656.41	828.20	2015.90	1009.45		4.60	-0.33	0.031
157.00	-6.43	-1.05	0.00	-25.00	0.00	25.00	1638.23	819.11	1961.83	982.37		4.74	-0.34	0.029
160.00	-6.16	-1.04	0.00	-21.85	0.00	21.85	1610.46	805.23	1881.48	942.14		4.96	-0.35	0.027
165.00	-5.73	-1.01	0.00	-16.65	0.00	16.65	1562.88	781.44	1749.71	876.15		5.33	-0.36	0.023
170.00	-5.31	-0.98	0.00	-11.59	0.00	11.59	1513.65	756.82	1620.81	811.61		5.71	-0.37	0.018
175.00	-4.91	-0.93	0.00	-6.71	0.00	6.71	1462.77	731.39	1495.04	748.63		6.10	-0.38	0.012
177.00	-2.58	-0.57	0.00	-4.85	0.00	4.85	1441.72	720.86	1445.41	723.78		6.26	-0.38	0.008
180.00	-2.40	-0.54	0.00	-3.13	0.00	3.13	1400.09	700.04	1362.73	682.38		6.49	-0.38	0.006
180.00	-2.40	-0.54	0.00	-3.13	0.00	3.13	1210.02	605.01	1174.63	588.19		6.49	-0.38	0.007
185.00	-0.32	-0.09	0.00	-0.43	0.00	0.43	1210.02	605.01	1174.63	588.19		6.89	-0.38	0.001
190.00	0.00	-0.08	0.00	0.00	0.00	0.00	1210.02	605.01	1174.63	588.19		7.29	-0.38	0.000

Copyright © 2020 by Tower Engineering Solutions, LLC. All rights reserved.

Wind Loading - Shaft

Structure:	CT08748-A-SBA		**Code:**	EIA/TIA-222-G	4/30/2020
Site Name:	Woodstock 4, CT		**Exposure:**	C	
Height:	190.00 (ft)		**Crest Height:**	0.00	
Base Elev:	0.000 (ft)		**Site Class:**	D - Stiff Soil	
Gh:	1.1	**Topography:** 1	**Struct Class:**	II	Page: 24

Tower Engineering Solutions

Load Case: 1.0D + 1.0W 60 mph Wind

Dead Load Factor 1.00

Wind Load Factor 1.00

Iterations 24

Elev (ft)	Description	Kzt	Kz	qz (psf)	qzGh (psf)	C (mph-ft)	Cf	Ice Thick (in)	Tributary (ft)	Aa (sf)	CfAa (sf)	Wind Force X (lb)	Dead Load Ice (lb)	Tot Dead Load (lb)
0.00		1.00	0.85	7.442	8.19	301.92	0.650	0.000	0.00	0.000	0.00	0.0	0.0	0.0
5.00		1.00	0.85	7.442	8.19	296.41	0.650	0.000	5.00	27.041	17.58	143.9	0.0	1499.6
10.00		1.00	0.85	7.442	8.19	290.90	0.650	0.000	5.00	26.543	17.25	141.2	0.0	1471.8
15.00		1.00	0.85	7.442	8.19	285.39	0.650	0.000	5.00	26.045	16.93	138.6	0.0	1444.0
20.00		1.00	0.90	7.896	8.69	288.29	0.650	0.000	5.00	25.547	16.61	144.2	0.0	1416.2
25.00		1.00	0.95	8.276	9.10	289.33	0.650	0.000	5.00	25.049	16.28	148.2	0.0	1388.3
30.00		1.00	0.98	8.600	9.46	289.02	0.650	0.000	5.00	24.550	15.96	151.0	0.0	1360.5
35.00		1.00	1.01	8.883	9.77	287.73	0.650	0.000	5.00	24.052	15.63	152.8	0.0	1332.7
40.00		1.00	1.04	9.137	10.05	285.69	0.650	0.000	5.00	23.554	15.31	153.9	0.0	1304.9
41.00	Bot - Section 2	1.00	1.05	9.184	10.10	285.21	0.650	0.000	1.00	4.651	3.02	30.5	0.0	257.6
45.00		1.00	1.07	9.366	10.30	283.08	0.650	0.000	4.00	18.659	12.13	125.0	0.0	1906.4
48.00	Top - Section 1	1.00	1.08	9.494	10.44	281.27	0.650	0.000	3.00	13.785	8.96	93.6	0.0	1408.1
50.00		1.00	1.09	9.576	10.53	283.97	0.650	0.000	2.00	9.091	5.91	62.2	0.0	432.1
55.00		1.00	1.12	9.770	10.75	280.52	0.650	0.000	5.00	22.378	14.55	156.3	0.0	1063.4
60.00		1.00	1.14	9.951	10.95	276.73	0.650	0.000	5.00	21.880	14.22	155.7	0.0	1039.6
65.00		1.00	1.16	10.120	11.13	272.64	0.650	0.000	5.00	21.382	13.90	154.7	0.0	1015.8
70.00		1.00	1.17	10.279	11.31	268.30	0.650	0.000	5.00	20.884	13.57	153.5	0.0	991.9
75.00		1.00	1.19	10.430	11.47	263.74	0.650	0.000	5.00	20.386	13.25	152.0	0.0	968.1
80.00	Appurtenance(s)	1.00	1.21	10.572	11.63	258.97	0.650	0.000	5.00	19.888	12.93	150.3	0.0	944.3
85.00	Bot - Section 3	1.00	1.22	10.708	11.78	254.01	0.650	0.000	5.00	19.390	12.60	148.5	0.0	920.4
90.00		1.00	1.24	10.838	11.92	248.90	0.650	0.000	5.00	19.156	12.45	148.4	0.0	1655.4
91.00	Top - Section 2	1.00	1.24	10.863	11.95	247.86	0.650	0.000	1.00	3.771	2.45	29.3	0.0	325.8
95.00		1.00	1.25	10.962	12.06	247.18	0.650	0.000	4.00	14.887	9.68	116.7	0.0	589.5
100.00	Appurtenance(s)	1.00	1.27	11.081	12.19	241.80	0.650	0.000	5.00	18.160	11.80	143.9	0.0	719.0
105.00		1.00	1.28	11.195	12.31	236.29	0.650	0.000	5.00	17.662	11.48	141.4	0.0	699.2
110.00	Appurtenance(s)	1.00	1.29	11.305	12.44	230.65	0.650	0.000	5.00	17.164	11.16	138.7	0.0	679.3
115.00		1.00	1.30	11.412	12.55	224.91	0.650	0.000	5.00	16.666	10.83	136.0	0.0	659.4
120.00		1.00	1.32	11.514	12.67	219.07	0.650	0.000	5.00	16.168	10.51	133.1	0.0	639.6
125.00		1.00	1.33	11.614	12.78	213.13	0.650	0.000	5.00	15.670	10.19	130.1	0.0	619.7
130.00	Bot - Section 4	1.00	1.34	11.710	12.88	207.10	0.650	0.000	5.00	15.172	9.86	127.0	0.0	599.9
135.00	Top - Section 3	1.00	1.35	11.803	12.98	200.99	0.650	0.000	5.00	14.885	9.68	125.6	0.0	1051.6
140.00	Appurtenance(s)	1.00	1.36	11.894	13.08	197.75	0.650	0.000	5.00	14.387	9.35	122.4	0.0	455.7
145.00		1.00	1.37	11.982	13.18	191.49	0.650	0.000	5.00	13.889	9.03	119.0	0.0	439.8
150.00		1.00	1.38	12.068	13.27	185.16	0.650	0.000	5.00	13.391	8.70	115.6	0.0	423.9
155.00		1.00	1.39	12.152	13.37	178.76	0.650	0.000	5.00	12.893	8.38	112.0	0.0	408.0
157.00	Appurtenance(s)	1.00	1.39	12.185	13.40	176.18	0.650	0.000	2.00	5.018	3.26	43.7	0.0	158.8
160.00		1.00	1.40	12.233	13.46	172.29	0.650	0.000	3.00	7.377	4.80	64.5	0.0	233.4
165.00		1.00	1.41	12.313	13.54	165.76	0.650	0.000	5.00	11.897	7.73	104.7	0.0	376.2
170.00		1.00	1.42	12.390	13.63	159.18	0.650	0.000	5.00	11.399	7.41	101.0	0.0	360.4
175.00		1.00	1.42	12.466	13.71	152.53	0.650	0.000	5.00	10.901	7.09	97.2	0.0	344.5
177.00	Appurtenance(s)	1.00	1.43	12.496	13.75	149.86	0.650	0.000	2.00	4.221	2.74	37.7	0.0	133.3
180.00	Top - Section 4	1.00	1.43	12.540	13.79	145.83	0.650	0.000	3.00	6.182	4.02	55.4	0.0	195.2
185.00	Appurtenance(s)	1.00	1.44	12.613	13.87	146.25	0.650	0.000	5.00	10.154	6.60	91.6	0.0	360.2
190.00		1.00	1.45	12.684	13.95	146.66	0.650	0.000	5.00	10.154	6.60	92.1	0.0	360.2
								Totals:	**190.00**			**5,083.2**		**34,653.9**

Copyright © 2020 by Tower Engineering Solutions, LLC. All rights reserved.

Discrete Appurtenance Forces

Structure:	CT08748-A-SBA		**Code:**	EIA/TIA-222-G	4/30/2020
Site Name:	Woodstock 4, CT		**Exposure:**	C	
Height:	190.00 (ft)		**Crest Height:**	0.00	
Base Elev:	0.000 (ft)		**Site Class:**	D - Stiff Soil	
Gh:	1.1	**Topography:** 1	**Struct Class:**	II	Page: 25

Tower Engineering Solutions

Load Case: 1.0D + 1.0W 60 mph Wind

Dead Load Factor 1.00

Wind Load Factor 1.00

Iterations 24

No.	Elev (ft)	Description	Qty	qz (psf)	qzGh (psf)	Orient Factor x Ka	Ka	Total CaAa (sf)	Dead Load (lb)	Horiz Ecc (ft)	Vert Ecc (ft)	Wind FX (lb)	Mom Y (lb-ft)	Mom Z (lb-ft)
1	185.00	ADC	6	12.613	13.874	0.55	0.80	0.33	96.00	0.000	0.000	4.57	0.00	0.00
2	185.00	Powerwave LGP21903	6	12.613	13.874	0.59	0.80	0.96	33.00	0.000	0.000	13.27	0.00	0.00
3	185.00	Powerwave LGP21401	6	12.613	13.874	0.51	0.80	3.97	84.60	0.000	0.000	55.07	0.00	0.00
4	185.00	Powerwave 7770.00	9	12.613	13.874	0.68	0.80	33.46	479.52	0.000	0.000	464.26	0.00	0.00
5	185.00	Low Profile Platform	1	12.613	13.874	1.00	1.00	22.00	1250.00	0.000	0.000	305.23	0.00	0.00
6	177.00	Platform w/ Hand Rails	1	12.496	13.746	1.00	1.00	32.00	1588.50	0.000	0.000	439.86	0.00	0.00
7	177.00	EMS RR90-17-02DPL2	3	12.496	13.746	0.65	0.75	8.52	119.82	0.000	0.000	117.05	0.00	0.00
8	177.00	Ericsson KRY 112 489/2	3	12.496	13.746	0.62	0.75	1.20	46.20	0.000	0.000	16.54	0.00	0.00
9	177.00	782 11056	3	12.496	13.746	0.50	0.75	0.33	3.90	0.000	0.000	4.56	0.00	0.00
10	177.00	APXV18-206516S-C-A20	3	12.496	13.746	0.55	0.75	5.93	56.10	0.000	0.000	81.50	0.00	0.00
11	177.00	APXVAARR24_43-U-NA2	3	12.496	13.746	0.52	0.75	31.88	384.00	0.000	0.000	438.19	0.00	0.00
12	177.00	4449 B71+B12	3	12.496	13.746	0.50	0.75	2.49	210.00	0.000	0.000	34.19	0.00	0.00
13	157.00	SAF	4	12.185	13.403	1.00	1.00	4.88	30.80	0.000	0.000	65.41	0.00	0.00
14	157.00	VHLPX3-6W	1	12.185	13.403	1.00	1.00	10.68	53.00	0.000	0.000	143.14	0.00	0.00
15	157.00	SUX6-65B	1	12.185	13.403	1.00	1.00	35.67	209.00	0.000	0.000	478.09	0.00	0.00
16	157.00	Flush Mount	2	12.185	13.403	1.00	1.00	10.00	700.00	0.000	0.000	134.03	0.00	0.00
17	140.00	DS4C06F36D-N	1	11.894	13.084	1.00	1.00	5.50	70.00	0.000	0.000	71.96	0.00	0.00
18	130.00	SitePro UQB4	1	11.710	12.881	1.00	1.00	4.50	285.23	0.000	0.000	57.96	0.00	0.00
19	130.00	SitePro SV197-48	1	11.710	12.881	1.00	1.00	7.25	79.00	0.000	0.000	93.39	0.00	0.00
20	110.00	Antenex Y1505	2	11.305	12.436	1.00	1.00	7.20	10.00	0.000	0.000	89.54	0.00	0.00
21	110.00	Pipe Mounts	2	11.305	12.436	1.00	1.00	10.00	80.00	0.000	0.000	124.36	0.00	0.00
22	100.00	Standoffs	2	11.081	12.189	1.00	1.00	5.26	120.00	0.000	0.000	64.11	0.00	0.00
23	100.00	Decibel DB212-1	2	11.514	12.666	1.00	1.00	13.00	62.00	0.000	20.000	164.65	0.00	3293.10
24	80.00	Telewave ANT450D6-9	2	10.654	11.720	1.00	1.00	5.54	36.00	0.000	3.000	64.93	0.00	194.79
25	80.00	Standoffs	2	10.572	11.629	1.00	1.00	5.26	120.00	0.000	0.000	61.17	0.00	0.00
							Totals:		**6,206.67**			**3,587.03**		

Copyright © 2020 by Tower Engineering Solutions, LLC. All rights reserved.

Total Applied Force Summary

Structure:	CT08748-A-SBA		**Code:**	EIA/TIA-222-G	4/30/2020
Site Name:	Woodstock 4, CT		**Exposure:**	C	
Height:	190.00 (ft)		**Crest Height:**	0.00	
Base Elev:	0.000 (ft)		**Site Class:**	D - Stiff Soil	
Gh:	1.1	**Topography:** 1	**Struct Class:**	II	Page: 26

TES Tower Engineering Solutions

Load Case: 1.0D + 1.0W 60 mph Wind

Dead Load Factor 1.00

Wind Load Factor 1.00

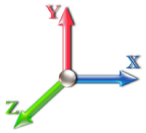

Iterations 24

Elev (ft)	Description	Lateral FX (-) (lb)	Axial FY (-) (lb)	Torsion MY (lb-ft)	Moment MZ (lb-ft)
0.00		0.00	0.00	0.00	0.00
5.00		143.88	1631.23	0.00	0.00
10.00		141.23	1603.42	0.00	0.00
15.00		138.58	1575.61	0.00	0.00
20.00		144.23	1547.80	0.00	0.00
25.00		148.22	1519.99	0.00	0.00
30.00		150.96	1492.18	0.00	0.00
35.00		152.77	1464.37	0.00	0.00
40.00		153.88	1436.57	0.00	0.00
41.00		30.54	283.98	0.00	0.00
45.00		124.96	2011.77	0.00	0.00
48.00		93.58	1487.13	0.00	0.00
50.00		62.24	484.71	0.00	0.00
55.00		156.33	1195.09	0.00	0.00
60.00		155.67	1171.26	0.00	0.00
65.00		154.71	1147.42	0.00	0.00
70.00		153.49	1123.59	0.00	0.00
75.00		152.02	1099.75	0.00	0.00
80.00	(4) attachments	276.43	1231.91	0.00	194.79
85.00		148.45	1046.88	0.00	0.00
90.00		148.44	1781.80	0.00	0.00
91.00		29.29	351.12	0.00	0.00
95.00		116.68	690.69	0.00	0.00
100.00	(4) attachments	372.64	1027.49	0.00	3293.10
105.00		141.38	820.42	0.00	0.00
110.00	(4) attachments	352.64	890.56	0.00	0.00
115.00		135.98	775.50	0.00	0.00
120.00		133.11	755.63	0.00	0.00
125.00		130.12	735.77	0.00	0.00
130.00	(2) attachments	278.38	1080.14	0.00	0.00
135.00		125.62	1167.63	0.00	0.00
140.00	(1) attachments	194.31	641.75	0.00	0.00
145.00		119.00	550.66	0.00	0.00
150.00		115.55	534.77	0.00	0.00
155.00		112.02	518.87	0.00	0.00
157.00	(8) attachments	864.38	1195.90	0.00	0.00
160.00		64.53	295.83	0.00	0.00
165.00		104.74	480.34	0.00	0.00
170.00		100.99	464.45	0.00	0.00
175.00		97.17	448.56	0.00	0.00
177.00	(19) attachments	1169.61	2583.50	0.00	0.00
180.00		55.43	201.00	0.00	0.00
185.00	(28) attachments	933.97	2312.95	0.00	0.00
190.00		92.09	360.23	0.00	0.00
	Totals:	**8,670.25**	**45,220.20**	**0.00**	**3,487.88**

Copyright © 2020 by Tower Engineering Solutions, LLC. All rights reserved.

Calculated Forces

Structure:	CT08748-A-SBA	**Code:**	EIA/TIA-222-G	4/30/2020	
Site Name:	Woodstock 4, CT	**Exposure:**	C		
Height:	190.00 (ft)	**Crest Height:**	0.00		
Base Elev:	0.000 (ft)	**Site Class:**	D - Stiff Soil		
Gh:	1.1 **Topography:** 1	**Struct Class:**	II	Page: 27	

Tower Engineering Solutions

Load Case: 1.0D + 1.0W 60 mph Wind

Dead Load Factor 1.00

Wind Load Factor 1.00

Iterations 24

Seg Elev (ft)	Pu FY (-) (kips)	Vu FX (-) (kips)	Tu MY (-) (ft-kips)	Mu MZ (ft-kips)	Mu MX (ft-kips)	Resultant Moment (ft-kips)	phi Pn (kips)	phi Vn (kips)	phi Tn (ft-kips)	phi Mn (ft-kips)	Total Deflect (in)	Rotation Sway (deg)	Rotation Twist (deg)	Stress Ratio
0.00	-45.22	-8.68	0.00	-1064.2	0.00	1064.23	5803.10	2901.55	15291.3	7657.05	0.00	0.000	0.000	0.147
5.00	-43.58	-8.56	0.00	-1020.8	0.00	1020.82	5740.33	2870.16	14846.1	7434.11	0.02	-0.032	0.000	0.145
10.00	-41.97	-8.44	0.00	-978.01	0.00	978.01	5675.91	2837.95	14402.8	7212.14	0.07	-0.065	0.000	0.143
15.00	-40.39	-8.33	0.00	-935.78	0.00	935.78	5609.85	2804.93	13961.8	6991.28	0.15	-0.098	0.000	0.141
20.00	-38.84	-8.20	0.00	-894.15	0.00	894.15	5542.15	2771.07	13523.1	6771.63	0.27	-0.131	0.000	0.139
25.00	-37.32	-8.07	0.00	-853.14	0.00	853.14	5472.81	2736.40	13087.2	6553.32	0.43	-0.165	0.000	0.137
30.00	-35.82	-7.94	0.00	-812.78	0.00	812.78	5401.82	2700.91	12654.1	6336.48	0.62	-0.199	0.000	0.135
35.00	-34.35	-7.80	0.00	-773.09	0.00	773.09	5329.20	2664.60	12224.2	6121.21	0.85	-0.234	0.000	0.133
40.00	-32.91	-7.65	0.00	-734.08	0.00	734.08	5254.93	2627.47	11797.7	5907.64	1.11	-0.269	0.000	0.131
41.00	-32.63	-7.63	0.00	-726.43	0.00	726.43	5239.88	2619.94	11712.8	5865.14	1.17	-0.276	0.000	0.130
45.00	-30.61	-7.51	0.00	-695.91	0.00	695.91	5179.02	2589.51	11374.8	5695.90	1.41	-0.305	0.000	0.128
48.00	-29.12	-7.42	0.00	-673.38	0.00	673.38	4202.19	2101.09	9258.62	4636.19	1.61	-0.327	0.000	0.152
50.00	-28.64	-7.37	0.00	-658.54	0.00	658.54	4180.07	2090.03	9128.39	4570.98	1.75	-0.342	0.000	0.151
55.00	-27.44	-7.22	0.00	-621.72	0.00	621.72	4123.62	2061.81	8804.12	4408.60	2.13	-0.382	0.000	0.148
60.00	-26.26	-7.08	0.00	-585.61	0.00	585.61	4065.54	2032.77	8481.93	4247.27	2.56	-0.423	0.000	0.144
65.00	-25.11	-6.93	0.00	-550.23	0.00	550.23	4005.81	2002.90	8162.06	4087.10	3.02	-0.464	0.000	0.141
70.00	-23.98	-6.79	0.00	-515.58	0.00	515.58	3944.44	1972.22	7844.75	3928.21	3.53	-0.505	0.000	0.137
75.00	-22.88	-6.64	0.00	-481.65	0.00	481.65	3881.43	1940.71	7530.24	3770.72	4.08	-0.547	0.000	0.134
80.00	-21.65	-6.37	0.00	-448.26	0.00	448.26	3816.78	1908.39	7218.77	3614.75	4.68	-0.589	0.000	0.130
85.00	-20.60	-6.22	0.00	-416.42	0.00	416.42	3750.48	1875.24	6910.57	3460.42	5.31	-0.631	0.000	0.126
90.00	-18.81	-6.06	0.00	-385.31	0.00	385.31	3682.55	1841.27	6605.90	3307.86	6.00	-0.673	0.000	0.122
91.00	-18.46	-6.04	0.00	-379.25	0.00	379.25	2898.33	1449.17	5260.79	2634.30	6.14	-0.681	0.000	0.150
95.00	-17.77	-5.92	0.00	-355.11	0.00	355.11	2860.60	1430.30	5080.74	2544.15	6.73	-0.715	0.000	0.146
100.00	-16.74	-5.55	0.00	-322.20	0.00	322.20	2811.95	1405.98	4857.28	2432.25	7.50	-0.763	0.000	0.138
105.00	-15.92	-5.41	0.00	-294.45	0.00	294.45	2761.66	1380.83	4635.80	2321.34	8.32	-0.810	0.000	0.133
110.00	-15.03	-5.06	0.00	-267.39	0.00	267.39	2709.73	1354.87	4416.54	2211.55	9.20	-0.857	0.000	0.126
115.00	-14.25	-4.92	0.00	-242.10	0.00	242.10	2656.16	1328.08	4199.76	2103.00	10.12	-0.903	0.000	0.121
120.00	-13.49	-4.79	0.00	-217.49	0.00	217.49	2600.95	1300.48	3985.68	1995.80	11.09	-0.949	0.000	0.114
125.00	-12.76	-4.65	0.00	-193.56	0.00	193.56	2544.10	1272.05	3774.55	1890.08	12.11	-0.994	0.000	0.107
130.00	-11.68	-4.37	0.00	-170.29	0.00	170.29	2485.60	1242.80	3566.61	1785.96	13.18	-1.038	0.000	0.100
135.00	-10.51	-4.23	0.00	-148.46	0.00	148.46	1823.78	911.89	2575.19	1289.51	14.29	-1.080	0.000	0.121
140.00	-9.87	-4.03	0.00	-127.33	0.00	127.33	1784.40	892.20	2432.60	1218.11	15.44	-1.121	0.000	0.110
145.00	-9.32	-3.90	0.00	-107.19	0.00	107.19	1743.38	871.69	2291.70	1147.55	16.64	-1.166	0.000	0.099
150.00	-8.78	-3.78	0.00	-87.67	0.00	87.67	1700.71	850.36	2152.72	1077.96	17.88	-1.209	0.000	0.087
155.00	-8.26	-3.66	0.00	-68.75	0.00	68.75	1656.41	828.20	2015.90	1009.45	19.17	-1.247	0.000	0.073
157.00	-7.09	-2.78	0.00	-61.43	0.00	61.43	1638.23	819.11	1961.83	982.37	19.69	-1.261	0.000	0.067
160.00	-6.79	-2.71	0.00	-53.10	0.00	53.10	1610.46	805.23	1881.48	942.14	20.49	-1.280	0.000	0.061
165.00	-6.31	-2.60	0.00	-39.56	0.00	39.56	1562.88	781.44	1749.71	876.15	21.85	-1.309	0.000	0.049
170.00	-5.85	-2.49	0.00	-26.58	0.00	26.58	1513.65	756.82	1620.81	811.61	23.23	-1.332	0.000	0.037
175.00	-5.40	-2.38	0.00	-14.15	0.00	14.15	1462.77	731.39	1495.04	748.63	24.64	-1.348	0.000	0.023
177.00	-2.85	-1.15	0.00	-9.40	0.00	9.40	1441.72	720.86	1445.41	723.78	25.20	-1.353	0.000	0.015
180.00	-2.65	-1.09	0.00	-5.95	0.00	5.95	1400.09	700.04	1362.73	682.38	26.06	-1.357	0.000	0.011
180.00	-2.65	-1.09	0.00	-5.95	0.00	5.95	1210.02	605.01	1174.63	588.19	26.06	-1.357	0.000	0.012
185.00	-0.36	-0.10	0.00	-0.50	0.00	0.50	1210.02	605.01	1174.63	588.19	27.48	-1.360	0.000	0.001
190.00	0.00	-0.09	0.00	0.00	0.00	0.00	1210.02	605.01	1174.63	588.19	28.90	-1.361	0.000	0.000

Copyright © 2020 by Tower Engineering Solutions, LLC. All rights reserved.

Final Analysis Summary

Structure:	CT08748-A-SBA		**Code:**	EIA/TIA-222-G	4/30/2020
Site Name:	Woodstock 4, CT		**Exposure:**	C	
Height:	190.00 (ft)		**Crest Height:**	0.00	
Base Elev:	0.000 (ft)		**Site Class:**	D - Stiff Soil	
Gh:	1.1	**Topography:** 1	**Struct Class:**	II	Page: 28

Tower Engineering Solutions

Reactions

Load Case	Shear FX (kips)	Shear FZ (kips)	Axial FY (kips)	Moment MX (ft-kips)	Moment MY (ft-kips)	Moment MZ (ft-kips)
1.2D + 1.6W 101 mph Wind	39.4	0.00	54.21	0.00	0.00	4848.65
0.9D + 1.6W 101 mph Wind	39.4	0.00	40.65	0.00	0.00	4803.76
1.2D + 1.0Di + 1.0Wi 50 mph Wind	12.3	0.00	89.29	0.00	0.00	1533.23
1.2D + 1.0E	1.8	0.00	54.26	0.00	0.00	231.82
0.9D + 1.0E	1.8	0.00	40.70	0.00	0.00	229.43
1.0D + 1.0W 60 mph Wind	8.7	0.00	45.22	0.00	0.00	1064.23

Max Stresses

Load Case	Pu FY (-) (kips)	Vu FX (-) (kips)	Tu MY (-) (ft-kips)	Mu MZ (ft-kips)	Mu MX (ft-kips)	Resultant Moment (ft-kips)	phi Pn (kips)	phi Vn (kips)	phi Tn (ft-kips)	phi Mn (ft-kips)	Elev (ft)	Stress Ratio
1.2D + 1.6W 101 mph Wind	-34.11	-33.78	0.00	-3072.1	0.00	-3072.1	4202.19	2101.0	9258.62	4636.19	48.00	0.671
0.9D + 1.6W 101 mph Wind	-25.37	-33.54	0.00	-3034.0	0.00	-3034.0	4202.19	2101.0	9258.62	4636.19	48.00	0.661
1.2D + 1.0Di + 1.0Wi 50 mph Wind	-62.99	-10.88	0.00	-969.83	0.00	-969.83	4202.19	2101.0	9258.62	4636.19	48.00	0.224
1.2D + 1.0E	-12.70	-1.12	0.00	-49.93	0.00	-49.93	1823.78	911.89	2575.19	1289.51	135.00	0.046
0.9D + 1.0E	-9.52	-1.11	0.00	-49.27	0.00	-49.27	1823.78	911.89	2575.19	1289.51	135.00	0.043
1.0D + 1.0W 60 mph Wind	-29.12	-7.42	0.00	-673.38	0.00	-673.38	4202.19	2101.0	9258.62	4636.19	48.00	0.152

Copyright © 2020 by Tower Engineering Solutions, LLC. All rights reserved.

Monopole Mat Foundation Design

			Date
			4/30/2020
Customer Name:	DRW Canada Co.	**EIA/TIA Standard:**	EIA-222-G
Site Name:		**Structure Height (Ft.):**	190
Site Number:	CT08748-A-SBA	**Engineer Name:**	J. Tibbetts
Engr. Number:	93543	**Engineer Login ID:**	

Foundation Info Obtained from:	Drawings/Calculations
Structure Type:	Monopole
Analysis or Design?	Analysis

Base Reactions (Factored):

Axial Load (Kips):	89.3	Shear Force (Kips):	39.4
Uplift Force (Kips):	0.0	Moment (Kips-ft):	4848.6
Allowable overstress %:	5.0%		

Foundation Geometries:

		Mods required -Yes/No ?:	No
Diameter of Pier (ft.):	7.0	Depth of Base BG (ft.):	8.0
Pier Height A. G. (ft.):	0.25	Thickness of Pad (ft):	4.00
Length of Pad (ft.):	33	Width of Pad (ft.):	33
Final Length of pad (ft)	33.0	Final width of pad (ft):	33.0

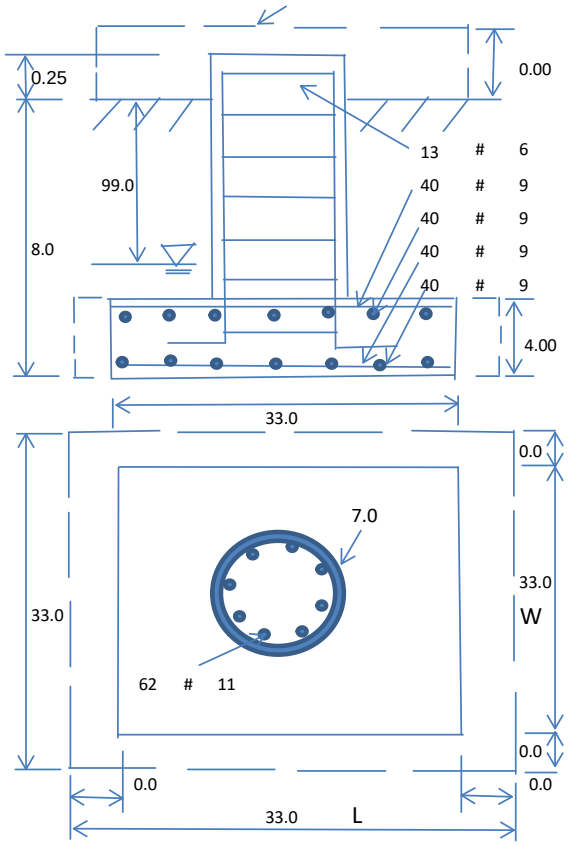

Material Properties and Reabr Info:

Concrete Strength (psi):	4000	Steel Elastic Modulus:	29000	ksi
Vertical bar yield (ksi)	60	Tie steel yield (ksi):	60	
Vertical Rebar Size #:	11	Tie / Stirrup Size #:	6	
Qty. of Vertical Rebars:	62	Tie Spacing (in):	8.0	
Pad Rebar Yield (Ksi):	60	Pad Steel Rebar Size (#):	9	
Concrete Cover (in.):	4	Unit Weight of Concrete:	150.0	pcf

Rebar at the bottom of the concrete pad:

Qty. of Rebar in Pad (L):	40	Qty. of Rebar in Pad (W):	40

Rebar at the top of the concrete pad:

Qty. of Rebar in Pad (L):	40	Qty. of Rebar in Pad (W):	40
Apply 1.35 factor for e/w Per G:	1.35		

Soil Design Parameters:

Soil Unit Weight (pcf):	100.0	Soil Buoyant Weight:	50.0	Pcf		
Water Table B.G.S. (ft):	99.0	Unit Weight of Water:	62.4	pcf	Angle from Top of Pad:	20
Ultimate Bearing Pressure (psf):	8000	Ultimate Skin Friction:	0	Psf	Angle from Bottm of Pad:	20
Consider Friction for O.T.M. (Y/N):	No	Consider Friction for bearing (Y/N):	No		Angle from Bottm of Pad:	20
Consider soil hor. resist. for OTM.:	No	Reduction factor on the maximum soil bearing pressure:				1.00

Foundation Analysis and Design: Uplift Strength Reduction Factor: 0.75 Compression Strength Reduction Factor: 0.75

Total Dry Soil Volume (cu. Ft.):	4202.06	Total Dry Soil Weight (Kips):	420.21
Total Buoyant Soil Volume (cu. Ft.):	0.00	Total Buoyant Soil Weight (Kips):	0.00
Total Effective Soil Weight (Kips):	420.21	Weight from the Concrete Block at Top (K):	0.00
Total Dry Concrete Volume (cu. Ft.):	4519.56	Total Dry Concrete Weight (Kips):	677.93
Total Buoyant Concrete Volume (cu. Ft.):	0.00	Total Buoyant Concrete Weight (Kips):	0.00
Total Effective Concrete Weight (Kips):	677.93	Total Vertical Load on Base (Kips):	1187.44

Check Soil Capacities:

					Load/ Capacity Ratio	
Calculated Maxium Net Soil Pressure under the base (psf):	1820	<	Allowable Factored Soil Bearing (psf):	6000	0.30	OK!
Allowable Foundation Overturning Resistance (kips-ft.):	17780.8	>	Design Factored Momont (kips-ft):	5174	0.29	OK!
Factor of Safety Against Overturning (O. R. Moment/Design Moment):	3.44	OK!				

Check the capacities of Reinforceing Concrete:

Strength reduction factor (Flexure and axial tension):	0.90	Strength reduction factor (Shear):	0.75			
Strength reduction factor (Axial compresion):	0.65	Wind Load Factor on Concrete Design:	1.00			
					Load/ Capacity Ratio	
(1) Concrete Pier:						
Vertical Steel Rebar Area (sq. in./each):	1.56		Tie / Stirrup Area (sq. in./each):	0.44		
Calculated Moment Capacity (Mn,Kips-Ft):	14906.9	>	Design Factored Moment (Mu, Kips-F	5016.1	0.34	OK!
Calculated Shear Capacity (Kips):	969.3	>	Design Factored Shear (Kips):	39.4	0.04	OK!
Calculated Tension Capacity (Tn, Kips):	5222.9	>	Design Factored Tension (Tu Kips):	0.0	0.00	OK!
Calculated Compression Capacity (Pn, Kips):	9626.8	>	Design Factored Axial Load (Pu Kips):	89.3	0.01	OK!
Moment & Axial Strength Combination:	0.34	OK!	Check Tie Spacing (Design/Required):		0.6667	OK!
Pier Reinforcement Ratio:	0.017		Reinforcement Ratio is satisfied per ACI			
(2).Concrete Pad:						
One-Way Design Shear Capacity (L-Direction, Kips):	1631.9	>	One-Way Factored Shear (L-D. Kips):	360.0	0.22	OK!
One-Way Design Shear Capacity (W-Direction, Kips):	1631.9	>	One-Way Factored Shear (W-D., Kips)	360.0	0.22	OK!
One-Way Design Shear Capacity (Corner-Corner. Kips):	1603.6	>	One-Way Factored Shear (C-C, Kips):	319.0	0.20	OK!
Lower Steel Pad Reinforcement Ratio (L-Direct.):	0.0023	OK!	Lower Steel Pad Reinf. Ratio (W-Direc	0.0023		
Lower Steel Pad Moment Capacity (L-Direction. Kips-ft):	7658.3	>	Moment at Bottom (L-Dir. K-Ft):	2868.5	0.37	OK!
Lower Steel Pad Moment Capacity (W-Direction. Kips-ft):	7658.3	>	Moment at Bottom (W-Dir. K-Ft):	2868.5	0.37	OK!
Lower Steel Pad Moment Capacity (Corner-Corner,K-ft):	10790.5	>	Moment at Bottom (C-C Dir. K-Ft):	4056.6	0.38	OK!
Upper Steel Pad Reinforcement Ratio (L-Direct.):	0.0023	OK!	Upper Steel Reinf. Ratio (W-Dir.):	0.0023		
Upper Steel Pad Moment Capacity (L-Direc. Kips-ft):	7658.3	>	Moment at the top (L-Dir K-Ft):	973.6	0.13	OK!
Upper Steel Pad Moment Capacity (W-Direc. Kips-ft):	7658.3	>	Moment at the top (W-Dir K-Ft):	973.6	0.13	OK!
Upper Steel Pad Moment Capacity (Corner-Corner. K-ft):	10790.5	>	Moment at the top (C-C Dir. K-Ft):	908.2	0.08	OK!
(3).Check Punching Shear Capacity due to Moment in the Pier:						
Moment transferred by punching shear:	1939.4	k-ft.	Max. factored shear stress v_{u_CD}:		3.3	Psi
Max. factored shear stress v_{u_AB}:	10.9	Psi	Factored shear Strength ϕv_n:		189.7	Psi
Max. factored shear stress v_u:	10.9	Psi	Check Usage of Punching Shear Capacity:		0.06	OK!

DRW NX LLC
(514) 320-4912

GPD Engineering and Architecture Professional Corporation
Matt Dickson
520 South Main Street, Suite 2531
Akron, OH 44311
(469) 573-4308
mdickson@gpdgroup.com

GPD# US.CT.SBA.08748-A.01
June 22, 2020

MOUNT ANALYSIS REPORT

SITE DESIGNATION:	**Site Name #:**	**US.CT.SBA.08748-A**
ANALYSIS CRITERIA:	**Codes:**	**TIA-222-G, 2015 IBC, & 2018 Connecticut Building Code** **130 mph (ultimate 3-second gust) w/ 0" ice** **101 mph (nominal 3-second gust) w/ 0" ice** **50 mph (3-second gust) w/ 1.5" ice**
SITE DATA:		**215 Coatney Hill Rd, Woodstock, CT 06281, Windham County** **Latitude 41° 57' 43.41" N, Longitude 72° 01' 7.16" W** **(2) Commscope MCRM1030-4 Ring Mounts**

Dear Christian Pigeon,

GPD is pleased to submit this Mount Analysis Report to determine the structural integrity of the aforementioned mount. The purpose of the analysis is to determine the suitability of the mount with the proposed loading configuration detailed in the analysis report.

Analysis Results

Mount Stress Level with Proposed Equipment:	67.6%	Pass

We at GPD appreciate the opportunity of providing our continuing professional services to you and DRW NX LLC. If you have any questions or need further assistance on this or any other projects please do not hesitate to call.

Respectfully submitted,

STATE OF CONNECTICUT
CHRISTOPHER J. SCHEKS
No. 0030026
LICENSED
PROFESSIONAL ENGINEER

Christopher J. Scheks, P.E.
Connecticut #: 0030026

6/22/2020

SUMMARY & RESULTS

The purpose of this analysis was to verify whether the proposed mounts are capable of carrying the proposed loading configuration as specified by DRW NX LLC.

This analysis utilizes an ultimate 3-second gust wind speed of 130 mph (converted to an equivalent 101 mph nominal 3-second gust wind speed per Section 1609.3.1 for use with TIA-222 G) as required by the 2015 International Building Code & 2018 Connecticut Building Code. Applicable Standard references and design criteria are listed in Appendices A & B.

The mount was verified to be capable of withstanding a 500 lb live load concurrent with 30-mph wind speeds.

MOUNT SUMMARY AND RESULTS

Member	Capacity	Results
Mount	53.6%	Pass
Mount to Tower Connection	67.6%	Pass

RECOMMENDATIONS

The mount has sufficient capacity to carry the proposed loading configuration. No modifications are required at this time.

ANALYSIS METHOD

RISA-3D (Version 17.0.2), a commercially available analysis software package, and hand calculations were used to create a three-dimensional model of the mount and calculate member stresses for the proposed loading configuration. Selected calculations from this analysis are included in Appendices B & C. The following table details the information provided to complete this structural analysis. This analysis is solely based on this information.

DOCUMENTS PROVIDED

Document	Remarks	Source
Construction Drawings	GPD Project #: US.CT.NXTR.1043980.01, dated 6/12/2020	DRW NX LLC
Mount Design	Commscope Drawing #: MC-RM1030-4, dated 6/27/2011	Commscope
Mount Mapping	Not Provided	N/A
Previous Mount Analysis	Not Provided	N/A
Mount Modification Drawings	Not Provided	N/A
Tower Design	Not Provided	N/A
Previous Tower Analysis	Not Provided	N/A

ASSUMPTIONS

This mount structural analysis is based on the theoretical capacity of the members and is not a condition assessment of the mount. This analysis is from information supplied, and therefore, its results are based on and are as accurate as that supplied data. GPD has made no independent determination, nor is it required to, of its accuracy. The following assumptions were made for this structural analysis.

1. The mount member sizes and shapes are considered accurate as supplied. The material grade is as per data supplied and/or as assumed based on experience with similar mounts.
2. The antenna configuration is as supplied and/or as modeled in the analysis. When information was not provided, the configuration was modeled based upon past experience with similar loading.
3. Some assumptions are made regarding antennas and mount sizes and their projected areas based on best interpretation of data supplied and of best knowledge of antenna type and industry practice.
4. The mount has been properly maintained in accordance with TIA Standards and/or with manufacturer's specifications.
5. All welds and connections are assumed to develop at least the member capacity unless determined otherwise and explicitly stated in this report.
6. The threaded rods at the mount to tower connection are considered to be sufficiently tightened to resist rotation.

If any of these assumptions are not valid or have been made in error, this analysis may be affected, and GPD should be allowed to review any new information to determine its effect on the structural integrity of the mount.

DISCLAIMER OF WARRANTIES

GPD has not performed a site visit to the mount to verify the member sizes and antenna/coax loading. If the existing conditions are not as represented on the mount elevation contained in this report, we should be contacted immediately to evaluate the significance of the discrepancy. This is not a condition assessment of the mount. This report does not replace a full mount inspection. The mount is assumed to have been properly fabricated, maintained, in good condition, twist free, and plumb.

The engineering services rendered by GPD in connection with this Mount Analysis are limited to a computer analysis of the mount structure and theoretical capacity of its main structural members. All mount components have been assumed to only resist dead loads when no other loads are applied. No allowance was made for any damaged, bent, missing, loose, or rusted members (above and below ground). No allowance was made for loose bolts or cracked welds.

This analysis is limited to the designated maximum wind and seismic conditions per the governing mount standards and code. Wind forces resulting in tower vibrations near the structure's resonant frequencies were not considered in this analysis and are outside the scope of this analysis. Lateral loading from any dynamic response was not evaluated under a time-domain based fatigue analysis.

GPD does not analyze the fabrication of the structure (including welding). It is not possible to have all the very detailed information needed to perform a thorough analysis of every structural sub-component and connection of an existing mount. GPD provides a limited scope of service in that we cannot verify the adequacy of every weld, plate connection detail, etc. The purpose of this report is to assess the feasibility of adding appurtenances usually accompanied by transmission lines to the structure.

It is the owner's responsibility to determine the amount of ice accumulation in excess of the specified code recommended amount, if any, that should be considered in the structural analysis.

The attached sketches are a schematic representation of the analyzed mount. If any material is fabricated from these sketches, the contractor shall be responsible for field verifying the existing conditions, proper fit, and clearance in the field. Any mentions of structural modifications are reasonable estimates and should not be used as a precise construction document. Precise modification drawings are obtainable from GPD, but are beyond the scope of this report.

Towers are designed to carry gravity, wind, and ice loads. All members, legs, diagonals, struts, and redundant members provide structural stability to the tower with little redundancy. Absence or removal of a member can trigger catastrophic failure unless a substitute is provided before any removal. Legs carry axial loads and derive their strength from shorter unbraced lengths by the presence of redundant members and their connection to the diagonals with bolts or welds. If the bolts or welds are removed without providing any substitute to the frame, the leg is subjected to a higher unbraced length that immediately reduces its load carrying capacity. If a diagonal is also removed in addition to the connection, the unbraced length of the leg is greatly increased, jeopardizing its load carrying capacity. Failure of one leg can result in a tower collapse because there is no redundancy. Redundant members and diagonals are critical to the stability of the tower.

GPD makes no warranties, expressed and/or implied, in connection with this report and disclaims any liability arising from material, fabrication, and erection of this mount. GPD will not be responsible whatsoever for, or on account of, consequential or incidental damages sustained by any person, firm, or organization as a result of any data or conclusions contained in this report. The maximum liability of GPD pursuant to this report will be limited to the total fee received for preparation of this report.

APPENDIX A

Mount Analysis Summary Form

Mount Analysis Summary Form

General Info

Site Name	US.CT.SBA.08748-A
Date of Analysis	6/22/2020
Company Performing Analysis	GPD

The information contained in this summary report is not to be used independently from the PE stamped mount analysis.

Structure Info	Description	Date
Tower Type (G, SST, MP)	M	
Tower Height (top of steel AGL)	192'	
Mount Manufacturer	Commscope	
Mount Model	MCRM1030-4 Ring Mount	
Mount Design	Commscope Drawing #: MC-RM1030-4	6/27/2011
Mount Mapping	n/a	
Previous Mount Analysis	n/a	
Mount Modification Design	n/a	
Tower Design	n/a	
Previous Tower Analysis	n/a	

Design Parameters

Design Code Used	TIA-222-G, 2015 IBC, 2018 Connecticut Building Code, & AISC-360
Location of Tower (County, State)	Windham, CT
Wind Speed (mph)	101 (nominal 3-second gust)
Ice Thickness (in)	1
Risk Category (I, II, III)	II
Exposure Category (B, C, D)	C
Topographic Category (1 to 5)	1

Analysis Results (% Maximum Usage)

Proposed Condition	
Mount (%)	53.6%
Mount to Tower Connection (%)	67.6%

Steel Yield Strength (ksi)

Pipes	35
Bolts	A307

Note: Steel grades have been assumed based upon experience with similar mounts.

The mount was verified to be capable of withstanding a 500 lb live load concurrent with 30-mph wind speeds.

Proposed Configuration

Antenna								Mount		
Antenna Owner	Mount Height (ft)	Antenna CL (ft)	Quantity	Type	Manufacturer	Model	Azimuth	Quantity	Manufacturer	Type
DRW NX	157	161	1	Ice Shield	Commscope	MD-SQ3		2	Commscope	MCRM1030-4 Ring Mount
DRW NX	157	161	1	Ice Shield	Commscope	MD-S6				on the same mounts
DRW NX	157	157	1	Dish	Commscope	VHLPX3-6W	66			on the same mounts
DRW NX	157	157	1	Dish	Commscope	USX6-6W-6GR	233			on the same mounts
DRW NX	157	157	4	ODU	SAF	MXM MK2				on the same mounts

APPENDIX B

Wind Calculations and RISA-3D Output File

TIA-222-G: Mount Analysis Wind Loading
US.CT.SBA.08748-A - US.CT.SBA.08748-A
US.CT.SBA.08748-A.01

Structure Information		
Structure Type:	Monopole	
Structure Height:	192	ft
z (Mount Centerline) =	157	ft
Gh (Mount Gust Effect Factor) =	1.00	
Risk Category:	II	

Code Specifications		
TIA/EIA Code:	G	
Nominal Wind Speed (No Ice) =	101	mph (3-s gust)
Nominal Wind Speed (With Ice) =	50	mph (3-s gust)
Ice Thickness	1.5	in
Exposure Category	C	

Topographic Inputs	
Topographic Feature:	N/A

Section Sets										No Ice	Ice Output	
Mount Components	Member Type	Length (in)	Side (Longest seeing wind) (in)	Other Side (in)	Calculated Dc, for ice weight (in)	Dc, for ice weight (in)	Area Type (Round or Flat)	K_a	User's Wind Multiplier	Normal Wind Force (lb/ft)*	Normal Ice Wind Force (lb/ft)*	Ice Weight (lb/ft)*
Face Pipe	Pipe	72.000	3.5	3.5		3.50	Round	1.00	1.00	11.09	5.91	30.01
Mount Pipe	Pipe	96.000	4.5	4.5		4.50	Round	1.00	1.00	14.48	6.74	34.30
Dish Strut	Pipe	33.625	0.5	0.5		0.50	Round	1.00	1.00	1.73	3.94	17.16
Tower Pipe	Pipe	96.000	4.5	4.5		4.50	Round	1.00	1.00	14.48	6.74	34.30

*All forces are unfactored.

Appurtenances								Shielding			No Ice		Ice Output	
	Appurtenance Model	Loading Elevation (ft)	Height (in)	Front Width (in)	Side Depth (in)	Wt (lbs)	Type for Area	Front Shielding (%)	Side Shielding (%)	K_a and/or block shielding	Normal Wind Force (lbs)*	Wt (lbs) (no ice)*	Normal Wind Force (lbs) (w/ ice)*	Wt (lbs) (only ice)*
(1)	MD-SQ3	161	36	24	36	125	Flat	0%	0%	1.00	249.91	125.00	80.73	854.02
(1)	MD-S6	161	48	100	14	442.9	Flat	0%	0%	1.00	1388.39	442.90	385.33	1836.46
(1)	VHLPX3-6W	157	39.4	39.4	24.3	53	Dish w/o Radome	0%	0%	1.00	486.46	53.00	165.44	320.51
(1)	USX6-6W-6GR	157	72	72	59.8	198	HP Dish	0%	0%	1.00	1231.69	198.00	363.52	1046.37
(4)	MXM MK2	157	17.13	11.02	5.12	17.64	Flat	0%	0%	1.00	54.31	17.64	23.45	139.86

*All forces are unfactored.

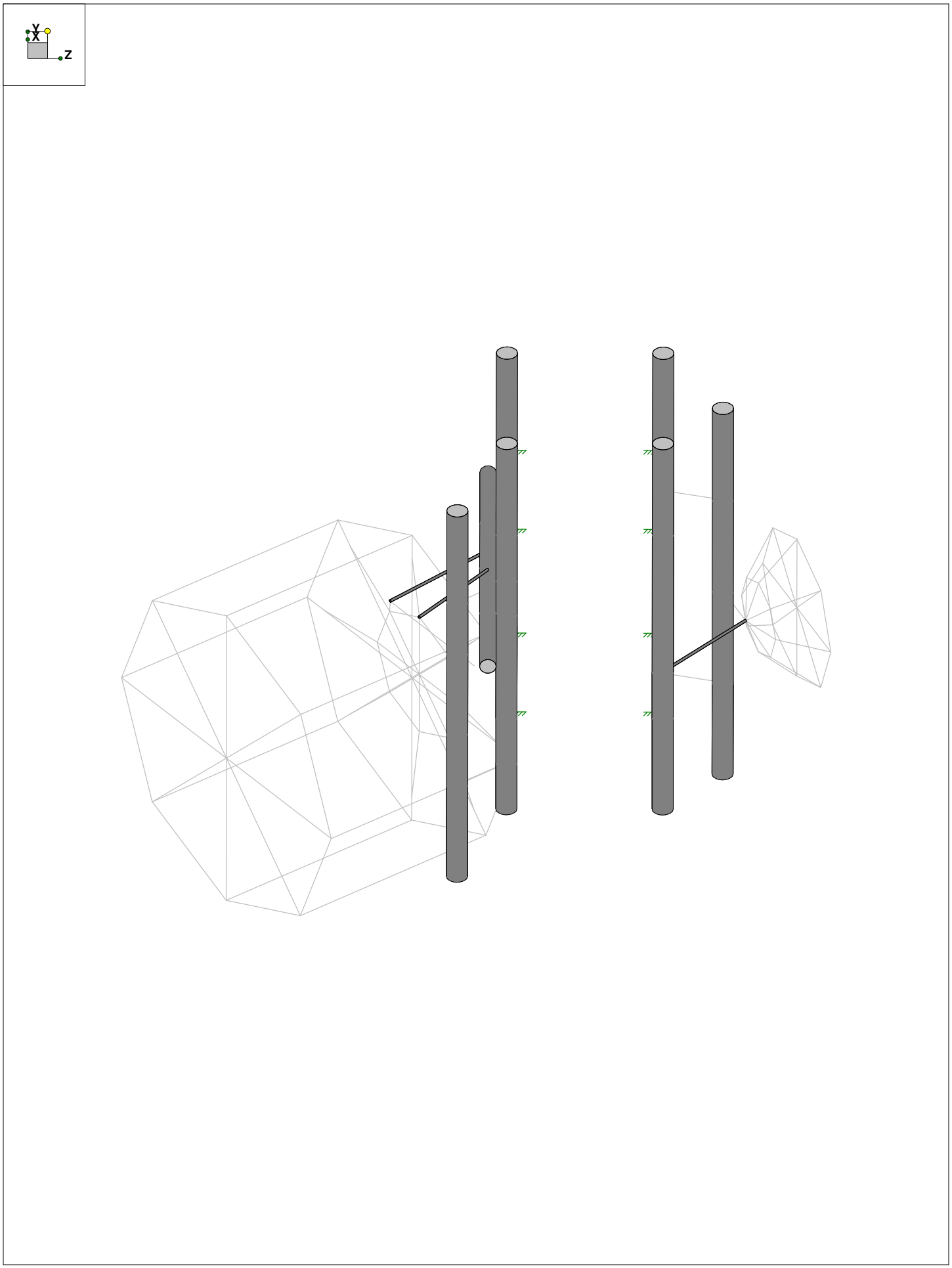
Y
X
Z

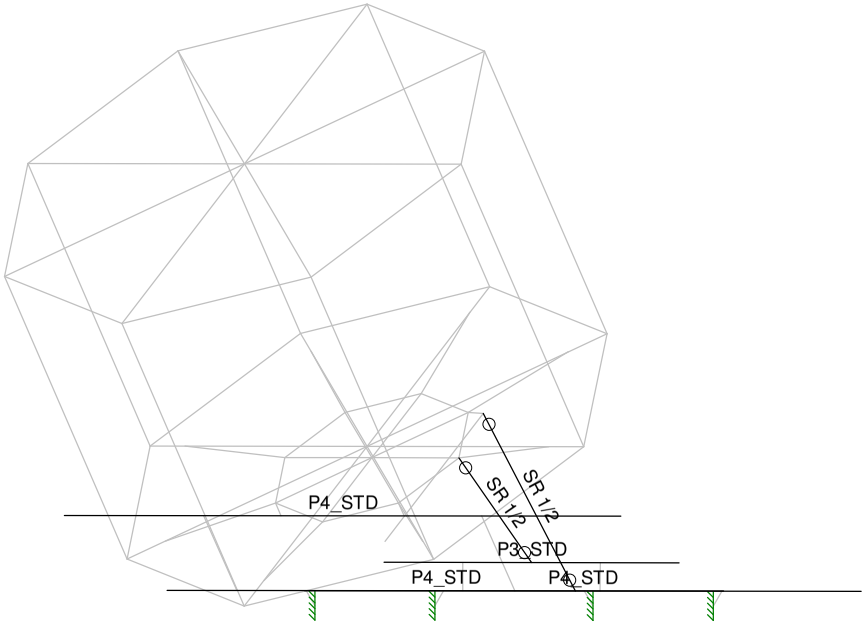
P4_STD
SR 1/2
SR 1/2
P3_STD
P4_STD
P4_STD

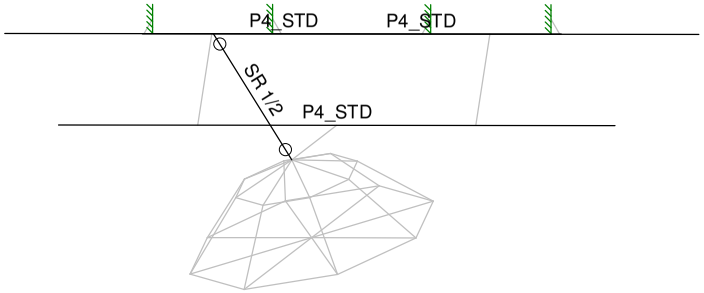
P4_STD
P4_STD
SR 1/2
P4_STD

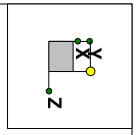
X
Z

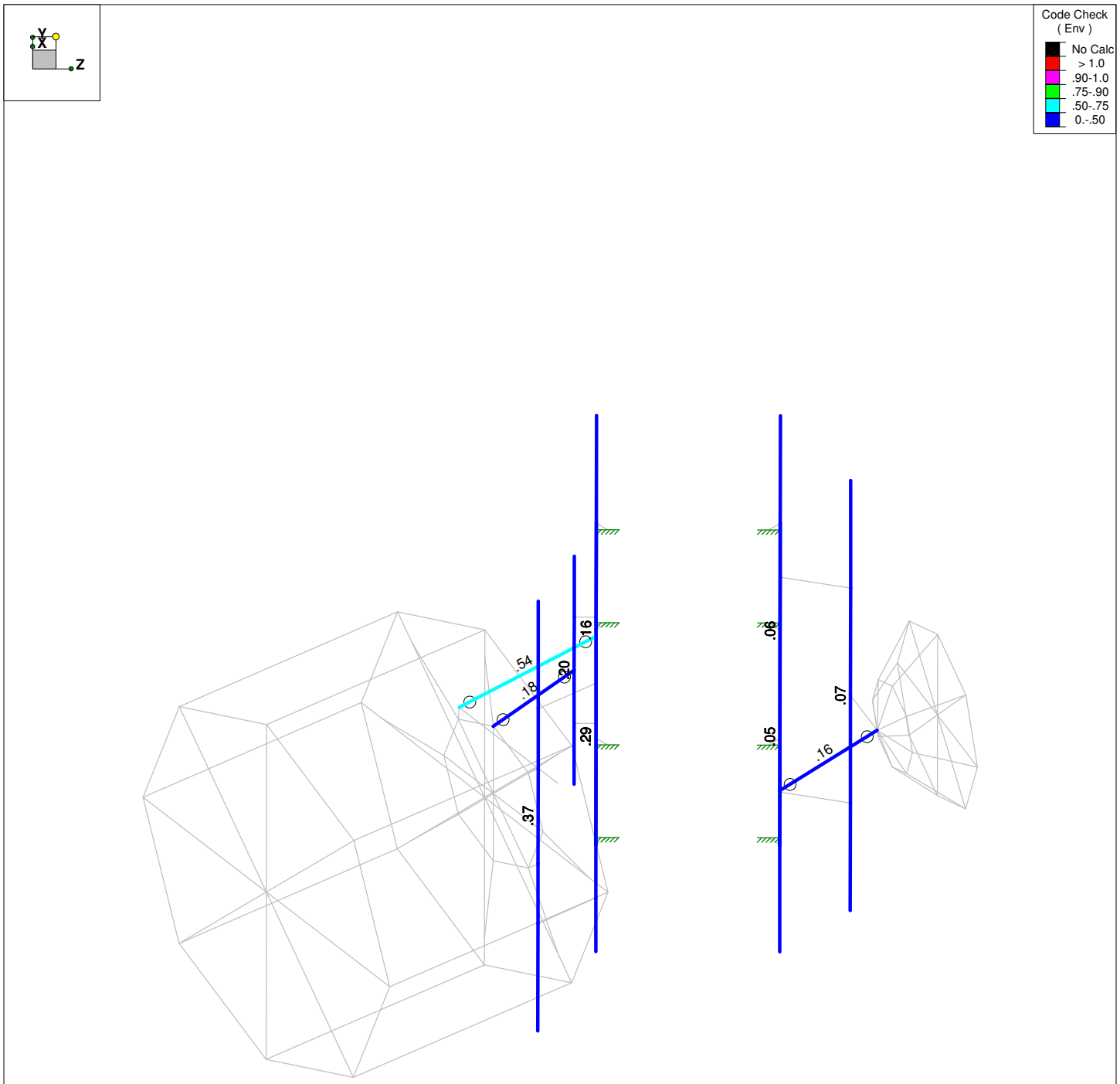

Member Code Checks Displayed (Enveloped)
Results for LC 1, 1.4 Dead

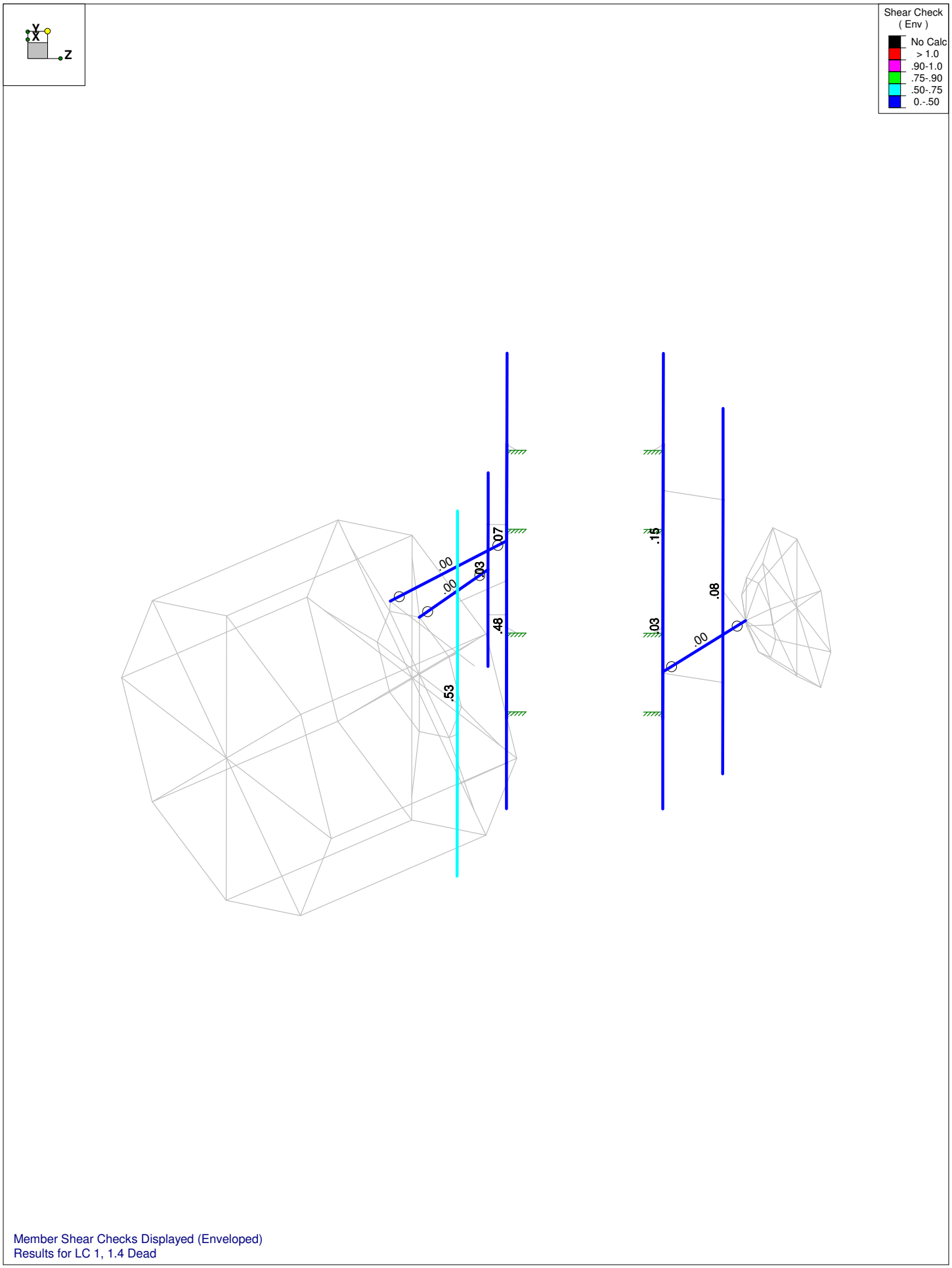

Member Shear Checks Displayed (Enveloped)
Results for LC 1, 1.4 Dead

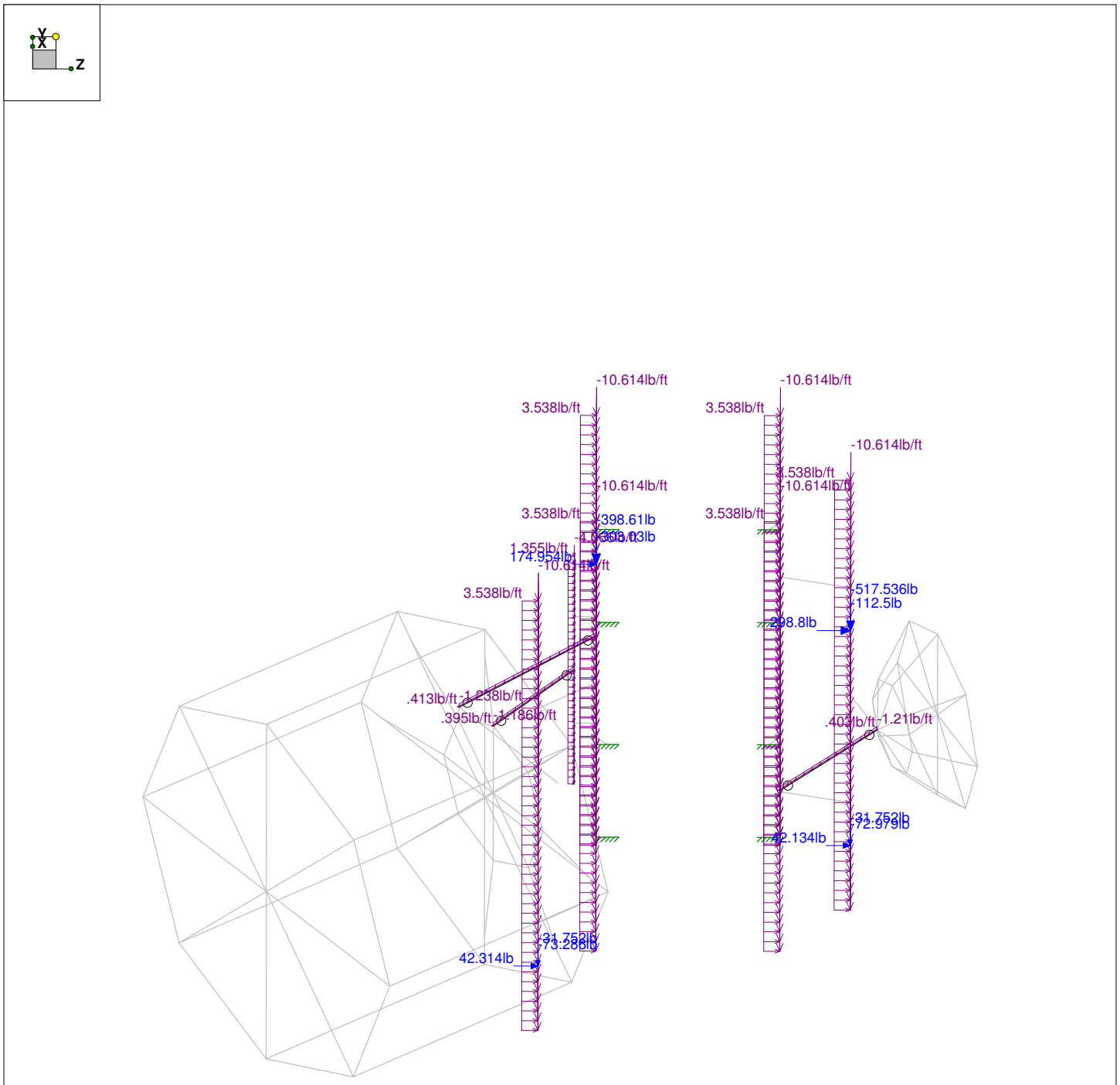

Loads: LC 13, 0.9 Dead + 1.6 Wind @ 150° - No Ice

Hot Rolled Steel Properties

	Label	E [ksi]	G [ksi]	Nu	Therm (\1...	Density[k/...	Yield[ksi]	Ry	Fu[ksi]	Rt
1	A36 Gr.36	29000	11154	.3	.65	.49	36	1.5	58	1.2
2	A572 Gr.50	29000	11154	.3	.65	.49	50	1.1	65	1.1
3	A992	29000	11154	.3	.65	.49	50	1.1	65	1.1
4	A500 Gr.42	29000	11154	.3	.65	.49	42	1.4	58	1.3
5	A500 Gr.46	29000	11154	.3	.65	.49	46	1.4	58	1.3
6	A53 Gr. B	29000	11154	.3	.65	.49	35	1.5	60	1.2

Hot Rolled Steel Section Sets

	Label	Shape	Type	Design ...	Material	Design ...	A [in2]	Iyy [in4]	Izz [in4]	J [in4]
1	Face Pipe	P3_STD	None	None	A53 Gr. B	Typical	2.228	3.017	3.017	6.034
2	Mount Pipe	P4_STD	None	None	A53 Gr. B	Typical	3.174	7.233	7.233	14.465
3	Dish Strut	SR 1/2	None	None	A36 Gr.36	Typical	.196	.003	.003	.006
4	Tower Pipe	P4_STD	None	None	A53 Gr. B	Typical	3.174	7.233	7.233	14.465

Basic Load Cases

	BLC Description	Category	X Gravity	Y Gravity	Z Gravity	Joint	Point	Distributed	Area(Me...	Surface(P...
1	Dead	DL		-1			12			
2	No Ice Wind 0 deg	None					12	9		
3	No Ice Wind 30 deg	None					24	20		
4	No Ice Wind 60 deg	None					24	20		
5	No Ice Wind 90 deg	None					12	10		
6	No Ice Wind 120 deg	None					24	20		
7	No Ice Wind 150 deg	None					24	20		
8	No Ice Wind 180 deg	None					12	9		
9	No Ice Wind 210 deg	None					24	20		
10	No Ice Wind 240 deg	None					24	20		
11	No Ice Wind 270 deg	None					12	10		
12	No Ice Wind 300 deg	None					24	20		
13	No Ice Wind 330 deg	None					24	20		
14	Ice Weight	None					12			
15	Ice Wind 0 deg	None					12	9		
16	Ice Wind 30 deg	None					24	20		
17	Ice Wind 60 deg	None					24	20		
18	Ice Wind 90 deg	None					12	10		
19	Ice Wind 120 deg	None					24	20		
20	Ice Wind 150 deg	None					24	20		
21	Ice Wind 180 deg	None					12	9		
22	Ice Wind 210 deg	None					24	20		
23	Ice Wind 240 deg	None					24	20		
24	Ice Wind 270 deg	None					12	10		
25	Ice Wind 300 deg	None					24	20		
26	Ice Wind 330 deg	None					24	20		
27	Live Load - M136	None					1			
28	Live Load - M75	None					1			
29	Live Load - M76	None					1			
30	Live Load - M81	None					1			
31	Live Load - M82	None					1			
32	Live Load - M89	None					1			
33	Live Load - M84 (Start)	None					1			
34	Live Load - M84 (Mid...	None					1			
35	Live Load - M84 (End)	None					1			

Load Combinations

	Description	S...	P...	S...	B...	Fa...	B...	Fa...	B...	Fa...	B...	Fa...	B...	Fa...	B...	Fa...	B...	Fa...	B...	Fa...	B...	Fa...	B...	Fa...
1	1.4 Dead	Yes	Y		1	1.4	0		0		0		0		0		0		0					
2	1.2 Dead + 1.6 Wind @ 0°...	Yes	Y		1	1.2	2	1.6	0		0		0		0		0		0					
3	0.9 Dead + 1.6 Wind @ 0°...	Yes	Y		1	.9	2	1.6	0		0		0		0		0		0					
4	1.2 Dead + 1.6 Wind @ 30...	Yes	Y		1	1.2	3	1.6	0		0		0		0		0		0					
5	0.9 Dead + 1.6 Wind @ 30...	Yes	Y		1	.9	3	1.6	0		0		0		0		0		0					
6	1.2 Dead + 1.6 Wind @ 60...	Yes	Y		1	1.2	4	1.6	0		0		0		0		0		0					
7	0.9 Dead + 1.6 Wind @ 60...	Yes	Y		1	.9	4	1.6	0		0		0		0		0		0					
8	1.2 Dead + 1.6 Wind @ 90...	Yes	Y		1	1.2	5	1.6	0		0		0		0		0		0					
9	0.9 Dead + 1.6 Wind @ 90...	Yes	Y		1	.9	5	1.6	0		0		0		0		0		0					
10	1.2 Dead + 1.6 Wind @ 12...	Yes	Y		1	1.2	6	1.6	0		0		0		0		0		0					
11	0.9 Dead + 1.6 Wind @ 12...	Yes	Y		1	.9	6	1.6	0		0		0		0		0		0					
12	1.2 Dead + 1.6 Wind @ 15...	Yes	Y		1	1.2	7	1.6	0		0		0		0		0		0					
13	0.9 Dead + 1.6 Wind @ 15...	Yes	Y		1	.9	7	1.6	0		0		0		0		0		0					
14	1.2 Dead + 1.6 Wind @ 18...	Yes	Y		1	1.2	8	1.6	0		0		0		0		0		0					
15	0.9 Dead + 1.6 Wind @ 18...	Yes	Y		1	.9	8	1.6	0		0		0		0		0		0					
16	1.2 Dead + 1.6 Wind @ 21...	Yes	Y		1	1.2	9	1.6	0		0		0		0		0		0					
17	0.9 Dead + 1.6 Wind @ 21...	Yes	Y		1	.9	9	1.6	0		0		0		0		0		0					
18	1.2 Dead + 1.6 Wind @ 24...	Yes	Y		1	1.2	10	1.6	0		0		0		0		0		0					
19	0.9 Dead + 1.6 Wind @ 24...	Yes	Y		1	.9	10	1.6	0		0		0		0		0		0					
20	1.2 Dead + 1.6 Wind @ 27...	Yes	Y		1	1.2	11	1.6	0		0		0		0		0		0					
21	0.9 Dead + 1.6 Wind @ 27...	Yes	Y		1	.9	11	1.6	0		0		0		0		0		0					
22	1.2 Dead + 1.6 Wind @ 30...	Yes	Y		1	1.2	12	1.6	0		0		0		0		0		0					
23	0.9 Dead + 1.6 Wind @ 30...	Yes	Y		1	.9	12	1.6	0		0		0		0		0		0					
24	1.2 Dead + 1.6 Wind @ 33...	Yes	Y		1	1.2	13	1.6	0		0		0		0		0		0					
25	0.9 Dead + 1.6 Wind @ 33...	Yes	Y		1	.9	13	1.6	0		0		0		0		0		0					
26	1.2 Dead + 1.0 Ice Wind ...	Yes	Y		1	1.2	15	1	14	1		1	0		0		0		0					
27	1.2 Dead + 1.0 Ice Wind ...	Yes	Y		1	1.2	16	1	14	1		1	0		0		0		0					
28	1.2 Dead + 1.0 Ice Wind ...	Yes	Y		1	1.2	17	1	14	1		1	0		0		0		0					
29	1.2 Dead + 1.0 Ice Wind ...	Yes	Y		1	1.2	18	1	14	1		1	0		0		0		0					
30	1.2 Dead + 1.0 Ice Wind ...	Yes	Y		1	1.2	19	1	14	1		1	0		0		0		0					
31	1.2 Dead + 1.0 Ice Wind ...	Yes	Y		1	1.2	20	1	14	1		1	0		0		0		0					
32	1.2 Dead + 1.0 Ice Wind ...	Yes	Y		1	1.2	21	1	14	1		1	0		0		0		0					
33	1.2 Dead + 1.0 Ice Wind ...	Yes	Y		1	1.2	22	1	14	1		1	0		0		0		0					
34	1.2 Dead + 1.0 Ice Wind ...	Yes	Y		1	1.2	23	1	14	1		1	0		0		0		0					
35	1.2 Dead + 1.0 Ice Wind ...	Yes	Y		1	1.2	24	1	14	1		1	0		0		0		0					
36	1.2 Dead + 1.0 Ice Wind ...	Yes	Y		1	1.2	25	1	14	1		1	0		0		0		0					
37	1.2 Dead + 1.0 Ice Wind ...	Yes	Y		1	1.2	26	1	14	1		1	0		0		0		0					
38	1.2 Dead + 1.5 Live_M - M...	Yes	Y		1	1.2	27	1.5	2	.088	0		0		0		0		0					
39	1.2 Dead + 1.5 Live_M - M...	Yes	Y		1	1.2	27	1.5	3	.088	0		0		0		0		0					
40	1.2 Dead + 1.5 Live_M - M...	Yes	Y		1	1.2	27	1.5	4	.088	0		0		0		0		0					
41	1.2 Dead + 1.5 Live_M - M...	Yes	Y		1	1.2	27	1.5	5	.088	0		0		0		0		0					
42	1.2 Dead + 1.5 Live_M - M...	Yes	Y		1	1.2	27	1.5	6	.088	0		0		0		0		0					
43	1.2 Dead + 1.5 Live_M - M...	Yes	Y		1	1.2	27	1.5	7	.088	0		0		0		0		0					
44	1.2 Dead + 1.5 Live_M - M...	Yes	Y		1	1.2	27	1.5	8	.088	0		0		0		0		0					
45	1.2 Dead + 1.5 Live_M - M...	Yes	Y		1	1.2	27	1.5	9	.088	0		0		0		0		0					
46	1.2 Dead + 1.5 Live_M - M...	Yes	Y		1	1.2	27	1.5	10	.088	0		0		0		0		0					
47	1.2 Dead + 1.5 Live_M - M...	Yes	Y		1	1.2	27	1.5	11	.088	0		0		0		0		0					
48	1.2 Dead + 1.5 Live_M - M...	Yes	Y		1	1.2	27	1.5	12	.088	0		0		0		0		0					
49	1.2 Dead + 1.5 Live_M - M...	Yes	Y		1	1.2	27	1.5	13	.088	0		0		0		0		0					
50	1.2 Dead + 1.5 Live_M - M...	Yes	Y		1	1.2	28	1.5	2	.088	0		0		0		0		0					
51	1.2 Dead + 1.5 Live_M - M...	Yes	Y		1	1.2	28	1.5	3	.088	0		0		0		0		0					
52	1.2 Dead + 1.5 Live_M - M...	Yes	Y		1	1.2	28	1.5	4	.088	0		0		0		0		0					
53	1.2 Dead + 1.5 Live_M - M...	Yes	Y		1	1.2	28	1.5	5	.088	0		0		0		0		0					
54	1.2 Dead + 1.5 Live_M - M...	Yes	Y		1	1.2	28	1.5	6	.088	0		0		0		0		0					
55	1.2 Dead + 1.5 Live_M - M...	Yes	Y		1	1.2	28	1.5	7	.088	0		0		0		0		0					
56	1.2 Dead + 1.5 Live_M - M...	Yes	Y		1	1.2	28	1.5	8	.088	0		0		0		0		0					

Load Combinations (Continued)

	Description	S...	P...	S...	B...	Fa...	B...	Fa...	B...	Fa...	B...	Fa...	B...	Fa...	B...	Fa...	B...	Fa...	B...	Fa...	B...	Fa...	B...	Fa...
57	1.2 Dead + 1.5 Live_M - M..	Yes	Y		1	1.2	28	1.5	9	.088	0		0		0		0		0					
58	1.2 Dead + 1.5 Live_M - M..	Yes	Y		1	1.2	28	1.5	10	.088	0		0		0		0		0					
59	1.2 Dead + 1.5 Live_M - M..	Yes	Y		1	1.2	28	1.5	11	.088	0		0		0		0		0					
60	1.2 Dead + 1.5 Live_M - M..	Yes	Y		1	1.2	28	1.5	12	.088	0		0		0		0		0					
61	1.2 Dead + 1.5 Live_M - M..	Yes	Y		1	1.2	28	1.5	13	.088	0		0		0		0		0					
62	1.2 Dead + 1.5 Live_M - M..	Yes	Y		1	1.2	29	1.5	2	.088	0		0		0		0		0					
63	1.2 Dead + 1.5 Live_M - M..	Yes	Y		1	1.2	29	1.5	3	.088	0		0		0		0		0					
64	1.2 Dead + 1.5 Live_M - M..	Yes	Y		1	1.2	29	1.5	4	.088	0		0		0		0		0					
65	1.2 Dead + 1.5 Live_M - M..	Yes	Y		1	1.2	29	1.5	5	.088	0		0		0		0		0					
66	1.2 Dead + 1.5 Live_M - M..	Yes	Y		1	1.2	29	1.5	6	.088	0		0		0		0		0					
67	1.2 Dead + 1.5 Live_M - M..	Yes	Y		1	1.2	29	1.5	7	.088	0		0		0		0		0					
68	1.2 Dead + 1.5 Live_M - M..	Yes	Y		1	1.2	29	1.5	8	.088	0		0		0		0		0					
69	1.2 Dead + 1.5 Live_M - M..	Yes	Y		1	1.2	29	1.5	9	.088	0		0		0		0		0					
70	1.2 Dead + 1.5 Live_M - M..	Yes	Y		1	1.2	29	1.5	10	.088	0		0		0		0		0					
71	1.2 Dead + 1.5 Live_M - M..	Yes	Y		1	1.2	29	1.5	11	.088	0		0		0		0		0					
72	1.2 Dead + 1.5 Live_M - M..	Yes	Y		1	1.2	29	1.5	12	.088	0		0		0		0		0					
73	1.2 Dead + 1.5 Live_M - M..	Yes	Y		1	1.2	29	1.5	13	.088	0		0		0		0		0					
74	1.2 Dead + 1.5 Live_M - M..	Yes	Y		1	1.2	30	1.5	2	.088	0		0		0		0		0					
75	1.2 Dead + 1.5 Live_M - M..	Yes	Y		1	1.2	30	1.5	3	.088	0		0		0		0		0					
76	1.2 Dead + 1.5 Live_M - M..	Yes	Y		1	1.2	30	1.5	4	.088	0		0		0		0		0					
77	1.2 Dead + 1.5 Live_M - M..	Yes	Y		1	1.2	30	1.5	5	.088	0		0		0		0		0					
78	1.2 Dead + 1.5 Live_M - M..	Yes	Y		1	1.2	30	1.5	6	.088	0		0		0		0		0					
79	1.2 Dead + 1.5 Live_M - M..	Yes	Y		1	1.2	30	1.5	7	.088	0		0		0		0		0					
80	1.2 Dead + 1.5 Live_M - M..	Yes	Y		1	1.2	30	1.5	8	.088	0		0		0		0		0					
81	1.2 Dead + 1.5 Live_M - M..	Yes	Y		1	1.2	30	1.5	9	.088	0		0		0		0		0					
82	1.2 Dead + 1.5 Live_M - M..	Yes	Y		1	1.2	30	1.5	10	.088	0		0		0		0		0					
83	1.2 Dead + 1.5 Live_M - M..	Yes	Y		1	1.2	30	1.5	11	.088	0		0		0		0		0					
84	1.2 Dead + 1.5 Live_M - M..	Yes	Y		1	1.2	30	1.5	12	.088	0		0		0		0		0					
85	1.2 Dead + 1.5 Live_M - M..	Yes	Y		1	1.2	30	1.5	13	.088	0		0		0		0		0					
86	1.2 Dead + 1.5 Live_M - M..	Yes	Y		1	1.2	31	1.5	2	.088	0		0		0		0		0					
87	1.2 Dead + 1.5 Live_M - M..	Yes	Y		1	1.2	31	1.5	3	.088	0		0		0		0		0					
88	1.2 Dead + 1.5 Live_M - M..	Yes	Y		1	1.2	31	1.5	4	.088	0		0		0		0		0					
89	1.2 Dead + 1.5 Live_M - M..	Yes	Y		1	1.2	31	1.5	5	.088	0		0		0		0		0					
90	1.2 Dead + 1.5 Live_M - M..	Yes	Y		1	1.2	31	1.5	6	.088	0		0		0		0		0					
91	1.2 Dead + 1.5 Live_M - M..	Yes	Y		1	1.2	31	1.5	7	.088	0		0		0		0		0					
92	1.2 Dead + 1.5 Live_M - M..	Yes	Y		1	1.2	31	1.5	8	.088	0		0		0		0		0					
93	1.2 Dead + 1.5 Live_M - M..	Yes	Y		1	1.2	31	1.5	9	.088	0		0		0		0		0					
94	1.2 Dead + 1.5 Live_M - M..	Yes	Y		1	1.2	31	1.5	10	.088	0		0		0		0		0					
95	1.2 Dead + 1.5 Live_M - M..	Yes	Y		1	1.2	31	1.5	11	.088	0		0		0		0		0					
96	1.2 Dead + 1.5 Live_M - M..	Yes	Y		1	1.2	31	1.5	12	.088	0		0		0		0		0					
97	1.2 Dead + 1.5 Live_M - M..	Yes	Y		1	1.2	31	1.5	13	.088	0		0		0		0		0					
98	1.2 Dead + 1.5 Live_M - M..	Yes	Y		1	1.2	32	1.5	2	.088	0		0		0		0		0					
99	1.2 Dead + 1.5 Live_M - M..	Yes	Y		1	1.2	32	1.5	3	.088	0		0		0		0		0					
100	1.2 Dead + 1.5 Live_M - M..	Yes	Y		1	1.2	32	1.5	4	.088	0		0		0		0		0					
101	1.2 Dead + 1.5 Live_M - M..	Yes	Y		1	1.2	32	1.5	5	.088	0		0		0		0		0					
102	1.2 Dead + 1.5 Live_M - M..	Yes	Y		1	1.2	32	1.5	6	.088	0		0		0		0		0					
103	1.2 Dead + 1.5 Live_M - M..	Yes	Y		1	1.2	32	1.5	7	.088	0		0		0		0		0					
104	1.2 Dead + 1.5 Live_M - M..	Yes	Y		1	1.2	32	1.5	8	.088	0		0		0		0		0					
105	1.2 Dead + 1.5 Live_M - M..	Yes	Y		1	1.2	32	1.5	9	.088	0		0		0		0		0					
106	1.2 Dead + 1.5 Live_M - M..	Yes	Y		1	1.2	32	1.5	10	.088	0		0		0		0		0					
107	1.2 Dead + 1.5 Live_M - M..	Yes	Y		1	1.2	32	1.5	11	.088	0		0		0		0		0					
108	1.2 Dead + 1.5 Live_M - M..	Yes	Y		1	1.2	32	1.5	12	.088	0		0		0		0		0					
109	1.2 Dead + 1.5 Live_M - M..	Yes	Y		1	1.2	32	1.5	13	.088	0		0		0		0		0					
110	1.2 Dead + 1.5 Live_V - M...	Yes	Y		1	1.2	33	1.5	0		0		0		0		0		0					
111	1.2 Dead + 1.5 Live_V - M...	Yes	Y		1	1.2	34	1.5	0		0		0		0		0		0					
112	1.2 Dead + 1.5 Live_V - M...	Yes	Y		1	1.2	35	1.5	0		0		0		0		0		0					

Envelope AISC 14th(360-10): LRFD Steel Code Checks

	Member	Shape	Cod...	Loc...	LC	She...	Loc[in]	...	LC	phi*P...	phi*P...	phi*M...	phi*M.....		Eqn
1	M83	SR 1/2	.536	33....	13	.001	33.625		12	613.0...	6361....	.053	.053	...	H1-...
2	M136	P4_STD	.371	37	25	.535	24		25	81287...	99982...	11.318	11.318	...	H3-6
3	M76	P4_STD	.288	36	24	.477	72		25	81287...	99982...	11.318	11.318	...	H3-6
4	M84	P3_STD	.198	52.5	24	.029	52.5		25	57704...	70196...	6.124	6.124	...	H1-1b
5	M87	SR 1/2	.175	23....	12	.002	0		12	1300....	6361....	.053	.053	...	H1-...
6	M131A	SR 1/2	.161	26....	5	.001	0		12	1018....	6361....	.053	.053	...	H1-...
7	M75	P4_STD	.160	72	13	.068	72		13	81287...	99982...	11.318	11.318	...	H1-1b
8	M89	P4_STD	.072	72	22	.083	24		17	81287...	99982...	11.318	11.318	...	H1-1b
9	M81	P4_STD	.058	36	31	.147	72		16	81287...	99982...	11.318	11.318	...	H1-1b
10	M82	P4_STD	.051	72	4	.029	72		5	81287...	99982...	11.318	11.318	...	H1-1b

APPENDIX C

Additional Calculations

TIA-222-G CONNECTION CHECK
Mount to Tower Connection - Typ. All Sectors
US.CT.SBA.08748-A.01

Bolt Information		
Bolt Diameter (d)	0.625	in
Net Tensile Area (An)	0.226	in^2
# of Bolts Total (n)	4	
Bolt Distance Up-Down	4	in
Bolt Distance Left-Right	5.125	in
Bolt Grade	A307	
Bolt Tensile Strength (F_{ub})	60	ksi

RISA 3D Reactions (Up-Down)		
Moment (M)	2.33	k-ft
Axial (T)	2.85	kips
Shear (V)	1.17	kips

RISA 3D Reactions (Left -Right)		
Moment (M)	5.75	k-ft
Axial (T)	0.57	kips
Shear (V)	0.56	kips

Bolt Capacity (Up-Down)		
Nominal Tensile Strength (R_{nt})	13.560	kips
Nominal Shear Strength (R_{nv})	8.28	kips
Bolt Tensile Force (T_{ub})	4.21	kips
Bolt Shear Force (V_{ub})	0.293	kips
$T_{ub}/\phi R_{nt}$	0.41404	
$V_{ub}/\phi R_{nv}$	0.04721	
$(V_{ub}/\phi R_{nv})^2+(T_{ub}/\phi R_{nt})^2$	0.17366	
Bolt Capacity =	41.4%	OK

Bolt Capacity (Left-Right)		
Nominal Tensile Strength (R_{nt})	13.560	kips
Nominal Shear Strength (R_{nv})	8.28	kips
Bolt Tensile Force (T_{ub})	6.88	kips
Bolt Shear Force (V_{ub})	0.141	kips
$T_{ub}/\phi R_{nt}$	0.67647	
$V_{ub}/\phi R_{nv}$	0.02267	
$(V_{ub}/\phi R_{nv})^2+(T_{ub}/\phi R_{nt})^2$	0.45813	
Bolt Capacity =	67.6%	OK

DRAWING INDEX

SHEET NUMBER:	PAGE NAME:	REVISION NUMBER:
TP-1	TITLE PAGE	0
N-1	GENERAL NOTES	0
N-2	GENERAL NOTES	0
N-3	ELECTRICAL NOTES	0
C-1	OVERALL SITE PLAN	0
C-2	ENLARGED SITE PLAN	0
T-1	TOWER ELEVATION & ANTENNA SCHEDULE	0
T-2	DISH MOUNT DETAILS	0
T-3	DISH PLAN @ 157'-0"	0
T-4	DISH ELEVATIONS	0
T-5	COAX MOUNTING DETAILS	0
T-6	EQUIPMENT DETAILS	0
T-7	CABINET DETAILS	0
E-1	UTILITY PLAN	0
E-2	GROUNDING PLAN	0
E-3	ONE-LINE DIAGRAM & UTILITY DETAILS	0
E-4	PANEL SCHEDULE	0
E-5	GROUNDING RISER DIAGRAM	0
E-6	GROUNDING DETAILS	0

SITE NAME:

US.CT.SBA.08748-A

SITE ADDRESS:

215 COATNEY HILL RD WOODSTOCK, CT 06281

SPECIAL NOTES

CONTRACTOR SHALL VERIFY ALL (EX.) CONDITIONS IN FIELD. IF SIGNIFICANT DEVIATIONS OR DETERIORATION ARE ENCOUNTERED AT THE TIME OF CONSTRUCTION, A REPAIR PERMIT WILL BE OBTAINED AND CONTRACTOR SHALL NOTIFY STRUCTURAL ENGINEER IMMEDIATELY.

CONTRACTOR SHALL VERIFY ALL PLANS AND (EX.) DIMENSIONS AND CONDITIONS ON THE JOB SITE & SHALL IMMEDIATELY NOTIFY THE ENGINEER IN WRITING OF ANY DISCREPANCIES BEFORE PROCEEDING WITH THE WORK OR BE RESPONSIBLE FOR SAME.

THESE DRAWINGS ARE PLOTTED AT 22"X34" AND SCALABLE TO 11"X17". PLOT WILL BE FULL SCALE UNLESS OTHERWISE NOTED.

811 Know what's below. Call before you dig.

TO OBTAIN LOCATION OF PARTICIPANTS UNDERGROUND FACILITIES BEFORE YOU DIG IN CONNECTICUT, CONTACT CALL BEFORE YOU DIG
TOLL FREE: 1-800-922-4455 OR
www.cbyd.com

CONNECTICUT STATUTE REQUIRES MIN OF 2 WORKING DAYS NOTICE BEFORE YOU EXCAVATE

DIRECTIONS

(FROM: BANGOR INTERNATIONAL AIRPORT)

CONTINUE TO BRADLEY INTERNATIONAL AIRPORT CON. HEAD NORTH TOWARD BRADLEY INTERNATIONAL AIRPORT. SLIGHT LEFT ONTO BRADLEY INTERNATIONAL AIRPORT. SLIGHT LEFT. TAKE I-91 S, I-291 E AND I-84 E TO CT-190 E IN UNION. TAKE EXIT 73 FROM I-84 E. CONTINUE ONTO BRADLEY INTERNATIONAL AIRPORT CON. CONTINUE ONTO CT-20 E/BRADLEY INTERNATIONAL AIRPORT CON. TAKE THE EXIT TOWARD OLD COUNTY RD/KENNEDY RD. TURN RIGHT ONTO KENNEDY RD. TURN RIGHT TO MERGE ONTO I-91 S TOWARD HARTFORD. TAKE EXIT 35A FOR I-291 TOWARD MANCHESTER. CONTINUE ONTO I-291 E. USE THE LEFT LANE TO MERGE ONTO I-84 E TOWARD BOSTON. TAKE EXIT 73 FOR CT-190 TOWARD UNION. CONTINUE ON CT-190 E. TAKE CT-171 E, CT-197 E AND CENTER RD TO COATNEY HILL RD IN WOODSTOCK. TURN RIGHT ONTO CT-190 E. TURN RIGHT ONTO CT-171 E. TURN LEFT ONTO CT-197 E. TURN RIGHT ONTO CENTER RD. TURN RIGHT ONTO CENTER SCHOOL RD. CONTINUE ONTO COATNEY HILL RD. THE DESTINATION WILL BE ON THE LEFT.

LOCAL MAP

GOOGLE ©2020

PROJECT SUMMARY

SCOPE OF WORK: DRW NX PROPOSES TO:
GROUND SCOPE: INSTALL (1) 4' x 8' ELEVATED PLATFORM W/ EQUIPMENT CABINET, AND NEW 100A ELECTRICAL SERVICE.
TOWER SCOPE: INSTALL (1) 6'-0" MW DISH & (1) 3'-0" MW DISH W/ ICE SHIELDS, (4) SAF RADIOS, ASSOCIATED CABLING AND ASSOCIATED MOUNTING EQUIPMENT.

SITE NAME:	US.CT.SBA.08748-A
SITE ADDRESS:	215 COATNEY HILL RD WOODSTOCK, CT 06281 WINDHAM COUNTY
PROPERTY OWNER:	TOWN OF WOODSTOCK 215 COATNEY HILL RD WOODSTOCK, CT 06281
TOWER OWNER:	SBA 8051 CONGRESS AVENUE BOCA RATON, FLORIDA 33487 PHONE: 800-487-7483
COUNTY:	WINDHAM
JURISDICTION:	TOWN OF WOODSTOCK
PARCEL NUMBER:	CT-169-7276-32-19A
LATITUDE (NAD 83):	41° 57' 43.4052" N (41.962264°) (PER TOWER ENGINEERING SOLUTIONS 5/01/2020)
LONGITUDE (NAD 83):	72° 1' 7.1574" W (-72.018655°) (PER TOWER ENGINEERING SOLUTIONS 5/01/2020)
GROUND ELEVATION:	823' AMSL (PER GOOGLE EARTH)
APPLICANT:	DRW NX

BUILDING CODES:		
	STRUCTURAL	2018 CONNECTICUT BUILDING CODE, W/ AMENDMENTS FROM 2015 IBC
	MECHANICAL	2018 CONNECTICUT BUILDING CODE, W/ AMENDMENTS FROM 2015 IMC
	ELECTRICAL	2017 NEC, AS ADOPTED BY THE STATE OF CONNECTICUT
	FIRE LIFE SAFETY	2018 CONNECTICUT BUILDING CODE, W/ AMENDMENTS FROM 2015 IFC

CONSULTING TEAM

ENGINEER:
GPD ENGINEERING AND ARCHITECTURE PROFESSIONAL CORPORATION
520 SOUTH MAIN STREET, SUITE 2531
AKRON, OHIO 44311
CONTACT: JUSTIN BUTTERFIELD
PHONE #: 330-572-2205
EMAIL: jbutterfield@gpdgroup.com

STRUCTURAL ENGINEER:
TOWER ENGINEERING SOLUTIONS
1320 GREENWAY DR., SUITE 600
IRVING, TX 75038
CONTACT: SITEL SHRESTHA
PHONE #: 972-483-0607
FAX #: 972-975-9615

GPD Engineering and Architecture Professional Corporation
520 South Main Street
Akron, OH 44311
330.572.2100 Fax 330.572.2102

SEAL:

STATE OF CONNECTICUT · LICENSED PROFESSIONAL ENGINEER · 31512

06/16/2020

PROJECT LOCATION:

US.CT.SBA.08748-A
215 COATNEY HILL RD
WOODSTOCK, CT 06281
WINDHAM COUNTY

SCHEDULE OF REVISIONS

REV.	DESCRIPTION OF CHANGE	DRAWN BY:	AUTH BY:	ISSUE DATE
0	ISSUED FOR PERMITTING	ZDT	JWB	06/15/2020
A	90% REVIEW	ZDT	JWB	06/11/2020

SCALE:AS SHOWN | DESIGNED BY: ZDT | DRAWN BY: ZDT

GPD#:2020796.01.US.CT.SBA.08748-A.01

PROJECT NAME: US.CT.SBA.08748-A

DRAWING TITLE: TITLE PAGE

DRAWING NUMBER: TP-1

GENERAL NOTES

1. THE CONTRACTOR'S SCOPE OF WORK SHALL INCLUDE ALL ITEMS DEFINED IN THE CONTRACT DOCUMENTS. THE CONTRACT DOCUMENTS INCLUDE, BUT ARE NOT LIMITED TO, THE FOLLOWING: THE CONTRACT, SPECIFICATIONS AND CONSTRUCTION DRAWINGS.
2. ALL EQUIPMENT SUPPLIED BY THE OWNER SHALL BE PICKED UP BY THE CONTRACTOR AT THE APPROPRIATE WAREHOUSE.
3. THE CONTRACTOR IS RESPONSIBLE FOR COORDINATING ALL WORK.
4. THE CONTRACTOR SHALL PROVIDE ON-SITE SUPERVISION AT ALL TIMES WHILE THE WORK IS BEING PERFORMED AND SHALL DIRECT ALL WORK, USING HIS BEST SKILL AND ATTENTION. HE SHALL BE SOLELY RESPONSIBLE FOR ALL CONSTRUCTION MEANS, METHODS, TECHNIQUES, PROCEDURES AND SEQUENCES FOR COORDINATING ALL PORTIONS OF THE WORK UNDER THE CONTRACT.
5. THE CONTRACTOR SHALL VISIT THE JOB SITE TO REVIEW THE SCOPE OF WORK AND EXISTING JOB SITE CONDITIONS INCLUDING, BUT NOT LIMITED TO, MECHANICAL, ELECTRICAL SERVICE AND OVERALL COORDINATION. THE CONTRACTOR SHALL VERIFY ALL EXISTING CONDITIONS AND DIMENSIONS PRIOR TO SUBMITTING HIS BID. ANY DISCREPANCIES, CONFLICTS OR OMISSIONS, ETC., SHALL BE REPORTED TO DRW NX CONSTRUCTION SUPERVISOR BEFORE PROCEEDING WITH THE WORK.
6. THE CONTRACTOR SHALL PROTECT ALL AREAS FROM DAMAGE WHICH MAY OCCUR DURING CONSTRUCTION. ANY DAMAGE TO NEW AND EXISTING CONSTRUCTION, STRUCTURE, LANDSCAPING OR EQUIPMENT SHALL BE IMMEDIATELY REPAIRED OR REPLACED TO THE SATISFACTION OF THE TENANT, BUILDING OWNER OR OWNER'S REPRESENTATIVE AT THE EXPENSE OF THE CONTRACTOR.
7. IT SHALL BE THE RESPONSIBILITY OF THE CONTRACTOR TO LOCATE ALL EXISTING UTILITIES, WHETHER SHOWN HEREON OR NOT, AND TO PROTECT THEM FROM DAMAGE. THE CONTRACTOR SHALL BEAR ALL EXPENSES FOR REPAIR OR REPLACEMENT OF UTILITIES OR OTHER PROPERTY DAMAGED IN CONJUNCTION WITH THE EXECUTION OF WORK.
8. THE CONTRACTOR SHALL BE RESPONSIBLE FOR THE COMPLETE SECURITY OF THE SITE WHILE THE JOB IS IN PROGRESS AND UNTIL THE JOB IS COMPLETED.
9. THE CONTRACTOR SHALL PROVIDE TEMPORARY WATER, POWER AND TOILET FACILITIES AS REQUIRED BY THE CITY OR GOVERNING AGENCY.
10. THE CONTRACTOR AND ALL SUBORDINATE CONTRACTORS SHALL COMPLY WITH ALL LOCAL AND STATE REGULATIONS.
11. THE CONTRACTOR SHALL OBTAIN AND PAY FOR PERMITS, LICENSES AND INSPECTIONS NECESSARY FOR PERFORMANCE OF THE WORK AND INCLUDE THOSE IN THE COST OF THE WORK TO DRW NX.
12. FIGURED DIMENSIONS HAVE PRECEDENCE OVER DRAWING SCALE, AND DETAIL DRAWINGS HAVE PRECEDENCE OVER SMALL DRAWINGS. CHECK ACCURACY OF ALL DIMENSIONS IN THE FIELD. UNLESS SPECIFICALLY NOTED, DO NOT FABRICATE ANY MATERIALS OFF SITE, NOR DO ANY CONSTRUCTION UNTIL THE ACCURACY OF DRAWING DIMENSIONS HAVE BEEN VERIFIED AGAINST ACTUAL FIELD DIMENSIONS.
13. THE CONTRACTOR SHALL NOTIFY THE DRW NX CONSTRUCTION SUPERVISOR OF ANY CONFLICTS OR DISCREPANCIES IN THE CONTRACT DOCUMENTS OR FIELD CONDITIONS PRIOR TO EXECUTING THE WORK IN QUESTION.
14. THE CONTRACTOR SHALL NOTIFY THE DRW NX CONSTRUCTION SUPERVISOR IF DETAILS ARE CONSIDERED UNSOUND, UNSAFE, NOT WATERPROOF, OR NOT WITHIN CUSTOMARY TRADE PRACTICE. IF WORK IS PERFORMED, IT WILL BE ASSUMED THAT THERE IS NO OBJECTION TO THE DETAIL. DETAILS ARE INTENDED TO SHOW THE END RESULT OF THE DESIGN. MINOR MODIFICATIONS MAY BE REQUIRED TO SUIT JOB CONDITIONS, AND SHALL BE INCLUDED AS PART OF THE WORK.
15. EXISTING ELEVATIONS AND LOCATIONS TO BE JOINED SHALL BE VERIFIED BY THE CONTRACTOR BEFORE CONSTRUCTION. IF THEY DIFFER FROM THOSE SHOWN ON THE PLANS, THE CONTRACTOR SHALL NOTIFY THE DRW NX CONSTRUCTION SUPERVISOR SO THAT MODIFICATIONS CAN BE MADE BEFORE PROCEEDING WITH THE WORK.
16. ALL SYMBOLS AND ABBREVIATIONS USED ON THE DRAWINGS ARE CONSIDERED CONSTRUCTION STANDARDS. IF THE CONTRACTOR HAS QUESTIONS REGARDING THEIR EXACT MEANING, THE DRW NX CONSTRUCTION SUPERVISOR SHALL BE NOTIFIED FOR CLARIFICATION BEFORE PROCEEDING WITH THE WORK.
17. THE CONTRACTOR SHALL PROVIDE ALL NECESSARY BLOCKING, BACKING, FRAMING, HANGERS OR OTHER SUPPORT FOR ALL OTHER ITEMS REQUIRING THE SAME.
18. APPROVED PLANS SHALL BE KEPT IN A PLAN BOX AND SHALL NOT BE USED BY WORKMEN. ALL CONSTRUCTION SETS SHALL REFLECT SAME INFORMATION. AT ALL TIMES THESE ARE TO BE UNDER THE CARE OF THE JOB SUPERINTENDENT.
19. DESIGN DRAWINGS ARE DIAGRAMMATIC ONLY AND SHALL BE FOLLOWED AS CLOSELY AS ACTUAL CONSTRUCTION CONDITIONS WILL PERMIT. ANY ERROR, OMISSION, OR DESIGN DISCREPANCY SHALL BE BROUGHT TO THE ATTENTION OF THE DRW NX CONSTRUCTION SUPERVISOR FOR CLARIFICATION OR CORRECTION BEFORE CONSTRUCTION.
20. AS-BUILTS REQUIREMENTS: DO NOT USE RECORD DOCUMENTS FOR CONSTRUCTION PURPOSES. PROTECT RECORD DOCUMENTS FROM DETERIORATION AND LOSS IN A SECURE, FIRE-RESISTANT LOCATION. PROVIDE ACCESS TO RECORD DOCUMENTS FOR THE DRW NX CONSTRUCTION SUPERVISOR'S REFERENCE DURING NORMAL WORKING HOURS. MAINTAIN A CLEAN, UNDAMAGED SET OF BLUE OR BLACK LINE PRINTS OF CONTRACT DRAWINGS AND SHOP DRAWINGS. MARK THE SET TO SHOW THE ACTUAL INSTALLATION WHERE THE INSTALLATION VARIES SUBSTANTIALLY FROM THE WORK AS ORIGINALLY SHOWN. MARK WHICH DRAWINGS IS MOST CAPABLE OF SHOWING CONDITIONS FULLY AND ACCURATELY. WHERE SHOP DRAWINGS ARE USED, RECORD A CROSS-REFERENCE AT THE CORRESPONDING LOCATION ON THE CONTRACT DRAWINGS. GIVE PARTICULAR ATTENTION TO CONCEALED ELEMENTS THAT WOULD BE DIFFICULT TO MEASURE AND RECORD AT A LATER DATE. MARK RECORD SETS WITH RED ERASABLE PENCIL. USE OTHER COLORS TO DISTINGUISH BETWEEN VARIATIONS IN SEPARATE CATEGORIES OF THE WORK. MARK NEW INFORMATION THAT IS IMPORTANT TO THE OWNER BUT WAS NOT SHOWN ON THE CONTRACT DRAWINGS, DETAILS OR SHOP DRAWINGS. NOTE RELATED CHANGE ORDER NUMBERS WHERE APPLICABLE. NOTE RELATED RECORD DRAWING INFORMATION AND PRODUCT DATA. UPON COMPLETION OF THE WORK, SUBMIT ONE (1) COMPLETE SET OF RECORD DOCUMENTS TO THE DRW NX CONSTRUCTION SUPERVISOR FOR THE OWNER'S RECORDS.

PART I: GENERAL

1.1 SCOPE: CLEARING, GRUBBING, STRIPPING, EROSION CONTROL, SURVEY, LAYOUT, SUB GRADE PREPARATION, FINISH GRADING AND SECURITY FENCE, AS REQUIRED BY CONSTRUCTION DRAWINGS AND DETAIL DRAWINGS.

1.2 REFERENCES
A. DEPARTMENT OF TRANSPORTATION CONSTRUCTION AND MATERIAL SPECIFICATIONS FOR THE STATE IN WHICH THE PROJECT IS LOCATED.
B. ASTM (AMERICAN SOCIETY FOR TESTING AND MATERIALS)
C. OSHA (OCCUPATIONAL SAFETY AND HEALTH ADMINISTRATION)
D. AASHTO (AMERICAN ASSOCIATION OF STATE AND HIGHWAY TRANSPORTATION OFFICIALS)

1.3 INSPECTION AND TESTING
A. FIELD TESTING OF EARTHWORK, AGGREGATE BASE COURSE, COMPACTION, AND CONCRETE TESTING SHALL BE PERFORMED BY THE CONTRACTOR'S INDEPENDENT TESTING LAB.
B. ALL WORK SHALL BE INSPECTED AND RELEASED BY THE DRW NX CONSTRUCTION SUPERVISOR WHO SHALL CARRY OUT THE GENERAL INSPECTION OF THE WORK WITH SPECIFIC CONCERN TO PROPER PERFORMANCE OF THE WORK AS SPECIFIED AND/OR CALLED FOR ON THE DRAWINGS. IT IS THE CONTRACTOR'S RESPONSIBILITY TO REQUEST TIMELY INSPECTIONS PRIOR TO PROCEEDING WITH FURTHER WORK THAT WOULD MAKE PARTS OF THE WORK INACCESSIBLE OR DIFFICULT TO INSPECT.

1.4 SITE MAINTENANCE AND PROTECTION
A. PROVIDE ALL NECESSARY JOB SITE MAINTENANCE FROM COMMENCEMENT OF THE WORK UNTIL COMPLETION OF THE CONTRACT.
B. CONTACT THE ONE-CALL UTILITY LOCATION SERVICE PRIOR TO ANY EXCAVATING ACTIVITIES TO HAVE LOCATIONS OF UNDERGROUND UTILITIES VERIFIED.
C. AVOID DAMAGE TO THE SITE INCLUDING EXISTING FACILITIES, STRUCTURES, TREES AND SHRUBS DESIGNATED TO REMAIN. TAKE PROTECTIVE MEASURES TO PREVENT EXISTING FACILITIES THAT ARE NOT DESIGNATED FOR REMOVAL FROM BEING DAMAGED BY THE WORK.
D. KEEP SITE FREE OF ALL PONDING WATER.
E. PROVIDE EROSION CONTROL MEASURES IN ACCORDANCE WITH THE DEPARTMENT OF TRANSPORTATION CONSTRUCTION AND MATERIAL SPECIFICATIONS FOR THE STATE IN WHICH THE PROJECT IS LOCATED.
F. PROVIDE AND MAINTAIN ALL TEMPORARY FENCING, BARRICADES, WARNING SIGNALS AND SIMILAR DEVICES NECESSARY TO PROTECT LIFE AND PROPERTY DURING THE ENTIRE PERIOD OF CONSTRUCTION. REMOVE ALL SUCH DEVICES UPON COMPLETION OF THE WORK.

PART II: PRODUCTS

2.1 SUITABLE BACK FILL: EXCAVATED INORGANIC MATERIAL, COHESIVE AND NON-COHESIVE MATERIALS, INCLUDING GRAVEL, SAND, INORGANIC LEAN CLAY, GRAVEL SILT, GRAVEL CLAY, SAND CLAY, SAND SILT OR SILT CLAY MATERIAL FREE FROM FROZEN LUMPS, REFUSE, STONES OR ROCKS LARGER THAN 3-INCHES IN ANY DIMENSION OR OTHER MATERIAL THAT MAY MAKE THE INORGANIC MATERIAL UNSUITABLE FOR BACKFILL OR FILL MATERIAL AS DETERMINED BY THE DRW NX CONSTRUCTION SUPERVISOR AND GEOTECHNICAL ENGINEER.

2.2 POROUS AND NON POROUS EMBANKMENT AND BACK FILL:
A. CONNECTICUT: PER CONNECTICUT DEPARTMENT OF TRANSPORTATION SECTION 2.13-19

2.3 SELECT STRUCTURAL FILL: GRANULAR FILL MATERIAL FOR USE AROUND AND UNDER STRUCTURES WHERE STRUCTURAL FILL MATERIALS ARE REQUIRED:
A. CONNECTICUT: PER CONNECTICUT DEPARTMENT OF TRANSPORTATION SECTION 2.13-19

2.4 GRANULAR BEDDING AND TRENCH BACK FILL: WELL-GRADED SAND (SW OR SW-SM) AND THE FOLLOWING:
A. CONNECTICUT: PER CONNECTICUT DEPARTMENT OF TRANSPORTATION SECTION 2.13-19

2.5 CRUSHED STONE SURFACE COURSE FOR ACCESS ROAD:
A. CONNECTICUT: PER CONNECTICUT DEPARTMENT OF TRANSPORTATION SECTION 2.13-19L

2.6 CRUSHED STONE SUBBASE FOR ACCESS ROAD:
A. AASHTO #57 CRUSHED LIMESTONE OR APPROVED EQUAL

2.7 CRUSHED STONE GRANULAR BASE FOR COMPOUND:
A. AASHTO #57 CRUSHED LIMESTONE OR APPROVED EQUAL

2.8 UNSUITABLE MATERIALS: TOP SOIL, HIGH AND MODERATELY PLASTIC SILTS AND CLAY, MATERIAL CONTAINING REFUSE, FROZEN LUMPS, DEMOLISHED BITUMINOUS MATERIAL, VEGETATIVE MATTER, WOOD, STONES IN EXCESS OF 3-INCHES IN ANY DIMENSION AND DEBRIS AS DETERMINED BY THE CONSTRUCTION SUPERVISOR AND DRW NX GEOTECHNICAL ENGINEER. TYPICALLY, THESE WILL BE SOILS CLASSIFIED AS PT, MH, CH, OH, ML OR OL.

2.9 GEOTEXTILE FABRIC: MIRAFI 500X OR APPROVED EQUIVALENT

2.10 PLASTIC MARKING TAPE: SHALL BE ACID AND ALKALI RESISTANT POLYETHYLENE FILM, SPECIFICALLY MANUFACTURED FOR MARKING AND LOCATING UNDERGROUND UTILITIES, 6-INCHES WIDE WITH A MINIMUM THICKNESS OF 0.004-INCH. TAPE SHALL HAVE MINIMUM STRENGTH OF 1500 PSI IN BOTH DIRECTIONS AND MANUFACTURED WITH INTEGRAL WIRES, FOIL BACKING OR OTHER MEANS TO ENABLE DETECTION BY A METAL DETECTOR WHEN BURIED UP TO 3 FEET DEEP. THE METALLIC CORE OF THE TAPE SHALL BE ENCASED IN A PROTECTIVE JACKET OR PROVIDED WITH OTHER MEANS TO PROTECT IT FROM CORROSION. TAPE COLOR SHALL BE RED FOR ELECTRIC UTILITIES AND ORANGE FOR TELECOMMUNICATION UTILITIES.

2.11 SECURITY FENCE
A. PROVIDE AND INSTALL THE GALVANIZED FENCE WITH ASSOCIATED POSTS, RAILS, BRACES, FABRIC, TERMINAL POST, GATES, DROP BAR AND BARBED WIRE. USE APPLICABLE PROVISIONS OF ASTM FOR MATERIALS.
B. FABRIC SHALL BE HEAVY GALVANIZED CHAIN LINK FENCE, CONFORMING TO ASTM A392 2-INCH MESH 9 GAUGE WIRE (0.148 INCHES IN DIAMETER) WITH THE TOP AND BOTTOM SELVAGES TWISTED AND BARBED.
C. POSTS
   1. LINE POST FOR FABRIC UP TO 8 FEET HIGH SHALL BE 2 3/8 INCH O.D.
   2. END CORNER, PULL POST AND GATE POST SHALL BE 2 7/8 INCH O.D. ALL POSTS SHALL BE SCHEDULE 40 GALVANIZED STEEL PIPE IN ACCORDANCE WITH ASTM A120, A570 AND A525. FOR FENCE OVER 8 FEET HIGH, SIZE POST ACCORDING TO MANUFACTURER'S RECOMMENDATIONS.
D. TOP RAILS SHALL CONFORM TO 1 1/4 INCH (1.660" O.D.), SCHEDULE 40 GALVANIZED STEEL PIPE IN ACCORDANCE WITH ASTM A120.
E. TENSION WIRE SHALL BE 7 GAUGE U.S. STEEL WIRE GALVANIZED IN ACCORDANCE WITH ASTM A116, COATING CLASS III.
F. BRACE BANDS, TENSION BANDS AND TENSION BARS SHALL BE FABRICATED OF 1/8 INCH BY 7/8 INCH GALVANIZED STEEL WITH GALVANIZED STEEL CARRIAGE BOLTS AND NUTS IN ACCORDANCE WITH ASTM A123. TENSION BARS SHALL BE 1/4 INCH BY 3/4 INCH GALVANIZED STEEL BAR IN ACCORDANCE WITH ASTM A153.
G. FABRIC TIES SHALL BE CLASS I GALVANIZED STEEL WIRE NO LESS THAN 9 GAUGE.
H. POST TOPS SHALL BE PRESSED STEEL OR MALLEABLE IRON AND SHALL BE GALVANIZED PER ASTM A153.
I. BARBED WIRE SHALL CONSIST OF DOUBLE STRANDED 12 1/2 GAUGE WIRE ASTM A121, CLASS 3 WITH 4-POINT BARBS SPACED 5 INCHES APART. THE TOP 1 FOOT OF THE FENCE SHALL CONSIST OF 3 STRANDS OF BARBED WIRE ATTACHED TO 45 DEGREE ANGLE, HEAVY-PRESSED ARMS CAPABLE OF WITHSTANDING WITHOUT FAILURE 250 POUNDS DOWNWARD PULL AT THE OUTERMOST END OF THE ARM.
J. GATE MATERIALS, SUCH AS FABRIC, BOLTS, NUTS, TENSION BARS AND BARBED WIRE SHALL BE CONSISTENT WITH FENCE MATERIALS.

GPD Engineering and Architecture
Professional Corporation
520 South Main Street
Akron, OH 44311
330.572.2100 Fax 330.572.2102

SEAL:
STATE OF CONNECTICUT LEONARDO A. SFERRA 31512 LICENSED PROFESSIONAL ENGINEER
06/16/2020

PROJECT LOCATION:
US.CT.SBA.08748-A
215 COATNEY HILL RD
WOODSTOCK, CT 06281
WINDHAM COUNTY

SCHEDULE OF REVISIONS

REV.	DESCRIPTION OF CHANGE	DRAWN BY:	AUTH BY:	ISSUE DATE
0	ISSUED FOR PERMITTING	ZDT	JWB	06/15/2020
A	90% REVIEW	ZDT	JWB	06/11/2020

SCALE:AS SHOWN | DESIGNED BY: ZDT | DRAWN BY: ZDT

GPD#:2020796.01.US.CT.SBA.08748-A.01

PROJECT NAME:
US.CT.SBA.08748-A

DRAWING TITLE:
GENERAL NOTES

DRAWING NUMBER:
N-1

PART III: EXECUTION

3.1 GENERAL

A. BEFORE STARTING GENERAL SITE PREPARATION ACTIVITIES, INSTALL EROSION AND SEDIMENT CONTROL MEASURES. THE WORK AREA SHALL BE CONSTRUCTED AND MAINTAINED IN SUCH CONDITION THAT IN THE EVENT OF RAIN THE SITE WILL BE WELL DRAINED AT ALL TIMES.

B. PERFORM ALL SURVEY, LAYOUT, STAKING AND MARKING TO ESTABLISH AND MAINTAIN ALL LINES, GRADES, ELEVATIONS AND BENCHMARKS NEEDED FOR EXECUTION OF THE WORK.

C. CLEAR AND GRUB THE AREA WITHIN THE LIMITS OF THE SITE AND ONLY THE IMMEDIATE SURROUNDINGS NECESSARY TO COMPLETE THE WORK. REMOVE TREES, BRUSH, STUMPS, RUBBISH AND OTHER DEBRIS AND VEGETATION RESTING ON OR PROTRUDING THROUGH THE SURFACE OF THE SITE AREA TO BE CLEARED AND GRUBBED.

1. REMOVE THE FOLLOWING MATERIALS TO A DEPTH OF NO LESS THAN 12-INCHES BELOW THE ORIGINAL GROUND SURFACE: ROOTS, STUMPS AND OTHER DEBRIS, BRUSH AND REFUSE EMBEDDED IN OR PROTRUDING THROUGH THE GROUND SURFACE. RAKE, DISK OR PLOW THE AREA TO A DEPTH OF NO LESS THAN 6-INCHES, AND REMOVE UP TO A DEPTH OF 12-INCHES ALL ROOTS AND OTHER DEBRIS THEREBY EXPOSED.
2. REMOVE TOPSOIL MATERIALS COMPLETELY FROM THE SURFACE UNTIL THE SOIL NO LONGER MEETS THE DEFINITION OF TOPSOIL. AVOID MIXING TOPSOIL WITH SUBSOIL OR OTHER EXCAVATED MATERIALS. TOPSOIL SHALL BE STOCKPILED SEPARATELY FOR REUSE, AS DIRECTED BY THE CONSTRUCTION SUPERVISOR.
3. EXCEPT WHERE EXCAVATION TO GREATER DEPTH IS INDICATED, FILL DEPRESSIONS RESULTING FROM CLEARING, GRUBBING AND DEMOLITION COMPLETELY WITH SUITABLE FILL.

D. REMOVE FROM THE SITE AND DISPOSE IN AN AUTHORIZED LANDFILL ALL DEBRIS RESULTING FROM CLEARING AND GRUBBING OPERATIONS. BURNING IS NOT PERMITTED.

E. PRIOR TO EXCAVATING, THOROUGHLY EXAMINE THE AREA TO BE EXCAVATED AND/OR TRENCHED TO VERIFY THE LOCATIONS OF FEATURES INDICATED ON THE DRAWINGS, AND ASCERTAIN THE EXISTENCE AND LOCATION OF ANY STRUCTURE, UNDERGROUND STRUCTURE, CULVERT, STREAM CROSSING OR OTHER ITEM NOT SHOWN THAT MIGHT AFFECT OR INTERFERE WITH THE NEW CONSTRUCTION. NOTIFY THE DRW NX CONSTRUCTION SUPERVISOR OF ANY OBSTRUCTIONS THAT WILL PREVENT ACCOMPLISHMENT OF THE WORK AS INDICATED ON THE DRAWINGS.

F. SEPARATE AND STOCKPILE ALL EXCAVATED MATERIALS SUITABLE FOR BACK FILL. ALL EXCESS EXCAVATED AND UNSUITABLE MATERIALS SHALL BE DISPOSED OF IN AN AREA DESIGNATED BY THE DRW NX CONSTRUCTION SUPERVISOR. (UNSUITABLE MATERIAL MAY BE REQUIRED TO BE REMOVED FROM THE SITE.)

3.2 BACK FILL AS SOON AS PRACTICAL AFTER COMPLETING CONSTRUCTION OF THE RELATED STRUCTURE, INCLUDING EXPIRATION OF THE SPECIFIED MINIMUM CURING PERIOD FOR CAST-IN-PLACE CONCRETE, BACKFILL THE EXCAVATION WITH APPROVED MATERIAL TO RESTORE THE REQUIRED FINISH GRADE.

A. PRIOR TO PLACING BACKFILL AROUND STRUCTURES, ALL FORMS SHALL HAVE BEEN REMOVED AND THE EXCAVATION CLEANED OF ALL TRASH, DEBRIS AND UNSUITABLE MATERIALS.

B. BACK FILL BY PLACING AND COMPACTING SUITABLE BACKFILL MATERIAL OR SELECT GRANULAR BACKFILL MATERIAL, WHEN REQUIRED, IN UNIFORM HORIZONTAL LAYERS OF NO GREATER THAN 8-INCH LOOSE THICKNESS. WHERE HAND-OPERATED COMPACTORS ARE USED, THE FILL MATERIALS SHALL BE PLACED IN LIFTS NOT TO EXCEED FOUR INCHES IN LOOSE DEPTH.

C. WHENEVER THE DENSITY TESTS INDICATE THAT THE CONTRACTOR HAS NOT OBTAINED THE SPECIFIED DENSITY, THE SUCCEEDING LAYER SHALL NOT BE PLACED UNTIL THE SPECIFICATION REQUIREMENTS ARE MET UNLESS OTHERWISE AUTHORIZED BY THE GEOTECHNICAL ENGINEER. THE CONTRACTOR SHALL TAKE WHATEVER APPROPRIATE ACTION IS NECESSARY, SUCH AS DISKING AND DRYING, ADDING WATER OR INCREASING THE COMPACTIVE EFFORT.

D. THOROUGHLY COMPACT EACH LAYER OF BACKFILL TO A MINIMUM OF 90% OF THE MAXIMUM DRY DENSITY AS PROVIDED BY THE MODIFIED PROCTOR TEST C. DO NOT PLACE BACKFILL AROUND NEW CAST-IN-PLACE CONCRETE STRUCTURES UNTIL THE CONCRETE HAS CURED FOR AT LEAST 7 DAYS OR COMPRESSIVE STRENGTH TESTS INDICATE THAT THE CONCRETE HAS ACHIEVED MORE THAN 80% OF ITS SPECIFIED 28 DAY COMPRESSIVE STRENGTH.

3.3 TRENCH EXCAVATION

A. UTILITY TRENCHES SHALL BE EXCAVATED TO THE LINES AND GRADES SHOWN ON THE DRAWINGS OR AS DIRECTED BY THE DRW NX CONSTRUCTION SUPERVISOR. PROVIDE SHORING, SHEETING AND BRACING AS REQUIRED TO PREVENT CAVING OR SLOUGHING OF THE TRENCH WALLS.

B. THE TRENCH WIDTH EXTENDS A MINIMUM OF 6 INCHES BEYOND EACH OUTSIDE EDGE OF THE CONDUIT OR OUTERMOST CONDUIT, WHICHEVER IS APPLICABLE.

C. WHEN SOFT, YIELDING OR OTHERWISE UNSTABLE SOIL CONDITIONS ARE ENCOUNTERED AT THE REQUIRED TRENCH BOTTOM ELEVATION, OVER-EXCAVATE THE TRENCH TO A DEPTH OF NO LESS THAN 12 INCHES BELOW THE REQUIRED ELEVATION AND BACKFILL WITH GRANULAR BEDDING MATERIAL.

3.4 TRENCH BACK FILL

A. PROVIDE GRANULAR BEDDING MATERIAL IN ACCORDANCE WITH THE SPECIFICATIONS, DRAWINGS AND THE UTILITY REQUIREMENTS.

B. NOTIFY THE DRW NX CONSTRUCTION SUPERVISOR 24 HOURS IN ADVANCE OF BACK FILLING

C. CONDUCT UTILITY CHECK TESTS BEFORE BACK FILLING BACK FILL AND COMPACT TRENCH BEFORE ACCEPTANCE TESTING.

D. PLACE GRANULAR TRENCH BACKFILL UNIFORMLY ON BOTH SIDES OF THE CONDUITS IN 6-INCH UNCOMPACTED LIFTS UNTIL 12 INCHES OVER THE CONDUITS. SOLIDLY RAM AND TAMP BACKFILL INTO SPACES AROUND THE CONDUITS.

E. PROTECT CONDUIT FROM LATERAL MOVEMENT, DAMAGE FROM IMPACT OR UNBALANCED LOADING.

F. ABOVE THE CONDUIT EMBEDMENT ZONE, PLACE AND COMPACT SATISFACTORY BACKFILL MATERIAL IN 9-INCH MAXIMUM LOOSE THICKNESS LIFTS TO RESTORE THE REQUIRED FINISHED SURFACE GRADE.

G. COMPACT FINAL TRENCH BACKFILL TO A DENSITY EQUAL TO OR GREATER THAN THAT OF THE EXISTING UNDISTURBED MATERIAL IMMEDIATELY ADJACENT TO THE TRENCH BUT NO LESS THAN A MINIMUM OF 95%OF THE MAXIMUM DRY DENSITY AS PROVIDED BY THE MODIFIED PROCTOR TEST, ASTM D1557

3.5 AGGREGATE ACCESS ROAD AND SITE

A. CLEAR, GRUB, STRIP AND EXCAVATE FOR THE ACCESS ROAD AND TOWER COMPOUND TO THE LINES AND GRADES INDICATED ON THE DRAWINGS. SCARIFY TO A DEPTH OF 6 INCHES AND PROOF-ROLL. ALL HOLES, RUTS, SOFT PLACES AND OTHER DEFECTS SHALL BE CORRECTED.

B. THE ENTIRE SUB GRADE SHALL BE COMPACTED TO NOT LESS THAN 95% OF THE MAXIMUM DRY DENSITY AS PROVIDED BY THE MODIFIED PROCTOR TEST, ASTM D 1557.

C. AFTER PREPARATION OF THE SUB GRADE IS COMPLETED, THE GEOTEXTILE FABRIC SHALL BE INSTALLED TO THE LIMITS INDICATED ON THE DRAWINGS BY ROLLING THE FABRIC OUT LONGITUDINALLY ALONG THE ROADWAY OR SITE. THE FABRIC SHALL NOT BE DRAGGED ACROSS THE SUB GRADE PLACE THE ENTIRE ROLL IN A SINGLE OPERATION, ROLLING THE MATERIAL AS SMOOTHLY AS POSSIBLE.

1. OVERLAPS PARALLEL TO THE ROADWAY AND SITE WILL BE PERMITTED AT THE CENTERLINE AND AT LOCATIONS BEYOND THE ROADWAY OR SITE SURFACE WIDTH (I.E., WITHIN THE SHOULDER WIDTH) ONLY. NO LONGITUDINAL OVERLAPS SHALL BE LOCATED BETWEEN THE CENTERLINE AND THE SHOULDER. PARALLEL OVERLAPS SHALL BE A MINIMUM OF 3 FEET WIDE.
2. TRANSVERSE (PERPENDICULAR TO THE ROADWAY) OVERLAPS AT THE END OF A ROLL SHALL OVERLAP IN THE DIRECTION OF THE AGGREGATE PLACEMENT (PREVIOUS ROLL ON TOP) AND SHALL HAVE A MINIMUM LENGTH OF 3 FEET.
3. ALL OVERLAPS SHALL BE PINNED WITH STAPLES OR NAILS BETWEEN 10 AND 12 INCHES LONG TO INSURE STABLE POSITIONING DURING PLACEMENT OF AGGREGATE. PIN LONGITUDINAL SEAMS AT 25-FOOT CENTERS AND TRANSVERSE SEAMS EVERY 5 FEET ON CENTER.

D. THE AGGREGATE SUB BASE, BASE AND SURFACE COURSES SHALL BE CONSTRUCTED IN LAYERS NOT MORE THAN 4 INCHES (COMPACTED) THICKNESS. AGGREGATE TO BE PLACED ON GEOTEXTILE FABRIC SHALL BE END-DUMPED ON THE FABRIC FROM THE FREE END OF THE FABRIC OR OVER PREVIOUSLY PLACED AGGREGATE. AT NO TIME SHALL EQUIPMENT, EITHER DUMPING THE AGGREGATE OR GRADING THE AGGREGATE, BE PERMITTED ON THE ROADWAY OR COMPOUND WITH LESS THAN 8 INCHES OF MATERIAL COVERING THE FABRIC.

E. THE AGGREGATE SUB BASE AND BASE SHALL BE IMMEDIATELY COMPACTED TO NOT LESS THAN 95% OF THE MAXIMUM DRY DENSITY AS PROVIDED BY THE MODIFIED PROCTOR TEST, ASTM D 1557.

3.6 FINISH GRADING

A. PERFORM ALL FINISHED GRADING TO PROVIDE SMOOTH, EVEN SURFACE AND SUBSURFACE DRAINAGE OF THE ENTIRE AREA WITHIN THE LIMITS OF CONSTRUCTION. GRADING SHALL BE COMPATIBLE WITH ALL SURROUNDING TOPOGRAPHY AND STRUCTURES.

B. UTILIZE SATISFACTORY FILL MATERIALS RESULTING FROM THE EXCAVATION WORK IN THE CONSTRUCTION OF FILLS, EMBANKMENTS AND FOR THE REPLACEMENT OF REMOVED UNSUITABLE MATERIALS.

C. REPAIR ALL ACCESS ROADS AND SURROUNDING AREAS USED DURING THE COURSE OF THIS WORK TO THEIR ORIGINAL CONDITION.

3.7 SECURITY FENCE

A. THE BOTTOM OF THE FENCE SHALL BE 2 INCHES BELOW THE TOP OF THE COMPOUND GRAVEL. IF THE SITE CROSSES FEATURES SUCH AS DRAINAGE DITCHES, ETC., THE FENCE SHALL SPAN THE DEPRESSION. CLOSE THE SPACE BELOW THE BOTTOM OF THE FENCE WITH EXTRA FENCE FABRIC OR BARBED WIRE AS DIRECTED BY THE DRW NX CONSTRUCTION SUPERVISOR. PRIOR TO PLACING COMPONENTS SUCH AS FABRIC, RAILS, TENSION WIRE AND GATES, ENSURE THAT THE CONCRETE POST FOUNDATION HAS REACHED AT LEAST 75% OF ITS DESIGN STRENGTH OR HAS CURED A MINIMUM OF 7 DAYS AFTER SETTING THE POST.

B. FURNISH GATES WITH NECESSARY FITTINGS AND HARDWARE. HINGES SHALL ALLOW SWING GATES TO SWING 180 DEGREES. PLUNGER BARS SHALL HAVE TOP, BOTTOM AND MIDDLE LOCKING POINTS WITH THE MIDDLE POINT ARRANGED FOR PADLOCKING. GATES SHALL HAVE KEEPERS ON EACH LEAF THAT ENGAGE AUTOMATICALLY WHEN THE GATE IS SWUNG OPEN. REPAIR GALVANIZED COATING DAMAGED IN THE FIELD WITH METHODS AND TECHNIQUES AS RECOMMENDED BY THE MANUFACTURER.

END OF SPECIFICATION

SAFETY ENFORCEMENT

SAFETY IS OF PARAMOUNT CONCERN TO BOTH SITE WORKERS AND THE PUBLIC.

1. CONSTRUCTION WORK PRESENTS UNIQUE THREATS TO HEALTH AND SAFETY. THE CONTRACTOR IS RESPONSIBLE TO EDUCATE THEIR WORK FORCE OF THESE DANGERS AND LIMIT THEIR EXPOSURE TO HAZARDS. THIS EDUCATION SHALL INCLUDE BUT NOT BE LIMITED TO APPLICABLE TRAINING COURSES AND CERTIFICATIONS, PROPER PERSONAL PROTECTIVE EQUIPMENT USAGE, DAILY TAILGATE MEETINGS AND ANY OTHER PREVENTATIVE MEASURES WHICH MAY BE REASONABLY EXPECTED. THE CONTRACTOR AND ALL SUB-CONTRACTORS SHALL BE RESPONSIBLE FOR THE SAFETY OF THE WORK AREA, ADJACENT AREAS AND ANY PROPERTY OCCUPANTS WHO MAY BE AFFECTED BY THE WORK UNDER CONTRACT. THE CONTRACTOR SHALL REVIEW ALL LANDOWNER, PRIME CONTRACTOR, CARRIER, OSHA, AND LOCAL SAFETY GUIDELINES AND AT ALL TIMES SHALL CONFORM TO THE MOST RESTRICTIVE OF THESE STANDARDS TO ENSURE A SAFE WORKPLACE.

2. ALL SAFETY EQUIPMENT SHALL BE INSPECTED ACCORDING TO ALL OSHA AND INDUSTRY SCHEDULED INTERVALS AND ALL INSPECTIONS SHALL BE DOCUMENTED PER APPLICABLE CODES AND STANDARDS.

3. TOWER WORK PRESENTS ADDITIONAL THREATS TO HEALTH AND SAFETY. ALL TOWER WORKERS WORKING ON A TOWER MUST BE ADEQUATELY TRAINED AND MONITORED TO ENSURE THAT SAFE WORK PRACTICES ARE LEARNED AND FOLLOWED. AS REQUIRED BY OSHA, WHEN WORKING ON EXISTING COMMUNICATION TOWERS, EMPLOYEES MUST BE PROVIDED WITH APPROPRIATE FALL PROTECTION, TRAINED TO USE THIS FALL PROTECTION PROPERLY, AND THE USE OF FALL PROTECTION MUST BE CONSISTENTLY SUPERVISED AND ENFORCED BY THE CONTRACTOR.

4. ELECTRICAL WORK PRESENTS SPECIFIC THREATS TO THE HEALTH AND SAFETY OF WORKERS ON SITE. SPECIFICALLY ELECTROCUTIONS ARE THE FOURTH LEADING CAUSE OF DEATH ON CONSTRUCTION SITES. ALL ELECTRICAL WORKERS SHALL HAVE CURRENT CERTIFICATIONS WHICH SATISFY ALL TRAINING REQUIREMENTS FOR THE ELECTRICAL WORK THEY ARE PERFORMING PER OSHA STANDARDS. ALL ELECTRICAL WORKERS SHALL ADHERE TO ALL SAFETY RULES AND REGULATIONS FOR WORKER AND PUBLIC SAFETY. ALL WORK SHALL BE PERFORMED BY QUALIFIED ELECTRICIANS TRAINED FOR THE TYPE OF WORK AND THE VOLTAGES PRESENT FOR EACH TASK. THE CONTRACTOR SHALL REVIEW ALL LANDOWNER, PRIME CONTRACTOR, CARRIER, OSHA, NFPA 70, AND LOCAL SAFETY GUIDELINES AND AT ALL TIMES SHALL CONFORM TO THE MOST RESTRICTIVE OF THESE STANDARDS TO ENSURE A SAFE WORKPLACE.

GPD Engineering and Architecture
Professional Corporation

520 South Main Street
Akron, OH 44311
330.572.2100 Fax 330.572.2102

SEAL:

STATE OF CONNECTICUT LEONARDO A. SFERRA 31512 LICENSED PROFESSIONAL ENGINEER

06/16/2020

PROJECT LOCATION:

US.CT.SBA.08748-A
215 COATNEY HILL RD
WOODSTOCK, CT 06281
WINDHAM COUNTY

SCHEDULE OF REVISIONS

REV.	DESCRIPTION OF CHANGE	DRAWN BY:	AUTH BY:	ISSUE DATE
0	ISSUED FOR PERMITTING	ZDT	JWB	06/15/2020
A	90% REVIEW	ZDT	JWB	06/11/2020

SCALE:AS SHOWN | DESIGNED BY: ZDT | DRAWN BY: ZDT

GPD#:2020796.01.US.CT.SBA.08748-A.01

PROJECT NAME:
US.CT.SBA.08748-A

DRAWING TITLE:
GENERAL NOTES

DRAWING NUMBER:
N-2

PROJECT SPECIFICATION 16000 (ELECTRICAL)

NOT ALL SECTIONS MAY APPLY TO THIS PROJECT, COORDINATE WITH CONSTRUCTION MANAGER.

PART I: GENERAL

1.1 SCOPE: THIS SPECIFICATION DESCRIBES THE MINIMUM REQUIREMENT FOR INSTALLATION OF ALL ELECTRICAL SYSTEMS.

1.2 REFERENCES: THE PUBLICATIONS LISTED BELOW FORM PART OF THIS SPECIFICATION. EACH PUBLICATION SHALL BE THE LATEST REVISION AND ADDENDUM IN EFFECT ON THE DATE THIS SPECIFICATION IS ISSUED FOR CONSTRUCTION, UNLESS NOTED OTHERWISE. EXCEPT AS MODIFIED BY THE REQUIREMENTS SPECIFIED HEREIN, OR THE DETAILS OF THE DRAWINGS, WORK INCLUDED IN THIS SPECIFICATION SHALL CONFORM TO THE APPLICABLE PROVISIONS OF THESE PUBLICATIONS.

A. ANSI (AMERICAN NATIONAL STANDARDS INSTITUTE)
B. NESC (NATIONAL ELECTRICAL SAFETY CODE), LATEST EDITION
C. NEC (NATIONAL ELECTRICAL CODE), LATEST EDITION
D. NFPA 70 (NATIONAL FIRE PROTECTION ASSOCIATION)
E. OSHA (OCCUPATIONAL SAFETY AND HEALTH ADMINISTRATION), INCLUDING ALL APPLICABLE AMENDMENTS
F. U.L. (UNDERWRITERS LABORATORIES)

1.3 SYSTEM DESCRIPTION

A. DESIGN REQUIREMENTS: THE CONTRACTOR SHALL INSTALL UNDERGROUND ELECTRICAL AND TELEPHONE CONDUITS AND CABLE AS SPECIFIED HEREIN AND AS SHOWN ON THE DRAWINGS.
B. PERFORMANCE REQUIREMENTS: WHEN FINISHED, WORK SHALL BE IN A COMPLETE AND UNDAMAGED STATE, AS REQUIRED IN THE CONTRACT DOCUMENTS.

PART II: PRODUCTS

2.1 GENERAL

A. ITEMS SHALL BE NEW AND SHALL BE INSTALLED ONLY IF IN FIRST-CLASS CONDITION.
B. SUBSTITUTIONS FOR MATERIAL WILL BE PERMITTED ONLY BY WRITTEN APPROVAL OF THE DRW NX CONSTRUCTION SUPERVISOR.

2.2 MATERIALS: THE CONTRACTOR SHALL PROVIDE ALL MATERIAL EXCEPT AS SPECIFIED IN THE CONTRACT DOCUMENTS. ALL MATERIAL SHALL BE APPROVED AND LISTED BY OR BEAR THE U.L. LABEL, AND WILL COMPLY WITH ANSI, IEEE AND NEMA STANDARDS WHERE APPLICABLE.

A. CONDUITS:
1. ALL UNDERGROUND CONDUIT SHALL BE SCHEDULE 40 PVC, SIZED AS SHOWN ON THE CONSTRUCTION DRAWINGS.
2. ALL EXTERIOR ABOVEGROUND CONDUIT SHALL BE PER LOCAL CODE REQUIREMENTS, MIN. SCH. 80 PVC.
3. ALL INTERIOR CONDUIT SHALL BE EMT WITH COMPRESSION-TYPE FITTINGS.
4. LIQUID-TIGHT FLEXIBLE METALLIC CONDUIT SHALL BE USED FOR OUTDOOR LOCATIONS WHERE FLEXIBLE CONNECTION IS REQUIRED.

B. CABLES:
CONDUCTORS FOR GENERAL WIRING SHALL BE NEC STANDARD ANNEALED COPPER WIRE WITH NEC 600 VOLT INSULATION.
1. #8 AND LARGER-STRANDED TYPE, THHN/THWN
2. #10 AND SMALLER-SOLID TYPE THHN/THWN
3. CONDUCTORS IN CONDUIT IN OR ADJACENT TO HIGH HEAT SOURCE SHALL BE TYPE XHHW
4. CONDUCTORS IN CONDUITS ABOVE ROOF, ON TOP OF ROOF OR INSIDE BUILT-UP ROOFING MATERIAL SHALL BE TYPE XHHW

C. CONVENIENCE OUTLET: UNLESS NOTED OTHERWISE, SURFACE-MOUNTED OUTLETS FOR EXTERIOR LOCATIONS SHALL BE FERALOY, CAD/ZINC ELECTROPLATED WITH THREADED HUBS OR CONDUIT ENTRANCES DRILLED AND TAPPED. ALL COVERS SHALL BE SELF-CLOSING AND GASKETED. SURFACE MOUNTED OUTLETS FOR INTERIOR LOCATIONS SHALL BE GALVANIZED, PRESSED STEEL WITH COVER PLATE, SIERRA PLASTIC STYLE, IVORY COLOR.

D. COAXIAL CABLE SUPPORTS
1. ALL WAVE GUIDE SUPPORTS SHALL BE MANUFACTURED TO MEET ALL COAX MINIMUM BENDING REQUIREMENTS WAVE GUIDES, AND B1587 FOR 6 WAVE GUIDES. SUPPORTS SHALL BE PROVIDED 3'-0" ON CENTERS.

PART III: EXECUTION

3.1 PREPARATION

A. BEFORE LAYING OUT WORK, EXERCISE PROPER PRECAUTION TO VERIFY EACH MEASUREMENT.
B. USE EXTREME CAUTION BEFORE EXCAVATING IN EXISTING AREAS TO LOCATE EXISTING UNDERGROUND SERVICES.

3.2 INSPECTION

A. A VISUAL CHECK OF ELECTRICAL AND TELEPHONE CABLES, CONDUITS AND OTHER ITEMS SHALL BE MADE BY AN DRW NX CONSTRUCTION SUPERVISOR BEFORE THESE ITEMS ARE PERMANENTLY INSTALLED.
B. THE CONTRACTOR SHALL NOTIFY THE DRW NX CONSTRUCTION SUPERVISOR 24 HOURS PRIOR TO TRENCH BACK FILL

3.3 INSTALLATION

A. TRENCHING, BACK FILLING, BEDDING AND COMPACTING SHALL COMPLY WITH SITE WORK SPECIFICATIONS.
B. DIG TRENCHES TO THE REQUIRED DEPTH AS SHOWN ON THE DRAWINGS WITHOUT POCKETS OR DIPS. REMOVE LARGE STONES FROM THE BOTTOM OF THE TRENCH AND FIRMLY TAMP LOOSE FILL IN THE BOTTOM BEFORE CONDUIT IS LAID.
C. INSTALL UNDERGROUND CONDUIT WITH A MINIMUM 3-INCH TO 100-FOOT SLOPE OR TO A SLOPE SHOWN ON THE DRAWINGS.
D. UNLESS SHOWN OTHERWISE ON THE DRAWINGS, TERMINATE AND CAP ALL STUB-UPS 12 INCHES ABOVE FINISHED GRADE ELEVATION.
E. WHEREVER CONDUITS CROSS UNDER ROADWAYS, USE GALVANIZED RIGID STEEL CONDUITS IN ALL CASES, EXTENDING 5 FEET BEYOND THE EDGE OF THE ROAD BED. MINIMUM DEPTH FOR CONDUIT SHALL BE 4 FEET BELOW ROADWAY GRADE.
F. MARK UNDERGROUND CONDUITS WITH A 6-INCH WIDE RED POLYETHYLENE TAPE BURIED 6 INCHES UNDER THE SURFACE DIRECTLY OVER THE CONDUITS. MARK THE TAPE THUS: CAUTION-BURIED ELECTRICAL CABLE.
G. FOR SEALING CONDUITS, USE ONLY NONTHERMOPLASTIC COMPOUNDS SUCH AS J.M. DUXSEAL, OR AN APPROVED SUBSTITUTE. THE COMPOUND SHALL HAVE NO EFFECT ON RUBBER OR RUBBER-LIKE INSULATIONS, LEAD, ALUMINUM OR FERROUS ALLOYS; IT SHALL BE INSOLUBLE IN WATER AND WITHSTAND MAXIMUM TEMPERATURE RANGES OF THE LOCALITY.
H. COAXIAL - REFER TO NOKIA ANTENNA AND COAXIAL CABLE INSULATION PROCEDURES.
I. ANTENNA - REFER TO NOKIA ANTENNA AND COAXIAL CABLE INSULATION PROCEDURES.
J. LNA/MHA - REFER TO NOKIA ANTENNA AND COAXIAL CABLE INSULATION PROCEDURES.

END OF ELECTRICAL SPECIFICATIONS

PROJECT SPECIFICATION 16670 (GROUNDING)

NOT ALL SECTIONS MAY APPLY TO THIS PROJECT, COORDINATE WITH CONSTRUCTION MANAGER.

PART I: GENERAL

1.1 SCOPE

A. THIS SPECIFICATION PRESCRIBES THE REQUIREMENTS FOR FURNISHING, INSTALLATION AND TESTING OF THE GROUNDING CABLE, CONNECTORS AND ASSOCIATED COMPONENTS AS INDICATED ON THE DRAWINGS.
B. APPLICATIONS OF ELECTRICAL GROUNDING AND BONDING WORK SPECIFIED IN THIS SPECIFICATION INCLUDE THE FOLLOWING:
1. FENCE AND GATE POSTS
2. ELECTRICAL POWER SYSTEMS
3. GROUNDING ELECTRODES
4. GROUND BUS BAR
5. SERVICE EQUIPMENT
6. ENCLOSURES
7. MONOPOLE/LATTICE TOWER
8. ICE BRIDGE

1.2 REFERENCES: THE PUBLICATIONS LISTED BELOW FORM PART OF THIS SPECIFICATION. EACH PUBLICATION SHALL BE THE LATEST REVISION AND ADDENDUM IN EFFECT ON THE DATE THIS SPECIFICATION IS ISSUED FOR CONSTRUCTION, UNLESS NOTED OTHERWISE. EXCEPT AS MODIFIED BY THE REQUIREMENTS SPECIFIED HEREIN, OR THE DETAILS OF THE DRAWINGS, WORK INCLUDED IN THIS SPECIFICATION SHALL CONFORM TO THE APPLICABLE PROVISIONS OF THESE PUBLICATIONS.

A. ANSI (AMERICAN NATIONAL STANDARDS INSTITUTE)
B. IEEE (INSTITUTE OF ELECTRICAL AND ELECTRONICS ENGINEERS)
C. NEC (NATIONAL ELECTRICAL CODE), LATEST EDITION
D. NEMA (NATIONAL ELECTRICAL MANUFACTURERS ASSOCIATION)
E. NESC (NATIONAL ELECTRICAL SAFETY CODE), LATEST EDITION
F. OSHA (OCCUPATIONAL SAFETY AND HEALTH ADMINISTRATION)
G. U.L. (UNDERWRITERS LABORATORIES)
H. APPLICABLE LOCAL CODES AND ORDINANCES

PART II: PRODUCTS

2.1 MATERIALS: EXCEPT AS OTHERWISE INDICATED, PROVIDE ELECTRICAL GROUNDING AND BONDING SYSTEMS INDICATED; WITH ASSEMBLY OF MATERIAL, INCLUDING, BUT NOT LIMITED TO, GROUNDING ELECTRODES, BONDING JUMPER AND ADDITIONAL ACCESSORIES NEEDED FOR A COMPLETE INSTALLATION. WHERE MORE THAN ONE TYPE COMPONENT PRODUCT MEETS INDICATED REQUIREMENTS, SELECTION IS INSTALLER'S OPTION. WHERE MATERIALS OR COMPONENTS ARE NOT INDICATED, PROVIDE PRODUCTS WHICH COMPLY WITH NEC, U.L. AND IEEE REQUIREMENTS AND WITH ESTABLISHED INDUSTRY STANDARDS FOR THOSE APPLICATIONS INDICATED.

A. GROUNDING
1. THE EQUIPMENT SHALL BE GROUNDED AS FOLLOWS, AS SHOWN ON THE DRAWINGS AND IN COMPLIANCE WITH NEC ARTICLE 250 AND STATE AND LOCAL CODES.
2. GROUND RODS AND QUANTITY SHOWN ON THE DRAWINGS ARE DIAGRAMMATIC. THE CONTRACTOR SHALL PERFORM A GROUND-RESISTANCE-TO-EARTH TEST. SHOULD THE INSTALLATION HAVE A RESISTANCE OF 5 OHMS OR MORE, CONTRACTOR SHALL INSTALL MORE GROUND RODS AS NECESSARY SO THAT THE OVERALL GROUND-TO-EARTH RESISTANCE IS LESS THAN 5 OHMS.
3. INSTALL ELECTRICAL GROUNDING AND BONDING SYSTEMS AS INDICATED, IN ACCORDANCE WITH MANUFACTURER'S INSTRUCTIONS, NEC'S "STANDARD OF INSTALLATION," AND IN ACCORDANCE WITH RECOGNIZED INDUSTRY PRACTICES TO ENSURE THAT PRODUCTS COMPLY WITH REQUIREMENTS.
4. COORDINATE WITH OTHER ELECTRICAL WORK AS NECESSARY TO INTERFACE INSTALLATION OF ELECTRICAL GROUNDING AND BONDING SYSTEMS.
5. INSTALL GROUND CONDUCTORS A MINIMUM OF 36 INCHES BELOW FINISHED GRADE WHICH ENCIRCLES THE TOWER AND EQUIPMENT AND ARE CONNECTED TO EACH DRIVEN GROUND ROD. GROUND TRENCH SHALL BE AT LEAST 24 INCHES AWAY FROM FOUNDATIONS.
6. TIGHTEN GROUNDING AND BONDING CONNECTORS, INCLUDING SCREWS AND BOLTS, IN ACCORDANCE WITH MANUFACTURER'S PUBLISHED TORQUE TIGHTENING VALUE FOR CONNECTORS AND BOLTS. WHERE MANUFACTURER'S TORQUING REQUIREMENTS ARE NOT INDICATED, TIGHTEN CONNECTIONS TO COMPLY WITH TIGHTENING TORQUE VALUE SPECIFIED IN U.L. 486A TO ASSURE PERMANENT AND EFFECTIVE GROUNDING.
7. APPLY CORROSION-RESISTANT FINISH (NO-OX) TO FIELD-CONNECTIONS, AT COPPER GROUND BARS AND PLACES WHERE FACTORY APPLIED PROTECTIVE COATING HAVE BEEN DESTROYED, WHICH ARE SUBJECTED TO CORROSIVE AND/OR OXIDATION PROCESS.
8. ON EXISTING LATTICE TOWERS, WATER TOWERS AND ROOF TOPS WHEN A NEW GROUNDING SYSTEM IS INSTALLED, THE CONTRACTOR SHALL TIE THE NEW GROUND SYSTEM TO THE EXISTING WATER TOWER, LATTICE TOWER STRUCTURAL STEEL OR BUILDING STRUCTURAL STEEL AS THE CASE MAY BE AT LEAST AT ONE LOCATION SO THAT THEY ARE AT THE SAME POTENTIAL.

B. GROUND RODS
1. GROUND RODS SHALL BE 3/4" DIAMETER 10'-0" LONG, COPPER CLAD DRIVEN ROD(S).
2. GROUND ROD(S) SHALL BE LOCATED AT THE PERIMETER OF EQUIPMENT AS TO CREATE A GROUND RING AS SHOWN ON THE DRAWINGS.
3. GROUND ROD(S) SHALL BE SPACED AT A MINIMUM SPACING OF 8'-0" AND A MAXIMUM SPACING OF 10'-0".
4. GROUND RODS SHALL BE BURIED BELOW THE FROSTLINE. AT NO TIME SHALL THIS DEPTH BE LESS THAN 18" BELOW FINISHED GRADE.
5. GROUND RODS WHICH CANNOT BE DRIVEN STRAIGHT DOWN THE ENTIRE (10) FEET, SHALL BE DRIVEN AT AN ANGLE NOT GRATER THAN 45 DEGREES (NEC 250-83 AND 250-84).
6. GROUND ROD LOCATIONS SHALL BE NOTED ON THE AS-BUILT DRAWING COMPLETE WITH DIMENSIONS.
7. PROVIDE GROUND TEST WELLS AS SHOWN ON THE CONSTRUCTION DRAWINGS.

C. GROUND CONDUCTOR
1. ALL DIRECT BURIED GROUND CONDUCTORS SHALL BE TINNED SOLID (#2 AWG CU) WIRE. BURIED GROUND CONDUCTOR SHALL BE INSTALLED AT MINIMUM DEPTH OF 36" BELOW GRADE.
2. ALL SUB GRADE GROUND CONNECTIONS SHALL BE MADE THROUGH THE USE OF EXOTHERMIC WELD PROCESS. CONNECTIONS SHALL INCLUDE ALL CABLE TO CABLE SPLICES, TEES AND ALL GROUND ROD CONNECTIONS. MOLD, WELD KITS, ETC., SHALL BE MANUFACTURED BY CADWELD AND SHALL BE INSTALLED AS PER THE MANUFACTURER'S INSTRUCTIONS.
3. GROUND CONDUCTORS SHALL BE ROUTED IN THE SHORTEST AND STRAIGHTEST DISTANCES POSSIBLE TO MINIMIZE TRANSIENT VOLTAGE RISES. CONDUCTORS SHALL BE INSTALLED AS FOLLOWS:
A. ALL GROUND CONDUCTORS SHALL FOLLOW A CONTINUOUS DOWNWARD PATTERN TO THE GROUND SOURCE. (NEVER RUN GROUND CONDUCTOR IN AN UPWARD DIRECTION.)
B. CONDUCTORS SHALL BE INSTALLED WITH A MINIMUM OF 12 INCH MINIMUM BENDING RADIUS.
C. WHEN THE MINIMUM BENDING RADIUS CANNOT BE ACHIEVED, GROUND CABLES SHALL BE ROUTED AT 90 DEGREE BENDS WITH THE USE OF EXOTHERMIC CONNECTIONS AT 90 DEGREES. THE INTENT IS TO ELIMINATE THE CABLE BEND RADIUS AND REPLACE THE RADIUS WITH AN EXOTHERMIC CONNECTION.

PART III: EXECUTION

3.1 PREPARATION

A. ALL SURFACES TO WHICH GROUND CONNECTIONS WILL BE MADE SHALL BE FREE OF PAINT, GALVANIZING DIRECT CORROSION ETC..
B. ALL METAL SURFACES EXPOSED ON GROUNDING SHALL BE EITHER COLD GALVANIZE, OR PAINTED TO MATCH ORIGINAL SURFACE.

3.2 EXAMINATION.

A. EXAMINE AREAS AND CONDITIONS UNDER WHICH ELECTRICAL GROUNDING AND BONDING CONNECTIONS ARE TO BE MADE AND NOTIFY DRW NX CONSTRUCTION SUPERVISOR IN WRITING OF CONDITIONS DETRIMENTAL TO PROPER COMPLETION OF WORK. DO NOT PROCEED WITH WORK UNTIL UNSATISFACTORY CONDITIONS HAVE BEEN REMEDIED.
B. THE CONTRACTOR SHALL NOTIFY THE DRW NX CONSTRUCTION SUPERVISOR 24 HOURS PRIOR TO TRENCH BACK FILL ALL WORK DONE BELOW FINISHED GRADE SHALL BE INSPECTED BY THE AERIAL CONSTRUCTION SUPERVISOR DURING THAT PERIOD OR THE CONTRACTOR SHALL PROCEED.

3.3 GROUND TESTING

A. THE CONTRACTOR SHALL TEST THE GROUND ELECTRODE ROD RESISTANCE IN ACCORDANCE WITH THE METHODS OF MEASUREMENT SHOWN IN THE FALL OF POTENTIAL METHOD.
B. TEST INSTRUMENTS SHALL OPERATE AT A FREQUENCY OTHER THAN 60 HERTZ AND SHALL CONTAIN STRAY CURRENT AND DC FILTERS, FAULT CURRENT PROTECTION AND HAVE SENSITIVITY TO OPERATE A LOW SIGNAL STRENGTH.
C. PRIOR TO TESTING, THE CONTRACTOR SHALL DE-ENERGIZE ALL POWER SOURCES, DISCONNECT THE ELECTRODE CONDUCTOR FROM THE GROUND ROD, WEAR HIGH VOLTAGE RUBBER SAFETY GLOVES AND WILL NOT HANDLE TEST INSTRUMENTS IF AT ALL POSSIBLE.
D. GROUND TESTS ARE TO BE PERFORMED BY QUALIFIED PERSONS FAMILIAR WITH THE CONSTRUCTION AND OPERATION OF THE EQUIPMENT AND THE HAZARDS INVOLVED.
E. AN INDEPENDENT, APPROVED OUTSIDE FIRM SHALL PERFORM THE GROUND TEST AS OUTLINED. ALL TEST RESULTS SHALL BE FORWARDED TO THE DRW NX CONSTRUCTION SUPERVISOR FOR APPROVAL.

END OF GROUNDING SPECIFICATIONS

CLOSE OUT DOCUMENTATION

CLOSEOUT BOOK CONTAINING THE FOLLOWING:

A. AS BUILT DESIGN DRAWINGS
B. SWEEP TEST RESULTS
C. GROUND RESISTIVITY TEST
D. PHOTO DOCUMENTATION OF:
1. UNDERGROUND CONDUITS AND GROUND RING
2. ANTENNA, COAXIAL, JUMPER ATTACHMENTS AND GROUND KIT ATTACHMENTS
3. ANTENNA DOWN TILT MEASUREMENT USING AN INCLINOMETER ON THE BACK PLANE OF THE ANTENNA
4. GROUND BAR ATTACHMENTS
E. SIGNED OFF PERMIT CARDS
F. CERTIFICATE OF OCCUPANCY
G. RETURN OF KEYS AND/OR ACCESS AUTHORIZATION
H. ORIGINAL BUILDING PERMIT

DRW NX

GPD Engineering and Architecture
Professional Corporation

520 South Main Street
Akron, OH 44311
330.572.2100 Fax 330.572.2102

SEAL:

STATE OF CONNECTICUT · STEVEN A. SCHAUB · 21004 · LICENSED PROFESSIONAL ENGINEER

06/16/2020

PROJECT LOCATION:

US.CT.SBA.08748-A
215 COATNEY HILL RD
WOODSTOCK, CT 06281
WINDHAM COUNTY

SCHEDULE OF REVISIONS

REV.	DESCRIPTION OF CHANGE	DRAWN BY:	AUTH BY:	ISSUE DATE
0	ISSUED FOR PERMITTING	ZDT	JWB	06/15/2020
A	90% REVIEW	ZDT	JWB	06/11/2020

SCALE:AS SHOWN | DESIGNED BY: ZDT | DRAWN BY: ZDT

GPD#:2020796.01.US.CT.SBA.08748-A.01

PROJECT NAME:
US.CT.SBA.08748-A

DRAWING TITLE:
ELECTRICAL NOTES

DRAWING NUMBER:
N-3

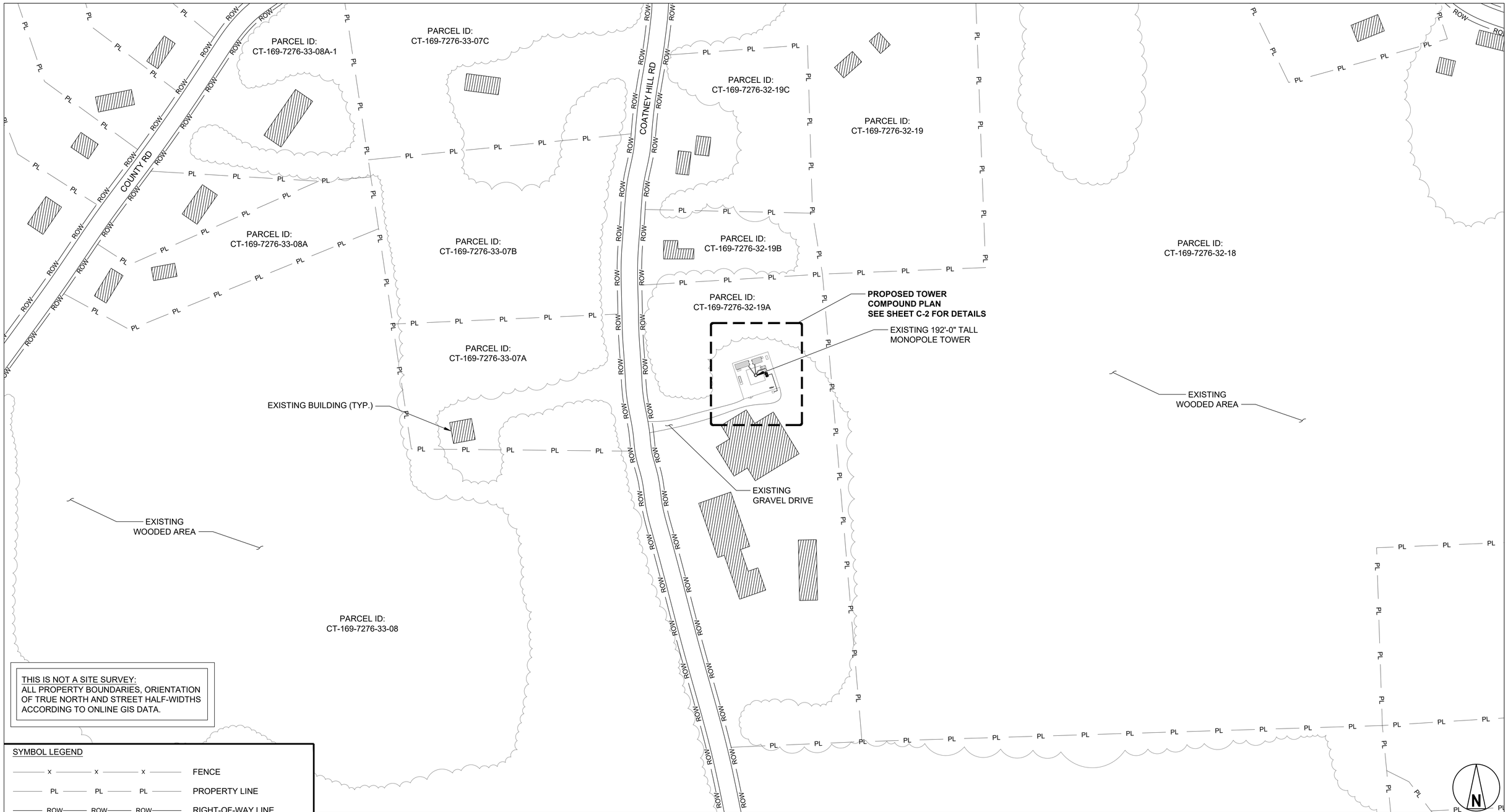

THIS IS NOT A SITE SURVEY:
ALL PROPERTY BOUNDARIES, ORIENTATION OF TRUE NORTH AND STREET HALF-WIDTHS ACCORDING TO ONLINE GIS DATA.

SYMBOL LEGEND

—— x —— x —— x ——	FENCE
—— PL —— PL —— PL ——	PROPERTY LINE
—— ROW —— ROW —— ROW ——	RIGHT-OF-WAY LINE
⌒⌒⌒⌒⌒⌒⌒⌒	TREE LINE

OVERALL SITE PLAN

100' 50' 0 100' 200'
1"=100'

1

DRWNX

GPD Engineering and Architecture
Professional Corporation

520 South Main Street
Akron, OH 44311
330.572.2100 Fax 330.572.2102

SEAL:

STATE OF CONNECTICUT · LEONARDO A. ZERBA · 31512 · LICENSED PROFESSIONAL ENGINEER

06/16/2020

PROJECT LOCATION:

US.CT.SBA.08748-A
215 COATNEY HILL RD
WOODSTOCK, CT 06281
WINDHAM COUNTY

SCHEDULE OF REVISIONS

REV.	DESCRIPTION OF CHANGE	DRAWN BY:	AUTH BY:	ISSUE DATE
0	ISSUED FOR PERMITTING	ZDT	JWB	06/15/2020
A	90% REVIEW	ZDT	JWB	06/11/2020

SCALE:AS SHOWN DESIGNED BY: ZDT DRAWN BY: ZDT

GPD#:2020796.01.US.CT.SBA.08748-A.01

PROJECT NAME:
US.CT.SBA.08748-A

DRAWING TITLE:
OVERALL SITE PLAN

DRAWING NUMBER:
C-1

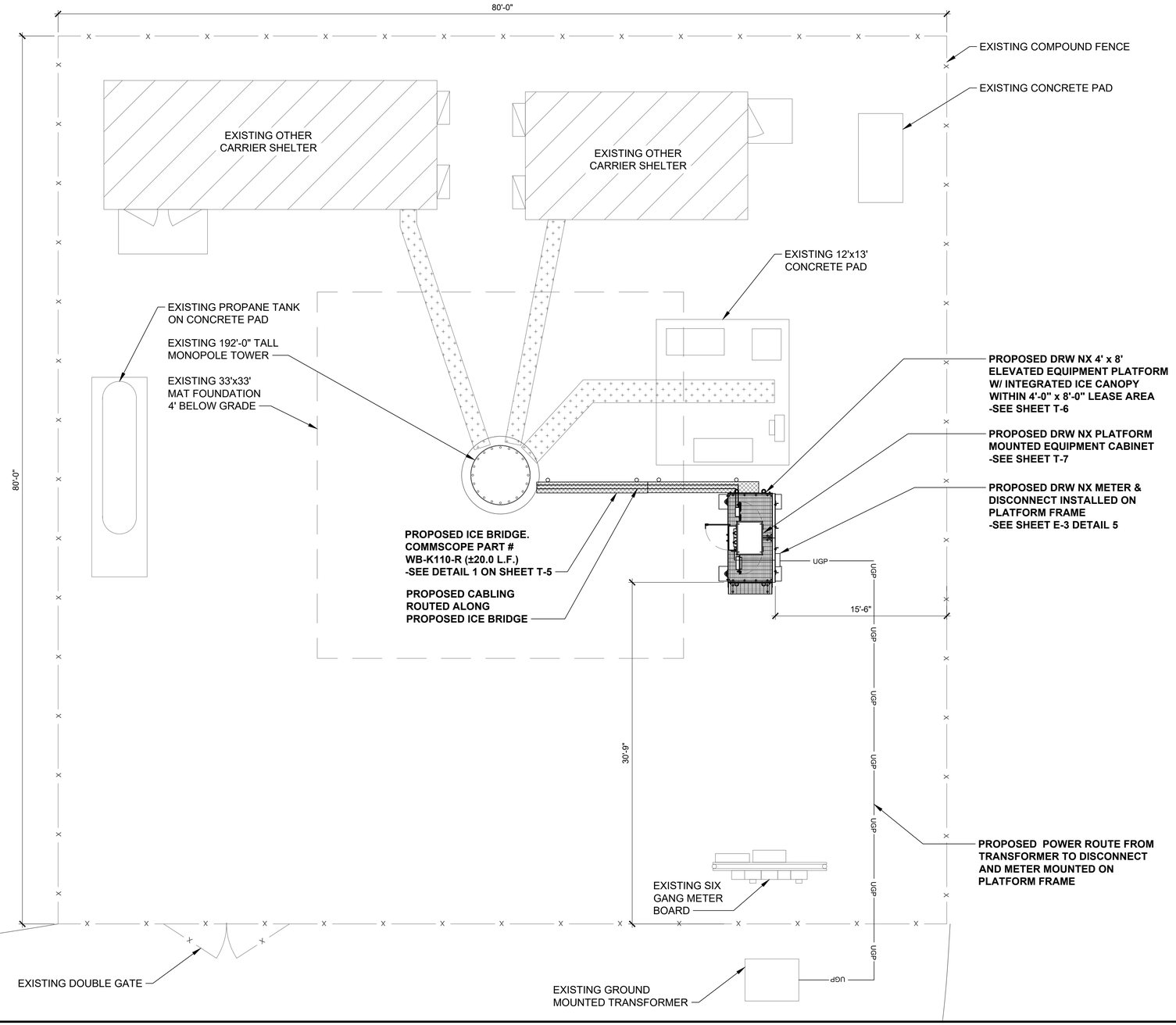

SYMBOL LEGEND

- PROPOSED LEASE AREA
- EXISTING LEASE AREA
- FENCE
- PROPOSED ICE BRIDGE
- EXISTING ICE BRIDGE

ENLARGED SITE PLAN

6' 4' 2' 0 5' 10'
3/16"=1'-0"

1

DRW NX

GPD Engineering and Architecture Professional Corporation
520 South Main Street
Akron, OH 44311
330.572.2100 Fax 330.572.2102

SEAL:

STATE OF CONNECTICUT · LEONARDO A. SERRA · 31512 · LICENSED PROFESSIONAL ENGINEER

06/16/2020

PROJECT LOCATION:

US.CT.SBA.08748-A
215 COATNEY HILL RD
WOODSTOCK, CT 06281
WINDHAM COUNTY

SCHEDULE OF REVISIONS

REV.	DESCRIPTION OF CHANGE	DRAWN BY:	AUTH BY:	ISSUE DATE
0	ISSUED FOR PERMITTING	ZDT	JWB	06/15/2020
A	90% REVIEW	ZDT	JWB	06/11/2020

SCALE:AS SHOWN | DESIGNED BY: ZDT | DRAWN BY: ZDT

GPD#:2020796.01.US.CT.SBA.08748-A.01

PROJECT NAME:
US.CT.SBA.08748-A

DRAWING TITLE:
ENLARGED SITE PLAN

DRAWING NUMBER:
C-2

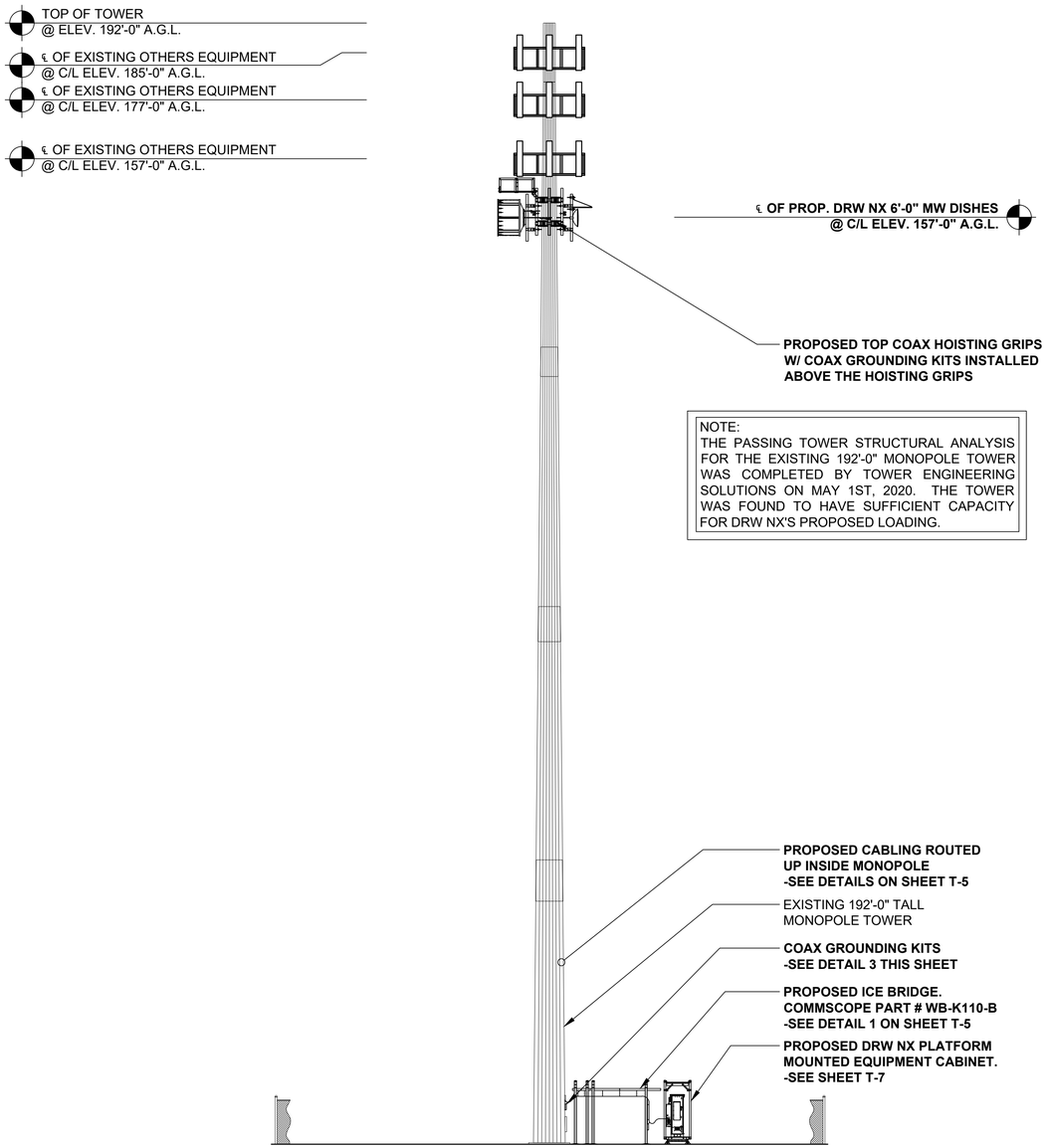

NOTE:
THE PASSING TOWER STRUCTURAL ANALYSIS FOR THE EXISTING 192'-0" MONOPOLE TOWER WAS COMPLETED BY TOWER ENGINEERING SOLUTIONS ON MAY 1ST, 2020. THE TOWER WAS FOUND TO HAVE SUFFICIENT CAPACITY FOR DRW NX'S PROPOSED LOADING.

TOWER ELEVATION | SCALE: N.T.S. | 1

MICROWAVE DISH CONFIGURATION

DISH #	AZIMUTH	MODEL #	DIAMETER (FT)	WEIGHT (LBS)	RADIO MODEL #	RAD CENTER (FT)	MECH. DOWNTILT	ODU QUANTITY	CABLING TABLE # OF CABLES	CABLING TABLE MODEL #	CABLING TABLE DIA. (IN)
1	66	VHLPX3-6W	3	38	SAF MXM MK2 ODU	157	-	2	3/3/3	LDF4-50A/CAT6/COPPER POWER	1/2, 1/4, 1/4
2	233	USX6-6W-6GR	6	198	SAF MXM MK2 ODU	157	-	2	3/3/3	LDF4-50A/CAT6/COPPER POWER	1/2, 1/4, 1/4
ICE SHIELD	66	MD-SQ3	-	125	-	161	-	-	-	-	-
ICE SHIELD	233	MD-S6	-	416	-	161	-	-	-	-	-
-	-	-	-	-	-	-	-	-	-	-	-
-	-	-	-	-	-	-	-	-	-	-	-
-	-	-	-	-	-	-	-	-	-	-	-
-	-	-	-	-	-	-	-	-	-	-	-

EQUIPMENT QUANTITIES

ITEM	MODEL #	QUANTITY	UNIT*
TOWER MOUNTED GROUND BAR	-	2	
ICE BRIDGE LENGTH	WB-K110-B	2	10 LF
TOWER COAX QTY	LDF4-50A	1168	LF
TOWER FIBER CABLE QTY	CAT6	1168	LF
TOWER POWER CABLE QTY	COPPER POWER CABLE	1168	LF
HANGER ADAPTER GROMMET QTY	VALMONT BC124	24	
HANGER ADAPTER GROMMET QTY	VALMONT BC1410	24	
SNAP-IN QTY	COMMSCOPE SSH-158-3	48	
GROUNDING KIT QTY	COMMSCOPE CSG12-12B2U	54	
MID-GROUNDING KIT QTY	COMMSCOPE CSG12-12B2U	0	
TOP HOISTING GRIP QTY	COMMSCOPE L4SGRIP	18	
MID-HOISTING GRIP QTY	COMMSCOPE 43094	0	

ANTENNA SCHEDULE | 2

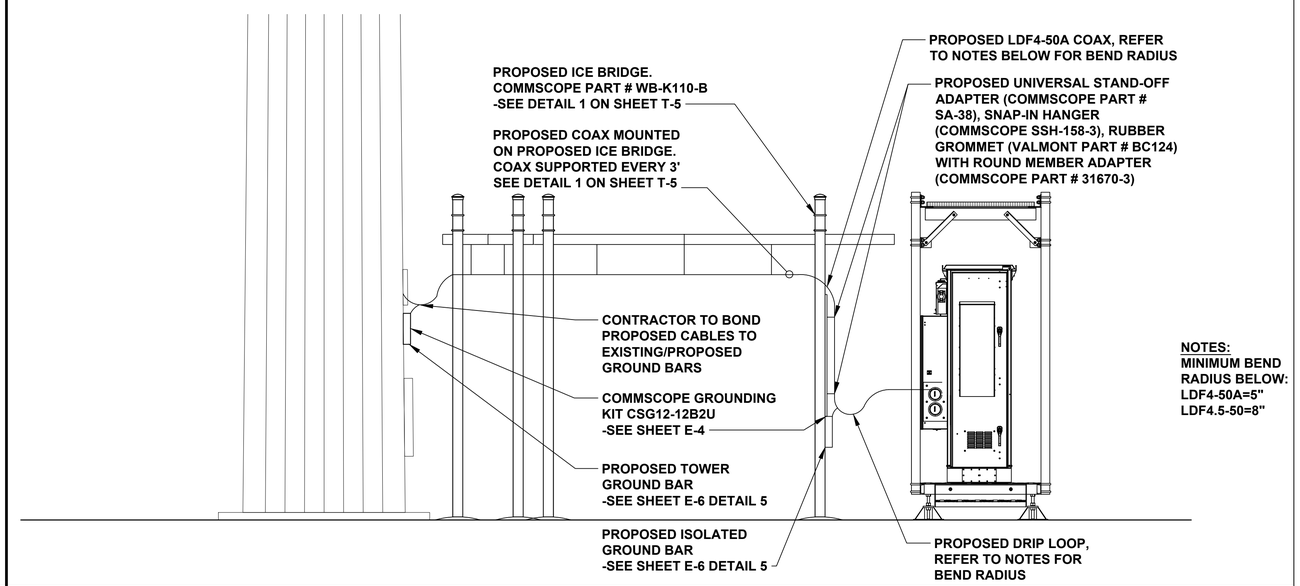

NOTES:
MINIMUM BEND RADIUS BELOW:
LDF4-50A=5"
LDF4.5-50=8"

ENLARGED ELEVATION | SCALE: N.T.S. | 3

DRW NX

GPD Engineering and Architecture
Professional Corporation

520 South Main Street
Akron, OH 44311
330.572.2100 Fax 330.572.2102

SEAL:
STATE OF CONNECTICUT · LEONARDO A. ZERBA · 31512 · LICENSED PROFESSIONAL ENGINEER
06/16/2020

PROJECT LOCATION:

US.CT.SBA.08748-A
215 COATNEY HILL RD
WOODSTOCK, CT 06281
WINDHAM COUNTY

SCHEDULE OF REVISIONS

REV.	DESCRIPTION OF CHANGE	DRAWN BY:	AUTH BY:	ISSUE DATE
0	ISSUED FOR PERMITTING	ZDT	JWB	06/15/2020
A	90% REVIEW	ZDT	JWB	06/11/2020

SCALE:AS SHOWN | DESIGNED BY: ZDT | DRAWN BY: ZDT

GPD#:2020796.01.US.CT.SBA.08748-A.01

PROJECT NAME:
US.CT.SBA.08748-A

DRAWING TITLE:
TOWER ELEVATION & ANTENNA SCHEDULE

DRAWING NUMBER:
T-1

ITEM	PART NO.	DESCRIPTION	QTY.	WEIGHT
1	RM1030405	10-30 4 SECTOR RM WLDMNT	4	45.99 LBS
2	MT-384-20	3/4" X 20" GALV THREADED ROD	8	2.48 LBS
3	GWL-06	3/4" GALV LOCK WASHER	16	0.04 LBS
4	GN-06	3/4" GALV HEX NUT	16	0.15 LBS

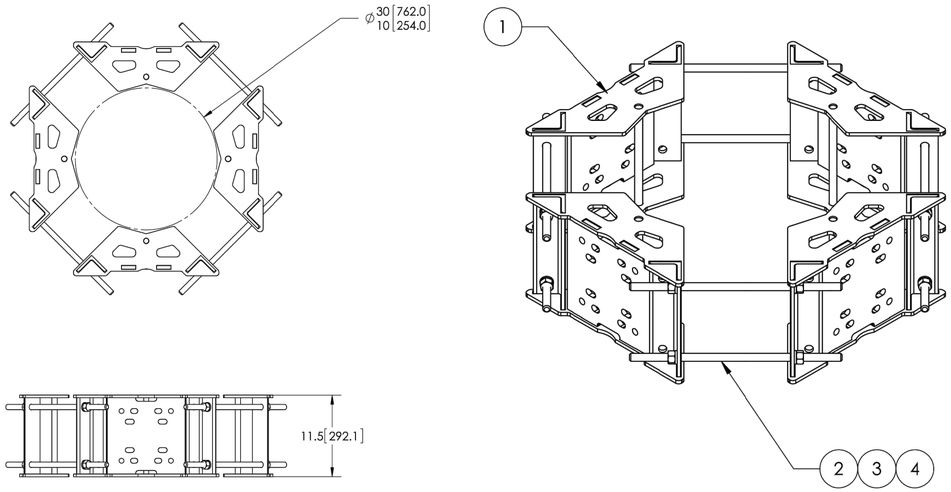

These drawings and specifications are the proprietary property of ANDREW CORPORATION and may be used only for the specific purpose authorized in writing by Andrew Corporation.

ALL DIMENSIONS ARE IN INCHES U.O.S.
TOLERANCES UNLESS OTHERWISE SPECIFIED:
.X = ± .12 ANGLES ±2°
.XX = ± .06 FRACTIONS ±1/32
.XXX= ± .03
REMOVE BURRS AND BREAK EDGES .005

DO NOT SCALE THIS PRINT

DRAWN BY: MSM	SHEET: 1 of 1	PART NUMBER: MC-RM1030-4	
CHECKED BY: TP	SCALE: NTS	DESCRIPTION: FOUR SECTOR RING MOUNT, 10–30 OD	
DATE: 06/27/11	MATERIAL: A36	DRAWING TYPE: ASSEMBLY DRAWING	
REVISION: H	FINISH: GALV A123	ANDREW®	WESTCHESTER, IL. 60154 U.S.A.
	WEIGHT: 206.79 LBS		

FOUR SECTOR RING MOUNT (COMMSCOPE PART #: MC-RM1030-4)

SCALE: N.T.S. | 1

Dual ODU mounting bracket

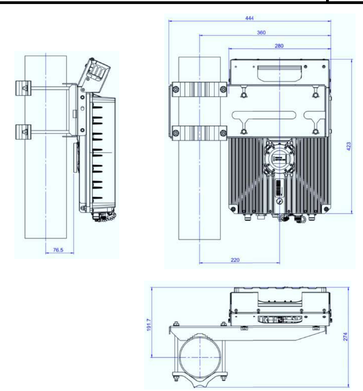

ODU MOUNT

SCALE: N.T.S. | 2

ANTENNA LINE	COMMSCOPE CONNECTOR PART #	COMMSCOPE PREPTOOL
LDF4-50A	L4TNM-PSA	CPT-12U
LDF4.5-50A	L4.5PNM-RC	N/A

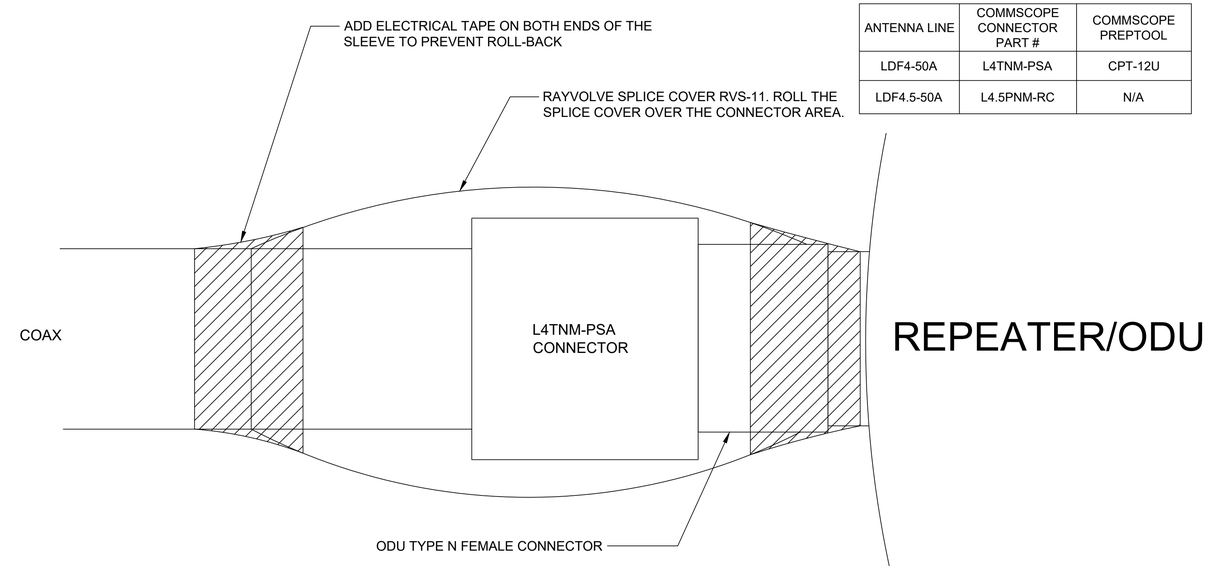

COAX TO REPEATER/ODU WEATHERPROOFING DETAIL

SCALE: N.T.S. | 3

ANTENNA LINE	COMMSCOPE GROUNDING KIT
LDF4-50A	CSG12-12B2U
LDF4.5-50A	SG58-12B2U

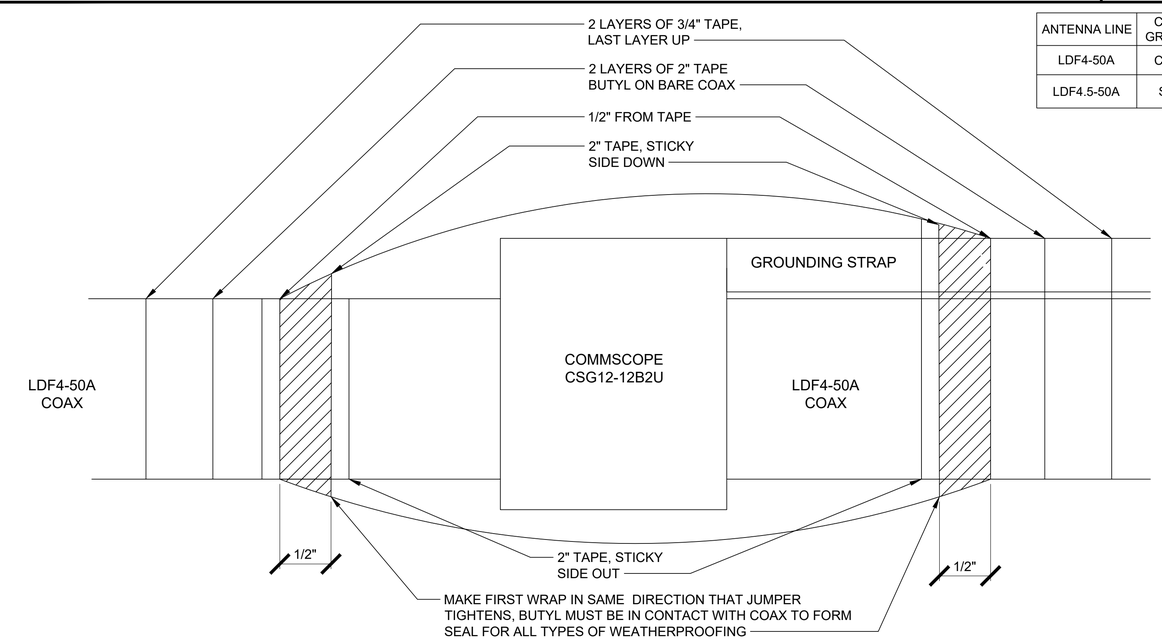

GROUNDING KIT WEATHERPROOFING DETAIL

SCALE: N.T.S. | 4

DRWNX

GPD Engineering and Architecture Professional Corporation

520 South Main Street
Akron, OH 44311
330.572.2100 Fax 330.572.2102

SEAL: STATE OF CONNECTICUT · LEONIDAS A. BERNA · 31512 · LICENSED PROFESSIONAL ENGINEER
06/16/2020

PROJECT LOCATION:

US.CT.SBA.08748-A
215 COATNEY HILL RD
WOODSTOCK, CT 06281
WINDHAM COUNTY

SCHEDULE OF REVISIONS

REV.	DESCRIPTION OF CHANGE	DRAWN BY:	AUTH BY:	ISSUE DATE
0	ISSUED FOR PERMITTING	ZDT	JWB	06/15/2020
A	90% REVIEW	ZDT	JWB	06/11/2020

SCALE:AS SHOWN | DESIGNED BY: ZDT | DRAWN BY: ZDT

GPD#:2020796.01.US.CT.SBA.08748-A.01

PROJECT NAME: US.CT.SBA.08748-A

DRAWING TITLE: DISH MOUNT DETAILS

DRAWING NUMBER: T-2

COMMSCOPE BILL OF MATERIAL FOR DISH & MOUNTING COMPONENTS			
ITEM	PART NO.	DESCRIPTION	QTY
1	USX6-6W-6GR / VHLPX3-6W	6'-0" MW DISH / 3'-0" MW DISH	1 / 1
2	MC-RM1030-4	UNIVERSAL RING MOUNT 10" TO 30" O.D.	2
3	MT-654-96	4" STD PIPE	4
4	MT-547-72	3" STD PIPE	1
5	PM-SC4-96	UNIVERSAL OPEN FACE PIPE MOUNT	2
6	GUB-5456	GALV. 5/8" U-BOLT ASSEMBLY	16
7	CO-200	CROSSOVER PLATE	2

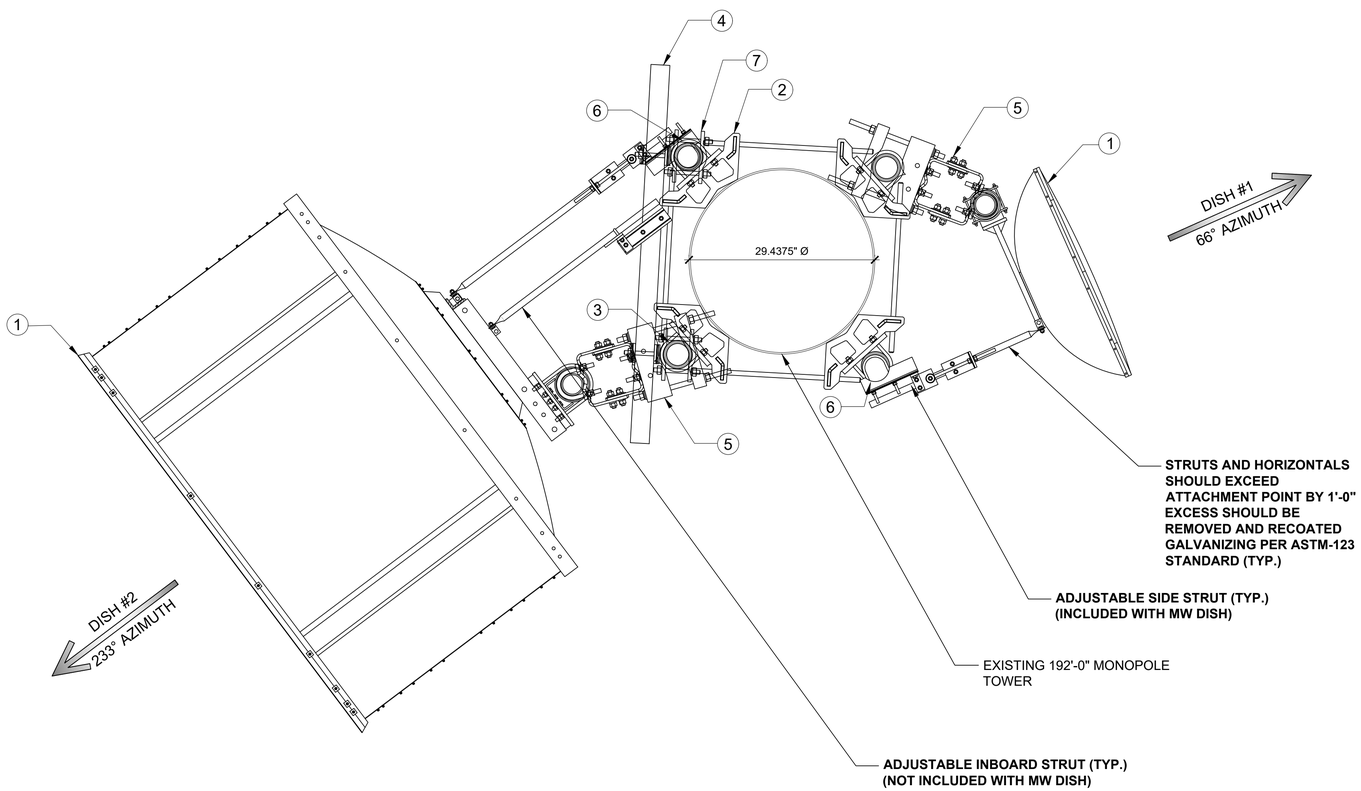

NOTE:
1. THE SIDE STRUTS MUST BE ATTACHED POINTING DIRECTLY BEHIND THE ANTENNA WITHIN THE FOLLOWING ANGULAR LIMITS:
   SIDE STRUT (WITH AZIMUTH ADJUSTMENT):
   25° HORIZONTALLY
   5° VERTICALLY
   SIDE STRUT (WITHOUT AZIMUTH ADJUSTMENT):
   25° HORIZONTALLY
   25° VERTICALLY
2. REFER TO SOW DOCUMENT FOR ODU CABLING DETAILS
3. ANTENNAS MUST BE INSTALLED PER MANUFACTURER SPECIFICATIONS

N

DISH PLAN @ 157'-0" A.G.L.

0 0.75 1.5 3
1" = 1'-0"

1

DRWNX

GPD Engineering and Architecture Professional Corporation
520 South Main Street
Akron, OH 44311
330.572.2100 Fax 330.572.2102

SEAL:
STATE OF CONNECTICUT · LEONARDO A. BRAZIL · 31512 · LICENSED PROFESSIONAL ENGINEER
06/16/2020

PROJECT LOCATION:
US.CT.SBA.08748-A
215 COATNEY HILL RD
WOODSTOCK, CT 06281
WINDHAM COUNTY

SCHEDULE OF REVISIONS

REV.	DESCRIPTION OF CHANGE	DRAWN BY:	AUTH BY:	ISSUE DATE
0	ISSUED FOR PERMITTING	ZDT	JWB	06/15/2020
A	90% REVIEW	ZDT	JWB	06/11/2020

SCALE:AS SHOWN DESIGNED BY: ZDT DRAWN BY: ZDT

GPD#:2020796.01.US.CT.SBA.08748-A.01

PROJECT NAME:
US.CT.SBA.08748-A

DRAWING TITLE:
DISH PLAN @ 157'-0" A.G.L.

DRAWING NUMBER:
T-3

COMMSCOPE BILL OF MATERIAL FOR DISH & MOUNTING COMPONENTS			
ITEM	PART NO.	DESCRIPTION	QTY
1	USX6-6W-6GR / VHLPX3-6W	6'-0" MW DISH / 3'-0" MW DISH	1 / 1
2	MC-RM1030-4	UNIVERSAL RING MOUNT 10" TO 30" O.D.	2
3	MT-654-96	4" STD PIPE	4
4	MT-547-72	3" STD PIPE	1
5	PM-SC4-96	UNIVERSAL OPEN FACE PIPE MOUNT	2
6	GUB-5456	GALV. 5/8" U-BOLT ASSEMBLY	16
7	CO-200	CROSSOVER PLATE	2
8	MD-S6	6FT ICE SHIELD	1
9	MD-SQ3	3FT ICE SHIELD	1

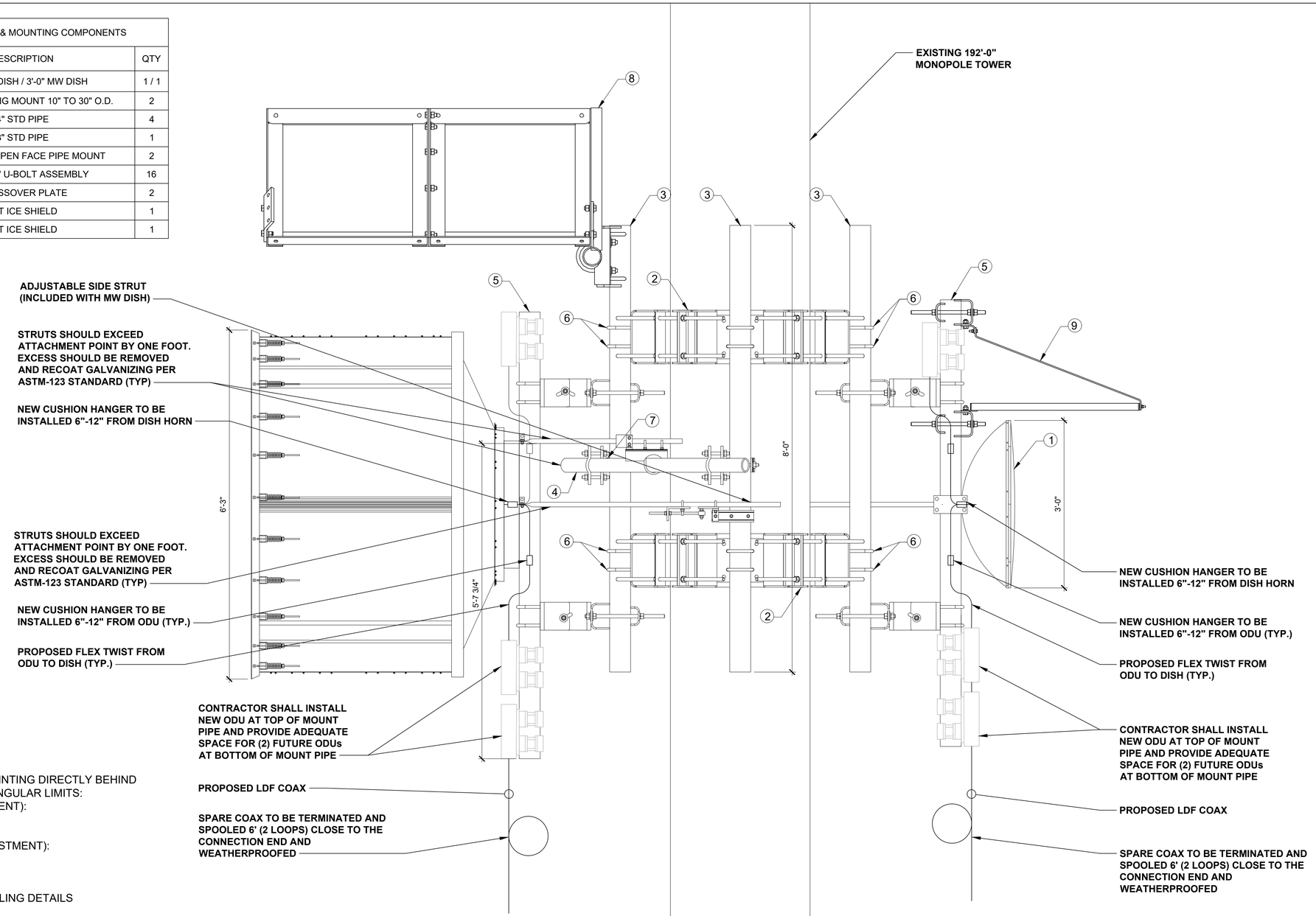

NOTE:
1. THE SIDE STRUTS MUST BE ATTACHED POINTING DIRECTLY BEHIND THE ANTENNA WITHIN THE FOLLOWING ANGULAR LIMITS:
   - -SIDE STRUT (WITH AZIMUTH ADJUSTMENT):
     - 25° HORIZONTALLY
     - 5° VERTICALLY
   - -SIDE STRUT (WITHOUT AZIMUTH ADJUSTMENT):
     - 25° HORIZONTALLY
     - 25° VERTICALLY

2. REFER TO SOW DOCUMENT FOR ODU CABLING DETAILS

3 THE PIPE MOUNT CAN BE EXTENDED VERTICALLY TO ACCOMMODATE THE PROPOSED ODU'S IF SITE CONSTRAINTS PREVENT THE INSTALLATION OF ODU'S BELOW THE PROPOSED DISH

TYPICAL 6' MW DISH MOUNT ELEVATION

12" 9" 6" 3" 0 1'
1 1/2"=1'-0"

1

DRWNX

GPD Engineering and Architecture Professional Corporation
520 South Main Street
Akron, OH 44311
330.572.2100 Fax 330.572.2102

SEAL:
STATE OF CONNECTICUT · LEONARDO A. BERNAL · 31512 · LICENSED PROFESSIONAL ENGINEER
06/16/2020

PROJECT LOCATION:
US.CT.SBA.08748-A
215 COATNEY HILL RD
WOODSTOCK, CT 06281
WINDHAM COUNTY

SCHEDULE OF REVISIONS

REV.	DESCRIPTION OF CHANGE	DRAWN BY:	AUTH BY:	ISSUE DATE
0	ISSUED FOR PERMITTING	ZDT	JWB	06/15/2020
A	90% REVIEW	ZDT	JWB	06/11/2020

SCALE:AS SHOWN DESIGNED BY: ZDT DRAWN BY: ZDT

GPD#:2020796.01.US.CT.SBA.08748-A.01

PROJECT NAME:
US.CT.SBA.08748-A

DRAWING TITLE:
DISH ELEVATIONS

DRAWING NUMBER:
T-4

COMMSCOPE # WB-K110-B (FOR REFERENCE ONLY)			
ITEM	PART NO.	DESCRIPTION	QTY
1	MF-130	DIRECT BURIAL PIPE COLUMN, 13'-1"	2
2	WB-CY110	SAFETY GRATING 12" X 10"	1
3	WBK110BHK	HARDWARE KIT (ITEMS 4-16)	1
4	PC-034	PIPE CAP 3-1/2"	2
5	WBLB123.07	12" WAVEGUIDE BRIDGE SUPPORT BRACKET	2
6	GUB-4356	1/2" X 3-5/8" X 6" GALV U-BOLT KIT	4
7	WB-JB-6	1/2" J-BOLT	4
8	GWF-04	1/2" GALV FLAT WASHER	4
9	GWL-04	1/2" GALV LOCK WASHER	4
10	GN-04	1/2" GALV HEX NUT	4
11	GB-03205	3/8" X 2" GALV BOLT KIT	9
12	MT-387	SQUARE WASHER, 1-1/2" X 1-5/8" W/ 7/16" HOLE	18
13	GWF-03	3/8" GALV FLAT WASHER	9
14	WBT243.01	VERTICAL TRAPEZE SECTION	3
15	GB-03105	3/8" X 1" GALV BOLT KIT	18
16	WBT123.02	12" HORIZONTAL TRAPEZE SECTION	9

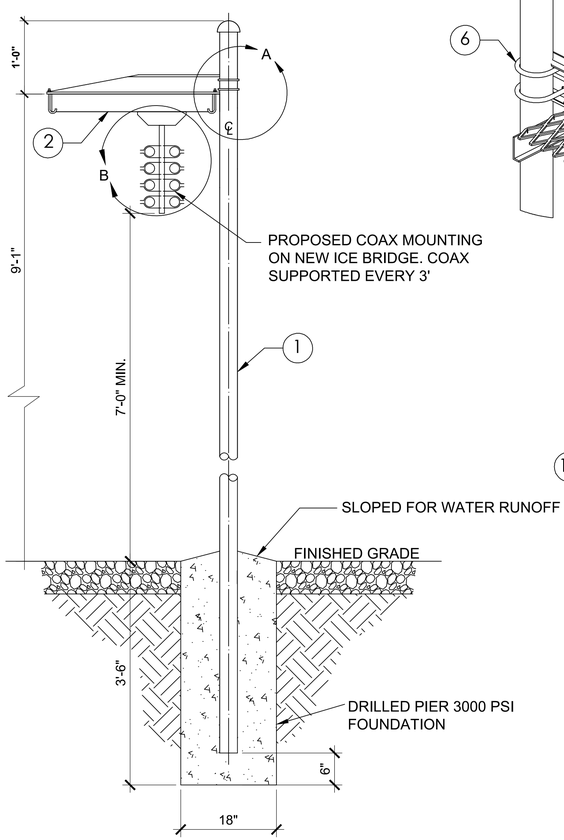

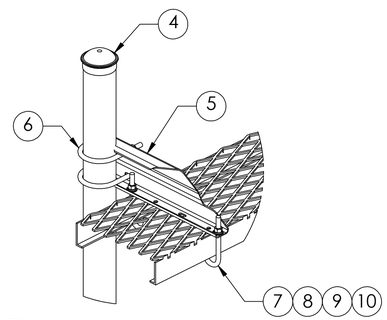

DETAIL "A"

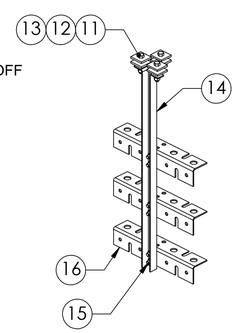

DETAIL "B"

ICE BRIDGE DETAIL (COMMSCOPE PART # WB-K110-B) | SCALE: N.T.S. | 1

DETAIL NOT USED | SCALE: N.T.S. | 2

EXECUTION

1. STRUCTURAL EXCAVATION
   A. FOUNDATION EXCAVATIONS SHALL BE CUT TO FIRM MATERIAL HAVING A SAFE BEARING VALUE OF 3000 PSF AND SHALL BE FREE OF ALL LOOSE AND WET MATERIALS. IF THE BOTTOM OF THE EXCAVATION IS NOT FIRM AND STABLE, OVER-EXCAVATE AN ADDITIONAL 12 INCHES, COMPACT SUB-GRADE AND FILL WITH 12 INCHES OF SELECT STRUCTURAL FILL.
   B. AFTER EXCAVATION, THE EXPOSED SOILS SHALL BE INSPECTED AND TESTED AND ANY UNSUITABLE DEPOSITS REMOVED AS DIRECTED TO REACH SUITABLE BEARING SOIL. ALL OVER-EXCAVATED AREAS SHALL BE BACK FILLED WITH SELECT STRUCTURAL FILL OR WITH LEAN CONCRETE FILL TO THE ELEVATION OF THE BOTTOM OF FOOTING OR FOUNDATION AS INDICATED ON THE DRAWINGS.
   C. PRIOR TO PLACEMENT OF CONC. FOUNDATIONS, THE SURFACE ON WHICH THE CONCRETE IS TO BE PLACED SHALL BE COMPACTED TO A MINIMUM OF 95% OF THE MODIFIED PROCTOR DENSITY BY THE MODIFIED PROCTOR TEST, ASTM D1557.
   D. NO FOUNDATIONS OR STRUCTURES SHALL BE CONSTRUCTED UNTIL THE BASE MATERIALS HAVE BEEN INSPECTED BY THE DRW NX CONSTRUCTION SUPERVISOR.

2. STRUCTURAL FILL:
   ALL COMPACTED FILL SHALL BE PLACED IN LAYERS NOT EXCEEDING A LOOSE 8" THICKNESS AND COMPACTED TO A MINIMUM DENSITY OF 95% OF THE MODIFIED PROCTOR DENSITY OBTAINED IN ACCORDANCE WITH ASTM D-1557.

NOTES | SCALE: N.T.S. | 3

DRW NX

GPD Engineering and Architecture Professional Corporation

520 South Main Street
Akron, OH 44311
330.572.2100 Fax 330.572.2102

SEAL:

STATE OF CONNECTICUT · CHRISTOPHER J. SEYKERS · No. 30095 · LICENSED PROFESSIONAL ENGINEER

06/16/2020

PROJECT LOCATION:

US.CT.SBA.08748-A
215 COATNEY HILL RD
WOODSTOCK, CT 06281
WINDHAM COUNTY

SCHEDULE OF REVISIONS

REV.	DESCRIPTION OF CHANGE	DRAWN BY:	AUTH BY:	ISSUE DATE
0	ISSUED FOR PERMITTING	ZDT	JWB	06/15/2020
A	90% REVIEW	ZDT	JWB	06/11/2020

SCALE: AS SHOWN | DESIGNED BY: ZDT | DRAWN BY: ZDT

GPD#:2020796.01.US.CT.SBA.08748-A.01

PROJECT NAME: US.CT.SBA.08748-A

DRAWING TITLE: COAX MOUNTING DETAILS

DRAWING NUMBER: T-5

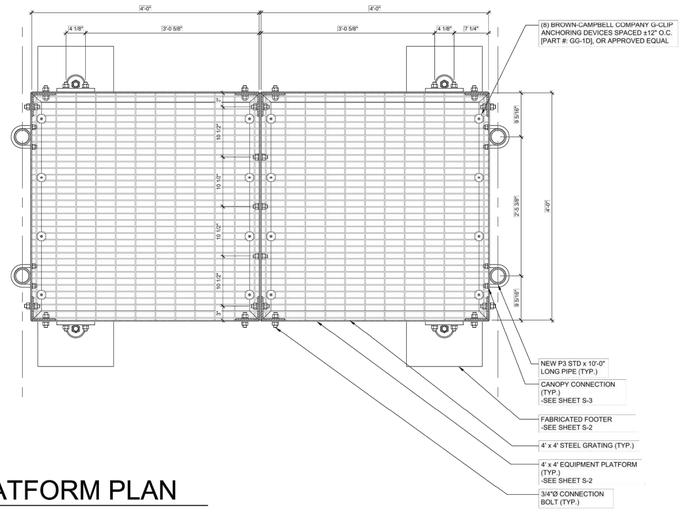

19 / S-7 4' x 8' PLATFORM PLAN

SCALE: 1 1/2" = 1'-0"

NOTE:
CONTRACTOR SHALL REFERENCE DRAWINGS BY GPD GROUP (JOB #: 2019796.PLATFORMDESIGN.01) FOR THE FULL SET OF DRAWINGS

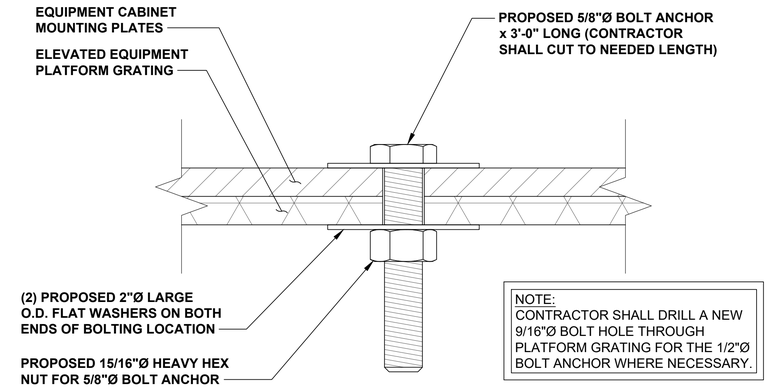

NOTE:
CONTRACTOR SHALL DRILL A NEW 9/16"Ø BOLT HOLE THROUGH PLATFORM GRATING FOR THE 1/2"Ø BOLT ANCHOR WHERE NECESSARY.

1 / T-6 PLATFORM BOLTING DETAIL

SCALE: 1" = 1'-0"

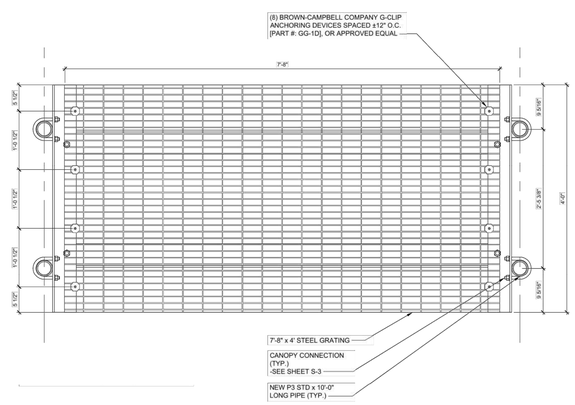

20 / S-7 4' x 8' CANOPY PLAN

SCALE: 1 1/2" = 1'-0"

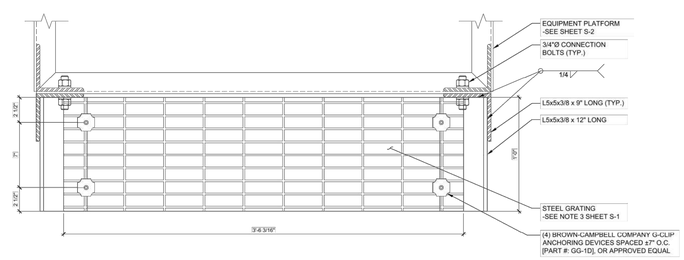

I / S-5 STEP SECTION

SCALE: 3" = 1'-0"

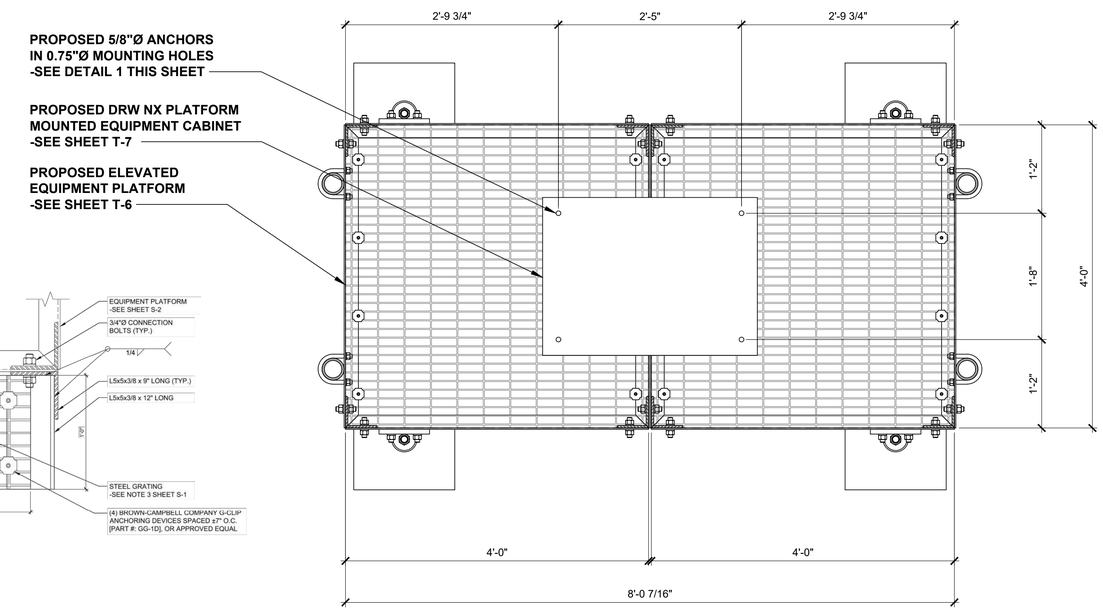

2 / T-6 EQUIPMENT PLATFORM PLAN

SCALE: 1" = 1'-0"

ELEVATED EQUIPMENT PLATFORM (PART #: PLATFORM FABRICATION)

SCALE: N.T.S.

1

DRW NX

REFERENCE ONLY

SEAL:

REFERENCE ONLY

PROJECT LOCATION:

US.CT.SBA.08748-A
215 COATNEY HILL RD
WOODSTOCK, CT 06281
WINDHAM COUNTY

SCHEDULE OF REVISIONS

REV.	DESCRIPTION OF CHANGE	DRAWN BY:	AUTH BY:	ISSUE DATE
0	ISSUED FOR PERMITTING	ZDT	JWB	06/15/2020
A	90% REVIEW	ZDT	JWB	06/11/2020

SCALE:AS SHOWN | DESIGNED BY: ZDT | DRAWN BY: ZDT

GPD#:2020796.01.US.CT.SBA.08748-A.01

PROJECT NAME:
US.CT.SBA.08748-A

DRAWING TITLE:
EQUIPMENT DETAILS

DRAWING NUMBER:
T-6

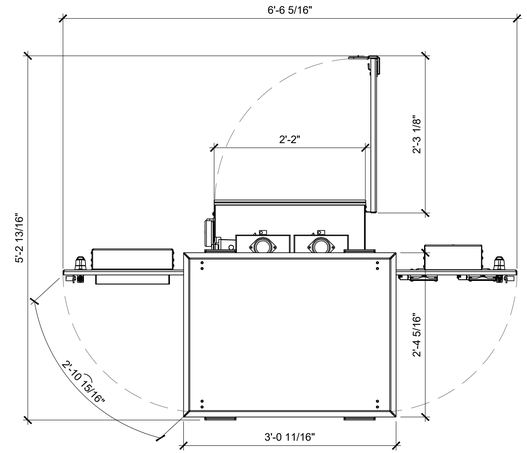

PLAN VIEW

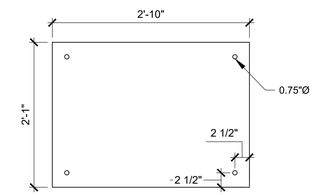

MOUNTING DETAIL

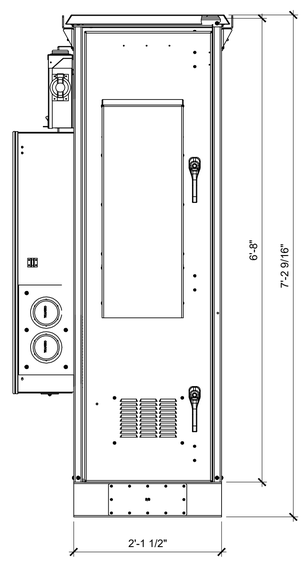

SIDE VIEW

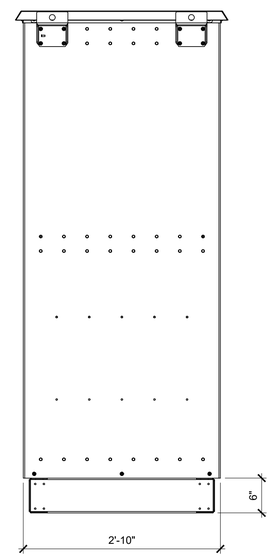

FRONT VIEW

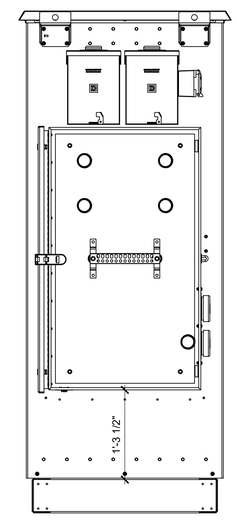

BACK VIEW

CABINET SPECIFICATIONS

SCALE: N.T.S. | 1

DRWNX

REFERENCE ONLY

SEAL:

REFERENCE ONLY

PROJECT LOCATION:

US.CT.SBA.08748-A
215 COATNEY HILL RD
WOODSTOCK, CT 06281
WINDHAM COUNTY

SCHEDULE OF REVISIONS

REV.	DESCRIPTION OF CHANGE	DRAWN BY:	AUTH BY:	ISSUE DATE
0	ISSUED FOR PERMITTING	ZDT	JWB	06/15/2020
A	90% REVIEW	ZDT	JWB	06/11/2020

SCALE:AS SHOWN | DESIGNED BY: ZDT | DRAWN BY: ZDT

GPD#:2020796.01.US.CT.SBA.08748-A.01

PROJECT NAME:
US.CT.SBA.08748-A

DRAWING TITLE:
CABINET DETAILS

DRAWING NUMBER:
T-7

VOLTAGE DROP

1) DISTANCE BETWEEN TRANSFOMER AND METER/DISCONNECT/LOAD CENTER
2) DISTANCE BETWEEN METER/DISCONNECT/LOAD CENTER AND EQUIPMENT

ROUTE	WIRE SIZE	LENGTH OF RUN	PHASE	VOLTAGE DROP %	VOLTAGE DROP
1	3#1	55'	120/240 SINGLE	0.57%	1.36v
2	3#1	5'	120/240 SINGLE	0.052%	0.12v
TOTAL				0.622%	1.48v

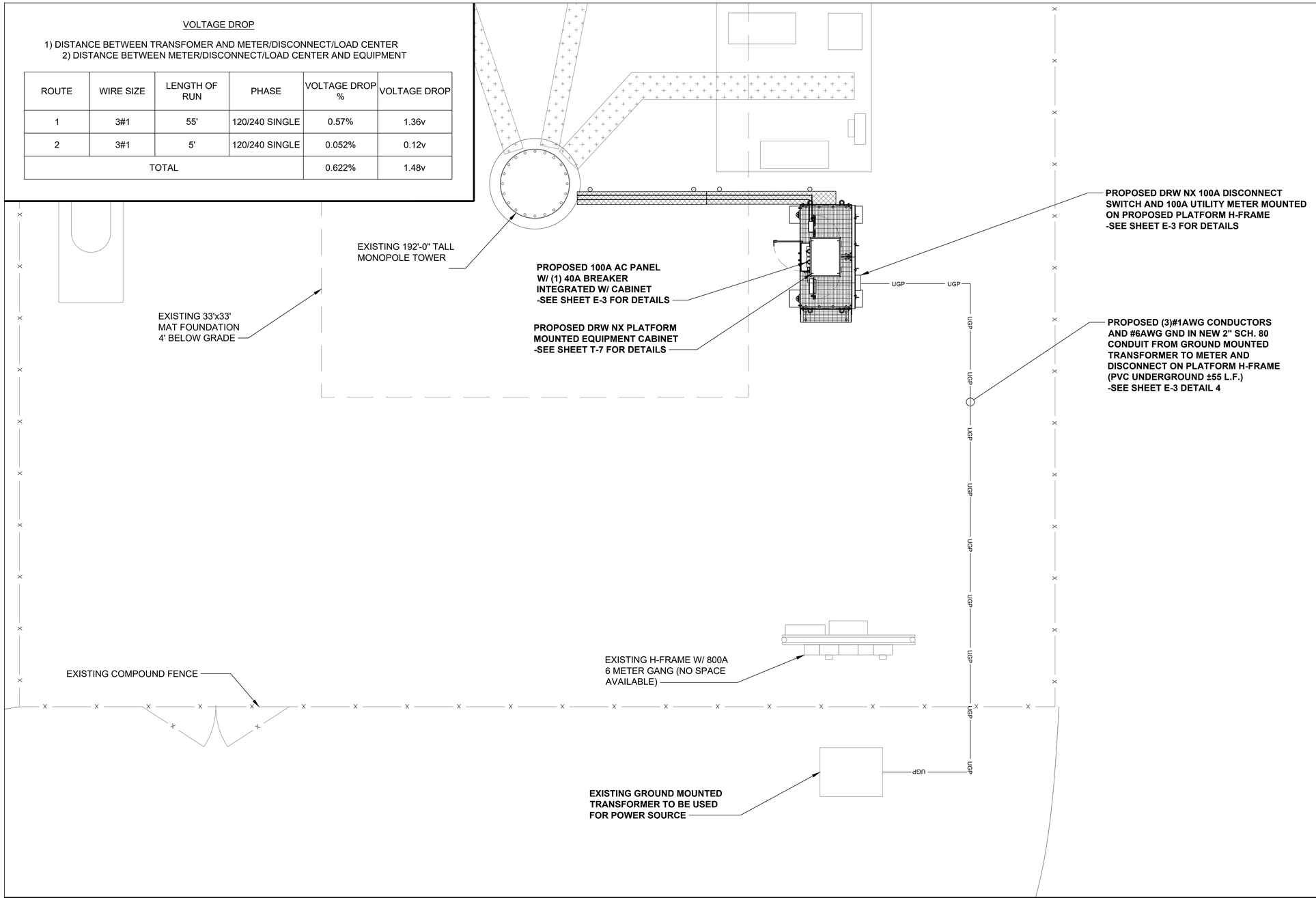

SITE UTILITY PLAN

4' 2' 0 4' 8'
1/4"=1'-0"

1

DRW NX

GPD Engineering and Architecture Professional Corporation

520 South Main Street
Akron, OH 44311
330.572.2100 Fax 330.572.2102

SEAL:

STATE OF CONNECTICUT · STEVEN D. SCHAUB · 21004 · LICENSED PROFESSIONAL ENGINEER

06/16/2020

PROJECT LOCATION:

US.CT.SBA.08748-A
215 COATNEY HILL RD
WOODSTOCK, CT 06281
WINDHAM COUNTY

SCHEDULE OF REVISIONS

REV.	DESCRIPTION OF CHANGE	DRAWN BY:	AUTH BY:	ISSUE DATE
0	ISSUED FOR PERMITTING	ZDT	JWB	06/15/2020
A	90% REVIEW	ZDT	JWB	06/11/2020

SCALE:AS SHOWN DESIGNED BY: ZDT DRAWN BY: ZDT

GPD#:2020796.01.US.CT.SBA.08748-A.01

PROJECT NAME:
US.CT.SBA.08748-A

DRAWING TITLE:
UTILITY PLAN

DRAWING NUMBER:
E-1

(A) EXTERIOR GROUND RING: #2 AWG SOLID COPPER, BURIED AT A DEPTH OF AT LEAST 30 INCHES BELOW GRADE, OR 6" BELOW THE FRONT LINE AND APPROXIMATELY 24" FROM THE EXTERIOR WALL OR FOOTING. (REFER TO SHEET N-3 PART II: 2.1 A2)

(B) GROUND ROD: UL LISTED COPPER CLAD STEEL. MINIMUM 3/4" DIAMETER BY TEN FEET LONG. TWO GROUND RODS SHALL BE INSTALLED WITH INSPECTION SLEEVES. GROUND RODS SHALL BE DRIVEN TO THE DEPTH OF GROUND RING CONDUCTOR. (REFER TO SHEET N-3 PART II: 2.1 A.2)

(C) TOWER EXIT GROUND BAR: MECHANICALLY SECURE THE GROUND BAR DIRECTLY TO TOWER WITH STAINLESS STEEL MOUNTING MATERIAL. CONTRACTOR TO VERIFY THAT THE STRUCTURE IS PROPERLY GROUNDED TO THE TOWER GROUND RING. 2#2 AWG SOLID TINNED COPPER TO GROUND.

(D) EXTERIOR UNIT BONDS: METALLIC OBJECTS, EXTERNAL TO OR MOUNTED TO THE H-FRAME, CABINETS, SHALL BE BONDED TO THE EXTERIOR GROUND RING W/ #2 AWG SOLID TINNED CU.

(E) ICE BRIDGE SUPPORTS: EACH ICE BRIDGE LEG SHALL BE BONDED TO THE GROUND RING WITH #2 AWG BARE TINNED COPPER CONDUCTOR. PROVIDE EXOTHERMIC WELDS AT BOTH THE ICE BRIDGE LEG AND BURIED GROUND RING.

(F) MASTER GROUNDING BAR: EXTEND TWO (2) #2 AWG TINNED CU CONDUCTORS FROM BURIED GROUNDING RING UP TO MASTER GROUNDING BAR & MAKE EXOTHERMIC CONNECTIONS.

(G) FENCE AND GATE GROUNDING: METAL FENCES WITHIN 7 FEET OF THE EXTERIOR GROUND RING OR OBJECTS BONDED TO THE EXTERIOR GROUND RING SHALL BE BE BONDED TO THE GROUND RING WITH A #2 AWG SOLID TINNED COPPER CONDUCTOR AT AN INTERVAL NOT EXCEEDING 25 FEET. BONDS SHALL BE MADE AT EACH GATE POST COPPER FLEX ACROSS GATE OPENINGS.

CONTRACTOR SHALL FIELD VERIFY ALL EXISTING GROUNDING PRIOR TO COMMENCING WORK

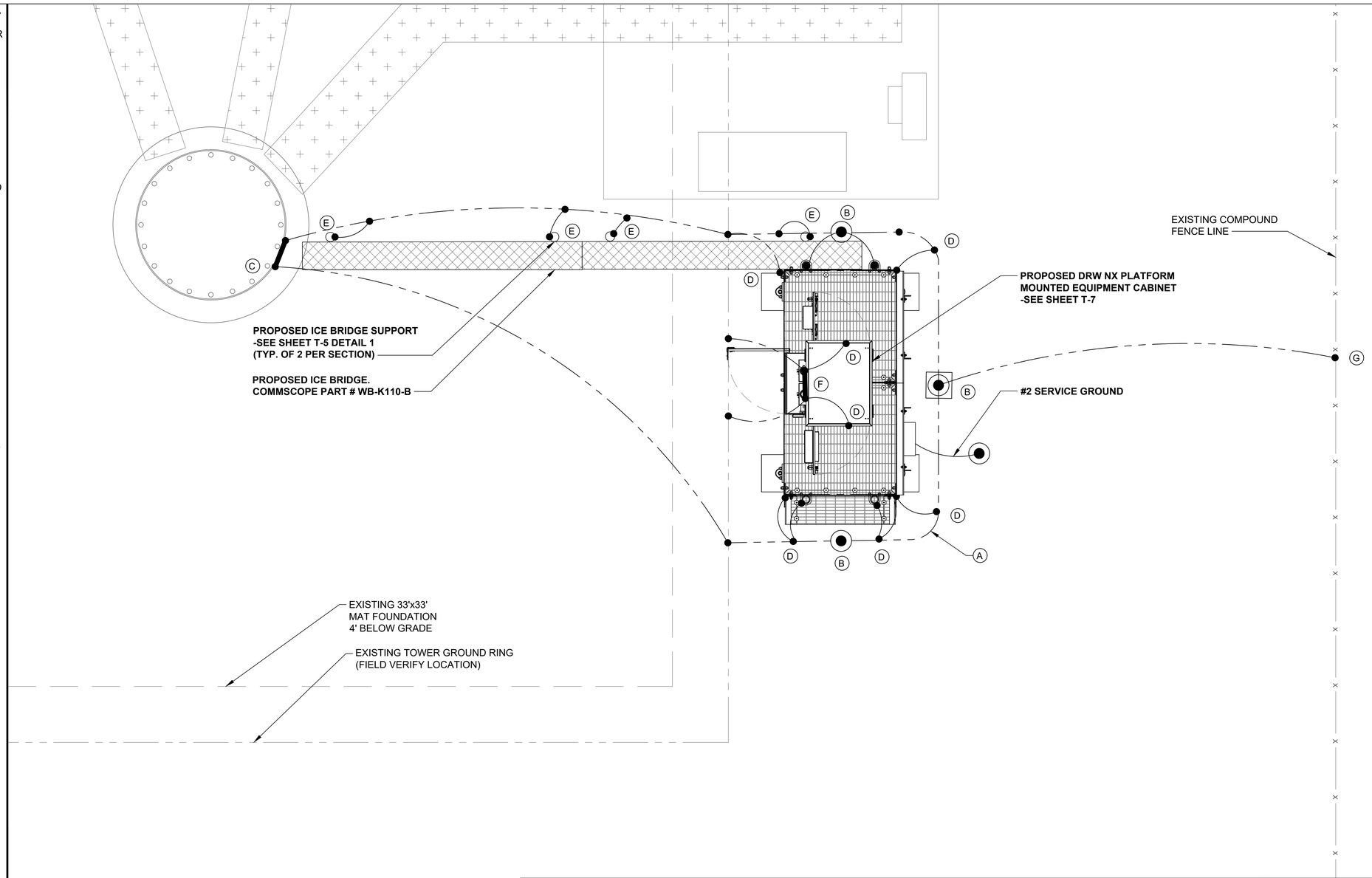

SYMBOL	DESCRIPTION	SYMBOL	DESCRIPTION	SYMBOL	DESCRIPTION	SYMBOL	DESCRIPTION
	3/4" x 10' COPPER CLAD STEEL GROUND ROD		3/4" x 10' COPPER CLAD TEST WELL GROUND ROD W/INSPECTION SLEEVE		EXOTHERMIC WELD (CADWELD) (UNLESS OTHERWISE NOTED)		EXOTHERMIC WELD (CADWELD) WITH INSPECTION SLEEVE

GROUNDING NOTES 1

GROUNDING PLAN

12" 6" 0 1' 2' 3' 4' 5'
1/2"=1'-0"

2

DRW NX

GPD Engineering and Architecture Professional Corporation
520 South Main Street
Akron, OH 44311
330.572.2100 Fax 330.572.2102

SEAL: STATE OF CONNECTICUT STEVEN P. SCHAHL LICENSED PROFESSIONAL ENGINEER 06/16/2020

PROJECT LOCATION:
US.CT.SBA.08748-A
215 COATNEY HILL RD
WOODSTOCK, CT 06281
WINDHAM COUNTY

SCHEDULE OF REVISIONS

REV.	DESCRIPTION OF CHANGE	DRAWN BY:	AUTH BY:	ISSUE DATE
0	ISSUED FOR PERMITTING	ZDT	JWB	06/15/2020
A	90% REVIEW	ZDT	JWB	06/11/2020

SCALE:AS SHOWN DESIGNED BY: ZDT DRAWN BY: ZDT

GPD#:2020796.01.US.CT.SBA.08748-A.01

PROJECT NAME: US.CT.SBA.08748-A

DRAWING TITLE: GROUNDING PLAN

DRAWING NUMBER: E-2

DETAIL NOT USED

SCALE: N.T.S. | 1

DETAIL NOT USED

SCALE: N.T.S. | 2

TYPICAL CONDUIT TRENCH DETAIL

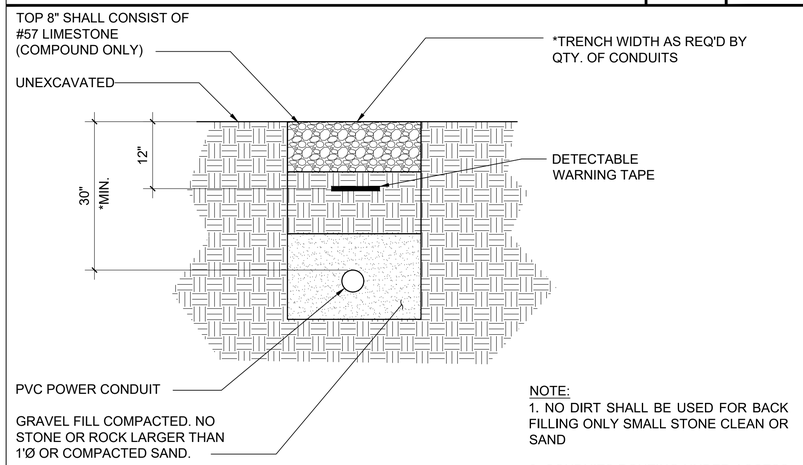

NOTE:
1. NO DIRT SHALL BE USED FOR BACK FILLING ONLY SMALL STONE CLEAN OR SAND

2. CONDUITS ROUTING UNDER ACCESS DRIVE OR IN FRONT OF ACCESS GATE, CONCRETE ENCASEMENT SHOULD SURROUND THE CONDUITS AT LEAST 8" ON ALL SIDES.

*AS PER LOCAL CODE REQUIREMENTS

SCALE: N.T.S. | 4

MOUNTED H-FRAME (SITE PRO1 PART #: MER8-P)

PARTS LIST

ITEM	QTY	PART NO.	PART DESCRIPTION	LENGTH	UNIT WT.	NET WT.
1	4	X-MCOVUP	UPRIGHT SUPPORT FOR MCOV-4 & MCOV-6	120 in	32.17	128.68
2	2	X-MCOV4	HORIZONTAL SUPPORT ANGLE FOR MCOV-4	47 7/8 in	27.35	54.71
3	4	X-MUPBP	BACKING PLATE FOR X-MCOVUP		4.46	17.84
4	2	UNT10	UNISTRUT	120 in	20.38	40.76
5	8	G58134	5/8" x 1-3/4" HDG BOLT	1 3/4 in	0.27	2.15
6	16	G58FW	5/8" HDG USS FLATWASHER	1/8 in	0.07	1.13
7	12	G58LW	5/8" HDG LOCKWASHER	5/32 in	0.03	0.31
8	12	G58NUT	5/8" HDG HEAVY 2H HEX NUT	5/8 in	0.13	1.56
9	4	G58234	5/8" UNC HEX BOLT (A325)	2 3/4 in	0.36	1.42
10	8	G38112	3/8" x 1-1/2" HDG HEX BOLT GR5		0.07	0.57
11	8	G38FW	3/8" HDG USS FLATWASHER		0.01	0.09
12	8	SP158	SPRING NUT FOR 1-5/8" STRUT		0.10	0.82
					TOTAL WT. #	207.79

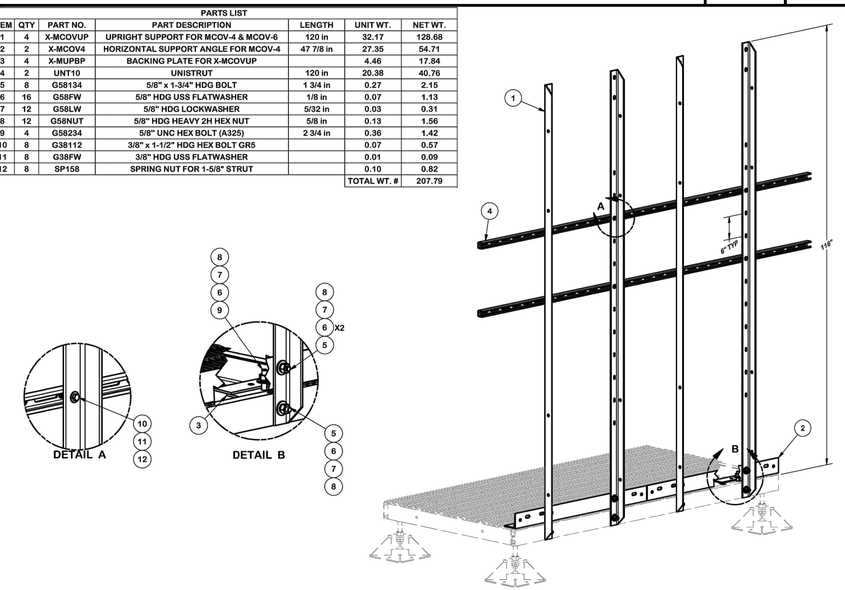

SCALE: N.T.S. | 5

1	TRANSFORMER	METER/DISCONNECT	(3)#1AWG & (1)#6AWG GND 2" CONDUIT	
2	METER GANG	100A DISTR. PANEL	(3)#1AWG & (1)#6AWG GND 2" CONDUIT	

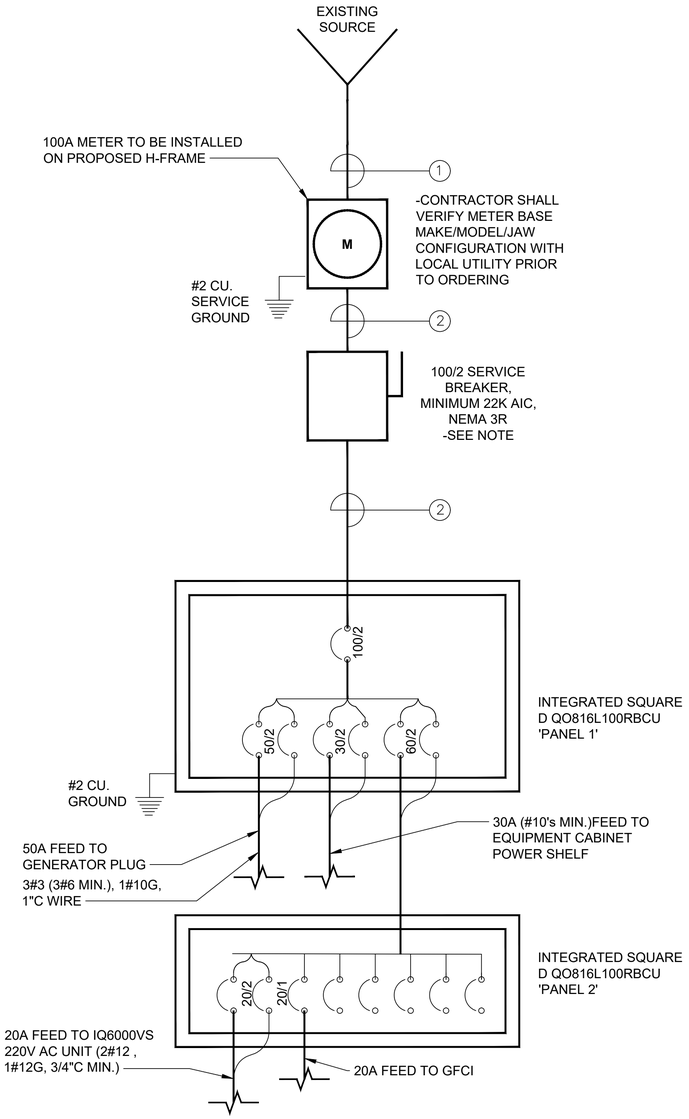

NOTE:
CONTRACTOR SHALL COORDINATE WITH LOCAL UTILITY TO VERIFY EXISTING TRANSFORMER SHORT CIRCUIT FAULT CURRENT AT PANEL, AND VERIFY ALL NEW ELECTRICAL EQUIPMENT HAS AN AIC RATING THAT EXCEEDS FAULT CURRENT AT SOURCE.

ONE-LINE DIAGRAM

SCALE: N.T.S. | 3

DRWNX

GPD Engineering and Architecture
Professional Corporation

520 South Main Street
Akron, OH 44311
330.572.2100 Fax 330.572.2102

SEAL:

STATE OF CONNECTICUT · STEVEN P. SCHAIK · 28014 · LICENSED PROFESSIONAL ENGINEER

06/16/2020

PROJECT LOCATION:

US.CT.SBA.08748-A
215 COATNEY HILL RD
WOODSTOCK, CT 06281
WINDHAM COUNTY

SCHEDULE OF REVISIONS

REV.	DESCRIPTION OF CHANGE	DRAWN BY:	AUTH BY:	ISSUE DATE
0	ISSUED FOR PERMITTING	ZDT	JWB	06/15/2020
A	90% REVIEW	ZDT	JWB	06/11/2020

SCALE:AS SHOWN | DESIGNED BY: ZDT | DRAWN BY: ZDT

GPD#:2020796.01.US.CT.SBA.08748-A.01

PROJECT NAME:
US.CT.SBA.08748-A

DRAWING TITLE:
ONE-LINE DIAGRAM & UTILITY DETAILS

DRAWING NUMBER:
E-3

SITE NUMBER:	US.CT.SBA.08748-A	MODEL NUMBER:	SQUARE D QO816L100RBCU - 1
VOLTAGE:	120/240V	PHASE:	1
MAIN BREAKER:	100 AMP	BUSS RATING:	100 AMPS
MOUNT:	SURFACE	NEUTRAL BAR:	YES
ENCLOSURE TYPE:	NEMA 3R	N to GROUND BOND:	NO
PANEL STATUS:	PROPOSED	INTERNAL TVSS:	YES

WIRE:	3
AIC:	22K (SEE NOTE)
GROUND BAR:	YES

CKT	LOAD DESCRIPTION	BREAKER AMPS	BREAKER POLES	BREAKER STATUS	SERVICE LOAD VA	USAGE FACTOR	PHASE A VA	PHASE B VA
1	100A MAIN	100	2	ON	0	1.00	0	
2					0	1.00		0
3	GENERATOR PLUG	50	2	ON	0	1.00	0	
4					0	1.00		0
5	DC POWER SHELF	30	2	ON	2800	1.00	2800	
6					2800	1.00		2800
7	PANEL 2 (PROVIDED BY MANUFACTURER)	60	2	ON	1850	1.00	1850	
8					1850	1.00		1850
							4650	4650

VA

TOTAL KVA	9.30
AMPS	38.75

PROPOSED PANEL

NOTE:
CONTRACTOR SHALL COORDINATE WITH LOCAL UTILITY TO VERIFY EXISTING TRANSFORMER SHORT CIRCUIT FAULT CURRENT AT PANEL, AND VERIFY ALL NEW ELECTRICAL EQUIPMENT HAS AN AIC RATING THAT EXCEEDS FAULT CURRENT AT SOURCE.

DRW NX PANEL SCHEDULE - PANEL 1

1

SITE NUMBER:	US.CT.SBA.08748-A	MODEL NUMBER:	SQUARE D QO816L100RBCU - 2
VOLTAGE:	120/240V	PHASE:	1
MAIN BREAKER:	N/A (MLO)	BUSS RATING:	100 AMPS
MOUNT:	SURFACE	NEUTRAL BAR:	YES
ENCLOSURE TYPE:	NEMA 3R	N to GROUND BOND:	NO
PANEL STATUS:	PROPOSED	INTERNAL TVSS:	YES

WIRE:	3
AIC:	22K (SEE NOTE)
GROUND BAR:	YES

CKT	LOAD DESCRIPTION	BREAKER AMPS	BREAKER POLES	BREAKER STATUS	SERVICE LOAD VA	USAGE FACTOR	PHASE A VA	PHASE B VA
1	AC UNIT	20	2	ON	1760	1.00	1760	
2					1760	1.00		1760
3	GFCI	20	1	ON	180	1.00	180	
4	---	---	---	N/A	0	1.00		0
5	---	---	---	N/A	0	1.00	0	
6	---	---	---	N/A	0	1.00		0
7	---	---	---	N/A	0	1.00	0	
8	---	---	---	N/A	0	1.00		0
							1940	1760

VA

TOTAL KVA	3.70
AMPS	15.42

PROPOSED PANEL

NOTE:
CONTRACTOR SHALL COORDINATE WITH LOCAL UTILITY TO VERIFY EXISTING TRANSFORMER SHORT CIRCUIT FAULT CURRENT AT PANEL, AND VERIFY ALL NEW ELECTRICAL EQUIPMENT HAS AN AIC RATING THAT EXCEEDS FAULT CURRENT AT SOURCE.

DRW NX PANEL SCHEDULE - PANEL 2

2

DRW NX

GPD Engineering and Architecture Professional Corporation
520 South Main Street
Akron, OH 44311
330.572.2100 Fax 330.572.2102

SEAL:
STATE OF CONNECTICUT · STEVEN P. SCHAAF · LICENSED · PROFESSIONAL ENGINEER
06/16/2020

PROJECT LOCATION:
US.CT.SBA.08748-A
215 COATNEY HILL RD
WOODSTOCK, CT 06281
WINDHAM COUNTY

SCHEDULE OF REVISIONS

REV.	DESCRIPTION OF CHANGE	DRAWN BY:	AUTH BY:	ISSUE DATE
0	ISSUED FOR PERMITTING	ZDT	JWB	06/15/2020
A	90% REVIEW	ZDT	JWB	06/11/2020

SCALE:AS SHOWN DESIGNED BY: ZDT DRAWN BY: ZDT

GPD#:2020796.01.US.CT.SBA.08748-A.01

PROJECT NAME:
US.CT.SBA.08748-A

DRAWING TITLE:
PANEL SCHEDULE

DRAWING NUMBER:
E-4

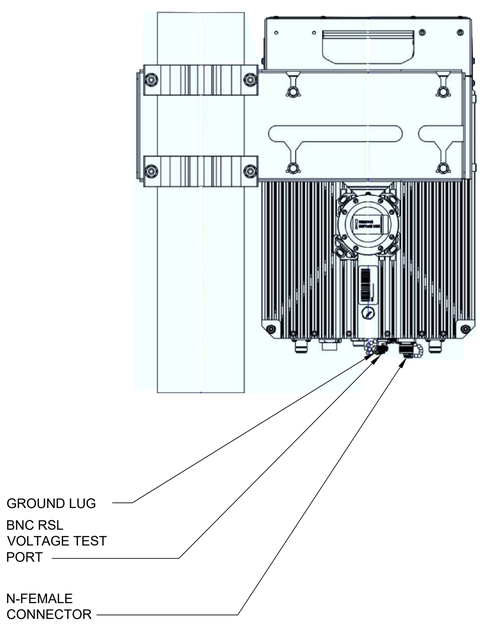

DETAIL

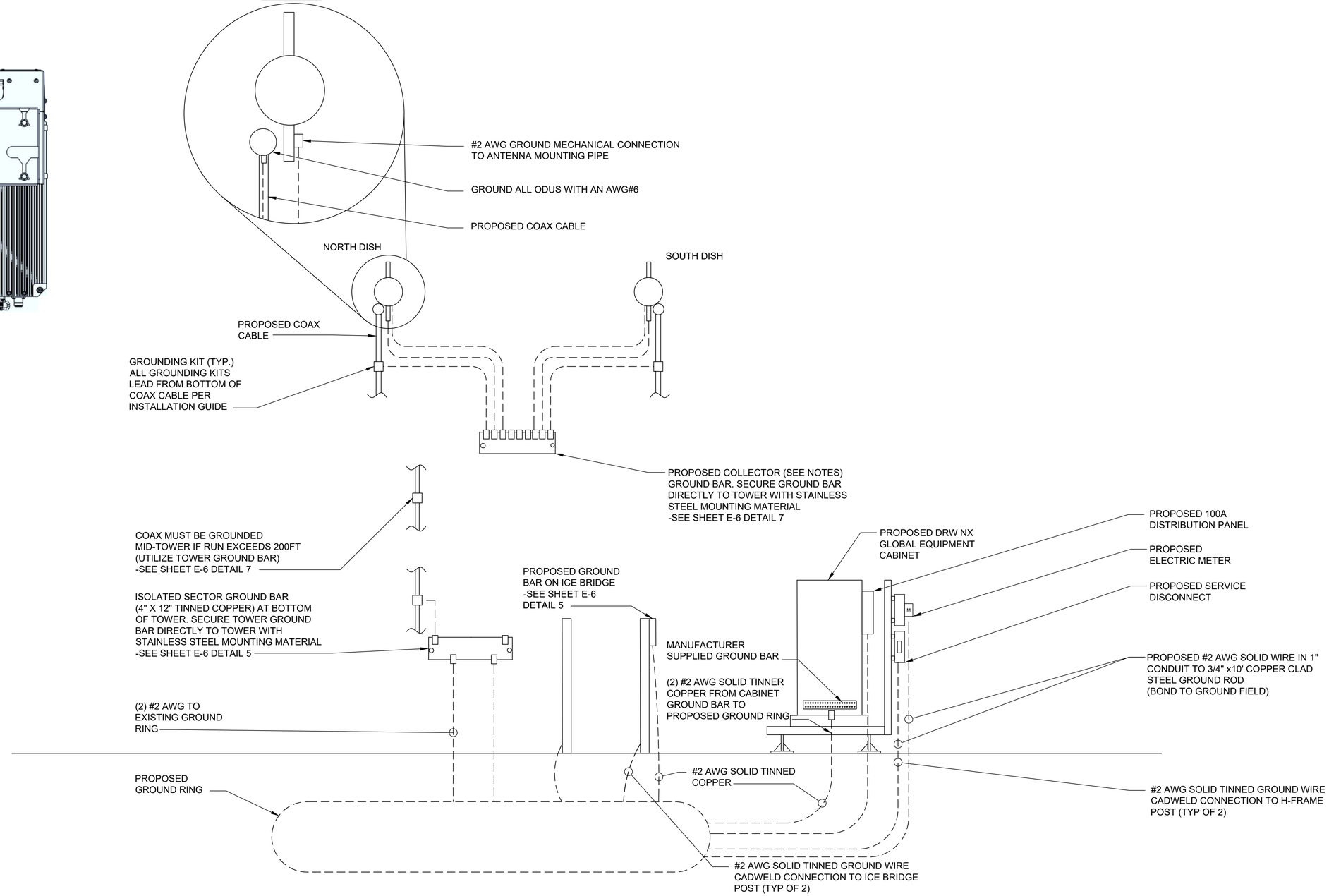

NOTE:

1. COAX NEEDS TO BE GROUND AT ALL VERTICAL AND HORIZONTAL TRANSITIONS

ANTENNA GROUNDING RISER

SCALE: N.T.S.

1

DRW NX

GPD Engineering and Architecture Professional Corporation
520 South Main Street
Akron, OH 44311
330.572.2100 Fax 330.572.2102

SEAL:

STATE OF CONNECTICUT · STEVEN P. SCHAUB · 21014 · LICENSED PROFESSIONAL ENGINEER

06/16/2020

PROJECT LOCATION:

US.CT.SBA.08748-A
215 COATNEY HILL RD
WOODSTOCK, CT 06281
WINDHAM COUNTY

SCHEDULE OF REVISIONS

REV.	DESCRIPTION OF CHANGE	DRAWN BY:	AUTH BY:	ISSUE DATE
0	ISSUED FOR PERMITTING	ZDT	JWB	06/15/2020
A	90% REVIEW	ZDT	JWB	06/11/2020

SCALE:AS SHOWN | DESIGNED BY: ZDT | DRAWN BY: ZDT

GPD#:2020796.01.US.CT.SBA.08748-A.01

PROJECT NAME: US.CT.SBA.08748-A

DRAWING TITLE: GROUNDING RISER DIAGRAM

DRAWING NUMBER: E-5

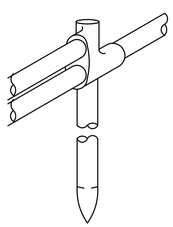

CADWELD TYPE NC
THERMOWELD TYPE CR-17

DOUBLE CABLE TO GROUND ROD

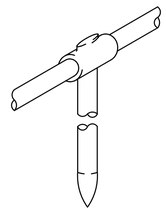

CADWELD TYPE GT
THERMOWELD TYPE CR-2

HORIZONTAL TO GROUND ROD

GROUND ROD

SCALE: N.T.S. | 1

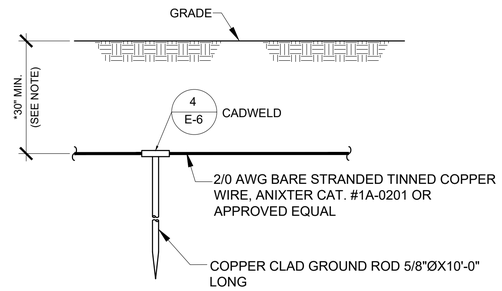

NOTE:

*GROUND ROD SHALL BE MIN. 30" BELOW GRADE OR 6" BELOW FROST LINE. (WHICH EVER IS GREATER) AS PER N.E.C. ARTICLE 250-50(D)

GROUND ROD DETAIL

SCALE: N.T.S. | 2

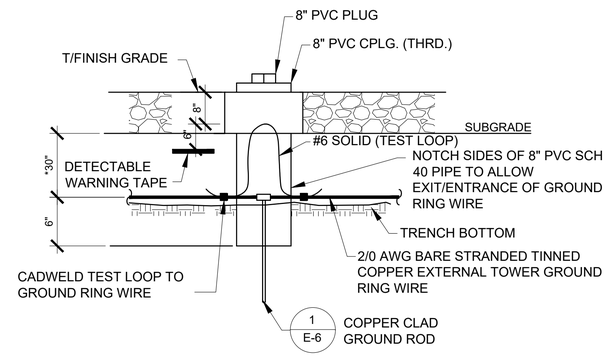

NOTE:

* GROUND WIRE SHALL BE MIN. 30" BELOW GRADE OR 6" BELOW FROST LINE. (WHICH EVER IS GREATER) AS PER N.E.C. ARTICLE 250-50(D)

INSPECTION PORT DETAIL

SCALE: N.T.S. | 3

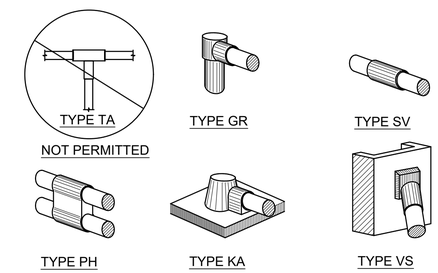

CADWELDS (TYPICAL)

SCALE: N.T.S. | 4

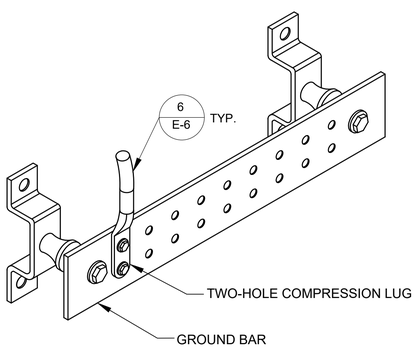

NOTES:

1. SECURE TO INTERIOR OR EXTERIOR WALL w/S.S. LAG HARGER CAT #GBB-1442-G OR APPROVED EQUAL

TOWER BASE INSULATED GROUND BAR

SCALE: N.T.S. | 5

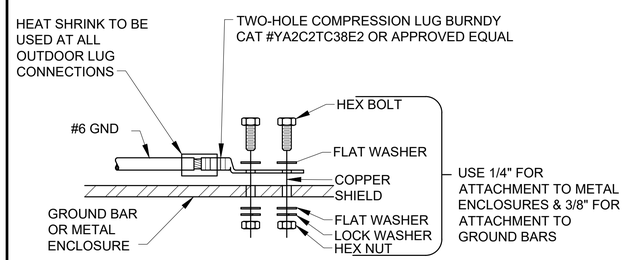

INSTALLATION NOTES:

1. BOLTS, WASHERS, AND NUTS SHALL BE STAINLESS STEEL.
2. SELECT BOLT LENGTH TO PROVIDE MINIMUM OF TWO EXPOSED THREADS.
3. BURNISHING MOUNTING SURFACE TO REMOVE PAINT IN THE ARE OF LUG CONTACT.
4. APPLY COPPER SHIELD COMPOUND TO MATING SURFACE OF LUG AND WIPE CLEAN EXCESS COMPOUND.
5. ALL METAL ELECTRICAL EQUIPMENT SHALL BE EXTERNALLY GROUNDED TO THE TOWER EGR. (PAINTED METAL SURFACES MUST HAVE SMALL SECTION OF PAINT REMOVED BEFORE INSTALLATION, AND SHALL BE SPRAYED LIGHTLY WITH CLEAR COAT LACQUER FINISH.

GROUNDING FLAT SURFACES (TYPICAL)

SCALE: N.T.S. | 6

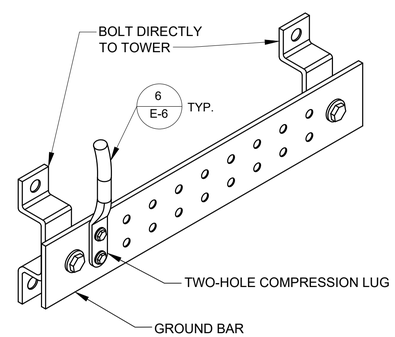

TOWER GROUND BAR

SCALE: N.T.S. | 7

DETAIL NOT USED

SCALE: N.T.S. | 8

DRWNX

GPD Engineering and Architecture Professional Corporation

520 South Main Street
Akron, OH 44311
330.572.2100 Fax 330.572.2102

SEAL:

STATE OF CONNECTICUT · STEVEN P. SCHADE · 28004 · LICENSED PROFESSIONAL ENGINEER

06/16/2020

PROJECT LOCATION:

US.CT.SBA.08748-A
215 COATNEY HILL RD
WOODSTOCK, CT 06281
WINDHAM COUNTY

SCHEDULE OF REVISIONS

REV.	DESCRIPTION OF CHANGE	DRAWN BY:	AUTH BY:	ISSUE DATE
0	ISSUED FOR PERMITTING	ZDT	JWB	06/15/2020
A	90% REVIEW	ZDT	JWB	06/11/2020

SCALE:AS SHOWN | DESIGNED BY: ZDT | DRAWN BY: ZDT

GPD#:2020796.01.US.CT.SBA.08748-A.01

PROJECT NAME: US.CT.SBA.08748-A

DRAWING TITLE: GROUNDING DETAILS

DRAWING NUMBER: E-6