CROWN CASTLE

1 Cityplace Dr, Suite 490
Creve Coeur, MO 63141

Phone: (314) 513-0147
www.crowncastle.com

August 24, 2021

Melanie A. Bachman
Executive Director
Connecticut Siting Council
10 Franklin Square
New Britain, CT 06051

RE: **Notice of Exempt Modification for Verizon**
Crown Site ID#876379; Verizon Site ID# 467557
1440 Main Street North, Woodbury, CT 06798
Latitude: 41° 35′ 23.81/ Longitude: -73° 10′ 11.52

Dear Ms. Bachman:

Verizon currently maintains (15) antennas at the 150-foot mounts on the existing 163-foot Monopole Tower located at **1440 Main Street North in Woodbury.** The property is owned by Wolff Tikva and the Tower by Crown Castle. Verizon now intends to replace three (3) existing antennas. This modification/proposal includes hardware that is both 4G(LTE) and 5G capable through remote software configuration and either or both services may be turned on or off at various times.

Planned Modifications:
Tower:

Remove and Replace:
(3) Antel – BXA-7006306CF-2 Antennas **(REMOVE)** (3) Samsung- MT6407-77A Antennas **(REPLACE)**

(3) Alcatel Lucent – Radios 2x60- 700 **(REMOVE)** – (3) Samsung – RFV01U-D1A Radio **(REPLACE)**

(6) 1-5/8" Coax Cable **(REMOVE)**

Relocate
(6) Andrew – SBNHH-165B Antennas **(RELOCATE)**

Install
(3) Side x Side Antenna Mounting brackets **(NEW)**

Modify
(1) Platform Mount

CROWN CASTLE
1 Cityplace Dr, Suite 490
Creve Coeur, MO 63141
Phone: (314) 513-0147
www.crowncastle.com

The facility was approved by the Town of Woodbury Zoning Commission on August 10, 1999. The approval was given with conditions which this exempt modification complies with.

Please accept this letter as notification pursuant to Regulations of Connecticut State Agencies §16-50j-73, for construction that constitutes an exempt modification pursuant to R.C.S.A. §16-50j-72(b)(2). In accordance with R.C.S.A. §16-50j-73, a copy of this letter is being sent to Barbara Perkinson, First Selectman for the Town of Woodbury and Gary Testa, Building Official for the Town of Woodbury. A copy will also be sent to the property owner.

1. The proposed modifications will not result in an increase in the height of the existing tower.

2. The proposed modifications will not require the extension of the site boundary.

3. The proposed modification will not increase noise levels at the facility by six decibels or more, or to levels that exceed state and local criteria.

4. The operation of the replacement antennas will not increase radio frequency emissions at the facility to a level at or above the Federal Communication Commission safety standard.

5. The proposed modifications will not cause a change or alteration in the physical or environmental characteristics of the site.

6. The existing structure and its foundation can support the proposed loading.

For the foregoing reasons, Verizon respectfully submits that the proposed modifications to the above-reference telecommunications facility constitutes an exempt modification under R.C.S.A. §16-50j-72(b)(2).

Sincerely,

Ersilia Davis
NETWORK BUILDING + CONSULTING
Project Manager
1777 Sentry Parkway W | VEVA 17, Suite 400
Blue Bell, PA 19422
edavis@nbcllc.com
(551)804-0667

CROWN CASTLE

1 Cityplace Dr, Suite 490
Creve Coeur, MO 63141

Phone: (314) 513-0147
www.crowncastle.com

cc:

Barbara Perkinson, First Selectman *(Via Fedex)*
Town of Woodbury
281 Main Street South
Woodbury, CT 06798
Phone: (203) 263-2141

Gary Testa, Building Official *(Via Fedex)*
Town of Woodbury
281 Main Street South
Woodbury, CT 06798
Phone: (203) 263-5717

Wolff Tikva (*Via Fedex)*
1514 Main Street North
Woodbury, CT 06798

FedEx

TRACK ANOTHER SHIPMENT

774622039892

ADD NICKNAME

Delivered
Thursday, August 26, 2021 at 9:48 am

DELIVERED

Signature release on file

GET STATUS UPDATES

OBTAIN PROOF OF DELIVERY

FROM

Ersilia Davis

1777 Sentry Parkway
VEVA 17, Suite 210
Blue Bell, PA US 19422
551-804-0667

TO

Barbara Perkinson
Town of Woodbury

281 Main Street South
WOODBURY, CT US 06798
203-263-2141

Travel History

TIME ZONE
Local Scan Time

Thursday, August 26, 2021

9:48 AM	WOODBURY, CT	Delivered Package delivered to recipient address - release authorized
8:46 AM	WATERTOWN, CT	On FedEx vehicle for delivery
7:56 AM	WATERTOWN, CT	At local FedEx facility
3:59 AM	NEWARK, NJ	Departed FedEx hub

Wednesday, August 25, 2021

10:37 PM	NEWARK, NJ	Arrived at FedEx hub
9:22 PM	NEWBURGH, NY	Left FedEx origin facility
6:42 PM	NEWBURGH, NY	Picked up

Tuesday, August 24, 2021

1:47 PM	Shipment information sent to FedEx

Shipment Facts

TRACKING NUMBER 774622039892	**SERVICE** FedEx Priority Overnight	**WEIGHT** 1 lbs / 0.45 kgs
DELIVERY ATTEMPTS 1	**TOTAL PIECES** 1	**TOTAL SHIPMENT WEIGHT** 1 lbs / 0.45 kgs
TERMS Shipper	**SHIPPER REFERENCE** 100788/NBC 876379	**PACKAGING** FedEx Envelope
SPECIAL HANDLING SECTION Deliver Weekday	**SHIP DATE** 8/25/21	**STANDARD TRANSIT** 8/26/21 before 10:30 am
ACTUAL DELIVERY 8/26/21 at 9:48 am		

FedEx

TRACK ANOTHER SHIPMENT

774622174967

ADD NICKNAME

Delivered
Thursday, August 26, 2021 at 9:48 am

DELIVERED

Signature release on file

GET STATUS UPDATES

OBTAIN PROOF OF DELIVERY

FROM

Ersilia Davis

1777 Sentry Parkway
VEVA 17, Suite 210
Blue Bell, PA US 19422
551-804-0667

TO

Gary Testa
Town of Woodbury

281 Main Street South
WOODBURY, CT US 06798
203-263-5717

Travel History

TIME ZONE
Local Scan Time

Thursday, August 26, 2021

9:48 AM	WOODBURY, CT	Delivered Package delivered to recipient address - release authorized
8:46 AM	WATERTOWN, CT	On FedEx vehicle for delivery
7:56 AM	WATERTOWN, CT	At local FedEx facility
3:59 AM	NEWARK, NJ	Departed FedEx hub

Wednesday, August 25, 2021

10:37 PM	NEWARK, NJ	Arrived at FedEx hub
9:22 PM	NEWBURGH, NY	Left FedEx origin facility
6:42 PM	NEWBURGH, NY	Picked up

Tuesday, August 24, 2021

1:54 PM	Shipment information sent to FedEx

Shipment Facts

TRACKING NUMBER 774622174967	**SERVICE** FedEx Priority Overnight	**WEIGHT** 1 lbs / 0.45 kgs
DELIVERY ATTEMPTS 1	**TOTAL PIECES** 1	**TOTAL SHIPMENT WEIGHT** 1 lbs / 0.45 kgs
TERMS Shipper	**SHIPPER REFERENCE** 100788/NBC 876379	**PACKAGING** FedEx Envelope
SPECIAL HANDLING SECTION Deliver Weekday	**SHIP DATE** 8/25/21	**STANDARD TRANSIT** 8/26/21 before 10:30 am
ACTUAL DELIVERY 8/26/21 at 9:48 am		

FedEx

TRACK ANOTHER SHIPMENT

774622254317

ADD NICKNAME

Delivered
Thursday, August 26, 2021 at 9:16 am

DELIVERED
Signature not required

GET STATUS UPDATES

OBTAIN PROOF OF DELIVERY

FROM
Ersilia Davis
1777 Sentry Parkway
VEVA 17, Suite 210
Blue Bell, PA US 19422
551-804-0667

TO
Tikva Wolff
1514 Main St. North
WOODBURY, CT US 06798
877-486-9377

Travel History

TIME ZONE
Local Scan Time

Thursday, August 26, 2021

9:16 AM	WOODBURY, CT	Delivered Package delivered to recipient address - release authorized
8:47 AM	WATERTOWN, CT	On FedEx vehicle for delivery
7:53 AM	WATERTOWN, CT	At local FedEx facility
3:59 AM	NEWARK, NJ	Departed FedEx hub

Wednesday, August 25, 2021

10:37 PM	NEWARK, NJ	Arrived at FedEx hub
9:22 PM	NEWBURGH, NY	Left FedEx origin facility
6:42 PM	NEWBURGH, NY	Picked up

Tuesday, August 24, 2021

1:57 PM	Shipment information sent to FedEx

Shipment Facts

TRACKING NUMBER 774622254317	**SERVICE** FedEx Priority Overnight	**WEIGHT** 1 lbs / 0.45 kgs
DELIVERY ATTEMPTS 1	**DELIVERED TO** Residence	**TOTAL PIECES** 1
TOTAL SHIPMENT WEIGHT 1 lbs / 0.45 kgs	**TERMS** Distribuidor	**SHIPPER REFERENCE** 100788/NBC 876379
PACKAGING FedEx Envelope	**SPECIAL HANDLING SECTION** Deliver Weekday, Residential Delivery	**SHIP DATE** 8/25/21
STANDARD TRANSIT 8/26/21 before 12:00 pm	**ACTUAL DELIVERY** 8/26/21 at 9:16 am	

Exhibit A

Original Facility Approval

Zoning Commission

P.O. Box 369
Town of Woodbury - Woodbury, Connecticut 06798-0369

First land deed from the Indians
April 12th 1659

Telephone: (203) 263-3467
Fax: (203) 263-5076

VOICES
Middle Quarter Mall
Main Street South
Woodbury, CT 06798

Kindly publish the following legal notice in VOICES on Sunday, August 22, 1999. The invoice should be sent to the Accounting Office, 281 Main Street S. Box #369, Woodbury, CT 06798 with a tear-sheet copy for the Town Planner's Office.

LEGAL NOTICE

At its regular meeting held on Tuesday, August 10, 1999, the Woodbury Zoning Commission took the following actions:

X APPROVED: With conditions, Application #969 submitted by Sprint Spectrum, LP, d/b/a Sprint PCS to construct a radio · tower/wireless telecommunications facility at 1440 Main St. N., Richard Wolff, property owner. (Map 12/Lot 54)

APPROVED: With conditions, Application #973 submitted by Watertown Fire District for an Earth Materials Permit for gravel excavation from Nonnewaug River, Hart Farm Wellfield on Rte. 61. (Map 14/Lots 10, 32, 32A –B, 33)

DENIED: To deny without prejudice Application #971 for lack of information submitted by Woodbury Fire Dept. for Earth Materials Permit for a fire pond at 274 Grassy Hill Rd., Richard Wolff, property owner. (Map 64/Lot 12).

APPROVED: With conditions, Application #976 submitted by Flanders Nature Center, Inc. for a Special Permit to hold a fall festival at the Van Vleck Farm Sanctuary on Flanders Rd and Church Hill Rd on October 3, 1999. (Map 96/Lots 21, 22, 23)

Dated this 20th day of August, 1999.

Sue Bartlett

Sue Bartlett, Admin. Asst.

A letter of 8/10/99 from Ken Faroni of O & G was submitted granting a 65-day extension.

(Tietz unseated, Alt. Leach seated)
#969/Sprint Spectrum/Wolff/1440 Main St. N/Wireless TeleComm. Facility
MOTION:
WHEREAS, the WOODBURY ZONING COMMISSION has received Application #969 submitted by Sprint Spectrum, L.P., d/b/a Sprint PCS for a Special Permit pursuant to Section 5.2.4 of the Woodbury Zoning Regulations to construct a radio tower/wireless telecommunications facility and associated radio equipment on property owned by Richard Wolff at 1440 Main Street North (Tax Assessor's Map 12/Lot 54); and

WHEREAS, members of the Commission inspected the site at a duly noticed special meeting on July 6, 1999; and

WHEREAS, a duly called public hearing was held June 22, 1999 and July 13, 1999 to consider the application and to receive public comments; and

WHEREAS, the Commission has carefully considered all the information and testimony received during the duly called public hearing; and

WHEREAS, the Commission has determined that the proposed radio tower/telecommunications facility and associated radio equipment are in conformance with Section 5.2.4 of the Woodbury Zoning Regulations after conditions 6 and 7 below, are met;

NOW THEREFORE BE IT RESOLVED that the WOODBURY ZONING COMMISSION approves Application #969 submitted by Sprint Spectrum, L.P., d/b/a Sprint PCS for a Special Permit pursuant to Section 5.2.4 of the Woodbury Zoning Regulations to construct a radio tower/telecommunications facility and associated radio equipment on property owned by Richard Wolff at 1440 Main Street North (Tax Assessor's Map 12/Lot 54) as depicted on the site plans and accompanying materials dated June 17, 1999, with the following conditions:

1. A final site development plan, annotated with all conditions herein, shall be filed with the Town Planner prior to commencement of construction;
2. An itemized estimate of costs for soil erosion and sedimentation control, screening, landscaping, and tower removal and site restoration must be provided to the Woodbury Town Planner (Town Planner) for determination of an appropriate bond and such bond shall be posted in a form and amount determined by the Town Planner, prior to commencement of construction;
3. The Town Planner shall be notified 48 hours prior to commencement of construction to permit inspection of soil erosion and sedimentation control devices;

4. The tower and enclosure area shall be designed to accommodate up to six providers of telecommunications services, with all ground equipment enclosed in a single building and the enclosure secured and screened in manner that is architecturally compatible with surrounding farm;
5. All electric and telephone service to the tower and building shall be installed below ground.
6. The galvanized steel tower shall not exceed 160 feet above grade in height, shall have no lights above the height of the building, screening, or fence, and shall not be painted. Any future extension of the tower to accommodate additional antennas or addition of any facilities other than shown on the approved site plan shall require an amendment to this Special Permit as provided in Section 10.6 of the Woodbury Zoning Regulations, however, an extension of the tower from 160 feet to 190 feet shall be deemed to be of a minor nature;
7. The tower shall be located no closer than 190 feet from any property line along Main Street North and Swamp Road.
8. Sprint shall use best efforts to make the tower available to other telecommunications carriers and promote co-location on this tower on a commercially reasonable basis;
9. In the event the wireless telecommunications facility ceases to be used by Sprint PCS or any bona fide tenant providers of telecommunication services for a period of a year, the tower and all associated equipment and structures shall be removed by Sprint PCS within 90 days.;
10. Construction shall not commence until all applicable appeal periods have terminated and this permit will expire if construction is not completed by August 10, 2001; and
11. An A2, as-built survey shall be filed with the Town Planner upon completion of construction.

Made by Kelly, seconded by Alt. Leach.
Vote 5-0 in favor.

(Tietz unseated, Alt. Leach seated)

#973/Watertown Fire District/Hart Farm Wellfield/Rte 61/EM Permit

MOTION:

WHEREAS, the WOODBURY ZONING COMMISSION has received Application #973 submitted by the Watertown Fire District for an Earth Materials Permit pursuant to Section 15.3 of the Woodbury Zoning Regulations to excavate up to 4500 cubic yards of gravel from the Nonnewaug River (Tax Assessor's Map 14/Lots 10, 32, 32A, 32B, 33); and

WHEREAS, the Woodbury Inland Wetlands Agency approved the regulated activity on August 9, 1999; and

WHEREAS, a duly called public hearing was held July 27, 1999 and August 10, 1999 to consider the application and to receive public comments; and

Exhibit B

Property Card

Town of Woodbury, CT

Property Listing Report

Map Block Lot	012-054	Building #	Unique Identifier	390820

Property Information

Property Location	1440 MAIN ST NORTH
Mailing Address	4017 WASHINGTON ROAD MCMURRAY PA 15317
Land Use	Utility Building
Zoning Code	OS60
Neighborhood	26

Owner	WOLFF TIKVA
Co-Owner	
Book / Page	0384/1171
Land Class	Industrial
Census Tract	3621
Acreage	1.38

Valuation Summary

(Assessed value = 70% of Appraised Value)

Item	Appraised	Assessed
Buildings	0	0
Outbuildings	384068	268850
Land	131100	91770
Total	515168	0

Utility Information

Electric	No
Gas	No
Sewer	No
Public Water	No
Well	No

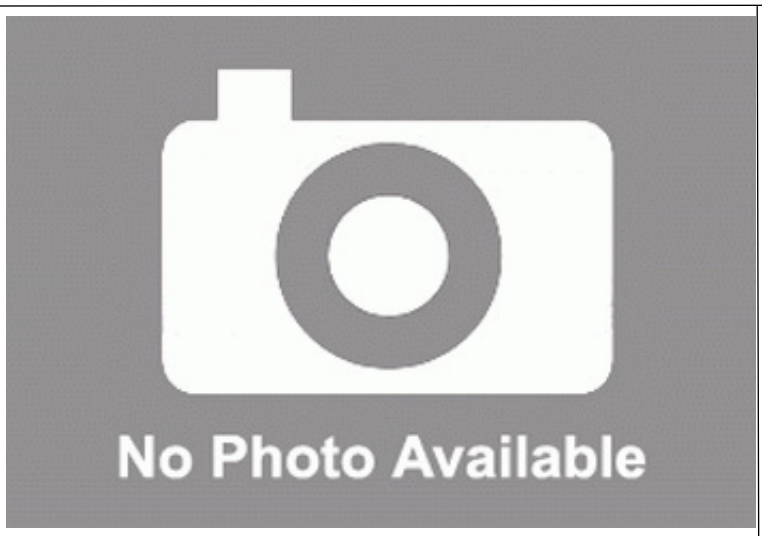

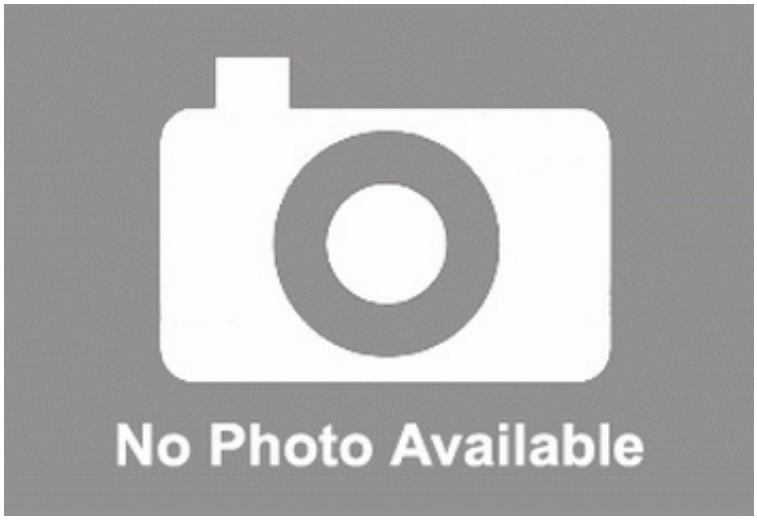

Primary Construction Details

Year Built	
Building Desc.	
Building Style	
Stories	
Exterior Walls	
Exterior Walls 2	
Interior Walls	
Interior Walls 2	
Interior Floors 1	
Interior Floors 2	

Heating Fuel	
Heating Type	
AC Type	
Bedrooms	
Full Bathrooms	
Half Bathrooms	
Extra Fixtures	
Total Rooms	
Bath Style	
Kitchen Style	
Occupancy	

Building Use	
Building Condition	
Frame Type	
Fireplaces	
Bsmt Gar	
Fin Bsmt Area	
Fin Bsmt Quality	
Building Grade	
Roof Style	
Roof Cover	

Report Created On 8/12/2021

Town of Woodbury, CT

Property Listing Report | Map Block Lot 012-054 | Building # | Unique Identifier 390820

Detached Outbuildings

Type	Description	Area (sq ft)	Condition	Year Built
Cell Towers	Building/Equipment	300	Average	2000
Cell Towers	Building/Equipment	392	Average	2000
Cell Towers	Mono Pole	120	Average	2000
Cell Towers	Building/Equipment	420	Average	2000
Cell Towers	Building/Equipment	400	Average	2000
Cell Towers	Fencing	400	Average	2000

Attached Extra Features

Type	Description	Area (sq ft)	Condition	Year Built

Sales History

Owner of Record	Book/ Page	Sale Date	Sale Price
WOLFF TIKVA	0384_1171	9/29/2011	0
WOLFF RICHARD ESTATE OF	343_ 526	5/25/2006	0

Report Created On 8/12/2021

Exhibit C

Construction Drawings

verizon

VERIZON SITE NUMBER: 467557
VERIZON SITE NAME: WOODBURY N CT
VERIZON FUZE ID: 16272070
SITE TYPE: MONOPOLE
TOWER HEIGHT: 163'-0"

BUSINESS UNIT #: 876379
SITE ADDRESS: 1440 MAIN STREET NORTH
WOODBURY, CT 06798
COUNTY: LITCHFIELD
JURISDICTION: TOWN OF WOODBURY

VERIZON AWS - MODIFICATION;5G_L-SUB6-PREP,5G_RADIO SWAP

SITE INFORMATION

CROWN CASTLE USA INC. SITE NAME:	N. WOODBURY/ WOLFF PARCEL
SITE ADDRESS:	1440 MAIN STREET NORTH WOODBURY, CT 06798
COUNTY:	LITCHFIELD
MAP BLOCK LOT #:	012-054
AREA OF CONSTRUCTION:	EXISTING
LATITUDE:	41° 35' 23.81"
LONGITUDE:	-73° 10' 11.52"
LAT/LONG TYPE:	NAD83
GROUND ELEVATION:	482' ±
CURRENT ZONING:	OS60
JURISDICTION:	TOWN OF WOODBURY
OCCUPANCY CLASSIFICATION:	U
TYPE OF CONSTRUCTION:	IIB
A.D.A. COMPLIANCE:	FACILITY IS UNMANNED AND NOT FOR HUMAN HABITATION
PROPERTY OWNER:	WOLFF TIKVA 1514 MAIN ST NORTH WOODBURY, CT 06798
TOWER OWNER:	CROWN CASTLE USA INC. 2000 CORPORATE DRIVE CANONSBURG, PA 15317
CARRIER/APPLICANT:	VERIZON WIRELESS 20 ALEXANDER DRIVE, 2ND FLOOR WALLINGFORD, CT 06492
ELECTRIC PROVIDER:	CONNECTICUT LIGHT & POWER CO (800) 922-4455
TELCO PROVIDER:	AT&T (888) 608-3036

PROJECT TEAM

A&E FIRM:	TOWER ENGINEERING PROFESSIONALS. 326 TRYON ROAD RALEIGH, NC 27603 JOSEPH T. CRESS - PROJECT MANAGER GRAHAM M. ANDRES - CIVIL ENGINEER
CROWN CASTLE USA INC. DISTRICT CONTACTS:	6325 ARDREY KELL ROAD, SUITE 600 CHARLOTTE, NC 28277 SARA REA LOADHOLDT - A&E SPECIALIST (704) 405-6548

DRAWING INDEX

SHEET #	SHEET DESCRIPTION
T-1	TITLE SHEET
T-2	GENERAL NOTES
C-1	SITE PLAN
C-2	TOWER ELEVATION & ANTENNA PLANS
C-3	EQUIPMENT SCHEDULES
C-4	EQUIPMENT DETAILS
C-5	EQUIPMENT DETAILS
C-6	COLOR CODE MATRIX
C-7	PLUMBING DIAGRAM
G-1	GROUNDING DETAILS
G-2	GROUNDING DETAILS
APPENDIX	MOUNT MODIFICATION DETAILS

ALL DRAWINGS CONTAINED HEREIN ARE FORMATTED FOR FULL SIZE. CONTRACTOR SHALL VERIFY ALL PLANS AND EXISTING DIMENSIONS AND CONDITIONS ON THE JOB SITE AND SHALL IMMEDIATELY NOTIFY THE ENGINEER IN WRITING OF ANY DISCREPANCIES BEFORE PROCEEDING WITH THE WORK OR BE RESPONSIBLE FOR SAME.

APPROVALS

SIGNATURE	DATE

CONTRACTOR PMI REQUIREMENTS

PMI ACCESSED AT	https://pmi.vxwsmart.com
SMART TOOL VENDOR PROJECT NUMBER	16272070
VzW LOCATION CODE (PSLC)	467557

*** PMI AND REQUIREMENTS ALSO EMBEDDED IN MOUNT ANALYSIS REPORT

MOUNT MODIFICATION REQUIRED	**Y**

VzW APPROVED SMART KIT VENDORS

REFER TO MOUNT MODIFICATION DRAWINGS PAGE FOR VzW SMART KIT APPROVED VENDORS

LOCATION MAP

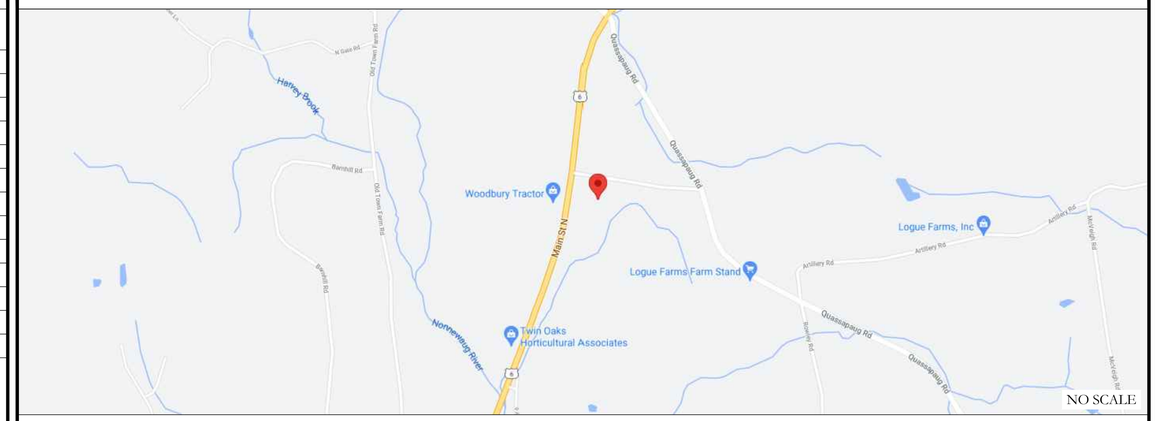

NO SCALE

DRIVING DIRECTIONS FROM VERIZON LOCAL OFFICE (495 UNION ST WATERBURY, CT 06706)
HEAD WEST ON SWAMP RD TOWARD US-6 E. TURN RIGHT ONTO US-6 E. TURN RIGHT ONTO NOVA SCOTIA HILL RD. TURN RIGHT ONTO CT-262/BUCKINGHAM ST. TURN LEFT ONTO CT-262. TURN RIGHT TO MERGE WITH CT-8 S TOWARD WATERBURY. MERGE WITH CT-8 S. USE THE LEFT LANE TO TAKE EXIT 31 TO MERGE WITH I-84 E TOWARD HARTFORD. TAKE EXIT 23 FOR CT-69 N TOWARD WOLCOTT. USE ANY LANE TO TURN RIGHT ONTO WASHINGTON ST. CONTINUE ONTO SILVER ST EXPY. TURN LEFT. CONTINUE STRAIGHT. TURN LEFT. TURN RIGHT.

APPLICABLE CODES/REFERENCE DOCUMENTS

ALL WORK SHALL BE PERFORMED AND MATERIALS INSTALLED IN ACCORDANCE WITH THE CURRENT EDITIONS OF THE FOLLOWING CODES AS ADOPTED BY THE LOCAL GOVERNING AUTHORITIES. NOTHING IN THESE PLANS IS TO BE CONSTRUED TO PERMIT WORK NOT CONFORMING TO THESE CODES:

CODE TYPE	CODE
BUILDING	2018 CONNECTICUT STATE BUILDING CODE (2015 IBC)
MECHANICAL	2018 CONNECTICUT STATE MECHANICAL CODE (2015 IMC)
ELECTRICAL	2017 NEC

REFERENCE DOCUMENTS:

STRUCTURAL ANALYSIS:	TOWER ENGINEERING PROFESSIONALS
DATED:	08/11/2021
MOUNT ANALYSIS:	MASER CONSULTING CONNECTICUT
DATED:	07/30/2021
RFDS REVISION:	0
DATED:	02/10/2021
ORDER ID:	552711
REVISION:	0

CALL CONNECTICUT ONE CALL
(800) 922-4455 CBYD.COM
CALL 2 WORKING DAYS
BEFORE YOU DIG!

PROJECT DESCRIPTION

THE PURPOSE OF THIS PROJECT IS TO ENHANCE BROADBAND CONNECTIVITY AND CAPACITY TO THE EXISTING ELIGIBLE WIRELESS FACILITY.

TOWER SCOPE OF WORK:
- REMOVE (3) ANTENNAS
- REMOVE (3) RRHs
- RELOCATE (6) ANTENNAS
- MODIFY PLATFORM MOUNT
- INSTALL (3) ANTENNAS
- INSTALL (6) RRHs
- INSTALL (3) SIDE-BY-SIDE ANTENNA MOUNTING BRACKETS

NOTE:
PRIOR TO ACCESSING/ENTERING THE SITE YOU MUST CONTACT THE CROWN NOC AT (800) 788-7011 & CROWN CONSTRUCTION MANAGER

verizon
20 ALEXANDER DRIVE, 2ND FLOOR
WALLINGFORD, CT 06492

CROWN CASTLE
1200 MACARTHUR BLVD, SUITE 200
MAHWAH, NJ 07430

TOWER ENGINEERING PROFESSIONALS
326 TRYON RD
RALEIGH, NC 27603
(919) 661-6351
TEP JOB #: 25647.582839

VERIZON SITE NUMBER:
467557

BU #: **876379**
N. WOODBURY/ WOLFF PARCEL

1440 MAIN STREET NORTH
WOODBURY, CT 06798

EXISTING 163'-0" MONOPOLE

ISSUED FOR:

REV	DATE	DRWN	DESCRIPTION	DES./QA
0	08/09/21	GBP	CONSTRUCTION	JTC
1	08/12/21	JCH	CONSTRUCTION	JTC

08/12/21

IT IS A VIOLATION OF LAW FOR ANY PERSON, UNLESS THEY ARE ACTING UNDER THE DIRECTION OF A LICENSED PROFESSIONAL ENGINEER, TO ALTER THIS DOCUMENT.

SHEET NUMBER:	REVISION:
T-1	1

CROWN CASTLE USA INC. SITE ACTIVITY REQUIREMENTS:

1. NOTICE TO PROCEED– NO WORK SHALL COMMENCE PRIOR TO CROWN CASTLE USA INC. WRITTEN NOTICE TO PROCEED (NTP) AND THE ISSUANCE OF A PURCHASE ORDER. PRIOR TO ACCESSING/ENTERING THE SITE YOU MUST CONTACT THE CROWN CASTLE USA INC. NOC AT 800–788–7011 & THE CROWN CASTLE USA INC. CONSTRUCTION MANAGER.
2. "LOOK UP" – CROWN CASTLE USA INC. SAFETY CLIMB REQUIREMENT:
   THE INTEGRITY OF THE SAFETY CLIMB AND ALL COMPONENTS OF THE CLIMBING FACILITY SHALL BE CONSIDERED DURING ALL STAGES OF DESIGN, INSTALLATION, AND INSPECTION. TOWER MODIFICATION, MOUNT REINFORCEMENTS, AND/OR EQUIPMENT INSTALLATIONS SHALL NOT COMPROMISE THE INTEGRITY OR FUNCTIONAL USE OF THE SAFETY CLIMB OR ANY COMPONENTS OF THE CLIMBING FACILITY ON THE STRUCTURE. THIS SHALL INCLUDE, BUT NOT BE LIMITED TO: PINCHING OF THE WIRE ROPE, BENDING OF THE WIRE ROPE FROM ITS SUPPORTS, DIRECT CONTACT OR CLOSE PROXIMITY TO THE WIRE ROPE WHICH MAY CAUSE FRICTIONAL WEAR, IMPACT TO THE ANCHORAGE POINTS IN ANY WAY, OR TO IMPEDE/BLOCK ITS INTENDED USE. ANY COMPROMISED SAFETY CLIMB, INCLUDING EXISTING CONDITIONS MUST BE TAGGED OUT AND REPORTED TO YOUR CROWN CASTLE USA INC. POC OR CALL THE NOC TO GENERATE A SAFETY CLIMB MAINTENANCE AND CONTRACTOR NOTICE TICKET.
3. PRIOR TO THE START OF CONSTRUCTION, ALL REQUIRED JURISDICTIONAL PERMITS SHALL BE OBTAINED. THIS INCLUDES, BUT IS NOT LIMITED TO, BUILDING, ELECTRICAL, MECHANICAL, FIRE, FLOOD ZONE, ENVIRONMENTAL, AND ZONING. AFTER ONSITE ACTIVITIES AND CONSTRUCTION ARE COMPLETED, ALL REQUIRED PERMITS SHALL BE SATISFIED AND CLOSED OUT ACCORDING TO LOCAL JURISDICTIONAL REQUIREMENTS.
4. ALL CONSTRUCTION MEANS AND METHODS; INCLUDING BUT NOT LIMITED TO, ERECTION PLANS, RIGGING PLANS, CLIMBING PLANS, AND RESCUE PLANS SHALL BE THE RESPONSIBILITY OF THE GENERAL CONTRACTOR RESPONSIBLE FOR THE EXECUTION OF THE WORK CONTAINED HEREIN, AND SHALL MEET ANSI/ASSE A10.48 (LATEST EDITION); FEDERAL, STATE, AND LOCAL REGULATIONS; AND ANY APPLICABLE INDUSTRY CONSENSUS STANDARDS RELATED TO THE CONSTRUCTION ACTIVITIES BEING PERFORMED. ALL RIGGING PLANS SHALL ADHERE TO ANSI/ASSE A10.48 (LATEST EDITION) AND CROWN CASTLE USA INC. STANDARD CED–STD–10253, INCLUDING THE REQUIRED INVOLVEMENT OF A QUALIFIED ENGINEER FOR CLASS IV CONSTRUCTION, TO CERTIFY THE SUPPORTING STRUCTURE(S) IN ACCORDANCE WITH ANSI/TIA–322 (LATEST EDITION).
5. ALL SITE WORK TO COMPLY WITH QAS–STD–10068 "INSTALLATION STANDARDS FOR CONSTRUCTION ACTIVITIES ON CROWN CASTLE USA INC. TOWER SITE," CED–STD–10294 "STANDARD FOR INSTALLATION OF MOUNTS AND APPURTENANCES," AND LATEST VERSION OF ANSI/TIA–1019–A–2012 "STANDARD FOR INSTALLATION, ALTERATION, AND MAINTENANCE OF ANTENNA SUPPORTING STRUCTURES AND ANTENNAS."
6. IF THE SPECIFIED EQUIPMENT CAN NOT BE INSTALLED AS SHOWN ON THESE DRAWINGS, THE CONTRACTOR SHALL PROPOSE AN ALTERNATIVE INSTALLATION FOR APPROVAL BY CROWN CASTLE USA INC. PRIOR TO PROCEEDING WITH ANY SUCH CHANGE OF INSTALLATION.
7. ALL MATERIALS FURNISHED AND INSTALLED SHALL BE IN STRICT ACCORDANCE WITH ALL APPLICABLE CODES, REGULATIONS AND ORDINANCES. CONTRACTOR SHALL ISSUE ALL APPROPRIATE NOTICES AND COMPLY WITH ALL LAWS, ORDINANCES, RULES, REGULATIONS AND LAWFUL ORDERS OF ANY PUBLIC AUTHORITY REGARDING THE PERFORMANCE OF THE WORK. ALL WORK CARRIED OUT SHALL COMPLY WITH ALL APPLICABLE MUNICIPAL AND UTILITY COMPANY SPECIFICATIONS AND LOCAL JURISDICTIONAL CODES, ORDINANCES AND APPLICABLE REGULATIONS.
8. THE CONTRACTOR SHALL INSTALL ALL EQUIPMENT AND MATERIALS IN ACCORDANCE WITH MANUFACTURER'S RECOMMENDATIONS UNLESS SPECIFICALLY STATED OTHERWISE.
9. THE CONTRACTOR SHALL CONTACT UTILITY LOCATING SERVICES PRIOR TO THE START OF CONSTRUCTION.
10. ALL EXISTING ACTIVE SEWER, WATER, GAS, ELECTRIC AND OTHER UTILITIES WHERE ENCOUNTERED IN THE WORK, SHALL BE PROTECTED AT ALL TIMES AND WHERE REQUIRED FOR THE PROPER EXECUTION OF THE WORK, SHALL BE RELOCATED AS DIRECTED BY CONTRACTOR. EXTREME CAUTION SHOULD BE USED BY THE CONTRACTOR WHEN EXCAVATING OR DRILLING PIERS AROUND OR NEAR UTILITIES. CONTRACTOR SHALL PROVIDE SAFETY TRAINING FOR THE WORKING CREW. THIS WILL INCLUDE BUT NOT BE LIMITED TO A) FALL PROTECTION B) CONFINED SPACE C) ELECTRICAL SAFETY D) TRENCHING AND EXCAVATION E) CONSTRUCTION SAFETY PROCEDURES.
11. ALL SITE WORK SHALL BE AS INDICATED ON THE STAMPED CONSTRUCTION DRAWINGS AND PROJECT SPECIFICATIONS, LATEST APPROVED REVISION.
12. CONTRACTOR SHALL KEEP THE SITE FREE FROM ACCUMULATING WASTE MATERIAL, DEBRIS, AND TRASH AT THE COMPLETION OF THE WORK. IF NECESSARY, RUBBISH, STUMPS, DEBRIS, STICKS, STONES AND OTHER REFUSE SHALL BE REMOVED FROM THE SITE AND DISPOSED OF LEGALLY.
13. ALL EXISTING INACTIVE SEWER, WATER, GAS, ELECTRIC AND OTHER UTILITIES, WHICH INTERFERE WITH THE EXECUTION OF THE WORK, SHALL BE REMOVED AND/OR CAPPED, PLUGGED OR OTHERWISE DISCONTINUED AT POINTS WHICH WILL NOT INTERFERE WITH THE EXECUTION OF THE WORK, SUBJECT TO THE APPROVAL OF CONTRACTOR, TOWER OWNER, CROWN CASTLE USA INC., AND/OR LOCAL UTILITIES.
14. THE CONTRACTOR SHALL PROVIDE SITE SIGNAGE IN ACCORDANCE WITH THE TECHNICAL SPECIFICATION FOR SITE SIGNAGE REQUIRED BY LOCAL JURISDICTION AND SIGNAGE REQUIRED ON INDIVIDUAL PIECES OF EQUIPMENT, ROOMS, AND SHELTERS.
15. THE SITE SHALL BE GRADED TO CAUSE SURFACE WATER TO FLOW AWAY FROM THE CARRIER'S EQUIPMENT AND TOWER AREAS.
16. THE SUB GRADE SHALL BE COMPACTED AND BROUGHT TO A SMOOTH UNIFORM GRADE PRIOR TO FINISHED SURFACE APPLICATION.
17. THE AREAS OF THE OWNERS PROPERTY DISTURBED BY THE WORK AND NOT COVERED BY THE TOWER, EQUIPMENT OR DRIVEWAY, SHALL BE GRADED TO A UNIFORM SLOPE, AND STABILIZED TO PREVENT EROSION AS SPECIFIED ON THE CONSTRUCTION DRAWINGS AND/OR PROJECT SPECIFICATIONS.
18. CONTRACTOR SHALL MINIMIZE DISTURBANCE TO EXISTING SITE DURING CONSTRUCTION. EROSION CONTROL MEASURES, IF REQUIRED DURING CONSTRUCTION, SHALL BE IN CONFORMANCE WITH THE LOCAL GUIDELINES FOR EROSION AND SEDIMENT CONTROL.
19. THE CONTRACTOR SHALL PROTECT EXISTING IMPROVEMENTS, PAVEMENTS, CURBS, LANDSCAPING AND STRUCTURES. ANY DAMAGED PART SHALL BE REPAIRED AT CONTRACTOR'S EXPENSE TO THE SATISFACTION OF OWNER.
20. CONTRACTOR SHALL LEGALLY AND PROPERLY DISPOSE OF ALL SCRAP MATERIALS SUCH AS COAXIAL CABLES AND OTHER ITEMS REMOVED FROM THE EXISTING FACILITY. ANTENNAS REMOVED SHALL BE RETURNED TO THE OWNER'S DESIGNATED LOCATION.
21. CONTRACTOR SHALL LEAVE PREMISES IN CLEAN CONDITION. TRASH AND DEBRIS SHOULD BE REMOVED FROM SITE ON A DAILY BASIS.
22. NO FILL OR EMBANKMENT MATERIAL SHALL BE PLACED ON FROZEN GROUND. FROZEN MATERIALS, SNOW OR ICE SHALL NOT BE PLACED IN ANY FILL OR EMBANKMENT.

GENERAL NOTES:

1. FOR THE PURPOSE OF CONSTRUCTION DRAWING, THE FOLLOWING DEFINITIONS SHALL APPLY:
   CONTRACTOR: GENERAL CONTRACTOR RESPONSIBLE FOR CONSTRUCTION
   CARRIER: VERIZON
   TOWER OWNER: CROWN CASTLE USA INC.
2. THESE DRAWINGS HAVE BEEN PREPARED USING STANDARDS OF PROFESSIONAL CARE AND COMPLETENESS NORMALLY EXERCISED UNDER SIMILAR CIRCUMSTANCES BY REPUTABLE ENGINEERS IN THIS OR SIMILAR LOCALITIES. IT IS ASSUMED THAT THE WORK DEPICTED WILL BE PERFORMED BY AN EXPERIENCED CONTRACTOR AND/OR WORKPEOPLE WHO HAVE A WORKING KNOWLEDGE OF THE APPLICABLE CODE STANDARDS AND REQUIREMENTS AND OF INDUSTRY ACCEPTED STANDARD GOOD PRACTICE. AS NOT EVERY CONDITION OR ELEMENT IS (OR CAN BE) EXPLICITLY SHOWN ON THESE DRAWINGS, THE CONTRACTOR SHALL USE INDUSTRY ACCEPTED STANDARD GOOD PRACTICE FOR MISCELLANEOUS WORK NOT EXPLICITLY SHOWN.
3. THESE DRAWINGS REPRESENT THE FINISHED STRUCTURE. THEY DO NOT INDICATE THE MEANS OR METHODS OF CONSTRUCTION. THE CONTRACTOR SHALL BE SOLELY RESPONSIBLE FOR THE CONSTRUCTION MEANS, METHODS, TECHNIQUES, SEQUENCES, AND PROCEDURES. THE CONTRACTOR SHALL PROVIDE ALL MEASURES NECESSARY FOR PROTECTION OF LIFE AND PROPERTY DURING CONSTRUCTION. SUCH MEASURES SHALL INCLUDE, BUT NOT BE LIMITED TO, BRACING, FORMWORK, SHORING, ETC. SITE VISITS BY THE ENGINEER OR HIS REPRESENTATIVE WILL NOT INCLUDE INSPECTION OF THESE ITEMS AND IS FOR STRUCTURAL OBSERVATION OF THE FINISHED STRUCTURE ONLY.
4. NOTES AND DETAILS IN THE CONSTRUCTION DRAWINGS SHALL TAKE PRECEDENCE OVER GENERAL NOTES AND TYPICAL DETAILS. WHERE NO DETAILS ARE SHOWN, CONSTRUCTION SHALL CONFORM TO SIMILAR WORK ON THE PROJECT, AND/OR AS PROVIDED FOR IN THE CONTRACT DOCUMENTS. WHERE DISCREPANCIES OCCUR BETWEEN PLANS, DETAILS, GENERAL NOTES, AND SPECIFICATIONS, THE GREATER, MORE STRICT REQUIREMENTS, SHALL GOVERN. IF FURTHER CLARIFICATION IS REQUIRED CONTACT THE ENGINEER OF RECORD.
5. SUBSTANTIAL EFFORT HAS BEEN MADE TO PROVIDE ACCURATE DIMENSIONS AND MEASUREMENTS ON THE DRAWINGS TO ASSIST IN THE FABRICATION AND/OR PLACEMENT OF CONSTRUCTION ELEMENTS BUT IT IS THE SOLE RESPONSIBILITY OF THE CONTRACTOR TO FIELD VERIFY THE DIMENSIONS, MEASUREMENTS, AND/OR CLEARANCES SHOWN IN THE CONSTRUCTION DRAWINGS PRIOR TO FABRICATION OR CUTTING OF ANY NEW OR EXISTING CONSTRUCTION ELEMENTS. IF IT IS DETERMINED THAT THERE ARE DISCREPANCIES AND/OR CONFLICTS WITH THE CONSTRUCTION DRAWINGS THE ENGINEER OF RECORD IS TO BE NOTIFIED AS SOON AS POSSIBLE.
6. PRIOR TO THE SUBMISSION OF BIDS, THE BIDDING CONTRACTOR SHALL VISIT THE CELL SITE TO FAMILIARIZE WITH THE EXISTING CONDITIONS AND TO CONFIRM THAT THE WORK CAN BE ACCOMPLISHED AS SHOWN ON THE CONSTRUCTION DRAWINGS. ANY DISCREPANCY FOUND SHALL BE BROUGHT TO THE ATTENTION OF CROWN CASTLE.
7. ALL MATERIALS FURNISHED AND INSTALLED SHALL BE IN STRICT ACCORDANCE WITH ALL APPLICABLE CODES, REGULATIONS AND ORDINANCES. CONTRACTOR SHALL ISSUE ALL APPROPRIATE NOTICES AND COMPLY WITH ALL LAWS, ORDINANCES, RULES, REGULATIONS AND LAWFUL ORDERS OF ANY PUBLIC AUTHORITY REGARDING THE PERFORMANCE OF THE WORK. ALL WORK CARRIED OUT SHALL COMPLY WITH ALL APPLICABLE MUNICIPAL AND UTILITY COMPANY SPECIFICATIONS AND LOCAL JURISDICTIONAL CODES, ORDINANCES AND APPLICABLE REGULATIONS.
8. UNLESS NOTED OTHERWISE, THE WORK SHALL INCLUDE FURNISHING MATERIALS, EQUIPMENT, APPURTENANCES AND LABOR NECESSARY TO COMPLETE ALL INSTALLATIONS AS INDICATED ON THE DRAWINGS.
9. THE CONTRACTOR SHALL INSTALL ALL EQUIPMENT AND MATERIALS IN ACCORDANCE WITH MANUFACTURER'S RECOMMENDATIONS UNLESS SPECIFICALLY STATED OTHERWISE.
10. IF THE SPECIFIED EQUIPMENT CAN NOT BE INSTALLED AS SHOWN ON THESE DRAWINGS, THE CONTRACTOR SHALL PROPOSE AN ALTERNATIVE INSTALLATION FOR APPROVAL BY THE CARRIER AND CROWN CASTLE PRIOR TO PROCEEDING WITH ANY SUCH CHANGE OF INSTALLATION.
11. CONTRACTOR IS TO PERFORM A SITE INVESTIGATION AND IS TO DETERMINE THE BEST ROUTING OF ALL CONDUITS FOR POWER, AND TELCO AND FOR GROUNDING CABLES AS SHOWN IN THE POWER, TELCO, AND GROUNDING PLAN DRAWINGS.
12. THE CONTRACTOR SHALL PROTECT EXISTING IMPROVEMENTS, PAVEMENTS, CURBS, LANDSCAPING AND STRUCTURES. ANY DAMAGED PART SHALL BE REPAIRED AT CONTRACTOR'S EXPENSE TO THE SATISFACTION OF CROWN CASTLE USA INC.
13. CONTRACTOR SHALL LEGALLY AND PROPERLY DISPOSE OF ALL SCRAP MATERIALS SUCH AS COAXIAL CABLES AND OTHER ITEMS REMOVED FROM THE EXISTING FACILITY. ANTENNAS REMOVED SHALL BE RETURNED TO THE OWNER'S DESIGNATED LOCATION.
14. CONTRACTOR SHALL LEAVE PREMISES IN CLEAN CONDITION. TRASH AND DEBRIS SHOULD BE REMOVED FROM SITE ON A DAILY BASIS.

CONCRETE, FOUNDATIONS, AND REINFORCING STEEL:

1. ALL CONCRETE WORK SHALL BE IN ACCORDANCE WITH THE ACI 301, ACI 318, ACI 336, ASTM A184, ASTM A185 AND THE DESIGN AND CONSTRUCTION SPECIFICATION FOR CAST–IN–PLACE CONCRETE.
2. UNLESS NOTED OTHERWISE, SOIL BEARING PRESSURE USED FOR DESIGN OF SLABS AND FOUNDATIONS IS ASSUMED TO BE 1000 psf.
3. ALL CONCRETE SHALL HAVE A MINIMUM COMPRESSIVE STRENGTH (f'c) OF 3000 psi AT 28 DAYS, UNLESS NOTED OTHERWISE. NO MORE THAN 90 MINUTES SHALL ELAPSE FROM BATCH TIME TO TIME OF PLACEMENT UNLESS APPROVED BY THE ENGINEER OF RECORD. TEMPERATURE OF CONCRETE SHALL NOT EXCEED 90°f AT TIME OF PLACEMENT.
4. CONCRETE EXPOSED TO FREEZE–THAW CYCLES SHALL CONTAIN AIR ENTRAINING ADMIXTURES. AMOUNT OF AIR ENTRAINMENT TO BE BASED ON SIZE OF AGGREGATE AND F3 CLASS EXPOSURE (VERY SEVERE). CEMENT USED TO BE TYPE II PORTLAND CEMENT WITH A MAXIMUM WATER–TO–CEMENT RATIO (W/C) OF 0.45.
5. ALL STEEL REINFORCING SHALL CONFORM TO ASTM A615. ALL WELDED WIRE FABRIC (WWF) SHALL CONFORM TO ASTM A185. ALL SPLICES SHALL BE CLASS "B" TENSION SPLICES, UNLESS NOTED OTHERWISE. ALL HOOKS SHALL BE STANDARD 90 DEGREE HOOKS, UNLESS NOTED OTHERWISE. YIELD STRENGTH (Fy) OF STANDARD DEFORMED BARS ARE AS FOLLOWS:
   #4 BARS AND SMALLER.......................................40 ksi
   #5 BARS AND LARGER...60 ksi
6. THE FOLLOWING MINIMUM CONCRETE COVER SHALL BE PROVIDED FOR REINFORCING STEEL UNLESS SHOWN OTHERWISE ON DRAWINGS:
   CONCRETE CAST AGAINST AND PERMANENTLY EXPOSED TO EARTH.....................3"
   CONCRETE EXPOSED TO EARTH OR WEATHER:
   #6 BARS AND LARGER...2"
   #5 BARS AND SMALLER...1–1/2"
   CONCRETE NOT EXPOSED TO EARTH OR WEATHER:
   SLAB AND WALLS...3/4"
   BEAMS AND COLUMNS...1–1/2"
7. A TOOLED EDGE OR A 3/4" CHAMFER SHALL BE PROVIDED AT ALL EXPOSED EDGES OF CONCRETE, UNLESS NOTED OTHERWISE, IN ACCORDANCE WITH ACI 301 SECTION 4.2.4.

ELECTRICAL INSTALLATION NOTES:

1. ALL ELECTRICAL WORK SHALL BE PERFORMED IN ACCORDANCE WITH THE PROJECT SPECIFICATIONS, NEC AND ALL APPLICABLE FEDERAL, STATE, AND LOCAL CODES/ORDINANCES.
2. CONDUIT ROUTINGS ARE SCHEMATIC. CONTRACTOR SHALL INSTALL CONDUITS SO THAT ACCESS TO EQUIPMENT IS NOT BLOCKED AND TRIP HAZARDS ARE ELIMINATED.
3. WIRING, RACEWAY AND SUPPORT METHODS AND MATERIALS SHALL COMPLY WITH THE REQUIREMENTS OF THE NEC.
4. ALL CIRCUITS SHALL BE SEGREGATED AND MAINTAIN MINIMUM CABLE SEPARATION AS REQUIRED BY THE NEC.
   4.1. ALL EQUIPMENT SHALL BEAR THE UNDERWRITERS LABORATORIES LABEL OF APPROVAL, AND SHALL CONFORM TO REQUIREMENT OF THE NATIONAL ELECTRICAL CODE.
   4.2. ALL OVERCURRENT DEVICES SHALL HAVE AN INTERRUPTING CURRENT RATING THAT SHALL BE GREATER THAN THE SHORT CIRCUIT CURRENT TO WHICH THEY ARE SUBJECTED, 22,000 AIC MINIMUM. VERYIFY AVAILABLE SHORT CIRCUIT CURRENT DOES NOT EXCEED THE RATING OF ELECTRICAL EQUIPMENT IN ACCORDANCE WITH ARTICLE 110.24 NEC OR THE MOST CURRENT ADOPTED CODE PRE THE GOVERNING JURISDICTION.
5. EACH END OF EVERY POWER PHASE CONDUCTOR, GROUNDING CONDUCTOR, AND TELCO CONDUCTOR OR CABLE SHALL BE LABELED WITH COLOR–CODED INSULATION OR ELECTRICAL TAPE (3M BRAND, 1/2" PLASTIC ELECTRICAL TAPE WITH UV PROTECTION, OR EQUAL). THE IDENTIFICATION METHOD SHALL CONFORM WITH NEC AND OSHA.
6. ALL ELECTRICAL COMPONENTS SHALL BE CLEARLY LABELED WITH LAMICOID TAGS SHOWING THEIR RATED VOLTAGE, PHASE CONFIGURATION, WIRE CONFIGURATION, POWER OR AMPACITY RATING AND BRANCH CIRCUIT ID NUMBERS (i.e. PANEL BOARD AND CIRCUIT ID'S).
7. PANEL BOARDS (ID NUMBERS) SHALL BE CLEARLY LABELED WITH PLASTIC LABELS.
8. ALL TIE WRAPS SHALL BE CUT FLUSH WITH APPROVED CUTTING TOOL TO REMOVE SHARP EDGES.
9. ALL POWER AND EQUIPMENT GROUND WIRING IN TUBING OR CONDUIT SHALL BE SINGLE COPPER CONDUCTOR (#14 OR LARGER) WITH TYPE THHW, THWN, THWN–2, XHHW, XHHW–2, THW, THW–2, RHW, OR RHW–2 INSULATION UNLESS OTHERWISE SPECIFIED.
10. SUPPLEMENTAL EQUIPMENT GROUND WIRING LOCATED INDOORS SHALL BE SINGLE COPPER CONDUCTOR (#6 OR LARGER) WITH TYPE THHW, THWN, THWN–2, XHHW, XHHW–2, THW, THW–2, RHW, OR RHW–2 INSULATION UNLESS OTHERWISE SPECIFIED.
11. POWER AND CONTROL WIRING IN FLEXIBLE CORD SHALL BE MULTI–CONDUCTOR, TYPE SOOW CORD (#14 OR LARGER) UNLESS OTHERWISE SPECIFIED.
12. POWER AND CONTROL WIRING FOR USE IN CABLE TRAY SHALL BE MULTI–CONDUCTOR, TYPE TC CABLE (#14 OR LARGER), WITH TYPE THHW, THWN, THWN–2, XHHW, XHHW–2, THW, THW–2, RHW, OR RHW–2 INSULATION UNLESS OTHERWISE SPECIFIED.
13. ALL POWER AND GROUNDING CONNECTIONS SHALL BE CRIMP–STYLE, COMPRESSION WIRE LUGS AND WIRE NUTS BY THOMAS AND BETTS (OR EQUAL). LUGS AND WIRE NUTS SHALL BE RATED FOR OPERATION NOT LESS THAN 75° C (90° C IF AVAILABLE).
14. RACEWAY AND CABLE TRAY SHALL BE LISTED OR LABELED FOR ELECTRICAL USE IN ACCORDANCE WITH NEMA, UL, ANSI/IEEE AND NEC.
15. ELECTRICAL METALLIC TUBING (EMT), INTERMEDIATE METAL CONDUIT (IMC), OR RIGID METAL CONDUIT (RMC) SHALL BE USED FOR EXPOSED INDOOR LOCATIONS.
16. ELECTRICAL METALLIC TUBING (EMT) OR METAL–CLAD CABLE (MC) SHALL BE USED FOR CONCEALED INDOOR LOCATIONS.
17. SCHEDULE 40 PVC UNDERGROUND ON STRAIGHTS AND SCHEDULE 80 PVC FOR ALL ELBOWS/90s AND ALL APPROVED ABOVE GRADE PVC CONDUIT.
18. LIQUID–TIGHT FLEXIBLE METALLIC CONDUIT (LIQUID–TITE FLEX) SHALL BE USED INDOORS AND OUTDOORS, WHERE VIBRATION OCCURS OR FLEXIBILITY IS NEEDED.
19. CONDUIT AND TUBING FITTINGS SHALL BE THREADED OR COMPRESSION–TYPE AND APPROVED FOR THE LOCATION USED. SET SCREW FITTINGS ARE NOT ACCEPTABLE.
20. CABINETS, BOXES AND WIRE WAYS SHALL BE LABELED FOR ELECTRICAL USE IN ACCORDANCE WITH NEMA, UL, ANSI/IEEE AND THE NEC.
21. WIREWAYS SHALL BE METAL WITH AN ENAMEL FINISH AND INCLUDE A HINGED COVER, DESIGNED TO SWING OPEN DOWNWARDS (WIREMOLD SPECMATE WIREWAY).
22. SLOTTED WIRING DUCT SHALL BE PVC AND INCLUDE COVER (PANDUIT TYPE E OR EQUAL).
23. CONDUITS SHALL BE FASTENED SECURELY IN PLACE WITH APPROVED NON–PERFORATED STRAPS AND HANGERS. EXPLOSIVE DEVICES (i.e. POWDER–ACTUATED) FOR ATTACHING HANGERS TO STRUCTURE WILL NOT BE PERMITTED. CLOSELY FOLLOW THE LINES OF THE STRUCTURE, MAINTAIN CLOSE PROXIMITY TO THE STRUCTURE AND KEEP CONDUITS IN TIGHT ENVELOPES. CHANGES IN DIRECTION TO ROUTE AROUND OBSTACLES SHALL BE MADE WITH CONDUIT OUTLET BODIES. CONDUIT SHALL BE INSTALLED IN A NEAT AND WORKMANLIKE MANNER. PARALLEL AND PERPENDICULAR TO STRUCTURE WALL AND CEILING LINES. ALL CONDUIT SHALL BE FISHED TO CLEAR OBSTRUCTIONS. ENDS OF CONDUITS SHALL BE TEMPORARILY CAPPED FLUSH TO FINISH GRADE TO PREVENT CONCRETE, PLASTER OR DIRT FROM ENTERING. CONDUITS SHALL BE RIGIDLY CLAMPED TO BOXES BY GALVANIZED MALLEABLE IRON BUSHING ON INSIDE AND GALVANIZED MALLEABLE IRON LOCKNUT ON OUTSIDE AND INSIDE.
24. EQUIPMENT CABINETS, TERMINAL BOXES, JUNCTION BOXES AND PULL BOXES SHALL BE GALVANIZED OR EPOXY–COATED SHEET STEEL. SHALL MEET OR EXCEED UL 50 AND BE RATED NEMA 1 (OR BETTER) FOR INTERIOR LOCATIONS AND NEMA 3R (OR BETTER) FOR EXTERIOR LOCATIONS.
25. METAL RECEPTACLE, SWITCH AND DEVICE BOXES SHALL BE GALVANIZED, EPOXY–COATED OR NON–CORRODING; SHALL MEET OR EXCEED UL 514A AND NEMA OS 1 AND BE RATED NEMA 1 (OR BETTER) FOR INTERIOR LOCATIONS AND WEATHER PROTECTED (WP OR BETTER) FOR EXTERIOR LOCATIONS.
26. NONMETALLIC RECEPTACLE, SWITCH AND DEVICE BOXES SHALL MEET OR EXCEED NEMA OS 2 (NEWEST REVISION) AND BE RATED NEMA 1 (OR BETTER) FOR INTERIOR LOCATIONS AND WEATHER PROTECTED (WP OR BETTER) FOR EXTERIOR LOCATIONS.
27. THE CONTRACTOR SHALL NOTIFY AND OBTAIN NECESSARY AUTHORIZATION FROM THE CARRIER AND/OR CROWN CASTLE USA INC. BEFORE COMMENCING WORK ON THE AC POWER DISTRIBUTION PANELS.
28. THE CONTRACTOR SHALL PROVIDE NECESSARY TAGGING ON THE BREAKERS, CABLES AND DISTRIBUTION PANELS IN ACCORDANCE WITH THE APPLICABLE CODES AND STANDARDS TO SAFEGUARD LIFE AND PROPERTY.
29. INSTALL LAMICOID LABEL ON THE METER CENTER TO SHOW "VERIZON".
30. ALL EMPTY/SPARE CONDUITS THAT ARE INSTALLED ARE TO HAVE A METERED MULE TAPE PULL CORD INSTALLED.

CONDUCTOR COLOR CODE		
SYSTEM	CONDUCTOR	COLOR
120/240V, 1Ø	A PHASE	BLACK
	B PHASE	RED
	NEUTRAL	WHITE
	GROUND	GREEN
120/208V, 3Ø	A PHASE	BLACK
	B PHASE	RED
	C PHASE	BLUE
	NEUTRAL	WHITE
	GROUND	GREEN
277/480V, 3Ø	A PHASE	BROWN
	B PHASE	ORANGE OR PURPLE
	C PHASE	YELLOW
	NEUTRAL	GREY
	GROUND	GREEN
DC VOLTAGE	POS (+)	RED**
	NEG (–)	BLACK**

* SEE NEC 210.5(C)(1) AND (2)
** POLARITY MARKED AT TERMINATION

APWA UNIFORM COLOR CODE:

WHITE	PROPOSED EXCAVATION
PINK	TEMPORARY SURVEY MARKINGS
RED	ELECTRIC POWER LINES, CABLES, CONDUIT, AND LIGHTING CABLES
YELLOW	GAS, OIL, STEAM, PETROLEUM, OR GASEOUS MATERIALS
ORANGE	COMMUNICATION, ALARM OR SIGNAL LINES, CABLES, OR CONDUIT AND TRAFFIC LOOPS
BLUE	POTABLE WATER
PURPLE	RECLAIMED WATER, IRRIGATION, AND SLURRY LINES
GREEN	SEWERS AND DRAIN LINES

ABBREVIATIONS:

ANT	ANTENNA
(E)	EXISTING
FIF	FACILITY INTERFACE FRAME
GEN	GENERATOR
GPS	GLOBAL POSITIONING SYSTEM
GSM	GLOBAL SYSTEM FOR MOBILE
LTE	LONG TERM EVOLUTION
MGB	MASTER GROUND BAR
MW	MICROWAVE
(N)	NEW
NEC	NATIONAL ELECTRIC CODE
(P)	PROPOSED
PP	POWER PLANT
QTY	QUANTITY
RECT	RECTIFIER
RBS	RADIO BASE STATION
RET	REMOTE ELECTRIC TILT
RFDS	RADIO FREQUENCY DATA SHEET
RRH	REMOTE RADIO HEAD
RRU	REMOTE RADIO UNIT
SIAD	SMART INTEGRATED DEVICE
TMA	TOWER MOUNTED AMPLIFIER
TYP	TYPICAL
UMTS	UNIVERSAL MOBILE TELECOMMUNICATIONS SYSTEM
W.P.	WORK POINT

GREENFIELD GROUNDING NOTES:

1. ALL GROUND ELECTRODE SYSTEMS (INCLUDING TELECOMMUNICATION, RADIO, LIGHTNING PROTECTION AND AC POWER GES'S) SHALL BE BONDED TOGETHER AT OR BELOW GRADE, BY TWO OR MORE COPPER BONDING CONDUCTORS IN ACCORDANCE WITH THE NEC.
2. THE CONTRACTOR SHALL PERFORM IEEE FALL–OF–POTENTAL RESISTANCE TO EARTH TESTING (PER IEEE 1100 AND 81) FOR GROUND ELECTRODE SYSTEMS, THE CONTRACTOR SHALL FURNISH AND INSTALL SUPPLEMENTAL GROUND ELECTRODES AS NEEDED TO ACHIEVE A TEST RESULT OF 5 OHMS OR LESS.
3. THE CONTRACTOR IS RESPONSIBLE FOR PROPERLY SEQUENCING GROUNDING AND UNDERGROUND CONDUIT INSTALLATION AS TO PREVENT ANY LOSS OF CONTINUITY IN THE GROUNDING SYSTEM OR DAMAGE TO THE CONDUIT AND PROVIDE TESTING RESULTS.
4. METAL CONDUIT AND TRAY SHALL BE GROUNDED AND MADE ELECTRICALLY CONTINUOUS WITH LISTED BONDING FITTINGS OR BY BONDING ACROSS THE DISCONTINUITY WITH #6 COPPER WIRE UL APPROVED GROUNDING TYPE CONDUIT CLAMPS.
5. METAL RACEWAY SHALL NOT BE USED AS THE NEC REQUIRED EQUIPMENT GROUND CONDUCTOR. STRANDED COPPER CONDUCTORS WITH GREEN INSULATION, SIZED IN ACCORDANCE WITH THE NEC, SHALL BE FURNISHED AND INSTALLED WITH THE POWER CIRCUITS TO BTS EQUIPMENT.
6. EACH CABINET FRAME SHALL BE DIRECTLY CONNECTED TO THE MASTER GROUND BAR WITH GREEN INSULATED SUPPLEMENTAL EQUIPMENT GROUND WIRES, #6 STRANDED COPPER OR LARGER FOR INDOOR BTS; #2 BARE SOLID TINNED COPPER FOR OUTDOOR BTS.
7. CONNECTIONS TO THE GROUND BUS SHALL NOT BE DOUBLED UP OR STACKED BACK TO BACK CONNECTIONS ON OPPOSITE SIDE OF THE GROUND BUS ARE PERMITTED.
8. ALL EXTERIOR GROUND CONDUCTORS BETWEEN EQUIPMENT/GROUND BARS AND THE GROUND RING SHALL BE #2 SOLID TINNED COPPER UNLESS OTHERWISE INDICATED.
9. ALUMINUM CONDUCTOR OR COPPER CLAD STEEL CONDUCTOR SHALL NOT BE USED FOR GROUNDING CONNECTIONS.
10. USE OF 90° BENDS IN THE PROTECTION GROUNDING CONDUCTORS SHALL BE AVOIDED WHEN 45° BENDS CAN BE ADEQUATELY SUPPORTED.
11. EXOTHERMIC WELDS SHALL BE USED FOR ALL GROUNDING CONNECTIONS BELOW GRADE.
12. ALL GROUND CONNECTIONS ABOVE GRADE (INTERIOR AND EXTERIOR) SHALL BE FORMED USING HIGH PRESS CRIMPS.
13. COMPRESSION GROUND CONNECTIONS MAY BE REPLACED BY EXOTHERMIC WELD CONNECTIONS.
14. ICE BRIDGE BONDING CONDUCTORS SHALL BE EXOTHERMICALLY BONDED OR BOLTED TO THE BRIDGE AND THE TOWER GROUND BAR.
15. APPROVED ANTIOXIDANT COATINGS (i.e. CONDUCTIVE GEL OR PASTE) SHALL BE USED ON ALL COMPRESSION AND BOLTED GROUND CONNECTIONS.
16. ALL EXTERIOR GROUND CONNECTIONS SHALL BE COATED WITH A CORROSION RESISTANT MATERIAL.
17. MISCELLANEOUS ELECTRICAL AND NON–ELECTRICAL METAL BOXES, FRAMES AND SUPPORTS SHALL BE BONDED TO THE GROUND RING, IN ACCORDANCE WITH THE NEC.
18. BOND ALL METALLIC OBJECTS WITHIN 6 ft OF MAIN GROUND RING WITH (1) #2 BARE SOLID TINNED COPPER GROUND CONDUCTOR.
19. GROUND CONDUCTORS USED FOR THE FACILITY GROUNDING AND LIGHTNING PROTECTION SYSTEMS SHALL NOT BE ROUTED THROUGH METALLIC OBJECTS THAT FORM A RING AROUND THE CONDUCTOR, SUCH AS METALLIC CONDUITS, METAL SUPPORT CLIPS OR SLEEVES THROUGH WALLS OR FLOORS. WHEN IT IS REQUIRED TO BE HOUSED IN CONDUIT TO MEET CODE REQUIREMENTS OR LOCAL CONDITIONS, NON–METALLIC MATERIAL SUCH AS PVC CONDUIT SHALL BE USED. WHERE USE OF METAL CONDUIT IS UNAVOIDABLE (i.e., NONMETALLIC CONDUIT PROHIBITED BY LOCAL CODE) THE GROUND CONDUCTOR SHALL BE BONDED TO EACH END OF THE METAL CONDUIT.
20. ALL GROUNDS THAT TRANSITION FROM BELOW GRADE TO ABOVE GRADE MUST BE #2 BARE SOLID TINNED COPPER IN 3/4" NON–METALLIC, FLEXIBLE CONDUIT FROM 24" BELOW GRADE TO WITHIN 3" TO 6" OF CAD–WELD TERMINATION POINT. THE EXPOSED END OF THE CONDUIT MUST BE SEALED WITH SILICONE CAULK. (ADD TRANSITIONING GROUND STANDARD DETAIL AS WELL).
21. BUILDINGS WHERE THE MAIN GROUNDING CONDUCTORS ARE REQUIRED TO BE ROUTED TO GRADE, THE CONTRACTOR SHALL ROUTE TWO GROUNDING CONDUCTORS FROM THE ROOFTOP, TOWERS, AND WATER TOWERS GROUNDING RING, TO THE EXISTING GROUNDING SYSTEM, THE GROUNDING CONDUCTORS SHALL NOT BE SMALLER THAN 2/0 COPPER. ROOFTOP GROUNDING RING SHALL BE BONDED TO THE EXISTING GROUNDING SYSTEM, THE BUILDING STEEL COLUMNS, LIGHTNING PROTECTION SYSTEM, AND BUILDING MAIN WATER LINE (FERROUS OR NONFERROUS METAL PIPING ONLY).

verizon
20 ALEXANDER DRIVE, 2ND FLOOR
WALLINGFORD, CT 06492

CROWN CASTLE
1200 MACARTHUR BLVD, SUITE 200
MAHWAH, NJ 07430

TOWER ENGINEERING PROFESSIONALS
326 TRYON RD
RALEIGH, NC 27603
(919) 661-6351
TEP JOB #: 25647.582839

VERIZON SITE NUMBER:
467557

BU #: **876379**
N. WOODBURY/ WOLFF PARCEL

1440 MAIN STREET NORTH
WOODBURY, CT 06798

EXISTING 163'-0" MONOPOLE

ISSUED FOR:

REV	DATE	DRWN	DESCRIPTION	DES./QA
0	08/09/21	GBP	CONSTRUCTION	JTC

08/09/21

IT IS A VIOLATION OF LAW FOR ANY PERSON, UNLESS THEY ARE ACTING UNDER THE DIRECTION OF A LICENSED PROFESSIONAL ENGINEER, TO ALTER THIS DOCUMENT.

SHEET NUMBER: T-2
REVISION: 0

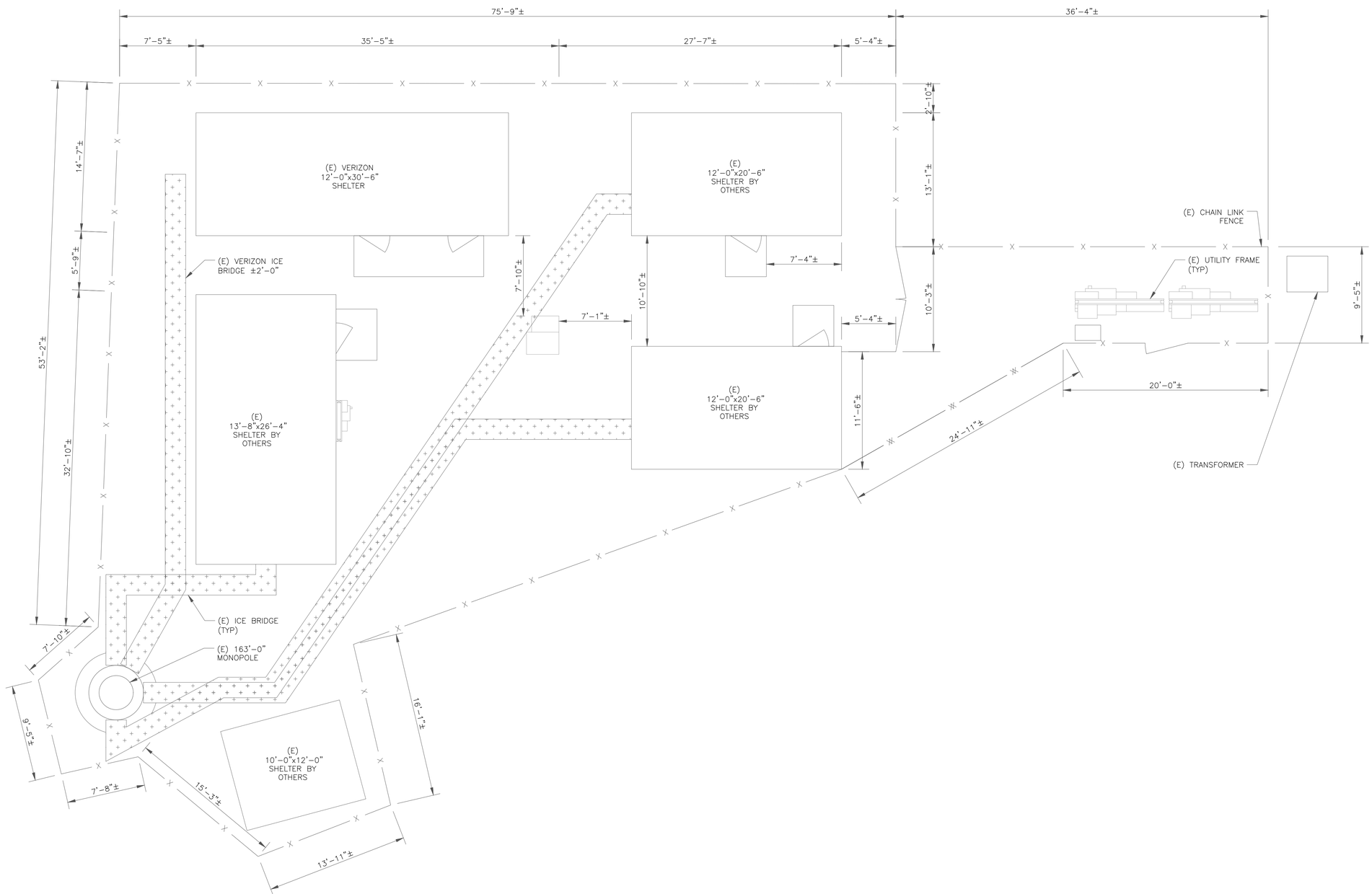

1 SITE PLAN

SCALE: 2' 1' 0 2' 3/8"=1'-0" (FULL SIZE) 3/16"=1'-0" (11x17)

verizon

20 ALEXANDER DRIVE, 2ND FLOOR
WALLINGFORD, CT 06492

CROWN CASTLE

1200 MACARTHUR BLVD, SUITE 200
MAHWAH, NJ 07430

TOWER ENGINEERING PROFESSIONALS

326 TRYON RD
RALEIGH, NC 27603
(919) 661-6351

TEP JOB #: 25647.582839

VERIZON SITE NUMBER:
467557

BU #: **876379**
N. WOODBURY/ WOLFF PARCEL

1440 MAIN STREET NORTH
WOODBURY, CT 06798

EXISTING 163'-0" MONOPOLE

ISSUED FOR:

REV	DATE	DRWN	DESCRIPTION	DES./QA
0	08/09/21	GBP	CONSTRUCTION	JTC

STATE OF CONNECTICUT
GREGORY B. PORTER
29538
LICENSED
PROFESSIONAL ENGINEER

08/09/21

IT IS A VIOLATION OF LAW FOR ANY PERSON, UNLESS THEY ARE ACTING UNDER THE DIRECTION OF A LICENSED PROFESSIONAL ENGINEER, TO ALTER THIS DOCUMENT.

SHEET NUMBER: C-1

REVISION: 0

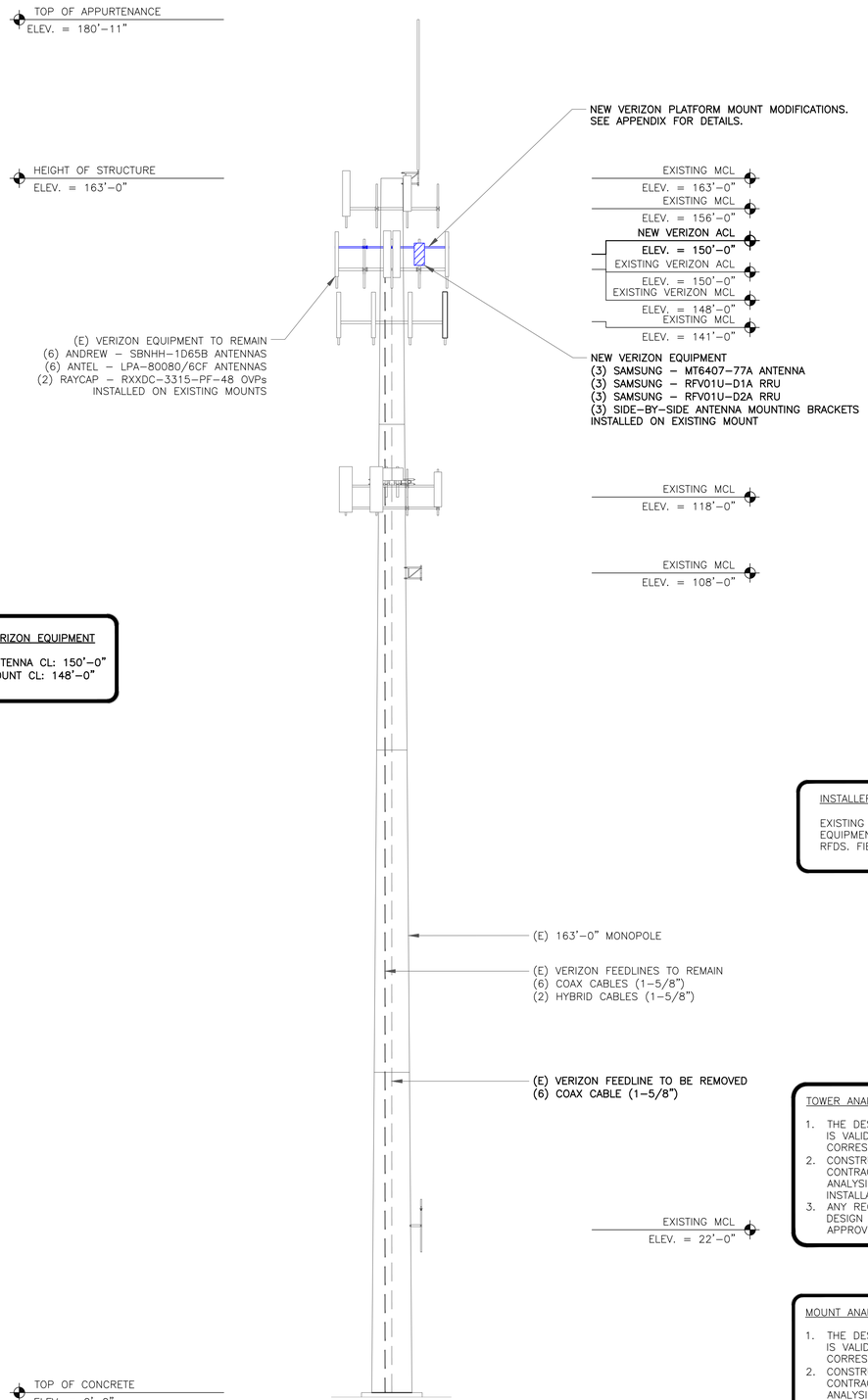

1 TOWER ELEVATION
SCALE: NOT TO SCALE

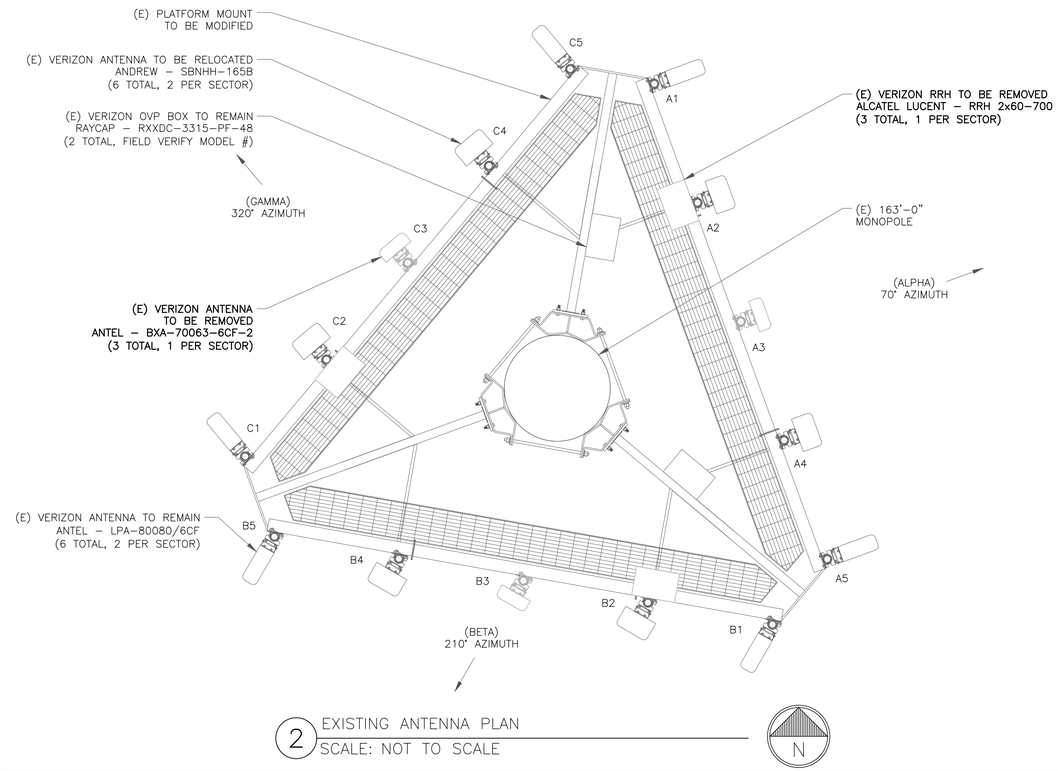

2 EXISTING ANTENNA PLAN
SCALE: NOT TO SCALE

INSTALLER NOTE:

EXISTING AND PROPOSED ANTENNA/ EQUIPMENT POSITIONING SHOWN PER RFDS. FIELD CONDITIONS MAY VARY.

TOWER ANALYSIS NOTES:

1. THE DESIGN DEPICTED IN THESE DRAWINGS IS VALID WHEN ACCOMPANIED BY A CORRESPONDING PASSING TOWER ANALYSIS.
2. CONSTRUCTION MANAGER / GENERAL CONTRACTOR SHALL REVIEW THE TOWER ANALYSIS FOR ANY CONDITIONS PRIOR TO INSTALLATION.
3. ANY REQUIRED TOWER MODIFICATION DESIGN OR TOWER REPLACEMENT SHALL BE APPROVED BY EOR.

MOUNT ANALYSIS NOTES:

1. THE DESIGN DEPICTED IN THESE DRAWINGS IS VALID WHEN ACCOMPANIED BY A CORRESPONDING PASSING MOUNT ANALYSIS.
2. CONSTRUCTION MANAGER / GENERAL CONTRACTOR SHALL REVIEW THE MOUNT ANALYSIS FOR ANY CONDITIONS PRIOR TO INSTALLATION.
3. ANY REQUIRED MOUNT MODIFICATION DESIGN OR MOUNT REPLACEMENT SHALL BE APPROVED BY EOR.

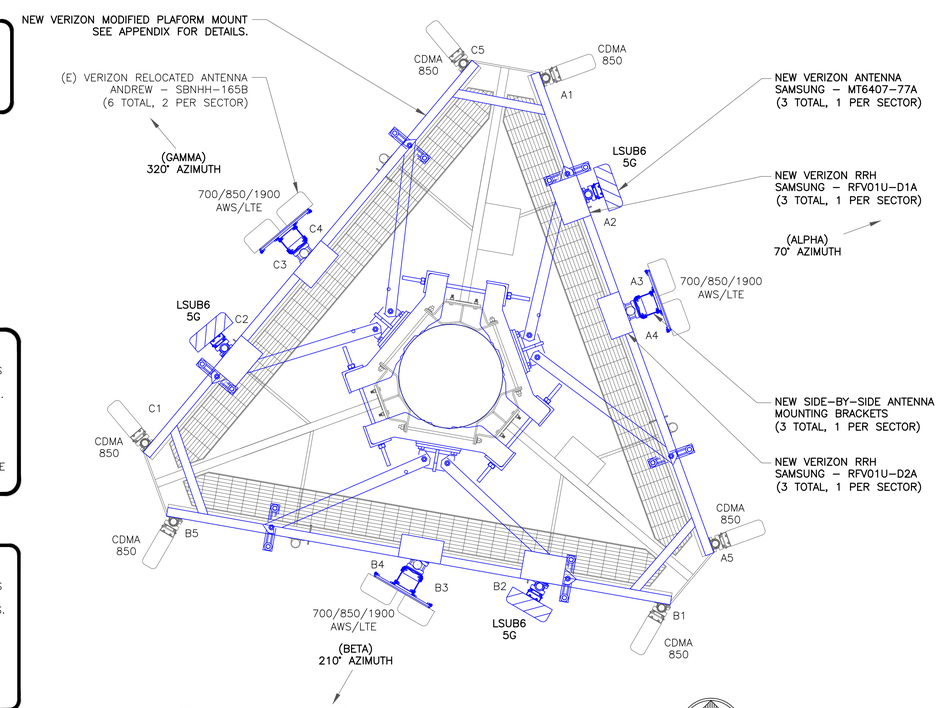

3 NEW ANTENNA PLAN
SCALE: NOT TO SCALE

verizon
20 ALEXANDER DRIVE, 2ND FLOOR
WALLINGFORD, CT 06492

CROWN CASTLE
1200 MACARTHUR BLVD, SUITE 200
MAHWAH, NJ 07430

TOWER ENGINEERING PROFESSIONALS
326 TRYON RD
RALEIGH, NC 27603
(919) 661-6351
TEP JOB #: 25647.582839

VERIZON SITE NUMBER:
467557

BU #: **876379**
N. WOODBURY/ WOLFF PARCEL

1440 MAIN STREET NORTH
WOODBURY, CT 06798

EXISTING 163'-0" MONOPOLE

ISSUED FOR:

REV	DATE	DRWN	DESCRIPTION	DES./QA
0	08/09/21	GBP	CONSTRUCTION	JTC
1	08/12/21	JCH	CONSTRUCTION	JTC

08/12/21

IT IS A VIOLATION OF LAW FOR ANY PERSON, UNLESS THEY ARE ACTING UNDER THE DIRECTION OF A LICENSED PROFESSIONAL ENGINEER, TO ALTER THIS DOCUMENT.

SHEET NUMBER: C-2

REVISION: 1

ANTENNA/RRH SCHEDULE – @ 93'–0"

SECTOR	STATUS	ANTENNA MANUFACTURER	ANTENNA MODEL	ANTENNA CENTERLINE	AZIMUTH	MECHANICAL DOWNTILTS	ELECTRICAL DOWNTILTS	TOWER EQUIPMENT MANUFACTURER	TOWER EQUIPMENT QTY/MODEL
A1	EXISTING	ANTEL	LPA–80080/6CF	150'–0"	70°	*	*	RFS/CELWAVE	(1) DBC1–12C–24AB–0Z OVP BOX
A2	**NEW**	**SAMSUNG**	**MT6407–77A**	**150'–0"**	**70°**	*****	*****	**SAMSUNG**	**(1) RFV01U–D1A RRH**
A3	EXISTING	ANDREW	SBNHH–1D65B	150'–0"	70°	*	*	–	–
A4	EXISTING	ANDREW	SBNHH–1D65B	150'–0"	70°	*	*	SAMSUNG	(1) RFV01U–D2A RRH
A5	EXISTING	ANTEL	LPA–80080/6CF	150'–0"	70°	*	*	–	–
B1	EXISTING	ANTEL	LPA–80080/6CF	150'–0"	210°	*	*	–	–
B2	**NEW**	**SAMSUNG**	**MT6407–77A**	**150'–0"**	**210°**	*****	*****	**SAMSUNG**	**(1) RFV01U–D1A RRH**
B3	EXISTING	ANDREW	SBNHH–1D65B	150'–0"	210°	*	*	–	–
B4	EXISTING	ANDREW	SBNHH–1D65B	150'–0"	210°	*	*	SAMSUNG	(1) RFV01U–D2A RRH
B5	EXISTING	ANTEL	LPA–80080/6CF	150'–0"	210°	*	*	–	–
C1	EXISTING	ANTEL	LPA–80080/6CF	150'–0"	320°	*	*	–	–
C2	**NEW**	**SAMSUNG**	**MT6407–77A**	**150'–0"**	**320°**	*****	*****	**SAMSUNG**	**(1) RFV01U–D1A RRH**
C3	EXISTING	ANDREW	SBNHH–1D65B	150'–0"	320°	*	*	–	–
C4	EXISTING	ANDREW	SBNHH–1D65B	150'–0"	320°	*	*	SAMSUNG	(1) RFV01U–D2A RRH
C5	EXISTING	ANTEL	LPA–80080/6CF	150'–0"	320°	*	*	–	–

NOTE – NEW ANTENNA/EQUIPMENT SHOWN IN BOLD

* – CONTRACTOR TO REFERENCE MOST RECENT RFDS FOR MECHANICAL AND ELECTRICAL DOWNTILTS

1 VERIZON TOWER EQUIPMENT SCHEDULE
SCALE: NOT TO SCALE

CABLE SCHEDULE

STATUS	CABLE TYPE	MANUFACTURER (MODEL #)	SIZE	LENGTH	QTY
EXISTING	COAX	ANDREW LDF7–50A	1–5/8"	200'–0"±	6
EXISTING	COAX	ANDREW LDF7–50A	1–5/8"	200'–0"±	**6
EXISTING	HYBRID	FIELD VERIFY	1–5/8"	200'–0"±	2
				TOTAL CABLE QTY:	8

** – EXISTING CABLE TO BE REMOVED

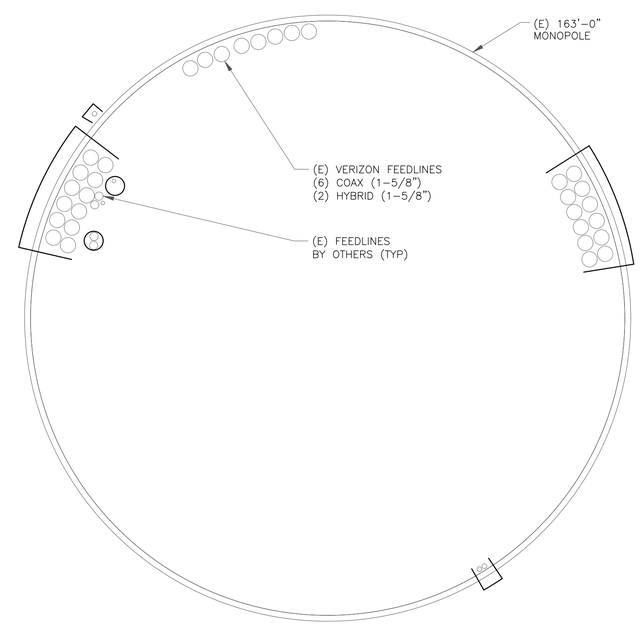

2 BASE LEVEL DETAIL
SCALE: NOT TO SCALE

verizon
20 ALEXANDER DRIVE, 2ND FLOOR
WALLINGFORD, CT 06492

CROWN CASTLE
1200 MACARTHUR BLVD, SUITE 200
MAHWAH, NJ 07430

TOWER ENGINEERING PROFESSIONALS
326 TRYON RD
RALEIGH, NC 27603
(919) 661-6351
TEP JOB #: 25647.582839

VERIZON SITE NUMBER:
467557

BU #: **876379**
N. WOODBURY/ WOLFF PARCEL

1440 MAIN STREET NORTH
WOODBURY, CT 06798

EXISTING 163'-0" MONOPOLE

ISSUED FOR:

REV	DATE	DRWN	DESCRIPTION	DES./QA
0	08/09/21	GBP	CONSTRUCTION	JTC
1	08/12/21	JCH	CONSTRUCTION	JTC

08/12/21

IT IS A VIOLATION OF LAW FOR ANY PERSON, UNLESS THEY ARE ACTING UNDER THE DIRECTION OF A LICENSED PROFESSIONAL ENGINEER, TO ALTER THIS DOCUMENT.

SHEET NUMBER: C-3

REVISION: 1

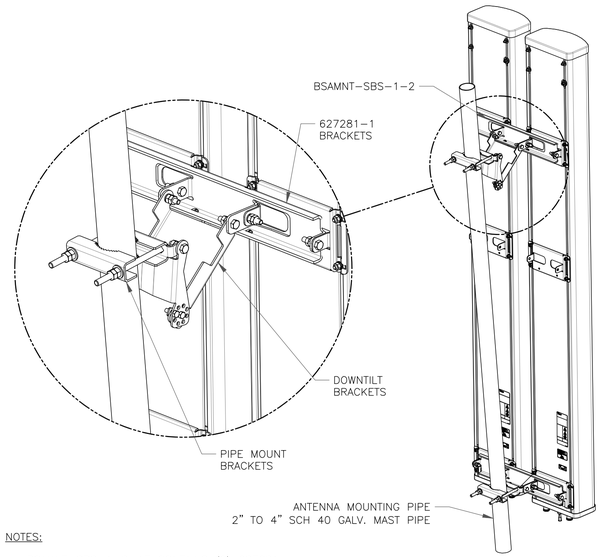

NOTES:

- BSAMNT-SBS-1-2 KIT CONTAINS (2) 627281 MOUNTING BRACKETS.
- TORQUE THE M10 BOLT ASSEMBLY TO 37 N.m. PER MANUFACTURE'S RECOMMENDATIONS.

1 COMMSCOPE – BSAMNT-SBS-1-2
SCALE: NOT TO SCALE

2 NOT USED
SCALE: NOT TO SCALE

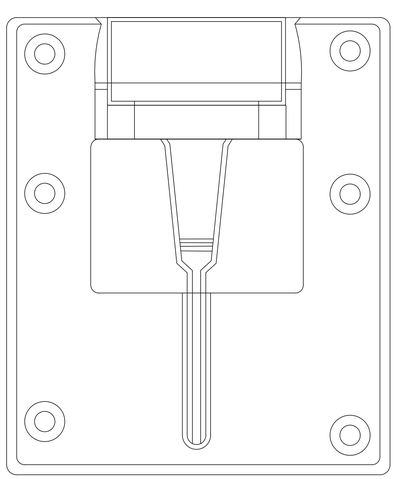

3 SAMSUNG – EP97-01585A BRACKET DETAIL
SCALE: NOT TO SCALE

INSTALLER NOTES:

ALL PIPES BRACKETS AND MISCELLANEOUS HARDWARE TO BE GALVANIZED UNLESS NOTED OTHERWISE.

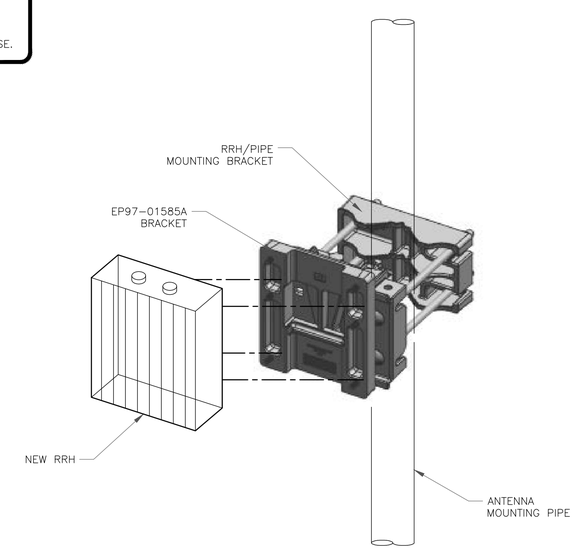

4 ANTENNA & RRH MOUNTING DETAIL
SCALE: NOT TO SCALE

verizon
20 ALEXANDER DRIVE, 2ND FLOOR
WALLINGFORD, CT 06492

CROWN CASTLE
1200 MACARTHUR BLVD, SUITE 200
MAHWAH, NJ 07430

TOWER ENGINEERING PROFESSIONALS
326 TRYON RD
RALEIGH, NC 27603
(919) 661-6351
TEP JOB #: 25647.582839

VERIZON SITE NUMBER:
467557

BU #: **876379**
N. WOODBURY/ WOLFF PARCEL

1440 MAIN STREET NORTH
WOODBURY, CT 06798

EXISTING 163'-0" MONOPOLE

ISSUED FOR:

REV	DATE	DRWN	DESCRIPTION	DES./QA
0	08/09/21	GBP	CONSTRUCTION	JTC

08/09/21

IT IS A VIOLATION OF LAW FOR ANY PERSON, UNLESS THEY ARE ACTING UNDER THE DIRECTION OF A LICENSED PROFESSIONAL ENGINEER, TO ALTER THIS DOCUMENT.

SHEET NUMBER: C-4

REVISION: 0

1 NOT USED
SCALE: NOT TO SCALE

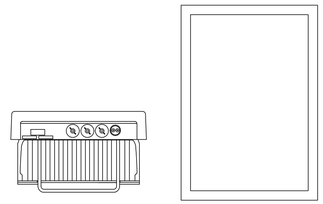

SAMSUNG TELECOMMUNICATIONS – MT6407–77A ANTENNA
WEIGHT: 81.57 LBS
SIZE (HxWxD): 35.06x16.06x5.51 IN.

2 SAMSUNG – MT6407–77A
SCALE: NOT TO SCALE

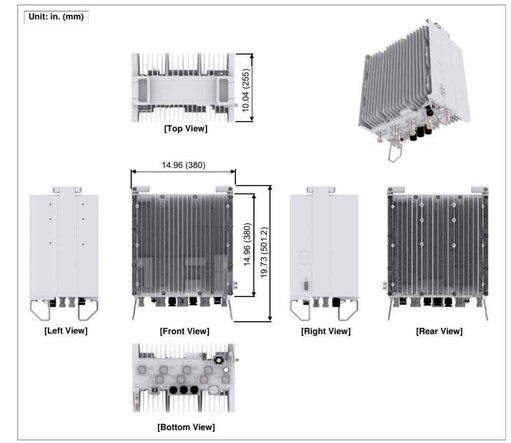

SAMSUNG – RFV01U–D1A
WEIGHT: 84.40 LBS
SIZE (HxWxD): 15.00x15.00x10.00 IN.

3 SAMSUNG – RFV01U–D1A
SCALE: NOT TO SCALE

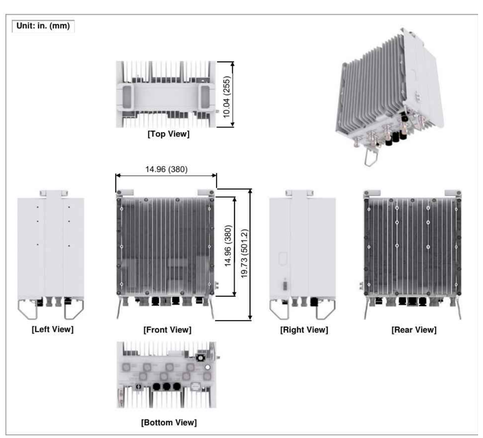

SAMSUNG – RFV01U–D2A
WEIGHT: 70.30 LBS
SIZE (HxWxD): 15.00x15.00x8.10 IN.

4 SAMSUNG – RFV01U–D2A
SCALE: NOT TO SCALE

5 NOT USED
SCALE: NOT TO SCALE

6 NOT USED
SCALE: NOT TO SCALE

verizon
20 ALEXANDER DRIVE, 2ND FLOOR
WALLINGFORD, CT 06492

CROWN CASTLE
1200 MACARTHUR BLVD, SUITE 200
MAHWAH, NJ 07430

TOWER ENGINEERING PROFESSIONALS
326 TRYON RD
RALEIGH, NC 27603
(919) 661-6351
TEP JOB #: 25647.582839

VERIZON SITE NUMBER:
467557

BU #: **876379**
N. WOODBURY/ WOLFF PARCEL

1440 MAIN STREET NORTH
WOODBURY, CT 06798

EXISTING 163'-0" MONOPOLE

ISSUED FOR:

REV	DATE	DRWN	DESCRIPTION	DES./QA
0	08/09/21	GBP	CONSTRUCTION	JTC
1	08/12/21	JCH	CONSTRUCTION	JTC

08/12/21

IT IS A VIOLATION OF LAW FOR ANY PERSON, UNLESS THEY ARE ACTING UNDER THE DIRECTION OF A LICENSED PROFESSIONAL ENGINEER, TO ALTER THIS DOCUMENT.

SHEET NUMBER: C-5
REVISION: 1

COLOR CODE MATRIX

Azimuth (1) Alpha					
Cell (850 CDMA)	Red				
PCS2 (1900 LTE)	Pink	Red	Pink		
700 LTE	Lt. Green	Red	Lt. Green		
850 LTE	Purple	Red	Purple		
2100 LTE	Orange	Red	Orange		
High Band Dual Band (Shared Lines)	Orange	Pink	Red	Pink	Orange
Low Band Dual Band (Shared Lines)	Purple	Lt. Green	Red	Lt. Green	Purple
5G	Brown	Red	Brown		
LAA	Gray	Red	Gray		
CBRS	White	Red	White		

Azimuth (2) Beta					
Cell (850 CDMA)	Blue				
PCS2 (1900 LTE)	Pink	Blue	Pink		
700 LTE	Lt. Green	Blue	Lt. Green		
850 LTE	Purple	Blue	Purple		
2100 LTE	Orange	Blue	Orange		
High Band Dual Band (Shared Lines)	Orange	Pink	Blue	Pink	Orange
Low Band Dual Band (Shared Lines)	Purple	Lt. Green	Blue	Lt. Green	Purple
5G	Brown	Blue	Brown		
LAA	Gray	Blue	Gray		
CBRS	White	Blue	White		

Azimuth (3) Gamma					
Cell (850 CDMA)	Yellow				
PCS2 (1900 LTE)	Pink	Yellow	Pink		
700 LTE	Lt. Green	Yellow	Lt. Green		
850 LTE	Purple	Yellow	Purple		
2100 LTE	Orange	Yellow	Orange		
High Band Dual Band (Shared Lines)	Orange	Pink	Yellow	Pink	Orange
Low Band Dual Band (Shared Lines)	Purple	Lt. Green	Yellow	Lt. Green	Purple
5G	Brown	Yellow	Brown		
LAA	Gray	Yellow	Gray		
CBRS	White	Yellow	White		

COLOR CODE MATRIX

Azimuth (4) Delta					
Cell (850 CDMA)	Orange				
PCS2 (1900 LTE)	Pink	Orange	Pink		
700 LTE	Lt. Green	Orange	Lt. Green		
850 LTE	Purple	Orange	Purple		
2100 LTE	Orange	Orange	Orange		
High Band Dual Band (Shared Lines)	Orange	Pink	Orange	Pink	Orange
Low Band Dual Band (Shared Lines)	Purple	Lt. Green	Orange	Lt. Green	Purple
5G	Brown	Orange	Brown		
LAA	Gray	Orange	Gray		
CBRS	White	Orange	White		

Azimuth (5) Epsilon					
Cell (850 CDMA)	White				
PCS2 (1900 LTE)	Pink	White	Pink		
700 LTE	Lt. Green	White	Lt. Green		
850 LTE	Purple	White	Purple		
2100 LTE	Orange	White	Orange		
High Band Dual Band (Shared Lines)	Orange	Pink	White	Pink	Orange
Low Band Dual Band (Shared Lines)	Purple	Lt. Green	White	Lt. Green	Purple
5G	Brown	White	Brown		
LAA	Gray	White	Gray		
CBRS	White	White	White		

Azimuth (6) Zeta					
Cell (850 CDMA)	Gray				
PCS2 (1900 LTE)	Pink	Gray	Pink		
700 LTE	Lt. Green	Gray	Lt. Green		
850 LTE	Purple	Gray	Purple		
2100 LTE	Orange	Gray	Orange		
High Band Dual Band (Shared Lines)	Orange	Pink	Gray	Pink	Orange
Low Band Dual Band (Shared Lines)	Purple	Lt. Green	Gray	Lt. Green	Purple
5G	Brown	Gray	Brown		
LAA	Gray	Gray	Gray		
CBRS	White	Gray	White		

1 COLOR CODE MATRIX
SCALE: NOT TO SCALE

verizon
20 ALEXANDER DRIVE, 2ND FLOOR
WALLINGFORD, CT 06492

CROWN CASTLE
1200 MACARTHUR BLVD, SUITE 200
MAHWAH, NJ 07430

TOWER ENGINEERING PROFESSIONALS
326 TRYON RD
RALEIGH, NC 27603
(919) 661-6351
TEP JOB #: 25647.582839

VERIZON SITE NUMBER:
467557

BU #: **876379**
N. WOODBURY/ WOLFF PARCEL

1440 MAIN STREET NORTH
WOODBURY, CT 06798

EXISTING 163'-0" MONOPOLE

ISSUED FOR:

REV	DATE	DRWN	DESCRIPTION	DES./QA
0	08/09/21	GBP	CONSTRUCTION	JTC

08/09/21

IT IS A VIOLATION OF LAW FOR ANY PERSON, UNLESS THEY ARE ACTING UNDER THE DIRECTION OF A LICENSED PROFESSIONAL ENGINEER, TO ALTER THIS DOCUMENT.

SHEET NUMBER: C-6
REVISION: 0

- Port 1 & 2 are for low band (698-896 MHz).
- Port 3,4,5, & 6 are for high band (1695-2360 MHz).
- AISG cable is only needed when drawn in the diagrams below, if it is not drawn then SBT is enough to control all RET motors.
- Not all SBT ports are needed to control RET, only green port connection to green port will control RET.

RET DC signal pass for RET
(Port that will control RET)

DC signal capable Port

AISG Cable

RET DC signal pass for RET
(Port that will control RET)

Hybriflex cables

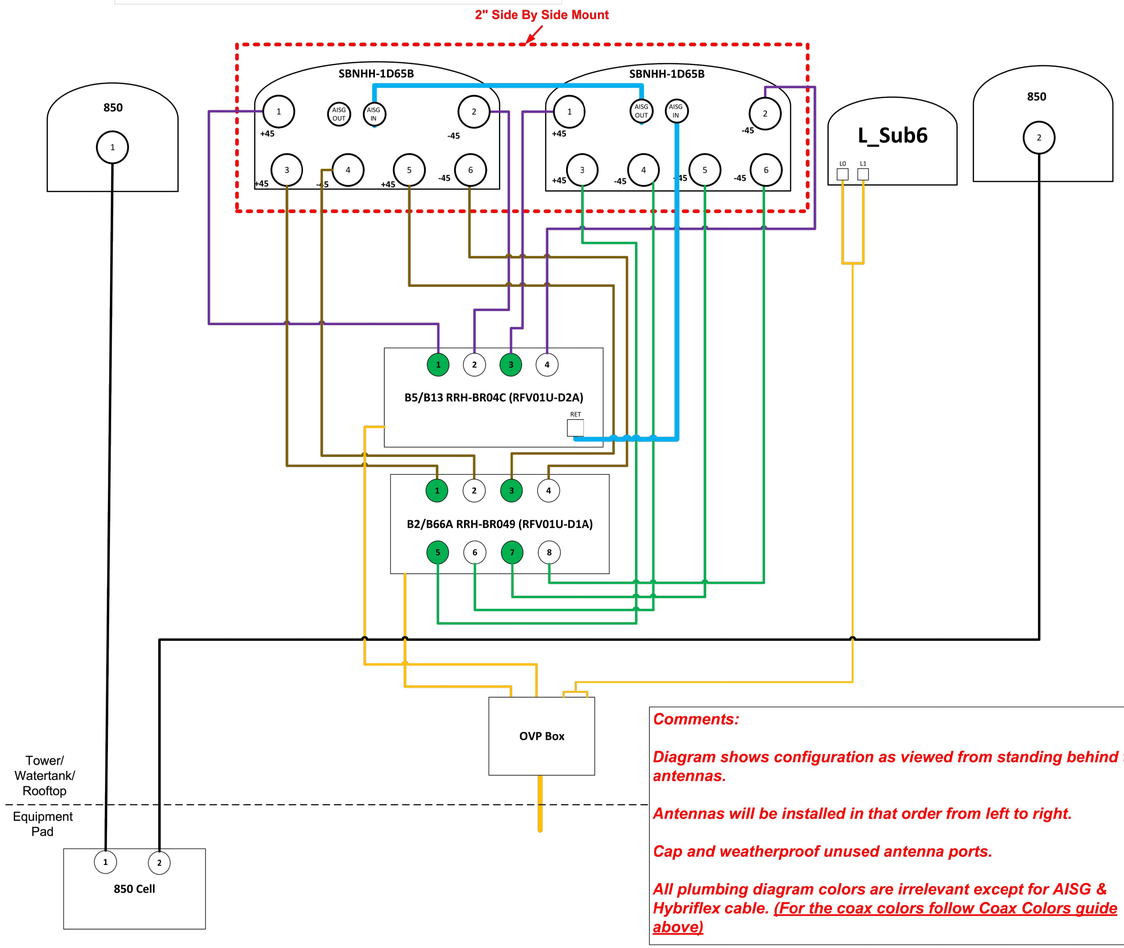

Comments:

Diagram shows configuration as viewed from standing behind the antennas.

Antennas will be installed in that order from left to right.

Cap and weatherproof unused antenna ports.

All plumbing diagram colors are irrelevant except for AISG & Hybriflex cable. (For the coax colors follow Coax Colors guide above)

1 PLUMBING DIAGRAM
SCALE: NOT TO SCALE

verizon
20 ALEXANDER DRIVE, 2ND FLOOR
WALLINGFORD, CT 06492

CROWN CASTLE
1200 MACARTHUR BLVD, SUITE 200
MAHWAH, NJ 07430

TOWER ENGINEERING PROFESSIONALS
326 TRYON RD
RALEIGH, NC 27603
(919) 661-6351
TEP JOB #: 25647.582839

VERIZON SITE NUMBER:
467557

BU #: **876379**
N. WOODBURY/ WOLFF PARCEL

1440 MAIN STREET NORTH
WOODBURY, CT 06798

EXISTING 163'-0" MONOPOLE

ISSUED FOR:

REV	DATE	DRWN	DESCRIPTION	DES./QA
0	08/09/21	GBP	CONSTRUCTION	JTC

08/09/21

IT IS A VIOLATION OF LAW FOR ANY PERSON, UNLESS THEY ARE ACTING UNDER THE DIRECTION OF A LICENSED PROFESSIONAL ENGINEER, TO ALTER THIS DOCUMENT.

SHEET NUMBER: C-7

REVISION: 0

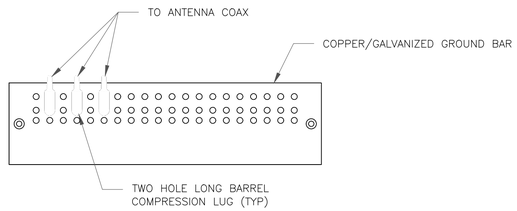

NOTES:

1. DOUBLING UP "OR STACKING" OF CONNECTIONS IS NOT PERMITTED.
2. EXTERIOR ANTIOXIDANT JOINT COMPOUND TO BE USED ON ALL EXTERIOR CONNECTIONS.
3. GROUND BAR SHALL NOT BE ISOLATED FROM TOWER. MOUNT DIRECTLY TO ANTENNA MOUNT STEEL.

1 ANTENNA SECTOR GROUND BAR DETAIL
SCALE: NOT TO SCALE

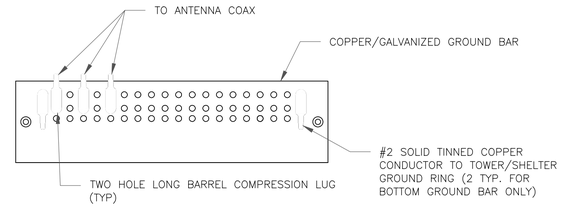

NOTES:

1. EXTERIOR ANTIOXIDANT JOINT COMPOUND TO BE USED ON ALL EXTERIOR CONNECTIONS.
2. GROUND BAR SHALL NOT BE ISOLATED FROM TOWER. MOUNT DIRECTLY TO TOWER STEEL (TOWER ONLY).
3. GROUND BAR SHALL BE ISOLATED FROM BUILDING OR SHELTER.

2 TOWER/SHELTER GROUND BAR DETAIL
SCALE: NOT TO SCALE

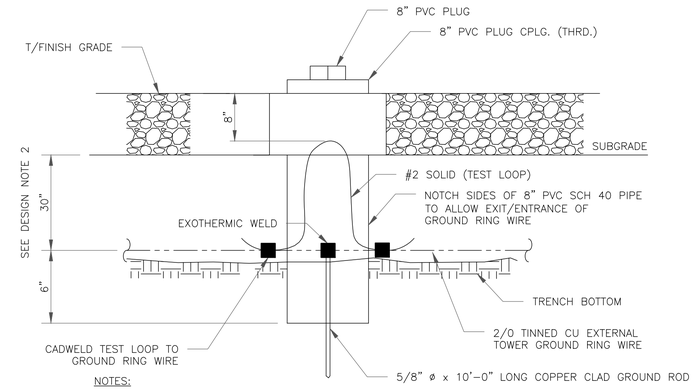

NOTES:

1. GROUND ROD SHALL BE DRIVEN VERTICALLY, NOT TO EXCEED 45 DEGREES FROM THE VERTICAL
2. GROUND WIRE SHALL BE MIN. 30" BELOW GRADE OR 6" BELOW FROST LINE. (WHICH EVER IS GREATER) AS PER N.E.C. ARTICLE 250-50(D)

3 INSPECTION WELL DETAIL
SCALE: NOT TO SCALE

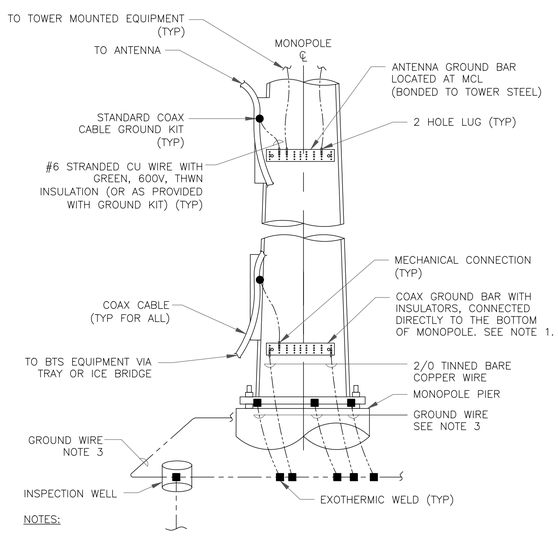

NOTES:

1. NUMBER OF GROUNDING BARS MAY VARY DEPENDING ON THE TYPE OF TOWER, ANTENNA LOCATIONS AND CONNECTION ORIENTATION. COAXIAL CABLES EXCEEDING 200 FEET ON THE TOWER SHALL HAVE GROUND KITS AT THE MIDPOINT. PROVIDE AS REQUIRED.
2. ONLY MECHANICAL CONNECTIONS ARE ALLOWED TO BE MADE TO CROWN CASTLE USA INC. TOWERS. ALL MECHANICAL CONNECTIONS SHALL BE TREATED WITH AN ANTI-OXIDANT COATING.
3. ALL TOWER GROUNDING SYSTEMS SHALL COMPLY WITH THE REQUIREMENTS OF THE RECOGNIZED EDITION OF ANSI/TIA 222 AND NFPA 780.

4 TYPICAL ANTENNA CABLE GROUNDING
SCALE: NOT TO SCALE

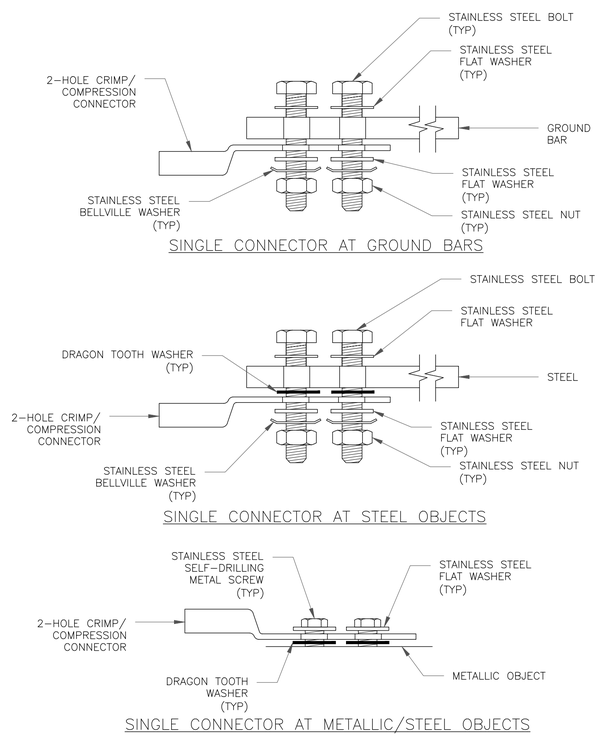

5 HARDWARE DETAIL FOR EXTERIOR CONNECTIONS
SCALE: NOT TO SCALE

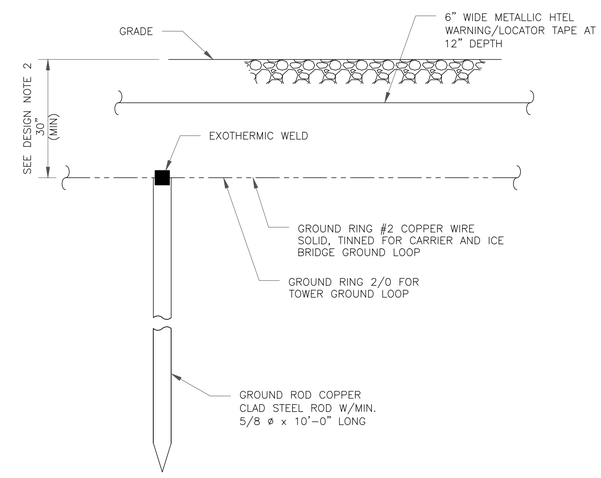

NOTES:

1. GROUND ROD SHALL BE DRIVEN VERTICALLY, NOT TO EXCEED 45 DEGREES FROM THE VERTICAL
2. GROUND WIRE SHALL BE MIN. 30" BELOW GRADE OR 6" BELOW FROST LINE. (WHICH EVER IS GREATER) AS PER N.E.C. ARTICLE 250-50(D)

6 GROUND ROD DETAIL
SCALE: NOT TO SCALE

verizon
20 ALEXANDER DRIVE, 2ND FLOOR
WALLINGFORD, CT 06492

CROWN CASTLE
1200 MACARTHUR BLVD, SUITE 200
MAHWAH, NJ 07430

TOWER ENGINEERING PROFESSIONALS
326 TRYON RD
RALEIGH, NC 27603
(919) 661-6351
TEP JOB #: 25647.582839

VERIZON SITE NUMBER:
467557

BU #: **876379**
N. WOODBURY/ WOLFF PARCEL

1440 MAIN STREET NORTH
WOODBURY, CT 06798

EXISTING 163'-0" MONOPOLE

ISSUED FOR:

REV	DATE	DRWN	DESCRIPTION	DES./QA
0	08/09/21	GBP	CONSTRUCTION	JTC

IT IS A VIOLATION OF LAW FOR ANY PERSON, UNLESS THEY ARE ACTING UNDER THE DIRECTION OF A LICENSED PROFESSIONAL ENGINEER, TO ALTER THIS DOCUMENT.

SHEET NUMBER: G-1
REVISION: 0

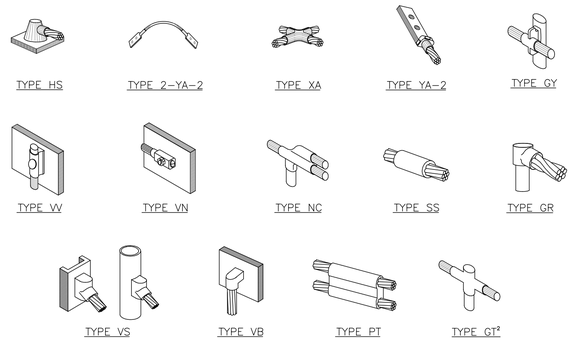

NOTE:

1. ERICO EXOTHERMIC "MOLD TYPES" SHOWN HERE ARE EXAMPLES. CONSULT WITH CONSTRUCTION MANAGER FOR SPECIFIC MOLDS TO BE USED FOR THIS PROJECT.
2. MOLD TYPE ONLY TO BE USED BELOW GRADE WHEN CONNECTING GROUND RING TO GROUND ROD.

1 CADWELD GROUNDING CONNECTIONS
SCALE: NOT TO SCALE

WIRE SIZE	BURNDY LUG	BOLT SIZE
#6 AWG GREEN INSULATED	YA6C-2TC38	3/8" - 16 NC S 2 BOLT
#2 AWG SOLID TINNED	YA3C-2TC38	3/8" - 16 NC S 2 BOLT
#2 AWG STRANDED	YA2C-2TC38	3/8" - 16 NC S 2 BOLT
#2/0 AWG STRANDED	YA26-2TC38	3/8" - 16 NC S 2 BOLT
#4/0 AWG STRANDED	YA28-2N	1/2" - 16 NC S 2 BOLT

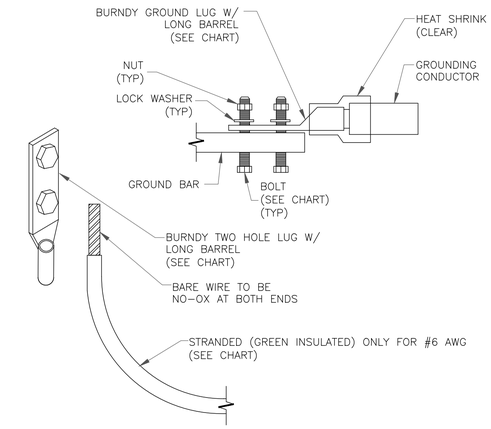

NOTES:

1. ALL GROUNDING LUGS ARE TO BE INSTALLED PER MANUFACTURER'S SPECIFICATIONS. ALL HARDWARE BOLTS, NUTS, LOCK WASHERS SHALL BE STAINLESS STEEL. ALL HARDWARE ARE TO BE AS FOLLOWS: BOLT, FLAT WASHER,GROUND BAR, GROUND LUG, FLAT WASHER AND NUT.

2 MECHANICAL LUG CONNECTION
SCALE: NOT TO SCALE

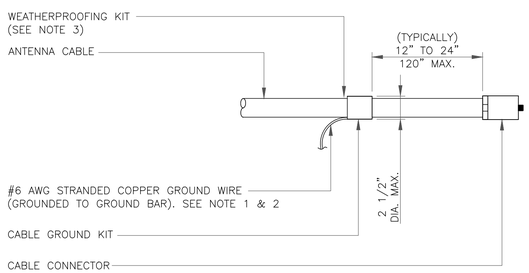

NOTES:

1. DO NOT INSTALL CABLE GROUND KIT AT A BEND AND ALWAYS DIRECT GROUND WIRE DOWN TO GROUND BAR.
2. GROUNDING KIT SHALL BE TYPE AND PART NUMBER AS SUPPLIED OR RECOMMENDED BY CABLE MANUFACTURER.
3. WEATHER PROOFING SHALL BE TWO-PART TAPE KIT, COLD SHRINK SHALL NOT BE USED.

3 CABLE GROUND KIT CONNECTION
SCALE: NOT TO SCALE

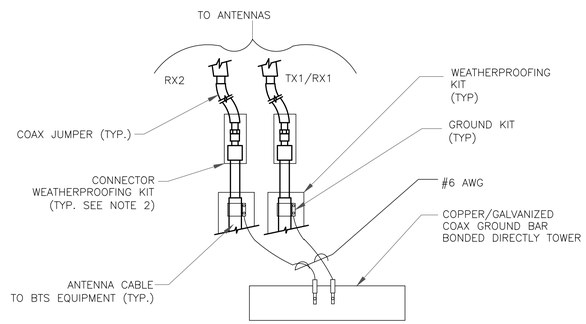

NOTES:

1. DO NOT INSTALL CABLE GROUND KIT AT A BEND AND ALWAYS DIRECT GROUND WIRE DOWN TO ANTENNA GROUND BAR.
2. WEATHER PROOFING SHALL BE TWO-PART TAPE KIT. COLD SHRINK SHALL NOT BE USED.

4 GROUND CABLE CONNECTION
SCALE: NOT TO SCALE

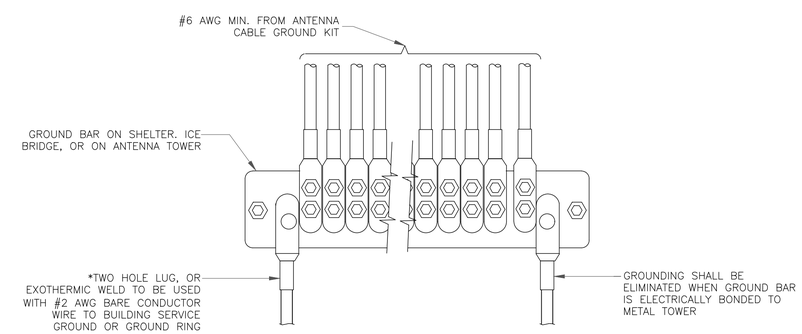

5 GROUNDWIRE INSTALLATION
SCALE: NOT TO SCALE

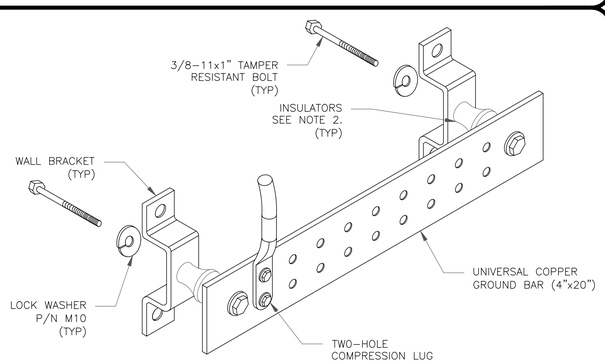

NOTES:

1. DOWN LEAD (HOME RUN) CONDUCTORS ARE NOT TO BE INSTALLED ON CROWN CASTLE USA INC. TOWER, PER THE GROUNDING DOWN CONDUCTOR POLICY QAS-STD-10091. NO MODIFICATION OR DRILLING TO TOWER STEEL IS ALLOWED IN ANY FORM OR FASHION, CAD-WELDING ON THE TOWER AND/OR IN THE AIR ARE NOT PERMITTED.
2. OMIT INSULATOR WHEN MOUNTING TO TOWER STEEL OR PLATFORM STEEL USE INSULATORS WHEN ATTACHING TO BUILDING OR SHELTERS.

6 GROUND BAR DETAIL
SCALE: NOT TO SCALE

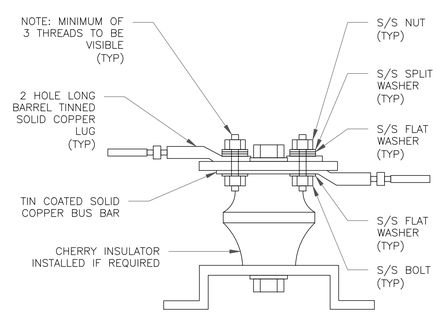

7 LUG DETAIL
SCALE: NOT TO SCALE

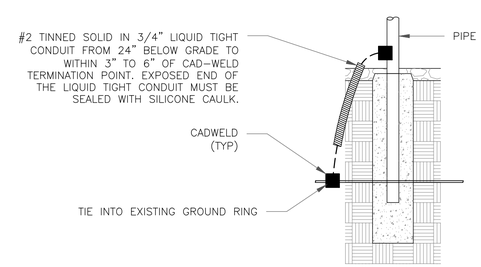

8 TRANSITIONING GROUND DETAIL
SCALE: NOT TO SCALE

verizon
20 ALEXANDER DRIVE, 2ND FLOOR
WALLINGFORD, CT 06492

CROWN CASTLE
1200 MACARTHUR BLVD, SUITE 200
MAHWAH, NJ 07430

TOWER ENGINEERING PROFESSIONALS
326 TRYON RD
RALEIGH, NC 27603
(919) 661-6351
TEP JOB #: 25647.582839

VERIZON SITE NUMBER:
467557

BU #: **876379**
N. WOODBURY/ WOLFF PARCEL

1440 MAIN STREET NORTH
WOODBURY, CT 06798

EXISTING 163'-0" MONOPOLE

ISSUED FOR:

REV	DATE	DRWN	DESCRIPTION	DES./QA
0	08/09/21	GBP	CONSTRUCTION	JTC

08/09/21

IT IS A VIOLATION OF LAW FOR ANY PERSON, UNLESS THEY ARE ACTING UNDER THE DIRECTION OF A LICENSED PROFESSIONAL ENGINEER, TO ALTER THIS DOCUMENT.

SHEET NUMBER: G-2
REVISION: 0

MOUNT MODIFICATION DRAWINGS
EXISTING 14.50' PLATFORM

TOWER OWNER: CROWN CASTLE
TOWER OWNER SITE NUMBER: 876379

CARRIER SITE NAME: WOODBURY N CT
CARRIER SITE NUMBER: 467557
FUZE ID: 16272070

1440 MAIN ST. NORTH
WOODBURY, CT 06798
LITCHFIELD COUNTY

LATITUDE: 41.589947° N
LONGITUDE: 73.169867° W

DESIGN CRITERIA

WIND LOADS

BASIC WIND SPEED (3 SECOND GUST), V = 116 MPH
EXPOSURE CATEGORY C
TOPOGRAPHIC CATEGORY 1
MEAN BASE ELEVATION (AMSL) = 490.19'

ICE LOADS

ICE WIND SPEED (3 SECOND GUST), V = 50 MPH
ICE THICKNESS = 1.00 IN

SEISMIC LOADS

SEISMIC DESIGN CATEGORY B
SHORT TERM MCER GROUND MOTION, S_S = .190
LONG TERM MCER GROUND MOTION, S_1 = .054

PROJECT INFORMATION

APPLICANT/LESSEE

COMPANY: VERIZON WIRELESS

CLIENT REPRESENTATIVE

COMPANY: VERIZON WIRELESS
ADDRESS: 118 FLANDERS ROAD, THIRD FLOOR
CITY, STATE, ZIP: WESTBOROUGH, MA 01581
CONTACT: ANDREW CANDIELLO
EMAIL: ANDREW.CANDIELLO@VERIZONWIRELESS.COM

PROJECT MANAGER

COMPANY: MASER CONSULTING CONNECTICUT
CONTACT: PETER ALBANO
PHONE: 856-797-0412
E-MAIL: PETER.ALBANO@COLLIERSENGINEERING.COM

CONTRACTOR PMI REQUIREMENTS

PMI LOCATION: HTTPS://PMI.VZWSMART.COM
SMART TOOL PROJECT #: 10090305
VZW LOCATION CODE (PSLC): 467557
ANALYSIS DATE: 7/30/2021

PMI REQUIREMENTS EMBEDDED WITHIN MOUNT MODIFICATION REPORT

SHEET INDEX

SHEET	DESCRIPTION
ST-1	TITLE SHEET
SBOM-1	BILL OF MATERIALS
SGN-1	GENERAL NOTES
SCF-1	CLIMBING FACILITY DETAIL
SS-1	MODIFICATION DETAILS
SS-2	MOUNT PHOTOS
	SPECIFICATION SHEETS

COPYRIGHT ©2021
MASER CONSULTING CONNECTICUT
ALL RIGHTS RESERVED
THIS DRAWING AND ALL THE INFORMATION CONTAINED HEREIN IS AUTHORIZED FOR USE ONLY BY THE PARTY FOR WHOM THE WORK WAS CONTRACTED OR TO WHOM IT IS CERTIFIED. THIS DRAWING MAY NOT BE COPIED, REUSED, DISCLOSED, DISTRIBUTED OR RELIED UPON FOR ANY OTHER PURPOSE WITHOUT THE EXPRESS WRITTEN CONSENT OF MASER CONSULTING CONNECTICUT.

MASER CONSULTING CONNECTICUT
WILL BE KNOWN AS COLLIERS ENGINEERING & DESIGN IN 2021
Customer Loyalty *through* Client Satisfaction
www.maserconsulting.com
Office Locations:
- NEW JERSEY
- NEW YORK
- PENNSYLVANIA
- VIRGINIA
- FLORIDA
- NORTH CAROLINA
- SOUTH CAROLINA
- NEW MEXICO
- MARYLAND
- GEORGIA
- TEXAS
- TENNESSEE
- COLORADO

C.O.A. #: JPC.0000131

Copyright © 2021. Maser Consulting All Rights Reserved. This drawing and all the information contained herein is authorized for use only by the party for whom the services were contracted or to whom it is certified. This drawing may not be copied, reused, disclosed, distributed or relied upon for any other purpose without the express written consent of Maser Consulting.

PROTECT YOURSELF
ALL STATES REQUIRE NOTIFICATION OF EXCAVATORS, DESIGNERS, OR ANY PERSON PREPARING TO DISTURB THE EARTH'S SURFACE ANYWHERE IN ANY STATE
Know what's below. Call before you dig.
FOR STATE SPECIFIC DIRECT PHONE NUMBERS VISIT: WWW.CALL811.COM

SCALE: AS SHOWN
JOB NUMBER: 21777330A

REV	DATE	DESCRIPTION	DRAWN BY	CHECKED BY
0	7/30/2021	ISSUED FOR CONSTRUCTION	MSG	JPL

STATE OF CONNECTICUT
DEJIAN XU
No. 33733
LICENSED PROFESSIONAL ENGINEER
07/30/2021

IT IS A VIOLATION OF LAW FOR ANY PERSON, UNLESS THEY ARE ACTING UNDER THE DIRECTION OF THE RESPONSIBLE LICENSED PROFESSIONAL ENGINEER, TO ALTER THIS DOCUMENT.

SITE NAME:
WOODBURY N CT
467557
1440 MAIN ST. NORTH
WOODBURY, CT 06798
LITCHFIELD COUNTY

MT. LAUREL OFFICE
2000 Midlantic Drive
Suite 100
Mount Laurel, NJ 08054
Phone: 856.797.0412
Fax: 856.722.1120

SHEET TITLE: TITLE SHEET
SHEET NUMBER: ST-1

NOTE: DO NOT SCALE DRAWINGS FOR CONSTRUCTION.

BILL OF MATERIALS

SECTION 1 - VZWSMART KITS

QUANTITY	MANUFACTURER	PART NUMBER	DESCRIPTION	NOTES	UNIT WEIGHT (LBS.)	WEIGHT (LBS.)
3	VZWSMART	VZWSMART-PLK3	SUPPORT RAIL CORNER BRACKET		30	90
12		VZWSMART-MSK1	CROSSOVER PLATE		14	168

SECTION 2 - OTHER REQUIRED PARTS

QUANTITY	MANUFACTURER	PART NUMBER	DESCRIPTION	NOTES	UNIT WEIGHT (LBS.)	WEIGHT (LBS.)
1	SITE PRO 1	PRK-SFS-L	SUPPORT RAIL REINFORCEMENT KIT (LONG)	OR EOR APPROVED EQUAL, CONTACT MASER CONSULTING CONNECTICUT FOR APPROVAL OF SUBSTITUTION.	642	642
3	-	-	186" LONG, P2 1/2 STD	GALVANIZED	85	255
3	-	-	30" LONG, L3x3x1/4	GALVANIZED; CONTRACTOR TO VERIFY THE LENGTH REQUIRED AND TRIM AS NECESSARY IN ACCORDANCE WITH THE 'STRUCTURAL STEEL' NOTES ON SHEET SGN-1.	9	27
					TOTAL:	1182

VZWSMART KITS - APPROVED VENDORS

COMMSCOPE	
CONTACT	SALVADOR ANGUIANO
PHONE	(817) 304-7492
EMAIL	SALVADOR.ANGUIANO@COMMSCOPE.COM
WEBSITE	WWW.COMMSCOPE.COM
METROSITE FABRICATORS, LLC	
CONTACT	KENT RAMEY
PHONE	(706) 335-7045 (O), (706) 982-9788 (M)
EMAIL	KENT@METROSITELLC.COM
WEBSITE	METROSITEFABRICATORS.COM
PERFECTVISION	
CONTACT	WIRELESS SALES
PHONE	(844) 887-6723
EMAIL	WWW.PERFECT-VISION.COM
WEBSITE	WIRELESSSALES@PERFECT-VISION.COM
SABRE INDUSTRIES, INC.	
CONTACT	ANGIE WELCH
PHONE	(866) 428-6937
EMAIL	AKWELCH@SABREINDUSTRIES.COM
WEBSITE	WWW.SABRESITESOLUTIONS.COM
SITE PRO 1	
CONTACT	PAULA BOSWELL
PHONE	(972) 236-9843
EMAIL	PAULA.BOSWELL@VALMONT.COM
WEBSITE	WWW.SITEPRO1.COM

NOTES:

1. THE MANUFACTURERS LISTED ARE THE APPROVED VENDORS FOR THE VZW MOUNT KITS. EACH MANUFACTURER WILL BE AWARE OF WHICH KITS HAVE BEEN THROUGH THE VZW APPROVAL PROCESS AND THEY ARE IN TURN APPROVED TO SELL. PLEASE NOTE THAT THE MATERIAL UTILIZED ON THE MOUNT MODIFICATIONS WILL BE REVIEWED AS A PART OF THE DESKTOP PMI COMPLETED BY THE SMART TOOL VENDOR. IT WILL BE REQUIRED THAT THE VZW KITS SPECIFIED ARE UTILIZED IN THE MODIFICATIONS.

2. ALL MATERIALS REQUIRED FOR THE DESIGNED MODIFICATIONS BUT NOT LISTED IN THIS SHEET ARE ASSUMED TO BE PROVIDED BY THE CONTRACTOR.

MASER CONSULTING CONNECTICUT
WILL BE KNOWN AS COLLIERS ENGINEERING & DESIGN IN 2021
Customer Loyalty *through* Client Satisfaction
www.maserconsulting.com
Office Locations:
NEW JERSEY, NEW YORK, PENNSYLVANIA, VIRGINIA, FLORIDA, NORTH CAROLINA, SOUTH CAROLINA, NEW MEXICO, MARYLAND, GEORGIA, TEXAS, TENNESSEE, COLORADO
C.O.A. #: JPC.0000131

Copyright © 2021. Maser Consulting All Rights Reserved. This drawing and all the information contained herein is authorized for use only by the party for whom the services were contracted or to whom it is certified. This drawing may not be copied, reused, disclosed, distributed or relied upon for any other purpose without the express written consent of Maser Consulting.

verizon

PROTECT YOURSELF
ALL STATES REQUIRE NOTIFICATION OF EXCAVATORS, DESIGNERS, OR ANY PERSON PREPARING TO DISTURB THE EARTH'S SURFACE ANYWHERE IN ANY STATE
811 Know what's below. Call before you dig.
FOR STATE SPECIFIC DIRECT PHONE NUMBERS VISIT: WWW.CALL811.COM

SCALE: AS SHOWN
JOB NUMBER: 21777330A

REV	DATE	DESCRIPTION	DRAWN BY	CHECKED BY
0	7/30/2021	ISSUED FOR CONSTRUCTION	MSG	JPL

STATE OF CONNECTICUT
DEJIAN XU
No. 33733
LICENSED PROFESSIONAL ENGINEER
07/30/2021

IT IS A VIOLATION OF LAW FOR ANY PERSON, UNLESS THEY ARE ACTING UNDER THE DIRECTION OF THE RESPONSIBLE LICENSED PROFESSIONAL ENGINEER, TO ALTER THIS DOCUMENT.

SITE NAME:
WOODBURY N CT
467557
1440 MAIN ST. NORTH
WOODBURY, CT 06798
LITCHFIELD COUNTY

MT. LAUREL OFFICE
2000 Midlantic Drive
Suite 100
Mount Laurel, NJ 08054
Phone: 856.797.0412
Fax: 856.722.1120

SHEET TITLE: BILL OF MATERIALS
SHEET NUMBER: SBOM-1

NOTE: DO NOT SCALE DRAWINGS FOR CONSTRUCTION.

AcAuth: U044447837 WOODBURY N CT *MountedDrawings FA50_20210729.dwg\SBOM-1 By: MGRAHAM

PROJECT NOTES

1. SEE MODIFICATION NOTES
2. THE CONTRACTOR SHALL COMPLY WITH ALL APPLICABLE CODES, ORDINANCES, LAWS AND REGULATIONS OF ALL MUNICIPALITIES, UTILITY COMPANIES OR OTHER PUBLIC/GOVERNING AUTHORITIES.
3. THE CONTRACTOR SHALL BE RESPONSIBLE FOR OBTAINING ALL PERMITS AND INSPECTIONS THAT MAY BE REQUIRED BY ANY FEDERAL, STATE, COUNTY OR MUNICIPAL AUTHORITIES.
4. THE CONTRACTOR SHALL NOTIFY THE CONSTRUCTION MANAGER, IN WRITING, OF ANY CONFLICTS, ERRORS OR OMISSIONS PRIOR TO THE SUBMISSION OF BIDS OR PERFORMANCE OF WORK.
5. THE CONTRACTOR SHALL BE RESPONSIBLE FOR PROTECTING ALL EXISTING SITE IMPROVEMENTS PRIOR TO COMMENCING CONSTRUCTION. THE CONTRACTOR SHALL REPAIR ANY DAMAGE AS A RESULT OF CONSTRUCTION OF THIS FACILITY AT THE CONTRACTOR'S EXPENSE TO THE SATISFACTION OF THE OWNER.
6. THE SCOPE OF WORK FOR THIS PROJECT SHALL INCLUDE PROVIDING ALL MATERIALS, EQUIPMENT AND LABOR REQUIRED TO COMPLETE THIS PROJECT. ALL EQUIPMENT SHALL BE INSTALLED IN ACCORDANCE WITH MANUFACTURER'S RECOMMENDATIONS.
7. THE CONTRACTOR SHALL VISIT THE PROJECT SITE PRIOR TO SUBMITTING THE BID TO VERIFY THAT THE PROJECT CAN BE CONSTRUCTED IN ACCORDANCE WITH THE CONTRACT DOCUMENTS AND CONSTRUCTION DRAWINGS.
8. THE CONTRACTOR SHALL VERIFY ALL EXISTING DIMENSIONS AND CONDITIONS PRIOR TO COMMENCING ANY WORK. ALL DIMENSIONS OF EXISTING CONSTRUCTION SHOWN ON THESE DRAWINGS MUST BE VERIFIED. THE CONTRACTOR SHALL NOTIFY THE CONSTRUCTION MANAGER OF ANY DISCREPANCIES PRIOR TO ORDERING MATERIAL OR PROCEEDING WITH CONSTRUCTION.
9. SINCE THE CELL SITE MAY BE ACTIVE, ALL SAFETY PRECAUTIONS MUST BE TAKEN WHEN WORKING AROUND HIGH LEVELS OF ELECTROMAGNETIC RADIATION. EQUIPMENT SHOULD BE SHUTDOWN PRIOR TO PERFORMING ANY WORK THAT COULD EXPOSE THE WORKERS TO DANGER. PERSONAL RF EXPOSURE MONITORS ARE REQUIRED TO BE WORN TO ALERT OF ANY POTENTIALLY DANGEROUS EXPOSURE LEVELS.
10. NO NOISE, SMOKE, DUST OR ODOR WILL RESULT FROM THIS FACILITY AS TO CAUSE A NUISANCE.
11. THE FACILITY IS UNMANNED AND NOT FOR HUMAN HABITATION (NO HANDICAP ACCESS IS REQUIRED).

GENERAL NOTES

1. THESE MODIFICATIONS HAVE BEEN DESIGNED IN ACCORDANCE WITH THE GOVERNING PROVISIONS OF THE TELECOMMUNICATIONS INDUSTRY STANDARD TIA-222-H. MATERIALS AND SERVICES PROVIDED BY THE CONTRACTOR SHALL CONFORM TO THE ABOVE MENTIONED CODES.
2. CONTRACTOR SHALL TAKE ALL PRECAUTIONS NECESSARY TO PREVENT DAMAGE TO EXISTING STRUCTURES. ANY DAMAGE TO EXISTING STRUCTURES AS A RESULT OF THE CONTRACTOR'S WORK OR FROM DAMAGE DUE TO OTHER CAUSES SHALL BE REPAIRED AT THE CONTRACTOR'S EXPENSE TO THE SATISFACTION OF THE OWNER.
3. CONTRACTOR SHALL VERIFY ALL DIMENSIONS AND EXISTING CONDITIONS BEFORE BEGINNING WORK, ORDERING MATERIAL, AND PREPARING OF SHOP DRAWINGS. ANY DISCREPANCIES BETWEEN FIELD CONDITIONS AND THE CONTRACT DOCUMENTS SHALL BE BROUGHT TO THE IMMEDIATE ATTENTION OF THE ENGINEER. IF THE CONTRACTOR DISCOVERS ANY EXISTING CONDITIONS THAT ARE NOT REPRESENTED ON THESE DRAWINGS, OR ANY CONDITIONS THAT WOULD INTERFERE WITH THE INSTALLATION OF THE MODIFICATIONS, NOTIFY THE ENGINEER IMMEDIATELY.
4. IT IS ASSUMED THAT ANY STRUCTURAL MODIFICATION WORK SPECIFIED ON THESE PLANS WILL BE ACCOMPLISHED BY KNOWLEDGEABLE WORKMEN WITH TOWER CONSTRUCTION EXPERIENCE.
5. THE CONTRACTOR SHALL SUPERVISE AND DIRECT THE WORK AND SHALL BE SOLELY RESPONSIBLE FOR ALL CONSTRUCTION METHODS, MEANS, TECHNIQUES, SEQUENCES, AND PROCEDURES.
6. ALL CONSTRUCTION MEANS AND METHODS; INCLUDING BUT NOT LIMITED TO, ERECTION PLANS, RIGGING PLANS, CLIMBING PLANS, AND RESCUE PLANS SHALL BE THE RESPONSIBILITY OF THE GENERAL CONTRACTOR RESPONSIBLE FOR THE EXECUTION OF THE WORK CONTAINED HEREIN AND SHALL MEET ANSI/TIA-322 (LATEST EDITION), OSHA, AND GENERAL INDUSTRY STANDARDS. ALL RIGGING PLANS SHALL ADHERE TO ANSI/TIA-322 (LATEST EDITION) INCLUDING THE REQUIRED INVOLVEMENT OF A QUALIFIED ENGINEER FOR CLASS IV CONSTRUCTION.
7. THE CONTRACTOR IS SOLELY RESPONSIBLE FOR INITIATING, MAINTAINING, AND SUPERVISING ALL SAFETY PROGRAMS IN ACCORDANCE WITH APPLICABLE SAFETY CODES.
8. WORK SHALL ONLY BE PERFORMED DURING CALM DRY DAYS (WINDS LESS THAN 30-MPH). THE STRUCTURE SHOWN ON THE DRAWINGS IS STRUCTURALLY SOUND ONLY IN THE COMPLETED FORM. THE CONTRACTOR SHALL BE RESPONSIBLE FOR THE STRENGTH AND STABILITY OF THE STRUCTURE DURING ERECTION. CONTRACTOR SHALL PROVIDE TEMPORARY SUPPORT, SHORING, BRACING AND ANY OTHER STRUCTURAL SYSTEMS AS REQUIRED TO RESIST ALL FORCES THAT MAY OCCUR DURING HANDLING AND ERECTION UNTIL THE STRUCTURE IS FULLY COMPLETED. TEMPORARY SUPPORTS, BRACING AND OTHER STRUCTURAL SYSTEMS REQUIRED DURING CONSTRUCTION SHALL REMAIN THE CONTRACTOR'S PROPERTY AFTER THEIR USE.
9. ALL INSTALLATIONS PERFORMED ON THIS STRUCTURE SHALL BE COMPLETED IN ACCORDANCE WITH THE GOVERNING PROVISIONS OF THE STANDARD FOR INSTALLATION, ALTERATION AND MAINTENANCE OF ANTENNA SUPPORTING STRUCTURES AND ANTENNAS, ANSI/TIA-322.
10. CONTRACTOR SHALL SECURE SITE BACK TO EXISTING CONDITION UNDER SUPERVISION OF OWNER. ALL FENCE, STONE, GEOFABRIC, GROUNDING, AND SURROUNDING GRADE SHALL BE REPLACED AND REPAIRED AS REQUIRED TO ACHIEVE OWNER APPROVAL. POSITIVE DRAINAGE AWAY FROM TOWER SITE SHALL BE MAINTAINED.
11. CONNECTIONS BETWEEN ITEMS SUPPORTED BY THE STRUCTURE AND THE STRUCTURE NOT SPECIFICALLY DETAILED IN THE CONTRACT DOCUMENTS ARE THE RESPONSIBILITY OF THE CONTRACTOR. SUCH CONNECTIONS SHALL BE DESIGNED, COORDINATED AND INSPECTED BY A PROFESSIONAL STRUCTURAL ENGINEER LICENSED IN THE STATE OF THE PROJECT. SUBMIT SIGNED AND SEALED CALCULATIONS DURING SHOP DRAWING REVIEW.
12. DO NOT SCALE DRAWINGS.
13. DO NOT USE THESE DRAWINGS FOR ANY OTHER SITE.
14. ALL MATERIAL UTILIZED FOR THIS PROJECT MUST BE NEW AND FREE OF ANY DEFECTS. ANY MATERIAL SUBSTITUTIONS, INCLUDING BUT NOT LIMITED TO ALTERED SIZE AND/OR STRENGTHS, MUST BE APPROVED BY THE OWNER AND ENGINEER IN WRITING.
15. THE MOUNT UNDER NO CIRCUMSTANCES SHOULD BE USED AS A TIE OFF POINT.

STRUCTURAL STEEL

1. DESIGN, DETAILING, FABRICATION AND ERECTION OF STRUCTURAL STEEL SHALL CONFORM TO THE FOLLOWING PUBLICATIONS EXCEPT AS SPECIFICALLY INDICATED IN THE CONTRACT DOCUMENTS.
   a. AMERICAN INSTITUTE OF STEEL CONSTRUCTION (AISC) MANUAL OF STEEL CONSTRUCTION (15TH EDITION)
   b. SPECIFICATION FOR STRUCTURAL JOINTS USING ASTM A325 OR A490 BOLTS
   c. AISC CODE OF STANDARD PRACTICE
2. STRUCTURAL STEEL SHALL CONFORM TO THE FOLLOWING UNLESS OTHERWISE SHOWN:

CHANNELS, ANGLES, PLATES, ETC.	ASTM A36 (GR 36)
STEEL PIPE	ASTM A53 (GR 35)
BOLTS	ASTM A325
NUTS	ASTM A563
LOCK WASHERS	LOCKING STRUCTURAL GRADE

3. ALL SUBSTITUTIONS PROPOSED BY THE CONTRACTOR SHALL BE APPROVED IN WRITING BY THE ENGINEER. CONTRACTOR SHALL PROVIDE DOCUMENTATION TO ENGINEER FOR VERIFYING THE SUBSTITUTE IS SUITABLE FOR USE AND MEETS ORIGINAL DESIGN CRITERIA. DIFFERENCES FROM THE ORIGINAL DESIGN, INCLUDING MAINTENANCE, REPAIR AND REPLACEMENT, SHALL BE NOTED. ESTIMATES OF COSTS/CREDITS ASSOCIATED WITH THE SUBSTITUTION (INCLUDING RE-DESIGN COSTS AND COSTS TO SUB-CONTRACTORS) SHALL BE PROVIDED TO THE ENGINEER. CONTRACTOR SHALL PROVIDE ADDITIONAL DOCUMENTATION AND/OR SPECIFICATIONS TO THE ENGINEER AS REQUESTED.
4. PROVIDE STRUCTURAL STEEL SHOP DRAWINGS TO ENGINEER FOR APPROVAL PRIOR TO FABRICATION.
   a. SUBMIT SHOP DRAWINGS TO

      PETER.ALBANO@COLLIERSENGINEERING.COM

   b. PROVIDE MASER CONSULTING CONNECTICUT PROJECT # AND MASER CONSULTING CONNECTICUT PROJECT ENGINEER CONTACT IN THE BODY OF THE EMAIL.
5. DRILL NO HOLES IN ANY NEW OR EXISTING STRUCTURAL STEEL MEMBERS OTHER THAN THOSE SHOWN ON STRUCTURAL DRAWINGS WITHOUT THE APPROVAL OF THE ENGINEER OF RECORD.
6. GALVANIZED ASTM A325 BOLTS SHALL NOT BE REUSED.
7. ALL NEW STEEL SHALL BE HOT BE DIPPED GALVANIZED FOR FULL WEATHER PROTECTION. IN ADDITION ALL NEW STEEL SHALL BE PAINTED TO MATCH EXISTING STEEL. CONTRACTOR SHALL OBTAIN WRITTEN PERMISSION TO PROTECT STEEL BY ANY OTHER MEANS.
8. ALL BOLT ASSEMBLIES FOR STRUCTURAL MEMBERS REPRESENTED IN THIS DRAWING REQUIRE LOCKING DEVICES TO BE INSTALLED IN ACCORDANCE WITH TIA-222-H SECTION 4.9.2 REQUIREMENTS.
9. WHERE CONNECTIONS ARE NOT FULLY DETAILED ON THESE DRAWINGS, FABRICATOR SHALL DESIGN CONNECTIONS TO RESIST LOADS AND FORCES WHERE SHOWN ON DRAWINGS AND AS OUTLINED IN SPECIFICATIONS.
10. FOR MEMBERS BEING REPLACED, PROVIDE NEW BOLTS AND MATCH EXISTING SIZE AND GRADE. MAINTAIN AISC REQUIREMENTS FOR MINIMUM BOLT DISTANCE AND SPACING.
11. ALL PROPOSED AND/OR REPLACED BOLTS SHALL BE OF SUFFICIENT LENGTH SUCH THAT THE END OF THE BOLT IS AT LEAST FLUSH WITH THE FACE OF THE NUT. IT IS NOT PERMITTED FOR THE BOLT END TO BE BELOW THE FACE OF THE NUT AFTER TIGHTENING IS COMPLETED.
12. GALVANIZED ASTM A325 BOLTS SHALL NOT BE REUSED.
13. ALL NEW STEEL SHALL BE HOT BE DIPPED GALVANIZED FOR FULL WEATHER PROTECTION. CONTRACTOR SHALL OBTAIN WRITTEN PERMISSION TO PROTECT STEEL BY ANY OTHER MEANS.
14. ALL EXISTING PAINTED/GALVANIZED SURFACES DAMAGED DURING REHAB INCLUDING AREAS UNDER STIFFENER PLATES SHALL BE WIRE BRUSHED CLEAN, REPAIRED BY COLD GALVANIZING (ZINGA OR ZINC COTE), AND REPAINTED TO MATCH THE EXISTING FINISH (IF APPLICABLE).
15. ALL HOLES IN STEEL MEMBERS SHALL BE SIZED 1/16" LARGER THAN THE BOLT DIAMETER. STANDARD HOLES SHALL BE USED UNLESS NOTED OTHERWISE.

WELDING NOTES

1. ALL WELDING SHALL BE DONE IN ACCORDANCE WITH AWS D1.0 (LATEST EDITION). THIS SHALL INCLUDE A CERTIFIED WELD INSPECTION (CWI) FOR ACCEPTANCE OR REJECTION OF ALL WELDING OPERATIONS, PRE, DURING, AND POST INSTALLATION, USING THE ACCEPTANCE CRITERIA OF AWS D1.1.
2. CONTRACTOR IS RESPONSIBLE FOR COMMISSIONING A THIRD PARTY CERTIFIED WELD INSPECTOR (CWI) THROUGHOUT THE ENTIRETY OF THE PROJECT. A PASSING CWI REPORT SHALL BE PROVIDED TO THE ENGINEER UPON COMPLETION OF THE PROJECT.
3. THE CERTIFIED WELD INSPECTOR SHALL INDICATE, IN A WRITTEN CWI REPORT, THAT ALL WELDING OPERATIONS PRE, DURING, AND POST INSTALLATION WERE CONDUCTED IN ACCORDANCE WITH AWS D1.1 WITH PHOTOGRAPHS AND DOCUMENTATION SUPPORTING THE ACCEPTANCE OR REJECTION OF ALL WELDING. ALL CWI WELD INSPECTION DOCUMENTATION AND PHOTOS SHALL BE SUBMITTED DURING THE PMI.
4. IN CASES WHERE A WELD IS SPECIFIED BETWEEN TWO MEMBERS IN WHICH THERE IS A GAP IN BETWEEN, THE WELD IS TO BE BUILT-UP SUCH THAT THE SIZE OF WELD ON THE MEMBER IS EQUAL TO THAT SHOWN IN THE DRAWINGS.
5. OXY FUEL GAS WELDING OR BRAZING IS STRICTLY PROHIBITED. SPECIFICALLY, NO TORCH CUTTING IS PERMITTED ON SITE. ALL HOLES SHALL BE CUT WITH A GRINDER.
6. CONTRACTOR SHALL EXERCISE CAUTION WHEN WELDING A GALVANIZED SURFACE.

BOLT SCHEDULE (IN.)

BOLT DIAMETER	STANDARD HOLE	SHORT SLOT	MIN. EDGE DISTANCE	SPACING
1/2	9/16	9/16 x 11/16	7/8	1 1/2
5/8	11/16	11/16 x 7/8	1 1/8	1 7/8
3/4	13/16	13/16 x 1	1 1/4	2 1/4
7/8	15/16	15/16 x 1 1/8	1 1/2	2 5/8
1	1 1/16	1 1/16 x 1 5/16	1 3/4	3

WORKABLE GAGES (IN.)

LEG	GAGE
4	2 1/2
3 1/2	2
3	1 3/4
2 1/2	1 3/8
2	1 1/8

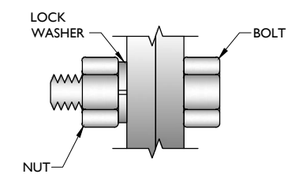

TYP. BOLT ASSEMBLY

NOTES:

1. ALL DIMENSIONS REPRESENTED IN THE ABOVE TABLES ARE AISC MINIMUM REQUIREMENTS. CONTRACTOR SHALL VERIFY EXISTING CONDITIONS IN FIELD AND NOTIFY ENGINEER IF DISTANCES ARE LESS THAN THOSE PROVIDED.
2. THE DIMENSIONS PROVIDED ARE MINIMUM REQUIREMENTS. ACTUAL DIMENSIONS OF PROPOSED MEMBERS WITHIN THESE DRAWINGS MAY VARY FROM THE AISC MINIMUM REQUIREMENTS.
3. SHORT SLOT HOLES SHALL ONLY BE USED WHEN DEPICTED IN THE DRAWINGS
4. MATCH EXISTING GAGES WHEN APPLICABLE, UNLESS MINIMUM EDGE DISTANCES ARE COMPROMISED.

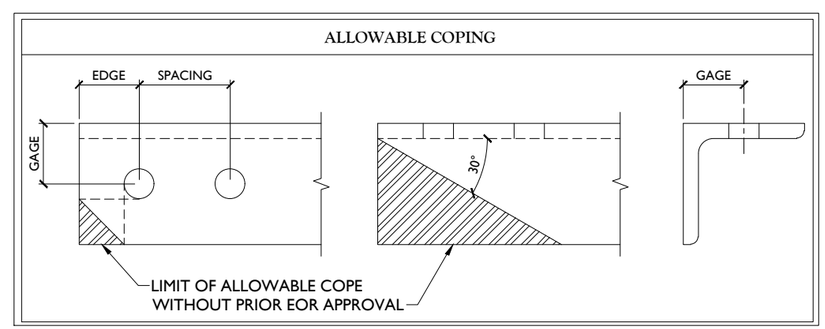

MASER CONSULTING CONNECTICUT
WILL BE KNOWN AS COLLIERS ENGINEERING & DESIGN IN 2021
Customer Loyalty *through* Client Satisfaction
www.maserconsulting.com
Office Locations:
NEW JERSEY, NEW YORK, PENNSYLVANIA, VIRGINIA, FLORIDA, NORTH CAROLINA, SOUTH CAROLINA, NEW MEXICO, MARYLAND, GEORGIA, TEXAS, TENNESSEE, COLORADO
C.O.A. #: JPC.0000131

Copyright © 2021. Maser Consulting All Rights Reserved. This drawing and all the information contained herein is authorized for use only by the party for whom the services were contracted or to whom it is certified. This drawing may not be copied, reused, disclosed, distributed or relied upon for any other purpose without the express written consent of Maser Consulting.

verizon

811 PROTECT YOURSELF
ALL STATES REQUIRE NOTIFICATION OF EXCAVATORS, DESIGNERS, OR ANY PERSON PREPARING TO DISTURB THE EARTH'S SURFACE ANYWHERE IN ANY STATE
Know what's below. Call before you dig.
FOR STATE SPECIFIC DIRECT PHONE NUMBERS VISIT: WWW.CALL811.COM

SCALE: AS SHOWN
JOB NUMBER: 21777330A

REV	DATE	DESCRIPTION	DRAWN BY	CHECKED BY
0	7/30/2021	ISSUED FOR CONSTRUCTION	MSG	JPL

STATE OF CONNECTICUT
DEJIAN XU
No. 33733
LICENSED PROFESSIONAL ENGINEER
07/30/2021

IT IS A VIOLATION OF LAW FOR ANY PERSON, UNLESS THEY ARE ACTING UNDER THE DIRECTION OF THE RESPONSIBLE LICENSED PROFESSIONAL ENGINEER, TO ALTER THIS DOCUMENT.

SITE NAME:
WOODBURY N CT
467557
1440 MAIN ST. NORTH
WOODBURY, CT 06798
LITCHFIELD COUNTY

MT. LAUREL OFFICE
2000 Midlantic Drive
Suite 100
Mount Laurel, NJ 08054
Phone: 856.797.0412
Fax: 856.722.1120

SHEET TITLE: MODIFICATION NOTES

SHEET NUMBER: SGN-1

NOTE: DO NOT SCALE DRAWINGS FOR CONSTRUCTION.

ALAnkin 1100446/35" WOODBURY N CT *MountedDrawings PA85 20130776.dwg(SGN-1 By: MGR AnsiM

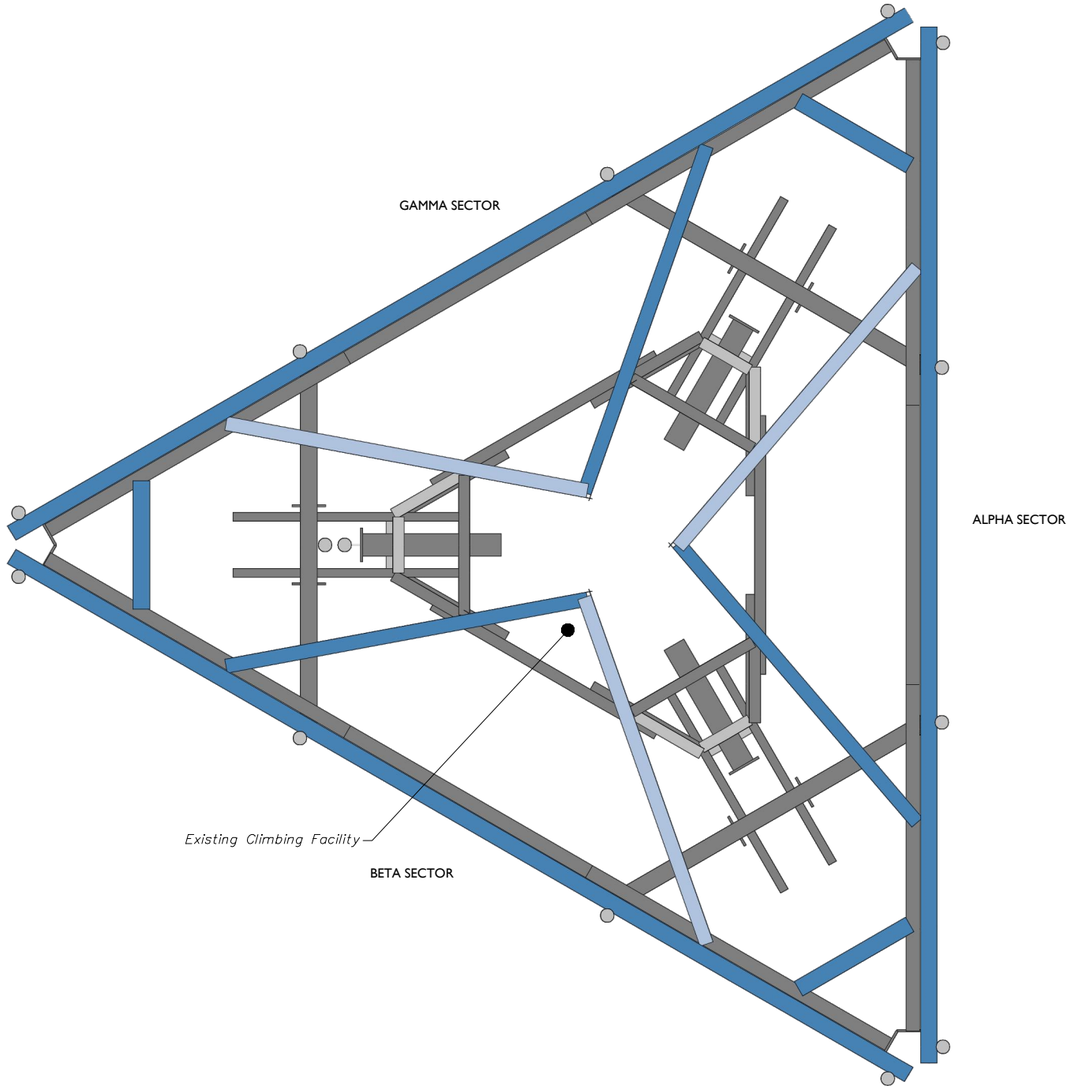

1 CLIMBING FACILITY LOCATION

SCALE : N.T.S.

STRUCTURAL NOTES:

1. CONTRACTOR TO INSPECT CLIMBING FACILITIES AT SITE AND ENSURE THAT THE SAFETY CLIMB IS IN GOOD CONDITION AND THAT THE WIRE ROPE DOES NOT OR WILL NOT INTERFERE WITH THE EXISTING OR PROPOSED MOUNT CONNECTIONS. CONTRACTOR SHALL INSTALL SAFETY CLIMB WIRE ROPE GUIDED AROUND MOUNT CONNECTIONS AS NEEDED.

2. INSTALL SHALL NOT CAUSE HARM TO THE STRUCTURE, CLIMBING FACILITY, SAFETY CLIMB, OR ANY SYSTEM INSTALLED ON THE STRUCTURE. TIMELY NOTICE AND DOCUMENTATION SHALL BE PROVIDED BY CONTRACTORS TO THE EOR (OF STRUCTURAL DESIGN) IF AN OBSTRUCTION WAS REQUIRED TO MEET THE RF SYSTEM DESIGN REQUIREMENTS AND PERFORMANCES.

CLIMBING FACILITY PHOTO

MASER CONSULTING CONNECTICUT
WILL BE KNOWN AS COLLIERS ENGINEERING & DESIGN IN 2021
Customer Loyalty *through* Client Satisfaction
www.maserconsulting.com
Office Locations:
- NEW JERSEY
- NEW YORK
- PENNSYLVANIA
- VIRGINIA
- FLORIDA
- NORTH CAROLINA
- SOUTH CAROLINA
- NEW MEXICO
- MARYLAND
- GEORGIA
- TEXAS
- TENNESSEE
- COLORADO

C.O.A. #: JPC.0000131

Copyright © 2021. Maser Consulting All Rights Reserved. This drawing and all the information contained herein is authorized for use only by the party for whom the services were contracted or to whom it is certified. This drawing may not be copied, reused, disclosed, distributed or relied upon for any other purpose without the express written consent of Maser Consulting.

verizon

811 Know what's below. Call before you dig.

PROTECT YOURSELF

ALL STATES REQUIRE NOTIFICATION OF EXCAVATORS, DESIGNERS, OR ANY PERSON PREPARING TO DISTURB THE EARTH'S SURFACE ANYWHERE IN ANY STATE

FOR STATE SPECIFIC DIRECT PHONE NUMBERS VISIT: WWW.CALL811.COM

SCALE : AS SHOWN

JOB NUMBER : 21777330A

REV	DATE	DESCRIPTION	DRAWN BY	CHECKED BY
0	7/30/2021	ISSUED FOR CONSTRUCTION	MSG	JPL

STATE OF CONNECTICUT
DEJIAN XU
No. 33733
LICENSED PROFESSIONAL ENGINEER
07/30/2021

IT IS A VIOLATION OF LAW FOR ANY PERSON, UNLESS THEY ARE ACTING UNDER THE DIRECTION OF THE RESPONSIBLE LICENSED PROFESSIONAL ENGINEER, TO ALTER THIS DOCUMENT.

SITE NAME:

WOODBURY N CT
467557

1440 MAIN ST. NORTH
WOODBURY, CT 06798
LITCHFIELD COUNTY

MT. LAUREL OFFICE
2000 Midlantic Drive
Suite 100
Mount Laurel, NJ 08054

Phone: 856.797.0412
Fax: 856.722.1120

SHEET TITLE : CLIMBING FACILITY DETAIL

SHEET NUMBER : SCF-1

NOTE: DO NOT SCALE DRAWINGS FOR CONSTRUCTION.

LEGEND:

- PROPOSED
- RELOCATED
- EXISTING

MOUNT MODIFICATION SCHEDULE

NO.	ELEVATION	QUANTITY	DESCRIPTION	NOTES
1	148'-0"	3	PROPOSED SUPPORT RAIL CORNER BRACKET (PART #: VZWSMART-PLK3) WITH 30" LONG L3X3X1/4 ANGLES	CONTRACTOR TO VERIFY THE LENGTH REQUIRED AND TRIM AS NECESSARY IN ACCORDANCE WITH THE 'STRUCTURAL STEEL' NOTES ON SHEET SGN-1. CONTRACTOR SHALL CONNECT PROPOSED L3X3X1/4 ANGLES TO CORNER BRACKETS USING THE PROVIDED (8) 5/8" DIA. BOLTS, (4) BOLTS PER CONNECTION.
2		1	SUPPORT RAIL REINFORCEMENT KIT (LONG)	OR EOR APPROVED EQUAL, CONTACT MASER CONSULTING CONNECTICUT FOR APPROVAL OF SUBSTITUTION.
3		3	186" LONG, P2 1/2 STD SUPPORT RAIL	RADIO AND/OR TME POSITIONS SHALL BE ADJUSTED VERTICALLY AS NEEDED IN ORDER TO ACHIEVE INSTALLATION OF HORIZONTAL AS SHOWN. EOR SHALL BE NOTIFIED IF EQUIPMENT NEEDS TO BE RELOCATED TO ANOTHER MOUNT PIPE. CONNECT NEW HORIZONTAL TO ALL EXISTING VERTICAL MOUNT PIPES WITH CROSSOVER PLATES (PART #: VZWSMART-MSK1).
4				
5				
6				
7				
8				
9				
10				

NOTES.

MOUNT MEMBERS NOT SHOWN FOR CLARITY U.N.O.

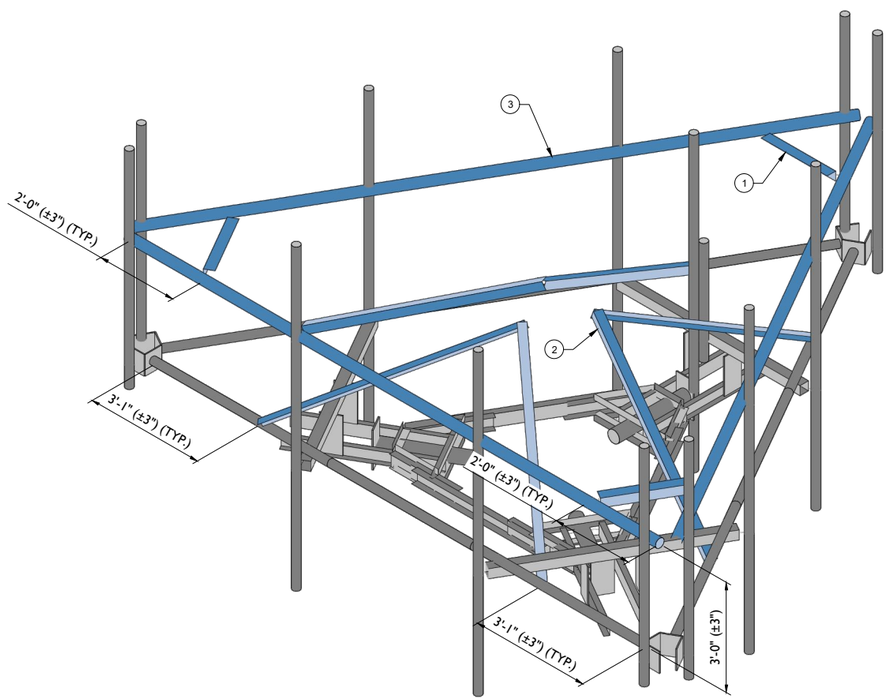

1 PROPOSED ISOMETRIC VIEW

SCALE : N.T.S.

MASER CONSULTING CONNECTICUT
WILL BE KNOWN AS COLLIERS ENGINEERING & DESIGN IN 2021
Customer Loyalty *through* Client Satisfaction
www.maserconsulting.com
Office Locations:
- NEW JERSEY
- NEW YORK
- PENNSYLVANIA
- VIRGINIA
- FLORIDA
- NORTH CAROLINA
- SOUTH CAROLINA
- NEW MEXICO
- MARYLAND
- GEORGIA
- TEXAS
- TENNESSEE
- COLORADO

C.O.A. #: JPC.0000131

Copyright © 2021. Maser Consulting All Rights Reserved. This drawing and all the information contained herein is authorized for use only by the party for whom the services were contracted or to whom it is certified. This drawing may not be copied, reused, disclosed, distributed or relied upon for any other purpose without the express written consent of Maser Consulting.

verizon

PROTECT YOURSELF

ALL STATES REQUIRE NOTIFICATION OF EXCAVATORS, DESIGNERS, OR ANY PERSON PREPARING TO DISTURB THE EARTH'S SURFACE ANYWHERE IN ANY STATE

811 Know what's below. Call before you dig.

FOR STATE SPECIFIC DIRECT PHONE NUMBERS VISIT: WWW.CALL811.COM

SCALE : AS SHOWN

JOB NUMBER : 21777330A

REV	DATE	DESCRIPTION	DRAWN BY	CHECKED BY
0	7/30/2021	ISSUED FOR CONSTRUCTION	MSG	JPL

STATE OF CONNECTICUT
DEJIAN XU
No. 33733
LICENSED PROFESSIONAL ENGINEER

07/30/2021

IT IS A VIOLATION OF LAW FOR ANY PERSON, UNLESS THEY ARE ACTING UNDER THE DIRECTION OF THE RESPONSIBLE LICENSED PROFESSIONAL ENGINEER, TO ALTER THIS DOCUMENT.

SITE NAME:

WOODBURY N CT
467557

1440 MAIN ST. NORTH
WOODBURY, CT 06798
LITCHFIELD COUNTY

MT. LAUREL OFFICE
2000 Midlantic Drive
Suite 100
Mount Laurel, NJ 08054

Phone: 856.797.0412
Fax: 856.722.1120

SHEET TITLE : MODIFICATION DETAILS

SHEET NUMBER : SS-1

NOTE: DO NOT SCALE DRAWINGS FOR CONSTRUCTION.

SA Atlas: 10044463757 WOODBURY N CT Mount Mod Drawings PAGE 20210729.dwg DS-1 By: MCKAHAN

MOUNT PHOTO 1

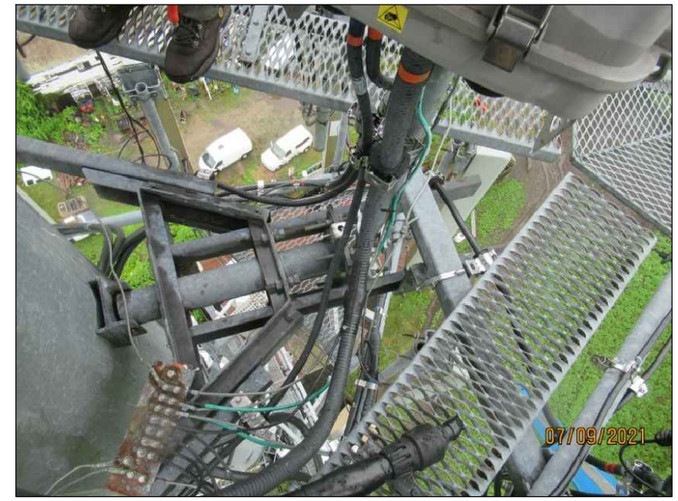

MOUNT PHOTO 2

MOUNT PHOTO 3

MOUNT PHOTO 4

MASER CONSULTING
CONNECTICUT
WILL BE KNOWN AS COLLIERS ENGINEERING & DESIGN IN 2021
Customer Loyalty *through* Client Satisfaction
www.maserconsulting.com
Office Locations:
- NEW JERSEY
- NEW YORK
- PENNSYLVANIA
- VIRGINIA
- FLORIDA
- NORTH CAROLINA
- SOUTH CAROLINA
- NEW MEXICO
- MARYLAND
- GEORGIA
- TEXAS
- TENNESSEE
- COLORADO

C.O.A. #: JPC.0000131

Copyright © 2021. Maser Consulting All Rights Reserved. This drawing and all the information contained herein is authorized for use only by the party for whom the services were contracted or to whom it is certified. This drawing may not be copied, reused, disclosed, distributed or relied upon for any other purpose without the express written consent of Maser Consulting.

verizon

811
PROTECT YOURSELF
ALL STATES REQUIRE NOTIFICATION OF EXCAVATORS, DESIGNERS, OR ANY PERSON PREPARING TO DISTURB THE EARTH'S SURFACE ANYWHERE IN ANY STATE
Know what's below. Call before you dig.
FOR STATE SPECIFIC DIRECT PHONE NUMBERS VISIT: WWW.CALL811.COM

SCALE : AS SHOWN
JOB NUMBER : 21777330A

REV	DATE	DESCRIPTION	DRAWN BY	CHECKED BY
0	7/30/2021	ISSUED FOR CONSTRUCTION	MSG	JPL

STATE OF CONNECTICUT
DEJIAN XU
No. 33733
LICENSED PROFESSIONAL ENGINEER
07/30/2021

IT IS A VIOLATION OF LAW FOR ANY PERSON, UNLESS THEY ARE ACTING UNDER THE DIRECTION OF THE RESPONSIBLE LICENSED PROFESSIONAL ENGINEER, TO ALTER THIS DOCUMENT.

SITE NAME:

WOODBURY N CT
467557

1440 MAIN ST. NORTH
WOODBURY, CT 06798
LITCHFIELD COUNTY

MT. LAUREL OFFICE
2000 Midlantic Drive
Suite 100
Mount Laurel, NJ 08054

Phone: 856.797.0412
Fax: 856.722.1120

SHEET TITLE : MOUNT PHOTOS

SHEET NUMBER : SS-2

NOTE: DO NOT SCALE DRAWINGS FOR CONSTRUCTION.

ALFAdsk, 1004446757 WOODBURY N CT Mount#Drawings PAGE 30210779.dwg(SS-2) By: MCGRAHAM

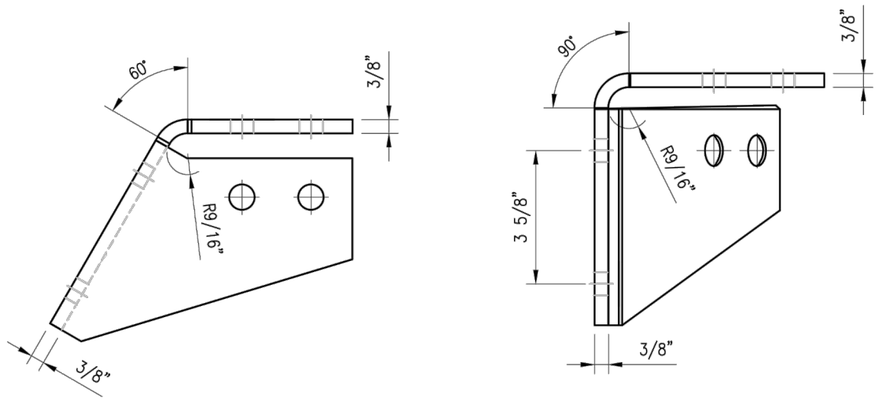

TOP VIEW SIDE VIEW

CBP–L

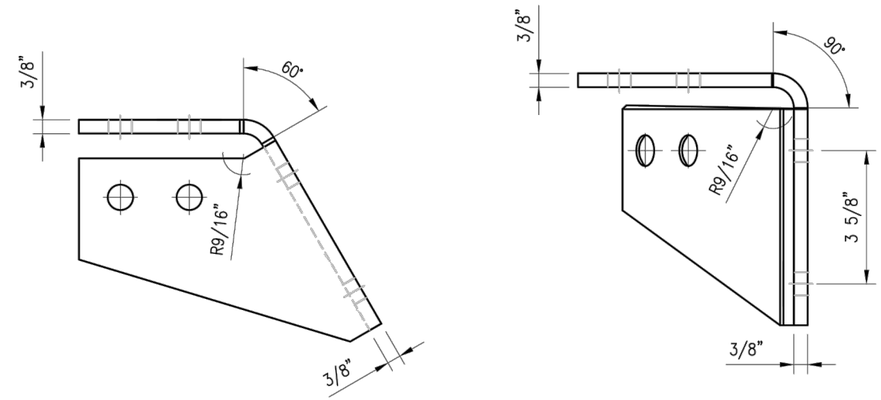

TOP VIEW SIDE VIEW

CBP–R

NOTES:
1. HOT–DIPPED GALVANIZED PER ASTM A123.

VZWSMART–PLK3 (SUPPORT RAIL CORNER BRACKET)

ITEM NO.	QTY.	PART NO.	DESCRIPTION	SHEET #	WT
1	1	CBP–L	CORNER BENT PLATE BRACKET	PLK3–F1	9
2	1	CBP–R	CORNER BENT PLATE BRACKET	PLK3–F1	9
3	4	MS02–625–300–500	RU–BOLT 5/8" X 3" I.W. X 5" I.L. A36 (OR EQUIV.)	RBC–1	5
4	8	---	BOLT 5/8" X 2" A325	---	3
5	16	FW–625	5/8" HDG USS FLAT WASHER	---	1
6	16	LW–625	5/8" HDG LOCK WASHER	---	0
7	16	NUT–625	5/8" HDG HEX NUT	---	2
				GALVANIZED WT	30

VzW SMART Tool© Vendor

verizon

DRAWN BY: H.R CHECKED BY: HMA

REV.	DESCRIPTION	BY	DATE
0	FIRST ISSUE	H.R	05/08/20

SHEET TITLE:
VZWSMART–PLK3 SUPPORT RAIL CORNER BRACKET

SHEET NUMBER: VZWSMART–PLK3

REV #: 0

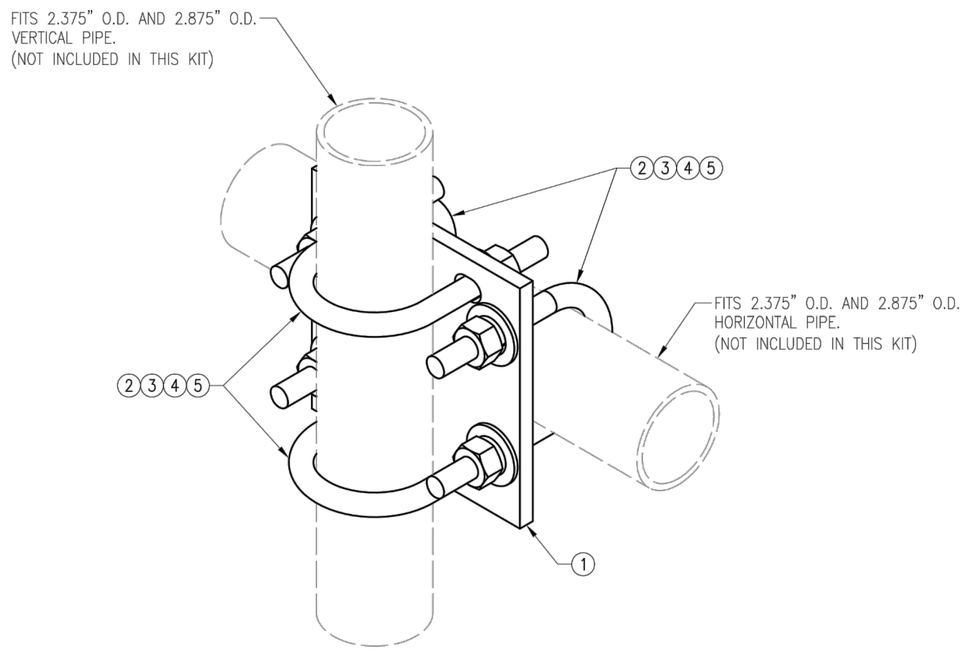

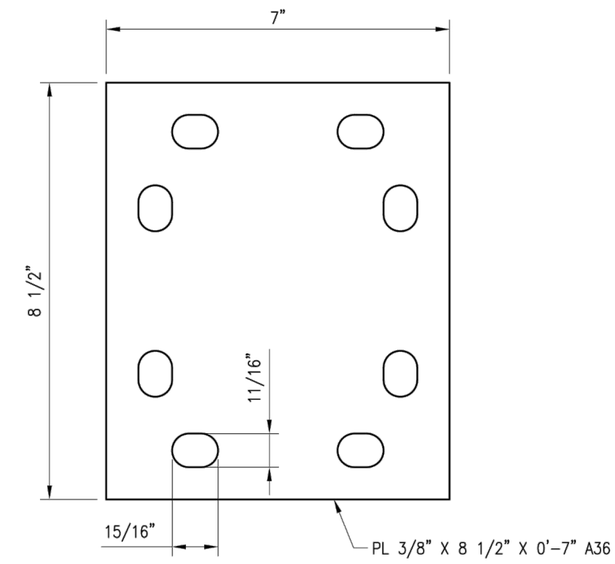

PL375-857

NOTES:
1. HOT-DIPPED GALVANIZED PER ASTM A123.

VZWSMART-MSK1 (CROSSOVER PLATE)

ITEM NO.	QTY.	PART NO.	DESCRIPTION	SHEET #	WT
1	1	PL375-857	PL 3/8" X 8 1/2" X 0'-7" A36	MSK1-F1	6
2	4	MS02-625-300-500	RU-BOLT 5/8" X 3" I.W. X 5" I.L. A36 (OR EQUIV.)	RBC-1	5
3	8	FW-625	5/8" HDG USS FLAT WASHER	---	1
4	8	LW-625	5/8" HDG LOCK WASHER	---	0
5	8	NUT-625	5/8" HDG HEX NUT	---	1
				GALVANIZED WT	14

VzW
SMART Tool©
Vendor

verizon

DRAWN BY: H.R | CHECKED BY: HMA

REV.	DESCRIPTION	BY	DATE
0	FIRST ISSUE	H.R	05/08/20

SHEET TITLE:
VZWSMART-MSK1
CROSSOVER PLATE

SHEET NUMBER: VZWSMART-MSK1

REV #: 0

PARTS LIST						
ITEM	QTY	PART NO.	PART DESCRIPTION	LENGTH	UNIT WT.	NET WT.
1	3	X-LWRM	RING MOUNT WELDMENT		68.81	206.42
2	3	X-TBW	T-BRACKET WELDMENT		13.60	40.80
3	6	X-254924	DIAGONAL ANGLE - SITE PRO 1	72 in	19.71	118.24
4	12	X-STU	STIFF ARM CHANNEL BRACKET	8 1/2 in	1.37	16.46
5	6	SHCM-T	CHAIN MOUNT TIGHTENER BRACKET	3 in	1.86	11.15
6	12	G12112	1/2" x 1-1/2" HDG HEX BOLT GR5	1/2 in	0.15	1.77
7	3	G12212	1/2" x 2-1/2" HDG HEX BOLT GR5	2 1/2 in	0.20	0.61
8	12	G12065	1/2" x 6-1/2" HDG HEX BOLT GR5 FULL THREAD	6 1/2 in	0.41	4.91
9	24	G12FW	1/2" HDG USS FLATWASHER	3/32 in	0.03	0.82
10	27	G12LW	1/2" HDG LOCKWASHER	1/8 in	0.01	0.38
11	27	G12NUT	1/2" HDG HEAVY 2H HEX NUT		0.07	1.93
12	12	A582114	5/8" x 2-1/4" HDG A325 HEX BOLT	2 1/4 in	0.31	3.75
13	9	G58R-24	5/8" x 24" THREADED ROD (HDG.)	24 in	0.40	3.59
13	9	G58R-48	5/8" x 48" THREADED ROD (HDG.)	48 in	0.40	3.59
14	30	G58LW	5/8" HDG LOCKWASHER		0.03	0.78
15	30	G58NUT	5/8" HDG HEAVY 2H HEX NUT		0.13	3.90
					TOTAL WT. #	642.04

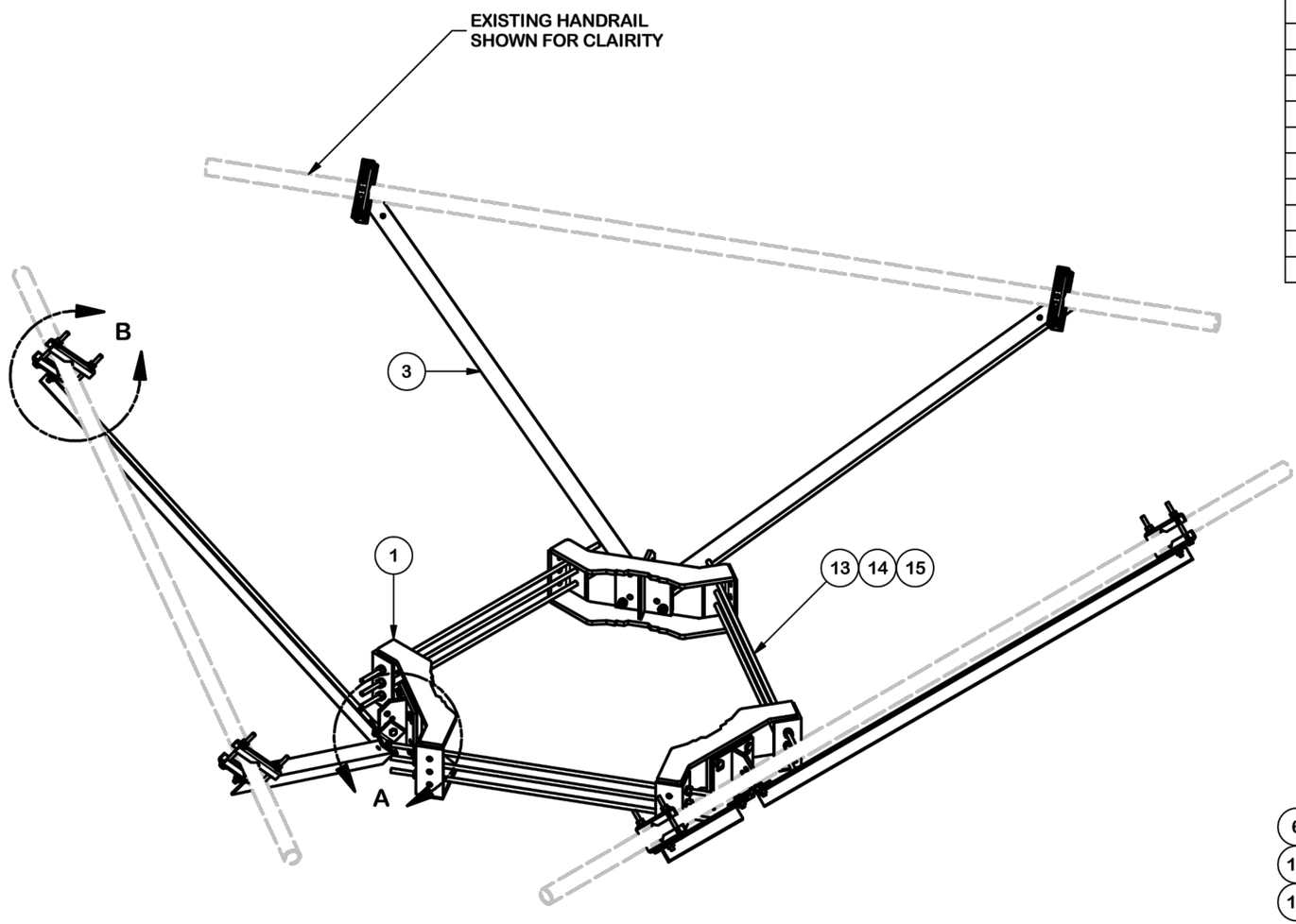

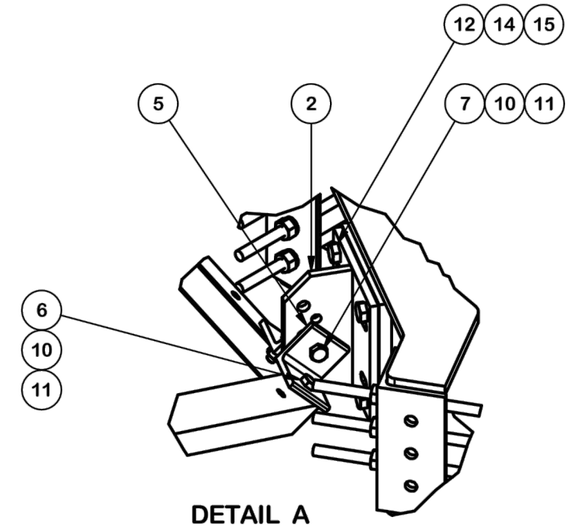

DETAIL A

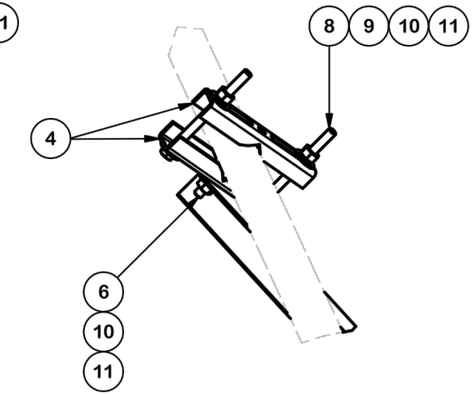

DETAIL B

REV	DESCRIPTION OF REVISIONS	CPD	BY	DATE
A	CHANGED MAX. DIA. FOR HANDRAIL CONNECTION	SP1	BC	10/25/2017

REVISION HISTORY

TOLERANCE NOTES

TOLERANCES ON DIMENSIONS, UNLESS OTHERWISE NOTED ARE:
SAWED, SHEARED AND GAS CUT EDGES (± 0.030")
DRILLED AND GAS CUT HOLES (± 0.030") - NO CONING OF HOLES
LASER CUT EDGES AND HOLES (± 0.010") - NO CONING OF HOLES
BENDS ARE ± 1/2 DEGREE
ALL OTHER MACHINING (± 0.030")
ALL OTHER ASSEMBLY (± 0.060")

PROPRIETARY NOTE:
THE DATA AND TECHNIQUES CONTAINED IN THIS DRAWING ARE PROPRIETARY INFORMATION OF VALMONT INDUSTRIES AND CONSIDERED A TRADE SECRET. ANY USE OR DISCLOSURE WITHOUT THE CONSENT OF VALMONT INDUSTRIES IS STRICTLY PROHIBITED.

DESCRIPTION
HANDRAIL REINFORCEMENT KIT (LONG)

CPD NO.	DRAWN BY	ENG. APPROVAL	PART NO.
SP1	CSL3 2/23/2017	3RD PARTY	PRK-SFS-L

CLASS	SUB	DRAWING USAGE	CHECKED BY	DWG. NO.
81	02	SHOP	BMC 9/8/2017	PRK-SFS-L

SITE PRO 1
A valmont COMPANY
Engineering Support Team:
1-888-753-7446
Locations:
New York, NY
Atlanta, GA
Los Angeles, CA
Plymouth, IN
Salem, OR
Dallas, TX

Exhibit D

Structural Analysis Report

Date: **May 12, 2021**

Tower Engineering Professionals
326 Tryon Road
Raleigh, NC 27603
(919) 661-6351

Subject: Structural Analysis Report

Carrier Designation:	***Verizon Wireless* Co-Locate**	
	Site Number:	467557
	Site Name:	WOODBURY N CT
Crown Castle Designation:	**BU Number:**	876379
	Site Name:	N. WOODBURY / WOLFF PARCEL
	JDE Job Number:	644658
	Work Order Number:	1958003
	Order Number:	552711 Rev. 0
Engineering Firm Designation:	**TEP Project Number:**	25647.541989
Site Data:	**1440 Main Street North, Woodbury, Litchfield County, CT 06798** **Latitude *41° 35' 23.81"*, Longitude *-73° 10' 11.52"*** **163 Foot - Monopole Tower**	

Tower Engineering Professionals is pleased to submit this **"Structural Analysis Report"** to determine the structural integrity of the above-mentioned tower.

The purpose of the analysis is to determine acceptability of the tower stress level. Based on our analysis we have determined the tower stress level for the structure and foundation, under the following load case, to be:

LC7: Proposed Equipment Configuration **Sufficient Capacity – 48.9%**

This analysis utilizes an ultimate 3-second gust wind speed of 120 mph as required by the 2018 Connecticut State Building Code. Applicable Standard references and design criteria are listed in Section 2 - Analysis Criteria.

Structural analysis prepared by: Sean Arsenault, C.W.I. / DEN

Respectfully submitted by:

Aaron T. Rucker, P.E.

STATE OF CONNECTICUT
AARON THOMAS RUCKER
32608
LICENSED
PROFESSIONAL ENGINEER

Electronic Copy

TABLE OF CONTENTS

1) INTRODUCTION

2) ANALYSIS CRITERIA
Table 1 - Proposed Equipment Configuration
Table 2 - Other Considered Equipment

3) ANALYSIS PROCEDURE
Table 3 - Documents Provided
3.1) Analysis Method
3.2) Assumptions

4) ANALYSIS RESULTS
Table 4 - Section Capacity (Summary)
Table 5 - Tower Component Stresses vs. Capacity
4.1) Recommendations

5) APPENDIX A
tnxTower Output

6) APPENDIX B
Base Level Drawing

7) APPENDIX C
Additional Calculations

1) INTRODUCTION

This tower is a 163-ft monopole tower designed by Engineered Endeavors, Inc.

2) ANALYSIS CRITERIA

TIA-222 Revision:	TIA-222-H
Risk Category:	II
Wind Speed:	120 mph
Exposure Category:	C
Topographic Factor:	1.0
Ice Thickness:	1.5 in
Wind Speed with Ice:	50 mph
Service Wind Speed:	60 mph

Table 1 - Proposed Equipment Configuration

Mounting Level (ft)	Center Line Elevation (ft)	Number of Antennas	Antenna Manufacturer	Antenna Model	Number of Feed Lines	Feed Line Size (in)
148.0	150.0	6	Antel	LPA-80080/6CF w/ Mount Pipe	7	1-5/8
		6	Andrew	SBNHH-1D65B w/ Mount Pipe		
		3	VZW	Sub6 Antenna - VZS01 w/ Mount Pipe		
		1	RFS Celwave	DB-C1-12C-24AB-0Z		
		3	Samsung Telecom.	RFV01U-D1A		
		3	Samsung Telecom.	RFV01U-D2A		
	148.0	1	Tower Mounts	Platform Mount [LP 401-1]		

Table 2 - Other Considered Equipment

Mounting Level (ft)	Center Line Elevation (ft)	Number of Antennas	Antenna Manufacturer	Antenna Model	Number of Feed Lines	Feed Line Size (in)
160.0	171.0	1	Sinclair	SC229-SFXLDF	1	1/2
	160.0	1	Tower Mounts	Pipe Mount [PM 601-1]		
156.0	158.0	3	RFS Celwave	APX16DWV-16DWV-S-E-A20 w/ Mount Pipe	4	1-5/8
		3	RFS Celwave	APXVAALL24_43-U-NA20_TMO w/ Mount Pipe		
		3	Ericsson	AIR6449 B41_T-MOBILE w/ Mount Pipe		
		3	Ericsson	RADIO 4415 B66A_CCIV3		
		3	Ericsson	RADIO 4449 B71 B85A_T-MOBILE		
		3	Ericsson	RADIO 4424 B25_TMO		
	156.0	1	Tower Mounts	Platform Mount [LP 602-1]		
141.0	142.0	12	Decibel	DB846G90A-XY w/ Mount Pipe	12	1-5/8
	141.0	1	Tower Mounts	Platform Mount [LP 303-1]		

Mounting Level (ft)	Center Line Elevation (ft)	Number of Antennas	Antenna Manufacturer	Antenna Model	Number of Feed Lines	Feed Line Size (in)
120.0	121.0	6	Ericsson	TME-RRUS-11	-	-
118.0	119.0	3	Powerwave Technologies	7770.00 w/ Mount Pipe	2 4 12	3/8 7/8 1-5/8
		6	Commscope	NNHH-65B-R4 w/ Mount Pipe		
		3	Ericsson	RRUS 4478 B14		
		3	Powerwave Technologies	TT19-08BP111-001		
		3	Ericsson	RRUS 4449 B5/B12		
		3	Ericsson	RRUS 8843 B2/B66A		
		1	Raycap	DC6-48-60-18-8F		
		1	Raycap	DC6-48-60-0-8C-EV		
	118.0	1	Tower Mounts	Platform Mount [LP 401-1_KCKR]		
		1	Tower Mounts	Miscellaneous [NA 510-1]		
108.0	110.0	1	Telewave	ANT150D6-9	1	1/2
22.0	24.0	1	Lucent	KS24019-L112A	1	1/2
	22.0	1	Tower Mounts	Side Arm Mount [SO 701-1]		

3) ANALYSIS PROCEDURE

Table 3 - Documents Provided

Document	Reference	Source
Geotechnical Report	1531966	CCISites
Tower Foundation Drawings	1614612	CCISites
Tower Manufacturer Drawings	1613543	CCISites

3.1) Analysis Method

tnxTower (version 8.0.9.0), a commercially available analysis software package, was used to create a three-dimensional model of the tower and calculate member stresses for various loading cases. Selected output from the analysis is included in Appendix A. When applicable, Crown Castle has calculated and provided the effective area for panel antennas using approved methods following the intent of the TIA-222 Standard.

3.2) Assumptions

1) The tower and structures were maintained in accordance with the TIA-222 Standard.
2) The configuration of antennas, transmission cables, mounts and other appurtenances are as specified in Tables 1 and 2, and the referenced drawings.

This analysis may be affected if any assumptions are not valid or have been made in error. Tower Engineering Professionals should be notified to determine the effect on the structural integrity of the tower.

4) ANALYSIS RESULTS

Table 4 - Section Capacity (Summary)

Section No.	Elevation (ft)	Component Type	Size	Critical Element	P (k)	ΦP_{allow} (k)	% Capacity	Pass / Fail
L1	163.007 - 121.587	Pole	TP42.37x34.28x0.3125	1	-15.44	2492.97	17.4	Pass
L2	121.587 - 84.67	Pole	TP48.83x40.6057x0.375	2	-30.45	3448.83	34.2	Pass
L3	84.67 - 42.2067	Pole	TP56.25x46.7975x0.4375	3	-46.20	4636.15	43.8	Pass
L4	42.2067 - 0	Pole	TP63.5x53.916x0.5	4	-70.51	6141.33	48.9	Pass
							Summary	
						Pole (L4)	48.9	Pass
						RATING =	**48.9**	**Pass**

Table 5 - Tower Component Stresses vs. Capacity - LC7

Notes	Component	Elevation (ft)	% Capacity	Pass / Fail
1,2	Anchor Rods	-	50.6	Pass
1,2	Base Plate	-	48.2	Pass
1,2	Base Foundation Soil Interaction	-	26.7	Pass
1,2	Base Foundation Structural	-	48.2	Pass

Structure Rating (max from all components) =	**48.9%**

Notes:
1) See additional documentation in "Appendix C - Additional Calculations" for calculations supporting the % capacity listed.
2) Rating per TIA-222-H Section 15.5

4.1) Recommendations

1) The tower and its foundation have sufficient capacity to carry the proposed load configuration. No modifications are required at this time.

APPENDIX A

TNXTOWER OUTPUT

Section	Length (ft)	Number of Sides	Thickness (in)	Socket Length (ft)	Top Dia (in)	Bot Dia (in)	Grade	Weight (K)
1	41.42	18	0.3125	5.83	34.2800	42.3700	A572-65	5.3
2	42.75	18	0.3750	6.67	40.6057	48.8300		7.7
3	49.13	18	0.4375	7.58	46.7975	56.2500		11.9
4	49.79	18	0.5000		53.9160	63.5000		15.7
								40.5

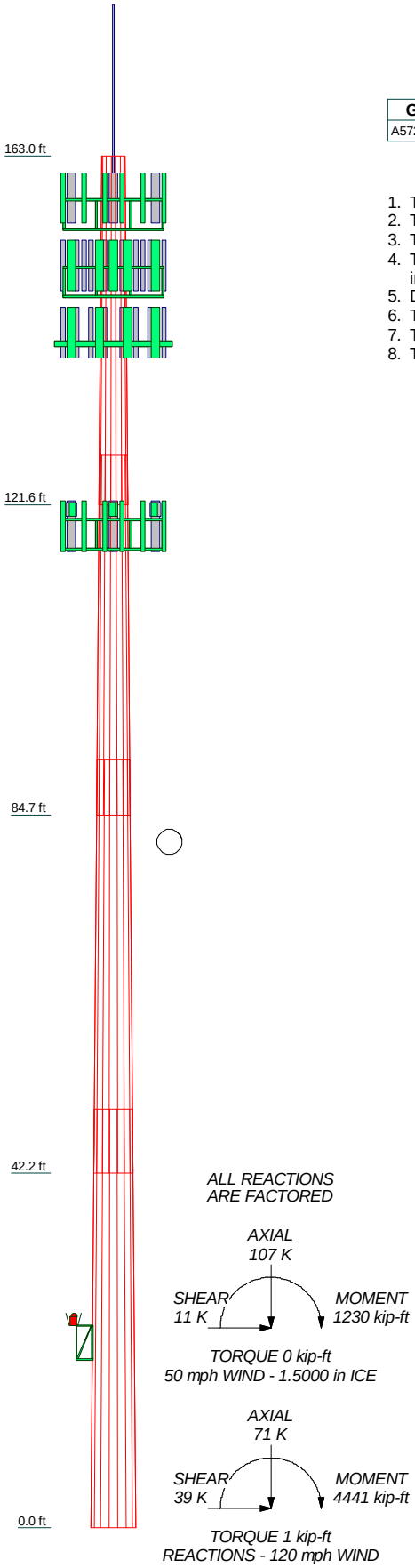

MATERIAL STRENGTH

GRADE	Fy	Fu	GRADE	Fy	Fu
A572-65	65 ksi	80 ksi			

TOWER DESIGN NOTES

1. Tower is located in Litchfield County, Connecticut.
2. Tower designed for Exposure C to the TIA-222-H Standard.
3. Tower designed for a 120 mph basic wind in accordance with the TIA-222-H Standard.
4. Tower is also designed for a 50 mph basic wind with 1.50 in ice. Ice is considered to increase in thickness with height.
5. Deflections are based upon a 60 mph wind.
6. Tower Risk Category II.
7. Topographic Category 1 with Crest Height of 0.00 ft
8. TOWER RATING: 48.9%

Tower Engineering Professionals, Inc.

Tower Engineering Professionals, Inc.
326 Tryon Road
Raliegh, NC 27603
Phone: (919) 661-6351
FAX: (919) 661-6350

Job:	***N. Woodbury / Wolff Parcel (BU 876379)***		
Project:	***TEP No. 25647.541989***		
Client: Crown Castle	Drawn by: EJB	App'd:	
Code: TIA-222-H	Date: 05/12/21	Scale: NTS	
Path: C:\Users\ebosshart\Desktop\N Woodbury SA Review (BU 876379)\tnxTower\876379_1958003_LC7.eri		Dwg No. E-1	

Tower Input Data

The tower is a monopole.
This tower is designed using the TIA-222-H standard.
The following design criteria apply:

Tower is located in Litchfield County, Connecticut.
Tower base elevation above sea level: 490.00 ft.
Basic wind speed of 120 mph.
Risk Category II.
Exposure Category C.
Simplified Topographic Factor Procedure for wind speed-up calculations is used.
Topographic Category: 1.
Crest Height: 0.00 ft.
Nominal ice thickness of 1.5000 in.
Ice thickness is considered to increase with height.
Ice density of 56 pcf.
A wind speed of 50 mph is used in combination with ice.
Temperature drop of 50 °F.
Deflections calculated using a wind speed of 60 mph.
A non-linear (P-delta) analysis was used.
Pressures are calculated at each section.
Stress ratio used in pole design is 1.
Tower analysis based on target reliabilities in accordance with Annex S.
Load Modification Factors used: $K_{es}(F_w) = 0.95$, $K_{es}(t_i) = 0.85$.
Maximum demand-capacity ratio is: 1.05.
Local bending stresses due to climbing loads, feed line supports, and appurtenance mounts are not considered.

Options

Consider Moments - Legs
Consider Moments - Horizontals
Consider Moments - Diagonals
Use Moment Magnification
√ Use Code Stress Ratios
√ Use Code Safety Factors - Guys
Escalate Ice
Always Use Max Kz
Use Special Wind Profile
Include Bolts In Member Capacity
Leg Bolts Are At Top Of Section
Secondary Horizontal Braces Leg
Use Diamond Inner Bracing (4 Sided)
SR Members Have Cut Ends
SR Members Are Concentric

Distribute Leg Loads As Uniform
Assume Legs Pinned
√ Assume Rigid Index Plate
√ Use Clear Spans For Wind Area
Use Clear Spans For KL/r
Retension Guys To Initial Tension
√ Bypass Mast Stability Checks
√ Use Azimuth Dish Coefficients
√ Project Wind Area of Appurt.
Autocalc Torque Arm Areas
Add IBC .6D+W Combination
√ Sort Capacity Reports By Component
Triangulate Diamond Inner Bracing
Treat Feed Line Bundles As Cylinder
Ignore KL/ry For 60 Deg. Angle Legs

Use ASCE 10 X-Brace Ly Rules
Calculate Redundant Bracing Forces
Ignore Redundant Members in FEA
SR Leg Bolts Resist Compression
All Leg Panels Have Same Allowable
Offset Girt At Foundation
√ Consider Feed Line Torque
Include Angle Block Shear Check
Use TIA-222-H Bracing Resist. Exemption
Use TIA-222-H Tension Splice Exemption

Poles

√ Include Shear-Torsion Interaction
Always Use Sub-Critical Flow
Use Top Mounted Sockets
Pole Without Linear Attachments
Pole With Shroud Or No Appurtenances
Outside and Inside Corner Radii Are Known

Tapered Pole Section Geometry

Section	Elevation ft	Section Length ft	Splice Length ft	Number of Sides	Top Diameter in	Bottom Diameter in	Wall Thickness in	Bend Radius in	Pole Grade
L1	163.01-121.59	41.42	5.83	18	34.2800	42.3700	0.3125	1.2500	A572-65 (65 ksi)
L2	121.59-84.67	42.75	6.67	18	40.6057	48.8300	0.3750	1.5000	A572-65 (65 ksi)
L3	84.67-42.21	49.13	7.58	18	46.7975	56.2500	0.4375	1.7500	A572-65 (65 ksi)
L4	42.21-0.00	49.79		18	53.9160	63.5000	0.5000	2.0000	A572-65 (65 ksi)

Tapered Pole Properties

Section	Tip Dia. in	Area in^2	I in^4	r in	C in	I/C in^3	J in^4	It/Q in^2	w in	w/t
L1	34.7606	33.6915	4911.1720	12.0585	17.4142	282.0205	9828.8063	16.8490	5.4833	17.546
	42.9754	41.7158	9322.3361	14.9304	21.5240	433.1144	18656.9387	20.8619	6.9071	22.103
L2	42.3138	47.8845	9791.4488	14.2819	20.6277	474.6754	19595.7813	23.9468	6.4866	17.298
	49.5254	57.6736	17107.6924	17.2015	24.8056	689.6695	34237.8956	28.8423	7.9341	21.158
L3	48.7543	64.3766	17480.3988	16.4578	23.7731	735.3015	34983.7987	32.1944	7.4664	17.066
	57.0503	77.5026	30501.1953	19.8134	28.5750	1067.4084	61042.5248	38.7587	9.1300	20.869
L4	56.1528	84.7712	30558.2087	18.9627	27.3893	1115.6981	61156.6267	42.3936	8.6092	17.218
	64.4025	99.9810	50134.4235	22.3650	32.2580	1554.1702	100334.8152	50.0000	10.2960	20.592

Tower Elevation ft	Gusset Area (per face) ft^2	Gusset Thickness in	Gusset Grade	Adjust. Factor A_f	Adjust. Factor A_r	Weight Mult.	Double Angle Stitch Bolt Spacing Diagonals in	Double Angle Stitch Bolt Spacing Horizontals in	Double Angle Stitch Bolt Spacing Redundants in
L1 163.01-121.59				1	1	1			
L2 121.59-84.67				1	1	1			
L3 84.67-42.21				1	1	1			
L4 42.21-0.00				1	1	1			

Feed Line/Linear Appurtenances - Entered As Round Or Flat

Description	Sector	Exclude From Torque Calculation	Component Type	Placement ft	Total Number	Number Per Row	Start/End Position	Width or Diameter in	Perimeter in	Weight plf
****** Safety Line 3/8 ******	C	No	Surface Ar (CaAa)	163.00 - 0.00	1	1	-0.167 -0.167	0.3750		0.22
****** LDF4-50A(1/2) ******	C	No	Surface Ar (CaAa)	22.00 - 0.00	1	1	0.167 0.167	0.6250		0.15

Feed Line/Linear Appurtenances - Entered As Area

Description	Face or Leg	Allow Shield	Exclude From Torque Calculation	Component Type	Placement ft	Total Number		C_AA_A ft^2/ft	Weight plf
******									
LDF4-50A(1/2)	B	No	No	Inside Pole	160.00 - 0.00	1	No Ice	0.00	0.15
							1/2" Ice	0.00	0.15
							1" Ice	0.00	0.15
							2" Ice	0.00	0.15
******									
***									
HB158-21U6S24-xx M_TMO(1-5/8)	A	No	No	Inside Pole	156.00 - 0.00	4	No Ice	0.00	2.50
							1/2" Ice	0.00	2.50
							1" Ice	0.00	2.50
							2" Ice	0.00	2.50
******									
LDF7-50A(1-5/8)	A	No	No	Inside Pole	148.00 - 0.00	6	No Ice	0.00	0.82
							1/2" Ice	0.00	0.82
							1" Ice	0.00	0.82
							2" Ice	0.00	0.82
HB158-1-08U8-S8J 18(1-5/8)	A	No	No	Inside Pole	148.00 - 0.00	1	No Ice	0.00	1.30
							1/2" Ice	0.00	1.30
							1" Ice	0.00	1.30
							2" Ice	0.00	1.30
******									
LDF7-50A(1-5/8)	A	No	No	Inside Pole	141.00 - 0.00	12	No Ice	0.00	0.82
							1/2" Ice	0.00	0.82
							1" Ice	0.00	0.82
							2" Ice	0.00	0.82
******									
2" Flexible Conduit	C	No	No	Inside Pole	118.00 - 0.00	2	No Ice	0.00	0.34
							1/2" Ice	0.00	0.34
							1" Ice	0.00	0.34
							2" Ice	0.00	0.34
FB-L98B-002-75000 (3/8)	C	No	No	Inside Pole	118.00 - 0.00	1	No Ice	0.00	0.06
							1/2" Ice	0.00	0.06
							1" Ice	0.00	0.06
							2" Ice	0.00	0.06
FB-L98B-034-XXX(3/8")	C	No	No	Inside Pole	118.00 - 0.00	1	No Ice	0.00	0.06
							1/2" Ice	0.00	0.06
							1" Ice	0.00	0.06
							2" Ice	0.00	0.06
WR-VG66ST-BRD(7/8)	C	No	No	Inside Pole	118.00 - 0.00	2	No Ice	0.00	0.91
							1/2" Ice	0.00	0.91
							1" Ice	0.00	0.91
							2" Ice	0.00	0.91
WR-VG86ST-BRD A(7/8)	C	No	No	Inside Pole	118.00 - 0.00	2	No Ice	0.00	0.68
							1/2" Ice	0.00	0.68
							1" Ice	0.00	0.68
							2" Ice	0.00	0.68
LCF158-50A(1-5/8)	C	No	No	Inside Pole	118.00 - 0.00	12	No Ice	0.00	0.80
							1/2" Ice	0.00	0.80
							1" Ice	0.00	0.80
							2" Ice	0.00	0.80
******									
LDF4-50A(1/2)	B	No	No	Inside Pole	108.00 - 0.00	1	No Ice	0.00	0.15
							1/2" Ice	0.00	0.15
							1" Ice	0.00	0.15

Description	Face or Leg	Allow Shield	Exclude From Torque Calculation	Component Type	Placement ft	Total Number		C_AA_A ft^2/ft	Weight plf
******							2" Ice	0.00	0.15

Feed Line/Linear Appurtenances Section Areas

Tower Section	Tower Elevation ft	Face	A_R ft^2	A_F ft^2	C_AA_A In Face ft^2	C_AA_A Out Face ft^2	Weight K
L1	163.01-121.59	A	0.000	0.000	0.000	0.000	0.70
		B	0.000	0.000	0.000	0.000	0.01
		C	0.000	0.000	1.553	0.000	0.01
L2	121.59-84.67	A	0.000	0.000	0.000	0.000	0.96
		B	0.000	0.000	0.000	0.000	0.01
		C	0.000	0.000	1.384	0.000	0.46
L3	84.67-42.21	A	0.000	0.000	0.000	0.000	1.11
		B	0.000	0.000	0.000	0.000	0.01
		C	0.000	0.000	1.592	0.000	0.59
L4	42.21-0.00	A	0.000	0.000	0.000	0.000	1.10
		B	0.000	0.000	0.000	0.000	0.01
		C	0.000	0.000	2.958	0.000	0.59

Feed Line/Linear Appurtenances Section Areas - With Ice

Tower Section	Tower Elevation ft	Face or Leg	Ice Thickness in	A_R ft^2	A_F ft^2	C_AA_A In Face ft^2	C_AA_A Out Face ft^2	Weight K
L1	163.01-121.59	A	1.475	0.000	0.000	0.000	0.000	0.70
		B		0.000	0.000	0.000	0.000	0.01
		C		0.000	0.000	13.770	0.000	0.15
L2	121.59-84.67	A	1.428	0.000	0.000	0.000	0.000	0.96
		B		0.000	0.000	0.000	0.000	0.01
		C		0.000	0.000	12.275	0.000	0.58
L3	84.67-42.21	A	1.361	0.000	0.000	0.000	0.000	1.11
		B		0.000	0.000	0.000	0.000	0.01
		C		0.000	0.000	13.724	0.000	0.72
L4	42.21-0.00	A	1.221	0.000	0.000	0.000	0.000	1.10
		B		0.000	0.000	0.000	0.000	0.01
		C		0.000	0.000	20.431	0.000	0.78

Feed Line Center of Pressure

Section	Elevation ft	CP_X in	CP_Z in	CP_X Ice in	CP_Z Ice in
L1	163.01-121.59	0.1035	0.2838	0.4883	1.3388
L2	121.59-84.67	0.1036	0.2841	0.4992	1.3686
L3	84.67-42.21	0.1037	0.2843	0.4943	1.3552

Section	Elevation ft	CP_X in	CP_Z in	CP_X Ice in	CP_Z Ice in
L4	42.21-0.00	0.0102	0.5359	0.1954	2.0397

Note: For pole sections, center of pressure calculations do not consider feed line shielding.

Shielding Factor Ka

Tower Section	Feed Line Record No.	Description	Feed Line Segment Elev.	K_a No Ice	K_a Ice
L1	2	Safety Line 3/8	121.59 - 163.00	1.0000	1.0000
L2	2	Safety Line 3/8	84.67 - 121.59	1.0000	1.0000
L3	2	Safety Line 3/8	42.21 - 84.67	1.0000	1.0000
L4	2	Safety Line 3/8	0.00 - 42.21	1.0000	1.0000
L4	26	LDF4-50A(1/2)	0.00 - 22.00	1.0000	1.0000

Discrete Tower Loads

Description	Face or Leg	Offset Type	Offsets: Horz Lateral Vert ft ft ft	Azimuth Adjustment °	Placement ft		C_AA_A Front ft^2	C_AA_A Side ft^2	Weight K
******									
SC229-SFXLDF	A	From Leg	1.00 0.00 11.00	0.0000	160.00	No Ice 1/2" Ice 1" Ice 2" Ice	5.95 7.97 10.00 14.12	5.95 7.97 10.00 14.12	0.03 0.07 0.13 0.28
Pipe Mount [PM 601-1]	A	From Leg	0.50 0.00 0.00	0.0000	160.00	No Ice 1/2" Ice 1" Ice 2" Ice	1.32 1.58 1.84 2.40	1.32 1.58 1.84 2.40	0.07 0.08 0.09 0.13
******									
APX16DWV-16DWV-S-E-A 20 w/ Mount Pipe	A	From Centroid-Leg	4.00 0.00 2.00	0.0000	156.00	No Ice 1/2" Ice 1" Ice 2" Ice	6.29 6.86 7.45 8.68	2.76 3.27 3.79 4.90	0.06 0.11 0.16 0.29
APX16DWV-16DWV-S-E-A 20 w/ Mount Pipe	B	From Centroid-Leg	4.00 0.00 2.00	0.0000	156.00	No Ice 1/2" Ice 1" Ice 2" Ice	6.29 6.86 7.45 8.68	2.76 3.27 3.79 4.90	0.06 0.11 0.16 0.29
APX16DWV-16DWV-S-E-A 20 w/ Mount Pipe	C	From Centroid-Leg	4.00 0.00 2.00	0.0000	156.00	No Ice 1/2" Ice 1" Ice 2" Ice	6.29 6.86 7.45 8.68	2.76 3.27 3.79 4.90	0.06 0.11 0.16 0.29
APXVAALL24_43-U-NA20	A	From	4.00	0.0000	156.00	No Ice	14.69	6.87	0.18

Description	Face or Leg	Offset Type	Offsets: Horz Lateral Vert ft ft ft	Azimuth Adjustment °	Placement ft		C_AA_A Front ft^2	C_AA_A Side ft^2	Weight K
_TMO w/ Mount Pipe		Centroid-Le	0.00			1/2" Ice	15.46	7.55	0.31
		g	2.00			1" Ice	16.23	8.25	0.45
						2" Ice	17.82	9.67	0.78
APXVAALL24_43-U-NA20	B	From	4.00	0.0000	156.00	No Ice	14.69	6.87	0.18
_TMO w/ Mount Pipe		Centroid-Le	0.00			1/2" Ice	15.46	7.55	0.31
		g	2.00			1" Ice	16.23	8.25	0.45
						2" Ice	17.82	9.67	0.78
APXVAALL24_43-U-NA20	C	From	4.00	0.0000	156.00	No Ice	14.69	6.87	0.18
_TMO w/ Mount Pipe		Centroid-Le	0.00			1/2" Ice	15.46	7.55	0.31
		g	2.00			1" Ice	16.23	8.25	0.45
						2" Ice	17.82	9.67	0.78
AIR6449 B41_T-MOBILE	A	From	4.00	0.0000	156.00	No Ice	5.19	2.71	0.13
w/ Mount Pipe		Centroid-Le	0.00			1/2" Ice	5.59	3.04	0.17
		g	2.00			1" Ice	6.02	3.38	0.23
						2" Ice	6.90	4.12	0.35
AIR6449 B41_T-MOBILE	B	From	4.00	0.0000	156.00	No Ice	5.19	2.71	0.13
w/ Mount Pipe		Centroid-Le	0.00			1/2" Ice	5.59	3.04	0.17
		g	2.00			1" Ice	6.02	3.38	0.23
						2" Ice	6.90	4.12	0.35
AIR6449 B41_T-MOBILE	C	From	4.00	0.0000	156.00	No Ice	5.19	2.71	0.13
w/ Mount Pipe		Centroid-Le	0.00			1/2" Ice	5.59	3.04	0.17
		g	2.00			1" Ice	6.02	3.38	0.23
						2" Ice	6.90	4.12	0.35
RADIO 4415 B66A_CCIV3	A	From	4.00	0.0000	156.00	No Ice	1.64	0.68	0.05
		Centroid-Le	0.00			1/2" Ice	1.80	0.79	0.06
		g	2.00			1" Ice	1.97	0.91	0.07
						2" Ice	2.32	1.18	0.11
RADIO 4415 B66A_CCIV3	B	From	4.00	0.0000	156.00	No Ice	1.64	0.68	0.05
		Centroid-Le	0.00			1/2" Ice	1.80	0.79	0.06
		g	2.00			1" Ice	1.97	0.91	0.07
						2" Ice	2.32	1.18	0.11
RADIO 4415 B66A_CCIV3	C	From	4.00	0.0000	156.00	No Ice	1.64	0.68	0.05
		Centroid-Le	0.00			1/2" Ice	1.80	0.79	0.06
		g	2.00			1" Ice	1.97	0.91	0.07
						2" Ice	2.32	1.18	0.11
RADIO 4449 B71	A	From	4.00	0.0000	156.00	No Ice	1.97	1.59	0.07
B85A_T-MOBILE		Centroid-Le	0.00			1/2" Ice	2.15	1.75	0.09
		g	2.00			1" Ice	2.33	1.92	0.12
						2" Ice	2.72	2.28	0.17
RADIO 4449 B71	B	From	4.00	0.0000	156.00	No Ice	1.97	1.59	0.07
B85A_T-MOBILE		Centroid-Le	0.00			1/2" Ice	2.15	1.75	0.09
		g	2.00			1" Ice	2.33	1.92	0.12
						2" Ice	2.72	2.28	0.17
RADIO 4449 B71	C	From	4.00	0.0000	156.00	No Ice	1.97	1.59	0.07
B85A_T-MOBILE		Centroid-Le	0.00			1/2" Ice	2.15	1.75	0.09
		g	2.00			1" Ice	2.33	1.92	0.12
						2" Ice	2.72	2.28	0.17
RADIO 4424 B25_TMO	A	From	4.00	0.0000	156.00	No Ice	2.05	1.61	0.09
		Centroid-Le	0.00			1/2" Ice	2.23	1.77	0.11
		g	2.00			1" Ice	2.42	1.94	0.13
						2" Ice	2.81	2.30	0.19
RADIO 4424 B25_TMO	B	From	4.00	0.0000	156.00	No Ice	2.05	1.61	0.09
		Centroid-Le	0.00			1/2" Ice	2.23	1.77	0.11
		g	2.00			1" Ice	2.42	1.94	0.13
						2" Ice	2.81	2.30	0.19
RADIO 4424 B25_TMO	C	From	4.00	0.0000	156.00	No Ice	2.05	1.61	0.09
		Centroid-Le	0.00			1/2" Ice	2.23	1.77	0.11

Description	Face or Leg	Offset Type	Offsets: Horz Lateral Vert ft ft ft	Azimuth Adjustment °	Placement ft		C_AA_A Front ft^2	C_AA_A Side ft^2	Weight K
		g	2.00			1" Ice	2.42	1.94	0.13
						2" Ice	2.81	2.30	0.19
Platform Mount [LP 602-1]	C	None		0.0000	156.00	No Ice	31.07	31.07	1.34
						1/2" Ice	34.82	34.82	1.97
						1" Ice	38.48	38.48	2.67
						2" Ice	45.60	45.60	4.31
8' Ladder	C	From	2.00	0.0000	156.00	No Ice	1.53	5.33	0.10
		Centroid-Fa	0.00			1/2" Ice	4.36	8.08	0.11
		ce	-4.00			1" Ice	7.19	10.83	0.13
						2" Ice	12.86	16.33	0.16
2.4" Dia. x 6-ft	A	From	4.00	0.0000	156.00	No Ice	1.43	1.43	0.02
		Centroid-Le	0.00			1/2" Ice	1.92	1.92	0.03
		g	0.00			1" Ice	2.29	2.29	0.05
						2" Ice	3.06	3.06	0.09
2.4" Dia. x 6-ft	B	From	4.00	0.0000	156.00	No Ice	1.43	1.43	0.02
		Centroid-Le	0.00			1/2" Ice	1.92	1.92	0.03
		g	0.00			1" Ice	2.29	2.29	0.05
						2" Ice	3.06	3.06	0.09
2.4" Dia. x 6-ft	C	From	4.00	0.0000	156.00	No Ice	1.43	1.43	0.02
		Centroid-Le	0.00			1/2" Ice	1.92	1.92	0.03
		g	0.00			1" Ice	2.29	2.29	0.05
						2" Ice	3.06	3.06	0.09
******									
LPA-80080/6CF w/ Mount	A	From	4.00	0.0000	148.00	No Ice	4.93	10.92	0.07
Pipe		Centroid-Fa	0.00			1/2" Ice	5.58	12.21	0.14
		ce	2.00			1" Ice	6.16	13.16	0.22
						2" Ice	7.33	15.11	0.41
(2) LPA-80080/6CF w/	B	From	4.00	0.0000	148.00	No Ice	4.93	10.92	0.07
Mount Pipe		Centroid-Fa	0.00			1/2" Ice	5.58	12.21	0.14
		ce	2.00			1" Ice	6.16	13.16	0.22
						2" Ice	7.33	15.11	0.41
(3) LPA-80080/6CF w/	C	From	4.00	0.0000	148.00	No Ice	4.93	10.92	0.07
Mount Pipe		Centroid-Fa	0.00			1/2" Ice	5.58	12.21	0.14
		ce	2.00			1" Ice	6.16	13.16	0.22
						2" Ice	7.33	15.11	0.41
(3) SBNHH-1D65B w/	A	From	4.00	0.0000	148.00	No Ice	4.09	3.30	0.07
Mount Pipe		Centroid-Fa	0.00			1/2" Ice	4.49	3.68	0.13
		ce	2.00			1" Ice	4.89	4.07	0.20
						2" Ice	5.72	4.87	0.39
(2) SBNHH-1D65B w/	B	From	4.00	0.0000	148.00	No Ice	4.09	3.30	0.07
Mount Pipe		Centroid-Fa	0.00			1/2" Ice	4.49	3.68	0.13
		ce	2.00			1" Ice	4.89	4.07	0.20
						2" Ice	5.72	4.87	0.39
SBNHH-1D65B w/ Mount	C	From	4.00	0.0000	148.00	No Ice	4.09	3.30	0.07
Pipe		Centroid-Fa	0.00			1/2" Ice	4.49	3.68	0.13
		ce	2.00			1" Ice	4.89	4.07	0.20
						2" Ice	5.72	4.87	0.39
Sub6 Antenna - VZS01 w/	A	From	4.00	0.0000	148.00	No Ice	4.92	2.69	0.10
Mount Pipe		Centroid-Fa	0.00			1/2" Ice	5.26	3.15	0.14
		ce	2.00			1" Ice	5.62	3.63	0.19
						2" Ice	6.37	4.64	0.29
Sub6 Antenna - VZS01 w/	B	From	4.00	0.0000	148.00	No Ice	4.92	2.69	0.10
Mount Pipe		Centroid-Fa	0.00			1/2" Ice	5.26	3.15	0.14
		ce	2.00			1" Ice	5.62	3.63	0.19
						2" Ice	6.37	4.64	0.29
Sub6 Antenna - VZS01 w/	C	From	4.00	0.0000	148.00	No Ice	4.92	2.69	0.10
Mount Pipe		Centroid-Fa	0.00			1/2" Ice	5.26	3.15	0.14

Description	Face or Leg	Offset Type	Offsets: Horz Lateral Vert ft ft ft	Azimuth Adjustment °	Placement ft		C_AA_A Front ft^2	C_AA_A Side ft^2	Weight K
		ce	2.00			1" Ice	5.62	3.63	0.19
						2" Ice	6.37	4.64	0.29
DB-C1-12C-24AB-0Z	B	From	4.00	0.0000	148.00	No Ice	4.06	3.10	0.03
		Centroid-Fa	0.00			1/2" Ice	4.32	3.34	0.07
		ce	2.00			1" Ice	4.58	3.58	0.11
						2" Ice	5.14	4.09	0.20
RFV01U-D1A	A	From	4.00	0.0000	148.00	No Ice	1.88	1.25	0.08
		Centroid-Fa	0.00			1/2" Ice	2.05	1.39	0.10
		ce	2.00			1" Ice	2.22	1.54	0.12
						2" Ice	2.60	1.86	0.18
RFV01U-D1A	B	From	4.00	0.0000	148.00	No Ice	1.88	1.25	0.08
		Centroid-Fa	0.00			1/2" Ice	2.05	1.39	0.10
		ce	2.00			1" Ice	2.22	1.54	0.12
						2" Ice	2.60	1.86	0.18
RFV01U-D1A	C	From	4.00	0.0000	148.00	No Ice	1.88	1.25	0.08
		Centroid-Fa	0.00			1/2" Ice	2.05	1.39	0.10
		ce	2.00			1" Ice	2.22	1.54	0.12
						2" Ice	2.60	1.86	0.18
RFV01U-D2A	A	From	4.00	0.0000	148.00	No Ice	1.88	1.01	0.07
		Centroid-Fa	0.00			1/2" Ice	2.05	1.14	0.09
		ce	2.00			1" Ice	2.22	1.28	0.11
						2" Ice	2.60	1.59	0.15
RFV01U-D2A	B	From	4.00	0.0000	148.00	No Ice	1.88	1.01	0.07
		Centroid-Fa	0.00			1/2" Ice	2.05	1.14	0.09
		ce	2.00			1" Ice	2.22	1.28	0.11
						2" Ice	2.60	1.59	0.15
RFV01U-D2A	C	From	4.00	0.0000	148.00	No Ice	1.88	1.01	0.07
		Centroid-Fa	0.00			1/2" Ice	2.05	1.14	0.09
		ce	2.00			1" Ice	2.22	1.28	0.11
						2" Ice	2.60	1.59	0.15
Platform Mount [LP 401-1]	C	None		0.0000	148.00	No Ice	24.04	24.04	1.65
						1/2" Ice	28.93	28.93	2.17
						1" Ice	33.88	33.88	2.76
						2" Ice	43.93	43.93	4.16
******									
(4) DB846G90A-XY w/	A	From	4.00	0.0000	141.00	No Ice	3.50	5.30	0.05
Mount Pipe		Centroid-Fa	0.00			1/2" Ice	4.05	5.88	0.10
		ce	1.00			1" Ice	4.62	6.48	0.16
						2" Ice	5.81	7.71	0.32
(4) DB846G90A-XY w/	B	From	4.00	0.0000	141.00	No Ice	3.50	5.30	0.05
Mount Pipe		Centroid-Fa	0.00			1/2" Ice	4.05	5.88	0.10
		ce	1.00			1" Ice	4.62	6.48	0.16
						2" Ice	5.81	7.71	0.32
(4) DB846G90A-XY w/	C	From	4.00	0.0000	141.00	No Ice	3.50	5.30	0.05
Mount Pipe		Centroid-Fa	0.00			1/2" Ice	4.05	5.88	0.10
		ce	1.00			1" Ice	4.62	6.48	0.16
						2" Ice	5.81	7.71	0.32
Platform Mount [LP 303-1]	C	None		0.0000	141.00	No Ice	14.69	14.69	1.25
						1/2" Ice	18.01	18.01	1.57
						1" Ice	21.34	21.34	1.94
						2" Ice	28.08	28.08	2.85
******									
(2) TME-RRUS-11	A	From Leg	1.00	0.0000	120.00	No Ice	2.78	1.19	0.05
			0.00			1/2" Ice	2.99	1.33	0.07
			1.00			1" Ice	3.21	1.49	0.09
						2" Ice	3.66	1.83	0.15
(2) TME-RRUS-11	B	From Leg	1.00	0.0000	120.00	No Ice	2.78	1.19	0.05

Description	Face or Leg	Offset Type	Offsets: Horz Lateral Vert ft ft ft	Azimuth Adjustment °	Placement ft		C_AA_A Front ft^2	C_AA_A Side ft^2	Weight K
			0.00			1/2" Ice	2.99	1.33	0.07
			1.00			1" Ice	3.21	1.49	0.09
						2" Ice	3.66	1.83	0.15
(2) TME-RRUS-11	C	From Leg	1.00	0.0000	120.00	No Ice	2.78	1.19	0.05
			0.00			1/2" Ice	2.99	1.33	0.07
			1.00			1" Ice	3.21	1.49	0.09
						2" Ice	3.66	1.83	0.15
2.4" Dia. x 6-ft	A	From Leg	0.50	0.0000	120.00	No Ice	1.43	1.43	0.02
			0.00			1/2" Ice	1.92	1.92	0.03
			0.00			1" Ice	2.29	2.29	0.05
						2" Ice	3.06	3.06	0.09
2.4" Dia. x 6-ft	B	From Leg	0.50	0.0000	120.00	No Ice	1.43	1.43	0.02
			0.00			1/2" Ice	1.92	1.92	0.03
			0.00			1" Ice	2.29	2.29	0.05
						2" Ice	3.06	3.06	0.09
2.4" Dia. x 6-ft	C	From Leg	0.50	0.0000	120.00	No Ice	1.43	1.43	0.02
			0.00			1/2" Ice	1.92	1.92	0.03
			0.00			1" Ice	2.29	2.29	0.05
						2" Ice	3.06	3.06	0.09
******									
7770.00 w/ Mount Pipe	A	From Centroid-Leg	4.00	0.0000	118.00	No Ice	5.75	4.25	0.06
			0.00			1/2" Ice	6.18	5.01	0.10
			1.00			1" Ice	6.61	5.71	0.16
						2" Ice	7.49	7.16	0.29
7770.00 w/ Mount Pipe	B	From Centroid-Leg	4.00	0.0000	118.00	No Ice	5.75	4.25	0.06
			0.00			1/2" Ice	6.18	5.01	0.10
			1.00			1" Ice	6.61	5.71	0.16
						2" Ice	7.49	7.16	0.29
7770.00 w/ Mount Pipe	C	From Centroid-Leg	4.00	0.0000	118.00	No Ice	5.75	4.25	0.06
			0.00			1/2" Ice	6.18	5.01	0.10
			1.00			1" Ice	6.61	5.71	0.16
						2" Ice	7.49	7.16	0.29
(2) NNHH-65B-R4 w/ Mount Pipe	A	From Centroid-Leg	4.00	0.0000	118.00	No Ice	7.55	4.23	0.11
			0.00			1/2" Ice	8.04	4.67	0.20
			1.00			1" Ice	8.53	5.12	0.30
						2" Ice	9.56	6.05	0.53
(2) NNHH-65B-R4 w/ Mount Pipe	B	From Centroid-Leg	4.00	0.0000	118.00	No Ice	7.55	4.23	0.11
			0.00			1/2" Ice	8.04	4.67	0.20
			1.00			1" Ice	8.53	5.12	0.30
						2" Ice	9.56	6.05	0.53
(2) NNHH-65B-R4 w/ Mount Pipe	C	From Centroid-Leg	4.00	0.0000	118.00	No Ice	7.55	4.23	0.11
			0.00			1/2" Ice	8.04	4.67	0.20
			1.00			1" Ice	8.53	5.12	0.30
						2" Ice	9.56	6.05	0.53
RRUS 4478 B14	A	From Centroid-Leg	4.00	0.0000	118.00	No Ice	1.84	1.06	0.06
			0.00			1/2" Ice	2.01	1.20	0.08
			1.00			1" Ice	2.19	1.34	0.09
						2" Ice	2.57	1.66	0.14
RRUS 4478 B14	B	From Centroid-Leg	4.00	0.0000	118.00	No Ice	1.84	1.06	0.06
			0.00			1/2" Ice	2.01	1.20	0.08
			1.00			1" Ice	2.19	1.34	0.09
						2" Ice	2.57	1.66	0.14
RRUS 4478 B14	C	From Centroid-Leg	4.00	0.0000	118.00	No Ice	1.84	1.06	0.06
			0.00			1/2" Ice	2.01	1.20	0.08
			1.00			1" Ice	2.19	1.34	0.09
						2" Ice	2.57	1.66	0.14
TT19-08BP111-001	A	From	4.00	0.0000	118.00	No Ice	0.55	0.44	0.02

Description	Face or Leg	Offset Type	Offsets: Horz Lateral Vert ft ft ft	Azimuth Adjustment °	Placement ft		C_AA_A Front ft^2	C_AA_A Side ft^2	Weight K
		Centroid-Leg	0.00 1.00			1/2" Ice 1" Ice 2" Ice	0.64 0.74 0.97	0.53 0.63 0.84	0.02 0.03 0.05
TT19-08BP111-001	B	From Centroid-Leg	4.00 0.00 1.00	0.0000	118.00	No Ice 1/2" Ice 1" Ice 2" Ice	0.55 0.64 0.74 0.97	0.44 0.53 0.63 0.84	0.02 0.02 0.03 0.05
TT19-08BP111-001	C	From Centroid-Leg	4.00 0.00 1.00	0.0000	118.00	No Ice 1/2" Ice 1" Ice 2" Ice	0.55 0.64 0.74 0.97	0.44 0.53 0.63 0.84	0.02 0.02 0.03 0.05
RRUS 4449 B5/B12	A	From Centroid-Leg	4.00 0.00 1.00	0.0000	118.00	No Ice 1/2" Ice 1" Ice 2" Ice	1.97 2.14 2.33 2.72	1.41 1.56 1.73 2.07	0.07 0.09 0.11 0.16
RRUS 4449 B5/B12	B	From Centroid-Leg	4.00 0.00 1.00	0.0000	118.00	No Ice 1/2" Ice 1" Ice 2" Ice	1.97 2.14 2.33 2.72	1.41 1.56 1.73 2.07	0.07 0.09 0.11 0.16
RRUS 4449 B5/B12	C	From Centroid-Leg	4.00 0.00 1.00	0.0000	118.00	No Ice 1/2" Ice 1" Ice 2" Ice	1.97 2.14 2.33 2.72	1.41 1.56 1.73 2.07	0.07 0.09 0.11 0.16
RRUS 8843 B2/B66A	A	From Centroid-Leg	4.00 0.00 1.00	0.0000	118.00	No Ice 1/2" Ice 1" Ice 2" Ice	1.64 1.80 1.97 2.32	1.35 1.50 1.65 1.99	0.07 0.09 0.11 0.16
RRUS 8843 B2/B66A	B	From Centroid-Leg	4.00 0.00 1.00	0.0000	118.00	No Ice 1/2" Ice 1" Ice 2" Ice	1.64 1.80 1.97 2.32	1.35 1.50 1.65 1.99	0.07 0.09 0.11 0.16
RRUS 8843 B2/B66A	C	From Centroid-Leg	4.00 0.00 1.00	0.0000	118.00	No Ice 1/2" Ice 1" Ice 2" Ice	1.64 1.80 1.97 2.32	1.35 1.50 1.65 1.99	0.07 0.09 0.11 0.16
DC6-48-60-18-8F	B	From Centroid-Leg	4.00 0.00 1.00	0.0000	118.00	No Ice 1/2" Ice 1" Ice 2" Ice	1.21 1.89 2.11 2.57	1.21 1.89 2.11 2.57	0.03 0.05 0.08 0.14
DC6-48-60-0-8C-EV	C	From Centroid-Leg	4.00 0.00 1.00	0.0000	118.00	No Ice 1/2" Ice 1" Ice 2" Ice	1.14 1.79 2.00 2.45	1.14 1.79 2.00 2.45	0.03 0.05 0.07 0.13
Platform Mount [LP 401-1_KCKR]	C	None		0.0000	118.00	No Ice 1/2" Ice 1" Ice 2" Ice	35.26 43.15 51.27 68.18	35.26 43.15 51.27 68.18	1.92 2.58 3.36 5.24
Miscellaneous [NA 510-1]	C	None		0.0000	118.00	No Ice 1/2" Ice 1" Ice 2" Ice	6.36 8.52 10.62 14.64	6.36 8.52 10.62 14.64	0.26 0.34 0.46 0.77
2.4" Dia. x 6-ft	A	From Centroid-Leg	4.00 0.00 0.00	0.0000	118.00	No Ice 1/2" Ice 1" Ice 2" Ice	1.43 1.92 2.29 3.06	1.43 1.92 2.29 3.06	0.02 0.03 0.05 0.09
2.4" Dia. x 6-ft	B	From Centroid-Le	4.00 0.00	0.0000	118.00	No Ice 1/2" Ice	1.43 1.92	1.43 1.92	0.02 0.03

Description	Face or Leg	Offset Type	Offsets: Horz Lateral Vert ft ft ft	Azimuth Adjustment °	Placement ft		C_AA_A Front ft^2	C_AA_A Side ft^2	Weight K
		g	0.00			1" Ice	2.29	2.29	0.05
						2" Ice	3.06	3.06	0.09
2.4" Dia. x 6-ft	C	From	4.00	0.0000	118.00	No Ice	1.43	1.43	0.02
		Centroid-Le	0.00			1/2" Ice	1.92	1.92	0.03
		g	0.00			1" Ice	2.29	2.29	0.05
						2" Ice	3.06	3.06	0.09
******									
ANT150D6-9	A	From Leg	2.00	0.0000	108.00	No Ice	5.00	5.00	0.03
			0.00			1/2" Ice	7.03	7.03	0.06
			2.00			1" Ice	9.07	9.07	0.11
						2" Ice	13.22	13.22	0.25
******									
KS24019-L112A	C	From Leg	3.00	0.0000	22.00	No Ice	0.08	0.08	0.01
			0.00			1/2" Ice	0.13	0.13	0.01
			2.00			1" Ice	0.19	0.19	0.01
						2" Ice	0.35	0.35	0.02
Side Arm Mount [SO 701-1]	C	From Leg	1.50	0.0000	22.00	No Ice	0.85	1.67	0.07
			0.00			1/2" Ice	1.14	2.34	0.08
			0.00			1" Ice	1.43	3.01	0.09
						2" Ice	2.01	4.35	0.12
******									

Load Combinations

Comb. No.	Description
1	Dead Only
2	1.2 Dead+1.0 Wind 0 deg - No Ice
3	0.9 Dead+1.0 Wind 0 deg - No Ice
4	1.2 Dead+1.0 Wind 30 deg - No Ice
5	0.9 Dead+1.0 Wind 30 deg - No Ice
6	1.2 Dead+1.0 Wind 60 deg - No Ice
7	0.9 Dead+1.0 Wind 60 deg - No Ice
8	1.2 Dead+1.0 Wind 90 deg - No Ice
9	0.9 Dead+1.0 Wind 90 deg - No Ice
10	1.2 Dead+1.0 Wind 120 deg - No Ice
11	0.9 Dead+1.0 Wind 120 deg - No Ice
12	1.2 Dead+1.0 Wind 150 deg - No Ice
13	0.9 Dead+1.0 Wind 150 deg - No Ice
14	1.2 Dead+1.0 Wind 180 deg - No Ice
15	0.9 Dead+1.0 Wind 180 deg - No Ice
16	1.2 Dead+1.0 Wind 210 deg - No Ice
17	0.9 Dead+1.0 Wind 210 deg - No Ice
18	1.2 Dead+1.0 Wind 240 deg - No Ice
19	0.9 Dead+1.0 Wind 240 deg - No Ice
20	1.2 Dead+1.0 Wind 270 deg - No Ice
21	0.9 Dead+1.0 Wind 270 deg - No Ice
22	1.2 Dead+1.0 Wind 300 deg - No Ice
23	0.9 Dead+1.0 Wind 300 deg - No Ice
24	1.2 Dead+1.0 Wind 330 deg - No Ice
25	0.9 Dead+1.0 Wind 330 deg - No Ice

Comb. No.	Description
26	1.2 Dead+1.0 Ice+1.0 Temp
27	1.2 Dead+1.0 Wind 0 deg+1.0 Ice+1.0 Temp
28	1.2 Dead+1.0 Wind 30 deg+1.0 Ice+1.0 Temp
29	1.2 Dead+1.0 Wind 60 deg+1.0 Ice+1.0 Temp
30	1.2 Dead+1.0 Wind 90 deg+1.0 Ice+1.0 Temp
31	1.2 Dead+1.0 Wind 120 deg+1.0 Ice+1.0 Temp
32	1.2 Dead+1.0 Wind 150 deg+1.0 Ice+1.0 Temp
33	1.2 Dead+1.0 Wind 180 deg+1.0 Ice+1.0 Temp
34	1.2 Dead+1.0 Wind 210 deg+1.0 Ice+1.0 Temp
35	1.2 Dead+1.0 Wind 240 deg+1.0 Ice+1.0 Temp
36	1.2 Dead+1.0 Wind 270 deg+1.0 Ice+1.0 Temp
37	1.2 Dead+1.0 Wind 300 deg+1.0 Ice+1.0 Temp
38	1.2 Dead+1.0 Wind 330 deg+1.0 Ice+1.0 Temp
39	Dead+Wind 0 deg - Service
40	Dead+Wind 30 deg - Service
41	Dead+Wind 60 deg - Service
42	Dead+Wind 90 deg - Service
43	Dead+Wind 120 deg - Service
44	Dead+Wind 150 deg - Service
45	Dead+Wind 180 deg - Service
46	Dead+Wind 210 deg - Service
47	Dead+Wind 240 deg - Service
48	Dead+Wind 270 deg - Service
49	Dead+Wind 300 deg - Service
50	Dead+Wind 330 deg - Service

Maximum Member Forces

Section No.	Elevation ft	Component Type	Condition	Gov. Load Comb.	Axial K	Major Axis Moment kip-ft	Minor Axis Moment kip-ft
L1	163.007 - 121.587	Pole	Max Tension	20	0.00	-0.00	0.00
			Max. Compression	26	-33.22	-0.64	0.41
			Max. Mx	8	-15.44	-406.25	-2.24
			Max. My	2	-15.49	2.23	391.58
			Max. Vy	8	18.20	-406.25	-2.24
			Max. Vx	14	17.57	-2.42	-391.50
			Max. Torque	4			-1.90
L2	121.587 - 84.67	Pole	Max Tension	1	0.00	0.00	0.00
			Max. Compression	26	-58.34	-0.67	0.43
			Max. Mx	8	-30.45	-1304.87	-6.06
			Max. My	2	-30.49	5.97	1267.21
			Max. Vy	8	28.68	-1304.87	-6.06
			Max. Vx	14	28.04	-6.21	-1267.18
			Max. Torque	4			-2.00
L3	84.67 - 42.2067	Pole	Max Tension	1	0.00	0.00	0.00
			Max. Compression	26	-78.16	-0.67	0.12
			Max. Mx	8	-46.20	-2609.26	-10.43
			Max. My	14	-46.23	-10.56	-2545.11
			Max. Vy	8	33.99	-2609.26	-10.43
			Max. Vx	14	33.35	-10.56	-2545.11
			Max. Torque	4			-1.55
L4	42.2067 - 0	Pole	Max Tension	1	0.00	0.00	0.00
			Max. Compression	26	-107.29	-0.24	-0.72
			Max. Mx	20	-70.51	4441.17	15.54
			Max. My	14	-70.51	-15.60	-4346.43

Section No.	Elevation ft	Component Type	Condition	Gov. Load Comb.	Axial K	Major Axis Moment kip-ft	Minor Axis Moment kip-ft
			Max. Vy	20	-39.24	4441.17	15.54
			Max. Vx	14	38.64	-15.60	-4346.43
			Max. Torque	4			-1.55

Maximum Reactions

Location	Condition	Gov. Load Comb.	Vertical K	Horizontal, X K	Horizontal, Z K
Pole	Max. Vert	30	107.29	-10.86	-0.03
	Max. H_x	20	70.53	39.20	0.11
	Max. H_z	2	70.53	0.11	38.60
	Max. M_x	2	4345.98	0.11	38.60
	Max. M_z	8	4440.86	-39.20	-0.11
	Max. Torsion	16	1.41	19.50	-33.38
	Min. Vert	17	52.89	19.50	-33.38
	Min. H_x	8	70.53	-39.20	-0.11
	Min. H_z	14	70.53	-0.11	-38.60
	Min. M_x	14	-4346.43	-0.11	-38.60
	Min. M_z	20	-4441.17	39.20	0.11
	Min. Torsion	4	-1.43	-19.50	33.38

Tower Mast Reaction Summary

Load Combination	Vertical K	$Shear_x$ K	$Shear_z$ K	Overturning Moment, M_x kip-ft	Overturning Moment, M_z kip-ft	Torque kip-ft
Dead Only	58.77	0.00	0.00	0.18	0.13	0.00
1.2 Dead+1.0 Wind 0 deg - No Ice	70.53	-0.11	-38.60	-4345.98	15.92	1.27
0.9 Dead+1.0 Wind 0 deg - No Ice	52.89	-0.11	-38.60	-4312.88	15.75	1.27
1.2 Dead+1.0 Wind 30 deg - No Ice	70.53	19.50	-33.38	-3755.81	-2206.75	1.43
0.9 Dead+1.0 Wind 30 deg - No Ice	52.89	19.50	-33.38	-3727.22	-2189.91	1.43
1.2 Dead+1.0 Wind 60 deg - No Ice	70.53	33.89	-19.21	-2159.20	-3838.03	1.20
0.9 Dead+1.0 Wind 60 deg - No Ice	52.89	33.89	-19.21	-2142.80	-3808.72	1.20
1.2 Dead+1.0 Wind 90 deg - No Ice	70.53	39.20	0.11	15.98	-4440.86	0.63
0.9 Dead+1.0 Wind 90 deg - No Ice	52.89	39.20	0.11	15.79	-4406.93	0.63
1.2 Dead+1.0 Wind 120 deg - No Ice	70.53	34.01	19.40	2186.94	-3853.77	-0.11
0.9 Dead+1.0 Wind 120 deg - No Ice	52.89	34.01	19.40	2170.19	-3824.32	-0.11
1.2 Dead+1.0 Wind 150 deg - No Ice	70.53	19.70	33.49	3772.00	-2234.03	-0.81
0.9 Dead+1.0 Wind 150 deg - No Ice	52.89	19.70	33.49	3743.16	-2216.97	-0.81
1.2 Dead+1.0 Wind 180 deg -	70.53	0.11	38.60	4346.43	-15.60	-1.29

Load Combination	Vertical K	$Shear_x$ K	$Shear_z$ K	Overturning Moment, M_x kip-ft	Overturning Moment, M_z kip-ft	Torque kip-ft
No Ice						
0.9 Dead+1.0 Wind 180 deg - No Ice	52.89	0.11	38.60	4313.22	-15.51	-1.28
1.2 Dead+1.0 Wind 210 deg - No Ice	70.53	-19.50	33.38	3756.26	2207.06	-1.41
0.9 Dead+1.0 Wind 210 deg - No Ice	52.89	-19.50	33.38	3727.55	2190.15	-1.41
1.2 Dead+1.0 Wind 240 deg - No Ice	70.53	-33.89	19.21	2159.64	3838.34	-1.16
0.9 Dead+1.0 Wind 240 deg - No Ice	52.89	-33.89	19.21	2143.13	3808.95	-1.16
1.2 Dead+1.0 Wind 270 deg - No Ice	70.53	-39.20	-0.11	-15.54	4441.17	-0.62
0.9 Dead+1.0 Wind 270 deg - No Ice	52.89	-39.20	-0.11	-15.46	4407.16	-0.62
1.2 Dead+1.0 Wind 300 deg - No Ice	70.53	-34.01	-19.40	-2186.49	3854.08	0.09
0.9 Dead+1.0 Wind 300 deg - No Ice	52.89	-34.01	-19.40	-2169.85	3824.55	0.09
1.2 Dead+1.0 Wind 330 deg - No Ice	70.53	-19.70	-33.49	-3771.55	2234.35	0.77
0.9 Dead+1.0 Wind 330 deg - No Ice	52.89	-19.70	-33.49	-3742.83	2217.21	0.77
1.2 Dead+1.0 Ice+1.0 Temp	107.29	0.00	0.00	0.72	-0.24	0.00
1.2 Dead+1.0 Wind 0 deg+1.0 Ice+1.0 Temp	107.29	-0.03	-10.74	-1209.97	3.22	0.26
1.2 Dead+1.0 Wind 30 deg+1.0 Ice+1.0 Temp	107.29	5.41	-9.29	-1046.01	-612.08	0.25
1.2 Dead+1.0 Wind 60 deg+1.0 Ice+1.0 Temp	107.29	9.39	-5.35	-601.58	-1063.45	0.17
1.2 Dead+1.0 Wind 90 deg+1.0 Ice+1.0 Temp	107.29	10.86	0.03	4.23	-1229.95	0.04
1.2 Dead+1.0 Wind 120 deg+1.0 Ice+1.0 Temp	107.29	9.42	5.39	609.10	-1066.97	-0.09
1.2 Dead+1.0 Wind 150 deg+1.0 Ice+1.0 Temp	107.29	5.45	9.32	1050.95	-618.17	-0.20
1.2 Dead+1.0 Wind 180 deg+1.0 Ice+1.0 Temp	107.29	0.03	10.74	1211.40	-3.82	-0.26
1.2 Dead+1.0 Wind 210 deg+1.0 Ice+1.0 Temp	107.29	-5.41	9.29	1047.44	611.48	-0.25
1.2 Dead+1.0 Wind 240 deg+1.0 Ice+1.0 Temp	107.29	-9.39	5.35	603.01	1062.85	-0.17
1.2 Dead+1.0 Wind 270 deg+1.0 Ice+1.0 Temp	107.29	-10.86	-0.03	-2.81	1229.35	-0.04
1.2 Dead+1.0 Wind 300 deg+1.0 Ice+1.0 Temp	107.29	-9.42	-5.39	-607.68	1066.37	0.09
1.2 Dead+1.0 Wind 330 deg+1.0 Ice+1.0 Temp	107.29	-5.45	-9.32	-1049.53	617.57	0.20
Dead+Wind 0 deg - Service	58.77	-0.03	-9.09	-1018.68	3.82	0.30
Dead+Wind 30 deg - Service	58.77	4.59	-7.86	-880.33	-517.22	0.34
Dead+Wind 60 deg - Service	58.77	7.98	-4.52	-506.05	-899.64	0.28
Dead+Wind 90 deg - Service	58.77	9.23	0.03	3.88	-1040.97	0.15
Dead+Wind 120 deg - Service	58.77	8.01	4.57	512.82	-903.34	-0.02
Dead+Wind 150 deg - Service	58.77	4.64	7.89	884.40	-523.62	-0.18
Dead+Wind 180 deg - Service	58.77	0.03	9.09	1019.06	-3.56	-0.30
Dead+Wind 210 deg - Service	58.77	-4.59	7.86	880.71	517.48	-0.34
Dead+Wind 240 deg - Service	58.77	-7.98	4.52	506.42	899.90	-0.28
Dead+Wind 270 deg - Service	58.77	-9.23	-0.03	-3.51	1041.23	-0.15
Dead+Wind 300 deg - Service	58.77	-8.01	-4.57	-512.45	903.59	0.02
Dead+Wind 330 deg - Service	58.77	-4.64	-7.89	-884.03	523.88	0.18

Solution Summary

	Sum of Applied Forces			Sum of Reactions			
Load Comb.	PX K	PY K	PZ K	PX K	PY K	PZ K	% Error
1	0.00	-58.77	0.00	0.00	58.77	0.00	0.000%
2	-0.11	-70.53	-38.60	0.11	70.53	38.60	0.000%
3	-0.11	-52.89	-38.60	0.11	52.89	38.60	0.000%
4	19.50	-70.53	-33.38	-19.50	70.53	33.38	0.000%
5	19.50	-52.89	-33.38	-19.50	52.89	33.38	0.000%
6	33.89	-70.53	-19.21	-33.89	70.53	19.21	0.000%
7	33.89	-52.89	-19.21	-33.89	52.89	19.21	0.000%
8	39.20	-70.53	0.11	-39.20	70.53	-0.11	0.000%
9	39.20	-52.89	0.11	-39.20	52.89	-0.11	0.000%
10	34.01	-70.53	19.40	-34.01	70.53	-19.40	0.000%
11	34.01	-52.89	19.40	-34.01	52.89	-19.40	0.000%
12	19.70	-70.53	33.49	-19.70	70.53	-33.49	0.000%
13	19.70	-52.89	33.49	-19.70	52.89	-33.49	0.000%
14	0.11	-70.53	38.60	-0.11	70.53	-38.60	0.000%
15	0.11	-52.89	38.60	-0.11	52.89	-38.60	0.000%
16	-19.50	-70.53	33.38	19.50	70.53	-33.38	0.000%
17	-19.50	-52.89	33.38	19.50	52.89	-33.38	0.000%
18	-33.89	-70.53	19.21	33.89	70.53	-19.21	0.000%
19	-33.89	-52.89	19.21	33.89	52.89	-19.21	0.000%
20	-39.20	-70.53	-0.11	39.20	70.53	0.11	0.000%
21	-39.20	-52.89	-0.11	39.20	52.89	0.11	0.000%
22	-34.01	-70.53	-19.40	34.01	70.53	19.40	0.000%
23	-34.01	-52.89	-19.40	34.01	52.89	19.40	0.000%
24	-19.70	-70.53	-33.49	19.70	70.53	33.49	0.000%
25	-19.70	-52.89	-33.49	19.70	52.89	33.49	0.000%
26	0.00	-107.29	0.00	0.00	107.29	0.00	0.000%
27	-0.03	-107.29	-10.74	0.03	107.29	10.74	0.000%
28	5.41	-107.29	-9.29	-5.41	107.29	9.29	0.000%
29	9.39	-107.29	-5.35	-9.39	107.29	5.35	0.000%
30	10.86	-107.29	0.03	-10.86	107.29	-0.03	0.000%
31	9.42	-107.29	5.39	-9.42	107.29	-5.39	0.000%
32	5.45	-107.29	9.32	-5.45	107.29	-9.32	0.000%
33	0.03	-107.29	10.74	-0.03	107.29	-10.74	0.000%
34	-5.41	-107.29	9.29	5.41	107.29	-9.29	0.000%
35	-9.39	-107.29	5.35	9.39	107.29	-5.35	0.000%
36	-10.86	-107.29	-0.03	10.86	107.29	0.03	0.000%
37	-9.42	-107.29	-5.39	9.42	107.29	5.39	0.000%
38	-5.45	-107.29	-9.32	5.45	107.29	9.32	0.000%
39	-0.03	-58.77	-9.09	0.03	58.77	9.09	0.000%
40	4.59	-58.77	-7.86	-4.59	58.77	7.86	0.000%
41	7.98	-58.77	-4.52	-7.98	58.77	4.52	0.000%
42	9.23	-58.77	0.03	-9.23	58.77	-0.03	0.000%
43	8.01	-58.77	4.57	-8.01	58.77	-4.57	0.000%
44	4.64	-58.77	7.89	-4.64	58.77	-7.89	0.000%
45	0.03	-58.77	9.09	-0.03	58.77	-9.09	0.000%
46	-4.59	-58.77	7.86	4.59	58.77	-7.86	0.000%
47	-7.98	-58.77	4.52	7.98	58.77	-4.52	0.000%
48	-9.23	-58.77	-0.03	9.23	58.77	0.03	0.000%
49	-8.01	-58.77	-4.57	8.01	58.77	4.57	0.000%
50	-4.64	-58.77	-7.89	4.64	58.77	7.89	0.000%

Non-Linear Convergence Results

Load Combination	Converged?	Number of Cycles	Displacement Tolerance	Force Tolerance
1	Yes	4	0.00000001	0.00000001
2	Yes	4	0.00000001	0.00029394
3	Yes	4	0.00000001	0.00018814
4	Yes	5	0.00000001	0.00020658
5	Yes	5	0.00000001	0.00009894
6	Yes	5	0.00000001	0.00019672
7	Yes	5	0.00000001	0.00009377
8	Yes	4	0.00000001	0.00024518
9	Yes	4	0.00000001	0.00015165
10	Yes	5	0.00000001	0.00020580
11	Yes	5	0.00000001	0.00009807
12	Yes	5	0.00000001	0.00020822
13	Yes	5	0.00000001	0.00009950
14	Yes	4	0.00000001	0.00038991
15	Yes	4	0.00000001	0.00025336
16	Yes	5	0.00000001	0.00019439
17	Yes	5	0.00000001	0.00009279
18	Yes	5	0.00000001	0.00020754
19	Yes	5	0.00000001	0.00009921
20	Yes	4	0.00000001	0.00016769
21	Yes	4	0.00000001	0.00009518
22	Yes	5	0.00000001	0.00020698
23	Yes	5	0.00000001	0.00009867
24	Yes	5	0.00000001	0.00020115
25	Yes	5	0.00000001	0.00009594
26	Yes	4	0.00000001	0.00000001
27	Yes	5	0.00000001	0.00014463
28	Yes	5	0.00000001	0.00016229
29	Yes	5	0.00000001	0.00016314
30	Yes	5	0.00000001	0.00014737
31	Yes	5	0.00000001	0.00016438
32	Yes	5	0.00000001	0.00016341
33	Yes	5	0.00000001	0.00014458
34	Yes	5	0.00000001	0.00016151
35	Yes	5	0.00000001	0.00016303
36	Yes	5	0.00000001	0.00014704
37	Yes	5	0.00000001	0.00016424
38	Yes	5	0.00000001	0.00016285
39	Yes	4	0.00000001	0.00003182
40	Yes	4	0.00000001	0.00010548
41	Yes	4	0.00000001	0.00009169
42	Yes	4	0.00000001	0.00002903
43	Yes	4	0.00000001	0.00009874
44	Yes	4	0.00000001	0.00010329
45	Yes	4	0.00000001	0.00003260
46	Yes	4	0.00000001	0.00009070
47	Yes	4	0.00000001	0.00010509
48	Yes	4	0.00000001	0.00002857
49	Yes	4	0.00000001	0.00009999
50	Yes	4	0.00000001	0.00009473

Maximum Tower Deflections - Service Wind

Section No.	Elevation ft	Horz. Deflection in	Gov. Load Comb.	Tilt °	Twist °
L1	163.007 - 121.587	14.244	42	0.6803	0.0012
L2	127.42 - 84.67	9.265	42	0.6349	0.0008
L3	91.3367 - 42.2067	4.921	42	0.4907	0.0004
L4	49.79 - 0	1.514	48	0.2708	0.0002

Critical Deflections and Radius of Curvature - Service Wind

Elevation ft	Appurtenance	Gov. Load Comb.	Deflection in	Tilt °	Twist °	Radius of Curvature ft
160.00	SC229-SFXLDF	42	13.813	0.6784	0.0012	147729
156.00	APX16DWV-16DWV-S-E-A20 w/ Mount Pipe	42	13.240	0.6757	0.0011	105420
148.00	LPA-80080/6CF w/ Mount Pipe	42	12.102	0.6691	0.0010	49221
141.00	(4) DB846G90A-XY w/ Mount Pipe	42	11.118	0.6609	0.0009	33564
120.00	(2) TME-RRUS-11	42	8.294	0.6132	0.0007	18320
118.00	7770.00 w/ Mount Pipe	42	8.038	0.6064	0.0007	17758
108.00	ANT150D6-9	42	6.802	0.5679	0.0006	15397
22.00	KS24019-L112A	48	0.452	0.1195	0.0001	18362

Maximum Tower Deflections - Design Wind

Section No.	Elevation ft	Horz. Deflection in	Gov. Load Comb.	Tilt °	Twist °
L1	163.007 - 121.587	60.803	8	2.9050	0.0050
L2	127.42 - 84.67	39.550	8	2.7115	0.0032
L3	91.3367 - 42.2067	21.007	8	2.0952	0.0016
L4	49.79 - 0	6.459	20	1.1559	0.0006

Critical Deflections and Radius of Curvature - Design Wind

Elevation ft	Appurtenance	Gov. Load Comb.	Deflection in	Tilt °	Twist °	Radius of Curvature ft
160.00	SC229-SFXLDF	8	58.963	2.8968	0.0050	34789
156.00	APX16DWV-16DWV-S-E-A20 w/ Mount Pipe	8	56.520	2.8853	0.0048	24826
148.00	LPA-80080/6CF w/ Mount Pipe	8	51.660	2.8570	0.0044	11590
141.00	(4) DB846G90A-XY w/ Mount Pipe	8	47.461	2.8224	0.0041	7903
120.00	(2) TME-RRUS-11	8	35.406	2.6186	0.0030	4309
118.00	7770.00 w/ Mount Pipe	8	34.315	2.5898	0.0029	4176
108.00	ANT150D6-9	8	29.038	2.4250	0.0024	3618
22.00	KS24019-L112A	20	1.926	0.5101	0.0003	4301

Compression Checks

Pole Design Data

Section No.	Elevation ft	Size	L ft	L_u ft	Kl/r	A in^2	P_u K	ϕP_n K	Ratio $\frac{P_u}{\phi P_n}$
L1	163.007 - 121.587 (1)	TP42.37x34.28x0.3125	41.42	0.00	0.0	40.5857	-15.44	2374.26	0.007
L2	121.587 - 84.67 (2)	TP48.83x40.6057x0.375	42.75	0.00	0.0	56.1470	-30.45	3284.60	0.009
L3	84.67 - 42.2067 (3)	TP56.25x46.7975x0.4375	49.13	0.00	0.0	75.4766	-46.20	4415.38	0.010
L4	42.2067 - 0 (4)	TP63.5x53.916x0.5	49.79	0.00	0.0	99.9810	-70.51	5848.89	0.012

Pole Bending Design Data

Section No.	Elevation ft	Size	M_{ux} kip-ft	ϕM_{nx} kip-ft	Ratio $\frac{M_{ux}}{\phi M_{nx}}$	M_{uy} kip-ft	ϕM_{ny} kip-ft	Ratio $\frac{M_{uy}}{\phi M_{ny}}$
L1	163.007 - 121.587 (1)	TP42.37x34.28x0.3125	406.26	2309.38	0.176	0.00	2309.38	0.000
L2	121.587 - 84.67 (2)	TP48.83x40.6057x0.375	1304.89	3734.23	0.349	0.00	3734.23	0.000
L3	84.67 - 42.2067 (3)	TP56.25x46.7975x0.4375	2609.28	5807.86	0.449	0.00	5807.86	0.000
L4	42.2067 - 0 (4)	TP63.5x53.916x0.5	4441.19	8875.75	0.500	0.00	8875.75	0.000

Pole Shear Design Data

Section No.	Elevation ft	Size	Actual V_u K	ϕV_n K	Ratio $\frac{V_u}{\phi V_n}$	Actual T_u kip-ft	ϕT_n kip-ft	Ratio $\frac{T_u}{\phi T_n}$
L1	163.007 - 121.587 (1)	TP42.37x34.28x0.3125	18.20	712.28	0.026	1.23	2552.38	0.000
L2	121.587 - 84.67 (2)	TP48.83x40.6057x0.375	28.68	985.38	0.029	0.52	4070.72	0.000
L3	84.67 - 42.2067 (3)	TP56.25x46.7975x0.4375	33.99	1324.61	0.026	0.51	6305.17	0.000
L4	42.2067 - 0 (4)	TP63.5x53.916x0.5	39.24	1754.67	0.022	0.62	9680.92	0.000

Pole Interaction Design Data

Section No.	Elevation ft	Ratio $\frac{P_u}{\phi P_n}$	Ratio $\frac{M_{ux}}{\phi M_{nx}}$	Ratio $\frac{M_{uy}}{\phi M_{ny}}$	Ratio $\frac{V_u}{\phi V_n}$	Ratio $\frac{T_u}{\phi T_n}$	Comb. Stress Ratio	Allow. Stress Ratio	Criteria

Section No.	Elevation ft	Ratio $P_u / \phi P_n$	Ratio $M_{ux} / \phi M_{nx}$	Ratio $M_{uy} / \phi M_{ny}$	Ratio $V_u / \phi V_n$	Ratio $T_u / \phi T_n$	Comb. Stress Ratio	Allow. Stress Ratio	Criteria
L1	163.007 - 121.587 (1)	0.007	0.176	0.000	0.026	0.000	0.183	1.050	4.8.2
L2	121.587 - 84.67 (2)	0.009	0.349	0.000	0.029	0.000	0.360	1.050	4.8.2
L3	84.67 - 42.2067 (3)	0.010	0.449	0.000	0.026	0.000	0.460	1.050	4.8.2
L4	42.2067 - 0 (4)	0.012	0.500	0.000	0.022	0.000	0.513	1.050	4.8.2

Section Capacity Table

Section No.	Elevation ft	Component Type	Size	Critical Element	P K	$øP_{allow}$ K	% Capacity	Pass Fail
L1	163.007 - 121.587	Pole	TP42.37x34.28x0.3125	1	-15.44	2492.97	17.4	Pass
L2	121.587 - 84.67	Pole	TP48.83x40.6057x0.375	2	-30.45	3448.83	34.2	Pass
L3	84.67 - 42.2067	Pole	TP56.25x46.7975x0.4375	3	-46.20	4636.15	43.8	Pass
L4	42.2067 - 0	Pole	TP63.5x53.916x0.5	4	-70.51	6141.33	48.9	Pass
							Summary	
						Pole (L4)	48.9	Pass
						RATING =	**48.9**	**Pass**

APPENDIX B

BASE LEVEL DRAWING

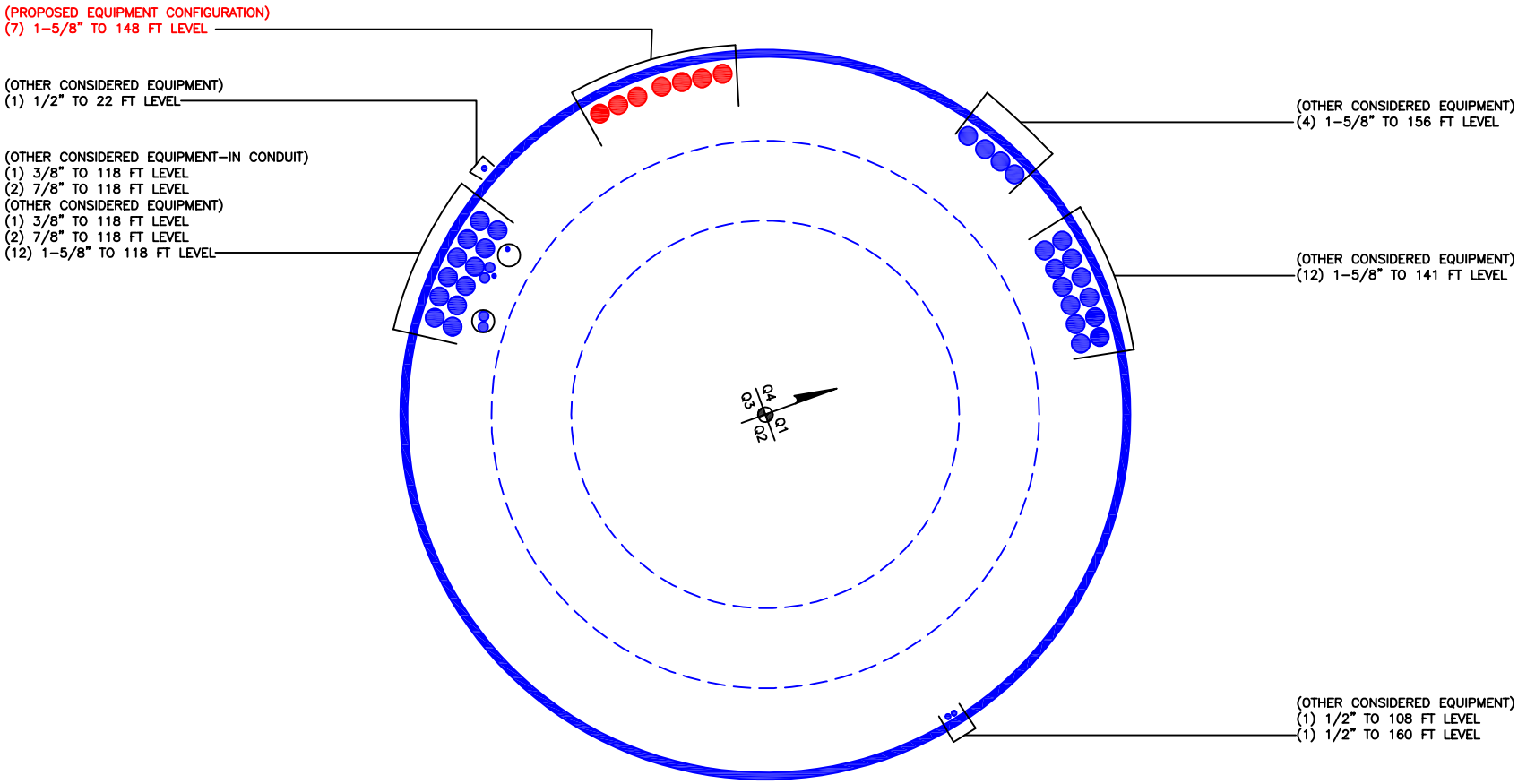
(PROPOSED EQUIPMENT CONFIGURATION)
(7) 1-5/8" TO 148 FT LEVEL
(OTHER CONSIDERED EQUIPMENT)
(1) 1/2" TO 22 FT LEVEL
(OTHER CONSIDERED EQUIPMENT-IN CONDUIT)
(1) 3/8" TO 118 FT LEVEL
(2) 7/8" TO 118 FT LEVEL
(OTHER CONSIDERED EQUIPMENT)
(1) 3/8" TO 118 FT LEVEL
(2) 7/8" TO 118 FT LEVEL
(12) 1-5/8" TO 118 FT LEVEL
(OTHER CONSIDERED EQUIPMENT)
(4) 1-5/8" TO 156 FT LEVEL
(OTHER CONSIDERED EQUIPMENT)
(12) 1-5/8" TO 141 FT LEVEL
(OTHER CONSIDERED EQUIPMENT)
(1) 1/2" TO 108 FT LEVEL
(1) 1/2" TO 160 FT LEVEL
Q1
Q2
Q3
Q4

APPENDIX C

ADDITIONAL CALCULATIONS

ASCE 7 Hazards Report

Address:
No Address at This Location

Standard: ASCE/SEI 7-10
Risk Category: II
Soil Class: D - Stiff Soil

Elevation: 490.19 ft (NAVD 88)
Latitude: 41.589947
Longitude: -73.169867

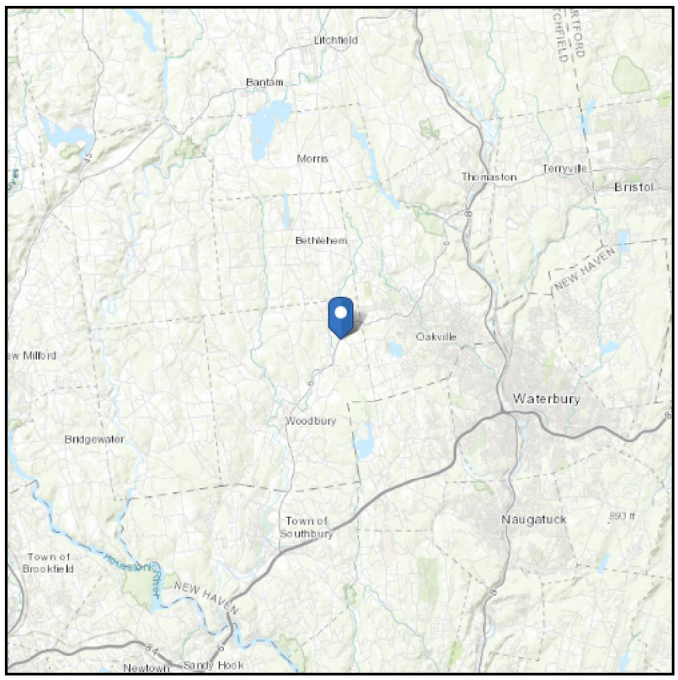

Wind

Results:

Wind Speed:	118 Vmph	*120 Vmph per jurisdiction
10-year MRI	76 Vmph	
25-year MRI	85 Vmph	
50-year MRI	90 Vmph	
100-year MRI	97 Vmph	

Data Source: ASCE/SEI 7-10, Fig. 26.5-1A and Figs. CC-1–CC-4, and Section 26.5.2, incorporating errata of March 12, 2014

Date Accessed: Thu Apr 29 2021

Value provided is 3-second gust wind speeds at 33 ft above ground for Exposure C Category, based on linear interpolation between contours. Wind speeds are interpolated in accordance with the 7-10 Standard. Wind speeds correspond to approximately a 7% probability of exceedance in 50 years (annual exceedance probability = 0.00143, MRI = 700 years).

Site is in a hurricane-prone region as defined in ASCE/SEI 7-10 Section 26.2. Glazed openings need not be protected against wind-borne debris.

Seismic

Site Soil Class: D - Stiff Soil

Results:

S_S :	0.191	S_{DS} :	0.204
S_1 :	0.065	S_{D1} :	0.103
F_a :	1.6	T_L :	6
F_v :	2.4	PGA :	0.099
S_{MS} :	0.306	PGA_M :	0.159
S_{M1} :	0.155	F_{PGA} :	1.6
		I_e :	1

Seismic Design Category B

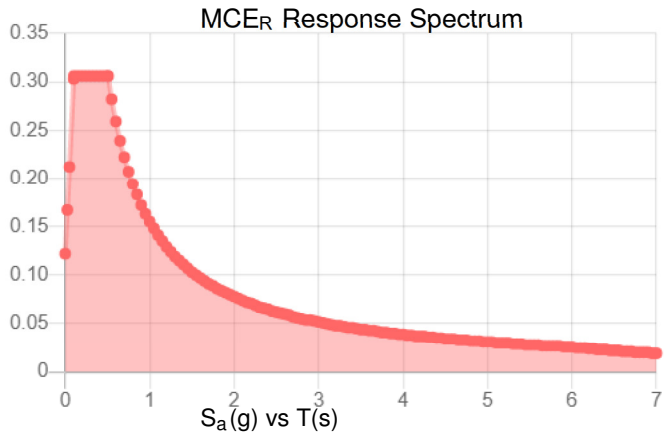

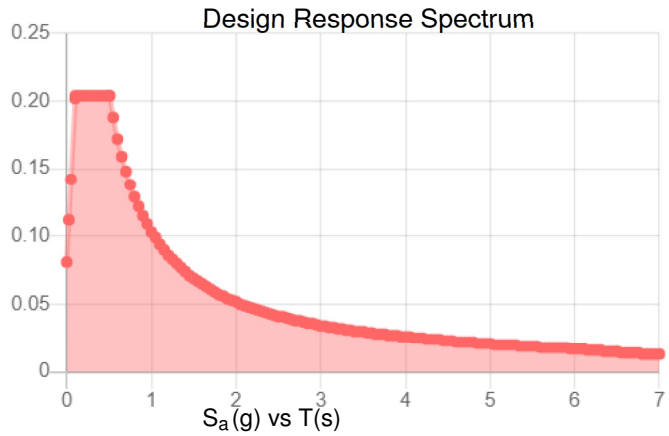

Data Accessed: Thu Apr 29 2021

Date Source: USGS Seismic Design Maps based on ASCE/SEI 7-10, incorporating Supplement 1 and errata of March 31, 2013, and ASCE/SEI 7-10 Table 1.5-2. Additional data for site-specific ground motion procedures in accordance with ASCE/SEI 7-10 Ch. 21 are available from USGS.

Ice

Results:

Ice Thickness:	0.75 in.
Concurrent Temperature:	5 F
Gust Speed:	50 mph
Data Source:	Standard ASCE/SEI 7-10, Figs. 10-2 through 10-8
Date Accessed:	Thu Apr 29 2021

Ice thicknesses on structures in exposed locations at elevations higher than the surrounding terrain and in valleys and gorges may exceed the mapped values.

Values provided are equivalent radial ice thicknesses due to freezing rain with concurrent 3-second gust speeds, for a 50-year mean recurrence interval, and temperatures concurrent with ice thicknesses due to freezing rain. Thicknesses for ice accretions caused by other sources shall be obtained from local meteorological studies. Ice thicknesses in exposed locations at elevations higher than the surrounding terrain and in valleys and gorges may exceed the mapped values.

The ASCE 7 Hazard Tool is provided for your convenience, for informational purposes only, and is provided “as is” and without warranties of any kind. The location data included herein has been obtained from information developed, produced, and maintained by third party providers; or has been extrapolated from maps incorporated in the ASCE 7 standard. While ASCE has made every effort to use data obtained from reliable sources or methodologies, ASCE does not make any representations or warranties as to the accuracy, completeness, reliability, currency, or quality of any data provided herein. Any third-party links provided by this Tool should not be construed as an endorsement, affiliation, relationship, or sponsorship of such third-party content by or from ASCE.

ASCE does not intend, nor should anyone interpret, the results provided by this Tool to replace the sound judgment of a competent professional, having knowledge and experience in the appropriate field(s) of practice, nor to substitute for the standard of care required of such professionals in interpreting and applying the contents of this Tool or the ASCE 7 standard.

In using this Tool, you expressly assume all risks associated with your use. Under no circumstances shall ASCE or its officers, directors, employees, members, affiliates, or agents be liable to you or any other person for any direct, indirect, special, incidental, or consequential damages arising from or related to your use of, or reliance on, the Tool or any information obtained therein. To the fullest extent permitted by law, you agree to release and hold harmless ASCE from any and all liability of any nature arising out of or resulting from any use of data provided by the ASCE 7 Hazard Tool.

Monopole Base Plate Connection

Site Info	
BU #	876379
Site Name	Woodbury / Wolff Par
Order #	552711 Rev. 0

Analysis Considerations	
TIA-222 Revision	H
Grout Considered:	No
l_{ar} (in)	0.75

Applied Loads	
Moment (kip-ft)	4441.00
Axial Force (kips)	71.00
Shear Force (kips)	39.00

**TIA-222-H Section 15.5 Applied*

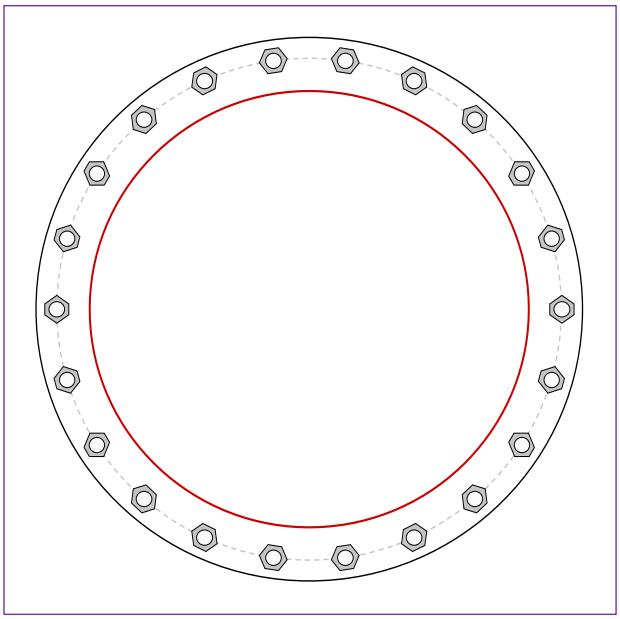

Connection Properties

Anchor Rod Data

(22) 2-1/4" ø bolts (A615-75 N; Fy=75 ksi, Fu=100 ksi) on 73" BC

Base Plate Data

79" OD x 2.5" Plate (A871 Gr. 60; Fy=60 ksi, Fu=75 ksi)

Stiffener Data

N/A

Pole Data

63.5" x 0.5" 18-sided pole (A572-65; Fy=65 ksi, Fu=80 ksi)

Analysis Results

Anchor Rod Summary *(units of kips, kip-in)*

Pu_t = 129.45	ϕPn_t = 243.75	**Stress Rating**
Vu = 1.77	ϕVn = 149.1	**50.6%**
Mu = n/a	ϕMn = n/a	**Pass**

Base Plate Summary

Max Stress (ksi):	27.34	(Flexural)
Allowable Stress (ksi):	54	
Stress Rating:	**48.2%**	**Pass**

Drilled Pier Foundation

BU # :	876379
Site Name:	N. Woodbury / Wolff P
Order Number:	552711 Rev. 0

TIA-222 Revison:	H
Tower Type:	Monopole

Applied Loads	Comp.	Uplift
Moment (kip-ft)	4441	
Axial Force (kips)	71	
Shear Force (kips)	39	

Material Properties		
Concrete Strength, f'c:	4	ksi
Rebar Strength, Fy:	60	ksi
Tie Yield Strength, Fyt:	60	ksi

Pier Design Data		
Depth	28	ft
Ext. Above Grade	1	ft
Pier Section 1		
From 1' above grade to 28' below grade		
Pier Diameter	8	ft
Rebar Quantity	32	
Rebar Size	11	
Clear Cover to Ties	4	in
Tie Size	5	
Tie Spacing	12	in

Rebar & Pier Options

Embedded Pole Inputs

Belled Pier Inputs

Analysis Results		
Soil Lateral Check	*Compression*	*Uplift*
$D_{v=0}$ (ft from TOC)	7.60	-
Soil Safety Factor	4.74	-
Max Moment (kip-ft)	4695.87	-
Rating*	*26.7%*	-
Soil Vertical Check	*Compression*	*Uplift*
Skin Friction (kips)	542.87	-
End Bearing (kips)	1350.10	-
Weight of Concrete (kips)	211.52	-
Total Capacity (kips)	1892.96	-
Axial (kips)	282.52	-
Rating*	*14.2%*	-
Reinforced Concrete Flexure	*Compression*	*Uplift*
Critical Depth (ft from TOC)	7.28	-
Critical Moment (kip-ft)	4694.89	-
Critical Moment Capacity	9268.22	-
Rating*	*48.2%*	-
Reinforced Concrete Shear	*Compression*	*Uplift*
Critical Depth (ft from TOC)	25.42	-
Critical Shear (kip)	211.64	-
Critical Shear Capacity	1230.38	-
Rating*	*16.4%*	-

Shear-Friciton Methodology is Applied

Soil Interaction Rating*	**26.7%**
Structural Foundation Rating*	**48.2%**

*Rating per TIA-222-H Section 15.5

Check Limitation	
Apply TIA-222-H Section 15.5:	☑
N/A	☐
Shear Design Options	
Check Shear along Depth of Pier:	☑
Utilize Shear-Friction Methodology:	☑
Override Critical Depth:	☐

Go to Soil Calculations

Soil Profile

Groundwater Depth	14.5	# of Layers	5

Layer	Top (ft)	Bottom (ft)	Thickness (ft)	γ_{soil} (pcf)	$\gamma_{concrete}$ (pcf)	Cohesion (ksf)	Angle of Friction (degrees)	Calculated Ultimate Skin Friction Comp (ksf)	Calculated Ultimate Skin Friction Uplift (ksf)	Ultimate Skin Friction Comp Override (ksf)	Ultimate Skin Friction Uplift Override (ksf)	Ult. Net Bearing Capacity (ksf)	SPT Blow Count	Soil Type
1	0	4	4	135	150	0	0	0.000	0.000	0.00	0.00			Cohesionless
2	4	5	1	135	150	0	38	0.000	0.000	0.00	0.00			Cohesionless
3	5	14.5	9.5	135	150	0	38	0.000	0.000	0.80	0.80			Cohesionless
4	14.5	15	0.5	75	87.6	0	38	0.000	0.000	0.80	0.80			Cohesionless
5	15	28	13	75	87.6	0	38	0.000	0.000	1.60	1.60	32		Cohesionless

Exhibit E

Mount Analysis

Maser Consulting Connecticut
2000 Midlantic Drive, Suite 100
Mt. Laurel, NJ 08054
(856) 797-0412
Peter.albano@colliersengineer.com

Post-Mod Antenna Mount Analysis Report and PMI Requirements

Mount Fix

SMART Tool Project #: 10090305
Maser Consulting Connecticut Project #: 21777330A

July 30, 2021

Site Information	*Site ID:*	*467557-VZW / WOODBURY N CT*
	Site Name:	*WOODBURY N CT*
	Carrier Name:	*Verizon Wireless*
	Address:	*1440 Main St North*
		Woodbury, Connecticut 06798
		Litchfield County
	Latitude:	*41.589947°*
	Longitude:	*-73.169867°*
Structure Information	*Tower Type:*	*163-Ft Monopole*
	Mount Type:	*14.50-Ft Platform*

FUZE ID # 16272070

Analysis Results

Platform: **68.1% Pass**

******Contractor PMI Requirements*:**
Included at the end of this MA report
Available & Submitted via portal at https://pmi.vzwsmart.com
Contractor - Please Review Specific Site PMI Requirements Upon Award
Requirements also Noted on Mount Modification Drawings
Requirements may also be Noted on A & E drawings

Report Prepared By: Nathan LaPorte

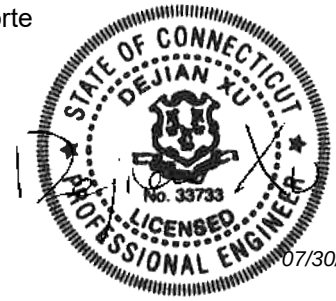

07/30/2021

Executive Summary:

The objective of this report is to summarize the analysis results of the antenna support mount including the proposed modifications at the subject facility for the final wireless telecommunications configuration, per the applicable codes and standards.

This analysis is inclusive of the mount structure only and does not address the structural capacity of the supporting structure. This mounting frame was not analyzed as an anchor attachment point for fall protection. All climbing activities are required to have a fall protection plan completed by a competent person.

Sources of Information:

Document Type	Remarks
Radio Frequency Data Sheet (RFDS)	*Verizon Wireless, Site ID: 325192, Dated May 17, 2021*
Mount Mapping Report	*RKS Design & Engineering LLC, Site ID: 876379, dated July 9, 2021*
Previous Mount Analysis	*Maser Consulting Connecticut Project #: 21777330, dated July 23, 2021*
Mount Modification Drawings	*Maser Consulting Connecticut Project #: 21777330, dated July 30, 2021*

Analysis Criteria:

Codes and Standards:	ANSI/TIA-222-H	
Wind Parameters:	Basic Wind Speed (Ultimate 3-sec. Gust), V_{ULT}:	116 mph
	Ice Wind Speed (3-sec. Gust):	50 mph
	Design Ice Thickness:	1.00 in
	Risk Category:	II
	Exposure Category:	C
	Topographic Category:	1
	Topographic Feature Considered:	N/A
	Topographic Method:	N/A
	Ground Elevation Factor, K_e:	0.982
Seismic Parameters:	S_S:	0.190
	S_1:	0.054
Maintenance Parameters:	Wind Speed (3-sec. Gust):	30 mph
	Maintenance Live Load, Lv:	250 lbs.
	Maintenance Live Load, Lm:	500 lbs.
Analysis Software:	RISA-3D (V17)	

Final Loading Configuration:

The following equipment has been considered for the analysis of the mount:

Mount Elevation (ft)	Equipment Elevation (ft)	Quantity	Manufacturer	Model	Status
148.00	150.00	3	Samsung	MT6407-77A	Added
		3	Samsung	B2/B66A RRH-BR049	
		3	Samsung	B5/B13 RRH-BR04C	
		6	Andrew	SBNHH-1D65B	Retained
		6	Antel	LPA-80080/6CF	
		1	Raycap	RRFDC-3315-PF-48	
		1	Raycap	RRFDC-3315-PF-48*	

* Equipment is flush mounted directly to the Monopole. They are not mounted on platform mounts and are not included in this mount analysis.

The recent mount mapping reported existing OVP units. It is acceptable to install up to any three (3) of the OVP model numbers listed below as required at any location other than the mount face without affecting the structural capacity of the mount. If OVP units are installed on the mount face, a mount re-analysis may be required unless replacing an existing OVP.

Model Number	Ports	AKA
DB-B1-6C-12AB-0Z	6	OVP-6
RVZDC-6627-PF-48	12	OVP-12

Standard Conditions:

1. All engineering services are performed on the basis that the information provided to Maser Consulting Connecticut and used in this analysis is current and correct. The existing equipment loading has been applied at locations determined from the supplied documentation. Any deviation from the loading locations specified in this report shall be communicated to Maser Consulting Connecticut to verify deviation will not adversely impact the analysis.

2. Mounts are assumed to have been properly fabricated, installed and maintained in good condition, twist free and plumb in accordance with its original design and manufacturer's specifications.

   Obvious safety and structural issues/deficiencies noticed at the time of the mount mapping and reported in the Mount Mapping Report are assumed to be corrected and documented as part of the PMI process and are not considered in the mount analysis.

   The mount analysis and the mount mapping are not a condition assessment of the mount. Proper maintenance and condition assessments are still required post analysis.

3. For mount analyses completed from other data sources (including new replacement mounts) and not specifically mapped by Maser Consulting Connecticut, the mounts are assumed to have been properly fabricated, installed and maintained in good condition, twist free and plumb in accordance with its original design and manufacturer's specifications.

4. All member connections are assumed to have been designed to meet or exceed the load carrying capacity of the connected member unless otherwise specified in this report.

5. The mount was checked up to, and including, the bolts that fasten it to the mount collar/attachment and threaded rod connections in collar members if applicable. Local deformation and interaction between the mount collar/attachment and the supporting tower structure are outside the scope of this analysis.

6. All services are performed, results obtained, and recommendations made in accordance with generally accepted engineering principles and practices. Maser Consulting Connecticut is not responsible for the conclusion, opinions, and recommendations made by others based on the information supplied.

7. Structural Steel Grades have been assumed as follows, if applicable, unless otherwise noted in this analysis:
   - Channel, Solid Round, Angle, Plate — ASTM A36 (Gr. 36)
   - HSS (Rectangular) — ASTM 500 (Gr. B-46)
   - Pipe — ASTM A53 (Gr. B-35)
   - Threaded Rod — F1554 (Gr. 36)
   - Bolts — ASTM A325

Discrepancies between in-field conditions and the assumptions listed above may render this analysis invalid unless explicitly approved by Maser Consulting Connecticut.

Analysis Results:

Component	Utilization %	Pass/Fail
Standoff	11.2 %	Pass
Main Channel	28.5 %	Pass
Side Angles	20.0 %	Pass
Side Channel	21.0 %	Pass
Standoff Plate	27.8 %	Pass
Cross Member HSS	25.7 %	Pass
Face Horizontal	61.4 %	Pass
Face Horizontal Plates	38.7 %	Pass
Antenna Pipe	68.1 %	Pass
Support Rail	32.2 %	Pass
Corner Bracket	33.2 %	Pass
V-Bracing	18.0 %	Pass
Mount Connection	23.1 %	Pass

Structure Rating – *(Controlling Utilization of all Components)*	**68.1%**

Recommendation:

The existing mount will be **SUFFICIENT** for the final loading after the proposed modifications are successfully completed.

ANSI/ASSP rigging plan review services compliant with the requirements of ANSI/TIA 322 are available for a Construction Class IV site or other, if required. Separate review fees will apply.

Attachments:

1. Mount Photos
2. Mount Mapping Report (for reference only)
3. Analysis Calculations
4. **Contractor Required PMI Report Deliverables**
5. Antenna Placement Diagrams
6. TIA Adoption and Wind Speed Usage Letter

V4.0 Updated on 3-31-2021

Antenna Mount Mapping Form (PATENT PENDING)

FCC #
UNKNOWN

Tower Owner:	CROWN CASTLE	**Mapping Date:**	7/9/2021
Site Name:	CC : N WOODBURY/ WOLFF PARCEL; VZW : WOODBURY N CT	**Tower Type:**	Monopole
Site Number or ID:	CC : 876379	**Tower Height (Ft.):**	UNKNOWN
Mapping Contractor:	RKS Design & Engineering, LLC	**Mount Elevation (Ft.):**	148.1

This antenna mapping form is the property of TES and under **PATENT PENDING**. The formation contained herein is considered confidential in nature and is to be used only for the specific customer it was intended for. Reproduction, transmission, publication, modification or disclosure by any method is prohibited except by express written permission of TES. All means and methods are the responsibility of the contractor and the work shall be compliant with ANSI/ASSE A 10.48, OSHA, FCC, FAA and other safety requirements that may apply. TES is not warrantying the usability of the safety climb as it must be assessed prior to each use in compliance with OSHA requirements.

Please insert the sketches of the antenna mount from the "Sketches" tab with dimensions and members here.

Mount Pipe Configuration and Geometries [Unit = Inches]

Sector / Position	Mount Pipe Size & Length	Vertical Offset Dimension "u"	Horizontal Offset "C1, C2, C3, etc."	Sector / Position	Mount Pipe Size & Length	Vertical Offset Dimension "u"	Horizontal Offset "C1, C2, C3, etc."
A1	PIPE 2.375"Ø x 0.15" x 72" LONG	65.25		C1	PIPE 2.375"Ø x 0.15" x 72" LONG	65.25	
A2	PIPE 2.375"Ø x 0.15" x 104" LON	65.25	57.50	C2	PIPE 2.375"Ø x 0.15" x 104" LONG	65.25	57.50
A3	PIPE 2.375"Ø x 0.15" x 104" LON	65.25	117.50	C3	PIPE 2.375"Ø x 0.15" x 104" LONG	65.25	117.50
A4	PIPE 2.375"Ø x 0.15" x 72" LONG	65.25	177.50	C4	PIPE 2.375"Ø x 0.15" x 72" LONG	65.25	177.50
A5				C5			
A6				C6			
B1	PIPE 2.375"Ø x 0.15" x 72" LONG	65.25		D1			
B2	PIPE 2.375"Ø x 0.15" x 104" LON	65.25	57.50	D2			
B3	PIPE 2.375"Ø x 0.15" x 104" LON	65.25	117.50	D3			
B4	PIPE 2.375"Ø x 0.15" x 72" LONG	65.25	177.50	D4			
B5				D5			
B6				D6			

Distance between bottom rail and mount CL elevation (dim d). Unit is inches. See 'Mount Elev Ref' tab for details. :	
Distance from top of bottom support rail to lowest tip of ant./eqpt. of Carrier above. (N/A if > 10 ft.) :	5.5
Distance from top of bottom support rail to highest tip of ant./eqpt. of Carrier below. (N/A if > 10 ft.) :	3.5
Please enter additional infomation or comments below.	
Tower Face Width at Mount Elev. (ft.):	Tower Leg Size or Pole Shaft Diameter at Mount Elev. (in.):
For T-Arms/Platforms on monopoles, report the weld size from the main standoff to the plate bolting into the collar mount.	36.7

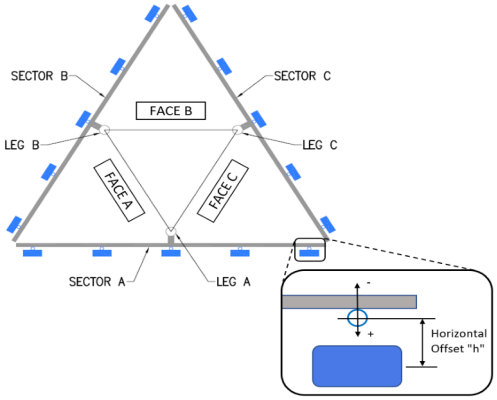

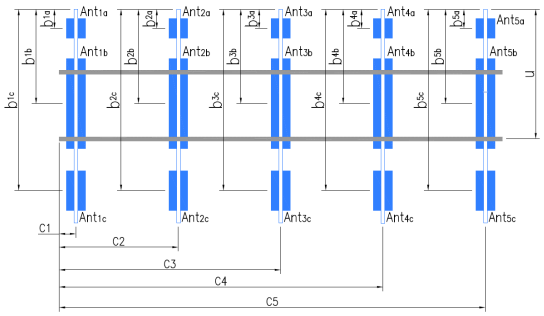

Antenna Layout (Looking Out From Tower)

	Enter antenna model. If not labeled, enter "Unknown".						Mounting Locations [Units are inches and degrees]			Photos of antennas
Ants. Items	Antenna Models if Known	Width (in.)	Depth (in.)	Height (in.)	Coax Size and Qty	Antenna Center-line (Ft.)	Vertical Distances"b_{1a}, b_{2a}, b_{3a}, b_{1b}...." (Inches)	Horiz. Offset "h" (Use "-" if Ant. is behind)	Antenna Azimuth (Degrees)	Photo Numbers
Sector A										
Ant_{1a}										
Ant_{1b}	LPA-80080/6CF E-DIN	5.51	13.19	70.87		150.663	34.50	15.50	100.00	6,409
Ant_{1c}										
Ant_{2a}	B13 RRH 4X30	11.80	7.50	20.90		151.167	28.45	-5.25		6,409
Ant_{2b}	SBNHH-1D65B	11.90	7.10	72.00		149.538	48.00	8.55	100.00	6,409
Ant_{2c}										
Ant_{3a}										
Ant_{3b}	SBNHH-1D65B	11.90	7.10	72.00		149.538	48.00	8.55	100.00	6,407
Ant_{3c}										
Ant_{4a}										
Ant_{4b}	LPA-80080/6CF E-DIN	5.51	13.19	70.87		150.663	34.50	15.50	100.00	6,407
Ant_{4c}										
Ant_{5a}										
Ant_{5b}										
Ant_{5c}										
Ant on Standoff										
Ant on Standoff										
Ant on Tower										
Ant on Tower										

Mount Azimuth (Degree) for Each Sector			Tower Leg Azimuth (Degree) for Each Sector		
Sector A:	100.00	Deg	Leg A:		Deg
Sector B:	220.00	Deg	Leg B:		Deg
Sector C:	340.00	Deg	Leg C:		Deg
Sector D:		Deg	Leg D:		Deg

Climbing Facility Information			
Location:		Deg	N/A
Climbing Facility	Corrosion Type:		N/A
	Access:		N/A
	Condition:		N/A

Please insert a photo of the mount centerline measurement here.

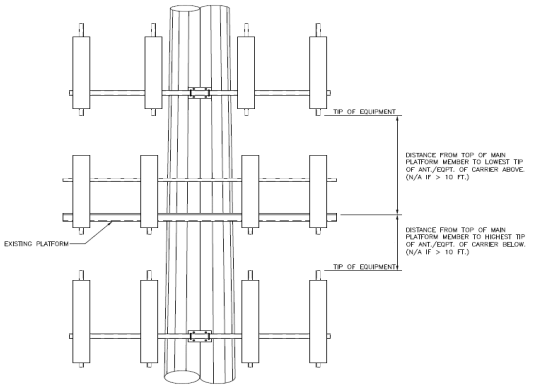

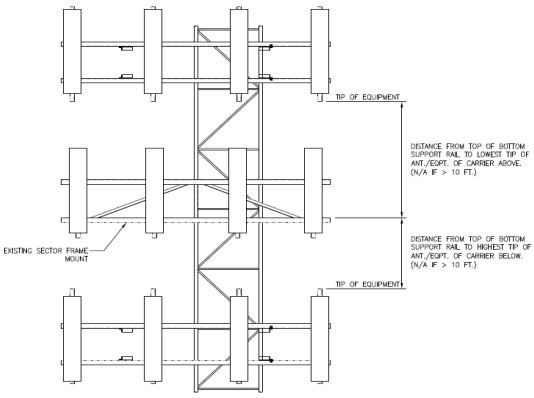

For T-Arms/Platforms on monopoles, record the weld size from the main standoff member to the plate bolting into the collar. See below for reference.

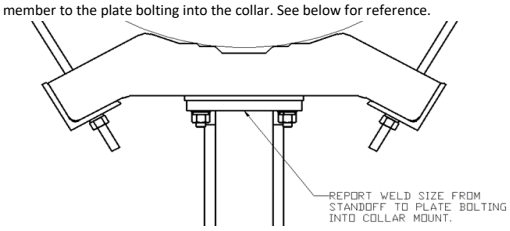

Sector B										
Ant_{1a}										
Ant_{1b}	LPA-80080/6CF E-DIN	5.51	13.19	70.87		150.663	34.50	15.50	220.00	15,411
Ant_{1c}										
Ant_{2a}	B13 RRH 4X30	11.80	7.50	20.90		151.167	28.45	-5.25		15,411
Ant_{2b}	SBNHH-1D65B	11.90	7.10	72.00		149.538	48.00	8.55	220.00	15,411
Ant_{2c}										
Ant_{3a}										
Ant_{3b}	SBNHH-1D65B	11.90	7.10	72.00		149.538	48.00	8.55	220.00	15,413
Ant_{3c}										
Ant_{4a}										
Ant_{4b}	LPA-80080/6CF E-DIN	5.51	13.19	70.87		150.663	34.50	15.50	220.00	15,413
Ant_{4c}										
Ant_{5a}										
Ant_{5b}										
Ant_{5c}										
Ant on Standoff										
Ant on Standoff										
Ant on Tower										
Ant on Tower										
Sector C										
Ant_{1a}										
Ant_{1b}	LPA-80080/6CF E-DIN	5.51	13.19	70.87		150.663	34.50	15.50	340.00	25,417
Ant_{1c}										
Ant_{2a}	B13 RRH 4X30	11.80	7.50	20.90		151.167	28.45	-5.25		25,417
Ant_{2b}	SBNHH-1D65B	11.90	7.10	72.00		149.538	48.00	8.55	340.00	25,417
Ant_{2c}										
Ant_{3a}										
Ant_{3b}	SBNHH-1D65B	11.90	7.10	72.00		149.538	48.00	8.55	340.00	25,416
Ant_{3c}										
Ant_{4a}										
Ant_{4b}	LPA-80080/6CF E-DIN	5.51	13.19	70.87		150.663	34.50	15.50	340.00	25,417
Ant_{4c}										
Ant_{5a}										
Ant_{5b}										
Ant_{5c}										
Ant on Standoff	RRFDC-3315-PF-48	15.73	10.25	25.60			32.75			416
Ant on Standoff										
Ant on Tower	RRFDC-3315-PF-48	15.73	10.25	25.60			54.00			416
Ant on Tower										
Sector D										
Ant_{1a}										
Ant_{1b}										
Ant_{1c}										
Ant_{2a}										
Ant_{2b}										
Ant_{2c}										
Ant_{3a}										
Ant_{3b}										
Ant_{3c}										
Ant_{4a}										
Ant_{4b}										
Ant_{4c}										
Ant_{5a}										
Ant_{5b}										
Ant_{5c}										
Ant on Standoff										
Ant on Standoff										
Ant on Tower										
Ant on Tower										

Observed Safety and Structural Issues During the Mount Mapping		
Issue #	Description of Issue	Photo #
1	COAX TOTAL (14): (6) FH 1 5/8,(6) FH 1 5/8 CUT, (2) 1.43"Ø HYBRID	
2		
3		
4		
5		
6		
7		
8		

Observed Obstructions to Tower Lighting System				
If the tower lighting system is being obstructed by the carrier's equipment (for example: a light nested by the antennas), please provide photos and fill in the information below.				Photo #
Description of Obstruction:				
Type of Light:		Photo #		Additional Comments:
Lighting Technology:		Photo #		
Elevation (AGL) at base of light (Ft.):		Photo #		
Is a service loop available?		Photo #		
Is beacon installed on an extension?		Photo #		

Mapping Notes
1. Please report any visible structural or safety issues observed on the antenna mounts (Damaged members, loose connections, tilting mounts, safety climb issues, etc.)
2. If the thickness of the existing pipes or tubing can't be obtained from a general tool (such as Caliper), please use an ultrasonic measurement tool (thickness gauge) to measure the thickness.
3. Please create all required detail sketches of the mounts and insert them into the "Sketches" tab.
4. Please measure and enter the bolt sizes and types under the Members Box in the spreadsheet of the mount type.
5. Take and label the photos of the tower, mounts, connections, antennas and all measurements. Minimum 50 photos are required.
6. Please measure and report the size and length of all existing antenna mounting pipes.
7. Please measure and report the antenna information for all sectors.
8. Don't delete or rearrange any sheet or contents of any sheet from this mapping form.

Standard Conditions
1. Obvious safety and structural issues/deficiencies noticed at the time of the mount mapping are to be reported in this mapping. However, this mount mapping is not a condition assessment of the mount.

V4.0 Updated on 3-31-2021

Antenna Mount Mapping Form (PATENT PENDING)

			FCC #
			UNKNOWN
Tower Owner:	CROWN CASTLE	**Mapping Date:**	7/9/2021
Site Name:	CC : N WOODBURY/ WOLFF PARCEL; VZW : WOODBURY N CT	**Tower Type:**	Monopole
Site Number or ID:	CC : 876379	**Tower Height (Ft.):**	UNKNOWN
Mapping Contractor:	RKS Design & Engineering, LLC	**Mount Elevation (Ft.):**	148.1

This antenna mapping form is the property of TES and under PATENT PENDING. The formation contained herein is considered confidential in nature and is to be used only for the specific customer it was intended for. Reproduction, transmission, publication, modification or disclosure by any method is prohibited except by express written permission of TES. All means and methods are the responsibility of the contractor and the work shall be compliant with ANSI/ASSE A 10.48, OSHA, FCC, FAA and other safety requirements that may apply. TES is not warrantying the usability of the safety climb as it must be assessed prior to each use in compliance with OSHA requirements.

Please Insert Sketches of the Antenna Mount

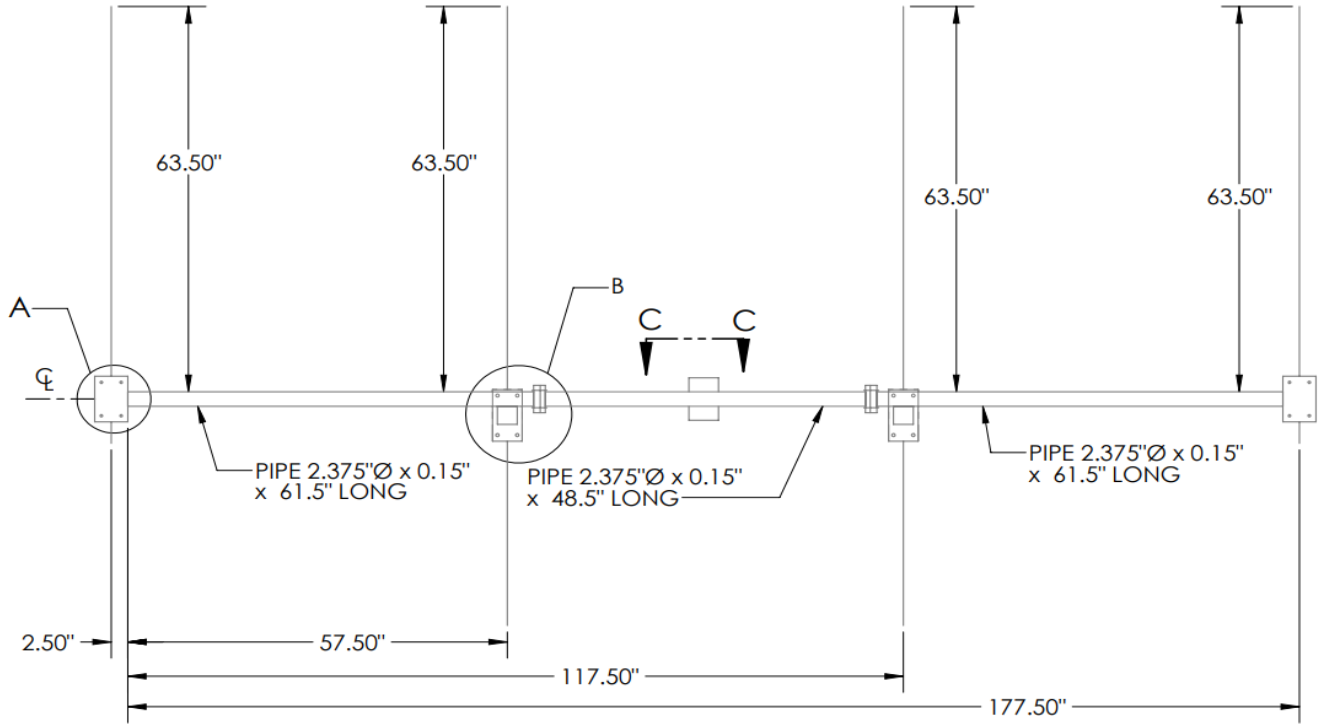

SECTOR A,B & C

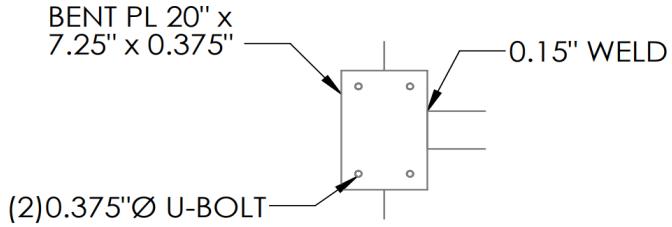

DETAIL A

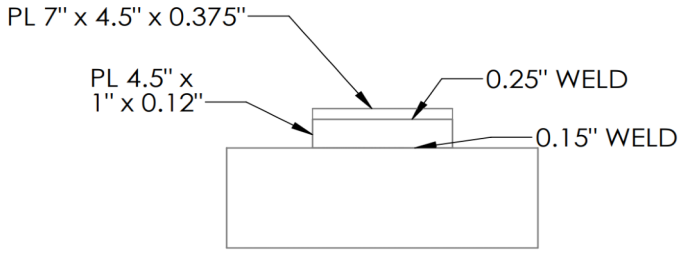

SECTION C-C

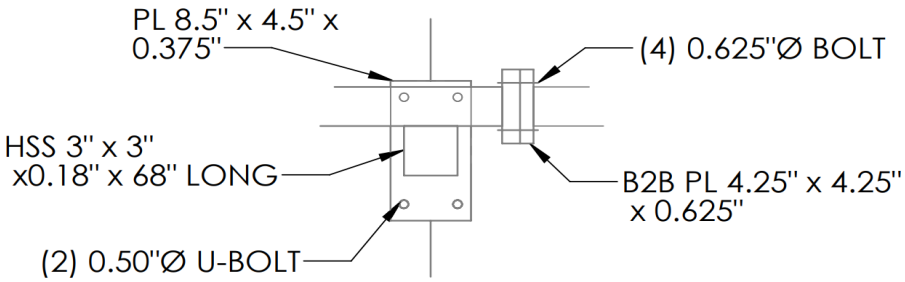

DETAIL B

Please Insert Sketches of the Antenna Mount, cont'd

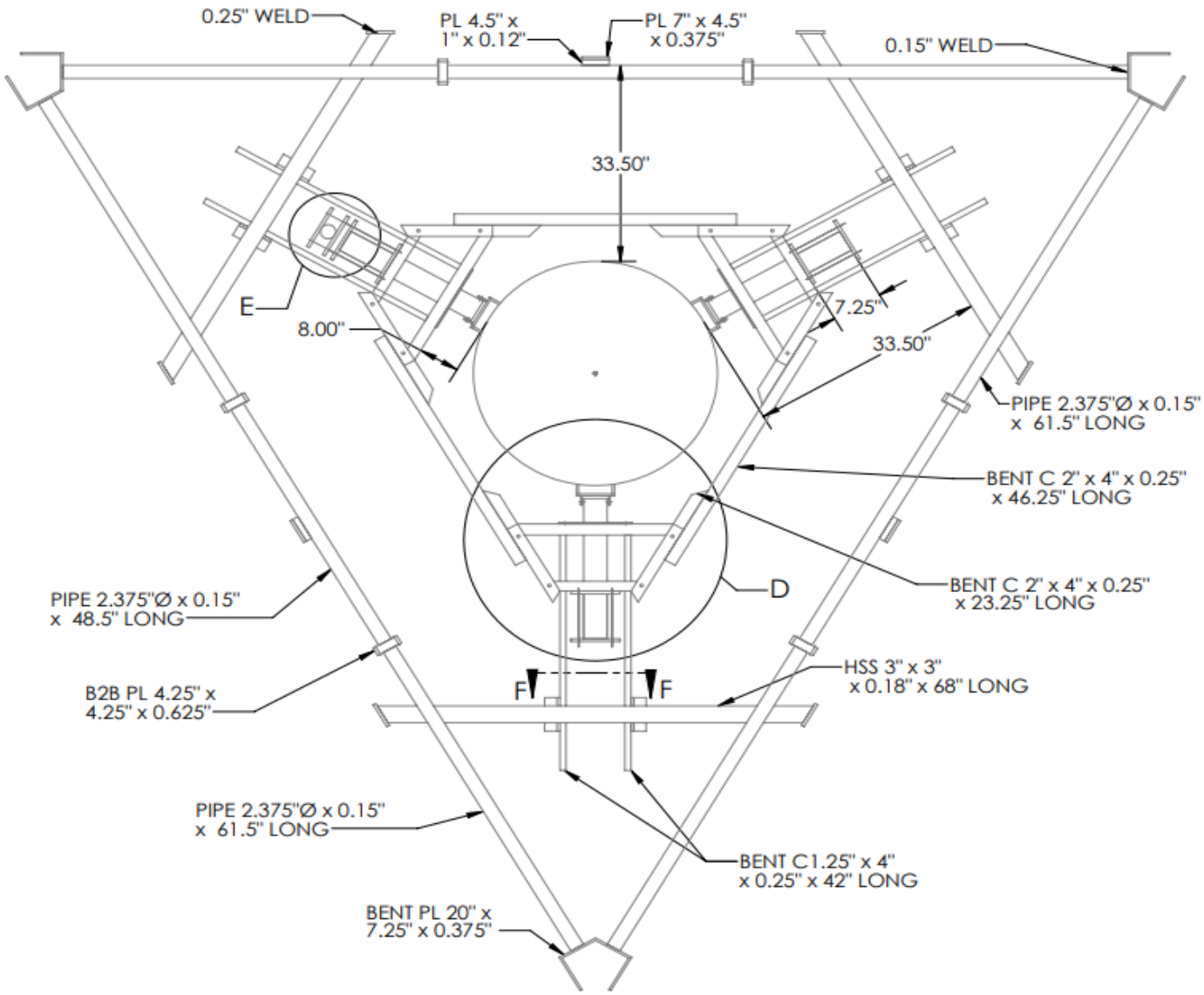

MOUNT PLAN VIEW

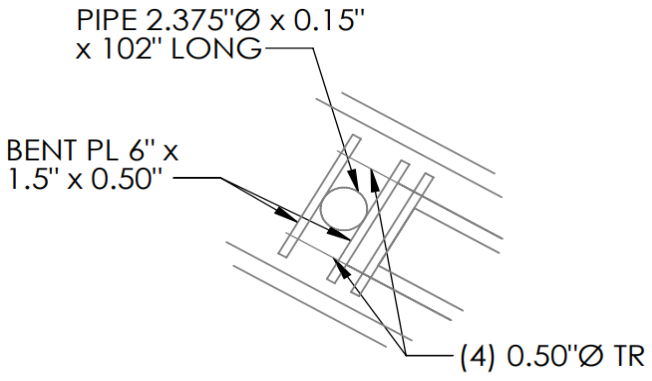

DETAIL E

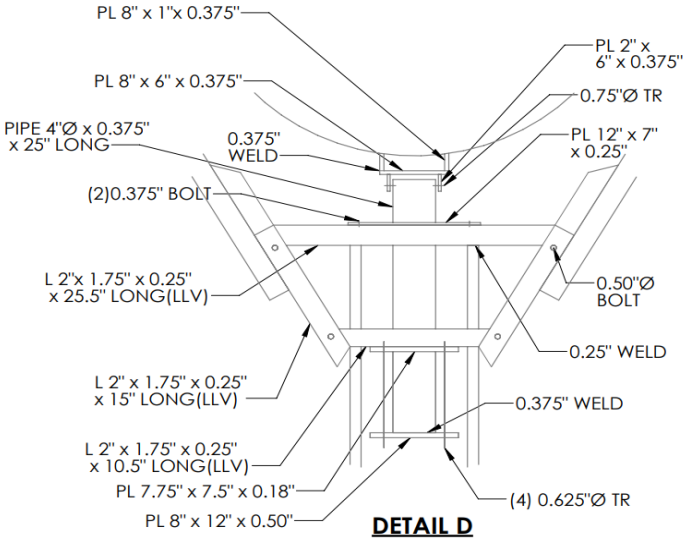

DETAIL D

Please Insert Sketches of the Antenna Mount, cont'd

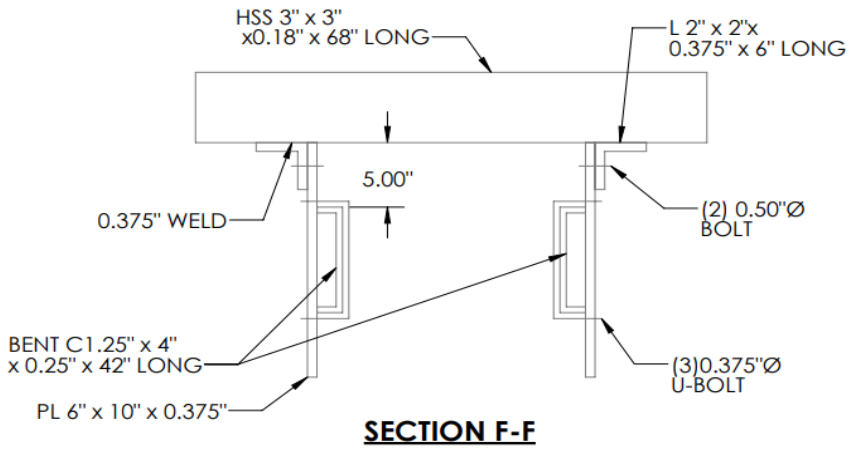

SECTION F-F

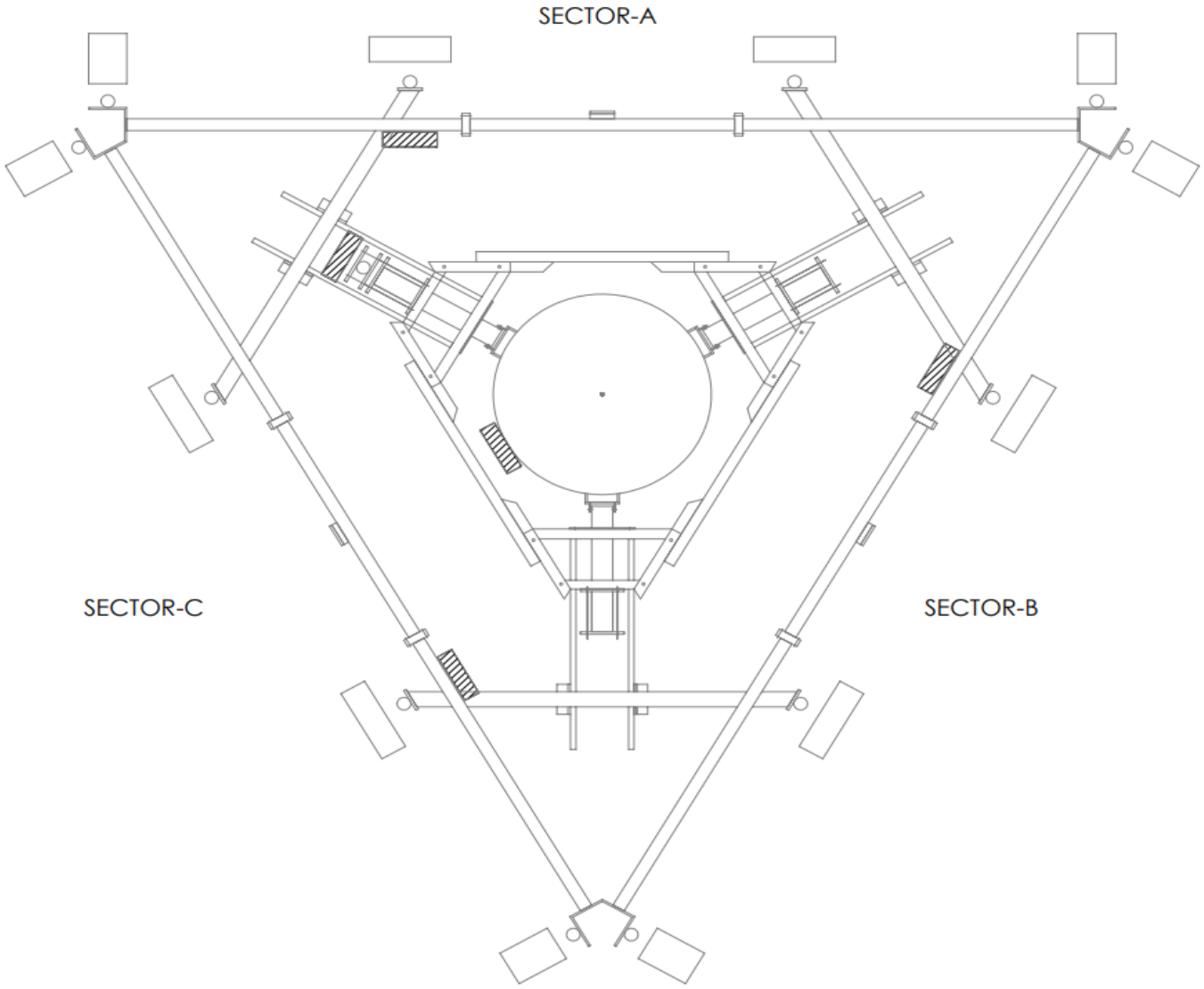

ANTENNA PLAN VIEW

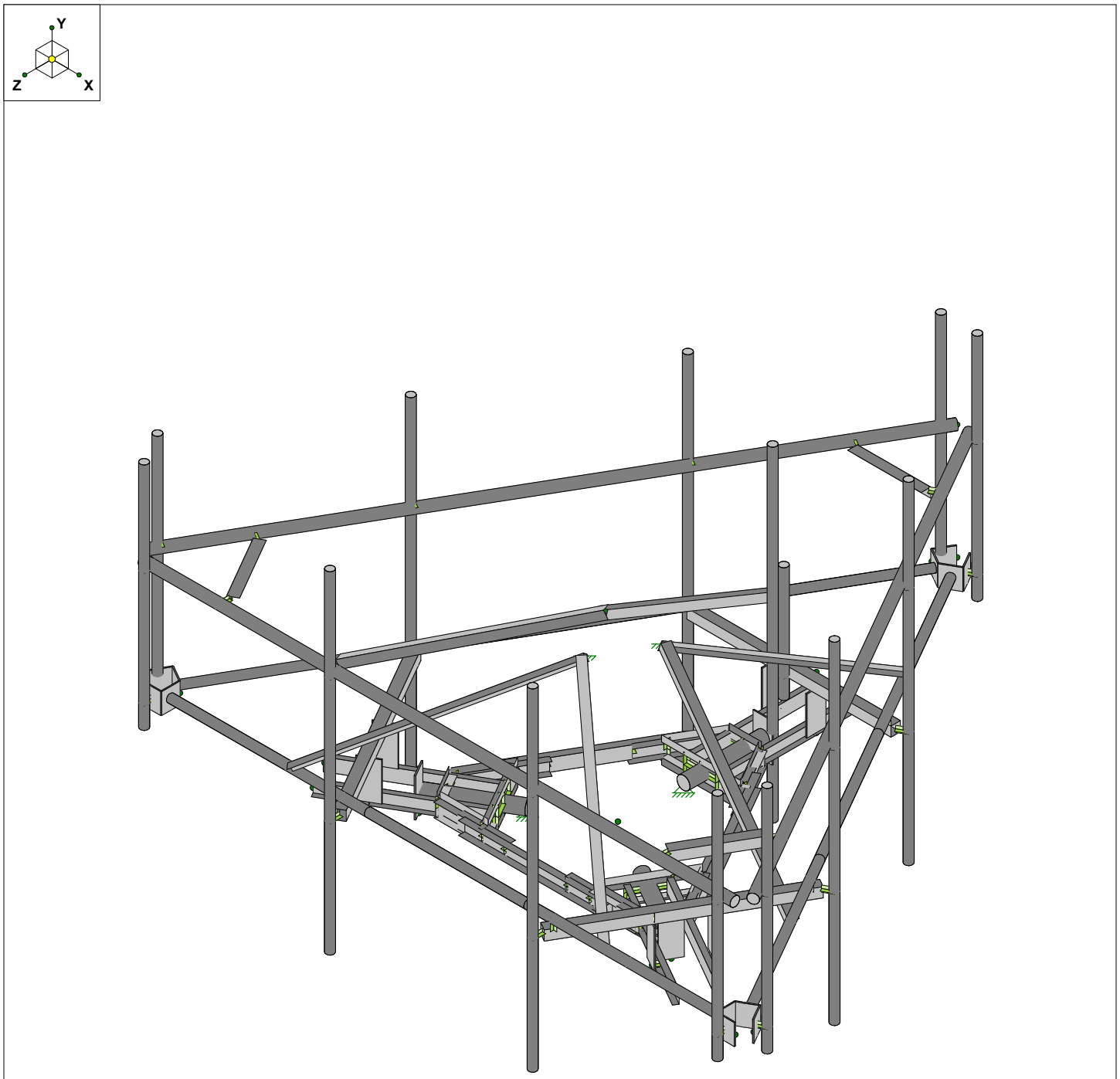

Envelope Only Solution

Maser Consulting	Mount Fix	SK - 1
NL		July 27, 2021 at 7:58 AM
21777330A		MOD_LOADED_467557-VZW_MT...

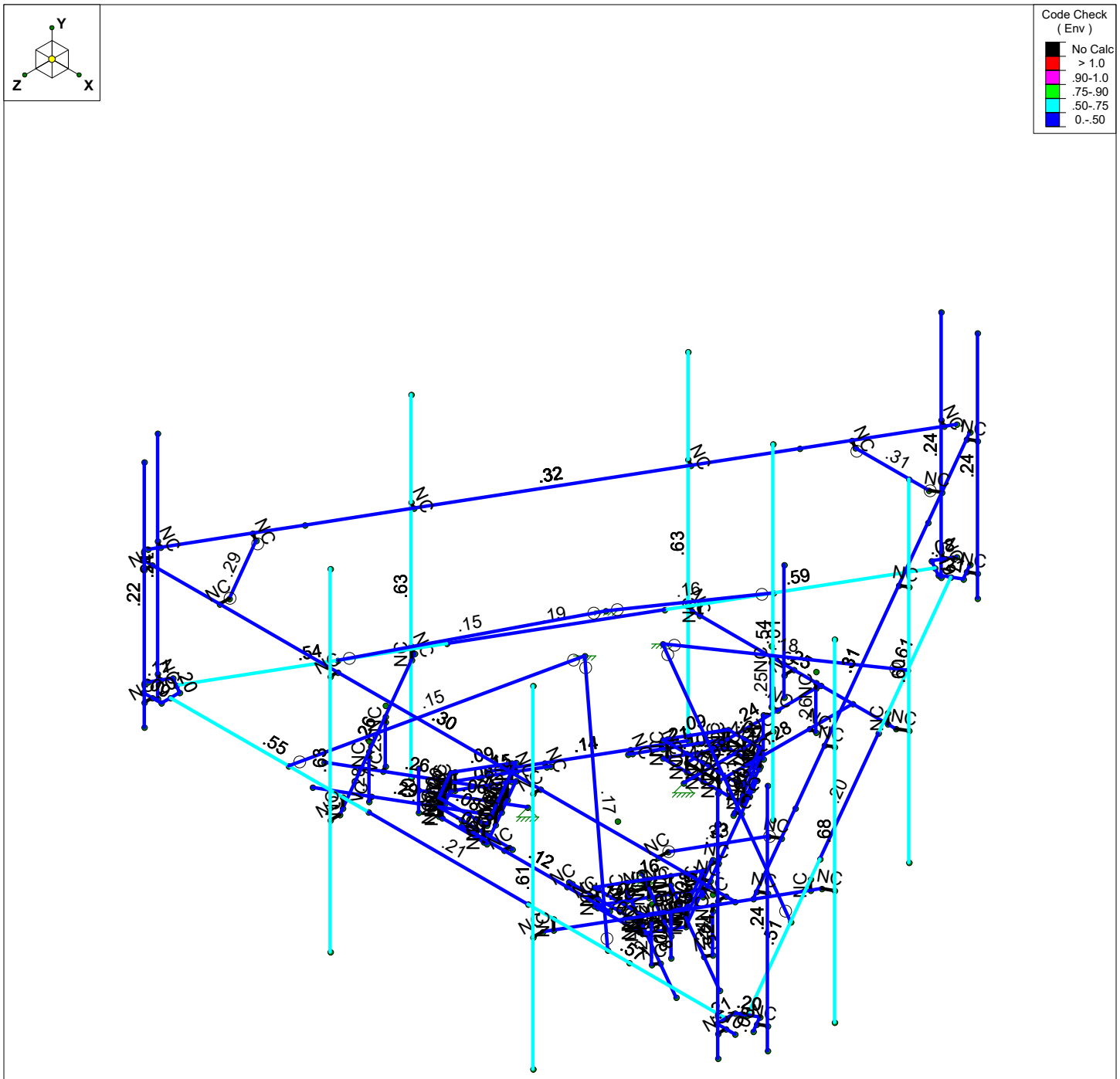

Member Code Checks Displayed (Enveloped)
Envelope Only Solution

Maser Consulting	Mount Fix	SK - 2
NL		July 27, 2021 at 7:58 AM
21777330A		MOD_LOADED_467557-VZW_MT...

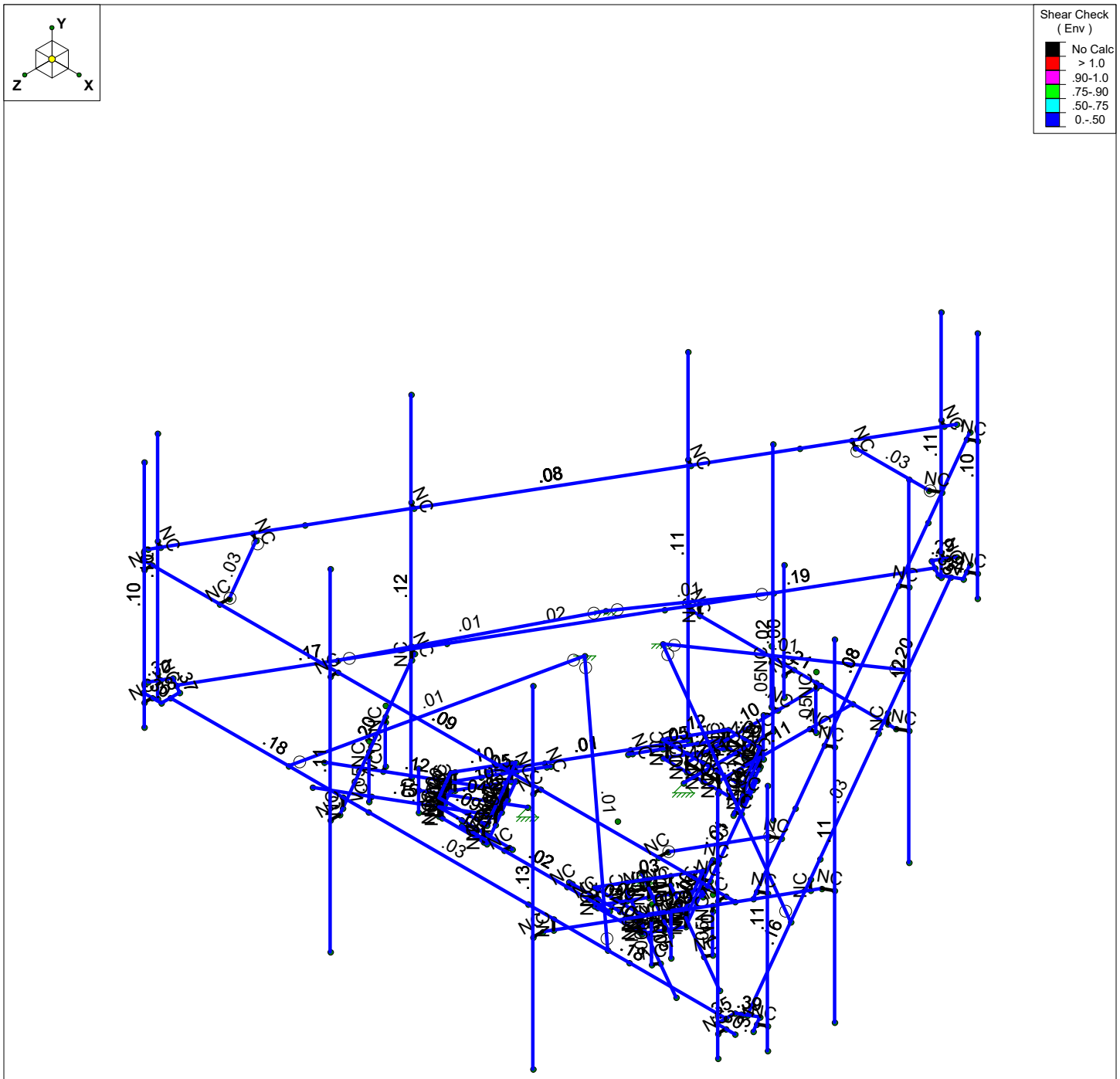

Member Shear Checks Displayed (Enveloped)
Envelope Only Solution

Maser Consulting	Mount Fix	SK - 3
NL		July 27, 2021 at 7:58 AM
21777330A		MOD_LOADED_467557-VZW_MT...

Basic Load Cases

	BLC Description	Category	X Gravity	Y Gravity	Z Gravity	Joint	Point	DistributedArea(Me...	Surface(...	
1	Antenna D	None					111			
2	Antenna Di	None					111			
3	Antenna Wo (0 Deg)	None					111			
4	Antenna Wo (30 Deg)	None					111			
5	Antenna Wo (60 Deg)	None					111			
6	Antenna Wo (90 Deg)	None					111			
7	Antenna Wo (120 Deg)	None					111			
8	Antenna Wo (150 Deg)	None					111			
9	Antenna Wo (180 Deg)	None					111			
10	Antenna Wo (210 Deg)	None					111			
11	Antenna Wo (240 Deg)	None					111			
12	Antenna Wo (270 Deg)	None					111			
13	Antenna Wo (300 Deg)	None					111			
14	Antenna Wo (330 Deg)	None					111			
15	Antenna Wi (0 Deg)	None					111			
16	Antenna Wi (30 Deg)	None					111			
17	Antenna Wi (60 Deg)	None					111			
18	Antenna Wi (90 Deg)	None					111			
19	Antenna Wi (120 Deg)	None					111			
20	Antenna Wi (150 Deg)	None					111			
21	Antenna Wi (180 Deg)	None					111			
22	Antenna Wi (210 Deg)	None					111			
23	Antenna Wi (240 Deg)	None					111			
24	Antenna Wi (270 Deg)	None					111			
25	Antenna Wi (300 Deg)	None					111			
26	Antenna Wi (330 Deg)	None					111			
27	Antenna Wm (0 Deg)	None					111			
28	Antenna Wm (30 Deg)	None					111			
29	Antenna Wm (60 Deg)	None					111			
30	Antenna Wm (90 Deg)	None					111			
31	Antenna Wm (120 Deg)	None					111			
32	Antenna Wm (150 Deg)	None					111			
33	Antenna Wm (180 Deg)	None					111			
34	Antenna Wm (210 Deg)	None					111			
35	Antenna Wm (240 Deg)	None					111			
36	Antenna Wm (270 Deg)	None					111			
37	Antenna Wm (300 Deg)	None					111			
38	Antenna Wm (330 Deg)	None					111			
39	Structure D	None		-1					9	
40	Structure Di	None						101	9	
41	Structure Wo (0 Deg)	None						202		
42	Structure Wo (30 Deg)	None						202		
43	Structure Wo (60 Deg)	None						202		
44	Structure Wo (90 Deg)	None						202		
45	Structure Wo (120 Deg)	None						202		
46	Structure Wo (150 Deg)	None						202		
47	Structure Wo (180 Deg)	None						202		
48	Structure Wo (210 Deg)	None						202		
49	Structure Wo (240 Deg)	None						202		
50	Structure Wo (270 Deg)	None						202		
51	Structure Wo (300 Deg)	None						202		
52	Structure Wo (330 Deg)	None						202		
53	Structure Wi (0 Deg)	None						202		
54	Structure Wi (30 Deg)	None						202		
55	Structure Wi (60 Deg)	None						202		
56	Structure Wi (90 Deg)	None						202		

Basic Load Cases (Continued)

	BLC Description	Category	X Gravity	Y Gravity	Z Gravity	Joint	Point	DistributedArea(Me...	Surface(...	
57	Structure Wi (120 Deg)	None						202		
58	Structure Wi (150 Deg)	None						202		
59	Structure Wi (180 Deg)	None						202		
60	Structure Wi (210 Deg)	None						202		
61	Structure Wi (240 Deg)	None						202		
62	Structure Wi (270 Deg)	None						202		
63	Structure Wi (300 Deg)	None						202		
64	Structure Wi (330 Deg)	None						202		
65	Structure Wm (0 Deg)	None						202		
66	Structure Wm (30 Deg)	None						202		
67	Structure Wm (60 Deg)	None						202		
68	Structure Wm (90 Deg)	None						202		
69	Structure Wm (120 Deg)	None						202		
70	Structure Wm (150 Deg)	None						202		
71	Structure Wm (180 Deg)	None						202		
72	Structure Wm (210 Deg)	None						202		
73	Structure Wm (240 Deg)	None						202		
74	Structure Wm (270 Deg)	None						202		
75	Structure Wm (300 Deg)	None						202		
76	Structure Wm (330 Deg)	None						202		
77	Lm1	None					1			
78	Lm2	None					1			
79	Lv1	None					1			
80	Lv2	None					1			
81	BLC 39 Transient Area ...	None						75		
82	BLC 40 Transient Area ...	None						75		

Load Combinations

	Description	Solve	P...	S...	BLC	Fac...	BLC	Fac...	BLC	Fac...	BLC	Fac...	BLC	Fac...	BLC	Fac...	BLC	Fac...	BLC	Fac...	BLC	Fac...	BLC	Fac...
1	1.2D+1.0Wo (0 De...	Yes	Y		1	1.2	39	1.2	3	1	41	1												
2	1.2D+1.0Wo (30 D...	Yes	Y		1	1.2	39	1.2	4	1	42	1												
3	1.2D+1.0Wo (60 D...	Yes	Y		1	1.2	39	1.2	5	1	43	1												
4	1.2D+1.0Wo (90 D...	Yes	Y		1	1.2	39	1.2	6	1	44	1												
5	1.2D+1.0Wo (120 ...	Yes	Y		1	1.2	39	1.2	7	1	45	1												
6	1.2D+1.0Wo (150 ...	Yes	Y		1	1.2	39	1.2	8	1	46	1												
7	1.2D+1.0Wo (180 ...	Yes	Y		1	1.2	39	1.2	9	1	47	1												
8	1.2D+1.0Wo (210 ...	Yes	Y		1	1.2	39	1.2	10	1	48	1												
9	1.2D+1.0Wo (240 ...	Yes	Y		1	1.2	39	1.2	11	1	49	1												
10	1.2D+1.0Wo (270 ...	Yes	Y		1	1.2	39	1.2	12	1	50	1												
11	1.2D+1.0Wo (300 ...	Yes	Y		1	1.2	39	1.2	13	1	51	1												
12	1.2D+1.0Wo (330 ...	Yes	Y		1	1.2	39	1.2	14	1	52	1												
13	1.2D + 1.0Di + 1.0...	Yes	Y		1	1.2	39	1.2	2	1	40	1	15	1	53	1								
14	1.2D + 1.0Di + 1.0...	Yes	Y		1	1.2	39	1.2	2	1	40	1	16	1	54	1								
15	1.2D + 1.0Di + 1.0...	Yes	Y		1	1.2	39	1.2	2	1	40	1	17	1	55	1								
16	1.2D + 1.0Di + 1.0...	Yes	Y		1	1.2	39	1.2	2	1	40	1	18	1	56	1								
17	1.2D + 1.0Di + 1.0...	Yes	Y		1	1.2	39	1.2	2	1	40	1	19	1	57	1								
18	1.2D + 1.0Di + 1.0...	Yes	Y		1	1.2	39	1.2	2	1	40	1	20	1	58	1								
19	1.2D + 1.0Di + 1.0...	Yes	Y		1	1.2	39	1.2	2	1	40	1	21	1	59	1								
20	1.2D + 1.0Di + 1.0...	Yes	Y		1	1.2	39	1.2	2	1	40	1	22	1	60	1								
21	1.2D + 1.0Di + 1.0...	Yes	Y		1	1.2	39	1.2	2	1	40	1	23	1	61	1								
22	1.2D + 1.0Di + 1.0...	Yes	Y		1	1.2	39	1.2	2	1	40	1	24	1	62	1								
23	1.2D + 1.0Di + 1.0...	Yes	Y		1	1.2	39	1.2	2	1	40	1	25	1	63	1								
24	1.2D + 1.0Di + 1.0...	Yes	Y		1	1.2	39	1.2	2	1	40	1	26	1	64	1								
25	1.2D + 1.5Lm1 + 1...	Yes	Y		1	1.2	39	1.2	77	1.5	27	1	65	1										
26	1.2D + 1.5Lm1 + 1...	Yes	Y		1	1.2	39	1.2	77	1.5	28	1	66	1										

Load Combinations (Continued)

	Description	Solve	P...	S...	BLC	Fac..	BLC	Fac...	BLC	Fac..	BLC	Fac..	BLC	Fac..	BLC	Fac..	BLC	Fac..	BLC	Fac..	BLC	Fac..	BLC	Fac...
27	1.2D + 1.5Lm1 + 1...	Yes	Y		1	1.2	39	1.2	77	1.5	29	1	67	1										
28	1.2D + 1.5Lm1 + 1...	Yes	Y		1	1.2	39	1.2	77	1.5	30	1	68	1										
29	1.2D + 1.5Lm1 + 1...	Yes	Y		1	1.2	39	1.2	77	1.5	31	1	69	1										
30	1.2D + 1.5Lm1 + 1...	Yes	Y		1	1.2	39	1.2	77	1.5	32	1	70	1										
31	1.2D + 1.5Lm1 + 1...	Yes	Y		1	1.2	39	1.2	77	1.5	33	1	71	1										
32	1.2D + 1.5Lm1 + 1...	Yes	Y		1	1.2	39	1.2	77	1.5	34	1	72	1										
33	1.2D + 1.5Lm1 + 1...	Yes	Y		1	1.2	39	1.2	77	1.5	35	1	73	1										
34	1.2D + 1.5Lm1 + 1...	Yes	Y		1	1.2	39	1.2	77	1.5	36	1	74	1										
35	1.2D + 1.5Lm1 + 1...	Yes	Y		1	1.2	39	1.2	77	1.5	37	1	75	1										
36	1.2D + 1.5Lm1 + 1...	Yes	Y		1	1.2	39	1.2	77	1.5	38	1	76	1										
37	1.2D + 1.5Lm2 + 1...	Yes	Y		1	1.2	39	1.2	78	1.5	27	1	65	1										
38	1.2D + 1.5Lm2 + 1...	Yes	Y		1	1.2	39	1.2	78	1.5	28	1	66	1										
39	1.2D + 1.5Lm2 + 1...	Yes	Y		1	1.2	39	1.2	78	1.5	29	1	67	1										
40	1.2D + 1.5Lm2 + 1...	Yes	Y		1	1.2	39	1.2	78	1.5	30	1	68	1										
41	1.2D + 1.5Lm2 + 1...	Yes	Y		1	1.2	39	1.2	78	1.5	31	1	69	1										
42	1.2D + 1.5Lm2 + 1...	Yes	Y		1	1.2	39	1.2	78	1.5	32	1	70	1										
43	1.2D + 1.5Lm2 + 1...	Yes	Y		1	1.2	39	1.2	78	1.5	33	1	71	1										
44	1.2D + 1.5Lm2 + 1...	Yes	Y		1	1.2	39	1.2	78	1.5	34	1	72	1										
45	1.2D + 1.5Lm2 + 1...	Yes	Y		1	1.2	39	1.2	78	1.5	35	1	73	1										
46	1.2D + 1.5Lm2 + 1...	Yes	Y		1	1.2	39	1.2	78	1.5	36	1	74	1										
47	1.2D + 1.5Lm2 + 1...	Yes	Y		1	1.2	39	1.2	78	1.5	37	1	75	1										
48	1.2D + 1.5Lm2 + 1...	Yes	Y		1	1.2	39	1.2	78	1.5	38	1	76	1										
49	1.2D + 1.5Lv1	Yes	Y		1	1.2	39	1.2	79	1.5														
50	1.2D + 1.5Lv2	Yes	Y		1	1.2	39	1.2	80	1.5														
51	1.4D	Yes	Y		1	1.4	39	1.4																

Joint Coordinates and Temperatures

	Label	X [in]	Y [in]	Z [in]	Temp [F]	Detach From Diap...
1	CP	0	0	0	0	
2	N2	-0.	0	-20.655	0	
3	N3	-0.	0	-45.655	0	
4	N4	-0.	0	-26.664632	0	
5	N5	-0.	0	-39.655	0	
6	N6	-5.	0	-26.664632	0	
7	N7	-5.	0	-39.655	0	
8	N8	5.	0	-26.664632	0	
9	N9	5.	0	-39.655	0	
10	N10	-5.	0	-68.655	0	
11	N11	5.	0	-68.655	0	
12	N12	-0.	2.5	-26.664632	0	
13	N13	-0.	2.5	-39.655	0	
14	N14	-0.	-2.5	-26.664632	0	
15	N15	-0.	-2.5	-39.655	0	
16	N16	-5.	2.5	-26.664632	0	
17	N17	5.	2.5	-26.664632	0	
18	N18	-5.	-2.5	-26.664632	0	
19	N19	5.	-2.5	-26.664632	0	
20	N20	-5.	2.5	-39.655	0	
21	N21	5.	2.5	-39.655	0	
22	N22	-5.	-2.5	-39.655	0	
23	N23	5.	-2.5	-39.655	0	
24	N34	-12.500023	2.5	-26.664632	0	
25	N35	12.500023	2.5	-26.664632	0	
26	N31	-12.500023	-2.5	-26.664632	0	
27	N32	12.500023	-2.5	-26.664632	0	

Joint Coordinates and Temperatures (Continued)

	Label	X [in]	Y [in]	Z [in]	Temp [F]	Detach From Diap...
28	N31A	-5.500002	2.5	-38.788975	0	
29	N32A	5.500002	2.5	-38.788975	0	
30	N33	-5.500002	-2.5	-38.788975	0	
31	N34A	5.500002	-2.5	-38.788975	0	
32	N35A	-12.000021	2.5	-27.530657	0	
33	N36	12.000021	2.5	-27.530657	0	
34	N37	-12.000021	-2.5	-27.530657	0	
35	N38	12.000021	-2.5	-27.530657	0	
36	N39	-12.000021	0	-27.530657	0	
37	N40	12.000021	0	-27.530657	0	
38	N41	-5.500002	0	-38.788975	0	
39	N42	5.500002	0	-38.788975	0	
40	N43	-8.500011	0	-33.592828	0	
41	N44	8.500011	0	-33.592828	0	
42	N46A	-31.99651	0	3.933502	0	
43	N49	31.99651	0	3.933502	0	
44	N51	-16.500035	0	-19.736436	0	
45	N52	16.500035	0	-19.736436	0	
46	N49A	-12.500023	0	-26.664632	0	
47	N50A	12.500023	0	-26.664632	0	
48	N51A	-16.000033	0	-20.60246	0	
49	N52A	16.000033	0	-20.60246	0	
50	N57	-5.	0	-55.155	0	
51	N58	5.	0	-55.155	0	
52	N59	-0.	6	-45.655	0	
53	N60	-0.	-6	-45.655	0	
54	N61	-7.	0	-55.155	0	
55	N62	7.	0	-55.155	0	
56	N63	-7.	12	-55.155	0	
57	N64	7.	12	-55.155	0	
58	N65	-7.	13.5	-55.155	0	
59	N66	7.	13.5	-55.155	0	
60	N67	-32.	13.5	-55.155	0	
61	N68	32.	13.5	-55.155	0	
62	N70	13.872942	0	-27.457287	0	
63	N71	17.372942	0	-21.395109	0	
64	N70A	-13.872942	0	-27.457287	0	
65	N71A	-17.372942	0	-21.395109	0	
66	N71B	-17.887755	0	10.3275	0	
67	N72	-39.53839	0	22.8275	0	
68	N73	-23.092249	0	13.332316	0	
69	N74	-34.342237	0	19.8275	0	
70	N75	-20.592249	0	17.662443	0	
71	N76	-31.842237	0	24.157627	0	
72	N77	-25.592249	0	9.002189	0	
73	N78	-36.842237	0	15.497373	0	
74	N79	-56.956974	0	38.657627	0	
75	N80	-61.956974	0	29.997373	0	
76	N81	-23.092249	2.5	13.332316	0	
77	N82	-34.342237	2.5	19.8275	0	
78	N83	-23.092249	-2.5	13.332316	0	
79	N84	-34.342237	-2.5	19.8275	0	
80	N85	-20.592249	2.5	17.662443	0	
81	N86	-25.592249	2.5	9.002189	0	
82	N87	-20.592249	-2.5	17.662443	0	
83	N88	-25.592249	-2.5	9.002189	0	
84	N89	-31.842237	2.5	24.157627	0	

Joint Coordinates and Temperatures (Continued)

	Label	X [in]	Y [in]	Z [in]	Temp [F]	Detach From Diap...
85	N90	-36.842237	2.5	15.497373	0	
86	N91	-31.842237	-2.5	24.157627	0	
87	N92	-36.842237	-2.5	15.497373	0	
88	N93	-16.842237	2.5	24.157653	0	
89	N94	-29.34226	2.5	2.506979	0	
90	N95	-16.842237	-2.5	24.157653	0	
91	N96	-29.34226	-2.5	2.506979	0	
92	N97	-30.842237	2.5	24.157627	0	
93	N98	-36.342239	2.5	14.631347	0	
94	N99	-30.842237	-2.5	24.157627	0	
95	N100	-36.342239	-2.5	14.631347	0	
96	N101	-17.842237	2.5	24.157627	0	
97	N102	-29.842259	2.5	3.373005	0	
98	N103	-17.842237	-2.5	24.157627	0	
99	N104	-29.842259	-2.5	3.373005	0	
100	N105	-17.842237	0	24.157627	0	
101	N106	-29.842259	0	3.373005	0	
102	N107	-30.842237	0	24.157627	0	
103	N108	-36.342239	0	14.631347	0	
104	N109	-24.842237	0	24.157639	0	
105	N110	-33.342248	0	9.435189	0	
106	N111	19.404767	0	25.743039	0	
107	N112	-23.122915	0	25.742964	0	
108	N113	-12.591742	0	-29.676541	0	
109	N115	-8.842237	0	24.157667	0	
110	N116	-25.342272	0	-4.421231	0	
111	N117	-16.842237	0	24.157627	0	
112	N118	-29.34226	0	2.506979	0	
113	N119	-9.842237	0	24.157627	0	
114	N120	-25.842271	0	-3.555205	0	
115	N121	-45.265631	0	31.907627	0	
116	N122	-50.265631	0	23.247373	0	
117	N123	-39.53839	6	22.8275	0	
118	N124	-39.53839	-6	22.8275	0	
119	N125	-44.265631	0	33.639678	0	
120	N126	-51.265631	0	21.515322	0	
121	N127	-44.265631	12	33.639678	0	
122	N128	-51.265631	12	21.515322	0	
123	N129	-44.265631	13.5	33.639678	0	
124	N130	-51.265631	13.5	21.515322	0	
125	N131	-31.765631	13.5	55.290313	0	
126	N132	-63.765631	13.5	-0.135313	0	
127	N135	-30.715179	0	1.714324	0	
128	N136	-27.215179	0	-4.347854	0	
129	N137	-16.842237	0	25.742964	0	
130	N138	-9.842237	0	25.742964	0	
131	N140	17.887755	0	10.3275	0	
132	N141	39.53839	0	22.8275	0	
133	N142	23.092249	0	13.332316	0	
134	N143	34.342237	0	19.8275	0	
135	N144	25.592249	0	9.002189	0	
136	N145	36.842237	0	15.497373	0	
137	N146	20.592249	0	17.662443	0	
138	N147	31.842237	0	24.157627	0	
139	N148	61.956974	0	29.997373	0	
140	N149	56.956974	0	38.657627	0	
141	N150	23.092249	2.5	13.332316	0	

Joint Coordinates and Temperatures (Continued)

	Label	X [in]	Y [in]	Z [in]	Temp [F]	Detach From Diap...
142	N151	34.342237	2.5	19.8275	0	
143	N152	23.092249	-2.5	13.332316	0	
144	N153	34.342237	-2.5	19.8275	0	
145	N154	25.592249	2.5	9.002189	0	
146	N155	20.592249	2.5	17.662443	0	
147	N156	25.592249	-2.5	9.002189	0	
148	N157	20.592249	-2.5	17.662443	0	
149	N158	36.842237	2.5	15.497373	0	
150	N159	31.842237	2.5	24.157627	0	
151	N160	36.842237	-2.5	15.497373	0	
152	N161	31.842237	-2.5	24.157627	0	
153	N162	29.34226	2.5	2.506979	0	
154	N163	16.842237	2.5	24.157653	0	
155	N164	29.34226	-2.5	2.506979	0	
156	N165	16.842237	-2.5	24.157653	0	
157	N166	36.342239	2.5	14.631347	0	
158	N167	30.842237	2.5	24.157627	0	
159	N168	36.342239	-2.5	14.631347	0	
160	N169	30.842237	-2.5	24.157627	0	
161	N170	29.842259	2.5	3.373005	0	
162	N171	17.842237	2.5	24.157627	0	
163	N172	29.842259	-2.5	3.373005	0	
164	N173	17.842237	-2.5	24.157627	0	
165	N174	29.842259	0	3.373005	0	
166	N175	17.842237	0	24.157627	0	
167	N176	36.342239	0	14.631347	0	
168	N177	30.842237	0	24.157627	0	
169	N178	33.342248	0	9.435189	0	
170	N179	24.842237	0	24.157639	0	
171	N180	12.591742	0	-29.676541	0	
172	N182	-19.404767	0	25.743039	0	
173	N183	23.122915	0	25.742964	0	
174	N184	25.342272	0	-4.421231	0	
175	N185	8.842237	0	24.157667	0	
176	N186	29.34226	0	2.506979	0	
177	N187	16.842237	0	24.157627	0	
178	N188	25.842271	0	-3.555205	0	
179	N189	9.842237	0	24.157627	0	
180	N190	50.265631	0	23.247373	0	
181	N191	45.265631	0	31.907627	0	
182	N192	39.53839	6	22.8275	0	
183	N193	39.53839	-6	22.8275	0	
184	N194	51.265631	0	21.515322	0	
185	N195	44.265631	0	33.639678	0	
186	N196	51.265631	12	21.515322	0	
187	N197	44.265631	12	33.639678	0	
188	N198	51.265631	13.5	21.515322	0	
189	N199	44.265631	13.5	33.639678	0	
190	N200	63.765631	13.5	-0.135313	0	
191	N201	31.765631	13.5	55.290313	0	
192	N204	16.842237	0	25.742964	0	
193	N205	9.842237	0	25.742964	0	
194	N206	30.715179	0	1.714324	0	
195	N207	27.215179	0	-4.347854	0	
196	N206A	86.999981	16.5	53.09416	0	
197	N207A	-87.000019	16.5	53.09416	0	
198	N202	86.999981	16.5	55.95886	0	

Joint Coordinates and Temperatures (Continued)

	Label	X [in]	Y [in]	Z [in]	Temp [F]	Detach From Diap...
199	N207B	2.480901	16.5	-101.891274	0	
200	N208	89.480892	16.5	48.79713	0	
201	N212	86.999981	16.5	50.229463	0	
202	N214	-89.480887	16.5	48.797122	0	
203	N215	-2.480892	16.5	-101.89129	0	
204	N221	29.464102	13.5	-55.155	0	
205	N222	-29.464102	13.5	-55.155	0	
206	N223	-33.03358	13.5	53.09416	0	
207	N224	-62.497682	13.5	2.06084	0	
208	N225	33.03358	13.5	53.09416	0	
209	N226	62.497682	13.5	2.06084	0	
210	N227	29.464102	16.5	-55.155	0	
211	N228	-29.464102	16.5	-55.155	0	
212	N229	-33.03358	16.5	53.09416	0	
213	N230	-62.497682	16.5	2.06084	0	
214	N231	33.03358	16.5	53.09416	0	
215	N232	62.497682	16.5	2.06084	0	
216	N231A	92.729381	16.5	55.95886	0	
217	N221A	-87.000019	16.5	55.95886	0	
218	N222A	-87.000019	16.5	50.229463	0	
219	N223A	-92.729419	16.5	55.95886	0	
220	N224A	4.961804	16.5	-103.323624	0	
221	N225A	-0.	16.5	-100.458925	0	
222	N226A	2.097104	16.5	-108.28543	0	
223	N227A	91.961804	16.5	47.364796	0	
224	N229A	94.826504	16.5	52.326602	0	
225	N230A	-91.961785	16.5	47.364764	0	
226	N232A	-94.826485	16.5	52.32657	0	
227	N233	-4.961785	16.5	-103.323657	0	
228	N235	-2.097085	16.5	-108.285463	0	
229	N233A	-25.000019	16.5	53.09416	0	
230	N234	58.480892	16.5	-4.896445	0	
231	N235A	-33.480892	16.5	-48.197715	0	
232	N236	24.999981	16.5	53.09416	0	
233	N237	33.480892	16.5	-48.197715	0	
234	N238	-58.480892	16.5	-4.896445	0	
235	N239	89.864681	16.5	55.95886	0	
236	N240	-89.864719	16.5	55.95886	0	
237	N241	89.864681	16.5	58.45886	0	
238	N242	-89.864719	16.5	58.45886	0	
239	N256	3.529454	16.5	-105.804527	0	
240	N257	93.394154	16.5	49.845699	0	
241	N258	5.694518	16.5	-107.054527	0	
242	N259	95.559218	16.5	48.595699	0	
243	N273	-93.394135	16.5	49.845667	0	
244	N274	-3.529435	16.5	-105.80456	0	
245	N275	-95.559199	16.5	48.595667	0	
246	N276	-5.694499	16.5	-107.05456	0	
247	N294A	-0.	13.5	-55.155	0	
248	N295	-0.	13.5	-52.155	0	
249	N296	-0.	43.5	-52.155	0	
250	N297	-0.	7.5	-52.155	0	
251	N291	-0.	0	-48.655	0	
252	N292	-0.	-24	-48.655	0	
253	N293	-0.	78	-48.655	0	
254	N270	-31.765631	13.5	58.290313	0	
255	N271	31.765631	13.5	58.290313	0	

Joint Coordinates and Temperatures (Continued)

	Label	X [in]	Y [in]	Z [in]	Temp [F]	Detach From Diap...
256	N272	-31.765631	81.75	58.290313	0	
257	N273A	31.765631	81.75	58.290313	0	
258	N274A	-31.765631	-22.25	58.290313	0	
259	N275A	31.765631	-22.25	58.290313	0	
260	N278A	66.363707	13.5	-1.635313	0	
261	N279A	34.598076	13.5	-56.655	0	
262	N280A	66.363707	81.75	-1.635313	0	
263	N281	34.598076	81.75	-56.655	0	
264	N282	66.363707	-22.25	-1.635313	0	
265	N283	34.598076	-22.25	-56.655	0	
266	N286	-34.598076	13.5	-56.655	0	
267	N287	-66.363707	13.5	-1.635313	0	
268	N288	-34.598076	81.75	-56.655	0	
269	N289	-66.363707	81.75	-1.635313	0	
270	N290	-34.598076	-22.25	-56.655	0	
271	N291A	-66.363707	-22.25	-1.635313	0	
272	N276A	89.864681	81.75	58.45886	0	
273	N277	-89.864719	81.75	58.45886	0	
274	N278	89.864681	9.75	58.45886	0	
275	N279	-89.864719	9.75	58.45886	0	
276	N280	5.694518	81.75	-107.054527	0	
277	N281A	95.559218	81.75	48.595699	0	
278	N282A	5.694518	9.75	-107.054527	0	
279	N283A	95.559218	9.75	48.595699	0	
280	N284	-95.559199	81.75	48.595667	0	
281	N285	-5.694499	81.75	-107.05456	0	
282	N286A	-95.559199	9.75	48.595667	0	
283	N287A	-5.694499	9.75	-107.05456	0	
284	N284A	33.855518	0	7.15355	0	
285	N285A	10.732603	0	-32.896514	0	
286	N286B	-10.732603	0	-32.896514	0	
287	N287B	-33.855518	0	7.15355	0	
288	N288A	-7.	16.5	-55.155	0	
289	N289A	7.	16.5	-55.155	0	
290	N290A	-44.265631	16.5	33.639678	0	
291	N291B	-51.265631	16.5	21.515322	0	
292	N292A	51.265631	16.5	21.515322	0	
293	N293A	44.265631	16.5	33.639678	0	
294	N294	88.653922	16.5	49.274574	0	
295	N295A	88.240437	16.5	49.513296	0	
296	N296A	92.729381	52.5	55.95886	0	
297	N297A	-92.729419	52.5	55.95886	0	
298	N300	2.097104	52.5	-108.28543	0	
299	N301	94.826504	52.5	52.326602	0	
300	N304	-94.826485	52.5	52.32657	0	
301	N305	-2.097085	52.5	-108.285463	0	
302	N302	89.864681	52.5	55.95886	0	
303	N303	-89.864719	52.5	55.95886	0	
304	N304A	89.864681	52.5	58.45886	0	
305	N305A	-89.864719	52.5	58.45886	0	
306	N306	-31.765631	52.5	55.95886	0	
307	N307	31.765631	52.5	55.95886	0	
308	N308	-31.765631	52.5	58.290313	0	
309	N309	31.765631	52.5	58.290313	0	
310	N310	3.529454	52.5	-105.804527	0	
311	N311	93.394154	52.5	49.845699	0	
312	N312	5.694518	52.5	-107.054527	0	

Joint Coordinates and Temperatures (Continued)

	Label	X [in]	Y [in]	Z [in]	Temp [F]	Detach From Diap...
313	N313	95.559218	52.5	48.595699	0	
314	N314	64.34461	52.5	-0.469587	0	
315	N315	32.578979	52.5	-55.489274	0	
316	N316	66.363707	52.5	-1.635313	0	
317	N317	34.598076	52.5	-56.655	0	
318	N318	-93.394135	52.5	49.845667	0	
319	N319	-3.529435	52.5	-105.80456	0	
320	N320	-95.559199	52.5	48.595667	0	
321	N321	-5.694499	52.5	-107.05456	0	
322	N322	-32.578979	52.5	-55.489274	0	
323	N323	-64.34461	52.5	-0.469587	0	
324	N324	-34.598076	52.5	-56.655	0	
325	N325	-66.363707	52.5	-1.635313	0	
326	N326	-68.729419	52.5	55.95886	0	
327	N327	68.729381	52.5	55.95886	0	
328	N328	-68.729419	52.5	52.95886	0	
329	N329	68.729381	52.5	52.95886	0	
330	N330	82.826504	52.5	31.541992	0	
331	N331	14.097104	52.5	-87.50082	0	
332	N332	80.228428	52.5	33.041992	0	
333	N333	11.499028	52.5	-86.00082	0	
334	N334	-14.097085	52.5	-87.500853	0	
335	N335	-82.826485	52.5	31.54196	0	
336	N336	-11.499009	52.5	-86.000853	0	
337	N337	-80.228409	52.5	33.04196	0	
338	N338	-50.	16.5	53.09086	0	
339	N339	56.729381	16.5	53.09086	0	
340	N340	76.826504	52.5	21.149688	0	
341	N341	20.097104	52.5	-77.108515	0	
342	N342	-20.097085	52.5	-77.108548	0	
343	N343	-76.826485	52.5	21.149655	0	
344	N345	0	50.	10.3275	0	
345	N345A	50.	16.5	53.09086	0	
346	N346	70.978033	16.5	16.75584	0	
347	N347	8.943877	50.	-5.16375	0	
348	N348	20.978033	16.5	-69.8467	0	
349	N349	-20.978033	16.5	-69.8467	0	
350	N350	-8.943877	50.	-5.16375	0	
351	N351	-70.978033	16.5	16.75584	0	

Hot Rolled Steel Section Sets

	Label	Shape	Type	Design List	Material	Design ...	A [in2]	Iyy [in4]	Izz [in4]	J [in4]
1	Antenna Pipe	PIPE_2.0	Beam	Pipe	A53 Gr. B	Typical	1.02	.627	.627	1.25
2	Standoff	PIPE_3.5X	Beam	Pipe	A53 Gr. B	Typical	3.43	5.94	5.94	11.9
3	Cross Member HSS	HSS3X3X3	Beam	Pipe	A500 Gr. B 46	Typical	1.89	2.46	2.46	4.03
4	TES Main Channel	C5X9	Beam	Channel	A36 Gr.36	Typical	2.64	.624	8.89	.109
5	TES Side Channel	C5X9	Beam	Channel	A36 Gr.36	Typical	2.64	.624	8.89	.109
6	Side Angles	L2x2x4	Beam	Single Angle	A36 Gr.36	Typical	.944	.346	.346	.021
7	Face Horizontal	PIPE_2.0	Beam	Pipe	A53 Gr. B	Typical	1.02	.627	.627	1.25
8	TES FH Plates	PL3/8x6	Beam	RECT	A36 Gr.36	Typical	2.25	.026	6.75	.101
9	SO Vertical Plates	PL3/8x6	Beam	RECT	A36 Gr.36	Typical	2.25	.026	6.75	.101
10	Cross Member An...	L2x2x6	Beam	Single Angle	A36 Gr.36	Typical	1.37	.476	.476	.066
11	Standoff Plate	PL3/8x6	Beam	RECT	A36 Gr.36	Typical	2.25	.026	6.75	.101
12	Main Channel	C4X4.5	Beam	Channel	A36 Gr.36	Typical	1.34	.265	3.53	.031
13	Side Channel	C4X2	Beam	Channel	A36 Gr.36	Typical	2.123	.716	4.668	.056

Hot Rolled Steel Section Sets (Continued)

	Label	Shape	Type	Design List	Material	Design ...	A [in2]	Iyy [in4]	Izz [in4]	J [in4]
14	FH Plates	PL3/8X6.5	Beam	Channel	A36 Gr.36	Typical	2.438	.029	8.582	.11
15	MOD Support Rail	PIPE 2.5	Beam	Channel	A53 Gr. B	Typical	1.61	1.45	1.45	2.89
16	MOD Corner Brac...	L3X3X4	Beam	Channel	A36 Gr.36	Typical	1.44	1.23	1.23	.031
17	MOD V-Bracing	L2.5x2.5x3	Beam	Channel	A36 Gr.36	Typical	.901	.535	.535	.011

Hot Rolled Steel Design Parameters

	Label	Shape	Length[in]	Lbyy[in]	Lbzz[in]	Lcomp top[in]	Lcomp bot[in]	L-torqu...	Kyy	Kzz	Cb	Function
1	M1	Standoff	25			Lbyy						Lateral
2	M4	Main Channel	41.99			Lbyy						Lateral
3	M5	Main Channel	41.99			Lbyy						Lateral
4	M18	Side Angles	10			Lbyy						Lateral
5	M19	Side Angles	15			Lbyy						Lateral
6	M20	Side Angles	15			Lbyy						Lateral
7	M21	Side Angles	25			Lbyy						Lateral
8	M22	Side Angles	10			Lbyy						Lateral
9	M28	Side Channel	23			Lbyy						Lateral
10	M29	Side Channel	23			Lbyy						Lateral
11	M27A	Side Angles	15			Lbyy						Lateral
12	M28A	Side Angles	15			Lbyy						Lateral
13	M29A	Side Angles	25			Lbyy						Lateral
14	M44	Standoff Pla...	12			Lbyy						Lateral
15	M47	Standoff Pla...	12			Lbyy						Lateral
16	M48	Standoff Pla...	12			Lbyy						Lateral
17	M51	Cross Mem...	64			Lbyy						Lateral
18	M52	Standoff	25			Lbyy						Lateral
19	M55	Main Channel	41.99			Lbyy						Lateral
20	M56	Main Channel	41.99			Lbyy						Lateral
21	M69	Side Angles	10			Lbyy						Lateral
22	M70	Side Angles	15			Lbyy						Lateral
23	M71	Side Angles	15			Lbyy						Lateral
24	M72	Side Angles	25			Lbyy						Lateral
25	M73	Side Angles	10			Lbyy						Lateral
26	M76	Side Channel	23			Lbyy						Lateral
27	M77	Side Channel	23			Lbyy						Lateral
28	M78	Side Angles	15			Lbyy						Lateral
29	M79	Side Angles	15			Lbyy						Lateral
30	M80	Side Angles	25			Lbyy						Lateral
31	M95	Standoff Pla...	12			Lbyy						Lateral
32	M98	Standoff Pla...	12			Lbyy						Lateral
33	M99	Standoff Pla...	12			Lbyy						Lateral
34	M102	Cross Mem...	64			Lbyy						Lateral
35	M103	Standoff	25			Lbyy						Lateral
36	M106	Main Channel	41.99			Lbyy						Lateral
37	M107	Main Channel	41.99			Lbyy						Lateral
38	M120	Side Angles	10			Lbyy						Lateral
39	M121	Side Angles	15			Lbyy						Lateral
40	M122	Side Angles	15			Lbyy						Lateral
41	M123	Side Angles	25			Lbyy						Lateral
42	M124	Side Angles	10			Lbyy						Lateral
43	M127	Side Channel	23			Lbyy						Lateral
44	M128	Side Channel	23			Lbyy						Lateral
45	M129	Side Angles	15			Lbyy						Lateral
46	M130	Side Angles	15			Lbyy						Lateral
47	M131	Side Angles	25			Lbyy						Lateral
48	M146	Standoff Pla...	12			Lbyy						Lateral

Hot Rolled Steel Design Parameters (Continued)

	Label	Shape	Length[in]	Lbyy[in]	Lbzz[in]	Lcomp top[in]	Lcomp bot[in]	L-torqu...	Kyy	Kzz	Cb	Function
49	M149	Standoff Pla...	12			Lbyy						Lateral
50	M150	Standoff Pla...	12			Lbyy						Lateral
51	M153	Cross Mem...	64			Lbyy						Lateral
52	M148A	Side Channel	46.246			Lbyy						Lateral
53	M151A	Face Horizo...	62			Lbyy						Lateral
54	M152A	FH Plates	5.729			Lbyy						Lateral
55	M154	Face Horizo...	62			Lbyy						Lateral
56	M157	Face Horizo...	62			Lbyy						Lateral
57	M166	FH Plates	5.729			Lbyy						Lateral
58	M162A	FH Plates	5.729			Lbyy						Lateral
59	M163A	FH Plates	5.729			Lbyy						Lateral
60	M164A	FH Plates	5.729			Lbyy						Lateral
61	M165A	FH Plates	5.729			Lbyy						Lateral
62	M166A	FH Plates	5.729			Lbyy						Lateral
63	M167	FH Plates	5.729			Lbyy						Lateral
64	M168	FH Plates	5.729			Lbyy						Lateral
65	M169	FH Plates	5.729			Lbyy						Lateral
66	M170	FH Plates	5.729			Lbyy						Lateral
67	M171	FH Plates	5.729			Lbyy						Lateral
68	M172	Face Horizo...	50			Lbyy						Lateral
69	M173	Face Horizo...	50			Lbyy						Lateral
70	M174	Face Horizo...	50			Lbyy						Lateral
71	M175	Face Horizo...	62			Lbyy						Lateral
72	M176	Face Horizo...	62			Lbyy						Lateral
73	M177	Face Horizo...	62			Lbyy						Lateral
74	M203	Antenna Pipe	36			Lbyy						Lateral
75	OVP	Antenna Pipe	102			Lbyy						Lateral
76	MP3A	Antenna Pipe	104			Lbyy						Lateral
77	MP2A	Antenna Pipe	104			Lbyy						Lateral
78	MP3C	Antenna Pipe	104			Lbyy						Lateral
79	MP2C	Antenna Pipe	104			Lbyy						Lateral
80	MP3B	Antenna Pipe	104			Lbyy						Lateral
81	MP2B	Antenna Pipe	104			Lbyy						Lateral
82	MP1A	Antenna Pipe	72			Lbyy						Lateral
83	MP4A	Antenna Pipe	72			Lbyy						Lateral
84	MP1C	Antenna Pipe	72			Lbyy						Lateral
85	MP4C	Antenna Pipe	72			Lbyy						Lateral
86	MP1B	Antenna Pipe	72			Lbyy						Lateral
87	MP4B	Antenna Pipe	72			Lbyy						Lateral
88	M204A	Side Channel	46.246			Lbyy						Lateral
89	M205B	Side Channel	46.246			Lbyy						Lateral
90	M206	MOD Supp...	185.459			Lbyy						Lateral
91	M207	MOD Supp...	185.459			Lbyy						Lateral
92	M208	MOD Supp...	185.459			Lbyy						Lateral
93	M227	MOD Corne...	22.998			Lbyy						Lateral
94	M228	MOD Corne...	22.998			Lbyy						Lateral
95	M229	MOD Corne...	22.998			Lbyy						Lateral
96	M231	MOD V-Bra...	73.831			Lbyy						Lateral
97	M231A	MOD V-Bra...	73.831			Lbyy						Lateral
98	M232	MOD V-Bra...	73.831			Lbyy						Lateral
99	M233	MOD V-Bra...	73.831			Lbyy						Lateral
100	M234	MOD V-Bra...	73.831			Lbyy						Lateral
101	M235	MOD V-Bra...	73.831			Lbyy						Lateral

Member Primary Data

	Label	I Joint	J Joint	K Joint	Rotate(deg)	Section/Shape	Type	Design List	Material	Design Rules
1	M1	N2	N3			Standoff	Beam	Pipe	A53 Gr. B	Typical
2	M2	N4	N6			RIGID	None	None	RIGID	Typical
3	M3	N4	N8			RIGID	None	None	RIGID	Typical
4	M4	N6	N10		180	Main Channel	Beam	Channel	A36 Gr.36	Typical
5	M5	N8	N11			Main Channel	Beam	Channel	A36 Gr.36	Typical
6	M6	N5	N13			RIGID	None	None	RIGID	Typical
7	M7	N5	N15			RIGID	None	None	RIGID	Typical
8	M8	N4	N12			RIGID	None	None	RIGID	Typical
9	M9	N4	N14			RIGID	None	None	RIGID	Typical
10	M10	N9	N23			RIGID	None	None	RIGID	Typical
11	M11	N9	N21			RIGID	None	None	RIGID	Typical
12	M12	N7	N22			RIGID	None	None	RIGID	Typical
13	M13	N7	N20			RIGID	None	None	RIGID	Typical
14	M14	N6	N16			RIGID	None	None	RIGID	Typical
15	M15	N6	N18			RIGID	None	None	RIGID	Typical
16	M16	N17	N8			RIGID	None	None	RIGID	Typical
17	M17	N8	N19			RIGID	None	None	RIGID	Typical
18	M18	N21	N20		270	Side Angles	Beam	Single Angle	A36 Gr.36	Typical
19	M19	N20	N34			Side Angles	Beam	Single Angle	A36 Gr.36	Typical
20	M20	N21	N35		270	Side Angles	Beam	Single Angle	A36 Gr.36	Typical
21	M21	N35	N34			Side Angles	Beam	Single Angle	A36 Gr.36	Typical
22	M22	N23	N22		90	Side Angles	Beam	Single Angle	A36 Gr.36	Typical
23	M26	N5	N7			RIGID	None	None	RIGID	Typical
24	M27	N5	N9			RIGID	None	None	RIGID	Typical
25	M28	N7	N51		180	Side Channel	Beam	Channel	A36 Gr.36	Typical
26	M29	N9	N52			Side Channel	Beam	Channel	A36 Gr.36	Typical
27	M27A	N22	N31		90	Side Angles	Beam	Single Angle	A36 Gr.36	Typical
28	M28A	N23	N32		180	Side Angles	Beam	Single Angle	A36 Gr.36	Typical
29	M29A	N32	N31		90	Side Angles	Beam	Single Angle	A36 Gr.36	Typical
30	M30	N42	N32A			RIGID	None	None	RIGID	Typical
31	M31	N42	N34A			RIGID	None	None	RIGID	Typical
32	M32	N40	N36			RIGID	None	None	RIGID	Typical
33	M33	N40	N38			RIGID	None	None	RIGID	Typical
34	M34	N41	N31A			RIGID	None	None	RIGID	Typical
35	M35	N41	N33			RIGID	None	None	RIGID	Typical
36	M36	N39	N35A			RIGID	None	None	RIGID	Typical
37	M37	N39	N37			RIGID	None	None	RIGID	Typical
38	M40A	N49A	N70A			RIGID	None	None	RIGID	Typical
39	M41A	N51A	N71A			RIGID	None	None	RIGID	Typical
40	M42	N50A	N70			RIGID	None	None	RIGID	Typical
41	M43	N52A	N71			RIGID	None	None	RIGID	Typical
42	M44	N60	N59			Standoff Plate	Beam	RECT	A36 Gr.36	Typical
43	M45	N57	N61			RIGID	None	None	RIGID	Typical
44	M46	N58	N62			RIGID	None	None	RIGID	Typical
45	M47	N61	N63		90	Standoff Plate	Beam	RECT	A36 Gr.36	Typical
46	M48	N62	N64		90	Standoff Plate	Beam	RECT	A36 Gr.36	Typical
47	M49	N63	N65			RIGID	None	None	RIGID	Typical
48	M50	N64	N66			RIGID	None	None	RIGID	Typical
49	M51	N68	N67			Cross Member...	Beam	Pipe	A500 Gr. ...	Typical
50	M52	N71B	N72			Standoff	Beam	Pipe	A53 Gr. B	Typical
51	M53	N73	N75			RIGID	None	None	RIGID	Typical
52	M54	N73	N77			RIGID	None	None	RIGID	Typical
53	M55	N75	N79		180	Main Channel	Beam	Channel	A36 Gr.36	Typical
54	M56	N77	N80			Main Channel	Beam	Channel	A36 Gr.36	Typical
55	M57	N74	N82			RIGID	None	None	RIGID	Typical
56	M58	N74	N84			RIGID	None	None	RIGID	Typical

Member Primary Data (Continued)

	Label	I Joint	J Joint	K Joint	Rotate(deg)	Section/Shape	Type	Design List	Material	Design Rules
57	M59	N73	N81			RIGID	None	None	RIGID	Typical
58	M60	N73	N83			RIGID	None	None	RIGID	Typical
59	M61	N78	N92			RIGID	None	None	RIGID	Typical
60	M62	N78	N90			RIGID	None	None	RIGID	Typical
61	M63	N76	N91			RIGID	None	None	RIGID	Typical
62	M64	N76	N89			RIGID	None	None	RIGID	Typical
63	M65	N75	N85			RIGID	None	None	RIGID	Typical
64	M66	N75	N87			RIGID	None	None	RIGID	Typical
65	M67	N86	N77			RIGID	None	None	RIGID	Typical
66	M68	N77	N88			RIGID	None	None	RIGID	Typical
67	M69	N90	N89		270	Side Angles	Beam	Single Angle	A36 Gr.36	Typical
68	M70	N89	N93			Side Angles	Beam	Single Angle	A36 Gr.36	Typical
69	M71	N90	N94		270	Side Angles	Beam	Single Angle	A36 Gr.36	Typical
70	M72	N94	N93			Side Angles	Beam	Single Angle	A36 Gr.36	Typical
71	M73	N92	N91		90	Side Angles	Beam	Single Angle	A36 Gr.36	Typical
72	M74	N74	N76			RIGID	None	None	RIGID	Typical
73	M75	N74	N78			RIGID	None	None	RIGID	Typical
74	M76	N76	N115		180	Side Channel	Beam	Channel	A36 Gr.36	Typical
75	M77	N78	N116			Side Channel	Beam	Channel	A36 Gr.36	Typical
76	M78	N91	N95		90	Side Angles	Beam	Single Angle	A36 Gr.36	Typical
77	M79	N92	N96		180	Side Angles	Beam	Single Angle	A36 Gr.36	Typical
78	M80	N96	N95		90	Side Angles	Beam	Single Angle	A36 Gr.36	Typical
79	M81	N108	N98			RIGID	None	None	RIGID	Typical
80	M82	N108	N100			RIGID	None	None	RIGID	Typical
81	M83	N106	N102			RIGID	None	None	RIGID	Typical
82	M84	N106	N104			RIGID	None	None	RIGID	Typical
83	M85	N107	N97			RIGID	None	None	RIGID	Typical
84	M86	N107	N99			RIGID	None	None	RIGID	Typical
85	M87	N105	N101			RIGID	None	None	RIGID	Typical
86	M88	N105	N103			RIGID	None	None	RIGID	Typical
87	M91	N117	N137			RIGID	None	None	RIGID	Typical
88	M92	N119	N138			RIGID	None	None	RIGID	Typical
89	M93	N118	N135			RIGID	None	None	RIGID	Typical
90	M94	N120	N136			RIGID	None	None	RIGID	Typical
91	M95	N124	N123		120	Standoff Plate	Beam	RECT	A36 Gr.36	Typical
92	M96	N121	N125			RIGID	None	None	RIGID	Typical
93	M97	N122	N126			RIGID	None	None	RIGID	Typical
94	M98	N125	N127		210	Standoff Plate	Beam	RECT	A36 Gr.36	Typical
95	M99	N126	N128		210	Standoff Plate	Beam	RECT	A36 Gr.36	Typical
96	M100	N127	N129			RIGID	None	None	RIGID	Typical
97	M101	N128	N130			RIGID	None	None	RIGID	Typical
98	M102	N132	N131			Cross Member...	Beam	Pipe	A500 Gr. ...	Typical
99	M103	N140	N141			Standoff	Beam	Pipe	A53 Gr. B	Typical
100	M104	N142	N144			RIGID	None	None	RIGID	Typical
101	M105	N142	N146			RIGID	None	None	RIGID	Typical
102	M106	N144	N148		180	Main Channel	Beam	Channel	A36 Gr.36	Typical
103	M107	N146	N149			Main Channel	Beam	Channel	A36 Gr.36	Typical
104	M108	N143	N151			RIGID	None	None	RIGID	Typical
105	M109	N143	N153			RIGID	None	None	RIGID	Typical
106	M110	N142	N150			RIGID	None	None	RIGID	Typical
107	M111	N142	N152			RIGID	None	None	RIGID	Typical
108	M112	N147	N161			RIGID	None	None	RIGID	Typical
109	M113	N147	N159			RIGID	None	None	RIGID	Typical
110	M114	N145	N160			RIGID	None	None	RIGID	Typical
111	M115	N145	N158			RIGID	None	None	RIGID	Typical
112	M116	N144	N154			RIGID	None	None	RIGID	Typical
113	M117	N144	N156			RIGID	None	None	RIGID	Typical

Member Primary Data (Continued)

	Label	I Joint	J Joint	K Joint	Rotate(deg)	Section/Shape	Type	Design List	Material	Design Rules
114	M118	N155	N146			RIGID	None	None	RIGID	Typical
115	M119	N146	N157			RIGID	None	None	RIGID	Typical
116	M120	N159	N158		270	Side Angles	Beam	Single Angle	A36 Gr.36	Typical
117	M121	N158	N162			Side Angles	Beam	Single Angle	A36 Gr.36	Typical
118	M122	N159	N163		270	Side Angles	Beam	Single Angle	A36 Gr.36	Typical
119	M123	N163	N162			Side Angles	Beam	Single Angle	A36 Gr.36	Typical
120	M124	N161	N160		90	Side Angles	Beam	Single Angle	A36 Gr.36	Typical
121	M125	N143	N145			RIGID	None	None	RIGID	Typical
122	M126	N143	N147			RIGID	None	None	RIGID	Typical
123	M127	N145	N184		180	Side Channel	Beam	Channel	A36 Gr.36	Typical
124	M128	N147	N185			Side Channel	Beam	Channel	A36 Gr.36	Typical
125	M129	N160	N164		90	Side Angles	Beam	Single Angle	A36 Gr.36	Typical
126	M130	N161	N165		180	Side Angles	Beam	Single Angle	A36 Gr.36	Typical
127	M131	N165	N164		90	Side Angles	Beam	Single Angle	A36 Gr.36	Typical
128	M132	N177	N167			RIGID	None	None	RIGID	Typical
129	M133	N177	N169			RIGID	None	None	RIGID	Typical
130	M134	N175	N171			RIGID	None	None	RIGID	Typical
131	M135	N175	N173			RIGID	None	None	RIGID	Typical
132	M136	N176	N166			RIGID	None	None	RIGID	Typical
133	M137	N176	N168			RIGID	None	None	RIGID	Typical
134	M138	N174	N170			RIGID	None	None	RIGID	Typical
135	M139	N174	N172			RIGID	None	None	RIGID	Typical
136	M142	N186	N206			RIGID	None	None	RIGID	Typical
137	M143	N188	N207			RIGID	None	None	RIGID	Typical
138	M144	N187	N204			RIGID	None	None	RIGID	Typical
139	M145	N189	N205			RIGID	None	None	RIGID	Typical
140	M146	N193	N192		60	Standoff Plate	Beam	RECT	A36 Gr.36	Typical
141	M147	N190	N194			RIGID	None	None	RIGID	Typical
142	M148	N191	N195			RIGID	None	None	RIGID	Typical
143	M149	N194	N196		150	Standoff Plate	Beam	RECT	A36 Gr.36	Typical
144	M150	N195	N197		150	Standoff Plate	Beam	RECT	A36 Gr.36	Typical
145	M151	N196	N198			RIGID	None	None	RIGID	Typical
146	M152	N197	N199			RIGID	None	None	RIGID	Typical
147	M153	N201	N200			Cross Member...	Beam	Pipe	A500 Gr. ...	Typical
148	M148A	N112	N183			Side Channel	Beam	Channel	A36 Gr.36	Typical
149	M151A	N207A	N233A			Face Horizontal	Beam	Pipe	A53 Gr. B	Typical
150	M152A	N202	N212			FH Plates	Beam	Channel	A36 Gr.36	Typical
151	M154	N208	N234			Face Horizontal	Beam	Pipe	A53 Gr. B	Typical
152	M157	N215	N235A			Face Horizontal	Beam	Pipe	A53 Gr. B	Typical
153	M160	N225	N231			RIGID	None	None	RIGID	Typical
154	M161	N223	N229			RIGID	None	None	RIGID	Typical
155	M162	N224	N230			RIGID	None	None	RIGID	Typical
156	M163	N222	N228			RIGID	None	None	RIGID	Typical
157	M164	N221	N227			RIGID	None	None	RIGID	Typical
158	M165	N226	N232			RIGID	None	None	RIGID	Typical
159	M166	N202	N231A			FH Plates	Beam	Channel	A36 Gr.36	Typical
160	M162A	N221A	N222A			FH Plates	Beam	Channel	A36 Gr.36	Typical
161	M163A	N221A	N223A			FH Plates	Beam	Channel	A36 Gr.36	Typical
162	M164A	N224A	N225A			FH Plates	Beam	Channel	A36 Gr.36	Typical
163	M165A	N224A	N226A			FH Plates	Beam	Channel	A36 Gr.36	Typical
164	M166A	N227A	N212			FH Plates	Beam	Channel	A36 Gr.36	Typical
165	M167	N227A	N229A			FH Plates	Beam	Channel	A36 Gr.36	Typical
166	M168	N230A	N222A			FH Plates	Beam	Channel	A36 Gr.36	Typical
167	M169	N230A	N232A			FH Plates	Beam	Channel	A36 Gr.36	Typical
168	M170	N233	N225A			FH Plates	Beam	Channel	A36 Gr.36	Typical
169	M171	N233	N235			FH Plates	Beam	Channel	A36 Gr.36	Typical
170	M172	N233A	N236			Face Horizontal	Beam	Pipe	A53 Gr. B	Typical

Member Primary Data (Continued)

	Label	I Joint	J Joint	K Joint	Rotate(deg)	Section/Shape	Type	Design List	Material	Design Rules
171	M173	N234	N237			Face Horizontal	Beam	Pipe	A53 Gr. B	Typical
172	M174	N235A	N238			Face Horizontal	Beam	Pipe	A53 Gr. B	Typical
173	M175	N236	N206A			Face Horizontal	Beam	Pipe	A53 Gr. B	Typical
174	M176	N237	N207B			Face Horizontal	Beam	Pipe	A53 Gr. B	Typical
175	M177	N238	N214			Face Horizontal	Beam	Pipe	A53 Gr. B	Typical
176	M178	N240	N242			RIGID	None	None	RIGID	Typical
177	M179	N239	N241			RIGID	None	None	RIGID	Typical
178	M186	N257	N259			RIGID	None	None	RIGID	Typical
179	M187	N256	N258			RIGID	None	None	RIGID	Typical
180	M194	N274	N276			RIGID	None	None	RIGID	Typical
181	M195	N273	N275			RIGID	None	None	RIGID	Typical
182	M202	N294A	N295			RIGID	None	None	RIGID	Typical
183	M203	N296	N297			Antenna Pipe	Beam	Pipe	A53 Gr. B	Typical
184	OVP	N293	N292			Antenna Pipe	Beam	Pipe	A53 Gr. B	Typical
185	M205	N3	N291			RIGID	None	None	RIGID	Typical
186	MP3A	N272	N274A			Antenna Pipe	Beam	Pipe	A53 Gr. B	Typical
187	MP2A	N273A	N275A			Antenna Pipe	Beam	Pipe	A53 Gr. B	Typical
188	M196	N201	N271			RIGID	None	None	RIGID	Typical
189	M197	N131	N270			RIGID	None	None	RIGID	Typical
190	MP3C	N280A	N282			Antenna Pipe	Beam	Pipe	A53 Gr. B	Typical
191	MP2C	N281	N283			Antenna Pipe	Beam	Pipe	A53 Gr. B	Typical
192	M200	N68	N279A			RIGID	None	None	RIGID	Typical
193	M201	N200	N278A			RIGID	None	None	RIGID	Typical
194	MP3B	N288	N290			Antenna Pipe	Beam	Pipe	A53 Gr. B	Typical
195	MP2B	N289	N291A			Antenna Pipe	Beam	Pipe	A53 Gr. B	Typical
196	M204	N132	N287			RIGID	None	None	RIGID	Typical
197	M205A	N67	N286			RIGID	None	None	RIGID	Typical
198	MP1A	N276A	N278			Antenna Pipe	Beam	Pipe	A53 Gr. B	Typical
199	MP4A	N277	N279			Antenna Pipe	Beam	Pipe	A53 Gr. B	Typical
200	MP1C	N280	N282A			Antenna Pipe	Beam	Pipe	A53 Gr. B	Typical
201	MP4C	N281A	N283A			Antenna Pipe	Beam	Pipe	A53 Gr. B	Typical
202	MP1B	N284	N286A			Antenna Pipe	Beam	Pipe	A53 Gr. B	Typical
203	MP4B	N285	N287A			Antenna Pipe	Beam	Pipe	A53 Gr. B	Typical
204	M204A	N284A	N285A			Side Channel	Beam	Channel	A36 Gr.36	Typical
205	M205B	N286B	N287B			Side Channel	Beam	Channel	A36 Gr.36	Typical
206	M206	N297A	N296A			MOD Support ...	Beam	Channel	A53 Gr. B	Typical
207	M207	N301	N300			MOD Support ...	Beam	Channel	A53 Gr. B	Typical
208	M208	N305	N304			MOD Support ...	Beam	Channel	A53 Gr. B	Typical
209	M209	N303	N305A			RIGID	None	None	RIGID	Typical
210	M210	N302	N304A			RIGID	None	None	RIGID	Typical
211	M211	N307	N309			RIGID	None	None	RIGID	Typical
212	M212	N306	N308			RIGID	None	None	RIGID	Typical
213	M213	N311	N313			RIGID	None	None	RIGID	Typical
214	M214	N310	N312			RIGID	None	None	RIGID	Typical
215	M215	N315	N317			RIGID	None	None	RIGID	Typical
216	M216	N314	N316			RIGID	None	None	RIGID	Typical
217	M217	N319	N321			RIGID	None	None	RIGID	Typical
218	M218	N318	N320			RIGID	None	None	RIGID	Typical
219	M219	N323	N325			RIGID	None	None	RIGID	Typical
220	M220	N322	N324			RIGID	None	None	RIGID	Typical
221	M221	N328	N326			RIGID	None	None	RIGID	Typical
222	M222	N329	N327			RIGID	None	None	RIGID	Typical
223	M223	N332	N330			RIGID	None	None	RIGID	Typical
224	M224	N333	N331			RIGID	None	None	RIGID	Typical
225	M225	N336	N334			RIGID	None	None	RIGID	Typical
226	M226	N337	N335			RIGID	None	None	RIGID	Typical
227	M227	N337	N328		180	MOD Corner B...	Beam	Channel	A36 Gr.36	Typical

Member Primary Data (Continued)

	Label	I Joint	J Joint	K Joint	Rotate(deg)	Section/Shape	Type	Design List	Material	Design Rules
228	M228	N329	N332		180	MOD Corner B...	Beam	Channel	A36 Gr.36	Typical
229	M229	N333	N336		180	MOD Corner B...	Beam	Channel	A36 Gr.36	Typical
230	M231	N345	N338		180	MOD V-Bracing	Beam	Channel	A36 Gr.36	Typical
231	M231A	N345	N345A		90	MOD V-Bracing	Beam	Channel	A36 Gr.36	Typical
232	M232	N347	N346		180	MOD V-Bracing	Beam	Channel	A36 Gr.36	Typical
233	M233	N347	N348		90	MOD V-Bracing	Beam	Channel	A36 Gr.36	Typical
234	M234	N350	N349		180	MOD V-Bracing	Beam	Channel	A36 Gr.36	Typical
235	M235	N350	N351		90	MOD V-Bracing	Beam	Channel	A36 Gr.36	Typical

Member Advanced Data

	Label	I Release	J Release	I Offset[in]	J Offset[in]	T/C Only	Physical	Defl Rat...	Analysis ...	Inactive	Seismic...
1	M1						Yes				None
2	M2						Yes	** NA **			None
3	M3						Yes	** NA **			None
4	M4						Yes				None
5	M5						Yes				None
6	M6						Yes	** NA **			None
7	M7						Yes	** NA **			None
8	M8						Yes	** NA **			None
9	M9						Yes	** NA **			None
10	M10						Yes	** NA **			None
11	M11						Yes	** NA **			None
12	M12						Yes	** NA **			None
13	M13						Yes	** NA **			None
14	M14						Yes	** NA **			None
15	M15						Yes	** NA **			None
16	M16						Yes	** NA **			None
17	M17						Yes	** NA **			None
18	M18						Yes				None
19	M19						Yes				None
20	M20						Yes				None
21	M21						Yes				None
22	M22						Yes				None
23	M26						Yes	** NA **			None
24	M27						Yes	** NA **			None
25	M28						Yes				None
26	M29						Yes				None
27	M27A						Yes				None
28	M28A						Yes				None
29	M29A						Yes				None
30	M30						Yes	** NA **			None
31	M31						Yes	** NA **			None
32	M32						Yes	** NA **			None
33	M33						Yes	** NA **			None
34	M34						Yes	** NA **			None
35	M35						Yes	** NA **			None
36	M36						Yes	** NA **			None
37	M37						Yes	** NA **			None
38	M40A						Yes	** NA **			None
39	M41A						Yes	** NA **			None
40	M42						Yes	** NA **			None
41	M43						Yes	** NA **			None
42	M44						Yes				None
43	M45						Yes	** NA **			None
44	M46						Yes	** NA **			None

Member Advanced Data (Continued)

	Label	I Release	J Release	I Offset[in]	J Offset[in]	T/C Only	Physical	Defl Rat...	Analysis ...	Inactive	Seismic...
45	M47						Yes				None
46	M48						Yes				None
47	M49						Yes	** NA **			None
48	M50						Yes	** NA **			None
49	M51						Yes				None
50	M52						Yes				None
51	M53						Yes	** NA **			None
52	M54						Yes	** NA **			None
53	M55						Yes				None
54	M56						Yes				None
55	M57						Yes	** NA **			None
56	M58						Yes	** NA **			None
57	M59						Yes	** NA **			None
58	M60						Yes	** NA **			None
59	M61						Yes	** NA **			None
60	M62						Yes	** NA **			None
61	M63						Yes	** NA **			None
62	M64						Yes	** NA **			None
63	M65						Yes	** NA **			None
64	M66						Yes	** NA **			None
65	M67						Yes	** NA **			None
66	M68						Yes	** NA **			None
67	M69						Yes				None
68	M70						Yes				None
69	M71						Yes				None
70	M72						Yes				None
71	M73						Yes				None
72	M74						Yes	** NA **			None
73	M75						Yes	** NA **			None
74	M76						Yes				None
75	M77						Yes				None
76	M78						Yes				None
77	M79						Yes				None
78	M80						Yes				None
79	M81						Yes	** NA **			None
80	M82						Yes	** NA **			None
81	M83						Yes	** NA **			None
82	M84						Yes	** NA **			None
83	M85						Yes	** NA **			None
84	M86						Yes	** NA **			None
85	M87						Yes	** NA **			None
86	M88						Yes	** NA **			None
87	M91						Yes	** NA **			None
88	M92						Yes	** NA **			None
89	M93						Yes	** NA **			None
90	M94						Yes	** NA **			None
91	M95						Yes				None
92	M96						Yes	** NA **			None
93	M97						Yes	** NA **			None
94	M98						Yes				None
95	M99						Yes				None
96	M100						Yes	** NA **			None
97	M101						Yes	** NA **			None
98	M102						Yes				None
99	M103						Yes				None
100	M104						Yes	** NA **			None
101	M105						Yes	** NA **			None

Member Advanced Data (Continued)

	Label	I Release	J Release	I Offset[in]	J Offset[in]	T/C Only	Physical	Defl Rat...	Analysis ...	Inactive	Seismic...
102	M106						Yes				None
103	M107						Yes				None
104	M108						Yes	** NA **			None
105	M109						Yes	** NA **			None
106	M110						Yes	** NA **			None
107	M111						Yes	** NA **			None
108	M112						Yes	** NA **			None
109	M113						Yes	** NA **			None
110	M114						Yes	** NA **			None
111	M115						Yes	** NA **			None
112	M116						Yes	** NA **			None
113	M117						Yes	** NA **			None
114	M118						Yes	** NA **			None
115	M119						Yes	** NA **			None
116	M120						Yes				None
117	M121						Yes				None
118	M122						Yes				None
119	M123						Yes				None
120	M124						Yes				None
121	M125						Yes	** NA **			None
122	M126						Yes	** NA **			None
123	M127						Yes				None
124	M128						Yes				None
125	M129						Yes				None
126	M130						Yes				None
127	M131						Yes				None
128	M132						Yes	** NA **			None
129	M133						Yes	** NA **			None
130	M134						Yes	** NA **			None
131	M135						Yes	** NA **			None
132	M136						Yes	** NA **			None
133	M137						Yes	** NA **			None
134	M138						Yes	** NA **			None
135	M139						Yes	** NA **			None
136	M142						Yes	** NA **			None
137	M143						Yes	** NA **			None
138	M144						Yes	** NA **			None
139	M145						Yes	** NA **			None
140	M146						Yes				None
141	M147						Yes	** NA **			None
142	M148						Yes	** NA **			None
143	M149						Yes				None
144	M150						Yes				None
145	M151						Yes	** NA **			None
146	M152						Yes	** NA **			None
147	M153						Yes				None
148	M148A						Yes				None
149	M151A						Yes				None
150	M152A						Yes				None
151	M154						Yes				None
152	M157						Yes				None
153	M160						Yes	** NA **			None
154	M161						Yes	** NA **			None
155	M162						Yes	** NA **			None
156	M163						Yes	** NA **			None
157	M164						Yes	** NA **			None
158	M165						Yes	** NA **			None

Member Advanced Data (Continued)

	Label	I Release	J Release	I Offset[in]	J Offset[in]	T/C Only	Physical	Defl Rat...	Analysis ...	Inactive	Seismic...
159	M166						Yes				None
160	M162A						Yes				None
161	M163A						Yes				None
162	M164A						Yes				None
163	M165A						Yes				None
164	M166A						Yes				None
165	M167						Yes				None
166	M168						Yes				None
167	M169						Yes				None
168	M170						Yes				None
169	M171						Yes				None
170	M172						Yes				None
171	M173						Yes				None
172	M174						Yes				None
173	M175						Yes				None
174	M176						Yes				None
175	M177						Yes				None
176	M178						Yes	** NA **			None
177	M179						Yes	** NA **			None
178	M186						Yes	** NA **			None
179	M187						Yes	** NA **			None
180	M194						Yes	** NA **			None
181	M195						Yes	** NA **			None
182	M202						Yes	** NA **			None
183	M203						Yes				None
184	OVP						Yes				None
185	M205						Yes	** NA **			None
186	MP3A						Yes				None
187	MP2A						Yes				None
188	M196						Yes	** NA **			None
189	M197						Yes	** NA **			None
190	MP3C						Yes				None
191	MP2C						Yes				None
192	M200						Yes	** NA **			None
193	M201						Yes	** NA **			None
194	MP3B						Yes				None
195	MP2B						Yes				None
196	M204						Yes	** NA **			None
197	M205A						Yes	** NA **			None
198	MP1A						Yes				None
199	MP4A						Yes				None
200	MP1C						Yes				None
201	MP4C						Yes				None
202	MP1B						Yes				None
203	MP4B						Yes				None
204	M204A						Yes				None
205	M205B						Yes				None
206	M206						Yes				None
207	M207						Yes				None
208	M208						Yes				None
209	M209						Yes	** NA **			None
210	M210						Yes	** NA **			None
211	M211						Yes	** NA **			None
212	M212						Yes	** NA **			None
213	M213						Yes	** NA **			None
214	M214						Yes	** NA **			None
215	M215						Yes	** NA **			None

Member Advanced Data (Continued)

	Label	I Release	J Release	I Offset[in]	J Offset[in]	T/C Only	Physical	Defl Rat...	Analysis ...	Inactive	Seismic...
216	M216						Yes	** NA **			None
217	M217						Yes	** NA **			None
218	M218						Yes	** NA **			None
219	M219						Yes	** NA **			None
220	M220						Yes	** NA **			None
221	M221		OOOOOO				Yes	** NA **			None
222	M222		OOOOOO				Yes	** NA **			None
223	M223		OOOOOO				Yes	** NA **			None
224	M224		OOOOOO				Yes	** NA **			None
225	M225		OOOOOO				Yes	** NA **			None
226	M226		OOOOOO				Yes	** NA **			None
227	M227						Yes				None
228	M228						Yes				None
229	M229						Yes				None
230	M231	BenPIN	BenPIN				Yes				None
231	M231A	BenPIN	BenPIN				Yes				None
232	M232	BenPIN	BenPIN				Yes				None
233	M233	BenPIN	BenPIN				Yes				None
234	M234	BenPIN	BenPIN				Yes				None
235	M235	BenPIN	BenPIN				Yes				None

Member Point Loads (BLC 1 : Antenna D)

	Member Label	Direction	Magnitude[lb,k-ft]	Location[in,%]
1	MP3A	Y	-43.55	29.04
2	MP3A	My	-.022	29.04
3	MP3A	Mz	0	29.04
4	MP3A	Y	-43.55	53.04
5	MP3A	My	-.022	53.04
6	MP3A	Mz	0	53.04
7	MP3B	Y	-43.55	29.04
8	MP3B	My	.017	29.04
9	MP3B	Mz	-.014	29.04
10	MP3B	Y	-43.55	53.04
11	MP3B	My	.017	53.04
12	MP3B	Mz	-.014	53.04
13	MP3C	Y	-43.55	29.04
14	MP3C	My	.007	29.04
15	MP3C	Mz	.02	29.04
16	MP3C	Y	-43.55	53.04
17	MP3C	My	.007	53.04
18	MP3C	Mz	.02	53.04
19	MP2A	Y	-20	11.04
20	MP2A	My	-.01	11.04
21	MP2A	Mz	.012	11.04
22	MP2A	Y	-20	71.04
23	MP2A	My	-.01	71.04
24	MP2A	Mz	.012	71.04
25	MP2B	Y	-20	11.04
26	MP2B	My	-.01	11.04
27	MP2B	Mz	.012	11.04
28	MP2B	Y	-20	71.04
29	MP2B	My	-.01	71.04
30	MP2B	Mz	.012	71.04
31	MP2C	Y	-20	11.04
32	MP2C	My	-.01	11.04

Member Point Loads (BLC 1 : Antenna D) (Continued)

	Member Label	Direction	Magnitude[lb,k-ft]	Location[in,%]
33	MP2C	Mz	.012	11.04
34	MP2C	Y	-20	71.04
35	MP2C	My	-.01	71.04
36	MP2C	Mz	.012	71.04
37	MP2A	Y	-20	11.04
38	MP2A	My	-.01	11.04
39	MP2A	Mz	-.012	11.04
40	MP2A	Y	-20	71.04
41	MP2A	My	-.01	71.04
42	MP2A	Mz	-.012	71.04
43	MP2B	Y	-20	11.04
44	MP2B	My	-.01	11.04
45	MP2B	Mz	-.012	11.04
46	MP2B	Y	-20	71.04
47	MP2B	My	-.01	71.04
48	MP2B	Mz	-.012	71.04
49	MP2C	Y	-20	11.04
50	MP2C	My	-.01	11.04
51	MP2C	Mz	-.012	11.04
52	MP2C	Y	-20	71.04
53	MP2C	My	-.01	71.04
54	MP2C	Mz	-.012	71.04
55	MP1A	Y	-10.5	11.04
56	MP1A	My	-.005	11.04
57	MP1A	Mz	0	11.04
58	MP1A	Y	-10.5	71.04
59	MP1A	My	-.005	71.04
60	MP1A	Mz	0	71.04
61	MP1B	Y	-10.5	11.04
62	MP1B	My	.004	11.04
63	MP1B	Mz	-.003	11.04
64	MP1B	Y	-10.5	71.04
65	MP1B	My	.004	71.04
66	MP1B	Mz	-.003	71.04
67	MP1C	Y	-10.5	11.04
68	MP1C	My	.002	11.04
69	MP1C	Mz	.005	11.04
70	MP1C	Y	-10.5	71.04
71	MP1C	My	.002	71.04
72	MP1C	Mz	.005	71.04
73	MP4A	Y	-10.5	11.04
74	MP4A	My	-.005	11.04
75	MP4A	Mz	0	11.04
76	MP4A	Y	-10.5	71.04
77	MP4A	My	-.005	71.04
78	MP4A	Mz	0	71.04
79	MP4B	Y	-10.5	11.04
80	MP4B	My	.004	11.04
81	MP4B	Mz	-.003	11.04
82	MP4B	Y	-10.5	71.04
83	MP4B	My	.004	71.04
84	MP4B	Mz	-.003	71.04
85	MP4C	Y	-10.5	11.04
86	MP4C	My	.002	11.04
87	MP4C	Mz	.005	11.04
88	MP4C	Y	-10.5	71.04
89	MP4C	My	.002	71.04

Member Point Loads (BLC 1 : Antenna D) (Continued)

	Member Label	Direction	Magnitude[lb,k-ft]	Location[in,%]
90	MP4C	Mz	.005	71.04
91	MP3A	Y	-84.4	36
92	MP3A	My	.042	36
93	MP3A	Mz	0	36
94	MP3B	Y	-84.4	36
95	MP3B	My	-.032	36
96	MP3B	Mz	.027	36
97	MP3C	Y	-84.4	36
98	MP3C	My	-.014	36
99	MP3C	Mz	-.04	36
100	MP2A	Y	-70.3	36
101	MP2A	My	.035	36
102	MP2A	Mz	0	36
103	MP2B	Y	-70.3	36
104	MP2B	My	-.027	36
105	MP2B	Mz	.023	36
106	MP2C	Y	-70.3	36
107	MP2C	My	-.012	36
108	MP2C	Mz	-.033	36
109	OVP	Y	-32	18
110	OVP	My	0	18
111	OVP	Mz	0	18

Member Point Loads (BLC 2 : Antenna Di)

	Member Label	Direction	Magnitude[lb,k-ft]	Location[in,%]
1	MP3A	Y	-35.886	29.04
2	MP3A	My	-.018	29.04
3	MP3A	Mz	0	29.04
4	MP3A	Y	-35.886	53.04
5	MP3A	My	-.018	53.04
6	MP3A	Mz	0	53.04
7	MP3B	Y	-35.886	29.04
8	MP3B	My	.014	29.04
9	MP3B	Mz	-.012	29.04
10	MP3B	Y	-35.886	53.04
11	MP3B	My	.014	53.04
12	MP3B	Mz	-.012	53.04
13	MP3C	Y	-35.886	29.04
14	MP3C	My	.006	29.04
15	MP3C	Mz	.017	29.04
16	MP3C	Y	-35.886	53.04
17	MP3C	My	.006	53.04
18	MP3C	Mz	.017	53.04
19	MP2A	Y	-61.524	11.04
20	MP2A	My	-.031	11.04
21	MP2A	Mz	.036	11.04
22	MP2A	Y	-61.524	71.04
23	MP2A	My	-.031	71.04
24	MP2A	Mz	.036	71.04
25	MP2B	Y	-61.524	11.04
26	MP2B	My	-.031	11.04
27	MP2B	Mz	.036	11.04
28	MP2B	Y	-61.524	71.04
29	MP2B	My	-.031	71.04
30	MP2B	Mz	.036	71.04
31	MP2C	Y	-61.524	11.04

Member Point Loads (BLC 2 : Antenna Di) (Continued)

	Member Label	Direction	Magnitude[lb,k-ft]	Location[in,%]
32	MP2C	My	-.031	11.04
33	MP2C	Mz	.036	11.04
34	MP2C	Y	-61.524	71.04
35	MP2C	My	-.031	71.04
36	MP2C	Mz	.036	71.04
37	MP2A	Y	-61.524	11.04
38	MP2A	My	-.031	11.04
39	MP2A	Mz	-.036	11.04
40	MP2A	Y	-61.524	71.04
41	MP2A	My	-.031	71.04
42	MP2A	Mz	-.036	71.04
43	MP2B	Y	-61.524	11.04
44	MP2B	My	-.031	11.04
45	MP2B	Mz	-.036	11.04
46	MP2B	Y	-61.524	71.04
47	MP2B	My	-.031	71.04
48	MP2B	Mz	-.036	71.04
49	MP2C	Y	-61.524	11.04
50	MP2C	My	-.031	11.04
51	MP2C	Mz	-.036	11.04
52	MP2C	Y	-61.524	71.04
53	MP2C	My	-.031	71.04
54	MP2C	Mz	-.036	71.04
55	MP1A	Y	-58.922	11.04
56	MP1A	My	-.029	11.04
57	MP1A	Mz	0	11.04
58	MP1A	Y	-58.922	71.04
59	MP1A	My	-.029	71.04
60	MP1A	Mz	0	71.04
61	MP1B	Y	-58.922	11.04
62	MP1B	My	.023	11.04
63	MP1B	Mz	-.019	11.04
64	MP1B	Y	-58.922	71.04
65	MP1B	My	.023	71.04
66	MP1B	Mz	-.019	71.04
67	MP1C	Y	-58.922	11.04
68	MP1C	My	.01	11.04
69	MP1C	Mz	.028	11.04
70	MP1C	Y	-58.922	71.04
71	MP1C	My	.01	71.04
72	MP1C	Mz	.028	71.04
73	MP4A	Y	-58.922	11.04
74	MP4A	My	-.029	11.04
75	MP4A	Mz	0	11.04
76	MP4A	Y	-58.922	71.04
77	MP4A	My	-.029	71.04
78	MP4A	Mz	0	71.04
79	MP4B	Y	-58.922	11.04
80	MP4B	My	.023	11.04
81	MP4B	Mz	-.019	11.04
82	MP4B	Y	-58.922	71.04
83	MP4B	My	.023	71.04
84	MP4B	Mz	-.019	71.04
85	MP4C	Y	-58.922	11.04
86	MP4C	My	.01	11.04
87	MP4C	Mz	.028	11.04
88	MP4C	Y	-58.922	71.04

Member Point Loads (BLC 2 : Antenna Di) (Continued)

	Member Label	Direction	Magnitude[lb,k-ft]	Location[in,%]
89	MP4C	My	.01	71.04
90	MP4C	Mz	.028	71.04
91	MP3A	Y	-45.248	36
92	MP3A	My	.023	36
93	MP3A	Mz	0	36
94	MP3B	Y	-45.248	36
95	MP3B	My	-.017	36
96	MP3B	Mz	.015	36
97	MP3C	Y	-45.248	36
98	MP3C	My	-.008	36
99	MP3C	Mz	-.021	36
100	MP2A	Y	-40.695	36
101	MP2A	My	.02	36
102	MP2A	Mz	0	36
103	MP2B	Y	-40.695	36
104	MP2B	My	-.016	36
105	MP2B	Mz	.013	36
106	MP2C	Y	-40.695	36
107	MP2C	My	-.007	36
108	MP2C	Mz	-.019	36
109	OVP	Y	-88.574	18
110	OVP	My	0	18
111	OVP	Mz	0	18

Member Point Loads (BLC 3 : Antenna Wo (0 Deg))

	Member Label	Direction	Magnitude[lb,k-ft]	Location[in,%]
1	MP3A	X	0	29.04
2	MP3A	Z	-93.461	29.04
3	MP3A	Mx	0	29.04
4	MP3A	X	0	53.04
5	MP3A	Z	-93.461	53.04
6	MP3A	Mx	0	53.04
7	MP3B	X	0	29.04
8	MP3B	Z	-69.963	29.04
9	MP3B	Mx	.022	29.04
10	MP3B	X	0	53.04
11	MP3B	Z	-69.963	53.04
12	MP3B	Mx	.022	53.04
13	MP3C	X	0	29.04
14	MP3C	Z	-43.243	29.04
15	MP3C	Mx	-.02	29.04
16	MP3C	X	0	53.04
17	MP3C	Z	-43.243	53.04
18	MP3C	Mx	-.02	53.04
19	MP2A	X	0	11.04
20	MP2A	Z	-162.264	11.04
21	MP2A	Mx	-.095	11.04
22	MP2A	X	0	71.04
23	MP2A	Z	-162.264	71.04
24	MP2A	Mx	-.095	71.04
25	MP2B	X	0	11.04
26	MP2B	Z	-162.264	11.04
27	MP2B	Mx	-.095	11.04
28	MP2B	X	0	71.04
29	MP2B	Z	-162.264	71.04
30	MP2B	Mx	-.095	71.04

Member Point Loads (BLC 3 : Antenna Wo (0 Deg)) (Continued)

	Member Label	Direction	Magnitude[lb,k-ft]	Location[in,%]
31	MP2C	X	0	11.04
32	MP2C	Z	-162.264	11.04
33	MP2C	Mx	-.095	11.04
34	MP2C	X	0	71.04
35	MP2C	Z	-162.264	71.04
36	MP2C	Mx	-.095	71.04
37	MP2A	X	0	11.04
38	MP2A	Z	-162.264	11.04
39	MP2A	Mx	.095	11.04
40	MP2A	X	0	71.04
41	MP2A	Z	-162.264	71.04
42	MP2A	Mx	.095	71.04
43	MP2B	X	0	11.04
44	MP2B	Z	-162.264	11.04
45	MP2B	Mx	.095	11.04
46	MP2B	X	0	71.04
47	MP2B	Z	-162.264	71.04
48	MP2B	Mx	.095	71.04
49	MP2C	X	0	11.04
50	MP2C	Z	-162.264	11.04
51	MP2C	Mx	.095	11.04
52	MP2C	X	0	71.04
53	MP2C	Z	-162.264	71.04
54	MP2C	Mx	.095	71.04
55	MP1A	X	0	11.04
56	MP1A	Z	-86.104	11.04
57	MP1A	Mx	0	11.04
58	MP1A	X	0	71.04
59	MP1A	Z	-86.104	71.04
60	MP1A	Mx	0	71.04
61	MP1B	X	0	11.04
62	MP1B	Z	-121.419	11.04
63	MP1B	Mx	.039	11.04
64	MP1B	X	0	71.04
65	MP1B	Z	-121.419	71.04
66	MP1B	Mx	.039	71.04
67	MP1C	X	0	11.04
68	MP1C	Z	-161.579	11.04
69	MP1C	Mx	-.076	11.04
70	MP1C	X	0	71.04
71	MP1C	Z	-161.579	71.04
72	MP1C	Mx	-.076	71.04
73	MP4A	X	0	11.04
74	MP4A	Z	-86.104	11.04
75	MP4A	Mx	0	11.04
76	MP4A	X	0	71.04
77	MP4A	Z	-86.104	71.04
78	MP4A	Mx	0	71.04
79	MP4B	X	0	11.04
80	MP4B	Z	-121.419	11.04
81	MP4B	Mx	.039	11.04
82	MP4B	X	0	71.04
83	MP4B	Z	-121.419	71.04
84	MP4B	Mx	.039	71.04
85	MP4C	X	0	11.04
86	MP4C	Z	-161.579	11.04
87	MP4C	Mx	-.076	11.04

Member Point Loads (BLC 3 : Antenna Wo (0 Deg)) (Continued)

	Member Label	Direction	Magnitude[lb,k-ft]	Location[in,%]
88	MP4C	X	0	71.04
89	MP4C	Z	-161.579	71.04
90	MP4C	Mx	-.076	71.04
91	MP3A	X	0	36
92	MP3A	Z	-74.371	36
93	MP3A	Mx	0	36
94	MP3B	X	0	36
95	MP3B	Z	-64.183	36
96	MP3B	Mx	-.021	36
97	MP3C	X	0	36
98	MP3C	Z	-52.598	36
99	MP3C	Mx	.025	36
100	MP2A	X	0	36
101	MP2A	Z	-74.371	36
102	MP2A	Mx	0	36
103	MP2B	X	0	36
104	MP2B	Z	-60.28	36
105	MP2B	Mx	-.019	36
106	MP2C	X	0	36
107	MP2C	Z	-44.257	36
108	MP2C	Mx	.021	36
109	OVP	X	0	18
110	OVP	Z	-127.668	18
111	OVP	Mx	0	18

Member Point Loads (BLC 4 : Antenna Wo (30 Deg))

	Member Label	Direction	Magnitude[lb,k-ft]	Location[in,%]
1	MP3A	X	39.622	29.04
2	MP3A	Z	-68.627	29.04
3	MP3A	Mx	-.02	29.04
4	MP3A	X	39.622	53.04
5	MP3A	Z	-68.627	53.04
6	MP3A	Mx	-.02	53.04
7	MP3B	X	21.621	29.04
8	MP3B	Z	-37.449	29.04
9	MP3B	Mx	.02	29.04
10	MP3B	X	21.621	53.04
11	MP3B	Z	-37.449	53.04
12	MP3B	Mx	.02	53.04
13	MP3C	X	34.982	29.04
14	MP3C	Z	-60.59	29.04
15	MP3C	Mx	-.022	29.04
16	MP3C	X	34.982	53.04
17	MP3C	Z	-60.59	53.04
18	MP3C	Mx	-.022	53.04
19	MP2A	X	74.262	11.04
20	MP2A	Z	-128.626	11.04
21	MP2A	Mx	-.112	11.04
22	MP2A	X	74.262	71.04
23	MP2A	Z	-128.626	71.04
24	MP2A	Mx	-.112	71.04
25	MP2B	X	74.262	11.04
26	MP2B	Z	-128.626	11.04
27	MP2B	Mx	-.112	11.04
28	MP2B	X	74.262	71.04
29	MP2B	Z	-128.626	71.04

Member Point Loads (BLC 4 : Antenna Wo (30 Deg)) (Continued)

	Member Label	Direction	Magnitude[lb,k-ft]	Location[in,%]
30	MP2B	Mx	-.112	71.04
31	MP2C	X	74.262	11.04
32	MP2C	Z	-128.626	11.04
33	MP2C	Mx	-.112	11.04
34	MP2C	X	74.262	71.04
35	MP2C	Z	-128.626	71.04
36	MP2C	Mx	-.112	71.04
37	MP2A	X	74.262	11.04
38	MP2A	Z	-128.626	11.04
39	MP2A	Mx	.038	11.04
40	MP2A	X	74.262	71.04
41	MP2A	Z	-128.626	71.04
42	MP2A	Mx	.038	71.04
43	MP2B	X	74.262	11.04
44	MP2B	Z	-128.626	11.04
45	MP2B	Mx	.038	11.04
46	MP2B	X	74.262	71.04
47	MP2B	Z	-128.626	71.04
48	MP2B	Mx	.038	71.04
49	MP2C	X	74.262	11.04
50	MP2C	Z	-128.626	11.04
51	MP2C	Mx	.038	11.04
52	MP2C	X	74.262	71.04
53	MP2C	Z	-128.626	71.04
54	MP2C	Mx	.038	71.04
55	MP1A	X	53.736	11.04
56	MP1A	Z	-93.074	11.04
57	MP1A	Mx	-.027	11.04
58	MP1A	X	53.736	71.04
59	MP1A	Z	-93.074	71.04
60	MP1A	Mx	-.027	71.04
61	MP1B	X	80.79	11.04
62	MP1B	Z	-139.932	11.04
63	MP1B	Mx	.076	11.04
64	MP1B	X	80.79	71.04
65	MP1B	Z	-139.932	71.04
66	MP1B	Mx	.076	71.04
67	MP1C	X	60.71	11.04
68	MP1C	Z	-105.152	11.04
69	MP1C	Mx	-.039	11.04
70	MP1C	X	60.71	71.04
71	MP1C	Z	-105.152	71.04
72	MP1C	Mx	-.039	71.04
73	MP4A	X	53.736	11.04
74	MP4A	Z	-93.074	11.04
75	MP4A	Mx	-.027	11.04
76	MP4A	X	53.736	71.04
77	MP4A	Z	-93.074	71.04
78	MP4A	Mx	-.027	71.04
79	MP4B	X	80.79	11.04
80	MP4B	Z	-139.932	11.04
81	MP4B	Mx	.076	11.04
82	MP4B	X	80.79	71.04
83	MP4B	Z	-139.932	71.04
84	MP4B	Mx	.076	71.04
85	MP4C	X	60.71	11.04
86	MP4C	Z	-105.152	11.04

Member Point Loads (BLC 4 : Antenna Wo (30 Deg)) (Continued)

	Member Label	Direction	Magnitude[lb,k-ft]	Location[in,%]
87	MP4C	Mx	-.039	11.04
88	MP4C	X	60.71	71.04
89	MP4C	Z	-105.152	71.04
90	MP4C	Mx	-.039	71.04
91	MP3A	X	34.103	36
92	MP3A	Z	-59.069	36
93	MP3A	Mx	.017	36
94	MP3B	X	26.299	36
95	MP3B	Z	-45.551	36
96	MP3B	Mx	-.025	36
97	MP3C	X	32.092	36
98	MP3C	Z	-55.584	36
99	MP3C	Mx	.021	36
100	MP2A	X	32.923	36
101	MP2A	Z	-57.024	36
102	MP2A	Mx	.016	36
103	MP2B	X	22.129	36
104	MP2B	Z	-38.328	36
105	MP2B	Mx	-.021	36
106	MP2C	X	30.14	36
107	MP2C	Z	-52.204	36
108	MP2C	Mx	.019	36
109	OVP	X	62.172	18
110	OVP	Z	-107.685	18
111	OVP	Mx	0	18

Member Point Loads (BLC 5 : Antenna Wo (60 Deg))

	Member Label	Direction	Magnitude[lb,k-ft]	Location[in,%]
1	MP3A	X	44.001	29.04
2	MP3A	Z	-25.404	29.04
3	MP3A	Mx	-.022	29.04
4	MP3A	X	44.001	53.04
5	MP3A	Z	-25.404	53.04
6	MP3A	Mx	-.022	53.04
7	MP3B	X	33.173	29.04
8	MP3B	Z	-19.152	29.04
9	MP3B	Mx	.019	29.04
10	MP3B	X	33.173	53.04
11	MP3B	Z	-19.152	53.04
12	MP3B	Mx	.019	53.04
13	MP3C	X	79.455	29.04
14	MP3C	Z	-45.873	29.04
15	MP3C	Mx	-.008	29.04
16	MP3C	X	79.455	53.04
17	MP3C	Z	-45.873	53.04
18	MP3C	Mx	-.008	53.04
19	MP2A	X	104.829	11.04
20	MP2A	Z	-60.523	11.04
21	MP2A	Mx	-.088	11.04
22	MP2A	X	104.829	71.04
23	MP2A	Z	-60.523	71.04
24	MP2A	Mx	-.088	71.04
25	MP2B	X	104.829	11.04
26	MP2B	Z	-60.523	11.04
27	MP2B	Mx	-.088	11.04
28	MP2B	X	104.829	71.04

Member Point Loads (BLC 5 : Antenna Wo (60 Deg)) (Continued)

	Member Label	Direction	Magnitude[lb,k-ft]	Location[in,%]
29	MP2B	Z	-60.523	71.04
30	MP2B	Mx	-.088	71.04
31	MP2C	X	104.829	11.04
32	MP2C	Z	-60.523	11.04
33	MP2C	Mx	-.088	11.04
34	MP2C	X	104.829	71.04
35	MP2C	Z	-60.523	71.04
36	MP2C	Mx	-.088	71.04
37	MP2A	X	104.829	11.04
38	MP2A	Z	-60.523	11.04
39	MP2A	Mx	-.017	11.04
40	MP2A	X	104.829	71.04
41	MP2A	Z	-60.523	71.04
42	MP2A	Mx	-.017	71.04
43	MP2B	X	104.829	11.04
44	MP2B	Z	-60.523	11.04
45	MP2B	Mx	-.017	11.04
46	MP2B	X	104.829	71.04
47	MP2B	Z	-60.523	71.04
48	MP2B	Mx	-.017	71.04
49	MP2C	X	104.829	11.04
50	MP2C	Z	-60.523	11.04
51	MP2C	Mx	-.017	11.04
52	MP2C	X	104.829	71.04
53	MP2C	Z	-60.523	71.04
54	MP2C	Mx	-.017	71.04
55	MP1A	X	130.085	11.04
56	MP1A	Z	-75.105	11.04
57	MP1A	Mx	-.065	11.04
58	MP1A	X	130.085	71.04
59	MP1A	Z	-75.105	71.04
60	MP1A	Mx	-.065	71.04
61	MP1B	X	146.359	11.04
62	MP1B	Z	-84.5	11.04
63	MP1B	Mx	.083	11.04
64	MP1B	X	146.359	71.04
65	MP1B	Z	-84.5	71.04
66	MP1B	Mx	.083	71.04
67	MP1C	X	76.8	11.04
68	MP1C	Z	-44.34	11.04
69	MP1C	Mx	-.008	11.04
70	MP1C	X	76.8	71.04
71	MP1C	Z	-44.34	71.04
72	MP1C	Mx	-.008	71.04
73	MP4A	X	130.085	11.04
74	MP4A	Z	-75.105	11.04
75	MP4A	Mx	-.065	11.04
76	MP4A	X	130.085	71.04
77	MP4A	Z	-75.105	71.04
78	MP4A	Mx	-.065	71.04
79	MP4B	X	146.359	11.04
80	MP4B	Z	-84.5	11.04
81	MP4B	Mx	.083	11.04
82	MP4B	X	146.359	71.04
83	MP4B	Z	-84.5	71.04
84	MP4B	Mx	.083	71.04
85	MP4C	X	76.8	11.04

Member Point Loads (BLC 5 : Antenna Wo (60 Deg)) (Continued)

	Member Label	Direction	Magnitude[lb,k-ft]	Location[in,%]
86	MP4C	Z	-44.34	11.04
87	MP4C	Mx	-.008	11.04
88	MP4C	X	76.8	71.04
89	MP4C	Z	-44.34	71.04
90	MP4C	Mx	-.008	71.04
91	MP3A	X	48.392	36
92	MP3A	Z	-27.939	36
93	MP3A	Mx	.024	36
94	MP3B	X	43.697	36
95	MP3B	Z	-25.228	36
96	MP3B	Mx	-.025	36
97	MP3C	X	63.763	36
98	MP3C	Z	-36.814	36
99	MP3C	Mx	.006	36
100	MP2A	X	42.257	36
101	MP2A	Z	-24.397	36
102	MP2A	Mx	.021	36
103	MP2B	X	35.764	36
104	MP2B	Z	-20.648	36
105	MP2B	Mx	-.02	36
106	MP2C	X	63.517	36
107	MP2C	Z	-36.671	36
108	MP2C	Mx	.006	36
109	OVP	X	120.383	18
110	OVP	Z	-69.503	18
111	OVP	Mx	0	18

Member Point Loads (BLC 6 : Antenna Wo (90 Deg))

	Member Label	Direction	Magnitude[lb,k-ft]	Location[in,%]
1	MP3A	X	36.59	29.04
2	MP3A	Z	0	29.04
3	MP3A	Mx	-.018	29.04
4	MP3A	X	36.59	53.04
5	MP3A	Z	0	53.04
6	MP3A	Mx	-.018	53.04
7	MP3B	X	60.088	29.04
8	MP3B	Z	0	29.04
9	MP3B	Mx	.023	29.04
10	MP3B	X	60.088	53.04
11	MP3B	Z	0	53.04
12	MP3B	Mx	.023	53.04
13	MP3C	X	86.808	29.04
14	MP3C	Z	0	29.04
15	MP3C	Mx	.015	29.04
16	MP3C	X	86.808	53.04
17	MP3C	Z	0	53.04
18	MP3C	Mx	.015	53.04
19	MP2A	X	107.307	11.04
20	MP2A	Z	0	11.04
21	MP2A	Mx	-.054	11.04
22	MP2A	X	107.307	71.04
23	MP2A	Z	0	71.04
24	MP2A	Mx	-.054	71.04
25	MP2B	X	107.307	11.04
26	MP2B	Z	0	11.04
27	MP2B	Mx	-.054	11.04

Member Point Loads (BLC 6 : Antenna Wo (90 Deg)) (Continued)

	Member Label	Direction	Magnitude[lb,k-ft]	Location[in,%]
28	MP2B	X	107.307	71.04
29	MP2B	Z	0	71.04
30	MP2B	Mx	-.054	71.04
31	MP2C	X	107.307	11.04
32	MP2C	Z	0	11.04
33	MP2C	Mx	-.054	11.04
34	MP2C	X	107.307	71.04
35	MP2C	Z	0	71.04
36	MP2C	Mx	-.054	71.04
37	MP2A	X	107.307	11.04
38	MP2A	Z	0	11.04
39	MP2A	Mx	-.054	11.04
40	MP2A	X	107.307	71.04
41	MP2A	Z	0	71.04
42	MP2A	Mx	-.054	71.04
43	MP2B	X	107.307	11.04
44	MP2B	Z	0	11.04
45	MP2B	Mx	-.054	11.04
46	MP2B	X	107.307	71.04
47	MP2B	Z	0	71.04
48	MP2B	Mx	-.054	71.04
49	MP2C	X	107.307	11.04
50	MP2C	Z	0	11.04
51	MP2C	Mx	-.054	11.04
52	MP2C	X	107.307	71.04
53	MP2C	Z	0	71.04
54	MP2C	Mx	-.054	71.04
55	MP1A	X	171.578	11.04
56	MP1A	Z	0	11.04
57	MP1A	Mx	-.086	11.04
58	MP1A	X	171.578	71.04
59	MP1A	Z	0	71.04
60	MP1A	Mx	-.086	71.04
61	MP1B	X	136.262	11.04
62	MP1B	Z	0	11.04
63	MP1B	Mx	.052	11.04
64	MP1B	X	136.262	71.04
65	MP1B	Z	0	71.04
66	MP1B	Mx	.052	71.04
67	MP1C	X	96.102	11.04
68	MP1C	Z	0	11.04
69	MP1C	Mx	.016	11.04
70	MP1C	X	96.102	71.04
71	MP1C	Z	0	71.04
72	MP1C	Mx	.016	71.04
73	MP4A	X	171.578	11.04
74	MP4A	Z	0	11.04
75	MP4A	Mx	-.086	11.04
76	MP4A	X	171.578	71.04
77	MP4A	Z	0	71.04
78	MP4A	Mx	-.086	71.04
79	MP4B	X	136.262	11.04
80	MP4B	Z	0	11.04
81	MP4B	Mx	.052	11.04
82	MP4B	X	136.262	71.04
83	MP4B	Z	0	71.04
84	MP4B	Mx	.052	71.04

Member Point Loads (BLC 6 : Antenna Wo (90 Deg)) (Continued)

	Member Label	Direction	Magnitude[lb,k-ft]	Location[in,%]
85	MP4C	X	96.102	11.04
86	MP4C	Z	0	11.04
87	MP4C	Mx	.016	11.04
88	MP4C	X	96.102	71.04
89	MP4C	Z	0	71.04
90	MP4C	Mx	.016	71.04
91	MP3A	X	49.713	36
92	MP3A	Z	0	36
93	MP3A	Mx	.025	36
94	MP3B	X	59.901	36
95	MP3B	Z	0	36
96	MP3B	Mx	-.023	36
97	MP3C	X	71.487	36
98	MP3C	Z	0	36
99	MP3C	Mx	-.012	36
100	MP2A	X	40.268	36
101	MP2A	Z	0	36
102	MP2A	Mx	.02	36
103	MP2B	X	54.359	36
104	MP2B	Z	0	36
105	MP2B	Mx	-.021	36
106	MP2C	X	70.382	36
107	MP2C	Z	0	36
108	MP2C	Mx	-.012	36
109	OVP	X	156.991	18
110	OVP	Z	0	18
111	OVP	Mx	0	18

Member Point Loads (BLC 7 : Antenna Wo (120 Deg))

	Member Label	Direction	Magnitude[lb,k-ft]	Location[in,%]
1	MP3A	X	44.001	29.04
2	MP3A	Z	25.404	29.04
3	MP3A	Mx	-.022	29.04
4	MP3A	X	44.001	53.04
5	MP3A	Z	25.404	53.04
6	MP3A	Mx	-.022	53.04
7	MP3B	X	75.178	29.04
8	MP3B	Z	43.404	29.04
9	MP3B	Mx	.015	29.04
10	MP3B	X	75.178	53.04
11	MP3B	Z	43.404	53.04
12	MP3B	Mx	.015	53.04
13	MP3C	X	52.037	29.04
14	MP3C	Z	30.044	29.04
15	MP3C	Mx	.023	29.04
16	MP3C	X	52.037	53.04
17	MP3C	Z	30.044	53.04
18	MP3C	Mx	.023	53.04
19	MP2A	X	104.829	11.04
20	MP2A	Z	60.523	11.04
21	MP2A	Mx	-.017	11.04
22	MP2A	X	104.829	71.04
23	MP2A	Z	60.523	71.04
24	MP2A	Mx	-.017	71.04
25	MP2B	X	104.829	11.04
26	MP2B	Z	60.523	11.04

Member Point Loads (BLC 7 : Antenna Wo (120 Deg)) (Continued)

	Member Label	Direction	Magnitude[lb,k-ft]	Location[in,%]
27	MP2B	Mx	-.017	11.04
28	MP2B	X	104.829	71.04
29	MP2B	Z	60.523	71.04
30	MP2B	Mx	-.017	71.04
31	MP2C	X	104.829	11.04
32	MP2C	Z	60.523	11.04
33	MP2C	Mx	-.017	11.04
34	MP2C	X	104.829	71.04
35	MP2C	Z	60.523	71.04
36	MP2C	Mx	-.017	71.04
37	MP2A	X	104.829	11.04
38	MP2A	Z	60.523	11.04
39	MP2A	Mx	-.088	11.04
40	MP2A	X	104.829	71.04
41	MP2A	Z	60.523	71.04
42	MP2A	Mx	-.088	71.04
43	MP2B	X	104.829	11.04
44	MP2B	Z	60.523	11.04
45	MP2B	Mx	-.088	11.04
46	MP2B	X	104.829	71.04
47	MP2B	Z	60.523	71.04
48	MP2B	Mx	-.088	71.04
49	MP2C	X	104.829	11.04
50	MP2C	Z	60.523	11.04
51	MP2C	Mx	-.088	11.04
52	MP2C	X	104.829	71.04
53	MP2C	Z	60.523	71.04
54	MP2C	Mx	-.088	71.04
55	MP1A	X	130.085	11.04
56	MP1A	Z	75.105	11.04
57	MP1A	Mx	-.065	11.04
58	MP1A	X	130.085	71.04
59	MP1A	Z	75.105	71.04
60	MP1A	Mx	-.065	71.04
61	MP1B	X	83.227	11.04
62	MP1B	Z	48.051	11.04
63	MP1B	Mx	.016	11.04
64	MP1B	X	83.227	71.04
65	MP1B	Z	48.051	71.04
66	MP1B	Mx	.016	71.04
67	MP1C	X	118.006	11.04
68	MP1C	Z	68.131	11.04
69	MP1C	Mx	.052	11.04
70	MP1C	X	118.006	71.04
71	MP1C	Z	68.131	71.04
72	MP1C	Mx	.052	71.04
73	MP4A	X	130.085	11.04
74	MP4A	Z	75.105	11.04
75	MP4A	Mx	-.065	11.04
76	MP4A	X	130.085	71.04
77	MP4A	Z	75.105	71.04
78	MP4A	Mx	-.065	71.04
79	MP4B	X	83.227	11.04
80	MP4B	Z	48.051	11.04
81	MP4B	Mx	.016	11.04
82	MP4B	X	83.227	71.04
83	MP4B	Z	48.051	71.04

Member Point Loads (BLC 7 : Antenna Wo (120 Deg)) (Continued)

	Member Label	Direction	Magnitude[lb,k-ft]	Location[in,%]
84	MP4B	Mx	.016	71.04
85	MP4C	X	118.006	11.04
86	MP4C	Z	68.131	11.04
87	MP4C	Mx	.052	11.04
88	MP4C	X	118.006	71.04
89	MP4C	Z	68.131	71.04
90	MP4C	Mx	.052	71.04
91	MP3A	X	48.392	36
92	MP3A	Z	27.939	36
93	MP3A	Mx	.024	36
94	MP3B	X	61.909	36
95	MP3B	Z	35.743	36
96	MP3B	Mx	-.012	36
97	MP3C	X	51.876	36
98	MP3C	Z	29.951	36
99	MP3C	Mx	-.023	36
100	MP2A	X	42.257	36
101	MP2A	Z	24.397	36
102	MP2A	Mx	.021	36
103	MP2B	X	60.952	36
104	MP2B	Z	35.191	36
105	MP2B	Mx	-.012	36
106	MP2C	X	47.076	36
107	MP2C	Z	27.179	36
108	MP2C	Mx	-.021	36
109	OVP	X	138.837	18
110	OVP	Z	80.157	18
111	OVP	Mx	0	18

Member Point Loads (BLC 8 : Antenna Wo (150 Deg))

	Member Label	Direction	Magnitude[lb,k-ft]	Location[in,%]
1	MP3A	X	39.622	29.04
2	MP3A	Z	68.627	29.04
3	MP3A	Mx	-.02	29.04
4	MP3A	X	39.622	53.04
5	MP3A	Z	68.627	53.04
6	MP3A	Mx	-.02	53.04
7	MP3B	X	45.873	29.04
8	MP3B	Z	79.455	29.04
9	MP3B	Mx	-.008	29.04
10	MP3B	X	45.873	53.04
11	MP3B	Z	79.455	53.04
12	MP3B	Mx	-.008	53.04
13	MP3C	X	19.152	29.04
14	MP3C	Z	33.173	29.04
15	MP3C	Mx	.019	29.04
16	MP3C	X	19.152	53.04
17	MP3C	Z	33.173	53.04
18	MP3C	Mx	.019	53.04
19	MP2A	X	74.262	11.04
20	MP2A	Z	128.626	11.04
21	MP2A	Mx	.038	11.04
22	MP2A	X	74.262	71.04
23	MP2A	Z	128.626	71.04
24	MP2A	Mx	.038	71.04
25	MP2B	X	74.262	11.04

Member Point Loads (BLC 8 : Antenna Wo (150 Deg)) (Continued)

	Member Label	Direction	Magnitude[lb,k-ft]	Location[in,%]
26	MP2B	Z	128.626	11.04
27	MP2B	Mx	.038	11.04
28	MP2B	X	74.262	71.04
29	MP2B	Z	128.626	71.04
30	MP2B	Mx	.038	71.04
31	MP2C	X	74.262	11.04
32	MP2C	Z	128.626	11.04
33	MP2C	Mx	.038	11.04
34	MP2C	X	74.262	71.04
35	MP2C	Z	128.626	71.04
36	MP2C	Mx	.038	71.04
37	MP2A	X	74.262	11.04
38	MP2A	Z	128.626	11.04
39	MP2A	Mx	-.112	11.04
40	MP2A	X	74.262	71.04
41	MP2A	Z	128.626	71.04
42	MP2A	Mx	-.112	71.04
43	MP2B	X	74.262	11.04
44	MP2B	Z	128.626	11.04
45	MP2B	Mx	-.112	11.04
46	MP2B	X	74.262	71.04
47	MP2B	Z	128.626	71.04
48	MP2B	Mx	-.112	71.04
49	MP2C	X	74.262	11.04
50	MP2C	Z	128.626	11.04
51	MP2C	Mx	-.112	11.04
52	MP2C	X	74.262	71.04
53	MP2C	Z	128.626	71.04
54	MP2C	Mx	-.112	71.04
55	MP1A	X	53.736	11.04
56	MP1A	Z	93.074	11.04
57	MP1A	Mx	-.027	11.04
58	MP1A	X	53.736	71.04
59	MP1A	Z	93.074	71.04
60	MP1A	Mx	-.027	71.04
61	MP1B	X	44.34	11.04
62	MP1B	Z	76.8	11.04
63	MP1B	Mx	-.008	11.04
64	MP1B	X	44.34	71.04
65	MP1B	Z	76.8	71.04
66	MP1B	Mx	-.008	71.04
67	MP1C	X	84.5	11.04
68	MP1C	Z	146.359	11.04
69	MP1C	Mx	.083	11.04
70	MP1C	X	84.5	71.04
71	MP1C	Z	146.359	71.04
72	MP1C	Mx	.083	71.04
73	MP4A	X	53.736	11.04
74	MP4A	Z	93.074	11.04
75	MP4A	Mx	-.027	11.04
76	MP4A	X	53.736	71.04
77	MP4A	Z	93.074	71.04
78	MP4A	Mx	-.027	71.04
79	MP4B	X	44.34	11.04
80	MP4B	Z	76.8	11.04
81	MP4B	Mx	-.008	11.04
82	MP4B	X	44.34	71.04

Member Point Loads (BLC 8 : Antenna Wo (150 Deg)) (Continued)

	Member Label	Direction	Magnitude[lb,k-ft]	Location[in,%]
83	MP4B	Z	76.8	71.04
84	MP4B	Mx	-.008	71.04
85	MP4C	X	84.5	11.04
86	MP4C	Z	146.359	11.04
87	MP4C	Mx	.083	11.04
88	MP4C	X	84.5	71.04
89	MP4C	Z	146.359	71.04
90	MP4C	Mx	.083	71.04
91	MP3A	X	34.103	36
92	MP3A	Z	59.069	36
93	MP3A	Mx	.017	36
94	MP3B	X	36.814	36
95	MP3B	Z	63.763	36
96	MP3B	Mx	.006	36
97	MP3C	X	25.228	36
98	MP3C	Z	43.697	36
99	MP3C	Mx	-.025	36
100	MP2A	X	32.923	36
101	MP2A	Z	57.024	36
102	MP2A	Mx	.016	36
103	MP2B	X	36.671	36
104	MP2B	Z	63.517	36
105	MP2B	Mx	.006	36
106	MP2C	X	20.648	36
107	MP2C	Z	35.764	36
108	MP2C	Mx	-.02	36
109	OVP	X	72.826	18
110	OVP	Z	126.139	18
111	OVP	Mx	0	18

Member Point Loads (BLC 9 : Antenna Wo (180 Deg))

	Member Label	Direction	Magnitude[lb,k-ft]	Location[in,%]
1	MP3A	X	0	29.04
2	MP3A	Z	93.461	29.04
3	MP3A	Mx	0	29.04
4	MP3A	X	0	53.04
5	MP3A	Z	93.461	53.04
6	MP3A	Mx	0	53.04
7	MP3B	X	0	29.04
8	MP3B	Z	69.963	29.04
9	MP3B	Mx	-.022	29.04
10	MP3B	X	0	53.04
11	MP3B	Z	69.963	53.04
12	MP3B	Mx	-.022	53.04
13	MP3C	X	0	29.04
14	MP3C	Z	43.243	29.04
15	MP3C	Mx	.02	29.04
16	MP3C	X	0	53.04
17	MP3C	Z	43.243	53.04
18	MP3C	Mx	.02	53.04
19	MP2A	X	0	11.04
20	MP2A	Z	162.264	11.04
21	MP2A	Mx	.095	11.04
22	MP2A	X	0	71.04
23	MP2A	Z	162.264	71.04
24	MP2A	Mx	.095	71.04

Member Point Loads (BLC 9 : Antenna Wo (180 Deg)) (Continued)

	Member Label	Direction	Magnitude[lb,k-ft]	Location[in,%]
25	MP2B	X	0	11.04
26	MP2B	Z	162.264	11.04
27	MP2B	Mx	.095	11.04
28	MP2B	X	0	71.04
29	MP2B	Z	162.264	71.04
30	MP2B	Mx	.095	71.04
31	MP2C	X	0	11.04
32	MP2C	Z	162.264	11.04
33	MP2C	Mx	.095	11.04
34	MP2C	X	0	71.04
35	MP2C	Z	162.264	71.04
36	MP2C	Mx	.095	71.04
37	MP2A	X	0	11.04
38	MP2A	Z	162.264	11.04
39	MP2A	Mx	-.095	11.04
40	MP2A	X	0	71.04
41	MP2A	Z	162.264	71.04
42	MP2A	Mx	-.095	71.04
43	MP2B	X	0	11.04
44	MP2B	Z	162.264	11.04
45	MP2B	Mx	-.095	11.04
46	MP2B	X	0	71.04
47	MP2B	Z	162.264	71.04
48	MP2B	Mx	-.095	71.04
49	MP2C	X	0	11.04
50	MP2C	Z	162.264	11.04
51	MP2C	Mx	-.095	11.04
52	MP2C	X	0	71.04
53	MP2C	Z	162.264	71.04
54	MP2C	Mx	-.095	71.04
55	MP1A	X	0	11.04
56	MP1A	Z	86.104	11.04
57	MP1A	Mx	0	11.04
58	MP1A	X	0	71.04
59	MP1A	Z	86.104	71.04
60	MP1A	Mx	0	71.04
61	MP1B	X	0	11.04
62	MP1B	Z	121.419	11.04
63	MP1B	Mx	-.039	11.04
64	MP1B	X	0	71.04
65	MP1B	Z	121.419	71.04
66	MP1B	Mx	-.039	71.04
67	MP1C	X	0	11.04
68	MP1C	Z	161.579	11.04
69	MP1C	Mx	.076	11.04
70	MP1C	X	0	71.04
71	MP1C	Z	161.579	71.04
72	MP1C	Mx	.076	71.04
73	MP4A	X	0	11.04
74	MP4A	Z	86.104	11.04
75	MP4A	Mx	0	11.04
76	MP4A	X	0	71.04
77	MP4A	Z	86.104	71.04
78	MP4A	Mx	0	71.04
79	MP4B	X	0	11.04
80	MP4B	Z	121.419	11.04
81	MP4B	Mx	-.039	11.04

Member Point Loads (BLC 9 : Antenna Wo (180 Deg)) (Continued)

	Member Label	Direction	Magnitude[lb,k-ft]	Location[in,%]
82	MP4B	X	0	71.04
83	MP4B	Z	121.419	71.04
84	MP4B	Mx	-.039	71.04
85	MP4C	X	0	11.04
86	MP4C	Z	161.579	11.04
87	MP4C	Mx	.076	11.04
88	MP4C	X	0	71.04
89	MP4C	Z	161.579	71.04
90	MP4C	Mx	.076	71.04
91	MP3A	X	0	36
92	MP3A	Z	74.371	36
93	MP3A	Mx	0	36
94	MP3B	X	0	36
95	MP3B	Z	64.183	36
96	MP3B	Mx	.021	36
97	MP3C	X	0	36
98	MP3C	Z	52.598	36
99	MP3C	Mx	-.025	36
100	MP2A	X	0	36
101	MP2A	Z	74.371	36
102	MP2A	Mx	0	36
103	MP2B	X	0	36
104	MP2B	Z	60.28	36
105	MP2B	Mx	.019	36
106	MP2C	X	0	36
107	MP2C	Z	44.257	36
108	MP2C	Mx	-.021	36
109	OVP	X	0	18
110	OVP	Z	127.668	18
111	OVP	Mx	0	18

Member Point Loads (BLC 10 : Antenna Wo (210 Deg))

	Member Label	Direction	Magnitude[lb,k-ft]	Location[in,%]
1	MP3A	X	-39.622	29.04
2	MP3A	Z	68.627	29.04
3	MP3A	Mx	.02	29.04
4	MP3A	X	-39.622	53.04
5	MP3A	Z	68.627	53.04
6	MP3A	Mx	.02	53.04
7	MP3B	X	-21.621	29.04
8	MP3B	Z	37.449	29.04
9	MP3B	Mx	-.02	29.04
10	MP3B	X	-21.621	53.04
11	MP3B	Z	37.449	53.04
12	MP3B	Mx	-.02	53.04
13	MP3C	X	-34.982	29.04
14	MP3C	Z	60.59	29.04
15	MP3C	Mx	.022	29.04
16	MP3C	X	-34.982	53.04
17	MP3C	Z	60.59	53.04
18	MP3C	Mx	.022	53.04
19	MP2A	X	-74.262	11.04
20	MP2A	Z	128.626	11.04
21	MP2A	Mx	.112	11.04
22	MP2A	X	-74.262	71.04
23	MP2A	Z	128.626	71.04

Member Point Loads (BLC 10 : Antenna Wo (210 Deg)) (Continued)

	Member Label	Direction	Magnitude[lb,k-ft]	Location[in,%]
24	MP2A	Mx	.112	71.04
25	MP2B	X	-74.262	11.04
26	MP2B	Z	128.626	11.04
27	MP2B	Mx	.112	11.04
28	MP2B	X	-74.262	71.04
29	MP2B	Z	128.626	71.04
30	MP2B	Mx	.112	71.04
31	MP2C	X	-74.262	11.04
32	MP2C	Z	128.626	11.04
33	MP2C	Mx	.112	11.04
34	MP2C	X	-74.262	71.04
35	MP2C	Z	128.626	71.04
36	MP2C	Mx	.112	71.04
37	MP2A	X	-74.262	11.04
38	MP2A	Z	128.626	11.04
39	MP2A	Mx	-.038	11.04
40	MP2A	X	-74.262	71.04
41	MP2A	Z	128.626	71.04
42	MP2A	Mx	-.038	71.04
43	MP2B	X	-74.262	11.04
44	MP2B	Z	128.626	11.04
45	MP2B	Mx	-.038	11.04
46	MP2B	X	-74.262	71.04
47	MP2B	Z	128.626	71.04
48	MP2B	Mx	-.038	71.04
49	MP2C	X	-74.262	11.04
50	MP2C	Z	128.626	11.04
51	MP2C	Mx	-.038	11.04
52	MP2C	X	-74.262	71.04
53	MP2C	Z	128.626	71.04
54	MP2C	Mx	-.038	71.04
55	MP1A	X	-53.736	11.04
56	MP1A	Z	93.074	11.04
57	MP1A	Mx	.027	11.04
58	MP1A	X	-53.736	71.04
59	MP1A	Z	93.074	71.04
60	MP1A	Mx	.027	71.04
61	MP1B	X	-80.79	11.04
62	MP1B	Z	139.932	11.04
63	MP1B	Mx	-.076	11.04
64	MP1B	X	-80.79	71.04
65	MP1B	Z	139.932	71.04
66	MP1B	Mx	-.076	71.04
67	MP1C	X	-60.71	11.04
68	MP1C	Z	105.152	11.04
69	MP1C	Mx	.039	11.04
70	MP1C	X	-60.71	71.04
71	MP1C	Z	105.152	71.04
72	MP1C	Mx	.039	71.04
73	MP4A	X	-53.736	11.04
74	MP4A	Z	93.074	11.04
75	MP4A	Mx	.027	11.04
76	MP4A	X	-53.736	71.04
77	MP4A	Z	93.074	71.04
78	MP4A	Mx	.027	71.04
79	MP4B	X	-80.79	11.04
80	MP4B	Z	139.932	11.04

Member Point Loads (BLC 10 : Antenna Wo (210 Deg)) (Continued)

	Member Label	Direction	Magnitude[lb,k-ft]	Location[in,%]
81	MP4B	Mx	-.076	11.04
82	MP4B	X	-80.79	71.04
83	MP4B	Z	139.932	71.04
84	MP4B	Mx	-.076	71.04
85	MP4C	X	-60.71	11.04
86	MP4C	Z	105.152	11.04
87	MP4C	Mx	.039	11.04
88	MP4C	X	-60.71	71.04
89	MP4C	Z	105.152	71.04
90	MP4C	Mx	.039	71.04
91	MP3A	X	-34.103	36
92	MP3A	Z	59.069	36
93	MP3A	Mx	-.017	36
94	MP3B	X	-26.299	36
95	MP3B	Z	45.551	36
96	MP3B	Mx	.025	36
97	MP3C	X	-32.092	36
98	MP3C	Z	55.584	36
99	MP3C	Mx	-.021	36
100	MP2A	X	-32.923	36
101	MP2A	Z	57.024	36
102	MP2A	Mx	-.016	36
103	MP2B	X	-22.129	36
104	MP2B	Z	38.328	36
105	MP2B	Mx	.021	36
106	MP2C	X	-30.14	36
107	MP2C	Z	52.204	36
108	MP2C	Mx	-.019	36
109	OVP	X	-62.172	18
110	OVP	Z	107.685	18
111	OVP	Mx	0	18

Member Point Loads (BLC 11 : Antenna Wo (240 Deg))

	Member Label	Direction	Magnitude[lb,k-ft]	Location[in,%]
1	MP3A	X	-44.001	29.04
2	MP3A	Z	25.404	29.04
3	MP3A	Mx	.022	29.04
4	MP3A	X	-44.001	53.04
5	MP3A	Z	25.404	53.04
6	MP3A	Mx	.022	53.04
7	MP3B	X	-33.173	29.04
8	MP3B	Z	19.152	29.04
9	MP3B	Mx	-.019	29.04
10	MP3B	X	-33.173	53.04
11	MP3B	Z	19.152	53.04
12	MP3B	Mx	-.019	53.04
13	MP3C	X	-79.455	29.04
14	MP3C	Z	45.873	29.04
15	MP3C	Mx	.008	29.04
16	MP3C	X	-79.455	53.04
17	MP3C	Z	45.873	53.04
18	MP3C	Mx	.008	53.04
19	MP2A	X	-104.829	11.04
20	MP2A	Z	60.523	11.04
21	MP2A	Mx	.088	11.04
22	MP2A	X	-104.829	71.04

Member Point Loads (BLC 11 : Antenna Wo (240 Deg)) (Continued)

	Member Label	Direction	Magnitude[lb,k-ft]	Location[in,%]
23	MP2A	Z	60.523	71.04
24	MP2A	Mx	.088	71.04
25	MP2B	X	-104.829	11.04
26	MP2B	Z	60.523	11.04
27	MP2B	Mx	.088	11.04
28	MP2B	X	-104.829	71.04
29	MP2B	Z	60.523	71.04
30	MP2B	Mx	.088	71.04
31	MP2C	X	-104.829	11.04
32	MP2C	Z	60.523	11.04
33	MP2C	Mx	.088	11.04
34	MP2C	X	-104.829	71.04
35	MP2C	Z	60.523	71.04
36	MP2C	Mx	.088	71.04
37	MP2A	X	-104.829	11.04
38	MP2A	Z	60.523	11.04
39	MP2A	Mx	.017	11.04
40	MP2A	X	-104.829	71.04
41	MP2A	Z	60.523	71.04
42	MP2A	Mx	.017	71.04
43	MP2B	X	-104.829	11.04
44	MP2B	Z	60.523	11.04
45	MP2B	Mx	.017	11.04
46	MP2B	X	-104.829	71.04
47	MP2B	Z	60.523	71.04
48	MP2B	Mx	.017	71.04
49	MP2C	X	-104.829	11.04
50	MP2C	Z	60.523	11.04
51	MP2C	Mx	.017	11.04
52	MP2C	X	-104.829	71.04
53	MP2C	Z	60.523	71.04
54	MP2C	Mx	.017	71.04
55	MP1A	X	-130.085	11.04
56	MP1A	Z	75.105	11.04
57	MP1A	Mx	.065	11.04
58	MP1A	X	-130.085	71.04
59	MP1A	Z	75.105	71.04
60	MP1A	Mx	.065	71.04
61	MP1B	X	-146.359	11.04
62	MP1B	Z	84.5	11.04
63	MP1B	Mx	-.083	11.04
64	MP1B	X	-146.359	71.04
65	MP1B	Z	84.5	71.04
66	MP1B	Mx	-.083	71.04
67	MP1C	X	-76.8	11.04
68	MP1C	Z	44.34	11.04
69	MP1C	Mx	.008	11.04
70	MP1C	X	-76.8	71.04
71	MP1C	Z	44.34	71.04
72	MP1C	Mx	.008	71.04
73	MP4A	X	-130.085	11.04
74	MP4A	Z	75.105	11.04
75	MP4A	Mx	.065	11.04
76	MP4A	X	-130.085	71.04
77	MP4A	Z	75.105	71.04
78	MP4A	Mx	.065	71.04
79	MP4B	X	-146.359	11.04

Member Point Loads (BLC 11 : Antenna Wo (240 Deg)) (Continued)

	Member Label	Direction	Magnitude[lb,k-ft]	Location[in,%]
80	MP4B	Z	84.5	11.04
81	MP4B	Mx	-.083	11.04
82	MP4B	X	-146.359	71.04
83	MP4B	Z	84.5	71.04
84	MP4B	Mx	-.083	71.04
85	MP4C	X	-76.8	11.04
86	MP4C	Z	44.34	11.04
87	MP4C	Mx	.008	11.04
88	MP4C	X	-76.8	71.04
89	MP4C	Z	44.34	71.04
90	MP4C	Mx	.008	71.04
91	MP3A	X	-48.392	36
92	MP3A	Z	27.939	36
93	MP3A	Mx	-.024	36
94	MP3B	X	-43.697	36
95	MP3B	Z	25.228	36
96	MP3B	Mx	.025	36
97	MP3C	X	-63.763	36
98	MP3C	Z	36.814	36
99	MP3C	Mx	-.006	36
100	MP2A	X	-42.257	36
101	MP2A	Z	24.397	36
102	MP2A	Mx	-.021	36
103	MP2B	X	-35.764	36
104	MP2B	Z	20.648	36
105	MP2B	Mx	.02	36
106	MP2C	X	-63.517	36
107	MP2C	Z	36.671	36
108	MP2C	Mx	-.006	36
109	OVP	X	-120.383	18
110	OVP	Z	69.503	18
111	OVP	Mx	0	18

Member Point Loads (BLC 12 : Antenna Wo (270 Deg))

	Member Label	Direction	Magnitude[lb,k-ft]	Location[in,%]
1	MP3A	X	-36.59	29.04
2	MP3A	Z	0	29.04
3	MP3A	Mx	.018	29.04
4	MP3A	X	-36.59	53.04
5	MP3A	Z	0	53.04
6	MP3A	Mx	.018	53.04
7	MP3B	X	-60.088	29.04
8	MP3B	Z	0	29.04
9	MP3B	Mx	-.023	29.04
10	MP3B	X	-60.088	53.04
11	MP3B	Z	0	53.04
12	MP3B	Mx	-.023	53.04
13	MP3C	X	-86.808	29.04
14	MP3C	Z	0	29.04
15	MP3C	Mx	-.015	29.04
16	MP3C	X	-86.808	53.04
17	MP3C	Z	0	53.04
18	MP3C	Mx	-.015	53.04
19	MP2A	X	-107.307	11.04
20	MP2A	Z	0	11.04
21	MP2A	Mx	.054	11.04

Member Point Loads (BLC 12 : Antenna Wo (270 Deg)) (Continued)

	Member Label	Direction	Magnitude[lb,k-ft]	Location[in,%]
22	MP2A	X	-107.307	71.04
23	MP2A	Z	0	71.04
24	MP2A	Mx	.054	71.04
25	MP2B	X	-107.307	11.04
26	MP2B	Z	0	11.04
27	MP2B	Mx	.054	11.04
28	MP2B	X	-107.307	71.04
29	MP2B	Z	0	71.04
30	MP2B	Mx	.054	71.04
31	MP2C	X	-107.307	11.04
32	MP2C	Z	0	11.04
33	MP2C	Mx	.054	11.04
34	MP2C	X	-107.307	71.04
35	MP2C	Z	0	71.04
36	MP2C	Mx	.054	71.04
37	MP2A	X	-107.307	11.04
38	MP2A	Z	0	11.04
39	MP2A	Mx	.054	11.04
40	MP2A	X	-107.307	71.04
41	MP2A	Z	0	71.04
42	MP2A	Mx	.054	71.04
43	MP2B	X	-107.307	11.04
44	MP2B	Z	0	11.04
45	MP2B	Mx	.054	11.04
46	MP2B	X	-107.307	71.04
47	MP2B	Z	0	71.04
48	MP2B	Mx	.054	71.04
49	MP2C	X	-107.307	11.04
50	MP2C	Z	0	11.04
51	MP2C	Mx	.054	11.04
52	MP2C	X	-107.307	71.04
53	MP2C	Z	0	71.04
54	MP2C	Mx	.054	71.04
55	MP1A	X	-171.578	11.04
56	MP1A	Z	0	11.04
57	MP1A	Mx	.086	11.04
58	MP1A	X	-171.578	71.04
59	MP1A	Z	0	71.04
60	MP1A	Mx	.086	71.04
61	MP1B	X	-136.262	11.04
62	MP1B	Z	0	11.04
63	MP1B	Mx	-.052	11.04
64	MP1B	X	-136.262	71.04
65	MP1B	Z	0	71.04
66	MP1B	Mx	-.052	71.04
67	MP1C	X	-96.102	11.04
68	MP1C	Z	0	11.04
69	MP1C	Mx	-.016	11.04
70	MP1C	X	-96.102	71.04
71	MP1C	Z	0	71.04
72	MP1C	Mx	-.016	71.04
73	MP4A	X	-171.578	11.04
74	MP4A	Z	0	11.04
75	MP4A	Mx	.086	11.04
76	MP4A	X	-171.578	71.04
77	MP4A	Z	0	71.04
78	MP4A	Mx	.086	71.04

Member Point Loads (BLC 12 : Antenna Wo (270 Deg)) (Continued)

	Member Label	Direction	Magnitude[lb,k-ft]	Location[in,%]
79	MP4B	X	-136.262	11.04
80	MP4B	Z	0	11.04
81	MP4B	Mx	-.052	11.04
82	MP4B	X	-136.262	71.04
83	MP4B	Z	0	71.04
84	MP4B	Mx	-.052	71.04
85	MP4C	X	-96.102	11.04
86	MP4C	Z	0	11.04
87	MP4C	Mx	-.016	11.04
88	MP4C	X	-96.102	71.04
89	MP4C	Z	0	71.04
90	MP4C	Mx	-.016	71.04
91	MP3A	X	-49.713	36
92	MP3A	Z	0	36
93	MP3A	Mx	-.025	36
94	MP3B	X	-59.901	36
95	MP3B	Z	0	36
96	MP3B	Mx	.023	36
97	MP3C	X	-71.487	36
98	MP3C	Z	0	36
99	MP3C	Mx	.012	36
100	MP2A	X	-40.268	36
101	MP2A	Z	0	36
102	MP2A	Mx	-.02	36
103	MP2B	X	-54.359	36
104	MP2B	Z	0	36
105	MP2B	Mx	.021	36
106	MP2C	X	-70.382	36
107	MP2C	Z	0	36
108	MP2C	Mx	.012	36
109	OVP	X	-156.991	18
110	OVP	Z	0	18
111	OVP	Mx	0	18

Member Point Loads (BLC 13 : Antenna Wo (300 Deg))

	Member Label	Direction	Magnitude[lb,k-ft]	Location[in,%]
1	MP3A	X	-44.001	29.04
2	MP3A	Z	-25.404	29.04
3	MP3A	Mx	.022	29.04
4	MP3A	X	-44.001	53.04
5	MP3A	Z	-25.404	53.04
6	MP3A	Mx	.022	53.04
7	MP3B	X	-75.178	29.04
8	MP3B	Z	-43.404	29.04
9	MP3B	Mx	-.015	29.04
10	MP3B	X	-75.178	53.04
11	MP3B	Z	-43.404	53.04
12	MP3B	Mx	-.015	53.04
13	MP3C	X	-52.037	29.04
14	MP3C	Z	-30.044	29.04
15	MP3C	Mx	-.023	29.04
16	MP3C	X	-52.037	53.04
17	MP3C	Z	-30.044	53.04
18	MP3C	Mx	-.023	53.04
19	MP2A	X	-104.829	11.04
20	MP2A	Z	-60.523	11.04

Member Point Loads (BLC 13 : Antenna Wo (300 Deg)) (Continued)

	Member Label	Direction	Magnitude[lb,k-ft]	Location[in,%]
21	MP2A	Mx	.017	11.04
22	MP2A	X	-104.829	71.04
23	MP2A	Z	-60.523	71.04
24	MP2A	Mx	.017	71.04
25	MP2B	X	-104.829	11.04
26	MP2B	Z	-60.523	11.04
27	MP2B	Mx	.017	11.04
28	MP2B	X	-104.829	71.04
29	MP2B	Z	-60.523	71.04
30	MP2B	Mx	.017	71.04
31	MP2C	X	-104.829	11.04
32	MP2C	Z	-60.523	11.04
33	MP2C	Mx	.017	11.04
34	MP2C	X	-104.829	71.04
35	MP2C	Z	-60.523	71.04
36	MP2C	Mx	.017	71.04
37	MP2A	X	-104.829	11.04
38	MP2A	Z	-60.523	11.04
39	MP2A	Mx	.088	11.04
40	MP2A	X	-104.829	71.04
41	MP2A	Z	-60.523	71.04
42	MP2A	Mx	.088	71.04
43	MP2B	X	-104.829	11.04
44	MP2B	Z	-60.523	11.04
45	MP2B	Mx	.088	11.04
46	MP2B	X	-104.829	71.04
47	MP2B	Z	-60.523	71.04
48	MP2B	Mx	.088	71.04
49	MP2C	X	-104.829	11.04
50	MP2C	Z	-60.523	11.04
51	MP2C	Mx	.088	11.04
52	MP2C	X	-104.829	71.04
53	MP2C	Z	-60.523	71.04
54	MP2C	Mx	.088	71.04
55	MP1A	X	-130.085	11.04
56	MP1A	Z	-75.105	11.04
57	MP1A	Mx	.065	11.04
58	MP1A	X	-130.085	71.04
59	MP1A	Z	-75.105	71.04
60	MP1A	Mx	.065	71.04
61	MP1B	X	-83.227	11.04
62	MP1B	Z	-48.051	11.04
63	MP1B	Mx	-.016	11.04
64	MP1B	X	-83.227	71.04
65	MP1B	Z	-48.051	71.04
66	MP1B	Mx	-.016	71.04
67	MP1C	X	-118.006	11.04
68	MP1C	Z	-68.131	11.04
69	MP1C	Mx	-.052	11.04
70	MP1C	X	-118.006	71.04
71	MP1C	Z	-68.131	71.04
72	MP1C	Mx	-.052	71.04
73	MP4A	X	-130.085	11.04
74	MP4A	Z	-75.105	11.04
75	MP4A	Mx	.065	11.04
76	MP4A	X	-130.085	71.04
77	MP4A	Z	-75.105	71.04

Member Point Loads (BLC 13 : Antenna Wo (300 Deg)) (Continued)

	Member Label	Direction	Magnitude[lb,k-ft]	Location[in,%]
78	MP4A	Mx	.065	71.04
79	MP4B	X	-83.227	11.04
80	MP4B	Z	-48.051	11.04
81	MP4B	Mx	-.016	11.04
82	MP4B	X	-83.227	71.04
83	MP4B	Z	-48.051	71.04
84	MP4B	Mx	-.016	71.04
85	MP4C	X	-118.006	11.04
86	MP4C	Z	-68.131	11.04
87	MP4C	Mx	-.052	11.04
88	MP4C	X	-118.006	71.04
89	MP4C	Z	-68.131	71.04
90	MP4C	Mx	-.052	71.04
91	MP3A	X	-48.392	36
92	MP3A	Z	-27.939	36
93	MP3A	Mx	-.024	36
94	MP3B	X	-61.909	36
95	MP3B	Z	-35.743	36
96	MP3B	Mx	.012	36
97	MP3C	X	-51.876	36
98	MP3C	Z	-29.951	36
99	MP3C	Mx	.023	36
100	MP2A	X	-42.257	36
101	MP2A	Z	-24.397	36
102	MP2A	Mx	-.021	36
103	MP2B	X	-60.952	36
104	MP2B	Z	-35.191	36
105	MP2B	Mx	.012	36
106	MP2C	X	-47.076	36
107	MP2C	Z	-27.179	36
108	MP2C	Mx	.021	36
109	OVP	X	-138.837	18
110	OVP	Z	-80.157	18
111	OVP	Mx	0	18

Member Point Loads (BLC 14 : Antenna Wo (330 Deg))

	Member Label	Direction	Magnitude[lb,k-ft]	Location[in,%]
1	MP3A	X	-39.622	29.04
2	MP3A	Z	-68.627	29.04
3	MP3A	Mx	.02	29.04
4	MP3A	X	-39.622	53.04
5	MP3A	Z	-68.627	53.04
6	MP3A	Mx	.02	53.04
7	MP3B	X	-45.873	29.04
8	MP3B	Z	-79.455	29.04
9	MP3B	Mx	.008	29.04
10	MP3B	X	-45.873	53.04
11	MP3B	Z	-79.455	53.04
12	MP3B	Mx	.008	53.04
13	MP3C	X	-19.152	29.04
14	MP3C	Z	-33.173	29.04
15	MP3C	Mx	-.019	29.04
16	MP3C	X	-19.152	53.04
17	MP3C	Z	-33.173	53.04
18	MP3C	Mx	-.019	53.04
19	MP2A	X	-74.262	11.04

Member Point Loads (BLC 14 : Antenna Wo (330 Deg)) (Continued)

	Member Label	Direction	Magnitude[lb,k-ft]	Location[in,%]
20	MP2A	Z	-128.626	11.04
21	MP2A	Mx	-.038	11.04
22	MP2A	X	-74.262	71.04
23	MP2A	Z	-128.626	71.04
24	MP2A	Mx	-.038	71.04
25	MP2B	X	-74.262	11.04
26	MP2B	Z	-128.626	11.04
27	MP2B	Mx	-.038	11.04
28	MP2B	X	-74.262	71.04
29	MP2B	Z	-128.626	71.04
30	MP2B	Mx	-.038	71.04
31	MP2C	X	-74.262	11.04
32	MP2C	Z	-128.626	11.04
33	MP2C	Mx	-.038	11.04
34	MP2C	X	-74.262	71.04
35	MP2C	Z	-128.626	71.04
36	MP2C	Mx	-.038	71.04
37	MP2A	X	-74.262	11.04
38	MP2A	Z	-128.626	11.04
39	MP2A	Mx	.112	11.04
40	MP2A	X	-74.262	71.04
41	MP2A	Z	-128.626	71.04
42	MP2A	Mx	.112	71.04
43	MP2B	X	-74.262	11.04
44	MP2B	Z	-128.626	11.04
45	MP2B	Mx	.112	11.04
46	MP2B	X	-74.262	71.04
47	MP2B	Z	-128.626	71.04
48	MP2B	Mx	.112	71.04
49	MP2C	X	-74.262	11.04
50	MP2C	Z	-128.626	11.04
51	MP2C	Mx	.112	11.04
52	MP2C	X	-74.262	71.04
53	MP2C	Z	-128.626	71.04
54	MP2C	Mx	.112	71.04
55	MP1A	X	-53.736	11.04
56	MP1A	Z	-93.074	11.04
57	MP1A	Mx	.027	11.04
58	MP1A	X	-53.736	71.04
59	MP1A	Z	-93.074	71.04
60	MP1A	Mx	.027	71.04
61	MP1B	X	-44.34	11.04
62	MP1B	Z	-76.8	11.04
63	MP1B	Mx	.008	11.04
64	MP1B	X	-44.34	71.04
65	MP1B	Z	-76.8	71.04
66	MP1B	Mx	.008	71.04
67	MP1C	X	-84.5	11.04
68	MP1C	Z	-146.359	11.04
69	MP1C	Mx	-.083	11.04
70	MP1C	X	-84.5	71.04
71	MP1C	Z	-146.359	71.04
72	MP1C	Mx	-.083	71.04
73	MP4A	X	-53.736	11.04
74	MP4A	Z	-93.074	11.04
75	MP4A	Mx	.027	11.04
76	MP4A	X	-53.736	71.04

Member Point Loads (BLC 14 : Antenna Wo (330 Deg)) (Continued)

	Member Label	Direction	Magnitude[lb,k-ft]	Location[in,%]
77	MP4A	Z	-93.074	71.04
78	MP4A	Mx	.027	71.04
79	MP4B	X	-44.34	11.04
80	MP4B	Z	-76.8	11.04
81	MP4B	Mx	.008	11.04
82	MP4B	X	-44.34	71.04
83	MP4B	Z	-76.8	71.04
84	MP4B	Mx	.008	71.04
85	MP4C	X	-84.5	11.04
86	MP4C	Z	-146.359	11.04
87	MP4C	Mx	-.083	11.04
88	MP4C	X	-84.5	71.04
89	MP4C	Z	-146.359	71.04
90	MP4C	Mx	-.083	71.04
91	MP3A	X	-34.103	36
92	MP3A	Z	-59.069	36
93	MP3A	Mx	-.017	36
94	MP3B	X	-36.814	36
95	MP3B	Z	-63.763	36
96	MP3B	Mx	-.006	36
97	MP3C	X	-25.228	36
98	MP3C	Z	-43.697	36
99	MP3C	Mx	.025	36
100	MP2A	X	-32.923	36
101	MP2A	Z	-57.024	36
102	MP2A	Mx	-.016	36
103	MP2B	X	-36.671	36
104	MP2B	Z	-63.517	36
105	MP2B	Mx	-.006	36
106	MP2C	X	-20.648	36
107	MP2C	Z	-35.764	36
108	MP2C	Mx	.02	36
109	OVP	X	-72.826	18
110	OVP	Z	-126.139	18
111	OVP	Mx	0	18

Member Point Loads (BLC 15 : Antenna Wi (0 Deg))

	Member Label	Direction	Magnitude[lb,k-ft]	Location[in,%]
1	MP3A	X	0	29.04
2	MP3A	Z	-19.632	29.04
3	MP3A	Mx	0	29.04
4	MP3A	X	0	53.04
5	MP3A	Z	-19.632	53.04
6	MP3A	Mx	0	53.04
7	MP3B	X	0	29.04
8	MP3B	Z	-14.978	29.04
9	MP3B	Mx	.005	29.04
10	MP3B	X	0	53.04
11	MP3B	Z	-14.978	53.04
12	MP3B	Mx	.005	53.04
13	MP3C	X	0	29.04
14	MP3C	Z	-9.685	29.04
15	MP3C	Mx	-.005	29.04
16	MP3C	X	0	53.04
17	MP3C	Z	-9.685	53.04
18	MP3C	Mx	-.005	53.04

Member Point Loads (BLC 15 : Antenna Wi (0 Deg)) (Continued)

	Member Label	Direction	Magnitude[lb,k-ft]	Location[in,%]
19	MP2A	X	0	11.04
20	MP2A	Z	-33.267	11.04
21	MP2A	Mx	-.019	11.04
22	MP2A	X	0	71.04
23	MP2A	Z	-33.267	71.04
24	MP2A	Mx	-.019	71.04
25	MP2B	X	0	11.04
26	MP2B	Z	-33.267	11.04
27	MP2B	Mx	-.019	11.04
28	MP2B	X	0	71.04
29	MP2B	Z	-33.267	71.04
30	MP2B	Mx	-.019	71.04
31	MP2C	X	0	11.04
32	MP2C	Z	-33.267	11.04
33	MP2C	Mx	-.019	11.04
34	MP2C	X	0	71.04
35	MP2C	Z	-33.267	71.04
36	MP2C	Mx	-.019	71.04
37	MP2A	X	0	11.04
38	MP2A	Z	-33.267	11.04
39	MP2A	Mx	.019	11.04
40	MP2A	X	0	71.04
41	MP2A	Z	-33.267	71.04
42	MP2A	Mx	.019	71.04
43	MP2B	X	0	11.04
44	MP2B	Z	-33.267	11.04
45	MP2B	Mx	.019	11.04
46	MP2B	X	0	71.04
47	MP2B	Z	-33.267	71.04
48	MP2B	Mx	.019	71.04
49	MP2C	X	0	11.04
50	MP2C	Z	-33.267	11.04
51	MP2C	Mx	.019	11.04
52	MP2C	X	0	71.04
53	MP2C	Z	-33.267	71.04
54	MP2C	Mx	.019	71.04
55	MP1A	X	0	11.04
56	MP1A	Z	-18.794	11.04
57	MP1A	Mx	0	11.04
58	MP1A	X	0	71.04
59	MP1A	Z	-18.794	71.04
60	MP1A	Mx	0	71.04
61	MP1B	X	0	11.04
62	MP1B	Z	-25.507	11.04
63	MP1B	Mx	.008	11.04
64	MP1B	X	0	71.04
65	MP1B	Z	-25.507	71.04
66	MP1B	Mx	.008	71.04
67	MP1C	X	0	11.04
68	MP1C	Z	-33.14	11.04
69	MP1C	Mx	-.016	11.04
70	MP1C	X	0	71.04
71	MP1C	Z	-33.14	71.04
72	MP1C	Mx	-.016	71.04
73	MP4A	X	0	11.04
74	MP4A	Z	-18.794	11.04
75	MP4A	Mx	0	11.04

Member Point Loads (BLC 15 : Antenna Wi (0 Deg)) (Continued)

	Member Label	Direction	Magnitude[lb,k-ft]	Location[in,%]
76	MP4A	X	0	71.04
77	MP4A	Z	-18.794	71.04
78	MP4A	Mx	0	71.04
79	MP4B	X	0	11.04
80	MP4B	Z	-25.507	11.04
81	MP4B	Mx	.008	11.04
82	MP4B	X	0	71.04
83	MP4B	Z	-25.507	71.04
84	MP4B	Mx	.008	71.04
85	MP4C	X	0	11.04
86	MP4C	Z	-33.14	11.04
87	MP4C	Mx	-.016	11.04
88	MP4C	X	0	71.04
89	MP4C	Z	-33.14	71.04
90	MP4C	Mx	-.016	71.04
91	MP3A	X	0	36
92	MP3A	Z	-16.552	36
93	MP3A	Mx	0	36
94	MP3B	X	0	36
95	MP3B	Z	-14.472	36
96	MP3B	Mx	-.005	36
97	MP3C	X	0	36
98	MP3C	Z	-12.106	36
99	MP3C	Mx	.006	36
100	MP2A	X	0	36
101	MP2A	Z	-16.552	36
102	MP2A	Mx	0	36
103	MP2B	X	0	36
104	MP2B	Z	-13.681	36
105	MP2B	Mx	-.004	36
106	MP2C	X	0	36
107	MP2C	Z	-10.416	36
108	MP2C	Mx	.005	36
109	OVP	X	0	18
110	OVP	Z	-27.462	18
111	OVP	Mx	0	18

Member Point Loads (BLC 16 : Antenna Wi (30 Deg))

	Member Label	Direction	Magnitude[lb,k-ft]	Location[in,%]
1	MP3A	X	8.408	29.04
2	MP3A	Z	-14.563	29.04
3	MP3A	Mx	-.004	29.04
4	MP3A	X	8.408	53.04
5	MP3A	Z	-14.563	53.04
6	MP3A	Mx	-.004	53.04
7	MP3B	X	4.843	29.04
8	MP3B	Z	-8.388	29.04
9	MP3B	Mx	.005	29.04
10	MP3B	X	4.843	53.04
11	MP3B	Z	-8.388	53.04
12	MP3B	Mx	.005	53.04
13	MP3C	X	7.489	29.04
14	MP3C	Z	-12.971	29.04
15	MP3C	Mx	-.005	29.04
16	MP3C	X	7.489	53.04
17	MP3C	Z	-12.971	53.04

Member Point Loads (BLC 16 : Antenna Wi (30 Deg)) (Continued)

	Member Label	Direction	Magnitude[lb,k-ft]	Location[in,%]
18	MP3C	Mx	-.005	53.04
19	MP2A	X	15.344	11.04
20	MP2A	Z	-26.576	11.04
21	MP2A	Mx	-.023	11.04
22	MP2A	X	15.344	71.04
23	MP2A	Z	-26.576	71.04
24	MP2A	Mx	-.023	71.04
25	MP2B	X	15.344	11.04
26	MP2B	Z	-26.576	11.04
27	MP2B	Mx	-.023	11.04
28	MP2B	X	15.344	71.04
29	MP2B	Z	-26.576	71.04
30	MP2B	Mx	-.023	71.04
31	MP2C	X	15.344	11.04
32	MP2C	Z	-26.576	11.04
33	MP2C	Mx	-.023	11.04
34	MP2C	X	15.344	71.04
35	MP2C	Z	-26.576	71.04
36	MP2C	Mx	-.023	71.04
37	MP2A	X	15.344	11.04
38	MP2A	Z	-26.576	11.04
39	MP2A	Mx	.008	11.04
40	MP2A	X	15.344	71.04
41	MP2A	Z	-26.576	71.04
42	MP2A	Mx	.008	71.04
43	MP2B	X	15.344	11.04
44	MP2B	Z	-26.576	11.04
45	MP2B	Mx	.008	11.04
46	MP2B	X	15.344	71.04
47	MP2B	Z	-26.576	71.04
48	MP2B	Mx	.008	71.04
49	MP2C	X	15.344	11.04
50	MP2C	Z	-26.576	11.04
51	MP2C	Mx	.008	11.04
52	MP2C	X	15.344	71.04
53	MP2C	Z	-26.576	71.04
54	MP2C	Mx	.008	71.04
55	MP1A	X	11.428	11.04
56	MP1A	Z	-19.794	11.04
57	MP1A	Mx	-.006	11.04
58	MP1A	X	11.428	71.04
59	MP1A	Z	-19.794	71.04
60	MP1A	Mx	-.006	71.04
61	MP1B	X	16.57	11.04
62	MP1B	Z	-28.7	11.04
63	MP1B	Mx	.016	11.04
64	MP1B	X	16.57	71.04
65	MP1B	Z	-28.7	71.04
66	MP1B	Mx	.016	71.04
67	MP1C	X	12.753	11.04
68	MP1C	Z	-22.089	11.04
69	MP1C	Mx	-.008	11.04
70	MP1C	X	12.753	71.04
71	MP1C	Z	-22.089	71.04
72	MP1C	Mx	-.008	71.04
73	MP4A	X	11.428	11.04
74	MP4A	Z	-19.794	11.04

Member Point Loads (BLC 16 : Antenna Wi (30 Deg)) (Continued)

	Member Label	Direction	Magnitude[lb,k-ft]	Location[in,%]
75	MP4A	Mx	-.006	11.04
76	MP4A	X	11.428	71.04
77	MP4A	Z	-19.794	71.04
78	MP4A	Mx	-.006	71.04
79	MP4B	X	16.57	11.04
80	MP4B	Z	-28.7	11.04
81	MP4B	Mx	.016	11.04
82	MP4B	X	16.57	71.04
83	MP4B	Z	-28.7	71.04
84	MP4B	Mx	.016	71.04
85	MP4C	X	12.753	11.04
86	MP4C	Z	-22.089	11.04
87	MP4C	Mx	-.008	11.04
88	MP4C	X	12.753	71.04
89	MP4C	Z	-22.089	71.04
90	MP4C	Mx	-.008	71.04
91	MP3A	X	7.647	36
92	MP3A	Z	-13.245	36
93	MP3A	Mx	.004	36
94	MP3B	X	6.053	36
95	MP3B	Z	-10.484	36
96	MP3B	Mx	-.006	36
97	MP3C	X	7.236	36
98	MP3C	Z	-12.533	36
99	MP3C	Mx	.005	36
100	MP2A	X	7.408	36
101	MP2A	Z	-12.83	36
102	MP2A	Mx	.004	36
103	MP2B	X	5.208	36
104	MP2B	Z	-9.021	36
105	MP2B	Mx	-.005	36
106	MP2C	X	6.841	36
107	MP2C	Z	-11.848	36
108	MP2C	Mx	.004	36
109	OVP	X	13.409	18
110	OVP	Z	-23.226	18
111	OVP	Mx	0	18

Member Point Loads (BLC 17 : Antenna Wi (60 Deg))

	Member Label	Direction	Magnitude[lb,k-ft]	Location[in,%]
1	MP3A	X	9.685	29.04
2	MP3A	Z	-5.592	29.04
3	MP3A	Mx	-.005	29.04
4	MP3A	X	9.685	53.04
5	MP3A	Z	-5.592	53.04
6	MP3A	Mx	-.005	53.04
7	MP3B	X	7.541	29.04
8	MP3B	Z	-4.354	29.04
9	MP3B	Mx	.004	29.04
10	MP3B	X	7.541	53.04
11	MP3B	Z	-4.354	53.04
12	MP3B	Mx	.004	53.04
13	MP3C	X	16.708	29.04
14	MP3C	Z	-9.646	29.04
15	MP3C	Mx	-.002	29.04
16	MP3C	X	16.708	53.04

Member Point Loads (BLC 17 : Antenna Wi (60 Deg)) (Continued)

	Member Label	Direction	Magnitude[lb,k-ft]	Location[in,%]
17	MP3C	Z	-9.646	53.04
18	MP3C	Mx	-.002	53.04
19	MP2A	X	22.109	11.04
20	MP2A	Z	-12.764	11.04
21	MP2A	Mx	-.018	11.04
22	MP2A	X	22.109	71.04
23	MP2A	Z	-12.764	71.04
24	MP2A	Mx	-.018	71.04
25	MP2B	X	22.109	11.04
26	MP2B	Z	-12.764	11.04
27	MP2B	Mx	-.018	11.04
28	MP2B	X	22.109	71.04
29	MP2B	Z	-12.764	71.04
30	MP2B	Mx	-.018	71.04
31	MP2C	X	22.109	11.04
32	MP2C	Z	-12.764	11.04
33	MP2C	Mx	-.018	11.04
34	MP2C	X	22.109	71.04
35	MP2C	Z	-12.764	71.04
36	MP2C	Mx	-.018	71.04
37	MP2A	X	22.109	11.04
38	MP2A	Z	-12.764	11.04
39	MP2A	Mx	-.004	11.04
40	MP2A	X	22.109	71.04
41	MP2A	Z	-12.764	71.04
42	MP2A	Mx	-.004	71.04
43	MP2B	X	22.109	11.04
44	MP2B	Z	-12.764	11.04
45	MP2B	Mx	-.004	11.04
46	MP2B	X	22.109	71.04
47	MP2B	Z	-12.764	71.04
48	MP2B	Mx	-.004	71.04
49	MP2C	X	22.109	11.04
50	MP2C	Z	-12.764	11.04
51	MP2C	Mx	-.004	11.04
52	MP2C	X	22.109	71.04
53	MP2C	Z	-12.764	71.04
54	MP2C	Mx	-.004	71.04
55	MP1A	X	26.828	11.04
56	MP1A	Z	-15.489	11.04
57	MP1A	Mx	-.013	11.04
58	MP1A	X	26.828	71.04
59	MP1A	Z	-15.489	71.04
60	MP1A	Mx	-.013	71.04
61	MP1B	X	29.921	11.04
62	MP1B	Z	-17.275	11.04
63	MP1B	Mx	.017	11.04
64	MP1B	X	29.921	71.04
65	MP1B	Z	-17.275	71.04
66	MP1B	Mx	.017	71.04
67	MP1C	X	16.701	11.04
68	MP1C	Z	-9.642	11.04
69	MP1C	Mx	-.002	11.04
70	MP1C	X	16.701	71.04
71	MP1C	Z	-9.642	71.04
72	MP1C	Mx	-.002	71.04
73	MP4A	X	26.828	11.04

Member Point Loads (BLC 17 : Antenna Wi (60 Deg)) (Continued)

	Member Label	Direction	Magnitude[lb,k-ft]	Location[in,%]
74	MP4A	Z	-15.489	11.04
75	MP4A	Mx	-.013	11.04
76	MP4A	X	26.828	71.04
77	MP4A	Z	-15.489	71.04
78	MP4A	Mx	-.013	71.04
79	MP4B	X	29.921	11.04
80	MP4B	Z	-17.275	11.04
81	MP4B	Mx	.017	11.04
82	MP4B	X	29.921	71.04
83	MP4B	Z	-17.275	71.04
84	MP4B	Mx	.017	71.04
85	MP4C	X	16.701	11.04
86	MP4C	Z	-9.642	11.04
87	MP4C	Mx	-.002	11.04
88	MP4C	X	16.701	71.04
89	MP4C	Z	-9.642	71.04
90	MP4C	Mx	-.002	71.04
91	MP3A	X	11.064	36
92	MP3A	Z	-6.388	36
93	MP3A	Mx	.006	36
94	MP3B	X	10.105	36
95	MP3B	Z	-5.834	36
96	MP3B	Mx	-.006	36
97	MP3C	X	14.203	36
98	MP3C	Z	-8.2	36
99	MP3C	Mx	.001	36
100	MP2A	X	9.821	36
101	MP2A	Z	-5.67	36
102	MP2A	Mx	.005	36
103	MP2B	X	8.498	36
104	MP2B	Z	-4.907	36
105	MP2B	Mx	-.005	36
106	MP2C	X	14.153	36
107	MP2C	Z	-8.171	36
108	MP2C	Mx	.001	36
109	OVP	X	25.684	18
110	OVP	Z	-14.829	18
111	OVP	Mx	0	18

Member Point Loads (BLC 18 : Antenna Wi (90 Deg))

	Member Label	Direction	Magnitude[lb,k-ft]	Location[in,%]
1	MP3A	X	8.367	29.04
2	MP3A	Z	0	29.04
3	MP3A	Mx	-.004	29.04
4	MP3A	X	8.367	53.04
5	MP3A	Z	0	53.04
6	MP3A	Mx	-.004	53.04
7	MP3B	X	13.022	29.04
8	MP3B	Z	0	29.04
9	MP3B	Mx	.005	29.04
10	MP3B	X	13.022	53.04
11	MP3B	Z	0	53.04
12	MP3B	Mx	.005	53.04
13	MP3C	X	18.314	29.04
14	MP3C	Z	0	29.04
15	MP3C	Mx	.003	29.04

Member Point Loads (BLC 18 : Antenna Wi (90 Deg)) (Continued)

	Member Label	Direction	Magnitude[lb,k-ft]	Location[in,%]
16	MP3C	X	18.314	53.04
17	MP3C	Z	0	53.04
18	MP3C	Mx	.003	53.04
19	MP2A	X	22.949	11.04
20	MP2A	Z	0	11.04
21	MP2A	Mx	-.011	11.04
22	MP2A	X	22.949	71.04
23	MP2A	Z	0	71.04
24	MP2A	Mx	-.011	71.04
25	MP2B	X	22.949	11.04
26	MP2B	Z	0	11.04
27	MP2B	Mx	-.011	11.04
28	MP2B	X	22.949	71.04
29	MP2B	Z	0	71.04
30	MP2B	Mx	-.011	71.04
31	MP2C	X	22.949	11.04
32	MP2C	Z	0	11.04
33	MP2C	Mx	-.011	11.04
34	MP2C	X	22.949	71.04
35	MP2C	Z	0	71.04
36	MP2C	Mx	-.011	71.04
37	MP2A	X	22.949	11.04
38	MP2A	Z	0	11.04
39	MP2A	Mx	-.011	11.04
40	MP2A	X	22.949	71.04
41	MP2A	Z	0	71.04
42	MP2A	Mx	-.011	71.04
43	MP2B	X	22.949	11.04
44	MP2B	Z	0	11.04
45	MP2B	Mx	-.011	11.04
46	MP2B	X	22.949	71.04
47	MP2B	Z	0	71.04
48	MP2B	Mx	-.011	71.04
49	MP2C	X	22.949	11.04
50	MP2C	Z	0	11.04
51	MP2C	Mx	-.011	11.04
52	MP2C	X	22.949	71.04
53	MP2C	Z	0	71.04
54	MP2C	Mx	-.011	71.04
55	MP1A	X	35.04	11.04
56	MP1A	Z	0	11.04
57	MP1A	Mx	-.018	11.04
58	MP1A	X	35.04	71.04
59	MP1A	Z	0	71.04
60	MP1A	Mx	-.018	71.04
61	MP1B	X	28.328	11.04
62	MP1B	Z	0	11.04
63	MP1B	Mx	.011	11.04
64	MP1B	X	28.328	71.04
65	MP1B	Z	0	71.04
66	MP1B	Mx	.011	71.04
67	MP1C	X	20.695	11.04
68	MP1C	Z	0	11.04
69	MP1C	Mx	.004	11.04
70	MP1C	X	20.695	71.04
71	MP1C	Z	0	71.04
72	MP1C	Mx	.004	71.04

Member Point Loads (BLC 18 : Antenna Wi (90 Deg)) (Continued)

	Member Label	Direction	Magnitude[lb,k-ft]	Location[in,%]
73	MP4A	X	35.04	11.04
74	MP4A	Z	0	11.04
75	MP4A	Mx	-.018	11.04
76	MP4A	X	35.04	71.04
77	MP4A	Z	0	71.04
78	MP4A	Mx	-.018	71.04
79	MP4B	X	28.328	11.04
80	MP4B	Z	0	11.04
81	MP4B	Mx	.011	11.04
82	MP4B	X	28.328	71.04
83	MP4B	Z	0	71.04
84	MP4B	Mx	.011	71.04
85	MP4C	X	20.695	11.04
86	MP4C	Z	0	11.04
87	MP4C	Mx	.004	11.04
88	MP4C	X	20.695	71.04
89	MP4C	Z	0	71.04
90	MP4C	Mx	.004	71.04
91	MP3A	X	11.517	36
92	MP3A	Z	0	36
93	MP3A	Mx	.006	36
94	MP3B	X	13.598	36
95	MP3B	Z	0	36
96	MP3B	Mx	-.005	36
97	MP3C	X	15.963	36
98	MP3C	Z	0	36
99	MP3C	Mx	-.003	36
100	MP2A	X	9.603	36
101	MP2A	Z	0	36
102	MP2A	Mx	.005	36
103	MP2B	X	12.475	36
104	MP2B	Z	0	36
105	MP2B	Mx	-.005	36
106	MP2C	X	15.74	36
107	MP2C	Z	0	36
108	MP2C	Mx	-.003	36
109	OVP	X	33.139	18
110	OVP	Z	0	18
111	OVP	Mx	0	18

Member Point Loads (BLC 19 : Antenna Wi (120 Deg))

	Member Label	Direction	Magnitude[lb,k-ft]	Location[in,%]
1	MP3A	X	9.685	29.04
2	MP3A	Z	5.592	29.04
3	MP3A	Mx	-.005	29.04
4	MP3A	X	9.685	53.04
5	MP3A	Z	5.592	53.04
6	MP3A	Mx	-.005	53.04
7	MP3B	X	15.861	29.04
8	MP3B	Z	9.157	29.04
9	MP3B	Mx	.003	29.04
10	MP3B	X	15.861	53.04
11	MP3B	Z	9.157	53.04
12	MP3B	Mx	.003	53.04
13	MP3C	X	11.277	29.04
14	MP3C	Z	6.511	29.04

Member Point Loads (BLC 19 : Antenna Wi (120 Deg)) (Continued)

	Member Label	Direction	Magnitude[lb,k-ft]	Location[in,%]
15	MP3C	Mx	.005	29.04
16	MP3C	X	11.277	53.04
17	MP3C	Z	6.511	53.04
18	MP3C	Mx	.005	53.04
19	MP2A	X	22.109	11.04
20	MP2A	Z	12.764	11.04
21	MP2A	Mx	-.004	11.04
22	MP2A	X	22.109	71.04
23	MP2A	Z	12.764	71.04
24	MP2A	Mx	-.004	71.04
25	MP2B	X	22.109	11.04
26	MP2B	Z	12.764	11.04
27	MP2B	Mx	-.004	11.04
28	MP2B	X	22.109	71.04
29	MP2B	Z	12.764	71.04
30	MP2B	Mx	-.004	71.04
31	MP2C	X	22.109	11.04
32	MP2C	Z	12.764	11.04
33	MP2C	Mx	-.004	11.04
34	MP2C	X	22.109	71.04
35	MP2C	Z	12.764	71.04
36	MP2C	Mx	-.004	71.04
37	MP2A	X	22.109	11.04
38	MP2A	Z	12.764	11.04
39	MP2A	Mx	-.018	11.04
40	MP2A	X	22.109	71.04
41	MP2A	Z	12.764	71.04
42	MP2A	Mx	-.018	71.04
43	MP2B	X	22.109	11.04
44	MP2B	Z	12.764	11.04
45	MP2B	Mx	-.018	11.04
46	MP2B	X	22.109	71.04
47	MP2B	Z	12.764	71.04
48	MP2B	Mx	-.018	71.04
49	MP2C	X	22.109	11.04
50	MP2C	Z	12.764	11.04
51	MP2C	Mx	-.018	11.04
52	MP2C	X	22.109	71.04
53	MP2C	Z	12.764	71.04
54	MP2C	Mx	-.018	71.04
55	MP1A	X	26.828	11.04
56	MP1A	Z	15.489	11.04
57	MP1A	Mx	-.013	11.04
58	MP1A	X	26.828	71.04
59	MP1A	Z	15.489	71.04
60	MP1A	Mx	-.013	71.04
61	MP1B	X	17.922	11.04
62	MP1B	Z	10.347	11.04
63	MP1B	Mx	.004	11.04
64	MP1B	X	17.922	71.04
65	MP1B	Z	10.347	71.04
66	MP1B	Mx	.004	71.04
67	MP1C	X	24.532	11.04
68	MP1C	Z	14.164	11.04
69	MP1C	Mx	.011	11.04
70	MP1C	X	24.532	71.04
71	MP1C	Z	14.164	71.04

Member Point Loads (BLC 19 : Antenna Wi (120 Deg)) (Continued)

	Member Label	Direction	Magnitude[lb,k-ft]	Location[in,%]
72	MP1C	Mx	.011	71.04
73	MP4A	X	26.828	11.04
74	MP4A	Z	15.489	11.04
75	MP4A	Mx	-.013	11.04
76	MP4A	X	26.828	71.04
77	MP4A	Z	15.489	71.04
78	MP4A	Mx	-.013	71.04
79	MP4B	X	17.922	11.04
80	MP4B	Z	10.347	11.04
81	MP4B	Mx	.004	11.04
82	MP4B	X	17.922	71.04
83	MP4B	Z	10.347	71.04
84	MP4B	Mx	.004	71.04
85	MP4C	X	24.532	11.04
86	MP4C	Z	14.164	11.04
87	MP4C	Mx	.011	11.04
88	MP4C	X	24.532	71.04
89	MP4C	Z	14.164	71.04
90	MP4C	Mx	.011	71.04
91	MP3A	X	11.064	36
92	MP3A	Z	6.388	36
93	MP3A	Mx	.006	36
94	MP3B	X	13.825	36
95	MP3B	Z	7.982	36
96	MP3B	Mx	-.003	36
97	MP3C	X	11.776	36
98	MP3C	Z	6.799	36
99	MP3C	Mx	-.005	36
100	MP2A	X	9.821	36
101	MP2A	Z	5.67	36
102	MP2A	Mx	.005	36
103	MP2B	X	13.631	36
104	MP2B	Z	7.87	36
105	MP2B	Mx	-.003	36
106	MP2C	X	10.803	36
107	MP2C	Z	6.237	36
108	MP2C	Mx	-.005	36
109	OVP	X	29.256	18
110	OVP	Z	16.891	18
111	OVP	Mx	0	18

Member Point Loads (BLC 20 : Antenna Wi (150 Deg))

	Member Label	Direction	Magnitude[lb,k-ft]	Location[in,%]
1	MP3A	X	8.408	29.04
2	MP3A	Z	14.563	29.04
3	MP3A	Mx	-.004	29.04
4	MP3A	X	8.408	53.04
5	MP3A	Z	14.563	53.04
6	MP3A	Mx	-.004	53.04
7	MP3B	X	9.646	29.04
8	MP3B	Z	16.708	29.04
9	MP3B	Mx	-.002	29.04
10	MP3B	X	9.646	53.04
11	MP3B	Z	16.708	53.04
12	MP3B	Mx	-.002	53.04
13	MP3C	X	4.354	29.04

Member Point Loads (BLC 20 : Antenna Wi (150 Deg)) (Continued)

	Member Label	Direction	Magnitude[lb,k-ft]	Location[in,%]
14	MP3C	Z	7.541	29.04
15	MP3C	Mx	.004	29.04
16	MP3C	X	4.354	53.04
17	MP3C	Z	7.541	53.04
18	MP3C	Mx	.004	53.04
19	MP2A	X	15.344	11.04
20	MP2A	Z	26.576	11.04
21	MP2A	Mx	.008	11.04
22	MP2A	X	15.344	71.04
23	MP2A	Z	26.576	71.04
24	MP2A	Mx	.008	71.04
25	MP2B	X	15.344	11.04
26	MP2B	Z	26.576	11.04
27	MP2B	Mx	.008	11.04
28	MP2B	X	15.344	71.04
29	MP2B	Z	26.576	71.04
30	MP2B	Mx	.008	71.04
31	MP2C	X	15.344	11.04
32	MP2C	Z	26.576	11.04
33	MP2C	Mx	.008	11.04
34	MP2C	X	15.344	71.04
35	MP2C	Z	26.576	71.04
36	MP2C	Mx	.008	71.04
37	MP2A	X	15.344	11.04
38	MP2A	Z	26.576	11.04
39	MP2A	Mx	-.023	11.04
40	MP2A	X	15.344	71.04
41	MP2A	Z	26.576	71.04
42	MP2A	Mx	-.023	71.04
43	MP2B	X	15.344	11.04
44	MP2B	Z	26.576	11.04
45	MP2B	Mx	-.023	11.04
46	MP2B	X	15.344	71.04
47	MP2B	Z	26.576	71.04
48	MP2B	Mx	-.023	71.04
49	MP2C	X	15.344	11.04
50	MP2C	Z	26.576	11.04
51	MP2C	Mx	-.023	11.04
52	MP2C	X	15.344	71.04
53	MP2C	Z	26.576	71.04
54	MP2C	Mx	-.023	71.04
55	MP1A	X	11.428	11.04
56	MP1A	Z	19.794	11.04
57	MP1A	Mx	-.006	11.04
58	MP1A	X	11.428	71.04
59	MP1A	Z	19.794	71.04
60	MP1A	Mx	-.006	71.04
61	MP1B	X	9.642	11.04
62	MP1B	Z	16.701	11.04
63	MP1B	Mx	-.002	11.04
64	MP1B	X	9.642	71.04
65	MP1B	Z	16.701	71.04
66	MP1B	Mx	-.002	71.04
67	MP1C	X	17.275	11.04
68	MP1C	Z	29.921	11.04
69	MP1C	Mx	.017	11.04
70	MP1C	X	17.275	71.04

Member Point Loads (BLC 20 : Antenna Wi (150 Deg)) (Continued)

	Member Label	Direction	Magnitude[lb,k-ft]	Location[in,%]
71	MP1C	Z	29.921	71.04
72	MP1C	Mx	.017	71.04
73	MP4A	X	11.428	11.04
74	MP4A	Z	19.794	11.04
75	MP4A	Mx	-.006	11.04
76	MP4A	X	11.428	71.04
77	MP4A	Z	19.794	71.04
78	MP4A	Mx	-.006	71.04
79	MP4B	X	9.642	11.04
80	MP4B	Z	16.701	11.04
81	MP4B	Mx	-.002	11.04
82	MP4B	X	9.642	71.04
83	MP4B	Z	16.701	71.04
84	MP4B	Mx	-.002	71.04
85	MP4C	X	17.275	11.04
86	MP4C	Z	29.921	11.04
87	MP4C	Mx	.017	11.04
88	MP4C	X	17.275	71.04
89	MP4C	Z	29.921	71.04
90	MP4C	Mx	.017	71.04
91	MP3A	X	7.647	36
92	MP3A	Z	13.245	36
93	MP3A	Mx	.004	36
94	MP3B	X	8.2	36
95	MP3B	Z	14.203	36
96	MP3B	Mx	.001	36
97	MP3C	X	5.834	36
98	MP3C	Z	10.105	36
99	MP3C	Mx	-.006	36
100	MP2A	X	7.408	36
101	MP2A	Z	12.83	36
102	MP2A	Mx	.004	36
103	MP2B	X	8.171	36
104	MP2B	Z	14.153	36
105	MP2B	Mx	.001	36
106	MP2C	X	4.907	36
107	MP2C	Z	8.498	36
108	MP2C	Mx	-.005	36
109	OVP	X	15.472	18
110	OVP	Z	26.798	18
111	OVP	Mx	0	18

Member Point Loads (BLC 21 : Antenna Wi (180 Deg))

	Member Label	Direction	Magnitude[lb,k-ft]	Location[in,%]
1	MP3A	X	0	29.04
2	MP3A	Z	19.632	29.04
3	MP3A	Mx	0	29.04
4	MP3A	X	0	53.04
5	MP3A	Z	19.632	53.04
6	MP3A	Mx	0	53.04
7	MP3B	X	0	29.04
8	MP3B	Z	14.978	29.04
9	MP3B	Mx	-.005	29.04
10	MP3B	X	0	53.04
11	MP3B	Z	14.978	53.04
12	MP3B	Mx	-.005	53.04

Member Point Loads (BLC 21 : Antenna Wi (180 Deg)) (Continued)

	Member Label	Direction	Magnitude[lb,k-ft]	Location[in,%]
13	MP3C	X	0	29.04
14	MP3C	Z	9.685	29.04
15	MP3C	Mx	.005	29.04
16	MP3C	X	0	53.04
17	MP3C	Z	9.685	53.04
18	MP3C	Mx	.005	53.04
19	MP2A	X	0	11.04
20	MP2A	Z	33.267	11.04
21	MP2A	Mx	.019	11.04
22	MP2A	X	0	71.04
23	MP2A	Z	33.267	71.04
24	MP2A	Mx	.019	71.04
25	MP2B	X	0	11.04
26	MP2B	Z	33.267	11.04
27	MP2B	Mx	.019	11.04
28	MP2B	X	0	71.04
29	MP2B	Z	33.267	71.04
30	MP2B	Mx	.019	71.04
31	MP2C	X	0	11.04
32	MP2C	Z	33.267	11.04
33	MP2C	Mx	.019	11.04
34	MP2C	X	0	71.04
35	MP2C	Z	33.267	71.04
36	MP2C	Mx	.019	71.04
37	MP2A	X	0	11.04
38	MP2A	Z	33.267	11.04
39	MP2A	Mx	-.019	11.04
40	MP2A	X	0	71.04
41	MP2A	Z	33.267	71.04
42	MP2A	Mx	-.019	71.04
43	MP2B	X	0	11.04
44	MP2B	Z	33.267	11.04
45	MP2B	Mx	-.019	11.04
46	MP2B	X	0	71.04
47	MP2B	Z	33.267	71.04
48	MP2B	Mx	-.019	71.04
49	MP2C	X	0	11.04
50	MP2C	Z	33.267	11.04
51	MP2C	Mx	-.019	11.04
52	MP2C	X	0	71.04
53	MP2C	Z	33.267	71.04
54	MP2C	Mx	-.019	71.04
55	MP1A	X	0	11.04
56	MP1A	Z	18.794	11.04
57	MP1A	Mx	0	11.04
58	MP1A	X	0	71.04
59	MP1A	Z	18.794	71.04
60	MP1A	Mx	0	71.04
61	MP1B	X	0	11.04
62	MP1B	Z	25.507	11.04
63	MP1B	Mx	-.008	11.04
64	MP1B	X	0	71.04
65	MP1B	Z	25.507	71.04
66	MP1B	Mx	-.008	71.04
67	MP1C	X	0	11.04
68	MP1C	Z	33.14	11.04
69	MP1C	Mx	.016	11.04

Member Point Loads (BLC 21 : Antenna Wi (180 Deg)) (Continued)

	Member Label	Direction	Magnitude[lb,k-ft]	Location[in,%]
70	MP1C	X	0	71.04
71	MP1C	Z	33.14	71.04
72	MP1C	Mx	.016	71.04
73	MP4A	X	0	11.04
74	MP4A	Z	18.794	11.04
75	MP4A	Mx	0	11.04
76	MP4A	X	0	71.04
77	MP4A	Z	18.794	71.04
78	MP4A	Mx	0	71.04
79	MP4B	X	0	11.04
80	MP4B	Z	25.507	11.04
81	MP4B	Mx	-.008	11.04
82	MP4B	X	0	71.04
83	MP4B	Z	25.507	71.04
84	MP4B	Mx	-.008	71.04
85	MP4C	X	0	11.04
86	MP4C	Z	33.14	11.04
87	MP4C	Mx	.016	11.04
88	MP4C	X	0	71.04
89	MP4C	Z	33.14	71.04
90	MP4C	Mx	.016	71.04
91	MP3A	X	0	36
92	MP3A	Z	16.552	36
93	MP3A	Mx	0	36
94	MP3B	X	0	36
95	MP3B	Z	14.472	36
96	MP3B	Mx	.005	36
97	MP3C	X	0	36
98	MP3C	Z	12.106	36
99	MP3C	Mx	-.006	36
100	MP2A	X	0	36
101	MP2A	Z	16.552	36
102	MP2A	Mx	0	36
103	MP2B	X	0	36
104	MP2B	Z	13.681	36
105	MP2B	Mx	.004	36
106	MP2C	X	0	36
107	MP2C	Z	10.416	36
108	MP2C	Mx	-.005	36
109	OVP	X	0	18
110	OVP	Z	27.462	18
111	OVP	Mx	0	18

Member Point Loads (BLC 22 : Antenna Wi (210 Deg))

	Member Label	Direction	Magnitude[lb,k-ft]	Location[in,%]
1	MP3A	X	-8.408	29.04
2	MP3A	Z	14.563	29.04
3	MP3A	Mx	.004	29.04
4	MP3A	X	-8.408	53.04
5	MP3A	Z	14.563	53.04
6	MP3A	Mx	.004	53.04
7	MP3B	X	-4.843	29.04
8	MP3B	Z	8.388	29.04
9	MP3B	Mx	-.005	29.04
10	MP3B	X	-4.843	53.04
11	MP3B	Z	8.388	53.04

Member Point Loads (BLC 22 : Antenna Wi (210 Deg)) (Continued)

	Member Label	Direction	Magnitude[lb,k-ft]	Location[in,%]
12	MP3B	Mx	-.005	53.04
13	MP3C	X	-7.489	29.04
14	MP3C	Z	12.971	29.04
15	MP3C	Mx	.005	29.04
16	MP3C	X	-7.489	53.04
17	MP3C	Z	12.971	53.04
18	MP3C	Mx	.005	53.04
19	MP2A	X	-15.344	11.04
20	MP2A	Z	26.576	11.04
21	MP2A	Mx	.023	11.04
22	MP2A	X	-15.344	71.04
23	MP2A	Z	26.576	71.04
24	MP2A	Mx	.023	71.04
25	MP2B	X	-15.344	11.04
26	MP2B	Z	26.576	11.04
27	MP2B	Mx	.023	11.04
28	MP2B	X	-15.344	71.04
29	MP2B	Z	26.576	71.04
30	MP2B	Mx	.023	71.04
31	MP2C	X	-15.344	11.04
32	MP2C	Z	26.576	11.04
33	MP2C	Mx	.023	11.04
34	MP2C	X	-15.344	71.04
35	MP2C	Z	26.576	71.04
36	MP2C	Mx	.023	71.04
37	MP2A	X	-15.344	11.04
38	MP2A	Z	26.576	11.04
39	MP2A	Mx	-.008	11.04
40	MP2A	X	-15.344	71.04
41	MP2A	Z	26.576	71.04
42	MP2A	Mx	-.008	71.04
43	MP2B	X	-15.344	11.04
44	MP2B	Z	26.576	11.04
45	MP2B	Mx	-.008	11.04
46	MP2B	X	-15.344	71.04
47	MP2B	Z	26.576	71.04
48	MP2B	Mx	-.008	71.04
49	MP2C	X	-15.344	11.04
50	MP2C	Z	26.576	11.04
51	MP2C	Mx	-.008	11.04
52	MP2C	X	-15.344	71.04
53	MP2C	Z	26.576	71.04
54	MP2C	Mx	-.008	71.04
55	MP1A	X	-11.428	11.04
56	MP1A	Z	19.794	11.04
57	MP1A	Mx	.006	11.04
58	MP1A	X	-11.428	71.04
59	MP1A	Z	19.794	71.04
60	MP1A	Mx	.006	71.04
61	MP1B	X	-16.57	11.04
62	MP1B	Z	28.7	11.04
63	MP1B	Mx	-.016	11.04
64	MP1B	X	-16.57	71.04
65	MP1B	Z	28.7	71.04
66	MP1B	Mx	-.016	71.04
67	MP1C	X	-12.753	11.04
68	MP1C	Z	22.089	11.04

Member Point Loads (BLC 22 : Antenna Wi (210 Deg)) (Continued)

	Member Label	Direction	Magnitude[lb,k-ft]	Location[in,%]
69	MP1C	Mx	.008	11.04
70	MP1C	X	-12.753	71.04
71	MP1C	Z	22.089	71.04
72	MP1C	Mx	.008	71.04
73	MP4A	X	-11.428	11.04
74	MP4A	Z	19.794	11.04
75	MP4A	Mx	.006	11.04
76	MP4A	X	-11.428	71.04
77	MP4A	Z	19.794	71.04
78	MP4A	Mx	.006	71.04
79	MP4B	X	-16.57	11.04
80	MP4B	Z	28.7	11.04
81	MP4B	Mx	-.016	11.04
82	MP4B	X	-16.57	71.04
83	MP4B	Z	28.7	71.04
84	MP4B	Mx	-.016	71.04
85	MP4C	X	-12.753	11.04
86	MP4C	Z	22.089	11.04
87	MP4C	Mx	.008	11.04
88	MP4C	X	-12.753	71.04
89	MP4C	Z	22.089	71.04
90	MP4C	Mx	.008	71.04
91	MP3A	X	-7.647	36
92	MP3A	Z	13.245	36
93	MP3A	Mx	-.004	36
94	MP3B	X	-6.053	36
95	MP3B	Z	10.484	36
96	MP3B	Mx	.006	36
97	MP3C	X	-7.236	36
98	MP3C	Z	12.533	36
99	MP3C	Mx	-.005	36
100	MP2A	X	-7.408	36
101	MP2A	Z	12.83	36
102	MP2A	Mx	-.004	36
103	MP2B	X	-5.208	36
104	MP2B	Z	9.021	36
105	MP2B	Mx	.005	36
106	MP2C	X	-6.841	36
107	MP2C	Z	11.848	36
108	MP2C	Mx	-.004	36
109	OVP	X	-13.409	18
110	OVP	Z	23.226	18
111	OVP	Mx	0	18

Member Point Loads (BLC 23 : Antenna Wi (240 Deg))

	Member Label	Direction	Magnitude[lb,k-ft]	Location[in,%]
1	MP3A	X	-9.685	29.04
2	MP3A	Z	5.592	29.04
3	MP3A	Mx	.005	29.04
4	MP3A	X	-9.685	53.04
5	MP3A	Z	5.592	53.04
6	MP3A	Mx	.005	53.04
7	MP3B	X	-7.541	29.04
8	MP3B	Z	4.354	29.04
9	MP3B	Mx	-.004	29.04
10	MP3B	X	-7.541	53.04

Member Point Loads (BLC 23 : Antenna Wi (240 Deg)) (Continued)

	Member Label	Direction	Magnitude[lb,k-ft]	Location[in,%]
11	MP3B	Z	4.354	53.04
12	MP3B	Mx	-.004	53.04
13	MP3C	X	-16.708	29.04
14	MP3C	Z	9.646	29.04
15	MP3C	Mx	.002	29.04
16	MP3C	X	-16.708	53.04
17	MP3C	Z	9.646	53.04
18	MP3C	Mx	.002	53.04
19	MP2A	X	-22.109	11.04
20	MP2A	Z	12.764	11.04
21	MP2A	Mx	.018	11.04
22	MP2A	X	-22.109	71.04
23	MP2A	Z	12.764	71.04
24	MP2A	Mx	.018	71.04
25	MP2B	X	-22.109	11.04
26	MP2B	Z	12.764	11.04
27	MP2B	Mx	.018	11.04
28	MP2B	X	-22.109	71.04
29	MP2B	Z	12.764	71.04
30	MP2B	Mx	.018	71.04
31	MP2C	X	-22.109	11.04
32	MP2C	Z	12.764	11.04
33	MP2C	Mx	.018	11.04
34	MP2C	X	-22.109	71.04
35	MP2C	Z	12.764	71.04
36	MP2C	Mx	.018	71.04
37	MP2A	X	-22.109	11.04
38	MP2A	Z	12.764	11.04
39	MP2A	Mx	.004	11.04
40	MP2A	X	-22.109	71.04
41	MP2A	Z	12.764	71.04
42	MP2A	Mx	.004	71.04
43	MP2B	X	-22.109	11.04
44	MP2B	Z	12.764	11.04
45	MP2B	Mx	.004	11.04
46	MP2B	X	-22.109	71.04
47	MP2B	Z	12.764	71.04
48	MP2B	Mx	.004	71.04
49	MP2C	X	-22.109	11.04
50	MP2C	Z	12.764	11.04
51	MP2C	Mx	.004	11.04
52	MP2C	X	-22.109	71.04
53	MP2C	Z	12.764	71.04
54	MP2C	Mx	.004	71.04
55	MP1A	X	-26.828	11.04
56	MP1A	Z	15.489	11.04
57	MP1A	Mx	.013	11.04
58	MP1A	X	-26.828	71.04
59	MP1A	Z	15.489	71.04
60	MP1A	Mx	.013	71.04
61	MP1B	X	-29.921	11.04
62	MP1B	Z	17.275	11.04
63	MP1B	Mx	-.017	11.04
64	MP1B	X	-29.921	71.04
65	MP1B	Z	17.275	71.04
66	MP1B	Mx	-.017	71.04
67	MP1C	X	-16.701	11.04

Member Point Loads (BLC 23 : Antenna Wi (240 Deg)) (Continued)

	Member Label	Direction	Magnitude[lb,k-ft]	Location[in,%]
68	MP1C	Z	9.642	11.04
69	MP1C	Mx	.002	11.04
70	MP1C	X	-16.701	71.04
71	MP1C	Z	9.642	71.04
72	MP1C	Mx	.002	71.04
73	MP4A	X	-26.828	11.04
74	MP4A	Z	15.489	11.04
75	MP4A	Mx	.013	11.04
76	MP4A	X	-26.828	71.04
77	MP4A	Z	15.489	71.04
78	MP4A	Mx	.013	71.04
79	MP4B	X	-29.921	11.04
80	MP4B	Z	17.275	11.04
81	MP4B	Mx	-.017	11.04
82	MP4B	X	-29.921	71.04
83	MP4B	Z	17.275	71.04
84	MP4B	Mx	-.017	71.04
85	MP4C	X	-16.701	11.04
86	MP4C	Z	9.642	11.04
87	MP4C	Mx	.002	11.04
88	MP4C	X	-16.701	71.04
89	MP4C	Z	9.642	71.04
90	MP4C	Mx	.002	71.04
91	MP3A	X	-11.064	36
92	MP3A	Z	6.388	36
93	MP3A	Mx	-.006	36
94	MP3B	X	-10.105	36
95	MP3B	Z	5.834	36
96	MP3B	Mx	.006	36
97	MP3C	X	-14.203	36
98	MP3C	Z	8.2	36
99	MP3C	Mx	-.001	36
100	MP2A	X	-9.821	36
101	MP2A	Z	5.67	36
102	MP2A	Mx	-.005	36
103	MP2B	X	-8.498	36
104	MP2B	Z	4.907	36
105	MP2B	Mx	.005	36
106	MP2C	X	-14.153	36
107	MP2C	Z	8.171	36
108	MP2C	Mx	-.001	36
109	OVP	X	-25.684	18
110	OVP	Z	14.829	18
111	OVP	Mx	0	18

Member Point Loads (BLC 24 : Antenna Wi (270 Deg))

	Member Label	Direction	Magnitude[lb,k-ft]	Location[in,%]
1	MP3A	X	-8.367	29.04
2	MP3A	Z	0	29.04
3	MP3A	Mx	.004	29.04
4	MP3A	X	-8.367	53.04
5	MP3A	Z	0	53.04
6	MP3A	Mx	.004	53.04
7	MP3B	X	-13.022	29.04
8	MP3B	Z	0	29.04
9	MP3B	Mx	-.005	29.04

Member Point Loads (BLC 24 : Antenna Wi (270 Deg)) (Continued)

	Member Label	Direction	Magnitude[lb,k-ft]	Location[in,%]
10	MP3B	X	-13.022	53.04
11	MP3B	Z	0	53.04
12	MP3B	Mx	-.005	53.04
13	MP3C	X	-18.314	29.04
14	MP3C	Z	0	29.04
15	MP3C	Mx	-.003	29.04
16	MP3C	X	-18.314	53.04
17	MP3C	Z	0	53.04
18	MP3C	Mx	-.003	53.04
19	MP2A	X	-22.949	11.04
20	MP2A	Z	0	11.04
21	MP2A	Mx	.011	11.04
22	MP2A	X	-22.949	71.04
23	MP2A	Z	0	71.04
24	MP2A	Mx	.011	71.04
25	MP2B	X	-22.949	11.04
26	MP2B	Z	0	11.04
27	MP2B	Mx	.011	11.04
28	MP2B	X	-22.949	71.04
29	MP2B	Z	0	71.04
30	MP2B	Mx	.011	71.04
31	MP2C	X	-22.949	11.04
32	MP2C	Z	0	11.04
33	MP2C	Mx	.011	11.04
34	MP2C	X	-22.949	71.04
35	MP2C	Z	0	71.04
36	MP2C	Mx	.011	71.04
37	MP2A	X	-22.949	11.04
38	MP2A	Z	0	11.04
39	MP2A	Mx	.011	11.04
40	MP2A	X	-22.949	71.04
41	MP2A	Z	0	71.04
42	MP2A	Mx	.011	71.04
43	MP2B	X	-22.949	11.04
44	MP2B	Z	0	11.04
45	MP2B	Mx	.011	11.04
46	MP2B	X	-22.949	71.04
47	MP2B	Z	0	71.04
48	MP2B	Mx	.011	71.04
49	MP2C	X	-22.949	11.04
50	MP2C	Z	0	11.04
51	MP2C	Mx	.011	11.04
52	MP2C	X	-22.949	71.04
53	MP2C	Z	0	71.04
54	MP2C	Mx	.011	71.04
55	MP1A	X	-35.04	11.04
56	MP1A	Z	0	11.04
57	MP1A	Mx	.018	11.04
58	MP1A	X	-35.04	71.04
59	MP1A	Z	0	71.04
60	MP1A	Mx	.018	71.04
61	MP1B	X	-28.328	11.04
62	MP1B	Z	0	11.04
63	MP1B	Mx	-.011	11.04
64	MP1B	X	-28.328	71.04
65	MP1B	Z	0	71.04
66	MP1B	Mx	-.011	71.04

Member Point Loads (BLC 24 : Antenna Wi (270 Deg)) (Continued)

	Member Label	Direction	Magnitude[lb,k-ft]	Location[in,%]
67	MP1C	X	-20.695	11.04
68	MP1C	Z	0	11.04
69	MP1C	Mx	-.004	11.04
70	MP1C	X	-20.695	71.04
71	MP1C	Z	0	71.04
72	MP1C	Mx	-.004	71.04
73	MP4A	X	-35.04	11.04
74	MP4A	Z	0	11.04
75	MP4A	Mx	.018	11.04
76	MP4A	X	-35.04	71.04
77	MP4A	Z	0	71.04
78	MP4A	Mx	.018	71.04
79	MP4B	X	-28.328	11.04
80	MP4B	Z	0	11.04
81	MP4B	Mx	-.011	11.04
82	MP4B	X	-28.328	71.04
83	MP4B	Z	0	71.04
84	MP4B	Mx	-.011	71.04
85	MP4C	X	-20.695	11.04
86	MP4C	Z	0	11.04
87	MP4C	Mx	-.004	11.04
88	MP4C	X	-20.695	71.04
89	MP4C	Z	0	71.04
90	MP4C	Mx	-.004	71.04
91	MP3A	X	-11.517	36
92	MP3A	Z	0	36
93	MP3A	Mx	-.006	36
94	MP3B	X	-13.598	36
95	MP3B	Z	0	36
96	MP3B	Mx	.005	36
97	MP3C	X	-15.963	36
98	MP3C	Z	0	36
99	MP3C	Mx	.003	36
100	MP2A	X	-9.603	36
101	MP2A	Z	0	36
102	MP2A	Mx	-.005	36
103	MP2B	X	-12.475	36
104	MP2B	Z	0	36
105	MP2B	Mx	.005	36
106	MP2C	X	-15.74	36
107	MP2C	Z	0	36
108	MP2C	Mx	.003	36
109	OVP	X	-33.139	18
110	OVP	Z	0	18
111	OVP	Mx	0	18

Member Point Loads (BLC 25 : Antenna Wi (300 Deg))

	Member Label	Direction	Magnitude[lb,k-ft]	Location[in,%]
1	MP3A	X	-9.685	29.04
2	MP3A	Z	-5.592	29.04
3	MP3A	Mx	.005	29.04
4	MP3A	X	-9.685	53.04
5	MP3A	Z	-5.592	53.04
6	MP3A	Mx	.005	53.04
7	MP3B	X	-15.861	29.04
8	MP3B	Z	-9.157	29.04

Member Point Loads (BLC 25 : Antenna Wi (300 Deg)) (Continued)

	Member Label	Direction	Magnitude[lb,k-ft]	Location[in,%]
9	MP3B	Mx	-.003	29.04
10	MP3B	X	-15.861	53.04
11	MP3B	Z	-9.157	53.04
12	MP3B	Mx	-.003	53.04
13	MP3C	X	-11.277	29.04
14	MP3C	Z	-6.511	29.04
15	MP3C	Mx	-.005	29.04
16	MP3C	X	-11.277	53.04
17	MP3C	Z	-6.511	53.04
18	MP3C	Mx	-.005	53.04
19	MP2A	X	-22.109	11.04
20	MP2A	Z	-12.764	11.04
21	MP2A	Mx	.004	11.04
22	MP2A	X	-22.109	71.04
23	MP2A	Z	-12.764	71.04
24	MP2A	Mx	.004	71.04
25	MP2B	X	-22.109	11.04
26	MP2B	Z	-12.764	11.04
27	MP2B	Mx	.004	11.04
28	MP2B	X	-22.109	71.04
29	MP2B	Z	-12.764	71.04
30	MP2B	Mx	.004	71.04
31	MP2C	X	-22.109	11.04
32	MP2C	Z	-12.764	11.04
33	MP2C	Mx	.004	11.04
34	MP2C	X	-22.109	71.04
35	MP2C	Z	-12.764	71.04
36	MP2C	Mx	.004	71.04
37	MP2A	X	-22.109	11.04
38	MP2A	Z	-12.764	11.04
39	MP2A	Mx	.018	11.04
40	MP2A	X	-22.109	71.04
41	MP2A	Z	-12.764	71.04
42	MP2A	Mx	.018	71.04
43	MP2B	X	-22.109	11.04
44	MP2B	Z	-12.764	11.04
45	MP2B	Mx	.018	11.04
46	MP2B	X	-22.109	71.04
47	MP2B	Z	-12.764	71.04
48	MP2B	Mx	.018	71.04
49	MP2C	X	-22.109	11.04
50	MP2C	Z	-12.764	11.04
51	MP2C	Mx	.018	11.04
52	MP2C	X	-22.109	71.04
53	MP2C	Z	-12.764	71.04
54	MP2C	Mx	.018	71.04
55	MP1A	X	-26.828	11.04
56	MP1A	Z	-15.489	11.04
57	MP1A	Mx	.013	11.04
58	MP1A	X	-26.828	71.04
59	MP1A	Z	-15.489	71.04
60	MP1A	Mx	.013	71.04
61	MP1B	X	-17.922	11.04
62	MP1B	Z	-10.347	11.04
63	MP1B	Mx	-.004	11.04
64	MP1B	X	-17.922	71.04
65	MP1B	Z	-10.347	71.04

Member Point Loads (BLC 25 : Antenna Wi (300 Deg)) (Continued)

	Member Label	Direction	Magnitude[lb,k-ft]	Location[in,%]
66	MP1B	Mx	-.004	71.04
67	MP1C	X	-24.532	11.04
68	MP1C	Z	-14.164	11.04
69	MP1C	Mx	-.011	11.04
70	MP1C	X	-24.532	71.04
71	MP1C	Z	-14.164	71.04
72	MP1C	Mx	-.011	71.04
73	MP4A	X	-26.828	11.04
74	MP4A	Z	-15.489	11.04
75	MP4A	Mx	.013	11.04
76	MP4A	X	-26.828	71.04
77	MP4A	Z	-15.489	71.04
78	MP4A	Mx	.013	71.04
79	MP4B	X	-17.922	11.04
80	MP4B	Z	-10.347	11.04
81	MP4B	Mx	-.004	11.04
82	MP4B	X	-17.922	71.04
83	MP4B	Z	-10.347	71.04
84	MP4B	Mx	-.004	71.04
85	MP4C	X	-24.532	11.04
86	MP4C	Z	-14.164	11.04
87	MP4C	Mx	-.011	11.04
88	MP4C	X	-24.532	71.04
89	MP4C	Z	-14.164	71.04
90	MP4C	Mx	-.011	71.04
91	MP3A	X	-11.064	36
92	MP3A	Z	-6.388	36
93	MP3A	Mx	-.006	36
94	MP3B	X	-13.825	36
95	MP3B	Z	-7.982	36
96	MP3B	Mx	.003	36
97	MP3C	X	-11.776	36
98	MP3C	Z	-6.799	36
99	MP3C	Mx	.005	36
100	MP2A	X	-9.821	36
101	MP2A	Z	-5.67	36
102	MP2A	Mx	-.005	36
103	MP2B	X	-13.631	36
104	MP2B	Z	-7.87	36
105	MP2B	Mx	.003	36
106	MP2C	X	-10.803	36
107	MP2C	Z	-6.237	36
108	MP2C	Mx	.005	36
109	OVP	X	-29.256	18
110	OVP	Z	-16.891	18
111	OVP	Mx	0	18

Member Point Loads (BLC 26 : Antenna Wi (330 Deg))

	Member Label	Direction	Magnitude[lb,k-ft]	Location[in,%]
1	MP3A	X	-8.408	29.04
2	MP3A	Z	-14.563	29.04
3	MP3A	Mx	.004	29.04
4	MP3A	X	-8.408	53.04
5	MP3A	Z	-14.563	53.04
6	MP3A	Mx	.004	53.04
7	MP3B	X	-9.646	29.04

Member Point Loads (BLC 26 : Antenna Wi (330 Deg)) (Continued)

	Member Label	Direction	Magnitude[lb,k-ft]	Location[in,%]
8	MP3B	Z	-16.708	29.04
9	MP3B	Mx	.002	29.04
10	MP3B	X	-9.646	53.04
11	MP3B	Z	-16.708	53.04
12	MP3B	Mx	.002	53.04
13	MP3C	X	-4.354	29.04
14	MP3C	Z	-7.541	29.04
15	MP3C	Mx	-.004	29.04
16	MP3C	X	-4.354	53.04
17	MP3C	Z	-7.541	53.04
18	MP3C	Mx	-.004	53.04
19	MP2A	X	-15.344	11.04
20	MP2A	Z	-26.576	11.04
21	MP2A	Mx	-.008	11.04
22	MP2A	X	-15.344	71.04
23	MP2A	Z	-26.576	71.04
24	MP2A	Mx	-.008	71.04
25	MP2B	X	-15.344	11.04
26	MP2B	Z	-26.576	11.04
27	MP2B	Mx	-.008	11.04
28	MP2B	X	-15.344	71.04
29	MP2B	Z	-26.576	71.04
30	MP2B	Mx	-.008	71.04
31	MP2C	X	-15.344	11.04
32	MP2C	Z	-26.576	11.04
33	MP2C	Mx	-.008	11.04
34	MP2C	X	-15.344	71.04
35	MP2C	Z	-26.576	71.04
36	MP2C	Mx	-.008	71.04
37	MP2A	X	-15.344	11.04
38	MP2A	Z	-26.576	11.04
39	MP2A	Mx	.023	11.04
40	MP2A	X	-15.344	71.04
41	MP2A	Z	-26.576	71.04
42	MP2A	Mx	.023	71.04
43	MP2B	X	-15.344	11.04
44	MP2B	Z	-26.576	11.04
45	MP2B	Mx	.023	11.04
46	MP2B	X	-15.344	71.04
47	MP2B	Z	-26.576	71.04
48	MP2B	Mx	.023	71.04
49	MP2C	X	-15.344	11.04
50	MP2C	Z	-26.576	11.04
51	MP2C	Mx	.023	11.04
52	MP2C	X	-15.344	71.04
53	MP2C	Z	-26.576	71.04
54	MP2C	Mx	.023	71.04
55	MP1A	X	-11.428	11.04
56	MP1A	Z	-19.794	11.04
57	MP1A	Mx	.006	11.04
58	MP1A	X	-11.428	71.04
59	MP1A	Z	-19.794	71.04
60	MP1A	Mx	.006	71.04
61	MP1B	X	-9.642	11.04
62	MP1B	Z	-16.701	11.04
63	MP1B	Mx	.002	11.04
64	MP1B	X	-9.642	71.04

Member Point Loads (BLC 26 : Antenna Wi (330 Deg)) (Continued)

	Member Label	Direction	Magnitude[lb,k-ft]	Location[in,%]
65	MP1B	Z	-16.701	71.04
66	MP1B	Mx	.002	71.04
67	MP1C	X	-17.275	11.04
68	MP1C	Z	-29.921	11.04
69	MP1C	Mx	-.017	11.04
70	MP1C	X	-17.275	71.04
71	MP1C	Z	-29.921	71.04
72	MP1C	Mx	-.017	71.04
73	MP4A	X	-11.428	11.04
74	MP4A	Z	-19.794	11.04
75	MP4A	Mx	.006	11.04
76	MP4A	X	-11.428	71.04
77	MP4A	Z	-19.794	71.04
78	MP4A	Mx	.006	71.04
79	MP4B	X	-9.642	11.04
80	MP4B	Z	-16.701	11.04
81	MP4B	Mx	.002	11.04
82	MP4B	X	-9.642	71.04
83	MP4B	Z	-16.701	71.04
84	MP4B	Mx	.002	71.04
85	MP4C	X	-17.275	11.04
86	MP4C	Z	-29.921	11.04
87	MP4C	Mx	-.017	11.04
88	MP4C	X	-17.275	71.04
89	MP4C	Z	-29.921	71.04
90	MP4C	Mx	-.017	71.04
91	MP3A	X	-7.647	36
92	MP3A	Z	-13.245	36
93	MP3A	Mx	-.004	36
94	MP3B	X	-8.2	36
95	MP3B	Z	-14.203	36
96	MP3B	Mx	-.001	36
97	MP3C	X	-5.834	36
98	MP3C	Z	-10.105	36
99	MP3C	Mx	.006	36
100	MP2A	X	-7.408	36
101	MP2A	Z	-12.83	36
102	MP2A	Mx	-.004	36
103	MP2B	X	-8.171	36
104	MP2B	Z	-14.153	36
105	MP2B	Mx	-.001	36
106	MP2C	X	-4.907	36
107	MP2C	Z	-8.498	36
108	MP2C	Mx	.005	36
109	OVP	X	-15.472	18
110	OVP	Z	-26.798	18
111	OVP	Mx	0	18

Member Point Loads (BLC 27 : Antenna Wm (0 Deg))

	Member Label	Direction	Magnitude[lb,k-ft]	Location[in,%]
1	MP3A	X	0	29.04
2	MP3A	Z	-6.251	29.04
3	MP3A	Mx	0	29.04
4	MP3A	X	0	53.04
5	MP3A	Z	-6.251	53.04
6	MP3A	Mx	0	53.04

Member Point Loads (BLC 27 : Antenna Wm (0 Deg)) (Continued)

	Member Label	Direction	Magnitude[lb,k-ft]	Location[in,%]
7	MP3B	X	0	29.04
8	MP3B	Z	-4.679	29.04
9	MP3B	Mx	.002	29.04
10	MP3B	X	0	53.04
11	MP3B	Z	-4.679	53.04
12	MP3B	Mx	.002	53.04
13	MP3C	X	0	29.04
14	MP3C	Z	-2.892	29.04
15	MP3C	Mx	-.001	29.04
16	MP3C	X	0	53.04
17	MP3C	Z	-2.892	53.04
18	MP3C	Mx	-.001	53.04
19	MP2A	X	0	11.04
20	MP2A	Z	-10.853	11.04
21	MP2A	Mx	-.006	11.04
22	MP2A	X	0	71.04
23	MP2A	Z	-10.853	71.04
24	MP2A	Mx	-.006	71.04
25	MP2B	X	0	11.04
26	MP2B	Z	-10.853	11.04
27	MP2B	Mx	-.006	11.04
28	MP2B	X	0	71.04
29	MP2B	Z	-10.853	71.04
30	MP2B	Mx	-.006	71.04
31	MP2C	X	0	11.04
32	MP2C	Z	-10.853	11.04
33	MP2C	Mx	-.006	11.04
34	MP2C	X	0	71.04
35	MP2C	Z	-10.853	71.04
36	MP2C	Mx	-.006	71.04
37	MP2A	X	0	11.04
38	MP2A	Z	-10.853	11.04
39	MP2A	Mx	.006	11.04
40	MP2A	X	0	71.04
41	MP2A	Z	-10.853	71.04
42	MP2A	Mx	.006	71.04
43	MP2B	X	0	11.04
44	MP2B	Z	-10.853	11.04
45	MP2B	Mx	.006	11.04
46	MP2B	X	0	71.04
47	MP2B	Z	-10.853	71.04
48	MP2B	Mx	.006	71.04
49	MP2C	X	0	11.04
50	MP2C	Z	-10.853	11.04
51	MP2C	Mx	.006	11.04
52	MP2C	X	0	71.04
53	MP2C	Z	-10.853	71.04
54	MP2C	Mx	.006	71.04
55	MP1A	X	0	11.04
56	MP1A	Z	-5.759	11.04
57	MP1A	Mx	0	11.04
58	MP1A	X	0	71.04
59	MP1A	Z	-5.759	71.04
60	MP1A	Mx	0	71.04
61	MP1B	X	0	11.04
62	MP1B	Z	-8.121	11.04
63	MP1B	Mx	.003	11.04

Member Point Loads (BLC 27 : Antenna Wm (0 Deg)) (Continued)

	Member Label	Direction	Magnitude[lb,k-ft]	Location[in,%]
64	MP1B	X	0	71.04
65	MP1B	Z	-8.121	71.04
66	MP1B	Mx	.003	71.04
67	MP1C	X	0	11.04
68	MP1C	Z	-10.807	11.04
69	MP1C	Mx	-.005	11.04
70	MP1C	X	0	71.04
71	MP1C	Z	-10.807	71.04
72	MP1C	Mx	-.005	71.04
73	MP4A	X	0	11.04
74	MP4A	Z	-5.759	11.04
75	MP4A	Mx	0	11.04
76	MP4A	X	0	71.04
77	MP4A	Z	-5.759	71.04
78	MP4A	Mx	0	71.04
79	MP4B	X	0	11.04
80	MP4B	Z	-8.121	11.04
81	MP4B	Mx	.003	11.04
82	MP4B	X	0	71.04
83	MP4B	Z	-8.121	71.04
84	MP4B	Mx	.003	71.04
85	MP4C	X	0	11.04
86	MP4C	Z	-10.807	11.04
87	MP4C	Mx	-.005	11.04
88	MP4C	X	0	71.04
89	MP4C	Z	-10.807	71.04
90	MP4C	Mx	-.005	71.04
91	MP3A	X	0	36
92	MP3A	Z	-4.974	36
93	MP3A	Mx	0	36
94	MP3B	X	0	36
95	MP3B	Z	-4.293	36
96	MP3B	Mx	-.001	36
97	MP3C	X	0	36
98	MP3C	Z	-3.518	36
99	MP3C	Mx	.002	36
100	MP2A	X	0	36
101	MP2A	Z	-4.974	36
102	MP2A	Mx	0	36
103	MP2B	X	0	36
104	MP2B	Z	-4.032	36
105	MP2B	Mx	-.001	36
106	MP2C	X	0	36
107	MP2C	Z	-2.96	36
108	MP2C	Mx	.001	36
109	OVP	X	0	18
110	OVP	Z	-8.539	18
111	OVP	Mx	0	18

Member Point Loads (BLC 28 : Antenna Wm (30 Deg))

	Member Label	Direction	Magnitude[lb,k-ft]	Location[in,%]
1	MP3A	X	2.65	29.04
2	MP3A	Z	-4.59	29.04
3	MP3A	Mx	-.001	29.04
4	MP3A	X	2.65	53.04
5	MP3A	Z	-4.59	53.04

Member Point Loads (BLC 28 : Antenna Wm (30 Deg)) (Continued)

	Member Label	Direction	Magnitude[lb,k-ft]	Location[in,%]
6	MP3A	Mx	-.001	53.04
7	MP3B	X	1.446	29.04
8	MP3B	Z	-2.505	29.04
9	MP3B	Mx	.001	29.04
10	MP3B	X	1.446	53.04
11	MP3B	Z	-2.505	53.04
12	MP3B	Mx	.001	53.04
13	MP3C	X	2.34	29.04
14	MP3C	Z	-4.053	29.04
15	MP3C	Mx	-.002	29.04
16	MP3C	X	2.34	53.04
17	MP3C	Z	-4.053	53.04
18	MP3C	Mx	-.002	53.04
19	MP2A	X	4.967	11.04
20	MP2A	Z	-8.603	11.04
21	MP2A	Mx	-.008	11.04
22	MP2A	X	4.967	71.04
23	MP2A	Z	-8.603	71.04
24	MP2A	Mx	-.008	71.04
25	MP2B	X	4.967	11.04
26	MP2B	Z	-8.603	11.04
27	MP2B	Mx	-.008	11.04
28	MP2B	X	4.967	71.04
29	MP2B	Z	-8.603	71.04
30	MP2B	Mx	-.008	71.04
31	MP2C	X	4.967	11.04
32	MP2C	Z	-8.603	11.04
33	MP2C	Mx	-.008	11.04
34	MP2C	X	4.967	71.04
35	MP2C	Z	-8.603	71.04
36	MP2C	Mx	-.008	71.04
37	MP2A	X	4.967	11.04
38	MP2A	Z	-8.603	11.04
39	MP2A	Mx	.003	11.04
40	MP2A	X	4.967	71.04
41	MP2A	Z	-8.603	71.04
42	MP2A	Mx	.003	71.04
43	MP2B	X	4.967	11.04
44	MP2B	Z	-8.603	11.04
45	MP2B	Mx	.003	11.04
46	MP2B	X	4.967	71.04
47	MP2B	Z	-8.603	71.04
48	MP2B	Mx	.003	71.04
49	MP2C	X	4.967	11.04
50	MP2C	Z	-8.603	11.04
51	MP2C	Mx	.003	11.04
52	MP2C	X	4.967	71.04
53	MP2C	Z	-8.603	71.04
54	MP2C	Mx	.003	71.04
55	MP1A	X	3.594	11.04
56	MP1A	Z	-6.225	11.04
57	MP1A	Mx	-.002	11.04
58	MP1A	X	3.594	71.04
59	MP1A	Z	-6.225	71.04
60	MP1A	Mx	-.002	71.04
61	MP1B	X	5.404	11.04
62	MP1B	Z	-9.359	11.04

Member Point Loads (BLC 28 : Antenna Wm (30 Deg)) (Continued)

	Member Label	Direction	Magnitude[lb,k-ft]	Location[in,%]
63	MP1B	Mx	.005	11.04
64	MP1B	X	5.404	71.04
65	MP1B	Z	-9.359	71.04
66	MP1B	Mx	.005	71.04
67	MP1C	X	4.061	11.04
68	MP1C	Z	-7.033	11.04
69	MP1C	Mx	-.003	11.04
70	MP1C	X	4.061	71.04
71	MP1C	Z	-7.033	71.04
72	MP1C	Mx	-.003	71.04
73	MP4A	X	3.594	11.04
74	MP4A	Z	-6.225	11.04
75	MP4A	Mx	-.002	11.04
76	MP4A	X	3.594	71.04
77	MP4A	Z	-6.225	71.04
78	MP4A	Mx	-.002	71.04
79	MP4B	X	5.404	11.04
80	MP4B	Z	-9.359	11.04
81	MP4B	Mx	.005	11.04
82	MP4B	X	5.404	71.04
83	MP4B	Z	-9.359	71.04
84	MP4B	Mx	.005	71.04
85	MP4C	X	4.061	11.04
86	MP4C	Z	-7.033	11.04
87	MP4C	Mx	-.003	11.04
88	MP4C	X	4.061	71.04
89	MP4C	Z	-7.033	71.04
90	MP4C	Mx	-.003	71.04
91	MP3A	X	2.281	36
92	MP3A	Z	-3.951	36
93	MP3A	Mx	.001	36
94	MP3B	X	1.759	36
95	MP3B	Z	-3.047	36
96	MP3B	Mx	-.002	36
97	MP3C	X	2.146	36
98	MP3C	Z	-3.718	36
99	MP3C	Mx	.001	36
100	MP2A	X	2.202	36
101	MP2A	Z	-3.814	36
102	MP2A	Mx	.001	36
103	MP2B	X	1.48	36
104	MP2B	Z	-2.564	36
105	MP2B	Mx	-.001	36
106	MP2C	X	2.016	36
107	MP2C	Z	-3.492	36
108	MP2C	Mx	.001	36
109	OVP	X	4.158	18
110	OVP	Z	-7.202	18
111	OVP	Mx	0	18

Member Point Loads (BLC 29 : Antenna Wm (60 Deg))

	Member Label	Direction	Magnitude[lb,k-ft]	Location[in,%]
1	MP3A	X	2.943	29.04
2	MP3A	Z	-1.699	29.04
3	MP3A	Mx	-.001	29.04
4	MP3A	X	2.943	53.04

Member Point Loads (BLC 29 : Antenna Wm (60 Deg)) (Continued)

	Member Label	Direction	Magnitude[lb,k-ft]	Location[in,%]
5	MP3A	Z	-1.699	53.04
6	MP3A	Mx	-.001	53.04
7	MP3B	X	2.219	29.04
8	MP3B	Z	-1.281	29.04
9	MP3B	Mx	.001	29.04
10	MP3B	X	2.219	53.04
11	MP3B	Z	-1.281	53.04
12	MP3B	Mx	.001	53.04
13	MP3C	X	5.314	29.04
14	MP3C	Z	-3.068	29.04
15	MP3C	Mx	-.000533	29.04
16	MP3C	X	5.314	53.04
17	MP3C	Z	-3.068	53.04
18	MP3C	Mx	-.000533	53.04
19	MP2A	X	7.011	11.04
20	MP2A	Z	-4.048	11.04
21	MP2A	Mx	-.006	11.04
22	MP2A	X	7.011	71.04
23	MP2A	Z	-4.048	71.04
24	MP2A	Mx	-.006	71.04
25	MP2B	X	7.011	11.04
26	MP2B	Z	-4.048	11.04
27	MP2B	Mx	-.006	11.04
28	MP2B	X	7.011	71.04
29	MP2B	Z	-4.048	71.04
30	MP2B	Mx	-.006	71.04
31	MP2C	X	7.011	11.04
32	MP2C	Z	-4.048	11.04
33	MP2C	Mx	-.006	11.04
34	MP2C	X	7.011	71.04
35	MP2C	Z	-4.048	71.04
36	MP2C	Mx	-.006	71.04
37	MP2A	X	7.011	11.04
38	MP2A	Z	-4.048	11.04
39	MP2A	Mx	-.001	11.04
40	MP2A	X	7.011	71.04
41	MP2A	Z	-4.048	71.04
42	MP2A	Mx	-.001	71.04
43	MP2B	X	7.011	11.04
44	MP2B	Z	-4.048	11.04
45	MP2B	Mx	-.001	11.04
46	MP2B	X	7.011	71.04
47	MP2B	Z	-4.048	71.04
48	MP2B	Mx	-.001	71.04
49	MP2C	X	7.011	11.04
50	MP2C	Z	-4.048	11.04
51	MP2C	Mx	-.001	11.04
52	MP2C	X	7.011	71.04
53	MP2C	Z	-4.048	71.04
54	MP2C	Mx	-.001	71.04
55	MP1A	X	8.701	11.04
56	MP1A	Z	-5.023	11.04
57	MP1A	Mx	-.004	11.04
58	MP1A	X	8.701	71.04
59	MP1A	Z	-5.023	71.04
60	MP1A	Mx	-.004	71.04
61	MP1B	X	9.789	11.04

Member Point Loads (BLC 29 : Antenna Wm (60 Deg)) (Continued)

	Member Label	Direction	Magnitude[lb,k-ft]	Location[in,%]
62	MP1B	Z	-5.652	11.04
63	MP1B	Mx	.006	11.04
64	MP1B	X	9.789	71.04
65	MP1B	Z	-5.652	71.04
66	MP1B	Mx	.006	71.04
67	MP1C	X	5.137	11.04
68	MP1C	Z	-2.966	11.04
69	MP1C	Mx	-.000515	11.04
70	MP1C	X	5.137	71.04
71	MP1C	Z	-2.966	71.04
72	MP1C	Mx	-.000515	71.04
73	MP4A	X	8.701	11.04
74	MP4A	Z	-5.023	11.04
75	MP4A	Mx	-.004	11.04
76	MP4A	X	8.701	71.04
77	MP4A	Z	-5.023	71.04
78	MP4A	Mx	-.004	71.04
79	MP4B	X	9.789	11.04
80	MP4B	Z	-5.652	11.04
81	MP4B	Mx	.006	11.04
82	MP4B	X	9.789	71.04
83	MP4B	Z	-5.652	71.04
84	MP4B	Mx	.006	71.04
85	MP4C	X	5.137	11.04
86	MP4C	Z	-2.966	11.04
87	MP4C	Mx	-.000515	11.04
88	MP4C	X	5.137	71.04
89	MP4C	Z	-2.966	71.04
90	MP4C	Mx	-.000515	71.04
91	MP3A	X	3.237	36
92	MP3A	Z	-1.869	36
93	MP3A	Mx	.002	36
94	MP3B	X	2.923	36
95	MP3B	Z	-1.687	36
96	MP3B	Mx	-.002	36
97	MP3C	X	4.265	36
98	MP3C	Z	-2.462	36
99	MP3C	Mx	.000427	36
100	MP2A	X	2.826	36
101	MP2A	Z	-1.632	36
102	MP2A	Mx	.001	36
103	MP2B	X	2.392	36
104	MP2B	Z	-1.381	36
105	MP2B	Mx	-.001	36
106	MP2C	X	4.248	36
107	MP2C	Z	-2.453	36
108	MP2C	Mx	.000426	36
109	OVP	X	8.052	18
110	OVP	Z	-4.649	18
111	OVP	Mx	0	18

Member Point Loads (BLC 30 : Antenna Wm (90 Deg))

	Member Label	Direction	Magnitude[lb,k-ft]	Location[in,%]
1	MP3A	X	2.447	29.04
2	MP3A	Z	0	29.04
3	MP3A	Mx	-.001	29.04

Member Point Loads (BLC 30 : Antenna Wm (90 Deg)) (Continued)

	Member Label	Direction	Magnitude[lb,k-ft]	Location[in,%]
4	MP3A	X	2.447	53.04
5	MP3A	Z	0	53.04
6	MP3A	Mx	-.001	53.04
7	MP3B	X	4.019	29.04
8	MP3B	Z	0	29.04
9	MP3B	Mx	.002	29.04
10	MP3B	X	4.019	53.04
11	MP3B	Z	0	53.04
12	MP3B	Mx	.002	53.04
13	MP3C	X	5.806	29.04
14	MP3C	Z	0	29.04
15	MP3C	Mx	.000993	29.04
16	MP3C	X	5.806	53.04
17	MP3C	Z	0	53.04
18	MP3C	Mx	.000993	53.04
19	MP2A	X	7.177	11.04
20	MP2A	Z	0	11.04
21	MP2A	Mx	-.004	11.04
22	MP2A	X	7.177	71.04
23	MP2A	Z	0	71.04
24	MP2A	Mx	-.004	71.04
25	MP2B	X	7.177	11.04
26	MP2B	Z	0	11.04
27	MP2B	Mx	-.004	11.04
28	MP2B	X	7.177	71.04
29	MP2B	Z	0	71.04
30	MP2B	Mx	-.004	71.04
31	MP2C	X	7.177	11.04
32	MP2C	Z	0	11.04
33	MP2C	Mx	-.004	11.04
34	MP2C	X	7.177	71.04
35	MP2C	Z	0	71.04
36	MP2C	Mx	-.004	71.04
37	MP2A	X	7.177	11.04
38	MP2A	Z	0	11.04
39	MP2A	Mx	-.004	11.04
40	MP2A	X	7.177	71.04
41	MP2A	Z	0	71.04
42	MP2A	Mx	-.004	71.04
43	MP2B	X	7.177	11.04
44	MP2B	Z	0	11.04
45	MP2B	Mx	-.004	11.04
46	MP2B	X	7.177	71.04
47	MP2B	Z	0	71.04
48	MP2B	Mx	-.004	71.04
49	MP2C	X	7.177	11.04
50	MP2C	Z	0	11.04
51	MP2C	Mx	-.004	11.04
52	MP2C	X	7.177	71.04
53	MP2C	Z	0	71.04
54	MP2C	Mx	-.004	71.04
55	MP1A	X	11.476	11.04
56	MP1A	Z	0	11.04
57	MP1A	Mx	-.006	11.04
58	MP1A	X	11.476	71.04
59	MP1A	Z	0	71.04
60	MP1A	Mx	-.006	71.04

Member Point Loads (BLC 30 : Antenna Wm (90 Deg)) (Continued)

	Member Label	Direction	Magnitude[lb,k-ft]	Location[in,%]
61	MP1B	X	9.114	11.04
62	MP1B	Z	0	11.04
63	MP1B	Mx	.003	11.04
64	MP1B	X	9.114	71.04
65	MP1B	Z	0	71.04
66	MP1B	Mx	.003	71.04
67	MP1C	X	6.428	11.04
68	MP1C	Z	0	11.04
69	MP1C	Mx	.001	11.04
70	MP1C	X	6.428	71.04
71	MP1C	Z	0	71.04
72	MP1C	Mx	.001	71.04
73	MP4A	X	11.476	11.04
74	MP4A	Z	0	11.04
75	MP4A	Mx	-.006	11.04
76	MP4A	X	11.476	71.04
77	MP4A	Z	0	71.04
78	MP4A	Mx	-.006	71.04
79	MP4B	X	9.114	11.04
80	MP4B	Z	0	11.04
81	MP4B	Mx	.003	11.04
82	MP4B	X	9.114	71.04
83	MP4B	Z	0	71.04
84	MP4B	Mx	.003	71.04
85	MP4C	X	6.428	11.04
86	MP4C	Z	0	11.04
87	MP4C	Mx	.001	11.04
88	MP4C	X	6.428	71.04
89	MP4C	Z	0	71.04
90	MP4C	Mx	.001	71.04
91	MP3A	X	3.325	36
92	MP3A	Z	0	36
93	MP3A	Mx	.002	36
94	MP3B	X	4.006	36
95	MP3B	Z	0	36
96	MP3B	Mx	-.002	36
97	MP3C	X	4.781	36
98	MP3C	Z	0	36
99	MP3C	Mx	-.000818	36
100	MP2A	X	2.693	36
101	MP2A	Z	0	36
102	MP2A	Mx	.001	36
103	MP2B	X	3.636	36
104	MP2B	Z	0	36
105	MP2B	Mx	-.001	36
106	MP2C	X	4.707	36
107	MP2C	Z	0	36
108	MP2C	Mx	-.000805	36
109	OVP	X	10.5	18
110	OVP	Z	0	18
111	OVP	Mx	0	18

Member Point Loads (BLC 31 : Antenna Wm (120 Deg))

	Member Label	Direction	Magnitude[lb,k-ft]	Location[in,%]
1	MP3A	X	2.943	29.04
2	MP3A	Z	1.699	29.04

Member Point Loads (BLC 31 : Antenna Wm (120 Deg)) (Continued)

	Member Label	Direction	Magnitude[lb,k-ft]	Location[in,%]
3	MP3A	Mx	-.001	29.04
4	MP3A	X	2.943	53.04
5	MP3A	Z	1.699	53.04
6	MP3A	Mx	-.001	53.04
7	MP3B	X	5.028	29.04
8	MP3B	Z	2.903	29.04
9	MP3B	Mx	.000993	29.04
10	MP3B	X	5.028	53.04
11	MP3B	Z	2.903	53.04
12	MP3B	Mx	.000993	53.04
13	MP3C	X	3.481	29.04
14	MP3C	Z	2.009	29.04
15	MP3C	Mx	.002	29.04
16	MP3C	X	3.481	53.04
17	MP3C	Z	2.009	53.04
18	MP3C	Mx	.002	53.04
19	MP2A	X	7.011	11.04
20	MP2A	Z	4.048	11.04
21	MP2A	Mx	-.001	11.04
22	MP2A	X	7.011	71.04
23	MP2A	Z	4.048	71.04
24	MP2A	Mx	-.001	71.04
25	MP2B	X	7.011	11.04
26	MP2B	Z	4.048	11.04
27	MP2B	Mx	-.001	11.04
28	MP2B	X	7.011	71.04
29	MP2B	Z	4.048	71.04
30	MP2B	Mx	-.001	71.04
31	MP2C	X	7.011	11.04
32	MP2C	Z	4.048	11.04
33	MP2C	Mx	-.001	11.04
34	MP2C	X	7.011	71.04
35	MP2C	Z	4.048	71.04
36	MP2C	Mx	-.001	71.04
37	MP2A	X	7.011	11.04
38	MP2A	Z	4.048	11.04
39	MP2A	Mx	-.006	11.04
40	MP2A	X	7.011	71.04
41	MP2A	Z	4.048	71.04
42	MP2A	Mx	-.006	71.04
43	MP2B	X	7.011	11.04
44	MP2B	Z	4.048	11.04
45	MP2B	Mx	-.006	11.04
46	MP2B	X	7.011	71.04
47	MP2B	Z	4.048	71.04
48	MP2B	Mx	-.006	71.04
49	MP2C	X	7.011	11.04
50	MP2C	Z	4.048	11.04
51	MP2C	Mx	-.006	11.04
52	MP2C	X	7.011	71.04
53	MP2C	Z	4.048	71.04
54	MP2C	Mx	-.006	71.04
55	MP1A	X	8.701	11.04
56	MP1A	Z	5.023	11.04
57	MP1A	Mx	-.004	11.04
58	MP1A	X	8.701	71.04
59	MP1A	Z	5.023	71.04

Member Point Loads (BLC 31 : Antenna Wm (120 Deg)) (Continued)

	Member Label	Direction	Magnitude[lb,k-ft]	Location[in,%]
60	MP1A	Mx	-.004	71.04
61	MP1B	X	5.567	11.04
62	MP1B	Z	3.214	11.04
63	MP1B	Mx	.001	11.04
64	MP1B	X	5.567	71.04
65	MP1B	Z	3.214	71.04
66	MP1B	Mx	.001	71.04
67	MP1C	X	7.893	11.04
68	MP1C	Z	4.557	11.04
69	MP1C	Mx	.003	11.04
70	MP1C	X	7.893	71.04
71	MP1C	Z	4.557	71.04
72	MP1C	Mx	.003	71.04
73	MP4A	X	8.701	11.04
74	MP4A	Z	5.023	11.04
75	MP4A	Mx	-.004	11.04
76	MP4A	X	8.701	71.04
77	MP4A	Z	5.023	71.04
78	MP4A	Mx	-.004	71.04
79	MP4B	X	5.567	11.04
80	MP4B	Z	3.214	11.04
81	MP4B	Mx	.001	11.04
82	MP4B	X	5.567	71.04
83	MP4B	Z	3.214	71.04
84	MP4B	Mx	.001	71.04
85	MP4C	X	7.893	11.04
86	MP4C	Z	4.557	11.04
87	MP4C	Mx	.003	11.04
88	MP4C	X	7.893	71.04
89	MP4C	Z	4.557	71.04
90	MP4C	Mx	.003	71.04
91	MP3A	X	3.237	36
92	MP3A	Z	1.869	36
93	MP3A	Mx	.002	36
94	MP3B	X	4.141	36
95	MP3B	Z	2.391	36
96	MP3B	Mx	-.000818	36
97	MP3C	X	3.47	36
98	MP3C	Z	2.003	36
99	MP3C	Mx	-.002	36
100	MP2A	X	2.826	36
101	MP2A	Z	1.632	36
102	MP2A	Mx	.001	36
103	MP2B	X	4.077	36
104	MP2B	Z	2.354	36
105	MP2B	Mx	-.000805	36
106	MP2C	X	3.149	36
107	MP2C	Z	1.818	36
108	MP2C	Mx	-.001	36
109	OVP	X	9.286	18
110	OVP	Z	5.361	18
111	OVP	Mx	0	18

Member Point Loads (BLC 32 : Antenna Wm (150 Deg))

	Member Label	Direction	Magnitude[lb,k-ft]	Location[in,%]
1	MP3A	X	2.65	29.04

Member Point Loads (BLC 32 : Antenna Wm (150 Deg)) (Continued)

	Member Label	Direction	Magnitude[lb,k-ft]	Location[in,%]
2	MP3A	Z	4.59	29.04
3	MP3A	Mx	-.001	29.04
4	MP3A	X	2.65	53.04
5	MP3A	Z	4.59	53.04
6	MP3A	Mx	-.001	53.04
7	MP3B	X	3.068	29.04
8	MP3B	Z	5.314	29.04
9	MP3B	Mx	-.000533	29.04
10	MP3B	X	3.068	53.04
11	MP3B	Z	5.314	53.04
12	MP3B	Mx	-.000533	53.04
13	MP3C	X	1.281	29.04
14	MP3C	Z	2.219	29.04
15	MP3C	Mx	.001	29.04
16	MP3C	X	1.281	53.04
17	MP3C	Z	2.219	53.04
18	MP3C	Mx	.001	53.04
19	MP2A	X	4.967	11.04
20	MP2A	Z	8.603	11.04
21	MP2A	Mx	.003	11.04
22	MP2A	X	4.967	71.04
23	MP2A	Z	8.603	71.04
24	MP2A	Mx	.003	71.04
25	MP2B	X	4.967	11.04
26	MP2B	Z	8.603	11.04
27	MP2B	Mx	.003	11.04
28	MP2B	X	4.967	71.04
29	MP2B	Z	8.603	71.04
30	MP2B	Mx	.003	71.04
31	MP2C	X	4.967	11.04
32	MP2C	Z	8.603	11.04
33	MP2C	Mx	.003	11.04
34	MP2C	X	4.967	71.04
35	MP2C	Z	8.603	71.04
36	MP2C	Mx	.003	71.04
37	MP2A	X	4.967	11.04
38	MP2A	Z	8.603	11.04
39	MP2A	Mx	-.008	11.04
40	MP2A	X	4.967	71.04
41	MP2A	Z	8.603	71.04
42	MP2A	Mx	-.008	71.04
43	MP2B	X	4.967	11.04
44	MP2B	Z	8.603	11.04
45	MP2B	Mx	-.008	11.04
46	MP2B	X	4.967	71.04
47	MP2B	Z	8.603	71.04
48	MP2B	Mx	-.008	71.04
49	MP2C	X	4.967	11.04
50	MP2C	Z	8.603	11.04
51	MP2C	Mx	-.008	11.04
52	MP2C	X	4.967	71.04
53	MP2C	Z	8.603	71.04
54	MP2C	Mx	-.008	71.04
55	MP1A	X	3.594	11.04
56	MP1A	Z	6.225	11.04
57	MP1A	Mx	-.002	11.04
58	MP1A	X	3.594	71.04

Member Point Loads (BLC 32 : Antenna Wm (150 Deg)) (Continued)

	Member Label	Direction	Magnitude[lb,k-ft]	Location[in,%]
59	MP1A	Z	6.225	71.04
60	MP1A	Mx	-.002	71.04
61	MP1B	X	2.966	11.04
62	MP1B	Z	5.137	11.04
63	MP1B	Mx	-.000515	11.04
64	MP1B	X	2.966	71.04
65	MP1B	Z	5.137	71.04
66	MP1B	Mx	-.000515	71.04
67	MP1C	X	5.652	11.04
68	MP1C	Z	9.789	11.04
69	MP1C	Mx	.006	11.04
70	MP1C	X	5.652	71.04
71	MP1C	Z	9.789	71.04
72	MP1C	Mx	.006	71.04
73	MP4A	X	3.594	11.04
74	MP4A	Z	6.225	11.04
75	MP4A	Mx	-.002	11.04
76	MP4A	X	3.594	71.04
77	MP4A	Z	6.225	71.04
78	MP4A	Mx	-.002	71.04
79	MP4B	X	2.966	11.04
80	MP4B	Z	5.137	11.04
81	MP4B	Mx	-.000515	11.04
82	MP4B	X	2.966	71.04
83	MP4B	Z	5.137	71.04
84	MP4B	Mx	-.000515	71.04
85	MP4C	X	5.652	11.04
86	MP4C	Z	9.789	11.04
87	MP4C	Mx	.006	11.04
88	MP4C	X	5.652	71.04
89	MP4C	Z	9.789	71.04
90	MP4C	Mx	.006	71.04
91	MP3A	X	2.281	36
92	MP3A	Z	3.951	36
93	MP3A	Mx	.001	36
94	MP3B	X	2.462	36
95	MP3B	Z	4.265	36
96	MP3B	Mx	.000428	36
97	MP3C	X	1.687	36
98	MP3C	Z	2.923	36
99	MP3C	Mx	-.002	36
100	MP2A	X	2.202	36
101	MP2A	Z	3.814	36
102	MP2A	Mx	.001	36
103	MP2B	X	2.453	36
104	MP2B	Z	4.248	36
105	MP2B	Mx	.000426	36
106	MP2C	X	1.381	36
107	MP2C	Z	2.392	36
108	MP2C	Mx	-.001	36
109	OVP	X	4.871	18
110	OVP	Z	8.437	18
111	OVP	Mx	0	18

Member Point Loads (BLC 33 : Antenna Wm (180 Deg))

Member Label	Direction	Magnitude[lb,k-ft]	Location[in,%]

Member Point Loads (BLC 33 : Antenna Wm (180 Deg)) (Continued)

	Member Label	Direction	Magnitude[lb,k-ft]	Location[in,%]
1	MP3A	X	0	29.04
2	MP3A	Z	6.251	29.04
3	MP3A	Mx	0	29.04
4	MP3A	X	0	53.04
5	MP3A	Z	6.251	53.04
6	MP3A	Mx	0	53.04
7	MP3B	X	0	29.04
8	MP3B	Z	4.679	29.04
9	MP3B	Mx	-.002	29.04
10	MP3B	X	0	53.04
11	MP3B	Z	4.679	53.04
12	MP3B	Mx	-.002	53.04
13	MP3C	X	0	29.04
14	MP3C	Z	2.892	29.04
15	MP3C	Mx	.001	29.04
16	MP3C	X	0	53.04
17	MP3C	Z	2.892	53.04
18	MP3C	Mx	.001	53.04
19	MP2A	X	0	11.04
20	MP2A	Z	10.853	11.04
21	MP2A	Mx	.006	11.04
22	MP2A	X	0	71.04
23	MP2A	Z	10.853	71.04
24	MP2A	Mx	.006	71.04
25	MP2B	X	0	11.04
26	MP2B	Z	10.853	11.04
27	MP2B	Mx	.006	11.04
28	MP2B	X	0	71.04
29	MP2B	Z	10.853	71.04
30	MP2B	Mx	.006	71.04
31	MP2C	X	0	11.04
32	MP2C	Z	10.853	11.04
33	MP2C	Mx	.006	11.04
34	MP2C	X	0	71.04
35	MP2C	Z	10.853	71.04
36	MP2C	Mx	.006	71.04
37	MP2A	X	0	11.04
38	MP2A	Z	10.853	11.04
39	MP2A	Mx	-.006	11.04
40	MP2A	X	0	71.04
41	MP2A	Z	10.853	71.04
42	MP2A	Mx	-.006	71.04
43	MP2B	X	0	11.04
44	MP2B	Z	10.853	11.04
45	MP2B	Mx	-.006	11.04
46	MP2B	X	0	71.04
47	MP2B	Z	10.853	71.04
48	MP2B	Mx	-.006	71.04
49	MP2C	X	0	11.04
50	MP2C	Z	10.853	11.04
51	MP2C	Mx	-.006	11.04
52	MP2C	X	0	71.04
53	MP2C	Z	10.853	71.04
54	MP2C	Mx	-.006	71.04
55	MP1A	X	0	11.04
56	MP1A	Z	5.759	11.04
57	MP1A	Mx	0	11.04

Member Point Loads (BLC 33 : Antenna Wm (180 Deg)) (Continued)

	Member Label	Direction	Magnitude[lb,k-ft]	Location[in,%]
58	MP1A	X	0	71.04
59	MP1A	Z	5.759	71.04
60	MP1A	Mx	0	71.04
61	MP1B	X	0	11.04
62	MP1B	Z	8.121	11.04
63	MP1B	Mx	-.003	11.04
64	MP1B	X	0	71.04
65	MP1B	Z	8.121	71.04
66	MP1B	Mx	-.003	71.04
67	MP1C	X	0	11.04
68	MP1C	Z	10.807	11.04
69	MP1C	Mx	.005	11.04
70	MP1C	X	0	71.04
71	MP1C	Z	10.807	71.04
72	MP1C	Mx	.005	71.04
73	MP4A	X	0	11.04
74	MP4A	Z	5.759	11.04
75	MP4A	Mx	0	11.04
76	MP4A	X	0	71.04
77	MP4A	Z	5.759	71.04
78	MP4A	Mx	0	71.04
79	MP4B	X	0	11.04
80	MP4B	Z	8.121	11.04
81	MP4B	Mx	-.003	11.04
82	MP4B	X	0	71.04
83	MP4B	Z	8.121	71.04
84	MP4B	Mx	-.003	71.04
85	MP4C	X	0	11.04
86	MP4C	Z	10.807	11.04
87	MP4C	Mx	.005	11.04
88	MP4C	X	0	71.04
89	MP4C	Z	10.807	71.04
90	MP4C	Mx	.005	71.04
91	MP3A	X	0	36
92	MP3A	Z	4.974	36
93	MP3A	Mx	0	36
94	MP3B	X	0	36
95	MP3B	Z	4.293	36
96	MP3B	Mx	.001	36
97	MP3C	X	0	36
98	MP3C	Z	3.518	36
99	MP3C	Mx	-.002	36
100	MP2A	X	0	36
101	MP2A	Z	4.974	36
102	MP2A	Mx	0	36
103	MP2B	X	0	36
104	MP2B	Z	4.032	36
105	MP2B	Mx	.001	36
106	MP2C	X	0	36
107	MP2C	Z	2.96	36
108	MP2C	Mx	-.001	36
109	OVP	X	0	18
110	OVP	Z	8.539	18
111	OVP	Mx	0	18

Member Point Loads (BLC 34 : Antenna Wm (210 Deg))

Member Label	Direction	Magnitude[lb,k-ft]	Location[in,%]

Member Point Loads (BLC 34 : Antenna Wm (210 Deg)) (Continued)

	Member Label	Direction	Magnitude[lb,k-ft]	Location[in,%]
1	MP3A	X	-2.65	29.04
2	MP3A	Z	4.59	29.04
3	MP3A	Mx	.001	29.04
4	MP3A	X	-2.65	53.04
5	MP3A	Z	4.59	53.04
6	MP3A	Mx	.001	53.04
7	MP3B	X	-1.446	29.04
8	MP3B	Z	2.505	29.04
9	MP3B	Mx	-.001	29.04
10	MP3B	X	-1.446	53.04
11	MP3B	Z	2.505	53.04
12	MP3B	Mx	-.001	53.04
13	MP3C	X	-2.34	29.04
14	MP3C	Z	4.053	29.04
15	MP3C	Mx	.002	29.04
16	MP3C	X	-2.34	53.04
17	MP3C	Z	4.053	53.04
18	MP3C	Mx	.002	53.04
19	MP2A	X	-4.967	11.04
20	MP2A	Z	8.603	11.04
21	MP2A	Mx	.008	11.04
22	MP2A	X	-4.967	71.04
23	MP2A	Z	8.603	71.04
24	MP2A	Mx	.008	71.04
25	MP2B	X	-4.967	11.04
26	MP2B	Z	8.603	11.04
27	MP2B	Mx	.008	11.04
28	MP2B	X	-4.967	71.04
29	MP2B	Z	8.603	71.04
30	MP2B	Mx	.008	71.04
31	MP2C	X	-4.967	11.04
32	MP2C	Z	8.603	11.04
33	MP2C	Mx	.008	11.04
34	MP2C	X	-4.967	71.04
35	MP2C	Z	8.603	71.04
36	MP2C	Mx	.008	71.04
37	MP2A	X	-4.967	11.04
38	MP2A	Z	8.603	11.04
39	MP2A	Mx	-.003	11.04
40	MP2A	X	-4.967	71.04
41	MP2A	Z	8.603	71.04
42	MP2A	Mx	-.003	71.04
43	MP2B	X	-4.967	11.04
44	MP2B	Z	8.603	11.04
45	MP2B	Mx	-.003	11.04
46	MP2B	X	-4.967	71.04
47	MP2B	Z	8.603	71.04
48	MP2B	Mx	-.003	71.04
49	MP2C	X	-4.967	11.04
50	MP2C	Z	8.603	11.04
51	MP2C	Mx	-.003	11.04
52	MP2C	X	-4.967	71.04
53	MP2C	Z	8.603	71.04
54	MP2C	Mx	-.003	71.04
55	MP1A	X	-3.594	11.04
56	MP1A	Z	6.225	11.04
57	MP1A	Mx	.002	11.04

Member Point Loads (BLC 34 : Antenna Wm (210 Deg)) (Continued)

	Member Label	Direction	Magnitude[lb,k-ft]	Location[in,%]
58	MP1A	X	-3.594	71.04
59	MP1A	Z	6.225	71.04
60	MP1A	Mx	.002	71.04
61	MP1B	X	-5.404	11.04
62	MP1B	Z	9.359	11.04
63	MP1B	Mx	-.005	11.04
64	MP1B	X	-5.404	71.04
65	MP1B	Z	9.359	71.04
66	MP1B	Mx	-.005	71.04
67	MP1C	X	-4.061	11.04
68	MP1C	Z	7.033	11.04
69	MP1C	Mx	.003	11.04
70	MP1C	X	-4.061	71.04
71	MP1C	Z	7.033	71.04
72	MP1C	Mx	.003	71.04
73	MP4A	X	-3.594	11.04
74	MP4A	Z	6.225	11.04
75	MP4A	Mx	.002	11.04
76	MP4A	X	-3.594	71.04
77	MP4A	Z	6.225	71.04
78	MP4A	Mx	.002	71.04
79	MP4B	X	-5.404	11.04
80	MP4B	Z	9.359	11.04
81	MP4B	Mx	-.005	11.04
82	MP4B	X	-5.404	71.04
83	MP4B	Z	9.359	71.04
84	MP4B	Mx	-.005	71.04
85	MP4C	X	-4.061	11.04
86	MP4C	Z	7.033	11.04
87	MP4C	Mx	.003	11.04
88	MP4C	X	-4.061	71.04
89	MP4C	Z	7.033	71.04
90	MP4C	Mx	.003	71.04
91	MP3A	X	-2.281	36
92	MP3A	Z	3.951	36
93	MP3A	Mx	-.001	36
94	MP3B	X	-1.759	36
95	MP3B	Z	3.047	36
96	MP3B	Mx	.002	36
97	MP3C	X	-2.146	36
98	MP3C	Z	3.718	36
99	MP3C	Mx	-.001	36
100	MP2A	X	-2.202	36
101	MP2A	Z	3.814	36
102	MP2A	Mx	-.001	36
103	MP2B	X	-1.48	36
104	MP2B	Z	2.564	36
105	MP2B	Mx	.001	36
106	MP2C	X	-2.016	36
107	MP2C	Z	3.492	36
108	MP2C	Mx	-.001	36
109	OVP	X	-4.158	18
110	OVP	Z	7.202	18
111	OVP	Mx	0	18

Member Point Loads (BLC 35 : Antenna Wm (240 Deg))

Member Label	Direction	Magnitude[lb,k-ft]	Location[in,%]

Member Point Loads (BLC 35 : Antenna Wm (240 Deg)) (Continued)

	Member Label	Direction	Magnitude[lb,k-ft]	Location[in,%]
1	MP3A	X	-2.943	29.04
2	MP3A	Z	1.699	29.04
3	MP3A	Mx	.001	29.04
4	MP3A	X	-2.943	53.04
5	MP3A	Z	1.699	53.04
6	MP3A	Mx	.001	53.04
7	MP3B	X	-2.219	29.04
8	MP3B	Z	1.281	29.04
9	MP3B	Mx	-.001	29.04
10	MP3B	X	-2.219	53.04
11	MP3B	Z	1.281	53.04
12	MP3B	Mx	-.001	53.04
13	MP3C	X	-5.314	29.04
14	MP3C	Z	3.068	29.04
15	MP3C	Mx	.000533	29.04
16	MP3C	X	-5.314	53.04
17	MP3C	Z	3.068	53.04
18	MP3C	Mx	.000533	53.04
19	MP2A	X	-7.011	11.04
20	MP2A	Z	4.048	11.04
21	MP2A	Mx	.006	11.04
22	MP2A	X	-7.011	71.04
23	MP2A	Z	4.048	71.04
24	MP2A	Mx	.006	71.04
25	MP2B	X	-7.011	11.04
26	MP2B	Z	4.048	11.04
27	MP2B	Mx	.006	11.04
28	MP2B	X	-7.011	71.04
29	MP2B	Z	4.048	71.04
30	MP2B	Mx	.006	71.04
31	MP2C	X	-7.011	11.04
32	MP2C	Z	4.048	11.04
33	MP2C	Mx	.006	11.04
34	MP2C	X	-7.011	71.04
35	MP2C	Z	4.048	71.04
36	MP2C	Mx	.006	71.04
37	MP2A	X	-7.011	11.04
38	MP2A	Z	4.048	11.04
39	MP2A	Mx	.001	11.04
40	MP2A	X	-7.011	71.04
41	MP2A	Z	4.048	71.04
42	MP2A	Mx	.001	71.04
43	MP2B	X	-7.011	11.04
44	MP2B	Z	4.048	11.04
45	MP2B	Mx	.001	11.04
46	MP2B	X	-7.011	71.04
47	MP2B	Z	4.048	71.04
48	MP2B	Mx	.001	71.04
49	MP2C	X	-7.011	11.04
50	MP2C	Z	4.048	11.04
51	MP2C	Mx	.001	11.04
52	MP2C	X	-7.011	71.04
53	MP2C	Z	4.048	71.04
54	MP2C	Mx	.001	71.04
55	MP1A	X	-8.701	11.04
56	MP1A	Z	5.023	11.04
57	MP1A	Mx	.004	11.04

Member Point Loads (BLC 35 : Antenna Wm (240 Deg)) (Continued)

	Member Label	Direction	Magnitude[lb,k-ft]	Location[in,%]
58	MP1A	X	-8.701	71.04
59	MP1A	Z	5.023	71.04
60	MP1A	Mx	.004	71.04
61	MP1B	X	-9.789	11.04
62	MP1B	Z	5.652	11.04
63	MP1B	Mx	-.006	11.04
64	MP1B	X	-9.789	71.04
65	MP1B	Z	5.652	71.04
66	MP1B	Mx	-.006	71.04
67	MP1C	X	-5.137	11.04
68	MP1C	Z	2.966	11.04
69	MP1C	Mx	.000515	11.04
70	MP1C	X	-5.137	71.04
71	MP1C	Z	2.966	71.04
72	MP1C	Mx	.000515	71.04
73	MP4A	X	-8.701	11.04
74	MP4A	Z	5.023	11.04
75	MP4A	Mx	.004	11.04
76	MP4A	X	-8.701	71.04
77	MP4A	Z	5.023	71.04
78	MP4A	Mx	.004	71.04
79	MP4B	X	-9.789	11.04
80	MP4B	Z	5.652	11.04
81	MP4B	Mx	-.006	11.04
82	MP4B	X	-9.789	71.04
83	MP4B	Z	5.652	71.04
84	MP4B	Mx	-.006	71.04
85	MP4C	X	-5.137	11.04
86	MP4C	Z	2.966	11.04
87	MP4C	Mx	.000515	11.04
88	MP4C	X	-5.137	71.04
89	MP4C	Z	2.966	71.04
90	MP4C	Mx	.000515	71.04
91	MP3A	X	-3.237	36
92	MP3A	Z	1.869	36
93	MP3A	Mx	-.002	36
94	MP3B	X	-2.923	36
95	MP3B	Z	1.687	36
96	MP3B	Mx	.002	36
97	MP3C	X	-4.265	36
98	MP3C	Z	2.462	36
99	MP3C	Mx	-.000427	36
100	MP2A	X	-2.826	36
101	MP2A	Z	1.632	36
102	MP2A	Mx	-.001	36
103	MP2B	X	-2.392	36
104	MP2B	Z	1.381	36
105	MP2B	Mx	.001	36
106	MP2C	X	-4.248	36
107	MP2C	Z	2.453	36
108	MP2C	Mx	-.000426	36
109	OVP	X	-8.052	18
110	OVP	Z	4.649	18
111	OVP	Mx	0	18

Member Point Loads (BLC 36 : Antenna Wm (270 Deg))

Member Label	Direction	Magnitude[lb,k-ft]	Location[in,%]

Member Point Loads (BLC 36 : Antenna Wm (270 Deg)) (Continued)

	Member Label	Direction	Magnitude[lb,k-ft]	Location[in,%]
1	MP3A	X	-2.447	29.04
2	MP3A	Z	0	29.04
3	MP3A	Mx	.001	29.04
4	MP3A	X	-2.447	53.04
5	MP3A	Z	0	53.04
6	MP3A	Mx	.001	53.04
7	MP3B	X	-4.019	29.04
8	MP3B	Z	0	29.04
9	MP3B	Mx	-.002	29.04
10	MP3B	X	-4.019	53.04
11	MP3B	Z	0	53.04
12	MP3B	Mx	-.002	53.04
13	MP3C	X	-5.806	29.04
14	MP3C	Z	0	29.04
15	MP3C	Mx	-.000993	29.04
16	MP3C	X	-5.806	53.04
17	MP3C	Z	0	53.04
18	MP3C	Mx	-.000993	53.04
19	MP2A	X	-7.177	11.04
20	MP2A	Z	0	11.04
21	MP2A	Mx	.004	11.04
22	MP2A	X	-7.177	71.04
23	MP2A	Z	0	71.04
24	MP2A	Mx	.004	71.04
25	MP2B	X	-7.177	11.04
26	MP2B	Z	0	11.04
27	MP2B	Mx	.004	11.04
28	MP2B	X	-7.177	71.04
29	MP2B	Z	0	71.04
30	MP2B	Mx	.004	71.04
31	MP2C	X	-7.177	11.04
32	MP2C	Z	0	11.04
33	MP2C	Mx	.004	11.04
34	MP2C	X	-7.177	71.04
35	MP2C	Z	0	71.04
36	MP2C	Mx	.004	71.04
37	MP2A	X	-7.177	11.04
38	MP2A	Z	0	11.04
39	MP2A	Mx	.004	11.04
40	MP2A	X	-7.177	71.04
41	MP2A	Z	0	71.04
42	MP2A	Mx	.004	71.04
43	MP2B	X	-7.177	11.04
44	MP2B	Z	0	11.04
45	MP2B	Mx	.004	11.04
46	MP2B	X	-7.177	71.04
47	MP2B	Z	0	71.04
48	MP2B	Mx	.004	71.04
49	MP2C	X	-7.177	11.04
50	MP2C	Z	0	11.04
51	MP2C	Mx	.004	11.04
52	MP2C	X	-7.177	71.04
53	MP2C	Z	0	71.04
54	MP2C	Mx	.004	71.04
55	MP1A	X	-11.476	11.04
56	MP1A	Z	0	11.04
57	MP1A	Mx	.006	11.04

Member Point Loads (BLC 36 : Antenna Wm (270 Deg)) (Continued)

	Member Label	Direction	Magnitude[lb,k-ft]	Location[in,%]
58	MP1A	X	-11.476	71.04
59	MP1A	Z	0	71.04
60	MP1A	Mx	.006	71.04
61	MP1B	X	-9.114	11.04
62	MP1B	Z	0	11.04
63	MP1B	Mx	-.003	11.04
64	MP1B	X	-9.114	71.04
65	MP1B	Z	0	71.04
66	MP1B	Mx	-.003	71.04
67	MP1C	X	-6.428	11.04
68	MP1C	Z	0	11.04
69	MP1C	Mx	-.001	11.04
70	MP1C	X	-6.428	71.04
71	MP1C	Z	0	71.04
72	MP1C	Mx	-.001	71.04
73	MP4A	X	-11.476	11.04
74	MP4A	Z	0	11.04
75	MP4A	Mx	.006	11.04
76	MP4A	X	-11.476	71.04
77	MP4A	Z	0	71.04
78	MP4A	Mx	.006	71.04
79	MP4B	X	-9.114	11.04
80	MP4B	Z	0	11.04
81	MP4B	Mx	-.003	11.04
82	MP4B	X	-9.114	71.04
83	MP4B	Z	0	71.04
84	MP4B	Mx	-.003	71.04
85	MP4C	X	-6.428	11.04
86	MP4C	Z	0	11.04
87	MP4C	Mx	-.001	11.04
88	MP4C	X	-6.428	71.04
89	MP4C	Z	0	71.04
90	MP4C	Mx	-.001	71.04
91	MP3A	X	-3.325	36
92	MP3A	Z	0	36
93	MP3A	Mx	-.002	36
94	MP3B	X	-4.006	36
95	MP3B	Z	0	36
96	MP3B	Mx	.002	36
97	MP3C	X	-4.781	36
98	MP3C	Z	0	36
99	MP3C	Mx	.000818	36
100	MP2A	X	-2.693	36
101	MP2A	Z	0	36
102	MP2A	Mx	-.001	36
103	MP2B	X	-3.636	36
104	MP2B	Z	0	36
105	MP2B	Mx	.001	36
106	MP2C	X	-4.707	36
107	MP2C	Z	0	36
108	MP2C	Mx	.000805	36
109	OVP	X	-10.5	18
110	OVP	Z	0	18
111	OVP	Mx	0	18

Member Point Loads (BLC 37 : Antenna Wm (300 Deg))

Member Label	Direction	Magnitude[lb,k-ft]	Location[in,%]

Member Point Loads (BLC 37 : Antenna Wm (300 Deg)) (Continued)

	Member Label	Direction	Magnitude[lb,k-ft]	Location[in,%]
1	MP3A	X	-2.943	29.04
2	MP3A	Z	-1.699	29.04
3	MP3A	Mx	.001	29.04
4	MP3A	X	-2.943	53.04
5	MP3A	Z	-1.699	53.04
6	MP3A	Mx	.001	53.04
7	MP3B	X	-5.028	29.04
8	MP3B	Z	-2.903	29.04
9	MP3B	Mx	-.000993	29.04
10	MP3B	X	-5.028	53.04
11	MP3B	Z	-2.903	53.04
12	MP3B	Mx	-.000993	53.04
13	MP3C	X	-3.481	29.04
14	MP3C	Z	-2.009	29.04
15	MP3C	Mx	-.002	29.04
16	MP3C	X	-3.481	53.04
17	MP3C	Z	-2.009	53.04
18	MP3C	Mx	-.002	53.04
19	MP2A	X	-7.011	11.04
20	MP2A	Z	-4.048	11.04
21	MP2A	Mx	.001	11.04
22	MP2A	X	-7.011	71.04
23	MP2A	Z	-4.048	71.04
24	MP2A	Mx	.001	71.04
25	MP2B	X	-7.011	11.04
26	MP2B	Z	-4.048	11.04
27	MP2B	Mx	.001	11.04
28	MP2B	X	-7.011	71.04
29	MP2B	Z	-4.048	71.04
30	MP2B	Mx	.001	71.04
31	MP2C	X	-7.011	11.04
32	MP2C	Z	-4.048	11.04
33	MP2C	Mx	.001	11.04
34	MP2C	X	-7.011	71.04
35	MP2C	Z	-4.048	71.04
36	MP2C	Mx	.001	71.04
37	MP2A	X	-7.011	11.04
38	MP2A	Z	-4.048	11.04
39	MP2A	Mx	.006	11.04
40	MP2A	X	-7.011	71.04
41	MP2A	Z	-4.048	71.04
42	MP2A	Mx	.006	71.04
43	MP2B	X	-7.011	11.04
44	MP2B	Z	-4.048	11.04
45	MP2B	Mx	.006	11.04
46	MP2B	X	-7.011	71.04
47	MP2B	Z	-4.048	71.04
48	MP2B	Mx	.006	71.04
49	MP2C	X	-7.011	11.04
50	MP2C	Z	-4.048	11.04
51	MP2C	Mx	.006	11.04
52	MP2C	X	-7.011	71.04
53	MP2C	Z	-4.048	71.04
54	MP2C	Mx	.006	71.04
55	MP1A	X	-8.701	11.04
56	MP1A	Z	-5.023	11.04
57	MP1A	Mx	.004	11.04

Member Point Loads (BLC 37 : Antenna Wm (300 Deg)) (Continued)

	Member Label	Direction	Magnitude[lb,k-ft]	Location[in,%]
58	MP1A	X	-8.701	71.04
59	MP1A	Z	-5.023	71.04
60	MP1A	Mx	.004	71.04
61	MP1B	X	-5.567	11.04
62	MP1B	Z	-3.214	11.04
63	MP1B	Mx	-.001	11.04
64	MP1B	X	-5.567	71.04
65	MP1B	Z	-3.214	71.04
66	MP1B	Mx	-.001	71.04
67	MP1C	X	-7.893	11.04
68	MP1C	Z	-4.557	11.04
69	MP1C	Mx	-.003	11.04
70	MP1C	X	-7.893	71.04
71	MP1C	Z	-4.557	71.04
72	MP1C	Mx	-.003	71.04
73	MP4A	X	-8.701	11.04
74	MP4A	Z	-5.023	11.04
75	MP4A	Mx	.004	11.04
76	MP4A	X	-8.701	71.04
77	MP4A	Z	-5.023	71.04
78	MP4A	Mx	.004	71.04
79	MP4B	X	-5.567	11.04
80	MP4B	Z	-3.214	11.04
81	MP4B	Mx	-.001	11.04
82	MP4B	X	-5.567	71.04
83	MP4B	Z	-3.214	71.04
84	MP4B	Mx	-.001	71.04
85	MP4C	X	-7.893	11.04
86	MP4C	Z	-4.557	11.04
87	MP4C	Mx	-.003	11.04
88	MP4C	X	-7.893	71.04
89	MP4C	Z	-4.557	71.04
90	MP4C	Mx	-.003	71.04
91	MP3A	X	-3.237	36
92	MP3A	Z	-1.869	36
93	MP3A	Mx	-.002	36
94	MP3B	X	-4.141	36
95	MP3B	Z	-2.391	36
96	MP3B	Mx	.000818	36
97	MP3C	X	-3.47	36
98	MP3C	Z	-2.003	36
99	MP3C	Mx	.002	36
100	MP2A	X	-2.826	36
101	MP2A	Z	-1.632	36
102	MP2A	Mx	-.001	36
103	MP2B	X	-4.077	36
104	MP2B	Z	-2.354	36
105	MP2B	Mx	.000805	36
106	MP2C	X	-3.149	36
107	MP2C	Z	-1.818	36
108	MP2C	Mx	.001	36
109	OVP	X	-9.286	18
110	OVP	Z	-5.361	18
111	OVP	Mx	0	18

Member Point Loads (BLC 38 : Antenna Wm (330 Deg))

Member Label	Direction	Magnitude[lb,k-ft]	Location[in,%]

Member Point Loads (BLC 38 : Antenna Wm (330 Deg)) (Continued)

	Member Label	Direction	Magnitude[lb,k-ft]	Location[in,%]
1	MP3A	X	-2.65	29.04
2	MP3A	Z	-4.59	29.04
3	MP3A	Mx	.001	29.04
4	MP3A	X	-2.65	53.04
5	MP3A	Z	-4.59	53.04
6	MP3A	Mx	.001	53.04
7	MP3B	X	-3.068	29.04
8	MP3B	Z	-5.314	29.04
9	MP3B	Mx	.000533	29.04
10	MP3B	X	-3.068	53.04
11	MP3B	Z	-5.314	53.04
12	MP3B	Mx	.000533	53.04
13	MP3C	X	-1.281	29.04
14	MP3C	Z	-2.219	29.04
15	MP3C	Mx	-.001	29.04
16	MP3C	X	-1.281	53.04
17	MP3C	Z	-2.219	53.04
18	MP3C	Mx	-.001	53.04
19	MP2A	X	-4.967	11.04
20	MP2A	Z	-8.603	11.04
21	MP2A	Mx	-.003	11.04
22	MP2A	X	-4.967	71.04
23	MP2A	Z	-8.603	71.04
24	MP2A	Mx	-.003	71.04
25	MP2B	X	-4.967	11.04
26	MP2B	Z	-8.603	11.04
27	MP2B	Mx	-.003	11.04
28	MP2B	X	-4.967	71.04
29	MP2B	Z	-8.603	71.04
30	MP2B	Mx	-.003	71.04
31	MP2C	X	-4.967	11.04
32	MP2C	Z	-8.603	11.04
33	MP2C	Mx	-.003	11.04
34	MP2C	X	-4.967	71.04
35	MP2C	Z	-8.603	71.04
36	MP2C	Mx	-.003	71.04
37	MP2A	X	-4.967	11.04
38	MP2A	Z	-8.603	11.04
39	MP2A	Mx	.008	11.04
40	MP2A	X	-4.967	71.04
41	MP2A	Z	-8.603	71.04
42	MP2A	Mx	.008	71.04
43	MP2B	X	-4.967	11.04
44	MP2B	Z	-8.603	11.04
45	MP2B	Mx	.008	11.04
46	MP2B	X	-4.967	71.04
47	MP2B	Z	-8.603	71.04
48	MP2B	Mx	.008	71.04
49	MP2C	X	-4.967	11.04
50	MP2C	Z	-8.603	11.04
51	MP2C	Mx	.008	11.04
52	MP2C	X	-4.967	71.04
53	MP2C	Z	-8.603	71.04
54	MP2C	Mx	.008	71.04
55	MP1A	X	-3.594	11.04
56	MP1A	Z	-6.225	11.04
57	MP1A	Mx	.002	11.04

Member Point Loads (BLC 38 : Antenna Wm (330 Deg)) (Continued)

	Member Label	Direction	Magnitude[lb,k-ft]	Location[in,%]
58	MP1A	X	-3.594	71.04
59	MP1A	Z	-6.225	71.04
60	MP1A	Mx	.002	71.04
61	MP1B	X	-2.966	11.04
62	MP1B	Z	-5.137	11.04
63	MP1B	Mx	.000515	11.04
64	MP1B	X	-2.966	71.04
65	MP1B	Z	-5.137	71.04
66	MP1B	Mx	.000515	71.04
67	MP1C	X	-5.652	11.04
68	MP1C	Z	-9.789	11.04
69	MP1C	Mx	-.006	11.04
70	MP1C	X	-5.652	71.04
71	MP1C	Z	-9.789	71.04
72	MP1C	Mx	-.006	71.04
73	MP4A	X	-3.594	11.04
74	MP4A	Z	-6.225	11.04
75	MP4A	Mx	.002	11.04
76	MP4A	X	-3.594	71.04
77	MP4A	Z	-6.225	71.04
78	MP4A	Mx	.002	71.04
79	MP4B	X	-2.966	11.04
80	MP4B	Z	-5.137	11.04
81	MP4B	Mx	.000515	11.04
82	MP4B	X	-2.966	71.04
83	MP4B	Z	-5.137	71.04
84	MP4B	Mx	.000515	71.04
85	MP4C	X	-5.652	11.04
86	MP4C	Z	-9.789	11.04
87	MP4C	Mx	-.006	11.04
88	MP4C	X	-5.652	71.04
89	MP4C	Z	-9.789	71.04
90	MP4C	Mx	-.006	71.04
91	MP3A	X	-2.281	36
92	MP3A	Z	-3.951	36
93	MP3A	Mx	-.001	36
94	MP3B	X	-2.462	36
95	MP3B	Z	-4.265	36
96	MP3B	Mx	-.000428	36
97	MP3C	X	-1.687	36
98	MP3C	Z	-2.923	36
99	MP3C	Mx	.002	36
100	MP2A	X	-2.202	36
101	MP2A	Z	-3.814	36
102	MP2A	Mx	-.001	36
103	MP2B	X	-2.453	36
104	MP2B	Z	-4.248	36
105	MP2B	Mx	-.000426	36
106	MP2C	X	-1.381	36
107	MP2C	Z	-2.392	36
108	MP2C	Mx	.001	36
109	OVP	X	-4.871	18
110	OVP	Z	-8.437	18
111	OVP	Mx	0	18

Member Point Loads (BLC 77 : Lm1)

Member Label	Direction	Magnitude[lb,k-ft]	Location[in,%]

Member Point Loads (BLC 77 : Lm1) (Continued)

	Member Label	Direction	Magnitude[lb,k-ft]	Location[in,%]
1	M160	Y	-500	%100

Member Point Loads (BLC 78 : Lm2)

	Member Label	Direction	Magnitude[lb,k-ft]	Location[in,%]
1	M161	Y	-500	%100

Member Point Loads (BLC 79 : Lv1)

	Member Label	Direction	Magnitude[lb,k-ft]	Location[in,%]
1	M151A	Y	-250	0

Member Point Loads (BLC 80 : Lv2)

	Member Label	Direction	Magnitude[lb,k-ft]	Location[in,%]
1	M172	Y	-250	%50

Member Distributed Loads (BLC 40 : Structure Di)

	Member Label	Direction	Start Magnitude[lb/ft,...	End Magnitude[lb/ft,F...	Start Location[in,%]	End Location[in,%]
1	M1	Y	-7.328	-7.328	0	%100
2	M4	Y	-9.235	-9.235	0	%100
3	M5	Y	-9.235	-9.235	0	%100
4	M18	Y	-5.664	-5.664	0	%100
5	M19	Y	-5.664	-5.664	0	%100
6	M20	Y	-5.664	-5.664	0	%100
7	M21	Y	-5.664	-5.664	0	%100
8	M22	Y	-5.664	-5.664	0	%100
9	M28	Y	-9.235	-9.235	0	%100
10	M29	Y	-9.235	-9.235	0	%100
11	M27A	Y	-5.664	-5.664	0	%100
12	M28A	Y	-5.664	-5.664	0	%100
13	M29A	Y	-5.664	-5.664	0	%100
14	M44	Y	-10.183	-10.183	0	%100
15	M47	Y	-10.183	-10.183	0	%100
16	M48	Y	-10.183	-10.183	0	%100
17	M51	Y	-7.672	-7.672	0	%100
18	M52	Y	-7.328	-7.328	0	%100
19	M55	Y	-9.235	-9.235	0	%100
20	M56	Y	-9.235	-9.235	0	%100
21	M69	Y	-5.664	-5.664	0	%100
22	M70	Y	-5.664	-5.664	0	%100
23	M71	Y	-5.664	-5.664	0	%100
24	M72	Y	-5.664	-5.664	0	%100
25	M73	Y	-5.664	-5.664	0	%100
26	M76	Y	-9.235	-9.235	0	%100
27	M77	Y	-9.235	-9.235	0	%100
28	M78	Y	-5.664	-5.664	0	%100
29	M79	Y	-5.664	-5.664	0	%100
30	M80	Y	-5.664	-5.664	0	%100
31	M95	Y	-10.183	-10.183	0	%100
32	M98	Y	-10.183	-10.183	0	%100
33	M99	Y	-10.183	-10.183	0	%100
34	M102	Y	-7.672	-7.672	0	%100
35	M103	Y	-7.328	-7.328	0	%100
36	M106	Y	-9.235	-9.235	0	%100
37	M107	Y	-9.235	-9.235	0	%100
38	M120	Y	-5.664	-5.664	0	%100

Member Distributed Loads (BLC 40 : Structure Di) (Continued)

	Member Label	Direction	Start Magnitude[lb/ft,...	End Magnitude[lb/ft,F...	Start Location[in,%]	End Location[in,%]
39	M121	Y	-5.664	-5.664	0	%100
40	M122	Y	-5.664	-5.664	0	%100
41	M123	Y	-5.664	-5.664	0	%100
42	M124	Y	-5.664	-5.664	0	%100
43	M127	Y	-9.235	-9.235	0	%100
44	M128	Y	-9.235	-9.235	0	%100
45	M129	Y	-5.664	-5.664	0	%100
46	M130	Y	-5.664	-5.664	0	%100
47	M131	Y	-5.664	-5.664	0	%100
48	M146	Y	-10.183	-10.183	0	%100
49	M149	Y	-10.183	-10.183	0	%100
50	M150	Y	-10.183	-10.183	0	%100
51	M153	Y	-7.672	-7.672	0	%100
52	M148A	Y	-9.235	-9.235	0	%100
53	M151A	Y	-5.021	-5.021	0	%100
54	M152A	Y	-10.183	-10.183	0	%100
55	M154	Y	-5.021	-5.021	0	%100
56	M157	Y	-5.021	-5.021	0	%100
57	M166	Y	-10.183	-10.183	0	%100
58	M162A	Y	-10.183	-10.183	0	%100
59	M163A	Y	-10.183	-10.183	0	%100
60	M164A	Y	-10.183	-10.183	0	%100
61	M165A	Y	-10.183	-10.183	0	%100
62	M166A	Y	-10.183	-10.183	0	%100
63	M167	Y	-10.183	-10.183	0	%100
64	M168	Y	-10.183	-10.183	0	%100
65	M169	Y	-10.183	-10.183	0	%100
66	M170	Y	-10.183	-10.183	0	%100
67	M171	Y	-10.183	-10.183	0	%100
68	M172	Y	-5.021	-5.021	0	%100
69	M173	Y	-5.021	-5.021	0	%100
70	M174	Y	-5.021	-5.021	0	%100
71	M175	Y	-5.021	-5.021	0	%100
72	M176	Y	-5.021	-5.021	0	%100
73	M177	Y	-5.021	-5.021	0	%100
74	M203	Y	-5.021	-5.021	0	%100
75	OVP	Y	-5.021	-5.021	0	%100
76	MP3A	Y	-5.021	-5.021	0	%100
77	MP2A	Y	-5.021	-5.021	0	%100
78	MP3C	Y	-5.021	-5.021	0	%100
79	MP2C	Y	-5.021	-5.021	0	%100
80	MP3B	Y	-5.021	-5.021	0	%100
81	MP2B	Y	-5.021	-5.021	0	%100
82	MP1A	Y	-5.021	-5.021	0	%100
83	MP4A	Y	-5.021	-5.021	0	%100
84	MP1C	Y	-5.021	-5.021	0	%100
85	MP4C	Y	-5.021	-5.021	0	%100
86	MP1B	Y	-5.021	-5.021	0	%100
87	MP4B	Y	-5.021	-5.021	0	%100
88	M204A	Y	-9.235	-9.235	0	%100
89	M205B	Y	-9.235	-9.235	0	%100
90	M206	Y	-5.731	-5.731	0	%100
91	M207	Y	-5.731	-5.731	0	%100
92	M208	Y	-5.731	-5.731	0	%100
93	M227	Y	-7.672	-7.672	0	%100
94	M228	Y	-7.672	-7.672	0	%100
95	M229	Y	-7.672	-7.672	0	%100

Member Distributed Loads (BLC 40 : Structure Di) (Continued)

	Member Label	Direction	Start Magnitude[lb/ft,...	End Magnitude[lb/ft,F...	Start Location[in,%]	End Location[in,%]
96	M231	Y	-6.668	-6.668	0	%100
97	M231A	Y	-6.668	-6.668	0	%100
98	M232	Y	-6.668	-6.668	0	%100
99	M233	Y	-6.668	-6.668	0	%100
100	M234	Y	-6.668	-6.668	0	%100
101	M235	Y	-6.668	-6.668	0	%100

Member Distributed Loads (BLC 41 : Structure Wo (0 Deg))

	Member Label	Direction	Start Magnitude[lb/ft,...	End Magnitude[lb/ft,F...	Start Location[in,%]	End Location[in,%]
1	M1	X	0	0	0	%100
2	M1	Z	0	0	0	%100
3	M4	X	0	0	0	%100
4	M4	Z	0	0	0	%100
5	M5	X	0	0	0	%100
6	M5	Z	0	0	0	%100
7	M18	X	0	0	0	%100
8	M18	Z	-8.691	-8.691	0	%100
9	M19	X	0	0	0	%100
10	M19	Z	-2.348	-2.348	0	%100
11	M20	X	0	0	0	%100
12	M20	Z	-2.348	-2.348	0	%100
13	M21	X	0	0	0	%100
14	M21	Z	-10.495	-10.495	0	%100
15	M22	X	0	0	0	%100
16	M22	Z	-8.691	-8.691	0	%100
17	M28	X	0	0	0	%100
18	M28	Z	-5.358	-5.358	0	%100
19	M29	X	0	0	0	%100
20	M29	Z	-5.358	-5.358	0	%100
21	M27A	X	0	0	0	%100
22	M27A	Z	-2.348	-2.348	0	%100
23	M28A	X	0	0	0	%100
24	M28A	Z	-2.348	-2.348	0	%100
25	M29A	X	0	0	0	%100
26	M29A	Z	-10.495	-10.495	0	%100
27	M44	X	0	0	0	%100
28	M44	Z	-23.862	-23.862	0	%100
29	M47	X	0	0	0	%100
30	M47	Z	-1.491	-1.491	0	%100
31	M48	X	0	0	0	%100
32	M48	Z	-1.491	-1.491	0	%100
33	M51	X	0	0	0	%100
34	M51	Z	-11.719	-11.719	0	%100
35	M52	X	0	0	0	%100
36	M52	Z	-7.335	-7.335	0	%100
37	M55	X	0	0	0	%100
38	M55	Z	-17.979	-17.979	0	%100
39	M56	X	0	0	0	%100
40	M56	Z	-17.979	-17.979	0	%100
41	M69	X	0	0	0	%100
42	M69	Z	-2.173	-2.173	0	%100
43	M70	X	0	0	0	%100
44	M70	Z	-9.39	-9.39	0	%100
45	M71	X	0	0	0	%100
46	M71	Z	-2.348	-2.348	0	%100
47	M72	X	0	0	0	%100

Member Distributed Loads (BLC 41 : Structure Wo (0 Deg)) (Continued)

	Member Label	Direction	Start Magnitude[lb/ft,...	End Magnitude[lb/ft,F...	Start Location[in,%]	End Location[in,%]
48	M72	Z	-2.624	-2.624	0	%100
49	M73	X	0	0	0	%100
50	M73	Z	-2.173	-2.173	0	%100
51	M76	X	0	0	0	%100
52	M76	Z	-21.432	-21.432	0	%100
53	M77	X	0	0	0	%100
54	M77	Z	-5.358	-5.358	0	%100
55	M78	X	0	0	0	%100
56	M78	Z	-9.39	-9.39	0	%100
57	M79	X	0	0	0	%100
58	M79	Z	-2.348	-2.348	0	%100
59	M80	X	0	0	0	%100
60	M80	Z	-2.624	-2.624	0	%100
61	M95	X	0	0	0	%100
62	M95	Z	-18.518	-18.518	0	%100
63	M98	X	0	0	0	%100
64	M98	Z	-7.83	-7.83	0	%100
65	M99	X	0	0	0	%100
66	M99	Z	-7.83	-7.83	0	%100
67	M102	X	0	0	0	%100
68	M102	Z	-2.93	-2.93	0	%100
69	M103	X	0	0	0	%100
70	M103	Z	-7.335	-7.335	0	%100
71	M106	X	0	0	0	%100
72	M106	Z	-17.979	-17.979	0	%100
73	M107	X	0	0	0	%100
74	M107	Z	-17.979	-17.979	0	%100
75	M120	X	0	0	0	%100
76	M120	Z	-2.173	-2.173	0	%100
77	M121	X	0	0	0	%100
78	M121	Z	-2.348	-2.348	0	%100
79	M122	X	0	0	0	%100
80	M122	Z	-9.39	-9.39	0	%100
81	M123	X	0	0	0	%100
82	M123	Z	-2.624	-2.624	0	%100
83	M124	X	0	0	0	%100
84	M124	Z	-2.173	-2.173	0	%100
85	M127	X	0	0	0	%100
86	M127	Z	-5.358	-5.358	0	%100
87	M128	X	0	0	0	%100
88	M128	Z	-21.432	-21.432	0	%100
89	M129	X	0	0	0	%100
90	M129	Z	-2.348	-2.348	0	%100
91	M130	X	0	0	0	%100
92	M130	Z	-9.39	-9.39	0	%100
93	M131	X	0	0	0	%100
94	M131	Z	-2.624	-2.624	0	%100
95	M146	X	0	0	0	%100
96	M146	Z	-18.518	-18.518	0	%100
97	M149	X	0	0	0	%100
98	M149	Z	-7.83	-7.83	0	%100
99	M150	X	0	0	0	%100
100	M150	Z	-7.83	-7.83	0	%100
101	M153	X	0	0	0	%100
102	M153	Z	-2.93	-2.93	0	%100
103	M148A	X	0	0	0	%100
104	M148A	Z	-24.442	-24.442	0	%100

Member Distributed Loads (BLC 41 : Structure Wo (0 Deg)) (Continued)

	Member Label	Direction	Start Magnitude[lb/ft,...	End Magnitude[lb/ft,F...	Start Location[in,%]	End Location[in,%]
105	M151A	X	0	0	0	%100
106	M151A	Z	-9.446	-9.446	0	%100
107	M152A	X	0	0	0	%100
108	M152A	Z	0	0	0	%100
109	M154	X	0	0	0	%100
110	M154	Z	-2.361	-2.361	0	%100
111	M157	X	0	0	0	%100
112	M157	Z	-2.361	-2.361	0	%100
113	M166	X	0	0	0	%100
114	M166	Z	-23.862	-23.862	0	%100
115	M162A	X	0	0	0	%100
116	M162A	Z	0	0	0	%100
117	M163A	X	0	0	0	%100
118	M163A	Z	-23.862	-23.862	0	%100
119	M164A	X	0	0	0	%100
120	M164A	Z	-17.897	-17.897	0	%100
121	M165A	X	0	0	0	%100
122	M165A	Z	-5.966	-5.966	0	%100
123	M166A	X	0	0	0	%100
124	M166A	Z	-17.897	-17.897	0	%100
125	M167	X	0	0	0	%100
126	M167	Z	-5.966	-5.966	0	%100
127	M168	X	0	0	0	%100
128	M168	Z	-17.897	-17.897	0	%100
129	M169	X	0	0	0	%100
130	M169	Z	-5.966	-5.966	0	%100
131	M170	X	0	0	0	%100
132	M170	Z	-17.897	-17.897	0	%100
133	M171	X	0	0	0	%100
134	M171	Z	-5.966	-5.966	0	%100
135	M172	X	0	0	0	%100
136	M172	Z	-8.755	-8.755	0	%100
137	M173	X	0	0	0	%100
138	M173	Z	-2.189	-2.189	0	%100
139	M174	X	0	0	0	%100
140	M174	Z	-2.189	-2.189	0	%100
141	M175	X	0	0	0	%100
142	M175	Z	-9.446	-9.446	0	%100
143	M176	X	0	0	0	%100
144	M176	Z	-2.361	-2.361	0	%100
145	M177	X	0	0	0	%100
146	M177	Z	-2.361	-2.361	0	%100
147	M203	X	0	0	0	%100
148	M203	Z	-7.724	-7.724	0	%100
149	OVP	X	0	0	0	%100
150	OVP	Z	-9.446	-9.446	0	%100
151	MP3A	X	0	0	0	%100
152	MP3A	Z	-9.446	-9.446	0	%100
153	MP2A	X	0	0	0	%100
154	MP2A	Z	-9.446	-9.446	0	%100
155	MP3C	X	0	0	0	%100
156	MP3C	Z	-9.446	-9.446	0	%100
157	MP2C	X	0	0	0	%100
158	MP2C	Z	-9.446	-9.446	0	%100
159	MP3B	X	0	0	0	%100
160	MP3B	Z	-9.446	-9.446	0	%100
161	MP2B	X	0	0	0	%100

Member Distributed Loads (BLC 41 : Structure Wo (0 Deg)) (Continued)

	Member Label	Direction	Start Magnitude[lb/ft,...	End Magnitude[lb/ft,F...	Start Location[in,%]	End Location[in,%]
162	MP2B	Z	-9.446	-9.446	0	%100
163	MP1A	X	0	0	0	%100
164	MP1A	Z	-9.446	-9.446	0	%100
165	MP4A	X	0	0	0	%100
166	MP4A	Z	-9.446	-9.446	0	%100
167	MP1C	X	0	0	0	%100
168	MP1C	Z	-9.446	-9.446	0	%100
169	MP4C	X	0	0	0	%100
170	MP4C	Z	-9.446	-9.446	0	%100
171	MP1B	X	0	0	0	%100
172	MP1B	Z	-9.446	-9.446	0	%100
173	MP4B	X	0	0	0	%100
174	MP4B	Z	-9.446	-9.446	0	%100
175	M204A	X	0	0	0	%100
176	M204A	Z	-6.11	-6.11	0	%100
177	M205B	X	0	0	0	%100
178	M205B	Z	-6.11	-6.11	0	%100
179	M206	X	0	0	0	%100
180	M206	Z	-11.434	-11.434	0	%100
181	M207	X	0	0	0	%100
182	M207	Z	-2.859	-2.859	0	%100
183	M208	X	0	0	0	%100
184	M208	Z	-2.859	-2.859	0	%100
185	M227	X	0	0	0	%100
186	M227	Z	-3.535	-3.535	0	%100
187	M228	X	0	0	0	%100
188	M228	Z	-3.535	-3.535	0	%100
189	M229	X	0	0	0	%100
190	M229	Z	-14.14	-14.14	0	%100
191	M231	X	0	0	0	%100
192	M231	Z	-11.012	-11.012	0	%100
193	M231A	X	0	0	0	%100
194	M231A	Z	-11.012	-11.012	0	%100
195	M232	X	0	0	0	%100
196	M232	Z	-15.11	-15.11	0	%100
197	M233	X	0	0	0	%100
198	M233	Z	-3.852	-3.852	0	%100
199	M234	X	0	0	0	%100
200	M234	Z	-3.852	-3.852	0	%100
201	M235	X	0	0	0	%100
202	M235	Z	-15.11	-15.11	0	%100

Member Distributed Loads (BLC 42 : Structure Wo (30 Deg))

	Member Label	Direction	Start Magnitude[lb/ft,...	End Magnitude[lb/ft,F...	Start Location[in,%]	End Location[in,%]
1	M1	X	1.223	1.223	0	%100
2	M1	Z	-2.117	-2.117	0	%100
3	M4	X	2.996	2.996	0	%100
4	M4	Z	-5.19	-5.19	0	%100
5	M5	X	2.996	2.996	0	%100
6	M5	Z	-5.19	-5.19	0	%100
7	M18	X	3.259	3.259	0	%100
8	M18	Z	-5.645	-5.645	0	%100
9	M19	X	0	0	0	%100
10	M19	Z	0	0	0	%100
11	M20	X	3.521	3.521	0	%100
12	M20	Z	-6.099	-6.099	0	%100

Member Distributed Loads (BLC 42 : Structure Wo (30 Deg)) (Continued)

	Member Label	Direction	Start Magnitude[lb/ft,...	End Magnitude[lb/ft,F...	Start Location[in,%]	End Location[in,%]
13	M21	X	3.936	3.936	0	%100
14	M21	Z	-6.817	-6.817	0	%100
15	M22	X	3.259	3.259	0	%100
16	M22	Z	-5.645	-5.645	0	%100
17	M28	X	0	0	0	%100
18	M28	Z	0	0	0	%100
19	M29	X	8.037	8.037	0	%100
20	M29	Z	-13.921	-13.921	0	%100
21	M27A	X	0	0	0	%100
22	M27A	Z	0	0	0	%100
23	M28A	X	3.521	3.521	0	%100
24	M28A	Z	-6.099	-6.099	0	%100
25	M29A	X	3.936	3.936	0	%100
26	M29A	Z	-6.817	-6.817	0	%100
27	M44	X	9.259	9.259	0	%100
28	M44	Z	-16.037	-16.037	0	%100
29	M47	X	5.531	5.531	0	%100
30	M47	Z	-9.579	-9.579	0	%100
31	M48	X	5.531	5.531	0	%100
32	M48	Z	-9.579	-9.579	0	%100
33	M51	X	4.395	4.395	0	%100
34	M51	Z	-7.612	-7.612	0	%100
35	M52	X	1.223	1.223	0	%100
36	M52	Z	-2.117	-2.117	0	%100
37	M55	X	2.996	2.996	0	%100
38	M55	Z	-5.19	-5.19	0	%100
39	M56	X	2.996	2.996	0	%100
40	M56	Z	-5.19	-5.19	0	%100
41	M69	X	3.259	3.259	0	%100
42	M69	Z	-5.645	-5.645	0	%100
43	M70	X	3.521	3.521	0	%100
44	M70	Z	-6.099	-6.099	0	%100
45	M71	X	0	0	0	%100
46	M71	Z	0	0	0	%100
47	M72	X	3.936	3.936	0	%100
48	M72	Z	-6.817	-6.817	0	%100
49	M73	X	3.259	3.259	0	%100
50	M73	Z	-5.645	-5.645	0	%100
51	M76	X	8.037	8.037	0	%100
52	M76	Z	-13.921	-13.921	0	%100
53	M77	X	0	0	0	%100
54	M77	Z	0	0	0	%100
55	M78	X	3.521	3.521	0	%100
56	M78	Z	-6.099	-6.099	0	%100
57	M79	X	0	0	0	%100
58	M79	Z	0	0	0	%100
59	M80	X	3.936	3.936	0	%100
60	M80	Z	-6.817	-6.817	0	%100
61	M95	X	3.915	3.915	0	%100
62	M95	Z	-6.781	-6.781	0	%100
63	M98	X	9.259	9.259	0	%100
64	M98	Z	-16.037	-16.037	0	%100
65	M99	X	9.259	9.259	0	%100
66	M99	Z	-16.037	-16.037	0	%100
67	M102	X	4.395	4.395	0	%100
68	M102	Z	-7.612	-7.612	0	%100
69	M103	X	4.89	4.89	0	%100

Member Distributed Loads (BLC 42 : Structure Wo (30 Deg)) (Continued)

	Member Label	Direction	Start Magnitude[lb/ft,...	End Magnitude[lb/ft,F...	Start Location[in,%]	End Location[in,%]
70	M103	Z	-8.47	-8.47	0	%100
71	M106	X	11.986	11.986	0	%100
72	M106	Z	-20.76	-20.76	0	%100
73	M107	X	11.986	11.986	0	%100
74	M107	Z	-20.76	-20.76	0	%100
75	M120	X	0	0	0	%100
76	M120	Z	0	0	0	%100
77	M121	X	3.521	3.521	0	%100
78	M121	Z	-6.099	-6.099	0	%100
79	M122	X	3.521	3.521	0	%100
80	M122	Z	-6.099	-6.099	0	%100
81	M123	X	0	0	0	%100
82	M123	Z	0	0	0	%100
83	M124	X	0	0	0	%100
84	M124	Z	0	0	0	%100
85	M127	X	8.037	8.037	0	%100
86	M127	Z	-13.92	-13.92	0	%100
87	M128	X	8.037	8.037	0	%100
88	M128	Z	-13.92	-13.92	0	%100
89	M129	X	3.521	3.521	0	%100
90	M129	Z	-6.099	-6.099	0	%100
91	M130	X	3.521	3.521	0	%100
92	M130	Z	-6.099	-6.099	0	%100
93	M131	X	0	0	0	%100
94	M131	Z	0	0	0	%100
95	M146	X	11.931	11.931	0	%100
96	M146	Z	-20.665	-20.665	0	%100
97	M149	X	1.243	1.243	0	%100
98	M149	Z	-2.153	-2.153	0	%100
99	M150	X	1.243	1.243	0	%100
100	M150	Z	-2.153	-2.153	0	%100
101	M153	X	0	0	0	%100
102	M153	Z	0	0	0	%100
103	M148A	X	9.166	9.166	0	%100
104	M148A	Z	-15.876	-15.876	0	%100
105	M151A	X	3.542	3.542	0	%100
106	M151A	Z	-6.135	-6.135	0	%100
107	M152A	X	2.983	2.983	0	%100
108	M152A	Z	-5.166	-5.166	0	%100
109	M154	X	3.542	3.542	0	%100
110	M154	Z	-6.135	-6.135	0	%100
111	M157	X	0	0	0	%100
112	M157	Z	0	0	0	%100
113	M166	X	8.948	8.948	0	%100
114	M166	Z	-15.499	-15.499	0	%100
115	M162A	X	2.983	2.983	0	%100
116	M162A	Z	-5.166	-5.166	0	%100
117	M163A	X	8.948	8.948	0	%100
118	M163A	Z	-15.499	-15.499	0	%100
119	M164A	X	2.983	2.983	0	%100
120	M164A	Z	-5.166	-5.166	0	%100
121	M165A	X	8.948	8.948	0	%100
122	M165A	Z	-15.499	-15.499	0	%100
123	M166A	X	2.983	2.983	0	%100
124	M166A	Z	-5.166	-5.166	0	%100
125	M167	X	8.948	8.948	0	%100
126	M167	Z	-15.499	-15.499	0	%100

Member Distributed Loads (BLC 42 : Structure Wo (30 Deg)) (Continued)

	Member Label	Direction	Start Magnitude[lb/ft,...	End Magnitude[lb/ft,F...	Start Location[in,%]	End Location[in,%]
127	M168	X	11.931	11.931	0	%100
128	M168	Z	-20.665	-20.665	0	%100
129	M169	X	0	0	0	%100
130	M169	Z	0	0	0	%100
131	M170	X	11.931	11.931	0	%100
132	M170	Z	-20.665	-20.665	0	%100
133	M171	X	0	0	0	%100
134	M171	Z	0	0	0	%100
135	M172	X	3.283	3.283	0	%100
136	M172	Z	-5.687	-5.687	0	%100
137	M173	X	3.283	3.283	0	%100
138	M173	Z	-5.687	-5.687	0	%100
139	M174	X	0	0	0	%100
140	M174	Z	0	0	0	%100
141	M175	X	3.542	3.542	0	%100
142	M175	Z	-6.135	-6.135	0	%100
143	M176	X	3.542	3.542	0	%100
144	M176	Z	-6.135	-6.135	0	%100
145	M177	X	0	0	0	%100
146	M177	Z	0	0	0	%100
147	M203	X	3.862	3.862	0	%100
148	M203	Z	-6.689	-6.689	0	%100
149	OVP	X	4.723	4.723	0	%100
150	OVP	Z	-8.18	-8.18	0	%100
151	MP3A	X	4.723	4.723	0	%100
152	MP3A	Z	-8.18	-8.18	0	%100
153	MP2A	X	4.723	4.723	0	%100
154	MP2A	Z	-8.18	-8.18	0	%100
155	MP3C	X	4.723	4.723	0	%100
156	MP3C	Z	-8.18	-8.18	0	%100
157	MP2C	X	4.723	4.723	0	%100
158	MP2C	Z	-8.18	-8.18	0	%100
159	MP3B	X	4.723	4.723	0	%100
160	MP3B	Z	-8.18	-8.18	0	%100
161	MP2B	X	4.723	4.723	0	%100
162	MP2B	Z	-8.18	-8.18	0	%100
163	MP1A	X	4.723	4.723	0	%100
164	MP1A	Z	-8.18	-8.18	0	%100
165	MP4A	X	4.723	4.723	0	%100
166	MP4A	Z	-8.18	-8.18	0	%100
167	MP1C	X	4.723	4.723	0	%100
168	MP1C	Z	-8.18	-8.18	0	%100
169	MP4C	X	4.723	4.723	0	%100
170	MP4C	Z	-8.18	-8.18	0	%100
171	MP1B	X	4.723	4.723	0	%100
172	MP1B	Z	-8.18	-8.18	0	%100
173	MP4B	X	4.723	4.723	0	%100
174	MP4B	Z	-8.18	-8.18	0	%100
175	M204A	X	9.166	9.166	0	%100
176	M204A	Z	-15.876	-15.876	0	%100
177	M205B	X	0	0	0	%100
178	M205B	Z	0	0	0	%100
179	M206	X	4.288	4.288	0	%100
180	M206	Z	-7.427	-7.427	0	%100
181	M207	X	4.288	4.288	0	%100
182	M207	Z	-7.427	-7.427	0	%100
183	M208	X	0	0	0	%100

Member Distributed Loads (BLC 42 : Structure Wo (30 Deg)) (Continued)

	Member Label	Direction	Start Magnitude[lb/ft,...	End Magnitude[lb/ft,F...	Start Location[in,%]	End Location[in,%]
184	M208	Z	0	0	0	%100
185	M227	X	5.303	5.303	0	%100
186	M227	Z	-9.184	-9.184	0	%100
187	M228	X	0	0	0	%100
188	M228	Z	0	0	0	%100
189	M229	X	5.303	5.303	0	%100
190	M229	Z	-9.185	-9.185	0	%100
191	M231	X	2.436	2.436	0	%100
192	M231	Z	-4.22	-4.22	0	%100
193	M231A	X	8.065	8.065	0	%100
194	M231A	Z	-13.97	-13.97	0	%100
195	M232	X	8.065	8.065	0	%100
196	M232	Z	-13.97	-13.97	0	%100
197	M233	X	2.436	2.436	0	%100
198	M233	Z	-4.22	-4.22	0	%100
199	M234	X	4.486	4.486	0	%100
200	M234	Z	-7.769	-7.769	0	%100
201	M235	X	4.486	4.486	0	%100
202	M235	Z	-7.769	-7.769	0	%100

Member Distributed Loads (BLC 43 : Structure Wo (60 Deg))

	Member Label	Direction	Start Magnitude[lb/ft,...	End Magnitude[lb/ft,F...	Start Location[in,%]	End Location[in,%]
1	M1	X	6.352	6.352	0	%100
2	M1	Z	-3.668	-3.668	0	%100
3	M4	X	15.57	15.57	0	%100
4	M4	Z	-8.989	-8.989	0	%100
5	M5	X	15.57	15.57	0	%100
6	M5	Z	-8.989	-8.989	0	%100
7	M18	X	1.882	1.882	0	%100
8	M18	Z	-1.086	-1.086	0	%100
9	M19	X	2.033	2.033	0	%100
10	M19	Z	-1.174	-1.174	0	%100
11	M20	X	8.132	8.132	0	%100
12	M20	Z	-4.695	-4.695	0	%100
13	M21	X	2.272	2.272	0	%100
14	M21	Z	-1.312	-1.312	0	%100
15	M22	X	1.882	1.882	0	%100
16	M22	Z	-1.086	-1.086	0	%100
17	M28	X	4.64	4.64	0	%100
18	M28	Z	-2.679	-2.679	0	%100
19	M29	X	18.561	18.561	0	%100
20	M29	Z	-10.716	-10.716	0	%100
21	M27A	X	2.033	2.033	0	%100
22	M27A	Z	-1.174	-1.174	0	%100
23	M28A	X	8.132	8.132	0	%100
24	M28A	Z	-4.695	-4.695	0	%100
25	M29A	X	2.272	2.272	0	%100
26	M29A	Z	-1.312	-1.312	0	%100
27	M44	X	6.781	6.781	0	%100
28	M44	Z	-3.915	-3.915	0	%100
29	M47	X	26.155	26.155	0	%100
30	M47	Z	-15.1	-15.1	0	%100
31	M48	X	26.155	26.155	0	%100
32	M48	Z	-15.1	-15.1	0	%100
33	M51	X	2.537	2.537	0	%100
34	M51	Z	-1.465	-1.465	0	%100

Member Distributed Loads (BLC 43 : Structure Wo (60 Deg)) (Continued)

	Member Label	Direction	Start Magnitude[lb/ft,...	End Magnitude[lb/ft,F...	Start Location[in,%]	End Location[in,%]
35	M52	X	0	0	0	%100
36	M52	Z	0	0	0	%100
37	M55	X	0	0	0	%100
38	M55	Z	0	0	0	%100
39	M56	X	0	0	0	%100
40	M56	Z	0	0	0	%100
41	M69	X	7.526	7.526	0	%100
42	M69	Z	-4.345	-4.345	0	%100
43	M70	X	2.033	2.033	0	%100
44	M70	Z	-1.174	-1.174	0	%100
45	M71	X	2.033	2.033	0	%100
46	M71	Z	-1.174	-1.174	0	%100
47	M72	X	9.089	9.089	0	%100
48	M72	Z	-5.248	-5.248	0	%100
49	M73	X	7.526	7.526	0	%100
50	M73	Z	-4.345	-4.345	0	%100
51	M76	X	4.64	4.64	0	%100
52	M76	Z	-2.679	-2.679	0	%100
53	M77	X	4.64	4.64	0	%100
54	M77	Z	-2.679	-2.679	0	%100
55	M78	X	2.033	2.033	0	%100
56	M78	Z	-1.174	-1.174	0	%100
57	M79	X	2.033	2.033	0	%100
58	M79	Z	-1.174	-1.174	0	%100
59	M80	X	9.089	9.089	0	%100
60	M80	Z	-5.248	-5.248	0	%100
61	M95	X	2.153	2.153	0	%100
62	M95	Z	-1.243	-1.243	0	%100
63	M98	X	20.665	20.665	0	%100
64	M98	Z	-11.931	-11.931	0	%100
65	M99	X	20.665	20.665	0	%100
66	M99	Z	-11.931	-11.931	0	%100
67	M102	X	10.149	10.149	0	%100
68	M102	Z	-5.86	-5.86	0	%100
69	M103	X	6.352	6.352	0	%100
70	M103	Z	-3.668	-3.668	0	%100
71	M106	X	15.57	15.57	0	%100
72	M106	Z	-8.989	-8.989	0	%100
73	M107	X	15.57	15.57	0	%100
74	M107	Z	-8.989	-8.989	0	%100
75	M120	X	1.882	1.882	0	%100
76	M120	Z	-1.086	-1.086	0	%100
77	M121	X	8.132	8.132	0	%100
78	M121	Z	-4.695	-4.695	0	%100
79	M122	X	2.033	2.033	0	%100
80	M122	Z	-1.174	-1.174	0	%100
81	M123	X	2.272	2.272	0	%100
82	M123	Z	-1.312	-1.312	0	%100
83	M124	X	1.882	1.882	0	%100
84	M124	Z	-1.086	-1.086	0	%100
85	M127	X	18.561	18.561	0	%100
86	M127	Z	-10.716	-10.716	0	%100
87	M128	X	4.64	4.64	0	%100
88	M128	Z	-2.679	-2.679	0	%100
89	M129	X	8.132	8.132	0	%100
90	M129	Z	-4.695	-4.695	0	%100
91	M130	X	2.033	2.033	0	%100

Member Distributed Loads (BLC 43 : Structure Wo (60 Deg)) (Continued)

	Member Label	Direction	Start Magnitude[lb/ft,...	End Magnitude[lb/ft,F...	Start Location[in,%]	End Location[in,%]
92	M130	Z	-1.174	-1.174	0	%100
93	M131	X	2.272	2.272	0	%100
94	M131	Z	-1.312	-1.312	0	%100
95	M146	X	16.037	16.037	0	%100
96	M146	Z	-9.259	-9.259	0	%100
97	M149	X	6.781	6.781	0	%100
98	M149	Z	-3.915	-3.915	0	%100
99	M150	X	6.781	6.781	0	%100
100	M150	Z	-3.915	-3.915	0	%100
101	M153	X	2.537	2.537	0	%100
102	M153	Z	-1.465	-1.465	0	%100
103	M148A	X	5.292	5.292	0	%100
104	M148A	Z	-3.055	-3.055	0	%100
105	M151A	X	2.045	2.045	0	%100
106	M151A	Z	-1.181	-1.181	0	%100
107	M152A	X	15.499	15.499	0	%100
108	M152A	Z	-8.948	-8.948	0	%100
109	M154	X	8.18	8.18	0	%100
110	M154	Z	-4.723	-4.723	0	%100
111	M157	X	2.045	2.045	0	%100
112	M157	Z	-1.181	-1.181	0	%100
113	M166	X	5.166	5.166	0	%100
114	M166	Z	-2.983	-2.983	0	%100
115	M162A	X	15.499	15.499	0	%100
116	M162A	Z	-8.948	-8.948	0	%100
117	M163A	X	5.166	5.166	0	%100
118	M163A	Z	-2.983	-2.983	0	%100
119	M164A	X	0	0	0	%100
120	M164A	Z	0	0	0	%100
121	M165A	X	20.665	20.665	0	%100
122	M165A	Z	-11.931	-11.931	0	%100
123	M166A	X	0	0	0	%100
124	M166A	Z	0	0	0	%100
125	M167	X	20.665	20.665	0	%100
126	M167	Z	-11.931	-11.931	0	%100
127	M168	X	15.499	15.499	0	%100
128	M168	Z	-8.948	-8.948	0	%100
129	M169	X	5.166	5.166	0	%100
130	M169	Z	-2.983	-2.983	0	%100
131	M170	X	15.499	15.499	0	%100
132	M170	Z	-8.948	-8.948	0	%100
133	M171	X	5.166	5.166	0	%100
134	M171	Z	-2.983	-2.983	0	%100
135	M172	X	1.896	1.896	0	%100
136	M172	Z	-1.094	-1.094	0	%100
137	M173	X	7.582	7.582	0	%100
138	M173	Z	-4.378	-4.378	0	%100
139	M174	X	1.896	1.896	0	%100
140	M174	Z	-1.094	-1.094	0	%100
141	M175	X	2.045	2.045	0	%100
142	M175	Z	-1.181	-1.181	0	%100
143	M176	X	8.18	8.18	0	%100
144	M176	Z	-4.723	-4.723	0	%100
145	M177	X	2.045	2.045	0	%100
146	M177	Z	-1.181	-1.181	0	%100
147	M203	X	6.689	6.689	0	%100
148	M203	Z	-3.862	-3.862	0	%100

Member Distributed Loads (BLC 43 : Structure Wo (60 Deg)) (Continued)

	Member Label	Direction	Start Magnitude[lb/ft,...	End Magnitude[lb/ft,F...	Start Location[in,%]	End Location[in,%]
149	OVP	X	8.18	8.18	0	%100
150	OVP	Z	-4.723	-4.723	0	%100
151	MP3A	X	8.18	8.18	0	%100
152	MP3A	Z	-4.723	-4.723	0	%100
153	MP2A	X	8.18	8.18	0	%100
154	MP2A	Z	-4.723	-4.723	0	%100
155	MP3C	X	8.18	8.18	0	%100
156	MP3C	Z	-4.723	-4.723	0	%100
157	MP2C	X	8.18	8.18	0	%100
158	MP2C	Z	-4.723	-4.723	0	%100
159	MP3B	X	8.18	8.18	0	%100
160	MP3B	Z	-4.723	-4.723	0	%100
161	MP2B	X	8.18	8.18	0	%100
162	MP2B	Z	-4.723	-4.723	0	%100
163	MP1A	X	8.18	8.18	0	%100
164	MP1A	Z	-4.723	-4.723	0	%100
165	MP4A	X	8.18	8.18	0	%100
166	MP4A	Z	-4.723	-4.723	0	%100
167	MP1C	X	8.18	8.18	0	%100
168	MP1C	Z	-4.723	-4.723	0	%100
169	MP4C	X	8.18	8.18	0	%100
170	MP4C	Z	-4.723	-4.723	0	%100
171	MP1B	X	8.18	8.18	0	%100
172	MP1B	Z	-4.723	-4.723	0	%100
173	MP4B	X	8.18	8.18	0	%100
174	MP4B	Z	-4.723	-4.723	0	%100
175	M204A	X	21.167	21.167	0	%100
176	M204A	Z	-12.221	-12.221	0	%100
177	M205B	X	5.292	5.292	0	%100
178	M205B	Z	-3.055	-3.055	0	%100
179	M206	X	2.476	2.476	0	%100
180	M206	Z	-1.429	-1.429	0	%100
181	M207	X	9.902	9.902	0	%100
182	M207	Z	-5.717	-5.717	0	%100
183	M208	X	2.476	2.476	0	%100
184	M208	Z	-1.429	-1.429	0	%100
185	M227	X	12.246	12.246	0	%100
186	M227	Z	-7.07	-7.07	0	%100
187	M228	X	3.061	3.061	0	%100
188	M228	Z	-1.768	-1.768	0	%100
189	M229	X	3.062	3.062	0	%100
190	M229	Z	-1.768	-1.768	0	%100
191	M231	X	3.336	3.336	0	%100
192	M231	Z	-1.926	-1.926	0	%100
193	M231A	X	13.086	13.086	0	%100
194	M231A	Z	-7.555	-7.555	0	%100
195	M232	X	9.536	9.536	0	%100
196	M232	Z	-5.506	-5.506	0	%100
197	M233	X	9.536	9.536	0	%100
198	M233	Z	-5.506	-5.506	0	%100
199	M234	X	13.086	13.086	0	%100
200	M234	Z	-7.555	-7.555	0	%100
201	M235	X	3.336	3.336	0	%100
202	M235	Z	-1.926	-1.926	0	%100

Member Distributed Loads (BLC 44 : Structure Wo (90 Deg))

	Member Label	Direction	Start Magnitude[lb/ft,...	End Magnitude[lb/ft,F...	Start Location[in,%]	End Location[in,%]

Member Distributed Loads (BLC 44 : Structure Wo (90 Deg)) (Continued)

	Member Label	Direction	Start Magnitude[lb/ft,...	End Magnitude[lb/ft,F...	Start Location[in,%]	End Location[in,%]
1	M1	X	9.78	9.78	0	%100
2	M1	Z	0	0	0	%100
3	M4	X	23.972	23.972	0	%100
4	M4	Z	0	0	0	%100
5	M5	X	23.972	23.972	0	%100
6	M5	Z	0	0	0	%100
7	M18	X	0	0	0	%100
8	M18	Z	0	0	0	%100
9	M19	X	7.043	7.043	0	%100
10	M19	Z	0	0	0	%100
11	M20	X	7.043	7.043	0	%100
12	M20	Z	0	0	0	%100
13	M21	X	0	0	0	%100
14	M21	Z	0	0	0	%100
15	M22	X	0	0	0	%100
16	M22	Z	0	0	0	%100
17	M28	X	16.074	16.074	0	%100
18	M28	Z	0	0	0	%100
19	M29	X	16.074	16.074	0	%100
20	M29	Z	0	0	0	%100
21	M27A	X	7.043	7.043	0	%100
22	M27A	Z	0	0	0	%100
23	M28A	X	7.043	7.043	0	%100
24	M28A	Z	0	0	0	%100
25	M29A	X	0	0	0	%100
26	M29A	Z	0	0	0	%100
27	M44	X	2.486	2.486	0	%100
28	M44	Z	0	0	0	%100
29	M47	X	39.771	39.771	0	%100
30	M47	Z	0	0	0	%100
31	M48	X	39.771	39.771	0	%100
32	M48	Z	0	0	0	%100
33	M51	X	0	0	0	%100
34	M51	Z	0	0	0	%100
35	M52	X	2.445	2.445	0	%100
36	M52	Z	0	0	0	%100
37	M55	X	5.993	5.993	0	%100
38	M55	Z	0	0	0	%100
39	M56	X	5.993	5.993	0	%100
40	M56	Z	0	0	0	%100
41	M69	X	6.518	6.518	0	%100
42	M69	Z	0	0	0	%100
43	M70	X	0	0	0	%100
44	M70	Z	0	0	0	%100
45	M71	X	7.043	7.043	0	%100
46	M71	Z	0	0	0	%100
47	M72	X	7.871	7.871	0	%100
48	M72	Z	0	0	0	%100
49	M73	X	6.518	6.518	0	%100
50	M73	Z	0	0	0	%100
51	M76	X	0	0	0	%100
52	M76	Z	0	0	0	%100
53	M77	X	16.074	16.074	0	%100
54	M77	Z	0	0	0	%100
55	M78	X	0	0	0	%100
56	M78	Z	0	0	0	%100
57	M79	X	7.043	7.043	0	%100

Member Distributed Loads (BLC 44 : Structure Wo (90 Deg)) (Continued)

	Member Label	Direction	Start Magnitude[lb/ft,...	End Magnitude[lb/ft,F...	Start Location[in,%]	End Location[in,%]
58	M79	Z	0	0	0	%100
59	M80	X	7.871	7.871	0	%100
60	M80	Z	0	0	0	%100
61	M95	X	7.83	7.83	0	%100
62	M95	Z	0	0	0	%100
63	M98	X	18.518	18.518	0	%100
64	M98	Z	0	0	0	%100
65	M99	X	18.518	18.518	0	%100
66	M99	Z	0	0	0	%100
67	M102	X	8.79	8.79	0	%100
68	M102	Z	0	0	0	%100
69	M103	X	2.445	2.445	0	%100
70	M103	Z	0	0	0	%100
71	M106	X	5.993	5.993	0	%100
72	M106	Z	0	0	0	%100
73	M107	X	5.993	5.993	0	%100
74	M107	Z	0	0	0	%100
75	M120	X	6.518	6.518	0	%100
76	M120	Z	0	0	0	%100
77	M121	X	7.043	7.043	0	%100
78	M121	Z	0	0	0	%100
79	M122	X	0	0	0	%100
80	M122	Z	0	0	0	%100
81	M123	X	7.871	7.871	0	%100
82	M123	Z	0	0	0	%100
83	M124	X	6.518	6.518	0	%100
84	M124	Z	0	0	0	%100
85	M127	X	16.074	16.074	0	%100
86	M127	Z	0	0	0	%100
87	M128	X	0	0	0	%100
88	M128	Z	0	0	0	%100
89	M129	X	7.043	7.043	0	%100
90	M129	Z	0	0	0	%100
91	M130	X	0	0	0	%100
92	M130	Z	0	0	0	%100
93	M131	X	7.871	7.871	0	%100
94	M131	Z	0	0	0	%100
95	M146	X	7.83	7.83	0	%100
96	M146	Z	0	0	0	%100
97	M149	X	18.518	18.518	0	%100
98	M149	Z	0	0	0	%100
99	M150	X	18.518	18.518	0	%100
100	M150	Z	0	0	0	%100
101	M153	X	8.79	8.79	0	%100
102	M153	Z	0	0	0	%100
103	M148A	X	0	0	0	%100
104	M148A	Z	0	0	0	%100
105	M151A	X	0	0	0	%100
106	M151A	Z	0	0	0	%100
107	M152A	X	23.862	23.862	0	%100
108	M152A	Z	0	0	0	%100
109	M154	X	7.084	7.084	0	%100
110	M154	Z	0	0	0	%100
111	M157	X	7.084	7.084	0	%100
112	M157	Z	0	0	0	%100
113	M166	X	0	0	0	%100
114	M166	Z	0	0	0	%100

Member Distributed Loads (BLC 44 : Structure Wo (90 Deg)) (Continued)

	Member Label	Direction	Start Magnitude[lb/ft,...	End Magnitude[lb/ft,F...	Start Location[in,%]	End Location[in,%]
115	M162A	X	23.862	23.862	0	%100
116	M162A	Z	0	0	0	%100
117	M163A	X	0	0	0	%100
118	M163A	Z	0	0	0	%100
119	M164A	X	5.966	5.966	0	%100
120	M164A	Z	0	0	0	%100
121	M165A	X	17.897	17.897	0	%100
122	M165A	Z	0	0	0	%100
123	M166A	X	5.965	5.965	0	%100
124	M166A	Z	0	0	0	%100
125	M167	X	17.897	17.897	0	%100
126	M167	Z	0	0	0	%100
127	M168	X	5.966	5.966	0	%100
128	M168	Z	0	0	0	%100
129	M169	X	17.897	17.897	0	%100
130	M169	Z	0	0	0	%100
131	M170	X	5.966	5.966	0	%100
132	M170	Z	0	0	0	%100
133	M171	X	17.897	17.897	0	%100
134	M171	Z	0	0	0	%100
135	M172	X	0	0	0	%100
136	M172	Z	0	0	0	%100
137	M173	X	6.566	6.566	0	%100
138	M173	Z	0	0	0	%100
139	M174	X	6.566	6.566	0	%100
140	M174	Z	0	0	0	%100
141	M175	X	0	0	0	%100
142	M175	Z	0	0	0	%100
143	M176	X	7.084	7.084	0	%100
144	M176	Z	0	0	0	%100
145	M177	X	7.084	7.084	0	%100
146	M177	Z	0	0	0	%100
147	M203	X	7.724	7.724	0	%100
148	M203	Z	0	0	0	%100
149	OVP	X	9.446	9.446	0	%100
150	OVP	Z	0	0	0	%100
151	MP3A	X	9.446	9.446	0	%100
152	MP3A	Z	0	0	0	%100
153	MP2A	X	9.446	9.446	0	%100
154	MP2A	Z	0	0	0	%100
155	MP3C	X	9.446	9.446	0	%100
156	MP3C	Z	0	0	0	%100
157	MP2C	X	9.446	9.446	0	%100
158	MP2C	Z	0	0	0	%100
159	MP3B	X	9.446	9.446	0	%100
160	MP3B	Z	0	0	0	%100
161	MP2B	X	9.446	9.446	0	%100
162	MP2B	Z	0	0	0	%100
163	MP1A	X	9.446	9.446	0	%100
164	MP1A	Z	0	0	0	%100
165	MP4A	X	9.446	9.446	0	%100
166	MP4A	Z	0	0	0	%100
167	MP1C	X	9.446	9.446	0	%100
168	MP1C	Z	0	0	0	%100
169	MP4C	X	9.446	9.446	0	%100
170	MP4C	Z	0	0	0	%100
171	MP1B	X	9.446	9.446	0	%100

Member Distributed Loads (BLC 44 : Structure Wo (90 Deg)) (Continued)

	Member Label	Direction	Start Magnitude[lb/ft,...	End Magnitude[lb/ft,F...	Start Location[in,%]	End Location[in,%]
172	MP1B	Z	0	0	0	%100
173	MP4B	X	9.446	9.446	0	%100
174	MP4B	Z	0	0	0	%100
175	M204A	X	18.331	18.331	0	%100
176	M204A	Z	0	0	0	%100
177	M205B	X	18.331	18.331	0	%100
178	M205B	Z	0	0	0	%100
179	M206	X	0	0	0	%100
180	M206	Z	0	0	0	%100
181	M207	X	8.576	8.576	0	%100
182	M207	Z	0	0	0	%100
183	M208	X	8.576	8.576	0	%100
184	M208	Z	0	0	0	%100
185	M227	X	10.605	10.605	0	%100
186	M227	Z	0	0	0	%100
187	M228	X	10.605	10.605	0	%100
188	M228	Z	0	0	0	%100
189	M229	X	0	0	0	%100
190	M229	Z	0	0	0	%100
191	M231	X	8.971	8.971	0	%100
192	M231	Z	0	0	0	%100
193	M231A	X	8.971	8.971	0	%100
194	M231A	Z	0	0	0	%100
195	M232	X	4.872	4.872	0	%100
196	M232	Z	0	0	0	%100
197	M233	X	16.131	16.131	0	%100
198	M233	Z	0	0	0	%100
199	M234	X	16.131	16.131	0	%100
200	M234	Z	0	0	0	%100
201	M235	X	4.872	4.872	0	%100
202	M235	Z	0	0	0	%100

Member Distributed Loads (BLC 45 : Structure Wo (120 Deg))

	Member Label	Direction	Start Magnitude[lb/ft,...	End Magnitude[lb/ft,F...	Start Location[in,%]	End Location[in,%]
1	M1	X	6.352	6.352	0	%100
2	M1	Z	3.668	3.668	0	%100
3	M4	X	15.57	15.57	0	%100
4	M4	Z	8.989	8.989	0	%100
5	M5	X	15.57	15.57	0	%100
6	M5	Z	8.989	8.989	0	%100
7	M18	X	1.882	1.882	0	%100
8	M18	Z	1.086	1.086	0	%100
9	M19	X	8.132	8.132	0	%100
10	M19	Z	4.695	4.695	0	%100
11	M20	X	2.033	2.033	0	%100
12	M20	Z	1.174	1.174	0	%100
13	M21	X	2.272	2.272	0	%100
14	M21	Z	1.312	1.312	0	%100
15	M22	X	1.882	1.882	0	%100
16	M22	Z	1.086	1.086	0	%100
17	M28	X	18.561	18.561	0	%100
18	M28	Z	10.716	10.716	0	%100
19	M29	X	4.64	4.64	0	%100
20	M29	Z	2.679	2.679	0	%100
21	M27A	X	8.132	8.132	0	%100
22	M27A	Z	4.695	4.695	0	%100

Member Distributed Loads (BLC 45 : Structure Wo (120 Deg)) (Continued)

	Member Label	Direction	Start Magnitude[lb/ft,...	End Magnitude[lb/ft,F...	Start Location[in,%]	End Location[in,%]
23	M28A	X	2.033	2.033	0	%100
24	M28A	Z	1.174	1.174	0	%100
25	M29A	X	2.272	2.272	0	%100
26	M29A	Z	1.312	1.312	0	%100
27	M44	X	6.781	6.781	0	%100
28	M44	Z	3.915	3.915	0	%100
29	M47	X	26.155	26.155	0	%100
30	M47	Z	15.1	15.1	0	%100
31	M48	X	26.155	26.155	0	%100
32	M48	Z	15.1	15.1	0	%100
33	M51	X	2.537	2.537	0	%100
34	M51	Z	1.465	1.465	0	%100
35	M52	X	6.352	6.352	0	%100
36	M52	Z	3.668	3.668	0	%100
37	M55	X	15.57	15.57	0	%100
38	M55	Z	8.989	8.989	0	%100
39	M56	X	15.57	15.57	0	%100
40	M56	Z	8.989	8.989	0	%100
41	M69	X	1.882	1.882	0	%100
42	M69	Z	1.086	1.086	0	%100
43	M70	X	2.033	2.033	0	%100
44	M70	Z	1.174	1.174	0	%100
45	M71	X	8.132	8.132	0	%100
46	M71	Z	4.695	4.695	0	%100
47	M72	X	2.272	2.272	0	%100
48	M72	Z	1.312	1.312	0	%100
49	M73	X	1.882	1.882	0	%100
50	M73	Z	1.086	1.086	0	%100
51	M76	X	4.64	4.64	0	%100
52	M76	Z	2.679	2.679	0	%100
53	M77	X	18.561	18.561	0	%100
54	M77	Z	10.716	10.716	0	%100
55	M78	X	2.033	2.033	0	%100
56	M78	Z	1.174	1.174	0	%100
57	M79	X	8.132	8.132	0	%100
58	M79	Z	4.695	4.695	0	%100
59	M80	X	2.272	2.272	0	%100
60	M80	Z	1.312	1.312	0	%100
61	M95	X	16.037	16.037	0	%100
62	M95	Z	9.259	9.259	0	%100
63	M98	X	6.781	6.781	0	%100
64	M98	Z	3.915	3.915	0	%100
65	M99	X	6.781	6.781	0	%100
66	M99	Z	3.915	3.915	0	%100
67	M102	X	2.537	2.537	0	%100
68	M102	Z	1.465	1.465	0	%100
69	M103	X	0	0	0	%100
70	M103	Z	0	0	0	%100
71	M106	X	0	0	0	%100
72	M106	Z	0	0	0	%100
73	M107	X	0	0	0	%100
74	M107	Z	0	0	0	%100
75	M120	X	7.526	7.526	0	%100
76	M120	Z	4.345	4.345	0	%100
77	M121	X	2.033	2.033	0	%100
78	M121	Z	1.174	1.174	0	%100
79	M122	X	2.033	2.033	0	%100

Member Distributed Loads (BLC 45 : Structure Wo (120 Deg)) (Continued)

	Member Label	Direction	Start Magnitude[lb/ft,...	End Magnitude[lb/ft,F...	Start Location[in,%]	End Location[in,%]
80	M122	Z	1.174	1.174	0	%100
81	M123	X	9.089	9.089	0	%100
82	M123	Z	5.248	5.248	0	%100
83	M124	X	7.526	7.526	0	%100
84	M124	Z	4.345	4.345	0	%100
85	M127	X	4.64	4.64	0	%100
86	M127	Z	2.679	2.679	0	%100
87	M128	X	4.64	4.64	0	%100
88	M128	Z	2.679	2.679	0	%100
89	M129	X	2.033	2.033	0	%100
90	M129	Z	1.174	1.174	0	%100
91	M130	X	2.033	2.033	0	%100
92	M130	Z	1.174	1.174	0	%100
93	M131	X	9.089	9.089	0	%100
94	M131	Z	5.248	5.248	0	%100
95	M146	X	2.153	2.153	0	%100
96	M146	Z	1.243	1.243	0	%100
97	M149	X	20.665	20.665	0	%100
98	M149	Z	11.931	11.931	0	%100
99	M150	X	20.665	20.665	0	%100
100	M150	Z	11.931	11.931	0	%100
101	M153	X	10.149	10.149	0	%100
102	M153	Z	5.86	5.86	0	%100
103	M148A	X	5.292	5.292	0	%100
104	M148A	Z	3.055	3.055	0	%100
105	M151A	X	2.045	2.045	0	%100
106	M151A	Z	1.181	1.181	0	%100
107	M152A	X	15.499	15.499	0	%100
108	M152A	Z	8.948	8.948	0	%100
109	M154	X	2.045	2.045	0	%100
110	M154	Z	1.181	1.181	0	%100
111	M157	X	8.18	8.18	0	%100
112	M157	Z	4.723	4.723	0	%100
113	M166	X	5.166	5.166	0	%100
114	M166	Z	2.983	2.983	0	%100
115	M162A	X	15.499	15.499	0	%100
116	M162A	Z	8.948	8.948	0	%100
117	M163A	X	5.166	5.166	0	%100
118	M163A	Z	2.983	2.983	0	%100
119	M164A	X	15.499	15.499	0	%100
120	M164A	Z	8.948	8.948	0	%100
121	M165A	X	5.166	5.166	0	%100
122	M165A	Z	2.983	2.983	0	%100
123	M166A	X	15.499	15.499	0	%100
124	M166A	Z	8.948	8.948	0	%100
125	M167	X	5.166	5.166	0	%100
126	M167	Z	2.983	2.983	0	%100
127	M168	X	0	0	0	%100
128	M168	Z	0	0	0	%100
129	M169	X	20.665	20.665	0	%100
130	M169	Z	11.931	11.931	0	%100
131	M170	X	0	0	0	%100
132	M170	Z	0	0	0	%100
133	M171	X	20.665	20.665	0	%100
134	M171	Z	11.931	11.931	0	%100
135	M172	X	1.896	1.896	0	%100
136	M172	Z	1.094	1.094	0	%100

Member Distributed Loads (BLC 45 : Structure Wo (120 Deg)) (Continued)

	Member Label	Direction	Start Magnitude[lb/ft,...	End Magnitude[lb/ft,F...	Start Location[in,%]	End Location[in,%]
137	M173	X	1.896	1.896	0	%100
138	M173	Z	1.094	1.094	0	%100
139	M174	X	7.582	7.582	0	%100
140	M174	Z	4.378	4.378	0	%100
141	M175	X	2.045	2.045	0	%100
142	M175	Z	1.181	1.181	0	%100
143	M176	X	2.045	2.045	0	%100
144	M176	Z	1.181	1.181	0	%100
145	M177	X	8.18	8.18	0	%100
146	M177	Z	4.723	4.723	0	%100
147	M203	X	6.689	6.689	0	%100
148	M203	Z	3.862	3.862	0	%100
149	OVP	X	8.18	8.18	0	%100
150	OVP	Z	4.723	4.723	0	%100
151	MP3A	X	8.18	8.18	0	%100
152	MP3A	Z	4.723	4.723	0	%100
153	MP2A	X	8.18	8.18	0	%100
154	MP2A	Z	4.723	4.723	0	%100
155	MP3C	X	8.18	8.18	0	%100
156	MP3C	Z	4.723	4.723	0	%100
157	MP2C	X	8.18	8.18	0	%100
158	MP2C	Z	4.723	4.723	0	%100
159	MP3B	X	8.18	8.18	0	%100
160	MP3B	Z	4.723	4.723	0	%100
161	MP2B	X	8.18	8.18	0	%100
162	MP2B	Z	4.723	4.723	0	%100
163	MP1A	X	8.18	8.18	0	%100
164	MP1A	Z	4.723	4.723	0	%100
165	MP4A	X	8.18	8.18	0	%100
166	MP4A	Z	4.723	4.723	0	%100
167	MP1C	X	8.18	8.18	0	%100
168	MP1C	Z	4.723	4.723	0	%100
169	MP4C	X	8.18	8.18	0	%100
170	MP4C	Z	4.723	4.723	0	%100
171	MP1B	X	8.18	8.18	0	%100
172	MP1B	Z	4.723	4.723	0	%100
173	MP4B	X	8.18	8.18	0	%100
174	MP4B	Z	4.723	4.723	0	%100
175	M204A	X	5.292	5.292	0	%100
176	M204A	Z	3.055	3.055	0	%100
177	M205B	X	21.167	21.167	0	%100
178	M205B	Z	12.221	12.221	0	%100
179	M206	X	2.476	2.476	0	%100
180	M206	Z	1.429	1.429	0	%100
181	M207	X	2.476	2.476	0	%100
182	M207	Z	1.429	1.429	0	%100
183	M208	X	9.902	9.902	0	%100
184	M208	Z	5.717	5.717	0	%100
185	M227	X	3.062	3.062	0	%100
186	M227	Z	1.768	1.768	0	%100
187	M228	X	12.246	12.246	0	%100
188	M228	Z	7.07	7.07	0	%100
189	M229	X	3.061	3.061	0	%100
190	M229	Z	1.768	1.768	0	%100
191	M231	X	13.086	13.086	0	%100
192	M231	Z	7.555	7.555	0	%100
193	M231A	X	3.336	3.336	0	%100

Member Distributed Loads (BLC 45 : Structure Wo (120 Deg)) (Continued)

	Member Label	Direction	Start Magnitude[lb/ft,...	End Magnitude[lb/ft,F...	Start Location[in,%]	End Location[in,%]
194	M231A	Z	1.926	1.926	0	%100
195	M232	X	3.336	3.336	0	%100
196	M232	Z	1.926	1.926	0	%100
197	M233	X	13.086	13.086	0	%100
198	M233	Z	7.555	7.555	0	%100
199	M234	X	9.536	9.536	0	%100
200	M234	Z	5.506	5.506	0	%100
201	M235	X	9.536	9.536	0	%100
202	M235	Z	5.506	5.506	0	%100

Member Distributed Loads (BLC 46 : Structure Wo (150 Deg))

	Member Label	Direction	Start Magnitude[lb/ft,...	End Magnitude[lb/ft,F...	Start Location[in,%]	End Location[in,%]
1	M1	X	1.223	1.223	0	%100
2	M1	Z	2.117	2.117	0	%100
3	M4	X	2.996	2.996	0	%100
4	M4	Z	5.19	5.19	0	%100
5	M5	X	2.996	2.996	0	%100
6	M5	Z	5.19	5.19	0	%100
7	M18	X	3.259	3.259	0	%100
8	M18	Z	5.645	5.645	0	%100
9	M19	X	3.521	3.521	0	%100
10	M19	Z	6.099	6.099	0	%100
11	M20	X	0	0	0	%100
12	M20	Z	0	0	0	%100
13	M21	X	3.936	3.936	0	%100
14	M21	Z	6.817	6.817	0	%100
15	M22	X	3.259	3.259	0	%100
16	M22	Z	5.645	5.645	0	%100
17	M28	X	8.037	8.037	0	%100
18	M28	Z	13.921	13.921	0	%100
19	M29	X	0	0	0	%100
20	M29	Z	0	0	0	%100
21	M27A	X	3.521	3.521	0	%100
22	M27A	Z	6.099	6.099	0	%100
23	M28A	X	0	0	0	%100
24	M28A	Z	0	0	0	%100
25	M29A	X	3.936	3.936	0	%100
26	M29A	Z	6.817	6.817	0	%100
27	M44	X	9.259	9.259	0	%100
28	M44	Z	16.037	16.037	0	%100
29	M47	X	5.531	5.531	0	%100
30	M47	Z	9.579	9.579	0	%100
31	M48	X	5.531	5.531	0	%100
32	M48	Z	9.579	9.579	0	%100
33	M51	X	4.395	4.395	0	%100
34	M51	Z	7.612	7.612	0	%100
35	M52	X	4.89	4.89	0	%100
36	M52	Z	8.47	8.47	0	%100
37	M55	X	11.986	11.986	0	%100
38	M55	Z	20.76	20.76	0	%100
39	M56	X	11.986	11.986	0	%100
40	M56	Z	20.76	20.76	0	%100
41	M69	X	0	0	0	%100
42	M69	Z	0	0	0	%100
43	M70	X	3.521	3.521	0	%100
44	M70	Z	6.099	6.099	0	%100

Member Distributed Loads (BLC 46 : Structure Wo (150 Deg)) (Continued)

	Member Label	Direction	Start Magnitude[lb/ft,...	End Magnitude[lb/ft,F...	Start Location[in,%]	End Location[in,%]
45	M71	X	3.521	3.521	0	%100
46	M71	Z	6.099	6.099	0	%100
47	M72	X	0	0	0	%100
48	M72	Z	0	0	0	%100
49	M73	X	0	0	0	%100
50	M73	Z	0	0	0	%100
51	M76	X	8.037	8.037	0	%100
52	M76	Z	13.92	13.92	0	%100
53	M77	X	8.037	8.037	0	%100
54	M77	Z	13.92	13.92	0	%100
55	M78	X	3.521	3.521	0	%100
56	M78	Z	6.099	6.099	0	%100
57	M79	X	3.521	3.521	0	%100
58	M79	Z	6.099	6.099	0	%100
59	M80	X	0	0	0	%100
60	M80	Z	0	0	0	%100
61	M95	X	11.931	11.931	0	%100
62	M95	Z	20.665	20.665	0	%100
63	M98	X	1.243	1.243	0	%100
64	M98	Z	2.153	2.153	0	%100
65	M99	X	1.243	1.243	0	%100
66	M99	Z	2.153	2.153	0	%100
67	M102	X	0	0	0	%100
68	M102	Z	0	0	0	%100
69	M103	X	1.223	1.223	0	%100
70	M103	Z	2.117	2.117	0	%100
71	M106	X	2.996	2.996	0	%100
72	M106	Z	5.19	5.19	0	%100
73	M107	X	2.996	2.996	0	%100
74	M107	Z	5.19	5.19	0	%100
75	M120	X	3.259	3.259	0	%100
76	M120	Z	5.645	5.645	0	%100
77	M121	X	0	0	0	%100
78	M121	Z	0	0	0	%100
79	M122	X	3.521	3.521	0	%100
80	M122	Z	6.099	6.099	0	%100
81	M123	X	3.936	3.936	0	%100
82	M123	Z	6.817	6.817	0	%100
83	M124	X	3.259	3.259	0	%100
84	M124	Z	5.645	5.645	0	%100
85	M127	X	0	0	0	%100
86	M127	Z	0	0	0	%100
87	M128	X	8.037	8.037	0	%100
88	M128	Z	13.921	13.921	0	%100
89	M129	X	0	0	0	%100
90	M129	Z	0	0	0	%100
91	M130	X	3.521	3.521	0	%100
92	M130	Z	6.099	6.099	0	%100
93	M131	X	3.936	3.936	0	%100
94	M131	Z	6.817	6.817	0	%100
95	M146	X	3.915	3.915	0	%100
96	M146	Z	6.781	6.781	0	%100
97	M149	X	9.259	9.259	0	%100
98	M149	Z	16.037	16.037	0	%100
99	M150	X	9.259	9.259	0	%100
100	M150	Z	16.037	16.037	0	%100
101	M153	X	4.395	4.395	0	%100

Member Distributed Loads (BLC 46 : Structure Wo (150 Deg)) (Continued)

	Member Label	Direction	Start Magnitude[lb/ft,...	End Magnitude[lb/ft,F...	Start Location[in,%]	End Location[in,%]
102	M153	Z	7.612	7.612	0	%100
103	M148A	X	9.166	9.166	0	%100
104	M148A	Z	15.876	15.876	0	%100
105	M151A	X	3.542	3.542	0	%100
106	M151A	Z	6.135	6.135	0	%100
107	M152A	X	2.983	2.983	0	%100
108	M152A	Z	5.166	5.166	0	%100
109	M154	X	0	0	0	%100
110	M154	Z	0	0	0	%100
111	M157	X	3.542	3.542	0	%100
112	M157	Z	6.135	6.135	0	%100
113	M166	X	8.948	8.948	0	%100
114	M166	Z	15.499	15.499	0	%100
115	M162A	X	2.983	2.983	0	%100
116	M162A	Z	5.166	5.166	0	%100
117	M163A	X	8.948	8.948	0	%100
118	M163A	Z	15.499	15.499	0	%100
119	M164A	X	11.931	11.931	0	%100
120	M164A	Z	20.665	20.665	0	%100
121	M165A	X	0	0	0	%100
122	M165A	Z	0	0	0	%100
123	M166A	X	11.931	11.931	0	%100
124	M166A	Z	20.665	20.665	0	%100
125	M167	X	0	0	0	%100
126	M167	Z	0	0	0	%100
127	M168	X	2.983	2.983	0	%100
128	M168	Z	5.166	5.166	0	%100
129	M169	X	8.948	8.948	0	%100
130	M169	Z	15.499	15.499	0	%100
131	M170	X	2.983	2.983	0	%100
132	M170	Z	5.166	5.166	0	%100
133	M171	X	8.948	8.948	0	%100
134	M171	Z	15.499	15.499	0	%100
135	M172	X	3.283	3.283	0	%100
136	M172	Z	5.687	5.687	0	%100
137	M173	X	0	0	0	%100
138	M173	Z	0	0	0	%100
139	M174	X	3.283	3.283	0	%100
140	M174	Z	5.687	5.687	0	%100
141	M175	X	3.542	3.542	0	%100
142	M175	Z	6.135	6.135	0	%100
143	M176	X	0	0	0	%100
144	M176	Z	0	0	0	%100
145	M177	X	3.542	3.542	0	%100
146	M177	Z	6.135	6.135	0	%100
147	M203	X	3.862	3.862	0	%100
148	M203	Z	6.689	6.689	0	%100
149	OVP	X	4.723	4.723	0	%100
150	OVP	Z	8.18	8.18	0	%100
151	MP3A	X	4.723	4.723	0	%100
152	MP3A	Z	8.18	8.18	0	%100
153	MP2A	X	4.723	4.723	0	%100
154	MP2A	Z	8.18	8.18	0	%100
155	MP3C	X	4.723	4.723	0	%100
156	MP3C	Z	8.18	8.18	0	%100
157	MP2C	X	4.723	4.723	0	%100
158	MP2C	Z	8.18	8.18	0	%100

Member Distributed Loads (BLC 46 : Structure Wo (150 Deg)) (Continued)

	Member Label	Direction	Start Magnitude[lb/ft,...	End Magnitude[lb/ft,F...	Start Location[in,%]	End Location[in,%]
159	MP3B	X	4.723	4.723	0	%100
160	MP3B	Z	8.18	8.18	0	%100
161	MP2B	X	4.723	4.723	0	%100
162	MP2B	Z	8.18	8.18	0	%100
163	MP1A	X	4.723	4.723	0	%100
164	MP1A	Z	8.18	8.18	0	%100
165	MP4A	X	4.723	4.723	0	%100
166	MP4A	Z	8.18	8.18	0	%100
167	MP1C	X	4.723	4.723	0	%100
168	MP1C	Z	8.18	8.18	0	%100
169	MP4C	X	4.723	4.723	0	%100
170	MP4C	Z	8.18	8.18	0	%100
171	MP1B	X	4.723	4.723	0	%100
172	MP1B	Z	8.18	8.18	0	%100
173	MP4B	X	4.723	4.723	0	%100
174	MP4B	Z	8.18	8.18	0	%100
175	M204A	X	0	0	0	%100
176	M204A	Z	0	0	0	%100
177	M205B	X	9.166	9.166	0	%100
178	M205B	Z	15.876	15.876	0	%100
179	M206	X	4.288	4.288	0	%100
180	M206	Z	7.427	7.427	0	%100
181	M207	X	0	0	0	%100
182	M207	Z	0	0	0	%100
183	M208	X	4.288	4.288	0	%100
184	M208	Z	7.427	7.427	0	%100
185	M227	X	0	0	0	%100
186	M227	Z	0	0	0	%100
187	M228	X	5.303	5.303	0	%100
188	M228	Z	9.185	9.185	0	%100
189	M229	X	5.303	5.303	0	%100
190	M229	Z	9.184	9.184	0	%100
191	M231	X	8.065	8.065	0	%100
192	M231	Z	13.97	13.97	0	%100
193	M231A	X	2.436	2.436	0	%100
194	M231A	Z	4.22	4.22	0	%100
195	M232	X	4.486	4.486	0	%100
196	M232	Z	7.769	7.769	0	%100
197	M233	X	4.486	4.486	0	%100
198	M233	Z	7.769	7.769	0	%100
199	M234	X	2.436	2.436	0	%100
200	M234	Z	4.22	4.22	0	%100
201	M235	X	8.065	8.065	0	%100
202	M235	Z	13.97	13.97	0	%100

Member Distributed Loads (BLC 47 : Structure Wo (180 Deg))

	Member Label	Direction	Start Magnitude[lb/ft,...	End Magnitude[lb/ft,F...	Start Location[in,%]	End Location[in,%]
1	M1	X	0	0	0	%100
2	M1	Z	0	0	0	%100
3	M4	X	0	0	0	%100
4	M4	Z	0	0	0	%100
5	M5	X	0	0	0	%100
6	M5	Z	0	0	0	%100
7	M18	X	0	0	0	%100
8	M18	Z	8.691	8.691	0	%100
9	M19	X	0	0	0	%100

Member Distributed Loads (BLC 47 : Structure Wo (180 Deg)) (Continued)

	Member Label	Direction	Start Magnitude[lb/ft,...	End Magnitude[lb/ft,F...	Start Location[in,%]	End Location[in,%]
10	M19	Z	2.348	2.348	0	%100
11	M20	X	0	0	0	%100
12	M20	Z	2.348	2.348	0	%100
13	M21	X	0	0	0	%100
14	M21	Z	10.495	10.495	0	%100
15	M22	X	0	0	0	%100
16	M22	Z	8.691	8.691	0	%100
17	M28	X	0	0	0	%100
18	M28	Z	5.358	5.358	0	%100
19	M29	X	0	0	0	%100
20	M29	Z	5.358	5.358	0	%100
21	M27A	X	0	0	0	%100
22	M27A	Z	2.348	2.348	0	%100
23	M28A	X	0	0	0	%100
24	M28A	Z	2.348	2.348	0	%100
25	M29A	X	0	0	0	%100
26	M29A	Z	10.495	10.495	0	%100
27	M44	X	0	0	0	%100
28	M44	Z	23.862	23.862	0	%100
29	M47	X	0	0	0	%100
30	M47	Z	1.491	1.491	0	%100
31	M48	X	0	0	0	%100
32	M48	Z	1.491	1.491	0	%100
33	M51	X	0	0	0	%100
34	M51	Z	11.719	11.719	0	%100
35	M52	X	0	0	0	%100
36	M52	Z	7.335	7.335	0	%100
37	M55	X	0	0	0	%100
38	M55	Z	17.979	17.979	0	%100
39	M56	X	0	0	0	%100
40	M56	Z	17.979	17.979	0	%100
41	M69	X	0	0	0	%100
42	M69	Z	2.173	2.173	0	%100
43	M70	X	0	0	0	%100
44	M70	Z	9.39	9.39	0	%100
45	M71	X	0	0	0	%100
46	M71	Z	2.348	2.348	0	%100
47	M72	X	0	0	0	%100
48	M72	Z	2.624	2.624	0	%100
49	M73	X	0	0	0	%100
50	M73	Z	2.173	2.173	0	%100
51	M76	X	0	0	0	%100
52	M76	Z	21.432	21.432	0	%100
53	M77	X	0	0	0	%100
54	M77	Z	5.358	5.358	0	%100
55	M78	X	0	0	0	%100
56	M78	Z	9.39	9.39	0	%100
57	M79	X	0	0	0	%100
58	M79	Z	2.348	2.348	0	%100
59	M80	X	0	0	0	%100
60	M80	Z	2.624	2.624	0	%100
61	M95	X	0	0	0	%100
62	M95	Z	18.518	18.518	0	%100
63	M98	X	0	0	0	%100
64	M98	Z	7.83	7.83	0	%100
65	M99	X	0	0	0	%100
66	M99	Z	7.83	7.83	0	%100

Member Distributed Loads (BLC 47 : Structure Wo (180 Deg)) (Continued)

	Member Label	Direction	Start Magnitude[lb/ft,...	End Magnitude[lb/ft,F...	Start Location[in,%]	End Location[in,%]
67	M102	X	0	0	0	%100
68	M102	Z	2.93	2.93	0	%100
69	M103	X	0	0	0	%100
70	M103	Z	7.335	7.335	0	%100
71	M106	X	0	0	0	%100
72	M106	Z	17.979	17.979	0	%100
73	M107	X	0	0	0	%100
74	M107	Z	17.979	17.979	0	%100
75	M120	X	0	0	0	%100
76	M120	Z	2.173	2.173	0	%100
77	M121	X	0	0	0	%100
78	M121	Z	2.348	2.348	0	%100
79	M122	X	0	0	0	%100
80	M122	Z	9.39	9.39	0	%100
81	M123	X	0	0	0	%100
82	M123	Z	2.624	2.624	0	%100
83	M124	X	0	0	0	%100
84	M124	Z	2.173	2.173	0	%100
85	M127	X	0	0	0	%100
86	M127	Z	5.358	5.358	0	%100
87	M128	X	0	0	0	%100
88	M128	Z	21.432	21.432	0	%100
89	M129	X	0	0	0	%100
90	M129	Z	2.348	2.348	0	%100
91	M130	X	0	0	0	%100
92	M130	Z	9.39	9.39	0	%100
93	M131	X	0	0	0	%100
94	M131	Z	2.624	2.624	0	%100
95	M146	X	0	0	0	%100
96	M146	Z	18.518	18.518	0	%100
97	M149	X	0	0	0	%100
98	M149	Z	7.83	7.83	0	%100
99	M150	X	0	0	0	%100
100	M150	Z	7.83	7.83	0	%100
101	M153	X	0	0	0	%100
102	M153	Z	2.93	2.93	0	%100
103	M148A	X	0	0	0	%100
104	M148A	Z	24.442	24.442	0	%100
105	M151A	X	0	0	0	%100
106	M151A	Z	9.446	9.446	0	%100
107	M152A	X	0	0	0	%100
108	M152A	Z	0	0	0	%100
109	M154	X	0	0	0	%100
110	M154	Z	2.361	2.361	0	%100
111	M157	X	0	0	0	%100
112	M157	Z	2.361	2.361	0	%100
113	M166	X	0	0	0	%100
114	M166	Z	23.862	23.862	0	%100
115	M162A	X	0	0	0	%100
116	M162A	Z	0	0	0	%100
117	M163A	X	0	0	0	%100
118	M163A	Z	23.862	23.862	0	%100
119	M164A	X	0	0	0	%100
120	M164A	Z	17.897	17.897	0	%100
121	M165A	X	0	0	0	%100
122	M165A	Z	5.966	5.966	0	%100
123	M166A	X	0	0	0	%100

Member Distributed Loads (BLC 47 : Structure Wo (180 Deg)) (Continued)

	Member Label	Direction	Start Magnitude[lb/ft,...	End Magnitude[lb/ft,F...	Start Location[in,%]	End Location[in,%]
124	M166A	Z	17.897	17.897	0	%100
125	M167	X	0	0	0	%100
126	M167	Z	5.966	5.966	0	%100
127	M168	X	0	0	0	%100
128	M168	Z	17.897	17.897	0	%100
129	M169	X	0	0	0	%100
130	M169	Z	5.966	5.966	0	%100
131	M170	X	0	0	0	%100
132	M170	Z	17.897	17.897	0	%100
133	M171	X	0	0	0	%100
134	M171	Z	5.966	5.966	0	%100
135	M172	X	0	0	0	%100
136	M172	Z	8.755	8.755	0	%100
137	M173	X	0	0	0	%100
138	M173	Z	2.189	2.189	0	%100
139	M174	X	0	0	0	%100
140	M174	Z	2.189	2.189	0	%100
141	M175	X	0	0	0	%100
142	M175	Z	9.446	9.446	0	%100
143	M176	X	0	0	0	%100
144	M176	Z	2.361	2.361	0	%100
145	M177	X	0	0	0	%100
146	M177	Z	2.361	2.361	0	%100
147	M203	X	0	0	0	%100
148	M203	Z	7.724	7.724	0	%100
149	OVP	X	0	0	0	%100
150	OVP	Z	9.446	9.446	0	%100
151	MP3A	X	0	0	0	%100
152	MP3A	Z	9.446	9.446	0	%100
153	MP2A	X	0	0	0	%100
154	MP2A	Z	9.446	9.446	0	%100
155	MP3C	X	0	0	0	%100
156	MP3C	Z	9.446	9.446	0	%100
157	MP2C	X	0	0	0	%100
158	MP2C	Z	9.446	9.446	0	%100
159	MP3B	X	0	0	0	%100
160	MP3B	Z	9.446	9.446	0	%100
161	MP2B	X	0	0	0	%100
162	MP2B	Z	9.446	9.446	0	%100
163	MP1A	X	0	0	0	%100
164	MP1A	Z	9.446	9.446	0	%100
165	MP4A	X	0	0	0	%100
166	MP4A	Z	9.446	9.446	0	%100
167	MP1C	X	0	0	0	%100
168	MP1C	Z	9.446	9.446	0	%100
169	MP4C	X	0	0	0	%100
170	MP4C	Z	9.446	9.446	0	%100
171	MP1B	X	0	0	0	%100
172	MP1B	Z	9.446	9.446	0	%100
173	MP4B	X	0	0	0	%100
174	MP4B	Z	9.446	9.446	0	%100
175	M204A	X	0	0	0	%100
176	M204A	Z	6.11	6.11	0	%100
177	M205B	X	0	0	0	%100
178	M205B	Z	6.11	6.11	0	%100
179	M206	X	0	0	0	%100
180	M206	Z	11.434	11.434	0	%100

Member Distributed Loads (BLC 47 : Structure Wo (180 Deg)) (Continued)

	Member Label	Direction	Start Magnitude[lb/ft,...	End Magnitude[lb/ft,F...	Start Location[in,%]	End Location[in,%]
181	M207	X	0	0	0	%100
182	M207	Z	2.859	2.859	0	%100
183	M208	X	0	0	0	%100
184	M208	Z	2.859	2.859	0	%100
185	M227	X	0	0	0	%100
186	M227	Z	3.535	3.535	0	%100
187	M228	X	0	0	0	%100
188	M228	Z	3.535	3.535	0	%100
189	M229	X	0	0	0	%100
190	M229	Z	14.14	14.14	0	%100
191	M231	X	0	0	0	%100
192	M231	Z	11.012	11.012	0	%100
193	M231A	X	0	0	0	%100
194	M231A	Z	11.012	11.012	0	%100
195	M232	X	0	0	0	%100
196	M232	Z	15.11	15.11	0	%100
197	M233	X	0	0	0	%100
198	M233	Z	3.852	3.852	0	%100
199	M234	X	0	0	0	%100
200	M234	Z	3.852	3.852	0	%100
201	M235	X	0	0	0	%100
202	M235	Z	15.11	15.11	0	%100

Member Distributed Loads (BLC 48 : Structure Wo (210 Deg))

	Member Label	Direction	Start Magnitude[lb/ft,...	End Magnitude[lb/ft,F...	Start Location[in,%]	End Location[in,%]
1	M1	X	-1.223	-1.223	0	%100
2	M1	Z	2.117	2.117	0	%100
3	M4	X	-2.996	-2.996	0	%100
4	M4	Z	5.19	5.19	0	%100
5	M5	X	-2.996	-2.996	0	%100
6	M5	Z	5.19	5.19	0	%100
7	M18	X	-3.259	-3.259	0	%100
8	M18	Z	5.645	5.645	0	%100
9	M19	X	0	0	0	%100
10	M19	Z	0	0	0	%100
11	M20	X	-3.521	-3.521	0	%100
12	M20	Z	6.099	6.099	0	%100
13	M21	X	-3.936	-3.936	0	%100
14	M21	Z	6.817	6.817	0	%100
15	M22	X	-3.259	-3.259	0	%100
16	M22	Z	5.645	5.645	0	%100
17	M28	X	0	0	0	%100
18	M28	Z	0	0	0	%100
19	M29	X	-8.037	-8.037	0	%100
20	M29	Z	13.921	13.921	0	%100
21	M27A	X	0	0	0	%100
22	M27A	Z	0	0	0	%100
23	M28A	X	-3.521	-3.521	0	%100
24	M28A	Z	6.099	6.099	0	%100
25	M29A	X	-3.936	-3.936	0	%100
26	M29A	Z	6.817	6.817	0	%100
27	M44	X	-9.259	-9.259	0	%100
28	M44	Z	16.037	16.037	0	%100
29	M47	X	-5.531	-5.531	0	%100
30	M47	Z	9.579	9.579	0	%100
31	M48	X	-5.531	-5.531	0	%100

Member Distributed Loads (BLC 48 : Structure Wo (210 Deg)) (Continued)

	Member Label	Direction	Start Magnitude[lb/ft,...	End Magnitude[lb/ft,F...	Start Location[in,%]	End Location[in,%]
32	M48	Z	9.579	9.579	0	%100
33	M51	X	-4.395	-4.395	0	%100
34	M51	Z	7.612	7.612	0	%100
35	M52	X	-1.223	-1.223	0	%100
36	M52	Z	2.117	2.117	0	%100
37	M55	X	-2.996	-2.996	0	%100
38	M55	Z	5.19	5.19	0	%100
39	M56	X	-2.996	-2.996	0	%100
40	M56	Z	5.19	5.19	0	%100
41	M69	X	-3.259	-3.259	0	%100
42	M69	Z	5.645	5.645	0	%100
43	M70	X	-3.521	-3.521	0	%100
44	M70	Z	6.099	6.099	0	%100
45	M71	X	0	0	0	%100
46	M71	Z	0	0	0	%100
47	M72	X	-3.936	-3.936	0	%100
48	M72	Z	6.817	6.817	0	%100
49	M73	X	-3.259	-3.259	0	%100
50	M73	Z	5.645	5.645	0	%100
51	M76	X	-8.037	-8.037	0	%100
52	M76	Z	13.921	13.921	0	%100
53	M77	X	0	0	0	%100
54	M77	Z	0	0	0	%100
55	M78	X	-3.521	-3.521	0	%100
56	M78	Z	6.099	6.099	0	%100
57	M79	X	0	0	0	%100
58	M79	Z	0	0	0	%100
59	M80	X	-3.936	-3.936	0	%100
60	M80	Z	6.817	6.817	0	%100
61	M95	X	-3.915	-3.915	0	%100
62	M95	Z	6.781	6.781	0	%100
63	M98	X	-9.259	-9.259	0	%100
64	M98	Z	16.037	16.037	0	%100
65	M99	X	-9.259	-9.259	0	%100
66	M99	Z	16.037	16.037	0	%100
67	M102	X	-4.395	-4.395	0	%100
68	M102	Z	7.612	7.612	0	%100
69	M103	X	-4.89	-4.89	0	%100
70	M103	Z	8.47	8.47	0	%100
71	M106	X	-11.986	-11.986	0	%100
72	M106	Z	20.76	20.76	0	%100
73	M107	X	-11.986	-11.986	0	%100
74	M107	Z	20.76	20.76	0	%100
75	M120	X	0	0	0	%100
76	M120	Z	0	0	0	%100
77	M121	X	-3.521	-3.521	0	%100
78	M121	Z	6.099	6.099	0	%100
79	M122	X	-3.521	-3.521	0	%100
80	M122	Z	6.099	6.099	0	%100
81	M123	X	0	0	0	%100
82	M123	Z	0	0	0	%100
83	M124	X	0	0	0	%100
84	M124	Z	0	0	0	%100
85	M127	X	-8.037	-8.037	0	%100
86	M127	Z	13.92	13.92	0	%100
87	M128	X	-8.037	-8.037	0	%100
88	M128	Z	13.92	13.92	0	%100

Member Distributed Loads (BLC 48 : Structure Wo (210 Deg)) (Continued)

	Member Label	Direction	Start Magnitude[lb/ft,...	End Magnitude[lb/ft,F...	Start Location[in,%]	End Location[in,%]
89	M129	X	-3.521	-3.521	0	%100
90	M129	Z	6.099	6.099	0	%100
91	M130	X	-3.521	-3.521	0	%100
92	M130	Z	6.099	6.099	0	%100
93	M131	X	0	0	0	%100
94	M131	Z	0	0	0	%100
95	M146	X	-11.931	-11.931	0	%100
96	M146	Z	20.665	20.665	0	%100
97	M149	X	-1.243	-1.243	0	%100
98	M149	Z	2.153	2.153	0	%100
99	M150	X	-1.243	-1.243	0	%100
100	M150	Z	2.153	2.153	0	%100
101	M153	X	0	0	0	%100
102	M153	Z	0	0	0	%100
103	M148A	X	-9.166	-9.166	0	%100
104	M148A	Z	15.876	15.876	0	%100
105	M151A	X	-3.542	-3.542	0	%100
106	M151A	Z	6.135	6.135	0	%100
107	M152A	X	-2.983	-2.983	0	%100
108	M152A	Z	5.166	5.166	0	%100
109	M154	X	-3.542	-3.542	0	%100
110	M154	Z	6.135	6.135	0	%100
111	M157	X	0	0	0	%100
112	M157	Z	0	0	0	%100
113	M166	X	-8.948	-8.948	0	%100
114	M166	Z	15.499	15.499	0	%100
115	M162A	X	-2.983	-2.983	0	%100
116	M162A	Z	5.166	5.166	0	%100
117	M163A	X	-8.948	-8.948	0	%100
118	M163A	Z	15.499	15.499	0	%100
119	M164A	X	-2.983	-2.983	0	%100
120	M164A	Z	5.166	5.166	0	%100
121	M165A	X	-8.948	-8.948	0	%100
122	M165A	Z	15.499	15.499	0	%100
123	M166A	X	-2.983	-2.983	0	%100
124	M166A	Z	5.166	5.166	0	%100
125	M167	X	-8.948	-8.948	0	%100
126	M167	Z	15.499	15.499	0	%100
127	M168	X	-11.931	-11.931	0	%100
128	M168	Z	20.665	20.665	0	%100
129	M169	X	0	0	0	%100
130	M169	Z	0	0	0	%100
131	M170	X	-11.931	-11.931	0	%100
132	M170	Z	20.665	20.665	0	%100
133	M171	X	0	0	0	%100
134	M171	Z	0	0	0	%100
135	M172	X	-3.283	-3.283	0	%100
136	M172	Z	5.687	5.687	0	%100
137	M173	X	-3.283	-3.283	0	%100
138	M173	Z	5.687	5.687	0	%100
139	M174	X	0	0	0	%100
140	M174	Z	0	0	0	%100
141	M175	X	-3.542	-3.542	0	%100
142	M175	Z	6.135	6.135	0	%100
143	M176	X	-3.542	-3.542	0	%100
144	M176	Z	6.135	6.135	0	%100
145	M177	X	0	0	0	%100

Member Distributed Loads (BLC 48 : Structure Wo (210 Deg)) (Continued)

	Member Label	Direction	Start Magnitude[lb/ft,...	End Magnitude[lb/ft,F...	Start Location[in,%]	End Location[in,%]
146	M177	Z	0	0	0	%100
147	M203	X	-3.862	-3.862	0	%100
148	M203	Z	6.689	6.689	0	%100
149	OVP	X	-4.723	-4.723	0	%100
150	OVP	Z	8.18	8.18	0	%100
151	MP3A	X	-4.723	-4.723	0	%100
152	MP3A	Z	8.18	8.18	0	%100
153	MP2A	X	-4.723	-4.723	0	%100
154	MP2A	Z	8.18	8.18	0	%100
155	MP3C	X	-4.723	-4.723	0	%100
156	MP3C	Z	8.18	8.18	0	%100
157	MP2C	X	-4.723	-4.723	0	%100
158	MP2C	Z	8.18	8.18	0	%100
159	MP3B	X	-4.723	-4.723	0	%100
160	MP3B	Z	8.18	8.18	0	%100
161	MP2B	X	-4.723	-4.723	0	%100
162	MP2B	Z	8.18	8.18	0	%100
163	MP1A	X	-4.723	-4.723	0	%100
164	MP1A	Z	8.18	8.18	0	%100
165	MP4A	X	-4.723	-4.723	0	%100
166	MP4A	Z	8.18	8.18	0	%100
167	MP1C	X	-4.723	-4.723	0	%100
168	MP1C	Z	8.18	8.18	0	%100
169	MP4C	X	-4.723	-4.723	0	%100
170	MP4C	Z	8.18	8.18	0	%100
171	MP1B	X	-4.723	-4.723	0	%100
172	MP1B	Z	8.18	8.18	0	%100
173	MP4B	X	-4.723	-4.723	0	%100
174	MP4B	Z	8.18	8.18	0	%100
175	M204A	X	-9.166	-9.166	0	%100
176	M204A	Z	15.876	15.876	0	%100
177	M205B	X	0	0	0	%100
178	M205B	Z	0	0	0	%100
179	M206	X	-4.288	-4.288	0	%100
180	M206	Z	7.427	7.427	0	%100
181	M207	X	-4.288	-4.288	0	%100
182	M207	Z	7.427	7.427	0	%100
183	M208	X	0	0	0	%100
184	M208	Z	0	0	0	%100
185	M227	X	-5.303	-5.303	0	%100
186	M227	Z	9.184	9.184	0	%100
187	M228	X	0	0	0	%100
188	M228	Z	0	0	0	%100
189	M229	X	-5.303	-5.303	0	%100
190	M229	Z	9.185	9.185	0	%100
191	M231	X	-2.436	-2.436	0	%100
192	M231	Z	4.22	4.22	0	%100
193	M231A	X	-8.065	-8.065	0	%100
194	M231A	Z	13.97	13.97	0	%100
195	M232	X	-8.065	-8.065	0	%100
196	M232	Z	13.97	13.97	0	%100
197	M233	X	-2.436	-2.436	0	%100
198	M233	Z	4.22	4.22	0	%100
199	M234	X	-4.486	-4.486	0	%100
200	M234	Z	7.769	7.769	0	%100
201	M235	X	-4.486	-4.486	0	%100
202	M235	Z	7.769	7.769	0	%100

Member Distributed Loads (BLC 49 : Structure Wo (240 Deg))

	Member Label	Direction	Start Magnitude[lb/ft,...	End Magnitude[lb/ft,F...	Start Location[in,%]	End Location[in,%]
1	M1	X	-6.352	-6.352	0	%100
2	M1	Z	3.668	3.668	0	%100
3	M4	X	-15.57	-15.57	0	%100
4	M4	Z	8.989	8.989	0	%100
5	M5	X	-15.57	-15.57	0	%100
6	M5	Z	8.989	8.989	0	%100
7	M18	X	-1.882	-1.882	0	%100
8	M18	Z	1.086	1.086	0	%100
9	M19	X	-2.033	-2.033	0	%100
10	M19	Z	1.174	1.174	0	%100
11	M20	X	-8.132	-8.132	0	%100
12	M20	Z	4.695	4.695	0	%100
13	M21	X	-2.272	-2.272	0	%100
14	M21	Z	1.312	1.312	0	%100
15	M22	X	-1.882	-1.882	0	%100
16	M22	Z	1.086	1.086	0	%100
17	M28	X	-4.64	-4.64	0	%100
18	M28	Z	2.679	2.679	0	%100
19	M29	X	-18.561	-18.561	0	%100
20	M29	Z	10.716	10.716	0	%100
21	M27A	X	-2.033	-2.033	0	%100
22	M27A	Z	1.174	1.174	0	%100
23	M28A	X	-8.132	-8.132	0	%100
24	M28A	Z	4.695	4.695	0	%100
25	M29A	X	-2.272	-2.272	0	%100
26	M29A	Z	1.312	1.312	0	%100
27	M44	X	-6.781	-6.781	0	%100
28	M44	Z	3.915	3.915	0	%100
29	M47	X	-26.155	-26.155	0	%100
30	M47	Z	15.1	15.1	0	%100
31	M48	X	-26.155	-26.155	0	%100
32	M48	Z	15.1	15.1	0	%100
33	M51	X	-2.537	-2.537	0	%100
34	M51	Z	1.465	1.465	0	%100
35	M52	X	0	0	0	%100
36	M52	Z	0	0	0	%100
37	M55	X	0	0	0	%100
38	M55	Z	0	0	0	%100
39	M56	X	0	0	0	%100
40	M56	Z	0	0	0	%100
41	M69	X	-7.526	-7.526	0	%100
42	M69	Z	4.345	4.345	0	%100
43	M70	X	-2.033	-2.033	0	%100
44	M70	Z	1.174	1.174	0	%100
45	M71	X	-2.033	-2.033	0	%100
46	M71	Z	1.174	1.174	0	%100
47	M72	X	-9.089	-9.089	0	%100
48	M72	Z	5.248	5.248	0	%100
49	M73	X	-7.526	-7.526	0	%100
50	M73	Z	4.345	4.345	0	%100
51	M76	X	-4.64	-4.64	0	%100
52	M76	Z	2.679	2.679	0	%100
53	M77	X	-4.64	-4.64	0	%100
54	M77	Z	2.679	2.679	0	%100
55	M78	X	-2.033	-2.033	0	%100
56	M78	Z	1.174	1.174	0	%100
57	M79	X	-2.033	-2.033	0	%100

Member Distributed Loads (BLC 49 : Structure Wo (240 Deg)) (Continued)

	Member Label	Direction	Start Magnitude[lb/ft,...	End Magnitude[lb/ft,F...	Start Location[in,%]	End Location[in,%]
58	M79	Z	1.174	1.174	0	%100
59	M80	X	-9.089	-9.089	0	%100
60	M80	Z	5.248	5.248	0	%100
61	M95	X	-2.153	-2.153	0	%100
62	M95	Z	1.243	1.243	0	%100
63	M98	X	-20.665	-20.665	0	%100
64	M98	Z	11.931	11.931	0	%100
65	M99	X	-20.665	-20.665	0	%100
66	M99	Z	11.931	11.931	0	%100
67	M102	X	-10.149	-10.149	0	%100
68	M102	Z	5.86	5.86	0	%100
69	M103	X	-6.352	-6.352	0	%100
70	M103	Z	3.668	3.668	0	%100
71	M106	X	-15.57	-15.57	0	%100
72	M106	Z	8.989	8.989	0	%100
73	M107	X	-15.57	-15.57	0	%100
74	M107	Z	8.989	8.989	0	%100
75	M120	X	-1.882	-1.882	0	%100
76	M120	Z	1.086	1.086	0	%100
77	M121	X	-8.132	-8.132	0	%100
78	M121	Z	4.695	4.695	0	%100
79	M122	X	-2.033	-2.033	0	%100
80	M122	Z	1.174	1.174	0	%100
81	M123	X	-2.272	-2.272	0	%100
82	M123	Z	1.312	1.312	0	%100
83	M124	X	-1.882	-1.882	0	%100
84	M124	Z	1.086	1.086	0	%100
85	M127	X	-18.561	-18.561	0	%100
86	M127	Z	10.716	10.716	0	%100
87	M128	X	-4.64	-4.64	0	%100
88	M128	Z	2.679	2.679	0	%100
89	M129	X	-8.132	-8.132	0	%100
90	M129	Z	4.695	4.695	0	%100
91	M130	X	-2.033	-2.033	0	%100
92	M130	Z	1.174	1.174	0	%100
93	M131	X	-2.272	-2.272	0	%100
94	M131	Z	1.312	1.312	0	%100
95	M146	X	-16.037	-16.037	0	%100
96	M146	Z	9.259	9.259	0	%100
97	M149	X	-6.781	-6.781	0	%100
98	M149	Z	3.915	3.915	0	%100
99	M150	X	-6.781	-6.781	0	%100
100	M150	Z	3.915	3.915	0	%100
101	M153	X	-2.537	-2.537	0	%100
102	M153	Z	1.465	1.465	0	%100
103	M148A	X	-5.292	-5.292	0	%100
104	M148A	Z	3.055	3.055	0	%100
105	M151A	X	-2.045	-2.045	0	%100
106	M151A	Z	1.181	1.181	0	%100
107	M152A	X	-15.499	-15.499	0	%100
108	M152A	Z	8.948	8.948	0	%100
109	M154	X	-8.18	-8.18	0	%100
110	M154	Z	4.723	4.723	0	%100
111	M157	X	-2.045	-2.045	0	%100
112	M157	Z	1.181	1.181	0	%100
113	M166	X	-5.166	-5.166	0	%100
114	M166	Z	2.983	2.983	0	%100

Member Distributed Loads (BLC 49 : Structure Wo (240 Deg)) (Continued)

	Member Label	Direction	Start Magnitude[lb/ft,...	End Magnitude[lb/ft,F...	Start Location[in,%]	End Location[in,%]
115	M162A	X	-15.499	-15.499	0	%100
116	M162A	Z	8.948	8.948	0	%100
117	M163A	X	-5.166	-5.166	0	%100
118	M163A	Z	2.983	2.983	0	%100
119	M164A	X	0	0	0	%100
120	M164A	Z	0	0	0	%100
121	M165A	X	-20.665	-20.665	0	%100
122	M165A	Z	11.931	11.931	0	%100
123	M166A	X	0	0	0	%100
124	M166A	Z	0	0	0	%100
125	M167	X	-20.665	-20.665	0	%100
126	M167	Z	11.931	11.931	0	%100
127	M168	X	-15.499	-15.499	0	%100
128	M168	Z	8.948	8.948	0	%100
129	M169	X	-5.166	-5.166	0	%100
130	M169	Z	2.983	2.983	0	%100
131	M170	X	-15.499	-15.499	0	%100
132	M170	Z	8.948	8.948	0	%100
133	M171	X	-5.166	-5.166	0	%100
134	M171	Z	2.983	2.983	0	%100
135	M172	X	-1.896	-1.896	0	%100
136	M172	Z	1.094	1.094	0	%100
137	M173	X	-7.582	-7.582	0	%100
138	M173	Z	4.378	4.378	0	%100
139	M174	X	-1.896	-1.896	0	%100
140	M174	Z	1.094	1.094	0	%100
141	M175	X	-2.045	-2.045	0	%100
142	M175	Z	1.181	1.181	0	%100
143	M176	X	-8.18	-8.18	0	%100
144	M176	Z	4.723	4.723	0	%100
145	M177	X	-2.045	-2.045	0	%100
146	M177	Z	1.181	1.181	0	%100
147	M203	X	-6.689	-6.689	0	%100
148	M203	Z	3.862	3.862	0	%100
149	OVP	X	-8.18	-8.18	0	%100
150	OVP	Z	4.723	4.723	0	%100
151	MP3A	X	-8.18	-8.18	0	%100
152	MP3A	Z	4.723	4.723	0	%100
153	MP2A	X	-8.18	-8.18	0	%100
154	MP2A	Z	4.723	4.723	0	%100
155	MP3C	X	-8.18	-8.18	0	%100
156	MP3C	Z	4.723	4.723	0	%100
157	MP2C	X	-8.18	-8.18	0	%100
158	MP2C	Z	4.723	4.723	0	%100
159	MP3B	X	-8.18	-8.18	0	%100
160	MP3B	Z	4.723	4.723	0	%100
161	MP2B	X	-8.18	-8.18	0	%100
162	MP2B	Z	4.723	4.723	0	%100
163	MP1A	X	-8.18	-8.18	0	%100
164	MP1A	Z	4.723	4.723	0	%100
165	MP4A	X	-8.18	-8.18	0	%100
166	MP4A	Z	4.723	4.723	0	%100
167	MP1C	X	-8.18	-8.18	0	%100
168	MP1C	Z	4.723	4.723	0	%100
169	MP4C	X	-8.18	-8.18	0	%100
170	MP4C	Z	4.723	4.723	0	%100
171	MP1B	X	-8.18	-8.18	0	%100

Member Distributed Loads (BLC 49 : Structure Wo (240 Deg)) (Continued)

	Member Label	Direction	Start Magnitude[lb/ft,...	End Magnitude[lb/ft,F...	Start Location[in,%]	End Location[in,%]
172	MP1B	Z	4.723	4.723	0	%100
173	MP4B	X	-8.18	-8.18	0	%100
174	MP4B	Z	4.723	4.723	0	%100
175	M204A	X	-21.167	-21.167	0	%100
176	M204A	Z	12.221	12.221	0	%100
177	M205B	X	-5.292	-5.292	0	%100
178	M205B	Z	3.055	3.055	0	%100
179	M206	X	-2.476	-2.476	0	%100
180	M206	Z	1.429	1.429	0	%100
181	M207	X	-9.902	-9.902	0	%100
182	M207	Z	5.717	5.717	0	%100
183	M208	X	-2.476	-2.476	0	%100
184	M208	Z	1.429	1.429	0	%100
185	M227	X	-12.246	-12.246	0	%100
186	M227	Z	7.07	7.07	0	%100
187	M228	X	-3.061	-3.061	0	%100
188	M228	Z	1.768	1.768	0	%100
189	M229	X	-3.062	-3.062	0	%100
190	M229	Z	1.768	1.768	0	%100
191	M231	X	-3.336	-3.336	0	%100
192	M231	Z	1.926	1.926	0	%100
193	M231A	X	-13.086	-13.086	0	%100
194	M231A	Z	7.555	7.555	0	%100
195	M232	X	-9.536	-9.536	0	%100
196	M232	Z	5.506	5.506	0	%100
197	M233	X	-9.536	-9.536	0	%100
198	M233	Z	5.506	5.506	0	%100
199	M234	X	-13.086	-13.086	0	%100
200	M234	Z	7.555	7.555	0	%100
201	M235	X	-3.336	-3.336	0	%100
202	M235	Z	1.926	1.926	0	%100

Member Distributed Loads (BLC 50 : Structure Wo (270 Deg))

	Member Label	Direction	Start Magnitude[lb/ft,...	End Magnitude[lb/ft,F...	Start Location[in,%]	End Location[in,%]
1	M1	X	-9.78	-9.78	0	%100
2	M1	Z	0	0	0	%100
3	M4	X	-23.972	-23.972	0	%100
4	M4	Z	0	0	0	%100
5	M5	X	-23.972	-23.972	0	%100
6	M5	Z	0	0	0	%100
7	M18	X	0	0	0	%100
8	M18	Z	0	0	0	%100
9	M19	X	-7.043	-7.043	0	%100
10	M19	Z	0	0	0	%100
11	M20	X	-7.043	-7.043	0	%100
12	M20	Z	0	0	0	%100
13	M21	X	0	0	0	%100
14	M21	Z	0	0	0	%100
15	M22	X	0	0	0	%100
16	M22	Z	0	0	0	%100
17	M28	X	-16.074	-16.074	0	%100
18	M28	Z	0	0	0	%100
19	M29	X	-16.074	-16.074	0	%100
20	M29	Z	0	0	0	%100
21	M27A	X	-7.043	-7.043	0	%100
22	M27A	Z	0	0	0	%100

Member Distributed Loads (BLC 50 : Structure Wo (270 Deg)) (Continued)

	Member Label	Direction	Start Magnitude[lb/ft,...	End Magnitude[lb/ft,F...	Start Location[in,%]	End Location[in,%]
23	M28A	X	-7.043	-7.043	0	%100
24	M28A	Z	0	0	0	%100
25	M29A	X	0	0	0	%100
26	M29A	Z	0	0	0	%100
27	M44	X	-2.486	-2.486	0	%100
28	M44	Z	0	0	0	%100
29	M47	X	-39.771	-39.771	0	%100
30	M47	Z	0	0	0	%100
31	M48	X	-39.771	-39.771	0	%100
32	M48	Z	0	0	0	%100
33	M51	X	0	0	0	%100
34	M51	Z	0	0	0	%100
35	M52	X	-2.445	-2.445	0	%100
36	M52	Z	0	0	0	%100
37	M55	X	-5.993	-5.993	0	%100
38	M55	Z	0	0	0	%100
39	M56	X	-5.993	-5.993	0	%100
40	M56	Z	0	0	0	%100
41	M69	X	-6.518	-6.518	0	%100
42	M69	Z	0	0	0	%100
43	M70	X	0	0	0	%100
44	M70	Z	0	0	0	%100
45	M71	X	-7.043	-7.043	0	%100
46	M71	Z	0	0	0	%100
47	M72	X	-7.871	-7.871	0	%100
48	M72	Z	0	0	0	%100
49	M73	X	-6.518	-6.518	0	%100
50	M73	Z	0	0	0	%100
51	M76	X	0	0	0	%100
52	M76	Z	0	0	0	%100
53	M77	X	-16.074	-16.074	0	%100
54	M77	Z	0	0	0	%100
55	M78	X	0	0	0	%100
56	M78	Z	0	0	0	%100
57	M79	X	-7.043	-7.043	0	%100
58	M79	Z	0	0	0	%100
59	M80	X	-7.871	-7.871	0	%100
60	M80	Z	0	0	0	%100
61	M95	X	-7.83	-7.83	0	%100
62	M95	Z	0	0	0	%100
63	M98	X	-18.518	-18.518	0	%100
64	M98	Z	0	0	0	%100
65	M99	X	-18.518	-18.518	0	%100
66	M99	Z	0	0	0	%100
67	M102	X	-8.79	-8.79	0	%100
68	M102	Z	0	0	0	%100
69	M103	X	-2.445	-2.445	0	%100
70	M103	Z	0	0	0	%100
71	M106	X	-5.993	-5.993	0	%100
72	M106	Z	0	0	0	%100
73	M107	X	-5.993	-5.993	0	%100
74	M107	Z	0	0	0	%100
75	M120	X	-6.518	-6.518	0	%100
76	M120	Z	0	0	0	%100
77	M121	X	-7.043	-7.043	0	%100
78	M121	Z	0	0	0	%100
79	M122	X	0	0	0	%100

Member Distributed Loads (BLC 50 : Structure Wo (270 Deg)) (Continued)

	Member Label	Direction	Start Magnitude[lb/ft,...	End Magnitude[lb/ft,F...	Start Location[in,%]	End Location[in,%]
80	M122	Z	0	0	0	%100
81	M123	X	-7.871	-7.871	0	%100
82	M123	Z	0	0	0	%100
83	M124	X	-6.518	-6.518	0	%100
84	M124	Z	0	0	0	%100
85	M127	X	-16.074	-16.074	0	%100
86	M127	Z	0	0	0	%100
87	M128	X	0	0	0	%100
88	M128	Z	0	0	0	%100
89	M129	X	-7.043	-7.043	0	%100
90	M129	Z	0	0	0	%100
91	M130	X	0	0	0	%100
92	M130	Z	0	0	0	%100
93	M131	X	-7.871	-7.871	0	%100
94	M131	Z	0	0	0	%100
95	M146	X	-7.83	-7.83	0	%100
96	M146	Z	0	0	0	%100
97	M149	X	-18.518	-18.518	0	%100
98	M149	Z	0	0	0	%100
99	M150	X	-18.518	-18.518	0	%100
100	M150	Z	0	0	0	%100
101	M153	X	-8.79	-8.79	0	%100
102	M153	Z	0	0	0	%100
103	M148A	X	0	0	0	%100
104	M148A	Z	0	0	0	%100
105	M151A	X	0	0	0	%100
106	M151A	Z	0	0	0	%100
107	M152A	X	-23.862	-23.862	0	%100
108	M152A	Z	0	0	0	%100
109	M154	X	-7.084	-7.084	0	%100
110	M154	Z	0	0	0	%100
111	M157	X	-7.084	-7.084	0	%100
112	M157	Z	0	0	0	%100
113	M166	X	0	0	0	%100
114	M166	Z	0	0	0	%100
115	M162A	X	-23.862	-23.862	0	%100
116	M162A	Z	0	0	0	%100
117	M163A	X	0	0	0	%100
118	M163A	Z	0	0	0	%100
119	M164A	X	-5.966	-5.966	0	%100
120	M164A	Z	0	0	0	%100
121	M165A	X	-17.897	-17.897	0	%100
122	M165A	Z	0	0	0	%100
123	M166A	X	-5.965	-5.965	0	%100
124	M166A	Z	0	0	0	%100
125	M167	X	-17.897	-17.897	0	%100
126	M167	Z	0	0	0	%100
127	M168	X	-5.966	-5.966	0	%100
128	M168	Z	0	0	0	%100
129	M169	X	-17.897	-17.897	0	%100
130	M169	Z	0	0	0	%100
131	M170	X	-5.966	-5.966	0	%100
132	M170	Z	0	0	0	%100
133	M171	X	-17.897	-17.897	0	%100
134	M171	Z	0	0	0	%100
135	M172	X	0	0	0	%100
136	M172	Z	0	0	0	%100

Member Distributed Loads (BLC 50 : Structure Wo (270 Deg)) (Continued)

	Member Label	Direction	Start Magnitude[lb/ft,...	End Magnitude[lb/ft,F...	Start Location[in,%]	End Location[in,%]
137	M173	X	-6.566	-6.566	0	%100
138	M173	Z	0	0	0	%100
139	M174	X	-6.566	-6.566	0	%100
140	M174	Z	0	0	0	%100
141	M175	X	0	0	0	%100
142	M175	Z	0	0	0	%100
143	M176	X	-7.084	-7.084	0	%100
144	M176	Z	0	0	0	%100
145	M177	X	-7.084	-7.084	0	%100
146	M177	Z	0	0	0	%100
147	M203	X	-7.724	-7.724	0	%100
148	M203	Z	0	0	0	%100
149	OVP	X	-9.446	-9.446	0	%100
150	OVP	Z	0	0	0	%100
151	MP3A	X	-9.446	-9.446	0	%100
152	MP3A	Z	0	0	0	%100
153	MP2A	X	-9.446	-9.446	0	%100
154	MP2A	Z	0	0	0	%100
155	MP3C	X	-9.446	-9.446	0	%100
156	MP3C	Z	0	0	0	%100
157	MP2C	X	-9.446	-9.446	0	%100
158	MP2C	Z	0	0	0	%100
159	MP3B	X	-9.446	-9.446	0	%100
160	MP3B	Z	0	0	0	%100
161	MP2B	X	-9.446	-9.446	0	%100
162	MP2B	Z	0	0	0	%100
163	MP1A	X	-9.446	-9.446	0	%100
164	MP1A	Z	0	0	0	%100
165	MP4A	X	-9.446	-9.446	0	%100
166	MP4A	Z	0	0	0	%100
167	MP1C	X	-9.446	-9.446	0	%100
168	MP1C	Z	0	0	0	%100
169	MP4C	X	-9.446	-9.446	0	%100
170	MP4C	Z	0	0	0	%100
171	MP1B	X	-9.446	-9.446	0	%100
172	MP1B	Z	0	0	0	%100
173	MP4B	X	-9.446	-9.446	0	%100
174	MP4B	Z	0	0	0	%100
175	M204A	X	-18.331	-18.331	0	%100
176	M204A	Z	0	0	0	%100
177	M205B	X	-18.331	-18.331	0	%100
178	M205B	Z	0	0	0	%100
179	M206	X	0	0	0	%100
180	M206	Z	0	0	0	%100
181	M207	X	-8.576	-8.576	0	%100
182	M207	Z	0	0	0	%100
183	M208	X	-8.576	-8.576	0	%100
184	M208	Z	0	0	0	%100
185	M227	X	-10.605	-10.605	0	%100
186	M227	Z	0	0	0	%100
187	M228	X	-10.605	-10.605	0	%100
188	M228	Z	0	0	0	%100
189	M229	X	0	0	0	%100
190	M229	Z	0	0	0	%100
191	M231	X	-8.971	-8.971	0	%100
192	M231	Z	0	0	0	%100
193	M231A	X	-8.971	-8.971	0	%100

Member Distributed Loads (BLC 50 : Structure Wo (270 Deg)) (Continued)

	Member Label	Direction	Start Magnitude[lb/ft,...	End Magnitude[lb/ft,F...	Start Location[in,%]	End Location[in,%]
194	M231A	Z	0	0	0	%100
195	M232	X	-4.872	-4.872	0	%100
196	M232	Z	0	0	0	%100
197	M233	X	-16.131	-16.131	0	%100
198	M233	Z	0	0	0	%100
199	M234	X	-16.131	-16.131	0	%100
200	M234	Z	0	0	0	%100
201	M235	X	-4.872	-4.872	0	%100
202	M235	Z	0	0	0	%100

Member Distributed Loads (BLC 51 : Structure Wo (300 Deg))

	Member Label	Direction	Start Magnitude[lb/ft,...	End Magnitude[lb/ft,F...	Start Location[in,%]	End Location[in,%]
1	M1	X	-6.352	-6.352	0	%100
2	M1	Z	-3.668	-3.668	0	%100
3	M4	X	-15.57	-15.57	0	%100
4	M4	Z	-8.989	-8.989	0	%100
5	M5	X	-15.57	-15.57	0	%100
6	M5	Z	-8.989	-8.989	0	%100
7	M18	X	-1.882	-1.882	0	%100
8	M18	Z	-1.086	-1.086	0	%100
9	M19	X	-8.132	-8.132	0	%100
10	M19	Z	-4.695	-4.695	0	%100
11	M20	X	-2.033	-2.033	0	%100
12	M20	Z	-1.174	-1.174	0	%100
13	M21	X	-2.272	-2.272	0	%100
14	M21	Z	-1.312	-1.312	0	%100
15	M22	X	-1.882	-1.882	0	%100
16	M22	Z	-1.086	-1.086	0	%100
17	M28	X	-18.561	-18.561	0	%100
18	M28	Z	-10.716	-10.716	0	%100
19	M29	X	-4.64	-4.64	0	%100
20	M29	Z	-2.679	-2.679	0	%100
21	M27A	X	-8.132	-8.132	0	%100
22	M27A	Z	-4.695	-4.695	0	%100
23	M28A	X	-2.033	-2.033	0	%100
24	M28A	Z	-1.174	-1.174	0	%100
25	M29A	X	-2.272	-2.272	0	%100
26	M29A	Z	-1.312	-1.312	0	%100
27	M44	X	-6.781	-6.781	0	%100
28	M44	Z	-3.915	-3.915	0	%100
29	M47	X	-26.155	-26.155	0	%100
30	M47	Z	-15.1	-15.1	0	%100
31	M48	X	-26.155	-26.155	0	%100
32	M48	Z	-15.1	-15.1	0	%100
33	M51	X	-2.537	-2.537	0	%100
34	M51	Z	-1.465	-1.465	0	%100
35	M52	X	-6.352	-6.352	0	%100
36	M52	Z	-3.668	-3.668	0	%100
37	M55	X	-15.57	-15.57	0	%100
38	M55	Z	-8.989	-8.989	0	%100
39	M56	X	-15.57	-15.57	0	%100
40	M56	Z	-8.989	-8.989	0	%100
41	M69	X	-1.882	-1.882	0	%100
42	M69	Z	-1.086	-1.086	0	%100
43	M70	X	-2.033	-2.033	0	%100
44	M70	Z	-1.174	-1.174	0	%100

Member Distributed Loads (BLC 51 : Structure Wo (300 Deg)) (Continued)

	Member Label	Direction	Start Magnitude[lb/ft,...	End Magnitude[lb/ft,F...	Start Location[in,%]	End Location[in,%]
45	M71	X	-8.132	-8.132	0	%100
46	M71	Z	-4.695	-4.695	0	%100
47	M72	X	-2.272	-2.272	0	%100
48	M72	Z	-1.312	-1.312	0	%100
49	M73	X	-1.882	-1.882	0	%100
50	M73	Z	-1.086	-1.086	0	%100
51	M76	X	-4.64	-4.64	0	%100
52	M76	Z	-2.679	-2.679	0	%100
53	M77	X	-18.561	-18.561	0	%100
54	M77	Z	-10.716	-10.716	0	%100
55	M78	X	-2.033	-2.033	0	%100
56	M78	Z	-1.174	-1.174	0	%100
57	M79	X	-8.132	-8.132	0	%100
58	M79	Z	-4.695	-4.695	0	%100
59	M80	X	-2.272	-2.272	0	%100
60	M80	Z	-1.312	-1.312	0	%100
61	M95	X	-16.037	-16.037	0	%100
62	M95	Z	-9.259	-9.259	0	%100
63	M98	X	-6.781	-6.781	0	%100
64	M98	Z	-3.915	-3.915	0	%100
65	M99	X	-6.781	-6.781	0	%100
66	M99	Z	-3.915	-3.915	0	%100
67	M102	X	-2.537	-2.537	0	%100
68	M102	Z	-1.465	-1.465	0	%100
69	M103	X	0	0	0	%100
70	M103	Z	0	0	0	%100
71	M106	X	0	0	0	%100
72	M106	Z	0	0	0	%100
73	M107	X	0	0	0	%100
74	M107	Z	0	0	0	%100
75	M120	X	-7.526	-7.526	0	%100
76	M120	Z	-4.345	-4.345	0	%100
77	M121	X	-2.033	-2.033	0	%100
78	M121	Z	-1.174	-1.174	0	%100
79	M122	X	-2.033	-2.033	0	%100
80	M122	Z	-1.174	-1.174	0	%100
81	M123	X	-9.089	-9.089	0	%100
82	M123	Z	-5.248	-5.248	0	%100
83	M124	X	-7.526	-7.526	0	%100
84	M124	Z	-4.345	-4.345	0	%100
85	M127	X	-4.64	-4.64	0	%100
86	M127	Z	-2.679	-2.679	0	%100
87	M128	X	-4.64	-4.64	0	%100
88	M128	Z	-2.679	-2.679	0	%100
89	M129	X	-2.033	-2.033	0	%100
90	M129	Z	-1.174	-1.174	0	%100
91	M130	X	-2.033	-2.033	0	%100
92	M130	Z	-1.174	-1.174	0	%100
93	M131	X	-9.089	-9.089	0	%100
94	M131	Z	-5.248	-5.248	0	%100
95	M146	X	-2.153	-2.153	0	%100
96	M146	Z	-1.243	-1.243	0	%100
97	M149	X	-20.665	-20.665	0	%100
98	M149	Z	-11.931	-11.931	0	%100
99	M150	X	-20.665	-20.665	0	%100
100	M150	Z	-11.931	-11.931	0	%100
101	M153	X	-10.149	-10.149	0	%100

Member Distributed Loads (BLC 51 : Structure Wo (300 Deg)) (Continued)

	Member Label	Direction	Start Magnitude[lb/ft,...	End Magnitude[lb/ft,F...	Start Location[in,%]	End Location[in,%]
102	M153	Z	-5.86	-5.86	0	%100
103	M148A	X	-5.292	-5.292	0	%100
104	M148A	Z	-3.055	-3.055	0	%100
105	M151A	X	-2.045	-2.045	0	%100
106	M151A	Z	-1.181	-1.181	0	%100
107	M152A	X	-15.499	-15.499	0	%100
108	M152A	Z	-8.948	-8.948	0	%100
109	M154	X	-2.045	-2.045	0	%100
110	M154	Z	-1.181	-1.181	0	%100
111	M157	X	-8.18	-8.18	0	%100
112	M157	Z	-4.723	-4.723	0	%100
113	M166	X	-5.166	-5.166	0	%100
114	M166	Z	-2.983	-2.983	0	%100
115	M162A	X	-15.499	-15.499	0	%100
116	M162A	Z	-8.948	-8.948	0	%100
117	M163A	X	-5.166	-5.166	0	%100
118	M163A	Z	-2.983	-2.983	0	%100
119	M164A	X	-15.499	-15.499	0	%100
120	M164A	Z	-8.948	-8.948	0	%100
121	M165A	X	-5.166	-5.166	0	%100
122	M165A	Z	-2.983	-2.983	0	%100
123	M166A	X	-15.499	-15.499	0	%100
124	M166A	Z	-8.948	-8.948	0	%100
125	M167	X	-5.166	-5.166	0	%100
126	M167	Z	-2.983	-2.983	0	%100
127	M168	X	0	0	0	%100
128	M168	Z	0	0	0	%100
129	M169	X	-20.665	-20.665	0	%100
130	M169	Z	-11.931	-11.931	0	%100
131	M170	X	0	0	0	%100
132	M170	Z	0	0	0	%100
133	M171	X	-20.665	-20.665	0	%100
134	M171	Z	-11.931	-11.931	0	%100
135	M172	X	-1.896	-1.896	0	%100
136	M172	Z	-1.094	-1.094	0	%100
137	M173	X	-1.896	-1.896	0	%100
138	M173	Z	-1.094	-1.094	0	%100
139	M174	X	-7.582	-7.582	0	%100
140	M174	Z	-4.378	-4.378	0	%100
141	M175	X	-2.045	-2.045	0	%100
142	M175	Z	-1.181	-1.181	0	%100
143	M176	X	-2.045	-2.045	0	%100
144	M176	Z	-1.181	-1.181	0	%100
145	M177	X	-8.18	-8.18	0	%100
146	M177	Z	-4.723	-4.723	0	%100
147	M203	X	-6.689	-6.689	0	%100
148	M203	Z	-3.862	-3.862	0	%100
149	OVP	X	-8.18	-8.18	0	%100
150	OVP	Z	-4.723	-4.723	0	%100
151	MP3A	X	-8.18	-8.18	0	%100
152	MP3A	Z	-4.723	-4.723	0	%100
153	MP2A	X	-8.18	-8.18	0	%100
154	MP2A	Z	-4.723	-4.723	0	%100
155	MP3C	X	-8.18	-8.18	0	%100
156	MP3C	Z	-4.723	-4.723	0	%100
157	MP2C	X	-8.18	-8.18	0	%100
158	MP2C	Z	-4.723	-4.723	0	%100

Member Distributed Loads (BLC 51 : Structure Wo (300 Deg)) (Continued)

	Member Label	Direction	Start Magnitude[lb/ft,...	End Magnitude[lb/ft,F...	Start Location[in,%]	End Location[in,%]
159	MP3B	X	-8.18	-8.18	0	%100
160	MP3B	Z	-4.723	-4.723	0	%100
161	MP2B	X	-8.18	-8.18	0	%100
162	MP2B	Z	-4.723	-4.723	0	%100
163	MP1A	X	-8.18	-8.18	0	%100
164	MP1A	Z	-4.723	-4.723	0	%100
165	MP4A	X	-8.18	-8.18	0	%100
166	MP4A	Z	-4.723	-4.723	0	%100
167	MP1C	X	-8.18	-8.18	0	%100
168	MP1C	Z	-4.723	-4.723	0	%100
169	MP4C	X	-8.18	-8.18	0	%100
170	MP4C	Z	-4.723	-4.723	0	%100
171	MP1B	X	-8.18	-8.18	0	%100
172	MP1B	Z	-4.723	-4.723	0	%100
173	MP4B	X	-8.18	-8.18	0	%100
174	MP4B	Z	-4.723	-4.723	0	%100
175	M204A	X	-5.292	-5.292	0	%100
176	M204A	Z	-3.055	-3.055	0	%100
177	M205B	X	-21.167	-21.167	0	%100
178	M205B	Z	-12.221	-12.221	0	%100
179	M206	X	-2.476	-2.476	0	%100
180	M206	Z	-1.429	-1.429	0	%100
181	M207	X	-2.476	-2.476	0	%100
182	M207	Z	-1.429	-1.429	0	%100
183	M208	X	-9.902	-9.902	0	%100
184	M208	Z	-5.717	-5.717	0	%100
185	M227	X	-3.062	-3.062	0	%100
186	M227	Z	-1.768	-1.768	0	%100
187	M228	X	-12.246	-12.246	0	%100
188	M228	Z	-7.07	-7.07	0	%100
189	M229	X	-3.061	-3.061	0	%100
190	M229	Z	-1.768	-1.768	0	%100
191	M231	X	-13.086	-13.086	0	%100
192	M231	Z	-7.555	-7.555	0	%100
193	M231A	X	-3.336	-3.336	0	%100
194	M231A	Z	-1.926	-1.926	0	%100
195	M232	X	-3.336	-3.336	0	%100
196	M232	Z	-1.926	-1.926	0	%100
197	M233	X	-13.086	-13.086	0	%100
198	M233	Z	-7.555	-7.555	0	%100
199	M234	X	-9.536	-9.536	0	%100
200	M234	Z	-5.506	-5.506	0	%100
201	M235	X	-9.536	-9.536	0	%100
202	M235	Z	-5.506	-5.506	0	%100

Member Distributed Loads (BLC 52 : Structure Wo (330 Deg))

	Member Label	Direction	Start Magnitude[lb/ft,...	End Magnitude[lb/ft,F...	Start Location[in,%]	End Location[in,%]
1	M1	X	-1.223	-1.223	0	%100
2	M1	Z	-2.117	-2.117	0	%100
3	M4	X	-2.996	-2.996	0	%100
4	M4	Z	-5.19	-5.19	0	%100
5	M5	X	-2.996	-2.996	0	%100
6	M5	Z	-5.19	-5.19	0	%100
7	M18	X	-3.259	-3.259	0	%100
8	M18	Z	-5.645	-5.645	0	%100
9	M19	X	-3.521	-3.521	0	%100

Member Distributed Loads (BLC 52 : Structure Wo (330 Deg)) (Continued)

	Member Label	Direction	Start Magnitude[lb/ft,...	End Magnitude[lb/ft,F...	Start Location[in,%]	End Location[in,%]
10	M19	Z	-6.099	-6.099	0	%100
11	M20	X	0	0	0	%100
12	M20	Z	0	0	0	%100
13	M21	X	-3.936	-3.936	0	%100
14	M21	Z	-6.817	-6.817	0	%100
15	M22	X	-3.259	-3.259	0	%100
16	M22	Z	-5.645	-5.645	0	%100
17	M28	X	-8.037	-8.037	0	%100
18	M28	Z	-13.921	-13.921	0	%100
19	M29	X	0	0	0	%100
20	M29	Z	0	0	0	%100
21	M27A	X	-3.521	-3.521	0	%100
22	M27A	Z	-6.099	-6.099	0	%100
23	M28A	X	0	0	0	%100
24	M28A	Z	0	0	0	%100
25	M29A	X	-3.936	-3.936	0	%100
26	M29A	Z	-6.817	-6.817	0	%100
27	M44	X	-9.259	-9.259	0	%100
28	M44	Z	-16.037	-16.037	0	%100
29	M47	X	-5.531	-5.531	0	%100
30	M47	Z	-9.579	-9.579	0	%100
31	M48	X	-5.531	-5.531	0	%100
32	M48	Z	-9.579	-9.579	0	%100
33	M51	X	-4.395	-4.395	0	%100
34	M51	Z	-7.612	-7.612	0	%100
35	M52	X	-4.89	-4.89	0	%100
36	M52	Z	-8.47	-8.47	0	%100
37	M55	X	-11.986	-11.986	0	%100
38	M55	Z	-20.76	-20.76	0	%100
39	M56	X	-11.986	-11.986	0	%100
40	M56	Z	-20.76	-20.76	0	%100
41	M69	X	0	0	0	%100
42	M69	Z	0	0	0	%100
43	M70	X	-3.521	-3.521	0	%100
44	M70	Z	-6.099	-6.099	0	%100
45	M71	X	-3.521	-3.521	0	%100
46	M71	Z	-6.099	-6.099	0	%100
47	M72	X	0	0	0	%100
48	M72	Z	0	0	0	%100
49	M73	X	0	0	0	%100
50	M73	Z	0	0	0	%100
51	M76	X	-8.037	-8.037	0	%100
52	M76	Z	-13.92	-13.92	0	%100
53	M77	X	-8.037	-8.037	0	%100
54	M77	Z	-13.92	-13.92	0	%100
55	M78	X	-3.521	-3.521	0	%100
56	M78	Z	-6.099	-6.099	0	%100
57	M79	X	-3.521	-3.521	0	%100
58	M79	Z	-6.099	-6.099	0	%100
59	M80	X	0	0	0	%100
60	M80	Z	0	0	0	%100
61	M95	X	-11.931	-11.931	0	%100
62	M95	Z	-20.665	-20.665	0	%100
63	M98	X	-1.243	-1.243	0	%100
64	M98	Z	-2.153	-2.153	0	%100
65	M99	X	-1.243	-1.243	0	%100
66	M99	Z	-2.153	-2.153	0	%100

Member Distributed Loads (BLC 52 : Structure Wo (330 Deg)) (Continued)

	Member Label	Direction	Start Magnitude[lb/ft,...	End Magnitude[lb/ft,F...	Start Location[in,%]	End Location[in,%]
67	M102	X	0	0	0	%100
68	M102	Z	0	0	0	%100
69	M103	X	-1.223	-1.223	0	%100
70	M103	Z	-2.117	-2.117	0	%100
71	M106	X	-2.996	-2.996	0	%100
72	M106	Z	-5.19	-5.19	0	%100
73	M107	X	-2.996	-2.996	0	%100
74	M107	Z	-5.19	-5.19	0	%100
75	M120	X	-3.259	-3.259	0	%100
76	M120	Z	-5.645	-5.645	0	%100
77	M121	X	0	0	0	%100
78	M121	Z	0	0	0	%100
79	M122	X	-3.521	-3.521	0	%100
80	M122	Z	-6.099	-6.099	0	%100
81	M123	X	-3.936	-3.936	0	%100
82	M123	Z	-6.817	-6.817	0	%100
83	M124	X	-3.259	-3.259	0	%100
84	M124	Z	-5.645	-5.645	0	%100
85	M127	X	0	0	0	%100
86	M127	Z	0	0	0	%100
87	M128	X	-8.037	-8.037	0	%100
88	M128	Z	-13.921	-13.921	0	%100
89	M129	X	0	0	0	%100
90	M129	Z	0	0	0	%100
91	M130	X	-3.521	-3.521	0	%100
92	M130	Z	-6.099	-6.099	0	%100
93	M131	X	-3.936	-3.936	0	%100
94	M131	Z	-6.817	-6.817	0	%100
95	M146	X	-3.915	-3.915	0	%100
96	M146	Z	-6.781	-6.781	0	%100
97	M149	X	-9.259	-9.259	0	%100
98	M149	Z	-16.037	-16.037	0	%100
99	M150	X	-9.259	-9.259	0	%100
100	M150	Z	-16.037	-16.037	0	%100
101	M153	X	-4.395	-4.395	0	%100
102	M153	Z	-7.612	-7.612	0	%100
103	M148A	X	-9.166	-9.166	0	%100
104	M148A	Z	-15.876	-15.876	0	%100
105	M151A	X	-3.542	-3.542	0	%100
106	M151A	Z	-6.135	-6.135	0	%100
107	M152A	X	-2.983	-2.983	0	%100
108	M152A	Z	-5.166	-5.166	0	%100
109	M154	X	0	0	0	%100
110	M154	Z	0	0	0	%100
111	M157	X	-3.542	-3.542	0	%100
112	M157	Z	-6.135	-6.135	0	%100
113	M166	X	-8.948	-8.948	0	%100
114	M166	Z	-15.499	-15.499	0	%100
115	M162A	X	-2.983	-2.983	0	%100
116	M162A	Z	-5.166	-5.166	0	%100
117	M163A	X	-8.948	-8.948	0	%100
118	M163A	Z	-15.499	-15.499	0	%100
119	M164A	X	-11.931	-11.931	0	%100
120	M164A	Z	-20.665	-20.665	0	%100
121	M165A	X	0	0	0	%100
122	M165A	Z	0	0	0	%100
123	M166A	X	-11.931	-11.931	0	%100

Member Distributed Loads (BLC 52 : Structure Wo (330 Deg)) (Continued)

	Member Label	Direction	Start Magnitude[lb/ft,...	End Magnitude[lb/ft,F...	Start Location[in,%]	End Location[in,%]
124	M166A	Z	-20.665	-20.665	0	%100
125	M167	X	0	0	0	%100
126	M167	Z	0	0	0	%100
127	M168	X	-2.983	-2.983	0	%100
128	M168	Z	-5.166	-5.166	0	%100
129	M169	X	-8.948	-8.948	0	%100
130	M169	Z	-15.499	-15.499	0	%100
131	M170	X	-2.983	-2.983	0	%100
132	M170	Z	-5.166	-5.166	0	%100
133	M171	X	-8.948	-8.948	0	%100
134	M171	Z	-15.499	-15.499	0	%100
135	M172	X	-3.283	-3.283	0	%100
136	M172	Z	-5.687	-5.687	0	%100
137	M173	X	0	0	0	%100
138	M173	Z	0	0	0	%100
139	M174	X	-3.283	-3.283	0	%100
140	M174	Z	-5.687	-5.687	0	%100
141	M175	X	-3.542	-3.542	0	%100
142	M175	Z	-6.135	-6.135	0	%100
143	M176	X	0	0	0	%100
144	M176	Z	0	0	0	%100
145	M177	X	-3.542	-3.542	0	%100
146	M177	Z	-6.135	-6.135	0	%100
147	M203	X	-3.862	-3.862	0	%100
148	M203	Z	-6.689	-6.689	0	%100
149	OVP	X	-4.723	-4.723	0	%100
150	OVP	Z	-8.18	-8.18	0	%100
151	MP3A	X	-4.723	-4.723	0	%100
152	MP3A	Z	-8.18	-8.18	0	%100
153	MP2A	X	-4.723	-4.723	0	%100
154	MP2A	Z	-8.18	-8.18	0	%100
155	MP3C	X	-4.723	-4.723	0	%100
156	MP3C	Z	-8.18	-8.18	0	%100
157	MP2C	X	-4.723	-4.723	0	%100
158	MP2C	Z	-8.18	-8.18	0	%100
159	MP3B	X	-4.723	-4.723	0	%100
160	MP3B	Z	-8.18	-8.18	0	%100
161	MP2B	X	-4.723	-4.723	0	%100
162	MP2B	Z	-8.18	-8.18	0	%100
163	MP1A	X	-4.723	-4.723	0	%100
164	MP1A	Z	-8.18	-8.18	0	%100
165	MP4A	X	-4.723	-4.723	0	%100
166	MP4A	Z	-8.18	-8.18	0	%100
167	MP1C	X	-4.723	-4.723	0	%100
168	MP1C	Z	-8.18	-8.18	0	%100
169	MP4C	X	-4.723	-4.723	0	%100
170	MP4C	Z	-8.18	-8.18	0	%100
171	MP1B	X	-4.723	-4.723	0	%100
172	MP1B	Z	-8.18	-8.18	0	%100
173	MP4B	X	-4.723	-4.723	0	%100
174	MP4B	Z	-8.18	-8.18	0	%100
175	M204A	X	0	0	0	%100
176	M204A	Z	0	0	0	%100
177	M205B	X	-9.166	-9.166	0	%100
178	M205B	Z	-15.876	-15.876	0	%100
179	M206	X	-4.288	-4.288	0	%100
180	M206	Z	-7.427	-7.427	0	%100

Member Distributed Loads (BLC 52 : Structure Wo (330 Deg)) (Continued)

	Member Label	Direction	Start Magnitude[lb/ft,...	End Magnitude[lb/ft,F...	Start Location[in,%]	End Location[in,%]
181	M207	X	0	0	0	%100
182	M207	Z	0	0	0	%100
183	M208	X	-4.288	-4.288	0	%100
184	M208	Z	-7.427	-7.427	0	%100
185	M227	X	0	0	0	%100
186	M227	Z	0	0	0	%100
187	M228	X	-5.303	-5.303	0	%100
188	M228	Z	-9.185	-9.185	0	%100
189	M229	X	-5.303	-5.303	0	%100
190	M229	Z	-9.184	-9.184	0	%100
191	M231	X	-8.065	-8.065	0	%100
192	M231	Z	-13.97	-13.97	0	%100
193	M231A	X	-2.436	-2.436	0	%100
194	M231A	Z	-4.22	-4.22	0	%100
195	M232	X	-4.486	-4.486	0	%100
196	M232	Z	-7.769	-7.769	0	%100
197	M233	X	-4.486	-4.486	0	%100
198	M233	Z	-7.769	-7.769	0	%100
199	M234	X	-2.436	-2.436	0	%100
200	M234	Z	-4.22	-4.22	0	%100
201	M235	X	-8.065	-8.065	0	%100
202	M235	Z	-13.97	-13.97	0	%100

Member Distributed Loads (BLC 53 : Structure Wi (0 Deg))

	Member Label	Direction	Start Magnitude[lb/ft,...	End Magnitude[lb/ft,F...	Start Location[in,%]	End Location[in,%]
1	M1	X	0	0	0	%100
2	M1	Z	0	0	0	%100
3	M4	X	0	0	0	%100
4	M4	Z	0	0	0	%100
5	M5	X	0	0	0	%100
6	M5	Z	0	0	0	%100
7	M18	X	0	0	0	%100
8	M18	Z	-2.674	-2.674	0	%100
9	M19	X	0	0	0	%100
10	M19	Z	-.718	-.718	0	%100
11	M20	X	0	0	0	%100
12	M20	Z	-.718	-.718	0	%100
13	M21	X	0	0	0	%100
14	M21	Z	-3.214	-3.214	0	%100
15	M22	X	0	0	0	%100
16	M22	Z	-2.674	-2.674	0	%100
17	M28	X	0	0	0	%100
18	M28	Z	-1.305	-1.305	0	%100
19	M29	X	0	0	0	%100
20	M29	Z	-1.305	-1.305	0	%100
21	M27A	X	0	0	0	%100
22	M27A	Z	-.718	-.718	0	%100
23	M28A	X	0	0	0	%100
24	M28A	Z	-.718	-.718	0	%100
25	M29A	X	0	0	0	%100
26	M29A	Z	-3.214	-3.214	0	%100
27	M44	X	0	0	0	%100
28	M44	Z	-5.52	-5.52	0	%100
29	M47	X	0	0	0	%100
30	M47	Z	-1.363	-1.363	0	%100
31	M48	X	0	0	0	%100

Member Distributed Loads (BLC 53 : Structure Wi (0 Deg)) (Continued)

	Member Label	Direction	Start Magnitude[lb/ft,...	End Magnitude[lb/ft,F...	Start Location[in,%]	End Location[in,%]
32	M48	Z	-1.363	-1.363	0	%100
33	M51	X	0	0	0	%100
34	M51	Z	-3.894	-3.894	0	%100
35	M52	X	0	0	0	%100
36	M52	Z	-2.395	-2.395	0	%100
37	M55	X	0	0	0	%100
38	M55	Z	-4.463	-4.463	0	%100
39	M56	X	0	0	0	%100
40	M56	Z	-4.463	-4.463	0	%100
41	M69	X	0	0	0	%100
42	M69	Z	-.668	-.668	0	%100
43	M70	X	0	0	0	%100
44	M70	Z	-2.872	-2.872	0	%100
45	M71	X	0	0	0	%100
46	M71	Z	-.718	-.718	0	%100
47	M72	X	0	0	0	%100
48	M72	Z	-.804	-.804	0	%100
49	M73	X	0	0	0	%100
50	M73	Z	-.668	-.668	0	%100
51	M76	X	0	0	0	%100
52	M76	Z	-5.219	-5.219	0	%100
53	M77	X	0	0	0	%100
54	M77	Z	-1.305	-1.305	0	%100
55	M78	X	0	0	0	%100
56	M78	Z	-2.872	-2.872	0	%100
57	M79	X	0	0	0	%100
58	M79	Z	-.718	-.718	0	%100
59	M80	X	0	0	0	%100
60	M80	Z	-.804	-.804	0	%100
61	M95	X	0	0	0	%100
62	M95	Z	-4.527	-4.527	0	%100
63	M98	X	0	0	0	%100
64	M98	Z	-2.541	-2.541	0	%100
65	M99	X	0	0	0	%100
66	M99	Z	-2.541	-2.541	0	%100
67	M102	X	0	0	0	%100
68	M102	Z	-.974	-.974	0	%100
69	M103	X	0	0	0	%100
70	M103	Z	-2.395	-2.395	0	%100
71	M106	X	0	0	0	%100
72	M106	Z	-4.463	-4.463	0	%100
73	M107	X	0	0	0	%100
74	M107	Z	-4.463	-4.463	0	%100
75	M120	X	0	0	0	%100
76	M120	Z	-.668	-.668	0	%100
77	M121	X	0	0	0	%100
78	M121	Z	-.718	-.718	0	%100
79	M122	X	0	0	0	%100
80	M122	Z	-2.872	-2.872	0	%100
81	M123	X	0	0	0	%100
82	M123	Z	-.804	-.804	0	%100
83	M124	X	0	0	0	%100
84	M124	Z	-.668	-.668	0	%100
85	M127	X	0	0	0	%100
86	M127	Z	-1.305	-1.305	0	%100
87	M128	X	0	0	0	%100
88	M128	Z	-5.219	-5.219	0	%100

Member Distributed Loads (BLC 53 : Structure Wi (0 Deg)) (Continued)

	Member Label	Direction	Start Magnitude[lb/ft,...	End Magnitude[lb/ft,F...	Start Location[in,%]	End Location[in,%]
89	M129	X	0	0	0	%100
90	M129	Z	-.718	-.718	0	%100
91	M130	X	0	0	0	%100
92	M130	Z	-2.872	-2.872	0	%100
93	M131	X	0	0	0	%100
94	M131	Z	-.804	-.804	0	%100
95	M146	X	0	0	0	%100
96	M146	Z	-4.527	-4.527	0	%100
97	M149	X	0	0	0	%100
98	M149	Z	-2.541	-2.541	0	%100
99	M150	X	0	0	0	%100
100	M150	Z	-2.541	-2.541	0	%100
101	M153	X	0	0	0	%100
102	M153	Z	-.974	-.974	0	%100
103	M148A	X	0	0	0	%100
104	M148A	Z	-6.096	-6.096	0	%100
105	M151A	X	0	0	0	%100
106	M151A	Z	-3.472	-3.472	0	%100
107	M152A	X	0	0	0	%100
108	M152A	Z	0	0	0	%100
109	M154	X	0	0	0	%100
110	M154	Z	-.868	-.868	0	%100
111	M157	X	0	0	0	%100
112	M157	Z	-.868	-.868	0	%100
113	M166	X	0	0	0	%100
114	M166	Z	-5.435	-5.435	0	%100
115	M162A	X	0	0	0	%100
116	M162A	Z	0	0	0	%100
117	M163A	X	0	0	0	%100
118	M163A	Z	-5.435	-5.435	0	%100
119	M164A	X	0	0	0	%100
120	M164A	Z	-4.076	-4.076	0	%100
121	M165A	X	0	0	0	%100
122	M165A	Z	-1.359	-1.359	0	%100
123	M166A	X	0	0	0	%100
124	M166A	Z	-4.076	-4.076	0	%100
125	M167	X	0	0	0	%100
126	M167	Z	-1.359	-1.359	0	%100
127	M168	X	0	0	0	%100
128	M168	Z	-4.076	-4.076	0	%100
129	M169	X	0	0	0	%100
130	M169	Z	-1.359	-1.359	0	%100
131	M170	X	0	0	0	%100
132	M170	Z	-4.076	-4.076	0	%100
133	M171	X	0	0	0	%100
134	M171	Z	-1.359	-1.359	0	%100
135	M172	X	0	0	0	%100
136	M172	Z	-3.233	-3.233	0	%100
137	M173	X	0	0	0	%100
138	M173	Z	-.808	-.808	0	%100
139	M174	X	0	0	0	%100
140	M174	Z	-.808	-.808	0	%100
141	M175	X	0	0	0	%100
142	M175	Z	-3.472	-3.472	0	%100
143	M176	X	0	0	0	%100
144	M176	Z	-.868	-.868	0	%100
145	M177	X	0	0	0	%100

Member Distributed Loads (BLC 53 : Structure Wi (0 Deg)) (Continued)

	Member Label	Direction	Start Magnitude[lb/ft,...	End Magnitude[lb/ft,F...	Start Location[in,%]	End Location[in,%]
146	M177	Z	-.868	-.868	0	%100
147	M203	X	0	0	0	%100
148	M203	Z	-2.85	-2.85	0	%100
149	OVP	X	0	0	0	%100
150	OVP	Z	-3.472	-3.472	0	%100
151	MP3A	X	0	0	0	%100
152	MP3A	Z	-3.472	-3.472	0	%100
153	MP2A	X	0	0	0	%100
154	MP2A	Z	-3.472	-3.472	0	%100
155	MP3C	X	0	0	0	%100
156	MP3C	Z	-3.472	-3.472	0	%100
157	MP2C	X	0	0	0	%100
158	MP2C	Z	-3.472	-3.472	0	%100
159	MP3B	X	0	0	0	%100
160	MP3B	Z	-3.472	-3.472	0	%100
161	MP2B	X	0	0	0	%100
162	MP2B	Z	-3.472	-3.472	0	%100
163	MP1A	X	0	0	0	%100
164	MP1A	Z	-3.472	-3.472	0	%100
165	MP4A	X	0	0	0	%100
166	MP4A	Z	-3.472	-3.472	0	%100
167	MP1C	X	0	0	0	%100
168	MP1C	Z	-3.472	-3.472	0	%100
169	MP4C	X	0	0	0	%100
170	MP4C	Z	-3.472	-3.472	0	%100
171	MP1B	X	0	0	0	%100
172	MP1B	Z	-3.472	-3.472	0	%100
173	MP4B	X	0	0	0	%100
174	MP4B	Z	-3.472	-3.472	0	%100
175	M204A	X	0	0	0	%100
176	M204A	Z	-1.524	-1.524	0	%100
177	M205B	X	0	0	0	%100
178	M205B	Z	-1.524	-1.524	0	%100
179	M206	X	0	0	0	%100
180	M206	Z	-3.841	-3.841	0	%100
181	M207	X	0	0	0	%100
182	M207	Z	-.96	-.96	0	%100
183	M208	X	0	0	0	%100
184	M208	Z	-.96	-.96	0	%100
185	M227	X	0	0	0	%100
186	M227	Z	-.966	-.966	0	%100
187	M228	X	0	0	0	%100
188	M228	Z	-.966	-.966	0	%100
189	M229	X	0	0	0	%100
190	M229	Z	-3.864	-3.864	0	%100
191	M231	X	0	0	0	%100
192	M231	Z	-3.187	-3.187	0	%100
193	M231A	X	0	0	0	%100
194	M231A	Z	-3.187	-3.187	0	%100
195	M232	X	0	0	0	%100
196	M232	Z	-4.373	-4.373	0	%100
197	M233	X	0	0	0	%100
198	M233	Z	-1.115	-1.115	0	%100
199	M234	X	0	0	0	%100
200	M234	Z	-1.115	-1.115	0	%100
201	M235	X	0	0	0	%100
202	M235	Z	-4.373	-4.373	0	%100

Member Distributed Loads (BLC 54 : Structure Wi (30 Deg))

	Member Label	Direction	Start Magnitude[lb/ft,...	End Magnitude[lb/ft,F...	Start Location[in,%]	End Location[in,%]
1	M1	X	.399	.399	0	%100
2	M1	Z	-.691	-.691	0	%100
3	M4	X	.744	.744	0	%100
4	M4	Z	-1.288	-1.288	0	%100
5	M5	X	.744	.744	0	%100
6	M5	Z	-1.288	-1.288	0	%100
7	M18	X	1.003	1.003	0	%100
8	M18	Z	-1.737	-1.737	0	%100
9	M19	X	0	0	0	%100
10	M19	Z	0	0	0	%100
11	M20	X	1.077	1.077	0	%100
12	M20	Z	-1.865	-1.865	0	%100
13	M21	X	1.205	1.205	0	%100
14	M21	Z	-2.088	-2.088	0	%100
15	M22	X	1.003	1.003	0	%100
16	M22	Z	-1.737	-1.737	0	%100
17	M28	X	0	0	0	%100
18	M28	Z	0	0	0	%100
19	M29	X	1.957	1.957	0	%100
20	M29	Z	-3.39	-3.39	0	%100
21	M27A	X	0	0	0	%100
22	M27A	Z	0	0	0	%100
23	M28A	X	1.077	1.077	0	%100
24	M28A	Z	-1.865	-1.865	0	%100
25	M29A	X	1.205	1.205	0	%100
26	M29A	Z	-2.088	-2.088	0	%100
27	M44	X	2.263	2.263	0	%100
28	M44	Z	-3.92	-3.92	0	%100
29	M47	X	1.571	1.571	0	%100
30	M47	Z	-2.721	-2.721	0	%100
31	M48	X	1.571	1.571	0	%100
32	M48	Z	-2.721	-2.721	0	%100
33	M51	X	1.46	1.46	0	%100
34	M51	Z	-2.53	-2.53	0	%100
35	M52	X	.399	.399	0	%100
36	M52	Z	-.691	-.691	0	%100
37	M55	X	.744	.744	0	%100
38	M55	Z	-1.288	-1.288	0	%100
39	M56	X	.744	.744	0	%100
40	M56	Z	-1.288	-1.288	0	%100
41	M69	X	1.003	1.003	0	%100
42	M69	Z	-1.737	-1.737	0	%100
43	M70	X	1.077	1.077	0	%100
44	M70	Z	-1.865	-1.865	0	%100
45	M71	X	0	0	0	%100
46	M71	Z	0	0	0	%100
47	M72	X	1.205	1.205	0	%100
48	M72	Z	-2.088	-2.088	0	%100
49	M73	X	1.003	1.003	0	%100
50	M73	Z	-1.737	-1.737	0	%100
51	M76	X	1.957	1.957	0	%100
52	M76	Z	-3.39	-3.39	0	%100
53	M77	X	0	0	0	%100
54	M77	Z	0	0	0	%100
55	M78	X	1.077	1.077	0	%100
56	M78	Z	-1.865	-1.865	0	%100
57	M79	X	0	0	0	%100

Member Distributed Loads (BLC 54 : Structure Wi (30 Deg)) (Continued)

	Member Label	Direction	Start Magnitude[lb/ft,...	End Magnitude[lb/ft,F...	Start Location[in,%]	End Location[in,%]
58	M79	Z	0	0	0	%100
59	M80	X	1.205	1.205	0	%100
60	M80	Z	-2.088	-2.088	0	%100
61	M95	X	1.271	1.271	0	%100
62	M95	Z	-2.201	-2.201	0	%100
63	M98	X	2.263	2.263	0	%100
64	M98	Z	-3.92	-3.92	0	%100
65	M99	X	2.263	2.263	0	%100
66	M99	Z	-3.92	-3.92	0	%100
67	M102	X	1.46	1.46	0	%100
68	M102	Z	-2.53	-2.53	0	%100
69	M103	X	1.597	1.597	0	%100
70	M103	Z	-2.766	-2.766	0	%100
71	M106	X	2.975	2.975	0	%100
72	M106	Z	-5.153	-5.153	0	%100
73	M107	X	2.975	2.975	0	%100
74	M107	Z	-5.153	-5.153	0	%100
75	M120	X	0	0	0	%100
76	M120	Z	0	0	0	%100
77	M121	X	1.077	1.077	0	%100
78	M121	Z	-1.865	-1.865	0	%100
79	M122	X	1.077	1.077	0	%100
80	M122	Z	-1.865	-1.865	0	%100
81	M123	X	0	0	0	%100
82	M123	Z	0	0	0	%100
83	M124	X	0	0	0	%100
84	M124	Z	0	0	0	%100
85	M127	X	1.957	1.957	0	%100
86	M127	Z	-3.39	-3.39	0	%100
87	M128	X	1.957	1.957	0	%100
88	M128	Z	-3.39	-3.39	0	%100
89	M129	X	1.077	1.077	0	%100
90	M129	Z	-1.865	-1.865	0	%100
91	M130	X	1.077	1.077	0	%100
92	M130	Z	-1.865	-1.865	0	%100
93	M131	X	0	0	0	%100
94	M131	Z	0	0	0	%100
95	M146	X	2.76	2.76	0	%100
96	M146	Z	-4.78	-4.78	0	%100
97	M149	X	.774	.774	0	%100
98	M149	Z	-1.341	-1.341	0	%100
99	M150	X	.774	.774	0	%100
100	M150	Z	-1.341	-1.341	0	%100
101	M153	X	0	0	0	%100
102	M153	Z	0	0	0	%100
103	M148A	X	2.286	2.286	0	%100
104	M148A	Z	-3.959	-3.959	0	%100
105	M151A	X	1.302	1.302	0	%100
106	M151A	Z	-2.255	-2.255	0	%100
107	M152A	X	.679	.679	0	%100
108	M152A	Z	-1.177	-1.177	0	%100
109	M154	X	1.302	1.302	0	%100
110	M154	Z	-2.255	-2.255	0	%100
111	M157	X	0	0	0	%100
112	M157	Z	0	0	0	%100
113	M166	X	2.038	2.038	0	%100
114	M166	Z	-3.53	-3.53	0	%100

Member Distributed Loads (BLC 54 : Structure Wi (30 Deg)) (Continued)

	Member Label	Direction	Start Magnitude[lb/ft,...	End Magnitude[lb/ft,F...	Start Location[in,%]	End Location[in,%]
115	M162A	X	.679	.679	0	%100
116	M162A	Z	-1.177	-1.177	0	%100
117	M163A	X	2.038	2.038	0	%100
118	M163A	Z	-3.53	-3.53	0	%100
119	M164A	X	.679	.679	0	%100
120	M164A	Z	-1.177	-1.177	0	%100
121	M165A	X	2.038	2.038	0	%100
122	M165A	Z	-3.53	-3.53	0	%100
123	M166A	X	.679	.679	0	%100
124	M166A	Z	-1.177	-1.177	0	%100
125	M167	X	2.038	2.038	0	%100
126	M167	Z	-3.53	-3.53	0	%100
127	M168	X	2.718	2.718	0	%100
128	M168	Z	-4.707	-4.707	0	%100
129	M169	X	0	0	0	%100
130	M169	Z	0	0	0	%100
131	M170	X	2.718	2.718	0	%100
132	M170	Z	-4.707	-4.707	0	%100
133	M171	X	0	0	0	%100
134	M171	Z	0	0	0	%100
135	M172	X	1.212	1.212	0	%100
136	M172	Z	-2.1	-2.1	0	%100
137	M173	X	1.212	1.212	0	%100
138	M173	Z	-2.1	-2.1	0	%100
139	M174	X	0	0	0	%100
140	M174	Z	0	0	0	%100
141	M175	X	1.302	1.302	0	%100
142	M175	Z	-2.255	-2.255	0	%100
143	M176	X	1.302	1.302	0	%100
144	M176	Z	-2.255	-2.255	0	%100
145	M177	X	0	0	0	%100
146	M177	Z	0	0	0	%100
147	M203	X	1.425	1.425	0	%100
148	M203	Z	-2.468	-2.468	0	%100
149	OVP	X	1.736	1.736	0	%100
150	OVP	Z	-3.007	-3.007	0	%100
151	MP3A	X	1.736	1.736	0	%100
152	MP3A	Z	-3.007	-3.007	0	%100
153	MP2A	X	1.736	1.736	0	%100
154	MP2A	Z	-3.007	-3.007	0	%100
155	MP3C	X	1.736	1.736	0	%100
156	MP3C	Z	-3.007	-3.007	0	%100
157	MP2C	X	1.736	1.736	0	%100
158	MP2C	Z	-3.007	-3.007	0	%100
159	MP3B	X	1.736	1.736	0	%100
160	MP3B	Z	-3.007	-3.007	0	%100
161	MP2B	X	1.736	1.736	0	%100
162	MP2B	Z	-3.007	-3.007	0	%100
163	MP1A	X	1.736	1.736	0	%100
164	MP1A	Z	-3.007	-3.007	0	%100
165	MP4A	X	1.736	1.736	0	%100
166	MP4A	Z	-3.007	-3.007	0	%100
167	MP1C	X	1.736	1.736	0	%100
168	MP1C	Z	-3.007	-3.007	0	%100
169	MP4C	X	1.736	1.736	0	%100
170	MP4C	Z	-3.007	-3.007	0	%100
171	MP1B	X	1.736	1.736	0	%100

Member Distributed Loads (BLC 54 : Structure Wi (30 Deg)) (Continued)

	Member Label	Direction	Start Magnitude[lb/ft,...	End Magnitude[lb/ft,F...	Start Location[in,%]	End Location[in,%]
172	MP1B	Z	-3.007	-3.007	0	%100
173	MP4B	X	1.736	1.736	0	%100
174	MP4B	Z	-3.007	-3.007	0	%100
175	M204A	X	2.286	2.286	0	%100
176	M204A	Z	-3.959	-3.959	0	%100
177	M205B	X	0	0	0	%100
178	M205B	Z	0	0	0	%100
179	M206	X	1.441	1.441	0	%100
180	M206	Z	-2.495	-2.495	0	%100
181	M207	X	1.441	1.441	0	%100
182	M207	Z	-2.495	-2.495	0	%100
183	M208	X	0	0	0	%100
184	M208	Z	0	0	0	%100
185	M227	X	1.449	1.449	0	%100
186	M227	Z	-2.51	-2.51	0	%100
187	M228	X	0	0	0	%100
188	M228	Z	0	0	0	%100
189	M229	X	1.449	1.449	0	%100
190	M229	Z	-2.51	-2.51	0	%100
191	M231	X	.705	.705	0	%100
192	M231	Z	-1.221	-1.221	0	%100
193	M231A	X	2.334	2.334	0	%100
194	M231A	Z	-4.043	-4.043	0	%100
195	M232	X	2.334	2.334	0	%100
196	M232	Z	-4.043	-4.043	0	%100
197	M233	X	.705	.705	0	%100
198	M233	Z	-1.221	-1.221	0	%100
199	M234	X	1.298	1.298	0	%100
200	M234	Z	-2.248	-2.248	0	%100
201	M235	X	1.298	1.298	0	%100
202	M235	Z	-2.248	-2.248	0	%100

Member Distributed Loads (BLC 55 : Structure Wi (60 Deg))

	Member Label	Direction	Start Magnitude[lb/ft,...	End Magnitude[lb/ft,F...	Start Location[in,%]	End Location[in,%]
1	M1	X	2.074	2.074	0	%100
2	M1	Z	-1.198	-1.198	0	%100
3	M4	X	3.865	3.865	0	%100
4	M4	Z	-2.231	-2.231	0	%100
5	M5	X	3.865	3.865	0	%100
6	M5	Z	-2.231	-2.231	0	%100
7	M18	X	.579	.579	0	%100
8	M18	Z	-.334	-.334	0	%100
9	M19	X	.622	.622	0	%100
10	M19	Z	-.359	-.359	0	%100
11	M20	X	2.487	2.487	0	%100
12	M20	Z	-1.436	-1.436	0	%100
13	M21	X	.696	.696	0	%100
14	M21	Z	-.402	-.402	0	%100
15	M22	X	.579	.579	0	%100
16	M22	Z	-.334	-.334	0	%100
17	M28	X	1.13	1.13	0	%100
18	M28	Z	-.652	-.652	0	%100
19	M29	X	4.52	4.52	0	%100
20	M29	Z	-2.609	-2.609	0	%100
21	M27A	X	.622	.622	0	%100
22	M27A	Z	-.359	-.359	0	%100

Member Distributed Loads (BLC 55 : Structure Wi (60 Deg)) (Continued)

	Member Label	Direction	Start Magnitude[lb/ft,...	End Magnitude[lb/ft,F...	Start Location[in,%]	End Location[in,%]
23	M28A	X	2.487	2.487	0	%100
24	M28A	Z	-1.436	-1.436	0	%100
25	M29A	X	.696	.696	0	%100
26	M29A	Z	-.402	-.402	0	%100
27	M44	X	2.201	2.201	0	%100
28	M44	Z	-1.271	-1.271	0	%100
29	M47	X	5.8	5.8	0	%100
30	M47	Z	-3.349	-3.349	0	%100
31	M48	X	5.8	5.8	0	%100
32	M48	Z	-3.349	-3.349	0	%100
33	M51	X	.843	.843	0	%100
34	M51	Z	-.487	-.487	0	%100
35	M52	X	0	0	0	%100
36	M52	Z	0	0	0	%100
37	M55	X	0	0	0	%100
38	M55	Z	0	0	0	%100
39	M56	X	0	0	0	%100
40	M56	Z	0	0	0	%100
41	M69	X	2.315	2.315	0	%100
42	M69	Z	-1.337	-1.337	0	%100
43	M70	X	.622	.622	0	%100
44	M70	Z	-.359	-.359	0	%100
45	M71	X	.622	.622	0	%100
46	M71	Z	-.359	-.359	0	%100
47	M72	X	2.783	2.783	0	%100
48	M72	Z	-1.607	-1.607	0	%100
49	M73	X	2.315	2.315	0	%100
50	M73	Z	-1.337	-1.337	0	%100
51	M76	X	1.13	1.13	0	%100
52	M76	Z	-.652	-.652	0	%100
53	M77	X	1.13	1.13	0	%100
54	M77	Z	-.652	-.652	0	%100
55	M78	X	.622	.622	0	%100
56	M78	Z	-.359	-.359	0	%100
57	M79	X	.622	.622	0	%100
58	M79	Z	-.359	-.359	0	%100
59	M80	X	2.783	2.783	0	%100
60	M80	Z	-1.607	-1.607	0	%100
61	M95	X	1.341	1.341	0	%100
62	M95	Z	-.774	-.774	0	%100
63	M98	X	4.78	4.78	0	%100
64	M98	Z	-2.76	-2.76	0	%100
65	M99	X	4.78	4.78	0	%100
66	M99	Z	-2.76	-2.76	0	%100
67	M102	X	3.373	3.373	0	%100
68	M102	Z	-1.947	-1.947	0	%100
69	M103	X	2.074	2.074	0	%100
70	M103	Z	-1.198	-1.198	0	%100
71	M106	X	3.865	3.865	0	%100
72	M106	Z	-2.231	-2.231	0	%100
73	M107	X	3.865	3.865	0	%100
74	M107	Z	-2.231	-2.231	0	%100
75	M120	X	.579	.579	0	%100
76	M120	Z	-.334	-.334	0	%100
77	M121	X	2.487	2.487	0	%100
78	M121	Z	-1.436	-1.436	0	%100
79	M122	X	.622	.622	0	%100

Member Distributed Loads (BLC 55 : Structure Wi (60 Deg)) (Continued)

	Member Label	Direction	Start Magnitude[lb/ft,...	End Magnitude[lb/ft,F...	Start Location[in,%]	End Location[in,%]
80	M122	Z	-.359	-.359	0	%100
81	M123	X	.696	.696	0	%100
82	M123	Z	-.402	-.402	0	%100
83	M124	X	.579	.579	0	%100
84	M124	Z	-.334	-.334	0	%100
85	M127	X	4.52	4.52	0	%100
86	M127	Z	-2.609	-2.609	0	%100
87	M128	X	1.13	1.13	0	%100
88	M128	Z	-.652	-.652	0	%100
89	M129	X	2.487	2.487	0	%100
90	M129	Z	-1.436	-1.436	0	%100
91	M130	X	.622	.622	0	%100
92	M130	Z	-.359	-.359	0	%100
93	M131	X	.696	.696	0	%100
94	M131	Z	-.402	-.402	0	%100
95	M146	X	3.92	3.92	0	%100
96	M146	Z	-2.263	-2.263	0	%100
97	M149	X	2.201	2.201	0	%100
98	M149	Z	-1.271	-1.271	0	%100
99	M150	X	2.201	2.201	0	%100
100	M150	Z	-1.271	-1.271	0	%100
101	M153	X	.843	.843	0	%100
102	M153	Z	-.487	-.487	0	%100
103	M148A	X	1.32	1.32	0	%100
104	M148A	Z	-.762	-.762	0	%100
105	M151A	X	.752	.752	0	%100
106	M151A	Z	-.434	-.434	0	%100
107	M152A	X	3.53	3.53	0	%100
108	M152A	Z	-2.038	-2.038	0	%100
109	M154	X	3.007	3.007	0	%100
110	M154	Z	-1.736	-1.736	0	%100
111	M157	X	.752	.752	0	%100
112	M157	Z	-.434	-.434	0	%100
113	M166	X	1.177	1.177	0	%100
114	M166	Z	-.679	-.679	0	%100
115	M162A	X	3.53	3.53	0	%100
116	M162A	Z	-2.038	-2.038	0	%100
117	M163A	X	1.177	1.177	0	%100
118	M163A	Z	-.679	-.679	0	%100
119	M164A	X	0	0	0	%100
120	M164A	Z	0	0	0	%100
121	M165A	X	4.707	4.707	0	%100
122	M165A	Z	-2.718	-2.718	0	%100
123	M166A	X	0	0	0	%100
124	M166A	Z	0	0	0	%100
125	M167	X	4.707	4.707	0	%100
126	M167	Z	-2.718	-2.718	0	%100
127	M168	X	3.53	3.53	0	%100
128	M168	Z	-2.038	-2.038	0	%100
129	M169	X	1.177	1.177	0	%100
130	M169	Z	-.679	-.679	0	%100
131	M170	X	3.53	3.53	0	%100
132	M170	Z	-2.038	-2.038	0	%100
133	M171	X	1.177	1.177	0	%100
134	M171	Z	-.679	-.679	0	%100
135	M172	X	.7	.7	0	%100
136	M172	Z	-.404	-.404	0	%100

Member Distributed Loads (BLC 55 : Structure Wi (60 Deg)) (Continued)

	Member Label	Direction	Start Magnitude[lb/ft,...	End Magnitude[lb/ft,F...	Start Location[in,%]	End Location[in,%]
137	M173	X	2.8	2.8	0	%100
138	M173	Z	-1.616	-1.616	0	%100
139	M174	X	.7	.7	0	%100
140	M174	Z	-.404	-.404	0	%100
141	M175	X	.752	.752	0	%100
142	M175	Z	-.434	-.434	0	%100
143	M176	X	3.007	3.007	0	%100
144	M176	Z	-1.736	-1.736	0	%100
145	M177	X	.752	.752	0	%100
146	M177	Z	-.434	-.434	0	%100
147	M203	X	2.468	2.468	0	%100
148	M203	Z	-1.425	-1.425	0	%100
149	OVP	X	3.007	3.007	0	%100
150	OVP	Z	-1.736	-1.736	0	%100
151	MP3A	X	3.007	3.007	0	%100
152	MP3A	Z	-1.736	-1.736	0	%100
153	MP2A	X	3.007	3.007	0	%100
154	MP2A	Z	-1.736	-1.736	0	%100
155	MP3C	X	3.007	3.007	0	%100
156	MP3C	Z	-1.736	-1.736	0	%100
157	MP2C	X	3.007	3.007	0	%100
158	MP2C	Z	-1.736	-1.736	0	%100
159	MP3B	X	3.007	3.007	0	%100
160	MP3B	Z	-1.736	-1.736	0	%100
161	MP2B	X	3.007	3.007	0	%100
162	MP2B	Z	-1.736	-1.736	0	%100
163	MP1A	X	3.007	3.007	0	%100
164	MP1A	Z	-1.736	-1.736	0	%100
165	MP4A	X	3.007	3.007	0	%100
166	MP4A	Z	-1.736	-1.736	0	%100
167	MP1C	X	3.007	3.007	0	%100
168	MP1C	Z	-1.736	-1.736	0	%100
169	MP4C	X	3.007	3.007	0	%100
170	MP4C	Z	-1.736	-1.736	0	%100
171	MP1B	X	3.007	3.007	0	%100
172	MP1B	Z	-1.736	-1.736	0	%100
173	MP4B	X	3.007	3.007	0	%100
174	MP4B	Z	-1.736	-1.736	0	%100
175	M204A	X	5.279	5.279	0	%100
176	M204A	Z	-3.048	-3.048	0	%100
177	M205B	X	1.32	1.32	0	%100
178	M205B	Z	-.762	-.762	0	%100
179	M206	X	.832	.832	0	%100
180	M206	Z	-.48	-.48	0	%100
181	M207	X	3.327	3.327	0	%100
182	M207	Z	-1.921	-1.921	0	%100
183	M208	X	.832	.832	0	%100
184	M208	Z	-.48	-.48	0	%100
185	M227	X	3.346	3.346	0	%100
186	M227	Z	-1.932	-1.932	0	%100
187	M228	X	.837	.837	0	%100
188	M228	Z	-.483	-.483	0	%100
189	M229	X	.837	.837	0	%100
190	M229	Z	-.483	-.483	0	%100
191	M231	X	.965	.965	0	%100
192	M231	Z	-.557	-.557	0	%100
193	M231A	X	3.787	3.787	0	%100

Member Distributed Loads (BLC 55 : Structure Wi (60 Deg)) (Continued)

	Member Label	Direction	Start Magnitude[lb/ft,...	End Magnitude[lb/ft,F...	Start Location[in,%]	End Location[in,%]
194	M231A	Z	-2.187	-2.187	0	%100
195	M232	X	2.76	2.76	0	%100
196	M232	Z	-1.593	-1.593	0	%100
197	M233	X	2.76	2.76	0	%100
198	M233	Z	-1.593	-1.593	0	%100
199	M234	X	3.787	3.787	0	%100
200	M234	Z	-2.187	-2.187	0	%100
201	M235	X	.965	.965	0	%100
202	M235	Z	-.557	-.557	0	%100

Member Distributed Loads (BLC 56 : Structure Wi (90 Deg))

	Member Label	Direction	Start Magnitude[lb/ft,...	End Magnitude[lb/ft,F...	Start Location[in,%]	End Location[in,%]
1	M1	X	3.194	3.194	0	%100
2	M1	Z	0	0	0	%100
3	M4	X	5.95	5.95	0	%100
4	M4	Z	0	0	0	%100
5	M5	X	5.95	5.95	0	%100
6	M5	Z	0	0	0	%100
7	M18	X	0	0	0	%100
8	M18	Z	0	0	0	%100
9	M19	X	2.154	2.154	0	%100
10	M19	Z	0	0	0	%100
11	M20	X	2.154	2.154	0	%100
12	M20	Z	0	0	0	%100
13	M21	X	0	0	0	%100
14	M21	Z	0	0	0	%100
15	M22	X	0	0	0	%100
16	M22	Z	0	0	0	%100
17	M28	X	3.914	3.914	0	%100
18	M28	Z	0	0	0	%100
19	M29	X	3.914	3.914	0	%100
20	M29	Z	0	0	0	%100
21	M27A	X	2.154	2.154	0	%100
22	M27A	Z	0	0	0	%100
23	M28A	X	2.154	2.154	0	%100
24	M28A	Z	0	0	0	%100
25	M29A	X	0	0	0	%100
26	M29A	Z	0	0	0	%100
27	M44	X	1.548	1.548	0	%100
28	M44	Z	0	0	0	%100
29	M47	X	8.475	8.475	0	%100
30	M47	Z	0	0	0	%100
31	M48	X	8.475	8.475	0	%100
32	M48	Z	0	0	0	%100
33	M51	X	0	0	0	%100
34	M51	Z	0	0	0	%100
35	M52	X	.798	.798	0	%100
36	M52	Z	0	0	0	%100
37	M55	X	1.488	1.488	0	%100
38	M55	Z	0	0	0	%100
39	M56	X	1.488	1.488	0	%100
40	M56	Z	0	0	0	%100
41	M69	X	2.005	2.005	0	%100
42	M69	Z	0	0	0	%100
43	M70	X	0	0	0	%100
44	M70	Z	0	0	0	%100

Member Distributed Loads (BLC 56 : Structure Wi (90 Deg)) (Continued)

	Member Label	Direction	Start Magnitude[lb/ft,...	End Magnitude[lb/ft,F...	Start Location[in,%]	End Location[in,%]
45	M71	X	2.154	2.154	0	%100
46	M71	Z	0	0	0	%100
47	M72	X	2.411	2.411	0	%100
48	M72	Z	0	0	0	%100
49	M73	X	2.005	2.005	0	%100
50	M73	Z	0	0	0	%100
51	M76	X	0	0	0	%100
52	M76	Z	0	0	0	%100
53	M77	X	3.914	3.914	0	%100
54	M77	Z	0	0	0	%100
55	M78	X	0	0	0	%100
56	M78	Z	0	0	0	%100
57	M79	X	2.154	2.154	0	%100
58	M79	Z	0	0	0	%100
59	M80	X	2.411	2.411	0	%100
60	M80	Z	0	0	0	%100
61	M95	X	2.541	2.541	0	%100
62	M95	Z	0	0	0	%100
63	M98	X	4.527	4.527	0	%100
64	M98	Z	0	0	0	%100
65	M99	X	4.527	4.527	0	%100
66	M99	Z	0	0	0	%100
67	M102	X	2.921	2.921	0	%100
68	M102	Z	0	0	0	%100
69	M103	X	.798	.798	0	%100
70	M103	Z	0	0	0	%100
71	M106	X	1.488	1.488	0	%100
72	M106	Z	0	0	0	%100
73	M107	X	1.488	1.488	0	%100
74	M107	Z	0	0	0	%100
75	M120	X	2.005	2.005	0	%100
76	M120	Z	0	0	0	%100
77	M121	X	2.154	2.154	0	%100
78	M121	Z	0	0	0	%100
79	M122	X	0	0	0	%100
80	M122	Z	0	0	0	%100
81	M123	X	2.411	2.411	0	%100
82	M123	Z	0	0	0	%100
83	M124	X	2.005	2.005	0	%100
84	M124	Z	0	0	0	%100
85	M127	X	3.914	3.914	0	%100
86	M127	Z	0	0	0	%100
87	M128	X	0	0	0	%100
88	M128	Z	0	0	0	%100
89	M129	X	2.154	2.154	0	%100
90	M129	Z	0	0	0	%100
91	M130	X	0	0	0	%100
92	M130	Z	0	0	0	%100
93	M131	X	2.411	2.411	0	%100
94	M131	Z	0	0	0	%100
95	M146	X	2.541	2.541	0	%100
96	M146	Z	0	0	0	%100
97	M149	X	4.527	4.527	0	%100
98	M149	Z	0	0	0	%100
99	M150	X	4.527	4.527	0	%100
100	M150	Z	0	0	0	%100
101	M153	X	2.921	2.921	0	%100

Member Distributed Loads (BLC 56 : Structure Wi (90 Deg)) (Continued)

	Member Label	Direction	Start Magnitude[lb/ft,...	End Magnitude[lb/ft,F...	Start Location[in,%]	End Location[in,%]
102	M153	Z	0	0	0	%100
103	M148A	X	0	0	0	%100
104	M148A	Z	0	0	0	%100
105	M151A	X	0	0	0	%100
106	M151A	Z	0	0	0	%100
107	M152A	X	5.435	5.435	0	%100
108	M152A	Z	0	0	0	%100
109	M154	X	2.604	2.604	0	%100
110	M154	Z	0	0	0	%100
111	M157	X	2.604	2.604	0	%100
112	M157	Z	0	0	0	%100
113	M166	X	0	0	0	%100
114	M166	Z	0	0	0	%100
115	M162A	X	5.435	5.435	0	%100
116	M162A	Z	0	0	0	%100
117	M163A	X	0	0	0	%100
118	M163A	Z	0	0	0	%100
119	M164A	X	1.359	1.359	0	%100
120	M164A	Z	0	0	0	%100
121	M165A	X	4.076	4.076	0	%100
122	M165A	Z	0	0	0	%100
123	M166A	X	1.359	1.359	0	%100
124	M166A	Z	0	0	0	%100
125	M167	X	4.076	4.076	0	%100
126	M167	Z	0	0	0	%100
127	M168	X	1.359	1.359	0	%100
128	M168	Z	0	0	0	%100
129	M169	X	4.076	4.076	0	%100
130	M169	Z	0	0	0	%100
131	M170	X	1.359	1.359	0	%100
132	M170	Z	0	0	0	%100
133	M171	X	4.076	4.076	0	%100
134	M171	Z	0	0	0	%100
135	M172	X	0	0	0	%100
136	M172	Z	0	0	0	%100
137	M173	X	2.425	2.425	0	%100
138	M173	Z	0	0	0	%100
139	M174	X	2.425	2.425	0	%100
140	M174	Z	0	0	0	%100
141	M175	X	0	0	0	%100
142	M175	Z	0	0	0	%100
143	M176	X	2.604	2.604	0	%100
144	M176	Z	0	0	0	%100
145	M177	X	2.604	2.604	0	%100
146	M177	Z	0	0	0	%100
147	M203	X	2.85	2.85	0	%100
148	M203	Z	0	0	0	%100
149	OVP	X	3.472	3.472	0	%100
150	OVP	Z	0	0	0	%100
151	MP3A	X	3.472	3.472	0	%100
152	MP3A	Z	0	0	0	%100
153	MP2A	X	3.472	3.472	0	%100
154	MP2A	Z	0	0	0	%100
155	MP3C	X	3.472	3.472	0	%100
156	MP3C	Z	0	0	0	%100
157	MP2C	X	3.472	3.472	0	%100
158	MP2C	Z	0	0	0	%100

Member Distributed Loads (BLC 56 : Structure Wi (90 Deg)) (Continued)

	Member Label	Direction	Start Magnitude[lb/ft,...	End Magnitude[lb/ft,F...	Start Location[in,%]	End Location[in,%]
159	MP3B	X	3.472	3.472	0	%100
160	MP3B	Z	0	0	0	%100
161	MP2B	X	3.472	3.472	0	%100
162	MP2B	Z	0	0	0	%100
163	MP1A	X	3.472	3.472	0	%100
164	MP1A	Z	0	0	0	%100
165	MP4A	X	3.472	3.472	0	%100
166	MP4A	Z	0	0	0	%100
167	MP1C	X	3.472	3.472	0	%100
168	MP1C	Z	0	0	0	%100
169	MP4C	X	3.472	3.472	0	%100
170	MP4C	Z	0	0	0	%100
171	MP1B	X	3.472	3.472	0	%100
172	MP1B	Z	0	0	0	%100
173	MP4B	X	3.472	3.472	0	%100
174	MP4B	Z	0	0	0	%100
175	M204A	X	4.572	4.572	0	%100
176	M204A	Z	0	0	0	%100
177	M205B	X	4.572	4.572	0	%100
178	M205B	Z	0	0	0	%100
179	M206	X	0	0	0	%100
180	M206	Z	0	0	0	%100
181	M207	X	2.881	2.881	0	%100
182	M207	Z	0	0	0	%100
183	M208	X	2.881	2.881	0	%100
184	M208	Z	0	0	0	%100
185	M227	X	2.898	2.898	0	%100
186	M227	Z	0	0	0	%100
187	M228	X	2.898	2.898	0	%100
188	M228	Z	0	0	0	%100
189	M229	X	0	0	0	%100
190	M229	Z	0	0	0	%100
191	M231	X	2.596	2.596	0	%100
192	M231	Z	0	0	0	%100
193	M231A	X	2.596	2.596	0	%100
194	M231A	Z	0	0	0	%100
195	M232	X	1.41	1.41	0	%100
196	M232	Z	0	0	0	%100
197	M233	X	4.668	4.668	0	%100
198	M233	Z	0	0	0	%100
199	M234	X	4.668	4.668	0	%100
200	M234	Z	0	0	0	%100
201	M235	X	1.41	1.41	0	%100
202	M235	Z	0	0	0	%100

Member Distributed Loads (BLC 57 : Structure Wi (120 Deg))

	Member Label	Direction	Start Magnitude[lb/ft,...	End Magnitude[lb/ft,F...	Start Location[in,%]	End Location[in,%]
1	M1	X	2.074	2.074	0	%100
2	M1	Z	1.198	1.198	0	%100
3	M4	X	3.865	3.865	0	%100
4	M4	Z	2.231	2.231	0	%100
5	M5	X	3.865	3.865	0	%100
6	M5	Z	2.231	2.231	0	%100
7	M18	X	.579	.579	0	%100
8	M18	Z	.334	.334	0	%100
9	M19	X	2.487	2.487	0	%100

Member Distributed Loads (BLC 57 : Structure Wi (120 Deg)) (Continued)

	Member Label	Direction	Start Magnitude[lb/ft,...	End Magnitude[lb/ft,F...	Start Location[in,%]	End Location[in,%]
10	M19	Z	1.436	1.436	0	%100
11	M20	X	.622	.622	0	%100
12	M20	Z	.359	.359	0	%100
13	M21	X	.696	.696	0	%100
14	M21	Z	.402	.402	0	%100
15	M22	X	.579	.579	0	%100
16	M22	Z	.334	.334	0	%100
17	M28	X	4.52	4.52	0	%100
18	M28	Z	2.609	2.609	0	%100
19	M29	X	1.13	1.13	0	%100
20	M29	Z	.652	.652	0	%100
21	M27A	X	2.487	2.487	0	%100
22	M27A	Z	1.436	1.436	0	%100
23	M28A	X	.622	.622	0	%100
24	M28A	Z	.359	.359	0	%100
25	M29A	X	.696	.696	0	%100
26	M29A	Z	.402	.402	0	%100
27	M44	X	2.201	2.201	0	%100
28	M44	Z	1.271	1.271	0	%100
29	M47	X	5.8	5.8	0	%100
30	M47	Z	3.349	3.349	0	%100
31	M48	X	5.8	5.8	0	%100
32	M48	Z	3.349	3.349	0	%100
33	M51	X	.843	.843	0	%100
34	M51	Z	.487	.487	0	%100
35	M52	X	2.074	2.074	0	%100
36	M52	Z	1.198	1.198	0	%100
37	M55	X	3.865	3.865	0	%100
38	M55	Z	2.231	2.231	0	%100
39	M56	X	3.865	3.865	0	%100
40	M56	Z	2.231	2.231	0	%100
41	M69	X	.579	.579	0	%100
42	M69	Z	.334	.334	0	%100
43	M70	X	.622	.622	0	%100
44	M70	Z	.359	.359	0	%100
45	M71	X	2.487	2.487	0	%100
46	M71	Z	1.436	1.436	0	%100
47	M72	X	.696	.696	0	%100
48	M72	Z	.402	.402	0	%100
49	M73	X	.579	.579	0	%100
50	M73	Z	.334	.334	0	%100
51	M76	X	1.13	1.13	0	%100
52	M76	Z	.652	.652	0	%100
53	M77	X	4.52	4.52	0	%100
54	M77	Z	2.609	2.609	0	%100
55	M78	X	.622	.622	0	%100
56	M78	Z	.359	.359	0	%100
57	M79	X	2.487	2.487	0	%100
58	M79	Z	1.436	1.436	0	%100
59	M80	X	.696	.696	0	%100
60	M80	Z	.402	.402	0	%100
61	M95	X	3.92	3.92	0	%100
62	M95	Z	2.263	2.263	0	%100
63	M98	X	2.201	2.201	0	%100
64	M98	Z	1.271	1.271	0	%100
65	M99	X	2.201	2.201	0	%100
66	M99	Z	1.271	1.271	0	%100

Member Distributed Loads (BLC 57 : Structure Wi (120 Deg)) (Continued)

	Member Label	Direction	Start Magnitude[lb/ft,...	End Magnitude[lb/ft,F...	Start Location[in,%]	End Location[in,%]
67	M102	X	.843	.843	0	%100
68	M102	Z	.487	.487	0	%100
69	M103	X	0	0	0	%100
70	M103	Z	0	0	0	%100
71	M106	X	0	0	0	%100
72	M106	Z	0	0	0	%100
73	M107	X	0	0	0	%100
74	M107	Z	0	0	0	%100
75	M120	X	2.315	2.315	0	%100
76	M120	Z	1.337	1.337	0	%100
77	M121	X	.622	.622	0	%100
78	M121	Z	.359	.359	0	%100
79	M122	X	.622	.622	0	%100
80	M122	Z	.359	.359	0	%100
81	M123	X	2.783	2.783	0	%100
82	M123	Z	1.607	1.607	0	%100
83	M124	X	2.315	2.315	0	%100
84	M124	Z	1.337	1.337	0	%100
85	M127	X	1.13	1.13	0	%100
86	M127	Z	.652	.652	0	%100
87	M128	X	1.13	1.13	0	%100
88	M128	Z	.652	.652	0	%100
89	M129	X	.622	.622	0	%100
90	M129	Z	.359	.359	0	%100
91	M130	X	.622	.622	0	%100
92	M130	Z	.359	.359	0	%100
93	M131	X	2.783	2.783	0	%100
94	M131	Z	1.607	1.607	0	%100
95	M146	X	1.341	1.341	0	%100
96	M146	Z	.774	.774	0	%100
97	M149	X	4.78	4.78	0	%100
98	M149	Z	2.76	2.76	0	%100
99	M150	X	4.78	4.78	0	%100
100	M150	Z	2.76	2.76	0	%100
101	M153	X	3.373	3.373	0	%100
102	M153	Z	1.947	1.947	0	%100
103	M148A	X	1.32	1.32	0	%100
104	M148A	Z	.762	.762	0	%100
105	M151A	X	.752	.752	0	%100
106	M151A	Z	.434	.434	0	%100
107	M152A	X	3.53	3.53	0	%100
108	M152A	Z	2.038	2.038	0	%100
109	M154	X	.752	.752	0	%100
110	M154	Z	.434	.434	0	%100
111	M157	X	3.007	3.007	0	%100
112	M157	Z	1.736	1.736	0	%100
113	M166	X	1.177	1.177	0	%100
114	M166	Z	.679	.679	0	%100
115	M162A	X	3.53	3.53	0	%100
116	M162A	Z	2.038	2.038	0	%100
117	M163A	X	1.177	1.177	0	%100
118	M163A	Z	.679	.679	0	%100
119	M164A	X	3.53	3.53	0	%100
120	M164A	Z	2.038	2.038	0	%100
121	M165A	X	1.177	1.177	0	%100
122	M165A	Z	.679	.679	0	%100
123	M166A	X	3.53	3.53	0	%100

Member Distributed Loads (BLC 57 : Structure Wi (120 Deg)) (Continued)

	Member Label	Direction	Start Magnitude[lb/ft,...	End Magnitude[lb/ft,F...	Start Location[in,%]	End Location[in,%]
124	M166A	Z	2.038	2.038	0	%100
125	M167	X	1.177	1.177	0	%100
126	M167	Z	.679	.679	0	%100
127	M168	X	0	0	0	%100
128	M168	Z	0	0	0	%100
129	M169	X	4.707	4.707	0	%100
130	M169	Z	2.718	2.718	0	%100
131	M170	X	0	0	0	%100
132	M170	Z	0	0	0	%100
133	M171	X	4.707	4.707	0	%100
134	M171	Z	2.718	2.718	0	%100
135	M172	X	.7	.7	0	%100
136	M172	Z	.404	.404	0	%100
137	M173	X	.7	.7	0	%100
138	M173	Z	.404	.404	0	%100
139	M174	X	2.8	2.8	0	%100
140	M174	Z	1.616	1.616	0	%100
141	M175	X	.752	.752	0	%100
142	M175	Z	.434	.434	0	%100
143	M176	X	.752	.752	0	%100
144	M176	Z	.434	.434	0	%100
145	M177	X	3.007	3.007	0	%100
146	M177	Z	1.736	1.736	0	%100
147	M203	X	2.468	2.468	0	%100
148	M203	Z	1.425	1.425	0	%100
149	OVP	X	3.007	3.007	0	%100
150	OVP	Z	1.736	1.736	0	%100
151	MP3A	X	3.007	3.007	0	%100
152	MP3A	Z	1.736	1.736	0	%100
153	MP2A	X	3.007	3.007	0	%100
154	MP2A	Z	1.736	1.736	0	%100
155	MP3C	X	3.007	3.007	0	%100
156	MP3C	Z	1.736	1.736	0	%100
157	MP2C	X	3.007	3.007	0	%100
158	MP2C	Z	1.736	1.736	0	%100
159	MP3B	X	3.007	3.007	0	%100
160	MP3B	Z	1.736	1.736	0	%100
161	MP2B	X	3.007	3.007	0	%100
162	MP2B	Z	1.736	1.736	0	%100
163	MP1A	X	3.007	3.007	0	%100
164	MP1A	Z	1.736	1.736	0	%100
165	MP4A	X	3.007	3.007	0	%100
166	MP4A	Z	1.736	1.736	0	%100
167	MP1C	X	3.007	3.007	0	%100
168	MP1C	Z	1.736	1.736	0	%100
169	MP4C	X	3.007	3.007	0	%100
170	MP4C	Z	1.736	1.736	0	%100
171	MP1B	X	3.007	3.007	0	%100
172	MP1B	Z	1.736	1.736	0	%100
173	MP4B	X	3.007	3.007	0	%100
174	MP4B	Z	1.736	1.736	0	%100
175	M204A	X	1.32	1.32	0	%100
176	M204A	Z	.762	.762	0	%100
177	M205B	X	5.279	5.279	0	%100
178	M205B	Z	3.048	3.048	0	%100
179	M206	X	.832	.832	0	%100
180	M206	Z	.48	.48	0	%100

Member Distributed Loads (BLC 57 : Structure Wi (120 Deg)) (Continued)

	Member Label	Direction	Start Magnitude[lb/ft,...	End Magnitude[lb/ft,F...	Start Location[in,%]	End Location[in,%]
181	M207	X	.832	.832	0	%100
182	M207	Z	.48	.48	0	%100
183	M208	X	3.327	3.327	0	%100
184	M208	Z	1.921	1.921	0	%100
185	M227	X	.837	.837	0	%100
186	M227	Z	.483	.483	0	%100
187	M228	X	3.346	3.346	0	%100
188	M228	Z	1.932	1.932	0	%100
189	M229	X	.837	.837	0	%100
190	M229	Z	.483	.483	0	%100
191	M231	X	3.787	3.787	0	%100
192	M231	Z	2.187	2.187	0	%100
193	M231A	X	.965	.965	0	%100
194	M231A	Z	.557	.557	0	%100
195	M232	X	.965	.965	0	%100
196	M232	Z	.557	.557	0	%100
197	M233	X	3.787	3.787	0	%100
198	M233	Z	2.187	2.187	0	%100
199	M234	X	2.76	2.76	0	%100
200	M234	Z	1.593	1.593	0	%100
201	M235	X	2.76	2.76	0	%100
202	M235	Z	1.593	1.593	0	%100

Member Distributed Loads (BLC 58 : Structure Wi (150 Deg))

	Member Label	Direction	Start Magnitude[lb/ft,...	End Magnitude[lb/ft,F...	Start Location[in,%]	End Location[in,%]
1	M1	X	.399	.399	0	%100
2	M1	Z	.691	.691	0	%100
3	M4	X	.744	.744	0	%100
4	M4	Z	1.288	1.288	0	%100
5	M5	X	.744	.744	0	%100
6	M5	Z	1.288	1.288	0	%100
7	M18	X	1.003	1.003	0	%100
8	M18	Z	1.737	1.737	0	%100
9	M19	X	1.077	1.077	0	%100
10	M19	Z	1.865	1.865	0	%100
11	M20	X	0	0	0	%100
12	M20	Z	0	0	0	%100
13	M21	X	1.205	1.205	0	%100
14	M21	Z	2.088	2.088	0	%100
15	M22	X	1.003	1.003	0	%100
16	M22	Z	1.737	1.737	0	%100
17	M28	X	1.957	1.957	0	%100
18	M28	Z	3.39	3.39	0	%100
19	M29	X	0	0	0	%100
20	M29	Z	0	0	0	%100
21	M27A	X	1.077	1.077	0	%100
22	M27A	Z	1.865	1.865	0	%100
23	M28A	X	0	0	0	%100
24	M28A	Z	0	0	0	%100
25	M29A	X	1.205	1.205	0	%100
26	M29A	Z	2.088	2.088	0	%100
27	M44	X	2.263	2.263	0	%100
28	M44	Z	3.92	3.92	0	%100
29	M47	X	1.571	1.571	0	%100
30	M47	Z	2.721	2.721	0	%100
31	M48	X	1.571	1.571	0	%100

Member Distributed Loads (BLC 58 : Structure Wi (150 Deg)) (Continued)

	Member Label	Direction	Start Magnitude[lb/ft,...	End Magnitude[lb/ft,F...	Start Location[in,%]	End Location[in,%]
32	M48	Z	2.721	2.721	0	%100
33	M51	X	1.46	1.46	0	%100
34	M51	Z	2.53	2.53	0	%100
35	M52	X	1.597	1.597	0	%100
36	M52	Z	2.766	2.766	0	%100
37	M55	X	2.975	2.975	0	%100
38	M55	Z	5.153	5.153	0	%100
39	M56	X	2.975	2.975	0	%100
40	M56	Z	5.153	5.153	0	%100
41	M69	X	0	0	0	%100
42	M69	Z	0	0	0	%100
43	M70	X	1.077	1.077	0	%100
44	M70	Z	1.865	1.865	0	%100
45	M71	X	1.077	1.077	0	%100
46	M71	Z	1.865	1.865	0	%100
47	M72	X	0	0	0	%100
48	M72	Z	0	0	0	%100
49	M73	X	0	0	0	%100
50	M73	Z	0	0	0	%100
51	M76	X	1.957	1.957	0	%100
52	M76	Z	3.39	3.39	0	%100
53	M77	X	1.957	1.957	0	%100
54	M77	Z	3.39	3.39	0	%100
55	M78	X	1.077	1.077	0	%100
56	M78	Z	1.865	1.865	0	%100
57	M79	X	1.077	1.077	0	%100
58	M79	Z	1.865	1.865	0	%100
59	M80	X	0	0	0	%100
60	M80	Z	0	0	0	%100
61	M95	X	2.76	2.76	0	%100
62	M95	Z	4.78	4.78	0	%100
63	M98	X	.774	.774	0	%100
64	M98	Z	1.341	1.341	0	%100
65	M99	X	.774	.774	0	%100
66	M99	Z	1.341	1.341	0	%100
67	M102	X	0	0	0	%100
68	M102	Z	0	0	0	%100
69	M103	X	.399	.399	0	%100
70	M103	Z	.691	.691	0	%100
71	M106	X	.744	.744	0	%100
72	M106	Z	1.288	1.288	0	%100
73	M107	X	.744	.744	0	%100
74	M107	Z	1.288	1.288	0	%100
75	M120	X	1.003	1.003	0	%100
76	M120	Z	1.737	1.737	0	%100
77	M121	X	0	0	0	%100
78	M121	Z	0	0	0	%100
79	M122	X	1.077	1.077	0	%100
80	M122	Z	1.865	1.865	0	%100
81	M123	X	1.205	1.205	0	%100
82	M123	Z	2.088	2.088	0	%100
83	M124	X	1.003	1.003	0	%100
84	M124	Z	1.737	1.737	0	%100
85	M127	X	0	0	0	%100
86	M127	Z	0	0	0	%100
87	M128	X	1.957	1.957	0	%100
88	M128	Z	3.39	3.39	0	%100

Member Distributed Loads (BLC 58 : Structure Wi (150 Deg)) (Continued)

	Member Label	Direction	Start Magnitude[lb/ft,...	End Magnitude[lb/ft,F...	Start Location[in,%]	End Location[in,%]
89	M129	X	0	0	0	%100
90	M129	Z	0	0	0	%100
91	M130	X	1.077	1.077	0	%100
92	M130	Z	1.865	1.865	0	%100
93	M131	X	1.205	1.205	0	%100
94	M131	Z	2.088	2.088	0	%100
95	M146	X	1.271	1.271	0	%100
96	M146	Z	2.201	2.201	0	%100
97	M149	X	2.263	2.263	0	%100
98	M149	Z	3.92	3.92	0	%100
99	M150	X	2.263	2.263	0	%100
100	M150	Z	3.92	3.92	0	%100
101	M153	X	1.46	1.46	0	%100
102	M153	Z	2.53	2.53	0	%100
103	M148A	X	2.286	2.286	0	%100
104	M148A	Z	3.959	3.959	0	%100
105	M151A	X	1.302	1.302	0	%100
106	M151A	Z	2.255	2.255	0	%100
107	M152A	X	.679	.679	0	%100
108	M152A	Z	1.177	1.177	0	%100
109	M154	X	0	0	0	%100
110	M154	Z	0	0	0	%100
111	M157	X	1.302	1.302	0	%100
112	M157	Z	2.255	2.255	0	%100
113	M166	X	2.038	2.038	0	%100
114	M166	Z	3.53	3.53	0	%100
115	M162A	X	.679	.679	0	%100
116	M162A	Z	1.177	1.177	0	%100
117	M163A	X	2.038	2.038	0	%100
118	M163A	Z	3.53	3.53	0	%100
119	M164A	X	2.718	2.718	0	%100
120	M164A	Z	4.707	4.707	0	%100
121	M165A	X	0	0	0	%100
122	M165A	Z	0	0	0	%100
123	M166A	X	2.718	2.718	0	%100
124	M166A	Z	4.707	4.707	0	%100
125	M167	X	0	0	0	%100
126	M167	Z	0	0	0	%100
127	M168	X	.679	.679	0	%100
128	M168	Z	1.177	1.177	0	%100
129	M169	X	2.038	2.038	0	%100
130	M169	Z	3.53	3.53	0	%100
131	M170	X	.679	.679	0	%100
132	M170	Z	1.177	1.177	0	%100
133	M171	X	2.038	2.038	0	%100
134	M171	Z	3.53	3.53	0	%100
135	M172	X	1.212	1.212	0	%100
136	M172	Z	2.1	2.1	0	%100
137	M173	X	0	0	0	%100
138	M173	Z	0	0	0	%100
139	M174	X	1.212	1.212	0	%100
140	M174	Z	2.1	2.1	0	%100
141	M175	X	1.302	1.302	0	%100
142	M175	Z	2.255	2.255	0	%100
143	M176	X	0	0	0	%100
144	M176	Z	0	0	0	%100
145	M177	X	1.302	1.302	0	%100

Member Distributed Loads (BLC 58 : Structure Wi (150 Deg)) (Continued)

	Member Label	Direction	Start Magnitude[lb/ft,...	End Magnitude[lb/ft,F...	Start Location[in,%]	End Location[in,%]
146	M177	Z	2.255	2.255	0	%100
147	M203	X	1.425	1.425	0	%100
148	M203	Z	2.468	2.468	0	%100
149	OVP	X	1.736	1.736	0	%100
150	OVP	Z	3.007	3.007	0	%100
151	MP3A	X	1.736	1.736	0	%100
152	MP3A	Z	3.007	3.007	0	%100
153	MP2A	X	1.736	1.736	0	%100
154	MP2A	Z	3.007	3.007	0	%100
155	MP3C	X	1.736	1.736	0	%100
156	MP3C	Z	3.007	3.007	0	%100
157	MP2C	X	1.736	1.736	0	%100
158	MP2C	Z	3.007	3.007	0	%100
159	MP3B	X	1.736	1.736	0	%100
160	MP3B	Z	3.007	3.007	0	%100
161	MP2B	X	1.736	1.736	0	%100
162	MP2B	Z	3.007	3.007	0	%100
163	MP1A	X	1.736	1.736	0	%100
164	MP1A	Z	3.007	3.007	0	%100
165	MP4A	X	1.736	1.736	0	%100
166	MP4A	Z	3.007	3.007	0	%100
167	MP1C	X	1.736	1.736	0	%100
168	MP1C	Z	3.007	3.007	0	%100
169	MP4C	X	1.736	1.736	0	%100
170	MP4C	Z	3.007	3.007	0	%100
171	MP1B	X	1.736	1.736	0	%100
172	MP1B	Z	3.007	3.007	0	%100
173	MP4B	X	1.736	1.736	0	%100
174	MP4B	Z	3.007	3.007	0	%100
175	M204A	X	0	0	0	%100
176	M204A	Z	0	0	0	%100
177	M205B	X	2.286	2.286	0	%100
178	M205B	Z	3.959	3.959	0	%100
179	M206	X	1.441	1.441	0	%100
180	M206	Z	2.495	2.495	0	%100
181	M207	X	0	0	0	%100
182	M207	Z	0	0	0	%100
183	M208	X	1.441	1.441	0	%100
184	M208	Z	2.495	2.495	0	%100
185	M227	X	0	0	0	%100
186	M227	Z	0	0	0	%100
187	M228	X	1.449	1.449	0	%100
188	M228	Z	2.51	2.51	0	%100
189	M229	X	1.449	1.449	0	%100
190	M229	Z	2.51	2.51	0	%100
191	M231	X	2.334	2.334	0	%100
192	M231	Z	4.043	4.043	0	%100
193	M231A	X	.705	.705	0	%100
194	M231A	Z	1.221	1.221	0	%100
195	M232	X	1.298	1.298	0	%100
196	M232	Z	2.248	2.248	0	%100
197	M233	X	1.298	1.298	0	%100
198	M233	Z	2.248	2.248	0	%100
199	M234	X	.705	.705	0	%100
200	M234	Z	1.221	1.221	0	%100
201	M235	X	2.334	2.334	0	%100
202	M235	Z	4.043	4.043	0	%100

Member Distributed Loads (BLC 59 : Structure Wi (180 Deg))

	Member Label	Direction	Start Magnitude[lb/ft,...	End Magnitude[lb/ft,F...	Start Location[in,%]	End Location[in,%]
1	M1	X	0	0	0	%100
2	M1	Z	0	0	0	%100
3	M4	X	0	0	0	%100
4	M4	Z	0	0	0	%100
5	M5	X	0	0	0	%100
6	M5	Z	0	0	0	%100
7	M18	X	0	0	0	%100
8	M18	Z	2.674	2.674	0	%100
9	M19	X	0	0	0	%100
10	M19	Z	.718	.718	0	%100
11	M20	X	0	0	0	%100
12	M20	Z	.718	.718	0	%100
13	M21	X	0	0	0	%100
14	M21	Z	3.214	3.214	0	%100
15	M22	X	0	0	0	%100
16	M22	Z	2.674	2.674	0	%100
17	M28	X	0	0	0	%100
18	M28	Z	1.305	1.305	0	%100
19	M29	X	0	0	0	%100
20	M29	Z	1.305	1.305	0	%100
21	M27A	X	0	0	0	%100
22	M27A	Z	.718	.718	0	%100
23	M28A	X	0	0	0	%100
24	M28A	Z	.718	.718	0	%100
25	M29A	X	0	0	0	%100
26	M29A	Z	3.214	3.214	0	%100
27	M44	X	0	0	0	%100
28	M44	Z	5.52	5.52	0	%100
29	M47	X	0	0	0	%100
30	M47	Z	1.363	1.363	0	%100
31	M48	X	0	0	0	%100
32	M48	Z	1.363	1.363	0	%100
33	M51	X	0	0	0	%100
34	M51	Z	3.894	3.894	0	%100
35	M52	X	0	0	0	%100
36	M52	Z	2.395	2.395	0	%100
37	M55	X	0	0	0	%100
38	M55	Z	4.463	4.463	0	%100
39	M56	X	0	0	0	%100
40	M56	Z	4.463	4.463	0	%100
41	M69	X	0	0	0	%100
42	M69	Z	.668	.668	0	%100
43	M70	X	0	0	0	%100
44	M70	Z	2.872	2.872	0	%100
45	M71	X	0	0	0	%100
46	M71	Z	.718	.718	0	%100
47	M72	X	0	0	0	%100
48	M72	Z	.804	.804	0	%100
49	M73	X	0	0	0	%100
50	M73	Z	.668	.668	0	%100
51	M76	X	0	0	0	%100
52	M76	Z	5.219	5.219	0	%100
53	M77	X	0	0	0	%100
54	M77	Z	1.305	1.305	0	%100
55	M78	X	0	0	0	%100
56	M78	Z	2.872	2.872	0	%100
57	M79	X	0	0	0	%100

Member Distributed Loads (BLC 59 : Structure Wi (180 Deg)) (Continued)

	Member Label	Direction	Start Magnitude[lb/ft,...	End Magnitude[lb/ft,F...	Start Location[in,%]	End Location[in,%]
58	M79	Z	.718	.718	0	%100
59	M80	X	0	0	0	%100
60	M80	Z	.804	.804	0	%100
61	M95	X	0	0	0	%100
62	M95	Z	4.527	4.527	0	%100
63	M98	X	0	0	0	%100
64	M98	Z	2.541	2.541	0	%100
65	M99	X	0	0	0	%100
66	M99	Z	2.541	2.541	0	%100
67	M102	X	0	0	0	%100
68	M102	Z	.974	.974	0	%100
69	M103	X	0	0	0	%100
70	M103	Z	2.395	2.395	0	%100
71	M106	X	0	0	0	%100
72	M106	Z	4.463	4.463	0	%100
73	M107	X	0	0	0	%100
74	M107	Z	4.463	4.463	0	%100
75	M120	X	0	0	0	%100
76	M120	Z	.668	.668	0	%100
77	M121	X	0	0	0	%100
78	M121	Z	.718	.718	0	%100
79	M122	X	0	0	0	%100
80	M122	Z	2.872	2.872	0	%100
81	M123	X	0	0	0	%100
82	M123	Z	.804	.804	0	%100
83	M124	X	0	0	0	%100
84	M124	Z	.668	.668	0	%100
85	M127	X	0	0	0	%100
86	M127	Z	1.305	1.305	0	%100
87	M128	X	0	0	0	%100
88	M128	Z	5.219	5.219	0	%100
89	M129	X	0	0	0	%100
90	M129	Z	.718	.718	0	%100
91	M130	X	0	0	0	%100
92	M130	Z	2.872	2.872	0	%100
93	M131	X	0	0	0	%100
94	M131	Z	.804	.804	0	%100
95	M146	X	0	0	0	%100
96	M146	Z	4.527	4.527	0	%100
97	M149	X	0	0	0	%100
98	M149	Z	2.541	2.541	0	%100
99	M150	X	0	0	0	%100
100	M150	Z	2.541	2.541	0	%100
101	M153	X	0	0	0	%100
102	M153	Z	.974	.974	0	%100
103	M148A	X	0	0	0	%100
104	M148A	Z	6.096	6.096	0	%100
105	M151A	X	0	0	0	%100
106	M151A	Z	3.472	3.472	0	%100
107	M152A	X	0	0	0	%100
108	M152A	Z	0	0	0	%100
109	M154	X	0	0	0	%100
110	M154	Z	.868	.868	0	%100
111	M157	X	0	0	0	%100
112	M157	Z	.868	.868	0	%100
113	M166	X	0	0	0	%100
114	M166	Z	5.435	5.435	0	%100

Member Distributed Loads (BLC 59 : Structure Wi (180 Deg)) (Continued)

	Member Label	Direction	Start Magnitude[lb/ft,...	End Magnitude[lb/ft,F...	Start Location[in,%]	End Location[in,%]
115	M162A	X	0	0	0	%100
116	M162A	Z	0	0	0	%100
117	M163A	X	0	0	0	%100
118	M163A	Z	5.435	5.435	0	%100
119	M164A	X	0	0	0	%100
120	M164A	Z	4.076	4.076	0	%100
121	M165A	X	0	0	0	%100
122	M165A	Z	1.359	1.359	0	%100
123	M166A	X	0	0	0	%100
124	M166A	Z	4.076	4.076	0	%100
125	M167	X	0	0	0	%100
126	M167	Z	1.359	1.359	0	%100
127	M168	X	0	0	0	%100
128	M168	Z	4.076	4.076	0	%100
129	M169	X	0	0	0	%100
130	M169	Z	1.359	1.359	0	%100
131	M170	X	0	0	0	%100
132	M170	Z	4.076	4.076	0	%100
133	M171	X	0	0	0	%100
134	M171	Z	1.359	1.359	0	%100
135	M172	X	0	0	0	%100
136	M172	Z	3.233	3.233	0	%100
137	M173	X	0	0	0	%100
138	M173	Z	.808	.808	0	%100
139	M174	X	0	0	0	%100
140	M174	Z	.808	.808	0	%100
141	M175	X	0	0	0	%100
142	M175	Z	3.472	3.472	0	%100
143	M176	X	0	0	0	%100
144	M176	Z	.868	.868	0	%100
145	M177	X	0	0	0	%100
146	M177	Z	.868	.868	0	%100
147	M203	X	0	0	0	%100
148	M203	Z	2.85	2.85	0	%100
149	OVP	X	0	0	0	%100
150	OVP	Z	3.472	3.472	0	%100
151	MP3A	X	0	0	0	%100
152	MP3A	Z	3.472	3.472	0	%100
153	MP2A	X	0	0	0	%100
154	MP2A	Z	3.472	3.472	0	%100
155	MP3C	X	0	0	0	%100
156	MP3C	Z	3.472	3.472	0	%100
157	MP2C	X	0	0	0	%100
158	MP2C	Z	3.472	3.472	0	%100
159	MP3B	X	0	0	0	%100
160	MP3B	Z	3.472	3.472	0	%100
161	MP2B	X	0	0	0	%100
162	MP2B	Z	3.472	3.472	0	%100
163	MP1A	X	0	0	0	%100
164	MP1A	Z	3.472	3.472	0	%100
165	MP4A	X	0	0	0	%100
166	MP4A	Z	3.472	3.472	0	%100
167	MP1C	X	0	0	0	%100
168	MP1C	Z	3.472	3.472	0	%100
169	MP4C	X	0	0	0	%100
170	MP4C	Z	3.472	3.472	0	%100
171	MP1B	X	0	0	0	%100

Member Distributed Loads (BLC 59 : Structure Wi (180 Deg)) (Continued)

	Member Label	Direction	Start Magnitude[lb/ft,...	End Magnitude[lb/ft,F...	Start Location[in,%]	End Location[in,%]
172	MP1B	Z	3.472	3.472	0	%100
173	MP4B	X	0	0	0	%100
174	MP4B	Z	3.472	3.472	0	%100
175	M204A	X	0	0	0	%100
176	M204A	Z	1.524	1.524	0	%100
177	M205B	X	0	0	0	%100
178	M205B	Z	1.524	1.524	0	%100
179	M206	X	0	0	0	%100
180	M206	Z	3.841	3.841	0	%100
181	M207	X	0	0	0	%100
182	M207	Z	.96	.96	0	%100
183	M208	X	0	0	0	%100
184	M208	Z	.96	.96	0	%100
185	M227	X	0	0	0	%100
186	M227	Z	.966	.966	0	%100
187	M228	X	0	0	0	%100
188	M228	Z	.966	.966	0	%100
189	M229	X	0	0	0	%100
190	M229	Z	3.864	3.864	0	%100
191	M231	X	0	0	0	%100
192	M231	Z	3.187	3.187	0	%100
193	M231A	X	0	0	0	%100
194	M231A	Z	3.187	3.187	0	%100
195	M232	X	0	0	0	%100
196	M232	Z	4.373	4.373	0	%100
197	M233	X	0	0	0	%100
198	M233	Z	1.115	1.115	0	%100
199	M234	X	0	0	0	%100
200	M234	Z	1.115	1.115	0	%100
201	M235	X	0	0	0	%100
202	M235	Z	4.373	4.373	0	%100

Member Distributed Loads (BLC 60 : Structure Wi (210 Deg))

	Member Label	Direction	Start Magnitude[lb/ft,...	End Magnitude[lb/ft,F...	Start Location[in,%]	End Location[in,%]
1	M1	X	-.399	-.399	0	%100
2	M1	Z	.691	.691	0	%100
3	M4	X	-.744	-.744	0	%100
4	M4	Z	1.288	1.288	0	%100
5	M5	X	-.744	-.744	0	%100
6	M5	Z	1.288	1.288	0	%100
7	M18	X	-1.003	-1.003	0	%100
8	M18	Z	1.737	1.737	0	%100
9	M19	X	0	0	0	%100
10	M19	Z	0	0	0	%100
11	M20	X	-1.077	-1.077	0	%100
12	M20	Z	1.865	1.865	0	%100
13	M21	X	-1.205	-1.205	0	%100
14	M21	Z	2.088	2.088	0	%100
15	M22	X	-1.003	-1.003	0	%100
16	M22	Z	1.737	1.737	0	%100
17	M28	X	0	0	0	%100
18	M28	Z	0	0	0	%100
19	M29	X	-1.957	-1.957	0	%100
20	M29	Z	3.39	3.39	0	%100
21	M27A	X	0	0	0	%100
22	M27A	Z	0	0	0	%100

Member Distributed Loads (BLC 60 : Structure Wi (210 Deg)) (Continued)

	Member Label	Direction	Start Magnitude[lb/ft,...	End Magnitude[lb/ft,F...	Start Location[in,%]	End Location[in,%]
23	M28A	X	-1.077	-1.077	0	%100
24	M28A	Z	1.865	1.865	0	%100
25	M29A	X	-1.205	-1.205	0	%100
26	M29A	Z	2.088	2.088	0	%100
27	M44	X	-2.263	-2.263	0	%100
28	M44	Z	3.92	3.92	0	%100
29	M47	X	-1.571	-1.571	0	%100
30	M47	Z	2.721	2.721	0	%100
31	M48	X	-1.571	-1.571	0	%100
32	M48	Z	2.721	2.721	0	%100
33	M51	X	-1.46	-1.46	0	%100
34	M51	Z	2.53	2.53	0	%100
35	M52	X	-.399	-.399	0	%100
36	M52	Z	.691	.691	0	%100
37	M55	X	-.744	-.744	0	%100
38	M55	Z	1.288	1.288	0	%100
39	M56	X	-.744	-.744	0	%100
40	M56	Z	1.288	1.288	0	%100
41	M69	X	-1.003	-1.003	0	%100
42	M69	Z	1.737	1.737	0	%100
43	M70	X	-1.077	-1.077	0	%100
44	M70	Z	1.865	1.865	0	%100
45	M71	X	0	0	0	%100
46	M71	Z	0	0	0	%100
47	M72	X	-1.205	-1.205	0	%100
48	M72	Z	2.088	2.088	0	%100
49	M73	X	-1.003	-1.003	0	%100
50	M73	Z	1.737	1.737	0	%100
51	M76	X	-1.957	-1.957	0	%100
52	M76	Z	3.39	3.39	0	%100
53	M77	X	0	0	0	%100
54	M77	Z	0	0	0	%100
55	M78	X	-1.077	-1.077	0	%100
56	M78	Z	1.865	1.865	0	%100
57	M79	X	0	0	0	%100
58	M79	Z	0	0	0	%100
59	M80	X	-1.205	-1.205	0	%100
60	M80	Z	2.088	2.088	0	%100
61	M95	X	-1.271	-1.271	0	%100
62	M95	Z	2.201	2.201	0	%100
63	M98	X	-2.263	-2.263	0	%100
64	M98	Z	3.92	3.92	0	%100
65	M99	X	-2.263	-2.263	0	%100
66	M99	Z	3.92	3.92	0	%100
67	M102	X	-1.46	-1.46	0	%100
68	M102	Z	2.53	2.53	0	%100
69	M103	X	-1.597	-1.597	0	%100
70	M103	Z	2.766	2.766	0	%100
71	M106	X	-2.975	-2.975	0	%100
72	M106	Z	5.153	5.153	0	%100
73	M107	X	-2.975	-2.975	0	%100
74	M107	Z	5.153	5.153	0	%100
75	M120	X	0	0	0	%100
76	M120	Z	0	0	0	%100
77	M121	X	-1.077	-1.077	0	%100
78	M121	Z	1.865	1.865	0	%100
79	M122	X	-1.077	-1.077	0	%100

Member Distributed Loads (BLC 60 : Structure Wi (210 Deg)) (Continued)

	Member Label	Direction	Start Magnitude[lb/ft,...	End Magnitude[lb/ft,F...	Start Location[in,%]	End Location[in,%]
80	M122	Z	1.865	1.865	0	%100
81	M123	X	0	0	0	%100
82	M123	Z	0	0	0	%100
83	M124	X	0	0	0	%100
84	M124	Z	0	0	0	%100
85	M127	X	-1.957	-1.957	0	%100
86	M127	Z	3.39	3.39	0	%100
87	M128	X	-1.957	-1.957	0	%100
88	M128	Z	3.39	3.39	0	%100
89	M129	X	-1.077	-1.077	0	%100
90	M129	Z	1.865	1.865	0	%100
91	M130	X	-1.077	-1.077	0	%100
92	M130	Z	1.865	1.865	0	%100
93	M131	X	0	0	0	%100
94	M131	Z	0	0	0	%100
95	M146	X	-2.76	-2.76	0	%100
96	M146	Z	4.78	4.78	0	%100
97	M149	X	-.774	-.774	0	%100
98	M149	Z	1.341	1.341	0	%100
99	M150	X	-.774	-.774	0	%100
100	M150	Z	1.341	1.341	0	%100
101	M153	X	0	0	0	%100
102	M153	Z	0	0	0	%100
103	M148A	X	-2.286	-2.286	0	%100
104	M148A	Z	3.959	3.959	0	%100
105	M151A	X	-1.302	-1.302	0	%100
106	M151A	Z	2.255	2.255	0	%100
107	M152A	X	-.679	-.679	0	%100
108	M152A	Z	1.177	1.177	0	%100
109	M154	X	-1.302	-1.302	0	%100
110	M154	Z	2.255	2.255	0	%100
111	M157	X	0	0	0	%100
112	M157	Z	0	0	0	%100
113	M166	X	-2.038	-2.038	0	%100
114	M166	Z	3.53	3.53	0	%100
115	M162A	X	-.679	-.679	0	%100
116	M162A	Z	1.177	1.177	0	%100
117	M163A	X	-2.038	-2.038	0	%100
118	M163A	Z	3.53	3.53	0	%100
119	M164A	X	-.679	-.679	0	%100
120	M164A	Z	1.177	1.177	0	%100
121	M165A	X	-2.038	-2.038	0	%100
122	M165A	Z	3.53	3.53	0	%100
123	M166A	X	-.679	-.679	0	%100
124	M166A	Z	1.177	1.177	0	%100
125	M167	X	-2.038	-2.038	0	%100
126	M167	Z	3.53	3.53	0	%100
127	M168	X	-2.718	-2.718	0	%100
128	M168	Z	4.707	4.707	0	%100
129	M169	X	0	0	0	%100
130	M169	Z	0	0	0	%100
131	M170	X	-2.718	-2.718	0	%100
132	M170	Z	4.707	4.707	0	%100
133	M171	X	0	0	0	%100
134	M171	Z	0	0	0	%100
135	M172	X	-1.212	-1.212	0	%100
136	M172	Z	2.1	2.1	0	%100

Member Distributed Loads (BLC 60 : Structure Wi (210 Deg)) (Continued)

	Member Label	Direction	Start Magnitude[lb/ft,...	End Magnitude[lb/ft,F...	Start Location[in,%]	End Location[in,%]
137	M173	X	-1.212	-1.212	0	%100
138	M173	Z	2.1	2.1	0	%100
139	M174	X	0	0	0	%100
140	M174	Z	0	0	0	%100
141	M175	X	-1.302	-1.302	0	%100
142	M175	Z	2.255	2.255	0	%100
143	M176	X	-1.302	-1.302	0	%100
144	M176	Z	2.255	2.255	0	%100
145	M177	X	0	0	0	%100
146	M177	Z	0	0	0	%100
147	M203	X	-1.425	-1.425	0	%100
148	M203	Z	2.468	2.468	0	%100
149	OVP	X	-1.736	-1.736	0	%100
150	OVP	Z	3.007	3.007	0	%100
151	MP3A	X	-1.736	-1.736	0	%100
152	MP3A	Z	3.007	3.007	0	%100
153	MP2A	X	-1.736	-1.736	0	%100
154	MP2A	Z	3.007	3.007	0	%100
155	MP3C	X	-1.736	-1.736	0	%100
156	MP3C	Z	3.007	3.007	0	%100
157	MP2C	X	-1.736	-1.736	0	%100
158	MP2C	Z	3.007	3.007	0	%100
159	MP3B	X	-1.736	-1.736	0	%100
160	MP3B	Z	3.007	3.007	0	%100
161	MP2B	X	-1.736	-1.736	0	%100
162	MP2B	Z	3.007	3.007	0	%100
163	MP1A	X	-1.736	-1.736	0	%100
164	MP1A	Z	3.007	3.007	0	%100
165	MP4A	X	-1.736	-1.736	0	%100
166	MP4A	Z	3.007	3.007	0	%100
167	MP1C	X	-1.736	-1.736	0	%100
168	MP1C	Z	3.007	3.007	0	%100
169	MP4C	X	-1.736	-1.736	0	%100
170	MP4C	Z	3.007	3.007	0	%100
171	MP1B	X	-1.736	-1.736	0	%100
172	MP1B	Z	3.007	3.007	0	%100
173	MP4B	X	-1.736	-1.736	0	%100
174	MP4B	Z	3.007	3.007	0	%100
175	M204A	X	-2.286	-2.286	0	%100
176	M204A	Z	3.959	3.959	0	%100
177	M205B	X	0	0	0	%100
178	M205B	Z	0	0	0	%100
179	M206	X	-1.441	-1.441	0	%100
180	M206	Z	2.495	2.495	0	%100
181	M207	X	-1.441	-1.441	0	%100
182	M207	Z	2.495	2.495	0	%100
183	M208	X	0	0	0	%100
184	M208	Z	0	0	0	%100
185	M227	X	-1.449	-1.449	0	%100
186	M227	Z	2.51	2.51	0	%100
187	M228	X	0	0	0	%100
188	M228	Z	0	0	0	%100
189	M229	X	-1.449	-1.449	0	%100
190	M229	Z	2.51	2.51	0	%100
191	M231	X	-.705	-.705	0	%100
192	M231	Z	1.221	1.221	0	%100
193	M231A	X	-2.334	-2.334	0	%100

Member Distributed Loads (BLC 60 : Structure Wi (210 Deg)) (Continued)

	Member Label	Direction	Start Magnitude[lb/ft,...	End Magnitude[lb/ft,F...	Start Location[in,%]	End Location[in,%]
194	M231A	Z	4.043	4.043	0	%100
195	M232	X	-2.334	-2.334	0	%100
196	M232	Z	4.043	4.043	0	%100
197	M233	X	-.705	-.705	0	%100
198	M233	Z	1.221	1.221	0	%100
199	M234	X	-1.298	-1.298	0	%100
200	M234	Z	2.248	2.248	0	%100
201	M235	X	-1.298	-1.298	0	%100
202	M235	Z	2.248	2.248	0	%100

Member Distributed Loads (BLC 61 : Structure Wi (240 Deg))

	Member Label	Direction	Start Magnitude[lb/ft,...	End Magnitude[lb/ft,F...	Start Location[in,%]	End Location[in,%]
1	M1	X	-2.074	-2.074	0	%100
2	M1	Z	1.198	1.198	0	%100
3	M4	X	-3.865	-3.865	0	%100
4	M4	Z	2.231	2.231	0	%100
5	M5	X	-3.865	-3.865	0	%100
6	M5	Z	2.231	2.231	0	%100
7	M18	X	-.579	-.579	0	%100
8	M18	Z	.334	.334	0	%100
9	M19	X	-.622	-.622	0	%100
10	M19	Z	.359	.359	0	%100
11	M20	X	-2.487	-2.487	0	%100
12	M20	Z	1.436	1.436	0	%100
13	M21	X	-.696	-.696	0	%100
14	M21	Z	.402	.402	0	%100
15	M22	X	-.579	-.579	0	%100
16	M22	Z	.334	.334	0	%100
17	M28	X	-1.13	-1.13	0	%100
18	M28	Z	.652	.652	0	%100
19	M29	X	-4.52	-4.52	0	%100
20	M29	Z	2.609	2.609	0	%100
21	M27A	X	-.622	-.622	0	%100
22	M27A	Z	.359	.359	0	%100
23	M28A	X	-2.487	-2.487	0	%100
24	M28A	Z	1.436	1.436	0	%100
25	M29A	X	-.696	-.696	0	%100
26	M29A	Z	.402	.402	0	%100
27	M44	X	-2.201	-2.201	0	%100
28	M44	Z	1.271	1.271	0	%100
29	M47	X	-5.8	-5.8	0	%100
30	M47	Z	3.349	3.349	0	%100
31	M48	X	-5.8	-5.8	0	%100
32	M48	Z	3.349	3.349	0	%100
33	M51	X	-.843	-.843	0	%100
34	M51	Z	.487	.487	0	%100
35	M52	X	0	0	0	%100
36	M52	Z	0	0	0	%100
37	M55	X	0	0	0	%100
38	M55	Z	0	0	0	%100
39	M56	X	0	0	0	%100
40	M56	Z	0	0	0	%100
41	M69	X	-2.315	-2.315	0	%100
42	M69	Z	1.337	1.337	0	%100
43	M70	X	-.622	-.622	0	%100
44	M70	Z	.359	.359	0	%100

Member Distributed Loads (BLC 61 : Structure Wi (240 Deg)) (Continued)

	Member Label	Direction	Start Magnitude[lb/ft,...	End Magnitude[lb/ft,F...	Start Location[in,%]	End Location[in,%]
45	M71	X	-.622	-.622	0	%100
46	M71	Z	.359	.359	0	%100
47	M72	X	-2.783	-2.783	0	%100
48	M72	Z	1.607	1.607	0	%100
49	M73	X	-2.315	-2.315	0	%100
50	M73	Z	1.337	1.337	0	%100
51	M76	X	-1.13	-1.13	0	%100
52	M76	Z	.652	.652	0	%100
53	M77	X	-1.13	-1.13	0	%100
54	M77	Z	.652	.652	0	%100
55	M78	X	-.622	-.622	0	%100
56	M78	Z	.359	.359	0	%100
57	M79	X	-.622	-.622	0	%100
58	M79	Z	.359	.359	0	%100
59	M80	X	-2.783	-2.783	0	%100
60	M80	Z	1.607	1.607	0	%100
61	M95	X	-1.341	-1.341	0	%100
62	M95	Z	.774	.774	0	%100
63	M98	X	-4.78	-4.78	0	%100
64	M98	Z	2.76	2.76	0	%100
65	M99	X	-4.78	-4.78	0	%100
66	M99	Z	2.76	2.76	0	%100
67	M102	X	-3.373	-3.373	0	%100
68	M102	Z	1.947	1.947	0	%100
69	M103	X	-2.074	-2.074	0	%100
70	M103	Z	1.198	1.198	0	%100
71	M106	X	-3.865	-3.865	0	%100
72	M106	Z	2.231	2.231	0	%100
73	M107	X	-3.865	-3.865	0	%100
74	M107	Z	2.231	2.231	0	%100
75	M120	X	-.579	-.579	0	%100
76	M120	Z	.334	.334	0	%100
77	M121	X	-2.487	-2.487	0	%100
78	M121	Z	1.436	1.436	0	%100
79	M122	X	-.622	-.622	0	%100
80	M122	Z	.359	.359	0	%100
81	M123	X	-.696	-.696	0	%100
82	M123	Z	.402	.402	0	%100
83	M124	X	-.579	-.579	0	%100
84	M124	Z	.334	.334	0	%100
85	M127	X	-4.52	-4.52	0	%100
86	M127	Z	2.609	2.609	0	%100
87	M128	X	-1.13	-1.13	0	%100
88	M128	Z	.652	.652	0	%100
89	M129	X	-2.487	-2.487	0	%100
90	M129	Z	1.436	1.436	0	%100
91	M130	X	-.622	-.622	0	%100
92	M130	Z	.359	.359	0	%100
93	M131	X	-.696	-.696	0	%100
94	M131	Z	.402	.402	0	%100
95	M146	X	-3.92	-3.92	0	%100
96	M146	Z	2.263	2.263	0	%100
97	M149	X	-2.201	-2.201	0	%100
98	M149	Z	1.271	1.271	0	%100
99	M150	X	-2.201	-2.201	0	%100
100	M150	Z	1.271	1.271	0	%100
101	M153	X	-.843	-.843	0	%100

Member Distributed Loads (BLC 61 : Structure Wi (240 Deg)) (Continued)

	Member Label	Direction	Start Magnitude[lb/ft,...	End Magnitude[lb/ft,F...	Start Location[in,%]	End Location[in,%]
102	M153	Z	.487	.487	0	%100
103	M148A	X	-1.32	-1.32	0	%100
104	M148A	Z	.762	.762	0	%100
105	M151A	X	-.752	-.752	0	%100
106	M151A	Z	.434	.434	0	%100
107	M152A	X	-3.53	-3.53	0	%100
108	M152A	Z	2.038	2.038	0	%100
109	M154	X	-3.007	-3.007	0	%100
110	M154	Z	1.736	1.736	0	%100
111	M157	X	-.752	-.752	0	%100
112	M157	Z	.434	.434	0	%100
113	M166	X	-1.177	-1.177	0	%100
114	M166	Z	.679	.679	0	%100
115	M162A	X	-3.53	-3.53	0	%100
116	M162A	Z	2.038	2.038	0	%100
117	M163A	X	-1.177	-1.177	0	%100
118	M163A	Z	.679	.679	0	%100
119	M164A	X	0	0	0	%100
120	M164A	Z	0	0	0	%100
121	M165A	X	-4.707	-4.707	0	%100
122	M165A	Z	2.718	2.718	0	%100
123	M166A	X	0	0	0	%100
124	M166A	Z	0	0	0	%100
125	M167	X	-4.707	-4.707	0	%100
126	M167	Z	2.718	2.718	0	%100
127	M168	X	-3.53	-3.53	0	%100
128	M168	Z	2.038	2.038	0	%100
129	M169	X	-1.177	-1.177	0	%100
130	M169	Z	.679	.679	0	%100
131	M170	X	-3.53	-3.53	0	%100
132	M170	Z	2.038	2.038	0	%100
133	M171	X	-1.177	-1.177	0	%100
134	M171	Z	.679	.679	0	%100
135	M172	X	-.7	-.7	0	%100
136	M172	Z	.404	.404	0	%100
137	M173	X	-2.8	-2.8	0	%100
138	M173	Z	1.616	1.616	0	%100
139	M174	X	-.7	-.7	0	%100
140	M174	Z	.404	.404	0	%100
141	M175	X	-.752	-.752	0	%100
142	M175	Z	.434	.434	0	%100
143	M176	X	-3.007	-3.007	0	%100
144	M176	Z	1.736	1.736	0	%100
145	M177	X	-.752	-.752	0	%100
146	M177	Z	.434	.434	0	%100
147	M203	X	-2.468	-2.468	0	%100
148	M203	Z	1.425	1.425	0	%100
149	OVP	X	-3.007	-3.007	0	%100
150	OVP	Z	1.736	1.736	0	%100
151	MP3A	X	-3.007	-3.007	0	%100
152	MP3A	Z	1.736	1.736	0	%100
153	MP2A	X	-3.007	-3.007	0	%100
154	MP2A	Z	1.736	1.736	0	%100
155	MP3C	X	-3.007	-3.007	0	%100
156	MP3C	Z	1.736	1.736	0	%100
157	MP2C	X	-3.007	-3.007	0	%100
158	MP2C	Z	1.736	1.736	0	%100

Member Distributed Loads (BLC 61 : Structure Wi (240 Deg)) (Continued)

	Member Label	Direction	Start Magnitude[lb/ft,...	End Magnitude[lb/ft,F...	Start Location[in,%]	End Location[in,%]
159	MP3B	X	-3.007	-3.007	0	%100
160	MP3B	Z	1.736	1.736	0	%100
161	MP2B	X	-3.007	-3.007	0	%100
162	MP2B	Z	1.736	1.736	0	%100
163	MP1A	X	-3.007	-3.007	0	%100
164	MP1A	Z	1.736	1.736	0	%100
165	MP4A	X	-3.007	-3.007	0	%100
166	MP4A	Z	1.736	1.736	0	%100
167	MP1C	X	-3.007	-3.007	0	%100
168	MP1C	Z	1.736	1.736	0	%100
169	MP4C	X	-3.007	-3.007	0	%100
170	MP4C	Z	1.736	1.736	0	%100
171	MP1B	X	-3.007	-3.007	0	%100
172	MP1B	Z	1.736	1.736	0	%100
173	MP4B	X	-3.007	-3.007	0	%100
174	MP4B	Z	1.736	1.736	0	%100
175	M204A	X	-5.279	-5.279	0	%100
176	M204A	Z	3.048	3.048	0	%100
177	M205B	X	-1.32	-1.32	0	%100
178	M205B	Z	.762	.762	0	%100
179	M206	X	-.832	-.832	0	%100
180	M206	Z	.48	.48	0	%100
181	M207	X	-3.327	-3.327	0	%100
182	M207	Z	1.921	1.921	0	%100
183	M208	X	-.832	-.832	0	%100
184	M208	Z	.48	.48	0	%100
185	M227	X	-3.346	-3.346	0	%100
186	M227	Z	1.932	1.932	0	%100
187	M228	X	-.837	-.837	0	%100
188	M228	Z	.483	.483	0	%100
189	M229	X	-.837	-.837	0	%100
190	M229	Z	.483	.483	0	%100
191	M231	X	-.965	-.965	0	%100
192	M231	Z	.557	.557	0	%100
193	M231A	X	-3.787	-3.787	0	%100
194	M231A	Z	2.187	2.187	0	%100
195	M232	X	-2.76	-2.76	0	%100
196	M232	Z	1.593	1.593	0	%100
197	M233	X	-2.76	-2.76	0	%100
198	M233	Z	1.593	1.593	0	%100
199	M234	X	-3.787	-3.787	0	%100
200	M234	Z	2.187	2.187	0	%100
201	M235	X	-.965	-.965	0	%100
202	M235	Z	.557	.557	0	%100

Member Distributed Loads (BLC 62 : Structure Wi (270 Deg))

	Member Label	Direction	Start Magnitude[lb/ft,...	End Magnitude[lb/ft,F...	Start Location[in,%]	End Location[in,%]
1	M1	X	-3.194	-3.194	0	%100
2	M1	Z	0	0	0	%100
3	M4	X	-5.95	-5.95	0	%100
4	M4	Z	0	0	0	%100
5	M5	X	-5.95	-5.95	0	%100
6	M5	Z	0	0	0	%100
7	M18	X	0	0	0	%100
8	M18	Z	0	0	0	%100
9	M19	X	-2.154	-2.154	0	%100

Member Distributed Loads (BLC 62 : Structure Wi (270 Deg)) (Continued)

	Member Label	Direction	Start Magnitude[lb/ft,...	End Magnitude[lb/ft,F...	Start Location[in,%]	End Location[in,%]
10	M19	Z	0	0	0	%100
11	M20	X	-2.154	-2.154	0	%100
12	M20	Z	0	0	0	%100
13	M21	X	0	0	0	%100
14	M21	Z	0	0	0	%100
15	M22	X	0	0	0	%100
16	M22	Z	0	0	0	%100
17	M28	X	-3.914	-3.914	0	%100
18	M28	Z	0	0	0	%100
19	M29	X	-3.914	-3.914	0	%100
20	M29	Z	0	0	0	%100
21	M27A	X	-2.154	-2.154	0	%100
22	M27A	Z	0	0	0	%100
23	M28A	X	-2.154	-2.154	0	%100
24	M28A	Z	0	0	0	%100
25	M29A	X	0	0	0	%100
26	M29A	Z	0	0	0	%100
27	M44	X	-1.548	-1.548	0	%100
28	M44	Z	0	0	0	%100
29	M47	X	-8.475	-8.475	0	%100
30	M47	Z	0	0	0	%100
31	M48	X	-8.475	-8.475	0	%100
32	M48	Z	0	0	0	%100
33	M51	X	0	0	0	%100
34	M51	Z	0	0	0	%100
35	M52	X	-.798	-.798	0	%100
36	M52	Z	0	0	0	%100
37	M55	X	-1.488	-1.488	0	%100
38	M55	Z	0	0	0	%100
39	M56	X	-1.488	-1.488	0	%100
40	M56	Z	0	0	0	%100
41	M69	X	-2.005	-2.005	0	%100
42	M69	Z	0	0	0	%100
43	M70	X	0	0	0	%100
44	M70	Z	0	0	0	%100
45	M71	X	-2.154	-2.154	0	%100
46	M71	Z	0	0	0	%100
47	M72	X	-2.411	-2.411	0	%100
48	M72	Z	0	0	0	%100
49	M73	X	-2.005	-2.005	0	%100
50	M73	Z	0	0	0	%100
51	M76	X	0	0	0	%100
52	M76	Z	0	0	0	%100
53	M77	X	-3.914	-3.914	0	%100
54	M77	Z	0	0	0	%100
55	M78	X	0	0	0	%100
56	M78	Z	0	0	0	%100
57	M79	X	-2.154	-2.154	0	%100
58	M79	Z	0	0	0	%100
59	M80	X	-2.411	-2.411	0	%100
60	M80	Z	0	0	0	%100
61	M95	X	-2.541	-2.541	0	%100
62	M95	Z	0	0	0	%100
63	M98	X	-4.527	-4.527	0	%100
64	M98	Z	0	0	0	%100
65	M99	X	-4.527	-4.527	0	%100
66	M99	Z	0	0	0	%100

Member Distributed Loads (BLC 62 : Structure Wi (270 Deg)) (Continued)

	Member Label	Direction	Start Magnitude[lb/ft,...	End Magnitude[lb/ft,F...	Start Location[in,%]	End Location[in,%]
67	M102	X	-2.921	-2.921	0	%100
68	M102	Z	0	0	0	%100
69	M103	X	-.798	-.798	0	%100
70	M103	Z	0	0	0	%100
71	M106	X	-1.488	-1.488	0	%100
72	M106	Z	0	0	0	%100
73	M107	X	-1.488	-1.488	0	%100
74	M107	Z	0	0	0	%100
75	M120	X	-2.005	-2.005	0	%100
76	M120	Z	0	0	0	%100
77	M121	X	-2.154	-2.154	0	%100
78	M121	Z	0	0	0	%100
79	M122	X	0	0	0	%100
80	M122	Z	0	0	0	%100
81	M123	X	-2.411	-2.411	0	%100
82	M123	Z	0	0	0	%100
83	M124	X	-2.005	-2.005	0	%100
84	M124	Z	0	0	0	%100
85	M127	X	-3.914	-3.914	0	%100
86	M127	Z	0	0	0	%100
87	M128	X	0	0	0	%100
88	M128	Z	0	0	0	%100
89	M129	X	-2.154	-2.154	0	%100
90	M129	Z	0	0	0	%100
91	M130	X	0	0	0	%100
92	M130	Z	0	0	0	%100
93	M131	X	-2.411	-2.411	0	%100
94	M131	Z	0	0	0	%100
95	M146	X	-2.541	-2.541	0	%100
96	M146	Z	0	0	0	%100
97	M149	X	-4.527	-4.527	0	%100
98	M149	Z	0	0	0	%100
99	M150	X	-4.527	-4.527	0	%100
100	M150	Z	0	0	0	%100
101	M153	X	-2.921	-2.921	0	%100
102	M153	Z	0	0	0	%100
103	M148A	X	0	0	0	%100
104	M148A	Z	0	0	0	%100
105	M151A	X	0	0	0	%100
106	M151A	Z	0	0	0	%100
107	M152A	X	-5.435	-5.435	0	%100
108	M152A	Z	0	0	0	%100
109	M154	X	-2.604	-2.604	0	%100
110	M154	Z	0	0	0	%100
111	M157	X	-2.604	-2.604	0	%100
112	M157	Z	0	0	0	%100
113	M166	X	0	0	0	%100
114	M166	Z	0	0	0	%100
115	M162A	X	-5.435	-5.435	0	%100
116	M162A	Z	0	0	0	%100
117	M163A	X	0	0	0	%100
118	M163A	Z	0	0	0	%100
119	M164A	X	-1.359	-1.359	0	%100
120	M164A	Z	0	0	0	%100
121	M165A	X	-4.076	-4.076	0	%100
122	M165A	Z	0	0	0	%100
123	M166A	X	-1.359	-1.359	0	%100

Member Distributed Loads (BLC 62 : Structure Wi (270 Deg)) (Continued)

	Member Label	Direction	Start Magnitude[lb/ft,...	End Magnitude[lb/ft,F...	Start Location[in,%]	End Location[in,%]
124	M166A	Z	0	0	0	%100
125	M167	X	-4.076	-4.076	0	%100
126	M167	Z	0	0	0	%100
127	M168	X	-1.359	-1.359	0	%100
128	M168	Z	0	0	0	%100
129	M169	X	-4.076	-4.076	0	%100
130	M169	Z	0	0	0	%100
131	M170	X	-1.359	-1.359	0	%100
132	M170	Z	0	0	0	%100
133	M171	X	-4.076	-4.076	0	%100
134	M171	Z	0	0	0	%100
135	M172	X	0	0	0	%100
136	M172	Z	0	0	0	%100
137	M173	X	-2.425	-2.425	0	%100
138	M173	Z	0	0	0	%100
139	M174	X	-2.425	-2.425	0	%100
140	M174	Z	0	0	0	%100
141	M175	X	0	0	0	%100
142	M175	Z	0	0	0	%100
143	M176	X	-2.604	-2.604	0	%100
144	M176	Z	0	0	0	%100
145	M177	X	-2.604	-2.604	0	%100
146	M177	Z	0	0	0	%100
147	M203	X	-2.85	-2.85	0	%100
148	M203	Z	0	0	0	%100
149	OVP	X	-3.472	-3.472	0	%100
150	OVP	Z	0	0	0	%100
151	MP3A	X	-3.472	-3.472	0	%100
152	MP3A	Z	0	0	0	%100
153	MP2A	X	-3.472	-3.472	0	%100
154	MP2A	Z	0	0	0	%100
155	MP3C	X	-3.472	-3.472	0	%100
156	MP3C	Z	0	0	0	%100
157	MP2C	X	-3.472	-3.472	0	%100
158	MP2C	Z	0	0	0	%100
159	MP3B	X	-3.472	-3.472	0	%100
160	MP3B	Z	0	0	0	%100
161	MP2B	X	-3.472	-3.472	0	%100
162	MP2B	Z	0	0	0	%100
163	MP1A	X	-3.472	-3.472	0	%100
164	MP1A	Z	0	0	0	%100
165	MP4A	X	-3.472	-3.472	0	%100
166	MP4A	Z	0	0	0	%100
167	MP1C	X	-3.472	-3.472	0	%100
168	MP1C	Z	0	0	0	%100
169	MP4C	X	-3.472	-3.472	0	%100
170	MP4C	Z	0	0	0	%100
171	MP1B	X	-3.472	-3.472	0	%100
172	MP1B	Z	0	0	0	%100
173	MP4B	X	-3.472	-3.472	0	%100
174	MP4B	Z	0	0	0	%100
175	M204A	X	-4.572	-4.572	0	%100
176	M204A	Z	0	0	0	%100
177	M205B	X	-4.572	-4.572	0	%100
178	M205B	Z	0	0	0	%100
179	M206	X	0	0	0	%100
180	M206	Z	0	0	0	%100

Member Distributed Loads (BLC 62 : Structure Wi (270 Deg)) (Continued)

	Member Label	Direction	Start Magnitude[lb/ft,...	End Magnitude[lb/ft,F...	Start Location[in,%]	End Location[in,%]
181	M207	X	-2.881	-2.881	0	%100
182	M207	Z	0	0	0	%100
183	M208	X	-2.881	-2.881	0	%100
184	M208	Z	0	0	0	%100
185	M227	X	-2.898	-2.898	0	%100
186	M227	Z	0	0	0	%100
187	M228	X	-2.898	-2.898	0	%100
188	M228	Z	0	0	0	%100
189	M229	X	0	0	0	%100
190	M229	Z	0	0	0	%100
191	M231	X	-2.596	-2.596	0	%100
192	M231	Z	0	0	0	%100
193	M231A	X	-2.596	-2.596	0	%100
194	M231A	Z	0	0	0	%100
195	M232	X	-1.41	-1.41	0	%100
196	M232	Z	0	0	0	%100
197	M233	X	-4.668	-4.668	0	%100
198	M233	Z	0	0	0	%100
199	M234	X	-4.668	-4.668	0	%100
200	M234	Z	0	0	0	%100
201	M235	X	-1.41	-1.41	0	%100
202	M235	Z	0	0	0	%100

Member Distributed Loads (BLC 63 : Structure Wi (300 Deg))

	Member Label	Direction	Start Magnitude[lb/ft,...	End Magnitude[lb/ft,F...	Start Location[in,%]	End Location[in,%]
1	M1	X	-2.074	-2.074	0	%100
2	M1	Z	-1.198	-1.198	0	%100
3	M4	X	-3.865	-3.865	0	%100
4	M4	Z	-2.231	-2.231	0	%100
5	M5	X	-3.865	-3.865	0	%100
6	M5	Z	-2.231	-2.231	0	%100
7	M18	X	-.579	-.579	0	%100
8	M18	Z	-.334	-.334	0	%100
9	M19	X	-2.487	-2.487	0	%100
10	M19	Z	-1.436	-1.436	0	%100
11	M20	X	-.622	-.622	0	%100
12	M20	Z	-.359	-.359	0	%100
13	M21	X	-.696	-.696	0	%100
14	M21	Z	-.402	-.402	0	%100
15	M22	X	-.579	-.579	0	%100
16	M22	Z	-.334	-.334	0	%100
17	M28	X	-4.52	-4.52	0	%100
18	M28	Z	-2.609	-2.609	0	%100
19	M29	X	-1.13	-1.13	0	%100
20	M29	Z	-.652	-.652	0	%100
21	M27A	X	-2.487	-2.487	0	%100
22	M27A	Z	-1.436	-1.436	0	%100
23	M28A	X	-.622	-.622	0	%100
24	M28A	Z	-.359	-.359	0	%100
25	M29A	X	-.696	-.696	0	%100
26	M29A	Z	-.402	-.402	0	%100
27	M44	X	-2.201	-2.201	0	%100
28	M44	Z	-1.271	-1.271	0	%100
29	M47	X	-5.8	-5.8	0	%100
30	M47	Z	-3.349	-3.349	0	%100
31	M48	X	-5.8	-5.8	0	%100

Member Distributed Loads (BLC 63 : Structure Wi (300 Deg)) (Continued)

	Member Label	Direction	Start Magnitude[lb/ft,...	End Magnitude[lb/ft,F...	Start Location[in,%]	End Location[in,%]
32	M48	Z	-3.349	-3.349	0	%100
33	M51	X	-.843	-.843	0	%100
34	M51	Z	-.487	-.487	0	%100
35	M52	X	-2.074	-2.074	0	%100
36	M52	Z	-1.198	-1.198	0	%100
37	M55	X	-3.865	-3.865	0	%100
38	M55	Z	-2.231	-2.231	0	%100
39	M56	X	-3.865	-3.865	0	%100
40	M56	Z	-2.231	-2.231	0	%100
41	M69	X	-.579	-.579	0	%100
42	M69	Z	-.334	-.334	0	%100
43	M70	X	-.622	-.622	0	%100
44	M70	Z	-.359	-.359	0	%100
45	M71	X	-2.487	-2.487	0	%100
46	M71	Z	-1.436	-1.436	0	%100
47	M72	X	-.696	-.696	0	%100
48	M72	Z	-.402	-.402	0	%100
49	M73	X	-.579	-.579	0	%100
50	M73	Z	-.334	-.334	0	%100
51	M76	X	-1.13	-1.13	0	%100
52	M76	Z	-.652	-.652	0	%100
53	M77	X	-4.52	-4.52	0	%100
54	M77	Z	-2.609	-2.609	0	%100
55	M78	X	-.622	-.622	0	%100
56	M78	Z	-.359	-.359	0	%100
57	M79	X	-2.487	-2.487	0	%100
58	M79	Z	-1.436	-1.436	0	%100
59	M80	X	-.696	-.696	0	%100
60	M80	Z	-.402	-.402	0	%100
61	M95	X	-3.92	-3.92	0	%100
62	M95	Z	-2.263	-2.263	0	%100
63	M98	X	-2.201	-2.201	0	%100
64	M98	Z	-1.271	-1.271	0	%100
65	M99	X	-2.201	-2.201	0	%100
66	M99	Z	-1.271	-1.271	0	%100
67	M102	X	-.843	-.843	0	%100
68	M102	Z	-.487	-.487	0	%100
69	M103	X	0	0	0	%100
70	M103	Z	0	0	0	%100
71	M106	X	0	0	0	%100
72	M106	Z	0	0	0	%100
73	M107	X	0	0	0	%100
74	M107	Z	0	0	0	%100
75	M120	X	-2.315	-2.315	0	%100
76	M120	Z	-1.337	-1.337	0	%100
77	M121	X	-.622	-.622	0	%100
78	M121	Z	-.359	-.359	0	%100
79	M122	X	-.622	-.622	0	%100
80	M122	Z	-.359	-.359	0	%100
81	M123	X	-2.783	-2.783	0	%100
82	M123	Z	-1.607	-1.607	0	%100
83	M124	X	-2.315	-2.315	0	%100
84	M124	Z	-1.337	-1.337	0	%100
85	M127	X	-1.13	-1.13	0	%100
86	M127	Z	-.652	-.652	0	%100
87	M128	X	-1.13	-1.13	0	%100
88	M128	Z	-.652	-.652	0	%100

Member Distributed Loads (BLC 63 : Structure Wi (300 Deg)) (Continued)

	Member Label	Direction	Start Magnitude[lb/ft,...	End Magnitude[lb/ft,F...	Start Location[in,%]	End Location[in,%]
89	M129	X	-.622	-.622	0	%100
90	M129	Z	-.359	-.359	0	%100
91	M130	X	-.622	-.622	0	%100
92	M130	Z	-.359	-.359	0	%100
93	M131	X	-2.783	-2.783	0	%100
94	M131	Z	-1.607	-1.607	0	%100
95	M146	X	-1.341	-1.341	0	%100
96	M146	Z	-.774	-.774	0	%100
97	M149	X	-4.78	-4.78	0	%100
98	M149	Z	-2.76	-2.76	0	%100
99	M150	X	-4.78	-4.78	0	%100
100	M150	Z	-2.76	-2.76	0	%100
101	M153	X	-3.373	-3.373	0	%100
102	M153	Z	-1.947	-1.947	0	%100
103	M148A	X	-1.32	-1.32	0	%100
104	M148A	Z	-.762	-.762	0	%100
105	M151A	X	-.752	-.752	0	%100
106	M151A	Z	-.434	-.434	0	%100
107	M152A	X	-3.53	-3.53	0	%100
108	M152A	Z	-2.038	-2.038	0	%100
109	M154	X	-.752	-.752	0	%100
110	M154	Z	-.434	-.434	0	%100
111	M157	X	-3.007	-3.007	0	%100
112	M157	Z	-1.736	-1.736	0	%100
113	M166	X	-1.177	-1.177	0	%100
114	M166	Z	-.679	-.679	0	%100
115	M162A	X	-3.53	-3.53	0	%100
116	M162A	Z	-2.038	-2.038	0	%100
117	M163A	X	-1.177	-1.177	0	%100
118	M163A	Z	-.679	-.679	0	%100
119	M164A	X	-3.53	-3.53	0	%100
120	M164A	Z	-2.038	-2.038	0	%100
121	M165A	X	-1.177	-1.177	0	%100
122	M165A	Z	-.679	-.679	0	%100
123	M166A	X	-3.53	-3.53	0	%100
124	M166A	Z	-2.038	-2.038	0	%100
125	M167	X	-1.177	-1.177	0	%100
126	M167	Z	-.679	-.679	0	%100
127	M168	X	0	0	0	%100
128	M168	Z	0	0	0	%100
129	M169	X	-4.707	-4.707	0	%100
130	M169	Z	-2.718	-2.718	0	%100
131	M170	X	0	0	0	%100
132	M170	Z	0	0	0	%100
133	M171	X	-4.707	-4.707	0	%100
134	M171	Z	-2.718	-2.718	0	%100
135	M172	X	-.7	-.7	0	%100
136	M172	Z	-.404	-.404	0	%100
137	M173	X	-.7	-.7	0	%100
138	M173	Z	-.404	-.404	0	%100
139	M174	X	-2.8	-2.8	0	%100
140	M174	Z	-1.616	-1.616	0	%100
141	M175	X	-.752	-.752	0	%100
142	M175	Z	-.434	-.434	0	%100
143	M176	X	-.752	-.752	0	%100
144	M176	Z	-.434	-.434	0	%100
145	M177	X	-3.007	-3.007	0	%100

Member Distributed Loads (BLC 63 : Structure Wi (300 Deg)) (Continued)

	Member Label	Direction	Start Magnitude[lb/ft,...	End Magnitude[lb/ft,F...	Start Location[in,%]	End Location[in,%]
146	M177	Z	-1.736	-1.736	0	%100
147	M203	X	-2.468	-2.468	0	%100
148	M203	Z	-1.425	-1.425	0	%100
149	OVP	X	-3.007	-3.007	0	%100
150	OVP	Z	-1.736	-1.736	0	%100
151	MP3A	X	-3.007	-3.007	0	%100
152	MP3A	Z	-1.736	-1.736	0	%100
153	MP2A	X	-3.007	-3.007	0	%100
154	MP2A	Z	-1.736	-1.736	0	%100
155	MP3C	X	-3.007	-3.007	0	%100
156	MP3C	Z	-1.736	-1.736	0	%100
157	MP2C	X	-3.007	-3.007	0	%100
158	MP2C	Z	-1.736	-1.736	0	%100
159	MP3B	X	-3.007	-3.007	0	%100
160	MP3B	Z	-1.736	-1.736	0	%100
161	MP2B	X	-3.007	-3.007	0	%100
162	MP2B	Z	-1.736	-1.736	0	%100
163	MP1A	X	-3.007	-3.007	0	%100
164	MP1A	Z	-1.736	-1.736	0	%100
165	MP4A	X	-3.007	-3.007	0	%100
166	MP4A	Z	-1.736	-1.736	0	%100
167	MP1C	X	-3.007	-3.007	0	%100
168	MP1C	Z	-1.736	-1.736	0	%100
169	MP4C	X	-3.007	-3.007	0	%100
170	MP4C	Z	-1.736	-1.736	0	%100
171	MP1B	X	-3.007	-3.007	0	%100
172	MP1B	Z	-1.736	-1.736	0	%100
173	MP4B	X	-3.007	-3.007	0	%100
174	MP4B	Z	-1.736	-1.736	0	%100
175	M204A	X	-1.32	-1.32	0	%100
176	M204A	Z	-.762	-.762	0	%100
177	M205B	X	-5.279	-5.279	0	%100
178	M205B	Z	-3.048	-3.048	0	%100
179	M206	X	-.832	-.832	0	%100
180	M206	Z	-.48	-.48	0	%100
181	M207	X	-.832	-.832	0	%100
182	M207	Z	-.48	-.48	0	%100
183	M208	X	-3.327	-3.327	0	%100
184	M208	Z	-1.921	-1.921	0	%100
185	M227	X	-.837	-.837	0	%100
186	M227	Z	-.483	-.483	0	%100
187	M228	X	-3.346	-3.346	0	%100
188	M228	Z	-1.932	-1.932	0	%100
189	M229	X	-.837	-.837	0	%100
190	M229	Z	-.483	-.483	0	%100
191	M231	X	-3.787	-3.787	0	%100
192	M231	Z	-2.187	-2.187	0	%100
193	M231A	X	-.965	-.965	0	%100
194	M231A	Z	-.557	-.557	0	%100
195	M232	X	-.965	-.965	0	%100
196	M232	Z	-.557	-.557	0	%100
197	M233	X	-3.787	-3.787	0	%100
198	M233	Z	-2.187	-2.187	0	%100
199	M234	X	-2.76	-2.76	0	%100
200	M234	Z	-1.593	-1.593	0	%100
201	M235	X	-2.76	-2.76	0	%100
202	M235	Z	-1.593	-1.593	0	%100

Member Distributed Loads (BLC 64 : Structure Wi (330 Deg))

	Member Label	Direction	Start Magnitude[lb/ft,...	End Magnitude[lb/ft,F...	Start Location[in,%]	End Location[in,%]
1	M1	X	-.399	-.399	0	%100
2	M1	Z	-.691	-.691	0	%100
3	M4	X	-.744	-.744	0	%100
4	M4	Z	-1.288	-1.288	0	%100
5	M5	X	-.744	-.744	0	%100
6	M5	Z	-1.288	-1.288	0	%100
7	M18	X	-1.003	-1.003	0	%100
8	M18	Z	-1.737	-1.737	0	%100
9	M19	X	-1.077	-1.077	0	%100
10	M19	Z	-1.865	-1.865	0	%100
11	M20	X	0	0	0	%100
12	M20	Z	0	0	0	%100
13	M21	X	-1.205	-1.205	0	%100
14	M21	Z	-2.088	-2.088	0	%100
15	M22	X	-1.003	-1.003	0	%100
16	M22	Z	-1.737	-1.737	0	%100
17	M28	X	-1.957	-1.957	0	%100
18	M28	Z	-3.39	-3.39	0	%100
19	M29	X	0	0	0	%100
20	M29	Z	0	0	0	%100
21	M27A	X	-1.077	-1.077	0	%100
22	M27A	Z	-1.865	-1.865	0	%100
23	M28A	X	0	0	0	%100
24	M28A	Z	0	0	0	%100
25	M29A	X	-1.205	-1.205	0	%100
26	M29A	Z	-2.088	-2.088	0	%100
27	M44	X	-2.263	-2.263	0	%100
28	M44	Z	-3.92	-3.92	0	%100
29	M47	X	-1.571	-1.571	0	%100
30	M47	Z	-2.721	-2.721	0	%100
31	M48	X	-1.571	-1.571	0	%100
32	M48	Z	-2.721	-2.721	0	%100
33	M51	X	-1.46	-1.46	0	%100
34	M51	Z	-2.53	-2.53	0	%100
35	M52	X	-1.597	-1.597	0	%100
36	M52	Z	-2.766	-2.766	0	%100
37	M55	X	-2.975	-2.975	0	%100
38	M55	Z	-5.153	-5.153	0	%100
39	M56	X	-2.975	-2.975	0	%100
40	M56	Z	-5.153	-5.153	0	%100
41	M69	X	0	0	0	%100
42	M69	Z	0	0	0	%100
43	M70	X	-1.077	-1.077	0	%100
44	M70	Z	-1.865	-1.865	0	%100
45	M71	X	-1.077	-1.077	0	%100
46	M71	Z	-1.865	-1.865	0	%100
47	M72	X	0	0	0	%100
48	M72	Z	0	0	0	%100
49	M73	X	0	0	0	%100
50	M73	Z	0	0	0	%100
51	M76	X	-1.957	-1.957	0	%100
52	M76	Z	-3.39	-3.39	0	%100
53	M77	X	-1.957	-1.957	0	%100
54	M77	Z	-3.39	-3.39	0	%100
55	M78	X	-1.077	-1.077	0	%100
56	M78	Z	-1.865	-1.865	0	%100
57	M79	X	-1.077	-1.077	0	%100

Member Distributed Loads (BLC 64 : Structure Wi (330 Deg)) (Continued)

	Member Label	Direction	Start Magnitude[lb/ft,...	End Magnitude[lb/ft,F...	Start Location[in,%]	End Location[in,%]
58	M79	Z	-1.865	-1.865	0	%100
59	M80	X	0	0	0	%100
60	M80	Z	0	0	0	%100
61	M95	X	-2.76	-2.76	0	%100
62	M95	Z	-4.78	-4.78	0	%100
63	M98	X	-.774	-.774	0	%100
64	M98	Z	-1.341	-1.341	0	%100
65	M99	X	-.774	-.774	0	%100
66	M99	Z	-1.341	-1.341	0	%100
67	M102	X	0	0	0	%100
68	M102	Z	0	0	0	%100
69	M103	X	-.399	-.399	0	%100
70	M103	Z	-.691	-.691	0	%100
71	M106	X	-.744	-.744	0	%100
72	M106	Z	-1.288	-1.288	0	%100
73	M107	X	-.744	-.744	0	%100
74	M107	Z	-1.288	-1.288	0	%100
75	M120	X	-1.003	-1.003	0	%100
76	M120	Z	-1.737	-1.737	0	%100
77	M121	X	0	0	0	%100
78	M121	Z	0	0	0	%100
79	M122	X	-1.077	-1.077	0	%100
80	M122	Z	-1.865	-1.865	0	%100
81	M123	X	-1.205	-1.205	0	%100
82	M123	Z	-2.088	-2.088	0	%100
83	M124	X	-1.003	-1.003	0	%100
84	M124	Z	-1.737	-1.737	0	%100
85	M127	X	0	0	0	%100
86	M127	Z	0	0	0	%100
87	M128	X	-1.957	-1.957	0	%100
88	M128	Z	-3.39	-3.39	0	%100
89	M129	X	0	0	0	%100
90	M129	Z	0	0	0	%100
91	M130	X	-1.077	-1.077	0	%100
92	M130	Z	-1.865	-1.865	0	%100
93	M131	X	-1.205	-1.205	0	%100
94	M131	Z	-2.088	-2.088	0	%100
95	M146	X	-1.271	-1.271	0	%100
96	M146	Z	-2.201	-2.201	0	%100
97	M149	X	-2.263	-2.263	0	%100
98	M149	Z	-3.92	-3.92	0	%100
99	M150	X	-2.263	-2.263	0	%100
100	M150	Z	-3.92	-3.92	0	%100
101	M153	X	-1.46	-1.46	0	%100
102	M153	Z	-2.53	-2.53	0	%100
103	M148A	X	-2.286	-2.286	0	%100
104	M148A	Z	-3.959	-3.959	0	%100
105	M151A	X	-1.302	-1.302	0	%100
106	M151A	Z	-2.255	-2.255	0	%100
107	M152A	X	-.679	-.679	0	%100
108	M152A	Z	-1.177	-1.177	0	%100
109	M154	X	0	0	0	%100
110	M154	Z	0	0	0	%100
111	M157	X	-1.302	-1.302	0	%100
112	M157	Z	-2.255	-2.255	0	%100
113	M166	X	-2.038	-2.038	0	%100
114	M166	Z	-3.53	-3.53	0	%100

Member Distributed Loads (BLC 64 : Structure Wi (330 Deg)) (Continued)

	Member Label	Direction	Start Magnitude[lb/ft,...	End Magnitude[lb/ft,F...	Start Location[in,%]	End Location[in,%]
115	M162A	X	-.679	-.679	0	%100
116	M162A	Z	-1.177	-1.177	0	%100
117	M163A	X	-2.038	-2.038	0	%100
118	M163A	Z	-3.53	-3.53	0	%100
119	M164A	X	-2.718	-2.718	0	%100
120	M164A	Z	-4.707	-4.707	0	%100
121	M165A	X	0	0	0	%100
122	M165A	Z	0	0	0	%100
123	M166A	X	-2.718	-2.718	0	%100
124	M166A	Z	-4.707	-4.707	0	%100
125	M167	X	0	0	0	%100
126	M167	Z	0	0	0	%100
127	M168	X	-.679	-.679	0	%100
128	M168	Z	-1.177	-1.177	0	%100
129	M169	X	-2.038	-2.038	0	%100
130	M169	Z	-3.53	-3.53	0	%100
131	M170	X	-.679	-.679	0	%100
132	M170	Z	-1.177	-1.177	0	%100
133	M171	X	-2.038	-2.038	0	%100
134	M171	Z	-3.53	-3.53	0	%100
135	M172	X	-1.212	-1.212	0	%100
136	M172	Z	-2.1	-2.1	0	%100
137	M173	X	0	0	0	%100
138	M173	Z	0	0	0	%100
139	M174	X	-1.212	-1.212	0	%100
140	M174	Z	-2.1	-2.1	0	%100
141	M175	X	-1.302	-1.302	0	%100
142	M175	Z	-2.255	-2.255	0	%100
143	M176	X	0	0	0	%100
144	M176	Z	0	0	0	%100
145	M177	X	-1.302	-1.302	0	%100
146	M177	Z	-2.255	-2.255	0	%100
147	M203	X	-1.425	-1.425	0	%100
148	M203	Z	-2.468	-2.468	0	%100
149	OVP	X	-1.736	-1.736	0	%100
150	OVP	Z	-3.007	-3.007	0	%100
151	MP3A	X	-1.736	-1.736	0	%100
152	MP3A	Z	-3.007	-3.007	0	%100
153	MP2A	X	-1.736	-1.736	0	%100
154	MP2A	Z	-3.007	-3.007	0	%100
155	MP3C	X	-1.736	-1.736	0	%100
156	MP3C	Z	-3.007	-3.007	0	%100
157	MP2C	X	-1.736	-1.736	0	%100
158	MP2C	Z	-3.007	-3.007	0	%100
159	MP3B	X	-1.736	-1.736	0	%100
160	MP3B	Z	-3.007	-3.007	0	%100
161	MP2B	X	-1.736	-1.736	0	%100
162	MP2B	Z	-3.007	-3.007	0	%100
163	MP1A	X	-1.736	-1.736	0	%100
164	MP1A	Z	-3.007	-3.007	0	%100
165	MP4A	X	-1.736	-1.736	0	%100
166	MP4A	Z	-3.007	-3.007	0	%100
167	MP1C	X	-1.736	-1.736	0	%100
168	MP1C	Z	-3.007	-3.007	0	%100
169	MP4C	X	-1.736	-1.736	0	%100
170	MP4C	Z	-3.007	-3.007	0	%100
171	MP1B	X	-1.736	-1.736	0	%100

Member Distributed Loads (BLC 64 : Structure Wi (330 Deg)) (Continued)

	Member Label	Direction	Start Magnitude[lb/ft,...	End Magnitude[lb/ft,F...	Start Location[in,%]	End Location[in,%]
172	MP1B	Z	-3.007	-3.007	0	%100
173	MP4B	X	-1.736	-1.736	0	%100
174	MP4B	Z	-3.007	-3.007	0	%100
175	M204A	X	0	0	0	%100
176	M204A	Z	0	0	0	%100
177	M205B	X	-2.286	-2.286	0	%100
178	M205B	Z	-3.959	-3.959	0	%100
179	M206	X	-1.441	-1.441	0	%100
180	M206	Z	-2.495	-2.495	0	%100
181	M207	X	0	0	0	%100
182	M207	Z	0	0	0	%100
183	M208	X	-1.441	-1.441	0	%100
184	M208	Z	-2.495	-2.495	0	%100
185	M227	X	0	0	0	%100
186	M227	Z	0	0	0	%100
187	M228	X	-1.449	-1.449	0	%100
188	M228	Z	-2.51	-2.51	0	%100
189	M229	X	-1.449	-1.449	0	%100
190	M229	Z	-2.51	-2.51	0	%100
191	M231	X	-2.334	-2.334	0	%100
192	M231	Z	-4.043	-4.043	0	%100
193	M231A	X	-.705	-.705	0	%100
194	M231A	Z	-1.221	-1.221	0	%100
195	M232	X	-1.298	-1.298	0	%100
196	M232	Z	-2.248	-2.248	0	%100
197	M233	X	-1.298	-1.298	0	%100
198	M233	Z	-2.248	-2.248	0	%100
199	M234	X	-.705	-.705	0	%100
200	M234	Z	-1.221	-1.221	0	%100
201	M235	X	-2.334	-2.334	0	%100
202	M235	Z	-4.043	-4.043	0	%100

Member Distributed Loads (BLC 65 : Structure Wm (0 Deg))

	Member Label	Direction	Start Magnitude[lb/ft,...	End Magnitude[lb/ft,F...	Start Location[in,%]	End Location[in,%]
1	M1	X	0	0	0	%100
2	M1	Z	0	0	0	%100
3	M4	X	0	0	0	%100
4	M4	Z	0	0	0	%100
5	M5	X	0	0	0	%100
6	M5	Z	0	0	0	%100
7	M18	X	0	0	0	%100
8	M18	Z	-.581	-.581	0	%100
9	M19	X	0	0	0	%100
10	M19	Z	-.157	-.157	0	%100
11	M20	X	0	0	0	%100
12	M20	Z	-.157	-.157	0	%100
13	M21	X	0	0	0	%100
14	M21	Z	-.702	-.702	0	%100
15	M22	X	0	0	0	%100
16	M22	Z	-.581	-.581	0	%100
17	M28	X	0	0	0	%100
18	M28	Z	-.358	-.358	0	%100
19	M29	X	0	0	0	%100
20	M29	Z	-.358	-.358	0	%100
21	M27A	X	0	0	0	%100
22	M27A	Z	-.157	-.157	0	%100

Member Distributed Loads (BLC 65 : Structure Wm (0 Deg)) (Continued)

	Member Label	Direction	Start Magnitude[lb/ft,...	End Magnitude[lb/ft,F...	Start Location[in,%]	End Location[in,%]
23	M28A	X	0	0	0	%100
24	M28A	Z	-.157	-.157	0	%100
25	M29A	X	0	0	0	%100
26	M29A	Z	-.702	-.702	0	%100
27	M44	X	0	0	0	%100
28	M44	Z	-1.596	-1.596	0	%100
29	M47	X	0	0	0	%100
30	M47	Z	-.1	-.1	0	%100
31	M48	X	0	0	0	%100
32	M48	Z	-.1	-.1	0	%100
33	M51	X	0	0	0	%100
34	M51	Z	-.784	-.784	0	%100
35	M52	X	0	0	0	%100
36	M52	Z	-.491	-.491	0	%100
37	M55	X	0	0	0	%100
38	M55	Z	-1.203	-1.203	0	%100
39	M56	X	0	0	0	%100
40	M56	Z	-1.203	-1.203	0	%100
41	M69	X	0	0	0	%100
42	M69	Z	-.145	-.145	0	%100
43	M70	X	0	0	0	%100
44	M70	Z	-.628	-.628	0	%100
45	M71	X	0	0	0	%100
46	M71	Z	-.157	-.157	0	%100
47	M72	X	0	0	0	%100
48	M72	Z	-.175	-.175	0	%100
49	M73	X	0	0	0	%100
50	M73	Z	-.145	-.145	0	%100
51	M76	X	0	0	0	%100
52	M76	Z	-1.433	-1.433	0	%100
53	M77	X	0	0	0	%100
54	M77	Z	-.358	-.358	0	%100
55	M78	X	0	0	0	%100
56	M78	Z	-.628	-.628	0	%100
57	M79	X	0	0	0	%100
58	M79	Z	-.157	-.157	0	%100
59	M80	X	0	0	0	%100
60	M80	Z	-.175	-.175	0	%100
61	M95	X	0	0	0	%100
62	M95	Z	-1.239	-1.239	0	%100
63	M98	X	0	0	0	%100
64	M98	Z	-.524	-.524	0	%100
65	M99	X	0	0	0	%100
66	M99	Z	-.524	-.524	0	%100
67	M102	X	0	0	0	%100
68	M102	Z	-.196	-.196	0	%100
69	M103	X	0	0	0	%100
70	M103	Z	-.491	-.491	0	%100
71	M106	X	0	0	0	%100
72	M106	Z	-1.203	-1.203	0	%100
73	M107	X	0	0	0	%100
74	M107	Z	-1.203	-1.203	0	%100
75	M120	X	0	0	0	%100
76	M120	Z	-.145	-.145	0	%100
77	M121	X	0	0	0	%100
78	M121	Z	-.157	-.157	0	%100
79	M122	X	0	0	0	%100

Member Distributed Loads (BLC 65 : Structure Wm (0 Deg)) (Continued)

	Member Label	Direction	Start Magnitude[lb/ft,...	End Magnitude[lb/ft,F...	Start Location[in,%]	End Location[in,%]
80	M122	Z	-.628	-.628	0	%100
81	M123	X	0	0	0	%100
82	M123	Z	-.175	-.175	0	%100
83	M124	X	0	0	0	%100
84	M124	Z	-.145	-.145	0	%100
85	M127	X	0	0	0	%100
86	M127	Z	-.358	-.358	0	%100
87	M128	X	0	0	0	%100
88	M128	Z	-1.433	-1.433	0	%100
89	M129	X	0	0	0	%100
90	M129	Z	-.157	-.157	0	%100
91	M130	X	0	0	0	%100
92	M130	Z	-.628	-.628	0	%100
93	M131	X	0	0	0	%100
94	M131	Z	-.175	-.175	0	%100
95	M146	X	0	0	0	%100
96	M146	Z	-1.239	-1.239	0	%100
97	M149	X	0	0	0	%100
98	M149	Z	-.524	-.524	0	%100
99	M150	X	0	0	0	%100
100	M150	Z	-.524	-.524	0	%100
101	M153	X	0	0	0	%100
102	M153	Z	-.196	-.196	0	%100
103	M148A	X	0	0	0	%100
104	M148A	Z	-1.635	-1.635	0	%100
105	M151A	X	0	0	0	%100
106	M151A	Z	-.632	-.632	0	%100
107	M152A	X	0	0	0	%100
108	M152A	Z	0	0	0	%100
109	M154	X	0	0	0	%100
110	M154	Z	-.158	-.158	0	%100
111	M157	X	0	0	0	%100
112	M157	Z	-.158	-.158	0	%100
113	M166	X	0	0	0	%100
114	M166	Z	-1.596	-1.596	0	%100
115	M162A	X	0	0	0	%100
116	M162A	Z	0	0	0	%100
117	M163A	X	0	0	0	%100
118	M163A	Z	-1.596	-1.596	0	%100
119	M164A	X	0	0	0	%100
120	M164A	Z	-1.197	-1.197	0	%100
121	M165A	X	0	0	0	%100
122	M165A	Z	-.399	-.399	0	%100
123	M166A	X	0	0	0	%100
124	M166A	Z	-1.197	-1.197	0	%100
125	M167	X	0	0	0	%100
126	M167	Z	-.399	-.399	0	%100
127	M168	X	0	0	0	%100
128	M168	Z	-1.197	-1.197	0	%100
129	M169	X	0	0	0	%100
130	M169	Z	-.399	-.399	0	%100
131	M170	X	0	0	0	%100
132	M170	Z	-1.197	-1.197	0	%100
133	M171	X	0	0	0	%100
134	M171	Z	-.399	-.399	0	%100
135	M172	X	0	0	0	%100
136	M172	Z	-.586	-.586	0	%100

Member Distributed Loads (BLC 65 : Structure Wm (0 Deg)) (Continued)

	Member Label	Direction	Start Magnitude[lb/ft,...	End Magnitude[lb/ft,F...	Start Location[in,%]	End Location[in,%]
137	M173	X	0	0	0	%100
138	M173	Z	-.146	-.146	0	%100
139	M174	X	0	0	0	%100
140	M174	Z	-.146	-.146	0	%100
141	M175	X	0	0	0	%100
142	M175	Z	-.632	-.632	0	%100
143	M176	X	0	0	0	%100
144	M176	Z	-.158	-.158	0	%100
145	M177	X	0	0	0	%100
146	M177	Z	-.158	-.158	0	%100
147	M203	X	0	0	0	%100
148	M203	Z	-.517	-.517	0	%100
149	OVP	X	0	0	0	%100
150	OVP	Z	-.632	-.632	0	%100
151	MP3A	X	0	0	0	%100
152	MP3A	Z	-.632	-.632	0	%100
153	MP2A	X	0	0	0	%100
154	MP2A	Z	-.632	-.632	0	%100
155	MP3C	X	0	0	0	%100
156	MP3C	Z	-.632	-.632	0	%100
157	MP2C	X	0	0	0	%100
158	MP2C	Z	-.632	-.632	0	%100
159	MP3B	X	0	0	0	%100
160	MP3B	Z	-.632	-.632	0	%100
161	MP2B	X	0	0	0	%100
162	MP2B	Z	-.632	-.632	0	%100
163	MP1A	X	0	0	0	%100
164	MP1A	Z	-.632	-.632	0	%100
165	MP4A	X	0	0	0	%100
166	MP4A	Z	-.632	-.632	0	%100
167	MP1C	X	0	0	0	%100
168	MP1C	Z	-.632	-.632	0	%100
169	MP4C	X	0	0	0	%100
170	MP4C	Z	-.632	-.632	0	%100
171	MP1B	X	0	0	0	%100
172	MP1B	Z	-.632	-.632	0	%100
173	MP4B	X	0	0	0	%100
174	MP4B	Z	-.632	-.632	0	%100
175	M204A	X	0	0	0	%100
176	M204A	Z	-.409	-.409	0	%100
177	M205B	X	0	0	0	%100
178	M205B	Z	-.409	-.409	0	%100
179	M206	X	0	0	0	%100
180	M206	Z	-.765	-.765	0	%100
181	M207	X	0	0	0	%100
182	M207	Z	-.191	-.191	0	%100
183	M208	X	0	0	0	%100
184	M208	Z	-.191	-.191	0	%100
185	M227	X	0	0	0	%100
186	M227	Z	-.236	-.236	0	%100
187	M228	X	0	0	0	%100
188	M228	Z	-.236	-.236	0	%100
189	M229	X	0	0	0	%100
190	M229	Z	-.946	-.946	0	%100
191	M231	X	0	0	0	%100
192	M231	Z	-.737	-.737	0	%100
193	M231A	X	0	0	0	%100

Member Distributed Loads (BLC 65 : Structure Wm (0 Deg)) (Continued)

	Member Label	Direction	Start Magnitude[lb/ft,...	End Magnitude[lb/ft,F...	Start Location[in,%]	End Location[in,%]
194	M231A	Z	-.737	-.737	0	%100
195	M232	X	0	0	0	%100
196	M232	Z	-1.011	-1.011	0	%100
197	M233	X	0	0	0	%100
198	M233	Z	-.258	-.258	0	%100
199	M234	X	0	0	0	%100
200	M234	Z	-.258	-.258	0	%100
201	M235	X	0	0	0	%100
202	M235	Z	-1.011	-1.011	0	%100

Member Distributed Loads (BLC 66 : Structure Wm (30 Deg))

	Member Label	Direction	Start Magnitude[lb/ft,...	End Magnitude[lb/ft,F...	Start Location[in,%]	End Location[in,%]
1	M1	X	.082	.082	0	%100
2	M1	Z	-.142	-.142	0	%100
3	M4	X	.2	.2	0	%100
4	M4	Z	-.347	-.347	0	%100
5	M5	X	.2	.2	0	%100
6	M5	Z	-.347	-.347	0	%100
7	M18	X	.218	.218	0	%100
8	M18	Z	-.378	-.378	0	%100
9	M19	X	0	0	0	%100
10	M19	Z	0	0	0	%100
11	M20	X	.236	.236	0	%100
12	M20	Z	-.408	-.408	0	%100
13	M21	X	.263	.263	0	%100
14	M21	Z	-.456	-.456	0	%100
15	M22	X	.218	.218	0	%100
16	M22	Z	-.378	-.378	0	%100
17	M28	X	0	0	0	%100
18	M28	Z	0	0	0	%100
19	M29	X	.538	.538	0	%100
20	M29	Z	-.931	-.931	0	%100
21	M27A	X	0	0	0	%100
22	M27A	Z	0	0	0	%100
23	M28A	X	.236	.236	0	%100
24	M28A	Z	-.408	-.408	0	%100
25	M29A	X	.263	.263	0	%100
26	M29A	Z	-.456	-.456	0	%100
27	M44	X	.619	.619	0	%100
28	M44	Z	-1.073	-1.073	0	%100
29	M47	X	.37	.37	0	%100
30	M47	Z	-.641	-.641	0	%100
31	M48	X	.37	.37	0	%100
32	M48	Z	-.641	-.641	0	%100
33	M51	X	.294	.294	0	%100
34	M51	Z	-.509	-.509	0	%100
35	M52	X	.082	.082	0	%100
36	M52	Z	-.142	-.142	0	%100
37	M55	X	.2	.2	0	%100
38	M55	Z	-.347	-.347	0	%100
39	M56	X	.2	.2	0	%100
40	M56	Z	-.347	-.347	0	%100
41	M69	X	.218	.218	0	%100
42	M69	Z	-.378	-.378	0	%100
43	M70	X	.236	.236	0	%100
44	M70	Z	-.408	-.408	0	%100

Member Distributed Loads (BLC 66 : Structure Wm (30 Deg)) (Continued)

	Member Label	Direction	Start Magnitude[lb/ft,...	End Magnitude[lb/ft,F...	Start Location[in,%]	End Location[in,%]
45	M71	X	0	0	0	%100
46	M71	Z	0	0	0	%100
47	M72	X	.263	.263	0	%100
48	M72	Z	-.456	-.456	0	%100
49	M73	X	.218	.218	0	%100
50	M73	Z	-.378	-.378	0	%100
51	M76	X	.538	.538	0	%100
52	M76	Z	-.931	-.931	0	%100
53	M77	X	0	0	0	%100
54	M77	Z	0	0	0	%100
55	M78	X	.236	.236	0	%100
56	M78	Z	-.408	-.408	0	%100
57	M79	X	0	0	0	%100
58	M79	Z	0	0	0	%100
59	M80	X	.263	.263	0	%100
60	M80	Z	-.456	-.456	0	%100
61	M95	X	.262	.262	0	%100
62	M95	Z	-.454	-.454	0	%100
63	M98	X	.619	.619	0	%100
64	M98	Z	-1.073	-1.073	0	%100
65	M99	X	.619	.619	0	%100
66	M99	Z	-1.073	-1.073	0	%100
67	M102	X	.294	.294	0	%100
68	M102	Z	-.509	-.509	0	%100
69	M103	X	.327	.327	0	%100
70	M103	Z	-.567	-.567	0	%100
71	M106	X	.802	.802	0	%100
72	M106	Z	-1.389	-1.389	0	%100
73	M107	X	.802	.802	0	%100
74	M107	Z	-1.389	-1.389	0	%100
75	M120	X	0	0	0	%100
76	M120	Z	0	0	0	%100
77	M121	X	.236	.236	0	%100
78	M121	Z	-.408	-.408	0	%100
79	M122	X	.236	.236	0	%100
80	M122	Z	-.408	-.408	0	%100
81	M123	X	0	0	0	%100
82	M123	Z	0	0	0	%100
83	M124	X	0	0	0	%100
84	M124	Z	0	0	0	%100
85	M127	X	.538	.538	0	%100
86	M127	Z	-.931	-.931	0	%100
87	M128	X	.538	.538	0	%100
88	M128	Z	-.931	-.931	0	%100
89	M129	X	.236	.236	0	%100
90	M129	Z	-.408	-.408	0	%100
91	M130	X	.236	.236	0	%100
92	M130	Z	-.408	-.408	0	%100
93	M131	X	0	0	0	%100
94	M131	Z	0	0	0	%100
95	M146	X	.798	.798	0	%100
96	M146	Z	-1.382	-1.382	0	%100
97	M149	X	.083	.083	0	%100
98	M149	Z	-.144	-.144	0	%100
99	M150	X	.083	.083	0	%100
100	M150	Z	-.144	-.144	0	%100
101	M153	X	0	0	0	%100

Member Distributed Loads (BLC 66 : Structure Wm (30 Deg)) (Continued)

	Member Label	Direction	Start Magnitude[lb/ft,...	End Magnitude[lb/ft,F...	Start Location[in,%]	End Location[in,%]
102	M153	Z	0	0	0	%100
103	M148A	X	.613	.613	0	%100
104	M148A	Z	-1.062	-1.062	0	%100
105	M151A	X	.237	.237	0	%100
106	M151A	Z	-.41	-.41	0	%100
107	M152A	X	.2	.2	0	%100
108	M152A	Z	-.346	-.346	0	%100
109	M154	X	.237	.237	0	%100
110	M154	Z	-.41	-.41	0	%100
111	M157	X	0	0	0	%100
112	M157	Z	0	0	0	%100
113	M166	X	.599	.599	0	%100
114	M166	Z	-1.037	-1.037	0	%100
115	M162A	X	.2	.2	0	%100
116	M162A	Z	-.346	-.346	0	%100
117	M163A	X	.599	.599	0	%100
118	M163A	Z	-1.037	-1.037	0	%100
119	M164A	X	.2	.2	0	%100
120	M164A	Z	-.346	-.346	0	%100
121	M165A	X	.599	.599	0	%100
122	M165A	Z	-1.037	-1.037	0	%100
123	M166A	X	.2	.2	0	%100
124	M166A	Z	-.346	-.346	0	%100
125	M167	X	.599	.599	0	%100
126	M167	Z	-1.037	-1.037	0	%100
127	M168	X	.798	.798	0	%100
128	M168	Z	-1.382	-1.382	0	%100
129	M169	X	0	0	0	%100
130	M169	Z	0	0	0	%100
131	M170	X	.798	.798	0	%100
132	M170	Z	-1.382	-1.382	0	%100
133	M171	X	0	0	0	%100
134	M171	Z	0	0	0	%100
135	M172	X	.22	.22	0	%100
136	M172	Z	-.38	-.38	0	%100
137	M173	X	.22	.22	0	%100
138	M173	Z	-.38	-.38	0	%100
139	M174	X	0	0	0	%100
140	M174	Z	0	0	0	%100
141	M175	X	.237	.237	0	%100
142	M175	Z	-.41	-.41	0	%100
143	M176	X	.237	.237	0	%100
144	M176	Z	-.41	-.41	0	%100
145	M177	X	0	0	0	%100
146	M177	Z	0	0	0	%100
147	M203	X	.258	.258	0	%100
148	M203	Z	-.447	-.447	0	%100
149	OVP	X	.316	.316	0	%100
150	OVP	Z	-.547	-.547	0	%100
151	MP3A	X	.316	.316	0	%100
152	MP3A	Z	-.547	-.547	0	%100
153	MP2A	X	.316	.316	0	%100
154	MP2A	Z	-.547	-.547	0	%100
155	MP3C	X	.316	.316	0	%100
156	MP3C	Z	-.547	-.547	0	%100
157	MP2C	X	.316	.316	0	%100
158	MP2C	Z	-.547	-.547	0	%100

Member Distributed Loads (BLC 66 : Structure Wm (30 Deg)) (Continued)

	Member Label	Direction	Start Magnitude[lb/ft,...	End Magnitude[lb/ft,F...	Start Location[in,%]	End Location[in,%]
159	MP3B	X	.316	.316	0	%100
160	MP3B	Z	-.547	-.547	0	%100
161	MP2B	X	.316	.316	0	%100
162	MP2B	Z	-.547	-.547	0	%100
163	MP1A	X	.316	.316	0	%100
164	MP1A	Z	-.547	-.547	0	%100
165	MP4A	X	.316	.316	0	%100
166	MP4A	Z	-.547	-.547	0	%100
167	MP1C	X	.316	.316	0	%100
168	MP1C	Z	-.547	-.547	0	%100
169	MP4C	X	.316	.316	0	%100
170	MP4C	Z	-.547	-.547	0	%100
171	MP1B	X	.316	.316	0	%100
172	MP1B	Z	-.547	-.547	0	%100
173	MP4B	X	.316	.316	0	%100
174	MP4B	Z	-.547	-.547	0	%100
175	M204A	X	.613	.613	0	%100
176	M204A	Z	-1.062	-1.062	0	%100
177	M205B	X	0	0	0	%100
178	M205B	Z	0	0	0	%100
179	M206	X	.287	.287	0	%100
180	M206	Z	-.497	-.497	0	%100
181	M207	X	.287	.287	0	%100
182	M207	Z	-.497	-.497	0	%100
183	M208	X	0	0	0	%100
184	M208	Z	0	0	0	%100
185	M227	X	.355	.355	0	%100
186	M227	Z	-.614	-.614	0	%100
187	M228	X	0	0	0	%100
188	M228	Z	0	0	0	%100
189	M229	X	.355	.355	0	%100
190	M229	Z	-.614	-.614	0	%100
191	M231	X	.163	.163	0	%100
192	M231	Z	-.282	-.282	0	%100
193	M231A	X	.539	.539	0	%100
194	M231A	Z	-.934	-.934	0	%100
195	M232	X	.539	.539	0	%100
196	M232	Z	-.934	-.934	0	%100
197	M233	X	.163	.163	0	%100
198	M233	Z	-.282	-.282	0	%100
199	M234	X	.3	.3	0	%100
200	M234	Z	-.52	-.52	0	%100
201	M235	X	.3	.3	0	%100
202	M235	Z	-.52	-.52	0	%100

Member Distributed Loads (BLC 67 : Structure Wm (60 Deg))

	Member Label	Direction	Start Magnitude[lb/ft,...	End Magnitude[lb/ft,F...	Start Location[in,%]	End Location[in,%]
1	M1	X	.425	.425	0	%100
2	M1	Z	-.245	-.245	0	%100
3	M4	X	1.041	1.041	0	%100
4	M4	Z	-.601	-.601	0	%100
5	M5	X	1.041	1.041	0	%100
6	M5	Z	-.601	-.601	0	%100
7	M18	X	.126	.126	0	%100
8	M18	Z	-.073	-.073	0	%100
9	M19	X	.136	.136	0	%100

Member Distributed Loads (BLC 67 : Structure Wm (60 Deg)) (Continued)

	Member Label	Direction	Start Magnitude[lb/ft,...	End Magnitude[lb/ft,F...	Start Location[in,%]	End Location[in,%]
10	M19	Z	-.079	-.079	0	%100
11	M20	X	.544	.544	0	%100
12	M20	Z	-.314	-.314	0	%100
13	M21	X	.152	.152	0	%100
14	M21	Z	-.088	-.088	0	%100
15	M22	X	.126	.126	0	%100
16	M22	Z	-.073	-.073	0	%100
17	M28	X	.31	.31	0	%100
18	M28	Z	-.179	-.179	0	%100
19	M29	X	1.241	1.241	0	%100
20	M29	Z	-.717	-.717	0	%100
21	M27A	X	.136	.136	0	%100
22	M27A	Z	-.079	-.079	0	%100
23	M28A	X	.544	.544	0	%100
24	M28A	Z	-.314	-.314	0	%100
25	M29A	X	.152	.152	0	%100
26	M29A	Z	-.088	-.088	0	%100
27	M44	X	.454	.454	0	%100
28	M44	Z	-.262	-.262	0	%100
29	M47	X	1.749	1.749	0	%100
30	M47	Z	-1.01	-1.01	0	%100
31	M48	X	1.749	1.749	0	%100
32	M48	Z	-1.01	-1.01	0	%100
33	M51	X	.17	.17	0	%100
34	M51	Z	-.098	-.098	0	%100
35	M52	X	0	0	0	%100
36	M52	Z	0	0	0	%100
37	M55	X	0	0	0	%100
38	M55	Z	0	0	0	%100
39	M56	X	0	0	0	%100
40	M56	Z	0	0	0	%100
41	M69	X	.503	.503	0	%100
42	M69	Z	-.291	-.291	0	%100
43	M70	X	.136	.136	0	%100
44	M70	Z	-.079	-.079	0	%100
45	M71	X	.136	.136	0	%100
46	M71	Z	-.079	-.079	0	%100
47	M72	X	.608	.608	0	%100
48	M72	Z	-.351	-.351	0	%100
49	M73	X	.503	.503	0	%100
50	M73	Z	-.291	-.291	0	%100
51	M76	X	.31	.31	0	%100
52	M76	Z	-.179	-.179	0	%100
53	M77	X	.31	.31	0	%100
54	M77	Z	-.179	-.179	0	%100
55	M78	X	.136	.136	0	%100
56	M78	Z	-.079	-.079	0	%100
57	M79	X	.136	.136	0	%100
58	M79	Z	-.079	-.079	0	%100
59	M80	X	.608	.608	0	%100
60	M80	Z	-.351	-.351	0	%100
61	M95	X	.144	.144	0	%100
62	M95	Z	-.083	-.083	0	%100
63	M98	X	1.382	1.382	0	%100
64	M98	Z	-.798	-.798	0	%100
65	M99	X	1.382	1.382	0	%100
66	M99	Z	-.798	-.798	0	%100

Member Distributed Loads (BLC 67 : Structure Wm (60 Deg)) (Continued)

	Member Label	Direction	Start Magnitude[lb/ft,...	End Magnitude[lb/ft,F...	Start Location[in,%]	End Location[in,%]
67	M102	X	.679	.679	0	%100
68	M102	Z	-.392	-.392	0	%100
69	M103	X	.425	.425	0	%100
70	M103	Z	-.245	-.245	0	%100
71	M106	X	1.041	1.041	0	%100
72	M106	Z	-.601	-.601	0	%100
73	M107	X	1.041	1.041	0	%100
74	M107	Z	-.601	-.601	0	%100
75	M120	X	.126	.126	0	%100
76	M120	Z	-.073	-.073	0	%100
77	M121	X	.544	.544	0	%100
78	M121	Z	-.314	-.314	0	%100
79	M122	X	.136	.136	0	%100
80	M122	Z	-.079	-.079	0	%100
81	M123	X	.152	.152	0	%100
82	M123	Z	-.088	-.088	0	%100
83	M124	X	.126	.126	0	%100
84	M124	Z	-.073	-.073	0	%100
85	M127	X	1.241	1.241	0	%100
86	M127	Z	-.717	-.717	0	%100
87	M128	X	.31	.31	0	%100
88	M128	Z	-.179	-.179	0	%100
89	M129	X	.544	.544	0	%100
90	M129	Z	-.314	-.314	0	%100
91	M130	X	.136	.136	0	%100
92	M130	Z	-.079	-.079	0	%100
93	M131	X	.152	.152	0	%100
94	M131	Z	-.088	-.088	0	%100
95	M146	X	1.073	1.073	0	%100
96	M146	Z	-.619	-.619	0	%100
97	M149	X	.454	.454	0	%100
98	M149	Z	-.262	-.262	0	%100
99	M150	X	.454	.454	0	%100
100	M150	Z	-.262	-.262	0	%100
101	M153	X	.17	.17	0	%100
102	M153	Z	-.098	-.098	0	%100
103	M148A	X	.354	.354	0	%100
104	M148A	Z	-.204	-.204	0	%100
105	M151A	X	.137	.137	0	%100
106	M151A	Z	-.079	-.079	0	%100
107	M152A	X	1.037	1.037	0	%100
108	M152A	Z	-.599	-.599	0	%100
109	M154	X	.547	.547	0	%100
110	M154	Z	-.316	-.316	0	%100
111	M157	X	.137	.137	0	%100
112	M157	Z	-.079	-.079	0	%100
113	M166	X	.346	.346	0	%100
114	M166	Z	-.2	-.2	0	%100
115	M162A	X	1.037	1.037	0	%100
116	M162A	Z	-.599	-.599	0	%100
117	M163A	X	.346	.346	0	%100
118	M163A	Z	-.2	-.2	0	%100
119	M164A	X	0	0	0	%100
120	M164A	Z	0	0	0	%100
121	M165A	X	1.382	1.382	0	%100
122	M165A	Z	-.798	-.798	0	%100
123	M166A	X	0	0	0	%100

Member Distributed Loads (BLC 67 : Structure Wm (60 Deg)) (Continued)

	Member Label	Direction	Start Magnitude[lb/ft,...	End Magnitude[lb/ft,F...	Start Location[in,%]	End Location[in,%]
124	M166A	Z	0	0	0	%100
125	M167	X	1.382	1.382	0	%100
126	M167	Z	-.798	-.798	0	%100
127	M168	X	1.037	1.037	0	%100
128	M168	Z	-.599	-.599	0	%100
129	M169	X	.346	.346	0	%100
130	M169	Z	-.2	-.2	0	%100
131	M170	X	1.037	1.037	0	%100
132	M170	Z	-.599	-.599	0	%100
133	M171	X	.346	.346	0	%100
134	M171	Z	-.2	-.2	0	%100
135	M172	X	.127	.127	0	%100
136	M172	Z	-.073	-.073	0	%100
137	M173	X	.507	.507	0	%100
138	M173	Z	-.293	-.293	0	%100
139	M174	X	.127	.127	0	%100
140	M174	Z	-.073	-.073	0	%100
141	M175	X	.137	.137	0	%100
142	M175	Z	-.079	-.079	0	%100
143	M176	X	.547	.547	0	%100
144	M176	Z	-.316	-.316	0	%100
145	M177	X	.137	.137	0	%100
146	M177	Z	-.079	-.079	0	%100
147	M203	X	.447	.447	0	%100
148	M203	Z	-.258	-.258	0	%100
149	OVP	X	.547	.547	0	%100
150	OVP	Z	-.316	-.316	0	%100
151	MP3A	X	.547	.547	0	%100
152	MP3A	Z	-.316	-.316	0	%100
153	MP2A	X	.547	.547	0	%100
154	MP2A	Z	-.316	-.316	0	%100
155	MP3C	X	.547	.547	0	%100
156	MP3C	Z	-.316	-.316	0	%100
157	MP2C	X	.547	.547	0	%100
158	MP2C	Z	-.316	-.316	0	%100
159	MP3B	X	.547	.547	0	%100
160	MP3B	Z	-.316	-.316	0	%100
161	MP2B	X	.547	.547	0	%100
162	MP2B	Z	-.316	-.316	0	%100
163	MP1A	X	.547	.547	0	%100
164	MP1A	Z	-.316	-.316	0	%100
165	MP4A	X	.547	.547	0	%100
166	MP4A	Z	-.316	-.316	0	%100
167	MP1C	X	.547	.547	0	%100
168	MP1C	Z	-.316	-.316	0	%100
169	MP4C	X	.547	.547	0	%100
170	MP4C	Z	-.316	-.316	0	%100
171	MP1B	X	.547	.547	0	%100
172	MP1B	Z	-.316	-.316	0	%100
173	MP4B	X	.547	.547	0	%100
174	MP4B	Z	-.316	-.316	0	%100
175	M204A	X	1.416	1.416	0	%100
176	M204A	Z	-.817	-.817	0	%100
177	M205B	X	.354	.354	0	%100
178	M205B	Z	-.204	-.204	0	%100
179	M206	X	.166	.166	0	%100
180	M206	Z	-.096	-.096	0	%100

Member Distributed Loads (BLC 67 : Structure Wm (60 Deg)) (Continued)

	Member Label	Direction	Start Magnitude[lb/ft,...	End Magnitude[lb/ft,F...	Start Location[in,%]	End Location[in,%]
181	M207	X	.662	.662	0	%100
182	M207	Z	-.382	-.382	0	%100
183	M208	X	.166	.166	0	%100
184	M208	Z	-.096	-.096	0	%100
185	M227	X	.819	.819	0	%100
186	M227	Z	-.473	-.473	0	%100
187	M228	X	.205	.205	0	%100
188	M228	Z	-.118	-.118	0	%100
189	M229	X	.205	.205	0	%100
190	M229	Z	-.118	-.118	0	%100
191	M231	X	.223	.223	0	%100
192	M231	Z	-.129	-.129	0	%100
193	M231A	X	.875	.875	0	%100
194	M231A	Z	-.505	-.505	0	%100
195	M232	X	.638	.638	0	%100
196	M232	Z	-.368	-.368	0	%100
197	M233	X	.638	.638	0	%100
198	M233	Z	-.368	-.368	0	%100
199	M234	X	.875	.875	0	%100
200	M234	Z	-.505	-.505	0	%100
201	M235	X	.223	.223	0	%100
202	M235	Z	-.129	-.129	0	%100

Member Distributed Loads (BLC 68 : Structure Wm (90 Deg))

	Member Label	Direction	Start Magnitude[lb/ft,...	End Magnitude[lb/ft,F...	Start Location[in,%]	End Location[in,%]
1	M1	X	.654	.654	0	%100
2	M1	Z	0	0	0	%100
3	M4	X	1.603	1.603	0	%100
4	M4	Z	0	0	0	%100
5	M5	X	1.603	1.603	0	%100
6	M5	Z	0	0	0	%100
7	M18	X	0	0	0	%100
8	M18	Z	0	0	0	%100
9	M19	X	.471	.471	0	%100
10	M19	Z	0	0	0	%100
11	M20	X	.471	.471	0	%100
12	M20	Z	0	0	0	%100
13	M21	X	0	0	0	%100
14	M21	Z	0	0	0	%100
15	M22	X	0	0	0	%100
16	M22	Z	0	0	0	%100
17	M28	X	1.075	1.075	0	%100
18	M28	Z	0	0	0	%100
19	M29	X	1.075	1.075	0	%100
20	M29	Z	0	0	0	%100
21	M27A	X	.471	.471	0	%100
22	M27A	Z	0	0	0	%100
23	M28A	X	.471	.471	0	%100
24	M28A	Z	0	0	0	%100
25	M29A	X	0	0	0	%100
26	M29A	Z	0	0	0	%100
27	M44	X	.166	.166	0	%100
28	M44	Z	0	0	0	%100
29	M47	X	2.66	2.66	0	%100
30	M47	Z	0	0	0	%100
31	M48	X	2.66	2.66	0	%100

Member Distributed Loads (BLC 68 : Structure Wm (90 Deg)) (Continued)

	Member Label	Direction	Start Magnitude[lb/ft,...	End Magnitude[lb/ft,F...	Start Location[in,%]	End Location[in,%]
32	M48	Z	0	0	0	%100
33	M51	X	0	0	0	%100
34	M51	Z	0	0	0	%100
35	M52	X	.164	.164	0	%100
36	M52	Z	0	0	0	%100
37	M55	X	.401	.401	0	%100
38	M55	Z	0	0	0	%100
39	M56	X	.401	.401	0	%100
40	M56	Z	0	0	0	%100
41	M69	X	.436	.436	0	%100
42	M69	Z	0	0	0	%100
43	M70	X	0	0	0	%100
44	M70	Z	0	0	0	%100
45	M71	X	.471	.471	0	%100
46	M71	Z	0	0	0	%100
47	M72	X	.526	.526	0	%100
48	M72	Z	0	0	0	%100
49	M73	X	.436	.436	0	%100
50	M73	Z	0	0	0	%100
51	M76	X	0	0	0	%100
52	M76	Z	0	0	0	%100
53	M77	X	1.075	1.075	0	%100
54	M77	Z	0	0	0	%100
55	M78	X	0	0	0	%100
56	M78	Z	0	0	0	%100
57	M79	X	.471	.471	0	%100
58	M79	Z	0	0	0	%100
59	M80	X	.526	.526	0	%100
60	M80	Z	0	0	0	%100
61	M95	X	.524	.524	0	%100
62	M95	Z	0	0	0	%100
63	M98	X	1.239	1.239	0	%100
64	M98	Z	0	0	0	%100
65	M99	X	1.239	1.239	0	%100
66	M99	Z	0	0	0	%100
67	M102	X	.588	.588	0	%100
68	M102	Z	0	0	0	%100
69	M103	X	.164	.164	0	%100
70	M103	Z	0	0	0	%100
71	M106	X	.401	.401	0	%100
72	M106	Z	0	0	0	%100
73	M107	X	.401	.401	0	%100
74	M107	Z	0	0	0	%100
75	M120	X	.436	.436	0	%100
76	M120	Z	0	0	0	%100
77	M121	X	.471	.471	0	%100
78	M121	Z	0	0	0	%100
79	M122	X	0	0	0	%100
80	M122	Z	0	0	0	%100
81	M123	X	.526	.526	0	%100
82	M123	Z	0	0	0	%100
83	M124	X	.436	.436	0	%100
84	M124	Z	0	0	0	%100
85	M127	X	1.075	1.075	0	%100
86	M127	Z	0	0	0	%100
87	M128	X	0	0	0	%100
88	M128	Z	0	0	0	%100

Member Distributed Loads (BLC 68 : Structure Wm (90 Deg)) (Continued)

	Member Label	Direction	Start Magnitude[lb/ft,...	End Magnitude[lb/ft,F...	Start Location[in,%]	End Location[in,%]
89	M129	X	.471	.471	0	%100
90	M129	Z	0	0	0	%100
91	M130	X	0	0	0	%100
92	M130	Z	0	0	0	%100
93	M131	X	.526	.526	0	%100
94	M131	Z	0	0	0	%100
95	M146	X	.524	.524	0	%100
96	M146	Z	0	0	0	%100
97	M149	X	1.239	1.239	0	%100
98	M149	Z	0	0	0	%100
99	M150	X	1.239	1.239	0	%100
100	M150	Z	0	0	0	%100
101	M153	X	.588	.588	0	%100
102	M153	Z	0	0	0	%100
103	M148A	X	0	0	0	%100
104	M148A	Z	0	0	0	%100
105	M151A	X	0	0	0	%100
106	M151A	Z	0	0	0	%100
107	M152A	X	1.596	1.596	0	%100
108	M152A	Z	0	0	0	%100
109	M154	X	.474	.474	0	%100
110	M154	Z	0	0	0	%100
111	M157	X	.474	.474	0	%100
112	M157	Z	0	0	0	%100
113	M166	X	0	0	0	%100
114	M166	Z	0	0	0	%100
115	M162A	X	1.596	1.596	0	%100
116	M162A	Z	0	0	0	%100
117	M163A	X	0	0	0	%100
118	M163A	Z	0	0	0	%100
119	M164A	X	.399	.399	0	%100
120	M164A	Z	0	0	0	%100
121	M165A	X	1.197	1.197	0	%100
122	M165A	Z	0	0	0	%100
123	M166A	X	.399	.399	0	%100
124	M166A	Z	0	0	0	%100
125	M167	X	1.197	1.197	0	%100
126	M167	Z	0	0	0	%100
127	M168	X	.399	.399	0	%100
128	M168	Z	0	0	0	%100
129	M169	X	1.197	1.197	0	%100
130	M169	Z	0	0	0	%100
131	M170	X	.399	.399	0	%100
132	M170	Z	0	0	0	%100
133	M171	X	1.197	1.197	0	%100
134	M171	Z	0	0	0	%100
135	M172	X	0	0	0	%100
136	M172	Z	0	0	0	%100
137	M173	X	.439	.439	0	%100
138	M173	Z	0	0	0	%100
139	M174	X	.439	.439	0	%100
140	M174	Z	0	0	0	%100
141	M175	X	0	0	0	%100
142	M175	Z	0	0	0	%100
143	M176	X	.474	.474	0	%100
144	M176	Z	0	0	0	%100
145	M177	X	.474	.474	0	%100

Member Distributed Loads (BLC 68 : Structure Wm (90 Deg)) (Continued)

	Member Label	Direction	Start Magnitude[lb/ft,...	End Magnitude[lb/ft,F...	Start Location[in,%]	End Location[in,%]
146	M177	Z	0	0	0	%100
147	M203	X	.517	.517	0	%100
148	M203	Z	0	0	0	%100
149	OVP	X	.632	.632	0	%100
150	OVP	Z	0	0	0	%100
151	MP3A	X	.632	.632	0	%100
152	MP3A	Z	0	0	0	%100
153	MP2A	X	.632	.632	0	%100
154	MP2A	Z	0	0	0	%100
155	MP3C	X	.632	.632	0	%100
156	MP3C	Z	0	0	0	%100
157	MP2C	X	.632	.632	0	%100
158	MP2C	Z	0	0	0	%100
159	MP3B	X	.632	.632	0	%100
160	MP3B	Z	0	0	0	%100
161	MP2B	X	.632	.632	0	%100
162	MP2B	Z	0	0	0	%100
163	MP1A	X	.632	.632	0	%100
164	MP1A	Z	0	0	0	%100
165	MP4A	X	.632	.632	0	%100
166	MP4A	Z	0	0	0	%100
167	MP1C	X	.632	.632	0	%100
168	MP1C	Z	0	0	0	%100
169	MP4C	X	.632	.632	0	%100
170	MP4C	Z	0	0	0	%100
171	MP1B	X	.632	.632	0	%100
172	MP1B	Z	0	0	0	%100
173	MP4B	X	.632	.632	0	%100
174	MP4B	Z	0	0	0	%100
175	M204A	X	1.226	1.226	0	%100
176	M204A	Z	0	0	0	%100
177	M205B	X	1.226	1.226	0	%100
178	M205B	Z	0	0	0	%100
179	M206	X	0	0	0	%100
180	M206	Z	0	0	0	%100
181	M207	X	.574	.574	0	%100
182	M207	Z	0	0	0	%100
183	M208	X	.574	.574	0	%100
184	M208	Z	0	0	0	%100
185	M227	X	.709	.709	0	%100
186	M227	Z	0	0	0	%100
187	M228	X	.709	.709	0	%100
188	M228	Z	0	0	0	%100
189	M229	X	0	0	0	%100
190	M229	Z	0	0	0	%100
191	M231	X	.6	.6	0	%100
192	M231	Z	0	0	0	%100
193	M231A	X	.6	.6	0	%100
194	M231A	Z	0	0	0	%100
195	M232	X	.326	.326	0	%100
196	M232	Z	0	0	0	%100
197	M233	X	1.079	1.079	0	%100
198	M233	Z	0	0	0	%100
199	M234	X	1.079	1.079	0	%100
200	M234	Z	0	0	0	%100
201	M235	X	.326	.326	0	%100
202	M235	Z	0	0	0	%100

Member Distributed Loads (BLC 69 : Structure Wm (120 Deg))

	Member Label	Direction	Start Magnitude[lb/ft,...	End Magnitude[lb/ft,F...	Start Location[in,%]	End Location[in,%]
1	M1	X	.425	.425	0	%100
2	M1	Z	.245	.245	0	%100
3	M4	X	1.041	1.041	0	%100
4	M4	Z	.601	.601	0	%100
5	M5	X	1.041	1.041	0	%100
6	M5	Z	.601	.601	0	%100
7	M18	X	.126	.126	0	%100
8	M18	Z	.073	.073	0	%100
9	M19	X	.544	.544	0	%100
10	M19	Z	.314	.314	0	%100
11	M20	X	.136	.136	0	%100
12	M20	Z	.079	.079	0	%100
13	M21	X	.152	.152	0	%100
14	M21	Z	.088	.088	0	%100
15	M22	X	.126	.126	0	%100
16	M22	Z	.073	.073	0	%100
17	M28	X	1.241	1.241	0	%100
18	M28	Z	.717	.717	0	%100
19	M29	X	.31	.31	0	%100
20	M29	Z	.179	.179	0	%100
21	M27A	X	.544	.544	0	%100
22	M27A	Z	.314	.314	0	%100
23	M28A	X	.136	.136	0	%100
24	M28A	Z	.079	.079	0	%100
25	M29A	X	.152	.152	0	%100
26	M29A	Z	.088	.088	0	%100
27	M44	X	.454	.454	0	%100
28	M44	Z	.262	.262	0	%100
29	M47	X	1.749	1.749	0	%100
30	M47	Z	1.01	1.01	0	%100
31	M48	X	1.749	1.749	0	%100
32	M48	Z	1.01	1.01	0	%100
33	M51	X	.17	.17	0	%100
34	M51	Z	.098	.098	0	%100
35	M52	X	.425	.425	0	%100
36	M52	Z	.245	.245	0	%100
37	M55	X	1.041	1.041	0	%100
38	M55	Z	.601	.601	0	%100
39	M56	X	1.041	1.041	0	%100
40	M56	Z	.601	.601	0	%100
41	M69	X	.126	.126	0	%100
42	M69	Z	.073	.073	0	%100
43	M70	X	.136	.136	0	%100
44	M70	Z	.079	.079	0	%100
45	M71	X	.544	.544	0	%100
46	M71	Z	.314	.314	0	%100
47	M72	X	.152	.152	0	%100
48	M72	Z	.088	.088	0	%100
49	M73	X	.126	.126	0	%100
50	M73	Z	.073	.073	0	%100
51	M76	X	.31	.31	0	%100
52	M76	Z	.179	.179	0	%100
53	M77	X	1.241	1.241	0	%100
54	M77	Z	.717	.717	0	%100
55	M78	X	.136	.136	0	%100
56	M78	Z	.079	.079	0	%100
57	M79	X	.544	.544	0	%100

Member Distributed Loads (BLC 69 : Structure Wm (120 Deg)) (Continued)

	Member Label	Direction	Start Magnitude[lb/ft,...	End Magnitude[lb/ft,F...	Start Location[in,%]	End Location[in,%]
58	M79	Z	.314	.314	0	%100
59	M80	X	.152	.152	0	%100
60	M80	Z	.088	.088	0	%100
61	M95	X	1.073	1.073	0	%100
62	M95	Z	.619	.619	0	%100
63	M98	X	.454	.454	0	%100
64	M98	Z	.262	.262	0	%100
65	M99	X	.454	.454	0	%100
66	M99	Z	.262	.262	0	%100
67	M102	X	.17	.17	0	%100
68	M102	Z	.098	.098	0	%100
69	M103	X	0	0	0	%100
70	M103	Z	0	0	0	%100
71	M106	X	0	0	0	%100
72	M106	Z	0	0	0	%100
73	M107	X	0	0	0	%100
74	M107	Z	0	0	0	%100
75	M120	X	.503	.503	0	%100
76	M120	Z	.291	.291	0	%100
77	M121	X	.136	.136	0	%100
78	M121	Z	.079	.079	0	%100
79	M122	X	.136	.136	0	%100
80	M122	Z	.079	.079	0	%100
81	M123	X	.608	.608	0	%100
82	M123	Z	.351	.351	0	%100
83	M124	X	.503	.503	0	%100
84	M124	Z	.291	.291	0	%100
85	M127	X	.31	.31	0	%100
86	M127	Z	.179	.179	0	%100
87	M128	X	.31	.31	0	%100
88	M128	Z	.179	.179	0	%100
89	M129	X	.136	.136	0	%100
90	M129	Z	.079	.079	0	%100
91	M130	X	.136	.136	0	%100
92	M130	Z	.079	.079	0	%100
93	M131	X	.608	.608	0	%100
94	M131	Z	.351	.351	0	%100
95	M146	X	.144	.144	0	%100
96	M146	Z	.083	.083	0	%100
97	M149	X	1.382	1.382	0	%100
98	M149	Z	.798	.798	0	%100
99	M150	X	1.382	1.382	0	%100
100	M150	Z	.798	.798	0	%100
101	M153	X	.679	.679	0	%100
102	M153	Z	.392	.392	0	%100
103	M148A	X	.354	.354	0	%100
104	M148A	Z	.204	.204	0	%100
105	M151A	X	.137	.137	0	%100
106	M151A	Z	.079	.079	0	%100
107	M152A	X	1.037	1.037	0	%100
108	M152A	Z	.599	.599	0	%100
109	M154	X	.137	.137	0	%100
110	M154	Z	.079	.079	0	%100
111	M157	X	.547	.547	0	%100
112	M157	Z	.316	.316	0	%100
113	M166	X	.346	.346	0	%100
114	M166	Z	.2	.2	0	%100

Member Distributed Loads (BLC 69 : Structure Wm (120 Deg)) (Continued)

	Member Label	Direction	Start Magnitude[lb/ft,...	End Magnitude[lb/ft,F...	Start Location[in,%]	End Location[in,%]
115	M162A	X	1.037	1.037	0	%100
116	M162A	Z	.599	.599	0	%100
117	M163A	X	.346	.346	0	%100
118	M163A	Z	.2	.2	0	%100
119	M164A	X	1.037	1.037	0	%100
120	M164A	Z	.599	.599	0	%100
121	M165A	X	.346	.346	0	%100
122	M165A	Z	.2	.2	0	%100
123	M166A	X	1.037	1.037	0	%100
124	M166A	Z	.599	.599	0	%100
125	M167	X	.346	.346	0	%100
126	M167	Z	.2	.2	0	%100
127	M168	X	0	0	0	%100
128	M168	Z	0	0	0	%100
129	M169	X	1.382	1.382	0	%100
130	M169	Z	.798	.798	0	%100
131	M170	X	0	0	0	%100
132	M170	Z	0	0	0	%100
133	M171	X	1.382	1.382	0	%100
134	M171	Z	.798	.798	0	%100
135	M172	X	.127	.127	0	%100
136	M172	Z	.073	.073	0	%100
137	M173	X	.127	.127	0	%100
138	M173	Z	.073	.073	0	%100
139	M174	X	.507	.507	0	%100
140	M174	Z	.293	.293	0	%100
141	M175	X	.137	.137	0	%100
142	M175	Z	.079	.079	0	%100
143	M176	X	.137	.137	0	%100
144	M176	Z	.079	.079	0	%100
145	M177	X	.547	.547	0	%100
146	M177	Z	.316	.316	0	%100
147	M203	X	.447	.447	0	%100
148	M203	Z	.258	.258	0	%100
149	OVP	X	.547	.547	0	%100
150	OVP	Z	.316	.316	0	%100
151	MP3A	X	.547	.547	0	%100
152	MP3A	Z	.316	.316	0	%100
153	MP2A	X	.547	.547	0	%100
154	MP2A	Z	.316	.316	0	%100
155	MP3C	X	.547	.547	0	%100
156	MP3C	Z	.316	.316	0	%100
157	MP2C	X	.547	.547	0	%100
158	MP2C	Z	.316	.316	0	%100
159	MP3B	X	.547	.547	0	%100
160	MP3B	Z	.316	.316	0	%100
161	MP2B	X	.547	.547	0	%100
162	MP2B	Z	.316	.316	0	%100
163	MP1A	X	.547	.547	0	%100
164	MP1A	Z	.316	.316	0	%100
165	MP4A	X	.547	.547	0	%100
166	MP4A	Z	.316	.316	0	%100
167	MP1C	X	.547	.547	0	%100
168	MP1C	Z	.316	.316	0	%100
169	MP4C	X	.547	.547	0	%100
170	MP4C	Z	.316	.316	0	%100
171	MP1B	X	.547	.547	0	%100

Member Distributed Loads (BLC 69 : Structure Wm (120 Deg)) (Continued)

	Member Label	Direction	Start Magnitude[lb/ft,...	End Magnitude[lb/ft,F...	Start Location[in,%]	End Location[in,%]
172	MP1B	Z	.316	.316	0	%100
173	MP4B	X	.547	.547	0	%100
174	MP4B	Z	.316	.316	0	%100
175	M204A	X	.354	.354	0	%100
176	M204A	Z	.204	.204	0	%100
177	M205B	X	1.416	1.416	0	%100
178	M205B	Z	.817	.817	0	%100
179	M206	X	.166	.166	0	%100
180	M206	Z	.096	.096	0	%100
181	M207	X	.166	.166	0	%100
182	M207	Z	.096	.096	0	%100
183	M208	X	.662	.662	0	%100
184	M208	Z	.382	.382	0	%100
185	M227	X	.205	.205	0	%100
186	M227	Z	.118	.118	0	%100
187	M228	X	.819	.819	0	%100
188	M228	Z	.473	.473	0	%100
189	M229	X	.205	.205	0	%100
190	M229	Z	.118	.118	0	%100
191	M231	X	.875	.875	0	%100
192	M231	Z	.505	.505	0	%100
193	M231A	X	.223	.223	0	%100
194	M231A	Z	.129	.129	0	%100
195	M232	X	.223	.223	0	%100
196	M232	Z	.129	.129	0	%100
197	M233	X	.875	.875	0	%100
198	M233	Z	.505	.505	0	%100
199	M234	X	.638	.638	0	%100
200	M234	Z	.368	.368	0	%100
201	M235	X	.638	.638	0	%100
202	M235	Z	.368	.368	0	%100

Member Distributed Loads (BLC 70 : Structure Wm (150 Deg))

	Member Label	Direction	Start Magnitude[lb/ft,...	End Magnitude[lb/ft,F...	Start Location[in,%]	End Location[in,%]
1	M1	X	.082	.082	0	%100
2	M1	Z	.142	.142	0	%100
3	M4	X	.2	.2	0	%100
4	M4	Z	.347	.347	0	%100
5	M5	X	.2	.2	0	%100
6	M5	Z	.347	.347	0	%100
7	M18	X	.218	.218	0	%100
8	M18	Z	.378	.378	0	%100
9	M19	X	.236	.236	0	%100
10	M19	Z	.408	.408	0	%100
11	M20	X	0	0	0	%100
12	M20	Z	0	0	0	%100
13	M21	X	.263	.263	0	%100
14	M21	Z	.456	.456	0	%100
15	M22	X	.218	.218	0	%100
16	M22	Z	.378	.378	0	%100
17	M28	X	.538	.538	0	%100
18	M28	Z	.931	.931	0	%100
19	M29	X	0	0	0	%100
20	M29	Z	0	0	0	%100
21	M27A	X	.236	.236	0	%100
22	M27A	Z	.408	.408	0	%100

Member Distributed Loads (BLC 70 : Structure Wm (150 Deg)) (Continued)

	Member Label	Direction	Start Magnitude[lb/ft,...	End Magnitude[lb/ft,F...	Start Location[in,%]	End Location[in,%]
23	M28A	X	0	0	0	%100
24	M28A	Z	0	0	0	%100
25	M29A	X	.263	.263	0	%100
26	M29A	Z	.456	.456	0	%100
27	M44	X	.619	.619	0	%100
28	M44	Z	1.073	1.073	0	%100
29	M47	X	.37	.37	0	%100
30	M47	Z	.641	.641	0	%100
31	M48	X	.37	.37	0	%100
32	M48	Z	.641	.641	0	%100
33	M51	X	.294	.294	0	%100
34	M51	Z	.509	.509	0	%100
35	M52	X	.327	.327	0	%100
36	M52	Z	.567	.567	0	%100
37	M55	X	.802	.802	0	%100
38	M55	Z	1.389	1.389	0	%100
39	M56	X	.802	.802	0	%100
40	M56	Z	1.389	1.389	0	%100
41	M69	X	0	0	0	%100
42	M69	Z	0	0	0	%100
43	M70	X	.236	.236	0	%100
44	M70	Z	.408	.408	0	%100
45	M71	X	.236	.236	0	%100
46	M71	Z	.408	.408	0	%100
47	M72	X	0	0	0	%100
48	M72	Z	0	0	0	%100
49	M73	X	0	0	0	%100
50	M73	Z	0	0	0	%100
51	M76	X	.538	.538	0	%100
52	M76	Z	.931	.931	0	%100
53	M77	X	.538	.538	0	%100
54	M77	Z	.931	.931	0	%100
55	M78	X	.236	.236	0	%100
56	M78	Z	.408	.408	0	%100
57	M79	X	.236	.236	0	%100
58	M79	Z	.408	.408	0	%100
59	M80	X	0	0	0	%100
60	M80	Z	0	0	0	%100
61	M95	X	.798	.798	0	%100
62	M95	Z	1.382	1.382	0	%100
63	M98	X	.083	.083	0	%100
64	M98	Z	.144	.144	0	%100
65	M99	X	.083	.083	0	%100
66	M99	Z	.144	.144	0	%100
67	M102	X	0	0	0	%100
68	M102	Z	0	0	0	%100
69	M103	X	.082	.082	0	%100
70	M103	Z	.142	.142	0	%100
71	M106	X	.2	.2	0	%100
72	M106	Z	.347	.347	0	%100
73	M107	X	.2	.2	0	%100
74	M107	Z	.347	.347	0	%100
75	M120	X	.218	.218	0	%100
76	M120	Z	.378	.378	0	%100
77	M121	X	0	0	0	%100
78	M121	Z	0	0	0	%100
79	M122	X	.236	.236	0	%100

Member Distributed Loads (BLC 70 : Structure Wm (150 Deg)) (Continued)

	Member Label	Direction	Start Magnitude[lb/ft,...	End Magnitude[lb/ft,F...	Start Location[in,%]	End Location[in,%]
80	M122	Z	.408	.408	0	%100
81	M123	X	.263	.263	0	%100
82	M123	Z	.456	.456	0	%100
83	M124	X	.218	.218	0	%100
84	M124	Z	.378	.378	0	%100
85	M127	X	0	0	0	%100
86	M127	Z	0	0	0	%100
87	M128	X	.538	.538	0	%100
88	M128	Z	.931	.931	0	%100
89	M129	X	0	0	0	%100
90	M129	Z	0	0	0	%100
91	M130	X	.236	.236	0	%100
92	M130	Z	.408	.408	0	%100
93	M131	X	.263	.263	0	%100
94	M131	Z	.456	.456	0	%100
95	M146	X	.262	.262	0	%100
96	M146	Z	.454	.454	0	%100
97	M149	X	.619	.619	0	%100
98	M149	Z	1.073	1.073	0	%100
99	M150	X	.619	.619	0	%100
100	M150	Z	1.073	1.073	0	%100
101	M153	X	.294	.294	0	%100
102	M153	Z	.509	.509	0	%100
103	M148A	X	.613	.613	0	%100
104	M148A	Z	1.062	1.062	0	%100
105	M151A	X	.237	.237	0	%100
106	M151A	Z	.41	.41	0	%100
107	M152A	X	.2	.2	0	%100
108	M152A	Z	.346	.346	0	%100
109	M154	X	0	0	0	%100
110	M154	Z	0	0	0	%100
111	M157	X	.237	.237	0	%100
112	M157	Z	.41	.41	0	%100
113	M166	X	.599	.599	0	%100
114	M166	Z	1.037	1.037	0	%100
115	M162A	X	.2	.2	0	%100
116	M162A	Z	.346	.346	0	%100
117	M163A	X	.599	.599	0	%100
118	M163A	Z	1.037	1.037	0	%100
119	M164A	X	.798	.798	0	%100
120	M164A	Z	1.382	1.382	0	%100
121	M165A	X	0	0	0	%100
122	M165A	Z	0	0	0	%100
123	M166A	X	.798	.798	0	%100
124	M166A	Z	1.382	1.382	0	%100
125	M167	X	0	0	0	%100
126	M167	Z	0	0	0	%100
127	M168	X	.2	.2	0	%100
128	M168	Z	.346	.346	0	%100
129	M169	X	.599	.599	0	%100
130	M169	Z	1.037	1.037	0	%100
131	M170	X	.199	.199	0	%100
132	M170	Z	.346	.346	0	%100
133	M171	X	.599	.599	0	%100
134	M171	Z	1.037	1.037	0	%100
135	M172	X	.22	.22	0	%100
136	M172	Z	.38	.38	0	%100

Member Distributed Loads (BLC 70 : Structure Wm (150 Deg)) (Continued)

	Member Label	Direction	Start Magnitude[lb/ft,...	End Magnitude[lb/ft,F...	Start Location[in,%]	End Location[in,%]
137	M173	X	0	0	0	%100
138	M173	Z	0	0	0	%100
139	M174	X	.22	.22	0	%100
140	M174	Z	.38	.38	0	%100
141	M175	X	.237	.237	0	%100
142	M175	Z	.41	.41	0	%100
143	M176	X	0	0	0	%100
144	M176	Z	0	0	0	%100
145	M177	X	.237	.237	0	%100
146	M177	Z	.41	.41	0	%100
147	M203	X	.258	.258	0	%100
148	M203	Z	.447	.447	0	%100
149	OVP	X	.316	.316	0	%100
150	OVP	Z	.547	.547	0	%100
151	MP3A	X	.316	.316	0	%100
152	MP3A	Z	.547	.547	0	%100
153	MP2A	X	.316	.316	0	%100
154	MP2A	Z	.547	.547	0	%100
155	MP3C	X	.316	.316	0	%100
156	MP3C	Z	.547	.547	0	%100
157	MP2C	X	.316	.316	0	%100
158	MP2C	Z	.547	.547	0	%100
159	MP3B	X	.316	.316	0	%100
160	MP3B	Z	.547	.547	0	%100
161	MP2B	X	.316	.316	0	%100
162	MP2B	Z	.547	.547	0	%100
163	MP1A	X	.316	.316	0	%100
164	MP1A	Z	.547	.547	0	%100
165	MP4A	X	.316	.316	0	%100
166	MP4A	Z	.547	.547	0	%100
167	MP1C	X	.316	.316	0	%100
168	MP1C	Z	.547	.547	0	%100
169	MP4C	X	.316	.316	0	%100
170	MP4C	Z	.547	.547	0	%100
171	MP1B	X	.316	.316	0	%100
172	MP1B	Z	.547	.547	0	%100
173	MP4B	X	.316	.316	0	%100
174	MP4B	Z	.547	.547	0	%100
175	M204A	X	0	0	0	%100
176	M204A	Z	0	0	0	%100
177	M205B	X	.613	.613	0	%100
178	M205B	Z	1.062	1.062	0	%100
179	M206	X	.287	.287	0	%100
180	M206	Z	.497	.497	0	%100
181	M207	X	0	0	0	%100
182	M207	Z	0	0	0	%100
183	M208	X	.287	.287	0	%100
184	M208	Z	.497	.497	0	%100
185	M227	X	0	0	0	%100
186	M227	Z	0	0	0	%100
187	M228	X	.355	.355	0	%100
188	M228	Z	.614	.614	0	%100
189	M229	X	.355	.355	0	%100
190	M229	Z	.614	.614	0	%100
191	M231	X	.539	.539	0	%100
192	M231	Z	.934	.934	0	%100
193	M231A	X	.163	.163	0	%100

Member Distributed Loads (BLC 70 : Structure Wm (150 Deg)) (Continued)

	Member Label	Direction	Start Magnitude[lb/ft,...	End Magnitude[lb/ft,F...	Start Location[in,%]	End Location[in,%]
194	M231A	Z	.282	.282	0	%100
195	M232	X	.3	.3	0	%100
196	M232	Z	.52	.52	0	%100
197	M233	X	.3	.3	0	%100
198	M233	Z	.52	.52	0	%100
199	M234	X	.163	.163	0	%100
200	M234	Z	.282	.282	0	%100
201	M235	X	.539	.539	0	%100
202	M235	Z	.934	.934	0	%100

Member Distributed Loads (BLC 71 : Structure Wm (180 Deg))

	Member Label	Direction	Start Magnitude[lb/ft,...	End Magnitude[lb/ft,F...	Start Location[in,%]	End Location[in,%]
1	M1	X	0	0	0	%100
2	M1	Z	0	0	0	%100
3	M4	X	0	0	0	%100
4	M4	Z	0	0	0	%100
5	M5	X	0	0	0	%100
6	M5	Z	0	0	0	%100
7	M18	X	0	0	0	%100
8	M18	Z	.581	.581	0	%100
9	M19	X	0	0	0	%100
10	M19	Z	.157	.157	0	%100
11	M20	X	0	0	0	%100
12	M20	Z	.157	.157	0	%100
13	M21	X	0	0	0	%100
14	M21	Z	.702	.702	0	%100
15	M22	X	0	0	0	%100
16	M22	Z	.581	.581	0	%100
17	M28	X	0	0	0	%100
18	M28	Z	.358	.358	0	%100
19	M29	X	0	0	0	%100
20	M29	Z	.358	.358	0	%100
21	M27A	X	0	0	0	%100
22	M27A	Z	.157	.157	0	%100
23	M28A	X	0	0	0	%100
24	M28A	Z	.157	.157	0	%100
25	M29A	X	0	0	0	%100
26	M29A	Z	.702	.702	0	%100
27	M44	X	0	0	0	%100
28	M44	Z	1.596	1.596	0	%100
29	M47	X	0	0	0	%100
30	M47	Z	.1	.1	0	%100
31	M48	X	0	0	0	%100
32	M48	Z	.1	.1	0	%100
33	M51	X	0	0	0	%100
34	M51	Z	.784	.784	0	%100
35	M52	X	0	0	0	%100
36	M52	Z	.491	.491	0	%100
37	M55	X	0	0	0	%100
38	M55	Z	1.203	1.203	0	%100
39	M56	X	0	0	0	%100
40	M56	Z	1.203	1.203	0	%100
41	M69	X	0	0	0	%100
42	M69	Z	.145	.145	0	%100
43	M70	X	0	0	0	%100
44	M70	Z	.628	.628	0	%100

Member Distributed Loads (BLC 71 : Structure Wm (180 Deg)) (Continued)

	Member Label	Direction	Start Magnitude[lb/ft,...	End Magnitude[lb/ft,F...	Start Location[in,%]	End Location[in,%]
45	M71	X	0	0	0	%100
46	M71	Z	.157	.157	0	%100
47	M72	X	0	0	0	%100
48	M72	Z	.175	.175	0	%100
49	M73	X	0	0	0	%100
50	M73	Z	.145	.145	0	%100
51	M76	X	0	0	0	%100
52	M76	Z	1.433	1.433	0	%100
53	M77	X	0	0	0	%100
54	M77	Z	.358	.358	0	%100
55	M78	X	0	0	0	%100
56	M78	Z	.628	.628	0	%100
57	M79	X	0	0	0	%100
58	M79	Z	.157	.157	0	%100
59	M80	X	0	0	0	%100
60	M80	Z	.175	.175	0	%100
61	M95	X	0	0	0	%100
62	M95	Z	1.239	1.239	0	%100
63	M98	X	0	0	0	%100
64	M98	Z	.524	.524	0	%100
65	M99	X	0	0	0	%100
66	M99	Z	.524	.524	0	%100
67	M102	X	0	0	0	%100
68	M102	Z	.196	.196	0	%100
69	M103	X	0	0	0	%100
70	M103	Z	.491	.491	0	%100
71	M106	X	0	0	0	%100
72	M106	Z	1.203	1.203	0	%100
73	M107	X	0	0	0	%100
74	M107	Z	1.203	1.203	0	%100
75	M120	X	0	0	0	%100
76	M120	Z	.145	.145	0	%100
77	M121	X	0	0	0	%100
78	M121	Z	.157	.157	0	%100
79	M122	X	0	0	0	%100
80	M122	Z	.628	.628	0	%100
81	M123	X	0	0	0	%100
82	M123	Z	.175	.175	0	%100
83	M124	X	0	0	0	%100
84	M124	Z	.145	.145	0	%100
85	M127	X	0	0	0	%100
86	M127	Z	.358	.358	0	%100
87	M128	X	0	0	0	%100
88	M128	Z	1.433	1.433	0	%100
89	M129	X	0	0	0	%100
90	M129	Z	.157	.157	0	%100
91	M130	X	0	0	0	%100
92	M130	Z	.628	.628	0	%100
93	M131	X	0	0	0	%100
94	M131	Z	.175	.175	0	%100
95	M146	X	0	0	0	%100
96	M146	Z	1.239	1.239	0	%100
97	M149	X	0	0	0	%100
98	M149	Z	.524	.524	0	%100
99	M150	X	0	0	0	%100
100	M150	Z	.524	.524	0	%100
101	M153	X	0	0	0	%100

Member Distributed Loads (BLC 71 : Structure Wm (180 Deg)) (Continued)

	Member Label	Direction	Start Magnitude[lb/ft,...	End Magnitude[lb/ft,F...	Start Location[in,%]	End Location[in,%]
102	M153	Z	.196	.196	0	%100
103	M148A	X	0	0	0	%100
104	M148A	Z	1.635	1.635	0	%100
105	M151A	X	0	0	0	%100
106	M151A	Z	.632	.632	0	%100
107	M152A	X	0	0	0	%100
108	M152A	Z	0	0	0	%100
109	M154	X	0	0	0	%100
110	M154	Z	.158	.158	0	%100
111	M157	X	0	0	0	%100
112	M157	Z	.158	.158	0	%100
113	M166	X	0	0	0	%100
114	M166	Z	1.596	1.596	0	%100
115	M162A	X	0	0	0	%100
116	M162A	Z	0	0	0	%100
117	M163A	X	0	0	0	%100
118	M163A	Z	1.596	1.596	0	%100
119	M164A	X	0	0	0	%100
120	M164A	Z	1.197	1.197	0	%100
121	M165A	X	0	0	0	%100
122	M165A	Z	.399	.399	0	%100
123	M166A	X	0	0	0	%100
124	M166A	Z	1.197	1.197	0	%100
125	M167	X	0	0	0	%100
126	M167	Z	.399	.399	0	%100
127	M168	X	0	0	0	%100
128	M168	Z	1.197	1.197	0	%100
129	M169	X	0	0	0	%100
130	M169	Z	.399	.399	0	%100
131	M170	X	0	0	0	%100
132	M170	Z	1.197	1.197	0	%100
133	M171	X	0	0	0	%100
134	M171	Z	.399	.399	0	%100
135	M172	X	0	0	0	%100
136	M172	Z	.586	.586	0	%100
137	M173	X	0	0	0	%100
138	M173	Z	.146	.146	0	%100
139	M174	X	0	0	0	%100
140	M174	Z	.146	.146	0	%100
141	M175	X	0	0	0	%100
142	M175	Z	.632	.632	0	%100
143	M176	X	0	0	0	%100
144	M176	Z	.158	.158	0	%100
145	M177	X	0	0	0	%100
146	M177	Z	.158	.158	0	%100
147	M203	X	0	0	0	%100
148	M203	Z	.517	.517	0	%100
149	OVP	X	0	0	0	%100
150	OVP	Z	.632	.632	0	%100
151	MP3A	X	0	0	0	%100
152	MP3A	Z	.632	.632	0	%100
153	MP2A	X	0	0	0	%100
154	MP2A	Z	.632	.632	0	%100
155	MP3C	X	0	0	0	%100
156	MP3C	Z	.632	.632	0	%100
157	MP2C	X	0	0	0	%100
158	MP2C	Z	.632	.632	0	%100

Member Distributed Loads (BLC 71 : Structure Wm (180 Deg)) (Continued)

	Member Label	Direction	Start Magnitude[lb/ft,...	End Magnitude[lb/ft,F...	Start Location[in,%]	End Location[in,%]
159	MP3B	X	0	0	0	%100
160	MP3B	Z	.632	.632	0	%100
161	MP2B	X	0	0	0	%100
162	MP2B	Z	.632	.632	0	%100
163	MP1A	X	0	0	0	%100
164	MP1A	Z	.632	.632	0	%100
165	MP4A	X	0	0	0	%100
166	MP4A	Z	.632	.632	0	%100
167	MP1C	X	0	0	0	%100
168	MP1C	Z	.632	.632	0	%100
169	MP4C	X	0	0	0	%100
170	MP4C	Z	.632	.632	0	%100
171	MP1B	X	0	0	0	%100
172	MP1B	Z	.632	.632	0	%100
173	MP4B	X	0	0	0	%100
174	MP4B	Z	.632	.632	0	%100
175	M204A	X	0	0	0	%100
176	M204A	Z	.409	.409	0	%100
177	M205B	X	0	0	0	%100
178	M205B	Z	.409	.409	0	%100
179	M206	X	0	0	0	%100
180	M206	Z	.765	.765	0	%100
181	M207	X	0	0	0	%100
182	M207	Z	.191	.191	0	%100
183	M208	X	0	0	0	%100
184	M208	Z	.191	.191	0	%100
185	M227	X	0	0	0	%100
186	M227	Z	.236	.236	0	%100
187	M228	X	0	0	0	%100
188	M228	Z	.236	.236	0	%100
189	M229	X	0	0	0	%100
190	M229	Z	.946	.946	0	%100
191	M231	X	0	0	0	%100
192	M231	Z	.737	.737	0	%100
193	M231A	X	0	0	0	%100
194	M231A	Z	.737	.737	0	%100
195	M232	X	0	0	0	%100
196	M232	Z	1.011	1.011	0	%100
197	M233	X	0	0	0	%100
198	M233	Z	.258	.258	0	%100
199	M234	X	0	0	0	%100
200	M234	Z	.258	.258	0	%100
201	M235	X	0	0	0	%100
202	M235	Z	1.011	1.011	0	%100

Member Distributed Loads (BLC 72 : Structure Wm (210 Deg))

	Member Label	Direction	Start Magnitude[lb/ft,...	End Magnitude[lb/ft,F...	Start Location[in,%]	End Location[in,%]
1	M1	X	-.082	-.082	0	%100
2	M1	Z	.142	.142	0	%100
3	M4	X	-.2	-.2	0	%100
4	M4	Z	.347	.347	0	%100
5	M5	X	-.2	-.2	0	%100
6	M5	Z	.347	.347	0	%100
7	M18	X	-.218	-.218	0	%100
8	M18	Z	.378	.378	0	%100
9	M19	X	0	0	0	%100

Member Distributed Loads (BLC 72 : Structure Wm (210 Deg)) (Continued)

	Member Label	Direction	Start Magnitude[lb/ft,...	End Magnitude[lb/ft,F...	Start Location[in,%]	End Location[in,%]
10	M19	Z	0	0	0	%100
11	M20	X	-.236	-.236	0	%100
12	M20	Z	.408	.408	0	%100
13	M21	X	-.263	-.263	0	%100
14	M21	Z	.456	.456	0	%100
15	M22	X	-.218	-.218	0	%100
16	M22	Z	.378	.378	0	%100
17	M28	X	0	0	0	%100
18	M28	Z	0	0	0	%100
19	M29	X	-.538	-.538	0	%100
20	M29	Z	.931	.931	0	%100
21	M27A	X	0	0	0	%100
22	M27A	Z	0	0	0	%100
23	M28A	X	-.236	-.236	0	%100
24	M28A	Z	.408	.408	0	%100
25	M29A	X	-.263	-.263	0	%100
26	M29A	Z	.456	.456	0	%100
27	M44	X	-.619	-.619	0	%100
28	M44	Z	1.073	1.073	0	%100
29	M47	X	-.37	-.37	0	%100
30	M47	Z	.641	.641	0	%100
31	M48	X	-.37	-.37	0	%100
32	M48	Z	.641	.641	0	%100
33	M51	X	-.294	-.294	0	%100
34	M51	Z	.509	.509	0	%100
35	M52	X	-.082	-.082	0	%100
36	M52	Z	.142	.142	0	%100
37	M55	X	-.2	-.2	0	%100
38	M55	Z	.347	.347	0	%100
39	M56	X	-.2	-.2	0	%100
40	M56	Z	.347	.347	0	%100
41	M69	X	-.218	-.218	0	%100
42	M69	Z	.378	.378	0	%100
43	M70	X	-.236	-.236	0	%100
44	M70	Z	.408	.408	0	%100
45	M71	X	0	0	0	%100
46	M71	Z	0	0	0	%100
47	M72	X	-.263	-.263	0	%100
48	M72	Z	.456	.456	0	%100
49	M73	X	-.218	-.218	0	%100
50	M73	Z	.378	.378	0	%100
51	M76	X	-.538	-.538	0	%100
52	M76	Z	.931	.931	0	%100
53	M77	X	0	0	0	%100
54	M77	Z	0	0	0	%100
55	M78	X	-.236	-.236	0	%100
56	M78	Z	.408	.408	0	%100
57	M79	X	0	0	0	%100
58	M79	Z	0	0	0	%100
59	M80	X	-.263	-.263	0	%100
60	M80	Z	.456	.456	0	%100
61	M95	X	-.262	-.262	0	%100
62	M95	Z	.454	.454	0	%100
63	M98	X	-.619	-.619	0	%100
64	M98	Z	1.073	1.073	0	%100
65	M99	X	-.619	-.619	0	%100
66	M99	Z	1.073	1.073	0	%100

Member Distributed Loads (BLC 72 : Structure Wm (210 Deg)) (Continued)

	Member Label	Direction	Start Magnitude[lb/ft,...	End Magnitude[lb/ft,F...	Start Location[in,%]	End Location[in,%]
67	M102	X	-.294	-.294	0	%100
68	M102	Z	.509	.509	0	%100
69	M103	X	-.327	-.327	0	%100
70	M103	Z	.567	.567	0	%100
71	M106	X	-.802	-.802	0	%100
72	M106	Z	1.389	1.389	0	%100
73	M107	X	-.802	-.802	0	%100
74	M107	Z	1.389	1.389	0	%100
75	M120	X	0	0	0	%100
76	M120	Z	0	0	0	%100
77	M121	X	-.236	-.236	0	%100
78	M121	Z	.408	.408	0	%100
79	M122	X	-.236	-.236	0	%100
80	M122	Z	.408	.408	0	%100
81	M123	X	0	0	0	%100
82	M123	Z	0	0	0	%100
83	M124	X	0	0	0	%100
84	M124	Z	0	0	0	%100
85	M127	X	-.538	-.538	0	%100
86	M127	Z	.931	.931	0	%100
87	M128	X	-.538	-.538	0	%100
88	M128	Z	.931	.931	0	%100
89	M129	X	-.236	-.236	0	%100
90	M129	Z	.408	.408	0	%100
91	M130	X	-.236	-.236	0	%100
92	M130	Z	.408	.408	0	%100
93	M131	X	0	0	0	%100
94	M131	Z	0	0	0	%100
95	M146	X	-.798	-.798	0	%100
96	M146	Z	1.382	1.382	0	%100
97	M149	X	-.083	-.083	0	%100
98	M149	Z	.144	.144	0	%100
99	M150	X	-.083	-.083	0	%100
100	M150	Z	.144	.144	0	%100
101	M153	X	0	0	0	%100
102	M153	Z	0	0	0	%100
103	M148A	X	-.613	-.613	0	%100
104	M148A	Z	1.062	1.062	0	%100
105	M151A	X	-.237	-.237	0	%100
106	M151A	Z	.41	.41	0	%100
107	M152A	X	-.2	-.2	0	%100
108	M152A	Z	.346	.346	0	%100
109	M154	X	-.237	-.237	0	%100
110	M154	Z	.41	.41	0	%100
111	M157	X	0	0	0	%100
112	M157	Z	0	0	0	%100
113	M166	X	-.599	-.599	0	%100
114	M166	Z	1.037	1.037	0	%100
115	M162A	X	-.2	-.2	0	%100
116	M162A	Z	.346	.346	0	%100
117	M163A	X	-.599	-.599	0	%100
118	M163A	Z	1.037	1.037	0	%100
119	M164A	X	-.2	-.2	0	%100
120	M164A	Z	.346	.346	0	%100
121	M165A	X	-.599	-.599	0	%100
122	M165A	Z	1.037	1.037	0	%100
123	M166A	X	-.2	-.2	0	%100

Member Distributed Loads (BLC 72 : Structure Wm (210 Deg)) (Continued)

	Member Label	Direction	Start Magnitude[lb/ft,...	End Magnitude[lb/ft,F...	Start Location[in,%]	End Location[in,%]
124	M166A	Z	.346	.346	0	%100
125	M167	X	-.599	-.599	0	%100
126	M167	Z	1.037	1.037	0	%100
127	M168	X	-.798	-.798	0	%100
128	M168	Z	1.382	1.382	0	%100
129	M169	X	0	0	0	%100
130	M169	Z	0	0	0	%100
131	M170	X	-.798	-.798	0	%100
132	M170	Z	1.382	1.382	0	%100
133	M171	X	0	0	0	%100
134	M171	Z	0	0	0	%100
135	M172	X	-.22	-.22	0	%100
136	M172	Z	.38	.38	0	%100
137	M173	X	-.22	-.22	0	%100
138	M173	Z	.38	.38	0	%100
139	M174	X	0	0	0	%100
140	M174	Z	0	0	0	%100
141	M175	X	-.237	-.237	0	%100
142	M175	Z	.41	.41	0	%100
143	M176	X	-.237	-.237	0	%100
144	M176	Z	.41	.41	0	%100
145	M177	X	0	0	0	%100
146	M177	Z	0	0	0	%100
147	M203	X	-.258	-.258	0	%100
148	M203	Z	.447	.447	0	%100
149	OVP	X	-.316	-.316	0	%100
150	OVP	Z	.547	.547	0	%100
151	MP3A	X	-.316	-.316	0	%100
152	MP3A	Z	.547	.547	0	%100
153	MP2A	X	-.316	-.316	0	%100
154	MP2A	Z	.547	.547	0	%100
155	MP3C	X	-.316	-.316	0	%100
156	MP3C	Z	.547	.547	0	%100
157	MP2C	X	-.316	-.316	0	%100
158	MP2C	Z	.547	.547	0	%100
159	MP3B	X	-.316	-.316	0	%100
160	MP3B	Z	.547	.547	0	%100
161	MP2B	X	-.316	-.316	0	%100
162	MP2B	Z	.547	.547	0	%100
163	MP1A	X	-.316	-.316	0	%100
164	MP1A	Z	.547	.547	0	%100
165	MP4A	X	-.316	-.316	0	%100
166	MP4A	Z	.547	.547	0	%100
167	MP1C	X	-.316	-.316	0	%100
168	MP1C	Z	.547	.547	0	%100
169	MP4C	X	-.316	-.316	0	%100
170	MP4C	Z	.547	.547	0	%100
171	MP1B	X	-.316	-.316	0	%100
172	MP1B	Z	.547	.547	0	%100
173	MP4B	X	-.316	-.316	0	%100
174	MP4B	Z	.547	.547	0	%100
175	M204A	X	-.613	-.613	0	%100
176	M204A	Z	1.062	1.062	0	%100
177	M205B	X	0	0	0	%100
178	M205B	Z	0	0	0	%100
179	M206	X	-.287	-.287	0	%100
180	M206	Z	.497	.497	0	%100

Member Distributed Loads (BLC 72 : Structure Wm (210 Deg)) (Continued)

	Member Label	Direction	Start Magnitude[lb/ft,...	End Magnitude[lb/ft,F...	Start Location[in,%]	End Location[in,%]
181	M207	X	-.287	-.287	0	%100
182	M207	Z	.497	.497	0	%100
183	M208	X	0	0	0	%100
184	M208	Z	0	0	0	%100
185	M227	X	-.355	-.355	0	%100
186	M227	Z	.614	.614	0	%100
187	M228	X	0	0	0	%100
188	M228	Z	0	0	0	%100
189	M229	X	-.355	-.355	0	%100
190	M229	Z	.614	.614	0	%100
191	M231	X	-.163	-.163	0	%100
192	M231	Z	.282	.282	0	%100
193	M231A	X	-.539	-.539	0	%100
194	M231A	Z	.934	.934	0	%100
195	M232	X	-.539	-.539	0	%100
196	M232	Z	.934	.934	0	%100
197	M233	X	-.163	-.163	0	%100
198	M233	Z	.282	.282	0	%100
199	M234	X	-.3	-.3	0	%100
200	M234	Z	.52	.52	0	%100
201	M235	X	-.3	-.3	0	%100
202	M235	Z	.52	.52	0	%100

Member Distributed Loads (BLC 73 : Structure Wm (240 Deg))

	Member Label	Direction	Start Magnitude[lb/ft,...	End Magnitude[lb/ft,F...	Start Location[in,%]	End Location[in,%]
1	M1	X	-.425	-.425	0	%100
2	M1	Z	.245	.245	0	%100
3	M4	X	-1.041	-1.041	0	%100
4	M4	Z	.601	.601	0	%100
5	M5	X	-1.041	-1.041	0	%100
6	M5	Z	.601	.601	0	%100
7	M18	X	-.126	-.126	0	%100
8	M18	Z	.073	.073	0	%100
9	M19	X	-.136	-.136	0	%100
10	M19	Z	.079	.079	0	%100
11	M20	X	-.544	-.544	0	%100
12	M20	Z	.314	.314	0	%100
13	M21	X	-.152	-.152	0	%100
14	M21	Z	.088	.088	0	%100
15	M22	X	-.126	-.126	0	%100
16	M22	Z	.073	.073	0	%100
17	M28	X	-.31	-.31	0	%100
18	M28	Z	.179	.179	0	%100
19	M29	X	-1.241	-1.241	0	%100
20	M29	Z	.717	.717	0	%100
21	M27A	X	-.136	-.136	0	%100
22	M27A	Z	.079	.079	0	%100
23	M28A	X	-.544	-.544	0	%100
24	M28A	Z	.314	.314	0	%100
25	M29A	X	-.152	-.152	0	%100
26	M29A	Z	.088	.088	0	%100
27	M44	X	-.454	-.454	0	%100
28	M44	Z	.262	.262	0	%100
29	M47	X	-1.749	-1.749	0	%100
30	M47	Z	1.01	1.01	0	%100
31	M48	X	-1.749	-1.749	0	%100

Member Distributed Loads (BLC 73 : Structure Wm (240 Deg)) (Continued)

	Member Label	Direction	Start Magnitude[lb/ft,...	End Magnitude[lb/ft,F...	Start Location[in,%]	End Location[in,%]
32	M48	Z	1.01	1.01	0	%100
33	M51	X	-.17	-.17	0	%100
34	M51	Z	.098	.098	0	%100
35	M52	X	0	0	0	%100
36	M52	Z	0	0	0	%100
37	M55	X	0	0	0	%100
38	M55	Z	0	0	0	%100
39	M56	X	0	0	0	%100
40	M56	Z	0	0	0	%100
41	M69	X	-.503	-.503	0	%100
42	M69	Z	.291	.291	0	%100
43	M70	X	-.136	-.136	0	%100
44	M70	Z	.079	.079	0	%100
45	M71	X	-.136	-.136	0	%100
46	M71	Z	.079	.079	0	%100
47	M72	X	-.608	-.608	0	%100
48	M72	Z	.351	.351	0	%100
49	M73	X	-.503	-.503	0	%100
50	M73	Z	.291	.291	0	%100
51	M76	X	-.31	-.31	0	%100
52	M76	Z	.179	.179	0	%100
53	M77	X	-.31	-.31	0	%100
54	M77	Z	.179	.179	0	%100
55	M78	X	-.136	-.136	0	%100
56	M78	Z	.079	.079	0	%100
57	M79	X	-.136	-.136	0	%100
58	M79	Z	.079	.079	0	%100
59	M80	X	-.608	-.608	0	%100
60	M80	Z	.351	.351	0	%100
61	M95	X	-.144	-.144	0	%100
62	M95	Z	.083	.083	0	%100
63	M98	X	-1.382	-1.382	0	%100
64	M98	Z	.798	.798	0	%100
65	M99	X	-1.382	-1.382	0	%100
66	M99	Z	.798	.798	0	%100
67	M102	X	-.679	-.679	0	%100
68	M102	Z	.392	.392	0	%100
69	M103	X	-.425	-.425	0	%100
70	M103	Z	.245	.245	0	%100
71	M106	X	-1.041	-1.041	0	%100
72	M106	Z	.601	.601	0	%100
73	M107	X	-1.041	-1.041	0	%100
74	M107	Z	.601	.601	0	%100
75	M120	X	-.126	-.126	0	%100
76	M120	Z	.073	.073	0	%100
77	M121	X	-.544	-.544	0	%100
78	M121	Z	.314	.314	0	%100
79	M122	X	-.136	-.136	0	%100
80	M122	Z	.079	.079	0	%100
81	M123	X	-.152	-.152	0	%100
82	M123	Z	.088	.088	0	%100
83	M124	X	-.126	-.126	0	%100
84	M124	Z	.073	.073	0	%100
85	M127	X	-1.241	-1.241	0	%100
86	M127	Z	.717	.717	0	%100
87	M128	X	-.31	-.31	0	%100
88	M128	Z	.179	.179	0	%100

Member Distributed Loads (BLC 73 : Structure Wm (240 Deg)) (Continued)

	Member Label	Direction	Start Magnitude[lb/ft,...	End Magnitude[lb/ft,F...	Start Location[in,%]	End Location[in,%]
89	M129	X	-.544	-.544	0	%100
90	M129	Z	.314	.314	0	%100
91	M130	X	-.136	-.136	0	%100
92	M130	Z	.079	.079	0	%100
93	M131	X	-.152	-.152	0	%100
94	M131	Z	.088	.088	0	%100
95	M146	X	-1.073	-1.073	0	%100
96	M146	Z	.619	.619	0	%100
97	M149	X	-.454	-.454	0	%100
98	M149	Z	.262	.262	0	%100
99	M150	X	-.454	-.454	0	%100
100	M150	Z	.262	.262	0	%100
101	M153	X	-.17	-.17	0	%100
102	M153	Z	.098	.098	0	%100
103	M148A	X	-.354	-.354	0	%100
104	M148A	Z	.204	.204	0	%100
105	M151A	X	-.137	-.137	0	%100
106	M151A	Z	.079	.079	0	%100
107	M152A	X	-1.037	-1.037	0	%100
108	M152A	Z	.599	.599	0	%100
109	M154	X	-.547	-.547	0	%100
110	M154	Z	.316	.316	0	%100
111	M157	X	-.137	-.137	0	%100
112	M157	Z	.079	.079	0	%100
113	M166	X	-.346	-.346	0	%100
114	M166	Z	.2	.2	0	%100
115	M162A	X	-1.037	-1.037	0	%100
116	M162A	Z	.599	.599	0	%100
117	M163A	X	-.346	-.346	0	%100
118	M163A	Z	.2	.2	0	%100
119	M164A	X	0	0	0	%100
120	M164A	Z	0	0	0	%100
121	M165A	X	-1.382	-1.382	0	%100
122	M165A	Z	.798	.798	0	%100
123	M166A	X	0	0	0	%100
124	M166A	Z	0	0	0	%100
125	M167	X	-1.382	-1.382	0	%100
126	M167	Z	.798	.798	0	%100
127	M168	X	-1.037	-1.037	0	%100
128	M168	Z	.599	.599	0	%100
129	M169	X	-.346	-.346	0	%100
130	M169	Z	.2	.2	0	%100
131	M170	X	-1.037	-1.037	0	%100
132	M170	Z	.599	.599	0	%100
133	M171	X	-.346	-.346	0	%100
134	M171	Z	.2	.2	0	%100
135	M172	X	-.127	-.127	0	%100
136	M172	Z	.073	.073	0	%100
137	M173	X	-.507	-.507	0	%100
138	M173	Z	.293	.293	0	%100
139	M174	X	-.127	-.127	0	%100
140	M174	Z	.073	.073	0	%100
141	M175	X	-.137	-.137	0	%100
142	M175	Z	.079	.079	0	%100
143	M176	X	-.547	-.547	0	%100
144	M176	Z	.316	.316	0	%100
145	M177	X	-.137	-.137	0	%100

Member Distributed Loads (BLC 73 : Structure Wm (240 Deg)) (Continued)

	Member Label	Direction	Start Magnitude[lb/ft,...	End Magnitude[lb/ft,F...	Start Location[in,%]	End Location[in,%]
146	M177	Z	.079	.079	0	%100
147	M203	X	-.447	-.447	0	%100
148	M203	Z	.258	.258	0	%100
149	OVP	X	-.547	-.547	0	%100
150	OVP	Z	.316	.316	0	%100
151	MP3A	X	-.547	-.547	0	%100
152	MP3A	Z	.316	.316	0	%100
153	MP2A	X	-.547	-.547	0	%100
154	MP2A	Z	.316	.316	0	%100
155	MP3C	X	-.547	-.547	0	%100
156	MP3C	Z	.316	.316	0	%100
157	MP2C	X	-.547	-.547	0	%100
158	MP2C	Z	.316	.316	0	%100
159	MP3B	X	-.547	-.547	0	%100
160	MP3B	Z	.316	.316	0	%100
161	MP2B	X	-.547	-.547	0	%100
162	MP2B	Z	.316	.316	0	%100
163	MP1A	X	-.547	-.547	0	%100
164	MP1A	Z	.316	.316	0	%100
165	MP4A	X	-.547	-.547	0	%100
166	MP4A	Z	.316	.316	0	%100
167	MP1C	X	-.547	-.547	0	%100
168	MP1C	Z	.316	.316	0	%100
169	MP4C	X	-.547	-.547	0	%100
170	MP4C	Z	.316	.316	0	%100
171	MP1B	X	-.547	-.547	0	%100
172	MP1B	Z	.316	.316	0	%100
173	MP4B	X	-.547	-.547	0	%100
174	MP4B	Z	.316	.316	0	%100
175	M204A	X	-1.416	-1.416	0	%100
176	M204A	Z	.817	.817	0	%100
177	M205B	X	-.354	-.354	0	%100
178	M205B	Z	.204	.204	0	%100
179	M206	X	-.166	-.166	0	%100
180	M206	Z	.096	.096	0	%100
181	M207	X	-.662	-.662	0	%100
182	M207	Z	.382	.382	0	%100
183	M208	X	-.166	-.166	0	%100
184	M208	Z	.096	.096	0	%100
185	M227	X	-.819	-.819	0	%100
186	M227	Z	.473	.473	0	%100
187	M228	X	-.205	-.205	0	%100
188	M228	Z	.118	.118	0	%100
189	M229	X	-.205	-.205	0	%100
190	M229	Z	.118	.118	0	%100
191	M231	X	-.223	-.223	0	%100
192	M231	Z	.129	.129	0	%100
193	M231A	X	-.875	-.875	0	%100
194	M231A	Z	.505	.505	0	%100
195	M232	X	-.638	-.638	0	%100
196	M232	Z	.368	.368	0	%100
197	M233	X	-.638	-.638	0	%100
198	M233	Z	.368	.368	0	%100
199	M234	X	-.875	-.875	0	%100
200	M234	Z	.505	.505	0	%100
201	M235	X	-.223	-.223	0	%100
202	M235	Z	.129	.129	0	%100

Member Distributed Loads (BLC 74 : Structure Wm (270 Deg))

	Member Label	Direction	Start Magnitude[lb/ft,...	End Magnitude[lb/ft,F...	Start Location[in,%]	End Location[in,%]
1	M1	X	-.654	-.654	0	%100
2	M1	Z	0	0	0	%100
3	M4	X	-1.603	-1.603	0	%100
4	M4	Z	0	0	0	%100
5	M5	X	-1.603	-1.603	0	%100
6	M5	Z	0	0	0	%100
7	M18	X	0	0	0	%100
8	M18	Z	0	0	0	%100
9	M19	X	-.471	-.471	0	%100
10	M19	Z	0	0	0	%100
11	M20	X	-.471	-.471	0	%100
12	M20	Z	0	0	0	%100
13	M21	X	0	0	0	%100
14	M21	Z	0	0	0	%100
15	M22	X	0	0	0	%100
16	M22	Z	0	0	0	%100
17	M28	X	-1.075	-1.075	0	%100
18	M28	Z	0	0	0	%100
19	M29	X	-1.075	-1.075	0	%100
20	M29	Z	0	0	0	%100
21	M27A	X	-.471	-.471	0	%100
22	M27A	Z	0	0	0	%100
23	M28A	X	-.471	-.471	0	%100
24	M28A	Z	0	0	0	%100
25	M29A	X	0	0	0	%100
26	M29A	Z	0	0	0	%100
27	M44	X	-.166	-.166	0	%100
28	M44	Z	0	0	0	%100
29	M47	X	-2.66	-2.66	0	%100
30	M47	Z	0	0	0	%100
31	M48	X	-2.66	-2.66	0	%100
32	M48	Z	0	0	0	%100
33	M51	X	0	0	0	%100
34	M51	Z	0	0	0	%100
35	M52	X	-.164	-.164	0	%100
36	M52	Z	0	0	0	%100
37	M55	X	-.401	-.401	0	%100
38	M55	Z	0	0	0	%100
39	M56	X	-.401	-.401	0	%100
40	M56	Z	0	0	0	%100
41	M69	X	-.436	-.436	0	%100
42	M69	Z	0	0	0	%100
43	M70	X	0	0	0	%100
44	M70	Z	0	0	0	%100
45	M71	X	-.471	-.471	0	%100
46	M71	Z	0	0	0	%100
47	M72	X	-.526	-.526	0	%100
48	M72	Z	0	0	0	%100
49	M73	X	-.436	-.436	0	%100
50	M73	Z	0	0	0	%100
51	M76	X	0	0	0	%100
52	M76	Z	0	0	0	%100
53	M77	X	-1.075	-1.075	0	%100
54	M77	Z	0	0	0	%100
55	M78	X	0	0	0	%100
56	M78	Z	0	0	0	%100
57	M79	X	-.471	-.471	0	%100

Member Distributed Loads (BLC 74 : Structure Wm (270 Deg)) (Continued)

	Member Label	Direction	Start Magnitude[lb/ft,...	End Magnitude[lb/ft,F...	Start Location[in,%]	End Location[in,%]
58	M79	Z	0	0	0	%100
59	M80	X	-.526	-.526	0	%100
60	M80	Z	0	0	0	%100
61	M95	X	-.524	-.524	0	%100
62	M95	Z	0	0	0	%100
63	M98	X	-1.239	-1.239	0	%100
64	M98	Z	0	0	0	%100
65	M99	X	-1.239	-1.239	0	%100
66	M99	Z	0	0	0	%100
67	M102	X	-.588	-.588	0	%100
68	M102	Z	0	0	0	%100
69	M103	X	-.164	-.164	0	%100
70	M103	Z	0	0	0	%100
71	M106	X	-.401	-.401	0	%100
72	M106	Z	0	0	0	%100
73	M107	X	-.401	-.401	0	%100
74	M107	Z	0	0	0	%100
75	M120	X	-.436	-.436	0	%100
76	M120	Z	0	0	0	%100
77	M121	X	-.471	-.471	0	%100
78	M121	Z	0	0	0	%100
79	M122	X	0	0	0	%100
80	M122	Z	0	0	0	%100
81	M123	X	-.526	-.526	0	%100
82	M123	Z	0	0	0	%100
83	M124	X	-.436	-.436	0	%100
84	M124	Z	0	0	0	%100
85	M127	X	-1.075	-1.075	0	%100
86	M127	Z	0	0	0	%100
87	M128	X	0	0	0	%100
88	M128	Z	0	0	0	%100
89	M129	X	-.471	-.471	0	%100
90	M129	Z	0	0	0	%100
91	M130	X	0	0	0	%100
92	M130	Z	0	0	0	%100
93	M131	X	-.526	-.526	0	%100
94	M131	Z	0	0	0	%100
95	M146	X	-.524	-.524	0	%100
96	M146	Z	0	0	0	%100
97	M149	X	-1.239	-1.239	0	%100
98	M149	Z	0	0	0	%100
99	M150	X	-1.239	-1.239	0	%100
100	M150	Z	0	0	0	%100
101	M153	X	-.588	-.588	0	%100
102	M153	Z	0	0	0	%100
103	M148A	X	0	0	0	%100
104	M148A	Z	0	0	0	%100
105	M151A	X	0	0	0	%100
106	M151A	Z	0	0	0	%100
107	M152A	X	-1.596	-1.596	0	%100
108	M152A	Z	0	0	0	%100
109	M154	X	-.474	-.474	0	%100
110	M154	Z	0	0	0	%100
111	M157	X	-.474	-.474	0	%100
112	M157	Z	0	0	0	%100
113	M166	X	0	0	0	%100
114	M166	Z	0	0	0	%100

Member Distributed Loads (BLC 74 : Structure Wm (270 Deg)) (Continued)

	Member Label	Direction	Start Magnitude[lb/ft,...	End Magnitude[lb/ft,F...	Start Location[in,%]	End Location[in,%]
115	M162A	X	-1.596	-1.596	0	%100
116	M162A	Z	0	0	0	%100
117	M163A	X	0	0	0	%100
118	M163A	Z	0	0	0	%100
119	M164A	X	-.399	-.399	0	%100
120	M164A	Z	0	0	0	%100
121	M165A	X	-1.197	-1.197	0	%100
122	M165A	Z	0	0	0	%100
123	M166A	X	-.399	-.399	0	%100
124	M166A	Z	0	0	0	%100
125	M167	X	-1.197	-1.197	0	%100
126	M167	Z	0	0	0	%100
127	M168	X	-.399	-.399	0	%100
128	M168	Z	0	0	0	%100
129	M169	X	-1.197	-1.197	0	%100
130	M169	Z	0	0	0	%100
131	M170	X	-.399	-.399	0	%100
132	M170	Z	0	0	0	%100
133	M171	X	-1.197	-1.197	0	%100
134	M171	Z	0	0	0	%100
135	M172	X	0	0	0	%100
136	M172	Z	0	0	0	%100
137	M173	X	-.439	-.439	0	%100
138	M173	Z	0	0	0	%100
139	M174	X	-.439	-.439	0	%100
140	M174	Z	0	0	0	%100
141	M175	X	0	0	0	%100
142	M175	Z	0	0	0	%100
143	M176	X	-.474	-.474	0	%100
144	M176	Z	0	0	0	%100
145	M177	X	-.474	-.474	0	%100
146	M177	Z	0	0	0	%100
147	M203	X	-.517	-.517	0	%100
148	M203	Z	0	0	0	%100
149	OVP	X	-.632	-.632	0	%100
150	OVP	Z	0	0	0	%100
151	MP3A	X	-.632	-.632	0	%100
152	MP3A	Z	0	0	0	%100
153	MP2A	X	-.632	-.632	0	%100
154	MP2A	Z	0	0	0	%100
155	MP3C	X	-.632	-.632	0	%100
156	MP3C	Z	0	0	0	%100
157	MP2C	X	-.632	-.632	0	%100
158	MP2C	Z	0	0	0	%100
159	MP3B	X	-.632	-.632	0	%100
160	MP3B	Z	0	0	0	%100
161	MP2B	X	-.632	-.632	0	%100
162	MP2B	Z	0	0	0	%100
163	MP1A	X	-.632	-.632	0	%100
164	MP1A	Z	0	0	0	%100
165	MP4A	X	-.632	-.632	0	%100
166	MP4A	Z	0	0	0	%100
167	MP1C	X	-.632	-.632	0	%100
168	MP1C	Z	0	0	0	%100
169	MP4C	X	-.632	-.632	0	%100
170	MP4C	Z	0	0	0	%100
171	MP1B	X	-.632	-.632	0	%100

Member Distributed Loads (BLC 74 : Structure Wm (270 Deg)) (Continued)

	Member Label	Direction	Start Magnitude[lb/ft,...	End Magnitude[lb/ft,F...	Start Location[in,%]	End Location[in,%]
172	MP1B	Z	0	0	0	%100
173	MP4B	X	-.632	-.632	0	%100
174	MP4B	Z	0	0	0	%100
175	M204A	X	-1.226	-1.226	0	%100
176	M204A	Z	0	0	0	%100
177	M205B	X	-1.226	-1.226	0	%100
178	M205B	Z	0	0	0	%100
179	M206	X	0	0	0	%100
180	M206	Z	0	0	0	%100
181	M207	X	-.574	-.574	0	%100
182	M207	Z	0	0	0	%100
183	M208	X	-.574	-.574	0	%100
184	M208	Z	0	0	0	%100
185	M227	X	-.709	-.709	0	%100
186	M227	Z	0	0	0	%100
187	M228	X	-.709	-.709	0	%100
188	M228	Z	0	0	0	%100
189	M229	X	0	0	0	%100
190	M229	Z	0	0	0	%100
191	M231	X	-.6	-.6	0	%100
192	M231	Z	0	0	0	%100
193	M231A	X	-.6	-.6	0	%100
194	M231A	Z	0	0	0	%100
195	M232	X	-.326	-.326	0	%100
196	M232	Z	0	0	0	%100
197	M233	X	-1.079	-1.079	0	%100
198	M233	Z	0	0	0	%100
199	M234	X	-1.079	-1.079	0	%100
200	M234	Z	0	0	0	%100
201	M235	X	-.326	-.326	0	%100
202	M235	Z	0	0	0	%100

Member Distributed Loads (BLC 75 : Structure Wm (300 Deg))

	Member Label	Direction	Start Magnitude[lb/ft,...	End Magnitude[lb/ft,F...	Start Location[in,%]	End Location[in,%]
1	M1	X	-.425	-.425	0	%100
2	M1	Z	-.245	-.245	0	%100
3	M4	X	-1.041	-1.041	0	%100
4	M4	Z	-.601	-.601	0	%100
5	M5	X	-1.041	-1.041	0	%100
6	M5	Z	-.601	-.601	0	%100
7	M18	X	-.126	-.126	0	%100
8	M18	Z	-.073	-.073	0	%100
9	M19	X	-.544	-.544	0	%100
10	M19	Z	-.314	-.314	0	%100
11	M20	X	-.136	-.136	0	%100
12	M20	Z	-.079	-.079	0	%100
13	M21	X	-.152	-.152	0	%100
14	M21	Z	-.088	-.088	0	%100
15	M22	X	-.126	-.126	0	%100
16	M22	Z	-.073	-.073	0	%100
17	M28	X	-1.241	-1.241	0	%100
18	M28	Z	-.717	-.717	0	%100
19	M29	X	-.31	-.31	0	%100
20	M29	Z	-.179	-.179	0	%100
21	M27A	X	-.544	-.544	0	%100
22	M27A	Z	-.314	-.314	0	%100

Member Distributed Loads (BLC 75 : Structure Wm (300 Deg)) (Continued)

	Member Label	Direction	Start Magnitude[lb/ft,...	End Magnitude[lb/ft,F...	Start Location[in,%]	End Location[in,%]
23	M28A	X	-.136	-.136	0	%100
24	M28A	Z	-.079	-.079	0	%100
25	M29A	X	-.152	-.152	0	%100
26	M29A	Z	-.088	-.088	0	%100
27	M44	X	-.454	-.454	0	%100
28	M44	Z	-.262	-.262	0	%100
29	M47	X	-1.749	-1.749	0	%100
30	M47	Z	-1.01	-1.01	0	%100
31	M48	X	-1.749	-1.749	0	%100
32	M48	Z	-1.01	-1.01	0	%100
33	M51	X	-.17	-.17	0	%100
34	M51	Z	-.098	-.098	0	%100
35	M52	X	-.425	-.425	0	%100
36	M52	Z	-.245	-.245	0	%100
37	M55	X	-1.041	-1.041	0	%100
38	M55	Z	-.601	-.601	0	%100
39	M56	X	-1.041	-1.041	0	%100
40	M56	Z	-.601	-.601	0	%100
41	M69	X	-.126	-.126	0	%100
42	M69	Z	-.073	-.073	0	%100
43	M70	X	-.136	-.136	0	%100
44	M70	Z	-.079	-.079	0	%100
45	M71	X	-.544	-.544	0	%100
46	M71	Z	-.314	-.314	0	%100
47	M72	X	-.152	-.152	0	%100
48	M72	Z	-.088	-.088	0	%100
49	M73	X	-.126	-.126	0	%100
50	M73	Z	-.073	-.073	0	%100
51	M76	X	-.31	-.31	0	%100
52	M76	Z	-.179	-.179	0	%100
53	M77	X	-1.241	-1.241	0	%100
54	M77	Z	-.717	-.717	0	%100
55	M78	X	-.136	-.136	0	%100
56	M78	Z	-.079	-.079	0	%100
57	M79	X	-.544	-.544	0	%100
58	M79	Z	-.314	-.314	0	%100
59	M80	X	-.152	-.152	0	%100
60	M80	Z	-.088	-.088	0	%100
61	M95	X	-1.073	-1.073	0	%100
62	M95	Z	-.619	-.619	0	%100
63	M98	X	-.454	-.454	0	%100
64	M98	Z	-.262	-.262	0	%100
65	M99	X	-.454	-.454	0	%100
66	M99	Z	-.262	-.262	0	%100
67	M102	X	-.17	-.17	0	%100
68	M102	Z	-.098	-.098	0	%100
69	M103	X	0	0	0	%100
70	M103	Z	0	0	0	%100
71	M106	X	0	0	0	%100
72	M106	Z	0	0	0	%100
73	M107	X	0	0	0	%100
74	M107	Z	0	0	0	%100
75	M120	X	-.503	-.503	0	%100
76	M120	Z	-.291	-.291	0	%100
77	M121	X	-.136	-.136	0	%100
78	M121	Z	-.079	-.079	0	%100
79	M122	X	-.136	-.136	0	%100

Member Distributed Loads (BLC 75 : Structure Wm (300 Deg)) (Continued)

	Member Label	Direction	Start Magnitude[lb/ft,...	End Magnitude[lb/ft,F...	Start Location[in,%]	End Location[in,%]
80	M122	Z	-.079	-.079	0	%100
81	M123	X	-.608	-.608	0	%100
82	M123	Z	-.351	-.351	0	%100
83	M124	X	-.503	-.503	0	%100
84	M124	Z	-.291	-.291	0	%100
85	M127	X	-.31	-.31	0	%100
86	M127	Z	-.179	-.179	0	%100
87	M128	X	-.31	-.31	0	%100
88	M128	Z	-.179	-.179	0	%100
89	M129	X	-.136	-.136	0	%100
90	M129	Z	-.079	-.079	0	%100
91	M130	X	-.136	-.136	0	%100
92	M130	Z	-.079	-.079	0	%100
93	M131	X	-.608	-.608	0	%100
94	M131	Z	-.351	-.351	0	%100
95	M146	X	-.144	-.144	0	%100
96	M146	Z	-.083	-.083	0	%100
97	M149	X	-1.382	-1.382	0	%100
98	M149	Z	-.798	-.798	0	%100
99	M150	X	-1.382	-1.382	0	%100
100	M150	Z	-.798	-.798	0	%100
101	M153	X	-.679	-.679	0	%100
102	M153	Z	-.392	-.392	0	%100
103	M148A	X	-.354	-.354	0	%100
104	M148A	Z	-.204	-.204	0	%100
105	M151A	X	-.137	-.137	0	%100
106	M151A	Z	-.079	-.079	0	%100
107	M152A	X	-1.037	-1.037	0	%100
108	M152A	Z	-.599	-.599	0	%100
109	M154	X	-.137	-.137	0	%100
110	M154	Z	-.079	-.079	0	%100
111	M157	X	-.547	-.547	0	%100
112	M157	Z	-.316	-.316	0	%100
113	M166	X	-.346	-.346	0	%100
114	M166	Z	-.2	-.2	0	%100
115	M162A	X	-1.037	-1.037	0	%100
116	M162A	Z	-.599	-.599	0	%100
117	M163A	X	-.346	-.346	0	%100
118	M163A	Z	-.2	-.2	0	%100
119	M164A	X	-1.037	-1.037	0	%100
120	M164A	Z	-.599	-.599	0	%100
121	M165A	X	-.346	-.346	0	%100
122	M165A	Z	-.2	-.2	0	%100
123	M166A	X	-1.037	-1.037	0	%100
124	M166A	Z	-.599	-.599	0	%100
125	M167	X	-.346	-.346	0	%100
126	M167	Z	-.2	-.2	0	%100
127	M168	X	0	0	0	%100
128	M168	Z	0	0	0	%100
129	M169	X	-1.382	-1.382	0	%100
130	M169	Z	-.798	-.798	0	%100
131	M170	X	0	0	0	%100
132	M170	Z	0	0	0	%100
133	M171	X	-1.382	-1.382	0	%100
134	M171	Z	-.798	-.798	0	%100
135	M172	X	-.127	-.127	0	%100
136	M172	Z	-.073	-.073	0	%100

Member Distributed Loads (BLC 75 : Structure Wm (300 Deg)) (Continued)

	Member Label	Direction	Start Magnitude[lb/ft,...	End Magnitude[lb/ft,F...	Start Location[in,%]	End Location[in,%]
137	M173	X	-.127	-.127	0	%100
138	M173	Z	-.073	-.073	0	%100
139	M174	X	-.507	-.507	0	%100
140	M174	Z	-.293	-.293	0	%100
141	M175	X	-.137	-.137	0	%100
142	M175	Z	-.079	-.079	0	%100
143	M176	X	-.137	-.137	0	%100
144	M176	Z	-.079	-.079	0	%100
145	M177	X	-.547	-.547	0	%100
146	M177	Z	-.316	-.316	0	%100
147	M203	X	-.447	-.447	0	%100
148	M203	Z	-.258	-.258	0	%100
149	OVP	X	-.547	-.547	0	%100
150	OVP	Z	-.316	-.316	0	%100
151	MP3A	X	-.547	-.547	0	%100
152	MP3A	Z	-.316	-.316	0	%100
153	MP2A	X	-.547	-.547	0	%100
154	MP2A	Z	-.316	-.316	0	%100
155	MP3C	X	-.547	-.547	0	%100
156	MP3C	Z	-.316	-.316	0	%100
157	MP2C	X	-.547	-.547	0	%100
158	MP2C	Z	-.316	-.316	0	%100
159	MP3B	X	-.547	-.547	0	%100
160	MP3B	Z	-.316	-.316	0	%100
161	MP2B	X	-.547	-.547	0	%100
162	MP2B	Z	-.316	-.316	0	%100
163	MP1A	X	-.547	-.547	0	%100
164	MP1A	Z	-.316	-.316	0	%100
165	MP4A	X	-.547	-.547	0	%100
166	MP4A	Z	-.316	-.316	0	%100
167	MP1C	X	-.547	-.547	0	%100
168	MP1C	Z	-.316	-.316	0	%100
169	MP4C	X	-.547	-.547	0	%100
170	MP4C	Z	-.316	-.316	0	%100
171	MP1B	X	-.547	-.547	0	%100
172	MP1B	Z	-.316	-.316	0	%100
173	MP4B	X	-.547	-.547	0	%100
174	MP4B	Z	-.316	-.316	0	%100
175	M204A	X	-.354	-.354	0	%100
176	M204A	Z	-.204	-.204	0	%100
177	M205B	X	-1.416	-1.416	0	%100
178	M205B	Z	-.817	-.817	0	%100
179	M206	X	-.166	-.166	0	%100
180	M206	Z	-.096	-.096	0	%100
181	M207	X	-.166	-.166	0	%100
182	M207	Z	-.096	-.096	0	%100
183	M208	X	-.662	-.662	0	%100
184	M208	Z	-.382	-.382	0	%100
185	M227	X	-.205	-.205	0	%100
186	M227	Z	-.118	-.118	0	%100
187	M228	X	-.819	-.819	0	%100
188	M228	Z	-.473	-.473	0	%100
189	M229	X	-.205	-.205	0	%100
190	M229	Z	-.118	-.118	0	%100
191	M231	X	-.875	-.875	0	%100
192	M231	Z	-.505	-.505	0	%100
193	M231A	X	-.223	-.223	0	%100

Member Distributed Loads (BLC 75 : Structure Wm (300 Deg)) (Continued)

	Member Label	Direction	Start Magnitude[lb/ft,...	End Magnitude[lb/ft,F...	Start Location[in,%]	End Location[in,%]
194	M231A	Z	-.129	-.129	0	%100
195	M232	X	-.223	-.223	0	%100
196	M232	Z	-.129	-.129	0	%100
197	M233	X	-.875	-.875	0	%100
198	M233	Z	-.505	-.505	0	%100
199	M234	X	-.638	-.638	0	%100
200	M234	Z	-.368	-.368	0	%100
201	M235	X	-.638	-.638	0	%100
202	M235	Z	-.368	-.368	0	%100

Member Distributed Loads (BLC 76 : Structure Wm (330 Deg))

	Member Label	Direction	Start Magnitude[lb/ft,...	End Magnitude[lb/ft,F...	Start Location[in,%]	End Location[in,%]
1	M1	X	-.082	-.082	0	%100
2	M1	Z	-.142	-.142	0	%100
3	M4	X	-.2	-.2	0	%100
4	M4	Z	-.347	-.347	0	%100
5	M5	X	-.2	-.2	0	%100
6	M5	Z	-.347	-.347	0	%100
7	M18	X	-.218	-.218	0	%100
8	M18	Z	-.378	-.378	0	%100
9	M19	X	-.236	-.236	0	%100
10	M19	Z	-.408	-.408	0	%100
11	M20	X	0	0	0	%100
12	M20	Z	0	0	0	%100
13	M21	X	-.263	-.263	0	%100
14	M21	Z	-.456	-.456	0	%100
15	M22	X	-.218	-.218	0	%100
16	M22	Z	-.378	-.378	0	%100
17	M28	X	-.538	-.538	0	%100
18	M28	Z	-.931	-.931	0	%100
19	M29	X	0	0	0	%100
20	M29	Z	0	0	0	%100
21	M27A	X	-.236	-.236	0	%100
22	M27A	Z	-.408	-.408	0	%100
23	M28A	X	0	0	0	%100
24	M28A	Z	0	0	0	%100
25	M29A	X	-.263	-.263	0	%100
26	M29A	Z	-.456	-.456	0	%100
27	M44	X	-.619	-.619	0	%100
28	M44	Z	-1.073	-1.073	0	%100
29	M47	X	-.37	-.37	0	%100
30	M47	Z	-.641	-.641	0	%100
31	M48	X	-.37	-.37	0	%100
32	M48	Z	-.641	-.641	0	%100
33	M51	X	-.294	-.294	0	%100
34	M51	Z	-.509	-.509	0	%100
35	M52	X	-.327	-.327	0	%100
36	M52	Z	-.567	-.567	0	%100
37	M55	X	-.802	-.802	0	%100
38	M55	Z	-1.389	-1.389	0	%100
39	M56	X	-.802	-.802	0	%100
40	M56	Z	-1.389	-1.389	0	%100
41	M69	X	0	0	0	%100
42	M69	Z	0	0	0	%100
43	M70	X	-.236	-.236	0	%100
44	M70	Z	-.408	-.408	0	%100

Member Distributed Loads (BLC 76 : Structure Wm (330 Deg)) (Continued)

	Member Label	Direction	Start Magnitude[lb/ft,...	End Magnitude[lb/ft,F...	Start Location[in,%]	End Location[in,%]
45	M71	X	-.236	-.236	0	%100
46	M71	Z	-.408	-.408	0	%100
47	M72	X	0	0	0	%100
48	M72	Z	0	0	0	%100
49	M73	X	0	0	0	%100
50	M73	Z	0	0	0	%100
51	M76	X	-.538	-.538	0	%100
52	M76	Z	-.931	-.931	0	%100
53	M77	X	-.538	-.538	0	%100
54	M77	Z	-.931	-.931	0	%100
55	M78	X	-.236	-.236	0	%100
56	M78	Z	-.408	-.408	0	%100
57	M79	X	-.236	-.236	0	%100
58	M79	Z	-.408	-.408	0	%100
59	M80	X	0	0	0	%100
60	M80	Z	0	0	0	%100
61	M95	X	-.798	-.798	0	%100
62	M95	Z	-1.382	-1.382	0	%100
63	M98	X	-.083	-.083	0	%100
64	M98	Z	-.144	-.144	0	%100
65	M99	X	-.083	-.083	0	%100
66	M99	Z	-.144	-.144	0	%100
67	M102	X	0	0	0	%100
68	M102	Z	0	0	0	%100
69	M103	X	-.082	-.082	0	%100
70	M103	Z	-.142	-.142	0	%100
71	M106	X	-.2	-.2	0	%100
72	M106	Z	-.347	-.347	0	%100
73	M107	X	-.2	-.2	0	%100
74	M107	Z	-.347	-.347	0	%100
75	M120	X	-.218	-.218	0	%100
76	M120	Z	-.378	-.378	0	%100
77	M121	X	0	0	0	%100
78	M121	Z	0	0	0	%100
79	M122	X	-.236	-.236	0	%100
80	M122	Z	-.408	-.408	0	%100
81	M123	X	-.263	-.263	0	%100
82	M123	Z	-.456	-.456	0	%100
83	M124	X	-.218	-.218	0	%100
84	M124	Z	-.378	-.378	0	%100
85	M127	X	0	0	0	%100
86	M127	Z	0	0	0	%100
87	M128	X	-.538	-.538	0	%100
88	M128	Z	-.931	-.931	0	%100
89	M129	X	0	0	0	%100
90	M129	Z	0	0	0	%100
91	M130	X	-.236	-.236	0	%100
92	M130	Z	-.408	-.408	0	%100
93	M131	X	-.263	-.263	0	%100
94	M131	Z	-.456	-.456	0	%100
95	M146	X	-.262	-.262	0	%100
96	M146	Z	-.454	-.454	0	%100
97	M149	X	-.619	-.619	0	%100
98	M149	Z	-1.073	-1.073	0	%100
99	M150	X	-.619	-.619	0	%100
100	M150	Z	-1.073	-1.073	0	%100
101	M153	X	-.294	-.294	0	%100

Member Distributed Loads (BLC 76 : Structure Wm (330 Deg)) (Continued)

	Member Label	Direction	Start Magnitude[lb/ft,...	End Magnitude[lb/ft,F...	Start Location[in,%]	End Location[in,%]
102	M153	Z	-.509	-.509	0	%100
103	M148A	X	-.613	-.613	0	%100
104	M148A	Z	-1.062	-1.062	0	%100
105	M151A	X	-.237	-.237	0	%100
106	M151A	Z	-.41	-.41	0	%100
107	M152A	X	-.2	-.2	0	%100
108	M152A	Z	-.346	-.346	0	%100
109	M154	X	0	0	0	%100
110	M154	Z	0	0	0	%100
111	M157	X	-.237	-.237	0	%100
112	M157	Z	-.41	-.41	0	%100
113	M166	X	-.599	-.599	0	%100
114	M166	Z	-1.037	-1.037	0	%100
115	M162A	X	-.2	-.2	0	%100
116	M162A	Z	-.346	-.346	0	%100
117	M163A	X	-.599	-.599	0	%100
118	M163A	Z	-1.037	-1.037	0	%100
119	M164A	X	-.798	-.798	0	%100
120	M164A	Z	-1.382	-1.382	0	%100
121	M165A	X	0	0	0	%100
122	M165A	Z	0	0	0	%100
123	M166A	X	-.798	-.798	0	%100
124	M166A	Z	-1.382	-1.382	0	%100
125	M167	X	0	0	0	%100
126	M167	Z	0	0	0	%100
127	M168	X	-.2	-.2	0	%100
128	M168	Z	-.346	-.346	0	%100
129	M169	X	-.599	-.599	0	%100
130	M169	Z	-1.037	-1.037	0	%100
131	M170	X	-.199	-.199	0	%100
132	M170	Z	-.346	-.346	0	%100
133	M171	X	-.599	-.599	0	%100
134	M171	Z	-1.037	-1.037	0	%100
135	M172	X	-.22	-.22	0	%100
136	M172	Z	-.38	-.38	0	%100
137	M173	X	0	0	0	%100
138	M173	Z	0	0	0	%100
139	M174	X	-.22	-.22	0	%100
140	M174	Z	-.38	-.38	0	%100
141	M175	X	-.237	-.237	0	%100
142	M175	Z	-.41	-.41	0	%100
143	M176	X	0	0	0	%100
144	M176	Z	0	0	0	%100
145	M177	X	-.237	-.237	0	%100
146	M177	Z	-.41	-.41	0	%100
147	M203	X	-.258	-.258	0	%100
148	M203	Z	-.447	-.447	0	%100
149	OVP	X	-.316	-.316	0	%100
150	OVP	Z	-.547	-.547	0	%100
151	MP3A	X	-.316	-.316	0	%100
152	MP3A	Z	-.547	-.547	0	%100
153	MP2A	X	-.316	-.316	0	%100
154	MP2A	Z	-.547	-.547	0	%100
155	MP3C	X	-.316	-.316	0	%100
156	MP3C	Z	-.547	-.547	0	%100
157	MP2C	X	-.316	-.316	0	%100
158	MP2C	Z	-.547	-.547	0	%100

Member Distributed Loads (BLC 76 : Structure Wm (330 Deg)) (Continued)

	Member Label	Direction	Start Magnitude[lb/ft,...	End Magnitude[lb/ft,F...	Start Location[in,%]	End Location[in,%]
159	MP3B	X	-.316	-.316	0	%100
160	MP3B	Z	-.547	-.547	0	%100
161	MP2B	X	-.316	-.316	0	%100
162	MP2B	Z	-.547	-.547	0	%100
163	MP1A	X	-.316	-.316	0	%100
164	MP1A	Z	-.547	-.547	0	%100
165	MP4A	X	-.316	-.316	0	%100
166	MP4A	Z	-.547	-.547	0	%100
167	MP1C	X	-.316	-.316	0	%100
168	MP1C	Z	-.547	-.547	0	%100
169	MP4C	X	-.316	-.316	0	%100
170	MP4C	Z	-.547	-.547	0	%100
171	MP1B	X	-.316	-.316	0	%100
172	MP1B	Z	-.547	-.547	0	%100
173	MP4B	X	-.316	-.316	0	%100
174	MP4B	Z	-.547	-.547	0	%100
175	M204A	X	0	0	0	%100
176	M204A	Z	0	0	0	%100
177	M205B	X	-.613	-.613	0	%100
178	M205B	Z	-1.062	-1.062	0	%100
179	M206	X	-.287	-.287	0	%100
180	M206	Z	-.497	-.497	0	%100
181	M207	X	0	0	0	%100
182	M207	Z	0	0	0	%100
183	M208	X	-.287	-.287	0	%100
184	M208	Z	-.497	-.497	0	%100
185	M227	X	0	0	0	%100
186	M227	Z	0	0	0	%100
187	M228	X	-.355	-.355	0	%100
188	M228	Z	-.614	-.614	0	%100
189	M229	X	-.355	-.355	0	%100
190	M229	Z	-.614	-.614	0	%100
191	M231	X	-.539	-.539	0	%100
192	M231	Z	-.934	-.934	0	%100
193	M231A	X	-.163	-.163	0	%100
194	M231A	Z	-.282	-.282	0	%100
195	M232	X	-.3	-.3	0	%100
196	M232	Z	-.52	-.52	0	%100
197	M233	X	-.3	-.3	0	%100
198	M233	Z	-.52	-.52	0	%100
199	M234	X	-.163	-.163	0	%100
200	M234	Z	-.282	-.282	0	%100
201	M235	X	-.539	-.539	0	%100
202	M235	Z	-.934	-.934	0	%100

Member Distributed Loads (BLC 81 : BLC 39 Transient Area Loads)

	Member Label	Direction	Start Magnitude[lb/ft,...	End Magnitude[lb/ft,F...	Start Location[in,%]	End Location[in,%]
1	M151A	Y	-.754	-3.041	0	11.16
2	M151A	Y	-3.041	-5.086	11.16	22.32
3	M151A	Y	-5.086	-6.859	22.32	33.48
4	M151A	Y	-6.859	-5.584	33.48	44.64
5	M151A	Y	-5.584	-1.291	44.64	55.8
6	M162A	Y	-.57	-.57	0	5.729
7	M168	Y	-.57	-.57	0	5.729
8	M177	Y	-1.291	-5.584	6.2	17.36
9	M177	Y	-5.584	-6.859	17.36	28.52

Member Distributed Loads (BLC 81 : BLC 39 Transient Area Loads) (Continued)

	Member Label	Direction	Start Magnitude[lb/ft,...	End Magnitude[lb/ft,F...	Start Location[in,%]	End Location[in,%]
10	M177	Y	-6.859	-5.086	28.52	39.68
11	M177	Y	-5.086	-3.041	39.68	50.84
12	M177	Y	-3.041	-.754	50.84	62
13	M151A	Y	-.07	-1.515	37.2	43.4
14	M151A	Y	-1.515	-5.254	43.4	49.6
15	M151A	Y	-5.254	-6.99	49.6	55.8
16	M151A	Y	-6.99	-5.874	55.8	62
17	M172	Y	-10.916	-8.468	0	10
18	M172	Y	-8.468	-6.915	10	20
19	M172	Y	-6.915	-6.916	20	30
20	M172	Y	-6.916	-8.937	30	40
21	M172	Y	-8.937	-12.32	40	50
22	M175	Y	-3.693	-6.324	0	6.2
23	M175	Y	-6.324	-5.35	6.2	12.4
24	M175	Y	-5.35	-1.612	12.4	18.6
25	M175	Y	-1.612	-.164	18.6	24.8
26	M152A	Y	-.57	-.57	0	5.729
27	M175	Y	-1.291	-5.584	6.2	17.36
28	M175	Y	-5.584	-6.859	17.36	28.52
29	M175	Y	-6.859	-5.086	28.52	39.68
30	M175	Y	-5.086	-3.041	39.68	50.84
31	M175	Y	-3.041	-.754	50.84	62
32	M154	Y	-.754	-3.041	0	11.16
33	M154	Y	-3.041	-5.086	11.16	22.32
34	M154	Y	-5.086	-6.859	22.32	33.48
35	M154	Y	-6.859	-5.584	33.48	44.64
36	M154	Y	-5.584	-1.291	44.64	55.8
37	M166A	Y	-.57	-.57	0	5.729
38	M154	Y	-.07	-1.517	37.2	43.4
39	M154	Y	-1.517	-5.255	43.4	49.6
40	M154	Y	-5.255	-6.988	49.6	55.8
41	M154	Y	-6.988	-5.875	55.8	62
42	M173	Y	-10.908	-8.467	0	10
43	M173	Y	-8.467	-6.916	10	20
44	M173	Y	-6.916	-6.915	20	30
45	M173	Y	-6.915	-8.938	30	40
46	M173	Y	-8.938	-12.326	40	50
47	M176	Y	-3.693	-6.326	0	6.2
48	M176	Y	-6.326	-5.349	6.2	12.4
49	M176	Y	-5.349	-1.61	12.4	18.6
50	M176	Y	-1.61	-.165	18.6	24.8
51	M164A	Y	-.57	-.57	0	5.729
52	M176	Y	-1.291	-5.584	6.2	17.36
53	M176	Y	-5.584	-6.859	17.36	28.52
54	M176	Y	-6.859	-5.086	28.52	39.68
55	M176	Y	-5.086	-3.041	39.68	50.84
56	M176	Y	-3.041	-.754	50.84	62
57	M157	Y	-.754	-3.041	0	11.16
58	M157	Y	-3.041	-5.086	11.16	22.32
59	M157	Y	-5.086	-6.859	22.32	33.48
60	M157	Y	-6.859	-5.584	33.48	44.64
61	M157	Y	-5.584	-1.291	44.64	55.8
62	M170	Y	-.57	-.57	0	5.729
63	M157	Y	-.07	-1.517	37.2	43.4
64	M157	Y	-1.517	-5.255	43.4	49.6
65	M157	Y	-5.255	-6.988	49.6	55.8
66	M157	Y	-6.988	-5.875	55.8	62

Member Distributed Loads (BLC 81 : BLC 39 Transient Area Loads) (Continued)

	Member Label	Direction	Start Magnitude[lb/ft,...	End Magnitude[lb/ft,F...	Start Location[in,%]	End Location[in,%]
67	M174	Y	-10.908	-8.467	0	10
68	M174	Y	-8.467	-6.916	10	20
69	M174	Y	-6.916	-6.915	20	30
70	M174	Y	-6.915	-8.938	30	40
71	M174	Y	-8.938	-12.326	40	50
72	M177	Y	-3.693	-6.326	0	6.2
73	M177	Y	-6.326	-5.349	6.2	12.4
74	M177	Y	-5.349	-1.61	12.4	18.6
75	M177	Y	-1.61	-.165	18.6	24.8

Member Distributed Loads (BLC 82 : BLC 40 Transient Area Loads)

	Member Label	Direction	Start Magnitude[lb/ft,...	End Magnitude[lb/ft,F...	Start Location[in,%]	End Location[in,%]
1	M151A	Y	-2.261	-9.124	0	11.16
2	M151A	Y	-9.124	-15.259	11.16	22.32
3	M151A	Y	-15.259	-20.576	22.32	33.48
4	M151A	Y	-20.576	-16.751	33.48	44.64
5	M151A	Y	-16.751	-3.872	44.64	55.8
6	M162A	Y	-1.709	-1.709	0	5.729
7	M151A	Y	-.209	-4.545	37.2	43.4
8	M151A	Y	-4.545	-15.761	43.4	49.6
9	M151A	Y	-15.761	-20.969	49.6	55.8
10	M151A	Y	-20.969	-17.622	55.8	62
11	M172	Y	-32.747	-25.404	0	10
12	M172	Y	-25.404	-20.744	10	20
13	M172	Y	-20.744	-20.747	20	30
14	M172	Y	-20.747	-26.812	30	40
15	M172	Y	-26.812	-36.96	40	50
16	M175	Y	-11.078	-18.972	0	6.2
17	M175	Y	-18.972	-16.049	6.2	12.4
18	M175	Y	-16.049	-4.836	12.4	18.6
19	M175	Y	-4.836	-.493	18.6	24.8
20	M152A	Y	-1.709	-1.709	0	5.729
21	M175	Y	-3.872	-16.751	6.2	17.36
22	M175	Y	-16.751	-20.576	17.36	28.52
23	M175	Y	-20.576	-15.259	28.52	39.68
24	M175	Y	-15.259	-9.124	39.68	50.84
25	M175	Y	-9.124	-2.261	50.84	62
26	M154	Y	-2.261	-9.124	0	11.16
27	M154	Y	-9.124	-15.259	11.16	22.32
28	M154	Y	-15.259	-20.576	22.32	33.48
29	M154	Y	-20.576	-16.751	33.48	44.64
30	M154	Y	-16.751	-3.872	44.64	55.8
31	M166A	Y	-1.709	-1.709	0	5.729
32	M154	Y	-.209	-4.552	37.2	43.4
33	M154	Y	-4.552	-15.765	43.4	49.6
34	M154	Y	-15.765	-20.965	49.6	55.8
35	M154	Y	-20.965	-17.625	55.8	62
36	M173	Y	-32.725	-25.4	0	10
37	M173	Y	-25.4	-20.747	10	20
38	M173	Y	-20.747	-20.744	20	30
39	M173	Y	-20.744	-26.815	30	40
40	M173	Y	-26.815	-36.979	40	50
41	M176	Y	-11.08	-18.978	0	6.2
42	M176	Y	-18.978	-16.046	6.2	12.4
43	M176	Y	-16.046	-4.83	12.4	18.6
44	M176	Y	-4.83	-.494	18.6	24.8

Member Distributed Loads (BLC 82 : BLC 40 Transient Area Loads) (Continued)

	Member Label	Direction	Start Magnitude[lb/ft,...	End Magnitude[lb/ft,F...	Start Location[in,%]	End Location[in,%]
45	M164A	Y	-1.709	-1.709	0	5.729
46	M176	Y	-3.872	-16.751	6.2	17.36
47	M176	Y	-16.751	-20.576	17.36	28.52
48	M176	Y	-20.576	-15.259	28.52	39.68
49	M176	Y	-15.259	-9.124	39.68	50.84
50	M176	Y	-9.124	-2.261	50.84	62
51	M157	Y	-2.261	-9.124	0	11.16
52	M157	Y	-9.124	-15.259	11.16	22.32
53	M157	Y	-15.259	-20.576	22.32	33.48
54	M157	Y	-20.576	-16.751	33.48	44.64
55	M157	Y	-16.751	-3.872	44.64	55.8
56	M170	Y	-1.709	-1.709	0	5.729
57	M157	Y	-.209	-4.545	37.2	43.4
58	M157	Y	-4.545	-15.761	43.4	49.6
59	M157	Y	-15.761	-20.969	49.6	55.8
60	M157	Y	-20.969	-17.622	55.8	62
61	M174	Y	-32.747	-25.404	0	10
62	M174	Y	-25.404	-20.744	10	20
63	M174	Y	-20.744	-20.747	20	30
64	M174	Y	-20.747	-26.812	30	40
65	M174	Y	-26.812	-36.96	40	50
66	M177	Y	-11.078	-18.972	0	6.2
67	M177	Y	-18.972	-16.049	6.2	12.4
68	M177	Y	-16.049	-4.836	12.4	18.6
69	M177	Y	-4.836	-.493	18.6	24.8
70	M168	Y	-1.709	-1.709	0	5.729
71	M177	Y	-3.872	-16.751	6.2	17.36
72	M177	Y	-16.751	-20.576	17.36	28.52
73	M177	Y	-20.576	-15.258	28.52	39.68
74	M177	Y	-15.258	-9.124	39.68	50.84
75	M177	Y	-9.124	-2.261	50.84	62

Member Area Loads (BLC 39 : Structure D)

	Joint A	Joint B	Joint C	Joint D	Direction	Distribution	Magnitude[ksf]
1	N207A	N222A	N290A	N229	Y	Two Way	-.005
2	N291B	N230	N214	N222A	Y	Two Way	-.005
3	N229	N290A	N293A	N231	Y	Two Way	-.005
4	N293A	N231	N206A	N212	Y	Two Way	-.005
5	N212	N208	N232	N292A	Y	Two Way	-.005
6	N292A	N232	N227	N289A	Y	Two Way	-.005
7	N289A	N227	N207B	N225A	Y	Two Way	-.005
8	N225A	N215	N228	N288A	Y	Two Way	-.005
9	N288A	N228	N230	N291B	Y	Two Way	-.005

Member Area Loads (BLC 40 : Structure Di)

	Joint A	Joint B	Joint C	Joint D	Direction	Distribution	Magnitude[ksf]
1	N207A	N222A	N290A	N229	Y	Two Way	-.015
2	N229	N290A	N293A	N231	Y	Two Way	-.015
3	N231	N293A	N212	N206A	Y	Two Way	-.015
4	N212	N208	N232	N292A	Y	Two Way	-.015
5	N292A	N232	N227	N289A	Y	Two Way	-.015
6	N289A	N227	N207B	N225A	Y	Two Way	-.015
7	N225A	N215	N228	N288A	Y	Two Way	-.015
8	N228	N288A	N291B	N230	Y	Two Way	-.015
9	N291B	N230	N214	N222A	Y	Two Way	-.015

Envelope AISC 15th(360-16): LRFD Steel Code Checks

	Member	Shape	Code Check	Loc[...	LC	Shear Check	Loc[in]	Dir	LC	phi*Pnc...	phi*Pnt ...	phi*Mn ...	phi*Mn ...	Cb	Eqn
1	M1	PIPE_3.5X	.084	19.01	1	.112	19.01		10	106067...	108045	10.684	10.684	3...	H1-1b
2	M4	C4X4.5	.240	28.4...	5	.102	20.558	y	6	27152.3...	43416	1.093	5.535	2...	H1-1b
3	M5	C4X4.5	.278	28.4...	20	.114	20.12	y	20	27152.3...	43416	1.093	5.535	2...	H1-1b
4	M18	L2x2x4	.000	5	13	.000	5	z	24	29529.1...	30585.6	.691	1.577	1...	H2-1
5	M19	L2x2x4	.091	14.0...	18	.115	15	y	19	28259.8...	30585.6	.691	1.577	2...	H2-1
6	M20	L2x2x4	.102	14.0...	20	.112	15	z	19	28259.8...	30585.6	.691	1.577	2...	H2-1
7	M21	L2x2x4	.197	17.7...	18	.033	17.708	y	18	24553.1...	30585.6	.691	1.577	1...	H2-1
8	M22	L2x2x4	.000	5	13	.000	10	z	24	29529.1...	30585.6	.691	1.577	1...	H2-1
9	M28	C4X2	.208	14.1...	4	.051	14.135	z	5	63207.9...	68801.4	2.141	7.717	2...	H1-1b
10	M29	C4X2	.210	14.1...	10	.043	14.135	z	10	63207.9...	68801.4	2.141	7.717	2...	H1-1b
11	M27A	L2x2x4	.100	14.0...	16	.116	15	z	18	28259.8...	30585.6	.691	1.577	1...	H2-1
12	M28A	L2x2x4	.100	14.0...	10	.116	15	y	20	28259.8...	30585.6	.691	1.577	1...	H2-1
13	M29A	L2x2x4	.200	17.7...	19	.033	17.708	z	19	24553.1...	30585.6	.691	1.577	1...	H2-1
14	M44	PL3/8x6	.005	6	1	.000	6	z	1	38175.32	72900	.57	8.176	1	H1-1b
15	M47	PL3/8x6	.254	0	5	.051	0	y	5	38175.32	72900	.57	9.113	1...	H1-1b
16	M48	PL3/8x6	.256	0	9	.053	0	y	9	38175.32	72900	.57	9.113	1...	H1-1b
17	M51	HSS3X3X3	.245	2.667	2	.214	2	z	1	63318.0...	78246	6.796	6.796	2...	H1-1b
18	M52	PIPE_3.5X	.064	5.99	14	.040	0		14	106067...	108045	10.684	10.684	1...	H1-1b
19	M55	C4X4.5	.285	28.4...	38	.154	20.558	y	41	27152.3...	43416	1.093	5.535	2...	H1-1b
20	M56	C4X4.5	.261	28.4...	16	.117	20.12	y	13	27152.3...	43416	1.093	5.535	2...	H1-1b
21	M69	L2x2x4	.000	0	21	.000	5	z	24	29529.1...	30585.6	.691	1.577	1...	H2-1
22	M70	L2x2x4	.077	14.0...	14	.095	15	y	15	28259.8...	30585.6	.691	1.577	2...	H2-1
23	M71	L2x2x4	.091	14.0...	24	.096	15	z	14	28259.8...	30585.6	.691	1.577	1...	H2-1
24	M72	L2x2x4	.166	7.292	13	.028	7.292	y	13	24553.1...	30585.6	.691	1.577	1...	H2-1
25	M73	L2x2x4	.000	0	21	.000	0	z	24	29529.1...	30585.6	.691	1.577	1...	H2-1
26	M76	C4X2	.132	14.1...	16	.014	14.135	z	2	63207.9...	68801.4	2.141	7.717	2...	H1-1b
27	M77	C4X2	.151	14.1...	24	.046	14.135	z	11	63207.9...	68801.4	2.141	7.717	2...	H1-1b
28	M78	L2x2x4	.082	14.0...	16	.097	15	z	14	28259.8...	30585.6	.691	1.577	2...	H2-1
29	M79	L2x2x4	.079	14.0...	2	.097	15	y	13	28259.8...	30585.6	.691	1.577	1...	H2-1
30	M80	L2x2x4	.166	7.292	14	.028	7.292	z	14	24553.1...	30585.6	.691	1.577	1...	H2-1
31	M95	PL3/8x6	.002	6	7	.000	6	y	12	38175.32	72900	.57	9.113	1...	H1-1b
32	M98	PL3/8x6	.278	0	37	.054	12	y	12	38175.32	72900	.57	9.113	1...	H1-1b
33	M99	PL3/8x6	.251	0	5	.051	0	y	6	38175.32	72900	.57	9.113	1...	H1-1b
34	M102	HSS3X3X3	.257	61.3...	7	.199	62	z	9	63318.0...	78246	6.796	6.796	2...	H1-1b
35	M103	PIPE_3.5X	.063	5.99	24	.039	0		24	106067...	108045	10.684	10.684	1...	H1-1b
36	M106	C4X4.5	.246	13.1...	8	.111	20.558	z	1	27152.3...	43416	1.093	5.535	2...	H1-1b
37	M107	C4X4.5	.279	28.4...	36	.147	20.558	y	33	27152.3...	43416	1.093	5.535	2...	H1-1b
38	M120	L2x2x4	.000	5	17	.000	5	z	24	29529.1...	30585.6	.691	1.577	1...	H2-1
39	M121	L2x2x4	.081	14.0...	14	.097	15	y	24	28259.8...	30585.6	.691	1.577	2...	H2-1
40	M122	L2x2x4	.086	14.0...	20	.091	15	z	23	28259.8...	30585.6	.691	1.577	2...	H2-1
41	M123	L2x2x4	.162	7.292	24	.027	17.708	y	13	24553.1...	30585.6	.691	1.577	1...	H2-1
42	M124	L2x2x4	.000	5	17	.000	10	z	24	29529.1...	30585.6	.691	1.577	1...	H2-1
43	M127	C4X2	.146	14.1...	2	.036	14.135	z	28	63207.9...	68801.4	2.141	7.717	2...	H1-1b
44	M128	C4X2	.139	14.1...	20	.019	14.135	z	8	63207.9...	68801.4	2.141	7.717	2...	H1-1b
45	M129	L2x2x4	.082	14.0...	24	.095	15	z	23	28259.8...	30585.6	.691	1.577	1...	H2-1
46	M130	L2x2x4	.069	14.0...	10	.096	15	y	24	28259.8...	30585.6	.691	1.577	2...	H2-1
47	M131	L2x2x4	.169	17.7...	24	.029	17.708	z	24	24553.1...	30585.6	.691	1.577	1...	H2-1
48	M146	PL3/8x6	.002	6	7	.000	6	y	8	38175.32	72900	.57	9.113	1...	H1-1b
49	M149	PL3/8x6	.236	0	9	.054	0	y	8	38175.32	72900	.57	9.113	1...	H1-1b
50	M150	PL3/8x6	.274	0	25	.057	0	y	1	38175.32	72900	.57	9.113	1...	H1-1b
51	M153	HSS3X3X3	.246	2.667	7	.202	62	z	5	63318.0...	78246	6.796	6.796	2...	H1-1b
52	M148A	C4X2	.120	13.4...	16	.017	23.123	z	10	49266.3...	68801.4	2.141	7.717	1...	H1-1b
53	M151A	PIPE_2.0	.552	53.6...	8	.176	37.458		8	23329.7...	32130	1.872	1.872	1...	H1-1b
54	M152A	PL3/8X6.5	.207	2.865	4	.345	2.865	y	8	68146.9...	78975	.617	10.695	1...	H1-1b
55	M154	PIPE_2.0	.513	53.6...	4	.164	37.458		4	23329.7...	32130	1.872	1.872	1...	H1-1b
56	M157	PIPE_2.0	.592	53.6...	12	.186	37.458		12	23329.7...	32130	1.872	1.872	1...	H1-1b

Envelope AISC 15th(360-16): LRFD Steel Code Checks (Continued)

	Member	Shape	Code Check	Loc[...	LC	Shear Check	Loc[in]	Dir	LC	phi*Pnc...	phi*Pnt ...	phi*Mn ...	phi*Mn ...	Cb	Eqn
57	M166	PL3/8X6.5	.097	2.865	6	.304	0	y	2	68146.9...	78975	.617	10.695	1...	H1-1b
58	M162A	PL3/8X6.5	.197	2.865	10	.378	2.865	y	6	68146.9...	78975	.617	10.695	1...	H1-1b
59	M163A	PL3/8X6.5	.093	2.865	7	.304	0	y	12	68146.9...	78975	.617	10.695	1...	H1-1b
60	M164A	PL3/8X6.5	.210	2.865	12	.341	2.865	y	17	68146.9...	78975	.617	10.695	1...	H1-1b
61	M165A	PL3/8X6.5	.107	2.865	2	.264	0	y	10	68146.9...	78975	.617	10.695	1...	H1-1b
62	M166A	PL3/8X6.5	.200	2.865	6	.387	0	y	1	68146.9...	78975	.617	10.695	1...	H1-1b
63	M167	PL3/8X6.5	.081	2.865	4	.310	0	y	8	68146.9...	78975	.617	10.695	1...	H1-1b
64	M168	PL3/8X6.5	.204	2.865	8	.372	0	y	1	68147.0...	78975	.617	10.695	1...	H1-1b
65	M169	PL3/8X6.5	.106	2.865	10	.301	0	y	6	68146.9...	78975	.617	10.695	1...	H1-1b
66	M170	PL3/8X6.5	.194	2.865	2	.351	0	y	9	68146.9...	78975	.617	10.695	1...	H1-1b
67	M171	PL3/8X6.5	.081	0	3	.287	0	y	4	68146.9...	78975	.617	10.695	1...	H1-1b
68	M172	PIPE_2.0	.208	50	5	.027	50		5	26092.12	32130	1.872	1.872	2...	H1-1b
69	M173	PIPE_2.0	.205	50	1	.031	50		1	26092.12	32130	1.872	1.872	2...	H1-1b
70	M174	PIPE_2.0	.191	50	9	.025	50		8	26092.12	32130	1.872	1.872	2...	H1-1b
71	M175	PIPE_2.0	.566	8.396	6	.183	24.542		6	23329.7...	32130	1.872	1.872	1...	H1-1b
72	M176	PIPE_2.0	.614	8.396	2	.197	24.542		2	23329.7...	32130	1.872	1.872	1...	H1-1b
73	M177	PIPE_2.0	.537	8.396	10	.175	24.542		10	23329.7...	32130	1.872	1.872	1...	H1-1b
74	M203	PIPE_2.0	.013	30	10	.002	30		10	28843.4...	32130	1.872	1.872	1...	H1-1b
75	OVP	PIPE_2.0	.535	77.5...	11	.023	77.563		11	13511.2...	32130	1.872	1.872	1...	H1-1b
76	MP3A	PIPE_2.0	.631	68.25	12	.112	52		10	13055.6...	32130	1.872	1.872	4...	H1-1b
77	MP2A	PIPE_2.0	.610	68.25	2	.129	68.25		4	13055.6...	32130	1.872	1.872	2...	H1-1b
78	MP3C	PIPE_2.0	.681	68.25	7	.113	52		6	13055.6...	32130	1.872	1.872	2.8	H1-1b
79	MP2C	PIPE_2.0	.601	68.25	12	.122	68.25		11	13055.6...	32130	1.872	1.872	2...	H1-1b
80	MP3B	PIPE_2.0	.635	68.25	2	.112	52		2	13055.6...	32130	1.872	1.872	3...	H1-1b
81	MP2B	PIPE_2.0	.632	68.25	7	.118	68.25		9	13055.6...	32130	1.872	1.872	2...	H1-1b
82	MP1A	PIPE_2.0	.245	29.25	8	.099	29.25		10	20866.7...	32130	1.872	1.872	2.1	H1-1b
83	MP4A	PIPE_2.0	.223	29.25	6	.102	65.25		5	20866.7...	32130	1.872	1.872	2...	H1-1b
84	MP1C	PIPE_2.0	.236	29.25	7	.099	29.25		6	20866.7...	32130	1.872	1.872	1...	H1-1b
85	MP4C	PIPE_2.0	.235	29.25	2	.112	65.25		1	20866.7...	32130	1.872	1.872	1...	H1-1b
86	MP1B	PIPE_2.0	.244	29.25	12	.095	65.25		2	20866.7...	32130	1.872	1.872	1...	H1-1b
87	MP4B	PIPE_2.0	.235	29.25	9	.110	29.25		9	20866.7...	32130	1.872	1.872	2...	H1-1b
88	M204A	C4X2	.130	32.7...	10	.013	27.458	z	4	49266.3...	68801.4	2.141	7.717	1...	H1-1b
89	M205B	C4X2	.143	13.4...	16	.012	18.306	z	10	49266.3...	68801.4	2.141	7.717	1...	H1-1b
90	M206	PIPE_2.5	.296	123....	4	.093	162....		7	9523.859	50715	3.596	3.596	4...	H1-1b
91	M207	PIPE_2.5	.312	123....	12	.081	162....		8	9523.859	50715	3.596	3.596	4...	H1-1b
92	M208	PIPE_2.5	.322	123....	8	.078	123....		7	9523.859	50715	3.596	3.596	4...	H1-1b
93	M227	L3X3X4	.293	22.9...	5	.033	4.312	z	6	43010.2...	46656	1.688	3.756	2...	H2-1
94	M228	L3X3X4	.332	22.9...	7	.035	1.677	z	8	43010.2...	46656	1.688	3.756	2...	H2-1
95	M229	L3X3X4	.306	22.9...	9	.032	0	z	10	43010.2...	46656	1.688	3.756	2...	H2-1
96	M231	L2.5x2.5x3	.154	36.1...	2	.008	73.831	z	6	8675.332	29192.4	.873	1.518	1...	H2-1
97	M231A	L2.5x2.5x3	.165	36.1...	12	.008	73.831	y	8	8675.332	29192.4	.873	1.518	1...	H2-1
98	M232	L2.5x2.5x3	.152	36.9...	2	.008	0	z	2	8675.332	29192.4	.873	1.518	1...	H2-1
99	M233	L2.5x2.5x3	.180	36.1...	8	.008	0	y	4	8675.332	29192.4	.873	1.518	1...	H2-1
100	M234	L2.5x2.5x3	.163	36.1...	6	.008	0	z	10	8675.332	29192.4	.873	1.518	1...	H2-1
101	M235	L2.5x2.5x3	.154	36.9...	12	.008	73.831	y	12	8675.332	29192.4	.873	1.518	1...	H2-1

Envelope Joint Reactions

	Joint		X [lb]	LC	Y [lb]	LC	Z [lb]	LC	MX [k-ft]	LC	MY [k-ft]	LC	MZ [k-ft]	LC
1	N2	max	593.156	10	1556.995	19	864.883	1	0	51	0	51	0	51
2		min	-594.932	4	-199.819	1	-1461.418	7	0	1	0	1	0	1
3	N71B	max	802.449	9	1282.571	14	826.551	4	0	51	0	51	0	51
4		min	-1282.58	3	4.165	8	-549.881	10	0	1	0	1	0	1
5	N140	max	1179.09	11	1264.698	24	832.635	11	0	51	0	51	0	51
6		min	-698.038	5	76.722	6	-548.504	5	0	1	0	1	0	1
7	N345	max	1141.992	10	2127.298	7	1153.036	1	0	1	0	9	0	3

Envelope Joint Reactions (Continued)

	Joint		X [lb]	LC	Y [lb]	LC	Z [lb]	LC	MX [k-ft]	LC	MY [k-ft]	LC	MZ [k-ft]	LC
8		min	-1133.978	4	-829.543	1	-2752.869	7	0	7	0	3	0	9
9	N347	max	868.444	10	2020.309	3	2009.602	1	0	2	0	8	0	4
10		min	-2250.177	4	-719.31	9	-1194.958	7	0	8	0	2	0	10
11	N350	max	2318.681	10	2032.42	11	1828.533	1	0	12	0	12	0	4
12		min	-944.158	4	-733.415	5	-1008.016	7	0	6	0	6	0	10
13	Totals:	max	6622.146	10	8570.229	19	7107.025	1						
14		min	-6622.149	4	3543.435	1	-7107.029	7						

Client:	Verizon Wireless	Date:	7/30/2021
Site Name:	Wethersfield 3 CT		
Project No.	20777267A		
Title:	Mount Fix	Page:	1

Version 3.1

I. Mount-to-Tower Connection Check

RISA Model Data

Nodes *(labeled per RISA)*	Orientation *(per graphic of typical platform)*
N71B	120
N140	240
N2	0

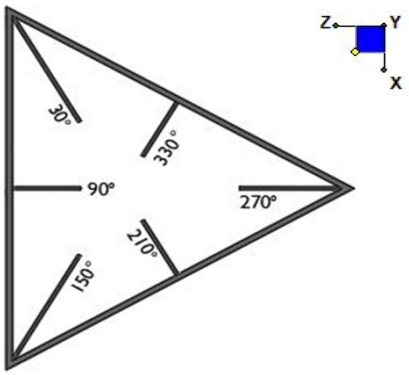

TYPICAL PLATFORM

Tower Connection Bolt Checks

Any moment resistance?:	no
Bolt Quantity per Reaction:	1
d_x (in) *(Delta X of typ. bolt config. sketch)* :	
d_y (in) *(Delta Y of typ. bolt config. sketch)* :	
Bolt Type:	A307
Bolt Diameter (in):	0.75
Required Tensile Strength (kips):	0.6
Required Shear Strength (kips):	2.0
Tensile Strength / bolt (kips):	14.4
Shear Strength / bolt (kips):	8.6
Tensile Capacity Overall:	**4.1%***
Shear Capacity Overall:	**23.1%**

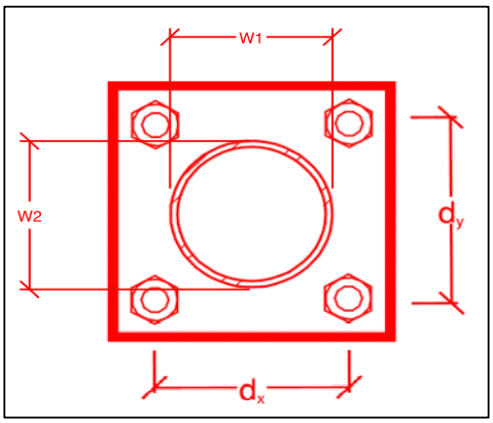

**Note: Tension reduction not required if tension or shear capacity < 30%*

Mount Desktop – Post Modification Inspection (PMI) Report Requirements

Documents & Photos Required from Contractor – Mount Modification

Purpose – to provide Maser Consulting Connecticut the proper documentation in order to complete the required Mount Desktop review of the Post Modification Inspection Report.

- Contractor is responsible for making certain the photos provided as noted below provide confirmation that the modification was completed in accordance with the modification drawings.
- Contractor shall relay any data that can impact the performance of the mount or the mount modification, this includes safety issues.

Base Requirements:

- Any special photos outside of the standard requirements will be indicated on the drawings
- Provide "as built drawings" showing contractor's name, preparer's signature, and date. Any deviations from the drawings (proposed modification) must be shown.
- Notation that all hardware was properly installed, and the existing hardware was inspected for any issues.
- Verification that loading is as communicated in the modification drawings. NOTE If loading is different than what is conveyed in the modification drawing contact Maser Consulting Connecticut immediately.
- Each photo should be time and date stamped
- Photos should be high resolution and submitted in a Zip File and should be organized in the file structure as depicted in Schedule A attached.
- Contractor shall ensure that the safety climb wire rope is supported and not adversely impacted by the install of the modification components. This may involve the install of wire rope guides, or other items to protect the wire rope.
- The photos in the file structure should be uploaded to **https://pmi.vzwsmart.com** as depicted on the drawings

Photo Requirements:

- *Base and "During Installation Photos"*
  - Base pictures include
    - Photo of Gate Signs showing the tower owner, site name, and number
    - Photo of carrier shelter showing the carrier site name and number if available
    - Photos of the galvanizing compound and/or paint used (if applicable), clearly showing the label and name
  - "During Installation Photos if provided - must be placed only in this folder
- *Photos taken at ground level*
  - Overall tower structure before and after installation of the modifications
  - Photos of the appropriate mount before and after installation of the modifications; if the mounts are at different rad elevations, pictures must be provided for all elevations that the modifications were installed

- *Photos taken at Mount Elevation*
    - Photos showing each individual sector before and also after installation of modifications. Each entire sector must be in one photo to show in the inter-connection of members.
        - These photos should also certify that the placement and geometry of the equipment on the mount is as depicted on the sketch and table in the mount analysis
    - Close-up photos of each installed modification per the modification drawings; pictures should also include connection hardware (U-bolts, bolts, nuts, all-threaded rods, etc.)
    - Photos showing the measurements of the installed modification member sizes (i.e. lengths, widths, depths, diameters, thicknesses)
    - Photos showing the elevation or distances of the installed modifications from the appropriate reference locations shown in the modification drawings
    - Photos showing the installed modifications onto the tower with tape drop measurements (if applicable) (i.e. ring/collar mounts, tie-backs, V-bracing kits, etc.); if the existing mount elevation needs to be changed according to the modification drawings, a tape drop measurement shall be provided before the elevation change
    - Photos showing the safety climb wire rope above and below the mount prior to modification.
    - Photos showing the climbing facility and safety climb if present.

Material Certification:

- Materials utilized must be as per specification on the drawings or the equivalent as validated by Maser Consulting Connecticut.
    - If the drawings are as specified on the drawings
        - The contractor should provide the packing list or the materials utilized to perform the mount modification
    - If an equivalent is utilized
        - It is required that the Maser Consulting Connecticut certification of such is included in the contractor submission package. There may be an additional charge for this certification if the equivalent submission doesn't meet specifications as prescribed in the drawings.
- The contractor must certify that the materials meet these specifications by one of these methods.

☐ The Material utilized was as specified on the Maser Consulting Connecticut Mount Modification Drawings and included in the Material certification folder is a packing list or invoice for these materials

☐ The material utilized was an "equivalent" and included as part of the contractor submission is the Maser Consulting Connecticut certification, invoices, or specifications validating accepted status

Certifying Individual: Company _____

Name _____

Signature _____

Antenna & equipment placement and Geometry Confirmation:

- The contractor must certify that the antenna & equipment placement and geometry is in accordance with the antenna placement diagrams as included in this mount analysis.

- ☐ The contractor certifies that the photos support and the equipment on the mount is as depicted on the antenna placement diagrams as included in this mount analysis.

- ☐ The contractor notes that the equipment on the mount is not in accordance with the antenna placement diagrams and has accordingly marked up the diagrams or provided a diagram outlining the differences.

Certifying Individual: Company _____

Name _____

Signature _____

Special Instructions / Validation as required from the MA or Mod Drawings:

Issue:

Contractor shall relocate existing OVP units on existing monopole as required for modification installation.

Response:

Schedule A – Photo & Document File Structure

- VzW Site Number / Name
  - Base & “During Installation” Photos
  - Pre-Installation Photos
    - Alpha
    - Beta
    - Gamma
    - Ground Level
    - Tape Drop
  - Post-Installation Photos
    - Alpha
    - Beta
    - Gamma
    - Ground Level
    - Tape Drop
    - Photos of climbing facility and safety climb – If Present
  - Certifications – Submission of this document including certifications
  - Specific Required Additional Photos

Plan View

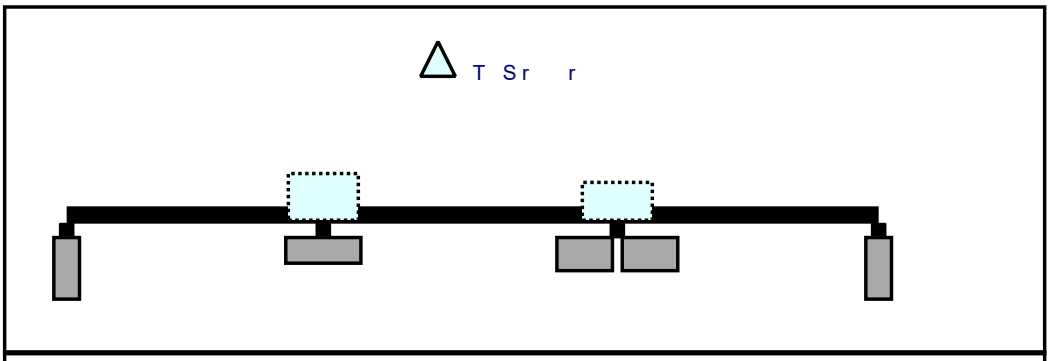

Front View
L Sr r

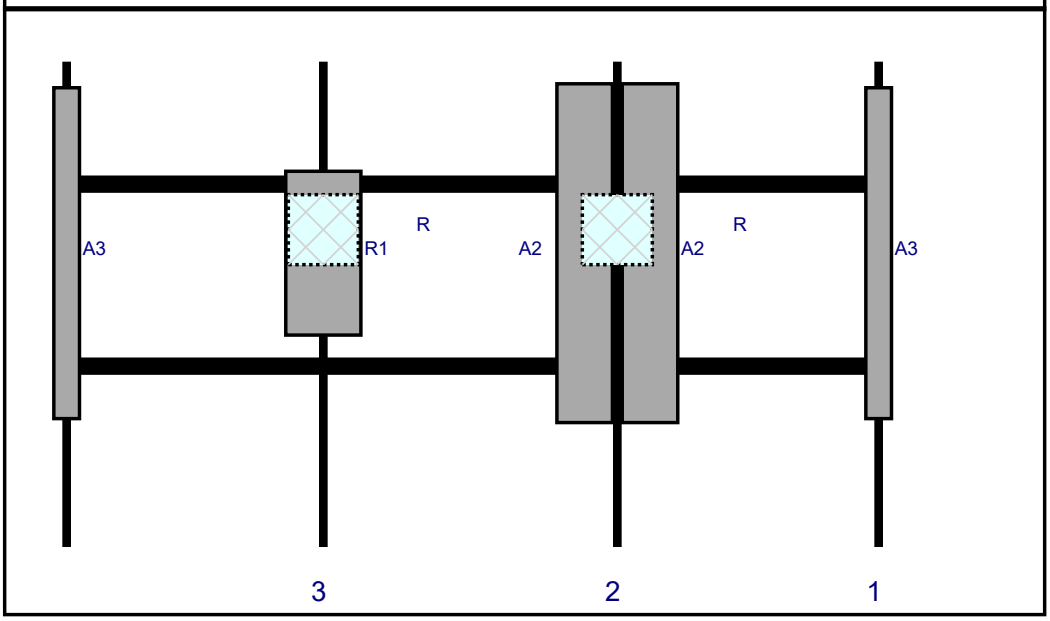

R	M d	d	D	P	P	A	. A	A				
			r L.		P	P	r T.	O	S		d	
A3	LPA	.	.	1	1	r	1.		R	d	2 21	
A2	SB 1D B	2.	11.	11	2	r	1.		R	d	2 21	
A2	SB 1D B	2.	11.	11	2	r	1.		R	d	2 21	
R	B B13 RR BR R 1 D2A	1	1	11	2	B	d 3		Add d			
R1	MT A	3 .1	1 .1		3	r	1.		Add d			
R	B2 B A RR BR R 1 D1A	1	1		3	B	d 3		Add d			
A3	LPA	.	.			r	1.		R	d	2 21	

Plan View

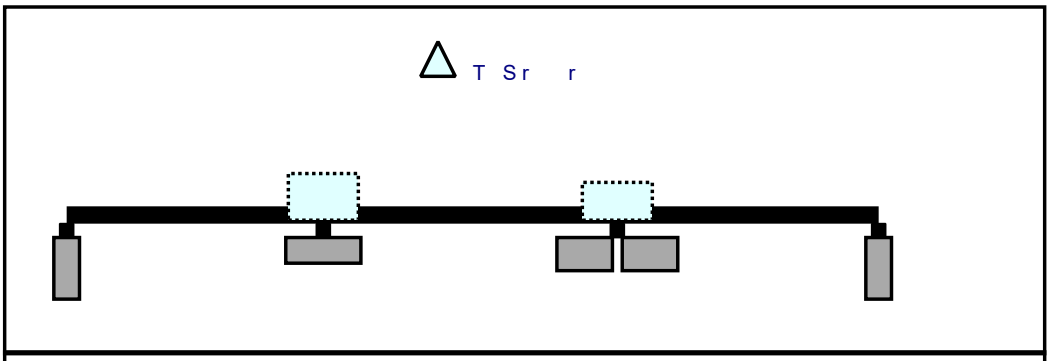

Front View
L S r r

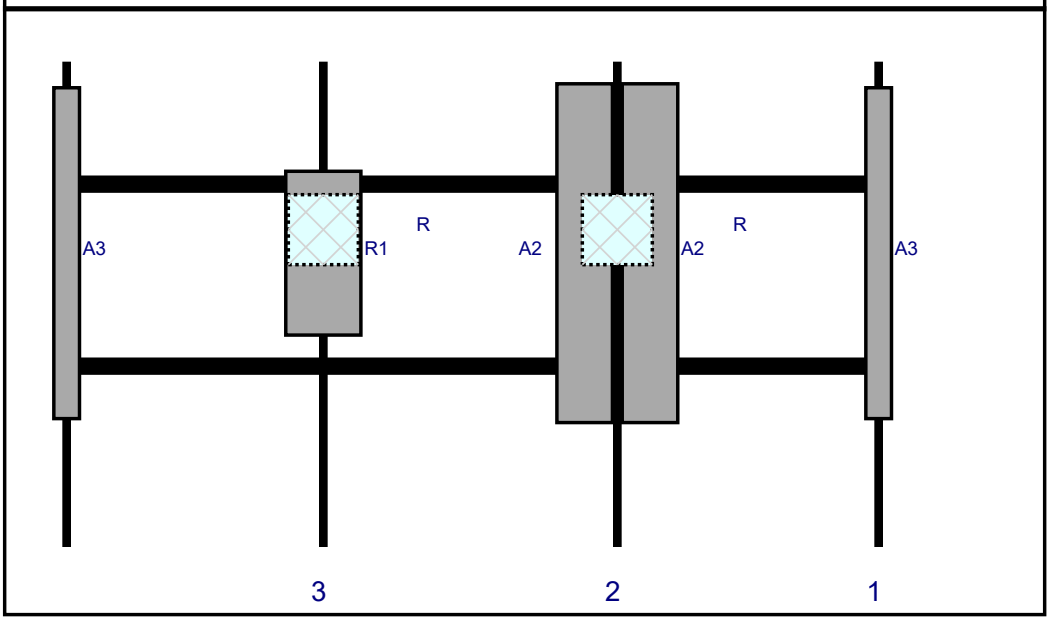

R	M d	d	D	P	P	A	. A	A	S	d
			r L.		P	P	r T.	O		
A3	LPA	. .	1	1		r	1.		R d	2 21
A2	SB 1D B	2. 11.	11	2		r	1.		R d	2 21
A2	SB 1D B	2. 11.	11	2		r	1.		R d	2 21
R	B B13 RR BR R 1 D2A	1 1	11	2		B d 3			Add d	
R1	MT A	3 .1 1 .1		3		r	1.		Add d	
R	B2 B A RR BR R 1 D1A	1 1		3		B d 3			Add d	
A3	LPA	. .				r	1.		R d	2 21

Plan View

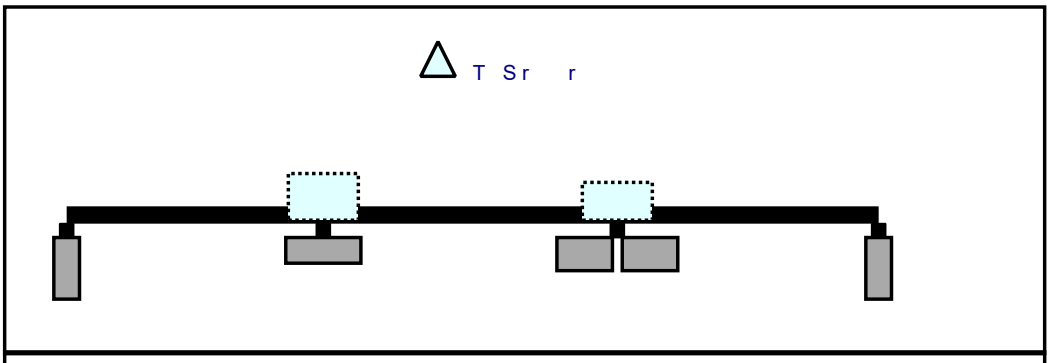

Front View
L S r r

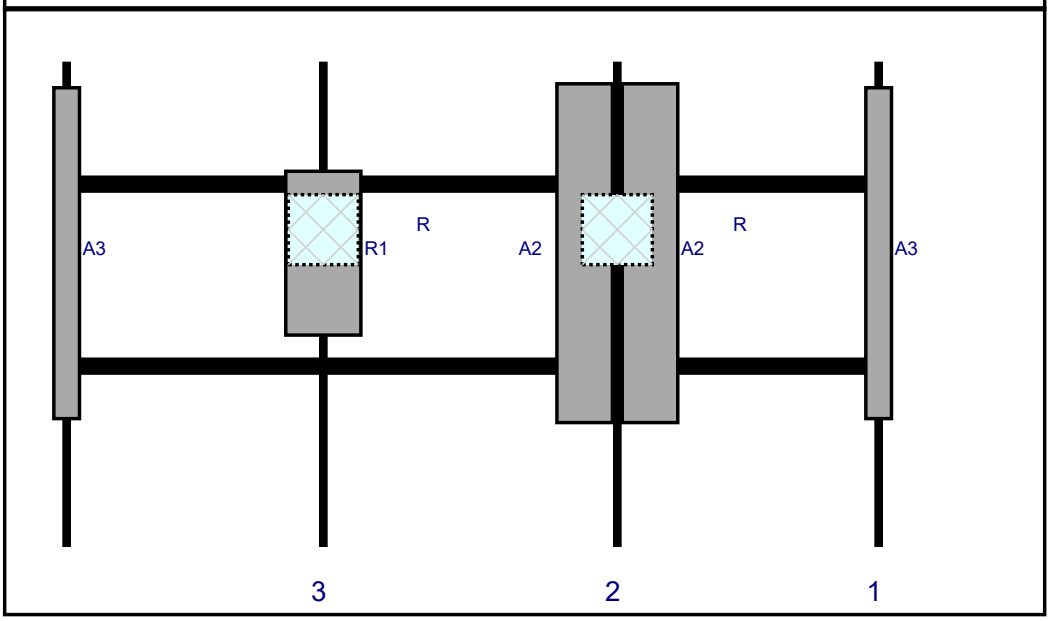

R	M d	d	D	P	P	A	. A	A	S	d
			r L.		P	P	r T.	O		
A3	LPA	. .	1	1		r	1.		R d	2 21
A2	SB 1D B	2. 11.	11	2		r	1.		R d	2 21
A2	SB 1D B	2. 11.	11	2		r	1.		R d	2 21
R	B B13 RR BR R 1 D2A	1 1	11	2		B	d 3		Add d	
R1	MT A	3 .1 1 .1		3		r	1.		Add d	
R	B2 B A RR BR R 1 D1A	1 1		3		B	d 3		Add d	
A3	LPA	. .				r	1.		R d	2 21

Maser Consulting Connecticut

Subject	TIA-222-H Usage	
Site Information	*Site ID:*	*467557-VZW / WOODBURY N CT*
	Site Name:	*WOODBURY N CT*
	Carrier Name:	*Verizon Wireless*
	Address:	*1440 Main St North* *Woodbury, Connecticut 06798* *Litchfield County*
	Latitude:	*41.589947°*
	Longitude:	*-73.169867°*
Structure Information	*Tower Type:*	*163-Ft Monopole*
	Mount Type:	*14.50-Ft Platform*
	FUZE ID # 16272070	

To Whom It May Concern,

We respectfully submit the above referenced Antenna Mount Structural Analysis report in conformance with ANSI/TIA-222-H, Structural Standard for Antenna Supporting Structures and Antennas and Small Wind Turbine Support Structures.

The 2015 International Building Code states that, in Section 3108, telecommunication towers shall be designed and constructed in accordance with the provisions of TIA-222. TIA-222-H is the latest revision of the TIA-222 Standard, effective as of January 01, 2018.

As with all ANSI standards and engineering best practice is to apply the most current revision of the standard. This ensures the engineer is applying all updates. As an example, the TIA-222-H Standard includes updates to bring it in line with the latest AISC and ACI standards and it also incorporates the latest wind speed maps by ASCE 7 based on updated studies of the wind data.

The TIA-222-H standard clarifies these specific requirements for the antenna mount analysis such as modeling methods, seismic analysis, 30-degree increment wind directions and maintenance loading. Therefore, it is our opinion that TIA-222-H is the most appropriate standard for antenna mount structural analysis and is acceptable for use at this site to ensure the engineer is taking into account the most current engineering standard available.

Sincerely,

Dejian Xu

Dejian Xu, PE
Technical Manager

2000 Midlantic Drive - Suite 100, Mt. Laurel, New Jersey 08054 Phone: (856) 797-0412

Exhibit F

Power Density/RF Emissions Report

Site Name: ***WOODBURY N CT***
Cumulative Power Density

Operator	Operating Frequency	Number of Trans.	ERP Per Trans.	Total ERP	Distance to Target	Calculated Power Density	Maximum Permissible Exposure*	Fraction of MPE
	(MHz)		(watts)	(watts)	(feet)	(mW/cm^2)	(mW/cm^2)	(%)
VZW 700	751	4	697	2788	150	0.0045	0.5007	0.89%
VZW CDMA	878.49	2	497	993	150	0.0016	0.5857	0.27%
VZW Cellular	874	4	826	3303	150	0.0053	0.5827	0.91%
VZW PCS	1980	4	986	3942	150	0.0063	1.0000	0.63%
VZW AWS	2120	4	2104	8416	150	0.0135	1.0000	1.35%
VZW CBAND	3730.08	4	6531	26125	150	0.0418	1.0000	4.18%
Total Percentage of Maximum Permissible Exposure								8.22%

*Guidelines adopted by the FCC on August 1, 1996, 47 CFR Part 1 based on NCRP Report 86, 1986 and generally on ANSI/IEEE C95.1-1992
**Calculation includes a -10 dB Off Beam Antenna Pattern Adjustment pursuant to Attachments B and C of the Siting Council's November 10, 2015 Memorandum for Exempt Modification filings

MHz = Megahertz
mW/cm^2 = milliwatts per square centimeter
ERP = Effective Radiated Power

Absolute worst case maximum values used.

ORIGIN ID:QFWA (551) 804-0667
ERSILIA DAVIS

1777 SENTRY PARKWAY
VEVA 17, SUITE 210
BLUE BELL, PA 19422
UNITED STATES US

SHIP DATE: 26AUG21
ACTWGT: 1.00 LB
CAD: 108980334/INET4400

BILL SENDER

TO **MELANIE A. BACHMAN**
CONNECTICUT SITING COUNCIL
10 FRANKLIN SQUARE

NEW BRITAIN CT 06051
(860) 827-2935
INV:
PO:
REF: 100788/CSC WOODBURY
DEPT:

56DJ1/BAF3/FE4A

J212021070901uv

FedEx Express

FRI - 27 AUG 10:30A
PRIORITY OVERNIGHT

TRK# 0201 **7746 4594 2600**

EB BDLA

06051
BDL
CT-US

After printing this label:
1. Use the 'Print' button on this page to print your label to your laser or inkjet printer.
2. Fold the printed page along the horizontal line.
3. Place label in shipping pouch and affix it to your shipment so that the barcode portion of the label can be read and scanned.

Warning: Use only the printed original label for shipping. Using a photocopy of this label for shipping purposes is fraudulent and could result in additional billing charges, along with the cancellation of your FedEx account number.
Use of this system constitutes your agreement to the service conditions in the current FedEx Service Guide, available on fedex.com.FedEx will not be responsible for any claim in excess of $100 per package, whether the result of loss, damage, delay, non-delivery,misdelivery,or misinformation, unless you declare a higher value, pay an additional charge, document your actual loss and file a timely claim.Limitations found in the current FedEx Service Guide apply. Your right to recover from FedEx for any loss, including intrinsic value of the package, loss of sales, income interest, profit, attorney's fees, costs, and other forms of damage whether direct, incidental,consequential, or special is limited to the greater of $100 or the authorized declared value. Recovery cannot exceed actual documented loss.Maximum for items of extraordinary value is $1,000, e.g. jewelry, precious metals, negotiable instruments and other items listed in our ServiceGuide. Written claims must be filed within strict time limits, see current FedEx Service Guide.