Derek Maheux Program Manager
c/o Cellco Partnership d/b/a Verizon Wireless
Centerline Communications, LLC
750 West Center Street, Suite 301
West Bridgewater, MA 02379
Mobile: (508)649-3407
Dmaheux@clinellc.com

October 20, 2023

Melanie A. Bachman
Acting Executive Director
Connecticut Siting Council
10 Franklin Square
New Britain, CT 06051

**RE: Notice of Exempt Modification // Site: WOODBURY W CT (ATC: 208478)**
**478 Good Hill Road Woodbury, CT 06798**
**N 41.557222 // W -73.256778**

Dear Ms. Bachman,

Cellco Partnership d/b/a Verizon Wireless currently maintains fifteen (15) antenna at the 147-ft level on the existing 147ft Tower, located at 478 Good Hill Road, Woodbury, CT. The tower is owned by American Tower. Verizon Wireless proposed modification involves the installation of six (6) interference mitigation filters on Verizon Wireless existing antenna platform and mounting assembly.

Please accept this letter as notification pursuant to Regulations of Connecticut State Agencies §16-50j-73, for construction that constitutes an exempt modification pursuant to R.C.S.A. § 16-50j-72(b)(2). In accordance with R.C.S.A. § 16-50j-73, a copy of this letter is being sent to Bethany's Chief Elected Official and Land Use Officer.

The planned modifications to the facility fall squarely within those activities explicitly provided for in R.C.S.A. § 16-50j-72(b)(2). Enclosed to accommodate this filing are construction drawings dated October 11, 2023, by A.T Engineering Services, LLC, a structural analysis dated August 9, 2023, by American Tower Corp., and a structural mount analysis by Colliers Engineering and Design dated September 27, 2023, and Non-Ionizing Electromagnetic Radiation (NIER) Study dated September 10, 2023, by Tower Engineering Professionals.

1. The proposed modifications will not result in an increase in the height of the existing structure.

2. The proposed modifications will not require the extension of the site boundary.

3. The proposed modifications will not increase noise levels at the facility by six decibels or more, or to levels that exceed state and local criteria.

4. The operation of the new antennas will not increase radio frequency emissions at the facility to a level at or above the Federal Communications Commission safety standard.

5. The proposed modifications will not cause a change or alteration in the physical or environmental characteristics of the site.

6. The existing structure and its foundation can support the proposed loading, as shown in the attached structural analysis and a structural mount analysis, pursuant to certain conditions defined therein. Design and engineering are fully illustrated within final construction drawings.

For the foregoing reasons, Verizon Wireless respectfully submits that the proposed modifications to the above referenced telecommunications facility constitute an exempt modification under R.C.S.A. § 16-50j-72(b)(2).

Sincerely,

*Derek Maheux*

_____

Derek Maheux, Program Manager
c/o Cellco Partnership d/b/a Verizon Wireless
Centerline Communications, LLC
750 West Center Street, Suite 301
West Bridgewater, MA 02379
Mobile: (508) 649 2307
Dmaheux@clinellc.com

Attachments: Exhibit 1 – Construction Drawings
Exhibit 2 – Property Card and GIS
Exhibit 3 – Structural Analysis
Exhibit 4 – Mount Analysis
Exhibit 5 – RF Emissions Analysis Report Evaluation
Exhibit 6 – Available Original Tower Approval Records
Exhibit 7 – Notice Deliver Confirmations

cc: Barbara Perkinson – First Selectwoman– Chief Elected Official
William Agresta – Town Planner - as P&Z official
American Tower Corporation - as tower owner
Roxbury Land Trust INC – as ground owner

# EXHIBIT 1

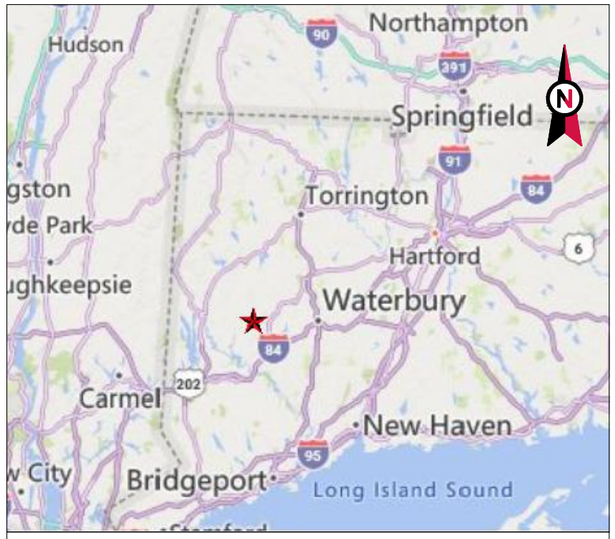


VICINITY MAP

AMERICAN TOWER®

ATC SITE NAME: GOOD HILL CT
ATC SITE NUMBER: 411180
VERIZON SITE NAME: WOODBURY W CT
VERIZON SITE NUMBER: 5000245327
VERIZON FUZE PID: 17123973
SITE ADDRESS: 478 GOOD HILL ROAD
WOODBURY, CT 06798

LOCATION MAP

# VERIZON AMENDMENT DRAWINGS

## COMPLIANCE CODE

ALL WORK SHALL BE PERFORMED AND MATERIALS INSTALLED IN ACCORDANCE WITH THE CURRENT EDITIONS OF THE FOLLOWING CODES AS ADOPTED BY THE LOCAL GOVERNMENT AUTHORITIES. NOTHING IN THESE PLANS IS TO BE CONSTRUED TO PERMIT WORK NOT CONFORMING TO THESE CODES.

1. 2020 NFPA 70, NATIONAL ELECTRIC CODE (NEC)
2. 2022 CONNECTICUT STATE BUILDING CODE
3. 2021 INTERNATIONAL BUILDING CODE (IBC)

DESIGN CRITERIA FROM TOWER STRUCTUAL ANALYSIS:

| | |
|---|---|
| BASIC WIND SPEED: | 115 MPH (3-SECOND GUST) |
| BASIC WIND SPEED W/ ICE: | 50 MPH (3-SECOND GUST) W/ 1.00" RADIAL ICE CONCURRENT |
| CODE(S): | ANSI/TIA-222-H / 2021 IBC / 2022 CONNECTICUT STATE BUILDING CODE |
| EXPOSURE CATEGORY: | B |
| RISK CATEGORY: | II |
| TOPO FACTOR PROCEDURE: | METHOD 1 |
| TOPOGRAPHIC CATEGORY: | 1 |
| SPECTRAL RESPONSE: | $S_S$=0.19, $S_1$=0.05 |
| SITE CLASS: | D - STIFF SOIL - DEFAULT |

INFORMATION TAKEN FROM STRUCTURAL ANALYSIS COMPLETED BY A.T. ENGINEERING SERVICES LLC, DATED 08/11/2023.

## UTILITY COMPANIES

POWER COMPANY: NORTHEAST UTILITY SERVICE
PHONE: (800) 286-2000

TELEPHONE COMPANY: ATT
PHONE: (800) 225-5288

811 Know what's below. Call before you dig.

## PROJECT SUMMARY

SITE ADDRESS:

478 GOOD HILL ROAD
WOODBURY, CT 06798
COUNTY: LITCHFIELD

GEOGRAPHIC COORDINATES:

LATITUDE: 41° 33' 26.181" N
LONGITUDE: 73° 15' 24.384" W
GROUND ELEVATION: 877' AMSL

## PROJECT TEAM

TOWER OWNER:

AMERICAN TOWER
10 PRESIDENTIAL WAY
WOBURN, MA 01801

APPLICANT:

VERIZON WIRELESS

ENGINEER:

ATC TOWER SERVICES, LLC
3500 REGENCY PKWY STE 100
CARY, NC 27518

PROPERTY OWNER:

ROXBURY LAND TR
478 GOOD HILL ROAD
WOODBURY, CT 06798

## PROJECT DESCRIPTION

THE PROPOSED PROJECT INCLUDES MODIFYING GROUND BASED AND TOWER MOUNTED EQUIPMENT AS INDICATED PER BELOW:

INSTALL MOUNT MODIFICATIONS AND (6) FILTER(s)

EXISTING (15) ANTENNA(s), (6) RRH(s), (3) DIPLEXER(s), (1) OVP(s), AND (6) 1-5/8" COAX / (2) 1-5/8" FIBER CABLE(s) TO REMAIN

## PROJECT NOTES

1. THE FACILITY IS UNMANNED.
2. A TECHNICIAN WILL VISIT THE SITE APPROXIMATELY ONCE A MONTH FOR ROUTINE INSPECTION AND MAINTENANCE.
3. THE PROJECT WILL NOT RESULT IN ANY SIGNIFICANT LAND DISTURBANCE OR EFFECT OF STORM WATER DRAINAGE.
4. NO SANITARY SEWER, POTABLE WATER OR TRASH DISPOSAL IS REQUIRED.
5. HANDICAP ACCESS IS NOT REQUIRED.
6. THE PROJECT DEPICTED IN THESE PLANS QUALIFIES AS AN ELIGIBLE FACILITIES REQUEST ENTITLED TO EXPEDITED REVIEW UNDER 47 U.S.C. § 1455(A) AS A MODIFICATION OF AN EXISTING WIRELESS TOWER THAT INVOLVES THE COLLOCATION, REMOVAL, AND/OR REPLACEMENT OF TRANSMISSION EQUIPMENT THAT IS NOT A SUBSTANTIAL CHANGE UNDER CFR § 1.61000 (B)(7).

## PROJECT LOCATION DIRECTIONS

FROM HAMDEN / NEW HAVEN TAKE CT-15 WILBUR CROSS PARKWAY S TOWARD NEW YORK CITY. TAKE EXIT 59 CT-69 TURN LEFT ONTO CT-69 TURN LEFT ON LUCY STREET TURN RIGHT ON CT-63 AMITY ROAD TURN LEFT ONTO CT-67 SEYMOUR ROAD CONTINUE ON CT-67 TURN LEFT ON ROXBURY ROAD CT-67 TURN RIGHT ONTO TRANSYLVANIA ROAD TURN LEFT ON GOOD HILL ROAD CT-317 478 GOOD HILL ROAD IS ON THE RIGHT ROXBURY LAND TRUST

## SHEET INDEX

| SHEET NO: | DESCRIPTION: | REV: | DATE: | BY: |
|---|---|---|---|---|
| G-001 | TITLE SHEET | 0 | 10/11/2023 | JLR |
| G-002 | GENERAL NOTES | 0 | 10/11/2023 | JLR |
| C-101 | DETAILED SITE PLAN | 0 | 10/11/2023 | JLR |
| C-201 | TOWER ELEVATION | 0 | 10/11/2023 | JLR |
| C-401 | ANTENNA INFORMATION & SCHEDULE | 0 | 10/11/2023 | JLR |
| C-501 | CONSTRUCTION DETAILS | 0 | 10/11/2023 | JLR |
| E-501 | GROUNDING DETAILS | 0 | 10/11/2023 | JLR |
| R-601 | SUPPLEMENTAL | | | |

## CONTRACTOR PMI REQUIREMENTS

| | |
|---|---|
| PMI ACCESSED AT: | HTTPS://PMI.VZWSMART.COM |
| SMART TOOL VENDOR PROJECT NUMBER: | 10207617 |
| VZW LOCATION CODE (PSLC): | 5000245327 |

***PMI AND REQUIREMENTS ALSO EMBEDDED IN MOUNT ANALYSIS REPORT

| | |
|---|---|
| MOUNT MODIFICATION REQUIRED: | NO |
| VZW APPROVED SMART KIT VENDORS: | REFER TO MOUNT MODIFICATION DRAWINGS PAGES FOR VZW SMART KIT APPROVED VENDORS |

AMERICAN TOWER®
A.T. ENGINEERING SERVICES LLC
3500 REGENCY PARKWAY
SUITE 100
CARY, NC 27518
PHONE: (919) 468-0112
PEC.0001553

THE USE AND PUBLICATION OF THESE DRAWINGS SHALL BE RESTRICTED TO THE ORIGINAL SITE FOR WHICH THEY ARE PREPARED. ANY USE OR DISCLOSURE OTHER THAN THAT WHICH RELATES TO AMERICAN TOWER OR THE SPECIFIED CARRIER IS STRICTLY PROHIBITED. NEITHER THE ARCHITECT NOR THE ENGINEER WILL BE PROVIDING ON-SITE CONSTRUCTION REVIEW OF THIS PROJECT. CONTRACTOR(S) MUST VERIFY ALL DIMENSIONS AND ADVISE AMERICAN TOWER OR THE SPECIFIED CARRIER OF ANY DISCREPANCIES. ANY PRIOR ISSUANCE OF THIS DRAWING IS SUPERSEDED BY THE LATEST VERSION.

Copyright © 2023 ATC IP LLC. All Rights Reserved.

| REV. | DESCRIPTION | BY | DATE |
|---|---|---|---|
| 0 | FOR CONSTRUCTION | JLR | 10/11/2023 |

ATC SITE NUMBER:
411180
ATC SITE NAME:
GOOD HILL CT
VERIZON SITE NAME:
WOODBURY W CT
SITE ADDRESS:
478 GOOD HILL ROAD
WOODBURY, CT 06798

SEAL:

verizon

| | |
|---|---|
| ATC JOB NO: | 14519465_G0 |
| CUSTOMER ID: | WOODBURY W CT |
| CUSTOMER #: | 5000245327 |

TITLE SHEET

| SHEET NUMBER: | REVISION: |
|---|---|
| G-001 | 0 |

## GENERAL CONSTRUCTION NOTES:

1. OWNER FURNISHED MATERIALS, VERIZON "THE COMPANY" WILL PROVIDE AND THE CONTRACTOR WILL INSTALL
   - A. BTS EQUIPMENT FRAME (PLATFORM) AND ICEBRIDGE SHELTER (GROUND BUILD/CO-LOCATE ONLY)
   - B. AC/TELCO INTERFACE BOX (PPC)
   - C. ICE BRIDGE (CABLE TRAY WITH COVER) (GROUND BUILD/CO-LOCATE ONLY, GC TO FURNISH AND INSTALL FOR ROOFTOP INSTALLATION)
   - D. TOWERS, MONOPOLES
   - E. TOWER LIGHTING
   - F. GENERATORS & LIQUID PROPANE TANK
   - G. ANTENNA STANDARD BRACKETS, FRAMES AND PIPES FOR MOUNTING
   - H. ANTENNAS (INSTALLED BY OTHERS)
   - I. TRANSMISSION LINE
   - J. TRANSMISSION LINE JUMPERS
   - K. TRANSMISSION LINE CONNECTORS WITH WEATHERPROOFING KITS
   - L. TRANSMISSION LINE GROUND KITS
   - M. HANGERS
   - N. HOISTING GRIPS
   - O. BTS EQUIPMENT
2. THE CONTRACTOR IS RESPONSIBLE TO PROVIDE ALL OTHER MATERIALS FOR THE COMPLETE INSTALLATION OF THE SITE INCLUDING, BUT NOT LIMITED TO, SUCH MATERIALS AS FENCING, STRUCTURAL STEEL SUPPORTING SUB-FRAME FOR PLATFORM, ROOFING LABOR AND MATERIALS, GROUNDING RINGS, GROUNDING WIRES, COPPER-CLAD OR XIT CHEMICAL GROUND ROD(S), BUSS BARS, TRANSFORMERS AND DISCONNECT SWITCHES WHERE APPLICABLE, TEMPORARY ELECTRICAL POWER, CONDUIT, LANDSCAPING COMPOUND STONE, CRANES, CORE DRILLING, SLEEPERS AND RUBBER MATTING, REBAR, CONCRETE CAISSONS, PADS AND/OR AUGER MOUNTS, MISCELLANEOUS FASTENERS, CABLE TRAYS, NON-STANDARD ANTENNA FRAMES AND ALL OTHER MATERIAL AND LABOR REQUIRED TO COMPLETE THE JOB ACCORDING TO THE DRAWINGS AND SPECIFICATIONS. IT IS THE POSITION OF VERIZON TO APPLY FOR PERMITTING AND CONTRACTOR RESPONSIBLE FOR PICKUP AND PAYMENT OF REQUIRED PERMITS.
3. ALL WORK SHALL CONFORM TO ALL CURRENT APPLICABLE FEDERAL, STATE, AND LOCAL CODES, INCLUDING ANSI/EIA/TIA-222, AND COMPLY WITH ATC CONSTRUCTION SPECIFICATIONS.
4. CONTRACTOR SHALL CONTACT LOCAL 811 FOR IDENTIFICATION OF UNDERGROUND UTILITIES PRIOR TO START OF CONSTRUCTION.
5. CONTRACTOR SHALL BE RESPONSIBLE FOR COORDINATING ALL REQUIRED INSPECTIONS.
6. ALL DIMENSIONS TO, OF, AND ON EXISTING BUILDINGS, DRAINAGE STRUCTURES, AND SITE IMPROVEMENTS SHALL BE VERIFIED IN FIELD BY CONTRACTOR WITH ALL DISCREPANCIES REPORTED TO THE ENGINEER.
7. DO NOT CHANGE SIZE OR SPACING OF STRUCTURAL ELEMENTS.
8. DETAILS SHOWN ARE TYPICAL; SIMILAR DETAILS APPLY TO SIMILAR CONDITIONS UNLESS OTHERWISE NOTED.
9. THESE DRAWINGS DO NOT INCLUDE NECESSARY COMPONENTS FOR CONSTRUCTION SAFETY WHICH SHALL BE THE SOLE RESPONSIBILITY OF THE CONTRACTOR.
10. CONTRACTOR SHALL BRACE STRUCTURES UNTIL ALL STRUCTURAL ELEMENTS NEEDED FOR STABILITY ARE INSTALLED. THESE ELEMENTS ARE AS FOLLOWS: LATERAL BRACING, ANCHOR BOLTS, ETC.
11. CONTRACTOR SHALL DETERMINE EXACT LOCATION OF EXISTING UTILITIES, GROUNDS DRAINS, DRAIN PIPES, VENTS, ETC. BEFORE COMMENCING WORK.
12. INCORRECTLY FABRICATED, DAMAGED, OR OTHERWISE MISFITTING OR NONCONFORMING MATERIALS OR CONDITIONS SHALL BE REPORTED TO THE VERIZON REP PRIOR TO REMEDIAL OR CORRECTIVE ACTION. ANY SUCH REMEDIAL ACTION SHALL REQUIRE WRITTEN APPROVAL BY THE VERIZON REP PRIOR TO PROCEEDING.
13. EACH CONTRACTOR SHALL COOPERATE WITH THE VERIZON REP, AND COORDINATE HIS WORK WITH THE WORK OF OTHERS.
14. CONTRACTOR SHALL REPAIR ANY DAMAGE CAUSED BY CONSTRUCTION OF THIS PROJECT TO MATCH EXISTING PRE-CONSTRUCTION CONDITIONS TO THE SATISFACTION OF THE VERIZON CONSTRUCTION MANAGER.
15. ALL CABLE/CONDUIT ENTRY/EXIT PORTS SHALL BE WEATHERPROOFED DURING INSTALLATION USING A SILICONE SEALANT.
16. WHERE EXISTING CONDITIONS DO NOT MATCH THOSE SHOWN IN THIS PLAN SET, CONTRACTOR SHALL NOTIFY THE VERIZON REP AND ENGINEER OF RECORD IMMEDIATELY.
17. CONTRACTOR SHALL ENSURE ALL SUBCONTRACTORS ARE PROVIDED WITH A COMPLETE AND CURRENT SET OF DRAWINGS AND SPECIFICATIONS FOR THIS PROJECT.
18. CONTRACTOR SHALL REMOVE ALL RUBBISH AND DEBRIS FROM THE SITE AT THE END OF EACH DAY.
19. CONTRACTOR SHALL COORDINATE WORK SCHEDULE WITH AMERICAN TOWER CORPORATION (ATC) AND TAKE PRECAUTIONS TO MINIMIZE IMPACT AND DISRUPTION OF OTHER OCCUPANTS OF THE FACILITY.
20. CONTRACTOR SHALL FURNISH VERIZON AND AMERICAN TOWER CORPORATION (ATC) WITH A PDF MARKED UP AS-BUILT SET OF DRAWINGS UPON COMPLETION OF WORK.
21. PRIOR TO SUBMISSION OF BID, CONTRACTOR SHALL COORDINATE WITH VERIZON REP TO DETERMINE WHAT, IF ANY, ITEMS WILL BE PROVIDED. ALL ITEMS NOT PROVIDED SHALL BE PROVIDED AND INSTALLED BY THE CONTRACTOR. CONTRACTOR WILL INSTALL ALL ITEMS PROVIDED.
22. PRIOR TO SUBMISSION OF BID, CONTRACTOR SHALL COORDINATE WITH VERIZON REP TO DETERMINE IF ANY PERMITS WILL BE OBTAINED BY CONTRACTOR. ALL REQUIRED PERMITS NOT OBTAINED BY VERIZON MUST BE OBTAINED, AND PAID FOR, BY THE CONTRACTOR.
23. CONTRACTOR SHALL INSTALL ALL SITE SIGNAGE IN ACCORDANCE WITH VERIZON SPECIFICATIONS AND REQUIREMENTS.
24. CONTRACTOR SHALL SUBMIT ALL SHOP DRAWINGS TO VERIZON FOR REVIEW AND APPROVAL PRIOR TO FABRICATION.
25. ALL EQUIPMENT SHALL BE INSTALLED ACCORDING TO MANUFACTURER'S SPECIFICATIONS AND LOCATED ACCORDING TO VERIZON SPECIFICATIONS, AND AS SHOWN IN THESE PLANS.
26. THE CONTRACTOR SHALL SUPERVISE AND DIRECT THE PROJECT DESCRIBED HEREIN. THE CONTRACTOR SHALL BE SOLELY RESPONSIBLE FOR ALL THE CONSTRUCTION MEANS, METHODS, TECHNIQUES, SEQUENCES AND PROCEDURES AND FOR COORDINATING ALL PORTIONS OF THE WORK UNDER THE CONTRACT.
27. CONTRACTOR SHALL NOTIFY VERIZON REP A MINIMUM OF 48 HOURS IN ADVANCE OF POURING CONCRETE OR BACKFILLING ANY UNDERGROUND UTILITIES, FOUNDATIONS OR SEALING ANY WALL, FLOOR OR ROOF PENETRATIONS FOR ENGINEERING REVIEW AND APPROVAL.
28. WHEN THE PROJECT SCOPE REQUIRES THE USE OF THE SAFETY CLIMB, THE GENERAL CONTRACTOR SHALL ENSURE THE SAFETY CLIMB IS FREE OF OBSTRUCTIONS, NOT RUBBING ON OR TRAPPED BY ANY INSTALLED CUSTOMER EQUIPMENT, IS VISUALLY TAUT, MEETS MANUFACTURER INSTALLATION SPECIFICATIONS, AND IS FIRMLY SECURED AT ALL CABLE GUIDE LOCATIONS UPON PROJECT COMPLETION.
29. COMPLETION OF PROJECT SHALL NOT OBSTRUCT, TRAP, LOOSEN, OR OTHERWISE CAUSE FAILURE TO MEET MANUFACTURER INSTALLATION REQUIREMENTS FOR THE SAFETY CLIMB.
30. CONTRACTOR SHALL BE RESPONSIBLE FOR SITE SAFETY INCLUDING COMPLIANCE WITH ALL APPLICABLE OSHA STANDARDS AND RECOMMENDATIONS AND SHALL PROVIDE ALL NECESSARY SAFETY DEVICES INCLUDING PPE AND PPM AND CONSTRUCTION DEVICES SUCH AS WELDING AND FIRE PREVENTION, TEMPORARY SHORING, SCAFFOLDING, TRENCH BOXES/SLOPING, BARRIERS, ETC.
31. THE CONTRACTOR SHALL PROTECT AT HIS OWN EXPENSE, ALL EXISTING FACILITIES AND SUCH OF HIS NEW WORK LIABLE TO INJURY DURING THE CONSTRUCTION PERIOD. ANY DAMAGE CAUSED BY NEGLECT ON THE PART OF THIS CONTRACTOR OR HIS REPRESENTATIVES, OR BY THE ELEMENTS DUE TO NEGLECT ON THE PART OF THIS CONTRACTOR OR HIS REPRESENTATIVES, EITHER TO THE EXISTING WORK, OR TO HIS WORK OR THE WORK OF ANY OTHER CONTRACTOR, SHALL BE REPAIRED AT HIS EXPENSE TO THE OWNER'S SATISFACTION.
32. ALL WORK SHALL BE INSTALLED IN A FIRST CLASS, NEAT AND WORKMANLIKE MANNER BY MECHANICS SKILLED IN THE TRADE INVOLVED. THE QUALITY OF WORKMANSHIP SHALL BE SUBJECT TO THE APPROVAL OF THE VERIZON REP. ANY WORK FOUND BY THE VERIZON REP TO BE OF INFERIOR QUALITY AND/OR WORKMANSHIP SHALL BE REPLACED AND/OR REWORKED AT CONTRACTOR EXPENSE UNTIL APPROVAL IS OBTAINED.
33. IN ORDER TO ESTABLISH STANDARDS OF QUALITY AND PERFORMANCE, ALL TYPES OF MATERIALS LISTED HEREINAFTER BY MANUFACTURER'S NAMES AND/OR MANUFACTURER'S CATALOG NUMBER SHALL BE PROVIDED BY THESE MANUFACTURERS AS SPECIFIED.
34. VERIZON FURNISHED EQUIPMENT SHALL BE PICKED-UP AT THE VERIZON WAREHOUSE, NO LATER THAN 48HR AFTER BEING NOTIFIED INSURED, STORED, UNCRATE, PROTECTED AND INSTALLED BY THE CONTRACTOR WITH ALL APPURTENANCES REQUIRED TO PLACE THE EQUIPMENT IN OPERATION, READY FOR USE. THE CONTRACTOR SHALL BE RESPONSIBLE FOR THE EQUIPMENT AFTER PICKING IT UP.
35. VERIZON OR HIS ARCHITECT/ENGINEER RESERVES THE RIGHT TO REJECT ANY EQUIPMENT OR MATERIALS WHICH, IN HIS OWN OPINION ARE NOT IN COMPLIANCE WITH THE CONTRACT DOCUMENTS, EITHER BEFORE OR AFTER INSTALLATION AND THE EQUIPMENT SHALL BE REPLACED WITH EQUIPMENT CONFORMING TO THE REQUIREMENTS OF THE CONTRACT DOCUMENTS BY THE CONTRACTOR AT NO COST TO VERIZON OR THEIR ARCHITECT/ENGINEER.

## SPECIAL CONSTRUCTION
## ANTENNA INSTALLATION NOTES:

1. WORK INCLUDED:
   - A. ANTENNA AND COAXIAL CABLES ARE FURNISHED BY VERIZON UNDER A SEPARATE CONTRACT. THE CONTRACTOR SHALL ASSIST ANTENNA INSTALLATION CONTRACTOR IN TERMS OF COORDINATION AND SITE ACCESS. ERECTION SUBCONTRACTOR SHALL BE RESPONSIBLE FOR THE PROTECTION OF PERSONNEL.
   - B. INSTALL ANTENNAS AS INDICATED ON DRAWINGS AND VERIZON SPECIFICATIONS.
   - C. INSTALL GALVANIZED STEEL ANTENNA MOUNTS AS INDICATED ON DRAWINGS.
   - D. INSTALL FURNISHED GALVANIZED STEEL OR ALUMINUM WAVEGUIDE.
   - E. CONTRACTOR SHALL PROVIDE FOUR (4) SETS OF SWEEP TESTS USING ANRITZU-PACKARD 8713B RF SCALAR NETWORK ANALYZER. SUBMIT FREQUENCY DOMAIN REFLECTOMETER(FDR) TESTS RESULTS TO THE PROJECT MANAGER. SWEEP TESTS SHALL BE AS PER ATTACHED RFS "MINIMUM FIELD TESTING RECOMMENDED FOR ANTENNA AND HELIAX COAXIAL CABLE SYSTEMS" DATED 10/5/93. TESTING SHALL BE PERFORMED BY AN INDEPENDENT TESTING SERVICE AND BE BOUND AND SUBMITTED WITHIN ONE WEEK OF WORK COMPLETION.
   - F. INSTALL COAXIAL CABLES AND TERMINATING BETWEEN ANTENNAS AND EQUIPMENT PER MANUFACTURER'S RECOMMENDATIONS. WEATHERPROOF ALL CONNECTIONS BETWEEN THE ANTENNA AND EQUIPMENT PER MANUFACTURER'S REQUIREMENTS. TERMINATE ALL COAXIAL CABLE THREE (3) FEET IN EXCESS OF ENTRY PORT LOCATION UNLESS OTHERWISE STATED.
   - G. ANTENNA AND COAXIAL CABLE GROUNDING:
2. ALL EXTERIOR #6 GREEN GROUND WIRE "DAISY CHAIN" CONNECTIONS ARE TO BE WEATHER SEALED WITH RFS CONNECTORS/SPLICE WEATHERPROOFING KIT #221213 OR EQUAL.
3. ALL COAXIAL CABLE GROUNDING KITS ARE TO BE INSTALLED ON STRAIGHT RUNS OF COAXIAL CABLE (NOT WITHIN BENDS)

**ALL DISCREPANCIES FROM WHAT IS SHOWN ON THESE CONSTRUCTION DRAWINGS SHALL BE COMMUNICATED TO ATC ENGINEERING IMMEDIATELY FOR CORRECTION OR RE-DESIGN. FAILURE TO COMMUNICATE DIRECTLY WITH ATC ENGINEERING OR ANY CHANGES FROM THE DESIGN CONDUCTED WITHOUT PRIOR APPROVAL FROM ATC ENGINEERING SHALL BE THE SOLE RESPONSIBILITY OF THE GENERAL CONTRACTOR.**


AMERICAN TOWER®
A.T. ENGINEERING SERVICES LLC
3500 REGENCY PARKWAY
SUITE 100
CARY, NC 27518
PHONE: (919) 468-0112
PEC.0001553



THE USE AND PUBLICATION OF THESE DRAWINGS SHALL BE RESTRICTED TO THE ORIGINAL SITE FOR WHICH THEY ARE PREPARED. ANY USE OR DISCLOSURE OTHER THAN THAT WHICH RELATES TO AMERICAN TOWER OR THE SPECIFIED CARRIER IS STRICTLY PROHIBITED. NEITHER THE ARCHITECT NOR THE ENGINEER WILL BE PROVIDING ON-SITE CONSTRUCTION REVIEW OF THIS PROJECT. CONTRACTOR(S) MUST VERIFY ALL DIMENSIONS AND ADVISE AMERICAN TOWER OR THE SPECIFIED CARRIER OF ANY DISCREPANCIES. ANY PRIOR ISSUANCE OF THIS DRAWING IS SUPERSEDED BY THE LATEST VERSION.


| REV. | DESCRIPTION | BY | DATE |
|---|---|---|---|
| 0 | FOR CONSTRUCTION | JLR | 10/11/2023 |
| | | | |
| | | | |
| | | | |
| | | | |

ATC SITE NUMBER:
411180
ATC SITE NAME:
GOOD HILL CT
VERIZON SITE NAME:
WOODBURY W CT
SITE ADDRESS:
478 GOOD HILL ROAD
WOODBURY, CT 06798

SEAL:

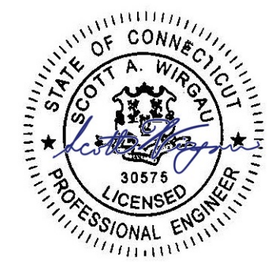


Digitally Signed: 2023-10-12

verizon

| | |
|---|---|
| ATC JOB NO: | 14519465_G0 |
| CUSTOMER ID: | WOODBURY W CT |
| CUSTOMER #: | 5000245327 |

GENERAL NOTES

| SHEET NUMBER: | REVISION: |
|---|---|
| G-002 | 0 |


Copyright © 2023 ATC IP LLC. All Rights Reserved.

SITE PLAN NOTES:

1. THIS SITE PLAN REPRESENTS THE BEST PRESENT KNOWLEDGE AVAILABLE TO THE ENGINEER AT THE TIME OF THIS DESIGN. THE CONTRACTOR SHALL VISIT THE SITE PRIOR TO CONSTRUCTION AND VERIFY ALL EXISTING CONDITIONS RELATED TO THE SCOPE OF WORK FOR THIS PROJECT.

2. ICE BRIDGE, CABLE LADDER, COAX PORT, AND COAX CABLE ARE SHOWN FOR REFERENCE ONLY. CONTRACTOR SHALL CONFIRM THE EXACT LOCATION OF ALL PROPOSED AND EXISTING EQUIPMENT AND STRUCTURES DEPICTED ON THIS PLAN. BEFORE UTILIZING EXISTING CABLE SUPPORTS, COAX PORTS, INSTALLING NEW PORTS OR ANY OTHER EQUIPMENT, CONTRACTOR SHALL VERIFY ALL ASPECTS OF THE COMPONENTS MEET THE ATC SPECIFICATIONS.

3. NO ELECTRICAL SCOPE IS INCLUDED IN THIS PROJECT.

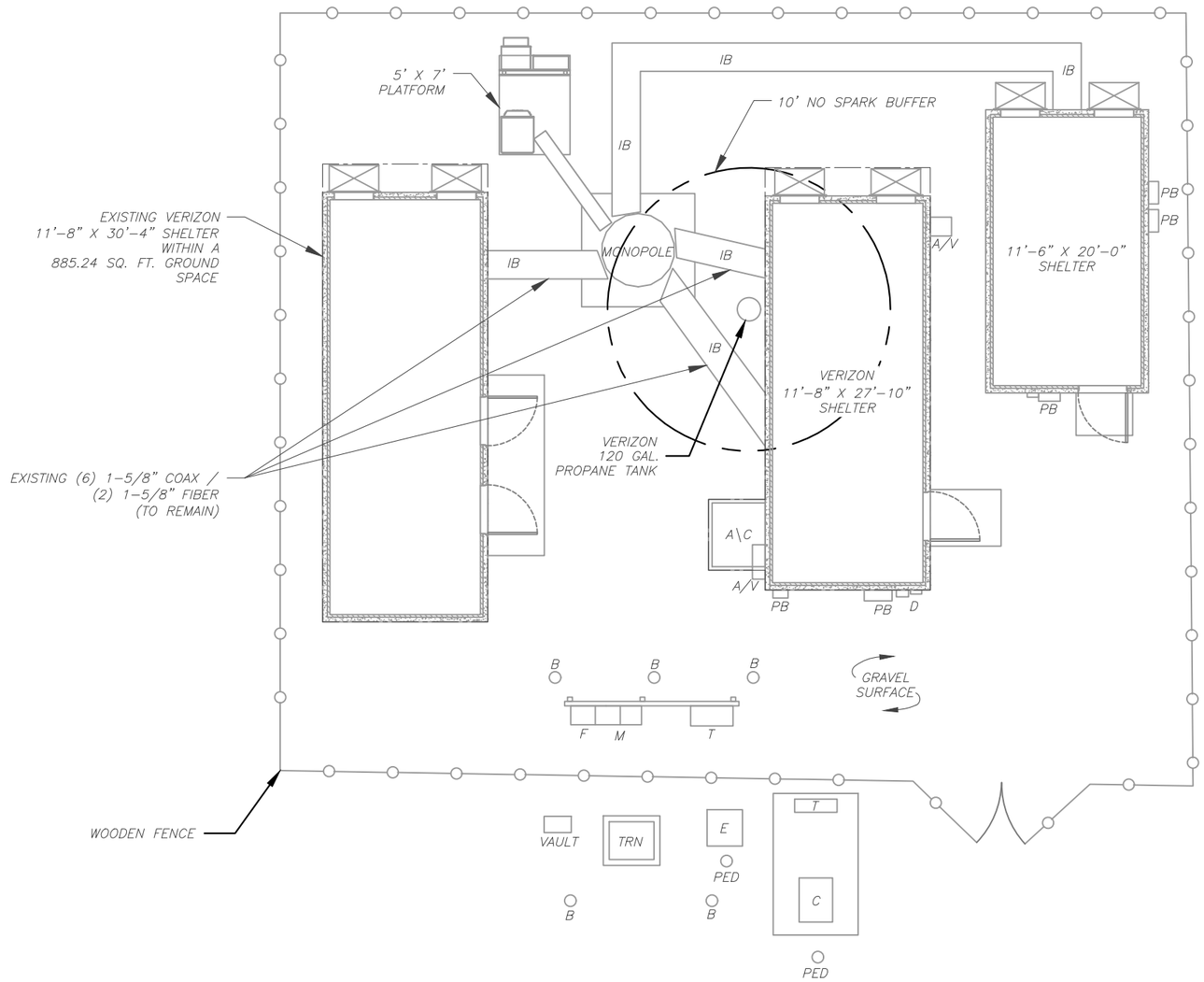


## LEGEND

| | |
|---|---|
| ⊗ | GROUNDING TEST WELL |
| ATS | AUTOMATIC TRANSFER SWITCH |
| B | BOLLARD |
| CSC | CELL SITE CABINET |
| D | DISCONNECT |
| E | ELECTRICAL |
| F | FIBER |
| GEN | GENERATOR |
| G | GENERATOR RECEPTACLE |
| HH, V | HAND HOLE, VAULT |
| IB | ICE BRIDGE |
| K | KENTROX BOX |
| LC | LIGHTING CONTROL |
| M | METER |
| PB | PULL BOX |
| PP | POWER POLE |
| T | TELCO |
| TRN | TRANSFORMER |
| | CHAINLINK FENCE |

1 DETAILED SITE PLAN

GRAPHIC SCALE

10 0 5 10

( IN FEET )
1 UNIT = 10 FEET


AMERICAN TOWER®
A.T. ENGINEERING SERVICES LLC
3500 REGENCY PARKWAY
SUITE 100
CARY, NC 27518
PHONE: (919) 468-0112
PEC.0001553



THE USE AND PUBLICATION OF THESE DRAWINGS SHALL BE RESTRICTED TO THE ORIGINAL SITE FOR WHICH THEY ARE PREPARED. ANY USE OR DISCLOSURE OTHER THAN THAT WHICH RELATES TO AMERICAN TOWER OR THE SPECIFIED CARRIER IS STRICTLY PROHIBITED. NEITHER THE ARCHITECT NOR THE ENGINEER WILL BE PROVIDING ON-SITE CONSTRUCTION REVIEW OF THIS PROJECT. CONTRACTOR(S) MUST VERIFY ALL DIMENSIONS AND ADVISE AMERICAN TOWER OR THE SPECIFIED CARRIER OF ANY DISCREPANCIES. ANY PRIOR ISSUANCE OF THIS DRAWING IS SUPERSEDED BY THE LATEST VERSION.


| REV. | DESCRIPTION | BY | DATE |
|---|---|---|---|
| 0 | FOR CONSTRUCTION | JLR | 10/11/2023 |
| | | | |
| | | | |
| | | | |
| | | | |

ATC SITE NUMBER:
411180

ATC SITE NAME:
GOOD HILL CT

VERIZON SITE NAME:
WOODBURY W CT

SITE ADDRESS:
478 GOOD HILL ROAD
WOODBURY, CT 06798

SEAL:

STATE OF CONNECTICUT
SCOTT A. WIRGAU
30575
LICENSED
PROFESSIONAL ENGINEER

Digitally Signed: 2023-10-12

verizon

| | |
|---|---|
| ATC JOB NO: | 14519465_G0 |
| CUSTOMER ID: | WOODBURY W CT |
| CUSTOMER #: | 5000245327 |

DETAILED SITE PLAN

| SHEET NUMBER: | REVISION: |
|---|---|
| C-101 | 0 |


Copyright © 2023 ATC IP LLC. All Rights Reserved.

PER MOUNT ANALYSIS COMPLETED BY COLLIERS ENGINEERING & DESIGN CT, P.C., DATED 09/27/2023, THE EXISTING MOUNT MUST BE MODIFIED TO ADEQUATELY SUPPORT THE PROPOSED LOADING. THE MOUNT MODIFICATION PROPOSED IN THE MOUNT ANALYSIS, INCLUDED AT THE END OF THIS PLAN SET, MUST BE INSTALLED PRIOR TO THE INSTALLATION OF THE PROPOSED ANTENNAS AND OTHER EQUIPMENT.

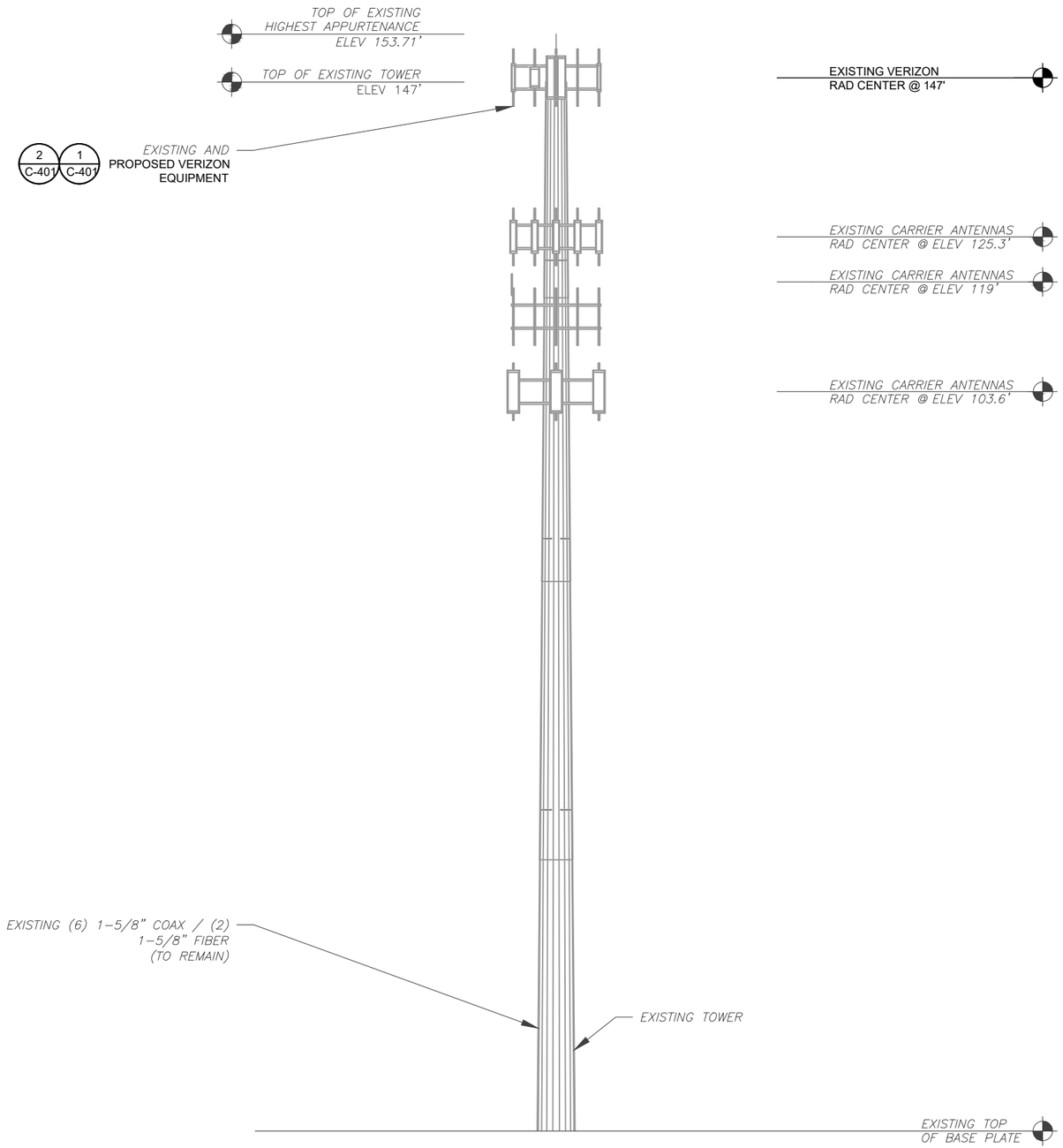


1 TOWER ELEVATION
SCALE: N.T.S.

TOWER NOTE:
1. IT IS THE CONTRACTOR'S RESPONSIBILITY TO CONFIRM WITH THE PROJECT MANAGER THAT THEY HAVE THE MOST RECENT VERSION OF THE STRUCTURAL ANALYSIS BEFORE COMMENCING WORK. EXISTING AND PROPOSED TOWER APPURTENANCES, MOUNTS, AND ANTENNAS ARE SHOWN BASED ON THE STRUCTURAL ANALYSIS.
2. WHERE APPLICABLE, ALL NEW ANTENNAS, EQUIPMENT, MOUNTS, CABLING, ETC. SHALL BE PAINTED/SOCKED TO MATCH EXISTING EQUIPMENT IN ACCORDANCE WITH FAA, JURISDICTION, AND/OR OTHER LOCAL REQUIREMENTS.
3. TOWER ELEVATIONS ARE MEASURED FROM TOP OF BASE PLATE TO MATCH STRUCTURAL ANALYSIS. ELEVATIONS DO NOT REFLECT TRUE ABOVE GROUND LEVEL (A.G.L.)
4. TOWER ELEVATION DEPICTION MAY NOT REFLECT ALL EQUIPMENT INCLUDED IN STRUCTURAL ANALYSIS. REFER TO STRUCTURAL ANALYSIS FOR FULL TOWER LOADING.


AMERICAN TOWER®
A.T. ENGINEERING SERVICES LLC
3500 REGENCY PARKWAY
SUITE 100
CARY, NC 27518
PHONE: (919) 468-0112
PEC.0001553



THE USE AND PUBLICATION OF THESE DRAWINGS SHALL BE RESTRICTED TO THE ORIGINAL SITE FOR WHICH THEY ARE PREPARED. ANY USE OR DISCLOSURE OTHER THAN THAT WHICH RELATES TO AMERICAN TOWER OR THE SPECIFIED CARRIER IS STRICTLY PROHIBITED. NEITHER THE ARCHITECT NOR THE ENGINEER WILL BE PROVIDING ON-SITE CONSTRUCTION REVIEW OF THIS PROJECT. CONTRACTOR(S) MUST VERIFY ALL DIMENSIONS AND ADVISE AMERICAN TOWER OR THE SPECIFIED CARRIER OF ANY DISCREPANCIES. ANY PRIOR ISSUANCE OF THIS DRAWING IS SUPERSEDED BY THE LATEST VERSION.


| REV. | DESCRIPTION | BY | DATE |
|---|---|---|---|
| 0 | FOR CONSTRUCTION | JLR | 10/11/2023 |
| | | | |
| | | | |
| | | | |
| | | | |

ATC SITE NUMBER:
411180
ATC SITE NAME:
GOOD HILL CT
VERIZON SITE NAME:
WOODBURY W CT
SITE ADDRESS:
478 GOOD HILL ROAD
WOODBURY, CT 06798

SEAL:

Digitally Signed: 2023-10-12

verizon

| | |
|---|---|
| ATC JOB NO: | 14519465_G0 |
| CUSTOMER ID: | WOODBURY W CT |
| CUSTOMER #: | 5000245327 |

TOWER ELEVATION

| SHEET NUMBER: | REVISION: |
|---|---|
| C-201 | 0 |


Copyright © 2023 ATC IP LLC. All Rights Reserved.

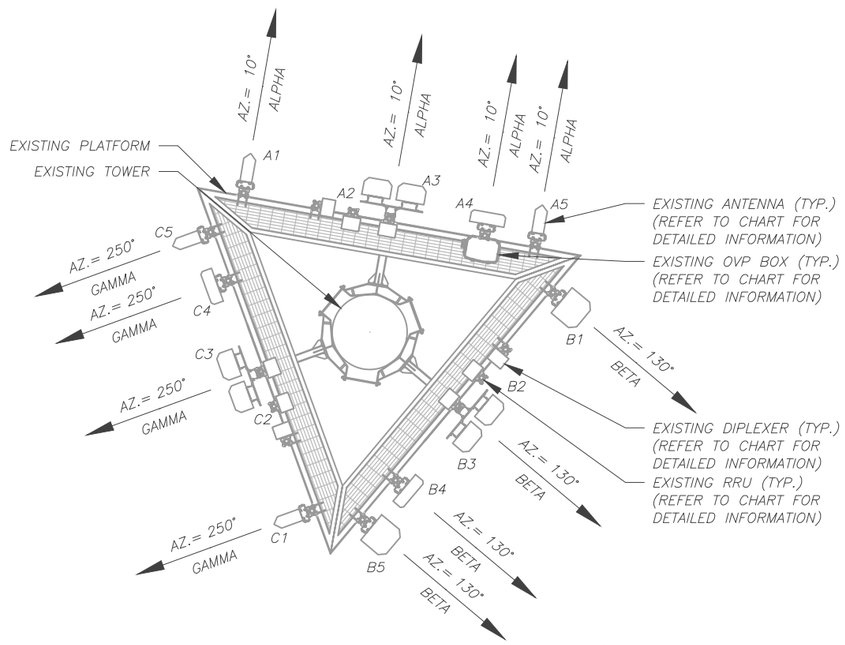


1 EXISTING ANTENNA PLAN

SCALE: N.T.S.

PER MOUNT ANALYSIS COMPLETED BY COLLIERS ENGINEERING & DESIGN CT, P.C., DATED 09/27/2023, THE EXISTING MOUNT MUST BE MODIFIED TO ADEQUATELY SUPPORT THE PROPOSED LOADING. THE MOUNT MODIFICATION PROPOSED IN THE MOUNT ANALYSIS, INCLUDED AT THE END OF THIS PLAN SET, MUST BE INSTALLED PRIOR TO THE INSTALLATION OF THE PROPOSED ANTENNAS AND OTHER EQUIPMENT.

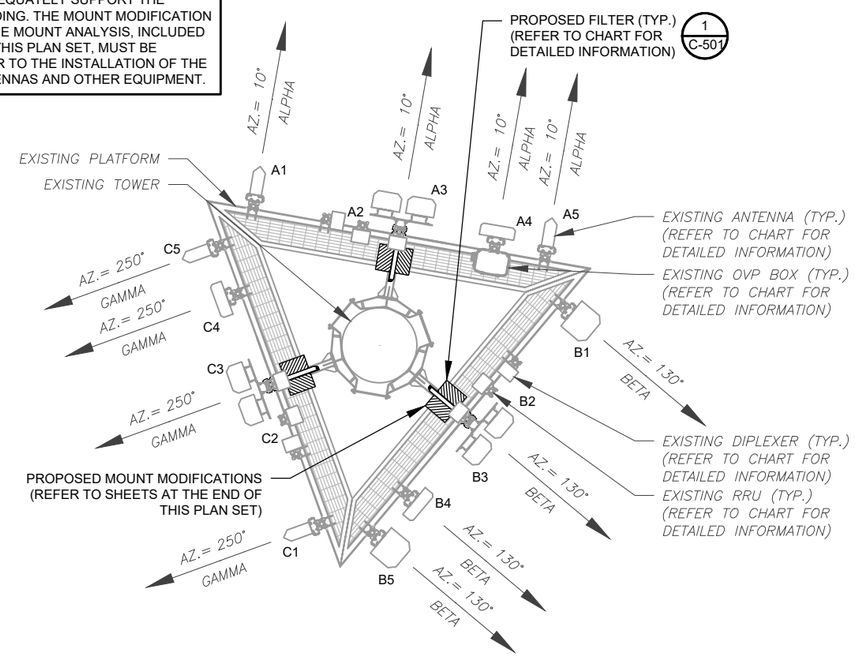


2 FINAL ANTENNA PLAN

SCALE: N.T.S.

EXISTING ANTENNA SCHEDULE

| LOCATION | | | ANTENNA SUMMARY | | | | NON ANTENNA SUMMARY | |
|---|---|---|---|---|---|---|---|---|
| SECTOR | RAD | AZ | POS | ANTENNA | BAND | STATUS | ADDITIONAL TOWER MOUNTED EQUIPMENT | STATUS |
| ALPHA | 147' | 10° | A1 | LPA-80080/4CF | – | RMN | – | – |
| | | | A2 | – | – | – | CBC78T-DS-43-2X | RMN |
| | | | | | | | B5/B13 RRH-BR04C | RMN |
| | | | A3 | JAHH-65B-R3B | – | RMN | B2/B66A RRH-BR049 | RMN |
| | | | | JAHH-65B-R3B | | | | |
| | | | A4 | MT6407-77A | – | RMN | – | – |
| | | | A5 | LPA-80080/4CF | – | RMN | – | – |
| BETA | 147' | 130° | B1 | LPA-80063/4CF | – | RMN | – | – |
| | | | B2 | – | – | – | CBC78T-DS-43-2X | RMN |
| | | | | | | | B5/B13 RRH-BR04C | RMN |
| | | | B3 | JAHH-65B-R3B | – | RMN | B2/B66A RRH-BR049 | RMN |
| | | | | JAHH-65B-R3B | | | | |
| | | | B4 | MT6407-77A | – | RMN | – | – |
| | | | B5 | LPA-80063/4CF | – | RMN | – | – |
| GAMMA | 147' | 250° | C1 | LPA-80080/4CF | – | RMN | – | – |
| | | | C2 | – | – | – | CBC78T-DS-43-2X | RMN |
| | | | | | | | B5/B13 RRH-BR04C | RMN |
| | | | C3 | JAHH-65B-R3B | – | RMN | B2/B66A RRH-BR049 | RMN |
| | | | | JAHH-65B-R3B | | | | |
| | | | C4 | MT6407-77A | – | RMN | – | – |
| | | | C5 | LPA-80080/4CF | – | RMN | – | – |

NOTES

1. CONFIRM WITH VERIZON REP FOR APPLICABLE UPDATES/REVISIONS AND MOST RECENT RFDS FOR NSN CONFIGURATION (CONFIG). GC TO CAP ALL UNUSED PORTS.
2. CONFIRM SPACING OF PROPOSED EQUIP DOES NOT CAUSE TOWER CONFLICTS NOR IMPEDE TOWER CLIMBING PEGS.

STATUS ABBREVIATIONS

RMV: TO BE REMOVED
RMN: TO REMAIN
REL: TO BE RELOCATED
ADD: TO BE ADDED

CABLE LENGTHS FOR JUMPERS

JUNCTION BOX TO RRU: 15'
RRU TO ANTENNA: 10'

FINAL ANTENNA SCHEDULE

| LOCATION | | | ANTENNA SUMMARY | | | | NON ANTENNA SUMMARY | |
|---|---|---|---|---|---|---|---|---|
| SECTOR | RAD | AZ | POS | ANTENNA | BAND | STATUS | ADDITIONAL TOWER MOUNTED EQUIPMENT | STATUS |
| ALPHA | 147' | 10° | A1 | LPA-80080/4CF | - | RMN | - | - |
| | | | A2 | - | - | - | CBC78T-DS-43-2X | RMN |
| | | | | | | | B5/B13 RRH-BR04C | RMN |
| | | | A3 | JAHH-65B-R3B | - | RMN | B2/B66A RRH-BR049 | RMN |
| | | | | JAHH-65B-R3B | | | (2) KA-6030 | ADD |
| | | | A4 | MT6407-77A | - | RMN | - | - |
| | | | A5 | LPA-80080/4CF | - | RMN | - | - |
| BETA | 147' | 130° | B1 | LPA-80063/4CF | - | RMN | - | - |
| | | | B2 | - | - | - | CBC78T-DS-43-2X | RMN |
| | | | | | | | B5/B13 RRH-BR04C | RMN |
| | | | B3 | JAHH-65B-R3B | - | RMN | B2/B66A RRH-BR049 | RMN |
| | | | | JAHH-65B-R3B | | | (2) KA-6030 | ADD |
| | | | B4 | MT6407-77A | - | RMN | - | - |
| | | | B5 | LPA-80063/4CF | - | RMN | - | - |
| GAMMA | 147' | 250° | C1 | LPA-80080/4CF | - | RMN | - | - |
| | | | C2 | - | - | - | CBC78T-DS-43-2X | RMN |
| | | | | | | | B5/B13 RRH-BR04C | RMN |
| | | | C3 | JAHH-65B-R3B | - | RMN | B2/B66A RRH-BR049 | RMN |
| | | | | JAHH-65B-R3B | | | (2) KA-6030 | ADD |
| | | | C4 | MT6407-77A | - | RMN | - | - |
| | | | C5 | LPA-80080/4CF | - | RMN | - | - |

| EXISTING FIBER DISTRIBUTION/OVP BOX | | EXISTING CABLING SUMMARY | |
|---|---|---|---|
| MODEL NUMBER | STATUS | CABLE QTY, SIZE, TYPE | STATUS |
| (1) DB-C1-12C-24AB-0Z | RMN | (6) 1-5/8" COAX / (2) 1-5/8" FIBER | RMN |

3 EQUIPMENT SCHEDULES

| FINAL FIBER DISTRIBUTION / OVP BOX | | FINAL CABLING SUMMARY | |
|---|---|---|---|
| MODEL NUMBER | STATUS | CABLE QTY, SIZE, TYPE | STATUS |
| (1) DB-C1-12C-24AB-0Z | RMN | (6) 1-5/8" COAX / (2) 1-5/8" FIBER | RMN |

AMERICAN TOWER®
A.T. ENGINEERING SERVICES LLC
3500 REGENCY PARKWAY
SUITE 100
CARY, NC 27518
PHONE: (919) 468-0112
PEC.0001553

THE USE AND PUBLICATION OF THESE DRAWINGS SHALL BE RESTRICTED TO THE ORIGINAL SITE FOR WHICH THEY ARE PREPARED. ANY USE OR DISCLOSURE OTHER THAN THAT WHICH RELATES TO AMERICAN TOWER OR THE SPECIFIED CARRIER IS STRICTLY PROHIBITED. NEITHER THE ARCHITECT NOR THE ENGINEER WILL BE PROVIDING ON-SITE CONSTRUCTION REVIEW OF THIS PROJECT. CONTRACTOR(S) MUST VERIFY ALL DIMENSIONS AND ADVISE AMERICAN TOWER OR THE SPECIFIED CARRIER OF ANY DISCREPANCIES. ANY PRIOR ISSUANCE OF THIS DRAWING IS SUPERSEDED BY THE LATEST VERSION.

| REV. | DESCRIPTION | BY | DATE |
|---|---|---|---|
| 0 | FOR CONSTRUCTION | JLR | 10/11/2023 |

ATC SITE NUMBER:
411180
ATC SITE NAME:
GOOD HILL CT
VERIZON SITE NAME:
WOODBURY W CT
SITE ADDRESS:
478 GOOD HILL ROAD
WOODBURY, CT 06798

SEAL:

Digitally Signed: 2023-10-12

verizon

| | |
|---|---|
| ATC JOB NO: | 14519465_G0 |
| CUSTOMER ID: | WOODBURY W CT |
| CUSTOMER #: | 5000245327 |

ANTENNA INFORMATION & SCHEDULE

| SHEET NUMBER: | REVISION: |
|---|---|
| C-401 | 0 |

Copyright © 2023 ATC IP LLC. All Rights Reserved.

EXISTING/PROPOSED MOUNTS AND/OR MOUNT MODIFICATIONS NOT SHOWN FOR CLARITY. REFER TO ANTENNA PLANS, MOUNT ANALYSES AND/OR MOUNT MODIFICATION DOCUMENTS FOR ADDITIONAL DETAIL.

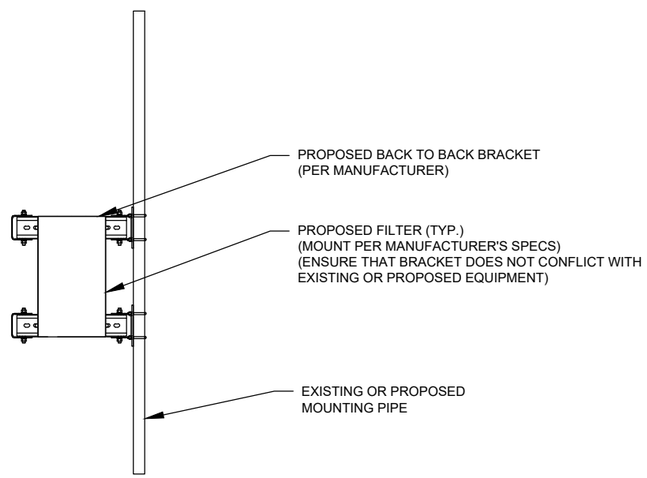


1 PROPOSED FILTER MOUNTING DETAIL - TYPICAL

SCALE: N.T.S.


AMERICAN TOWER®

A.T. ENGINEERING SERVICES LLC

3500 REGENCY PARKWAY
SUITE 100
CARY, NC 27518
PHONE: (919) 468-0112
PEC.0001553



THE USE AND PUBLICATION OF THESE DRAWINGS SHALL BE RESTRICTED TO THE ORIGINAL SITE FOR WHICH THEY ARE PREPARED. ANY USE OR DISCLOSURE OTHER THAN THAT WHICH RELATES TO AMERICAN TOWER OR THE SPECIFIED CARRIER IS STRICTLY PROHIBITED. NEITHER THE ARCHITECT NOR THE ENGINEER WILL BE PROVIDING ON-SITE CONSTRUCTION REVIEW OF THIS PROJECT. CONTRACTOR(S) MUST VERIFY ALL DIMENSIONS AND ADVISE AMERICAN TOWER OR THE SPECIFIED CARRIER OF ANY DISCREPANCIES. ANY PRIOR ISSUANCE OF THIS DRAWING IS SUPERSEDED BY THE LATEST VERSION.


| REV. | DESCRIPTION | BY | DATE |
|---|---|---|---|
| 0 | FOR CONSTRUCTION | JLR | 10/11/2023 |
| | | | |
| | | | |
| | | | |
| | | | |

ATC SITE NUMBER:
411180

ATC SITE NAME:
GOOD HILL CT

VERIZON SITE NAME:
WOODBURY W CT

SITE ADDRESS:
478 GOOD HILL ROAD
WOODBURY, CT 06798

SEAL:

Digitally Signed: 2023-10-12

verizon

| | |
|---|---|
| ATC JOB NO: | 14519465_G0 |
| CUSTOMER ID: | WOODBURY W CT |
| CUSTOMER #: | 5000245327 |

CONSTRUCTION DETAILS

| SHEET NUMBER: | REVISION: |
|---|---|
| C-501 | 0 |


Copyright © 2023 ATC IP LLC. All Rights Reserved.

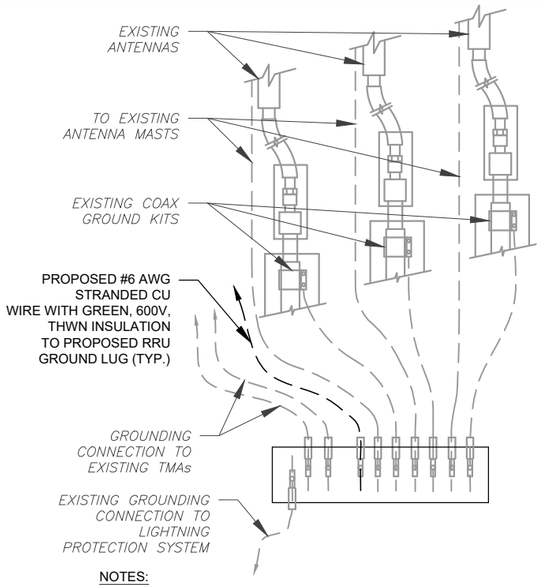


NOTES:

1. THIS DETAIL IS INTENDED TO SHOW THE GENERAL GROUNDING REQUIREMENTS. SLIGHT ADJUSTMENTS MAY BE REQUIRED BASED ON EXISTING SITE CONDITIONS. THE CONTRACTOR SHALL MAKE FIELD ADJUSTMENTS AS NEEDED AND INFORM THE CONSTRUCTION MANAGER OF ANY CONFLICTS.
2. SITE GROUNDING SHALL COMPLY WITH VERIZON GROUNDING STANDARDS, LATEST EDITION, AND COMPLY WITH VERIZON GROUNDING CHECKLIST, LATEST VERSION. WHEN NATIONAL AND LOCAL GROUNDING CODES ARE MORE STRINGENT THEY SHALL GOVERN.

## 1 TYPICAL ANTENNA GROUNDING DIAGRAM

SCALE: N.T.S.

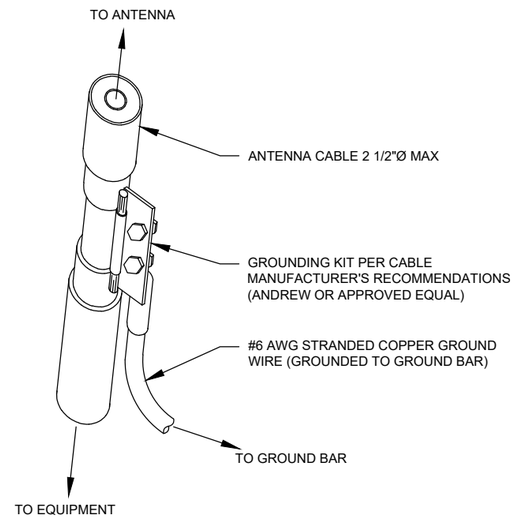


GROUND KIT NOTES:

1. DO NOT INSTALL CABLE GROUND KIT AT A BEND AND ALWAYS DIRECT GROUND WIRE DOWN TO GROUND BAR.
2. CONTRACTOR SHALL PROVIDE WEATHERPROOFING KIT (ANDREW PART NUMBER 221213) AND INSTALL/TAPE PER MANUFACTURER'S SPECIFICATIONS.

## 2 CABLE GROUND KIT CONNECTION DETAIL

SCALE: N.T.S.

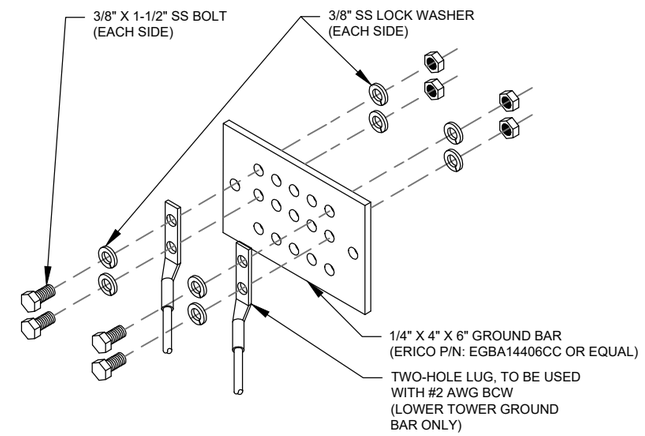


GROUND BAR NOTES:

1. GROUND BAR KITS COME WITH ALL HARDWARE, NUTS, BOLTS, WASHERS, ETC. EXCEPT THE STRUCTURAL MOUNTING MEMBER(S).
2. GROUND BAR TO BE BONDED DIRECTLY TO TOWER.

## 3 TOWER GROUND BAR DETAIL

SCALE: N.T.S.

AMERICAN TOWER®
A.T. ENGINEERING SERVICES LLC
3500 REGENCY PARKWAY
SUITE 100
CARY, NC 27518
PHONE: (919) 468-0112
PEC.0001553

THE USE AND PUBLICATION OF THESE DRAWINGS SHALL BE RESTRICTED TO THE ORIGINAL SITE FOR WHICH THEY ARE PREPARED. ANY USE OR DISCLOSURE OTHER THAN THAT WHICH RELATES TO AMERICAN TOWER OR THE SPECIFIED CARRIER IS STRICTLY PROHIBITED. NEITHER THE ARCHITECT NOR THE ENGINEER WILL BE PROVIDING ON-SITE CONSTRUCTION REVIEW OF THIS PROJECT. CONTRACTOR(S) MUST VERIFY ALL DIMENSIONS AND ADVISE AMERICAN TOWER OR THE SPECIFIED CARRIER OF ANY DISCREPANCIES. ANY PRIOR ISSUANCE OF THIS DRAWING IS SUPERSEDED BY THE LATEST VERSION.

| REV. | DESCRIPTION | BY | DATE |
|---|---|---|---|
| 0 | FOR CONSTRUCTION | JLR | 10/11/2023 |

ATC SITE NUMBER:
411180

ATC SITE NAME:
GOOD HILL CT

VERIZON SITE NAME:
WOODBURY W CT

SITE ADDRESS:
478 GOOD HILL ROAD
WOODBURY, CT 06798

SEAL:

Digitally Signed: 2023-10-12

verizon

| | |
|---|---|
| ATC JOB NO: | 14519465_G0 |
| CUSTOMER ID: | WOODBURY W CT |
| CUSTOMER #: | 5000245327 |

GROUNDING DETAILS

SHEET NUMBER: E-501

REVISION: 0

Copyright © 2023 ATC IP LLC. All Rights Reserved.

Colliers Engineering & Design CT, P.C.
1055 Washington Boulevard
Stamford, CT 06901
203.324.0800
peter.albano@collierseng.com

## Antenna Mount Analysis Report and PMI Requirements

Mount ReAnalysis

SMART Tool Project #: 10207617
Colliers Engineering & Design CT, P.C. Project #: 23777191 (Rev 1)

September 27, 2023

| | | |
|---|---|---|
| ***Site Information*** | *Site ID:* | *5000245327-VZW / WOODBURY W CT* |
| | *Site Name:* | *WOODBURY W CT* |
| | *Carrier Name:* | *Verizon Wireless* |
| | *Address:* | *478 Good Hill Road* |
| | | *Woodbury, Connecticut 06798* |
| | | *Litchfield County* |
| | *Latitude:* | *41.557222°* |
| | *Longitude:* | *-73.256778°* |
| ***Structure Information*** | *Tower Type:* | *149-Ft Monopole* |
| | *Mount Type:* | *14.00-Ft Platform* |

**FUZE ID # 17123973**

### Analysis Results

Platform: **76.1% Pass***

***Antennas and equipment to be installed in compliance with PMI Requirements of this mount analysis.**

******Contractor PMI Requirements*:**
***Included at the end of this MA report***
***Available & Submitted via portal at https://pmi.vzwsmart.com***

***For additional questions and support, please reach out to:***
***pmisupport@colliersengineering.com***

Report Prepared By: Gianna Argentina

Digitally signed by Derek Hartzell
Date: 2023.09.27 11:12:41-07'00'

STATE OF CONNECTICUT · DEREK R. HARTZELL · 32710 · LICENSED PROFESSIONAL ENGINEER



### Requirements:

The existing mount is **SUFFICIENT** for the final loading configuration shown in attachment 2 and do not require modifications. Additional requirements are noted below.

Contractor shall install the proposed filter units on new Site Pro 1 Dual Swivel Mount Kit (Part #: RRUDSM or EOR approved equivalent) in the location shown in the placement diagrams.

Contractor shall relocate the safety climb head assembly below the bottom VZW mount collar. Replace head assembly with Perfect Vision – PV-CMX-TA-BB-F, or EOR approved equivalent, and install on the same flat as the existing head assembly. Reroute and attach the existing safety climb wire rope to the proposed head assembly. Install safety climb wire rope guides as needed such that the wire rope does not contact any steel/coax cables.

Contractor shall install step bolt anchors (Perfect Vision – PV-CMX-INS-14-R0, or EOR approved equivalent) on every step bolt above the proposed safety climb head assembly.

If required, ANSI/ASSP rigging plan review services compliant with the requirements of ANSI/TIA 322 are available for a Construction Class IV site or other. Separate review fees will apply.

### Attachments:

1. **Contractor Required Post Installation Inspection (PMI) Report Deliverables**
2. Antenna Placement Diagrams
3. Mount Photos
4. Mount Mapping Report (for reference only)
5. Analysis Calculations

1 MOUNT ANALYSIS

NOTE: THIS SHEET WAS CREATED BY OTHERS AND PROVIDED AT THE REQUEST OF THE CUSTOMER WITHOUT EDIT. PLEASE REFERENCE THE MOUNT ANALYSIS REPORT FOR COMPLETE MOUNT ANALYSIS CALCULATIONS AND DETAILS. SUPPLEMENTAL PAGES INCLUDED IN THE CONSTRUCTION DRAWINGS ARE FOR REFERENCE ONLY. GENERAL CONTRACTOR IS TO VERYIFY THEY HAVE THE MOST RECENT MOUNT ANALYSIS PRIOR TO CONTRUCTION.

SUPPLEMENTAL

| SHEET NUMBER: | REVISION: |
|---|---|
| R-601 | 0 |

Copyright © 2023 ATC IP LLC. All Rights Reserved.

# KA-6030

## TWIN BANDSTOP 900MHZ INTERFERENCE MITIGATION FILTER

The KA-6030 is ideal for co-located 700, 850 and 900 networks. Utilising a 2.6MHz guardband the KA-6030 provides rejection of the 900 UL band while passing 700/850 UL and DL bands. Capable of being used in an outdoor environment the KA-6030 contains two identical bandstop filters, suitable for 2x2 MIMO configuration, offering excellent insertion loss, group delay and rejection.

### FEATURES

- Passes full 700 and 850 bands
- Low insertion loss
- Rejection of 900MHz uplink
- DC/AISG pass
- Twin unit
- Dual twin mounting available

### TECHNICAL SPECIFICATIONS

| BAND NAME | 700 PATH / 850 UPLINK PATH | 850 DOWNLINK PATH |
|---|---|---|
| **Passband** | 698 - 849MHz | 869 - 891.5MHz |
| **Insertion loss** | 0.1dB typical / 0.3dB maximum | 0.5dB typical, 1.45dB maximum |
| **Return loss** | 24dB typical, 18dB minimum | |
| **Maximum input power (Per Port)** | 100W average | 200W average and 66W per 5MHz |
| **Rejection** | 53dB minimum @ 894.1 - 896.5MHz | |

| ELECTRICAL | |
|---|---|
| **Impedance** | 50Ohms |
| **Intermodulation products** | -160dBc maximum in UL Band (assuming 20MHz Signal), with 2 x 43dBm carriers<br>-153dBc maximum with 2 x 43dBm |

| DC / AISG | |
|---|---|
| **Passband** | 0 - 13MHz |
| **Insertion loss** | 0.3dB maximum |
| **Return loss** | 15dB minimum |
| **Input voltage range** | ± 33V |
| **DC current rating** | 2A continuous, 4A peak |
| **Compliance** | 3GPP TS 25.461 |

| ENVIRONMENTAL | |
|---|---|
| For further details of environmental compliance, please contact Kaelus. | |
| **Temperature range** | -20ºC to +60ºC \| -4°F to +140°F |
| **Ingress protection** | IP67 |
| **Altitude** | 2600m \| 8530ft |
| **Lightning protection** | RF port: ±5kA maximum (8/20us), IEC 61000-4-5 – Unit must be terminated with some lightning protection circuits. |
| **MTBF** | >1,000,000 hours |
| **Compliance** | ETSI EN 300 019 class 4.1H, RoHS, NEBS GR-487-CORE |

| MECHANICAL | |
|---|---|
| **Dimensions H x D x W** | 269 x 277 x 80mm \| 10.60 x 10.90 x 3.15in (Excluding brackets and connectors) |
| **Weight** | 8.0 kg \| 17.6 lbs (no bracket) |
| **Finish** | Powder coated, light grey (RAL7035) |
| **Connectors** | RF: 4.3-10 (F) x 4 |
| **Mounting** | Optional pole/wall bracket supplied with two metal clamps 45-178mm diameter poles or custom bracket. See ordering information. |


© Kaelus 2022. All rights reserved

Contact Us: +1 303 768 8080 | +61 (0) 7 3907 1200 | www.kaelus.com

## ORDERING INFORMATION

| PART NUMBER | CONFIGURATION | OPTIONAL FEATURES | CONNECTORS |
|---|---|---|---|
| **KA-6030-2032** | TWIN, 2 in / 2 out | DC/AISG PASS | 4.3-10 (F) |


© Kaelus 2022. All rights reserved

Contact Us: +1 303 768 8080 | +61 (0) 7 3907 1200 | www.kaelus.com

## ELECTRICAL BLOCK DIAGRAM

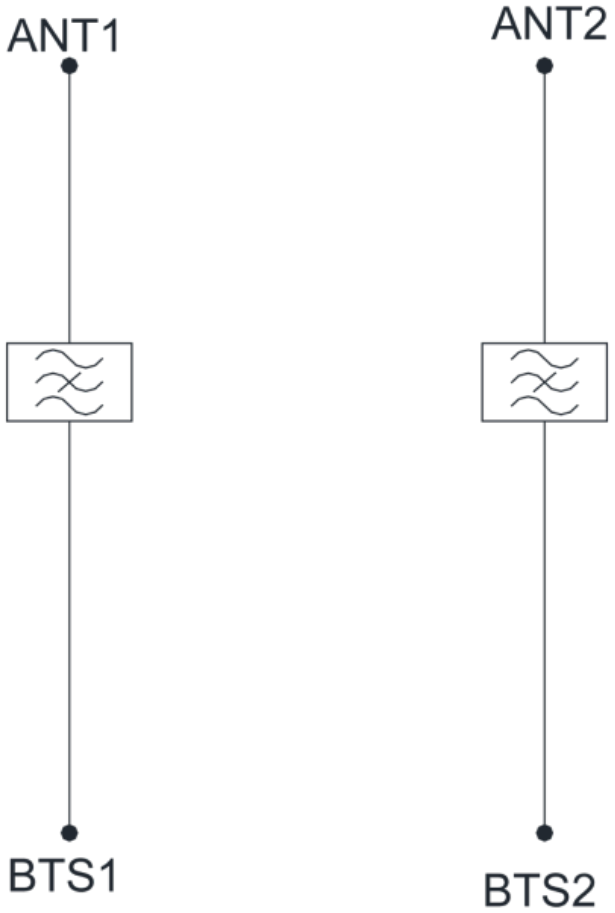



© Kaelus 2022. All rights reserved

Contact Us: +1 303 768 8080 | +61 (0) 7 3907 1200 | www.kaelus.com

## MECHANICAL BLOCK DIAGRAM

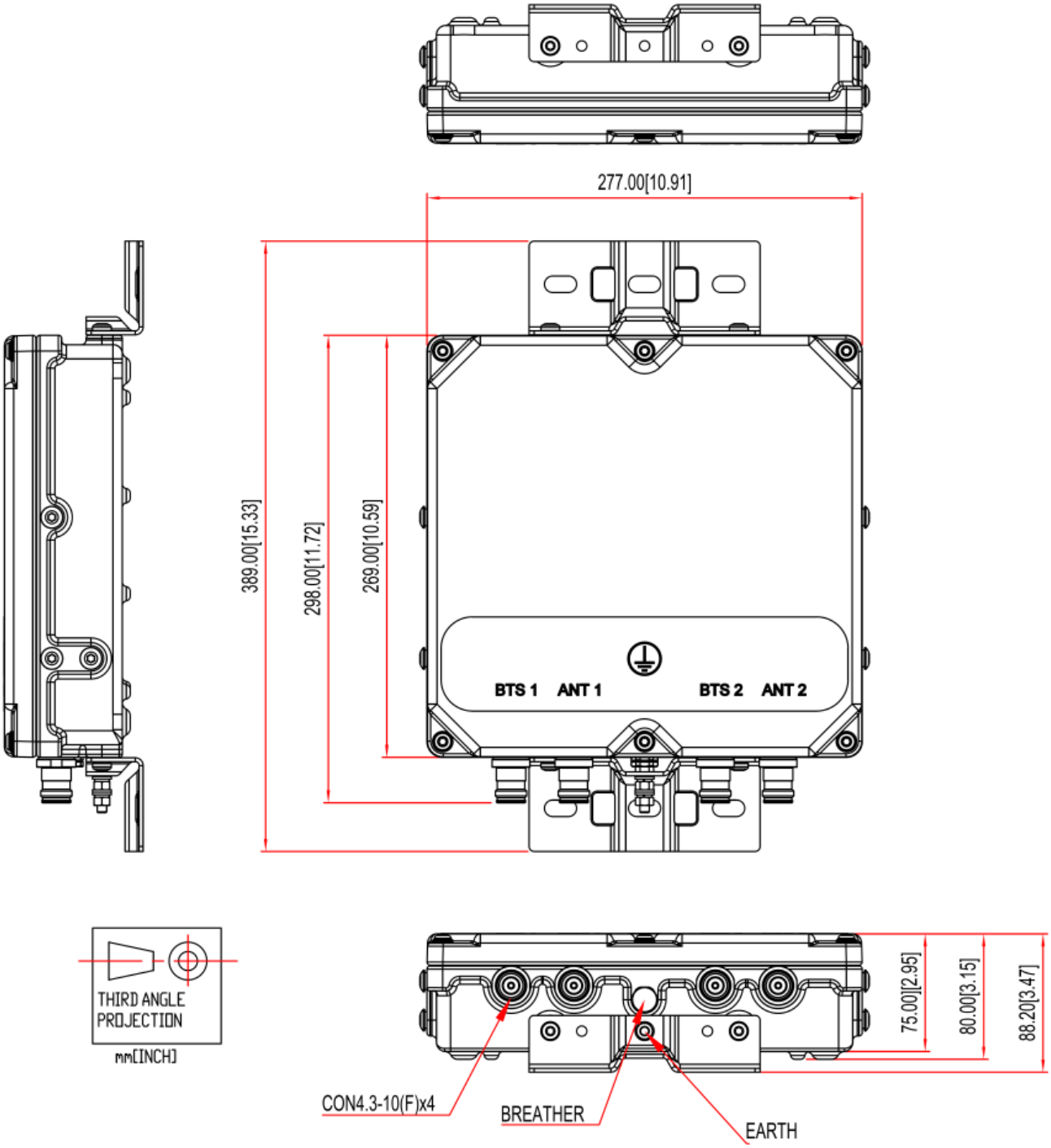



© Kaelus 2022. All rights reserved

Contact Us: +1 303 768 8080 | +61 (0) 7 3907 1200 | www.kaelus.com

# EXHIBIT 2

# Woodbury

**Unique ID:** 283400

**Card No:** 1 Of 2

| **Location:** | 478 GOOD HILL RD | **Map Id:** | 066-008 | **Zone:** | OS100 | **Date Printed:** | 10/13/2023 |
|---|---|---|---|---|---|---|---|
| | | **Neighborhood:** | 24 | | | **Last Update:** | 10/13/2023 |

| Owner Of Record | Volume/Page | Date | Sales Type | Valid | Sale Price |
|---|---|---|---|---|---|
| ROXBURY LAND TRUST INC | 0313/0366 | 3/23/2004 | | No | 1,800,000 |
| (BARNYARD), P O BOX 51, ROXBURY, CT 06783-0051 | | | Exempt | | |
| **Prior Owner History** | | | | | |
| GOOD HILL FARM LLC | 0249/458+ | 5/2/2000 | | No | 0 |

| Permit Number | Date | Permit Description |
|---|---|---|
| 22-87 | 2/10/2022 | ELECTRICAL UPGRADE OF DWELLING TO NEC 2017 |
| 21-104 | 1/18/2022 | CHANGE USE OF 2ND DWELLING FROM MIXED/RETAIL TO RESIDENTIAL USE |
| 21-769 | 10/5/2021 | BARN REPLACEMENT WINDOWS |
| 19-706 | 4/20/2020 | 28 X 46 X 10 GREEN HOUSE |
| 19-443 | 8/12/2019 | VERIZON WIRELESS PROPOSES TO REPLACE OLD ANTENNAS WITH NEW ANTENNAS AND ASSOCIATED ANCILLARY EQUIP |
| B772-18 | 6/27/2018 | VERIZON WIRELESS PROPOSES TO REPLACE OLD ANTENNAS WITH NEW ANTENNAS AND ASSOCIATED ANCILLARY EQUIPME |

**Supplemental Data**

| | | | |
|---|---|---|---|
| **Census/Tract** | 3621 | PA490 Application | |
| **Dev Map ID** | 29/75 | Cross Border Prop | |
| **GIS ID** | | List Price | |
| **Route** | | | |
| **District** | | | |
| **Utilities** | | | |

**Appraised Value**

| | |
|---|---|
| **Total Land Value** | 245,950 |
| **Total Building Value** | 292,249 |
| **Total Outbldg Value** | 108,673 |
| **Total Market Value** | 646,872 |

**Acres**

| Land Type | Acres | 490 | Total Value |
|---|---|---|---|
| Excess | 3.05 | 3.05 | |
| Commercial Site | 2.30 | 0.00 | |
| **Total** | | | 245,950 |

**State Item Codes**

| Code | Quantity | Value |
|---|---|---|
| 13-Residential Dwelling | 2.00 | 204.580 |
| 21-Commercial Land | 2.30 | 152.950 |
| 25-Commercial Outbuilding | 7.00 | 73.850 |
| 14-Res Outbuilding | 1.00 | 2.220 |
| 61-Farm | 3.05 | 1.680 |

**Assessment History (Prior Years as of Oct 1)**

| | 2023 | 2022 | 2021 | 2020 | 2019 |
|---|---|---|---|---|---|
| **Land** | 154,630 | 154,630 | 154,640 | 154,640 | 154,640 |
| **Building** | 204,580 | 204,580 | 172,780 | 172,780 | 172,780 |
| **Outbuilding** | 76,070 | 76,070 | 77,110 | 77,110 | 72,120 |
| **Total** | **435,280** | **435,280** | **404,530** | **404,530** | **399,540** |

**490 Appraised Totals**

| Type | Acres | Value | Type | Acres | Value |
|---|---|---|---|---|---|
| Tillable B | 0.50 | 695 | | | |
| Tillable C | 2.55 | 1708 | | | |
| | | | **Totals** | **3.05** | **2404** |

**Application Date:** **Expiration Date:**

**Comments**

**12/15/2022** 10/01/2022 CHANGED RETAIL BARN TO RESIDENTIAL COTTAGE

**Information may be deemed reliable, but not guaranteed.**

**Revaluation Date:** 10/1/2018

**Unique ID:** 283400 Woodbury **Card No:** 1 Of 2

| | |
|---|---|
| **Location:** | 478 GOOD HILL RD |
| **Map Id:** | 066-008 |

**General Description**

| | |
|---|---|
| **Building Use** | Single Family |
| **Units** | |
| **Overall Condition** | Average/Good |
| **Class** | 09 C+ |
| **Stories** | 2.00 |
| **Design (Style)** | Colonial |
| **Construction** | Wood Frame |
| **Year Built** | 1850 |
| **Percent Complete** | 100 |
| **Finished Area** | **2931** |

**Foundation**

| | |
|---|---|
| **Basement Area** | 798 |
| **Finished Basement** | 0 |
| **Garage Bays** | 0 |
| **Outside Entry** | Yes |
| **Sump Pump** | No |

**HVAC**

| | |
|---|---|
| **Heating Type** | Steam |
| **Fuel** | Oil |
| **Cooling Type** | |

**Interior**

| | |
|---|---|
| **Floors** | Hardwood/Carpet |
| **Attic Access** | No |
| **Walls** | Plaster |
| **Bath Cond** | |
| **Kitchen Cond** | |

**Exterior**

| | |
|---|---|
| **Exterior** | Wood Shingles |
| **Roof Cover** | Arch Shingles |
| **Roof Type** | |

**Special Features**

| Type | Count/Area |
|---|---|

**Room Summary**

| Total | Bedroom | Kitchens | Full Baths | Half Baths |
|---|---|---|---|---|
| 10 | 5 | 1 | 3 | 0 |

| Description | Area/Qty |
|---|---|
| Base Rate | 2931 |
| Basement | 798 |
| Fireplaces | 1 |
| Full Baths | 3 |

**Attached Components**

| Type | Year | Area |
|---|---|---|
| Open Porch | 1850 | 250 |
| Enclosed Porch | 1850 | 30 |
| Frame Garage | 1850 | 220 |

**Total Building Value:** **199,911**

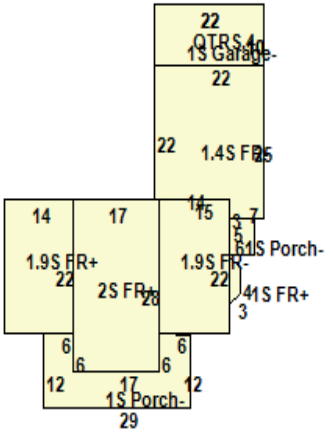

**Detached Component Computations**

| Type | Year | Condition | Area/Qty |
|---|---|---|---|
| 1.5 Story Barn | 1910 | Average/Fai | 4480 |
| 1.5 Story Barn | 1910 | Average/Fai | 2304 |
| 1.5 Story Barn | 1910 | Average/Fai | 1586 |
| Average Shed | 1910 | Average | 195 |
| Concrete Block/Frame Shed | 1910 | Average | 512 |
| Enclosed Porch | 1910 | Fair | 168 |
| Frame Shed | 1910 | Average | 100 |
| Glass/Steel Greenhouse | 1910 | Average | 1288 |

| Type | Year | Condition | Area/Qty |
|---|---|---|---|

# Woodbury

**Unique ID:** 283400 **Card No:** 2 Of 2

| **Location:** | 478 GOOD HILL RD | **Map Id:** | 066-008 | **Zone:** | OS100 | **Date Printed:** | 10/13/2023 |
|---|---|---|---|---|---|---|---|
| | | **Neighborhood:** | 24 | | | **Last Update:** | 10/13/2023 |

| Owner Of Record | Volume/Page | Date | Sales Type | Valid | Sale Price |
|---|---|---|---|---|---|
| ROXBURY LAND TRUST INC | 0313/0366 | 3/23/2004 | | No | 1,800,000 |
| (BARNYARD), P O BOX 51, ROXBURY, CT 06783-0051 | | | Exempt | | |
| **Prior Owner History** | | | | | |
| GOOD HILL FARM LLC | 0249/458+ | 5/2/2000 | | No | 0 |

| Permit Number | Date | Permit Description |
|---|---|---|
| 22-87 | 2/10/2022 | ELECTRICAL UPGRADE OF DWELLING TO NEC 2017 |
| 21-104 | 1/18/2022 | CHANGE USE OF 2ND DWELLING FROM MIXED/RETAIL TO RESIDENTIAL USE |
| 21-769 | 10/5/2021 | BARN REPLACEMENT WINDOWS |
| 19-706 | 4/20/2020 | 28 X 46 X 10 GREEN HOUSE |
| 19-443 | 8/12/2019 | VERIZON WIRELESS PROPOSES TO REPLACE OLD ANTENNAS WITH NEW ANTENNAS AND ASSOCIATED ANCILLARY EQUIP |
| B772-18 | 6/27/2018 | VERIZON WIRELESS PROPOSES TO REPLACE OLD ANTENNAS WITH NEW ANTENNAS AND ASSOCIATED ANCILLARY EQUIPME |

**Supplemental Data**

| | | | |
|---|---|---|---|
| **Census/Tract** | 3621 | PA490 Application | |
| **Dev Map ID** | 29/75 | Cross Border Prop | |
| **GIS ID** | | List Price | |
| **Route** | | | |
| **District** | | | |
| **Utilities** | | | |

**Appraised Value**

| | |
|---|---|
| **Total Land Value** | 245,950 |
| **Total Building Value** | 292,249 |
| **Total Outbldg Value** | 108,673 |
| **Total Market Value** | 646,872 |

**Acres**

| Land Type | Acres | 490 | Total Value |
|---|---|---|---|
| Excess | 3.05 | 3.05 | |
| Commercial Site | 2.30 | 0.00 | |
| **Total** | | | 245,950 |

**State Item Codes**

| Code | Quantity | Value |
|---|---|---|
| 13-Residential Dwelling | 2.00 | 204.580 |
| 21-Commercial Land | 2.30 | 152.950 |
| 25-Commercial Outbuilding | 7.00 | 73.850 |
| 14-Res Outbuilding | 1.00 | 2.220 |
| 61-Farm | 3.05 | 1.680 |

**Assessment History (Prior Years as of Oct 1)**

| | 2023 | 2022 | 2021 | 2020 | 2019 |
|---|---|---|---|---|---|
| **Land** | 154,630 | 154,630 | 154,640 | 154,640 | 154,640 |
| **Building** | 204,580 | 204,580 | 172,780 | 172,780 | 172,780 |
| **Outbuilding** | 76,070 | 76,070 | 77,110 | 77,110 | 72,120 |
| **Total** | **435,280** | **435,280** | **404,530** | **404,530** | **399,540** |

**490 Appraised Totals**

| Type | Acres | Value | Type | Acres | Value |
|---|---|---|---|---|---|
| Tillable B | 0.50 | 695 | | | |
| Tillable C | 2.55 | 1708 | | | |
| | | | **Totals** | **3.05** | **2404** |

**Application Date:** **Expiration Date:**

**Comments**

**12/15/2022** 10/01/2022 CHANGED RETAIL BARN TO RESIDENTIAL COTTAGE

**Information may be deemed reliable, but not guaranteed.** **Revaluation Date:** 10/1/2018

**Unique ID:** 283400 Woodbury **Card No:** 2 Of 2

| | |
|---|---|
| **Location:** | 478 GOOD HILL RD |
| **Map Id:** | 066-008 |

**General Description**

| | |
|---|---|
| **Building Use** | Single Family |
| **Units** | |
| **Overall Condition** | Average |
| **Class** | 09 C+ |
| **Stories** | 1.75 |
| **Design (Style)** | Cottage |
| **Construction** | Wood Frame |
| **Year Built** | 1910 |
| **Percent Complete** | 100 |
| **Finished Area** | **1250** |

**Foundation**

| | |
|---|---|
| **Basement Area** | 0 |
| **Finished Basement** | 0 |
| **Garage Bays** | 0 |
| **Outside Entry** | No |
| **Sump Pump** | No |

**HVAC**

| | |
|---|---|
| **Heating Type** | FHA |
| **Fuel** | Gas |
| **Cooling Type** | Other |

**Interior**

| | |
|---|---|
| **Floors** | Hardwood |
| **Attic Access** | None |
| **Walls** | Drywall |
| **Bath Cond** | |
| **Kitchen Cond** | |

**Exterior**

| | |
|---|---|
| **Exterior** | Clapboards |
| **Roof Cover** | Arch Shingles |
| **Roof Type** | Gambrel |

**Special Features**

| Type | Count/Area |
|---|---|

**Room Summary**

| Total | Bedroom | Kitchens | Full Baths | Half Baths |
|---|---|---|---|---|
| 5 | 3 | 1 | 1 | 0 |

| Description | Area/Qty |
|---|---|
| Base Rate | 1250 |
| Full Baths | 1 |

**Attached Components**

| Type | Year | Area |
|---|---|---|
| Frame Garage | 1910 | 520 |

**Total Building Value:** **92,338**

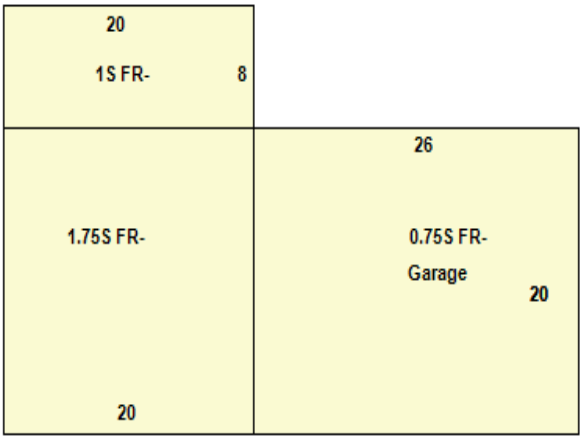


Photo Not Available

**Detached Component Computations**

| Type | Year | Condition | Area/Qty |
|---|---|---|---|
| 1.5 Story Barn | 1910 | Average/Fai | 4480 |
| 1.5 Story Barn | 1910 | Average/Fai | 2304 |
| 1.5 Story Barn | 1910 | Average/Fai | 1586 |
| Average Shed | 1910 | Average | 195 |
| Concrete Block/Frame Shed | 1910 | Average | 512 |
| Frame Shed | 1910 | Average | 100 |
| Glass/Steel Greenhouse | 1910 | Average | 1288 |

| Type | Year | Condition | Area/Qty |
|---|---|---|---|

# Town of Woodbury

Geographic Information System (GIS)

Date Printed: 10/13/2023

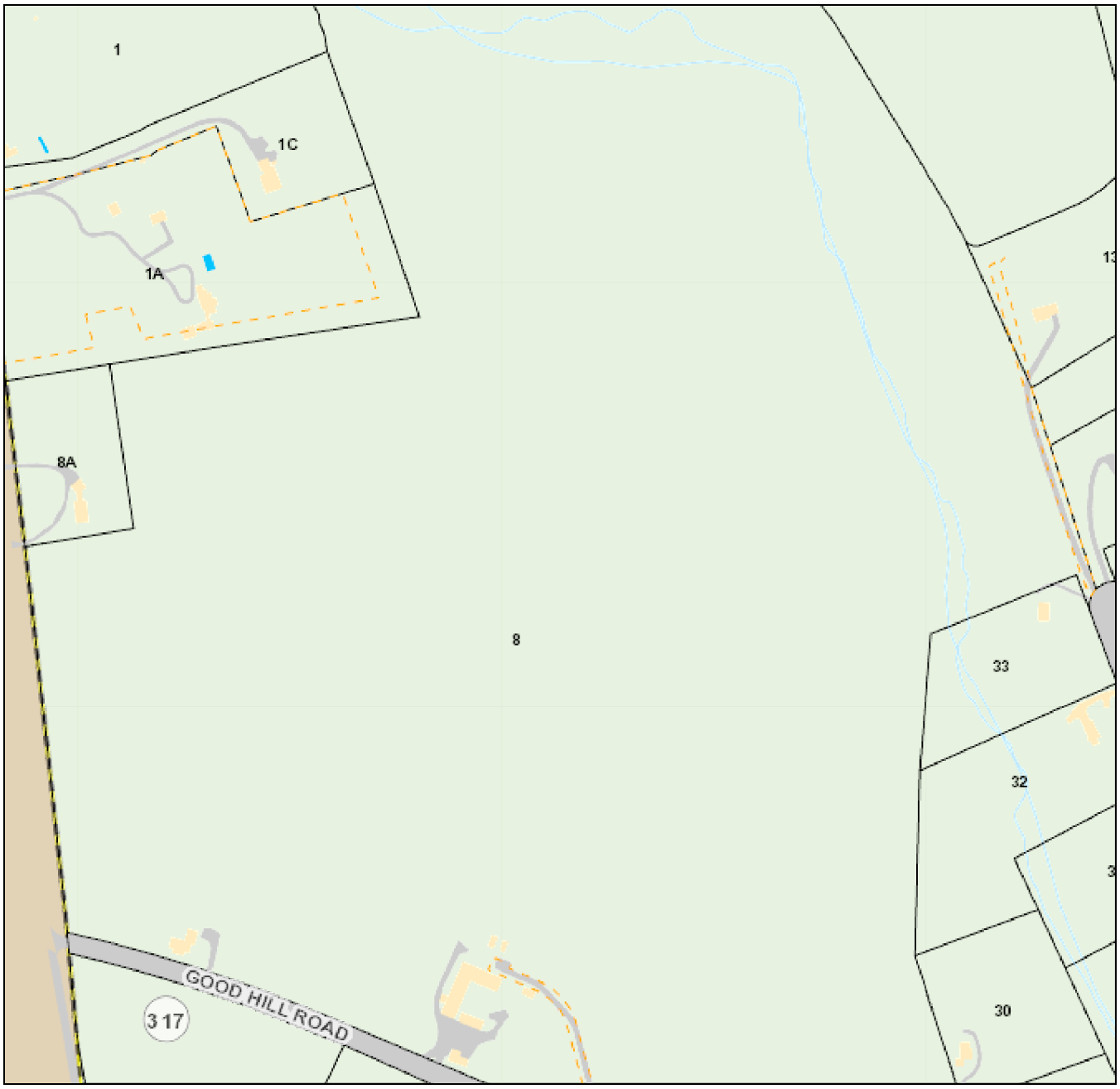


**MAP DISCLAIMER - NOTICE OF LIABILITY**

This map is for assessment purposes only. It is not for legal description or conveyances. All information is subject to verification by any user. The Town of Woodbury and its mapping contractors assume no legal responsibility for the information contained herein.

Approximate Scale: 1 inch = 400 feet

0 400 Feet

N W E S

# EXHIBIT 3

AMERICAN TOWER®
CORPORATION

# Structural Analysis Report

| | | |
|---|---|---|
| **Structure** | : | 147 ft Monopole |
| **ATC Asset Name** | : | Good Hill CT |
| **ATC Asset Number** | : | 411180 |
| **Engineering Number** | : | 14519465_C3_04 |
| **Proposed Carrier** | : | VERIZON WIRELESS |
| **Carrier Site Name** | : | WOODBURY W CT |
| **Carrier Site Number** | : | 5000245327 |
| **Site Location** | : | 478 Good Hill Road<br>Woodbury, CT 06798-2507<br>41.5573° N, 73.2568° W |
| **County** | : | Litchfield |
| **Date** | : | August 9, 2023 |
| **Max Usage** | : | 45% |
| **Analysis Result** | : | Pass |

STATE OF CONNECTICUT
ESHA KAUSHAL MODI
32593
LICENSED
PROFESSIONAL ENGINEER

Created By:

Myles Norman
Structural Engineer I

**COA: PEC.0001553**

## Introduction

The purpose of this report is to summarize results of a structural analysis performed on the 147 ft Monopole tower to reflect the change in loading by VERIZON WIRELESS.

## Supporting Documents

| | |
|---|---|
| **Tower:** | PJF Job #29200-1379, dated September 15, 2000<br>Mapping by TEP #05593, dated July 6, 2005 |
| **Foundation:** | PJF Job #29200-1300, dated September 14, 2000 |
| **Geotechnical:** | Clarence Welti Job #7081, dated March 27, 2000 |

## Analysis

The tower was analyzed using American Tower Corporation's tower analysis software. This program considers an elastic three-dimensional model and second-order effects per ANSI/TIA-222.

| | |
|---|---|
| **Basic Wind Speed:** | 115 mph (3-second gust) |
| **Basic Wind Speed w/ Ice:** | 50 mph (3-second gust) w/ 1.00" radial ice concurrent |
| **Code(s):** | ANSI/TIA-222-H / 2021 IBC / 2022 Connecticut State Building Code |
| **Exposure Category:** | B |
| **Risk Category:** | II |
| **Topographic Factor Procedure:** | Method 1 |
| **Topographic Category:** | 1 |
| **Spectral Response:** | Ss = 0.19, $S_1$ = 0.05 |
| **Site Class:** | D - Stiff Soil - Default |

## Conclusion

Based on the analysis results, the structure meets the requirements per the applicable codes listed above. The tower and foundation can support the equipment as described in this report.

If you have any questions or require additional information, please contact American Tower Engineering via email at **Engineering@americantower.com.** Please include the American Tower asset name, asset number, and engineering number in the subject line for any questions.

## Structure Usages

| Structural Component | Usage | Control | Result |
|---|---|---|---|
| Pole Shaft | 45.4% | 1.2D + 1.0W | Pass |
| Base Plate @ 0.0 ft | 36.6% | Rods | Pass |
| Mat & Pier | 25.1% | Moment [Soil] | Pass |

## Maximum Reactions

| Foundation | Moment (k-ft) | Axial (k) | Shear (k) |
|---|---|---|---|
| Monopole Base | 3,250.6 | 62.9 | 29.4 |

***Reactions shown reflect the results from the Load Case with maximum Moment***

Structure base reactions were analyzed using available geotechnical and foundation information.

## VERIZON WIRELESS Final Loading

| Elev (ft) | Qty | Equipment | Lines |
|---|---|---|---|
| 147.0 | 1 | RFS DB-C1-12C-24AB-0Z | (2) 1 5/8" (1.63"-41.3mm) Fiber<br>(6) 1 5/8" Coax |
| | 1 | VZW Unused Reserve (15681.24 sqin) | |
| | 2 | Antel LPA-80063/4CF | |
| | 3 | Commscope CBC78T-DS-43-2X | |
| | 3 | Samsung B2/B66A RRH-BR049 | |
| | 3 | Samsung B5/B13 RRH-BR04C | |
| | 3 | Samsung MT6407-77A | |
| | 4 | Antel LPA-80080/4CF ___ | |
| | 6 | Commscope JAHH-65B-R3B (63.3 lb) | |
| | 6 | Kaelus KA-6030 | |
| 146.0 | 1 | Platform with Handrails | - |
| 145.0 | 3 | Mount Reinforcement | - |

## Other Existing/Reserved Loading

| Elev (ft) | Qty | Equipment | Lines | Carrier |
|---|---|---|---|---|
| 135.0 | 2 | Light Sector Frame | - | - |
| | 1 | RFS SC2-W100BD | (2) 1.99" (50.7mm) Hybrid<br>(1) 1/2" Coax | T-MOBILE |
| | 3 | Commscope VV-65A-R1B | | |
| | 3 | Ericsson 4460 BAND 2/25 | | |
| | 3 | Ericsson 4480 BAND 71 | | |
| | 3 | Ericsson AIR 6419 B41 | | |
| | 3 | RFS APXVAALL24 43-U-NA20 | | |
| 128.1 | 1 | Raycap DC6-48-60-18-8F(32.8 lbs) | - | AT&T MOBILITY |
| 124.0 | 1 | Low Profile Platform | (2) 0.45" (11.5mm) Fiber<br>(4) 0.76" (19.2mm) 8 AWG 6<br>(12) 1 5/8" Coax | AT&T MOBILITY |
| | 1 | Kathrein Scala 800 10764 | | |
| | 1 | Raycap DC6-48-60-18-8F ("Squid") | | |
| | 2 | KMW AM-X-CD-16-65-00T-RET | | |
| | 3 | Ericsson RRUS 32 B2 | | |
| | 3 | Ericsson RRUS 4478 B14 | | |
| | 3 | KMW EPBQ-654L8H6-L2 | | |
| | 6 | Ericsson RRUS-11 | | |
| | 6 | Powerwave Allgon 7770.00 | | |
| | 6 | Powerwave Allgon LGP2140X | | |
| | 6 | Powerwave Allgon LGP21901 | | |
| 117.5 | 2 | Stand-Off | - | WOODBURY FIRE DEPARTMENT |
| | 2 | 3' Omni-Grid | (2) 1/2" Coax | WOODBURY VOLUNTEER FIRE DEPARTMENT |
| 101.0 | 1 | Platform with Handrails | - | - |
| | 1 | Commscope RDIDC-9181-PF-48 | (1) 1.60" (40.6mm) Hybrid | DISH WIRELESS L.L.C. |
| | 3 | Fujitsu TA08025-B604 | | |
| | 3 | Fujitsu TA08025-B605 | | |
| | 3 | JMA Wireless MX08FRO665-21 | | |

*(If table breaks across pages, please see previous page for data in merged cells)*

**Standard Conditions**

All engineering services performed by A.T. Engineering Services LLC are prepared on the basis that the information used is current and correct. This information may consist of, but is not limited to the following:

- Information supplied by the client regarding antenna, mounts, and feed line loading
- Information from drawings, design and analysis documents, and field notes in the possession of A.T. Engineering Services LLC

It is the responsibility of the client to ensure that the information provided to A.T. Engineering Services LLC and used in the performance of our engineering services is correct and complete.

All assets of American Tower Corporation, its affiliates, and subsidiaries (collectively "American Tower") are inspected at regular intervals. Based upon these inspections and in the absence of information to the contrary, American Tower assumes that all structures were constructed in accordance with the drawings and specifications.

Unless explicitly agreed by both the client and A.T. Engineering Services LLC, all services will be performed in accordance with the current revision of ANSI/TIA-222.

All services are performed, results obtained, and recommendations made in accordance with generally accepted engineering principles and practices. A.T. Engineering Services LLC is not responsible for the conclusions, opinions and recommendations made by others based on the information supplied herein.

## ANALYSIS PARAMETERS

| | | | | | |
|---|---|---|---|---|---|
| **Nominal Wind:** | 115 mph | **Ice Wind:** | 50 mph w/ 1" ice | **Service Wind:** | 60 mph |
| **Risk Category:** | II | **Exposure:** | B | **$S_s$:** 0.194 | **$S_1$:** 0.054 |
| **Topo Category:** | 1 | **Topo Factor:** | Method 1 | **Topo Feature:** | |
| **Structure Height:** | 147 ft | **Base Elevation:** | 0.00 ft | **Structure Type:** | Taper |
| **Base Diameter:** | 62.65 in | **Base Rotation:** | 0° | **Taper:** | 0.2070 (in/ft) |

## POLE SECTION PROPERTIES

| Section | Length (ft) | Flat Diameter (in) Top | Flat Diameter (in) Bottom | Thick (in) | Joint Type | Joint Length (in) | Pole Shape | Yield Strength (ksi) |
|---|---|---|---|---|---|---|---|---|
| 1 | 45.000 | 53.32 | 62.65 | 0.438 | | 0.000 | 18 Sides | 65 |
| 2 | 45.000 | 46.32 | 55.65 | 0.438 | Slip Joint | 84.000 | 18 Sides | 65 |
| 3 | 45.000 | 38.98 | 48.31 | 0.375 | Slip Joint | 72.000 | 18 Sides | 65 |
| 4 | 30.250 | 34.36 | 40.64 | 0.281 | Slip Joint | 63.000 | 18 Sides | 65 |

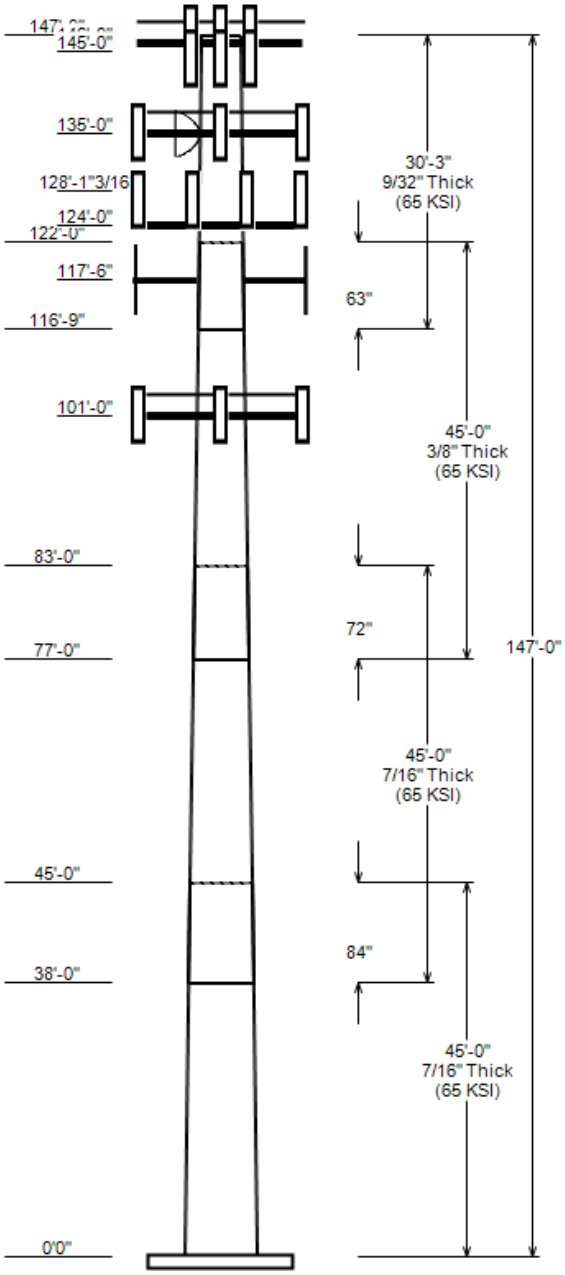


## DISCRETE APPURTENANCE

| Elev (ft) | Description |
|---|---|
| 147.0 | (3) Commscope CBC78T-DS-43-2X |
| 147.0 | (6) Kaelus KA-6030 |
| 147.0 | (3) Samsung B5/B13 RRH-BR04C |
| 147.0 | (3) Samsung B2/B66A RRH-BR049 |
| 147.0 | (1) RFS DB-C1-12C-24AB-0Z |
| 147.0 | (3) Samsung MT6407-77A |
| 147.0 | (4) Antel LPA-80080/4CF ___ |
| 147.0 | (2) Antel LPA-80063/4CF |
| 147.0 | (6) Commscope JAHH-65B-R3B (63.3 l |
| 147.0 | (1) VZW Unused Reserve (15681.24 s |
| 146.0 | (1) Generic Flat Platform with Han |
| 145.0 | (3) Mount Reinforcement |
| 135.0 | (3) Ericsson 4460 BAND 2/25 |
| 135.0 | (3) Ericsson 4480 BAND 71 |
| 135.0 | (1) RFS SC2-W100BD |
| 135.0 | (3) Ericsson AIR 6419 B41 |
| 135.0 | (3) Commscope VV-65A-R1B |
| 135.0 | (2) Generic Flat Light Sector Fram |
| 135.0 | (3) RFS APXVAALL24 43-U-NA20 |
| 128.1 | (1) Raycap DC6-48-60-18-8F(32.8 lb |
| 124.0 | (6) Powerwave Allgon LGP21901 |
| 124.0 | (6) Powerwave Allgon LGP2140X |
| 124.0 | (1) Raycap DC6-48-60-18-8F ("Squid |
| 124.0 | (3) Ericsson RRUS 4478 B14 |
| 124.0 | (3) Ericsson RRUS 32 B2 |
| 124.0 | (6) Ericsson RRUS-11 |
| 124.0 | (6) Powerwave Allgon 7770.00 |
| 124.0 | (1) Kathrein Scala 800 10764 |
| 124.0 | (2) KMW AM-X-CD-16-65-00T-RET |
| 124.0 | (3) KMW EPBQ-654L8H6-L2 |
| 124.0 | (1) Generic Round Low Profile Plat |
| 117.5 | (2) Generic 3' Omni-Grid |
| 117.5 | (2) Stand-Off |
| 101.0 | (1) Commscope RDIDC-9181-PF-48 |
| 101.0 | (3) Fujitsu TA08025-B604 |
| 101.0 | (3) Fujitsu TA08025-B605 |
| 101.0 | (3) JMA Wireless MX08FRO665-21 |
| 101.0 | (1) Generic Flat Platform with Han |

## LINEAR APPURTENANCE

| Elev To (ft) | Description |
|---|---|
| 147.0 | (6) 1 5/8" Coax |
| 147.0 | (2) 1 5/8" (1.63"-41.3mm) Fiber |
| 135.0 | (1) 1/2" Coax |
| 135.0 | (2) 1.99" (50.7mm) Hybrid |
| 128.0 | (1) 2" Carflex Non-Metallic Conduit |
| 128.0 | (4) 0.78" (19.7mm) 8 AWG 6 |
| 128.0 | (2) 0.39" (10mm) Fiber Trunk |
| 124.0 | (12) 1 5/8" Coax |
| 124.0 | (4) 0.76" (19.2mm) 8 AWG 6 |
| 124.0 | (2) 0.45" (11.5mm) Fiber |
| 117.5 | (2) 1/2" Coax |
| 101.0 | (1) 1.60" (40.6mm) Hybrid |

## DISH SERVICEABILITY

| Load Case | Elevation (ft) | Deflection (in) | Rotation (°) |
|---|---|---|---|
| 1.0D + 1.0W | 135.00 | 9.177 | 0.568 |

## GLOBAL BASE REACTIONS

| Load Case | Moment (kip-ft) | Axial (kip) | Shear (kip) |
|---|---|---|---|
| 1.2D + 1.0W | 3250.63 | 62.92 | 29.44 |
| 0.9D + 1.0W | 3225.59 | 47.18 | 29.43 |
| 1.2D + 1.0Di + 1.0Wi | 898.14 | 80.92 | 8.33 |
| 1.2D + 1.0Ev + 1.0Eh | 188.30 | 63.13 | 1.60 |
| 0.9D - 1.0Ev + 1.0Eh | 186.53 | 43.66 | 1.60 |
| 1.0D + 1.0W | 787.82 | 52.46 | 7.17 |

© 2007 - 2022 by ATC LLC. All rights reserved.

## ANALYSIS PARAMETERS

| | | | |
|---|---|---|---|
| **Location:** | Litchfield County,CT | **Height:** | 147 ft |
| **Type and Shape:** | Taper, 18 Sides | **Base Diameter:** | 62.65 in |
| **Manufacturer:** | Summit | **Top Diameter:** | 34.36 in |
| **$K_d$ (non-service):** | 0.95 | **Taper:** | 0.2070 in/ft |
| **$K_e$:** | 0.97 | **Rotation:** | 0.000º |

## ICE & WIND PARAMETERS

| | | | |
|---|---|---|---|
| **Risk Category:** | II | **Design Wind Speed:** | 115 mph |
| **Exposure Category:** | B | **Design Wind Speed w/ Ice:** | 50 mph |
| **Topo Factor Procedure:** | Method 1 | **Design Ice Thickness:** | 1.00 in |
| **Topographic Category:** | 1 | **Service Wind Speed:** | 60 mph |
| **Crest Height:** | 0 ft | **HMSL:** | 877.00 ft |

## SEISMIC PARAMETERS

| | | | | | |
|---|---|---|---|---|---|
| **Analysis Method:** | Equivalent Lateral Force Method | | | | |
| **Site Class:** | D - Stiff Soil | | **Period Based on Rayleigh Method (sec):** | | 1.89 |
| **$T_L$ (sec):** | 6 | **P:** | 1 | **$C_s$:** | 0.030 |
| **$S_s$:** | 0.194 | **$S_1$:** | 0.054 | **$C_s$ Max:** | 0.030 |
| **$F_a$:** | 1.600 | **$F_v$:** | 2.400 | **$C_s$ Min:** | 0.030 |
| **$S_{ds}$:** | 0.207 | **$S_{d1}$:** | 0.086 | | |

## LOAD CASES

| | |
|---|---|
| 1.2D + 1.0W | 115 mph Wind with No Ice |
| 0.9D + 1.0W | 115 mph Wind with No Ice (Reduced DL) |
| 1.2D + 1.0Di + 1.0Wi | 50 mph Wind with 1" Radial Ice |
| 1.2D + 1.0Ev + 1.0Eh | Seismic |
| 0.9D - 1.0Ev + 1.0Eh | Seismic (Reduced DL) |
| 1.0D + 1.0W | 60 mph Wind with No Ice |

*©2007 - 2022 by ATC LLC. All rights reserved.*

## SHAFT SECTION PROPERTIES

| | | | | | | | Bottom | | | | | | Top | | | | | | |
|---|---|---|---|---|---|---|---|---|---|---|---|---|---|---|---|---|---|---|---|
| Section | Length (ft) | Thick (in) | Fy (ksi) | Joint Type | Joint Len (in) | Weight (lb) | Dia (in) | Elev (ft) | Area ($in^2$) | Ix ($in^4$) | W/t Ratio | D/t Ratio | Dia (in) | Elev (ft) | Area ($in^2$) | Ix ($in^4$) | W/t Ratio | D/t Ratio | Taper (in/ft) |
| 1-18 | 45.00 | 0.4375 | 65 | | 0.00 | 12,236 | 62.65 | 0.000 | 86.39 | 42,243.1 | 23.49 | 143.20 | 53.32 | 45.00 | 73.43 | 25,947. | 19.73 | 121.88 | 0.2073 |
| 2-18 | 45.00 | 0.4375 | 65 | Slip | 84.00 | 10,747 | 55.65 | 38.000 | 76.66 | 29,524.4 | 20.66 | 127.20 | 46.32 | 83.00 | 63.71 | 16,945. | 16.90 | 105.87 | 0.2073 |
| 3-18 | 45.00 | 0.3750 | 65 | Slip | 72.00 | 7,887 | 48.31 | 77.000 | 57.06 | 16,566.1 | 20.95 | 128.83 | 38.98 | 122.00 | 45.95 | 8,655.0 | 16.57 | 103.96 | 0.2073 |
| 4-18 | 30.25 | 0.2813 | 65 | Slip | 63.00 | 3,420 | 40.64 | 116.750 | 36.03 | 7,412.9 | 23.71 | 144.46 | 34.36 | 147.00 | 30.43 | 4,466.4 | 19.78 | 122.16 | 0.2073 |
| | | | **Total Shaft Weight** | | | **34,290** | | | | | | | | | | | | | |

## DISCRETE APPURTENANCE PROPERTIES

| Attach Elev (ft) | Description | Qty | Ka | Vert Ecc (ft) | No Ice Weight (lb) | No Ice EPAa (sf) | No Ice Orientation Factor | Ice Weight (lb) | Ice EPAa (sf) | Ice Orientation Factor |
|---|---|---|---|---|---|---|---|---|---|---|
| 147.00 | VZW Unused Reserve (15681.24 s | 1 | 0.75 | 0.000 | 1123.60 | 108.898 | 0.90 | 1645.28 | 159.459 | 0.90 |
| 147.00 | Samsung B2/B66A RRH-BR049 | 3 | 0.75 | 0.000 | 84.40 | 1.875 | 0.50 | 126.92 | 2.477 | 0.50 |
| 147.00 | Antel LPA-80063/4CF | 2 | 0.75 | -1.000 | 20.00 | 6.142 | 0.82 | 150.01 | 6.820 | 0.82 |
| 147.00 | Commscope CBC78T-DS-43-2X | 3 | 0.75 | 0.000 | 20.70 | 0.552 | 0.50 | 35.42 | 0.891 | 0.50 |
| 147.00 | Kaelus KA-6030 | 6 | 0.75 | 0.000 | 17.60 | 0.963 | 0.50 | 33.31 | 1.398 | 0.50 |
| 147.00 | Commscope JAHH-65B-R3B (63.3 l | 6 | 0.75 | -1.000 | 63.30 | 9.113 | 0.69 | 198.14 | 10.962 | 0.69 |
| 147.00 | Samsung B5/B13 RRH-BR04C | 3 | 0.75 | 0.000 | 70.30 | 1.875 | 0.50 | 108.42 | 2.477 | 0.50 |
| 147.00 | RFS DB-C1-12C-24AB-0Z | 1 | 0.75 | 0.000 | 32.00 | 4.056 | 1.00 | 116.70 | 4.966 | 1.00 |
| 147.00 | Samsung MT6407-77A | 3 | 0.75 | 0.000 | 81.60 | 4.709 | 0.61 | 149.53 | 5.721 | 0.61 |
| 147.00 | Antel LPA-80080/4CF ___ | 4 | 0.75 | -1.000 | 12.00 | 5.399 | 0.62 | 95.78 | 3.167 | 0.62 |
| 146.00 | Generic Flat Platform with Han | 1 | 1.00 | 0.000 | 2500.00 | 42.400 | 1.00 | 3683.14 | 56.368 | 1.00 |
| 145.00 | Mount Reinforcement | 3 | 1.00 | 0.000 | 200.00 | 4.980 | 1.00 | 292.60 | 7.286 | 1.00 |
| 135.00 | RFS APXVAALL24 43-U-NA20 | 3 | 0.90 | 0.000 | 122.80 | 20.243 | 0.63 | 379.80 | 22.690 | 0.63 |
| 135.00 | Commscope VV-65A-R1B | 3 | 0.90 | 0.000 | 24.70 | 5.887 | 0.63 | 101.82 | 7.283 | 0.63 |
| 135.00 | Generic Flat Light Sector Fram | 2 | 0.90 | 0.000 | 400.00 | 17.900 | 0.67 | 598.57 | 27.856 | 0.67 |
| 135.00 | Ericsson AIR 6419 B41 | 3 | 0.90 | 0.000 | 68.50 | 5.600 | 0.63 | 148.22 | 6.645 | 0.63 |
| 135.00 | RFS SC2-W100BD | 1 | 1.00 | 0.000 | 20.00 | 4.796 | 1.00 | 81.15 | 5.647 | 1.00 |
| 135.00 | Ericsson 4480 BAND 71 | 3 | 0.90 | 0.000 | 81.00 | 2.878 | 0.50 | 131.23 | 3.619 | 0.50 |
| 135.00 | Ericsson 4460 BAND 2/25 | 3 | 0.90 | 0.000 | 109.00 | 2.564 | 0.50 | 167.32 | 3.259 | 0.50 |
| 128.10 | Raycap DC6-48-60-18-8F(32.8 lb | 1 | 0.80 | 1.000 | 32.80 | 1.470 | 1.00 | 73.32 | 1.929 | 1.00 |
| 124.00 | Powerwave Allgon LGP21901 | 6 | 0.80 | 1.000 | 5.50 | 0.200 | 0.50 | 10.53 | 0.409 | 0.50 |
| 124.00 | Generic Round Low Profile Plat | 1 | 1.00 | 0.000 | 1875.00 | 21.700 | 1.00 | 2405.39 | 34.274 | 1.00 |
| 124.00 | KMW EPBQ-654L8H6-L2 | 3 | 0.80 | 1.000 | 72.80 | 13.237 | 0.61 | 237.41 | 15.109 | 0.61 |
| 124.00 | KMW AM-X-CD-16-65-00T-RET | 2 | 0.80 | 1.000 | 48.50 | 8.024 | 0.75 | 154.56 | 9.851 | 0.75 |
| 124.00 | Kathrein Scala 800 10764 | 1 | 0.80 | 1.000 | 40.80 | 5.866 | 1.00 | 124.14 | 7.263 | 1.00 |
| 124.00 | Powerwave Allgon 7770.00 | 6 | 0.80 | 1.000 | 35.00 | 5.508 | 0.65 | 109.45 | 6.900 | 0.65 |
| 124.00 | Ericsson RRUS-11 | 6 | 0.80 | 0.000 | 55.00 | 3.792 | 0.61 | 113.79 | 4.633 | 0.61 |
| 124.00 | Powerwave Allgon LGP2140X | 6 | 0.80 | 1.000 | 19.00 | 1.080 | 0.50 | 35.25 | 1.544 | 0.50 |
| 124.00 | Raycap DC6-48-60-18-8F ("Squid | 1 | 0.80 | 1.000 | 18.90 | 1.470 | 1.00 | 59.32 | 1.927 | 1.00 |
| 124.00 | Ericsson RRUS 4478 B14 | 3 | 0.80 | 0.000 | 59.90 | 1.842 | 0.50 | 96.11 | 2.429 | 0.50 |
| 124.00 | Ericsson RRUS 32 B2 | 3 | 0.80 | 1.000 | 53.00 | 2.743 | 0.67 | 101.17 | 3.509 | 0.67 |
| 117.50 | Generic 3' Omni-Grid | 2 | 1.00 | 0.000 | 15.00 | 2.460 | 0.68 | 70.03 | 9.917 | 0.68 |
| 117.50 | Stand-Off | 2 | 1.00 | 0.000 | 75.00 | 2.500 | 0.90 | 115.86 | 3.885 | 0.90 |
| 101.00 | Fujitsu TA08025-B605 | 3 | 0.75 | 0.000 | 75.00 | 1.962 | 0.50 | 115.21 | 2.552 | 0.50 |
| 101.00 | Fujitsu TA08025-B604 | 3 | 0.75 | 0.000 | 63.90 | 1.962 | 0.50 | 101.33 | 2.552 | 0.50 |
| 101.00 | JMA Wireless MX08FRO665-21 | 3 | 0.75 | 0.000 | 64.50 | 12.489 | 0.64 | 229.46 | 14.293 | 0.64 |
| 101.00 | Generic Flat Platform with Han | 1 | 1.00 | 0.000 | 2500.00 | 42.400 | 1.00 | 3640.16 | 55.860 | 1.00 |
| 101.00 | Commscope RDIDC-9181-PF-48 | 1 | 0.75 | 0.000 | 21.90 | 1.867 | 1.00 | 58.42 | 2.445 | 1.00 |
| **Totals** | **Row Count: 38** | **108** | | | **14,258.70** | | | **25,016.93** | | |

## LINEAR APPURTENANCE PROPERTIES

*Load Case Azimuth (deg): 0.00*

| Elev From (ft) | Elev To (ft) | Qty | Description | Diameter (in) | Weight (lb/ft) | Flat | Max/ Row | Distance Between Rows(in) | Distance Between Cols(in) | Azimuth (deg) | Distance From Face (in) | Exposed To Wind | Carrier |
|---|---|---|---|---|---|---|---|---|---|---|---|---|---|
| 0.00 | 147.00 | 6 | 1 5/8" Coax | 1.98 | 0.82 | N | 0 | 0 | 0 | 0 | 0 | N | VERIZON WIRELESS |
| 0.00 | 147.00 | 2 | 1 5/8" (1.63"-41.3mm) | 1.63 | 1.61 | N | 0 | 0 | 0 | 0 | 0 | N | VERIZON WIRELESS |
| 0.00 | 135.00 | 2 | 1.99" (50.7mm) Hybrid | 1.99 | 1.9 | N | 0 | 0 | 0 | 0 | 0 | N | T-MOBILE |
| 0.00 | 135.00 | 1 | 1/2" Coax | 0.63 | 0.15 | N | 0 | 0 | 0 | 0 | 0 | N | T-MOBILE |

*©2007 - 2022 by ATC LLC. All rights reserved.*

## LINEAR APPURTENANCE PROPERTIES

*Load Case Azimuth (deg): 0.00*

| Elev From (ft) | Elev To (ft) | Qty | Description | Diameter (in) | Weight (lb/ft) | Flat | Max/ Row | Distance Between Rows(in) | Distance Between Cols(in) | Azimuth (deg) | Distance From Face (in) | Exposed To Wind | Carrier |
|---|---|---|---|---|---|---|---|---|---|---|---|---|---|
| 0.00 | 128.00 | 4 | 0.78" (19.7mm) 8 AWG | 0.78 | 0.59 | N | 0 | 0 | 0 | 0 | 0 | N | AT&T MOBILITY |
| 0.00 | 128.00 | 2 | 0.39" (10mm) Fiber Tr | 0.39 | 0.06 | N | 0 | 0 | 0 | 0 | 0 | N | AT&T MOBILITY |
| 0.00 | 128.00 | 1 | 2" Carflex Non-Metall | 2.36 | 0.68 | N | 0 | 0 | 0 | 0 | 0 | N | AT&T MOBILITY |
| 0.00 | 124.00 | 12 | 1 5/8" Coax | 1.98 | 0.82 | N | 0 | 0 | 0 | 0 | 0 | N | AT&T MOBILITY |
| 0.00 | 124.00 | 4 | 0.76" (19.2mm) 8 AWG | 0.76 | 0.53 | N | 0 | 0 | 0 | 0 | 0 | N | AT&T MOBILITY |
| 0.00 | 124.00 | 2 | 0.45" (11.5mm) Fiber | 0.45 | 0.08 | N | 0 | 0 | 0 | 0 | 0 | N | AT&T MOBILITY |
| 0.00 | 117.50 | 2 | 1/2" Coax | 0.63 | 0.15 | N | 0 | 0 | 0 | 0 | 0 | N | WOODBURY VOLUNTEE |
| 0.00 | 101.00 | 1 | 1.60" (40.6mm) Hybrid | 1.6 | 2.34 | N | 0 | 0 | 0 | 0 | 0 | N | DISH WIRELESS L.L.C. |

## SEGMENT PROPERTIES

| Seg Top Elev (ft) | Description *(Max Length: 5 ft)* | Thick (in) | Flat Dia (in) | Area ($in^2$) | Ix ($in^4$) | W/t Ratio | D/t Ratio | F'y (ksi) | S ($in^3$) | Z ($in^3$) | Weight (lb) |
|---|---|---|---|---|---|---|---|---|---|---|---|
| 0.00 | | 0.4375 | 62.650 | 86.387 | 42,243.10 | 23.49 | 143.20 | 73.8 | 1328.1 | 0.0 | 0.0 |
| 5.00 | | 0.4375 | 61.614 | 84.947 | 40,166.70 | 23.07 | 140.83 | 74.3 | 1284.0 | 0.0 | 1,457.5 |
| 10.00 | | 0.4375 | 60.577 | 83.508 | 38,159.50 | 22.65 | 138.46 | 74.8 | 1240.7 | 0.0 | 1,433.0 |
| 15.00 | | 0.4375 | 59.541 | 82.069 | 36,220.30 | 22.23 | 136.09 | 75.3 | 1198.2 | 0.0 | 1,408.6 |
| 20.00 | | 0.4375 | 58.504 | 80.630 | 34,348.00 | 21.82 | 133.72 | 75.7 | 1156.4 | 0.0 | 1,384.1 |
| 25.00 | | 0.4375 | 57.468 | 79.191 | 32,541.30 | 21.40 | 131.35 | 76.2 | 1115.3 | 0.0 | 1,359.6 |
| 30.00 | | 0.4375 | 56.431 | 77.751 | 30,799.10 | 20.98 | 128.99 | 76.7 | 1075.0 | 0.0 | 1,335.1 |
| 35.00 | | 0.4375 | 55.395 | 76.312 | 29,120.20 | 20.56 | 126.62 | 77.2 | 1035.4 | 0.0 | 1,310.6 |
| 38.00 | Bot - Section 2 | 0.4375 | 54.773 | 75.449 | 28,142.80 | 20.31 | 125.19 | 77.5 | 1012.0 | 0.0 | 774.6 |
| 40.00 | | 0.4375 | 54.358 | 74.873 | 27,503.50 | 20.14 | 124.25 | 77.7 | 996.6 | 0.0 | 1,031.3 |
| 45.00 | Top - Section 1 | 0.4375 | 54.197 | 74.649 | 27,257.10 | 20.08 | 123.88 | 77.8 | 990.6 | 0.0 | 2,543.9 |
| 50.00 | | 0.4375 | 53.160 | 73.209 | 25,710.70 | 19.66 | 121.51 | 78.3 | 952.6 | 0.0 | 1,257.8 |
| 55.00 | | 0.4375 | 52.124 | 71.770 | 24,224.00 | 19.24 | 119.14 | 78.8 | 915.4 | 0.0 | 1,233.3 |
| 60.00 | | 0.4375 | 51.087 | 70.331 | 22,795.70 | 18.83 | 116.77 | 79.3 | 878.9 | 0.0 | 1,208.8 |
| 65.00 | | 0.4375 | 50.051 | 68.892 | 21,424.70 | 18.41 | 114.40 | 79.7 | 843.1 | 0.0 | 1,184.4 |
| 70.00 | | 0.4375 | 49.014 | 67.452 | 20,109.80 | 17.99 | 112.03 | 80.2 | 808.1 | 0.0 | 1,159.9 |
| 75.00 | | 0.4375 | 47.978 | 66.013 | 18,849.80 | 17.57 | 109.66 | 80.7 | 773.8 | 0.0 | 1,135.4 |
| 77.00 | Bot - Section 3 | 0.4375 | 47.563 | 65.438 | 18,360.90 | 17.41 | 108.72 | 80.9 | 760.3 | 0.0 | 447.3 |
| 80.00 | | 0.4375 | 46.941 | 64.574 | 17,643.60 | 17.16 | 107.29 | 81.2 | 740.3 | 0.0 | 1,242.3 |
| 83.00 | Top - Section 2 | 0.3750 | 47.069 | 55.576 | 15,309.80 | 20.37 | 125.52 | 77.4 | 640.6 | 0.0 | 1,225.9 |
| 85.00 | | 0.3750 | 46.655 | 55.083 | 14,905.60 | 20.17 | 124.41 | 77.7 | 629.3 | 0.0 | 376.5 |
| 90.00 | | 0.3750 | 45.618 | 53.849 | 13,926.40 | 19.69 | 121.65 | 78.2 | 601.3 | 0.0 | 926.7 |
| 95.00 | | 0.3750 | 44.582 | 52.615 | 12,991.00 | 19.20 | 118.88 | 78.8 | 573.9 | 0.0 | 905.7 |
| 100.00 | | 0.3750 | 43.545 | 51.382 | 12,098.50 | 18.71 | 116.12 | 79.4 | 547.2 | 0.0 | 884.7 |
| 101.00 | | 0.3750 | 43.338 | 51.135 | 11,925.10 | 18.61 | 115.57 | 79.5 | 542.0 | 0.0 | 174.4 |
| 105.00 | | 0.3750 | 42.509 | 50.148 | 11,247.80 | 18.22 | 113.36 | 80 | 521.2 | 0.0 | 689.3 |
| 110.00 | | 0.3750 | 41.472 | 48.914 | 10,438.00 | 17.74 | 110.59 | 80.5 | 495.7 | 0.0 | 842.7 |
| 115.00 | | 0.3750 | 40.436 | 47.681 | 9,668.00 | 17.25 | 107.83 | 81.1 | 470.9 | 0.0 | 821.7 |
| 116.75 | Bot - Section 4 | 0.3750 | 40.073 | 47.249 | 9,407.70 | 17.08 | 106.86 | 81.3 | 462.4 | 0.0 | 282.6 |
| 117.50 | | 0.3750 | 39.918 | 47.064 | 9,297.60 | 17.01 | 106.45 | 81.4 | 458.8 | 0.0 | 212.1 |
| 120.00 | | 0.3750 | 39.399 | 46.447 | 8,936.90 | 16.76 | 105.07 | 81.7 | 446.8 | 0.0 | 701.1 |
| 122.00 | Top - Section 3 | 0.2813 | 39.547 | 35.057 | 6,829.20 | 23.03 | 140.59 | 74.3 | 340.1 | 0.0 | 554.3 |
| 124.00 | | 0.2813 | 39.133 | 34.687 | 6,615.10 | 22.77 | 139.11 | 74.6 | 332.9 | 0.0 | 237.3 |
| 125.00 | | 0.2813 | 38.926 | 34.502 | 6,509.80 | 22.64 | 138.38 | 74.8 | 329.4 | 0.0 | 117.7 |
| 128.10 | | 0.2813 | 38.283 | 33.928 | 6,190.40 | 22.23 | 136.09 | 75.3 | 318.5 | 0.0 | 360.9 |
| 130.00 | | 0.2813 | 37.889 | 33.577 | 5,999.90 | 21.99 | 134.69 | 75.5 | 311.9 | 0.0 | 218.2 |
| 135.00 | | 0.2813 | 36.853 | 32.651 | 5,517.40 | 21.34 | 131.01 | 76.3 | 294.9 | 0.0 | 563.4 |
| 140.00 | | 0.2813 | 35.816 | 31.726 | 5,061.40 | 20.69 | 127.32 | 77.1 | 278.3 | 0.0 | 547.7 |
| 145.00 | | 0.2813 | 34.780 | 30.801 | 4,631.30 | 20.04 | 123.64 | 77.8 | 262.3 | 0.0 | 531.9 |
| 146.00 | | 0.2813 | 34.572 | 30.615 | 4,548.40 | 19.91 | 122.90 | 78 | 259.1 | 0.0 | 104.5 |
| 147.00 | | 0.2813 | 34.365 | 30.430 | 4,466.40 | 19.78 | 122.16 | 78.1 | 256.0 | 0.0 | 103.9 |
| | | | | | | | | | | **Total:** | **34,290.7** |

## CALCULATED FORCES

Load Case: 1.2D + 1.0W 115 mph Wind with No Ice 21 Iterations

Gust Response Factor: 1.10

*©2007 - 2022 by ATC LLC. All rights reserved.*

CALCULATED FORCES

Dead load Factor: 1.20
Wind Load Factor: 1.00

| Seg Elev (ft) | Pu FY (-) (kips) | Vu FX (-) (kips) | Tu MY (ft-kips) | Mu MZ (ft-kips) | Mu MX (ft-kips) | Resultant Moment (ft-kips) | Phi Pn (kips) | Phi Vn (kips) | Phi Tn (ft-kips) | Phi Mn (ft-kips) | Total Deflect (in) | Rotation (deg) | Ratio |
|---|---|---|---|---|---|---|---|---|---|---|---|---|---|
| 0.00 | -62.92 | -29.44 | 0.00 | -3,250.6 | 0.00 | 3,250.63 | 5,735.95 | 1,516.09 | 8,518.97 | 7,348.40 | 0 | 0 | 0.454 |
| 5.00 | -60.94 | -29.10 | 0.00 | -3,103.4 | 0.00 | 3,103.42 | 5,677.95 | 1,490.83 | 8,237.51 | 7,152.06 | 0.06 | -0.11 | 0.445 |
| 10.00 | -58.99 | -28.76 | 0.00 | -2,957.9 | 0.00 | 2,957.93 | 5,618.68 | 1,465.57 | 7,960.77 | 6,956.64 | 0.23 | -0.21 | 0.436 |
| 15.00 | -57.06 | -28.41 | 0.00 | -2,814.2 | 0.00 | 2,814.15 | 5,558.13 | 1,440.31 | 7,688.77 | 6,762.21 | 0.51 | -0.32 | 0.427 |
| 20.00 | -55.17 | -28.07 | 0.00 | -2,672.1 | 0.00 | 2,672.09 | 5,496.31 | 1,415.05 | 7,421.49 | 6,568.87 | 0.91 | -0.43 | 0.417 |
| 25.00 | -53.31 | -27.73 | 0.00 | -2,531.7 | 0.00 | 2,531.74 | 5,433.22 | 1,389.79 | 7,158.94 | 6,376.70 | 1.41 | -0.54 | 0.407 |
| 30.00 | -51.49 | -27.39 | 0.00 | -2,393.1 | 0.00 | 2,393.10 | 5,368.86 | 1,364.54 | 6,901.11 | 6,185.76 | 2.04 | -0.65 | 0.397 |
| 35.00 | -49.70 | -27.10 | 0.00 | -2,256.2 | 0.00 | 2,256.17 | 5,303.22 | 1,339.28 | 6,648.02 | 5,996.16 | 2.77 | -0.75 | 0.386 |
| 38.00 | -48.64 | -26.91 | 0.00 | -2,174.9 | 0.00 | 2,174.89 | 5,263.22 | 1,324.12 | 6,498.43 | 5,883.07 | 3.26 | -0.82 | 0.379 |
| 40.00 | -47.30 | -26.64 | 0.00 | -2,121.1 | 0.00 | 2,121.07 | 5,236.31 | 1,314.02 | 6,399.65 | 5,807.96 | 3.62 | -0.86 | 0.375 |
| 45.00 | -44.02 | -26.22 | 0.00 | -1,987.9 | 0.00 | 1,987.87 | 5,225.77 | 1,310.08 | 6,361.38 | 5,778.78 | 4.57 | -0.97 | 0.353 |
| 50.00 | -42.30 | -25.81 | 0.00 | -1,856.8 | 0.00 | 1,856.78 | 5,157.39 | 1,284.82 | 6,118.48 | 5,592.31 | 5.64 | -1.07 | 0.341 |
| 55.00 | -40.60 | -25.39 | 0.00 | -1,727.7 | 0.00 | 1,727.74 | 5,087.73 | 1,259.57 | 5,880.31 | 5,407.44 | 6.82 | -1.17 | 0.328 |
| 60.00 | -38.94 | -24.96 | 0.00 | -1,600.8 | 0.00 | 1,600.81 | 5,016.81 | 1,234.31 | 5,646.86 | 5,224.23 | 8.1 | -1.27 | 0.315 |
| 65.00 | -37.31 | -24.52 | 0.00 | -1,476.0 | 0.00 | 1,476.04 | 4,944.61 | 1,209.05 | 5,418.14 | 5,042.78 | 9.48 | -1.37 | 0.301 |
| 70.00 | -35.71 | -24.07 | 0.00 | -1,353.4 | 0.00 | 1,353.45 | 4,871.14 | 1,183.79 | 5,194.15 | 4,863.15 | 10.96 | -1.46 | 0.286 |
| 75.00 | -34.15 | -23.75 | 0.00 | -1,233.1 | 0.00 | 1,233.08 | 4,796.39 | 1,158.53 | 4,974.89 | 4,685.45 | 12.54 | -1.55 | 0.271 |
| 77.00 | -33.53 | -23.52 | 0.00 | -1,185.6 | 0.00 | 1,185.59 | 4,766.14 | 1,148.43 | 4,888.51 | 4,614.92 | 13.2 | -1.59 | 0.264 |
| 80.00 | -31.92 | -23.23 | 0.00 | -1,115.0 | 0.00 | 1,115.01 | 4,720.37 | 1,133.27 | 4,760.36 | 4,509.74 | 14.21 | -1.64 | 0.254 |
| 83.00 | -30.33 | -22.97 | 0.00 | -1,045.3 | 0.00 | 1,045.33 | 3,873.58 | 975.36 | 4,113.65 | 3,720.97 | 15.26 | -1.69 | 0.289 |
| 85.00 | -29.79 | -22.66 | 0.00 | -999.4 | 0.00 | 999.39 | 3,850.55 | 966.70 | 4,040.94 | 3,665.75 | 15.98 | -1.73 | 0.281 |
| 90.00 | -28.48 | -22.20 | 0.00 | -886.1 | 0.00 | 886.07 | 3,792.09 | 945.05 | 3,861.98 | 3,528.60 | 17.84 | -1.82 | 0.259 |
| 95.00 | -27.20 | -21.74 | 0.00 | -775.0 | 0.00 | 775.05 | 3,732.36 | 923.40 | 3,687.08 | 3,392.80 | 19.79 | -1.9 | 0.236 |
| 100.00 | -25.95 | -21.45 | 0.00 | -666.3 | 0.00 | 666.34 | 3,671.36 | 901.75 | 3,516.24 | 3,258.44 | 21.82 | -1.98 | 0.212 |
| 101.00 | -22.02 | -18.85 | 0.00 | -644.9 | 0.00 | 644.90 | 3,659.01 | 897.42 | 3,482.55 | 3,231.75 | 22.24 | -2 | 0.206 |
| 105.00 | -21.05 | -18.43 | 0.00 | -569.5 | 0.00 | 569.50 | 3,609.08 | 880.10 | 3,349.44 | 3,125.60 | 23.94 | -2.05 | 0.188 |
| 110.00 | -19.87 | -17.97 | 0.00 | -477.3 | 0.00 | 477.34 | 3,545.54 | 858.45 | 3,186.70 | 2,994.36 | 26.13 | -2.12 | 0.165 |
| 115.00 | -18.72 | -17.64 | 0.00 | -387.5 | 0.00 | 387.51 | 3,480.72 | 836.80 | 3,028.01 | 2,864.81 | 28.38 | -2.18 | 0.141 |
| 116.75 | -18.33 | -17.52 | 0.00 | -356.6 | 0.00 | 356.65 | 3,457.73 | 829.22 | 2,973.43 | 2,819.88 | 29.18 | -2.2 | 0.132 |
| 117.50 | -17.84 | -17.08 | 0.00 | -343.5 | 0.00 | 343.51 | 3,447.83 | 825.97 | 2,950.18 | 2,800.69 | 29.53 | -2.21 | 0.128 |
| 120.00 | -16.92 | -16.85 | 0.00 | -300.8 | 0.00 | 300.81 | 3,414.62 | 815.15 | 2,873.37 | 2,737.03 | 30.69 | -2.23 | 0.115 |
| 122.00 | -16.19 | -16.65 | 0.00 | -267.1 | 0.00 | 267.10 | 2,344.85 | 615.26 | 2,182.03 | 1,895.77 | 31.63 | -2.25 | 0.149 |
| 124.00 | -12.05 | -12.95 | 0.00 | -231.6 | 0.00 | 231.65 | 2,329.63 | 608.76 | 2,136.20 | 1,863.44 | 32.58 | -2.27 | 0.130 |
| 125.00 | -11.89 | -12.77 | 0.00 | -218.7 | 0.00 | 218.70 | 2,321.95 | 605.51 | 2,113.47 | 1,847.31 | 33.05 | -2.28 | 0.124 |
| 128.10 | -11.37 | -12.49 | 0.00 | -179.1 | 0.00 | 179.07 | 2,297.80 | 595.44 | 2,043.77 | 1,797.48 | 34.54 | -2.3 | 0.105 |
| 130.00 | -11.09 | -12.19 | 0.00 | -155.3 | 0.00 | 155.33 | 2,282.76 | 589.27 | 2,001.63 | 1,767.07 | 35.46 | -2.32 | 0.093 |
| 135.00 | -8.04 | -8.41 | 0.00 | -94.4 | 0.00 | 94.36 | 2,242.30 | 573.03 | 1,892.83 | 1,687.56 | 37.9 | -2.35 | 0.060 |
| 140.00 | -7.35 | -7.97 | 0.00 | -52.3 | 0.00 | 52.29 | 2,200.57 | 556.79 | 1,787.07 | 1,608.86 | 40.37 | -2.37 | 0.036 |
| 145.00 | -5.98 | -7.11 | 0.00 | -12.4 | 0.00 | 12.41 | 2,157.57 | 540.55 | 1,684.36 | 1,531.05 | 42.85 | -2.37 | 0.011 |
| 146.00 | -2.92 | -5.30 | 0.00 | -5.3 | 0.00 | 5.30 | 2,148.81 | 537.30 | 1,664.18 | 1,515.60 | 43.35 | -2.38 | 0.005 |
| 147.00 | 0.00 | -5.18 | 0.00 | 0.0 | 0.00 | 0.00 | 2,140.01 | 534.05 | 1,644.12 | 1,500.19 | 43.85 | -2.38 | 0.000 |

*©2007 - 2022 by ATC LLC. All rights reserved.*

CALCULATED FORCES

Load Case: 0.9D + 1.0W — 115 mph Wind with No Ice (Reduced DL) — 21 Iterations

Gust Response Factor: 1.10
Dead load Factor: 0.90
Wind Load Factor: 1.00

| Seg Elev (ft) | Pu FY (-) (kips) | Vu FX (-) (kips) | Tu MY (ft-kips) | Mu MZ (ft-kips) | Mu MX (ft-kips) | Resultant Moment (ft-kips) | Phi Pn (kips) | Phi Vn (kips) | Phi Tn (ft-kips) | Phi Mn (ft-kips) | Total Deflect (in) | Rotation (deg) | Ratio |
|---|---|---|---|---|---|---|---|---|---|---|---|---|---|
| 0.00 | -47.18 | -29.43 | 0.00 | -3,225.6 | 0.00 | 3,225.59 | 5,735.95 | 1,516.09 | 8,518.97 | 7,348.40 | 0 | 0 | 0.448 |
| 5.00 | -45.68 | -29.05 | 0.00 | -3,078.4 | 0.00 | 3,078.45 | 5,677.95 | 1,490.83 | 8,237.51 | 7,152.06 | 0.06 | -0.11 | 0.439 |
| 10.00 | -44.21 | -28.68 | 0.00 | -2,933.2 | 0.00 | 2,933.18 | 5,618.68 | 1,465.57 | 7,960.77 | 6,956.64 | 0.23 | -0.21 | 0.430 |
| 15.00 | -42.75 | -28.32 | 0.00 | -2,789.8 | 0.00 | 2,789.76 | 5,558.13 | 1,440.31 | 7,688.77 | 6,762.21 | 0.51 | -0.32 | 0.421 |
| 20.00 | -41.32 | -27.95 | 0.00 | -2,648.2 | 0.00 | 2,648.18 | 5,496.31 | 1,415.05 | 7,421.49 | 6,568.87 | 0.9 | -0.43 | 0.411 |
| 25.00 | -39.92 | -27.59 | 0.00 | -2,508.4 | 0.00 | 2,508.43 | 5,433.22 | 1,389.79 | 7,158.94 | 6,376.70 | 1.4 | -0.53 | 0.401 |
| 30.00 | -38.53 | -27.22 | 0.00 | -2,370.5 | 0.00 | 2,370.50 | 5,368.86 | 1,364.54 | 6,901.11 | 6,185.76 | 2.02 | -0.64 | 0.391 |
| 35.00 | -37.18 | -26.92 | 0.00 | -2,234.4 | 0.00 | 2,234.39 | 5,303.22 | 1,339.28 | 6,648.02 | 5,996.16 | 2.75 | -0.75 | 0.380 |
| 38.00 | -36.38 | -26.73 | 0.00 | -2,153.6 | 0.00 | 2,153.63 | 5,263.22 | 1,324.12 | 6,498.43 | 5,883.07 | 3.24 | -0.81 | 0.373 |
| 40.00 | -35.37 | -26.44 | 0.00 | -2,100.2 | 0.00 | 2,100.18 | 5,236.31 | 1,314.02 | 6,399.65 | 5,807.96 | 3.58 | -0.85 | 0.369 |
| 45.00 | -32.91 | -26.02 | 0.00 | -1,968.0 | 0.00 | 1,967.96 | 5,225.77 | 1,310.08 | 6,361.38 | 5,778.78 | 4.53 | -0.96 | 0.347 |
| 50.00 | -31.60 | -25.59 | 0.00 | -1,837.9 | 0.00 | 1,837.88 | 5,157.39 | 1,284.82 | 6,118.48 | 5,592.31 | 5.6 | -1.06 | 0.335 |
| 55.00 | -30.33 | -25.16 | 0.00 | -1,709.9 | 0.00 | 1,709.92 | 5,087.73 | 1,259.57 | 5,880.31 | 5,407.44 | 6.76 | -1.16 | 0.323 |
| 60.00 | -29.07 | -24.72 | 0.00 | -1,584.1 | 0.00 | 1,584.12 | 5,016.81 | 1,234.31 | 5,646.86 | 5,224.23 | 8.03 | -1.26 | 0.309 |
| 65.00 | -27.84 | -24.28 | 0.00 | -1,460.5 | 0.00 | 1,460.51 | 4,944.61 | 1,209.05 | 5,418.14 | 5,042.78 | 9.4 | -1.35 | 0.296 |
| 70.00 | -26.64 | -23.83 | 0.00 | -1,339.1 | 0.00 | 1,339.12 | 4,871.14 | 1,183.79 | 5,194.15 | 4,863.15 | 10.87 | -1.45 | 0.281 |
| 75.00 | -25.46 | -23.50 | 0.00 | -1,220.0 | 0.00 | 1,219.98 | 4,796.39 | 1,158.53 | 4,974.89 | 4,685.45 | 12.43 | -1.54 | 0.266 |
| 77.00 | -24.99 | -23.28 | 0.00 | -1,173.0 | 0.00 | 1,172.98 | 4,766.14 | 1,148.43 | 4,888.51 | 4,614.92 | 13.08 | -1.57 | 0.260 |
| 80.00 | -23.78 | -22.98 | 0.00 | -1,103.2 | 0.00 | 1,103.15 | 4,720.37 | 1,133.27 | 4,760.36 | 4,509.74 | 14.08 | -1.62 | 0.250 |
| 83.00 | -22.59 | -22.73 | 0.00 | -1,034.2 | 0.00 | 1,034.20 | 3,873.58 | 975.36 | 4,113.65 | 3,720.97 | 15.12 | -1.68 | 0.284 |
| 85.00 | -22.18 | -22.42 | 0.00 | -988.7 | 0.00 | 988.73 | 3,850.55 | 966.70 | 4,040.94 | 3,665.75 | 15.83 | -1.71 | 0.276 |
| 90.00 | -21.19 | -21.96 | 0.00 | -876.6 | 0.00 | 876.63 | 3,792.09 | 945.05 | 3,861.98 | 3,528.60 | 17.67 | -1.8 | 0.255 |
| 95.00 | -20.23 | -21.50 | 0.00 | -766.8 | 0.00 | 766.83 | 3,732.36 | 923.40 | 3,687.08 | 3,392.80 | 19.6 | -1.88 | 0.232 |
| 100.00 | -19.29 | -21.21 | 0.00 | -659.3 | 0.00 | 659.33 | 3,671.36 | 901.75 | 3,516.24 | 3,258.44 | 21.62 | -1.96 | 0.208 |
| 101.00 | -16.36 | -18.64 | 0.00 | -638.1 | 0.00 | 638.12 | 3,659.01 | 897.42 | 3,482.55 | 3,231.75 | 22.03 | -1.98 | 0.202 |
| 105.00 | -15.64 | -18.23 | 0.00 | -563.6 | 0.00 | 563.55 | 3,609.08 | 880.10 | 3,349.44 | 3,125.60 | 23.71 | -2.03 | 0.185 |
| 110.00 | -14.75 | -17.77 | 0.00 | -472.4 | 0.00 | 472.41 | 3,545.54 | 858.45 | 3,186.70 | 2,994.36 | 25.88 | -2.1 | 0.162 |
| 115.00 | -13.89 | -17.45 | 0.00 | -383.6 | 0.00 | 383.57 | 3,480.72 | 836.80 | 3,028.01 | 2,864.81 | 28.11 | -2.16 | 0.138 |
| 116.75 | -13.59 | -17.33 | 0.00 | -353.0 | 0.00 | 353.04 | 3,457.73 | 829.22 | 2,973.43 | 2,819.88 | 28.91 | -2.18 | 0.130 |
| 117.50 | -13.23 | -16.90 | 0.00 | -340.0 | 0.00 | 340.04 | 3,447.83 | 825.97 | 2,950.18 | 2,800.69 | 29.25 | -2.18 | 0.126 |
| 120.00 | -12.54 | -16.68 | 0.00 | -297.8 | 0.00 | 297.80 | 3,414.62 | 815.15 | 2,873.37 | 2,737.03 | 30.4 | -2.21 | 0.113 |
| 122.00 | -11.99 | -16.48 | 0.00 | -264.4 | 0.00 | 264.45 | 2,344.85 | 615.26 | 2,182.03 | 1,895.77 | 31.33 | -2.23 | 0.145 |
| 124.00 | -8.92 | -12.82 | 0.00 | -229.3 | 0.00 | 229.33 | 2,329.63 | 608.76 | 2,136.20 | 1,863.44 | 32.27 | -2.24 | 0.127 |
| 125.00 | -8.80 | -12.64 | 0.00 | -216.5 | 0.00 | 216.51 | 2,321.95 | 605.51 | 2,113.47 | 1,847.31 | 32.74 | -2.25 | 0.121 |
| 128.10 | -8.41 | -12.37 | 0.00 | -177.3 | 0.00 | 177.28 | 2,297.80 | 595.44 | 2,043.77 | 1,797.48 | 34.21 | -2.28 | 0.103 |
| 130.00 | -8.20 | -12.07 | 0.00 | -153.8 | 0.00 | 153.77 | 2,282.76 | 589.27 | 2,001.63 | 1,767.07 | 35.12 | -2.29 | 0.091 |
| 135.00 | -5.95 | -8.33 | 0.00 | -93.4 | 0.00 | 93.41 | 2,242.30 | 573.03 | 1,892.83 | 1,687.56 | 37.54 | -2.32 | 0.058 |
| 140.00 | -5.44 | -7.89 | 0.00 | -51.8 | 0.00 | 51.78 | 2,200.57 | 556.79 | 1,787.07 | 1,608.86 | 39.99 | -2.34 | 0.035 |
| 145.00 | -4.42 | -7.04 | 0.00 | -12.3 | 0.00 | 12.31 | 2,157.57 | 540.55 | 1,684.36 | 1,531.05 | 42.44 | -2.35 | 0.010 |
| 146.00 | -2.14 | -5.27 | 0.00 | -5.3 | 0.00 | 5.27 | 2,148.81 | 537.30 | 1,664.18 | 1,515.60 | 42.94 | -2.35 | 0.005 |
| 147.00 | 0.00 | -5.18 | 0.00 | 0.0 | 0.00 | 0.00 | 2,140.01 | 534.05 | 1,644.12 | 1,500.19 | 43.43 | -2.35 | 0.000 |

*©2007 - 2022 by ATC LLC. All rights reserved.*

CALCULATED FORCES

Load Case: 1.2D + 1.0Di + 1.0Wi — 50 mph Wind with 1" Radial Ice — 20 Iterations

Gust Response Factor: 1.10 — Ice Dead Load Factor 1.00
Dead load Factor: 1.20 — Ice Importance Factor 1.00
Wind Load Factor: 1.00

| Seg Elev (ft) | Pu FY (-) (kips) | Vu FX (-) (kips) | Tu MY (ft-kips) | Mu MZ (ft-kips) | Mu MX (ft-kips) | Resultant Moment (ft-kips) | Phi Pn (kips) | Phi Vn (kips) | Phi Tn (ft-kips) | Phi Mn (ft-kips) | Total Deflect (in) | Rotation (deg) | Ratio |
|---|---|---|---|---|---|---|---|---|---|---|---|---|---|
| 0.00 | -80.92 | -8.33 | 0.00 | -898.1 | 0.00 | 898.14 | 5,735.95 | 1,516.09 | 8,518.97 | 7,348.40 | 0 | 0 | 0.136 |
| 5.00 | -78.69 | -8.22 | 0.00 | -856.5 | 0.00 | 856.50 | 5,677.95 | 1,490.83 | 8,237.51 | 7,152.06 | 0.02 | -0.03 | 0.134 |
| 10.00 | -76.45 | -8.12 | 0.00 | -815.4 | 0.00 | 815.39 | 5,618.68 | 1,465.57 | 7,960.77 | 6,956.64 | 0.06 | -0.06 | 0.131 |
| 15.00 | -74.23 | -8.01 | 0.00 | -774.8 | 0.00 | 774.81 | 5,558.13 | 1,440.31 | 7,688.77 | 6,762.21 | 0.14 | -0.09 | 0.128 |
| 20.00 | -72.04 | -7.91 | 0.00 | -734.8 | 0.00 | 734.75 | 5,496.31 | 1,415.05 | 7,421.49 | 6,568.87 | 0.25 | -0.12 | 0.125 |
| 25.00 | -69.87 | -7.80 | 0.00 | -695.2 | 0.00 | 695.23 | 5,433.22 | 1,389.79 | 7,158.94 | 6,376.70 | 0.39 | -0.15 | 0.122 |
| 30.00 | -67.73 | -7.69 | 0.00 | -656.2 | 0.00 | 656.23 | 5,368.86 | 1,364.54 | 6,901.11 | 6,185.76 | 0.56 | -0.18 | 0.119 |
| 35.00 | -65.62 | -7.60 | 0.00 | -617.8 | 0.00 | 617.77 | 5,303.22 | 1,339.28 | 6,648.02 | 5,996.16 | 0.76 | -0.21 | 0.115 |
| 38.00 | -64.37 | -7.54 | 0.00 | -595.0 | 0.00 | 594.96 | 5,263.22 | 1,324.12 | 6,498.43 | 5,883.07 | 0.9 | -0.22 | 0.113 |
| 40.00 | -62.92 | -7.46 | 0.00 | -579.9 | 0.00 | 579.87 | 5,236.31 | 1,314.02 | 6,399.65 | 5,807.96 | 1 | -0.24 | 0.112 |
| 45.00 | -59.33 | -7.33 | 0.00 | -542.6 | 0.00 | 542.57 | 5,225.77 | 1,310.08 | 6,361.38 | 5,778.78 | 1.26 | -0.27 | 0.105 |
| 50.00 | -57.28 | -7.20 | 0.00 | -505.9 | 0.00 | 505.93 | 5,157.39 | 1,284.82 | 6,118.48 | 5,592.31 | 1.55 | -0.29 | 0.102 |
| 55.00 | -55.27 | -7.07 | 0.00 | -469.9 | 0.00 | 469.94 | 5,087.73 | 1,259.57 | 5,880.31 | 5,407.44 | 1.88 | -0.32 | 0.098 |
| 60.00 | -53.29 | -6.93 | 0.00 | -434.6 | 0.00 | 434.61 | 5,016.81 | 1,234.31 | 5,646.86 | 5,224.23 | 2.23 | -0.35 | 0.094 |
| 65.00 | -51.35 | -6.79 | 0.00 | -400.0 | 0.00 | 399.96 | 4,944.61 | 1,209.05 | 5,418.14 | 5,042.78 | 2.61 | -0.37 | 0.090 |
| 70.00 | -49.44 | -6.65 | 0.00 | -366.0 | 0.00 | 366.01 | 4,871.14 | 1,183.79 | 5,194.15 | 4,863.15 | 3.01 | -0.4 | 0.085 |
| 75.00 | -47.56 | -6.54 | 0.00 | -332.8 | 0.00 | 332.76 | 4,796.39 | 1,158.53 | 4,974.89 | 4,685.45 | 3.44 | -0.42 | 0.081 |
| 77.00 | -46.82 | -6.47 | 0.00 | -319.7 | 0.00 | 319.67 | 4,766.14 | 1,148.43 | 4,888.51 | 4,614.92 | 3.62 | -0.43 | 0.079 |
| 80.00 | -45.02 | -6.38 | 0.00 | -300.2 | 0.00 | 300.25 | 4,720.37 | 1,133.27 | 4,760.36 | 4,509.74 | 3.9 | -0.45 | 0.076 |
| 83.00 | -43.24 | -6.30 | 0.00 | -281.1 | 0.00 | 281.12 | 3,873.58 | 975.36 | 4,113.65 | 3,720.97 | 4.19 | -0.46 | 0.087 |
| 85.00 | -42.59 | -6.20 | 0.00 | -268.5 | 0.00 | 268.52 | 3,850.55 | 966.70 | 4,040.94 | 3,665.75 | 4.38 | -0.47 | 0.084 |
| 90.00 | -40.97 | -6.05 | 0.00 | -237.5 | 0.00 | 237.52 | 3,792.09 | 945.05 | 3,861.98 | 3,528.60 | 4.89 | -0.5 | 0.078 |
| 95.00 | -39.38 | -5.90 | 0.00 | -207.3 | 0.00 | 207.26 | 3,732.36 | 923.40 | 3,687.08 | 3,392.80 | 5.42 | -0.52 | 0.072 |
| 100.00 | -37.83 | -5.81 | 0.00 | -177.7 | 0.00 | 177.74 | 3,671.36 | 901.75 | 3,516.24 | 3,258.44 | 5.98 | -0.54 | 0.065 |
| 101.00 | -32.29 | -5.15 | 0.00 | -171.9 | 0.00 | 171.94 | 3,659.01 | 897.42 | 3,482.55 | 3,231.75 | 6.09 | -0.54 | 0.062 |
| 105.00 | -31.09 | -5.01 | 0.00 | -151.4 | 0.00 | 151.35 | 3,609.08 | 880.10 | 3,349.44 | 3,125.60 | 6.55 | -0.56 | 0.057 |
| 110.00 | -29.61 | -4.86 | 0.00 | -126.3 | 0.00 | 126.29 | 3,545.54 | 858.45 | 3,186.70 | 2,994.36 | 7.15 | -0.58 | 0.051 |
| 115.00 | -28.16 | -4.75 | 0.00 | -102.0 | 0.00 | 101.99 | 3,480.72 | 836.80 | 3,028.01 | 2,864.81 | 7.76 | -0.59 | 0.044 |
| 116.75 | -27.66 | -4.71 | 0.00 | -93.7 | 0.00 | 93.67 | 3,457.73 | 829.22 | 2,973.43 | 2,819.88 | 7.98 | -0.6 | 0.041 |
| 117.50 | -26.98 | -4.52 | 0.00 | -90.1 | 0.00 | 90.14 | 3,447.83 | 825.97 | 2,950.18 | 2,800.69 | 8.07 | -0.6 | 0.040 |
| 120.00 | -25.91 | -4.45 | 0.00 | -78.8 | 0.00 | 78.83 | 3,414.62 | 815.15 | 2,873.37 | 2,737.03 | 8.39 | -0.61 | 0.036 |
| 122.00 | -25.06 | -4.39 | 0.00 | -69.9 | 0.00 | 69.93 | 2,344.85 | 615.26 | 2,182.03 | 1,895.77 | 8.64 | -0.61 | 0.048 |
| 124.00 | -18.69 | -3.43 | 0.00 | -60.7 | 0.00 | 60.66 | 2,329.63 | 608.76 | 2,136.20 | 1,863.44 | 8.9 | -0.61 | 0.041 |
| 125.00 | -18.47 | -3.37 | 0.00 | -57.2 | 0.00 | 57.23 | 2,321.95 | 605.51 | 2,113.47 | 1,847.31 | 9.03 | -0.62 | 0.039 |
| 128.10 | -17.74 | -3.28 | 0.00 | -46.8 | 0.00 | 46.77 | 2,297.80 | 595.44 | 2,043.77 | 1,797.48 | 9.43 | -0.62 | 0.034 |
| 130.00 | -17.34 | -3.18 | 0.00 | -40.5 | 0.00 | 40.53 | 2,282.76 | 589.27 | 2,001.63 | 1,767.07 | 9.68 | -0.63 | 0.031 |
| 135.00 | -12.30 | -2.22 | 0.00 | -24.6 | 0.00 | 24.61 | 2,242.30 | 573.03 | 1,892.83 | 1,687.56 | 10.35 | -0.64 | 0.020 |
| 140.00 | -11.33 | -2.07 | 0.00 | -13.5 | 0.00 | 13.51 | 2,200.57 | 556.79 | 1,787.07 | 1,608.86 | 11.01 | -0.64 | 0.014 |
| 145.00 | -9.45 | -1.81 | 0.00 | -3.2 | 0.00 | 3.15 | 2,157.57 | 540.55 | 1,684.36 | 1,531.05 | 11.69 | -0.64 | 0.006 |
| 146.00 | -5.34 | -1.34 | 0.00 | -1.3 | 0.00 | 1.34 | 2,148.81 | 537.30 | 1,664.18 | 1,515.60 | 11.82 | -0.64 | 0.003 |
| 147.00 | 0.00 | -1.28 | 0.00 | 0.0 | 0.00 | 0.00 | 2,140.01 | 534.05 | 1,644.12 | 1,500.19 | 11.96 | -0.64 | 0.000 |

*©2007 - 2022 by ATC LLC. All rights reserved.*

CALCULATED FORCES

Load Case: 1.0D + 1.0W — 60 mph Wind with No Ice — 20 Iterations

Gust Response Factor: 1.10
Dead load Factor: 1.00
Wind Load Factor: 1.00

| Seg Elev (ft) | Pu FY (-) (kips) | Vu FX (-) (kips) | Tu MY (ft-kips) | Mu MZ (ft-kips) | Mu MX (ft-kips) | Resultant Moment (ft-kips) | Phi Pn (kips) | Phi Vn (kips) | Phi Tn (ft-kips) | Phi Mn (ft-kips) | Total Deflect (in) | Rotation (deg) | Ratio |
|---|---|---|---|---|---|---|---|---|---|---|---|---|---|
| 0.00 | -52.46 | -7.17 | 0.00 | -787.8 | 0.00 | 787.82 | 5,735.95 | 1,516.09 | 8,518.97 | 7,348.40 | 0 | 0 | 0.116 |
| 5.00 | -50.85 | -7.08 | 0.00 | -752.0 | 0.00 | 751.98 | 5,677.95 | 1,490.83 | 8,237.51 | 7,152.06 | 0.01 | -0.03 | 0.114 |
| 10.00 | -49.26 | -6.99 | 0.00 | -716.6 | 0.00 | 716.58 | 5,618.68 | 1,465.57 | 7,960.77 | 6,956.64 | 0.06 | -0.05 | 0.112 |
| 15.00 | -47.70 | -6.90 | 0.00 | -681.6 | 0.00 | 681.62 | 5,558.13 | 1,440.31 | 7,688.77 | 6,762.21 | 0.12 | -0.08 | 0.109 |
| 20.00 | -46.16 | -6.82 | 0.00 | -647.1 | 0.00 | 647.10 | 5,496.31 | 1,415.05 | 7,421.49 | 6,568.87 | 0.22 | -0.1 | 0.107 |
| 25.00 | -44.65 | -6.73 | 0.00 | -613.0 | 0.00 | 613.02 | 5,433.22 | 1,389.79 | 7,158.94 | 6,376.70 | 0.34 | -0.13 | 0.104 |
| 30.00 | -43.16 | -6.64 | 0.00 | -579.4 | 0.00 | 579.37 | 5,368.86 | 1,364.54 | 6,901.11 | 6,185.76 | 0.49 | -0.16 | 0.102 |
| 35.00 | -41.70 | -6.57 | 0.00 | -546.2 | 0.00 | 546.15 | 5,303.22 | 1,339.28 | 6,648.02 | 5,996.16 | 0.67 | -0.18 | 0.099 |
| 38.00 | -40.83 | -6.52 | 0.00 | -526.4 | 0.00 | 526.44 | 5,263.22 | 1,324.12 | 6,498.43 | 5,883.07 | 0.79 | -0.2 | 0.097 |
| 40.00 | -39.74 | -6.46 | 0.00 | -513.4 | 0.00 | 513.39 | 5,236.31 | 1,314.02 | 6,399.65 | 5,807.96 | 0.88 | -0.21 | 0.096 |
| 45.00 | -37.04 | -6.35 | 0.00 | -481.1 | 0.00 | 481.10 | 5,225.77 | 1,310.08 | 6,361.38 | 5,778.78 | 1.11 | -0.23 | 0.090 |
| 50.00 | -35.63 | -6.25 | 0.00 | -449.3 | 0.00 | 449.34 | 5,157.39 | 1,284.82 | 6,118.48 | 5,592.31 | 1.37 | -0.26 | 0.087 |
| 55.00 | -34.25 | -6.15 | 0.00 | -418.1 | 0.00 | 418.08 | 5,087.73 | 1,259.57 | 5,880.31 | 5,407.44 | 1.65 | -0.28 | 0.084 |
| 60.00 | -32.89 | -6.04 | 0.00 | -387.4 | 0.00 | 387.35 | 5,016.81 | 1,234.31 | 5,646.86 | 5,224.23 | 1.96 | -0.31 | 0.081 |
| 65.00 | -31.55 | -5.93 | 0.00 | -357.1 | 0.00 | 357.14 | 4,944.61 | 1,209.05 | 5,418.14 | 5,042.78 | 2.3 | -0.33 | 0.077 |
| 70.00 | -30.24 | -5.82 | 0.00 | -327.5 | 0.00 | 327.47 | 4,871.14 | 1,183.79 | 5,194.15 | 4,863.15 | 2.66 | -0.35 | 0.074 |
| 75.00 | -28.95 | -5.75 | 0.00 | -298.4 | 0.00 | 298.35 | 4,796.39 | 1,158.53 | 4,974.89 | 4,685.45 | 3.04 | -0.38 | 0.070 |
| 77.00 | -28.44 | -5.69 | 0.00 | -286.9 | 0.00 | 286.86 | 4,766.14 | 1,148.43 | 4,888.51 | 4,614.92 | 3.2 | -0.38 | 0.068 |
| 80.00 | -27.11 | -5.62 | 0.00 | -269.8 | 0.00 | 269.78 | 4,720.37 | 1,133.27 | 4,760.36 | 4,509.74 | 3.44 | -0.4 | 0.066 |
| 83.00 | -25.79 | -5.56 | 0.00 | -252.9 | 0.00 | 252.92 | 3,873.58 | 975.36 | 4,113.65 | 3,720.97 | 3.7 | -0.41 | 0.075 |
| 85.00 | -25.36 | -5.48 | 0.00 | -241.8 | 0.00 | 241.81 | 3,850.55 | 966.70 | 4,040.94 | 3,665.75 | 3.87 | -0.42 | 0.073 |
| 90.00 | -24.28 | -5.37 | 0.00 | -214.4 | 0.00 | 214.40 | 3,792.09 | 945.05 | 3,861.98 | 3,528.60 | 4.32 | -0.44 | 0.067 |
| 95.00 | -23.22 | -5.26 | 0.00 | -187.5 | 0.00 | 187.54 | 3,732.36 | 923.40 | 3,687.08 | 3,392.80 | 4.79 | -0.46 | 0.062 |
| 100.00 | -22.19 | -5.19 | 0.00 | -161.2 | 0.00 | 161.25 | 3,671.36 | 901.75 | 3,516.24 | 3,258.44 | 5.28 | -0.48 | 0.056 |
| 101.00 | -18.86 | -4.56 | 0.00 | -156.1 | 0.00 | 156.07 | 3,659.01 | 897.42 | 3,482.55 | 3,231.75 | 5.39 | -0.48 | 0.053 |
| 105.00 | -18.06 | -4.46 | 0.00 | -137.8 | 0.00 | 137.83 | 3,609.08 | 880.10 | 3,349.44 | 3,125.60 | 5.8 | -0.5 | 0.049 |
| 110.00 | -17.07 | -4.35 | 0.00 | -115.5 | 0.00 | 115.53 | 3,545.54 | 858.45 | 3,186.70 | 2,994.36 | 6.33 | -0.51 | 0.043 |
| 115.00 | -16.11 | -4.27 | 0.00 | -93.8 | 0.00 | 93.80 | 3,480.72 | 836.80 | 3,028.01 | 2,864.81 | 6.87 | -0.53 | 0.037 |
| 116.75 | -15.78 | -4.24 | 0.00 | -86.3 | 0.00 | 86.34 | 3,457.73 | 829.22 | 2,973.43 | 2,819.88 | 7.07 | -0.53 | 0.035 |
| 117.50 | -15.37 | -4.13 | 0.00 | -83.2 | 0.00 | 83.16 | 3,447.83 | 825.97 | 2,950.18 | 2,800.69 | 7.15 | -0.53 | 0.034 |
| 120.00 | -14.60 | -4.08 | 0.00 | -72.8 | 0.00 | 72.83 | 3,414.62 | 815.15 | 2,873.37 | 2,737.03 | 7.43 | -0.54 | 0.031 |
| 122.00 | -13.99 | -4.03 | 0.00 | -64.7 | 0.00 | 64.67 | 2,344.85 | 615.26 | 2,182.03 | 1,895.77 | 7.66 | -0.54 | 0.040 |
| 124.00 | -10.43 | -3.14 | 0.00 | -56.1 | 0.00 | 56.08 | 2,329.63 | 608.76 | 2,136.20 | 1,863.44 | 7.89 | -0.55 | 0.035 |
| 125.00 | -10.30 | -3.09 | 0.00 | -53.0 | 0.00 | 52.95 | 2,321.95 | 605.51 | 2,113.47 | 1,847.31 | 8 | -0.55 | 0.033 |
| 128.10 | -9.86 | -3.03 | 0.00 | -43.4 | 0.00 | 43.35 | 2,297.80 | 595.44 | 2,043.77 | 1,797.48 | 8.36 | -0.56 | 0.028 |
| 130.00 | -9.62 | -2.95 | 0.00 | -37.6 | 0.00 | 37.61 | 2,282.76 | 589.27 | 2,001.63 | 1,767.07 | 8.59 | -0.56 | 0.026 |
| 135.00 | -6.97 | -2.04 | 0.00 | -22.8 | 0.00 | 22.84 | 2,242.30 | 573.03 | 1,892.83 | 1,687.56 | 9.18 | -0.57 | 0.017 |
| 140.00 | -6.38 | -1.93 | 0.00 | -12.7 | 0.00 | 12.66 | 2,200.57 | 556.79 | 1,787.07 | 1,608.86 | 9.78 | -0.57 | 0.011 |
| 145.00 | -5.21 | -1.72 | 0.00 | -3.0 | 0.00 | 3.01 | 2,157.57 | 540.55 | 1,684.36 | 1,531.05 | 10.38 | -0.57 | 0.004 |
| 146.00 | -2.60 | -1.29 | 0.00 | -1.3 | 0.00 | 1.29 | 2,148.81 | 537.30 | 1,664.18 | 1,515.60 | 10.5 | -0.57 | 0.002 |
| 147.00 | 0.00 | -1.26 | 0.00 | 0.0 | 0.00 | 0.00 | 2,140.01 | 534.05 | 1,644.12 | 1,500.19 | 10.62 | -0.57 | 0.000 |

*©2007 - 2022 by ATC LLC. All rights reserved.*

## EQUIVALENT LATERAL FORCES METHOD ANALYSIS

*(Based on ASCE7-16 Chapters 11, 12 and 15)*

| | |
|---|---|
| Spectral Response Acceleration for Short Period ($S_S$): | 0.194 |
| Spectral Response Acceleration at 1.0 Second Period ($S_1$): | 0.054 |
| Long-Period Transition Period ($T_L$ – Seconds): | 6 |
| Importance Factor ($I_e$): | 1.000 |
| Site Coefficient $F_a$: | 1.600 |
| Site Coefficient $F_v$: | 2.400 |
| Response Modification Coefficient (R): | 1.500 |
| Design Spectral Response Acceleration at Short Period ($S_{ds}$): | 0.207 |
| Design Spectral Response Acceleration at 1.0 Second Period ($S_{d1}$): | 0.086 |
| Seismic Response Coefficient ($C_s$): | 0.030 |
| Upper Limit $C_S$: | 0.030 |
| Lower Limit $C_S$: | 0.030 |
| Period based on Rayleigh Method (sec): | 1.890 |
| Redundancy Factor (p): | 1.000 |
| Seismic Force Distribution Exponent (k): | 1.700 |
| Total Unfactored Dead Load: | 52.460 k |
| Seismic Base Shear (E): | 1.590 k |

## SEISMIC FORCES

**1.2D + 1.0Ev + 1.0Eh** **Seismic**

| Segment | Height Above Base (ft) | Weight (lb) | $W_z$ (lb-ft) | $C_{vx}$ | Horizontal Force (lb) | Vertical Force (lb) |
|---|---|---|---|---|---|---|
| 40 | 146.5 | 112 | 532 | 0.005 | 8 | 139 |
| 39 | 145.5 | 113 | 528 | 0.005 | 8 | 140 |
| 38 | 142.5 | 573 | 2,593 | 0.024 | 38 | 711 |
| 37 | 137.5 | 588 | 2,508 | 0.023 | 37 | 730 |
| 36 | 132.5 | 624 | 2,497 | 0.023 | 37 | 774 |
| 35 | 129.05 | 241 | 923 | 0.008 | 14 | 299 |
| 34 | 126.55 | 408 | 1,510 | 0.014 | 22 | 506 |
| 33 | 124.5 | 133 | 479 | 0.004 | 7 | 165 |
| 32 | 123 | 292 | 1,030 | 0.010 | 15 | 363 |
| 31 | 121 | 609 | 2,089 | 0.019 | 31 | 756 |
| 30 | 118.75 | 770 | 2,557 | 0.024 | 38 | 955 |
| 29 | 117.125 | 233 | 756 | 0.007 | 11 | 289 |
| 28 | 115.875 | 331 | 1,055 | 0.010 | 16 | 411 |
| 27 | 112.5 | 960 | 2,911 | 0.027 | 43 | 1,192 |
| 26 | 107.5 | 981 | 2,754 | 0.026 | 41 | 1,218 |
| 25 | 103 | 800 | 2,088 | 0.019 | 31 | 993 |
| 24 | 100.5 | 204 | 512 | 0.005 | 8 | 254 |
| 23 | 97.5 | 1,035 | 2,461 | 0.023 | 36 | 1,285 |
| 22 | 92.5 | 1,056 | 2,296 | 0.021 | 34 | 1,311 |
| 21 | 87.5 | 1,077 | 2,131 | 0.020 | 31 | 1,337 |
| 20 | 84 | 437 | 806 | 0.008 | 12 | 542 |
| 19 | 81.5 | 1,316 | 2,308 | 0.021 | 34 | 1,634 |
| 18 | 78.5 | 1,332 | 2,193 | 0.020 | 32 | 1,654 |
| 17 | 76 | 507 | 790 | 0.007 | 12 | 630 |
| 16 | 72.5 | 1,285 | 1,849 | 0.017 | 27 | 1,596 |
| 15 | 67.5 | 1,310 | 1,669 | 0.015 | 25 | 1,626 |
| 14 | 62.5 | 1,334 | 1,492 | 0.014 | 22 | 1,657 |
| 13 | 57.5 | 1,359 | 1,319 | 0.012 | 19 | 1,687 |
| 12 | 52.5 | 1,383 | 1,150 | 0.011 | 17 | 1,717 |
| 11 | 47.5 | 1,408 | 988 | 0.009 | 15 | 1,748 |
| 10 | 42.5 | 2,694 | 1,565 | 0.014 | 23 | 3,344 |
| 9 | 39 | 1,091 | 548 | 0.005 | 8 | 1,355 |
| 8 | 36.5 | 865 | 388 | 0.004 | 6 | 1,073 |
| 7 | 32.5 | 1,461 | 538 | 0.005 | 8 | 1,813 |
| 6 | 27.5 | 1,485 | 412 | 0.004 | 6 | 1,844 |
| 5 | 22.5 | 1,510 | 298 | 0.003 | 4 | 1,874 |
| 4 | 17.5 | 1,534 | 198 | 0.002 | 3 | 1,904 |
| 3 | 12.5 | 1,559 | 113 | 0.001 | 2 | 1,935 |

*©2007 - 2022 by ATC LLC. All rights reserved.*

SEISMIC FORCES

**1.2D + 1.0Ev + 1.0Eh** **Seismic**

| Segment | Height Above Base (ft) | Weight (lb) | $W_z$ (lb-ft) | $C_{vx}$ | Horizontal Force (lb) | Vertical Force (lb) |
|---|---|---|---|---|---|---|
| 2 | 7.5 | 1,583 | 48 | 0.000 | 1 | 1,965 |
| 1 | 2.5 | 1,608 | 8 | 0.000 | 0 | 1,996 |
| Commscope CBC78T-DS-43-2X | 147 | 62 | 296 | 0.003 | 4 | 77 |
| Kaelus KA-6030 | 147 | 106 | 504 | 0.005 | 7 | 131 |
| Samsung B2/B66A RRH-BR049 | 147 | 253 | 1,209 | 0.011 | 18 | 314 |
| Samsung B5/B13 RRH-BR04C | 147 | 211 | 1,007 | 0.009 | 15 | 262 |
| RFS DB-C1-12C-24AB-0Z | 147 | 32 | 153 | 0.001 | 2 | 40 |
| Samsung MT6407-77A | 147 | 245 | 1,169 | 0.011 | 17 | 304 |
| Antel LPA-80080/4CF ___ | 147 | 48 | 229 | 0.002 | 3 | 60 |
| Antel LPA-80063/4CF | 147 | 40 | 191 | 0.002 | 3 | 50 |
| Commscope JAHH-65B-R3B (63.3 lb) | 147 | 380 | 1,813 | 0.017 | 27 | 471 |
| VZW Unused Reserve (15681.24 sqin) | 147 | 1,124 | 5,364 | 0.050 | 79 | 1,395 |
| Generic Flat Platform with Handrails | 146 | 2,500 | 11,798 | 0.109 | 174 | 3,103 |
| Generic Flat Platform with Handrails | 101 | 2,500 | 6,312 | 0.058 | 93 | 3,103 |
| Mount Reinforcement | 145 | 600 | 2,799 | 0.026 | 41 | 745 |
| Ericsson 4460 BAND 2/25 | 135 | 327 | 1,351 | 0.012 | 20 | 406 |
| Ericsson 4480 BAND 71 | 135 | 243 | 1,004 | 0.009 | 15 | 302 |
| RFS SC2-W100BD | 135 | 20 | 83 | 0.001 | 1 | 25 |
| Ericsson AIR 6419 B41 | 135 | 206 | 849 | 0.008 | 13 | 255 |
| Commscope VV-65A-R1B | 135 | 74 | 306 | 0.003 | 5 | 92 |
| Generic Flat Light Sector Frame | 135 | 800 | 3,305 | 0.031 | 49 | 993 |
| RFS APXVAALL24 43-U-NA20 | 135 | 368 | 1,522 | 0.014 | 22 | 457 |
| Raycap DC6-48-60-18-8F(32.8 lbs) | 128.1 | 33 | 124 | 0.001 | 2 | 41 |
| Powerwave Allgon LGP21901 | 124 | 33 | 118 | 0.001 | 2 | 41 |
| Powerwave Allgon LGP2140X | 124 | 114 | 408 | 0.004 | 6 | 142 |
| Raycap DC6-48-60-18-8F ("Squid") | 124 | 19 | 68 | 0.001 | 1 | 23 |
| Ericsson RRUS 4478 B14 | 124 | 180 | 643 | 0.006 | 9 | 223 |
| Ericsson RRUS 32 B2 | 124 | 159 | 569 | 0.005 | 8 | 197 |
| Ericsson RRUS-11 | 124 | 330 | 1,180 | 0.011 | 17 | 410 |
| Powerwave Allgon 7770.00 | 124 | 210 | 751 | 0.007 | 11 | 261 |
| Kathrein Scala 800 10764 | 124 | 41 | 146 | 0.001 | 2 | 51 |
| KMW AM-X-CD-16-65-00T-RET | 124 | 97 | 347 | 0.003 | 5 | 120 |
| KMW EPBQ-654L8H6-L2 | 124 | 218 | 781 | 0.007 | 12 | 271 |
| Generic Round Low Profile Platform | 124 | 1,875 | 6,706 | 0.062 | 99 | 2,328 |
| Generic 3' Omni-Grid | 117.5 | 30 | 98 | 0.001 | 1 | 37 |
| Stand-Off | 117.5 | 150 | 490 | 0.004 | 7 | 186 |
| Commscope RDIDC-9181-PF-48 | 101 | 22 | 55 | 0.000 | 1 | 27 |
| Fujitsu TA08025-B605 | 101 | 225 | 568 | 0.005 | 8 | 279 |
| Fujitsu TA08025-B604 | 101 | 192 | 484 | 0.004 | 7 | 238 |
| JMA Wireless MX08FRO665-21 | 101 | 194 | 489 | 0.004 | 7 | 240 |
| | **Totals:** | **52,458** | **108,176** | **1.000** | **1,595** | **65,121** |

SEISMIC FORCES

**0.9D - 1.0Ev + 1.0Eh** **Seismic (Reduced DL)**

| Segment | Height Above Base (ft) | Weight (lb) | $W_z$ (lb-ft) | $C_{vx}$ | Horizontal Force (lb) | Vertical Force (lb) |
|---|---|---|---|---|---|---|
| 40 | 146.5 | 112 | 532 | 0.005 | 8 | 96 |
| 39 | 145.5 | 113 | 528 | 0.005 | 8 | 97 |
| 38 | 142.5 | 573 | 2,593 | 0.024 | 38 | 492 |
| 37 | 137.5 | 588 | 2,508 | 0.023 | 37 | 505 |
| 36 | 132.5 | 624 | 2,497 | 0.023 | 37 | 536 |
| 35 | 129.05 | 241 | 923 | 0.008 | 14 | 207 |
| 34 | 126.55 | 408 | 1,510 | 0.014 | 22 | 350 |
| 33 | 124.5 | 133 | 479 | 0.004 | 7 | 114 |
| 32 | 123 | 292 | 1,030 | 0.010 | 15 | 251 |
| 31 | 121 | 609 | 2,089 | 0.019 | 31 | 523 |
| 30 | 118.75 | 770 | 2,557 | 0.024 | 38 | 661 |
| 29 | 117.125 | 233 | 756 | 0.007 | 11 | 200 |
| 28 | 115.875 | 331 | 1,055 | 0.010 | 16 | 284 |
| 27 | 112.5 | 960 | 2,911 | 0.027 | 43 | 824 |
| 26 | 107.5 | 981 | 2,754 | 0.026 | 41 | 842 |

*©2007 - 2022 by ATC LLC. All rights reserved.*

SEISMIC FORCES

**0.9D - 1.0Ev + 1.0Eh** **Seismic (Reduced DL)**

| Segment | Height Above Base (ft) | Weight (lb) | $W_z$ (lb-ft) | $C_{vx}$ | Horizontal Force (lb) | Vertical Force (lb) |
|---|---|---|---|---|---|---|
| 25 | 103 | 800 | 2,088 | 0.019 | 31 | 687 |
| 24 | 100.5 | 204 | 512 | 0.005 | 8 | 176 |
| 23 | 97.5 | 1,035 | 2,461 | 0.023 | 36 | 888 |
| 22 | 92.5 | 1,056 | 2,296 | 0.021 | 34 | 906 |
| 21 | 87.5 | 1,077 | 2,131 | 0.020 | 31 | 924 |
| 20 | 84 | 437 | 806 | 0.008 | 12 | 375 |
| 19 | 81.5 | 1,316 | 2,308 | 0.021 | 34 | 1,130 |
| 18 | 78.5 | 1,332 | 2,193 | 0.020 | 32 | 1,144 |
| 17 | 76 | 507 | 790 | 0.007 | 12 | 436 |
| 16 | 72.5 | 1,285 | 1,849 | 0.017 | 27 | 1,104 |
| 15 | 67.5 | 1,310 | 1,669 | 0.015 | 25 | 1,125 |
| 14 | 62.5 | 1,334 | 1,492 | 0.014 | 22 | 1,146 |
| 13 | 57.5 | 1,359 | 1,319 | 0.012 | 19 | 1,167 |
| 12 | 52.5 | 1,383 | 1,150 | 0.011 | 17 | 1,188 |
| 11 | 47.5 | 1,408 | 988 | 0.009 | 15 | 1,209 |
| 10 | 42.5 | 2,694 | 1,565 | 0.014 | 23 | 2,313 |
| 9 | 39 | 1,091 | 548 | 0.005 | 8 | 937 |
| 8 | 36.5 | 865 | 388 | 0.004 | 6 | 742 |
| 7 | 32.5 | 1,461 | 538 | 0.005 | 8 | 1,254 |
| 6 | 27.5 | 1,485 | 412 | 0.004 | 6 | 1,275 |
| 5 | 22.5 | 1,510 | 298 | 0.003 | 4 | 1,296 |
| 4 | 17.5 | 1,534 | 198 | 0.002 | 3 | 1,317 |
| 3 | 12.5 | 1,559 | 113 | 0.001 | 2 | 1,338 |
| 2 | 7.5 | 1,583 | 48 | 0.000 | 1 | 1,359 |
| 1 | 2.5 | 1,608 | 8 | 0.000 | 0 | 1,380 |
| Commscope CBC78T-DS-43-2X | 147 | 62 | 296 | 0.003 | 4 | 53 |
| Kaelus KA-6030 | 147 | 106 | 504 | 0.005 | 7 | 91 |
| Samsung B2/B66A RRH-BR049 | 147 | 253 | 1,209 | 0.011 | 18 | 217 |
| Samsung B5/B13 RRH-BR04C | 147 | 211 | 1,007 | 0.009 | 15 | 181 |
| RFS DB-C1-12C-24AB-0Z | 147 | 32 | 153 | 0.001 | 2 | 27 |
| Samsung MT6407-77A | 147 | 245 | 1,169 | 0.011 | 17 | 210 |
| Antel LPA-80080/4CF ___ | 147 | 48 | 229 | 0.002 | 3 | 41 |
| Antel LPA-80063/4CF | 147 | 40 | 191 | 0.002 | 3 | 34 |
| Commscope JAHH-65B-R3B (63.3 lb) | 147 | 380 | 1,813 | 0.017 | 27 | 326 |
| VZW Unused Reserve (15681.24 sqin) | 147 | 1,124 | 5,364 | 0.050 | 79 | 965 |
| Generic Flat Platform with Handrails | 146 | 2,500 | 11,798 | 0.109 | 174 | 2,147 |
| Generic Flat Platform with Handrails | 101 | 2,500 | 6,312 | 0.058 | 93 | 2,147 |
| Mount Reinforcement | 145 | 600 | 2,799 | 0.026 | 41 | 515 |
| Ericsson 4460 BAND 2/25 | 135 | 327 | 1,351 | 0.012 | 20 | 281 |
| Ericsson 4480 BAND 71 | 135 | 243 | 1,004 | 0.009 | 15 | 209 |
| RFS SC2-W100BD | 135 | 20 | 83 | 0.001 | 1 | 17 |
| Ericsson AIR 6419 B41 | 135 | 206 | 849 | 0.008 | 13 | 176 |
| Commscope VV-65A-R1B | 135 | 74 | 306 | 0.003 | 5 | 64 |
| Generic Flat Light Sector Frame | 135 | 800 | 3,305 | 0.031 | 49 | 687 |
| RFS APXVAALL24 43-U-NA20 | 135 | 368 | 1,522 | 0.014 | 22 | 316 |
| Raycap DC6-48-60-18-8F(32.8 lbs) | 128.1 | 33 | 124 | 0.001 | 2 | 28 |
| Powerwave Allgon LGP21901 | 124 | 33 | 118 | 0.001 | 2 | 28 |
| Powerwave Allgon LGP2140X | 124 | 114 | 408 | 0.004 | 6 | 98 |
| Raycap DC6-48-60-18-8F ("Squid") | 124 | 19 | 68 | 0.001 | 1 | 16 |
| Ericsson RRUS 4478 B14 | 124 | 180 | 643 | 0.006 | 9 | 154 |
| Ericsson RRUS 32 B2 | 124 | 159 | 569 | 0.005 | 8 | 137 |
| Ericsson RRUS-11 | 124 | 330 | 1,180 | 0.011 | 17 | 283 |
| Powerwave Allgon 7770.00 | 124 | 210 | 751 | 0.007 | 11 | 180 |
| Kathrein Scala 800 10764 | 124 | 41 | 146 | 0.001 | 2 | 35 |
| KMW AM-X-CD-16-65-00T-RET | 124 | 97 | 347 | 0.003 | 5 | 83 |
| KMW EPBQ-654L8H6-L2 | 124 | 218 | 781 | 0.007 | 12 | 188 |
| Generic Round Low Profile Platform | 124 | 1,875 | 6,706 | 0.062 | 99 | 1,610 |
| Generic 3' Omni-Grid | 117.5 | 30 | 98 | 0.001 | 1 | 26 |
| Stand-Off | 117.5 | 150 | 490 | 0.004 | 7 | 129 |
| Commscope RDIDC-9181-PF-48 | 101 | 22 | 55 | 0.000 | 1 | 19 |
| Fujitsu TA08025-B605 | 101 | 225 | 568 | 0.005 | 8 | 193 |

*©2007 - 2022 by ATC LLC. All rights reserved.*

SEISMIC FORCES

**0.9D - 1.0Ev + 1.0Eh** **Seismic (Reduced DL)**

| Segment | Height Above Base (ft) | Weight (lb) | $W_z$ (lb-ft) | $C_{vx}$ | Horizontal Force (lb) | Vertical Force (lb) |
|---|---|---|---|---|---|---|
| Fujitsu TA08025-B604 | 101 | 192 | 484 | 0.004 | 7 | 165 |
| JMA Wireless MX08FRO665-21 | 101 | 194 | 489 | 0.004 | 7 | 166 |
| | **Totals:** | **52,458** | **108,176** | **1.000** | **1,595** | **45,041** |

**1.2D + 1.0Ev + 1.0Eh** **Seismic**

CALCULATED FORCES

| Seg Elev (ft) | Pu FY (-) (kips) | Vu FX (-) (kips) | Tu MY (ft-kips) | Mu MZ (fr-kips) | Mu Mx (ft-kips) | Resultant Moment (ft-kips) | Phi Pn (kips) | Phi Vn (kips) | Phi Tn (kips) | Phi Mn (kips) | Total Deflect (in) | Rotation (deg) | Ratio |
|---|---|---|---|---|---|---|---|---|---|---|---|---|---|
| 0.00 | -63.13 | -1.60 | 0.00 | -188.30 | 0.00 | 188.30 | 5,735.95 | 1,516.09 | 8,519 | 7,348.40 | 0.00 | 0.00 | 0.04 |
| 5.00 | -61.16 | -1.60 | 0.00 | -180.31 | 0.00 | 180.31 | 5,677.95 | 1,490.83 | 8,238 | 7,152.06 | 0.00 | -0.01 | 0.04 |
| 10.00 | -59.22 | -1.61 | 0.00 | -172.29 | 0.00 | 172.29 | 5,618.68 | 1,465.57 | 7,961 | 6,956.64 | 0.01 | -0.01 | 0.04 |
| 15.00 | -57.32 | -1.61 | 0.00 | -164.25 | 0.00 | 164.25 | 5,558.13 | 1,440.31 | 7,689 | 6,762.21 | 0.03 | -0.02 | 0.04 |
| 20.00 | -55.45 | -1.61 | 0.00 | -156.20 | 0.00 | 156.20 | 5,496.31 | 1,415.05 | 7,421 | 6,568.87 | 0.05 | -0.03 | 0.03 |
| 25.00 | -53.60 | -1.61 | 0.00 | -148.14 | 0.00 | 148.14 | 5,433.22 | 1,389.79 | 7,159 | 6,376.70 | 0.08 | -0.03 | 0.03 |
| 30.00 | -51.79 | -1.61 | 0.00 | -140.09 | 0.00 | 140.09 | 5,368.86 | 1,364.54 | 6,901 | 6,185.76 | 0.12 | -0.04 | 0.03 |
| 35.00 | -50.72 | -1.61 | 0.00 | -132.05 | 0.00 | 132.05 | 5,303.22 | 1,339.28 | 6,648 | 5,996.16 | 0.16 | -0.04 | 0.03 |
| 38.00 | -49.36 | -1.60 | 0.00 | -127.24 | 0.00 | 127.24 | 5,263.22 | 1,324.12 | 6,498 | 5,883.07 | 0.19 | -0.05 | 0.03 |
| 40.00 | -46.02 | -1.58 | 0.00 | -124.04 | 0.00 | 124.04 | 5,236.31 | 1,314.02 | 6,400 | 5,807.96 | 0.21 | -0.05 | 0.03 |
| 45.00 | -44.27 | -1.56 | 0.00 | -116.16 | 0.00 | 116.16 | 5,225.77 | 1,310.08 | 6,361 | 5,778.78 | 0.27 | -0.06 | 0.03 |
| 50.00 | -42.55 | -1.55 | 0.00 | -108.33 | 0.00 | 108.33 | 5,157.39 | 1,284.82 | 6,118 | 5,592.31 | 0.33 | -0.06 | 0.03 |
| 55.00 | -40.86 | -1.53 | 0.00 | -100.58 | 0.00 | 100.58 | 5,087.73 | 1,259.57 | 5,880 | 5,407.44 | 0.40 | -0.07 | 0.03 |
| 60.00 | -39.21 | -1.51 | 0.00 | -92.91 | 0.00 | 92.91 | 5,016.81 | 1,234.31 | 5,647 | 5,224.23 | 0.47 | -0.07 | 0.03 |
| 65.00 | -37.58 | -1.49 | 0.00 | -85.35 | 0.00 | 85.35 | 4,944.61 | 1,209.05 | 5,418 | 5,042.78 | 0.55 | -0.08 | 0.03 |
| 70.00 | -35.99 | -1.46 | 0.00 | -77.90 | 0.00 | 77.90 | 4,871.14 | 1,183.79 | 5,194 | 4,863.15 | 0.64 | -0.09 | 0.02 |
| 75.00 | -35.36 | -1.45 | 0.00 | -70.58 | 0.00 | 70.58 | 4,796.39 | 1,158.53 | 4,975 | 4,685.45 | 0.73 | -0.09 | 0.02 |
| 77.00 | -33.70 | -1.42 | 0.00 | -67.67 | 0.00 | 67.67 | 4,766.14 | 1,148.43 | 4,889 | 4,614.92 | 0.77 | -0.09 | 0.02 |
| 80.00 | -32.07 | -1.39 | 0.00 | -63.41 | 0.00 | 63.41 | 4,720.37 | 1,133.27 | 4,760 | 4,509.74 | 0.83 | -0.10 | 0.02 |
| 83.00 | -31.53 | -1.37 | 0.00 | -59.26 | 0.00 | 59.26 | 3,873.58 | 975.36 | 4,114 | 3,720.97 | 0.89 | -0.10 | 0.02 |
| 85.00 | -30.19 | -1.34 | 0.00 | -56.51 | 0.00 | 56.51 | 3,850.55 | 966.70 | 4,041 | 3,665.75 | 0.93 | -0.10 | 0.02 |
| 90.00 | -28.88 | -1.31 | 0.00 | -49.80 | 0.00 | 49.80 | 3,792.09 | 945.05 | 3,862 | 3,528.60 | 1.04 | -0.11 | 0.02 |
| 95.00 | -27.59 | -1.27 | 0.00 | -43.26 | 0.00 | 43.26 | 3,732.36 | 923.40 | 3,687 | 3,392.80 | 1.15 | -0.11 | 0.02 |
| 100.00 | -27.34 | -1.26 | 0.00 | -36.91 | 0.00 | 36.91 | 3,671.36 | 901.75 | 3,516 | 3,258.44 | 1.27 | -0.11 | 0.02 |
| 101.00 | -22.46 | -1.11 | 0.00 | -35.64 | 0.00 | 35.64 | 3,659.01 | 897.42 | 3,483 | 3,231.75 | 1.29 | -0.12 | 0.02 |
| 105.00 | -21.24 | -1.07 | 0.00 | -31.21 | 0.00 | 31.21 | 3,609.08 | 880.10 | 3,349 | 3,125.60 | 1.39 | -0.12 | 0.02 |
| 110.00 | -20.05 | -1.02 | 0.00 | -25.87 | 0.00 | 25.87 | 3,545.54 | 858.45 | 3,187 | 2,994.36 | 1.52 | -0.12 | 0.01 |
| 115.00 | -19.64 | -1.01 | 0.00 | -20.76 | 0.00 | 20.76 | 3,480.72 | 836.80 | 3,028 | 2,864.81 | 1.65 | -0.13 | 0.01 |
| 116.75 | -19.35 | -1.00 | 0.00 | -19.00 | 0.00 | 19.00 | 3,457.73 | 829.22 | 2,973 | 2,819.88 | 1.69 | -0.13 | 0.01 |
| 117.50 | -18.17 | -0.95 | 0.00 | -18.26 | 0.00 | 18.26 | 3,447.83 | 825.97 | 2,950 | 2,800.69 | 1.71 | -0.13 | 0.01 |
| 120.00 | -17.41 | -0.91 | 0.00 | -15.89 | 0.00 | 15.89 | 3,414.62 | 815.15 | 2,873 | 2,737.03 | 1.78 | -0.13 | 0.01 |
| 122.00 | -17.05 | -0.90 | 0.00 | -14.06 | 0.00 | 14.06 | 2,344.85 | 615.26 | 2,182 | 1,895.77 | 1.84 | -0.13 | 0.02 |
| 124.00 | -12.82 | -0.71 | 0.00 | -12.26 | 0.00 | 12.26 | 2,329.63 | 608.76 | 2,136 | 1,863.44 | 1.89 | -0.13 | 0.01 |
| 125.00 | -12.31 | -0.69 | 0.00 | -11.55 | 0.00 | 11.55 | 2,321.95 | 605.51 | 2,113 | 1,847.31 | 1.92 | -0.13 | 0.01 |
| 128.10 | -11.97 | -0.67 | 0.00 | -9.43 | 0.00 | 9.43 | 2,297.80 | 595.44 | 2,044 | 1,797.48 | 2.00 | -0.13 | 0.01 |
| 130.00 | -11.20 | -0.63 | 0.00 | -8.15 | 0.00 | 8.15 | 2,282.76 | 589.27 | 2,002 | 1,767.07 | 2.05 | -0.13 | 0.01 |
| 135.00 | -7.94 | -0.46 | 0.00 | -4.99 | 0.00 | 4.99 | 2,242.30 | 573.03 | 1,893 | 1,687.56 | 2.19 | -0.13 | 0.01 |
| 140.00 | -7.23 | -0.42 | 0.00 | -2.67 | 0.00 | 2.67 | 2,200.57 | 556.79 | 1,787 | 1,608.86 | 2.34 | -0.14 | 0.01 |
| 145.00 | -6.35 | -0.37 | 0.00 | -0.56 | 0.00 | 0.56 | 2,157.57 | 540.55 | 1,684 | 1,531.05 | 2.48 | -0.14 | 0.00 |
| 146.00 | -3.10 | -0.18 | 0.00 | -0.18 | 0.00 | 0.18 | 2,148.81 | 537.30 | 1,664 | 1,515.60 | 2.51 | -0.14 | 0.00 |
| 147.00 | 0.00 | -0.18 | 0.00 | 0.00 | 0.00 | 0.00 | 2,140.01 | 534.05 | 1,644 | 1,500.19 | 2.53 | -0.14 | 0.00 |

**0.9D - 1.0Ev + 1.0Eh** **Seismic (Reduced DL)**

CALCULATED FORCES

| Seg Elev (ft) | Pu FY (-) (kips) | Vu FX (-) (kips) | Tu MY (ft-kips) | Mu MZ (fr-kips) | Mu Mx (ft-kips) | Resultant Moment (ft-kips) | Phi Pn (kips) | Phi Vn (kips) | Phi Tn (kips) | Phi Mn (kips) | Total Deflect (in) | Rotation (deg) | Ratio |
|---|---|---|---|---|---|---|---|---|---|---|---|---|---|
| 0.00 | -43.66 | -1.60 | 0.00 | -186.53 | 0.00 | 186.53 | 5,735.95 | 1,516.09 | 8,519 | 7,348.40 | 0.00 | 0.00 | 0.03 |
| 5.00 | -42.30 | -1.60 | 0.00 | -178.54 | 0.00 | 178.54 | 5,677.95 | 1,490.83 | 8,238 | 7,152.06 | 0.00 | -0.01 | 0.03 |
| 10.00 | -40.96 | -1.60 | 0.00 | -170.54 | 0.00 | 170.54 | 5,618.68 | 1,465.57 | 7,961 | 6,956.64 | 0.01 | -0.01 | 0.03 |
| 15.00 | -39.65 | -1.60 | 0.00 | -162.53 | 0.00 | 162.53 | 5,558.13 | 1,440.31 | 7,689 | 6,762.21 | 0.03 | -0.02 | 0.03 |

*©2007 - 2022 by ATC LLC. All rights reserved.*

CALCULATED FORCES

| Seg Elev (ft) | Pu FY (-) (kips) | Vu FX (-) (kips) | Tu MY (ft-kips) | Mu MZ (fr-kips) | Mu Mx (ft-kips) | Resultant Moment (ft-kips) | Phi Pn (kips) | Phi Vn (kips) | Phi Tn (kips) | Phi Mn (kips) | Total Deflect (in) | Rotation (deg) | Ratio |
|---|---|---|---|---|---|---|---|---|---|---|---|---|---|
| 20.00 | -38.35 | -1.60 | 0.00 | -154.51 | 0.00 | 154.51 | 5,496.31 | 1,415.05 | 7,421 | 6,568.87 | 0.05 | -0.02 | 0.03 |
| 25.00 | -37.07 | -1.60 | 0.00 | -146.50 | 0.00 | 146.50 | 5,433.22 | 1,389.79 | 7,159 | 6,376.70 | 0.08 | -0.03 | 0.03 |
| 30.00 | -35.82 | -1.60 | 0.00 | -138.49 | 0.00 | 138.49 | 5,368.86 | 1,364.54 | 6,901 | 6,185.76 | 0.12 | -0.04 | 0.03 |
| 35.00 | -35.08 | -1.59 | 0.00 | -130.52 | 0.00 | 130.52 | 5,303.22 | 1,339.28 | 6,648 | 5,996.16 | 0.16 | -0.04 | 0.03 |
| 38.00 | -34.14 | -1.59 | 0.00 | -125.74 | 0.00 | 125.74 | 5,263.22 | 1,324.12 | 6,498 | 5,883.07 | 0.19 | -0.05 | 0.03 |
| 40.00 | -31.83 | -1.56 | 0.00 | -122.57 | 0.00 | 122.57 | 5,236.31 | 1,314.02 | 6,400 | 5,807.96 | 0.21 | -0.05 | 0.03 |
| 45.00 | -30.62 | -1.55 | 0.00 | -114.75 | 0.00 | 114.75 | 5,225.77 | 1,310.08 | 6,361 | 5,778.78 | 0.26 | -0.06 | 0.03 |
| 50.00 | -29.43 | -1.54 | 0.00 | -107.00 | 0.00 | 107.00 | 5,157.39 | 1,284.82 | 6,118 | 5,592.31 | 0.33 | -0.06 | 0.03 |
| 55.00 | -28.26 | -1.52 | 0.00 | -99.33 | 0.00 | 99.33 | 5,087.73 | 1,259.57 | 5,880 | 5,407.44 | 0.39 | -0.07 | 0.02 |
| 60.00 | -27.12 | -1.50 | 0.00 | -91.74 | 0.00 | 91.74 | 5,016.81 | 1,234.31 | 5,647 | 5,224.23 | 0.47 | -0.07 | 0.02 |
| 65.00 | -25.99 | -1.47 | 0.00 | -84.26 | 0.00 | 84.26 | 4,944.61 | 1,209.05 | 5,418 | 5,042.78 | 0.55 | -0.08 | 0.02 |
| 70.00 | -24.89 | -1.45 | 0.00 | -76.89 | 0.00 | 76.89 | 4,871.14 | 1,183.79 | 5,194 | 4,863.15 | 0.63 | -0.08 | 0.02 |
| 75.00 | -24.45 | -1.44 | 0.00 | -69.66 | 0.00 | 69.66 | 4,796.39 | 1,158.53 | 4,975 | 4,685.45 | 0.72 | -0.09 | 0.02 |
| 77.00 | -23.31 | -1.40 | 0.00 | -66.79 | 0.00 | 66.79 | 4,766.14 | 1,148.43 | 4,889 | 4,614.92 | 0.76 | -0.09 | 0.02 |
| 80.00 | -22.18 | -1.37 | 0.00 | -62.58 | 0.00 | 62.58 | 4,720.37 | 1,133.27 | 4,760 | 4,509.74 | 0.82 | -0.09 | 0.02 |
| 83.00 | -21.80 | -1.36 | 0.00 | -58.48 | 0.00 | 58.48 | 3,873.58 | 975.36 | 4,114 | 3,720.97 | 0.88 | -0.10 | 0.02 |
| 85.00 | -20.88 | -1.32 | 0.00 | -55.77 | 0.00 | 55.77 | 3,850.55 | 966.70 | 4,041 | 3,665.75 | 0.92 | -0.10 | 0.02 |
| 90.00 | -19.97 | -1.29 | 0.00 | -49.14 | 0.00 | 49.14 | 3,792.09 | 945.05 | 3,862 | 3,528.60 | 1.03 | -0.10 | 0.02 |
| 95.00 | -19.08 | -1.25 | 0.00 | -42.69 | 0.00 | 42.69 | 3,732.36 | 923.40 | 3,687 | 3,392.80 | 1.14 | -0.11 | 0.02 |
| 100.00 | -18.91 | -1.25 | 0.00 | -36.42 | 0.00 | 36.42 | 3,671.36 | 901.75 | 3,516 | 3,258.44 | 1.26 | -0.11 | 0.02 |
| 101.00 | -15.53 | -1.09 | 0.00 | -35.17 | 0.00 | 35.17 | 3,659.01 | 897.42 | 3,483 | 3,231.75 | 1.28 | -0.11 | 0.02 |
| 105.00 | -14.69 | -1.05 | 0.00 | -30.79 | 0.00 | 30.79 | 3,609.08 | 880.10 | 3,349 | 3,125.60 | 1.38 | -0.12 | 0.01 |
| 110.00 | -13.87 | -1.01 | 0.00 | -25.53 | 0.00 | 25.53 | 3,545.54 | 858.45 | 3,187 | 2,994.36 | 1.50 | -0.12 | 0.01 |
| 115.00 | -13.58 | -0.99 | 0.00 | -20.49 | 0.00 | 20.49 | 3,480.72 | 836.80 | 3,028 | 2,864.81 | 1.63 | -0.12 | 0.01 |
| 116.75 | -13.38 | -0.98 | 0.00 | -18.75 | 0.00 | 18.75 | 3,457.73 | 829.22 | 2,973 | 2,819.88 | 1.68 | -0.12 | 0.01 |
| 117.50 | -12.57 | -0.93 | 0.00 | -18.02 | 0.00 | 18.02 | 3,447.83 | 825.97 | 2,950 | 2,800.69 | 1.69 | -0.13 | 0.01 |
| 120.00 | -12.04 | -0.90 | 0.00 | -15.68 | 0.00 | 15.68 | 3,414.62 | 815.15 | 2,873 | 2,737.03 | 1.76 | -0.13 | 0.01 |
| 122.00 | -11.79 | -0.89 | 0.00 | -13.88 | 0.00 | 13.88 | 2,344.85 | 615.26 | 2,182 | 1,895.77 | 1.81 | -0.13 | 0.01 |
| 124.00 | -8.87 | -0.70 | 0.00 | -12.10 | 0.00 | 12.10 | 2,329.63 | 608.76 | 2,136 | 1,863.44 | 1.87 | -0.13 | 0.01 |
| 125.00 | -8.52 | -0.68 | 0.00 | -11.40 | 0.00 | 11.40 | 2,321.95 | 605.51 | 2,113 | 1,847.31 | 1.89 | -0.13 | 0.01 |
| 128.10 | -8.28 | -0.66 | 0.00 | -9.30 | 0.00 | 9.30 | 2,297.80 | 595.44 | 2,044 | 1,797.48 | 1.98 | -0.13 | 0.01 |
| 130.00 | -7.75 | -0.62 | 0.00 | -8.05 | 0.00 | 8.05 | 2,282.76 | 589.27 | 2,002 | 1,767.07 | 2.03 | -0.13 | 0.01 |
| 135.00 | -5.49 | -0.46 | 0.00 | -4.93 | 0.00 | 4.93 | 2,242.30 | 573.03 | 1,893 | 1,687.56 | 2.17 | -0.13 | 0.01 |
| 140.00 | -5.00 | -0.42 | 0.00 | -2.64 | 0.00 | 2.64 | 2,200.57 | 556.79 | 1,787 | 1,608.86 | 2.31 | -0.13 | 0.00 |
| 145.00 | -4.39 | -0.37 | 0.00 | -0.55 | 0.00 | 0.55 | 2,157.57 | 540.55 | 1,684 | 1,531.05 | 2.45 | -0.13 | 0.00 |
| 146.00 | -2.15 | -0.18 | 0.00 | -0.18 | 0.00 | 0.18 | 2,148.81 | 537.30 | 1,664 | 1,515.60 | 2.48 | -0.13 | 0.00 |
| 147.00 | 0.00 | -0.18 | 0.00 | 0.00 | 0.00 | 0.00 | 2,140.01 | 534.05 | 1,644 | 1,500.19 | 2.51 | -0.13 | 0.00 |

*©2007 - 2022 by ATC LLC. All rights reserved.*

ANALYSIS SUMMARY

| | Base Reactions | | | | | | Max Usage | |
|---|---|---|---|---|---|---|---|---|
| Load Case | Shear FX (kips) | Shear FZ (kips) | Axial FY (kips) | Moment MX (ft-kips) | Moment MY (ft-kips) | Moment MZ (ft-kips) | Elev (ft) | Interaction Ratio |
| 1.2D + 1.0W | 29.44 | 0.00 | 62.92 | 0.00 | 0.00 | 3250.63 | 0.00 | 0.45 |
| 0.9D + 1.0W | 29.43 | 0.00 | 47.18 | 0.00 | 0.00 | 3225.59 | 0.00 | 0.45 |
| 1.2D + 1.0Di + 1.0Wi | 8.33 | 0.00 | 80.92 | 0.00 | 0.00 | 898.14 | 0.00 | 0.14 |
| 1.2D + 1.0Ev + 1.0Eh | 1.61 | 0.00 | 63.13 | 0.00 | 0.00 | 188.30 | 0.00 | 0.04 |
| 0.9D - 1.0Ev + 1.0Eh | 1.60 | 0.00 | 43.66 | 0.00 | 0.00 | 186.53 | 0.00 | 0.03 |
| 1.0D + 1.0W | 7.17 | 0.00 | 52.46 | 0.00 | 0.00 | 787.82 | 0.00 | 0.12 |

*©2007 - 2022 by ATC LLC. All rights reserved.*

# BASE PLATE ANALYSIS @ 0 FT

## APPLIED REACTIONS

| Moment (k-ft) | Axial (k) | Shear (k) |
|---|---|---|
| 3250.63 | 62.92 | 29.44 |

## PLATE PARAMETERS (ID# 26332)

| | | |
|---|---|---|
| Width: | 70 | in |
| Shape: | Square | |
| Thickness: | 3 | in |
| Grade: | A572-55 | |
| Yield Strength: | 55 | ksi |
| Tensile Strength: | 70 | ksi |
| Clip Length: | 18 | in |
| Rod Detail Type: | d | |
| Clear Distance | 4 | in |
| Base Weld Size: | 0.125 | in |
| Orientation Offset: | 45 | ° |
| Analysis Type: | Plastic | |
| Neutral Axis: | 90 | ° |

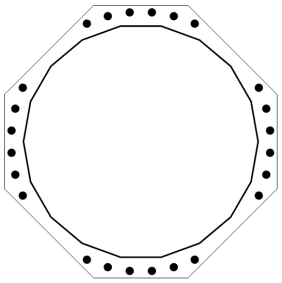

## ANCHOR ROD PARAMETERS

| Class | Arrangement | Quantity | Diameter (in) | Circle (in) | Grade | $F_y$ (ksi) | $F_u$ (ksi) | Spacing (in) | Offset (°) |
|---|---|---|---|---|---|---|---|---|---|
| Original [ID#27023] | Cluster | 24 | 2.25 | 70 | A615-75 | 75 | 100 | 6 | 45 |

## COMPONENT PROPERTIES

| Component | ID | Gross Area ($in^2$) | Net Area ($in^2$) | Individual Inertia ($in^4$) | Moment of Inertia ($in^4$) | Threads/in |
|---|---|---|---|---|---|---|
| Pole | 62.65"ø x 0.4375" (18 Sides) | 85.0743 | - | - | 41164.35 | - |
| Bolt Group | Original (24) 2.25"ø | 3.9761 | 3.2477 | 0.8393 | 44247.74 | 4.5 |

## REACTION DISTRIBUTION

| Component | ID | Moment $M_u$ (k-ft) | Axial Load $P_u$ (k) | Shear $V_u$ (k) | Moment Factor |
|---|---|---|---|---|---|
| Pole | 62.65"ø x 0.4375" (18 Sides) | 3250.6 | 62.92 | 29.44 | 1.000 |
| Bolt Group | Original (24) 2.25"ø | 3.250.6 | - | 29.44 | 1.000 |

## BASE PLATE BEND LINE ANALYSIS @ 0 FT

**POLE PROPERTIES**

| | | | | | |
|---|---|---|---|---|---|
| Flat-to-Flat Diameter: | 62.78 | in | Flat Width: | 11.069 | in |
| Point-to-Point Diameter: | 63.74 | in | Flat Radians: | 0.349 | rad |
| Orientation Offset: | - | ° | | | |

**PLATE PROPERTIES**

| | | |
|---|---|---|
| Neutral Axis: | 90 | ° |

| Bend Line | Chord Length (in) | Additional Length (in) | Section Modulus ($in^3$) | Applied Moment $M_u$ (k-in) | Moment Capacity $\Phi M_n$ (k-in) | Flexure Result $M_u/\Phi M_n$ |
|---|---|---|---|---|---|---|
| Flats | 36.220 | 0.00 | 81.495 | 658.4 | 4034.0 | 16.3% ✓ |
| Corners | 35.252 | 0.00 | 79.316 | 469.9 | 3926.1 | 12.0% ✓ |

## PLASTIC ANCHOR ROD ANALYSIS

| Class | Group Quantity | Rod Diameter (in) | Applied Axial Load $P_u$ (k) | Applied Shear Load $V_u$ (k) | Compressive Capacity $\Phi P_n$ (k) | Interaction Result |
|---|---|---|---|---|---|---|
| Original | 24 | 2.25 | 85.0 | 2.0 | 243.6 | 36.6% ✓ |

[redacted]

## APPLIED GLOBAL REACTIONS

| Moment (k-ft) | Axial (k) | Shear (k) |
|---|---|---|
| 3,250.63 | 62.92 | 29.44 |

## FOUNDATION PARAMETERS

| | | | |
|---|---|---|---|
| Mat Length: | L | 28 | ft |
| Mat Width: | W | 28 | ft |
| Mat Thickness: | T | 3 | ft |
| Base Depth: | L+T-h | 10 | ft |
| Pier Shape: | | Square | |
| Pier Width: | D | 8 | ft |
| Pier Height above Grade: | h | 0.5 | ft |
| Concrete Compressive Strength: | | 3,000 | psi |
| Mat Top Rebar: | | (48) #11 bars [60 ksi] | |
| Mat Bottom Rebar: | | (48) #11 bars [60 ksi] | |
| Pier Vertical Rebar: | | (48) #11 bars [60 ksi] | |
| Pier Rebar Ties: | s | #5 bars @ 6.0" c/c [40 ksi] | |
| Rebar Clear Cover: | | 3.0 | in |
| Tower Eccentricity: | ecc | 0 | ft |
| Tower Leg Count | | 1 | |

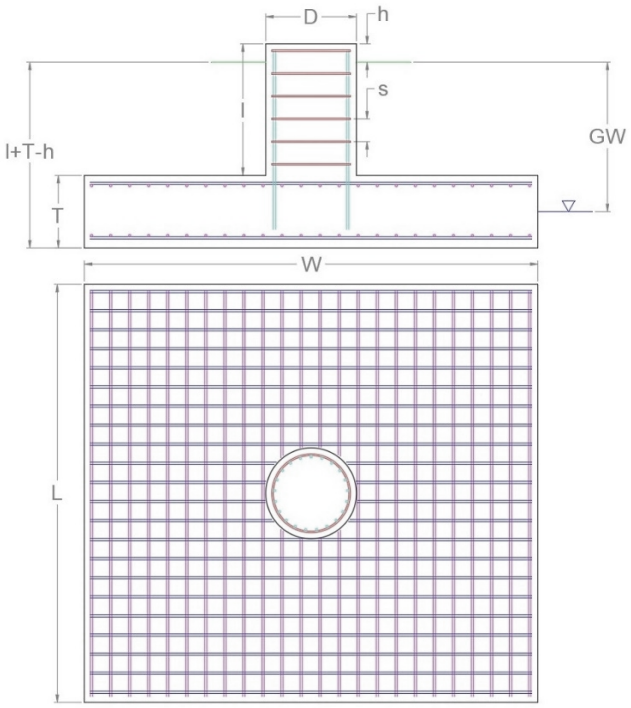


## SOIL PARAMETERS

| | | | |
|---|---|---|---|
| Water Table Depth [BGL]: | GW | 5 | ft |
| Soil Unit Weight: | | 135 | pcf |
| Ultimate Skin Friction: | | 4,000 | psf |
| Ultimate Bearing Pressure: | | 24,000 | psf |
| Bearing Pressure Type: | | Gross | |
| Coefficient of Shear Friction: | | 0.2 | |

## SOIL STRENGTH ANALYSIS

| Soil Strength Reduction Factor, $\Phi_s$ | Uplift Strength Reduction Factor, $\Phi_s$ | Asset Dead Load Factor | Dead Load Factor |
|---|---|---|---|
| 0.75 | 0.75 | 0.9 | 1.2 |

### SOIL OVERTURNING ANALYSIS

| Design Moment, $M_{u,Design}$ (k-ft) | Nominal Overturning Capacity, $\Phi_m M_n$ (k-ft) | Soil Overturning Usage, $M_{u,Design} / \Phi_m M_n$ |
|---|---|---|
| 3,559.75 | 14,167.35 | **25.1%** |

### SOIL BEARING ANALYSIS

| Net Bearing Pressure, $P_{u,Net}$ (psf) | Nominal Bearing Capacity, $\Phi_b P_n$ (k-ft) | Bearing Pressure Controlling Load Direction | Soil Bearing Usage, $P_{u,net} / \Phi_b P_n$ |
|---|---|---|---|
| 1,575.00 | 18,000.00 | Parallel to Pad Edge | **8.8%** |

### SOIL SLIDING SHEAR ANALYSIS

| Applied Shear Force, $V_u$ (k) | Friction Resistance (k) | Passive Pressure (psf) | Passive Pressure Resistance (k) | Nominal Shear Capacity, $\Phi_s V_n$ (k) | Soil Sliding Shear Usage, $V_u / \Phi_s V_n$ |
|---|---|---|---|---|---|
| 29.44 | 1,344.00 | 929.1 | 78.04 | 213.09 | **14.0%** |

## MAT REINFORCING STEEL STRENGTH ANALYSIS

| Steel Elastic Modulus, E (ksi) | Strength Bending/Tension Reduction Factor, $\Phi_b$ | Strength Shear Reduction Factor, $\Phi_v$ | Strength Compression Reduction Factor, $\Phi_c$ |
|---|---|---|---|
| 29,000 | 0.9 | 0.75 | 0.65 |

### MAT REINFORCING ONE WAY SHEAR ANALYSIS

| One Way Design Shear, $V_u$ (k) | Nominal One Way Shear Capacity, $\Phi_c V_n$ (k) | One Way Shear Controlling Load Direction | Mat One Way Shear Usage, $V_u$ / $\Phi_c V_n$ |
|---|---|---|---|
| 101.52 | 873.01 | Parallel to Pad Edge | **11.6%** |

### MAT REINFORCING PUNCHING SHEAR ANALYSIS

| Punching Shear Design Stress, $v_u$ (psi) | Nominal Punching Shear Capacity, $\Phi_c v_n$ (psi) | Mat Punching Shear Usage, $v_u$ / $\Phi_c v_n$ |
|---|---|---|
| 31.6 | 164.3 | **19.2%** |

### MAT REINFORCING MOMENT TRANSFER ANALYSIS

| Moment Transfer Effective Flexural Width, $w_f$ (in) | Neutral Axis Depth (in) | Pier Moment at Joint, $M_{ut}$ (k-in) | Nominal Moment Transfer Capacity, $\Phi M_{sc,f}$ (k-in) | Mat Moment Transfer Usage, 0.6 $M_{ut}$ / $\Phi M_{sc,f}$ |
|---|---|---|---|---|
| 17.00 | 5.42 | 0.00 | 74,387.3 | **0.0%** |

### MAT REINFORCING FLEXURE ANALYSIS – UPPER STEEL

| Factored Moment, $M_u$ (k-ft) | Nominal Flexural Capacity, $\Phi M_n$ (k-ft) | Flexural Steel Controlling Load Direction | Mat Upper Rebar Flexure Usage, $M_u$ / $\Phi M_n$ |
|---|---|---|---|
| 1,151.39 | 9,905.42 | Parallel to Pad Edge | **11.6%** |

### MAT REINFORCING FLEXURE ANALYSIS – LOWER STEEL

| Factored Moment, $M_u$ (k-ft) | Nominal Flexural Capacity, $\Phi M_n$ (k-ft) | Flexural Steel Controlling Load Direction | Mat Lower Rebar Flexure Usage, $M_u$ / $\Phi M_n$ |
|---|---|---|---|
| 2,205.40 | 9,905.42 | Parallel to Pad Edge | **22.3%** |

## PIER REINFORCING STEEL STRENGTH ANALYSIS

| Rebar Cage Diameter (in) | Steel Elastic Modulus, E (ksi) | Strength Bending/Tension Reduction Factor, $\Phi_b$ | Strength Shear Reduction Factor, $\Phi_v$ | Strength Compression Reduction Factor, $\Phi_c$ |
|---|---|---|---|---|
| 87.38 | 29,000 | 0.9 | 0.75 | 0.65 |

### PIER REINFORCING MOMENT ANALYSIS

| Design Moment, $M_u$ (k-ft) | Nominal Moment Capacity, $\Phi_b M_n$ (k-ft) | Bending Reinforcement Ratio | Pier Rebar Flexure Usage, $M_u/\Phi_b M_n$ |
|---|---|---|---|
| 3,471.43 | 14,396.93 | 0.008 | **24.1%** |

### PIER REINFORCING COMPRESSION ANALYSIS

| Design Compression, $P_u$ (k) | Nominal Compressive Capacity, $\Phi_p P_n$ (k) | Pier Rebar Compressive Usage, $P_u$ / $\Phi_p P_n$ |
|---|---|---|
| 62.92 | 12,169.80 | **0.5%** |

### PIER REINFORCING SHEAR ANALYSIS

| Design Shear, $V_u$ (k) | Nominal Shear Capacity, $\Phi_v V_n$ (k) | Pier Rebar Shear Usage, $V_u$ / $\Phi_v V_n$ |
|---|---|---|
| 29.44 | 997.84 | **3.0%** |

# EXHIBIT 4

Colliers Engineering & Design CT, P.C.
1055 Washington Boulevard
Stamford, CT 06901
203.324.0800
peter.albano@collierseng.com

# Antenna Mount Analysis Report and PMI Requirements

Mount ReAnalysis

SMART Tool Project #: 10207617
Colliers Engineering & Design CT, P.C. Project #: 23777191 (Rev 1)

September 27, 2023

| | | |
|---|---|---|
| ***Site Information*** | *Site ID:* | *5000245327-VZW / WOODBURY W CT* |
| | *Site Name:* | *WOODBURY W CT* |
| | *Carrier Name:* | *Verizon Wireless* |
| | *Address:* | *478 Good Hill Road*<br>*Woodbury, Connecticut 06798*<br>*Litchfield County* |
| | *Latitude:* | *41.557222°* |
| | *Longitude:* | *-73.256778°* |
| ***Structure Information*** | *Tower Type:* | *149-Ft Monopole* |
| | *Mount Type:* | *14.00-Ft Platform* |

**FUZE ID # 17123973**

## Analysis Results

Platform: **76.1% Pass***

***Antennas and equipment to be installed in compliance with PMI Requirements of this mount analysis.**

******Contractor PMI Requirements*:**
***Included at the end of this MA report***
***Available & Submitted via portal at https://pmi.vzwsmart.com***

***For additional questions and support, please reach out to:***
***pmisupport@colliersengineering.com***

Report Prepared By: Gianna Argentina

## Executive Summary:

The objective of this report is to determine the capacity of the antenna support mount at the subject facility for the final wireless telecommunications configuration, per the applicable codes and standards. Any modification listed under Sources of Information was assumed completed and was included in this analysis.

This analysis is inclusive of the mount structure only and does not address the structural capacity of the supporting structure. This mounting frame was not analyzed as an anchor attachment point for fall protection. All climbing activities are required to have a fall protection plan completed by a competent person.

## Sources of Information:

| Document Type | Remarks |
|---|---|
| *Radio Frequency Data Sheet (RFDS)* | *Verizon RFDS, Site ID: 325196, dated October 18, 2021* |
| *Mount Mapping Report* | *Hudson Design Group, LLC, Site ID: 469342, dated April 12, 2021* |
| *Previous Mount Analysis* | *Maser Consulting Connecticut, Project #: 21777476A (Rev. 1), dated October 21, 2021* |
| *PMI Report* | *Maser Consulting Connecticut, Project #: 21777476A, dated May 9, 2022* |
| *Filter Add Scope* | *Provided by Verizon Wireless* |

## Analysis Criteria:

| | | |
|---|---|---|
| Codes and Standards: | ANSI/TIA-222-H<br>2022 Connecticut State Building Code (CSBC), Effective October 1, 2022 | |
| Wind Parameters: | Basic Wind Speed (Ultimate 3-sec. Gust), $V_{ULT}$: | 120 mph |
| | Ice Wind Speed (3-sec. Gust): | 50 mph |
| | Design Ice Thickness: | 1.00 in |
| | Risk Category: | II |
| | Exposure Category: | C |
| | Topographic Category: | 1 |
| | Topographic Feature Considered: | N/A |
| | Topographic Method: | N/A |
| | Ground Elevation Factor, $K_e$: | 0.968 |
| Seismic Parameters: | $S_S$: | 0.194 g |
| | $S_1$: | 0.054 g |
| Maintenance Parameters: | Wind Speed (3-sec. Gust): | 30 mph |
| | Maintenance Load, Lv: | 250 lbs. |
| | Maintenance Load, Lm: | 500 lbs. |
| Analysis Software: | RISA-3D (V17) | |

## Final Loading Configuration:

The following equipment has been considered for the analysis of the mount:

| Mount Elevation (ft) | Equipment Elevation (ft) | Quantity | Manufacturer | Model | Status |
|---|---|---|---|---|---|
| 145.00 | 147.00 | 3 | Samsung | MT6407-77A | Retained |
| | | 6 | Commscope | JAHH-65B-R3B | |
| | | 2 | Antel | LPA-80063/4CF | |
| | | 3 | Samsung | B2/B66A RRH-BR049 | |
| | | 3 | Samsung | B5/B13 RRH-BR04C | |
| | | 4 | Amphenol Antel | LPA-80080/4CF | |
| | | 3 | Commscope | CBC78T-DS-43-2X | |
| | | 1 | Raycap | RVZDC-6627-PF-48 | |
| | | 6 | KAelus | KA-6030 | Added |

The recent mount mapping reported existing OVP units. It is acceptable to install up to any three (3) of the OVP model numbers listed below as required at any location other than the mount face without affecting the structural capacity of the mount. If OVP units are installed on the mount face, a mount re-analysis may be required unless replacing an existing OVP.

| Model Number | Ports | AKA |
|---|---|---|
| DB-B1-6C-12AB-0Z | 6 | OVP-6 |
| RVZDC-6627-PF-48 | 12 | OVP-12 |

## Standard Conditions:

1. All engineering services are performed on the basis that the information provided to Colliers Engineering & Design CT, P.C. and used in this analysis is current and correct. The existing equipment loading has been applied at locations determined from the supplied documentation. Any deviation from the loading locations specified in this report shall be communicated to Colliers Engineering & Design CT, P.C. to verify deviation will not adversely impact the analysis.

2. Mounts are assumed to have been properly fabricated, installed and maintained in good condition, twist free and plumb in accordance with its original design and manufacturer's specifications.

   Obvious safety and structural issues/deficiencies noticed at the time of the mount mapping and reported in the Mount Mapping Report are assumed to be corrected and documented as part of the PMI process and are not considered in the mount analysis.

   The mount analysis and the mount mapping are not a condition assessment of the mount. Proper maintenance and condition assessments are still required post analysis.

3. For mount analyses completed from other data sources (including new replacement mounts) and not specifically mapped in accordance with the NSTD-446 Standard, the mounts are assumed to have been properly fabricated, installed and maintained in good condition, twist free and plumb in accordance with its original design and manufacturer's specifications.

4. All member connections are assumed to have been designed to meet or exceed the load carrying capacity of the connected member unless otherwise specified in this report.

5. The mount was checked up to, and including, the bolts that fasten it to the mount collar/attachment and threaded rod connections in collar members if applicable. Local deformation and interaction between the mount collar/attachment and the supporting tower structure are outside the scope of this analysis.

6. All services are performed, results obtained, and recommendations made in accordance with generally accepted engineering principles and practices. Colliers Engineering & Design CT, P.C. is not responsible for the conclusion, opinions, and recommendations made by others based on the information supplied.

7. Structural Steel Grades have been assumed as follows, if applicable, unless otherwise noted in this analysis:
   - Channel, Solid Round, Angle, Plate — ASTM A36 (Gr. 36)
   - HSS (Rectangular) — ASTM 500 (Gr. B-46)
   - Pipe — ASTM A53 (Gr. B-35)
   - Threaded Rod — F1554 (Gr. 36)
   - Bolts — ASTM A325

**Discrepancies between in-field conditions and the assumptions listed above may render this analysis invalid unless explicitly approved by Colliers Engineering & Design CT, P.C.**

## Analysis Results:

| Component | Utilization % | Pass/Fail |
|---|---|---|
| Standoff_1 | 24.8 % | Pass |
| Standoff_2 | 14.4 % | Pass |
| Grating Angle | 33.9 % | Pass |
| Cross Members | 34.0 % | Pass |
| Face Horizontal | 76.1 % | Pass |
| Mount Pipe | 52.0 % | Pass |
| MOD Face Horizontal | 42.2 % | Pass |
| Corner Angle | 35.6 % | Pass |
| Support Rail | 42.7 % | Pass |
| MOD Bracing | 17.4 % | Pass |
| Standoff_1 | 24.8 % | Pass |
| Mount Connection | 24.5 % | Pass |

| | |
|---|---|
| **Structure Rating – *(Controlling Utilization of all Components)*** | **76.1%** |

## Mount Steel (EPA)a per ANSI/TIA-222-H Section 2.6.11.2:

| Ice Thickness (In) | Mount Pipes Excluded | | Mount Pipes Included | |
|---|---|---|---|---|
| | Front (EPA)a (Sq. Ft.) | Side (EPA)a (Sq. Ft.) | Front (EPA)a (Sq. Ft.) | Side (EPA)a (Sq. Ft.) |
| 0 | 45.7 | 45.7 | 61.7 | 61.7 |
| 0.5 | 56.7 | 56.7 | 79.5 | 79.5 |
| 1 | 67.4 | 67.4 | 96.9 | 96.9 |

Notes:
- (EPA)a values listed above may be used in the absence of more precise information
- (EPA)a values in the table above include 3 sector(s).
- Ka factors included in (EPA)a calculations

## Requirements:

The existing mount is **SUFFICIENT** for the final loading configuration shown in attachment 2 and do not require modifications. Additional requirements are noted below.

Contractor shall install the proposed filter units on new Site Pro 1 Dual Swivel Mount Kit (Part #: RRUDSM or EOR approved equivalent) in the location shown in the placement diagrams.

Contractor shall relocate the safety climb head assembly below the bottom VZW mount collar. Replace head assembly with Perfect Vision – PV-CMX-TA-BB-F, or EOR approved equivalent, and install on the same flat as the existing head assembly. Reroute and attach the existing safety climb wire rope to the proposed head assembly. Install safety climb wire rope guides as needed such that the wire rope does not contact any steel/coax cables.

Contractor shall install step bolt anchors (Perfect Vision – PV-CMX-INS-14-R0, or EOR approved equivalent) on every step bolt above the proposed safety climb head assembly.

If required, ANSI/ASSP rigging plan review services compliant with the requirements of ANSI/TIA 322 are available for a Construction Class IV site or other. Separate review fees will apply.

## Attachments:

1. **Contractor Required Post Installation Inspection (PMI) Report Deliverables**
2. Antenna Placement Diagrams
3. Mount Photos
4. Mount Mapping Report (for reference only)
5. Analysis Calculations

# Mount Desktop – Post Modification Inspection (PMI) Report Requirements

## Documents & Photos Required from Contractor – Passing Mount Analysis

Passing Mount Analysis requires a PMI due to a modification in loading.

Electronic pdf version of this can be downloaded at https://pmi.vzwsmart.com.

For additional questions and support, please reach out to pmisupport@colliersengineering.com

---

MDG #: 5000245327 SMART Project #: 10207617 Fuze Project ID: 17123973

**Purpose** – to provide SMART Tool structural vendor the proper documentation in order to complete the required Mount Desktop review of the Post Modification Inspection Report.

- Contractor is responsible for making certain the photos provided as noted below provide confirmation that the installation was completed in accordance with this Passing Mount Analysis.
- Contractor shall relay any data that can impact the performance of the mount, this includes safety issues.

**Base Requirements:**

- If installation will cause damage to the structure, the climbing facility, or safety climb if present or any installed system, SMART Tool vendor to be notified prior to install. Any special photos outside of the standard requirements will be indicated on the drawings.
- Provide "as built mount drawings" showing contractor's name, contact information, preparer's signature, and date. Any deviations from the drawings (Proposed modification) shall be shown. NOTE: If loading is different than what is conveyed in the passing mount analysis (MA) contact the SMART Tool vendor immediately.
- Each photo should be time and date stamped
- Photos should be high resolution.
- Contractor shall ensure that the safety climb wire rope is supported and not adversely impacted by the install of the modification components. This may involve the install of wire rope guides, or other items to protect the wire rope. If there is conflict, contact the SMART Tool engineer for recommendations.
- The PMI can be accessed at the following portal: ***https://pmi.vzwsmart.com***

**Photo Requirements:**

- *Photos taken at ground level*
  - Photo of Gate Signs showing the tower owner, site name, and number.
  - Overall tower structure after installation.
  - Photos of the mount after installation; if the mounts are at different rad elevations, pictures must be provided for all elevations that equipment was installed.
- *Photos taken at Mount Elevation*
  - Photos showing the safety climb wire rope above and below the mount prior to installation.
  - Photos showing the climbing facility and safety climb if present.
  - Photos showing each individual sector after installation. Each entire sector shall be in one photo to show the interconnection of members.

        - These photos shall also certify that the placement and geometry of the equipment on the mount is as depicted in the antenna placement diagram in this form.
    - Photos that show the model number of each antenna and piece of equipment installed per sector.

**Antenna & equipment placement and Geometry Confirmation:**

- The contractor shall certify that the antenna & equipment placement and geometry is in accordance with the sketch and table as included in the mount analysis and noted below.

☐ The contractor certifies that the photos support and the equipment on the mount is as depicted on the sketch and table included in this form and with the mount analysis provided.

OR

☐ The contractor notes that the equipment on the mount is not in accordance with the sketch and has noted the differences below and provided photo documentation of any alterations.

**Special Instructions / Validation as required from the MA or any other information the contractor deems necessary to share that was identified:**

**Issue:**

| |
|---|
| Contractor shall install the proposed filter units on new Site Pro 1 Dual Swivel Mount Kit (Part #: RRUDSM or EOR approved equivalent) in the location shown in the placement diagrams.<br><br>Contractor shall relocate the safety climb head assembly below the bottom VZW mount collar. Replace head assembly with Perfect Vision – PV-CMX-TA-BB-F, or EOR approved equivalent, and install on the same flat as the existing head assembly. Reroute and attach the existing safety climb wire rope to the proposed head assembly. Install safety climb wire rope guides as needed such that the wire rope does not contact any steel/coax cables.<br><br>Contractor shall install step bolt anchors (Perfect Vision – PV-CMX-INS-14-R0, or EOR approved equivalent) on every step bolt above the proposed safety climb head assembly. |

**Response:**

| |
|---|
| |

**Special Instruction Confirmation:**

☐ The contractor has read and acknowledges the above special instructions.

☐ All hardware listed in the Special Instructions above (if applicable) has been properly installed, and the existing hardware was inspected.

☐ The material utilized was as specified in the SMART Tool engineering vendor Special Instructions above (if applicable) and included in the material certification folder is a packing list or invoice for these materials.

OR

☐ The material utilized was approved by a SMART Tool engineering vendor as an "equivalent" and this approval is included as part of the contractor submission.

**Comments:**

| |
|---|
| |

**Contractor certifies that the climbing facility / safety climb was not damaged prior to starting work:**

☐ Yes ☐ No

**Contractor certifies no new damage created during the current installation:**

☐ Yes ☐ No

**Contractor to certify the condition of the safety climb and verify no damage when leaving the site:**

☐ Safety Climb in Good Condition ☐ Safety Climb Damaged

**Certifying Individual:**

| | |
|---|---|
| Company: | |
| Employee Name: | |
| Contact Phone: | |
| Email: | |
| Date: | |

**Structure: 2 327-VZW - WOODBURY W CT**

Se tor: **A** 9/27/2023

Str t re Type: Mo opole 10209204

Mo t Elev: 145.00 P ge: 1

Colliers Engineering & Design

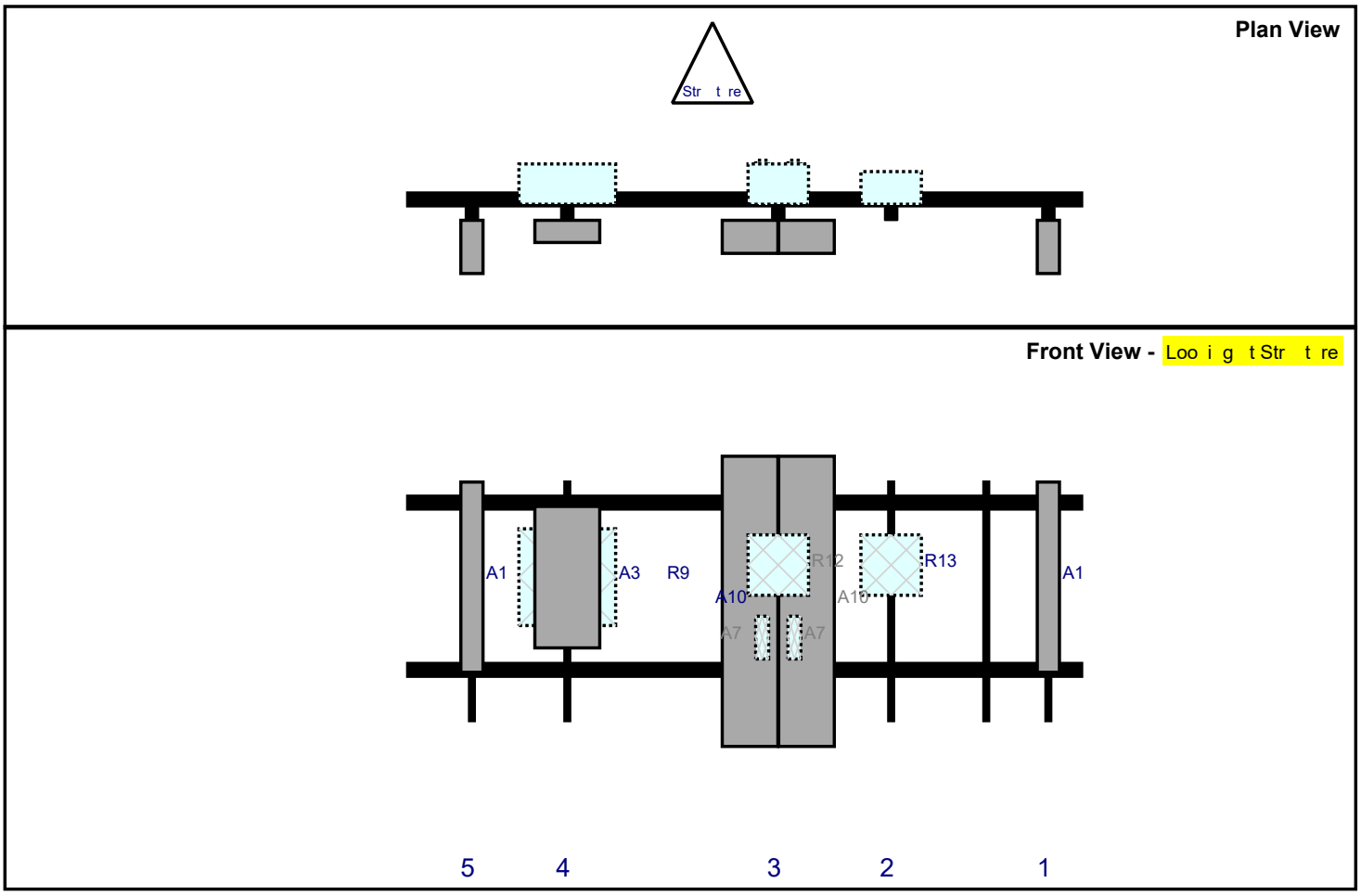


| Re # | Model | Height (i ) | Width (i ) | H Dist Fr L. | Pipe # | Pipe Pos V | A t Pos | C. A t Fr T. | A t H O | St t s | V lid tio |
|---|---|---|---|---|---|---|---|---|---|---|---|
| A1 | LPA-80080/4CF | 47.2 | 5.5 | 159.339 | 1 | | Fro t | 24 | 0 | Ret i ed | 04/27/2022 |
| R13 | B5/B13 RRH-BR04C | 15 | 15 | 120.339 | 2 | | Behi d | 21 | 0 | Ret i ed | 04/27/2022 |
| A10 | JAHH-65B-R3B | 72 | 13.8 | 92.339 | 3 | | Fro t | 30 | 7 | Ret i ed | 04/27/2022 |
| A10 | JAHH-65B-R3B | 72 | 13.8 | 92.339 | 3 | | Fro t | 30 | -7 | Ret i ed | 04/27/2022 |
| A7 | KA-6030 | 10.6 | 3.2 | 92.339 | 3 | | Behi d | 39 | 4 | Added | |
| A7 | KA-6030 | 10.6 | 3.2 | 92.339 | 3 | | Behi d | 39 | -4 | Added | |
| R12 | B2/B66A RRH-BR049 | 15 | 15 | 92.339 | 3 | | Behi d | 21 | 0 | Ret i ed | 04/27/2022 |
| A3 | DB-T1-6Z-8AB-0Z | 24 | 24 | 40 | 4 | | Behi d | 24 | 0 | Ret i ed | 04/27/2022 |
| R9 | MT6407-77A | 35.1 | 16.1 | 40 | 4 | | Fro t | 24 | 0 | Ret i ed | 04/27/2022 |
| A1 | LPA-80080/4CF | 47.2 | 5.5 | 16.339 | 5 | | Fro t | 24 | 0 | Ret i ed | 04/27/2022 |
| MPA2 | CBC78T-DS-43-2X | 6.4 | 6.9 | | Me | er | | | | Ret i ed | 04/27/2022 |
| MPB2 | CBC78T-DS-43-2X | 6.4 | 6.9 | | Me | er | | | | Ret i ed | 04/27/2022 |
| MPC2 | CBC78T-DS-43-2X | 6.4 | 6.9 | | Me | er | | | | Ret i ed | 04/27/2022 |

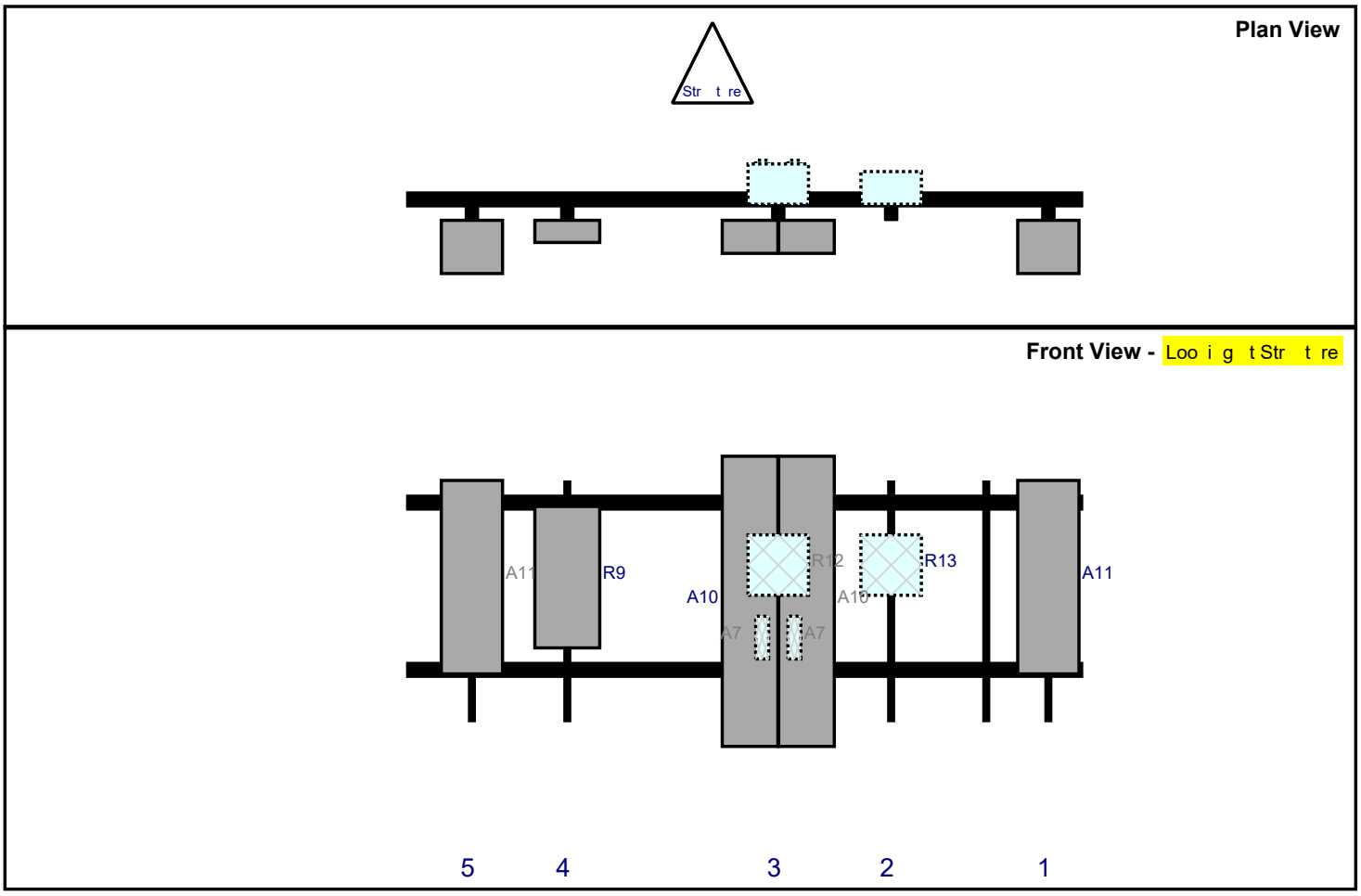


| Re # | Model | Height (i ) | Width (i ) | H Dist Fr L. | Pipe # | Pipe Pos V | A t Pos | C. A t Fr T. | A t H O | St t s | V lid tio |
|---|---|---|---|---|---|---|---|---|---|---|---|
| A11 | LPA-80063/4CF | 48 | 15.2 | 159.339 | 1 | | Fro t | 24 | 0 | Ret i ed | 04/27/2022 |
| R13 | B5/B13 RRH-BR04C | 15 | 15 | 120.339 | 2 | | Behi d | 21 | 0 | Ret i ed | 04/27/2022 |
| A10 | JAHH-65B-R3B | 72 | 13.8 | 92.339 | 3 | | Fro t | 30 | 7 | Ret i ed | 04/27/2022 |
| A10 | JAHH-65B-R3B | 72 | 13.8 | 92.339 | 3 | | Fro t | 30 | -7 | Ret i ed | 04/27/2022 |
| A7 | KA-6030 | 10.6 | 3.2 | 92.339 | 3 | | Behi d | 39 | 4 | Added | |
| A7 | KA-6030 | 10.6 | 3.2 | 92.339 | 3 | | Behi d | 39 | -4 | Added | |
| R12 | B2/B66A RRH-BR049 | 15 | 15 | 92.339 | 3 | | Behi d | 21 | 0 | Ret i ed | 04/27/2022 |
| R9 | MT6407-77A | 35.1 | 16.1 | 40 | 4 | | Fro t | 24 | 0 | Ret i ed | 04/27/2022 |
| A11 | LPA-80063/4CF | 48 | 15.2 | 16.339 | 5 | | Fro t | 24 | 0 | Ret i ed | 04/27/2022 |

Copyright 2019 y To er E gi eeri g Sol tio s, LLC. All Rights Reserved

**Plan View**

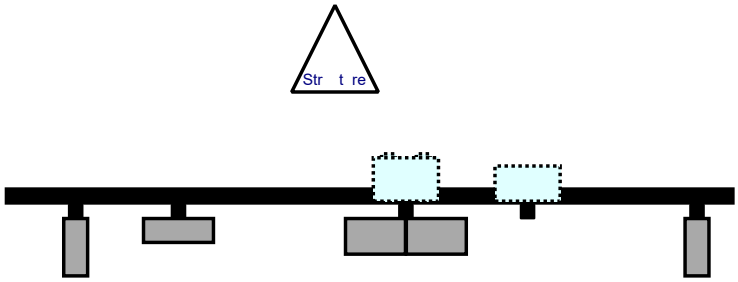


**Front View -** Loo i g t Str t re

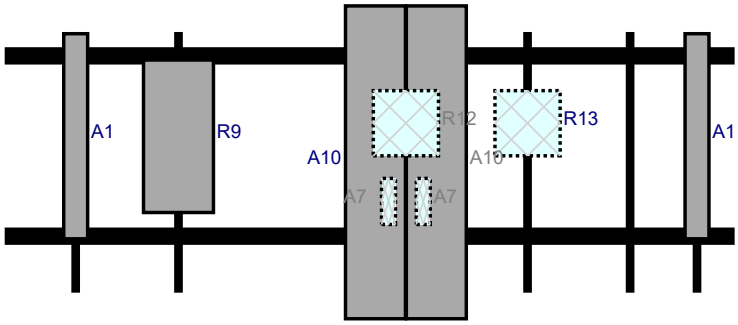


| Re # | Model | Height (i ) | Width (i ) | H Dist Fr L. | Pipe # | Pipe Pos V | A t Pos | C. A t Fr T. | A t H O | St t s | V lid tio |
|---|---|---|---|---|---|---|---|---|---|---|---|
| A1 | LPA-80080/4CF | 47.2 | 5.5 | 159.339 | 1 | | Fro t | 24 | 0 | Ret i ed | 04/27/2022 |
| R13 | B5/B13 RRH-BR04C | 15 | 15 | 120.339 | 2 | | Behi d | 21 | 0 | Ret i ed | 04/27/2022 |
| A10 | JAHH-65B-R3B | 72 | 13.8 | 92.339 | 3 | | Fro t | 30 | 7 | Ret i ed | 04/27/2022 |
| A10 | JAHH-65B-R3B | 72 | 13.8 | 92.339 | 3 | | Fro t | 30 | -7 | Ret i ed | 04/27/2022 |
| A7 | KA-6030 | 10.6 | 3.2 | 92.339 | 3 | | Behi d | 39 | 4 | Added | |
| A7 | KA-6030 | 10.6 | 3.2 | 92.339 | 3 | | Behi d | 39 | -4 | Added | |
| R12 | B2/B66A RRH-BR049 | 15 | 15 | 92.339 | 3 | | Behi d | 21 | 0 | Ret i ed | 04/27/2022 |
| R9 | MT6407-77A | 35.1 | 16.1 | 40 | 4 | | Fro t | 24 | 0 | Ret i ed | 04/27/2022 |
| A1 | LPA-80080/4CF | 47.2 | 5.5 | 16.339 | 5 | | Fro t | 24 | 0 | Ret i ed | 04/27/2022 |

Copyright 2019 y To er E gi eeri g Sol tio s, LLC. All Rights Reserved

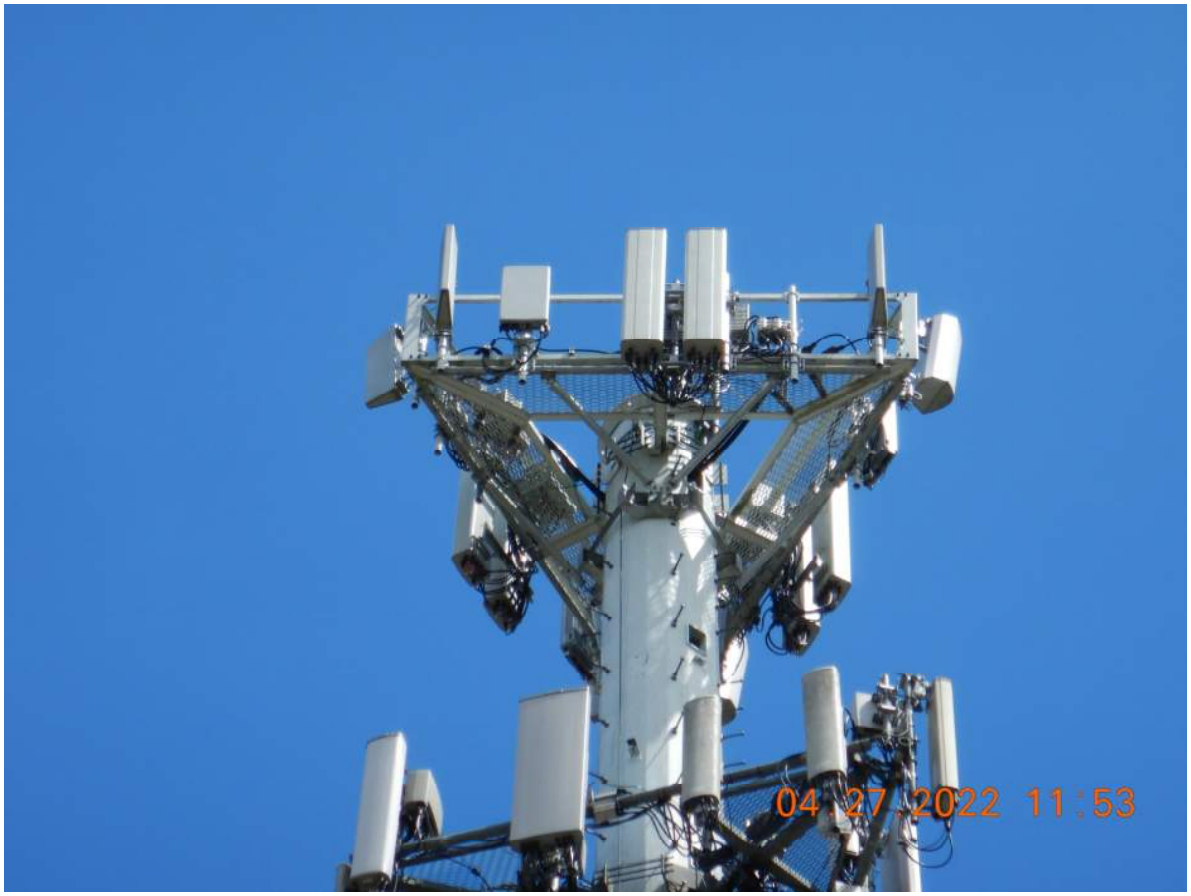
04.27.2022 11:53

04.27.2022 11:06

V4.0 Updated on 3-31-2021

# Antenna Mount Mapping Form (PATENT PENDING)

| | | | |
|---|---|---|---|
| | | | FCC # |
| **Tower Owner:** | ATC SEQUOIA | **Mapping Date:** | 4/12/2021 |
| **Site Name:** | WOODBURY W CT | **Tower Type:** | Monopole |
| **Site Number or ID:** | 469342 | **Tower Height (Ft.):** | 148.5 |
| **Mapping Contractor:** | HUDSON DESIGN GROUP,LLC. | **Mount Elevation (Ft.):** | 146 |

This antenna mapping form is the property of TES and under **PATENT PENDING**. The formation contained herein is considered confidential in nature and is to be used only for the specific customer it was intended for. Reproduction, transmission, publication, modification or disclosure by any method is prohibited except by express written permission of TES. All means and methods are the responsibility of the contractor and the work shall be compliant with ANSI/ASSE A 10.48, OSHA, FCC, FAA and other safety requirements that may apply. TES is not warrantying the usability of the safety climb as it must be assessed prior to each use in compliance with OSHA requirements.

Please insert the sketches of the antenna mount from the "Sketches" tab with dimensions and members here.

**Mount Pipe Configuration and Geometries [Unit = Inches]**

| Sector / Position | Mount Pipe Size & Length | Vertical Offset Dimension "u" | Horizontal Offset "C1, C2, C3, etc." | Sector / Position | Mount Pipe Size & Length | Vertical Offset Dimension "u" | Horizontal Offset "C1, C2, C3, etc." |
|---|---|---|---|---|---|---|---|
| A1 | 2" STD. PIPE X 60" LONG | 47.00 | 13.00 | C1 | 2" STD. PIPE X 60" LONG | 47.00 | 13.00 |
| A2 | 2" STD. PIPE X 60" LONG | 42.00 | 28.00 | C2 | 2" STD. PIPE X 60" LONG | 42.00 | 28.00 |
| A3 | 2" STD. PIPE X 60" LONG | 49.00 | 52.00 | C3 | 2" STD. PIPE X 60" LONG | 49.00 | 52.00 |
| A4 | 2" STD. PIPE X 60" LONG | 46.00 | 80.00 | C4 | 2" STD. PIPE X 60" LONG | 46.00 | 80.00 |
| A5 | 2" STD. PIPE X 60" LONG | 42.00 | 141.00 | C5 | 2" STD. PIPE X 60" LONG | 42.00 | 141.00 |
| A6 | 2" STD. PIPE X 60" LONG | 47.00 | 156.00 | C6 | 2" STD. PIPE X 60" LONG | 47.00 | 156.00 |
| B1 | 2" STD. PIPE X 60" LONG | 47.00 | 13.00 | D1 | | | |
| B2 | 2" STD. PIPE X 60" LONG | 42.00 | 28.00 | D2 | | | |
| B3 | 2" STD. PIPE X 60" LONG | 49.00 | 52.00 | D3 | | | |
| B4 | 2" STD. PIPE X 60" LONG | 46.00 | 80.00 | D4 | | | |
| B5 | 2" STD. PIPE X 60" LONG | 42.00 | 141.00 | D5 | | | |
| B6 | 2" STD. PIPE X 60" LONG | 47.00 | 156.00 | D6 | | | |

| | |
|---|---|
| Distance between bottom rail and mount CL elevation (dim d). Unit is inches. See 'Mount Elev Ref' tab for details. : | 2.00 |
| Distance from top of bottom support rail to lowest tip of ant./eqpt. of Carrier above. (N/A if > 10 ft.) : | |
| Distance from top of bottom support rail to highest tip of ant./eqpt. of Carrier below. (N/A if > 10 ft.) : | |

Please enter additional infomation or comments below.

| | | | |
|---|---|---|---|
| Tower Face Width at Mount Elev. (ft.): | | Tower Leg Size or Pole Shaft Diameter at Mount Elev. (in.): | 34 |
| For T-Arms/Platforms on monopoles, report the weld size from the main standoff to the plate bolting into the collar mount. | | | |

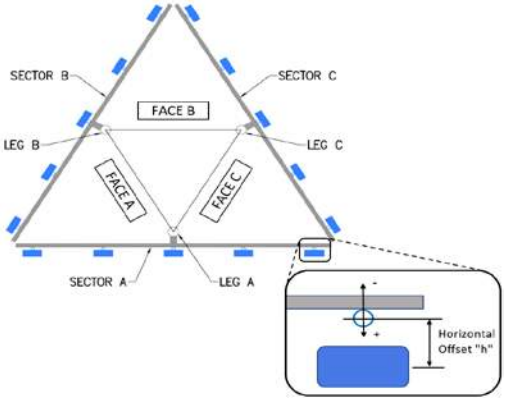


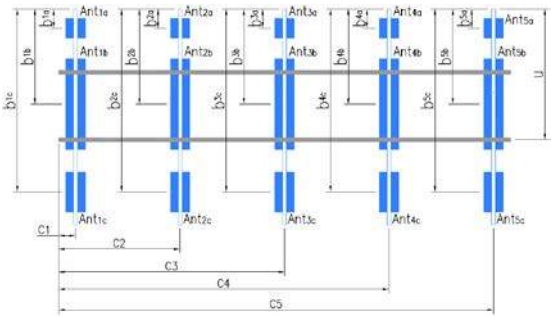


**Antenna Layout (Looking Out From Tower)**

| | Enter antenna model. If not labeled, enter "Unknown". | | | | | | Mounting Locations [Units are inches and degrees] | | | Photos of antennas |
|---|---|---|---|---|---|---|---|---|---|---|
| Ants. Items | Antenna Models if Known | Width (in.) | Depth (in.) | Height (in.) | Coax Size and Qty | Antenna Center-line (Ft.) | Vertical Distances"$b_{1a}$, $b_{2a}$, $b_{3a}$, $b_{1b}$...." (Inches) | Horiz. Offset "h" (Use "-" if Ant. is behind) | Antenna Azimuth (Degrees) | Photo Numbers |
| **Sector A** | | | | | | | | | | |
| $Ant_{1a}$ | | | | | | | | | | |
| $Ant_{1b}$ | LPA-80080/4CF | 6.00 | 13.00 | 47.00 | | 148.083 | 20.00 | 15.00 | 30.00 | 56,129 |
| $Ant_{1c}$ | | | | | | | | | | |
| $Ant_{2a}$ | CBC78T-DS-43-2X | 5.00 | 7.00 | 6.50 | | 146.833 | 30.00 | 0.00 | | 57,130 |
| $Ant_{2b}$ | | | | | | | | | | |
| $Ant_{2c}$ | | | | | | | | | | |
| $Ant_{3a}$ | | | | | | | | | | |
| $Ant_{3b}$ | RFV01U-D2A | 15.50 | 10.00 | 15.50 | | 148.417 | 18.00 | -8.00 | | 58,130 |
| $Ant_{3c}$ | | | | | | | | | | |
| $Ant_{4a}$ | RFV01U-D1A | 15.50 | 12.00 | 15.50 | | 148 | 20.00 | -9.00 | | 58,130 |
| $Ant_{4b}$ | (2) JAHH-65B-R3B | 14.00 | 8.50 | 72.00 | | 147.167 | 30.00 | 13.00 | 30.00 | 58,130 |
| $Ant_{4c}$ | | | | | | | | | | |
| $Ant_{5a}$ | | | | | | | | | | |
| $Ant_{5b}$ | LPA-80080/4CF | 6.00 | 13.00 | 47.00 | | 147.667 | 20.00 | 15.00 | 30.00 | 59,132 |
| $Ant_{5c}$ | | | | | | | | | | |
| Ant on Standoff | | | | | | | | | | |
| Ant on Standoff | | | | | | | | | | |
| Ant on Tower | | | | | | | | | | |
| Ant on Tower | | | | | | | | | | |

| Mount Azimuth (Degree) for Each Sector | | | Tower Leg Azimuth (Degree) for Each Sector | | |
|---|---|---|---|---|---|
| Sector A: | 30.00 | Deg | Leg A: | | Deg |
| Sector B: | 150.00 | Deg | Leg B: | | Deg |
| Sector C: | 270.00 | Deg | Leg C: | | Deg |
| Sector D: | | Deg | Leg D: | | Deg |

| Climbing Facility Information | | |
|---|---|---|
| Location: | 280.00 | Deg |
| Climbing Facility | Corrosion Type: | Good condition. |
| | Access: | Climbing path was unobstructed. |
| | Condition: | Good condition. |
| | | N/A |

Please insert a photo of the mount centerline measurement here.

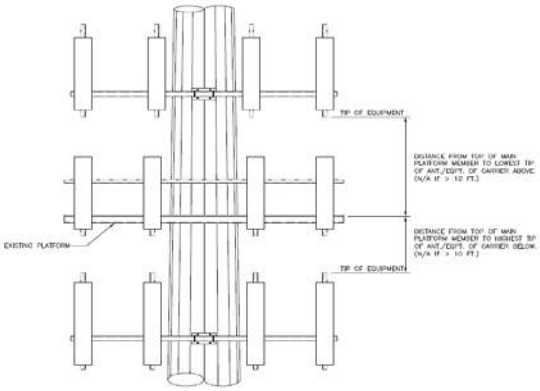


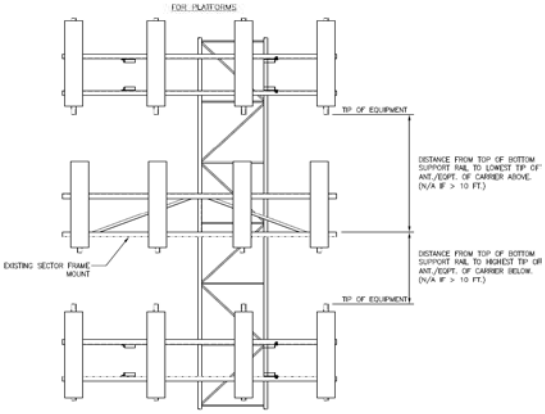


For T-Arms/Platforms on monopoles, record the weld size from the main standoff member to the plate bolting into the collar. See below for reference.

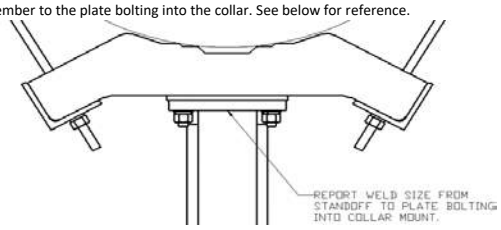


| | | | | | | | | | | |
|---|---|---|---|---|---|---|---|---|---|---|
| **Sector B** | | | | | | | | | | |
| $Ant_{1a}$ | | | | | | | | | | |
| $Ant_{1b}$ | LPA-80063/4CF | 15.00 | 13.00 | 47.00 | | 148.083 | 20.00 | 19.00 | 150.00 | 60,141 |
| $Ant_{1c}$ | | | | | | | | | | |
| $Ant_{2a}$ | CBC78T-DS-43-2X | 5.00 | 7.00 | 6.50 | | 146.833 | 30.00 | 0.00 | | 60,142 |
| $Ant_{2b}$ | | | | | | | | | | |
| $Ant_{2c}$ | | | | | | | | | | |
| $Ant_{3a}$ | | | | | | | | | | |
| $Ant_{3b}$ | RFV01U-D2A | 15.50 | 10.00 | 15.50 | | 148.417 | 18.00 | -8.00 | | 61,142 |
| $Ant_{3c}$ | | | | | | | | | | |
| $Ant_{4a}$ | RFV01U-D1A | 15.50 | 12.00 | 15.50 | | 148 | 20.00 | -9.00 | | 61,142 |
| $Ant_{4b}$ | (2) JAHH-65B-R3B | 14.00 | 8.50 | 72.00 | | 147.167 | 30.00 | 13.00 | 150.00 | 61,142 |
| $Ant_{4c}$ | | | | | | | | | | |
| $Ant_{5a}$ | | | | | | | | | | |
| $Ant_{5b}$ | LPA-80063/4CF | 15.00 | 13.00 | 47.00 | | 147.667 | 20.00 | 19.00 | 150.00 | 62,144 |
| $Ant_{5c}$ | | | | | | | | | | |
| Ant on Standoff | | | | | | | | | | |
| Ant on Standoff | | | | | | | | | | |
| Ant on Tower | | | | | | | | | | |
| Ant on Tower | | | | | | | | | | |
| **Sector C** | | | | | | | | | | |
| $Ant_{1a}$ | | | | | | | | | | |
| $Ant_{1b}$ | LPA-80080/4CF | 6.00 | 13.00 | 47.00 | | 148.083 | 20.00 | 15.00 | 270.00 | 62,153 |
| $Ant_{1c}$ | | | | | | | | | | |
| $Ant_{2a}$ | CBC78T-DS-43-2X | 5.00 | 7.00 | 6.50 | | 146.833 | 30.00 | 0.00 | | 62,150 |
| $Ant_{2b}$ | | | | | | | | | | |
| $Ant_{2c}$ | | | | | | | | | | |
| $Ant_{3a}$ | | | | | | | | | | |
| $Ant_{3b}$ | RFV01U-D2A | 15.50 | 10.00 | 15.50 | | 148.417 | 18.00 | -8.00 | | 63,150 |
| $Ant_{3c}$ | | | | | | | | | | |
| $Ant_{4a}$ | RFV01U-D1A | 15.50 | 12.00 | 15.50 | | 148 | 20.00 | -9.00 | | 63,154 |
| $Ant_{4b}$ | (2) JAHH-65B-R3B | 14.00 | 8.50 | 72.00 | | 147.167 | 30.00 | 13.00 | 270.00 | 63,154 |
| $Ant_{4c}$ | | | | | | | | | | |
| $Ant_{5a}$ | | | | | | | | | | |
| $Ant_{5b}$ | LPA-80080/4CF | 6.00 | 13.00 | 47.00 | | 147.667 | 20.00 | 15.00 | 270.00 | 64,155 |
| $Ant_{5c}$ | | | | | | | | | | |
| Ant on Standoff | | | | | | | | | | |
| Ant on Standoff | | | | | | | | | | |
| Ant on Tower | | | | | | | | | | |
| Ant on Tower | | | | | | | | | | |
| **Sector D** | | | | | | | | | | |
| $Ant_{1a}$ | | | | | | | | | | |
| $Ant_{1b}$ | | | | | | | | | | |
| $Ant_{1c}$ | | | | | | | | | | |
| $Ant_{2a}$ | | | | | | | | | | |
| $Ant_{2b}$ | | | | | | | | | | |
| $Ant_{2c}$ | | | | | | | | | | |
| $Ant_{3a}$ | | | | | | | | | | |
| $Ant_{3b}$ | | | | | | | | | | |
| $Ant_{3c}$ | | | | | | | | | | |
| $Ant_{4a}$ | | | | | | | | | | |
| $Ant_{4b}$ | | | | | | | | | | |
| $Ant_{4c}$ | | | | | | | | | | |
| $Ant_{5a}$ | | | | | | | | | | |
| $Ant_{5b}$ | | | | | | | | | | |
| $Ant_{5c}$ | | | | | | | | | | |
| Ant on Standoff | | | | | | | | | | |
| Ant on Standoff | | | | | | | | | | |
| Ant on Tower | | | | | | | | | | |
| Ant on Tower | | | | | | | | | | |

| Observed Safety and Structural Issues During the Mount Mapping | | |
|---|---|---|
| Issue # | Description of Issue | Photo # |
| 1 | | |
| 2 | | |
| 3 | | |
| 4 | | |
| 5 | | |
| 6 | | |
| 7 | | |
| 8 | | |

| Observed Obstructions to Tower Lighting System | | | | |
|---|---|---|---|---|
| If the tower lighting system is being obstructed by the carrier's equipment (for example: a light nested by the antennas), please provide photos and fill in the information below. | | | | Photo # |
| Description of Obstruction: | | | | |
| Type of Light: | | Photo # | | Additional Comments: |
| Lighting Technology: | | Photo # | | |
| Elevation (AGL) at base of light (Ft.): | | Photo # | | |
| Is a service loop available? | | Photo # | | |
| Is beacon installed on an extension? | | Photo # | | |

| Mapping Notes |
|---|
| 1. Please report any visible structural or safety issues observed on the antenna mounts (Damaged members, loose connections, tilting mounts, safety climb issues, etc.) |
| 2. If the thickness of the existing pipes or tubing can't be obtained from a general tool (such as Caliper), please use an ultrasonic measurement tool (thickness gauge) to measure the thickness. |
| 3. Please create all required detail sketches of the mounts and insert them into the "Sketches" tab. |
| 4. Please measure and enter the bolt sizes and types under the Members Box in the spreadsheet of the mount type. |
| 5. Take and label the photos of the tower, mounts, connections, antennas and all measurements. Minimum 50 photos are required. |
| 6. Please measure and report the size and length of all existing antenna mounting pipes. |
| 7. Please measure and report the antenna information for all sectors. |
| 8. Don't delete or rearrange any sheet or contents of any sheet from this mapping form. |

| Standard Conditions |
|---|
| 1. Obvious safety and structural issues/deficiencies noticed at the time of the mount mapping are to be reported in this mapping. However, this mount mapping is not a condition assessment of the mount. |

V4.0 Updated on 3-31-2021

# Antenna Mount Mapping Form (PATENT PENDING)

FCC #

| | | | |
|---|---|---|---|
| **Tower Owner:** | ATC SEQUOIA | **Mapping Date:** | 4/12/2021 |
| **Site Name:** | WOODBURY W CT | **Tower Type:** | Monopole |
| **Site Number or ID:** | 469342 | **Tower Height (Ft.):** | 148.5 |
| **Mapping Contractor:** | HUDSON DESIGN GROUP,LLC. | **Mount Elevation (Ft.):** | 146 |

This antenna mapping form is the property of TES and under **PATENT PENDING**. The formation contained herein is considered confidential in nature and is to be used only for the specific customer it was intended for. Reproduction, transmission, publication, modification or disclosure by any method is prohibited except by express written permission of TES. All means and methods are the responsibility of the contractor and the work shall be compliant with ANSI/ASSE A 10.48, OSHA, FCC, FAA and other safety requirements that may apply. TES is not warrantying the usability of the safety climb as it must be assessed prior to each use in compliance with OSHA requirements.

## Please Insert Sketches of the Antenna Mount

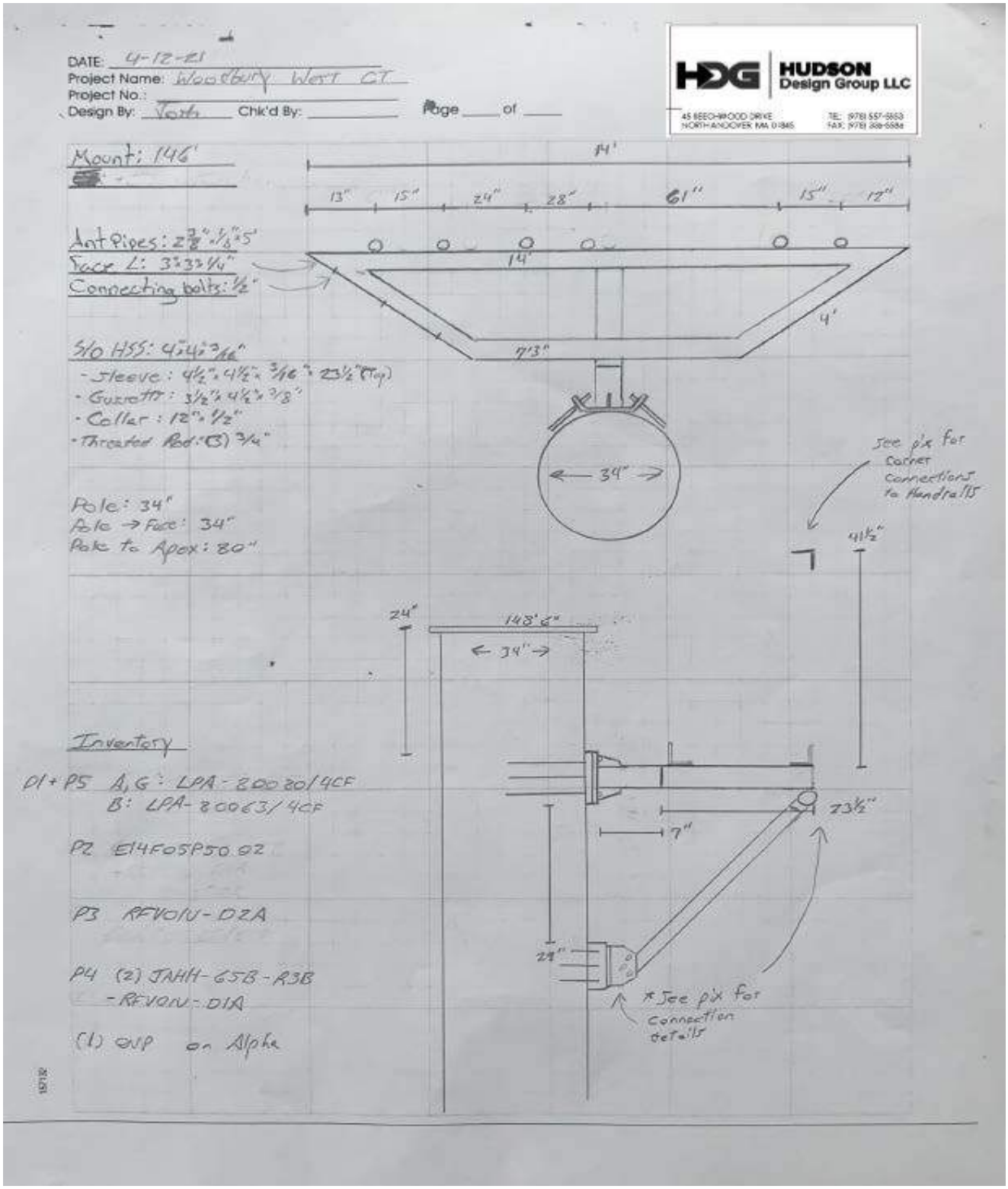

**Please Insert Sketches of the Antenna Mount, cont'd**

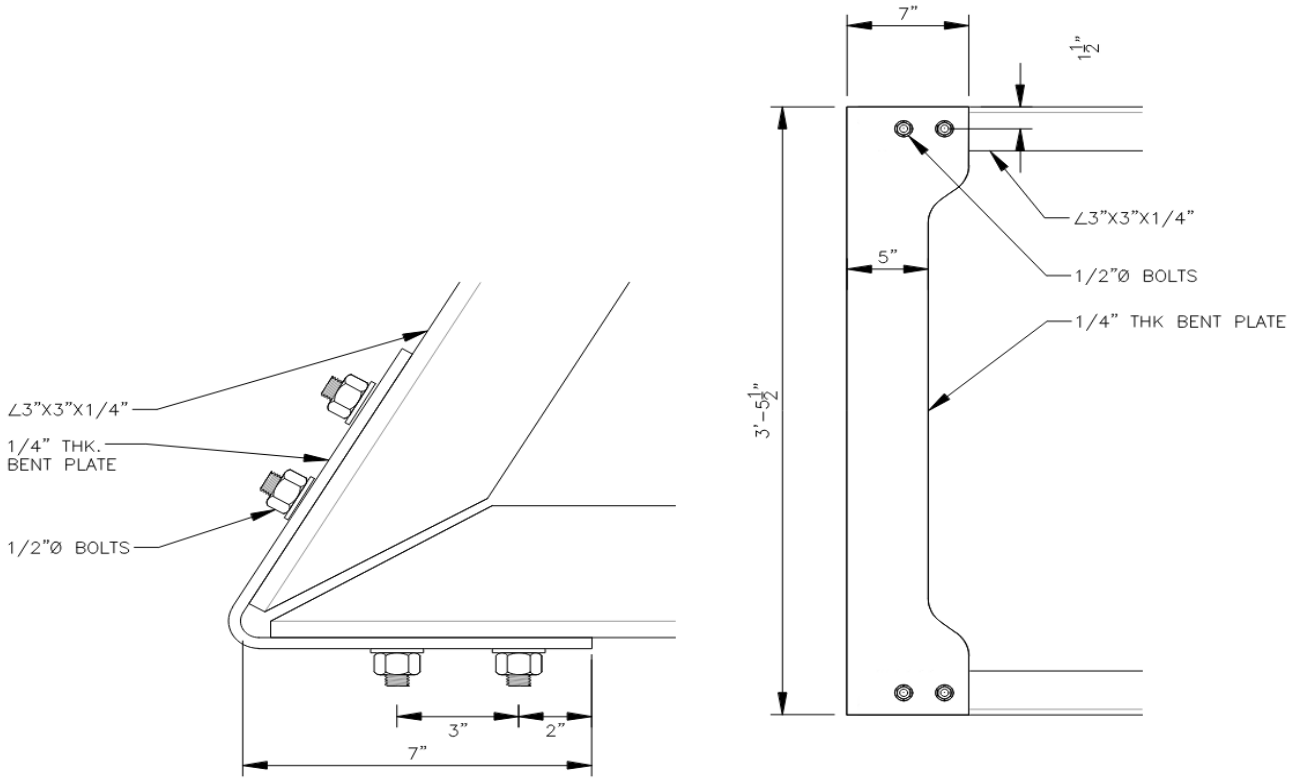


PLATFORM CORNER DETAIL

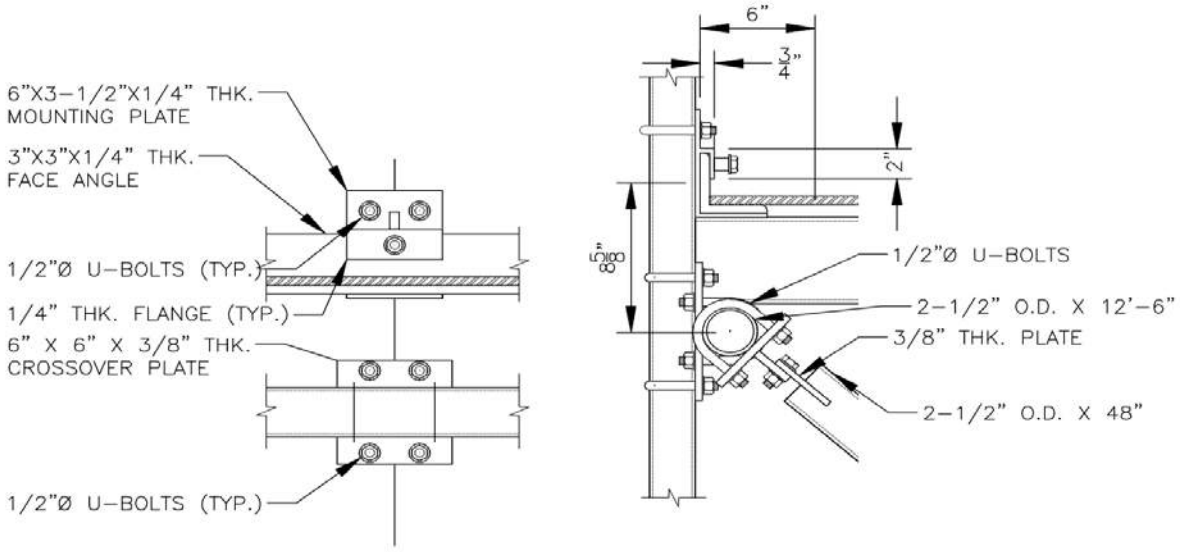


CROSSOVER PLATE DETAIL

**Please Insert Sketches of the Antenna Mount, cont'd**

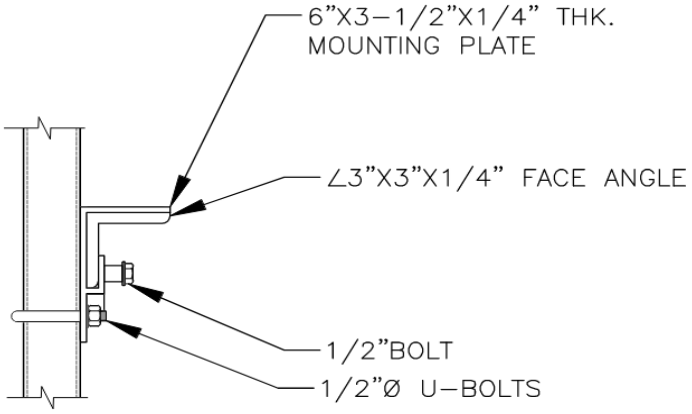


**HANDRAIL CONNECTION**

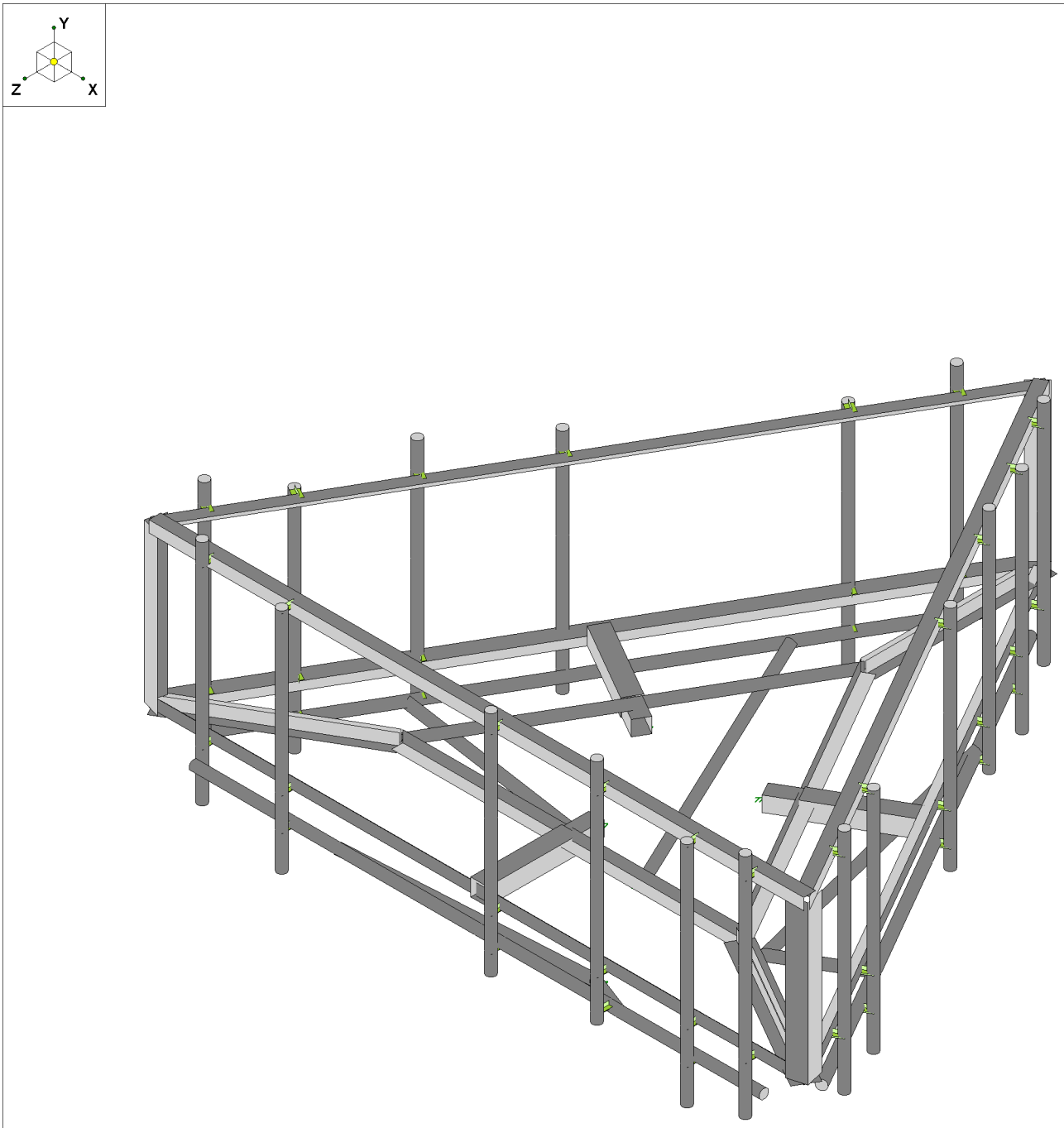


Envelope Only Solution

| | | |
|---|---|---|
| | | SK - 1 |
| | | Sept 26, 2023 at 9:22 AM |
| | | 5000245327-VZW_MT_LO_H.r3d |

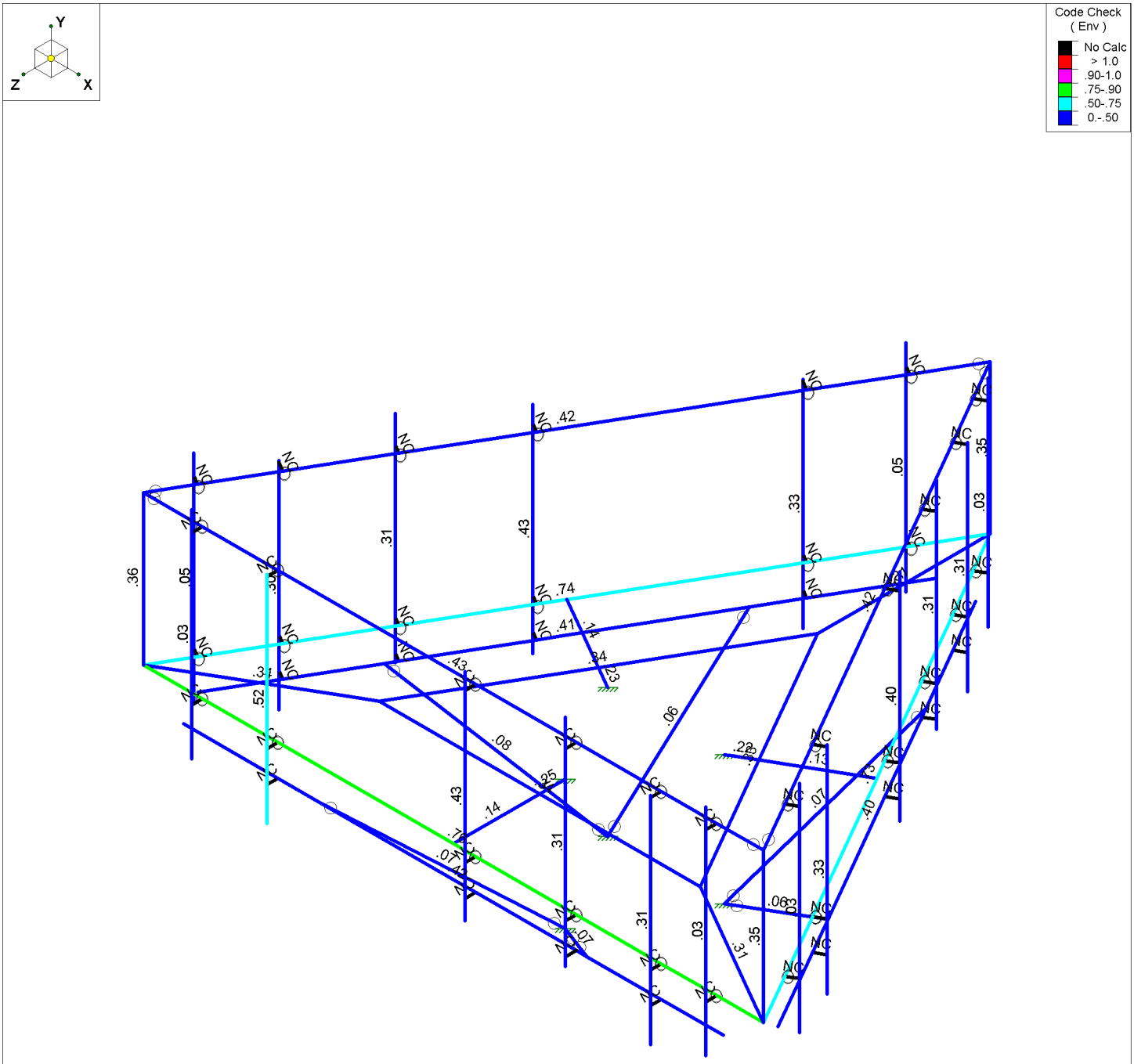


Member Code Checks Displayed (Enveloped)
Envelope Only Solution

| | | |
|---|---|---|
| | | SK - 2 |
| | | Sept 26, 2023 at 9:22 AM |
| | | 5000245327-VZW_MT_LO_H.r3d |

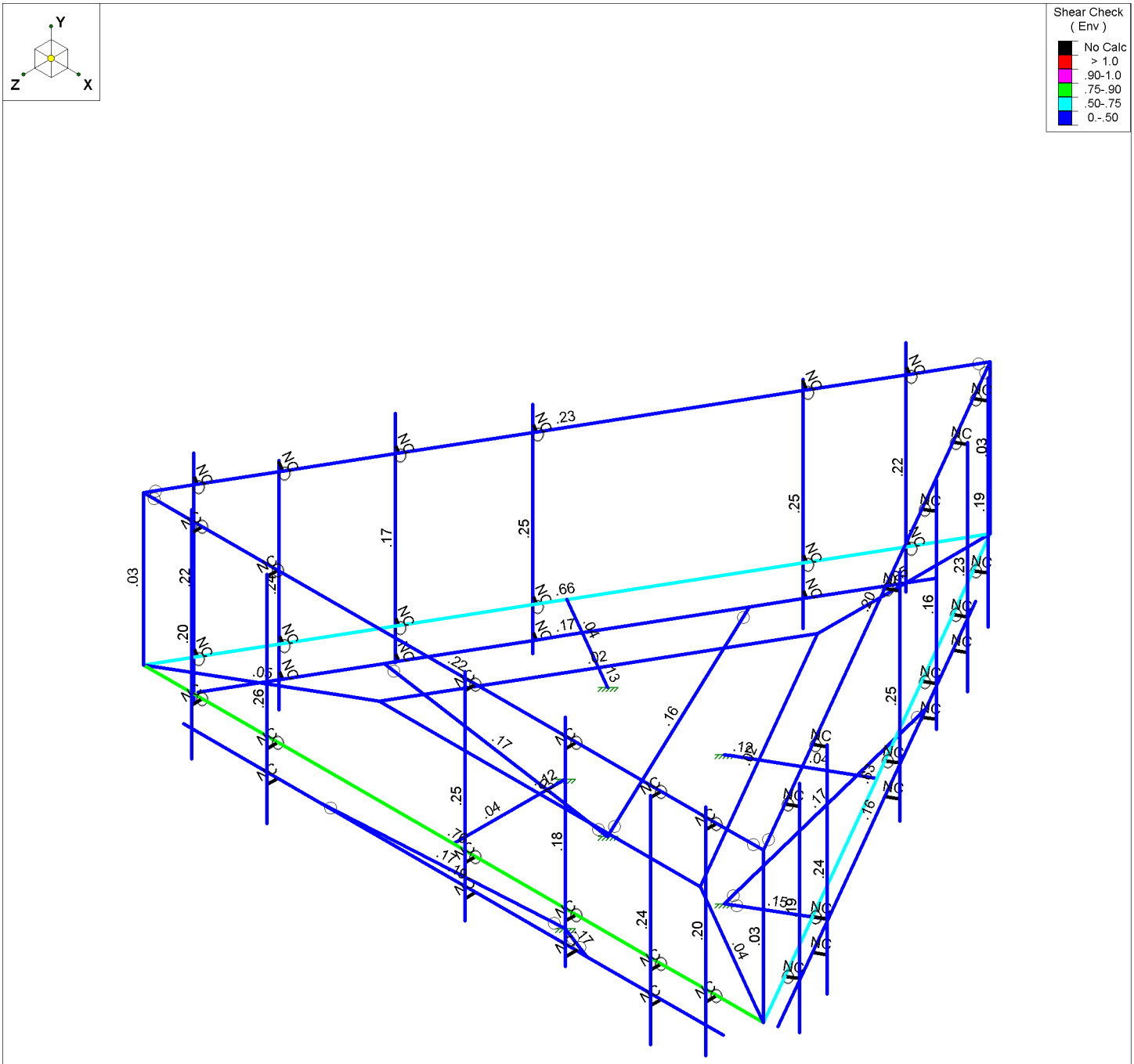


Member Shear Checks Displayed (Enveloped)
Envelope Only Solution

| | | |
|---|---|---|
| | | SK - 3 |
| | | Sept 26, 2023 at 9:22 AM |
| | | 5000245327-VZW_MT_LO_H.r3d |

## Basic Load Cases

| | BLC Description | Category | X Gravity | Y Gravity | Z Gravity | Joint | Point | Distributed | Area(Me... | Surface(P... |
|---|---|---|---|---|---|---|---|---|---|---|
| 1 | Antenna D | None | | | | | 138 | | | |
| 2 | Antenna Di | None | | | | | 138 | | | |
| 3 | Antenna Wo (0 Deg) | None | | | | | 138 | | | |
| 4 | Antenna Wo (30 Deg) | None | | | | | 138 | | | |
| 5 | Antenna Wo (60 Deg) | None | | | | | 138 | | | |
| 6 | Antenna Wo (90 Deg) | None | | | | | 138 | | | |
| 7 | Antenna Wo (120 Deg) | None | | | | | 138 | | | |
| 8 | Antenna Wo (150 Deg) | None | | | | | 138 | | | |
| 9 | Antenna Wo (180 Deg) | None | | | | | 138 | | | |
| 10 | Antenna Wo (210 Deg) | None | | | | | 138 | | | |
| 11 | Antenna Wo (240 Deg) | None | | | | | 138 | | | |
| 12 | Antenna Wo (270 Deg) | None | | | | | 138 | | | |
| 13 | Antenna Wo (300 Deg) | None | | | | | 138 | | | |
| 14 | Antenna Wo (330 Deg) | None | | | | | 138 | | | |
| 15 | Antenna Wi (0 Deg) | None | | | | | 138 | | | |
| 16 | Antenna Wi (30 Deg) | None | | | | | 138 | | | |
| 17 | Antenna Wi (60 Deg) | None | | | | | 138 | | | |
| 18 | Antenna Wi (90 Deg) | None | | | | | 138 | | | |
| 19 | Antenna Wi (120 Deg) | None | | | | | 138 | | | |
| 20 | Antenna Wi (150 Deg) | None | | | | | 138 | | | |
| 21 | Antenna Wi (180 Deg) | None | | | | | 138 | | | |
| 22 | Antenna Wi (210 Deg) | None | | | | | 138 | | | |
| 23 | Antenna Wi (240 Deg) | None | | | | | 138 | | | |
| 24 | Antenna Wi (270 Deg) | None | | | | | 138 | | | |
| 25 | Antenna Wi (300 Deg) | None | | | | | 138 | | | |
| 26 | Antenna Wi (330 Deg) | None | | | | | 138 | | | |
| 27 | Antenna Wm (0 Deg) | None | | | | | 138 | | | |
| 28 | Antenna Wm (30 Deg) | None | | | | | 138 | | | |
| 29 | Antenna Wm (60 Deg) | None | | | | | 138 | | | |
| 30 | Antenna Wm (90 Deg) | None | | | | | 138 | | | |
| 31 | Antenna Wm (120 De... | None | | | | | 138 | | | |
| 32 | Antenna Wm (150 De... | None | | | | | 138 | | | |
| 33 | Antenna Wm (180 De... | None | | | | | 138 | | | |
| 34 | Antenna Wm (210 De... | None | | | | | 138 | | | |
| 35 | Antenna Wm (240 De... | None | | | | | 138 | | | |
| 36 | Antenna Wm (270 De... | None | | | | | 138 | | | |
| 37 | Antenna Wm (300 De... | None | | | | | 138 | | | |
| 38 | Antenna Wm (330 De... | None | | | | | 138 | | | |
| 39 | Structure D | None | | -1 | | | | | 3 | |
| 40 | Structure Di | None | | | | | | 48 | 3 | |
| 41 | Structure Wo (0 Deg) | None | | | | | | 96 | | |
| 42 | Structure Wo (30 Deg) | None | | | | | | 96 | | |
| 43 | Structure Wo (60 Deg) | None | | | | | | 96 | | |
| 44 | Structure Wo (90 Deg) | None | | | | | | 96 | | |
| 45 | Structure Wo (120 D... | None | | | | | | 96 | | |
| 46 | Structure Wo (150 D... | None | | | | | | 96 | | |
| 47 | Structure Wo (180 D... | None | | | | | | 96 | | |
| 48 | Structure Wo (210 D... | None | | | | | | 96 | | |

## Basic Load Cases (Continued)

| | BLC Description | Category | X Gravity | Y Gravity | Z Gravity | Joint | Point | Distributed | Area(Me... | Surface(P... |
|---|---|---|---|---|---|---|---|---|---|---|
| 49 | Structure Wo (240 D... | None | | | | | | 96 | | |
| 50 | Structure Wo (270 D... | None | | | | | | 96 | | |
| 51 | Structure Wo (300 D... | None | | | | | | 96 | | |
| 52 | Structure Wo (330 D... | None | | | | | | 96 | | |
| 53 | Structure Wi (0 Deg) | None | | | | | | 96 | | |
| 54 | Structure Wi (30 Deg) | None | | | | | | 96 | | |
| 55 | Structure Wi (60 Deg) | None | | | | | | 96 | | |
| 56 | Structure Wi (90 Deg) | None | | | | | | 96 | | |
| 57 | Structure Wi (120 De... | None | | | | | | 96 | | |
| 58 | Structure Wi (150 De... | None | | | | | | 96 | | |
| 59 | Structure Wi (180 De... | None | | | | | | 96 | | |
| 60 | Structure Wi (210 De... | None | | | | | | 96 | | |
| 61 | Structure Wi (240 De... | None | | | | | | 96 | | |
| 62 | Structure Wi (270 De... | None | | | | | | 96 | | |
| 63 | Structure Wi (300 De... | None | | | | | | 96 | | |
| 64 | Structure Wi (330 De... | None | | | | | | 96 | | |
| 65 | Structure Wm (0 Deg) | None | | | | | | 96 | | |
| 66 | Structure Wm (30 D... | None | | | | | | 96 | | |
| 67 | Structure Wm (60 D... | None | | | | | | 96 | | |
| 68 | Structure Wm (90 D... | None | | | | | | 96 | | |
| 69 | Structure Wm (120 ... | None | | | | | | 96 | | |
| 70 | Structure Wm (150 ... | None | | | | | | 96 | | |
| 71 | Structure Wm (180 ... | None | | | | | | 96 | | |
| 72 | Structure Wm (210 ... | None | | | | | | 96 | | |
| 73 | Structure Wm (240 ... | None | | | | | | 96 | | |
| 74 | Structure Wm (270 ... | None | | | | | | 96 | | |
| 75 | Structure Wm (300 ... | None | | | | | | 96 | | |
| 76 | Structure Wm (330 ... | None | | | | | | 96 | | |
| 77 | Lm1 | None | | | | | 1 | | | |
| 78 | Lm2 | None | | | | | 1 | | | |
| 79 | Lv1 | None | | | | | 1 | | | |
| 80 | Lv2 | None | | | | | 1 | | | |
| 81 | Antenna Ev | None | | | | | 138 | | | |
| 82 | Antenna Eh (0 Deg) | None | | | | | 92 | | | |
| 83 | Antenna Eh (90 Deg) | None | | | | | 92 | | | |
| 84 | Structure Ev | ELY | | -.023 | | | | | 3 | |
| 85 | Structure Eh (0 Deg) | ELZ | | | -.058 | | | | 3 | |
| 86 | Structure Eh (90 Deg) | ELX | .058 | | | | | | 3 | |
| 87 | BLC 39 Transient Are... | None | | | | | | 30 | | |
| 88 | BLC 40 Transient Are... | None | | | | | | 30 | | |
| 89 | BLC 84 Transient Are... | None | | | | | | 30 | | |
| 90 | BLC 85 Transient Are... | None | | | | | | 30 | | |
| 91 | BLC 86 Transient Are... | None | | | | | | 30 | | |

## Load Combinations

| | Description | SolveP... | SR... | BLC | Fact... | BLC | Fact... | BLC | Fact... | BLC | Fact... | BLC | Fact... | BLC | Fact... | BLC | Fact... | BLC | Fact... | BLC | Fact... | BLC | Fact... |
|---|---|---|---|---|---|---|---|---|---|---|---|---|---|---|---|---|---|---|---|---|---|---|---|
| 1 | 1.2D+1.0... | Yes | Y | | 1 | 1.2 | 39 | 1.2 | 3 | 1 | 41 | 1 | | | | | | | | | | | |
| 2 | 1.2D+1.0... | Yes | Y | | 1 | 1.2 | 39 | 1.2 | 4 | 1 | 42 | 1 | | | | | | | | | | | |
| 3 | 1.2D+1.0... | Yes | Y | | 1 | 1.2 | 39 | 1.2 | 5 | 1 | 43 | 1 | | | | | | | | | | | |
| 4 | 1.2D+1.0... | Yes | Y | | 1 | 1.2 | 39 | 1.2 | 6 | 1 | 44 | 1 | | | | | | | | | | | |

## Load Combinations (Continued)

| | Description | Solve | P... | SR... | BLC | Fact... | BLC | Fact... | BLC | Fact... | BLC | Fact... | BLC | Fact... | BLC | Fact... | BLC | Fact... | BLC | Fact... | BLC | Fact... | BLC | Fact... |
|---|---|---|---|---|---|---|---|---|---|---|---|---|---|---|---|---|---|---|---|---|---|---|---|---|
| 5 | 1.2D+1.0... | Yes | Y | | 1 | 1.2 | 39 | 1.2 | 7 | 1 | 45 | 1 | | | | | | | | | | | | |
| 6 | 1.2D+1.0... | Yes | Y | | 1 | 1.2 | 39 | 1.2 | 8 | 1 | 46 | 1 | | | | | | | | | | | | |
| 7 | 1.2D+1.0... | Yes | Y | | 1 | 1.2 | 39 | 1.2 | 9 | 1 | 47 | 1 | | | | | | | | | | | | |
| 8 | 1.2D+1.0... | Yes | Y | | 1 | 1.2 | 39 | 1.2 | 10 | 1 | 48 | 1 | | | | | | | | | | | | |
| 9 | 1.2D+1.0... | Yes | Y | | 1 | 1.2 | 39 | 1.2 | 11 | 1 | 49 | 1 | | | | | | | | | | | | |
| 10 | 1.2D+1.0... | Yes | Y | | 1 | 1.2 | 39 | 1.2 | 12 | 1 | 50 | 1 | | | | | | | | | | | | |
| 11 | 1.2D+1.0... | Yes | Y | | 1 | 1.2 | 39 | 1.2 | 13 | 1 | 51 | 1 | | | | | | | | | | | | |
| 12 | 1.2D+1.0... | Yes | Y | | 1 | 1.2 | 39 | 1.2 | 14 | 1 | 52 | 1 | | | | | | | | | | | | |
| 13 | 1.2D + 1.0.. | Yes | Y | | 1 | 1.2 | 39 | 1.2 | 2 | 1 | 40 | 1 | 15 | 1 | 53 | 1 | | | | | | | | |
| 14 | 1.2D + 1.0.. | Yes | Y | | 1 | 1.2 | 39 | 1.2 | 2 | 1 | 40 | 1 | 16 | 1 | 54 | 1 | | | | | | | | |
| 15 | 1.2D + 1.0.. | Yes | Y | | 1 | 1.2 | 39 | 1.2 | 2 | 1 | 40 | 1 | 17 | 1 | 55 | 1 | | | | | | | | |
| 16 | 1.2D + 1.0.. | Yes | Y | | 1 | 1.2 | 39 | 1.2 | 2 | 1 | 40 | 1 | 18 | 1 | 56 | 1 | | | | | | | | |
| 17 | 1.2D + 1.0.. | Yes | Y | | 1 | 1.2 | 39 | 1.2 | 2 | 1 | 40 | 1 | 19 | 1 | 57 | 1 | | | | | | | | |
| 18 | 1.2D + 1.0.. | Yes | Y | | 1 | 1.2 | 39 | 1.2 | 2 | 1 | 40 | 1 | 20 | 1 | 58 | 1 | | | | | | | | |
| 19 | 1.2D + 1.0.. | Yes | Y | | 1 | 1.2 | 39 | 1.2 | 2 | 1 | 40 | 1 | 21 | 1 | 59 | 1 | | | | | | | | |
| 20 | 1.2D + 1.0.. | Yes | Y | | 1 | 1.2 | 39 | 1.2 | 2 | 1 | 40 | 1 | 22 | 1 | 60 | 1 | | | | | | | | |
| 21 | 1.2D + 1.0.. | Yes | Y | | 1 | 1.2 | 39 | 1.2 | 2 | 1 | 40 | 1 | 23 | 1 | 61 | 1 | | | | | | | | |
| 22 | 1.2D + 1.0.. | Yes | Y | | 1 | 1.2 | 39 | 1.2 | 2 | 1 | 40 | 1 | 24 | 1 | 62 | 1 | | | | | | | | |
| 23 | 1.2D + 1.0.. | Yes | Y | | 1 | 1.2 | 39 | 1.2 | 2 | 1 | 40 | 1 | 25 | 1 | 63 | 1 | | | | | | | | |
| 24 | 1.2D + 1.0.. | Yes | Y | | 1 | 1.2 | 39 | 1.2 | 2 | 1 | 40 | 1 | 26 | 1 | 64 | 1 | | | | | | | | |
| 25 | 1.2D + 1.5.. | Yes | Y | | 1 | 1.2 | 39 | 1.2 | 77 | 1.5 | 27 | 1 | 65 | 1 | | | | | | | | | | |
| 26 | 1.2D + 1.5.. | Yes | Y | | 1 | 1.2 | 39 | 1.2 | 77 | 1.5 | 28 | 1 | 66 | 1 | | | | | | | | | | |
| 27 | 1.2D + 1.5.. | Yes | Y | | 1 | 1.2 | 39 | 1.2 | 77 | 1.5 | 29 | 1 | 67 | 1 | | | | | | | | | | |
| 28 | 1.2D + 1.5.. | Yes | Y | | 1 | 1.2 | 39 | 1.2 | 77 | 1.5 | 30 | 1 | 68 | 1 | | | | | | | | | | |
| 29 | 1.2D + 1.5.. | Yes | Y | | 1 | 1.2 | 39 | 1.2 | 77 | 1.5 | 31 | 1 | 69 | 1 | | | | | | | | | | |
| 30 | 1.2D + 1.5.. | Yes | Y | | 1 | 1.2 | 39 | 1.2 | 77 | 1.5 | 32 | 1 | 70 | 1 | | | | | | | | | | |
| 31 | 1.2D + 1.5.. | Yes | Y | | 1 | 1.2 | 39 | 1.2 | 77 | 1.5 | 33 | 1 | 71 | 1 | | | | | | | | | | |
| 32 | 1.2D + 1.5.. | Yes | Y | | 1 | 1.2 | 39 | 1.2 | 77 | 1.5 | 34 | 1 | 72 | 1 | | | | | | | | | | |
| 33 | 1.2D + 1.5.. | Yes | Y | | 1 | 1.2 | 39 | 1.2 | 77 | 1.5 | 35 | 1 | 73 | 1 | | | | | | | | | | |
| 34 | 1.2D + 1.5.. | Yes | Y | | 1 | 1.2 | 39 | 1.2 | 77 | 1.5 | 36 | 1 | 74 | 1 | | | | | | | | | | |
| 35 | 1.2D + 1.5.. | Yes | Y | | 1 | 1.2 | 39 | 1.2 | 77 | 1.5 | 37 | 1 | 75 | 1 | | | | | | | | | | |
| 36 | 1.2D + 1.5.. | Yes | Y | | 1 | 1.2 | 39 | 1.2 | 77 | 1.5 | 38 | 1 | 76 | 1 | | | | | | | | | | |
| 37 | 1.2D + 1.5.. | Yes | Y | | 1 | 1.2 | 39 | 1.2 | 78 | 1.5 | 27 | 1 | 65 | 1 | | | | | | | | | | |
| 38 | 1.2D + 1.5.. | Yes | Y | | 1 | 1.2 | 39 | 1.2 | 78 | 1.5 | 28 | 1 | 66 | 1 | | | | | | | | | | |
| 39 | 1.2D + 1.5.. | Yes | Y | | 1 | 1.2 | 39 | 1.2 | 78 | 1.5 | 29 | 1 | 67 | 1 | | | | | | | | | | |
| 40 | 1.2D + 1.5.. | Yes | Y | | 1 | 1.2 | 39 | 1.2 | 78 | 1.5 | 30 | 1 | 68 | 1 | | | | | | | | | | |
| 41 | 1.2D + 1.5.. | Yes | Y | | 1 | 1.2 | 39 | 1.2 | 78 | 1.5 | 31 | 1 | 69 | 1 | | | | | | | | | | |
| 42 | 1.2D + 1.5.. | Yes | Y | | 1 | 1.2 | 39 | 1.2 | 78 | 1.5 | 32 | 1 | 70 | 1 | | | | | | | | | | |
| 43 | 1.2D + 1.5.. | Yes | Y | | 1 | 1.2 | 39 | 1.2 | 78 | 1.5 | 33 | 1 | 71 | 1 | | | | | | | | | | |
| 44 | 1.2D + 1.5.. | Yes | Y | | 1 | 1.2 | 39 | 1.2 | 78 | 1.5 | 34 | 1 | 72 | 1 | | | | | | | | | | |
| 45 | 1.2D + 1.5.. | Yes | Y | | 1 | 1.2 | 39 | 1.2 | 78 | 1.5 | 35 | 1 | 73 | 1 | | | | | | | | | | |
| 46 | 1.2D + 1.5.. | Yes | Y | | 1 | 1.2 | 39 | 1.2 | 78 | 1.5 | 36 | 1 | 74 | 1 | | | | | | | | | | |
| 47 | 1.2D + 1.5.. | Yes | Y | | 1 | 1.2 | 39 | 1.2 | 78 | 1.5 | 37 | 1 | 75 | 1 | | | | | | | | | | |
| 48 | 1.2D + 1.5.. | Yes | Y | | 1 | 1.2 | 39 | 1.2 | 78 | 1.5 | 38 | 1 | 76 | 1 | | | | | | | | | | |
| 49 | 1.2D + 1.5.. | Yes | Y | | 1 | 1.2 | 39 | 1.2 | 79 | 1.5 | | | | | | | | | | | | | | |
| 50 | 1.2D + 1.5.. | Yes | Y | | 1 | 1.2 | 39 | 1.2 | 80 | 1.5 | | | | | | | | | | | | | | |
| 51 | 1.4D | Yes | Y | | 1 | 1.4 | 39 | 1.4 | | | | | | | | | | | | | | | | |
| 52 | 1.2D + 1.0.. | Yes | Y | | 1 | 1.2 | 39 | 1.2 | 81 | 1 | ELY | 1 | 82 | 1 | 83 | | ELZ | 1 | ELX | | | | | |
| 53 | 1.2D + 1.0.. | Yes | Y | | 1 | 1.2 | 39 | 1.2 | 81 | 1 | ELY | 1 | 82 | .866 | 83 | .5 | ELZ | .866 | ELX | .5 | | | | |
| 54 | 1.2D + 1.0.. | Yes | Y | | 1 | 1.2 | 39 | 1.2 | 81 | 1 | ELY | 1 | 82 | .5 | 83 | .866 | ELZ | .5 | ELX | .866 | | | | |
| 55 | 1.2D + 1.0.. | Yes | Y | | 1 | 1.2 | 39 | 1.2 | 81 | 1 | ELY | 1 | 82 | | 83 | 1 | ELZ | | ELX | 1 | | | | |
| 56 | 1.2D + 1.0.. | Yes | Y | | 1 | 1.2 | 39 | 1.2 | 81 | 1 | ELY | 1 | 82 | -.5 | 83 | .866 | ELZ | -.5 | ELX | .866 | | | | |

## Load Combinations (Continued)

| | Description | SolveP... | SR... | BLC | Fact... | BLC | Fact... | BLC | Fact... | BLC | Fact... | BLC | Fact... | BLC | Fact... | BLC | Fact... | BLC | Fact... | BLC | Fact... | BLC | Fact... |
|---|---|---|---|---|---|---|---|---|---|---|---|---|---|---|---|---|---|---|---|---|---|---|---|
| 57 | 1.2D + 1.0... | Yes | Y | 1 | 1.2 | 39 | 1.2 | 81 | 1 | ELY | 1 | 82 | -.866 | 83 | .5 | ELZ | -.866 | ELX | .5 | | | | |
| 58 | 1.2D + 1.0... | Yes | Y | 1 | 1.2 | 39 | 1.2 | 81 | 1 | ELY | 1 | 82 | -1 | 83 | | ELZ | -1 | ELX | | | | | |
| 59 | 1.2D + 1.0... | Yes | Y | 1 | 1.2 | 39 | 1.2 | 81 | 1 | ELY | 1 | 82 | -.866 | 83 | -.5 | ELZ | -.866 | ELX | -.5 | | | | |
| 60 | 1.2D + 1.0... | Yes | Y | 1 | 1.2 | 39 | 1.2 | 81 | 1 | ELY | 1 | 82 | -.5 | 83 | -.866 | ELZ | -.5 | ELX | -.866 | | | | |
| 61 | 1.2D + 1.0... | Yes | Y | 1 | 1.2 | 39 | 1.2 | 81 | 1 | ELY | 1 | 82 | | 83 | -1 | ELZ | | ELX | -1 | | | | |
| 62 | 1.2D + 1.0... | Yes | Y | 1 | 1.2 | 39 | 1.2 | 81 | 1 | ELY | 1 | 82 | .5 | 83 | -.866 | ELZ | .5 | ELX | -.866 | | | | |
| 63 | 1.2D + 1.0... | Yes | Y | 1 | 1.2 | 39 | 1.2 | 81 | 1 | ELY | 1 | 82 | .866 | 83 | -.5 | ELZ | .866 | ELX | -.5 | | | | |
| 64 | 0.9D - 1.0... | Yes | Y | 1 | .9 | 39 | .9 | 81 | -1 | ELY | -1 | 82 | 1 | 83 | | ELZ | 1 | ELX | | | | | |
| 65 | 0.9D - 1.0... | Yes | Y | 1 | .9 | 39 | .9 | 81 | -1 | ELY | -1 | 82 | .866 | 83 | .5 | ELZ | .866 | ELX | .5 | | | | |
| 66 | 0.9D - 1.0... | Yes | Y | 1 | .9 | 39 | .9 | 81 | -1 | ELY | -1 | 82 | .5 | 83 | .866 | ELZ | .5 | ELX | .866 | | | | |
| 67 | 0.9D - 1.0... | Yes | Y | 1 | .9 | 39 | .9 | 81 | -1 | ELY | -1 | 82 | | 83 | 1 | ELZ | | ELX | 1 | | | | |
| 68 | 0.9D - 1.0... | Yes | Y | 1 | .9 | 39 | .9 | 81 | -1 | ELY | -1 | 82 | -.5 | 83 | .866 | ELZ | -.5 | ELX | .866 | | | | |
| 69 | 0.9D - 1.0... | Yes | Y | 1 | .9 | 39 | .9 | 81 | -1 | ELY | -1 | 82 | -.866 | 83 | .5 | ELZ | -.866 | ELX | .5 | | | | |
| 70 | 0.9D - 1.0... | Yes | Y | 1 | .9 | 39 | .9 | 81 | -1 | ELY | -1 | 82 | -1 | 83 | | ELZ | -1 | ELX | | | | | |
| 71 | 0.9D - 1.0... | Yes | Y | 1 | .9 | 39 | .9 | 81 | -1 | ELY | -1 | 82 | -.866 | 83 | -.5 | ELZ | -.866 | ELX | -.5 | | | | |
| 72 | 0.9D - 1.0... | Yes | Y | 1 | .9 | 39 | .9 | 81 | -1 | ELY | -1 | 82 | -.5 | 83 | -.866 | ELZ | -.5 | ELX | -.866 | | | | |
| 73 | 0.9D - 1.0... | Yes | Y | 1 | .9 | 39 | .9 | 81 | -1 | ELY | -1 | 82 | | 83 | -1 | ELZ | | ELX | -1 | | | | |
| 74 | 0.9D - 1.0... | Yes | Y | 1 | .9 | 39 | .9 | 81 | -1 | ELY | -1 | 82 | .5 | 83 | -.866 | ELZ | .5 | ELX | -.866 | | | | |
| 75 | 0.9D - 1.0... | Yes | Y | 1 | .9 | 39 | .9 | 81 | -1 | ELY | -1 | 82 | .866 | 83 | -.5 | ELZ | .866 | ELX | -.5 | | | | |

## Joint Coordinates and Temperatures

| | Label | X [ft] | Y [ft] | Z [ft] | Temp [F] | Detach From Diap... |
|---|---|---|---|---|---|---|
| 1 | CP | 0. | 0 | -0. | 0 | |
| 2 | N2 | 0. | 0 | 1.5625 | 0 | |
| 3 | N10 | -0. | 0 | -4.291667 | 0 | |
| 4 | N11 | -0. | 0 | -4.833334 | 0 | |
| 5 | N12 | -0. | 0 | -6.333334 | 0 | |
| 6 | N13 | -0. | 0 | -7.833334 | 0 | |
| 7 | N14 | -0. | 0 | -8.291667 | 0 | |
| 8 | N15 | -3.716693 | 0 | 2.145833 | 0 | |
| 9 | N16 | -7.180794 | 0 | 4.145833 | 0 | |
| 10 | N17 | 3.716693 | 0 | 2.145833 | 0 | |
| 11 | N18 | 7.180794 | 0 | 4.145833 | 0 | |
| 12 | N15A | 0. | 0 | 2.145833 | 0 | |
| 13 | N16A | 0. | 0 | 4.145833 | 0 | |
| 14 | N15B | -4.18579 | 0 | 2.416667 | 0 | |
| 15 | N16B | -5.484828 | 0 | 3.166667 | 0 | |
| 16 | N17A | -6.783866 | 0 | 3.916667 | 0 | |
| 17 | N18A | 4.18579 | 0 | 2.416667 | 0 | |
| 18 | N19 | 5.484828 | 0 | 3.166667 | 0 | |
| 19 | N20 | 6.783866 | 0 | 3.916667 | 0 | |
| 20 | N43 | 6.097456 | 0 | 4.145833 | 0 | |
| 21 | N44 | 6.097456 | 3.458333 | 4.145833 | 0 | |
| 22 | N45 | 6.097456 | 0 | 4.395833 | 0 | |
| 23 | N46 | 6.097456 | 3.458333 | 4.395833 | 0 | |
| 24 | N53 | 6.097456 | 3.916667 | 4.395833 | 0 | |
| 25 | N54 | 6.097456 | -1.083333 | 4.395833 | 0 | |
| 26 | N67 | 3.597461 | 0 | -2.060682 | 0 | |
| 27 | N78 | 1.858346 | 0 | -1.072917 | 0 | |
| 28 | N91 | -3.583333 | 0 | -2.085151 | 0 | |

## Joint Coordinates and Temperatures (Continued)

| | Label | X [ft] | Y [ft] | Z [ft] | Temp [F] | Detach From Diap... |
|---|---|---|---|---|---|---|
| 29 | N110 | -1.858346 | 0 | -1.072917 | 0 | |
| 30 | N108A | 3.590397 | 0 | -2.072917 | 0 | |
| 31 | N110A | -3.590397 | 0 | -2.072917 | 0 | |
| 32 | N118B | 6.097456 | 1.791667 | 4.395833 | 0 | |
| 33 | N119B | 1.425334 | 0 | -0.822917 | 0 | |
| 34 | N120 | 0. | -0.71875 | 4.145833 | 0 | |
| 35 | N121 | 6.25 | -0.71875 | 4.145833 | 0 | |
| 36 | N122 | -6.25 | -0.71875 | 4.145833 | 0 | |
| 37 | N123 | -0. | 3.458333 | -8.291667 | 0 | |
| 38 | N125 | -7.180794 | 3.458333 | 4.145833 | 0 | |
| 39 | N127 | 7.180794 | 3.458333 | 4.145833 | 0 | |
| 40 | N44A | 4.814123 | 0 | 4.145833 | 0 | |
| 41 | N45A | 4.814123 | 3.458333 | 4.145833 | 0 | |
| 42 | N46A | 4.814123 | 0 | 4.395833 | 0 | |
| 43 | N47 | 4.814123 | 3.458333 | 4.395833 | 0 | |
| 44 | N48 | 4.814123 | 3.5 | 4.395833 | 0 | |
| 45 | N49 | 4.814123 | -1.5 | 4.395833 | 0 | |
| 46 | N50 | 4.814123 | 1.791667 | 4.395833 | 0 | |
| 47 | N51 | 4.814123 | -0.71875 | 4.145833 | 0 | |
| 48 | N52 | 4.814123 | -0.71875 | 4.395833 | 0 | |
| 49 | N53A | 2.847456 | 0 | 4.145833 | 0 | |
| 50 | N54A | 2.847456 | 3.458333 | 4.145833 | 0 | |
| 51 | N55 | 2.847456 | 0 | 4.395833 | 0 | |
| 52 | N56 | 2.847456 | 3.458333 | 4.395833 | 0 | |
| 53 | N57 | 2.847456 | 4.083333 | 4.395833 | 0 | |
| 54 | N58 | 2.847456 | -0.916667 | 4.395833 | 0 | |
| 55 | N59 | 2.847456 | 1.791667 | 4.395833 | 0 | |
| 56 | N60 | 2.847456 | -0.71875 | 4.145833 | 0 | |
| 57 | N61 | 2.847456 | -0.71875 | 4.395833 | 0 | |
| 58 | N62 | 0.514123 | 0 | 4.145833 | 0 | |
| 59 | N63 | 0.514123 | 3.458333 | 4.145833 | 0 | |
| 60 | N64 | 0.514123 | 0 | 4.395833 | 0 | |
| 61 | N65 | 0.514123 | 3.458333 | 4.395833 | 0 | |
| 62 | N66 | 0.514123 | 3.833333 | 4.395833 | 0 | |
| 63 | N67A | 0.514123 | -1.166667 | 4.395833 | 0 | |
| 64 | N68 | 0.514123 | 1.791667 | 4.395833 | 0 | |
| 65 | N69 | 0.514123 | -0.71875 | 4.145833 | 0 | |
| 66 | N70 | 0.514123 | -0.71875 | 4.395833 | 0 | |
| 67 | N71 | -4.069211 | 0 | 4.145833 | 0 | |
| 68 | N72 | -4.069211 | 3.458333 | 4.145833 | 0 | |
| 69 | N73 | -4.069211 | 0 | 4.395833 | 0 | |
| 70 | N74 | -4.069211 | 3.458333 | 4.395833 | 0 | |
| 71 | N75 | -4.069211 | 3.5 | 4.395833 | 0 | |
| 72 | N76 | -4.069211 | -1.5 | 4.395833 | 0 | |
| 73 | N77A | -4.069211 | 1.791667 | 4.395833 | 0 | |
| 74 | N78A | -4.069211 | -0.71875 | 4.145833 | 0 | |
| 75 | N79 | -4.069211 | -0.71875 | 4.395833 | 0 | |
| 76 | N80 | -5.819211 | 0 | 4.145833 | 0 | |
| 77 | N81 | -5.819211 | 3.458333 | 4.145833 | 0 | |
| 78 | N82 | -5.819211 | 0 | 4.395833 | 0 | |
| 79 | N83 | -5.819211 | 3.458333 | 4.395833 | 0 | |
| 80 | N84 | -5.819211 | 3.916667 | 4.395833 | 0 | |

## Joint Coordinates and Temperatures (Continued)

| | Label | X [ft] | Y [ft] | Z [ft] | Temp [F] | Detach From Diap... |
|---|---|---|---|---|---|---|
| 81 | N85 | -5.819211 | -1.083333 | 4.395833 | 0 | |
| 82 | N88 | 3.097456 | -0.71875 | 4.145833 | 0 | |
| 83 | N90 | -3.097456 | -0.71875 | 4.145833 | 0 | |
| 84 | N91A | 0. | -2.993333 | 1.5625 | 0 | |
| 85 | N95 | 0.541669 | 0 | -7.353468 | 0 | |
| 86 | N96 | 0.541669 | 3.458333 | -7.353468 | 0 | |
| 87 | N97 | 0.758175 | 0 | -7.478468 | 0 | |
| 88 | N98 | 0.758175 | 3.458333 | -7.478468 | 0 | |
| 89 | N99 | 0.758175 | 3.916667 | -7.478468 | 0 | |
| 90 | N100 | 0.758175 | -1.083333 | -7.478468 | 0 | |
| 91 | N101 | 0.758175 | 1.791667 | -7.478468 | 0 | |
| 92 | N102 | 3.590397 | -0.71875 | -2.072917 | 0 | |
| 93 | N104 | 6.715397 | -0.71875 | 3.339742 | 0 | |
| 94 | N118 | 2.166669 | 0 | -4.538886 | 0 | |
| 95 | N119 | 2.166669 | 3.458333 | -4.538886 | 0 | |
| 96 | N120A | 2.383175 | 0 | -4.663886 | 0 | |
| 97 | N121A | 2.383175 | 3.458333 | -4.663886 | 0 | |
| 98 | N122A | 2.383175 | 4.083333 | -4.663886 | 0 | |
| 99 | N123A | 2.383175 | -0.916667 | -4.663886 | 0 | |
| 100 | N124 | 2.383175 | 1.791667 | -4.663886 | 0 | |
| 101 | N125A | 2.166669 | -0.71875 | -4.538886 | 0 | |
| 102 | N126 | 2.383175 | -0.71875 | -4.663886 | 0 | |
| 103 | N127A | 3.333336 | 0 | -2.51816 | 0 | |
| 104 | N128 | 3.333336 | 3.458333 | -2.51816 | 0 | |
| 105 | N129 | 3.549842 | 0 | -2.64316 | 0 | |
| 106 | N130 | 3.549842 | 3.458333 | -2.64316 | 0 | |
| 107 | N131 | 3.549842 | 3.833333 | -2.64316 | 0 | |
| 108 | N132 | 3.549842 | -1.166667 | -2.64316 | 0 | |
| 109 | N133 | 3.549842 | 1.791667 | -2.64316 | 0 | |
| 110 | N134 | 3.333336 | -0.71875 | -2.51816 | 0 | |
| 111 | N135 | 3.549842 | -0.71875 | -2.64316 | 0 | |
| 112 | N145 | 6.500002 | 0 | 2.966668 | 0 | |
| 113 | N146 | 6.500002 | 3.458333 | 2.966668 | 0 | |
| 114 | N147 | 6.716509 | 0 | 2.841668 | 0 | |
| 115 | N148 | 6.716509 | 3.458333 | 2.841668 | 0 | |
| 116 | N149 | 6.716509 | 3.916667 | 2.841668 | 0 | |
| 117 | N150 | 6.716509 | -1.083333 | 2.841668 | 0 | |
| 118 | N153 | 2.041669 | -0.71875 | -4.755392 | 0 | |
| 119 | N154 | 5.625002 | -0.71875 | 1.451123 | 0 | |
| 120 | N155 | 5.139125 | -0.71875 | 0.609559 | 0 | |
| 121 | N167 | -3.590397 | -0.71875 | -2.072917 | 0 | |
| 122 | N168 | -6.715397 | -0.71875 | 3.339742 | 0 | |
| 123 | N169 | -0.465397 | -0.71875 | -7.485575 | 0 | |
| 124 | N183 | -5.014125 | 0 | 0.393052 | 0 | |
| 125 | N184 | -5.014125 | 3.458333 | 0.393052 | 0 | |
| 126 | N185 | -5.230631 | 0 | 0.268052 | 0 | |
| 127 | N186 | -5.230631 | 3.458333 | 0.268052 | 0 | |
| 128 | N187 | -5.230631 | 4.083333 | 0.268052 | 0 | |
| 129 | N188 | -5.230631 | -0.916667 | 0.268052 | 0 | |
| 130 | N189 | -5.230631 | 1.791667 | 0.268052 | 0 | |
| 131 | N190 | -5.014125 | -0.71875 | 0.393052 | 0 | |
| 132 | N191 | -5.230631 | -0.71875 | 0.268052 | 0 | |

## Joint Coordinates and Temperatures (Continued)

| | Label | X [ft] | Y [ft] | Z [ft] | Temp [F] | Detach From Diap... |
|---|---|---|---|---|---|---|
| 133 | N192 | -3.847458 | 0 | -1.627674 | 0 | |
| 134 | N193 | -3.847458 | 3.458333 | -1.627674 | 0 | |
| 135 | N194 | -4.063965 | 0 | -1.752674 | 0 | |
| 136 | N195 | -4.063965 | 3.458333 | -1.752674 | 0 | |
| 137 | N196 | -4.063965 | 3.833333 | -1.752674 | 0 | |
| 138 | N197 | -4.063965 | -1.166667 | -1.752674 | 0 | |
| 139 | N198 | -4.063965 | 1.791667 | -1.752674 | 0 | |
| 140 | N199 | -3.847458 | -0.71875 | -1.627674 | 0 | |
| 141 | N200 | -4.063965 | -0.71875 | -1.752674 | 0 | |
| 142 | N210 | -0.680792 | 0 | -7.112501 | 0 | |
| 143 | N211 | -0.680792 | 3.458333 | -7.112501 | 0 | |
| 144 | N212 | -0.897298 | 0 | -7.237501 | 0 | |
| 145 | N213 | -0.897298 | 3.458333 | -7.237501 | 0 | |
| 146 | N214 | -0.897298 | 3.916667 | -7.237501 | 0 | |
| 147 | N215 | -0.897298 | -1.083333 | -7.237501 | 0 | |
| 148 | N218 | -5.139125 | -0.71875 | 0.609559 | 0 | |
| 149 | N219 | -1.555792 | -0.71875 | -5.596957 | 0 | |
| 150 | N220 | -2.041669 | -0.71875 | -4.755392 | 0 | |
| 151 | N210A | 1.353164 | 0 | -0.78125 | 0 | |
| 152 | N212A | -1.353165 | 0 | -0.78125 | 0 | |
| 153 | N212B | 1.353164 | -2.993333 | -0.78125 | 0 | |
| 154 | N215A | -1.353165 | -2.993333 | -0.78125 | 0 | |
| 155 | N212C | -6.722458 | 0 | 3.351973 | 0 | |
| 156 | N213A | -6.722458 | 3.458333 | 3.351973 | 0 | |
| 157 | N214A | -6.938965 | 0 | 3.226973 | 0 | |
| 158 | N215B | -6.938965 | 3.458333 | 3.226973 | 0 | |
| 159 | N216 | -6.938965 | 3.916667 | 3.226973 | 0 | |
| 160 | N217 | -6.938965 | -1.083333 | 3.226973 | 0 | |
| 161 | N198B | 0.465397 | -0.71875 | -7.485575 | 0 | |
| 162 | N200B | 5.625002 | 0 | 1.451123 | 0 | |
| 163 | N201B | 5.625002 | 3.458333 | 1.451123 | 0 | |
| 164 | N202B | 5.841509 | 0 | 1.326123 | 0 | |
| 165 | N203B | 5.841509 | 3.458333 | 1.326123 | 0 | |
| 166 | N204B | 5.841509 | 3.5 | 1.326123 | 0 | |
| 167 | N205B | 5.841509 | -1.5 | 1.326123 | 0 | |
| 168 | N206B | 5.841509 | 1.791667 | 1.326123 | 0 | |
| 169 | N208B | 5.841509 | -0.71875 | 1.326123 | 0 | |
| 170 | N210C | -1.555792 | 0 | -5.596957 | 0 | |
| 171 | N211B | -1.555792 | 3.458333 | -5.596957 | 0 | |
| 172 | N212E | -1.772298 | 0 | -5.721957 | 0 | |
| 173 | N213C | -1.772298 | 3.458333 | -5.721957 | 0 | |
| 174 | N214C | -1.772298 | 3.5 | -5.721957 | 0 | |
| 175 | N215D | -1.772298 | -1.5 | -5.721957 | 0 | |
| 176 | N216A | -1.772298 | 1.791667 | -5.721957 | 0 | |
| 177 | N218A | -1.772298 | -0.71875 | -5.721957 | 0 | |
| 178 | N197A | 1.183336 | 0 | -6.242069 | 0 | |
| 179 | N198C | 1.183336 | 3.458333 | -6.242069 | 0 | |
| 180 | N199B | 1.399842 | 0 | -6.367069 | 0 | |
| 181 | N200C | 1.399842 | 3.458333 | -6.367069 | 0 | |
| 182 | N201 | 1.399842 | 3.5 | -6.367069 | 0 | |
| 183 | N202 | 1.399842 | -1.5 | -6.367069 | 0 | |
| 184 | N203 | 1.399842 | 1.791667 | -6.367069 | 0 | |

## Joint Coordinates and Temperatures (Continued)

| | Label | X [ft] | Y [ft] | Z [ft] | Temp [F] | Detach From Diap... |
|---|---|---|---|---|---|---|
| 185 | N204 | 1.183336 | -0.71875 | -6.242069 | 0 | |
| 186 | N205 | 1.399842 | -0.71875 | -6.367069 | 0 | |
| 187 | N207 | -5.997458 | 0 | 2.096236 | 0 | |
| 188 | N208 | -5.997458 | 3.458333 | 2.096236 | 0 | |
| 189 | N209 | -6.213965 | 0 | 1.971236 | 0 | |
| 190 | N210D | -6.213965 | 3.458333 | 1.971236 | 0 | |
| 191 | N211C | -6.213965 | 3.5 | 1.971236 | 0 | |
| 192 | N212F | -6.213965 | -1.5 | 1.971236 | 0 | |
| 193 | N213D | -6.213965 | 1.791667 | 1.971236 | 0 | |
| 194 | N214D | -5.997458 | -0.71875 | 2.096236 | 0 | |
| 195 | N215E | -6.213965 | -0.71875 | 1.971236 | 0 | |

## Hot Rolled Steel Section Sets

| | Label | Shape | Type | Design List | Material | Design R... | A [in2] | Iyy [in4] | Izz [in4] | J [in4] |
|---|---|---|---|---|---|---|---|---|---|---|
| 1 | Mount Pipe | PIPE_2.0 | Column | Pipe | A53 Gr.B | Typical | 1.02 | .627 | .627 | 1.25 |
| 2 | Support Rail | L3X3X4 | Beam | Pipe | A36 Gr.36 | Typical | 1.44 | 1.23 | 1.23 | .031 |
| 3 | Bottom Corner Plate | L15X6.5X6 | Beam | Single An... | A36 Gr.36 | Typical | 7.922 | 24.473 | 192.705 | .363 |
| 4 | Standoff_2 | HSS4.5X4.5X3 | Beam | Tube | A500 Gr.B Rect | Typical | 2.93 | 9.02 | 9.02 | 14.4 |
| 5 | Cross Members | L3X3X4 | Beam | Channel | A36 Gr.36 | Typical | 1.44 | 1.23 | 1.23 | .031 |
| 6 | Face Horizontal | L3X3X4 | Beam | Single An... | A36 Gr.36 | Typical | 1.44 | 1.23 | 1.23 | .031 |
| 7 | Standoff_1 | HSS4X4X4 | Beam | Tube | A500 Gr.B Rect | Typical | 3.37 | 7.8 | 7.8 | 12.8 |
| 8 | Grating Angle | LL3x3x4x0 | Beam | Double A... | A36 Gr.36 | Typical | 2.88 | 4.5 | 2.46 | .063 |
| 9 | Corner Angle | L5X5X4 | Column | Single An... | A36 Gr.36 | Typical | 2.438 | 6.045 | 6.045 | .049 |
| 10 | MOD Face Horizontal | PIPE_2.0 | Beam | Pipe | A53 Gr.B | Typical | 1.02 | .627 | .627 | 1.25 |
| 11 | MOD Bracing | PIPE_2.0 | Beam | Pipe | A53 Gr.B | Typical | 1.02 | .627 | .627 | 1.25 |

## Hot Rolled Steel Properties

| | Label | E [ksi] | G [ksi] | Nu | Therm (/1E... | Density[k/ft... | Yield[ksi] | Ry | Fu[ksi] | Rt |
|---|---|---|---|---|---|---|---|---|---|---|
| 1 | A992 | 29000 | 11154 | .3 | .65 | .49 | 50 | 1.1 | 65 | 1.1 |
| 2 | A36 Gr.36 | 29000 | 11154 | .3 | .65 | .49 | 36 | 1.5 | 58 | 1.2 |
| 3 | A572 Gr.50 | 29000 | 11154 | .3 | .65 | .49 | 50 | 1.1 | 65 | 1.1 |
| 4 | A500 Gr.B RND | 29000 | 11154 | .3 | .65 | .527 | 42 | 1.4 | 58 | 1.3 |
| 5 | A500 Gr.B Rect | 29000 | 11154 | .3 | .65 | .527 | 46 | 1.4 | 58 | 1.3 |
| 6 | A53 Gr.B | 29000 | 11154 | .3 | .65 | .49 | 35 | 1.6 | 60 | 1.2 |
| 7 | A1085 | 29000 | 11154 | .3 | .65 | .49 | 50 | 1.4 | 65 | 1.3 |

## Member Primary Data

| | Label | I Joint | J Joint | K Joint | Rotate(deg) | Section/Shape | Type | Design List | Material | Design Rules |
|---|---|---|---|---|---|---|---|---|---|---|
| 1 | M1 | N2 | N15A | | | Standoff_1 | Beam | Tube | A500 Gr.B... | Typical |
| 2 | M2 | N15A | N16A | | | Standoff_2 | Beam | Tube | A500 Gr.B... | Typical |
| 3 | M5 | N14 | N10 | | 180 | Grating Angle | Beam | Double Angle (... | A36 Gr.36 | Typical |
| 4 | M6 | N16 | N15 | | 180 | Grating Angle | Beam | Double Angle (... | A36 Gr.36 | Typical |
| 5 | M7 | N18 | N17 | | 180 | Grating Angle | Beam | Double Angle (... | A36 Gr.36 | Typical |
| 6 | M6A | N17 | N15 | | 270 | Cross Members | Beam | Channel | A36 Gr.36 | Typical |
| 7 | M7A | N16 | N18 | | 270 | Face Horizontal | Beam | Single Angle | A36 Gr.36 | Typical |
| 8 | M18 | N44 | N46 | | | RIGID | None | None | RIGID | Typical |
| 9 | M19 | N43 | N45 | | | RIGID | None | None | RIGID | Typical |

## Member Primary Data (Continued)

| | Label | I Joint | J Joint | K Joint | Rotate(deg) | Section/Shape | Type | Design List | Material | Design Rules |
|---|---|---|---|---|---|---|---|---|---|---|
| 10 | MP1A | N53 | N54 | | 120 | Mount Pipe | Column | Pipe | A53 Gr.B | Typical |
| 11 | M23A | N10 | N17 | | 270 | Cross Members | Beam | Channel | A36 Gr.36 | Typical |
| 12 | M24 | N18 | N14 | | 270 | Face Horizontal | Beam | Single Angle | A36 Gr.36 | Typical |
| 13 | M39A | N15 | N10 | | 270 | Cross Members | Beam | Channel | A36 Gr.36 | Typical |
| 14 | M40 | N14 | N16 | | 270 | Face Horizontal | Beam | Single Angle | A36 Gr.36 | Typical |
| 15 | M55 | N78 | N108A | | | Standoff_2 | Beam | Tube | A500 Gr.B... | Typical |
| 16 | M56 | N110 | N110A | | | Standoff_2 | Beam | Tube | A500 Gr.B... | Typical |
| 17 | M60A | N122 | N121 | | | MOD Face Ho... | Beam | Pipe | A53 Gr.B | Typical |
| 18 | M61 | N14 | N123 | | 45 | Corner Angle | Column | Single Angle | A36 Gr.36 | Typical |
| 19 | M62 | N16 | N125 | | 165 | Corner Angle | Column | Single Angle | A36 Gr.36 | Typical |
| 20 | M63 | N18 | N127 | | 285 | Corner Angle | Column | Single Angle | A36 Gr.36 | Typical |
| 21 | M64 | N125 | N127 | | 180 | Support Rail | Beam | Pipe | A36 Gr.36 | Typical |
| 22 | M25 | N45A | N47 | | | RIGID | None | None | RIGID | Typical |
| 23 | M26 | N44A | N46A | | | RIGID | None | None | RIGID | Typical |
| 24 | MP4A | N75 | N76 | | 120 | Mount Pipe | Column | Pipe | A53 Gr.B | Typical |
| 25 | M28 | N51 | N52 | | | RIGID | None | None | RIGID | Typical |
| 26 | M29 | N54A | N56 | | | RIGID | None | None | RIGID | Typical |
| 27 | M30 | N53A | N55 | | | RIGID | None | None | RIGID | Typical |
| 28 | MP2A | N57 | N58 | | 120 | Mount Pipe | Column | Pipe | A53 Gr.B | Typical |
| 29 | M32 | N60 | N61 | | | RIGID | None | None | RIGID | Typical |
| 30 | M33 | N63 | N65 | | | RIGID | None | None | RIGID | Typical |
| 31 | M34 | N62 | N64 | | | RIGID | None | None | RIGID | Typical |
| 32 | MP3A | N66 | N67A | | 120 | Mount Pipe | Column | Pipe | A53 Gr.B | Typical |
| 33 | M36 | N69 | N70 | | | RIGID | None | None | RIGID | Typical |
| 34 | M37 | N72 | N74 | | | RIGID | None | None | RIGID | Typical |
| 35 | M38A | N71 | N73 | | | RIGID | None | None | RIGID | Typical |
| 36 | MPA2 | N48 | N49 | | 120 | Mount Pipe | Column | Pipe | A53 Gr.B | Typical |
| 37 | M40A | N78A | N79 | | | RIGID | None | None | RIGID | Typical |
| 38 | M41 | N81 | N83 | | | RIGID | None | None | RIGID | Typical |
| 39 | M42 | N80 | N82 | | | RIGID | None | None | RIGID | Typical |
| 40 | MP5A | N84 | N85 | | 120 | Mount Pipe | Column | Pipe | A53 Gr.B | Typical |
| 41 | M45 | N90 | N91A | | | MOD Bracing | Beam | Pipe | A53 Gr.B | Typical |
| 42 | M46 | N88 | N91A | | | MOD Bracing | Beam | Pipe | A53 Gr.B | Typical |
| 43 | M48 | N96 | N98 | | | RIGID | None | None | RIGID | Typical |
| 44 | M49 | N95 | N97 | | | RIGID | None | None | RIGID | Typical |
| 45 | MP1C | N99 | N100 | | | Mount Pipe | Column | Pipe | A53 Gr.B | Typical |
| 46 | M54A | N127 | N123 | | 180 | Support Rail | Beam | Pipe | A36 Gr.36 | Typical |
| 47 | M60 | N119 | N121A | | | RIGID | None | None | RIGID | Typical |
| 48 | M61A | N118 | N120A | | | RIGID | None | None | RIGID | Typical |
| 49 | MP2C | N122A | N123A | | | Mount Pipe | Column | Pipe | A53 Gr.B | Typical |
| 50 | M63A | N125A | N126 | | | RIGID | None | None | RIGID | Typical |
| 51 | M64A | N128 | N130 | | | RIGID | None | None | RIGID | Typical |
| 52 | M65 | N127A | N129 | | | RIGID | None | None | RIGID | Typical |
| 53 | MP3C | N131 | N132 | | | Mount Pipe | Column | Pipe | A53 Gr.B | Typical |
| 54 | M67 | N134 | N135 | | | RIGID | None | None | RIGID | Typical |
| 55 | M72 | N146 | N148 | | | RIGID | None | None | RIGID | Typical |
| 56 | M73 | N145 | N147 | | | RIGID | None | None | RIGID | Typical |
| 57 | MP5C | N149 | N150 | | | Mount Pipe | Column | Pipe | A53 Gr.B | Typical |
| 58 | M82 | N169 | N168 | | | MOD Face Ho... | Beam | Pipe | A53 Gr.B | Typical |
| 59 | M85 | N123 | N125 | | 180 | Support Rail | Beam | Pipe | A36 Gr.36 | Typical |
| 60 | M91 | N184 | N186 | | | RIGID | None | None | RIGID | Typical |
| 61 | M92 | N183 | N185 | | | RIGID | None | None | RIGID | Typical |

## Member Primary Data (Continued)

| | Label | I Joint | J Joint | K Joint | Rotate(deg) | Section/Shape | Type | Design List | Material | Design Rules |
|---|---|---|---|---|---|---|---|---|---|---|
| 62 | MP2B | N187 | N188 | | 240 | Mount Pipe | Column | Pipe | A53 Gr.B | Typical |
| 63 | M94 | N190 | N191 | | | RIGID | None | None | RIGID | Typical |
| 64 | M95 | N193 | N195 | | | RIGID | None | None | RIGID | Typical |
| 65 | M96 | N192 | N194 | | | RIGID | None | None | RIGID | Typical |
| 66 | MP3B | N196 | N197 | | 240 | Mount Pipe | Column | Pipe | A53 Gr.B | Typical |
| 67 | M98 | N199 | N200 | | | RIGID | None | None | RIGID | Typical |
| 68 | M103 | N211 | N213 | | | RIGID | None | None | RIGID | Typical |
| 69 | M104 | N210 | N212 | | | RIGID | None | None | RIGID | Typical |
| 70 | MP5B | N214 | N215 | | 240 | Mount Pipe | Column | Pipe | A53 Gr.B | Typical |
| 71 | M107A | N210A | N78 | | | Standoff_1 | Beam | Tube | A500 Gr.B... | Typical |
| 72 | M108A | N212A | N110 | | | Standoff_1 | Beam | Tube | A500 Gr.B... | Typical |
| 73 | M105 | N155 | N212B | | | MOD Bracing | Beam | Pipe | A53 Gr.B | Typical |
| 74 | M106A | N153 | N212B | | | MOD Bracing | Beam | Pipe | A53 Gr.B | Typical |
| 75 | M107 | N220 | N215A | | | MOD Bracing | Beam | Pipe | A53 Gr.B | Typical |
| 76 | M108 | N218 | N215A | | | MOD Bracing | Beam | Pipe | A53 Gr.B | Typical |
| 77 | M109 | N213A | N215B | | | RIGID | None | None | RIGID | Typical |
| 78 | M110 | N212C | N214A | | | RIGID | None | None | RIGID | Typical |
| 79 | MP1B | N216 | N217 | | 240 | Mount Pipe | Column | Pipe | A53 Gr.B | Typical |
| 80 | M102B | N104 | N198B | | | MOD Face Ho... | Beam | Pipe | A53 Gr.B | Typical |
| 81 | MP4C | N204B | N205B | | 120 | Mount Pipe | Column | Pipe | A53 Gr.B | Typical |
| 82 | M100A | N201B | N203B | | | RIGID | None | None | RIGID | Typical |
| 83 | M101A | N200B | N202B | | | RIGID | None | None | RIGID | Typical |
| 84 | M102C | N154 | N208B | | | RIGID | None | None | RIGID | Typical |
| 85 | MP4B | N214C | N215D | | 120 | Mount Pipe | Column | Pipe | A53 Gr.B | Typical |
| 86 | M104A | N211B | N213C | | | RIGID | None | None | RIGID | Typical |
| 87 | M105B | N210C | N212E | | | RIGID | None | None | RIGID | Typical |
| 88 | M106B | N219 | N218A | | | RIGID | None | None | RIGID | Typical |
| 89 | M97A | N198C | N200C | | | RIGID | None | None | RIGID | Typical |
| 90 | M98B | N197A | N199B | | | RIGID | None | None | RIGID | Typical |
| 91 | M99 | N204 | N205 | | | RIGID | None | None | RIGID | Typical |
| 92 | MPC2 | N201 | N202 | | 120 | Mount Pipe | Column | Pipe | A53 Gr.B | Typical |
| 93 | M101 | N208 | N210D | | | RIGID | None | None | RIGID | Typical |
| 94 | M102 | N207 | N209 | | | RIGID | None | None | RIGID | Typical |
| 95 | M103C | N214D | N215E | | | RIGID | None | None | RIGID | Typical |
| 96 | MPB2 | N211C | N212F | | 120 | Mount Pipe | Column | Pipe | A53 Gr.B | Typical |

## Member Advanced Data

| | Label | I Release | J Release | I Offset[in] | J Offset[in] | T/C Only | Physical | Defl Rat... | Analysis ... | Inactive | Seismic... |
|---|---|---|---|---|---|---|---|---|---|---|---|
| 1 | M1 | | | | | | Yes | | | | None |
| 2 | M2 | | | | | | Yes | | | | None |
| 3 | M5 | | | | | | Yes | | | | None |
| 4 | M6 | | | | | | Yes | | | | None |
| 5 | M7 | | | | | | Yes | | | | None |
| 6 | M6A | | | | | | Yes | | | | None |
| 7 | M7A | | | | | | Yes | | | | None |
| 8 | M18 | | OOOXOO | | | | Yes | ** NA ** | | | None |
| 9 | M19 | | OOOXOO | | | | Yes | ** NA ** | | | None |
| 10 | MP1A | | | | | | Yes | ** NA ** | | | None |
| 11 | M23A | | | | | | Yes | | | | None |
| 12 | M24 | | | | | | Yes | | | | None |

## Member Advanced Data (Continued)

| | Label | I Release | J Release | I Offset[in] | J Offset[in] | T/C Only | Physical | Defl Rat... | Analysis ... | Inactive | Seismic... |
|---|---|---|---|---|---|---|---|---|---|---|---|
| 13 | M39A | | | | | | Yes | | | | None |
| 14 | M40 | | | | | | Yes | | | | None |
| 15 | M55 | | | | | | Yes | | | | None |
| 16 | M56 | | | | | | Yes | | | | None |
| 17 | M60A | | | | | | Yes | | | | None |
| 18 | M61 | | | | | | Yes | ** NA ** | | | None |
| 19 | M62 | | | | | | Yes | ** NA ** | | | None |
| 20 | M63 | | | | | | Yes | ** NA ** | | | None |
| 21 | M64 | OOOOXO | OOOOXO | | | | Yes | Default | | | None |
| 22 | M25 | | OOOXOO | | | | Yes | ** NA ** | | | None |
| 23 | M26 | | OOOXOO | | | | Yes | ** NA ** | | | None |
| 24 | MP4A | | | | | | Yes | ** NA ** | | | None |
| 25 | M28 | | | | | | Yes | ** NA ** | | | None |
| 26 | M29 | | OOOXOO | | | | Yes | ** NA ** | | | None |
| 27 | M30 | | OOOXOO | | | | Yes | ** NA ** | | | None |
| 28 | MP2A | | | | | | Yes | ** NA ** | | | None |
| 29 | M32 | | | | | | Yes | ** NA ** | | | None |
| 30 | M33 | | OOOXOO | | | | Yes | ** NA ** | | | None |
| 31 | M34 | | OOOXOO | | | | Yes | ** NA ** | | | None |
| 32 | MP3A | | | | | | Yes | ** NA ** | | | None |
| 33 | M36 | | | | | | Yes | ** NA ** | | | None |
| 34 | M37 | | OOOXOO | | | | Yes | ** NA ** | | | None |
| 35 | M38A | | OOOXOO | | | | Yes | ** NA ** | | | None |
| 36 | MPA2 | | | | | | Yes | ** NA ** | | | None |
| 37 | M40A | | | | | | Yes | ** NA ** | | | None |
| 38 | M41 | | OOOXOO | | | | Yes | ** NA ** | | | None |
| 39 | M42 | | OOOXOO | | | | Yes | ** NA ** | | | None |
| 40 | MP5A | | | | | | Yes | ** NA ** | | | None |
| 41 | M45 | BenPIN | BenPIN | | | | Yes | | | | None |
| 42 | M46 | BenPIN | BenPIN | | | | Yes | | | | None |
| 43 | M48 | | OOOXOO | | | | Yes | ** NA ** | | | None |
| 44 | M49 | | OOOXOO | | | | Yes | ** NA ** | | | None |
| 45 | MP1C | | | | | | Yes | ** NA ** | | | None |
| 46 | M54A | OOOOXO | OOOOXO | | | | Yes | Default | | | None |
| 47 | M60 | | OOOXOO | | | | Yes | ** NA ** | | | None |
| 48 | M61A | | OOOXOO | | | | Yes | ** NA ** | | | None |
| 49 | MP2C | | | | | | Yes | ** NA ** | | | None |
| 50 | M63A | | | | | | Yes | ** NA ** | | | None |
| 51 | M64A | | OOOXOO | | | | Yes | ** NA ** | | | None |
| 52 | M65 | | OOOXOO | | | | Yes | ** NA ** | | | None |
| 53 | MP3C | | | | | | Yes | ** NA ** | | | None |
| 54 | M67 | | | | | | Yes | ** NA ** | | | None |
| 55 | M72 | | OOOXOO | | | | Yes | ** NA ** | | | None |
| 56 | M73 | | OOOXOO | | | | Yes | ** NA ** | | | None |
| 57 | MP5C | | | | | | Yes | ** NA ** | | | None |
| 58 | M82 | | | | | | Yes | | | | None |
| 59 | M85 | OOOOXO | OOOOXO | | | | Yes | Default | | | None |
| 60 | M91 | | OOOXOO | | | | Yes | ** NA ** | | | None |
| 61 | M92 | | OOOXOO | | | | Yes | ** NA ** | | | None |
| 62 | MP2B | | | | | | Yes | ** NA ** | | | None |
| 63 | M94 | | | | | | Yes | ** NA ** | | | None |
| 64 | M95 | | OOOXOO | | | | Yes | ** NA ** | | | None |

## Member Advanced Data (Continued)

| | Label | I Release | J Release | I Offset[in] | J Offset[in] | T/C Only | Physical | Defl Rat... | Analysis ... | Inactive | Seismic... |
|---|---|---|---|---|---|---|---|---|---|---|---|
| 65 | M96 | | OOOXOO | | | | Yes | ** NA ** | | | None |
| 66 | MP3B | | | | | | Yes | ** NA ** | | | None |
| 67 | M98 | | | | | | Yes | ** NA ** | | | None |
| 68 | M103 | | OOOXOO | | | | Yes | ** NA ** | | | None |
| 69 | M104 | | OOOXOO | | | | Yes | ** NA ** | | | None |
| 70 | MP5B | | | | | | Yes | ** NA ** | | | None |
| 71 | M107A | | | | | | Yes | | | | None |
| 72 | M108A | | | | | | Yes | | | | None |
| 73 | M105 | BenPIN | BenPIN | | | | Yes | | | | None |
| 74 | M106A | BenPIN | BenPIN | | | | Yes | | | | None |
| 75 | M107 | BenPIN | BenPIN | | | | Yes | | | | None |
| 76 | M108 | BenPIN | BenPIN | | | | Yes | | | | None |
| 77 | M109 | | OOOXOO | | | | Yes | ** NA ** | | | None |
| 78 | M110 | | OOOXOO | | | | Yes | ** NA ** | | | None |
| 79 | MP1B | | | | | | Yes | ** NA ** | | | None |
| 80 | M102B | | | | | | Yes | | | | None |
| 81 | MP4C | | | | | | Yes | ** NA ** | | | None |
| 82 | M100A | | OOOXOO | | | | Yes | ** NA ** | | | None |
| 83 | M101A | | OOOXOO | | | | Yes | ** NA ** | | | None |
| 84 | M102C | | | | | | Yes | ** NA ** | | | None |
| 85 | MP4B | | | | | | Yes | ** NA ** | | | None |
| 86 | M104A | | OOOXOO | | | | Yes | ** NA ** | | | None |
| 87 | M105B | | OOOXOO | | | | Yes | ** NA ** | | | None |
| 88 | M106B | | | | | | Yes | ** NA ** | | | None |
| 89 | M97A | | OOOXOO | | | | Yes | ** NA ** | | | None |
| 90 | M98B | | OOOXOO | | | | Yes | ** NA ** | | | None |
| 91 | M99 | | | | | | Yes | ** NA ** | | | None |
| 92 | MPC2 | | | | | | Yes | ** NA ** | | | None |
| 93 | M101 | | OOOXOO | | | | Yes | ** NA ** | | | None |
| 94 | M102 | | OOOXOO | | | | Yes | ** NA ** | | | None |
| 95 | M103C | | | | | | Yes | ** NA ** | | | None |
| 96 | MPB2 | | | | | | Yes | ** NA ** | | | None |

## Member Point Loads (BLC 1 : Antenna D)

| | Member Label | Direction | Magnitude[lb,k-ft] | Location[ft,%] |
|---|---|---|---|---|
| 1 | MP1A | Y | -6 | .5 |
| 2 | MP1A | My | -.007 | .5 |
| 3 | MP1A | Mz | 0 | .5 |
| 4 | MP1A | Y | -6 | 3.5 |
| 5 | MP1A | My | -.007 | 3.5 |
| 6 | MP1A | Mz | 0 | 3.5 |
| 7 | MP1C | Y | -6 | .5 |
| 8 | MP1C | My | .004 | .5 |
| 9 | MP1C | Mz | .006 | .5 |
| 10 | MP1C | Y | -6 | 3.5 |
| 11 | MP1C | My | .004 | 3.5 |
| 12 | MP1C | Mz | .006 | 3.5 |
| 13 | MP5A | Y | -6 | .5 |
| 14 | MP5A | My | -.007 | .5 |
| 15 | MP5A | Mz | 0 | .5 |

## Member Point Loads (BLC 1 : Antenna D) (Continued)

| | Member Label | Direction | Magnitude[lb,k-ft] | Location[ft,%] |
|---|---|---|---|---|
| 16 | MP5A | Y | -6 | 3.5 |
| 17 | MP5A | My | -.007 | 3.5 |
| 18 | MP5A | Mz | 0 | 3.5 |
| 19 | MP5C | Y | -6 | .5 |
| 20 | MP5C | My | .004 | .5 |
| 21 | MP5C | Mz | .006 | .5 |
| 22 | MP5C | Y | -6 | 3.5 |
| 23 | MP5C | My | .004 | 3.5 |
| 24 | MP5C | Mz | .006 | 3.5 |
| 25 | MPA2 | Y | -10.4 | 3 |
| 26 | MPA2 | My | 0 | 3 |
| 27 | MPA2 | Mz | -.003 | 3 |
| 28 | MP4A | Y | -18.9 | 2 |
| 29 | MP4A | My | .009 | 2 |
| 30 | MP4A | Mz | 0 | 2 |
| 31 | MPB2 | Y | -10.4 | 3 |
| 32 | MPB2 | My | .002 | 3 |
| 33 | MPB2 | Mz | .001 | 3 |
| 34 | MPC2 | Y | -10.4 | 3 |
| 35 | MPC2 | My | -.002 | 3 |
| 36 | MPC2 | Mz | .001 | 3 |
| 37 | MP3A | Y | -17.6 | 4.5 |
| 38 | MP3A | My | .018 | 4.5 |
| 39 | MP3A | Mz | .006 | 4.5 |
| 40 | MP3B | Y | -17.6 | 4.5 |
| 41 | MP3B | My | -.014 | 4.5 |
| 42 | MP3B | Mz | .012 | 4.5 |
| 43 | MP3C | Y | -17.6 | 4.5 |
| 44 | MP3C | My | -.004 | 4.5 |
| 45 | MP3C | Mz | -.018 | 4.5 |
| 46 | MP3A | Y | -17.6 | 4.5 |
| 47 | MP3A | My | .018 | 4.5 |
| 48 | MP3A | Mz | -.006 | 4.5 |
| 49 | MP3B | Y | -17.6 | 4.5 |
| 50 | MP3B | My | -.004 | 4.5 |
| 51 | MP3B | Mz | .018 | 4.5 |
| 52 | MP3C | Y | -17.6 | 4.5 |
| 53 | MP3C | My | -.014 | 4.5 |
| 54 | MP3C | Mz | -.012 | 4.5 |
| 55 | MP4A | Y | -43.55 | 1 |
| 56 | MP4A | My | -.022 | 1 |
| 57 | MP4A | Mz | 0 | 1 |
| 58 | MP4A | Y | -43.55 | 3 |
| 59 | MP4A | My | -.022 | 3 |
| 60 | MP4A | Mz | 0 | 3 |
| 61 | MP4B | Y | -43.55 | 1 |
| 62 | MP4B | My | .011 | 1 |
| 63 | MP4B | Mz | -.019 | 1 |
| 64 | MP4B | Y | -43.55 | 3 |
| 65 | MP4B | My | .011 | 3 |
| 66 | MP4B | Mz | -.019 | 3 |
| 67 | MP4C | Y | -43.55 | 1 |

## Member Point Loads (BLC 1 : Antenna D) (Continued)

| | Member Label | Direction | Magnitude[lb,k-ft] | Location[ft,%] |
|---|---|---|---|---|
| 68 | MP4C | My | .011 | 1 |
| 69 | MP4C | Mz | .019 | 1 |
| 70 | MP4C | Y | -43.55 | 3 |
| 71 | MP4C | My | .011 | 3 |
| 72 | MP4C | Mz | .019 | 3 |
| 73 | MP3A | Y | -31.65 | .5 |
| 74 | MP3A | My | -.034 | .5 |
| 75 | MP3A | Mz | .018 | .5 |
| 76 | MP3A | Y | -31.65 | 4.5 |
| 77 | MP3A | My | -.034 | 4.5 |
| 78 | MP3A | Mz | .018 | 4.5 |
| 79 | MP3B | Y | -31.65 | .5 |
| 80 | MP3B | My | .001 | .5 |
| 81 | MP3B | Mz | -.039 | .5 |
| 82 | MP3B | Y | -31.65 | 4.5 |
| 83 | MP3B | My | .001 | 4.5 |
| 84 | MP3B | Mz | -.039 | 4.5 |
| 85 | MP3C | Y | -31.65 | .5 |
| 86 | MP3C | My | .033 | .5 |
| 87 | MP3C | Mz | .02 | .5 |
| 88 | MP3C | Y | -31.65 | 4.5 |
| 89 | MP3C | My | .033 | 4.5 |
| 90 | MP3C | Mz | .02 | 4.5 |
| 91 | MP3A | Y | -31.65 | .5 |
| 92 | MP3A | My | -.034 | .5 |
| 93 | MP3A | Mz | -.018 | .5 |
| 94 | MP3A | Y | -31.65 | 4.5 |
| 95 | MP3A | My | -.034 | 4.5 |
| 96 | MP3A | Mz | -.018 | 4.5 |
| 97 | MP3B | Y | -31.65 | .5 |
| 98 | MP3B | My | .033 | .5 |
| 99 | MP3B | Mz | -.02 | .5 |
| 100 | MP3B | Y | -31.65 | 4.5 |
| 101 | MP3B | My | .033 | 4.5 |
| 102 | MP3B | Mz | -.02 | 4.5 |
| 103 | MP3C | Y | -31.65 | .5 |
| 104 | MP3C | My | .001 | .5 |
| 105 | MP3C | Mz | .039 | .5 |
| 106 | MP3C | Y | -31.65 | 4.5 |
| 107 | MP3C | My | .001 | 4.5 |
| 108 | MP3C | Mz | .039 | 4.5 |
| 109 | MP1B | Y | -10 | .5 |
| 110 | MP1B | My | .006 | .5 |
| 111 | MP1B | Mz | -.011 | .5 |
| 112 | MP1B | Y | -10 | 3.5 |
| 113 | MP1B | My | .006 | 3.5 |
| 114 | MP1B | Mz | -.011 | 3.5 |
| 115 | MP5B | Y | -10 | .5 |
| 116 | MP5B | My | .006 | .5 |
| 117 | MP5B | Mz | -.011 | .5 |
| 118 | MP5B | Y | -10 | 3.5 |
| 119 | MP5B | My | .006 | 3.5 |

## Member Point Loads (BLC 1 : Antenna D) (Continued)

| | Member Label | Direction | Magnitude[lb,k-ft] | Location[ft,%] |
|---|---|---|---|---|
| 120 | MP5B | Mz | -.011 | 3.5 |
| 121 | MP3A | Y | -84.4 | 2 |
| 122 | MP3A | My | .063 | 2 |
| 123 | MP3A | Mz | 0 | 2 |
| 124 | MP3B | Y | -84.4 | 2 |
| 125 | MP3B | My | -.032 | 2 |
| 126 | MP3B | Mz | .055 | 2 |
| 127 | MP3C | Y | -84.4 | 2 |
| 128 | MP3C | My | -.032 | 2 |
| 129 | MP3C | Mz | -.055 | 2 |
| 130 | MP2A | Y | -70.3 | 2 |
| 131 | MP2A | My | .047 | 2 |
| 132 | MP2A | Mz | 0 | 2 |
| 133 | MP2B | Y | -70.3 | 2 |
| 134 | MP2B | My | -.023 | 2 |
| 135 | MP2B | Mz | .041 | 2 |
| 136 | MP2C | Y | -70.3 | 2 |
| 137 | MP2C | My | -.023 | 2 |
| 138 | MP2C | Mz | -.041 | 2 |

## Member Point Loads (BLC 2 : Antenna Di)

| | Member Label | Direction | Magnitude[lb,k-ft] | Location[ft,%] |
|---|---|---|---|---|
| 1 | MP1A | Y | -40.512 | .5 |
| 2 | MP1A | My | -.051 | .5 |
| 3 | MP1A | Mz | 0 | .5 |
| 4 | MP1A | Y | -40.512 | 3.5 |
| 5 | MP1A | My | -.051 | 3.5 |
| 6 | MP1A | Mz | 0 | 3.5 |
| 7 | MP1C | Y | -40.512 | .5 |
| 8 | MP1C | My | .025 | .5 |
| 9 | MP1C | Mz | .044 | .5 |
| 10 | MP1C | Y | -40.512 | 3.5 |
| 11 | MP1C | My | .025 | 3.5 |
| 12 | MP1C | Mz | .044 | 3.5 |
| 13 | MP5A | Y | -40.512 | .5 |
| 14 | MP5A | My | -.051 | .5 |
| 15 | MP5A | Mz | 0 | .5 |
| 16 | MP5A | Y | -40.512 | 3.5 |
| 17 | MP5A | My | -.051 | 3.5 |
| 18 | MP5A | Mz | 0 | 3.5 |
| 19 | MP5C | Y | -40.512 | .5 |
| 20 | MP5C | My | .025 | .5 |
| 21 | MP5C | Mz | .044 | .5 |
| 22 | MP5C | Y | -40.512 | 3.5 |
| 23 | MP5C | My | .025 | 3.5 |
| 24 | MP5C | Mz | .044 | 3.5 |
| 25 | MPA2 | Y | -10.806 | 3 |
| 26 | MPA2 | My | 0 | 3 |
| 27 | MPA2 | Mz | -.003 | 3 |
| 28 | MP4A | Y | -87.515 | 2 |
| 29 | MP4A | My | .044 | 2 |

## Member Point Loads (BLC 2 : Antenna Di) (Continued)

| | Member Label | Direction | Magnitude[lb,k-ft] | Location[ft,%] |
|---|---|---|---|---|
| 30 | MP4A | Mz | 0 | 2 |
| 31 | MPB2 | Y | -10.806 | 3 |
| 32 | MPB2 | My | .002 | 3 |
| 33 | MPB2 | Mz | .001 | 3 |
| 34 | MPC2 | Y | -10.806 | 3 |
| 35 | MPC2 | My | -.002 | 3 |
| 36 | MPC2 | Mz | .001 | 3 |
| 37 | MP3A | Y | -17.447 | 4.5 |
| 38 | MP3A | My | .017 | 4.5 |
| 39 | MP3A | Mz | .006 | 4.5 |
| 40 | MP3B | Y | -17.447 | 4.5 |
| 41 | MP3B | My | -.014 | 4.5 |
| 42 | MP3B | Mz | .012 | 4.5 |
| 43 | MP3C | Y | -17.447 | 4.5 |
| 44 | MP3C | My | -.004 | 4.5 |
| 45 | MP3C | Mz | -.018 | 4.5 |
| 46 | MP3A | Y | -17.447 | 4.5 |
| 47 | MP3A | My | .017 | 4.5 |
| 48 | MP3A | Mz | -.006 | 4.5 |
| 49 | MP3B | Y | -17.447 | 4.5 |
| 50 | MP3B | My | -.004 | 4.5 |
| 51 | MP3B | Mz | .018 | 4.5 |
| 52 | MP3C | Y | -17.447 | 4.5 |
| 53 | MP3C | My | -.014 | 4.5 |
| 54 | MP3C | Mz | -.012 | 4.5 |
| 55 | MP4A | Y | -35.804 | 1 |
| 56 | MP4A | My | -.018 | 1 |
| 57 | MP4A | Mz | 0 | 1 |
| 58 | MP4A | Y | -35.804 | 3 |
| 59 | MP4A | My | -.018 | 3 |
| 60 | MP4A | Mz | 0 | 3 |
| 61 | MP4B | Y | -35.804 | 1 |
| 62 | MP4B | My | .009 | 1 |
| 63 | MP4B | Mz | -.016 | 1 |
| 64 | MP4B | Y | -35.804 | 3 |
| 65 | MP4B | My | .009 | 3 |
| 66 | MP4B | Mz | -.016 | 3 |
| 67 | MP4C | Y | -35.804 | 1 |
| 68 | MP4C | My | .009 | 1 |
| 69 | MP4C | Mz | .016 | 1 |
| 70 | MP4C | Y | -35.804 | 3 |
| 71 | MP4C | My | .009 | 3 |
| 72 | MP4C | Mz | .016 | 3 |
| 73 | MP3A | Y | -70.315 | .5 |
| 74 | MP3A | My | -.076 | .5 |
| 75 | MP3A | Mz | .041 | .5 |
| 76 | MP3A | Y | -70.315 | 4.5 |
| 77 | MP3A | My | -.076 | 4.5 |
| 78 | MP3A | Mz | .041 | 4.5 |
| 79 | MP3B | Y | -70.315 | .5 |
| 80 | MP3B | My | .003 | .5 |
| 81 | MP3B | Mz | -.086 | .5 |

## Member Point Loads (BLC 2 : Antenna Di) (Continued)

| | Member Label | Direction | Magnitude[lb,k-ft] | Location[ft,%] |
|---|---|---|---|---|
| 82 | MP3B | Y | -70.315 | 4.5 |
| 83 | MP3B | My | .003 | 4.5 |
| 84 | MP3B | Mz | -.086 | 4.5 |
| 85 | MP3C | Y | -70.315 | .5 |
| 86 | MP3C | My | .074 | .5 |
| 87 | MP3C | Mz | .045 | .5 |
| 88 | MP3C | Y | -70.315 | 4.5 |
| 89 | MP3C | My | .074 | 4.5 |
| 90 | MP3C | Mz | .045 | 4.5 |
| 91 | MP3A | Y | -70.315 | .5 |
| 92 | MP3A | My | -.076 | .5 |
| 93 | MP3A | Mz | -.041 | .5 |
| 94 | MP3A | Y | -70.315 | 4.5 |
| 95 | MP3A | My | -.076 | 4.5 |
| 96 | MP3A | Mz | -.041 | 4.5 |
| 97 | MP3B | Y | -70.315 | .5 |
| 98 | MP3B | My | .074 | .5 |
| 99 | MP3B | Mz | -.045 | .5 |
| 100 | MP3B | Y | -70.315 | 4.5 |
| 101 | MP3B | My | .074 | 4.5 |
| 102 | MP3B | Mz | -.045 | 4.5 |
| 103 | MP3C | Y | -70.315 | .5 |
| 104 | MP3C | My | .003 | .5 |
| 105 | MP3C | Mz | .086 | .5 |
| 106 | MP3C | Y | -70.315 | 4.5 |
| 107 | MP3C | My | .003 | 4.5 |
| 108 | MP3C | Mz | .086 | 4.5 |
| 109 | MP1B | Y | -64.1 | .5 |
| 110 | MP1B | My | .04 | .5 |
| 111 | MP1B | Mz | -.069 | .5 |
| 112 | MP1B | Y | -64.1 | 3.5 |
| 113 | MP1B | My | .04 | 3.5 |
| 114 | MP1B | Mz | -.069 | 3.5 |
| 115 | MP5B | Y | -64.1 | .5 |
| 116 | MP5B | My | .04 | .5 |
| 117 | MP5B | Mz | -.069 | .5 |
| 118 | MP5B | Y | -64.1 | 3.5 |
| 119 | MP5B | My | .04 | 3.5 |
| 120 | MP5B | Mz | -.069 | 3.5 |
| 121 | MP3A | Y | -45.144 | 2 |
| 122 | MP3A | My | .034 | 2 |
| 123 | MP3A | Mz | 0 | 2 |
| 124 | MP3B | Y | -45.144 | 2 |
| 125 | MP3B | My | -.017 | 2 |
| 126 | MP3B | Mz | .029 | 2 |
| 127 | MP3C | Y | -45.144 | 2 |
| 128 | MP3C | My | -.017 | 2 |
| 129 | MP3C | Mz | -.029 | 2 |
| 130 | MP2A | Y | -40.6 | 2 |
| 131 | MP2A | My | .027 | 2 |
| 132 | MP2A | Mz | 0 | 2 |
| 133 | MP2B | Y | -40.6 | 2 |

## Member Point Loads (BLC 2 : Antenna Di) (Continued)

| | Member Label | Direction | Magnitude[lb,k-ft] | Location[ft,%] |
|---|---|---|---|---|
| 134 | MP2B | My | -.014 | 2 |
| 135 | MP2B | Mz | .023 | 2 |
| 136 | MP2C | Y | -40.6 | 2 |
| 137 | MP2C | My | -.014 | 2 |
| 138 | MP2C | Mz | -.023 | 2 |

## Member Point Loads (BLC 3 : Antenna Wo (0 Deg))

| | Member Label | Direction | Magnitude[lb,k-ft] | Location[ft,%] |
|---|---|---|---|---|
| 1 | MP1A | X | 0 | .5 |
| 2 | MP1A | Z | -54.512 | .5 |
| 3 | MP1A | Mx | 0 | .5 |
| 4 | MP1A | X | 0 | 3.5 |
| 5 | MP1A | Z | -54.512 | 3.5 |
| 6 | MP1A | Mx | 0 | 3.5 |
| 7 | MP1C | X | 0 | .5 |
| 8 | MP1C | Z | -98.198 | .5 |
| 9 | MP1C | Mx | -.106 | .5 |
| 10 | MP1C | X | 0 | 3.5 |
| 11 | MP1C | Z | -98.198 | 3.5 |
| 12 | MP1C | Mx | -.106 | 3.5 |
| 13 | MP5A | X | 0 | .5 |
| 14 | MP5A | Z | -54.512 | .5 |
| 15 | MP5A | Mx | 0 | .5 |
| 16 | MP5A | X | 0 | 3.5 |
| 17 | MP5A | Z | -54.512 | 3.5 |
| 18 | MP5A | Mx | 0 | 3.5 |
| 19 | MP5C | X | 0 | .5 |
| 20 | MP5C | Z | -98.198 | .5 |
| 21 | MP5C | Mx | -.106 | .5 |
| 22 | MP5C | X | 0 | 3.5 |
| 23 | MP5C | Z | -98.198 | 3.5 |
| 24 | MP5C | Mx | -.106 | 3.5 |
| 25 | MPA2 | X | 0 | 3 |
| 26 | MPA2 | Z | -15.456 | 3 |
| 27 | MPA2 | Mx | .004 | 3 |
| 28 | MP4A | X | 0 | 2 |
| 29 | MP4A | Z | -200.505 | 2 |
| 30 | MP4A | Mx | 0 | 2 |
| 31 | MPB2 | X | 0 | 3 |
| 32 | MPB2 | Z | -11.884 | 3 |
| 33 | MPB2 | Mx | -.001 | 3 |
| 34 | MPC2 | X | 0 | 3 |
| 35 | MPC2 | Z | -11.884 | 3 |
| 36 | MPC2 | Mx | -.001 | 3 |
| 37 | MP3A | X | 0 | 4.5 |
| 38 | MP3A | Z | -40.101 | 4.5 |
| 39 | MP3A | Mx | -.013 | 4.5 |
| 40 | MP3B | X | 0 | 4.5 |
| 41 | MP3B | Z | -19.147 | 4.5 |
| 42 | MP3B | Mx | -.013 | 4.5 |
| 43 | MP3C | X | 0 | 4.5 |

## Member Point Loads (BLC 3 : Antenna Wo (0 Deg)) (Continued)

| | Member Label | Direction | Magnitude[lb,k-ft] | Location[ft,%] |
|---|---|---|---|---|
| 44 | MP3C | Z | -19.147 | 4.5 |
| 45 | MP3C | Mx | .02 | 4.5 |
| 46 | MP3A | X | 0 | 4.5 |
| 47 | MP3A | Z | -40.101 | 4.5 |
| 48 | MP3A | Mx | .013 | 4.5 |
| 49 | MP3B | X | 0 | 4.5 |
| 50 | MP3B | Z | -19.147 | 4.5 |
| 51 | MP3B | Mx | -.02 | 4.5 |
| 52 | MP3C | X | 0 | 4.5 |
| 53 | MP3C | Z | -19.147 | 4.5 |
| 54 | MP3C | Mx | .013 | 4.5 |
| 55 | MP4A | X | 0 | 1 |
| 56 | MP4A | Z | -81.873 | 1 |
| 57 | MP4A | Mx | 0 | 1 |
| 58 | MP4A | X | 0 | 3 |
| 59 | MP4A | Z | -81.873 | 3 |
| 60 | MP4A | Mx | 0 | 3 |
| 61 | MP4B | X | 0 | 1 |
| 62 | MP4B | Z | -41.615 | 1 |
| 63 | MP4B | Mx | .018 | 1 |
| 64 | MP4B | X | 0 | 3 |
| 65 | MP4B | Z | -41.615 | 3 |
| 66 | MP4B | Mx | .018 | 3 |
| 67 | MP4C | X | 0 | 1 |
| 68 | MP4C | Z | -41.615 | 1 |
| 69 | MP4C | Mx | -.018 | 1 |
| 70 | MP4C | X | 0 | 3 |
| 71 | MP4C | Z | -41.615 | 3 |
| 72 | MP4C | Mx | -.018 | 3 |
| 73 | MP3A | X | 0 | .5 |
| 74 | MP3A | Z | -190.27 | .5 |
| 75 | MP3A | Mx | -.111 | .5 |
| 76 | MP3A | X | 0 | 4.5 |
| 77 | MP3A | Z | -190.27 | 4.5 |
| 78 | MP3A | Mx | -.111 | 4.5 |
| 79 | MP3B | X | 0 | .5 |
| 80 | MP3B | Z | -141.293 | .5 |
| 81 | MP3B | Mx | .174 | .5 |
| 82 | MP3B | X | 0 | 4.5 |
| 83 | MP3B | Z | -141.293 | 4.5 |
| 84 | MP3B | Mx | .174 | 4.5 |
| 85 | MP3C | X | 0 | .5 |
| 86 | MP3C | Z | -141.293 | .5 |
| 87 | MP3C | Mx | -.091 | .5 |
| 88 | MP3C | X | 0 | 4.5 |
| 89 | MP3C | Z | -141.293 | 4.5 |
| 90 | MP3C | Mx | -.091 | 4.5 |
| 91 | MP3A | X | 0 | .5 |
| 92 | MP3A | Z | -190.27 | .5 |
| 93 | MP3A | Mx | .111 | .5 |
| 94 | MP3A | X | 0 | 4.5 |
| 95 | MP3A | Z | -190.27 | 4.5 |

## Member Point Loads (BLC 3 : Antenna Wo (0 Deg)) (Continued)

| | Member Label | Direction | Magnitude[lb,k-ft] | Location[ft,%] |
|---|---|---|---|---|
| 96 | MP3A | Mx | .111 | 4.5 |
| 97 | MP3B | X | 0 | .5 |
| 98 | MP3B | Z | -141.293 | .5 |
| 99 | MP3B | Mx | .091 | .5 |
| 100 | MP3B | X | 0 | 4.5 |
| 101 | MP3B | Z | -141.293 | 4.5 |
| 102 | MP3B | Mx | .091 | 4.5 |
| 103 | MP3C | X | 0 | .5 |
| 104 | MP3C | Z | -141.293 | .5 |
| 105 | MP3C | Mx | -.174 | .5 |
| 106 | MP3C | X | 0 | 4.5 |
| 107 | MP3C | Z | -141.293 | 4.5 |
| 108 | MP3C | Mx | -.174 | 4.5 |
| 109 | MP1B | X | 0 | .5 |
| 110 | MP1B | Z | -118.301 | .5 |
| 111 | MP1B | Mx | .128 | .5 |
| 112 | MP1B | X | 0 | 3.5 |
| 113 | MP1B | Z | -118.301 | 3.5 |
| 114 | MP1B | Mx | .128 | 3.5 |
| 115 | MP5B | X | 0 | .5 |
| 116 | MP5B | Z | -118.301 | .5 |
| 117 | MP5B | Mx | .128 | .5 |
| 118 | MP5B | X | 0 | 3.5 |
| 119 | MP5B | Z | -118.301 | 3.5 |
| 120 | MP5B | Mx | .128 | 3.5 |
| 121 | MP3A | X | 0 | 2 |
| 122 | MP3A | Z | -64.746 | 2 |
| 123 | MP3A | Mx | 0 | 2 |
| 124 | MP3B | X | 0 | 2 |
| 125 | MP3B | Z | -48.769 | 2 |
| 126 | MP3B | Mx | -.032 | 2 |
| 127 | MP3C | X | 0 | 2 |
| 128 | MP3C | Z | -48.769 | 2 |
| 129 | MP3C | Mx | .032 | 2 |
| 130 | MP2A | X | 0 | 2 |
| 131 | MP2A | Z | -64.746 | 2 |
| 132 | MP2A | Mx | 0 | 2 |
| 133 | MP2B | X | 0 | 2 |
| 134 | MP2B | Z | -42.816 | 2 |
| 135 | MP2B | Mx | -.025 | 2 |
| 136 | MP2C | X | 0 | 2 |
| 137 | MP2C | Z | -42.816 | 2 |
| 138 | MP2C | Mx | .025 | 2 |

## Member Point Loads (BLC 4 : Antenna Wo (30 Deg))

| | Member Label | Direction | Magnitude[lb,k-ft] | Location[ft,%] |
|---|---|---|---|---|
| 1 | MP1A | X | 34.537 | .5 |
| 2 | MP1A | Z | -59.82 | .5 |
| 3 | MP1A | Mx | -.043 | .5 |
| 4 | MP1A | X | 34.537 | 3.5 |
| 5 | MP1A | Z | -59.82 | 3.5 |

## Member Point Loads (BLC 4 : Antenna Wo (30 Deg)) (Continued)

| | Member Label | Direction | Magnitude[lb,k-ft] | Location[ft,%] |
|---|---|---|---|---|
| 6 | MP1A | Mx | -.043 | 3.5 |
| 7 | MP1C | X | 34.537 | .5 |
| 8 | MP1C | Z | -59.82 | .5 |
| 9 | MP1C | Mx | -.043 | .5 |
| 10 | MP1C | X | 34.537 | 3.5 |
| 11 | MP1C | Z | -59.82 | 3.5 |
| 12 | MP1C | Mx | -.043 | 3.5 |
| 13 | MP5A | X | 34.537 | .5 |
| 14 | MP5A | Z | -59.82 | .5 |
| 15 | MP5A | Mx | -.043 | .5 |
| 16 | MP5A | X | 34.537 | 3.5 |
| 17 | MP5A | Z | -59.82 | 3.5 |
| 18 | MP5A | Mx | -.043 | 3.5 |
| 19 | MP5C | X | 34.537 | .5 |
| 20 | MP5C | Z | -59.82 | .5 |
| 21 | MP5C | Mx | -.043 | .5 |
| 22 | MP5C | X | 34.537 | 3.5 |
| 23 | MP5C | Z | -59.82 | 3.5 |
| 24 | MP5C | Mx | -.043 | 3.5 |
| 25 | MPA2 | X | 7.133 | 3 |
| 26 | MPA2 | Z | -12.354 | 3 |
| 27 | MPA2 | Mx | .003 | 3 |
| 28 | MP4A | X | 85.632 | 2 |
| 29 | MP4A | Z | -148.319 | 2 |
| 30 | MP4A | Mx | .043 | 2 |
| 31 | MPB2 | X | 5.347 | 3 |
| 32 | MPB2 | Z | -9.261 | 3 |
| 33 | MPB2 | Mx | 0 | 3 |
| 34 | MPC2 | X | 7.133 | 3 |
| 35 | MPC2 | Z | -12.354 | 3 |
| 36 | MPC2 | Mx | -.003 | 3 |
| 37 | MP3A | X | 16.558 | 4.5 |
| 38 | MP3A | Z | -28.68 | 4.5 |
| 39 | MP3A | Mx | .007 | 4.5 |
| 40 | MP3B | X | 6.081 | 4.5 |
| 41 | MP3B | Z | -10.533 | 4.5 |
| 42 | MP3B | Mx | -.012 | 4.5 |
| 43 | MP3C | X | 16.558 | 4.5 |
| 44 | MP3C | Z | -28.68 | 4.5 |
| 45 | MP3C | Mx | .026 | 4.5 |
| 46 | MP3A | X | 16.558 | 4.5 |
| 47 | MP3A | Z | -28.68 | 4.5 |
| 48 | MP3A | Mx | .026 | 4.5 |
| 49 | MP3B | X | 6.081 | 4.5 |
| 50 | MP3B | Z | -10.533 | 4.5 |
| 51 | MP3B | Mx | -.012 | 4.5 |
| 52 | MP3C | X | 16.558 | 4.5 |
| 53 | MP3C | Z | -28.68 | 4.5 |
| 54 | MP3C | Mx | .007 | 4.5 |
| 55 | MP4A | X | 34.227 | 1 |
| 56 | MP4A | Z | -59.282 | 1 |
| 57 | MP4A | Mx | -.017 | 1 |

## Member Point Loads (BLC 4 : Antenna Wo (30 Deg)) (Continued)

| | Member Label | Direction | Magnitude[lb,k-ft] | Location[ft,%] |
|---|---|---|---|---|
| 58 | MP4A | X | 34.227 | 3 |
| 59 | MP4A | Z | -59.282 | 3 |
| 60 | MP4A | Mx | -.017 | 3 |
| 61 | MP4B | X | 14.098 | 1 |
| 62 | MP4B | Z | -24.418 | 1 |
| 63 | MP4B | Mx | .014 | 1 |
| 64 | MP4B | X | 14.098 | 3 |
| 65 | MP4B | Z | -24.418 | 3 |
| 66 | MP4B | Mx | .014 | 3 |
| 67 | MP4C | X | 34.227 | 1 |
| 68 | MP4C | Z | -59.282 | 1 |
| 69 | MP4C | Mx | -.017 | 1 |
| 70 | MP4C | X | 34.227 | 3 |
| 71 | MP4C | Z | -59.282 | 3 |
| 72 | MP4C | Mx | -.017 | 3 |
| 73 | MP3A | X | 86.972 | .5 |
| 74 | MP3A | Z | -150.641 | .5 |
| 75 | MP3A | Mx | -.182 | .5 |
| 76 | MP3A | X | 86.972 | 4.5 |
| 77 | MP3A | Z | -150.641 | 4.5 |
| 78 | MP3A | Mx | -.182 | 4.5 |
| 79 | MP3B | X | 62.484 | .5 |
| 80 | MP3B | Z | -108.225 | .5 |
| 81 | MP3B | Mx | .135 | .5 |
| 82 | MP3B | X | 62.484 | 4.5 |
| 83 | MP3B | Z | -108.225 | 4.5 |
| 84 | MP3B | Mx | .135 | 4.5 |
| 85 | MP3C | X | 86.972 | .5 |
| 86 | MP3C | Z | -150.641 | .5 |
| 87 | MP3C | Mx | -.006 | .5 |
| 88 | MP3C | X | 86.972 | 4.5 |
| 89 | MP3C | Z | -150.641 | 4.5 |
| 90 | MP3C | Mx | -.006 | 4.5 |
| 91 | MP3A | X | 86.972 | .5 |
| 92 | MP3A | Z | -150.641 | .5 |
| 93 | MP3A | Mx | -.006 | .5 |
| 94 | MP3A | X | 86.972 | 4.5 |
| 95 | MP3A | Z | -150.641 | 4.5 |
| 96 | MP3A | Mx | -.006 | 4.5 |
| 97 | MP3B | X | 62.484 | .5 |
| 98 | MP3B | Z | -108.225 | .5 |
| 99 | MP3B | Mx | .135 | .5 |
| 100 | MP3B | X | 62.484 | 4.5 |
| 101 | MP3B | Z | -108.225 | 4.5 |
| 102 | MP3B | Mx | .135 | 4.5 |
| 103 | MP3C | X | 86.972 | .5 |
| 104 | MP3C | Z | -150.641 | .5 |
| 105 | MP3C | Mx | -.182 | .5 |
| 106 | MP3C | X | 86.972 | 4.5 |
| 107 | MP3C | Z | -150.641 | 4.5 |
| 108 | MP3C | Mx | -.182 | 4.5 |
| 109 | MP1B | X | 57.459 | .5 |

## Member Point Loads (BLC 4 : Antenna Wo (30 Deg)) (Continued)

| | Member Label | Direction | Magnitude[lb,k-ft] | Location[ft,%] |
|---|---|---|---|---|
| 110 | MP1B | Z | -99.523 | .5 |
| 111 | MP1B | Mx | .144 | .5 |
| 112 | MP1B | X | 57.459 | 3.5 |
| 113 | MP1B | Z | -99.523 | 3.5 |
| 114 | MP1B | Mx | .144 | 3.5 |
| 115 | MP5B | X | 57.459 | .5 |
| 116 | MP5B | Z | -99.523 | .5 |
| 117 | MP5B | Mx | .144 | .5 |
| 118 | MP5B | X | 57.459 | 3.5 |
| 119 | MP5B | Z | -99.523 | 3.5 |
| 120 | MP5B | Mx | .144 | 3.5 |
| 121 | MP3A | X | 29.71 | 2 |
| 122 | MP3A | Z | -51.46 | 2 |
| 123 | MP3A | Mx | .022 | 2 |
| 124 | MP3B | X | 21.721 | 2 |
| 125 | MP3B | Z | -37.622 | 2 |
| 126 | MP3B | Mx | -.033 | 2 |
| 127 | MP3C | X | 29.71 | 2 |
| 128 | MP3C | Z | -51.46 | 2 |
| 129 | MP3C | Mx | .022 | 2 |
| 130 | MP2A | X | 28.718 | 2 |
| 131 | MP2A | Z | -49.741 | 2 |
| 132 | MP2A | Mx | .019 | 2 |
| 133 | MP2B | X | 17.753 | 2 |
| 134 | MP2B | Z | -30.749 | 2 |
| 135 | MP2B | Mx | -.024 | 2 |
| 136 | MP2C | X | 28.718 | 2 |
| 137 | MP2C | Z | -49.741 | 2 |
| 138 | MP2C | Mx | .019 | 2 |

## Member Point Loads (BLC 5 : Antenna Wo (60 Deg))

| | Member Label | Direction | Magnitude[lb,k-ft] | Location[ft,%] |
|---|---|---|---|---|
| 1 | MP1A | X | 85.042 | .5 |
| 2 | MP1A | Z | -49.099 | .5 |
| 3 | MP1A | Mx | -.106 | .5 |
| 4 | MP1A | X | 85.042 | 3.5 |
| 5 | MP1A | Z | -49.099 | 3.5 |
| 6 | MP1A | Mx | -.106 | 3.5 |
| 7 | MP1C | X | 47.209 | .5 |
| 8 | MP1C | Z | -27.256 | .5 |
| 9 | MP1C | Mx | 0 | .5 |
| 10 | MP1C | X | 47.209 | 3.5 |
| 11 | MP1C | Z | -27.256 | 3.5 |
| 12 | MP1C | Mx | 0 | 3.5 |
| 13 | MP5A | X | 85.042 | .5 |
| 14 | MP5A | Z | -49.099 | .5 |
| 15 | MP5A | Mx | -.106 | .5 |
| 16 | MP5A | X | 85.042 | 3.5 |
| 17 | MP5A | Z | -49.099 | 3.5 |
| 18 | MP5A | Mx | -.106 | 3.5 |
| 19 | MP5C | X | 47.209 | .5 |

## Member Point Loads (BLC 5 : Antenna Wo (60 Deg)) (Continued)

| | Member Label | Direction | Magnitude[lb,k-ft] | Location[ft,%] |
|---|---|---|---|---|
| 20 | MP5C | Z | -27.256 | .5 |
| 21 | MP5C | Mx | 0 | .5 |
| 22 | MP5C | X | 47.209 | 3.5 |
| 23 | MP5C | Z | -27.256 | 3.5 |
| 24 | MP5C | Mx | 0 | 3.5 |
| 25 | MPA2 | X | 10.292 | 3 |
| 26 | MPA2 | Z | -5.942 | 3 |
| 27 | MPA2 | Mx | .001 | 3 |
| 28 | MP4A | X | 97.674 | 2 |
| 29 | MP4A | Z | -56.392 | 2 |
| 30 | MP4A | Mx | .049 | 2 |
| 31 | MPB2 | X | 10.292 | 3 |
| 32 | MPB2 | Z | -5.942 | 3 |
| 33 | MPB2 | Mx | .001 | 3 |
| 34 | MPC2 | X | 13.385 | 3 |
| 35 | MPC2 | Z | -7.728 | 3 |
| 36 | MPC2 | Mx | -.004 | 3 |
| 37 | MP3A | X | 16.582 | 4.5 |
| 38 | MP3A | Z | -9.574 | 4.5 |
| 39 | MP3A | Mx | .013 | 4.5 |
| 40 | MP3B | X | 16.582 | 4.5 |
| 41 | MP3B | Z | -9.574 | 4.5 |
| 42 | MP3B | Mx | -.02 | 4.5 |
| 43 | MP3C | X | 34.728 | 4.5 |
| 44 | MP3C | Z | -20.05 | 4.5 |
| 45 | MP3C | Mx | .013 | 4.5 |
| 46 | MP3A | X | 16.582 | 4.5 |
| 47 | MP3A | Z | -9.574 | 4.5 |
| 48 | MP3A | Mx | .02 | 4.5 |
| 49 | MP3B | X | 16.582 | 4.5 |
| 50 | MP3B | Z | -9.574 | 4.5 |
| 51 | MP3B | Mx | -.013 | 4.5 |
| 52 | MP3C | X | 34.728 | 4.5 |
| 53 | MP3C | Z | -20.05 | 4.5 |
| 54 | MP3C | Mx | -.013 | 4.5 |
| 55 | MP4A | X | 36.04 | 1 |
| 56 | MP4A | Z | -20.808 | 1 |
| 57 | MP4A | Mx | -.018 | 1 |
| 58 | MP4A | X | 36.04 | 3 |
| 59 | MP4A | Z | -20.808 | 3 |
| 60 | MP4A | Mx | -.018 | 3 |
| 61 | MP4B | X | 36.04 | 1 |
| 62 | MP4B | Z | -20.808 | 1 |
| 63 | MP4B | Mx | .018 | 1 |
| 64 | MP4B | X | 36.04 | 3 |
| 65 | MP4B | Z | -20.808 | 3 |
| 66 | MP4B | Mx | .018 | 3 |
| 67 | MP4C | X | 70.904 | 1 |
| 68 | MP4C | Z | -40.936 | 1 |
| 69 | MP4C | Mx | 0 | 1 |
| 70 | MP4C | X | 70.904 | 3 |
| 71 | MP4C | Z | -40.936 | 3 |

## Member Point Loads (BLC 5 : Antenna Wo (60 Deg)) (Continued)

| | Member Label | Direction | Magnitude[lb,k-ft] | Location[ft,%] |
|---|---|---|---|---|
| 72 | MP4C | Mx | 0 | 3 |
| 73 | MP3A | X | 122.363 | .5 |
| 74 | MP3A | Z | -70.647 | .5 |
| 75 | MP3A | Mx | -.174 | .5 |
| 76 | MP3A | X | 122.363 | 4.5 |
| 77 | MP3A | Z | -70.647 | 4.5 |
| 78 | MP3A | Mx | -.174 | 4.5 |
| 79 | MP3B | X | 122.363 | .5 |
| 80 | MP3B | Z | -70.647 | .5 |
| 81 | MP3B | Mx | .091 | .5 |
| 82 | MP3B | X | 122.363 | 4.5 |
| 83 | MP3B | Z | -70.647 | 4.5 |
| 84 | MP3B | Mx | .091 | 4.5 |
| 85 | MP3C | X | 164.779 | .5 |
| 86 | MP3C | Z | -95.135 | .5 |
| 87 | MP3C | Mx | .111 | .5 |
| 88 | MP3C | X | 164.779 | 4.5 |
| 89 | MP3C | Z | -95.135 | 4.5 |
| 90 | MP3C | Mx | .111 | 4.5 |
| 91 | MP3A | X | 122.363 | .5 |
| 92 | MP3A | Z | -70.647 | .5 |
| 93 | MP3A | Mx | -.091 | .5 |
| 94 | MP3A | X | 122.363 | 4.5 |
| 95 | MP3A | Z | -70.647 | 4.5 |
| 96 | MP3A | Mx | -.091 | 4.5 |
| 97 | MP3B | X | 122.363 | .5 |
| 98 | MP3B | Z | -70.647 | .5 |
| 99 | MP3B | Mx | .174 | .5 |
| 100 | MP3B | X | 122.363 | 4.5 |
| 101 | MP3B | Z | -70.647 | 4.5 |
| 102 | MP3B | Mx | .174 | 4.5 |
| 103 | MP3C | X | 164.779 | .5 |
| 104 | MP3C | Z | -95.135 | .5 |
| 105 | MP3C | Mx | -.111 | .5 |
| 106 | MP3C | X | 164.779 | 4.5 |
| 107 | MP3C | Z | -95.135 | 4.5 |
| 108 | MP3C | Mx | -.111 | 4.5 |
| 109 | MP1B | X | 102.452 | .5 |
| 110 | MP1B | Z | -59.151 | .5 |
| 111 | MP1B | Mx | .128 | .5 |
| 112 | MP1B | X | 102.452 | 3.5 |
| 113 | MP1B | Z | -59.151 | 3.5 |
| 114 | MP1B | Mx | .128 | 3.5 |
| 115 | MP5B | X | 102.452 | .5 |
| 116 | MP5B | Z | -59.151 | .5 |
| 117 | MP5B | Mx | .128 | .5 |
| 118 | MP5B | X | 102.452 | 3.5 |
| 119 | MP5B | Z | -59.151 | 3.5 |
| 120 | MP5B | Mx | .128 | 3.5 |
| 121 | MP3A | X | 42.235 | 2 |
| 122 | MP3A | Z | -24.384 | 2 |
| 123 | MP3A | Mx | .032 | 2 |

## Member Point Loads (BLC 5 : Antenna Wo (60 Deg)) (Continued)

| | Member Label | Direction | Magnitude[lb,k-ft] | Location[ft,%] |
|---|---|---|---|---|
| 124 | MP3B | X | 42.235 | 2 |
| 125 | MP3B | Z | -24.384 | 2 |
| 126 | MP3B | Mx | -.032 | 2 |
| 127 | MP3C | X | 56.072 | 2 |
| 128 | MP3C | Z | -32.373 | 2 |
| 129 | MP3C | Mx | 0 | 2 |
| 130 | MP2A | X | 37.08 | 2 |
| 131 | MP2A | Z | -21.408 | 2 |
| 132 | MP2A | Mx | .025 | 2 |
| 133 | MP2B | X | 37.08 | 2 |
| 134 | MP2B | Z | -21.408 | 2 |
| 135 | MP2B | Mx | -.025 | 2 |
| 136 | MP2C | X | 56.072 | 2 |
| 137 | MP2C | Z | -32.373 | 2 |
| 138 | MP2C | Mx | 0 | 2 |

## Member Point Loads (BLC 6 : Antenna Wo (90 Deg))

| | Member Label | Direction | Magnitude[lb,k-ft] | Location[ft,%] |
|---|---|---|---|---|
| 1 | MP1A | X | 112.76 | .5 |
| 2 | MP1A | Z | 0 | .5 |
| 3 | MP1A | Mx | -.141 | .5 |
| 4 | MP1A | X | 112.76 | 3.5 |
| 5 | MP1A | Z | 0 | 3.5 |
| 6 | MP1A | Mx | -.141 | 3.5 |
| 7 | MP1C | X | 69.074 | .5 |
| 8 | MP1C | Z | 0 | .5 |
| 9 | MP1C | Mx | .043 | .5 |
| 10 | MP1C | X | 69.074 | 3.5 |
| 11 | MP1C | Z | 0 | 3.5 |
| 12 | MP1C | Mx | .043 | 3.5 |
| 13 | MP5A | X | 112.76 | .5 |
| 14 | MP5A | Z | 0 | .5 |
| 15 | MP5A | Mx | -.141 | .5 |
| 16 | MP5A | X | 112.76 | 3.5 |
| 17 | MP5A | Z | 0 | 3.5 |
| 18 | MP5A | Mx | -.141 | 3.5 |
| 19 | MP5C | X | 69.074 | .5 |
| 20 | MP5C | Z | 0 | .5 |
| 21 | MP5C | Mx | .043 | .5 |
| 22 | MP5C | X | 69.074 | 3.5 |
| 23 | MP5C | Z | 0 | 3.5 |
| 24 | MP5C | Mx | .043 | 3.5 |
| 25 | MPA2 | X | 10.694 | 3 |
| 26 | MPA2 | Z | 0 | 3 |
| 27 | MPA2 | Mx | 0 | 3 |
| 28 | MP4A | X | 83.544 | 2 |
| 29 | MP4A | Z | 0 | 2 |
| 30 | MP4A | Mx | .042 | 2 |
| 31 | MPB2 | X | 14.265 | 3 |
| 32 | MPB2 | Z | 0 | 3 |
| 33 | MPB2 | Mx | .003 | 3 |

## Member Point Loads (BLC 6 : Antenna Wo (90 Deg)) (Continued)

| | Member Label | Direction | Magnitude[lb,k-ft] | Location[ft,%] |
|---|---|---|---|---|
| 34 | MPC2 | X | 14.265 | 3 |
| 35 | MPC2 | Z | 0 | 3 |
| 36 | MPC2 | Mx | -.003 | 3 |
| 37 | MP3A | X | 12.163 | 4.5 |
| 38 | MP3A | Z | 0 | 4.5 |
| 39 | MP3A | Mx | .012 | 4.5 |
| 40 | MP3B | X | 33.116 | 4.5 |
| 41 | MP3B | Z | 0 | 4.5 |
| 42 | MP3B | Mx | -.026 | 4.5 |
| 43 | MP3C | X | 33.116 | 4.5 |
| 44 | MP3C | Z | 0 | 4.5 |
| 45 | MP3C | Mx | -.007 | 4.5 |
| 46 | MP3A | X | 12.163 | 4.5 |
| 47 | MP3A | Z | 0 | 4.5 |
| 48 | MP3A | Mx | .012 | 4.5 |
| 49 | MP3B | X | 33.116 | 4.5 |
| 50 | MP3B | Z | 0 | 4.5 |
| 51 | MP3B | Mx | -.007 | 4.5 |
| 52 | MP3C | X | 33.116 | 4.5 |
| 53 | MP3C | Z | 0 | 4.5 |
| 54 | MP3C | Mx | -.026 | 4.5 |
| 55 | MP4A | X | 28.196 | 1 |
| 56 | MP4A | Z | 0 | 1 |
| 57 | MP4A | Mx | -.014 | 1 |
| 58 | MP4A | X | 28.196 | 3 |
| 59 | MP4A | Z | 0 | 3 |
| 60 | MP4A | Mx | -.014 | 3 |
| 61 | MP4B | X | 68.454 | 1 |
| 62 | MP4B | Z | 0 | 1 |
| 63 | MP4B | Mx | .017 | 1 |
| 64 | MP4B | X | 68.454 | 3 |
| 65 | MP4B | Z | 0 | 3 |
| 66 | MP4B | Mx | .017 | 3 |
| 67 | MP4C | X | 68.454 | 1 |
| 68 | MP4C | Z | 0 | 1 |
| 69 | MP4C | Mx | .017 | 1 |
| 70 | MP4C | X | 68.454 | 3 |
| 71 | MP4C | Z | 0 | 3 |
| 72 | MP4C | Mx | .017 | 3 |
| 73 | MP3A | X | 124.967 | .5 |
| 74 | MP3A | Z | 0 | .5 |
| 75 | MP3A | Mx | -.135 | .5 |
| 76 | MP3A | X | 124.967 | 4.5 |
| 77 | MP3A | Z | 0 | 4.5 |
| 78 | MP3A | Mx | -.135 | 4.5 |
| 79 | MP3B | X | 173.945 | .5 |
| 80 | MP3B | Z | 0 | .5 |
| 81 | MP3B | Mx | .006 | .5 |
| 82 | MP3B | X | 173.945 | 4.5 |
| 83 | MP3B | Z | 0 | 4.5 |
| 84 | MP3B | Mx | .006 | 4.5 |
| 85 | MP3C | X | 173.945 | .5 |

## Member Point Loads (BLC 6 : Antenna Wo (90 Deg)) (Continued)

| | Member Label | Direction | Magnitude[lb,k-ft] | Location[ft,%] |
|---|---|---|---|---|
| 86 | MP3C | Z | 0 | .5 |
| 87 | MP3C | Mx | .182 | .5 |
| 88 | MP3C | X | 173.945 | 4.5 |
| 89 | MP3C | Z | 0 | 4.5 |
| 90 | MP3C | Mx | .182 | 4.5 |
| 91 | MP3A | X | 124.967 | .5 |
| 92 | MP3A | Z | 0 | .5 |
| 93 | MP3A | Mx | -.135 | .5 |
| 94 | MP3A | X | 124.967 | 4.5 |
| 95 | MP3A | Z | 0 | 4.5 |
| 96 | MP3A | Mx | -.135 | 4.5 |
| 97 | MP3B | X | 173.945 | .5 |
| 98 | MP3B | Z | 0 | .5 |
| 99 | MP3B | Mx | .182 | .5 |
| 100 | MP3B | X | 173.945 | 4.5 |
| 101 | MP3B | Z | 0 | 4.5 |
| 102 | MP3B | Mx | .182 | 4.5 |
| 103 | MP3C | X | 173.945 | .5 |
| 104 | MP3C | Z | 0 | .5 |
| 105 | MP3C | Mx | .006 | .5 |
| 106 | MP3C | X | 173.945 | 4.5 |
| 107 | MP3C | Z | 0 | 4.5 |
| 108 | MP3C | Mx | .006 | 4.5 |
| 109 | MP1B | X | 125.066 | .5 |
| 110 | MP1B | Z | 0 | .5 |
| 111 | MP1B | Mx | .078 | .5 |
| 112 | MP1B | X | 125.066 | 3.5 |
| 113 | MP1B | Z | 0 | 3.5 |
| 114 | MP1B | Mx | .078 | 3.5 |
| 115 | MP5B | X | 125.066 | .5 |
| 116 | MP5B | Z | 0 | .5 |
| 117 | MP5B | Mx | .078 | .5 |
| 118 | MP5B | X | 125.066 | 3.5 |
| 119 | MP5B | Z | 0 | 3.5 |
| 120 | MP5B | Mx | .078 | 3.5 |
| 121 | MP3A | X | 43.443 | 2 |
| 122 | MP3A | Z | 0 | 2 |
| 123 | MP3A | Mx | .033 | 2 |
| 124 | MP3B | X | 59.42 | 2 |
| 125 | MP3B | Z | 0 | 2 |
| 126 | MP3B | Mx | -.022 | 2 |
| 127 | MP3C | X | 59.42 | 2 |
| 128 | MP3C | Z | 0 | 2 |
| 129 | MP3C | Mx | -.022 | 2 |
| 130 | MP2A | X | 35.506 | 2 |
| 131 | MP2A | Z | 0 | 2 |
| 132 | MP2A | Mx | .024 | 2 |
| 133 | MP2B | X | 57.436 | 2 |
| 134 | MP2B | Z | 0 | 2 |
| 135 | MP2B | Mx | -.019 | 2 |
| 136 | MP2C | X | 57.436 | 2 |
| 137 | MP2C | Z | 0 | 2 |

## Member Point Loads (BLC 6 : Antenna Wo (90 Deg)) (Continued)

| | Member Label | Direction | Magnitude[lb,k-ft] | Location[ft,%] |
|---|---|---|---|---|
| 138 | MP2C | Mx | -.019 | 2 |

## Member Point Loads (BLC 7 : Antenna Wo (120 Deg))

| | Member Label | Direction | Magnitude[lb,k-ft] | Location[ft,%] |
|---|---|---|---|---|
| 1 | MP1A | X | 85.042 | .5 |
| 2 | MP1A | Z | 49.099 | .5 |
| 3 | MP1A | Mx | -.106 | .5 |
| 4 | MP1A | X | 85.042 | 3.5 |
| 5 | MP1A | Z | 49.099 | 3.5 |
| 6 | MP1A | Mx | -.106 | 3.5 |
| 7 | MP1C | X | 85.042 | .5 |
| 8 | MP1C | Z | 49.099 | .5 |
| 9 | MP1C | Mx | .106 | .5 |
| 10 | MP1C | X | 85.042 | 3.5 |
| 11 | MP1C | Z | 49.099 | 3.5 |
| 12 | MP1C | Mx | .106 | 3.5 |
| 13 | MP5A | X | 85.042 | .5 |
| 14 | MP5A | Z | 49.099 | .5 |
| 15 | MP5A | Mx | -.106 | .5 |
| 16 | MP5A | X | 85.042 | 3.5 |
| 17 | MP5A | Z | 49.099 | 3.5 |
| 18 | MP5A | Mx | -.106 | 3.5 |
| 19 | MP5C | X | 85.042 | .5 |
| 20 | MP5C | Z | 49.099 | .5 |
| 21 | MP5C | Mx | .106 | .5 |
| 22 | MP5C | X | 85.042 | 3.5 |
| 23 | MP5C | Z | 49.099 | 3.5 |
| 24 | MP5C | Mx | .106 | 3.5 |
| 25 | MPA2 | X | 10.292 | 3 |
| 26 | MPA2 | Z | 5.942 | 3 |
| 27 | MPA2 | Mx | -.001 | 3 |
| 28 | MP4A | X | 97.674 | 2 |
| 29 | MP4A | Z | 56.392 | 2 |
| 30 | MP4A | Mx | .049 | 2 |
| 31 | MPB2 | X | 13.385 | 3 |
| 32 | MPB2 | Z | 7.728 | 3 |
| 33 | MPB2 | Mx | .004 | 3 |
| 34 | MPC2 | X | 10.292 | 3 |
| 35 | MPC2 | Z | 5.942 | 3 |
| 36 | MPC2 | Mx | -.001 | 3 |
| 37 | MP3A | X | 16.582 | 4.5 |
| 38 | MP3A | Z | 9.574 | 4.5 |
| 39 | MP3A | Mx | .02 | 4.5 |
| 40 | MP3B | X | 34.728 | 4.5 |
| 41 | MP3B | Z | 20.05 | 4.5 |
| 42 | MP3B | Mx | -.013 | 4.5 |
| 43 | MP3C | X | 16.582 | 4.5 |
| 44 | MP3C | Z | 9.574 | 4.5 |
| 45 | MP3C | Mx | -.013 | 4.5 |
| 46 | MP3A | X | 16.582 | 4.5 |
| 47 | MP3A | Z | 9.574 | 4.5 |

## Member Point Loads (BLC 7 : Antenna Wo (120 Deg)) (Continued)

| | Member Label | Direction | Magnitude[lb,k-ft] | Location[ft,%] |
|---|---|---|---|---|
| 48 | MP3A | Mx | .013 | 4.5 |
| 49 | MP3B | X | 34.728 | 4.5 |
| 50 | MP3B | Z | 20.05 | 4.5 |
| 51 | MP3B | Mx | .013 | 4.5 |
| 52 | MP3C | X | 16.582 | 4.5 |
| 53 | MP3C | Z | 9.574 | 4.5 |
| 54 | MP3C | Mx | -.02 | 4.5 |
| 55 | MP4A | X | 36.04 | 1 |
| 56 | MP4A | Z | 20.808 | 1 |
| 57 | MP4A | Mx | -.018 | 1 |
| 58 | MP4A | X | 36.04 | 3 |
| 59 | MP4A | Z | 20.808 | 3 |
| 60 | MP4A | Mx | -.018 | 3 |
| 61 | MP4B | X | 70.904 | 1 |
| 62 | MP4B | Z | 40.936 | 1 |
| 63 | MP4B | Mx | 0 | 1 |
| 64 | MP4B | X | 70.904 | 3 |
| 65 | MP4B | Z | 40.936 | 3 |
| 66 | MP4B | Mx | 0 | 3 |
| 67 | MP4C | X | 36.04 | 1 |
| 68 | MP4C | Z | 20.808 | 1 |
| 69 | MP4C | Mx | .018 | 1 |
| 70 | MP4C | X | 36.04 | 3 |
| 71 | MP4C | Z | 20.808 | 3 |
| 72 | MP4C | Mx | .018 | 3 |
| 73 | MP3A | X | 122.363 | .5 |
| 74 | MP3A | Z | 70.647 | .5 |
| 75 | MP3A | Mx | -.091 | .5 |
| 76 | MP3A | X | 122.363 | 4.5 |
| 77 | MP3A | Z | 70.647 | 4.5 |
| 78 | MP3A | Mx | -.091 | 4.5 |
| 79 | MP3B | X | 164.779 | .5 |
| 80 | MP3B | Z | 95.135 | .5 |
| 81 | MP3B | Mx | -.111 | .5 |
| 82 | MP3B | X | 164.779 | 4.5 |
| 83 | MP3B | Z | 95.135 | 4.5 |
| 84 | MP3B | Mx | -.111 | 4.5 |
| 85 | MP3C | X | 122.363 | .5 |
| 86 | MP3C | Z | 70.647 | .5 |
| 87 | MP3C | Mx | .174 | .5 |
| 88 | MP3C | X | 122.363 | 4.5 |
| 89 | MP3C | Z | 70.647 | 4.5 |
| 90 | MP3C | Mx | .174 | 4.5 |
| 91 | MP3A | X | 122.363 | .5 |
| 92 | MP3A | Z | 70.647 | .5 |
| 93 | MP3A | Mx | -.174 | .5 |
| 94 | MP3A | X | 122.363 | 4.5 |
| 95 | MP3A | Z | 70.647 | 4.5 |
| 96 | MP3A | Mx | -.174 | 4.5 |
| 97 | MP3B | X | 164.779 | .5 |
| 98 | MP3B | Z | 95.135 | .5 |
| 99 | MP3B | Mx | .111 | .5 |

## Member Point Loads (BLC 7 : Antenna Wo (120 Deg)) (Continued)

| | Member Label | Direction | Magnitude[lb,k-ft] | Location[ft,%] |
|---|---|---|---|---|
| 100 | MP3B | X | 164.779 | 4.5 |
| 101 | MP3B | Z | 95.135 | 4.5 |
| 102 | MP3B | Mx | .111 | 4.5 |
| 103 | MP3C | X | 122.363 | .5 |
| 104 | MP3C | Z | 70.647 | .5 |
| 105 | MP3C | Mx | .091 | .5 |
| 106 | MP3C | X | 122.363 | 4.5 |
| 107 | MP3C | Z | 70.647 | 4.5 |
| 108 | MP3C | Mx | .091 | 4.5 |
| 109 | MP1B | X | 111.239 | .5 |
| 110 | MP1B | Z | 64.224 | .5 |
| 111 | MP1B | Mx | 0 | .5 |
| 112 | MP1B | X | 111.239 | 3.5 |
| 113 | MP1B | Z | 64.224 | 3.5 |
| 114 | MP1B | Mx | 0 | 3.5 |
| 115 | MP5B | X | 111.239 | .5 |
| 116 | MP5B | Z | 64.224 | .5 |
| 117 | MP5B | Mx | 0 | .5 |
| 118 | MP5B | X | 111.239 | 3.5 |
| 119 | MP5B | Z | 64.224 | 3.5 |
| 120 | MP5B | Mx | 0 | 3.5 |
| 121 | MP3A | X | 42.235 | 2 |
| 122 | MP3A | Z | 24.384 | 2 |
| 123 | MP3A | Mx | .032 | 2 |
| 124 | MP3B | X | 56.072 | 2 |
| 125 | MP3B | Z | 32.373 | 2 |
| 126 | MP3B | Mx | 0 | 2 |
| 127 | MP3C | X | 42.235 | 2 |
| 128 | MP3C | Z | 24.384 | 2 |
| 129 | MP3C | Mx | -.032 | 2 |
| 130 | MP2A | X | 37.08 | 2 |
| 131 | MP2A | Z | 21.408 | 2 |
| 132 | MP2A | Mx | .025 | 2 |
| 133 | MP2B | X | 56.072 | 2 |
| 134 | MP2B | Z | 32.373 | 2 |
| 135 | MP2B | Mx | 0 | 2 |
| 136 | MP2C | X | 37.08 | 2 |
| 137 | MP2C | Z | 21.408 | 2 |
| 138 | MP2C | Mx | -.025 | 2 |

## Member Point Loads (BLC 8 : Antenna Wo (150 Deg))

| | Member Label | Direction | Magnitude[lb,k-ft] | Location[ft,%] |
|---|---|---|---|---|
| 1 | MP1A | X | 34.537 | .5 |
| 2 | MP1A | Z | 59.82 | .5 |
| 3 | MP1A | Mx | -.043 | .5 |
| 4 | MP1A | X | 34.537 | 3.5 |
| 5 | MP1A | Z | 59.82 | 3.5 |
| 6 | MP1A | Mx | -.043 | 3.5 |
| 7 | MP1C | X | 56.38 | .5 |
| 8 | MP1C | Z | 97.653 | .5 |
| 9 | MP1C | Mx | .141 | .5 |

## Member Point Loads (BLC 8 : Antenna Wo (150 Deg)) (Continued)

| | Member Label | Direction | Magnitude[lb,k-ft] | Location[ft,%] |
|---|---|---|---|---|
| 10 | MP1C | X | 56.38 | 3.5 |
| 11 | MP1C | Z | 97.653 | 3.5 |
| 12 | MP1C | Mx | .141 | 3.5 |
| 13 | MP5A | X | 34.537 | .5 |
| 14 | MP5A | Z | 59.82 | .5 |
| 15 | MP5A | Mx | -.043 | .5 |
| 16 | MP5A | X | 34.537 | 3.5 |
| 17 | MP5A | Z | 59.82 | 3.5 |
| 18 | MP5A | Mx | -.043 | 3.5 |
| 19 | MP5C | X | 56.38 | .5 |
| 20 | MP5C | Z | 97.653 | .5 |
| 21 | MP5C | Mx | .141 | .5 |
| 22 | MP5C | X | 56.38 | 3.5 |
| 23 | MP5C | Z | 97.653 | 3.5 |
| 24 | MP5C | Mx | .141 | 3.5 |
| 25 | MPA2 | X | 7.133 | 3 |
| 26 | MPA2 | Z | 12.354 | 3 |
| 27 | MPA2 | Mx | -.003 | 3 |
| 28 | MP4A | X | 85.632 | 2 |
| 29 | MP4A | Z | 148.319 | 2 |
| 30 | MP4A | Mx | .043 | 2 |
| 31 | MPB2 | X | 7.133 | 3 |
| 32 | MPB2 | Z | 12.354 | 3 |
| 33 | MPB2 | Mx | .003 | 3 |
| 34 | MPC2 | X | 5.347 | 3 |
| 35 | MPC2 | Z | 9.261 | 3 |
| 36 | MPC2 | Mx | 0 | 3 |
| 37 | MP3A | X | 16.558 | 4.5 |
| 38 | MP3A | Z | 28.68 | 4.5 |
| 39 | MP3A | Mx | .026 | 4.5 |
| 40 | MP3B | X | 16.558 | 4.5 |
| 41 | MP3B | Z | 28.68 | 4.5 |
| 42 | MP3B | Mx | .007 | 4.5 |
| 43 | MP3C | X | 6.081 | 4.5 |
| 44 | MP3C | Z | 10.533 | 4.5 |
| 45 | MP3C | Mx | -.012 | 4.5 |
| 46 | MP3A | X | 16.558 | 4.5 |
| 47 | MP3A | Z | 28.68 | 4.5 |
| 48 | MP3A | Mx | .007 | 4.5 |
| 49 | MP3B | X | 16.558 | 4.5 |
| 50 | MP3B | Z | 28.68 | 4.5 |
| 51 | MP3B | Mx | .026 | 4.5 |
| 52 | MP3C | X | 6.081 | 4.5 |
| 53 | MP3C | Z | 10.533 | 4.5 |
| 54 | MP3C | Mx | -.012 | 4.5 |
| 55 | MP4A | X | 34.227 | 1 |
| 56 | MP4A | Z | 59.282 | 1 |
| 57 | MP4A | Mx | -.017 | 1 |
| 58 | MP4A | X | 34.227 | 3 |
| 59 | MP4A | Z | 59.282 | 3 |
| 60 | MP4A | Mx | -.017 | 3 |
| 61 | MP4B | X | 34.227 | 1 |

## Member Point Loads (BLC 8 : Antenna Wo (150 Deg)) (Continued)

| | Member Label | Direction | Magnitude[lb,k-ft] | Location[ft,%] |
|---|---|---|---|---|
| 62 | MP4B | Z | 59.282 | 1 |
| 63 | MP4B | Mx | -.017 | 1 |
| 64 | MP4B | X | 34.227 | 3 |
| 65 | MP4B | Z | 59.282 | 3 |
| 66 | MP4B | Mx | -.017 | 3 |
| 67 | MP4C | X | 14.098 | 1 |
| 68 | MP4C | Z | 24.418 | 1 |
| 69 | MP4C | Mx | .014 | 1 |
| 70 | MP4C | X | 14.098 | 3 |
| 71 | MP4C | Z | 24.418 | 3 |
| 72 | MP4C | Mx | .014 | 3 |
| 73 | MP3A | X | 86.972 | .5 |
| 74 | MP3A | Z | 150.641 | .5 |
| 75 | MP3A | Mx | -.006 | .5 |
| 76 | MP3A | X | 86.972 | 4.5 |
| 77 | MP3A | Z | 150.641 | 4.5 |
| 78 | MP3A | Mx | -.006 | 4.5 |
| 79 | MP3B | X | 86.972 | .5 |
| 80 | MP3B | Z | 150.641 | .5 |
| 81 | MP3B | Mx | -.182 | .5 |
| 82 | MP3B | X | 86.972 | 4.5 |
| 83 | MP3B | Z | 150.641 | 4.5 |
| 84 | MP3B | Mx | -.182 | 4.5 |
| 85 | MP3C | X | 62.484 | .5 |
| 86 | MP3C | Z | 108.225 | .5 |
| 87 | MP3C | Mx | .135 | .5 |
| 88 | MP3C | X | 62.484 | 4.5 |
| 89 | MP3C | Z | 108.225 | 4.5 |
| 90 | MP3C | Mx | .135 | 4.5 |
| 91 | MP3A | X | 86.972 | .5 |
| 92 | MP3A | Z | 150.641 | .5 |
| 93 | MP3A | Mx | -.182 | .5 |
| 94 | MP3A | X | 86.972 | 4.5 |
| 95 | MP3A | Z | 150.641 | 4.5 |
| 96 | MP3A | Mx | -.182 | 4.5 |
| 97 | MP3B | X | 86.972 | .5 |
| 98 | MP3B | Z | 150.641 | .5 |
| 99 | MP3B | Mx | -.006 | .5 |
| 100 | MP3B | X | 86.972 | 4.5 |
| 101 | MP3B | Z | 150.641 | 4.5 |
| 102 | MP3B | Mx | -.006 | 4.5 |
| 103 | MP3C | X | 62.484 | .5 |
| 104 | MP3C | Z | 108.225 | .5 |
| 105 | MP3C | Mx | .135 | .5 |
| 106 | MP3C | X | 62.484 | 4.5 |
| 107 | MP3C | Z | 108.225 | 4.5 |
| 108 | MP3C | Mx | .135 | 4.5 |
| 109 | MP1B | X | 62.533 | .5 |
| 110 | MP1B | Z | 108.31 | .5 |
| 111 | MP1B | Mx | -.078 | .5 |
| 112 | MP1B | X | 62.533 | 3.5 |
| 113 | MP1B | Z | 108.31 | 3.5 |

## Member Point Loads (BLC 8 : Antenna Wo (150 Deg)) (Continued)

| | Member Label | Direction | Magnitude[lb,k-ft] | Location[ft,%] |
|---|---|---|---|---|
| 114 | MP1B | Mx | -.078 | 3.5 |
| 115 | MP5B | X | 62.533 | .5 |
| 116 | MP5B | Z | 108.31 | .5 |
| 117 | MP5B | Mx | -.078 | .5 |
| 118 | MP5B | X | 62.533 | 3.5 |
| 119 | MP5B | Z | 108.31 | 3.5 |
| 120 | MP5B | Mx | -.078 | 3.5 |
| 121 | MP3A | X | 29.71 | 2 |
| 122 | MP3A | Z | 51.46 | 2 |
| 123 | MP3A | Mx | .022 | 2 |
| 124 | MP3B | X | 29.71 | 2 |
| 125 | MP3B | Z | 51.46 | 2 |
| 126 | MP3B | Mx | .022 | 2 |
| 127 | MP3C | X | 21.721 | 2 |
| 128 | MP3C | Z | 37.622 | 2 |
| 129 | MP3C | Mx | -.033 | 2 |
| 130 | MP2A | X | 28.718 | 2 |
| 131 | MP2A | Z | 49.741 | 2 |
| 132 | MP2A | Mx | .019 | 2 |
| 133 | MP2B | X | 28.718 | 2 |
| 134 | MP2B | Z | 49.741 | 2 |
| 135 | MP2B | Mx | .019 | 2 |
| 136 | MP2C | X | 17.753 | 2 |
| 137 | MP2C | Z | 30.749 | 2 |
| 138 | MP2C | Mx | -.024 | 2 |

## Member Point Loads (BLC 9 : Antenna Wo (180 Deg))

| | Member Label | Direction | Magnitude[lb,k-ft] | Location[ft,%] |
|---|---|---|---|---|
| 1 | MP1A | X | 0 | .5 |
| 2 | MP1A | Z | 54.512 | .5 |
| 3 | MP1A | Mx | 0 | .5 |
| 4 | MP1A | X | 0 | 3.5 |
| 5 | MP1A | Z | 54.512 | 3.5 |
| 6 | MP1A | Mx | 0 | 3.5 |
| 7 | MP1C | X | 0 | .5 |
| 8 | MP1C | Z | 98.198 | .5 |
| 9 | MP1C | Mx | .106 | .5 |
| 10 | MP1C | X | 0 | 3.5 |
| 11 | MP1C | Z | 98.198 | 3.5 |
| 12 | MP1C | Mx | .106 | 3.5 |
| 13 | MP5A | X | 0 | .5 |
| 14 | MP5A | Z | 54.512 | .5 |
| 15 | MP5A | Mx | 0 | .5 |
| 16 | MP5A | X | 0 | 3.5 |
| 17 | MP5A | Z | 54.512 | 3.5 |
| 18 | MP5A | Mx | 0 | 3.5 |
| 19 | MP5C | X | 0 | .5 |
| 20 | MP5C | Z | 98.198 | .5 |
| 21 | MP5C | Mx | .106 | .5 |
| 22 | MP5C | X | 0 | 3.5 |
| 23 | MP5C | Z | 98.198 | 3.5 |

## Member Point Loads (BLC 9 : Antenna Wo (180 Deg)) (Continued)

| | Member Label | Direction | Magnitude[lb,k-ft] | Location[ft,%] |
|---|---|---|---|---|
| 24 | MP5C | Mx | .106 | 3.5 |
| 25 | MPA2 | X | 0 | 3 |
| 26 | MPA2 | Z | 15.456 | 3 |
| 27 | MPA2 | Mx | -.004 | 3 |
| 28 | MP4A | X | 0 | 2 |
| 29 | MP4A | Z | 200.505 | 2 |
| 30 | MP4A | Mx | 0 | 2 |
| 31 | MPB2 | X | 0 | 3 |
| 32 | MPB2 | Z | 11.884 | 3 |
| 33 | MPB2 | Mx | .001 | 3 |
| 34 | MPC2 | X | 0 | 3 |
| 35 | MPC2 | Z | 11.884 | 3 |
| 36 | MPC2 | Mx | .001 | 3 |
| 37 | MP3A | X | 0 | 4.5 |
| 38 | MP3A | Z | 40.101 | 4.5 |
| 39 | MP3A | Mx | .013 | 4.5 |
| 40 | MP3B | X | 0 | 4.5 |
| 41 | MP3B | Z | 19.147 | 4.5 |
| 42 | MP3B | Mx | .013 | 4.5 |
| 43 | MP3C | X | 0 | 4.5 |
| 44 | MP3C | Z | 19.147 | 4.5 |
| 45 | MP3C | Mx | -.02 | 4.5 |
| 46 | MP3A | X | 0 | 4.5 |
| 47 | MP3A | Z | 40.101 | 4.5 |
| 48 | MP3A | Mx | -.013 | 4.5 |
| 49 | MP3B | X | 0 | 4.5 |
| 50 | MP3B | Z | 19.147 | 4.5 |
| 51 | MP3B | Mx | .02 | 4.5 |
| 52 | MP3C | X | 0 | 4.5 |
| 53 | MP3C | Z | 19.147 | 4.5 |
| 54 | MP3C | Mx | -.013 | 4.5 |
| 55 | MP4A | X | 0 | 1 |
| 56 | MP4A | Z | 81.873 | 1 |
| 57 | MP4A | Mx | 0 | 1 |
| 58 | MP4A | X | 0 | 3 |
| 59 | MP4A | Z | 81.873 | 3 |
| 60 | MP4A | Mx | 0 | 3 |
| 61 | MP4B | X | 0 | 1 |
| 62 | MP4B | Z | 41.615 | 1 |
| 63 | MP4B | Mx | -.018 | 1 |
| 64 | MP4B | X | 0 | 3 |
| 65 | MP4B | Z | 41.615 | 3 |
| 66 | MP4B | Mx | -.018 | 3 |
| 67 | MP4C | X | 0 | 1 |
| 68 | MP4C | Z | 41.615 | 1 |
| 69 | MP4C | Mx | .018 | 1 |
| 70 | MP4C | X | 0 | 3 |
| 71 | MP4C | Z | 41.615 | 3 |
| 72 | MP4C | Mx | .018 | 3 |
| 73 | MP3A | X | 0 | .5 |
| 74 | MP3A | Z | 190.27 | .5 |
| 75 | MP3A | Mx | .111 | .5 |

## Member Point Loads (BLC 9 : Antenna Wo (180 Deg)) (Continued)

| | Member Label | Direction | Magnitude[lb,k-ft] | Location[ft,%] |
|---|---|---|---|---|
| 76 | MP3A | X | 0 | 4.5 |
| 77 | MP3A | Z | 190.27 | 4.5 |
| 78 | MP3A | Mx | .111 | 4.5 |
| 79 | MP3B | X | 0 | .5 |
| 80 | MP3B | Z | 141.293 | .5 |
| 81 | MP3B | Mx | -.174 | .5 |
| 82 | MP3B | X | 0 | 4.5 |
| 83 | MP3B | Z | 141.293 | 4.5 |
| 84 | MP3B | Mx | -.174 | 4.5 |
| 85 | MP3C | X | 0 | .5 |
| 86 | MP3C | Z | 141.293 | .5 |
| 87 | MP3C | Mx | .091 | .5 |
| 88 | MP3C | X | 0 | 4.5 |
| 89 | MP3C | Z | 141.293 | 4.5 |
| 90 | MP3C | Mx | .091 | 4.5 |
| 91 | MP3A | X | 0 | .5 |
| 92 | MP3A | Z | 190.27 | .5 |
| 93 | MP3A | Mx | -.111 | .5 |
| 94 | MP3A | X | 0 | 4.5 |
| 95 | MP3A | Z | 190.27 | 4.5 |
| 96 | MP3A | Mx | -.111 | 4.5 |
| 97 | MP3B | X | 0 | .5 |
| 98 | MP3B | Z | 141.293 | .5 |
| 99 | MP3B | Mx | -.091 | .5 |
| 100 | MP3B | X | 0 | 4.5 |
| 101 | MP3B | Z | 141.293 | 4.5 |
| 102 | MP3B | Mx | -.091 | 4.5 |
| 103 | MP3C | X | 0 | .5 |
| 104 | MP3C | Z | 141.293 | .5 |
| 105 | MP3C | Mx | .174 | .5 |
| 106 | MP3C | X | 0 | 4.5 |
| 107 | MP3C | Z | 141.293 | 4.5 |
| 108 | MP3C | Mx | .174 | 4.5 |
| 109 | MP1B | X | 0 | .5 |
| 110 | MP1B | Z | 118.301 | .5 |
| 111 | MP1B | Mx | -.128 | .5 |
| 112 | MP1B | X | 0 | 3.5 |
| 113 | MP1B | Z | 118.301 | 3.5 |
| 114 | MP1B | Mx | -.128 | 3.5 |
| 115 | MP5B | X | 0 | .5 |
| 116 | MP5B | Z | 118.301 | .5 |
| 117 | MP5B | Mx | -.128 | .5 |
| 118 | MP5B | X | 0 | 3.5 |
| 119 | MP5B | Z | 118.301 | 3.5 |
| 120 | MP5B | Mx | -.128 | 3.5 |
| 121 | MP3A | X | 0 | 2 |
| 122 | MP3A | Z | 64.746 | 2 |
| 123 | MP3A | Mx | 0 | 2 |
| 124 | MP3B | X | 0 | 2 |
| 125 | MP3B | Z | 48.769 | 2 |
| 126 | MP3B | Mx | .032 | 2 |
| 127 | MP3C | X | 0 | 2 |

## Member Point Loads (BLC 9 : Antenna Wo (180 Deg)) (Continued)

| | Member Label | Direction | Magnitude[lb,k-ft] | Location[ft,%] |
|---|---|---|---|---|
| 128 | MP3C | Z | 48.769 | 2 |
| 129 | MP3C | Mx | -.032 | 2 |
| 130 | MP2A | X | 0 | 2 |
| 131 | MP2A | Z | 64.746 | 2 |
| 132 | MP2A | Mx | 0 | 2 |
| 133 | MP2B | X | 0 | 2 |
| 134 | MP2B | Z | 42.816 | 2 |
| 135 | MP2B | Mx | .025 | 2 |
| 136 | MP2C | X | 0 | 2 |
| 137 | MP2C | Z | 42.816 | 2 |
| 138 | MP2C | Mx | -.025 | 2 |

## Member Point Loads (BLC 10 : Antenna Wo (210 Deg))

| | Member Label | Direction | Magnitude[lb,k-ft] | Location[ft,%] |
|---|---|---|---|---|
| 1 | MP1A | X | -34.537 | .5 |
| 2 | MP1A | Z | 59.82 | .5 |
| 3 | MP1A | Mx | .043 | .5 |
| 4 | MP1A | X | -34.537 | 3.5 |
| 5 | MP1A | Z | 59.82 | 3.5 |
| 6 | MP1A | Mx | .043 | 3.5 |
| 7 | MP1C | X | -34.537 | .5 |
| 8 | MP1C | Z | 59.82 | .5 |
| 9 | MP1C | Mx | .043 | .5 |
| 10 | MP1C | X | -34.537 | 3.5 |
| 11 | MP1C | Z | 59.82 | 3.5 |
| 12 | MP1C | Mx | .043 | 3.5 |
| 13 | MP5A | X | -34.537 | .5 |
| 14 | MP5A | Z | 59.82 | .5 |
| 15 | MP5A | Mx | .043 | .5 |
| 16 | MP5A | X | -34.537 | 3.5 |
| 17 | MP5A | Z | 59.82 | 3.5 |
| 18 | MP5A | Mx | .043 | 3.5 |
| 19 | MP5C | X | -34.537 | .5 |
| 20 | MP5C | Z | 59.82 | .5 |
| 21 | MP5C | Mx | .043 | .5 |
| 22 | MP5C | X | -34.537 | 3.5 |
| 23 | MP5C | Z | 59.82 | 3.5 |
| 24 | MP5C | Mx | .043 | 3.5 |
| 25 | MPA2 | X | -7.133 | 3 |
| 26 | MPA2 | Z | 12.354 | 3 |
| 27 | MPA2 | Mx | -.003 | 3 |
| 28 | MP4A | X | -85.632 | 2 |
| 29 | MP4A | Z | 148.319 | 2 |
| 30 | MP4A | Mx | -.043 | 2 |
| 31 | MPB2 | X | -5.347 | 3 |
| 32 | MPB2 | Z | 9.261 | 3 |
| 33 | MPB2 | Mx | 0 | 3 |
| 34 | MPC2 | X | -7.133 | 3 |
| 35 | MPC2 | Z | 12.354 | 3 |
| 36 | MPC2 | Mx | .003 | 3 |
| 37 | MP3A | X | -16.558 | 4.5 |

## Member Point Loads (BLC 10 : Antenna Wo (210 Deg)) (Continued)

| | Member Label | Direction | Magnitude[lb,k-ft] | Location[ft,%] |
|---|---|---|---|---|
| 38 | MP3A | Z | 28.68 | 4.5 |
| 39 | MP3A | Mx | -.007 | 4.5 |
| 40 | MP3B | X | -6.081 | 4.5 |
| 41 | MP3B | Z | 10.533 | 4.5 |
| 42 | MP3B | Mx | .012 | 4.5 |
| 43 | MP3C | X | -16.558 | 4.5 |
| 44 | MP3C | Z | 28.68 | 4.5 |
| 45 | MP3C | Mx | -.026 | 4.5 |
| 46 | MP3A | X | -16.558 | 4.5 |
| 47 | MP3A | Z | 28.68 | 4.5 |
| 48 | MP3A | Mx | -.026 | 4.5 |
| 49 | MP3B | X | -6.081 | 4.5 |
| 50 | MP3B | Z | 10.533 | 4.5 |
| 51 | MP3B | Mx | .012 | 4.5 |
| 52 | MP3C | X | -16.558 | 4.5 |
| 53 | MP3C | Z | 28.68 | 4.5 |
| 54 | MP3C | Mx | -.007 | 4.5 |
| 55 | MP4A | X | -34.227 | 1 |
| 56 | MP4A | Z | 59.282 | 1 |
| 57 | MP4A | Mx | .017 | 1 |
| 58 | MP4A | X | -34.227 | 3 |
| 59 | MP4A | Z | 59.282 | 3 |
| 60 | MP4A | Mx | .017 | 3 |
| 61 | MP4B | X | -14.098 | 1 |
| 62 | MP4B | Z | 24.418 | 1 |
| 63 | MP4B | Mx | -.014 | 1 |
| 64 | MP4B | X | -14.098 | 3 |
| 65 | MP4B | Z | 24.418 | 3 |
| 66 | MP4B | Mx | -.014 | 3 |
| 67 | MP4C | X | -34.227 | 1 |
| 68 | MP4C | Z | 59.282 | 1 |
| 69 | MP4C | Mx | .017 | 1 |
| 70 | MP4C | X | -34.227 | 3 |
| 71 | MP4C | Z | 59.282 | 3 |
| 72 | MP4C | Mx | .017 | 3 |
| 73 | MP3A | X | -86.972 | .5 |
| 74 | MP3A | Z | 150.641 | .5 |
| 75 | MP3A | Mx | .182 | .5 |
| 76 | MP3A | X | -86.972 | 4.5 |
| 77 | MP3A | Z | 150.641 | 4.5 |
| 78 | MP3A | Mx | .182 | 4.5 |
| 79 | MP3B | X | -62.484 | .5 |
| 80 | MP3B | Z | 108.225 | .5 |
| 81 | MP3B | Mx | -.135 | .5 |
| 82 | MP3B | X | -62.484 | 4.5 |
| 83 | MP3B | Z | 108.225 | 4.5 |
| 84 | MP3B | Mx | -.135 | 4.5 |
| 85 | MP3C | X | -86.972 | .5 |
| 86 | MP3C | Z | 150.641 | .5 |
| 87 | MP3C | Mx | .006 | .5 |
| 88 | MP3C | X | -86.972 | 4.5 |
| 89 | MP3C | Z | 150.641 | 4.5 |

## Member Point Loads (BLC 10 : Antenna Wo (210 Deg)) (Continued)

| | Member Label | Direction | Magnitude[lb,k-ft] | Location[ft,%] |
|---|---|---|---|---|
| 90 | MP3C | Mx | .006 | 4.5 |
| 91 | MP3A | X | -86.972 | .5 |
| 92 | MP3A | Z | 150.641 | .5 |
| 93 | MP3A | Mx | .006 | .5 |
| 94 | MP3A | X | -86.972 | 4.5 |
| 95 | MP3A | Z | 150.641 | 4.5 |
| 96 | MP3A | Mx | .006 | 4.5 |
| 97 | MP3B | X | -62.484 | .5 |
| 98 | MP3B | Z | 108.225 | .5 |
| 99 | MP3B | Mx | -.135 | .5 |
| 100 | MP3B | X | -62.484 | 4.5 |
| 101 | MP3B | Z | 108.225 | 4.5 |
| 102 | MP3B | Mx | -.135 | 4.5 |
| 103 | MP3C | X | -86.972 | .5 |
| 104 | MP3C | Z | 150.641 | .5 |
| 105 | MP3C | Mx | .182 | .5 |
| 106 | MP3C | X | -86.972 | 4.5 |
| 107 | MP3C | Z | 150.641 | 4.5 |
| 108 | MP3C | Mx | .182 | 4.5 |
| 109 | MP1B | X | -57.459 | .5 |
| 110 | MP1B | Z | 99.523 | .5 |
| 111 | MP1B | Mx | -.144 | .5 |
| 112 | MP1B | X | -57.459 | 3.5 |
| 113 | MP1B | Z | 99.523 | 3.5 |
| 114 | MP1B | Mx | -.144 | 3.5 |
| 115 | MP5B | X | -57.459 | .5 |
| 116 | MP5B | Z | 99.523 | .5 |
| 117 | MP5B | Mx | -.144 | .5 |
| 118 | MP5B | X | -57.459 | 3.5 |
| 119 | MP5B | Z | 99.523 | 3.5 |
| 120 | MP5B | Mx | -.144 | 3.5 |
| 121 | MP3A | X | -29.71 | 2 |
| 122 | MP3A | Z | 51.46 | 2 |
| 123 | MP3A | Mx | -.022 | 2 |
| 124 | MP3B | X | -21.721 | 2 |
| 125 | MP3B | Z | 37.622 | 2 |
| 126 | MP3B | Mx | .033 | 2 |
| 127 | MP3C | X | -29.71 | 2 |
| 128 | MP3C | Z | 51.46 | 2 |
| 129 | MP3C | Mx | -.022 | 2 |
| 130 | MP2A | X | -28.718 | 2 |
| 131 | MP2A | Z | 49.741 | 2 |
| 132 | MP2A | Mx | -.019 | 2 |
| 133 | MP2B | X | -17.753 | 2 |
| 134 | MP2B | Z | 30.749 | 2 |
| 135 | MP2B | Mx | .024 | 2 |
| 136 | MP2C | X | -28.718 | 2 |
| 137 | MP2C | Z | 49.741 | 2 |
| 138 | MP2C | Mx | -.019 | 2 |

## Member Point Loads (BLC 11 : Antenna Wo (240 Deg))

| Member Label | Direction | Magnitude[lb,k-ft] | Location[ft,%] |
|---|---|---|---|

## Member Point Loads (BLC 11 : Antenna Wo (240 Deg)) (Continued)

| | Member Label | Direction | Magnitude[lb,k-ft] | Location[ft,%] |
|---|---|---|---|---|
| 1 | MP1A | X | -85.042 | .5 |
| 2 | MP1A | Z | 49.099 | .5 |
| 3 | MP1A | Mx | .106 | .5 |
| 4 | MP1A | X | -85.042 | 3.5 |
| 5 | MP1A | Z | 49.099 | 3.5 |
| 6 | MP1A | Mx | .106 | 3.5 |
| 7 | MP1C | X | -47.209 | .5 |
| 8 | MP1C | Z | 27.256 | .5 |
| 9 | MP1C | Mx | 0 | .5 |
| 10 | MP1C | X | -47.209 | 3.5 |
| 11 | MP1C | Z | 27.256 | 3.5 |
| 12 | MP1C | Mx | 0 | 3.5 |
| 13 | MP5A | X | -85.042 | .5 |
| 14 | MP5A | Z | 49.099 | .5 |
| 15 | MP5A | Mx | .106 | .5 |
| 16 | MP5A | X | -85.042 | 3.5 |
| 17 | MP5A | Z | 49.099 | 3.5 |
| 18 | MP5A | Mx | .106 | 3.5 |
| 19 | MP5C | X | -47.209 | .5 |
| 20 | MP5C | Z | 27.256 | .5 |
| 21 | MP5C | Mx | 0 | .5 |
| 22 | MP5C | X | -47.209 | 3.5 |
| 23 | MP5C | Z | 27.256 | 3.5 |
| 24 | MP5C | Mx | 0 | 3.5 |
| 25 | MPA2 | X | -10.292 | 3 |
| 26 | MPA2 | Z | 5.942 | 3 |
| 27 | MPA2 | Mx | -.001 | 3 |
| 28 | MP4A | X | -97.674 | 2 |
| 29 | MP4A | Z | 56.392 | 2 |
| 30 | MP4A | Mx | -.049 | 2 |
| 31 | MPB2 | X | -10.292 | 3 |
| 32 | MPB2 | Z | 5.942 | 3 |
| 33 | MPB2 | Mx | -.001 | 3 |
| 34 | MPC2 | X | -13.385 | 3 |
| 35 | MPC2 | Z | 7.728 | 3 |
| 36 | MPC2 | Mx | .004 | 3 |
| 37 | MP3A | X | -16.582 | 4.5 |
| 38 | MP3A | Z | 9.574 | 4.5 |
| 39 | MP3A | Mx | -.013 | 4.5 |
| 40 | MP3B | X | -16.582 | 4.5 |
| 41 | MP3B | Z | 9.574 | 4.5 |
| 42 | MP3B | Mx | .02 | 4.5 |
| 43 | MP3C | X | -34.728 | 4.5 |
| 44 | MP3C | Z | 20.05 | 4.5 |
| 45 | MP3C | Mx | -.013 | 4.5 |
| 46 | MP3A | X | -16.582 | 4.5 |
| 47 | MP3A | Z | 9.574 | 4.5 |
| 48 | MP3A | Mx | -.02 | 4.5 |
| 49 | MP3B | X | -16.582 | 4.5 |
| 50 | MP3B | Z | 9.574 | 4.5 |
| 51 | MP3B | Mx | .013 | 4.5 |
| 52 | MP3C | X | -34.728 | 4.5 |

## Member Point Loads (BLC 11 : Antenna Wo (240 Deg)) (Continued)

| | Member Label | Direction | Magnitude[lb,k-ft] | Location[ft,%] |
|---|---|---|---|---|
| 53 | MP3C | Z | 20.05 | 4.5 |
| 54 | MP3C | Mx | .013 | 4.5 |
| 55 | MP4A | X | -36.04 | 1 |
| 56 | MP4A | Z | 20.808 | 1 |
| 57 | MP4A | Mx | .018 | 1 |
| 58 | MP4A | X | -36.04 | 3 |
| 59 | MP4A | Z | 20.808 | 3 |
| 60 | MP4A | Mx | .018 | 3 |
| 61 | MP4B | X | -36.04 | 1 |
| 62 | MP4B | Z | 20.808 | 1 |
| 63 | MP4B | Mx | -.018 | 1 |
| 64 | MP4B | X | -36.04 | 3 |
| 65 | MP4B | Z | 20.808 | 3 |
| 66 | MP4B | Mx | -.018 | 3 |
| 67 | MP4C | X | -70.904 | 1 |
| 68 | MP4C | Z | 40.936 | 1 |
| 69 | MP4C | Mx | 0 | 1 |
| 70 | MP4C | X | -70.904 | 3 |
| 71 | MP4C | Z | 40.936 | 3 |
| 72 | MP4C | Mx | 0 | 3 |
| 73 | MP3A | X | -122.363 | .5 |
| 74 | MP3A | Z | 70.647 | .5 |
| 75 | MP3A | Mx | .174 | .5 |
| 76 | MP3A | X | -122.363 | 4.5 |
| 77 | MP3A | Z | 70.647 | 4.5 |
| 78 | MP3A | Mx | .174 | 4.5 |
| 79 | MP3B | X | -122.363 | .5 |
| 80 | MP3B | Z | 70.647 | .5 |
| 81 | MP3B | Mx | -.091 | .5 |
| 82 | MP3B | X | -122.363 | 4.5 |
| 83 | MP3B | Z | 70.647 | 4.5 |
| 84 | MP3B | Mx | -.091 | 4.5 |
| 85 | MP3C | X | -164.779 | .5 |
| 86 | MP3C | Z | 95.135 | .5 |
| 87 | MP3C | Mx | -.111 | .5 |
| 88 | MP3C | X | -164.779 | 4.5 |
| 89 | MP3C | Z | 95.135 | 4.5 |
| 90 | MP3C | Mx | -.111 | 4.5 |
| 91 | MP3A | X | -122.363 | .5 |
| 92 | MP3A | Z | 70.647 | .5 |
| 93 | MP3A | Mx | .091 | .5 |
| 94 | MP3A | X | -122.363 | 4.5 |
| 95 | MP3A | Z | 70.647 | 4.5 |
| 96 | MP3A | Mx | .091 | 4.5 |
| 97 | MP3B | X | -122.363 | .5 |
| 98 | MP3B | Z | 70.647 | .5 |
| 99 | MP3B | Mx | -.174 | .5 |
| 100 | MP3B | X | -122.363 | 4.5 |
| 101 | MP3B | Z | 70.647 | 4.5 |
| 102 | MP3B | Mx | -.174 | 4.5 |
| 103 | MP3C | X | -164.779 | .5 |
| 104 | MP3C | Z | 95.135 | .5 |

## Member Point Loads (BLC 11 : Antenna Wo (240 Deg)) (Continued)

| | Member Label | Direction | Magnitude[lb,k-ft] | Location[ft,%] |
|---|---|---|---|---|
| 105 | MP3C | Mx | .111 | .5 |
| 106 | MP3C | X | -164.779 | 4.5 |
| 107 | MP3C | Z | 95.135 | 4.5 |
| 108 | MP3C | Mx | .111 | 4.5 |
| 109 | MP1B | X | -102.452 | .5 |
| 110 | MP1B | Z | 59.151 | .5 |
| 111 | MP1B | Mx | -.128 | .5 |
| 112 | MP1B | X | -102.452 | 3.5 |
| 113 | MP1B | Z | 59.151 | 3.5 |
| 114 | MP1B | Mx | -.128 | 3.5 |
| 115 | MP5B | X | -102.452 | .5 |
| 116 | MP5B | Z | 59.151 | .5 |
| 117 | MP5B | Mx | -.128 | .5 |
| 118 | MP5B | X | -102.452 | 3.5 |
| 119 | MP5B | Z | 59.151 | 3.5 |
| 120 | MP5B | Mx | -.128 | 3.5 |
| 121 | MP3A | X | -42.235 | 2 |
| 122 | MP3A | Z | 24.384 | 2 |
| 123 | MP3A | Mx | -.032 | 2 |
| 124 | MP3B | X | -42.235 | 2 |
| 125 | MP3B | Z | 24.384 | 2 |
| 126 | MP3B | Mx | .032 | 2 |
| 127 | MP3C | X | -56.072 | 2 |
| 128 | MP3C | Z | 32.373 | 2 |
| 129 | MP3C | Mx | 0 | 2 |
| 130 | MP2A | X | -37.08 | 2 |
| 131 | MP2A | Z | 21.408 | 2 |
| 132 | MP2A | Mx | -.025 | 2 |
| 133 | MP2B | X | -37.08 | 2 |
| 134 | MP2B | Z | 21.408 | 2 |
| 135 | MP2B | Mx | .025 | 2 |
| 136 | MP2C | X | -56.072 | 2 |
| 137 | MP2C | Z | 32.373 | 2 |
| 138 | MP2C | Mx | 0 | 2 |

## Member Point Loads (BLC 12 : Antenna Wo (270 Deg))

| | Member Label | Direction | Magnitude[lb,k-ft] | Location[ft,%] |
|---|---|---|---|---|
| 1 | MP1A | X | -112.76 | .5 |
| 2 | MP1A | Z | 0 | .5 |
| 3 | MP1A | Mx | .141 | .5 |
| 4 | MP1A | X | -112.76 | 3.5 |
| 5 | MP1A | Z | 0 | 3.5 |
| 6 | MP1A | Mx | .141 | 3.5 |
| 7 | MP1C | X | -69.074 | .5 |
| 8 | MP1C | Z | 0 | .5 |
| 9 | MP1C | Mx | -.043 | .5 |
| 10 | MP1C | X | -69.074 | 3.5 |
| 11 | MP1C | Z | 0 | 3.5 |
| 12 | MP1C | Mx | -.043 | 3.5 |
| 13 | MP5A | X | -112.76 | .5 |
| 14 | MP5A | Z | 0 | .5 |

## Member Point Loads (BLC 12 : Antenna Wo (270 Deg)) (Continued)

| | Member Label | Direction | Magnitude[lb,k-ft] | Location[ft,%] |
|---|---|---|---|---|
| 15 | MP5A | Mx | .141 | .5 |
| 16 | MP5A | X | -112.76 | 3.5 |
| 17 | MP5A | Z | 0 | 3.5 |
| 18 | MP5A | Mx | .141 | 3.5 |
| 19 | MP5C | X | -69.074 | .5 |
| 20 | MP5C | Z | 0 | .5 |
| 21 | MP5C | Mx | -.043 | .5 |
| 22 | MP5C | X | -69.074 | 3.5 |
| 23 | MP5C | Z | 0 | 3.5 |
| 24 | MP5C | Mx | -.043 | 3.5 |
| 25 | MPA2 | X | -10.694 | 3 |
| 26 | MPA2 | Z | 0 | 3 |
| 27 | MPA2 | Mx | 0 | 3 |
| 28 | MP4A | X | -83.544 | 2 |
| 29 | MP4A | Z | 0 | 2 |
| 30 | MP4A | Mx | -.042 | 2 |
| 31 | MPB2 | X | -14.265 | 3 |
| 32 | MPB2 | Z | 0 | 3 |
| 33 | MPB2 | Mx | -.003 | 3 |
| 34 | MPC2 | X | -14.265 | 3 |
| 35 | MPC2 | Z | 0 | 3 |
| 36 | MPC2 | Mx | .003 | 3 |
| 37 | MP3A | X | -12.163 | 4.5 |
| 38 | MP3A | Z | 0 | 4.5 |
| 39 | MP3A | Mx | -.012 | 4.5 |
| 40 | MP3B | X | -33.116 | 4.5 |
| 41 | MP3B | Z | 0 | 4.5 |
| 42 | MP3B | Mx | .026 | 4.5 |
| 43 | MP3C | X | -33.116 | 4.5 |
| 44 | MP3C | Z | 0 | 4.5 |
| 45 | MP3C | Mx | .007 | 4.5 |
| 46 | MP3A | X | -12.163 | 4.5 |
| 47 | MP3A | Z | 0 | 4.5 |
| 48 | MP3A | Mx | -.012 | 4.5 |
| 49 | MP3B | X | -33.116 | 4.5 |
| 50 | MP3B | Z | 0 | 4.5 |
| 51 | MP3B | Mx | .007 | 4.5 |
| 52 | MP3C | X | -33.116 | 4.5 |
| 53 | MP3C | Z | 0 | 4.5 |
| 54 | MP3C | Mx | .026 | 4.5 |
| 55 | MP4A | X | -28.196 | 1 |
| 56 | MP4A | Z | 0 | 1 |
| 57 | MP4A | Mx | .014 | 1 |
| 58 | MP4A | X | -28.196 | 3 |
| 59 | MP4A | Z | 0 | 3 |
| 60 | MP4A | Mx | .014 | 3 |
| 61 | MP4B | X | -68.454 | 1 |
| 62 | MP4B | Z | 0 | 1 |
| 63 | MP4B | Mx | -.017 | 1 |
| 64 | MP4B | X | -68.454 | 3 |
| 65 | MP4B | Z | 0 | 3 |
| 66 | MP4B | Mx | -.017 | 3 |

## Member Point Loads (BLC 12 : Antenna Wo (270 Deg)) (Continued)

| | Member Label | Direction | Magnitude[lb,k-ft] | Location[ft,%] |
|---|---|---|---|---|
| 67 | MP4C | X | -68.454 | 1 |
| 68 | MP4C | Z | 0 | 1 |
| 69 | MP4C | Mx | -.017 | 1 |
| 70 | MP4C | X | -68.454 | 3 |
| 71 | MP4C | Z | 0 | 3 |
| 72 | MP4C | Mx | -.017 | 3 |
| 73 | MP3A | X | -124.967 | .5 |
| 74 | MP3A | Z | 0 | .5 |
| 75 | MP3A | Mx | .135 | .5 |
| 76 | MP3A | X | -124.967 | 4.5 |
| 77 | MP3A | Z | 0 | 4.5 |
| 78 | MP3A | Mx | .135 | 4.5 |
| 79 | MP3B | X | -173.945 | .5 |
| 80 | MP3B | Z | 0 | .5 |
| 81 | MP3B | Mx | -.006 | .5 |
| 82 | MP3B | X | -173.945 | 4.5 |
| 83 | MP3B | Z | 0 | 4.5 |
| 84 | MP3B | Mx | -.006 | 4.5 |
| 85 | MP3C | X | -173.945 | .5 |
| 86 | MP3C | Z | 0 | .5 |
| 87 | MP3C | Mx | -.182 | .5 |
| 88 | MP3C | X | -173.945 | 4.5 |
| 89 | MP3C | Z | 0 | 4.5 |
| 90 | MP3C | Mx | -.182 | 4.5 |
| 91 | MP3A | X | -124.967 | .5 |
| 92 | MP3A | Z | 0 | .5 |
| 93 | MP3A | Mx | .135 | .5 |
| 94 | MP3A | X | -124.967 | 4.5 |
| 95 | MP3A | Z | 0 | 4.5 |
| 96 | MP3A | Mx | .135 | 4.5 |
| 97 | MP3B | X | -173.945 | .5 |
| 98 | MP3B | Z | 0 | .5 |
| 99 | MP3B | Mx | -.182 | .5 |
| 100 | MP3B | X | -173.945 | 4.5 |
| 101 | MP3B | Z | 0 | 4.5 |
| 102 | MP3B | Mx | -.182 | 4.5 |
| 103 | MP3C | X | -173.945 | .5 |
| 104 | MP3C | Z | 0 | .5 |
| 105 | MP3C | Mx | -.006 | .5 |
| 106 | MP3C | X | -173.945 | 4.5 |
| 107 | MP3C | Z | 0 | 4.5 |
| 108 | MP3C | Mx | -.006 | 4.5 |
| 109 | MP1B | X | -125.066 | .5 |
| 110 | MP1B | Z | 0 | .5 |
| 111 | MP1B | Mx | -.078 | .5 |
| 112 | MP1B | X | -125.066 | 3.5 |
| 113 | MP1B | Z | 0 | 3.5 |
| 114 | MP1B | Mx | -.078 | 3.5 |
| 115 | MP5B | X | -125.066 | .5 |
| 116 | MP5B | Z | 0 | .5 |
| 117 | MP5B | Mx | -.078 | .5 |
| 118 | MP5B | X | -125.066 | 3.5 |

## Member Point Loads (BLC 12 : Antenna Wo (270 Deg)) (Continued)

| | Member Label | Direction | Magnitude[lb,k-ft] | Location[ft,%] |
|---|---|---|---|---|
| 119 | MP5B | Z | 0 | 3.5 |
| 120 | MP5B | Mx | -.078 | 3.5 |
| 121 | MP3A | X | -43.443 | 2 |
| 122 | MP3A | Z | 0 | 2 |
| 123 | MP3A | Mx | -.033 | 2 |
| 124 | MP3B | X | -59.42 | 2 |
| 125 | MP3B | Z | 0 | 2 |
| 126 | MP3B | Mx | .022 | 2 |
| 127 | MP3C | X | -59.42 | 2 |
| 128 | MP3C | Z | 0 | 2 |
| 129 | MP3C | Mx | .022 | 2 |
| 130 | MP2A | X | -35.506 | 2 |
| 131 | MP2A | Z | 0 | 2 |
| 132 | MP2A | Mx | -.024 | 2 |
| 133 | MP2B | X | -57.436 | 2 |
| 134 | MP2B | Z | 0 | 2 |
| 135 | MP2B | Mx | .019 | 2 |
| 136 | MP2C | X | -57.436 | 2 |
| 137 | MP2C | Z | 0 | 2 |
| 138 | MP2C | Mx | .019 | 2 |

## Member Point Loads (BLC 13 : Antenna Wo (300 Deg))

| | Member Label | Direction | Magnitude[lb,k-ft] | Location[ft,%] |
|---|---|---|---|---|
| 1 | MP1A | X | -85.042 | .5 |
| 2 | MP1A | Z | -49.099 | .5 |
| 3 | MP1A | Mx | .106 | .5 |
| 4 | MP1A | X | -85.042 | 3.5 |
| 5 | MP1A | Z | -49.099 | 3.5 |
| 6 | MP1A | Mx | .106 | 3.5 |
| 7 | MP1C | X | -85.042 | .5 |
| 8 | MP1C | Z | -49.099 | .5 |
| 9 | MP1C | Mx | -.106 | .5 |
| 10 | MP1C | X | -85.042 | 3.5 |
| 11 | MP1C | Z | -49.099 | 3.5 |
| 12 | MP1C | Mx | -.106 | 3.5 |
| 13 | MP5A | X | -85.042 | .5 |
| 14 | MP5A | Z | -49.099 | .5 |
| 15 | MP5A | Mx | .106 | .5 |
| 16 | MP5A | X | -85.042 | 3.5 |
| 17 | MP5A | Z | -49.099 | 3.5 |
| 18 | MP5A | Mx | .106 | 3.5 |
| 19 | MP5C | X | -85.042 | .5 |
| 20 | MP5C | Z | -49.099 | .5 |
| 21 | MP5C | Mx | -.106 | .5 |
| 22 | MP5C | X | -85.042 | 3.5 |
| 23 | MP5C | Z | -49.099 | 3.5 |
| 24 | MP5C | Mx | -.106 | 3.5 |
| 25 | MPA2 | X | -10.292 | 3 |
| 26 | MPA2 | Z | -5.942 | 3 |
| 27 | MPA2 | Mx | .001 | 3 |
| 28 | MP4A | X | -97.674 | 2 |

## Member Point Loads (BLC 13 : Antenna Wo (300 Deg)) (Continued)

| | Member Label | Direction | Magnitude[lb,k-ft] | Location[ft,%] |
|---|---|---|---|---|
| 29 | MP4A | Z | -56.392 | 2 |
| 30 | MP4A | Mx | -.049 | 2 |
| 31 | MPB2 | X | -13.385 | 3 |
| 32 | MPB2 | Z | -7.728 | 3 |
| 33 | MPB2 | Mx | -.004 | 3 |
| 34 | MPC2 | X | -10.292 | 3 |
| 35 | MPC2 | Z | -5.942 | 3 |
| 36 | MPC2 | Mx | .001 | 3 |
| 37 | MP3A | X | -16.582 | 4.5 |
| 38 | MP3A | Z | -9.574 | 4.5 |
| 39 | MP3A | Mx | -.02 | 4.5 |
| 40 | MP3B | X | -34.728 | 4.5 |
| 41 | MP3B | Z | -20.05 | 4.5 |
| 42 | MP3B | Mx | .013 | 4.5 |
| 43 | MP3C | X | -16.582 | 4.5 |
| 44 | MP3C | Z | -9.574 | 4.5 |
| 45 | MP3C | Mx | .013 | 4.5 |
| 46 | MP3A | X | -16.582 | 4.5 |
| 47 | MP3A | Z | -9.574 | 4.5 |
| 48 | MP3A | Mx | -.013 | 4.5 |
| 49 | MP3B | X | -34.728 | 4.5 |
| 50 | MP3B | Z | -20.05 | 4.5 |
| 51 | MP3B | Mx | -.013 | 4.5 |
| 52 | MP3C | X | -16.582 | 4.5 |
| 53 | MP3C | Z | -9.574 | 4.5 |
| 54 | MP3C | Mx | .02 | 4.5 |
| 55 | MP4A | X | -36.04 | 1 |
| 56 | MP4A | Z | -20.808 | 1 |
| 57 | MP4A | Mx | .018 | 1 |
| 58 | MP4A | X | -36.04 | 3 |
| 59 | MP4A | Z | -20.808 | 3 |
| 60 | MP4A | Mx | .018 | 3 |
| 61 | MP4B | X | -70.904 | 1 |
| 62 | MP4B | Z | -40.936 | 1 |
| 63 | MP4B | Mx | 0 | 1 |
| 64 | MP4B | X | -70.904 | 3 |
| 65 | MP4B | Z | -40.936 | 3 |
| 66 | MP4B | Mx | 0 | 3 |
| 67 | MP4C | X | -36.04 | 1 |
| 68 | MP4C | Z | -20.808 | 1 |
| 69 | MP4C | Mx | -.018 | 1 |
| 70 | MP4C | X | -36.04 | 3 |
| 71 | MP4C | Z | -20.808 | 3 |
| 72 | MP4C | Mx | -.018 | 3 |
| 73 | MP3A | X | -122.363 | .5 |
| 74 | MP3A | Z | -70.647 | .5 |
| 75 | MP3A | Mx | .091 | .5 |
| 76 | MP3A | X | -122.363 | 4.5 |
| 77 | MP3A | Z | -70.647 | 4.5 |
| 78 | MP3A | Mx | .091 | 4.5 |
| 79 | MP3B | X | -164.779 | .5 |
| 80 | MP3B | Z | -95.135 | .5 |

## Member Point Loads (BLC 13 : Antenna Wo (300 Deg)) (Continued)

| | Member Label | Direction | Magnitude[lb,k-ft] | Location[ft,%] |
|---|---|---|---|---|
| 81 | MP3B | Mx | .111 | .5 |
| 82 | MP3B | X | -164.779 | 4.5 |
| 83 | MP3B | Z | -95.135 | 4.5 |
| 84 | MP3B | Mx | .111 | 4.5 |
| 85 | MP3C | X | -122.363 | .5 |
| 86 | MP3C | Z | -70.647 | .5 |
| 87 | MP3C | Mx | -.174 | .5 |
| 88 | MP3C | X | -122.363 | 4.5 |
| 89 | MP3C | Z | -70.647 | 4.5 |
| 90 | MP3C | Mx | -.174 | 4.5 |
| 91 | MP3A | X | -122.363 | .5 |
| 92 | MP3A | Z | -70.647 | .5 |
| 93 | MP3A | Mx | .174 | .5 |
| 94 | MP3A | X | -122.363 | 4.5 |
| 95 | MP3A | Z | -70.647 | 4.5 |
| 96 | MP3A | Mx | .174 | 4.5 |
| 97 | MP3B | X | -164.779 | .5 |
| 98 | MP3B | Z | -95.135 | .5 |
| 99 | MP3B | Mx | -.111 | .5 |
| 100 | MP3B | X | -164.779 | 4.5 |
| 101 | MP3B | Z | -95.135 | 4.5 |
| 102 | MP3B | Mx | -.111 | 4.5 |
| 103 | MP3C | X | -122.363 | .5 |
| 104 | MP3C | Z | -70.647 | .5 |
| 105 | MP3C | Mx | -.091 | .5 |
| 106 | MP3C | X | -122.363 | 4.5 |
| 107 | MP3C | Z | -70.647 | 4.5 |
| 108 | MP3C | Mx | -.091 | 4.5 |
| 109 | MP1B | X | -111.239 | .5 |
| 110 | MP1B | Z | -64.224 | .5 |
| 111 | MP1B | Mx | 0 | .5 |
| 112 | MP1B | X | -111.239 | 3.5 |
| 113 | MP1B | Z | -64.224 | 3.5 |
| 114 | MP1B | Mx | 0 | 3.5 |
| 115 | MP5B | X | -111.239 | .5 |
| 116 | MP5B | Z | -64.224 | .5 |
| 117 | MP5B | Mx | 0 | .5 |
| 118 | MP5B | X | -111.239 | 3.5 |
| 119 | MP5B | Z | -64.224 | 3.5 |
| 120 | MP5B | Mx | 0 | 3.5 |
| 121 | MP3A | X | -42.235 | 2 |
| 122 | MP3A | Z | -24.384 | 2 |
| 123 | MP3A | Mx | -.032 | 2 |
| 124 | MP3B | X | -56.072 | 2 |
| 125 | MP3B | Z | -32.373 | 2 |
| 126 | MP3B | Mx | 0 | 2 |
| 127 | MP3C | X | -42.235 | 2 |
| 128 | MP3C | Z | -24.384 | 2 |
| 129 | MP3C | Mx | .032 | 2 |
| 130 | MP2A | X | -37.08 | 2 |
| 131 | MP2A | Z | -21.408 | 2 |
| 132 | MP2A | Mx | -.025 | 2 |

## Member Point Loads (BLC 13 : Antenna Wo (300 Deg)) (Continued)

| | Member Label | Direction | Magnitude[lb,k-ft] | Location[ft,%] |
|---|---|---|---|---|
| 133 | MP2B | X | -56.072 | 2 |
| 134 | MP2B | Z | -32.373 | 2 |
| 135 | MP2B | Mx | 0 | 2 |
| 136 | MP2C | X | -37.08 | 2 |
| 137 | MP2C | Z | -21.408 | 2 |
| 138 | MP2C | Mx | .025 | 2 |

## Member Point Loads (BLC 14 : Antenna Wo (330 Deg))

| | Member Label | Direction | Magnitude[lb,k-ft] | Location[ft,%] |
|---|---|---|---|---|
| 1 | MP1A | X | -34.537 | .5 |
| 2 | MP1A | Z | -59.82 | .5 |
| 3 | MP1A | Mx | .043 | .5 |
| 4 | MP1A | X | -34.537 | 3.5 |
| 5 | MP1A | Z | -59.82 | 3.5 |
| 6 | MP1A | Mx | .043 | 3.5 |
| 7 | MP1C | X | -56.38 | .5 |
| 8 | MP1C | Z | -97.653 | .5 |
| 9 | MP1C | Mx | -.141 | .5 |
| 10 | MP1C | X | -56.38 | 3.5 |
| 11 | MP1C | Z | -97.653 | 3.5 |
| 12 | MP1C | Mx | -.141 | 3.5 |
| 13 | MP5A | X | -34.537 | .5 |
| 14 | MP5A | Z | -59.82 | .5 |
| 15 | MP5A | Mx | .043 | .5 |
| 16 | MP5A | X | -34.537 | 3.5 |
| 17 | MP5A | Z | -59.82 | 3.5 |
| 18 | MP5A | Mx | .043 | 3.5 |
| 19 | MP5C | X | -56.38 | .5 |
| 20 | MP5C | Z | -97.653 | .5 |
| 21 | MP5C | Mx | -.141 | .5 |
| 22 | MP5C | X | -56.38 | 3.5 |
| 23 | MP5C | Z | -97.653 | 3.5 |
| 24 | MP5C | Mx | -.141 | 3.5 |
| 25 | MPA2 | X | -7.133 | 3 |
| 26 | MPA2 | Z | -12.354 | 3 |
| 27 | MPA2 | Mx | .003 | 3 |
| 28 | MP4A | X | -85.632 | 2 |
| 29 | MP4A | Z | -148.319 | 2 |
| 30 | MP4A | Mx | -.043 | 2 |
| 31 | MPB2 | X | -7.133 | 3 |
| 32 | MPB2 | Z | -12.354 | 3 |
| 33 | MPB2 | Mx | -.003 | 3 |
| 34 | MPC2 | X | -5.347 | 3 |
| 35 | MPC2 | Z | -9.261 | 3 |
| 36 | MPC2 | Mx | 0 | 3 |
| 37 | MP3A | X | -16.558 | 4.5 |
| 38 | MP3A | Z | -28.68 | 4.5 |
| 39 | MP3A | Mx | -.026 | 4.5 |
| 40 | MP3B | X | -16.558 | 4.5 |
| 41 | MP3B | Z | -28.68 | 4.5 |
| 42 | MP3B | Mx | -.007 | 4.5 |

## Member Point Loads (BLC 14 : Antenna Wo (330 Deg)) (Continued)

| | Member Label | Direction | Magnitude[lb,k-ft] | Location[ft,%] |
|---|---|---|---|---|
| 43 | MP3C | X | -6.081 | 4.5 |
| 44 | MP3C | Z | -10.533 | 4.5 |
| 45 | MP3C | Mx | .012 | 4.5 |
| 46 | MP3A | X | -16.558 | 4.5 |
| 47 | MP3A | Z | -28.68 | 4.5 |
| 48 | MP3A | Mx | -.007 | 4.5 |
| 49 | MP3B | X | -16.558 | 4.5 |
| 50 | MP3B | Z | -28.68 | 4.5 |
| 51 | MP3B | Mx | -.026 | 4.5 |
| 52 | MP3C | X | -6.081 | 4.5 |
| 53 | MP3C | Z | -10.533 | 4.5 |
| 54 | MP3C | Mx | .012 | 4.5 |
| 55 | MP4A | X | -34.227 | 1 |
| 56 | MP4A | Z | -59.282 | 1 |
| 57 | MP4A | Mx | .017 | 1 |
| 58 | MP4A | X | -34.227 | 3 |
| 59 | MP4A | Z | -59.282 | 3 |
| 60 | MP4A | Mx | .017 | 3 |
| 61 | MP4B | X | -34.227 | 1 |
| 62 | MP4B | Z | -59.282 | 1 |
| 63 | MP4B | Mx | .017 | 1 |
| 64 | MP4B | X | -34.227 | 3 |
| 65 | MP4B | Z | -59.282 | 3 |
| 66 | MP4B | Mx | .017 | 3 |
| 67 | MP4C | X | -14.098 | 1 |
| 68 | MP4C | Z | -24.418 | 1 |
| 69 | MP4C | Mx | -.014 | 1 |
| 70 | MP4C | X | -14.098 | 3 |
| 71 | MP4C | Z | -24.418 | 3 |
| 72 | MP4C | Mx | -.014 | 3 |
| 73 | MP3A | X | -86.972 | .5 |
| 74 | MP3A | Z | -150.641 | .5 |
| 75 | MP3A | Mx | .006 | .5 |
| 76 | MP3A | X | -86.972 | 4.5 |
| 77 | MP3A | Z | -150.641 | 4.5 |
| 78 | MP3A | Mx | .006 | 4.5 |
| 79 | MP3B | X | -86.972 | .5 |
| 80 | MP3B | Z | -150.641 | .5 |
| 81 | MP3B | Mx | .182 | .5 |
| 82 | MP3B | X | -86.972 | 4.5 |
| 83 | MP3B | Z | -150.641 | 4.5 |
| 84 | MP3B | Mx | .182 | 4.5 |
| 85 | MP3C | X | -62.484 | .5 |
| 86 | MP3C | Z | -108.225 | .5 |
| 87 | MP3C | Mx | -.135 | .5 |
| 88 | MP3C | X | -62.484 | 4.5 |
| 89 | MP3C | Z | -108.225 | 4.5 |
| 90 | MP3C | Mx | -.135 | 4.5 |
| 91 | MP3A | X | -86.972 | .5 |
| 92 | MP3A | Z | -150.641 | .5 |
| 93 | MP3A | Mx | .182 | .5 |
| 94 | MP3A | X | -86.972 | 4.5 |

## Member Point Loads (BLC 14 : Antenna Wo (330 Deg)) (Continued)

| | Member Label | Direction | Magnitude[lb,k-ft] | Location[ft,%] |
|---|---|---|---|---|
| 95 | MP3A | Z | -150.641 | 4.5 |
| 96 | MP3A | Mx | .182 | 4.5 |
| 97 | MP3B | X | -86.972 | .5 |
| 98 | MP3B | Z | -150.641 | .5 |
| 99 | MP3B | Mx | .006 | .5 |
| 100 | MP3B | X | -86.972 | 4.5 |
| 101 | MP3B | Z | -150.641 | 4.5 |
| 102 | MP3B | Mx | .006 | 4.5 |
| 103 | MP3C | X | -62.484 | .5 |
| 104 | MP3C | Z | -108.225 | .5 |
| 105 | MP3C | Mx | -.135 | .5 |
| 106 | MP3C | X | -62.484 | 4.5 |
| 107 | MP3C | Z | -108.225 | 4.5 |
| 108 | MP3C | Mx | -.135 | 4.5 |
| 109 | MP1B | X | -62.533 | .5 |
| 110 | MP1B | Z | -108.31 | .5 |
| 111 | MP1B | Mx | .078 | .5 |
| 112 | MP1B | X | -62.533 | 3.5 |
| 113 | MP1B | Z | -108.31 | 3.5 |
| 114 | MP1B | Mx | .078 | 3.5 |
| 115 | MP5B | X | -62.533 | .5 |
| 116 | MP5B | Z | -108.31 | .5 |
| 117 | MP5B | Mx | .078 | .5 |
| 118 | MP5B | X | -62.533 | 3.5 |
| 119 | MP5B | Z | -108.31 | 3.5 |
| 120 | MP5B | Mx | .078 | 3.5 |
| 121 | MP3A | X | -29.71 | 2 |
| 122 | MP3A | Z | -51.46 | 2 |
| 123 | MP3A | Mx | -.022 | 2 |
| 124 | MP3B | X | -29.71 | 2 |
| 125 | MP3B | Z | -51.46 | 2 |
| 126 | MP3B | Mx | -.022 | 2 |
| 127 | MP3C | X | -21.721 | 2 |
| 128 | MP3C | Z | -37.622 | 2 |
| 129 | MP3C | Mx | .033 | 2 |
| 130 | MP2A | X | -28.718 | 2 |
| 131 | MP2A | Z | -49.741 | 2 |
| 132 | MP2A | Mx | -.019 | 2 |
| 133 | MP2B | X | -28.718 | 2 |
| 134 | MP2B | Z | -49.741 | 2 |
| 135 | MP2B | Mx | -.019 | 2 |
| 136 | MP2C | X | -17.753 | 2 |
| 137 | MP2C | Z | -30.749 | 2 |
| 138 | MP2C | Mx | .024 | 2 |

## Member Point Loads (BLC 15 : Antenna Wi (0 Deg))

| | Member Label | Direction | Magnitude[lb,k-ft] | Location[ft,%] |
|---|---|---|---|---|
| 1 | MP1A | X | 0 | .5 |
| 2 | MP1A | Z | -11.481 | .5 |
| 3 | MP1A | Mx | 0 | .5 |
| 4 | MP1A | X | 0 | 3.5 |

## Member Point Loads (BLC 15 : Antenna Wi (0 Deg)) (Continued)

| | Member Label | Direction | Magnitude[lb,k-ft] | Location[ft,%] |
|---|---|---|---|---|
| 5 | MP1A | Z | -11.481 | 3.5 |
| 6 | MP1A | Mx | 0 | 3.5 |
| 7 | MP1C | X | 0 | .5 |
| 8 | MP1C | Z | -19.316 | .5 |
| 9 | MP1C | Mx | -.021 | .5 |
| 10 | MP1C | X | 0 | 3.5 |
| 11 | MP1C | Z | -19.316 | 3.5 |
| 12 | MP1C | Mx | -.021 | 3.5 |
| 13 | MP5A | X | 0 | .5 |
| 14 | MP5A | Z | -11.481 | .5 |
| 15 | MP5A | Mx | 0 | .5 |
| 16 | MP5A | X | 0 | 3.5 |
| 17 | MP5A | Z | -11.481 | 3.5 |
| 18 | MP5A | Mx | 0 | 3.5 |
| 19 | MP5C | X | 0 | .5 |
| 20 | MP5C | Z | -19.316 | .5 |
| 21 | MP5C | Mx | -.021 | .5 |
| 22 | MP5C | X | 0 | 3.5 |
| 23 | MP5C | Z | -19.316 | 3.5 |
| 24 | MP5C | Mx | -.021 | 3.5 |
| 25 | MPA2 | X | 0 | 3 |
| 26 | MPA2 | Z | -3.946 | 3 |
| 27 | MPA2 | Mx | .000987 | 3 |
| 28 | MP4A | X | 0 | 2 |
| 29 | MP4A | Z | -38.924 | 2 |
| 30 | MP4A | Mx | 0 | 2 |
| 31 | MPB2 | X | 0 | 3 |
| 32 | MPB2 | Z | -3.208 | 3 |
| 33 | MPB2 | Mx | -.000401 | 3 |
| 34 | MPC2 | X | 0 | 3 |
| 35 | MPC2 | Z | -3.208 | 3 |
| 36 | MPC2 | Mx | -.000401 | 3 |
| 37 | MP3A | X | 0 | 4.5 |
| 38 | MP3A | Z | -8.93 | 4.5 |
| 39 | MP3A | Mx | -.003 | 4.5 |
| 40 | MP3B | X | 0 | 4.5 |
| 41 | MP3B | Z | -4.758 | 4.5 |
| 42 | MP3B | Mx | -.003 | 4.5 |
| 43 | MP3C | X | 0 | 4.5 |
| 44 | MP3C | Z | -4.758 | 4.5 |
| 45 | MP3C | Mx | .005 | 4.5 |
| 46 | MP3A | X | 0 | 4.5 |
| 47 | MP3A | Z | -8.93 | 4.5 |
| 48 | MP3A | Mx | .003 | 4.5 |
| 49 | MP3B | X | 0 | 4.5 |
| 50 | MP3B | Z | -4.758 | 4.5 |
| 51 | MP3B | Mx | -.005 | 4.5 |
| 52 | MP3C | X | 0 | 4.5 |
| 53 | MP3C | Z | -4.758 | 4.5 |
| 54 | MP3C | Mx | .003 | 4.5 |
| 55 | MP4A | X | 0 | 1 |
| 56 | MP4A | Z | -19.264 | 1 |

## Member Point Loads (BLC 15 : Antenna Wi (0 Deg)) (Continued)

| | Member Label | Direction | Magnitude[lb,k-ft] | Location[ft,%] |
|---|---|---|---|---|
| 57 | MP4A | Mx | 0 | 1 |
| 58 | MP4A | X | 0 | 3 |
| 59 | MP4A | Z | -19.264 | 3 |
| 60 | MP4A | Mx | 0 | 3 |
| 61 | MP4B | X | 0 | 1 |
| 62 | MP4B | Z | -10.973 | 1 |
| 63 | MP4B | Mx | .005 | 1 |
| 64 | MP4B | X | 0 | 3 |
| 65 | MP4B | Z | -10.973 | 3 |
| 66 | MP4B | Mx | .005 | 3 |
| 67 | MP4C | X | 0 | 1 |
| 68 | MP4C | Z | -10.973 | 1 |
| 69 | MP4C | Mx | -.005 | 1 |
| 70 | MP4C | X | 0 | 3 |
| 71 | MP4C | Z | -10.973 | 3 |
| 72 | MP4C | Mx | -.005 | 3 |
| 73 | MP3A | X | 0 | .5 |
| 74 | MP3A | Z | -36.214 | .5 |
| 75 | MP3A | Mx | -.021 | .5 |
| 76 | MP3A | X | 0 | 4.5 |
| 77 | MP3A | Z | -36.214 | 4.5 |
| 78 | MP3A | Mx | -.021 | 4.5 |
| 79 | MP3B | X | 0 | .5 |
| 80 | MP3B | Z | -27.584 | .5 |
| 81 | MP3B | Mx | .034 | .5 |
| 82 | MP3B | X | 0 | 4.5 |
| 83 | MP3B | Z | -27.584 | 4.5 |
| 84 | MP3B | Mx | .034 | 4.5 |
| 85 | MP3C | X | 0 | .5 |
| 86 | MP3C | Z | -27.584 | .5 |
| 87 | MP3C | Mx | -.018 | .5 |
| 88 | MP3C | X | 0 | 4.5 |
| 89 | MP3C | Z | -27.584 | 4.5 |
| 90 | MP3C | Mx | -.018 | 4.5 |
| 91 | MP3A | X | 0 | .5 |
| 92 | MP3A | Z | -36.214 | .5 |
| 93 | MP3A | Mx | .021 | .5 |
| 94 | MP3A | X | 0 | 4.5 |
| 95 | MP3A | Z | -36.214 | 4.5 |
| 96 | MP3A | Mx | .021 | 4.5 |
| 97 | MP3B | X | 0 | .5 |
| 98 | MP3B | Z | -27.584 | .5 |
| 99 | MP3B | Mx | .018 | .5 |
| 100 | MP3B | X | 0 | 4.5 |
| 101 | MP3B | Z | -27.584 | 4.5 |
| 102 | MP3B | Mx | .018 | 4.5 |
| 103 | MP3C | X | 0 | .5 |
| 104 | MP3C | Z | -27.584 | .5 |
| 105 | MP3C | Mx | -.034 | .5 |
| 106 | MP3C | X | 0 | 4.5 |
| 107 | MP3C | Z | -27.584 | 4.5 |
| 108 | MP3C | Mx | -.034 | 4.5 |

## Member Point Loads (BLC 15 : Antenna Wi (0 Deg)) (Continued)

| | Member Label | Direction | Magnitude[lb,k-ft] | Location[ft,%] |
|---|---|---|---|---|
| 109 | MP1B | X | 0 | .5 |
| 110 | MP1B | Z | -23.012 | .5 |
| 111 | MP1B | Mx | .025 | .5 |
| 112 | MP1B | X | 0 | 3.5 |
| 113 | MP1B | Z | -23.012 | 3.5 |
| 114 | MP1B | Mx | .025 | 3.5 |
| 115 | MP5B | X | 0 | .5 |
| 116 | MP5B | Z | -23.012 | .5 |
| 117 | MP5B | Mx | .025 | .5 |
| 118 | MP5B | X | 0 | 3.5 |
| 119 | MP5B | Z | -23.012 | 3.5 |
| 120 | MP5B | Mx | .025 | 3.5 |
| 121 | MP3A | X | 0 | 2 |
| 122 | MP3A | Z | -16.24 | 2 |
| 123 | MP3A | Mx | 0 | 2 |
| 124 | MP3B | X | 0 | 2 |
| 125 | MP3B | Z | -12.534 | 2 |
| 126 | MP3B | Mx | -.008 | 2 |
| 127 | MP3C | X | 0 | 2 |
| 128 | MP3C | Z | -12.534 | 2 |
| 129 | MP3C | Mx | .008 | 2 |
| 130 | MP2A | X | 0 | 2 |
| 131 | MP2A | Z | -16.24 | 2 |
| 132 | MP2A | Mx | 0 | 2 |
| 133 | MP2B | X | 0 | 2 |
| 134 | MP2B | Z | -11.126 | 2 |
| 135 | MP2B | Mx | -.006 | 2 |
| 136 | MP2C | X | 0 | 2 |
| 137 | MP2C | Z | -11.126 | 2 |
| 138 | MP2C | Mx | .006 | 2 |

## Member Point Loads (BLC 16 : Antenna Wi (30 Deg))

| | Member Label | Direction | Magnitude[lb,k-ft] | Location[ft,%] |
|---|---|---|---|---|
| 1 | MP1A | X | 7.046 | .5 |
| 2 | MP1A | Z | -12.204 | .5 |
| 3 | MP1A | Mx | -.009 | .5 |
| 4 | MP1A | X | 7.046 | 3.5 |
| 5 | MP1A | Z | -12.204 | 3.5 |
| 6 | MP1A | Mx | -.009 | 3.5 |
| 7 | MP1C | X | 7.046 | .5 |
| 8 | MP1C | Z | -12.204 | .5 |
| 9 | MP1C | Mx | -.009 | .5 |
| 10 | MP1C | X | 7.046 | 3.5 |
| 11 | MP1C | Z | -12.204 | 3.5 |
| 12 | MP1C | Mx | -.009 | 3.5 |
| 13 | MP5A | X | 7.046 | .5 |
| 14 | MP5A | Z | -12.204 | .5 |
| 15 | MP5A | Mx | -.009 | .5 |
| 16 | MP5A | X | 7.046 | 3.5 |
| 17 | MP5A | Z | -12.204 | 3.5 |
| 18 | MP5A | Mx | -.009 | 3.5 |

## Member Point Loads (BLC 16 : Antenna Wi (30 Deg)) (Continued)

| | Member Label | Direction | Magnitude[lb,k-ft] | Location[ft,%] |
|---|---|---|---|---|
| 19 | MP5C | X | 7.046 | .5 |
| 20 | MP5C | Z | -12.204 | .5 |
| 21 | MP5C | Mx | -.009 | .5 |
| 22 | MP5C | X | 7.046 | 3.5 |
| 23 | MP5C | Z | -12.204 | 3.5 |
| 24 | MP5C | Mx | -.009 | 3.5 |
| 25 | MPA2 | X | 1.85 | 3 |
| 26 | MPA2 | Z | -3.204 | 3 |
| 27 | MPA2 | Mx | .000801 | 3 |
| 28 | MP4A | X | 16.781 | 2 |
| 29 | MP4A | Z | -29.065 | 2 |
| 30 | MP4A | Mx | .008 | 2 |
| 31 | MPB2 | X | 1.481 | 3 |
| 32 | MPB2 | Z | -2.565 | 3 |
| 33 | MPB2 | Mx | 0 | 3 |
| 34 | MPC2 | X | 1.85 | 3 |
| 35 | MPC2 | Z | -3.204 | 3 |
| 36 | MPC2 | Mx | -.000801 | 3 |
| 37 | MP3A | X | 3.77 | 4.5 |
| 38 | MP3A | Z | -6.529 | 4.5 |
| 39 | MP3A | Mx | .002 | 4.5 |
| 40 | MP3B | X | 1.684 | 4.5 |
| 41 | MP3B | Z | -2.917 | 4.5 |
| 42 | MP3B | Mx | -.003 | 4.5 |
| 43 | MP3C | X | 3.77 | 4.5 |
| 44 | MP3C | Z | -6.529 | 4.5 |
| 45 | MP3C | Mx | .006 | 4.5 |
| 46 | MP3A | X | 3.77 | 4.5 |
| 47 | MP3A | Z | -6.529 | 4.5 |
| 48 | MP3A | Mx | .006 | 4.5 |
| 49 | MP3B | X | 1.684 | 4.5 |
| 50 | MP3B | Z | -2.917 | 4.5 |
| 51 | MP3B | Mx | -.003 | 4.5 |
| 52 | MP3C | X | 3.77 | 4.5 |
| 53 | MP3C | Z | -6.529 | 4.5 |
| 54 | MP3C | Mx | .002 | 4.5 |
| 55 | MP4A | X | 8.25 | 1 |
| 56 | MP4A | Z | -14.289 | 1 |
| 57 | MP4A | Mx | -.004 | 1 |
| 58 | MP4A | X | 8.25 | 3 |
| 59 | MP4A | Z | -14.289 | 3 |
| 60 | MP4A | Mx | -.004 | 3 |
| 61 | MP4B | X | 4.104 | 1 |
| 62 | MP4B | Z | -7.109 | 1 |
| 63 | MP4B | Mx | .004 | 1 |
| 64 | MP4B | X | 4.104 | 3 |
| 65 | MP4B | Z | -7.109 | 3 |
| 66 | MP4B | Mx | .004 | 3 |
| 67 | MP4C | X | 8.25 | 1 |
| 68 | MP4C | Z | -14.289 | 1 |
| 69 | MP4C | Mx | -.004 | 1 |
| 70 | MP4C | X | 8.25 | 3 |

## Member Point Loads (BLC 16 : Antenna Wi (30 Deg)) (Continued)

| | Member Label | Direction | Magnitude[lb,k-ft] | Location[ft,%] |
|---|---|---|---|---|
| 71 | MP4C | Z | -14.289 | 3 |
| 72 | MP4C | Mx | -.004 | 3 |
| 73 | MP3A | X | 16.669 | .5 |
| 74 | MP3A | Z | -28.871 | .5 |
| 75 | MP3A | Mx | -.035 | .5 |
| 76 | MP3A | X | 16.669 | 4.5 |
| 77 | MP3A | Z | -28.871 | 4.5 |
| 78 | MP3A | Mx | -.035 | 4.5 |
| 79 | MP3B | X | 12.354 | .5 |
| 80 | MP3B | Z | -21.397 | .5 |
| 81 | MP3B | Mx | .027 | .5 |
| 82 | MP3B | X | 12.354 | 4.5 |
| 83 | MP3B | Z | -21.397 | 4.5 |
| 84 | MP3B | Mx | .027 | 4.5 |
| 85 | MP3C | X | 16.669 | .5 |
| 86 | MP3C | Z | -28.871 | .5 |
| 87 | MP3C | Mx | -.001 | .5 |
| 88 | MP3C | X | 16.669 | 4.5 |
| 89 | MP3C | Z | -28.871 | 4.5 |
| 90 | MP3C | Mx | -.001 | 4.5 |
| 91 | MP3A | X | 16.669 | .5 |
| 92 | MP3A | Z | -28.871 | .5 |
| 93 | MP3A | Mx | -.001 | .5 |
| 94 | MP3A | X | 16.669 | 4.5 |
| 95 | MP3A | Z | -28.871 | 4.5 |
| 96 | MP3A | Mx | -.001 | 4.5 |
| 97 | MP3B | X | 12.354 | .5 |
| 98 | MP3B | Z | -21.397 | .5 |
| 99 | MP3B | Mx | .027 | .5 |
| 100 | MP3B | X | 12.354 | 4.5 |
| 101 | MP3B | Z | -21.397 | 4.5 |
| 102 | MP3B | Mx | .027 | 4.5 |
| 103 | MP3C | X | 16.669 | .5 |
| 104 | MP3C | Z | -28.871 | .5 |
| 105 | MP3C | Mx | -.035 | .5 |
| 106 | MP3C | X | 16.669 | 4.5 |
| 107 | MP3C | Z | -28.871 | 4.5 |
| 108 | MP3C | Mx | -.035 | 4.5 |
| 109 | MP1B | X | 11.165 | .5 |
| 110 | MP1B | Z | -19.338 | .5 |
| 111 | MP1B | Mx | .028 | .5 |
| 112 | MP1B | X | 11.165 | 3.5 |
| 113 | MP1B | Z | -19.338 | 3.5 |
| 114 | MP1B | Mx | .028 | 3.5 |
| 115 | MP5B | X | 11.165 | .5 |
| 116 | MP5B | Z | -19.338 | .5 |
| 117 | MP5B | Mx | .028 | .5 |
| 118 | MP5B | X | 11.165 | 3.5 |
| 119 | MP5B | Z | -19.338 | 3.5 |
| 120 | MP5B | Mx | .028 | 3.5 |
| 121 | MP3A | X | 7.502 | 2 |
| 122 | MP3A | Z | -12.994 | 2 |

## Member Point Loads (BLC 16 : Antenna Wi (30 Deg)) (Continued)

| | Member Label | Direction | Magnitude[lb,k-ft] | Location[ft,%] |
|---|---|---|---|---|
| 123 | MP3A | Mx | .006 | 2 |
| 124 | MP3B | X | 5.649 | 2 |
| 125 | MP3B | Z | -9.785 | 2 |
| 126 | MP3B | Mx | -.008 | 2 |
| 127 | MP3C | X | 7.502 | 2 |
| 128 | MP3C | Z | -12.994 | 2 |
| 129 | MP3C | Mx | .006 | 2 |
| 130 | MP2A | X | 7.268 | 2 |
| 131 | MP2A | Z | -12.588 | 2 |
| 132 | MP2A | Mx | .005 | 2 |
| 133 | MP2B | X | 4.71 | 2 |
| 134 | MP2B | Z | -8.159 | 2 |
| 135 | MP2B | Mx | -.006 | 2 |
| 136 | MP2C | X | 7.268 | 2 |
| 137 | MP2C | Z | -12.588 | 2 |
| 138 | MP2C | Mx | .005 | 2 |

## Member Point Loads (BLC 17 : Antenna Wi (60 Deg))

| | Member Label | Direction | Magnitude[lb,k-ft] | Location[ft,%] |
|---|---|---|---|---|
| 1 | MP1A | X | 16.728 | .5 |
| 2 | MP1A | Z | -9.658 | .5 |
| 3 | MP1A | Mx | -.021 | .5 |
| 4 | MP1A | X | 16.728 | 3.5 |
| 5 | MP1A | Z | -9.658 | 3.5 |
| 6 | MP1A | Mx | -.021 | 3.5 |
| 7 | MP1C | X | 9.943 | .5 |
| 8 | MP1C | Z | -5.74 | .5 |
| 9 | MP1C | Mx | 1e-6 | .5 |
| 10 | MP1C | X | 9.943 | 3.5 |
| 11 | MP1C | Z | -5.74 | 3.5 |
| 12 | MP1C | Mx | 1e-6 | 3.5 |
| 13 | MP5A | X | 16.728 | .5 |
| 14 | MP5A | Z | -9.658 | .5 |
| 15 | MP5A | Mx | -.021 | .5 |
| 16 | MP5A | X | 16.728 | 3.5 |
| 17 | MP5A | Z | -9.658 | 3.5 |
| 18 | MP5A | Mx | -.021 | 3.5 |
| 19 | MP5C | X | 9.943 | .5 |
| 20 | MP5C | Z | -5.74 | .5 |
| 21 | MP5C | Mx | 1e-6 | .5 |
| 22 | MP5C | X | 9.943 | 3.5 |
| 23 | MP5C | Z | -5.74 | 3.5 |
| 24 | MP5C | Mx | 1e-6 | 3.5 |
| 25 | MPA2 | X | 2.778 | 3 |
| 26 | MPA2 | Z | -1.604 | 3 |
| 27 | MPA2 | Mx | .000401 | 3 |
| 28 | MP4A | X | 19.776 | 2 |
| 29 | MP4A | Z | -11.418 | 2 |
| 30 | MP4A | Mx | .01 | 2 |
| 31 | MPB2 | X | 2.778 | 3 |
| 32 | MPB2 | Z | -1.604 | 3 |

## Member Point Loads (BLC 17 : Antenna Wi (60 Deg)) (Continued)

| | Member Label | Direction | Magnitude[lb,k-ft] | Location[ft,%] |
|---|---|---|---|---|
| 33 | MPB2 | Mx | .000401 | 3 |
| 34 | MPC2 | X | 3.417 | 3 |
| 35 | MPC2 | Z | -1.973 | 3 |
| 36 | MPC2 | Mx | -.000986 | 3 |
| 37 | MP3A | X | 4.121 | 4.5 |
| 38 | MP3A | Z | -2.379 | 4.5 |
| 39 | MP3A | Mx | .003 | 4.5 |
| 40 | MP3B | X | 4.121 | 4.5 |
| 41 | MP3B | Z | -2.379 | 4.5 |
| 42 | MP3B | Mx | -.005 | 4.5 |
| 43 | MP3C | X | 7.733 | 4.5 |
| 44 | MP3C | Z | -4.465 | 4.5 |
| 45 | MP3C | Mx | .003 | 4.5 |
| 46 | MP3A | X | 4.121 | 4.5 |
| 47 | MP3A | Z | -2.379 | 4.5 |
| 48 | MP3A | Mx | .005 | 4.5 |
| 49 | MP3B | X | 4.121 | 4.5 |
| 50 | MP3B | Z | -2.379 | 4.5 |
| 51 | MP3B | Mx | -.003 | 4.5 |
| 52 | MP3C | X | 7.733 | 4.5 |
| 53 | MP3C | Z | -4.465 | 4.5 |
| 54 | MP3C | Mx | -.003 | 4.5 |
| 55 | MP4A | X | 9.503 | 1 |
| 56 | MP4A | Z | -5.486 | 1 |
| 57 | MP4A | Mx | -.005 | 1 |
| 58 | MP4A | X | 9.503 | 3 |
| 59 | MP4A | Z | -5.486 | 3 |
| 60 | MP4A | Mx | -.005 | 3 |
| 61 | MP4B | X | 9.503 | 1 |
| 62 | MP4B | Z | -5.486 | 1 |
| 63 | MP4B | Mx | .005 | 1 |
| 64 | MP4B | X | 9.503 | 3 |
| 65 | MP4B | Z | -5.486 | 3 |
| 66 | MP4B | Mx | .005 | 3 |
| 67 | MP4C | X | 16.683 | 1 |
| 68 | MP4C | Z | -9.632 | 1 |
| 69 | MP4C | Mx | 0 | 1 |
| 70 | MP4C | X | 16.683 | 3 |
| 71 | MP4C | Z | -9.632 | 3 |
| 72 | MP4C | Mx | 0 | 3 |
| 73 | MP3A | X | 23.889 | .5 |
| 74 | MP3A | Z | -13.792 | .5 |
| 75 | MP3A | Mx | -.034 | .5 |
| 76 | MP3A | X | 23.889 | 4.5 |
| 77 | MP3A | Z | -13.792 | 4.5 |
| 78 | MP3A | Mx | -.034 | 4.5 |
| 79 | MP3B | X | 23.889 | .5 |
| 80 | MP3B | Z | -13.792 | .5 |
| 81 | MP3B | Mx | .018 | .5 |
| 82 | MP3B | X | 23.889 | 4.5 |
| 83 | MP3B | Z | -13.792 | 4.5 |
| 84 | MP3B | Mx | .018 | 4.5 |

## Member Point Loads (BLC 17 : Antenna Wi (60 Deg)) (Continued)

| | Member Label | Direction | Magnitude[lb,k-ft] | Location[ft,%] |
|---|---|---|---|---|
| 85 | MP3C | X | 31.362 | .5 |
| 86 | MP3C | Z | -18.107 | .5 |
| 87 | MP3C | Mx | .021 | .5 |
| 88 | MP3C | X | 31.362 | 4.5 |
| 89 | MP3C | Z | -18.107 | 4.5 |
| 90 | MP3C | Mx | .021 | 4.5 |
| 91 | MP3A | X | 23.889 | .5 |
| 92 | MP3A | Z | -13.792 | .5 |
| 93 | MP3A | Mx | -.018 | .5 |
| 94 | MP3A | X | 23.889 | 4.5 |
| 95 | MP3A | Z | -13.792 | 4.5 |
| 96 | MP3A | Mx | -.018 | 4.5 |
| 97 | MP3B | X | 23.889 | .5 |
| 98 | MP3B | Z | -13.792 | .5 |
| 99 | MP3B | Mx | .034 | .5 |
| 100 | MP3B | X | 23.889 | 4.5 |
| 101 | MP3B | Z | -13.792 | 4.5 |
| 102 | MP3B | Mx | .034 | 4.5 |
| 103 | MP3C | X | 31.362 | .5 |
| 104 | MP3C | Z | -18.107 | .5 |
| 105 | MP3C | Mx | -.021 | .5 |
| 106 | MP3C | X | 31.362 | 4.5 |
| 107 | MP3C | Z | -18.107 | 4.5 |
| 108 | MP3C | Mx | -.021 | 4.5 |
| 109 | MP1B | X | 19.929 | .5 |
| 110 | MP1B | Z | -11.506 | .5 |
| 111 | MP1B | Mx | .025 | .5 |
| 112 | MP1B | X | 19.929 | 3.5 |
| 113 | MP1B | Z | -11.506 | 3.5 |
| 114 | MP1B | Mx | .025 | 3.5 |
| 115 | MP5B | X | 19.929 | .5 |
| 116 | MP5B | Z | -11.506 | .5 |
| 117 | MP5B | Mx | .025 | .5 |
| 118 | MP5B | X | 19.929 | 3.5 |
| 119 | MP5B | Z | -11.506 | 3.5 |
| 120 | MP5B | Mx | .025 | 3.5 |
| 121 | MP3A | X | 10.855 | 2 |
| 122 | MP3A | Z | -6.267 | 2 |
| 123 | MP3A | Mx | .008 | 2 |
| 124 | MP3B | X | 10.855 | 2 |
| 125 | MP3B | Z | -6.267 | 2 |
| 126 | MP3B | Mx | -.008 | 2 |
| 127 | MP3C | X | 14.064 | 2 |
| 128 | MP3C | Z | -8.12 | 2 |
| 129 | MP3C | Mx | 0 | 2 |
| 130 | MP2A | X | 9.635 | 2 |
| 131 | MP2A | Z | -5.563 | 2 |
| 132 | MP2A | Mx | .006 | 2 |
| 133 | MP2B | X | 9.635 | 2 |
| 134 | MP2B | Z | -5.563 | 2 |
| 135 | MP2B | Mx | -.006 | 2 |
| 136 | MP2C | X | 14.064 | 2 |

## Member Point Loads (BLC 17 : Antenna Wi (60 Deg)) (Continued)

| | Member Label | Direction | Magnitude[lb,k-ft] | Location[ft,%] |
|---|---|---|---|---|
| 137 | MP2C | Z | -8.12 | 2 |
| 138 | MP2C | Mx | 0 | 2 |

## Member Point Loads (BLC 18 : Antenna Wi (90 Deg))

| | Member Label | Direction | Magnitude[lb,k-ft] | Location[ft,%] |
|---|---|---|---|---|
| 1 | MP1A | X | 21.928 | .5 |
| 2 | MP1A | Z | 0 | .5 |
| 3 | MP1A | Mx | -.027 | .5 |
| 4 | MP1A | X | 21.928 | 3.5 |
| 5 | MP1A | Z | 0 | 3.5 |
| 6 | MP1A | Mx | -.027 | 3.5 |
| 7 | MP1C | X | 14.092 | .5 |
| 8 | MP1C | Z | 0 | .5 |
| 9 | MP1C | Mx | .009 | .5 |
| 10 | MP1C | X | 14.092 | 3.5 |
| 11 | MP1C | Z | 0 | 3.5 |
| 12 | MP1C | Mx | .009 | 3.5 |
| 13 | MP5A | X | 21.928 | .5 |
| 14 | MP5A | Z | 0 | .5 |
| 15 | MP5A | Mx | -.027 | .5 |
| 16 | MP5A | X | 21.928 | 3.5 |
| 17 | MP5A | Z | 0 | 3.5 |
| 18 | MP5A | Mx | -.027 | 3.5 |
| 19 | MP5C | X | 14.092 | .5 |
| 20 | MP5C | Z | 0 | .5 |
| 21 | MP5C | Mx | .009 | .5 |
| 22 | MP5C | X | 14.092 | 3.5 |
| 23 | MP5C | Z | 0 | 3.5 |
| 24 | MP5C | Mx | .009 | 3.5 |
| 25 | MPA2 | X | 2.962 | 3 |
| 26 | MPA2 | Z | 0 | 3 |
| 27 | MPA2 | Mx | 0 | 3 |
| 28 | MP4A | X | 17.473 | 2 |
| 29 | MP4A | Z | 0 | 2 |
| 30 | MP4A | Mx | .009 | 2 |
| 31 | MPB2 | X | 3.7 | 3 |
| 32 | MPB2 | Z | 0 | 3 |
| 33 | MPB2 | Mx | .000801 | 3 |
| 34 | MPC2 | X | 3.7 | 3 |
| 35 | MPC2 | Z | 0 | 3 |
| 36 | MPC2 | Mx | -.000801 | 3 |
| 37 | MP3A | X | 3.368 | 4.5 |
| 38 | MP3A | Z | 0 | 4.5 |
| 39 | MP3A | Mx | .003 | 4.5 |
| 40 | MP3B | X | 7.539 | 4.5 |
| 41 | MP3B | Z | 0 | 4.5 |
| 42 | MP3B | Mx | -.006 | 4.5 |
| 43 | MP3C | X | 7.539 | 4.5 |
| 44 | MP3C | Z | 0 | 4.5 |
| 45 | MP3C | Mx | -.002 | 4.5 |
| 46 | MP3A | X | 3.368 | 4.5 |

## Member Point Loads (BLC 18 : Antenna Wi (90 Deg)) (Continued)

| | Member Label | Direction | Magnitude[lb,k-ft] | Location[ft,%] |
|---|---|---|---|---|
| 47 | MP3A | Z | 0 | 4.5 |
| 48 | MP3A | Mx | .003 | 4.5 |
| 49 | MP3B | X | 7.539 | 4.5 |
| 50 | MP3B | Z | 0 | 4.5 |
| 51 | MP3B | Mx | -.002 | 4.5 |
| 52 | MP3C | X | 7.539 | 4.5 |
| 53 | MP3C | Z | 0 | 4.5 |
| 54 | MP3C | Mx | -.006 | 4.5 |
| 55 | MP4A | X | 8.209 | 1 |
| 56 | MP4A | Z | 0 | 1 |
| 57 | MP4A | Mx | -.004 | 1 |
| 58 | MP4A | X | 8.209 | 3 |
| 59 | MP4A | Z | 0 | 3 |
| 60 | MP4A | Mx | -.004 | 3 |
| 61 | MP4B | X | 16.5 | 1 |
| 62 | MP4B | Z | 0 | 1 |
| 63 | MP4B | Mx | .004 | 1 |
| 64 | MP4B | X | 16.5 | 3 |
| 65 | MP4B | Z | 0 | 3 |
| 66 | MP4B | Mx | .004 | 3 |
| 67 | MP4C | X | 16.5 | 1 |
| 68 | MP4C | Z | 0 | 1 |
| 69 | MP4C | Mx | .004 | 1 |
| 70 | MP4C | X | 16.5 | 3 |
| 71 | MP4C | Z | 0 | 3 |
| 72 | MP4C | Mx | .004 | 3 |
| 73 | MP3A | X | 24.708 | .5 |
| 74 | MP3A | Z | 0 | .5 |
| 75 | MP3A | Mx | -.027 | .5 |
| 76 | MP3A | X | 24.708 | 4.5 |
| 77 | MP3A | Z | 0 | 4.5 |
| 78 | MP3A | Mx | -.027 | 4.5 |
| 79 | MP3B | X | 33.337 | .5 |
| 80 | MP3B | Z | 0 | .5 |
| 81 | MP3B | Mx | .001 | .5 |
| 82 | MP3B | X | 33.337 | 4.5 |
| 83 | MP3B | Z | 0 | 4.5 |
| 84 | MP3B | Mx | .001 | 4.5 |
| 85 | MP3C | X | 33.337 | .5 |
| 86 | MP3C | Z | 0 | .5 |
| 87 | MP3C | Mx | .035 | .5 |
| 88 | MP3C | X | 33.337 | 4.5 |
| 89 | MP3C | Z | 0 | 4.5 |
| 90 | MP3C | Mx | .035 | 4.5 |
| 91 | MP3A | X | 24.708 | .5 |
| 92 | MP3A | Z | 0 | .5 |
| 93 | MP3A | Mx | -.027 | .5 |
| 94 | MP3A | X | 24.708 | 4.5 |
| 95 | MP3A | Z | 0 | 4.5 |
| 96 | MP3A | Mx | -.027 | 4.5 |
| 97 | MP3B | X | 33.337 | .5 |
| 98 | MP3B | Z | 0 | .5 |

## Member Point Loads (BLC 18 : Antenna Wi (90 Deg)) (Continued)

| | Member Label | Direction | Magnitude[lb,k-ft] | Location[ft,%] |
|---|---|---|---|---|
| 99 | MP3B | Mx | .035 | .5 |
| 100 | MP3B | X | 33.337 | 4.5 |
| 101 | MP3B | Z | 0 | 4.5 |
| 102 | MP3B | Mx | .035 | 4.5 |
| 103 | MP3C | X | 33.337 | .5 |
| 104 | MP3C | Z | 0 | .5 |
| 105 | MP3C | Mx | .001 | .5 |
| 106 | MP3C | X | 33.337 | 4.5 |
| 107 | MP3C | Z | 0 | 4.5 |
| 108 | MP3C | Mx | .001 | 4.5 |
| 109 | MP1B | X | 24.377 | .5 |
| 110 | MP1B | Z | 0 | .5 |
| 111 | MP1B | Mx | .015 | .5 |
| 112 | MP1B | X | 24.377 | 3.5 |
| 113 | MP1B | Z | 0 | 3.5 |
| 114 | MP1B | Mx | .015 | 3.5 |
| 115 | MP5B | X | 24.377 | .5 |
| 116 | MP5B | Z | 0 | .5 |
| 117 | MP5B | Mx | .015 | .5 |
| 118 | MP5B | X | 24.377 | 3.5 |
| 119 | MP5B | Z | 0 | 3.5 |
| 120 | MP5B | Mx | .015 | 3.5 |
| 121 | MP3A | X | 11.299 | 2 |
| 122 | MP3A | Z | 0 | 2 |
| 123 | MP3A | Mx | .008 | 2 |
| 124 | MP3B | X | 15.004 | 2 |
| 125 | MP3B | Z | 0 | 2 |
| 126 | MP3B | Mx | -.006 | 2 |
| 127 | MP3C | X | 15.004 | 2 |
| 128 | MP3C | Z | 0 | 2 |
| 129 | MP3C | Mx | -.006 | 2 |
| 130 | MP2A | X | 9.421 | 2 |
| 131 | MP2A | Z | 0 | 2 |
| 132 | MP2A | Mx | .006 | 2 |
| 133 | MP2B | X | 14.535 | 2 |
| 134 | MP2B | Z | 0 | 2 |
| 135 | MP2B | Mx | -.005 | 2 |
| 136 | MP2C | X | 14.535 | 2 |
| 137 | MP2C | Z | 0 | 2 |
| 138 | MP2C | Mx | -.005 | 2 |

## Member Point Loads (BLC 19 : Antenna Wi (120 Deg))

| | Member Label | Direction | Magnitude[lb,k-ft] | Location[ft,%] |
|---|---|---|---|---|
| 1 | MP1A | X | 16.728 | .5 |
| 2 | MP1A | Z | 9.658 | .5 |
| 3 | MP1A | Mx | -.021 | .5 |
| 4 | MP1A | X | 16.728 | 3.5 |
| 5 | MP1A | Z | 9.658 | 3.5 |
| 6 | MP1A | Mx | -.021 | 3.5 |
| 7 | MP1C | X | 16.728 | .5 |
| 8 | MP1C | Z | 9.658 | .5 |

## Member Point Loads (BLC 19 : Antenna Wi (120 Deg)) (Continued)

| | Member Label | Direction | Magnitude[lb,k-ft] | Location[ft,%] |
|---|---|---|---|---|
| 9 | MP1C | Mx | .021 | .5 |
| 10 | MP1C | X | 16.728 | 3.5 |
| 11 | MP1C | Z | 9.658 | 3.5 |
| 12 | MP1C | Mx | .021 | 3.5 |
| 13 | MP5A | X | 16.728 | .5 |
| 14 | MP5A | Z | 9.658 | .5 |
| 15 | MP5A | Mx | -.021 | .5 |
| 16 | MP5A | X | 16.728 | 3.5 |
| 17 | MP5A | Z | 9.658 | 3.5 |
| 18 | MP5A | Mx | -.021 | 3.5 |
| 19 | MP5C | X | 16.728 | .5 |
| 20 | MP5C | Z | 9.658 | .5 |
| 21 | MP5C | Mx | .021 | .5 |
| 22 | MP5C | X | 16.728 | 3.5 |
| 23 | MP5C | Z | 9.658 | 3.5 |
| 24 | MP5C | Mx | .021 | 3.5 |
| 25 | MPA2 | X | 2.778 | 3 |
| 26 | MPA2 | Z | 1.604 | 3 |
| 27 | MPA2 | Mx | -.000401 | 3 |
| 28 | MP4A | X | 19.776 | 2 |
| 29 | MP4A | Z | 11.418 | 2 |
| 30 | MP4A | Mx | .01 | 2 |
| 31 | MPB2 | X | 3.417 | 3 |
| 32 | MPB2 | Z | 1.973 | 3 |
| 33 | MPB2 | Mx | .000986 | 3 |
| 34 | MPC2 | X | 2.778 | 3 |
| 35 | MPC2 | Z | 1.604 | 3 |
| 36 | MPC2 | Mx | -.000401 | 3 |
| 37 | MP3A | X | 4.121 | 4.5 |
| 38 | MP3A | Z | 2.379 | 4.5 |
| 39 | MP3A | Mx | .005 | 4.5 |
| 40 | MP3B | X | 7.733 | 4.5 |
| 41 | MP3B | Z | 4.465 | 4.5 |
| 42 | MP3B | Mx | -.003 | 4.5 |
| 43 | MP3C | X | 4.121 | 4.5 |
| 44 | MP3C | Z | 2.379 | 4.5 |
| 45 | MP3C | Mx | -.003 | 4.5 |
| 46 | MP3A | X | 4.121 | 4.5 |
| 47 | MP3A | Z | 2.379 | 4.5 |
| 48 | MP3A | Mx | .003 | 4.5 |
| 49 | MP3B | X | 7.733 | 4.5 |
| 50 | MP3B | Z | 4.465 | 4.5 |
| 51 | MP3B | Mx | .003 | 4.5 |
| 52 | MP3C | X | 4.121 | 4.5 |
| 53 | MP3C | Z | 2.379 | 4.5 |
| 54 | MP3C | Mx | -.005 | 4.5 |
| 55 | MP4A | X | 9.503 | 1 |
| 56 | MP4A | Z | 5.486 | 1 |
| 57 | MP4A | Mx | -.005 | 1 |
| 58 | MP4A | X | 9.503 | 3 |
| 59 | MP4A | Z | 5.486 | 3 |
| 60 | MP4A | Mx | -.005 | 3 |

## Member Point Loads (BLC 19 : Antenna Wi (120 Deg)) (Continued)

| | Member Label | Direction | Magnitude[lb,k-ft] | Location[ft,%] |
|---|---|---|---|---|
| 61 | MP4B | X | 16.683 | 1 |
| 62 | MP4B | Z | 9.632 | 1 |
| 63 | MP4B | Mx | 0 | 1 |
| 64 | MP4B | X | 16.683 | 3 |
| 65 | MP4B | Z | 9.632 | 3 |
| 66 | MP4B | Mx | 0 | 3 |
| 67 | MP4C | X | 9.503 | 1 |
| 68 | MP4C | Z | 5.486 | 1 |
| 69 | MP4C | Mx | .005 | 1 |
| 70 | MP4C | X | 9.503 | 3 |
| 71 | MP4C | Z | 5.486 | 3 |
| 72 | MP4C | Mx | .005 | 3 |
| 73 | MP3A | X | 23.889 | .5 |
| 74 | MP3A | Z | 13.792 | .5 |
| 75 | MP3A | Mx | -.018 | .5 |
| 76 | MP3A | X | 23.889 | 4.5 |
| 77 | MP3A | Z | 13.792 | 4.5 |
| 78 | MP3A | Mx | -.018 | 4.5 |
| 79 | MP3B | X | 31.362 | .5 |
| 80 | MP3B | Z | 18.107 | .5 |
| 81 | MP3B | Mx | -.021 | .5 |
| 82 | MP3B | X | 31.362 | 4.5 |
| 83 | MP3B | Z | 18.107 | 4.5 |
| 84 | MP3B | Mx | -.021 | 4.5 |
| 85 | MP3C | X | 23.889 | .5 |
| 86 | MP3C | Z | 13.792 | .5 |
| 87 | MP3C | Mx | .034 | .5 |
| 88 | MP3C | X | 23.889 | 4.5 |
| 89 | MP3C | Z | 13.792 | 4.5 |
| 90 | MP3C | Mx | .034 | 4.5 |
| 91 | MP3A | X | 23.889 | .5 |
| 92 | MP3A | Z | 13.792 | .5 |
| 93 | MP3A | Mx | -.034 | .5 |
| 94 | MP3A | X | 23.889 | 4.5 |
| 95 | MP3A | Z | 13.792 | 4.5 |
| 96 | MP3A | Mx | -.034 | 4.5 |
| 97 | MP3B | X | 31.362 | .5 |
| 98 | MP3B | Z | 18.107 | .5 |
| 99 | MP3B | Mx | .021 | .5 |
| 100 | MP3B | X | 31.362 | 4.5 |
| 101 | MP3B | Z | 18.107 | 4.5 |
| 102 | MP3B | Mx | .021 | 4.5 |
| 103 | MP3C | X | 23.889 | .5 |
| 104 | MP3C | Z | 13.792 | .5 |
| 105 | MP3C | Mx | .018 | .5 |
| 106 | MP3C | X | 23.889 | 4.5 |
| 107 | MP3C | Z | 13.792 | 4.5 |
| 108 | MP3C | Mx | .018 | 4.5 |
| 109 | MP1B | X | 21.703 | .5 |
| 110 | MP1B | Z | 12.53 | .5 |
| 111 | MP1B | Mx | 0 | .5 |
| 112 | MP1B | X | 21.703 | 3.5 |

## Member Point Loads (BLC 19 : Antenna Wi (120 Deg)) (Continued)

| | Member Label | Direction | Magnitude[lb,k-ft] | Location[ft,%] |
|---|---|---|---|---|
| 113 | MP1B | Z | 12.53 | 3.5 |
| 114 | MP1B | Mx | 0 | 3.5 |
| 115 | MP5B | X | 21.703 | .5 |
| 116 | MP5B | Z | 12.53 | .5 |
| 117 | MP5B | Mx | 0 | .5 |
| 118 | MP5B | X | 21.703 | 3.5 |
| 119 | MP5B | Z | 12.53 | 3.5 |
| 120 | MP5B | Mx | 0 | 3.5 |
| 121 | MP3A | X | 10.855 | 2 |
| 122 | MP3A | Z | 6.267 | 2 |
| 123 | MP3A | Mx | .008 | 2 |
| 124 | MP3B | X | 14.064 | 2 |
| 125 | MP3B | Z | 8.12 | 2 |
| 126 | MP3B | Mx | 0 | 2 |
| 127 | MP3C | X | 10.855 | 2 |
| 128 | MP3C | Z | 6.267 | 2 |
| 129 | MP3C | Mx | -.008 | 2 |
| 130 | MP2A | X | 9.635 | 2 |
| 131 | MP2A | Z | 5.563 | 2 |
| 132 | MP2A | Mx | .006 | 2 |
| 133 | MP2B | X | 14.064 | 2 |
| 134 | MP2B | Z | 8.12 | 2 |
| 135 | MP2B | Mx | 0 | 2 |
| 136 | MP2C | X | 9.635 | 2 |
| 137 | MP2C | Z | 5.563 | 2 |
| 138 | MP2C | Mx | -.006 | 2 |

## Member Point Loads (BLC 20 : Antenna Wi (150 Deg))

| | Member Label | Direction | Magnitude[lb,k-ft] | Location[ft,%] |
|---|---|---|---|---|
| 1 | MP1A | X | 7.046 | .5 |
| 2 | MP1A | Z | 12.204 | .5 |
| 3 | MP1A | Mx | -.009 | .5 |
| 4 | MP1A | X | 7.046 | 3.5 |
| 5 | MP1A | Z | 12.204 | 3.5 |
| 6 | MP1A | Mx | -.009 | 3.5 |
| 7 | MP1C | X | 10.964 | .5 |
| 8 | MP1C | Z | 18.99 | .5 |
| 9 | MP1C | Mx | .027 | .5 |
| 10 | MP1C | X | 10.964 | 3.5 |
| 11 | MP1C | Z | 18.99 | 3.5 |
| 12 | MP1C | Mx | .027 | 3.5 |
| 13 | MP5A | X | 7.046 | .5 |
| 14 | MP5A | Z | 12.204 | .5 |
| 15 | MP5A | Mx | -.009 | .5 |
| 16 | MP5A | X | 7.046 | 3.5 |
| 17 | MP5A | Z | 12.204 | 3.5 |
| 18 | MP5A | Mx | -.009 | 3.5 |
| 19 | MP5C | X | 10.964 | .5 |
| 20 | MP5C | Z | 18.99 | .5 |
| 21 | MP5C | Mx | .027 | .5 |
| 22 | MP5C | X | 10.964 | 3.5 |

## Member Point Loads (BLC 20 : Antenna Wi (150 Deg)) (Continued)

| | Member Label | Direction | Magnitude[lb,k-ft] | Location[ft,%] |
|---|---|---|---|---|
| 23 | MP5C | Z | 18.99 | 3.5 |
| 24 | MP5C | Mx | .027 | 3.5 |
| 25 | MPA2 | X | 1.85 | 3 |
| 26 | MPA2 | Z | 3.204 | 3 |
| 27 | MPA2 | Mx | -.000801 | 3 |
| 28 | MP4A | X | 16.781 | 2 |
| 29 | MP4A | Z | 29.065 | 2 |
| 30 | MP4A | Mx | .008 | 2 |
| 31 | MPB2 | X | 1.85 | 3 |
| 32 | MPB2 | Z | 3.204 | 3 |
| 33 | MPB2 | Mx | .000801 | 3 |
| 34 | MPC2 | X | 1.481 | 3 |
| 35 | MPC2 | Z | 2.565 | 3 |
| 36 | MPC2 | Mx | 0 | 3 |
| 37 | MP3A | X | 3.77 | 4.5 |
| 38 | MP3A | Z | 6.529 | 4.5 |
| 39 | MP3A | Mx | .006 | 4.5 |
| 40 | MP3B | X | 3.77 | 4.5 |
| 41 | MP3B | Z | 6.529 | 4.5 |
| 42 | MP3B | Mx | .002 | 4.5 |
| 43 | MP3C | X | 1.684 | 4.5 |
| 44 | MP3C | Z | 2.917 | 4.5 |
| 45 | MP3C | Mx | -.003 | 4.5 |
| 46 | MP3A | X | 3.77 | 4.5 |
| 47 | MP3A | Z | 6.529 | 4.5 |
| 48 | MP3A | Mx | .002 | 4.5 |
| 49 | MP3B | X | 3.77 | 4.5 |
| 50 | MP3B | Z | 6.529 | 4.5 |
| 51 | MP3B | Mx | .006 | 4.5 |
| 52 | MP3C | X | 1.684 | 4.5 |
| 53 | MP3C | Z | 2.917 | 4.5 |
| 54 | MP3C | Mx | -.003 | 4.5 |
| 55 | MP4A | X | 8.25 | 1 |
| 56 | MP4A | Z | 14.289 | 1 |
| 57 | MP4A | Mx | -.004 | 1 |
| 58 | MP4A | X | 8.25 | 3 |
| 59 | MP4A | Z | 14.289 | 3 |
| 60 | MP4A | Mx | -.004 | 3 |
| 61 | MP4B | X | 8.25 | 1 |
| 62 | MP4B | Z | 14.289 | 1 |
| 63 | MP4B | Mx | -.004 | 1 |
| 64 | MP4B | X | 8.25 | 3 |
| 65 | MP4B | Z | 14.289 | 3 |
| 66 | MP4B | Mx | -.004 | 3 |
| 67 | MP4C | X | 4.104 | 1 |
| 68 | MP4C | Z | 7.109 | 1 |
| 69 | MP4C | Mx | .004 | 1 |
| 70 | MP4C | X | 4.104 | 3 |
| 71 | MP4C | Z | 7.109 | 3 |
| 72 | MP4C | Mx | .004 | 3 |
| 73 | MP3A | X | 16.669 | .5 |
| 74 | MP3A | Z | 28.871 | .5 |

## Member Point Loads (BLC 20 : Antenna Wi (150 Deg)) (Continued)

| | Member Label | Direction | Magnitude[lb,k-ft] | Location[ft,%] |
|---|---|---|---|---|
| 75 | MP3A | Mx | -.001 | .5 |
| 76 | MP3A | X | 16.669 | 4.5 |
| 77 | MP3A | Z | 28.871 | 4.5 |
| 78 | MP3A | Mx | -.001 | 4.5 |
| 79 | MP3B | X | 16.669 | .5 |
| 80 | MP3B | Z | 28.871 | .5 |
| 81 | MP3B | Mx | -.035 | .5 |
| 82 | MP3B | X | 16.669 | 4.5 |
| 83 | MP3B | Z | 28.871 | 4.5 |
| 84 | MP3B | Mx | -.035 | 4.5 |
| 85 | MP3C | X | 12.354 | .5 |
| 86 | MP3C | Z | 21.397 | .5 |
| 87 | MP3C | Mx | .027 | .5 |
| 88 | MP3C | X | 12.354 | 4.5 |
| 89 | MP3C | Z | 21.397 | 4.5 |
| 90 | MP3C | Mx | .027 | 4.5 |
| 91 | MP3A | X | 16.669 | .5 |
| 92 | MP3A | Z | 28.871 | .5 |
| 93 | MP3A | Mx | -.035 | .5 |
| 94 | MP3A | X | 16.669 | 4.5 |
| 95 | MP3A | Z | 28.871 | 4.5 |
| 96 | MP3A | Mx | -.035 | 4.5 |
| 97 | MP3B | X | 16.669 | .5 |
| 98 | MP3B | Z | 28.871 | .5 |
| 99 | MP3B | Mx | -.001 | .5 |
| 100 | MP3B | X | 16.669 | 4.5 |
| 101 | MP3B | Z | 28.871 | 4.5 |
| 102 | MP3B | Mx | -.001 | 4.5 |
| 103 | MP3C | X | 12.354 | .5 |
| 104 | MP3C | Z | 21.397 | .5 |
| 105 | MP3C | Mx | .027 | .5 |
| 106 | MP3C | X | 12.354 | 4.5 |
| 107 | MP3C | Z | 21.397 | 4.5 |
| 108 | MP3C | Mx | .027 | 4.5 |
| 109 | MP1B | X | 12.189 | .5 |
| 110 | MP1B | Z | 21.111 | .5 |
| 111 | MP1B | Mx | -.015 | .5 |
| 112 | MP1B | X | 12.189 | 3.5 |
| 113 | MP1B | Z | 21.111 | 3.5 |
| 114 | MP1B | Mx | -.015 | 3.5 |
| 115 | MP5B | X | 12.189 | .5 |
| 116 | MP5B | Z | 21.111 | .5 |
| 117 | MP5B | Mx | -.015 | .5 |
| 118 | MP5B | X | 12.189 | 3.5 |
| 119 | MP5B | Z | 21.111 | 3.5 |
| 120 | MP5B | Mx | -.015 | 3.5 |
| 121 | MP3A | X | 7.502 | 2 |
| 122 | MP3A | Z | 12.994 | 2 |
| 123 | MP3A | Mx | .006 | 2 |
| 124 | MP3B | X | 7.502 | 2 |
| 125 | MP3B | Z | 12.994 | 2 |
| 126 | MP3B | Mx | .006 | 2 |

## Member Point Loads (BLC 20 : Antenna Wi (150 Deg)) (Continued)

| | Member Label | Direction | Magnitude[lb,k-ft] | Location[ft,%] |
|---|---|---|---|---|
| 127 | MP3C | X | 5.649 | 2 |
| 128 | MP3C | Z | 9.785 | 2 |
| 129 | MP3C | Mx | -.008 | 2 |
| 130 | MP2A | X | 7.268 | 2 |
| 131 | MP2A | Z | 12.588 | 2 |
| 132 | MP2A | Mx | .005 | 2 |
| 133 | MP2B | X | 7.268 | 2 |
| 134 | MP2B | Z | 12.588 | 2 |
| 135 | MP2B | Mx | .005 | 2 |
| 136 | MP2C | X | 4.71 | 2 |
| 137 | MP2C | Z | 8.159 | 2 |
| 138 | MP2C | Mx | -.006 | 2 |

## Member Point Loads (BLC 21 : Antenna Wi (180 Deg))

| | Member Label | Direction | Magnitude[lb,k-ft] | Location[ft,%] |
|---|---|---|---|---|
| 1 | MP1A | X | 0 | .5 |
| 2 | MP1A | Z | 11.481 | .5 |
| 3 | MP1A | Mx | 0 | .5 |
| 4 | MP1A | X | 0 | 3.5 |
| 5 | MP1A | Z | 11.481 | 3.5 |
| 6 | MP1A | Mx | 0 | 3.5 |
| 7 | MP1C | X | 0 | .5 |
| 8 | MP1C | Z | 19.316 | .5 |
| 9 | MP1C | Mx | .021 | .5 |
| 10 | MP1C | X | 0 | 3.5 |
| 11 | MP1C | Z | 19.316 | 3.5 |
| 12 | MP1C | Mx | .021 | 3.5 |
| 13 | MP5A | X | 0 | .5 |
| 14 | MP5A | Z | 11.481 | .5 |
| 15 | MP5A | Mx | 0 | .5 |
| 16 | MP5A | X | 0 | 3.5 |
| 17 | MP5A | Z | 11.481 | 3.5 |
| 18 | MP5A | Mx | 0 | 3.5 |
| 19 | MP5C | X | 0 | .5 |
| 20 | MP5C | Z | 19.316 | .5 |
| 21 | MP5C | Mx | .021 | .5 |
| 22 | MP5C | X | 0 | 3.5 |
| 23 | MP5C | Z | 19.316 | 3.5 |
| 24 | MP5C | Mx | .021 | 3.5 |
| 25 | MPA2 | X | 0 | 3 |
| 26 | MPA2 | Z | 3.946 | 3 |
| 27 | MPA2 | Mx | -.000987 | 3 |
| 28 | MP4A | X | 0 | 2 |
| 29 | MP4A | Z | 38.924 | 2 |
| 30 | MP4A | Mx | 0 | 2 |
| 31 | MPB2 | X | 0 | 3 |
| 32 | MPB2 | Z | 3.208 | 3 |
| 33 | MPB2 | Mx | .000401 | 3 |
| 34 | MPC2 | X | 0 | 3 |
| 35 | MPC2 | Z | 3.208 | 3 |
| 36 | MPC2 | Mx | .000401 | 3 |

## Member Point Loads (BLC 21 : Antenna Wi (180 Deg)) (Continued)

| | Member Label | Direction | Magnitude[lb,k-ft] | Location[ft,%] |
|---|---|---|---|---|
| 37 | MP3A | X | 0 | 4.5 |
| 38 | MP3A | Z | 8.93 | 4.5 |
| 39 | MP3A | Mx | .003 | 4.5 |
| 40 | MP3B | X | 0 | 4.5 |
| 41 | MP3B | Z | 4.758 | 4.5 |
| 42 | MP3B | Mx | .003 | 4.5 |
| 43 | MP3C | X | 0 | 4.5 |
| 44 | MP3C | Z | 4.758 | 4.5 |
| 45 | MP3C | Mx | -.005 | 4.5 |
| 46 | MP3A | X | 0 | 4.5 |
| 47 | MP3A | Z | 8.93 | 4.5 |
| 48 | MP3A | Mx | -.003 | 4.5 |
| 49 | MP3B | X | 0 | 4.5 |
| 50 | MP3B | Z | 4.758 | 4.5 |
| 51 | MP3B | Mx | .005 | 4.5 |
| 52 | MP3C | X | 0 | 4.5 |
| 53 | MP3C | Z | 4.758 | 4.5 |
| 54 | MP3C | Mx | -.003 | 4.5 |
| 55 | MP4A | X | 0 | 1 |
| 56 | MP4A | Z | 19.264 | 1 |
| 57 | MP4A | Mx | 0 | 1 |
| 58 | MP4A | X | 0 | 3 |
| 59 | MP4A | Z | 19.264 | 3 |
| 60 | MP4A | Mx | 0 | 3 |
| 61 | MP4B | X | 0 | 1 |
| 62 | MP4B | Z | 10.973 | 1 |
| 63 | MP4B | Mx | -.005 | 1 |
| 64 | MP4B | X | 0 | 3 |
| 65 | MP4B | Z | 10.973 | 3 |
| 66 | MP4B | Mx | -.005 | 3 |
| 67 | MP4C | X | 0 | 1 |
| 68 | MP4C | Z | 10.973 | 1 |
| 69 | MP4C | Mx | .005 | 1 |
| 70 | MP4C | X | 0 | 3 |
| 71 | MP4C | Z | 10.973 | 3 |
| 72 | MP4C | Mx | .005 | 3 |
| 73 | MP3A | X | 0 | .5 |
| 74 | MP3A | Z | 36.214 | .5 |
| 75 | MP3A | Mx | .021 | .5 |
| 76 | MP3A | X | 0 | 4.5 |
| 77 | MP3A | Z | 36.214 | 4.5 |
| 78 | MP3A | Mx | .021 | 4.5 |
| 79 | MP3B | X | 0 | .5 |
| 80 | MP3B | Z | 27.584 | .5 |
| 81 | MP3B | Mx | -.034 | .5 |
| 82 | MP3B | X | 0 | 4.5 |
| 83 | MP3B | Z | 27.584 | 4.5 |
| 84 | MP3B | Mx | -.034 | 4.5 |
| 85 | MP3C | X | 0 | .5 |
| 86 | MP3C | Z | 27.584 | .5 |
| 87 | MP3C | Mx | .018 | .5 |
| 88 | MP3C | X | 0 | 4.5 |

## Member Point Loads (BLC 21 : Antenna Wi (180 Deg)) (Continued)

| | Member Label | Direction | Magnitude[lb,k-ft] | Location[ft,%] |
|---|---|---|---|---|
| 89 | MP3C | Z | 27.584 | 4.5 |
| 90 | MP3C | Mx | .018 | 4.5 |
| 91 | MP3A | X | 0 | .5 |
| 92 | MP3A | Z | 36.214 | .5 |
| 93 | MP3A | Mx | -.021 | .5 |
| 94 | MP3A | X | 0 | 4.5 |
| 95 | MP3A | Z | 36.214 | 4.5 |
| 96 | MP3A | Mx | -.021 | 4.5 |
| 97 | MP3B | X | 0 | .5 |
| 98 | MP3B | Z | 27.584 | .5 |
| 99 | MP3B | Mx | -.018 | .5 |
| 100 | MP3B | X | 0 | 4.5 |
| 101 | MP3B | Z | 27.584 | 4.5 |
| 102 | MP3B | Mx | -.018 | 4.5 |
| 103 | MP3C | X | 0 | .5 |
| 104 | MP3C | Z | 27.584 | .5 |
| 105 | MP3C | Mx | .034 | .5 |
| 106 | MP3C | X | 0 | 4.5 |
| 107 | MP3C | Z | 27.584 | 4.5 |
| 108 | MP3C | Mx | .034 | 4.5 |
| 109 | MP1B | X | 0 | .5 |
| 110 | MP1B | Z | 23.012 | .5 |
| 111 | MP1B | Mx | -.025 | .5 |
| 112 | MP1B | X | 0 | 3.5 |
| 113 | MP1B | Z | 23.012 | 3.5 |
| 114 | MP1B | Mx | -.025 | 3.5 |
| 115 | MP5B | X | 0 | .5 |
| 116 | MP5B | Z | 23.012 | .5 |
| 117 | MP5B | Mx | -.025 | .5 |
| 118 | MP5B | X | 0 | 3.5 |
| 119 | MP5B | Z | 23.012 | 3.5 |
| 120 | MP5B | Mx | -.025 | 3.5 |
| 121 | MP3A | X | 0 | 2 |
| 122 | MP3A | Z | 16.24 | 2 |
| 123 | MP3A | Mx | 0 | 2 |
| 124 | MP3B | X | 0 | 2 |
| 125 | MP3B | Z | 12.534 | 2 |
| 126 | MP3B | Mx | .008 | 2 |
| 127 | MP3C | X | 0 | 2 |
| 128 | MP3C | Z | 12.534 | 2 |
| 129 | MP3C | Mx | -.008 | 2 |
| 130 | MP2A | X | 0 | 2 |
| 131 | MP2A | Z | 16.24 | 2 |
| 132 | MP2A | Mx | 0 | 2 |
| 133 | MP2B | X | 0 | 2 |
| 134 | MP2B | Z | 11.126 | 2 |
| 135 | MP2B | Mx | .006 | 2 |
| 136 | MP2C | X | 0 | 2 |
| 137 | MP2C | Z | 11.126 | 2 |
| 138 | MP2C | Mx | -.006 | 2 |

## Member Point Loads (BLC 22 : Antenna Wi (210 Deg))

| | Member Label | Direction | Magnitude[lb,k-ft] | Location[ft,%] |
|---|---|---|---|---|
| 1 | MP1A | X | -7.046 | .5 |
| 2 | MP1A | Z | 12.204 | .5 |
| 3 | MP1A | Mx | .009 | .5 |
| 4 | MP1A | X | -7.046 | 3.5 |
| 5 | MP1A | Z | 12.204 | 3.5 |
| 6 | MP1A | Mx | .009 | 3.5 |
| 7 | MP1C | X | -7.046 | .5 |
| 8 | MP1C | Z | 12.204 | .5 |
| 9 | MP1C | Mx | .009 | .5 |
| 10 | MP1C | X | -7.046 | 3.5 |
| 11 | MP1C | Z | 12.204 | 3.5 |
| 12 | MP1C | Mx | .009 | 3.5 |
| 13 | MP5A | X | -7.046 | .5 |
| 14 | MP5A | Z | 12.204 | .5 |
| 15 | MP5A | Mx | .009 | .5 |
| 16 | MP5A | X | -7.046 | 3.5 |
| 17 | MP5A | Z | 12.204 | 3.5 |
| 18 | MP5A | Mx | .009 | 3.5 |
| 19 | MP5C | X | -7.046 | .5 |
| 20 | MP5C | Z | 12.204 | .5 |
| 21 | MP5C | Mx | .009 | .5 |
| 22 | MP5C | X | -7.046 | 3.5 |
| 23 | MP5C | Z | 12.204 | 3.5 |
| 24 | MP5C | Mx | .009 | 3.5 |
| 25 | MPA2 | X | -1.85 | 3 |
| 26 | MPA2 | Z | 3.204 | 3 |
| 27 | MPA2 | Mx | -.000801 | 3 |
| 28 | MP4A | X | -16.781 | 2 |
| 29 | MP4A | Z | 29.065 | 2 |
| 30 | MP4A | Mx | -.008 | 2 |
| 31 | MPB2 | X | -1.481 | 3 |
| 32 | MPB2 | Z | 2.565 | 3 |
| 33 | MPB2 | Mx | 0 | 3 |
| 34 | MPC2 | X | -1.85 | 3 |
| 35 | MPC2 | Z | 3.204 | 3 |
| 36 | MPC2 | Mx | .000801 | 3 |
| 37 | MP3A | X | -3.77 | 4.5 |
| 38 | MP3A | Z | 6.529 | 4.5 |
| 39 | MP3A | Mx | -.002 | 4.5 |
| 40 | MP3B | X | -1.684 | 4.5 |
| 41 | MP3B | Z | 2.917 | 4.5 |
| 42 | MP3B | Mx | .003 | 4.5 |
| 43 | MP3C | X | -3.77 | 4.5 |
| 44 | MP3C | Z | 6.529 | 4.5 |
| 45 | MP3C | Mx | -.006 | 4.5 |
| 46 | MP3A | X | -3.77 | 4.5 |
| 47 | MP3A | Z | 6.529 | 4.5 |
| 48 | MP3A | Mx | -.006 | 4.5 |
| 49 | MP3B | X | -1.684 | 4.5 |
| 50 | MP3B | Z | 2.917 | 4.5 |
| 51 | MP3B | Mx | .003 | 4.5 |
| 52 | MP3C | X | -3.77 | 4.5 |

## Member Point Loads (BLC 22 : Antenna Wi (210 Deg)) (Continued)

| | Member Label | Direction | Magnitude[lb,k-ft] | Location[ft,%] |
|---|---|---|---|---|
| 53 | MP3C | Z | 6.529 | 4.5 |
| 54 | MP3C | Mx | -.002 | 4.5 |
| 55 | MP4A | X | -8.25 | 1 |
| 56 | MP4A | Z | 14.289 | 1 |
| 57 | MP4A | Mx | .004 | 1 |
| 58 | MP4A | X | -8.25 | 3 |
| 59 | MP4A | Z | 14.289 | 3 |
| 60 | MP4A | Mx | .004 | 3 |
| 61 | MP4B | X | -4.104 | 1 |
| 62 | MP4B | Z | 7.109 | 1 |
| 63 | MP4B | Mx | -.004 | 1 |
| 64 | MP4B | X | -4.104 | 3 |
| 65 | MP4B | Z | 7.109 | 3 |
| 66 | MP4B | Mx | -.004 | 3 |
| 67 | MP4C | X | -8.25 | 1 |
| 68 | MP4C | Z | 14.289 | 1 |
| 69 | MP4C | Mx | .004 | 1 |
| 70 | MP4C | X | -8.25 | 3 |
| 71 | MP4C | Z | 14.289 | 3 |
| 72 | MP4C | Mx | .004 | 3 |
| 73 | MP3A | X | -16.669 | .5 |
| 74 | MP3A | Z | 28.871 | .5 |
| 75 | MP3A | Mx | .035 | .5 |
| 76 | MP3A | X | -16.669 | 4.5 |
| 77 | MP3A | Z | 28.871 | 4.5 |
| 78 | MP3A | Mx | .035 | 4.5 |
| 79 | MP3B | X | -12.354 | .5 |
| 80 | MP3B | Z | 21.397 | .5 |
| 81 | MP3B | Mx | -.027 | .5 |
| 82 | MP3B | X | -12.354 | 4.5 |
| 83 | MP3B | Z | 21.397 | 4.5 |
| 84 | MP3B | Mx | -.027 | 4.5 |
| 85 | MP3C | X | -16.669 | .5 |
| 86 | MP3C | Z | 28.871 | .5 |
| 87 | MP3C | Mx | .001 | .5 |
| 88 | MP3C | X | -16.669 | 4.5 |
| 89 | MP3C | Z | 28.871 | 4.5 |
| 90 | MP3C | Mx | .001 | 4.5 |
| 91 | MP3A | X | -16.669 | .5 |
| 92 | MP3A | Z | 28.871 | .5 |
| 93 | MP3A | Mx | .001 | .5 |
| 94 | MP3A | X | -16.669 | 4.5 |
| 95 | MP3A | Z | 28.871 | 4.5 |
| 96 | MP3A | Mx | .001 | 4.5 |
| 97 | MP3B | X | -12.354 | .5 |
| 98 | MP3B | Z | 21.397 | .5 |
| 99 | MP3B | Mx | -.027 | .5 |
| 100 | MP3B | X | -12.354 | 4.5 |
| 101 | MP3B | Z | 21.397 | 4.5 |
| 102 | MP3B | Mx | -.027 | 4.5 |
| 103 | MP3C | X | -16.669 | .5 |
| 104 | MP3C | Z | 28.871 | .5 |

## Member Point Loads (BLC 22 : Antenna Wi (210 Deg)) (Continued)

| | Member Label | Direction | Magnitude[lb,k-ft] | Location[ft,%] |
|---|---|---|---|---|
| 105 | MP3C | Mx | .035 | .5 |
| 106 | MP3C | X | -16.669 | 4.5 |
| 107 | MP3C | Z | 28.871 | 4.5 |
| 108 | MP3C | Mx | .035 | 4.5 |
| 109 | MP1B | X | -11.165 | .5 |
| 110 | MP1B | Z | 19.338 | .5 |
| 111 | MP1B | Mx | -.028 | .5 |
| 112 | MP1B | X | -11.165 | 3.5 |
| 113 | MP1B | Z | 19.338 | 3.5 |
| 114 | MP1B | Mx | -.028 | 3.5 |
| 115 | MP5B | X | -11.165 | .5 |
| 116 | MP5B | Z | 19.338 | .5 |
| 117 | MP5B | Mx | -.028 | .5 |
| 118 | MP5B | X | -11.165 | 3.5 |
| 119 | MP5B | Z | 19.338 | 3.5 |
| 120 | MP5B | Mx | -.028 | 3.5 |
| 121 | MP3A | X | -7.502 | 2 |
| 122 | MP3A | Z | 12.994 | 2 |
| 123 | MP3A | Mx | -.006 | 2 |
| 124 | MP3B | X | -5.649 | 2 |
| 125 | MP3B | Z | 9.785 | 2 |
| 126 | MP3B | Mx | .008 | 2 |
| 127 | MP3C | X | -7.502 | 2 |
| 128 | MP3C | Z | 12.994 | 2 |
| 129 | MP3C | Mx | -.006 | 2 |
| 130 | MP2A | X | -7.268 | 2 |
| 131 | MP2A | Z | 12.588 | 2 |
| 132 | MP2A | Mx | -.005 | 2 |
| 133 | MP2B | X | -4.71 | 2 |
| 134 | MP2B | Z | 8.159 | 2 |
| 135 | MP2B | Mx | .006 | 2 |
| 136 | MP2C | X | -7.268 | 2 |
| 137 | MP2C | Z | 12.588 | 2 |
| 138 | MP2C | Mx | -.005 | 2 |

## Member Point Loads (BLC 23 : Antenna Wi (240 Deg))

| | Member Label | Direction | Magnitude[lb,k-ft] | Location[ft,%] |
|---|---|---|---|---|
| 1 | MP1A | X | -16.728 | .5 |
| 2 | MP1A | Z | 9.658 | .5 |
| 3 | MP1A | Mx | .021 | .5 |
| 4 | MP1A | X | -16.728 | 3.5 |
| 5 | MP1A | Z | 9.658 | 3.5 |
| 6 | MP1A | Mx | .021 | 3.5 |
| 7 | MP1C | X | -9.943 | .5 |
| 8 | MP1C | Z | 5.74 | .5 |
| 9 | MP1C | Mx | -1e-6 | .5 |
| 10 | MP1C | X | -9.943 | 3.5 |
| 11 | MP1C | Z | 5.74 | 3.5 |
| 12 | MP1C | Mx | -1e-6 | 3.5 |
| 13 | MP5A | X | -16.728 | .5 |
| 14 | MP5A | Z | 9.658 | .5 |

## Member Point Loads (BLC 23 : Antenna Wi (240 Deg)) (Continued)

| | Member Label | Direction | Magnitude[lb,k-ft] | Location[ft,%] |
|---|---|---|---|---|
| 15 | MP5A | Mx | .021 | .5 |
| 16 | MP5A | X | -16.728 | 3.5 |
| 17 | MP5A | Z | 9.658 | 3.5 |
| 18 | MP5A | Mx | .021 | 3.5 |
| 19 | MP5C | X | -9.943 | .5 |
| 20 | MP5C | Z | 5.74 | .5 |
| 21 | MP5C | Mx | -1e-6 | .5 |
| 22 | MP5C | X | -9.943 | 3.5 |
| 23 | MP5C | Z | 5.74 | 3.5 |
| 24 | MP5C | Mx | -1e-6 | 3.5 |
| 25 | MPA2 | X | -2.778 | 3 |
| 26 | MPA2 | Z | 1.604 | 3 |
| 27 | MPA2 | Mx | -.000401 | 3 |
| 28 | MP4A | X | -19.776 | 2 |
| 29 | MP4A | Z | 11.418 | 2 |
| 30 | MP4A | Mx | -.01 | 2 |
| 31 | MPB2 | X | -2.778 | 3 |
| 32 | MPB2 | Z | 1.604 | 3 |
| 33 | MPB2 | Mx | -.000401 | 3 |
| 34 | MPC2 | X | -3.417 | 3 |
| 35 | MPC2 | Z | 1.973 | 3 |
| 36 | MPC2 | Mx | .000986 | 3 |
| 37 | MP3A | X | -4.121 | 4.5 |
| 38 | MP3A | Z | 2.379 | 4.5 |
| 39 | MP3A | Mx | -.003 | 4.5 |
| 40 | MP3B | X | -4.121 | 4.5 |
| 41 | MP3B | Z | 2.379 | 4.5 |
| 42 | MP3B | Mx | .005 | 4.5 |
| 43 | MP3C | X | -7.733 | 4.5 |
| 44 | MP3C | Z | 4.465 | 4.5 |
| 45 | MP3C | Mx | -.003 | 4.5 |
| 46 | MP3A | X | -4.121 | 4.5 |
| 47 | MP3A | Z | 2.379 | 4.5 |
| 48 | MP3A | Mx | -.005 | 4.5 |
| 49 | MP3B | X | -4.121 | 4.5 |
| 50 | MP3B | Z | 2.379 | 4.5 |
| 51 | MP3B | Mx | .003 | 4.5 |
| 52 | MP3C | X | -7.733 | 4.5 |
| 53 | MP3C | Z | 4.465 | 4.5 |
| 54 | MP3C | Mx | .003 | 4.5 |
| 55 | MP4A | X | -9.503 | 1 |
| 56 | MP4A | Z | 5.486 | 1 |
| 57 | MP4A | Mx | .005 | 1 |
| 58 | MP4A | X | -9.503 | 3 |
| 59 | MP4A | Z | 5.486 | 3 |
| 60 | MP4A | Mx | .005 | 3 |
| 61 | MP4B | X | -9.503 | 1 |
| 62 | MP4B | Z | 5.486 | 1 |
| 63 | MP4B | Mx | -.005 | 1 |
| 64 | MP4B | X | -9.503 | 3 |
| 65 | MP4B | Z | 5.486 | 3 |
| 66 | MP4B | Mx | -.005 | 3 |

## Member Point Loads (BLC 23 : Antenna Wi (240 Deg)) (Continued)

| | Member Label | Direction | Magnitude[lb,k-ft] | Location[ft,%] |
|---|---|---|---|---|
| 67 | MP4C | X | -16.683 | 1 |
| 68 | MP4C | Z | 9.632 | 1 |
| 69 | MP4C | Mx | 0 | 1 |
| 70 | MP4C | X | -16.683 | 3 |
| 71 | MP4C | Z | 9.632 | 3 |
| 72 | MP4C | Mx | 0 | 3 |
| 73 | MP3A | X | -23.889 | .5 |
| 74 | MP3A | Z | 13.792 | .5 |
| 75 | MP3A | Mx | .034 | .5 |
| 76 | MP3A | X | -23.889 | 4.5 |
| 77 | MP3A | Z | 13.792 | 4.5 |
| 78 | MP3A | Mx | .034 | 4.5 |
| 79 | MP3B | X | -23.889 | .5 |
| 80 | MP3B | Z | 13.792 | .5 |
| 81 | MP3B | Mx | -.018 | .5 |
| 82 | MP3B | X | -23.889 | 4.5 |
| 83 | MP3B | Z | 13.792 | 4.5 |
| 84 | MP3B | Mx | -.018 | 4.5 |
| 85 | MP3C | X | -31.362 | .5 |
| 86 | MP3C | Z | 18.107 | .5 |
| 87 | MP3C | Mx | -.021 | .5 |
| 88 | MP3C | X | -31.362 | 4.5 |
| 89 | MP3C | Z | 18.107 | 4.5 |
| 90 | MP3C | Mx | -.021 | 4.5 |
| 91 | MP3A | X | -23.889 | .5 |
| 92 | MP3A | Z | 13.792 | .5 |
| 93 | MP3A | Mx | .018 | .5 |
| 94 | MP3A | X | -23.889 | 4.5 |
| 95 | MP3A | Z | 13.792 | 4.5 |
| 96 | MP3A | Mx | .018 | 4.5 |
| 97 | MP3B | X | -23.889 | .5 |
| 98 | MP3B | Z | 13.792 | .5 |
| 99 | MP3B | Mx | -.034 | .5 |
| 100 | MP3B | X | -23.889 | 4.5 |
| 101 | MP3B | Z | 13.792 | 4.5 |
| 102 | MP3B | Mx | -.034 | 4.5 |
| 103 | MP3C | X | -31.362 | .5 |
| 104 | MP3C | Z | 18.107 | .5 |
| 105 | MP3C | Mx | .021 | .5 |
| 106 | MP3C | X | -31.362 | 4.5 |
| 107 | MP3C | Z | 18.107 | 4.5 |
| 108 | MP3C | Mx | .021 | 4.5 |
| 109 | MP1B | X | -19.929 | .5 |
| 110 | MP1B | Z | 11.506 | .5 |
| 111 | MP1B | Mx | -.025 | .5 |
| 112 | MP1B | X | -19.929 | 3.5 |
| 113 | MP1B | Z | 11.506 | 3.5 |
| 114 | MP1B | Mx | -.025 | 3.5 |
| 115 | MP5B | X | -19.929 | .5 |
| 116 | MP5B | Z | 11.506 | .5 |
| 117 | MP5B | Mx | -.025 | .5 |
| 118 | MP5B | X | -19.929 | 3.5 |

## Member Point Loads (BLC 23 : Antenna Wi (240 Deg)) (Continued)

| | Member Label | Direction | Magnitude[lb,k-ft] | Location[ft,%] |
|---|---|---|---|---|
| 119 | MP5B | Z | 11.506 | 3.5 |
| 120 | MP5B | Mx | -.025 | 3.5 |
| 121 | MP3A | X | -10.855 | 2 |
| 122 | MP3A | Z | 6.267 | 2 |
| 123 | MP3A | Mx | -.008 | 2 |
| 124 | MP3B | X | -10.855 | 2 |
| 125 | MP3B | Z | 6.267 | 2 |
| 126 | MP3B | Mx | .008 | 2 |
| 127 | MP3C | X | -14.064 | 2 |
| 128 | MP3C | Z | 8.12 | 2 |
| 129 | MP3C | Mx | 0 | 2 |
| 130 | MP2A | X | -9.635 | 2 |
| 131 | MP2A | Z | 5.563 | 2 |
| 132 | MP2A | Mx | -.006 | 2 |
| 133 | MP2B | X | -9.635 | 2 |
| 134 | MP2B | Z | 5.563 | 2 |
| 135 | MP2B | Mx | .006 | 2 |
| 136 | MP2C | X | -14.064 | 2 |
| 137 | MP2C | Z | 8.12 | 2 |
| 138 | MP2C | Mx | 0 | 2 |

## Member Point Loads (BLC 24 : Antenna Wi (270 Deg))

| | Member Label | Direction | Magnitude[lb,k-ft] | Location[ft,%] |
|---|---|---|---|---|
| 1 | MP1A | X | -21.928 | .5 |
| 2 | MP1A | Z | 0 | .5 |
| 3 | MP1A | Mx | .027 | .5 |
| 4 | MP1A | X | -21.928 | 3.5 |
| 5 | MP1A | Z | 0 | 3.5 |
| 6 | MP1A | Mx | .027 | 3.5 |
| 7 | MP1C | X | -14.092 | .5 |
| 8 | MP1C | Z | 0 | .5 |
| 9 | MP1C | Mx | -.009 | .5 |
| 10 | MP1C | X | -14.092 | 3.5 |
| 11 | MP1C | Z | 0 | 3.5 |
| 12 | MP1C | Mx | -.009 | 3.5 |
| 13 | MP5A | X | -21.928 | .5 |
| 14 | MP5A | Z | 0 | .5 |
| 15 | MP5A | Mx | .027 | .5 |
| 16 | MP5A | X | -21.928 | 3.5 |
| 17 | MP5A | Z | 0 | 3.5 |
| 18 | MP5A | Mx | .027 | 3.5 |
| 19 | MP5C | X | -14.092 | .5 |
| 20 | MP5C | Z | 0 | .5 |
| 21 | MP5C | Mx | -.009 | .5 |
| 22 | MP5C | X | -14.092 | 3.5 |
| 23 | MP5C | Z | 0 | 3.5 |
| 24 | MP5C | Mx | -.009 | 3.5 |
| 25 | MPA2 | X | -2.962 | 3 |
| 26 | MPA2 | Z | 0 | 3 |
| 27 | MPA2 | Mx | 0 | 3 |
| 28 | MP4A | X | -17.473 | 2 |

## Member Point Loads (BLC 24 : Antenna Wi (270 Deg)) (Continued)

| | Member Label | Direction | Magnitude[lb,k-ft] | Location[ft,%] |
|---|---|---|---|---|
| 29 | MP4A | Z | 0 | 2 |
| 30 | MP4A | Mx | -.009 | 2 |
| 31 | MPB2 | X | -3.7 | 3 |
| 32 | MPB2 | Z | 0 | 3 |
| 33 | MPB2 | Mx | -.000801 | 3 |
| 34 | MPC2 | X | -3.7 | 3 |
| 35 | MPC2 | Z | 0 | 3 |
| 36 | MPC2 | Mx | .000801 | 3 |
| 37 | MP3A | X | -3.368 | 4.5 |
| 38 | MP3A | Z | 0 | 4.5 |
| 39 | MP3A | Mx | -.003 | 4.5 |
| 40 | MP3B | X | -7.539 | 4.5 |
| 41 | MP3B | Z | 0 | 4.5 |
| 42 | MP3B | Mx | .006 | 4.5 |
| 43 | MP3C | X | -7.539 | 4.5 |
| 44 | MP3C | Z | 0 | 4.5 |
| 45 | MP3C | Mx | .002 | 4.5 |
| 46 | MP3A | X | -3.368 | 4.5 |
| 47 | MP3A | Z | 0 | 4.5 |
| 48 | MP3A | Mx | -.003 | 4.5 |
| 49 | MP3B | X | -7.539 | 4.5 |
| 50 | MP3B | Z | 0 | 4.5 |
| 51 | MP3B | Mx | .002 | 4.5 |
| 52 | MP3C | X | -7.539 | 4.5 |
| 53 | MP3C | Z | 0 | 4.5 |
| 54 | MP3C | Mx | .006 | 4.5 |
| 55 | MP4A | X | -8.209 | 1 |
| 56 | MP4A | Z | 0 | 1 |
| 57 | MP4A | Mx | .004 | 1 |
| 58 | MP4A | X | -8.209 | 3 |
| 59 | MP4A | Z | 0 | 3 |
| 60 | MP4A | Mx | .004 | 3 |
| 61 | MP4B | X | -16.5 | 1 |
| 62 | MP4B | Z | 0 | 1 |
| 63 | MP4B | Mx | -.004 | 1 |
| 64 | MP4B | X | -16.5 | 3 |
| 65 | MP4B | Z | 0 | 3 |
| 66 | MP4B | Mx | -.004 | 3 |
| 67 | MP4C | X | -16.5 | 1 |
| 68 | MP4C | Z | 0 | 1 |
| 69 | MP4C | Mx | -.004 | 1 |
| 70 | MP4C | X | -16.5 | 3 |
| 71 | MP4C | Z | 0 | 3 |
| 72 | MP4C | Mx | -.004 | 3 |
| 73 | MP3A | X | -24.708 | .5 |
| 74 | MP3A | Z | 0 | .5 |
| 75 | MP3A | Mx | .027 | .5 |
| 76 | MP3A | X | -24.708 | 4.5 |
| 77 | MP3A | Z | 0 | 4.5 |
| 78 | MP3A | Mx | .027 | 4.5 |
| 79 | MP3B | X | -33.337 | .5 |
| 80 | MP3B | Z | 0 | .5 |

## Member Point Loads (BLC 24 : Antenna Wi (270 Deg)) (Continued)

| | Member Label | Direction | Magnitude[lb,k-ft] | Location[ft,%] |
|---|---|---|---|---|
| 81 | MP3B | Mx | -.001 | .5 |
| 82 | MP3B | X | -33.337 | 4.5 |
| 83 | MP3B | Z | 0 | 4.5 |
| 84 | MP3B | Mx | -.001 | 4.5 |
| 85 | MP3C | X | -33.337 | .5 |
| 86 | MP3C | Z | 0 | .5 |
| 87 | MP3C | Mx | -.035 | .5 |
| 88 | MP3C | X | -33.337 | 4.5 |
| 89 | MP3C | Z | 0 | 4.5 |
| 90 | MP3C | Mx | -.035 | 4.5 |
| 91 | MP3A | X | -24.708 | .5 |
| 92 | MP3A | Z | 0 | .5 |
| 93 | MP3A | Mx | .027 | .5 |
| 94 | MP3A | X | -24.708 | 4.5 |
| 95 | MP3A | Z | 0 | 4.5 |
| 96 | MP3A | Mx | .027 | 4.5 |
| 97 | MP3B | X | -33.337 | .5 |
| 98 | MP3B | Z | 0 | .5 |
| 99 | MP3B | Mx | -.035 | .5 |
| 100 | MP3B | X | -33.337 | 4.5 |
| 101 | MP3B | Z | 0 | 4.5 |
| 102 | MP3B | Mx | -.035 | 4.5 |
| 103 | MP3C | X | -33.337 | .5 |
| 104 | MP3C | Z | 0 | .5 |
| 105 | MP3C | Mx | -.001 | .5 |
| 106 | MP3C | X | -33.337 | 4.5 |
| 107 | MP3C | Z | 0 | 4.5 |
| 108 | MP3C | Mx | -.001 | 4.5 |
| 109 | MP1B | X | -24.377 | .5 |
| 110 | MP1B | Z | 0 | .5 |
| 111 | MP1B | Mx | -.015 | .5 |
| 112 | MP1B | X | -24.377 | 3.5 |
| 113 | MP1B | Z | 0 | 3.5 |
| 114 | MP1B | Mx | -.015 | 3.5 |
| 115 | MP5B | X | -24.377 | .5 |
| 116 | MP5B | Z | 0 | .5 |
| 117 | MP5B | Mx | -.015 | .5 |
| 118 | MP5B | X | -24.377 | 3.5 |
| 119 | MP5B | Z | 0 | 3.5 |
| 120 | MP5B | Mx | -.015 | 3.5 |
| 121 | MP3A | X | -11.299 | 2 |
| 122 | MP3A | Z | 0 | 2 |
| 123 | MP3A | Mx | -.008 | 2 |
| 124 | MP3B | X | -15.004 | 2 |
| 125 | MP3B | Z | 0 | 2 |
| 126 | MP3B | Mx | .006 | 2 |
| 127 | MP3C | X | -15.004 | 2 |
| 128 | MP3C | Z | 0 | 2 |
| 129 | MP3C | Mx | .006 | 2 |
| 130 | MP2A | X | -9.421 | 2 |
| 131 | MP2A | Z | 0 | 2 |
| 132 | MP2A | Mx | -.006 | 2 |

## Member Point Loads (BLC 24 : Antenna Wi (270 Deg)) (Continued)

| | Member Label | Direction | Magnitude[lb,k-ft] | Location[ft,%] |
|---|---|---|---|---|
| 133 | MP2B | X | -14.535 | 2 |
| 134 | MP2B | Z | 0 | 2 |
| 135 | MP2B | Mx | .005 | 2 |
| 136 | MP2C | X | -14.535 | 2 |
| 137 | MP2C | Z | 0 | 2 |
| 138 | MP2C | Mx | .005 | 2 |

## Member Point Loads (BLC 25 : Antenna Wi (300 Deg))

| | Member Label | Direction | Magnitude[lb,k-ft] | Location[ft,%] |
|---|---|---|---|---|
| 1 | MP1A | X | -16.728 | .5 |
| 2 | MP1A | Z | -9.658 | .5 |
| 3 | MP1A | Mx | .021 | .5 |
| 4 | MP1A | X | -16.728 | 3.5 |
| 5 | MP1A | Z | -9.658 | 3.5 |
| 6 | MP1A | Mx | .021 | 3.5 |
| 7 | MP1C | X | -16.728 | .5 |
| 8 | MP1C | Z | -9.658 | .5 |
| 9 | MP1C | Mx | -.021 | .5 |
| 10 | MP1C | X | -16.728 | 3.5 |
| 11 | MP1C | Z | -9.658 | 3.5 |
| 12 | MP1C | Mx | -.021 | 3.5 |
| 13 | MP5A | X | -16.728 | .5 |
| 14 | MP5A | Z | -9.658 | .5 |
| 15 | MP5A | Mx | .021 | .5 |
| 16 | MP5A | X | -16.728 | 3.5 |
| 17 | MP5A | Z | -9.658 | 3.5 |
| 18 | MP5A | Mx | .021 | 3.5 |
| 19 | MP5C | X | -16.728 | .5 |
| 20 | MP5C | Z | -9.658 | .5 |
| 21 | MP5C | Mx | -.021 | .5 |
| 22 | MP5C | X | -16.728 | 3.5 |
| 23 | MP5C | Z | -9.658 | 3.5 |
| 24 | MP5C | Mx | -.021 | 3.5 |
| 25 | MPA2 | X | -2.778 | 3 |
| 26 | MPA2 | Z | -1.604 | 3 |
| 27 | MPA2 | Mx | .000401 | 3 |
| 28 | MP4A | X | -19.776 | 2 |
| 29 | MP4A | Z | -11.418 | 2 |
| 30 | MP4A | Mx | -.01 | 2 |
| 31 | MPB2 | X | -3.417 | 3 |
| 32 | MPB2 | Z | -1.973 | 3 |
| 33 | MPB2 | Mx | -.000986 | 3 |
| 34 | MPC2 | X | -2.778 | 3 |
| 35 | MPC2 | Z | -1.604 | 3 |
| 36 | MPC2 | Mx | .000401 | 3 |
| 37 | MP3A | X | -4.121 | 4.5 |
| 38 | MP3A | Z | -2.379 | 4.5 |
| 39 | MP3A | Mx | -.005 | 4.5 |
| 40 | MP3B | X | -7.733 | 4.5 |
| 41 | MP3B | Z | -4.465 | 4.5 |
| 42 | MP3B | Mx | .003 | 4.5 |

## Member Point Loads (BLC 25 : Antenna Wi (300 Deg)) (Continued)

| | Member Label | Direction | Magnitude[lb,k-ft] | Location[ft,%] |
|---|---|---|---|---|
| 43 | MP3C | X | -4.121 | 4.5 |
| 44 | MP3C | Z | -2.379 | 4.5 |
| 45 | MP3C | Mx | .003 | 4.5 |
| 46 | MP3A | X | -4.121 | 4.5 |
| 47 | MP3A | Z | -2.379 | 4.5 |
| 48 | MP3A | Mx | -.003 | 4.5 |
| 49 | MP3B | X | -7.733 | 4.5 |
| 50 | MP3B | Z | -4.465 | 4.5 |
| 51 | MP3B | Mx | -.003 | 4.5 |
| 52 | MP3C | X | -4.121 | 4.5 |
| 53 | MP3C | Z | -2.379 | 4.5 |
| 54 | MP3C | Mx | .005 | 4.5 |
| 55 | MP4A | X | -9.503 | 1 |
| 56 | MP4A | Z | -5.486 | 1 |
| 57 | MP4A | Mx | .005 | 1 |
| 58 | MP4A | X | -9.503 | 3 |
| 59 | MP4A | Z | -5.486 | 3 |
| 60 | MP4A | Mx | .005 | 3 |
| 61 | MP4B | X | -16.683 | 1 |
| 62 | MP4B | Z | -9.632 | 1 |
| 63 | MP4B | Mx | 0 | 1 |
| 64 | MP4B | X | -16.683 | 3 |
| 65 | MP4B | Z | -9.632 | 3 |
| 66 | MP4B | Mx | 0 | 3 |
| 67 | MP4C | X | -9.503 | 1 |
| 68 | MP4C | Z | -5.486 | 1 |
| 69 | MP4C | Mx | -.005 | 1 |
| 70 | MP4C | X | -9.503 | 3 |
| 71 | MP4C | Z | -5.486 | 3 |
| 72 | MP4C | Mx | -.005 | 3 |
| 73 | MP3A | X | -23.889 | .5 |
| 74 | MP3A | Z | -13.792 | .5 |
| 75 | MP3A | Mx | .018 | .5 |
| 76 | MP3A | X | -23.889 | 4.5 |
| 77 | MP3A | Z | -13.792 | 4.5 |
| 78 | MP3A | Mx | .018 | 4.5 |
| 79 | MP3B | X | -31.362 | .5 |
| 80 | MP3B | Z | -18.107 | .5 |
| 81 | MP3B | Mx | .021 | .5 |
| 82 | MP3B | X | -31.362 | 4.5 |
| 83 | MP3B | Z | -18.107 | 4.5 |
| 84 | MP3B | Mx | .021 | 4.5 |
| 85 | MP3C | X | -23.889 | .5 |
| 86 | MP3C | Z | -13.792 | .5 |
| 87 | MP3C | Mx | -.034 | .5 |
| 88 | MP3C | X | -23.889 | 4.5 |
| 89 | MP3C | Z | -13.792 | 4.5 |
| 90 | MP3C | Mx | -.034 | 4.5 |
| 91 | MP3A | X | -23.889 | .5 |
| 92 | MP3A | Z | -13.792 | .5 |
| 93 | MP3A | Mx | .034 | .5 |
| 94 | MP3A | X | -23.889 | 4.5 |

## Member Point Loads (BLC 25 : Antenna Wi (300 Deg)) (Continued)

| | Member Label | Direction | Magnitude[lb,k-ft] | Location[ft,%] |
|---|---|---|---|---|
| 95 | MP3A | Z | -13.792 | 4.5 |
| 96 | MP3A | Mx | .034 | 4.5 |
| 97 | MP3B | X | -31.362 | .5 |
| 98 | MP3B | Z | -18.107 | .5 |
| 99 | MP3B | Mx | -.021 | .5 |
| 100 | MP3B | X | -31.362 | 4.5 |
| 101 | MP3B | Z | -18.107 | 4.5 |
| 102 | MP3B | Mx | -.021 | 4.5 |
| 103 | MP3C | X | -23.889 | .5 |
| 104 | MP3C | Z | -13.792 | .5 |
| 105 | MP3C | Mx | -.018 | .5 |
| 106 | MP3C | X | -23.889 | 4.5 |
| 107 | MP3C | Z | -13.792 | 4.5 |
| 108 | MP3C | Mx | -.018 | 4.5 |
| 109 | MP1B | X | -21.703 | .5 |
| 110 | MP1B | Z | -12.53 | .5 |
| 111 | MP1B | Mx | 0 | .5 |
| 112 | MP1B | X | -21.703 | 3.5 |
| 113 | MP1B | Z | -12.53 | 3.5 |
| 114 | MP1B | Mx | 0 | 3.5 |
| 115 | MP5B | X | -21.703 | .5 |
| 116 | MP5B | Z | -12.53 | .5 |
| 117 | MP5B | Mx | 0 | .5 |
| 118 | MP5B | X | -21.703 | 3.5 |
| 119 | MP5B | Z | -12.53 | 3.5 |
| 120 | MP5B | Mx | 0 | 3.5 |
| 121 | MP3A | X | -10.855 | 2 |
| 122 | MP3A | Z | -6.267 | 2 |
| 123 | MP3A | Mx | -.008 | 2 |
| 124 | MP3B | X | -14.064 | 2 |
| 125 | MP3B | Z | -8.12 | 2 |
| 126 | MP3B | Mx | 0 | 2 |
| 127 | MP3C | X | -10.855 | 2 |
| 128 | MP3C | Z | -6.267 | 2 |
| 129 | MP3C | Mx | .008 | 2 |
| 130 | MP2A | X | -9.635 | 2 |
| 131 | MP2A | Z | -5.563 | 2 |
| 132 | MP2A | Mx | -.006 | 2 |
| 133 | MP2B | X | -14.064 | 2 |
| 134 | MP2B | Z | -8.12 | 2 |
| 135 | MP2B | Mx | 0 | 2 |
| 136 | MP2C | X | -9.635 | 2 |
| 137 | MP2C | Z | -5.563 | 2 |
| 138 | MP2C | Mx | .006 | 2 |

## Member Point Loads (BLC 26 : Antenna Wi (330 Deg))

| | Member Label | Direction | Magnitude[lb,k-ft] | Location[ft,%] |
|---|---|---|---|---|
| 1 | MP1A | X | -7.046 | .5 |
| 2 | MP1A | Z | -12.204 | .5 |
| 3 | MP1A | Mx | .009 | .5 |
| 4 | MP1A | X | -7.046 | 3.5 |

## Member Point Loads (BLC 26 : Antenna Wi (330 Deg)) (Continued)

| | Member Label | Direction | Magnitude[lb,k-ft] | Location[ft,%] |
|---|---|---|---|---|
| 5 | MP1A | Z | -12.204 | 3.5 |
| 6 | MP1A | Mx | .009 | 3.5 |
| 7 | MP1C | X | -10.964 | .5 |
| 8 | MP1C | Z | -18.99 | .5 |
| 9 | MP1C | Mx | -.027 | .5 |
| 10 | MP1C | X | -10.964 | 3.5 |
| 11 | MP1C | Z | -18.99 | 3.5 |
| 12 | MP1C | Mx | -.027 | 3.5 |
| 13 | MP5A | X | -7.046 | .5 |
| 14 | MP5A | Z | -12.204 | .5 |
| 15 | MP5A | Mx | .009 | .5 |
| 16 | MP5A | X | -7.046 | 3.5 |
| 17 | MP5A | Z | -12.204 | 3.5 |
| 18 | MP5A | Mx | .009 | 3.5 |
| 19 | MP5C | X | -10.964 | .5 |
| 20 | MP5C | Z | -18.99 | .5 |
| 21 | MP5C | Mx | -.027 | .5 |
| 22 | MP5C | X | -10.964 | 3.5 |
| 23 | MP5C | Z | -18.99 | 3.5 |
| 24 | MP5C | Mx | -.027 | 3.5 |
| 25 | MPA2 | X | -1.85 | 3 |
| 26 | MPA2 | Z | -3.204 | 3 |
| 27 | MPA2 | Mx | .000801 | 3 |
| 28 | MP4A | X | -16.781 | 2 |
| 29 | MP4A | Z | -29.065 | 2 |
| 30 | MP4A | Mx | -.008 | 2 |
| 31 | MPB2 | X | -1.85 | 3 |
| 32 | MPB2 | Z | -3.204 | 3 |
| 33 | MPB2 | Mx | -.000801 | 3 |
| 34 | MPC2 | X | -1.481 | 3 |
| 35 | MPC2 | Z | -2.565 | 3 |
| 36 | MPC2 | Mx | 0 | 3 |
| 37 | MP3A | X | -3.77 | 4.5 |
| 38 | MP3A | Z | -6.529 | 4.5 |
| 39 | MP3A | Mx | -.006 | 4.5 |
| 40 | MP3B | X | -3.77 | 4.5 |
| 41 | MP3B | Z | -6.529 | 4.5 |
| 42 | MP3B | Mx | -.002 | 4.5 |
| 43 | MP3C | X | -1.684 | 4.5 |
| 44 | MP3C | Z | -2.917 | 4.5 |
| 45 | MP3C | Mx | .003 | 4.5 |
| 46 | MP3A | X | -3.77 | 4.5 |
| 47 | MP3A | Z | -6.529 | 4.5 |
| 48 | MP3A | Mx | -.002 | 4.5 |
| 49 | MP3B | X | -3.77 | 4.5 |
| 50 | MP3B | Z | -6.529 | 4.5 |
| 51 | MP3B | Mx | -.006 | 4.5 |
| 52 | MP3C | X | -1.684 | 4.5 |
| 53 | MP3C | Z | -2.917 | 4.5 |
| 54 | MP3C | Mx | .003 | 4.5 |
| 55 | MP4A | X | -8.25 | 1 |
| 56 | MP4A | Z | -14.289 | 1 |

## Member Point Loads (BLC 26 : Antenna Wi (330 Deg)) (Continued)

| | Member Label | Direction | Magnitude[lb,k-ft] | Location[ft,%] |
|---|---|---|---|---|
| 57 | MP4A | Mx | .004 | 1 |
| 58 | MP4A | X | -8.25 | 3 |
| 59 | MP4A | Z | -14.289 | 3 |
| 60 | MP4A | Mx | .004 | 3 |
| 61 | MP4B | X | -8.25 | 1 |
| 62 | MP4B | Z | -14.289 | 1 |
| 63 | MP4B | Mx | .004 | 1 |
| 64 | MP4B | X | -8.25 | 3 |
| 65 | MP4B | Z | -14.289 | 3 |
| 66 | MP4B | Mx | .004 | 3 |
| 67 | MP4C | X | -4.104 | 1 |
| 68 | MP4C | Z | -7.109 | 1 |
| 69 | MP4C | Mx | -.004 | 1 |
| 70 | MP4C | X | -4.104 | 3 |
| 71 | MP4C | Z | -7.109 | 3 |
| 72 | MP4C | Mx | -.004 | 3 |
| 73 | MP3A | X | -16.669 | .5 |
| 74 | MP3A | Z | -28.871 | .5 |
| 75 | MP3A | Mx | .001 | .5 |
| 76 | MP3A | X | -16.669 | 4.5 |
| 77 | MP3A | Z | -28.871 | 4.5 |
| 78 | MP3A | Mx | .001 | 4.5 |
| 79 | MP3B | X | -16.669 | .5 |
| 80 | MP3B | Z | -28.871 | .5 |
| 81 | MP3B | Mx | .035 | .5 |
| 82 | MP3B | X | -16.669 | 4.5 |
| 83 | MP3B | Z | -28.871 | 4.5 |
| 84 | MP3B | Mx | .035 | 4.5 |
| 85 | MP3C | X | -12.354 | .5 |
| 86 | MP3C | Z | -21.397 | .5 |
| 87 | MP3C | Mx | -.027 | .5 |
| 88 | MP3C | X | -12.354 | 4.5 |
| 89 | MP3C | Z | -21.397 | 4.5 |
| 90 | MP3C | Mx | -.027 | 4.5 |
| 91 | MP3A | X | -16.669 | .5 |
| 92 | MP3A | Z | -28.871 | .5 |
| 93 | MP3A | Mx | .035 | .5 |
| 94 | MP3A | X | -16.669 | 4.5 |
| 95 | MP3A | Z | -28.871 | 4.5 |
| 96 | MP3A | Mx | .035 | 4.5 |
| 97 | MP3B | X | -16.669 | .5 |
| 98 | MP3B | Z | -28.871 | .5 |
| 99 | MP3B | Mx | .001 | .5 |
| 100 | MP3B | X | -16.669 | 4.5 |
| 101 | MP3B | Z | -28.871 | 4.5 |
| 102 | MP3B | Mx | .001 | 4.5 |
| 103 | MP3C | X | -12.354 | .5 |
| 104 | MP3C | Z | -21.397 | .5 |
| 105 | MP3C | Mx | -.027 | .5 |
| 106 | MP3C | X | -12.354 | 4.5 |
| 107 | MP3C | Z | -21.397 | 4.5 |
| 108 | MP3C | Mx | -.027 | 4.5 |

## Member Point Loads (BLC 26 : Antenna Wi (330 Deg)) (Continued)

| | Member Label | Direction | Magnitude[lb,k-ft] | Location[ft,%] |
|---|---|---|---|---|
| 109 | MP1B | X | -12.189 | .5 |
| 110 | MP1B | Z | -21.111 | .5 |
| 111 | MP1B | Mx | .015 | .5 |
| 112 | MP1B | X | -12.189 | 3.5 |
| 113 | MP1B | Z | -21.111 | 3.5 |
| 114 | MP1B | Mx | .015 | 3.5 |
| 115 | MP5B | X | -12.189 | .5 |
| 116 | MP5B | Z | -21.111 | .5 |
| 117 | MP5B | Mx | .015 | .5 |
| 118 | MP5B | X | -12.189 | 3.5 |
| 119 | MP5B | Z | -21.111 | 3.5 |
| 120 | MP5B | Mx | .015 | 3.5 |
| 121 | MP3A | X | -7.502 | 2 |
| 122 | MP3A | Z | -12.994 | 2 |
| 123 | MP3A | Mx | -.006 | 2 |
| 124 | MP3B | X | -7.502 | 2 |
| 125 | MP3B | Z | -12.994 | 2 |
| 126 | MP3B | Mx | -.006 | 2 |
| 127 | MP3C | X | -5.649 | 2 |
| 128 | MP3C | Z | -9.785 | 2 |
| 129 | MP3C | Mx | .008 | 2 |
| 130 | MP2A | X | -7.268 | 2 |
| 131 | MP2A | Z | -12.588 | 2 |
| 132 | MP2A | Mx | -.005 | 2 |
| 133 | MP2B | X | -7.268 | 2 |
| 134 | MP2B | Z | -12.588 | 2 |
| 135 | MP2B | Mx | -.005 | 2 |
| 136 | MP2C | X | -4.71 | 2 |
| 137 | MP2C | Z | -8.159 | 2 |
| 138 | MP2C | Mx | .006 | 2 |

## Member Point Loads (BLC 27 : Antenna Wm (0 Deg))

| | Member Label | Direction | Magnitude[lb,k-ft] | Location[ft,%] |
|---|---|---|---|---|
| 1 | MP1A | X | 0 | .5 |
| 2 | MP1A | Z | -3.407 | .5 |
| 3 | MP1A | Mx | 0 | .5 |
| 4 | MP1A | X | 0 | 3.5 |
| 5 | MP1A | Z | -3.407 | 3.5 |
| 6 | MP1A | Mx | 0 | 3.5 |
| 7 | MP1C | X | 0 | .5 |
| 8 | MP1C | Z | -6.137 | .5 |
| 9 | MP1C | Mx | -.007 | .5 |
| 10 | MP1C | X | 0 | 3.5 |
| 11 | MP1C | Z | -6.137 | 3.5 |
| 12 | MP1C | Mx | -.007 | 3.5 |
| 13 | MP5A | X | 0 | .5 |
| 14 | MP5A | Z | -3.407 | .5 |
| 15 | MP5A | Mx | 0 | .5 |
| 16 | MP5A | X | 0 | 3.5 |
| 17 | MP5A | Z | -3.407 | 3.5 |
| 18 | MP5A | Mx | 0 | 3.5 |

## Member Point Loads (BLC 27 : Antenna Wm (0 Deg)) (Continued)

| | Member Label | Direction | Magnitude[lb,k-ft] | Location[ft,%] |
|---|---|---|---|---|
| 19 | MP5C | X | 0 | .5 |
| 20 | MP5C | Z | -6.137 | .5 |
| 21 | MP5C | Mx | -.007 | .5 |
| 22 | MP5C | X | 0 | 3.5 |
| 23 | MP5C | Z | -6.137 | 3.5 |
| 24 | MP5C | Mx | -.007 | 3.5 |
| 25 | MPA2 | X | 0 | 3 |
| 26 | MPA2 | Z | -.966 | 3 |
| 27 | MPA2 | Mx | .000241 | 3 |
| 28 | MP4A | X | 0 | 2 |
| 29 | MP4A | Z | -12.532 | 2 |
| 30 | MP4A | Mx | 0 | 2 |
| 31 | MPB2 | X | 0 | 3 |
| 32 | MPB2 | Z | -.743 | 3 |
| 33 | MPB2 | Mx | -9.3e-5 | 3 |
| 34 | MPC2 | X | 0 | 3 |
| 35 | MPC2 | Z | -.743 | 3 |
| 36 | MPC2 | Mx | -9.3e-5 | 3 |
| 37 | MP3A | X | 0 | 4.5 |
| 38 | MP3A | Z | -2.506 | 4.5 |
| 39 | MP3A | Mx | -.000835 | 4.5 |
| 40 | MP3B | X | 0 | 4.5 |
| 41 | MP3B | Z | -1.197 | 4.5 |
| 42 | MP3B | Mx | -.000837 | 4.5 |
| 43 | MP3C | X | 0 | 4.5 |
| 44 | MP3C | Z | -1.197 | 4.5 |
| 45 | MP3C | Mx | .001 | 4.5 |
| 46 | MP3A | X | 0 | 4.5 |
| 47 | MP3A | Z | -2.506 | 4.5 |
| 48 | MP3A | Mx | .000835 | 4.5 |
| 49 | MP3B | X | 0 | 4.5 |
| 50 | MP3B | Z | -1.197 | 4.5 |
| 51 | MP3B | Mx | -.001 | 4.5 |
| 52 | MP3C | X | 0 | 4.5 |
| 53 | MP3C | Z | -1.197 | 4.5 |
| 54 | MP3C | Mx | .000837 | 4.5 |
| 55 | MP4A | X | 0 | 1 |
| 56 | MP4A | Z | -5.117 | 1 |
| 57 | MP4A | Mx | 0 | 1 |
| 58 | MP4A | X | 0 | 3 |
| 59 | MP4A | Z | -5.117 | 3 |
| 60 | MP4A | Mx | 0 | 3 |
| 61 | MP4B | X | 0 | 1 |
| 62 | MP4B | Z | -2.601 | 1 |
| 63 | MP4B | Mx | .001 | 1 |
| 64 | MP4B | X | 0 | 3 |
| 65 | MP4B | Z | -2.601 | 3 |
| 66 | MP4B | Mx | .001 | 3 |
| 67 | MP4C | X | 0 | 1 |
| 68 | MP4C | Z | -2.601 | 1 |
| 69 | MP4C | Mx | -.001 | 1 |
| 70 | MP4C | X | 0 | 3 |

## Member Point Loads (BLC 27 : Antenna Wm (0 Deg)) (Continued)

| | Member Label | Direction | Magnitude[lb,k-ft] | Location[ft,%] |
|---|---|---|---|---|
| 71 | MP4C | Z | -2.601 | 3 |
| 72 | MP4C | Mx | -.001 | 3 |
| 73 | MP3A | X | 0 | .5 |
| 74 | MP3A | Z | -11.892 | .5 |
| 75 | MP3A | Mx | -.007 | .5 |
| 76 | MP3A | X | 0 | 4.5 |
| 77 | MP3A | Z | -11.892 | 4.5 |
| 78 | MP3A | Mx | -.007 | 4.5 |
| 79 | MP3B | X | 0 | .5 |
| 80 | MP3B | Z | -8.831 | .5 |
| 81 | MP3B | Mx | .011 | .5 |
| 82 | MP3B | X | 0 | 4.5 |
| 83 | MP3B | Z | -8.831 | 4.5 |
| 84 | MP3B | Mx | .011 | 4.5 |
| 85 | MP3C | X | 0 | .5 |
| 86 | MP3C | Z | -8.831 | .5 |
| 87 | MP3C | Mx | -.006 | .5 |
| 88 | MP3C | X | 0 | 4.5 |
| 89 | MP3C | Z | -8.831 | 4.5 |
| 90 | MP3C | Mx | -.006 | 4.5 |
| 91 | MP3A | X | 0 | .5 |
| 92 | MP3A | Z | -11.892 | .5 |
| 93 | MP3A | Mx | .007 | .5 |
| 94 | MP3A | X | 0 | 4.5 |
| 95 | MP3A | Z | -11.892 | 4.5 |
| 96 | MP3A | Mx | .007 | 4.5 |
| 97 | MP3B | X | 0 | .5 |
| 98 | MP3B | Z | -8.831 | .5 |
| 99 | MP3B | Mx | .006 | .5 |
| 100 | MP3B | X | 0 | 4.5 |
| 101 | MP3B | Z | -8.831 | 4.5 |
| 102 | MP3B | Mx | .006 | 4.5 |
| 103 | MP3C | X | 0 | .5 |
| 104 | MP3C | Z | -8.831 | .5 |
| 105 | MP3C | Mx | -.011 | .5 |
| 106 | MP3C | X | 0 | 4.5 |
| 107 | MP3C | Z | -8.831 | 4.5 |
| 108 | MP3C | Mx | -.011 | 4.5 |
| 109 | MP1B | X | 0 | .5 |
| 110 | MP1B | Z | -7.394 | .5 |
| 111 | MP1B | Mx | .008 | .5 |
| 112 | MP1B | X | 0 | 3.5 |
| 113 | MP1B | Z | -7.394 | 3.5 |
| 114 | MP1B | Mx | .008 | 3.5 |
| 115 | MP5B | X | 0 | .5 |
| 116 | MP5B | Z | -7.394 | .5 |
| 117 | MP5B | Mx | .008 | .5 |
| 118 | MP5B | X | 0 | 3.5 |
| 119 | MP5B | Z | -7.394 | 3.5 |
| 120 | MP5B | Mx | .008 | 3.5 |
| 121 | MP3A | X | 0 | 2 |
| 122 | MP3A | Z | -4.047 | 2 |

## Member Point Loads (BLC 27 : Antenna Wm (0 Deg)) (Continued)

| | Member Label | Direction | Magnitude[lb,k-ft] | Location[ft,%] |
|---|---|---|---|---|
| 123 | MP3A | Mx | 0 | 2 |
| 124 | MP3B | X | 0 | 2 |
| 125 | MP3B | Z | -3.048 | 2 |
| 126 | MP3B | Mx | -.002 | 2 |
| 127 | MP3C | X | 0 | 2 |
| 128 | MP3C | Z | -3.048 | 2 |
| 129 | MP3C | Mx | .002 | 2 |
| 130 | MP2A | X | 0 | 2 |
| 131 | MP2A | Z | -4.047 | 2 |
| 132 | MP2A | Mx | 0 | 2 |
| 133 | MP2B | X | 0 | 2 |
| 134 | MP2B | Z | -2.676 | 2 |
| 135 | MP2B | Mx | -.002 | 2 |
| 136 | MP2C | X | 0 | 2 |
| 137 | MP2C | Z | -2.676 | 2 |
| 138 | MP2C | Mx | .002 | 2 |

## Member Point Loads (BLC 28 : Antenna Wm (30 Deg))

| | Member Label | Direction | Magnitude[lb,k-ft] | Location[ft,%] |
|---|---|---|---|---|
| 1 | MP1A | X | 2.159 | .5 |
| 2 | MP1A | Z | -3.739 | .5 |
| 3 | MP1A | Mx | -.003 | .5 |
| 4 | MP1A | X | 2.159 | 3.5 |
| 5 | MP1A | Z | -3.739 | 3.5 |
| 6 | MP1A | Mx | -.003 | 3.5 |
| 7 | MP1C | X | 2.159 | .5 |
| 8 | MP1C | Z | -3.739 | .5 |
| 9 | MP1C | Mx | -.003 | .5 |
| 10 | MP1C | X | 2.159 | 3.5 |
| 11 | MP1C | Z | -3.739 | 3.5 |
| 12 | MP1C | Mx | -.003 | 3.5 |
| 13 | MP5A | X | 2.159 | .5 |
| 14 | MP5A | Z | -3.739 | .5 |
| 15 | MP5A | Mx | -.003 | .5 |
| 16 | MP5A | X | 2.159 | 3.5 |
| 17 | MP5A | Z | -3.739 | 3.5 |
| 18 | MP5A | Mx | -.003 | 3.5 |
| 19 | MP5C | X | 2.159 | .5 |
| 20 | MP5C | Z | -3.739 | .5 |
| 21 | MP5C | Mx | -.003 | .5 |
| 22 | MP5C | X | 2.159 | 3.5 |
| 23 | MP5C | Z | -3.739 | 3.5 |
| 24 | MP5C | Mx | -.003 | 3.5 |
| 25 | MPA2 | X | .446 | 3 |
| 26 | MPA2 | Z | -.772 | 3 |
| 27 | MPA2 | Mx | .000193 | 3 |
| 28 | MP4A | X | 5.352 | 2 |
| 29 | MP4A | Z | -9.27 | 2 |
| 30 | MP4A | Mx | .003 | 2 |
| 31 | MPB2 | X | .334 | 3 |
| 32 | MPB2 | Z | -.579 | 3 |

## Member Point Loads (BLC 28 : Antenna Wm (30 Deg)) (Continued)

| | Member Label | Direction | Magnitude[lb,k-ft] | Location[ft,%] |
|---|---|---|---|---|
| 33 | MPB2 | Mx | 0 | 3 |
| 34 | MPC2 | X | .446 | 3 |
| 35 | MPC2 | Z | -.772 | 3 |
| 36 | MPC2 | Mx | -.000193 | 3 |
| 37 | MP3A | X | 1.035 | 4.5 |
| 38 | MP3A | Z | -1.792 | 4.5 |
| 39 | MP3A | Mx | .000438 | 4.5 |
| 40 | MP3B | X | .38 | 4.5 |
| 41 | MP3B | Z | -.658 | 4.5 |
| 42 | MP3B | Mx | -.00076 | 4.5 |
| 43 | MP3C | X | 1.035 | 4.5 |
| 44 | MP3C | Z | -1.792 | 4.5 |
| 45 | MP3C | Mx | .002 | 4.5 |
| 46 | MP3A | X | 1.035 | 4.5 |
| 47 | MP3A | Z | -1.792 | 4.5 |
| 48 | MP3A | Mx | .002 | 4.5 |
| 49 | MP3B | X | .38 | 4.5 |
| 50 | MP3B | Z | -.658 | 4.5 |
| 51 | MP3B | Mx | -.00076 | 4.5 |
| 52 | MP3C | X | 1.035 | 4.5 |
| 53 | MP3C | Z | -1.792 | 4.5 |
| 54 | MP3C | Mx | .000437 | 4.5 |
| 55 | MP4A | X | 2.139 | 1 |
| 56 | MP4A | Z | -3.705 | 1 |
| 57 | MP4A | Mx | -.001 | 1 |
| 58 | MP4A | X | 2.139 | 3 |
| 59 | MP4A | Z | -3.705 | 3 |
| 60 | MP4A | Mx | -.001 | 3 |
| 61 | MP4B | X | .881 | 1 |
| 62 | MP4B | Z | -1.526 | 1 |
| 63 | MP4B | Mx | .000881 | 1 |
| 64 | MP4B | X | .881 | 3 |
| 65 | MP4B | Z | -1.526 | 3 |
| 66 | MP4B | Mx | .000881 | 3 |
| 67 | MP4C | X | 2.139 | 1 |
| 68 | MP4C | Z | -3.705 | 1 |
| 69 | MP4C | Mx | -.001 | 1 |
| 70 | MP4C | X | 2.139 | 3 |
| 71 | MP4C | Z | -3.705 | 3 |
| 72 | MP4C | Mx | -.001 | 3 |
| 73 | MP3A | X | 5.436 | .5 |
| 74 | MP3A | Z | -9.415 | .5 |
| 75 | MP3A | Mx | -.011 | .5 |
| 76 | MP3A | X | 5.436 | 4.5 |
| 77 | MP3A | Z | -9.415 | 4.5 |
| 78 | MP3A | Mx | -.011 | 4.5 |
| 79 | MP3B | X | 3.905 | .5 |
| 80 | MP3B | Z | -6.764 | .5 |
| 81 | MP3B | Mx | .008 | .5 |
| 82 | MP3B | X | 3.905 | 4.5 |
| 83 | MP3B | Z | -6.764 | 4.5 |
| 84 | MP3B | Mx | .008 | 4.5 |

## Member Point Loads (BLC 28 : Antenna Wm (30 Deg)) (Continued)

| | Member Label | Direction | Magnitude[lb,k-ft] | Location[ft,%] |
|---|---|---|---|---|
| 85 | MP3C | X | 5.436 | .5 |
| 86 | MP3C | Z | -9.415 | .5 |
| 87 | MP3C | Mx | -.000396 | .5 |
| 88 | MP3C | X | 5.436 | 4.5 |
| 89 | MP3C | Z | -9.415 | 4.5 |
| 90 | MP3C | Mx | -.000396 | 4.5 |
| 91 | MP3A | X | 5.436 | .5 |
| 92 | MP3A | Z | -9.415 | .5 |
| 93 | MP3A | Mx | -.000397 | .5 |
| 94 | MP3A | X | 5.436 | 4.5 |
| 95 | MP3A | Z | -9.415 | 4.5 |
| 96 | MP3A | Mx | -.000397 | 4.5 |
| 97 | MP3B | X | 3.905 | .5 |
| 98 | MP3B | Z | -6.764 | .5 |
| 99 | MP3B | Mx | .008 | .5 |
| 100 | MP3B | X | 3.905 | 4.5 |
| 101 | MP3B | Z | -6.764 | 4.5 |
| 102 | MP3B | Mx | .008 | 4.5 |
| 103 | MP3C | X | 5.436 | .5 |
| 104 | MP3C | Z | -9.415 | .5 |
| 105 | MP3C | Mx | -.011 | .5 |
| 106 | MP3C | X | 5.436 | 4.5 |
| 107 | MP3C | Z | -9.415 | 4.5 |
| 108 | MP3C | Mx | -.011 | 4.5 |
| 109 | MP1B | X | 3.591 | .5 |
| 110 | MP1B | Z | -6.22 | .5 |
| 111 | MP1B | Mx | .009 | .5 |
| 112 | MP1B | X | 3.591 | 3.5 |
| 113 | MP1B | Z | -6.22 | 3.5 |
| 114 | MP1B | Mx | .009 | 3.5 |
| 115 | MP5B | X | 3.591 | .5 |
| 116 | MP5B | Z | -6.22 | .5 |
| 117 | MP5B | Mx | .009 | .5 |
| 118 | MP5B | X | 3.591 | 3.5 |
| 119 | MP5B | Z | -6.22 | 3.5 |
| 120 | MP5B | Mx | .009 | 3.5 |
| 121 | MP3A | X | 1.857 | 2 |
| 122 | MP3A | Z | -3.216 | 2 |
| 123 | MP3A | Mx | .001 | 2 |
| 124 | MP3B | X | 1.358 | 2 |
| 125 | MP3B | Z | -2.351 | 2 |
| 126 | MP3B | Mx | -.002 | 2 |
| 127 | MP3C | X | 1.857 | 2 |
| 128 | MP3C | Z | -3.216 | 2 |
| 129 | MP3C | Mx | .001 | 2 |
| 130 | MP2A | X | 1.795 | 2 |
| 131 | MP2A | Z | -3.109 | 2 |
| 132 | MP2A | Mx | .001 | 2 |
| 133 | MP2B | X | 1.11 | 2 |
| 134 | MP2B | Z | -1.922 | 2 |
| 135 | MP2B | Mx | -.001 | 2 |
| 136 | MP2C | X | 1.795 | 2 |

## Member Point Loads (BLC 28 : Antenna Wm (30 Deg)) (Continued)

| | Member Label | Direction | Magnitude[lb,k-ft] | Location[ft,%] |
|---|---|---|---|---|
| 137 | MP2C | Z | -3.109 | 2 |
| 138 | MP2C | Mx | .001 | 2 |

## Member Point Loads (BLC 29 : Antenna Wm (60 Deg))

| | Member Label | Direction | Magnitude[lb,k-ft] | Location[ft,%] |
|---|---|---|---|---|
| 1 | MP1A | X | 5.315 | .5 |
| 2 | MP1A | Z | -3.069 | .5 |
| 3 | MP1A | Mx | -.007 | .5 |
| 4 | MP1A | X | 5.315 | 3.5 |
| 5 | MP1A | Z | -3.069 | 3.5 |
| 6 | MP1A | Mx | -.007 | 3.5 |
| 7 | MP1C | X | 2.951 | .5 |
| 8 | MP1C | Z | -1.704 | .5 |
| 9 | MP1C | Mx | 0 | .5 |
| 10 | MP1C | X | 2.951 | 3.5 |
| 11 | MP1C | Z | -1.704 | 3.5 |
| 12 | MP1C | Mx | 0 | 3.5 |
| 13 | MP5A | X | 5.315 | .5 |
| 14 | MP5A | Z | -3.069 | .5 |
| 15 | MP5A | Mx | -.007 | .5 |
| 16 | MP5A | X | 5.315 | 3.5 |
| 17 | MP5A | Z | -3.069 | 3.5 |
| 18 | MP5A | Mx | -.007 | 3.5 |
| 19 | MP5C | X | 2.951 | .5 |
| 20 | MP5C | Z | -1.704 | .5 |
| 21 | MP5C | Mx | 0 | .5 |
| 22 | MP5C | X | 2.951 | 3.5 |
| 23 | MP5C | Z | -1.704 | 3.5 |
| 24 | MP5C | Mx | 0 | 3.5 |
| 25 | MPA2 | X | .643 | 3 |
| 26 | MPA2 | Z | -.371 | 3 |
| 27 | MPA2 | Mx | 9.3e-5 | 3 |
| 28 | MP4A | X | 6.105 | 2 |
| 29 | MP4A | Z | -3.524 | 2 |
| 30 | MP4A | Mx | .003 | 2 |
| 31 | MPB2 | X | .643 | 3 |
| 32 | MPB2 | Z | -.371 | 3 |
| 33 | MPB2 | Mx | 9.3e-5 | 3 |
| 34 | MPC2 | X | .837 | 3 |
| 35 | MPC2 | Z | -.483 | 3 |
| 36 | MPC2 | Mx | -.000242 | 3 |
| 37 | MP3A | X | 1.036 | 4.5 |
| 38 | MP3A | Z | -.598 | 4.5 |
| 39 | MP3A | Mx | .000837 | 4.5 |
| 40 | MP3B | X | 1.036 | 4.5 |
| 41 | MP3B | Z | -.598 | 4.5 |
| 42 | MP3B | Mx | -.001 | 4.5 |
| 43 | MP3C | X | 2.171 | 4.5 |
| 44 | MP3C | Z | -1.253 | 4.5 |
| 45 | MP3C | Mx | .000835 | 4.5 |
| 46 | MP3A | X | 1.036 | 4.5 |

## Member Point Loads (BLC 29 : Antenna Wm (60 Deg)) (Continued)

| | Member Label | Direction | Magnitude[lb,k-ft] | Location[ft,%] |
|---|---|---|---|---|
| 47 | MP3A | Z | -.598 | 4.5 |
| 48 | MP3A | Mx | .001 | 4.5 |
| 49 | MP3B | X | 1.036 | 4.5 |
| 50 | MP3B | Z | -.598 | 4.5 |
| 51 | MP3B | Mx | -.000836 | 4.5 |
| 52 | MP3C | X | 2.171 | 4.5 |
| 53 | MP3C | Z | -1.253 | 4.5 |
| 54 | MP3C | Mx | -.000836 | 4.5 |
| 55 | MP4A | X | 2.252 | 1 |
| 56 | MP4A | Z | -1.3 | 1 |
| 57 | MP4A | Mx | -.001 | 1 |
| 58 | MP4A | X | 2.252 | 3 |
| 59 | MP4A | Z | -1.3 | 3 |
| 60 | MP4A | Mx | -.001 | 3 |
| 61 | MP4B | X | 2.252 | 1 |
| 62 | MP4B | Z | -1.3 | 1 |
| 63 | MP4B | Mx | .001 | 1 |
| 64 | MP4B | X | 2.252 | 3 |
| 65 | MP4B | Z | -1.3 | 3 |
| 66 | MP4B | Mx | .001 | 3 |
| 67 | MP4C | X | 4.431 | 1 |
| 68 | MP4C | Z | -2.559 | 1 |
| 69 | MP4C | Mx | 0 | 1 |
| 70 | MP4C | X | 4.431 | 3 |
| 71 | MP4C | Z | -2.559 | 3 |
| 72 | MP4C | Mx | 0 | 3 |
| 73 | MP3A | X | 7.648 | .5 |
| 74 | MP3A | Z | -4.415 | .5 |
| 75 | MP3A | Mx | -.011 | .5 |
| 76 | MP3A | X | 7.648 | 4.5 |
| 77 | MP3A | Z | -4.415 | 4.5 |
| 78 | MP3A | Mx | -.011 | 4.5 |
| 79 | MP3B | X | 7.648 | .5 |
| 80 | MP3B | Z | -4.415 | .5 |
| 81 | MP3B | Mx | .006 | .5 |
| 82 | MP3B | X | 7.648 | 4.5 |
| 83 | MP3B | Z | -4.415 | 4.5 |
| 84 | MP3B | Mx | .006 | 4.5 |
| 85 | MP3C | X | 10.299 | .5 |
| 86 | MP3C | Z | -5.946 | .5 |
| 87 | MP3C | Mx | .007 | .5 |
| 88 | MP3C | X | 10.299 | 4.5 |
| 89 | MP3C | Z | -5.946 | 4.5 |
| 90 | MP3C | Mx | .007 | 4.5 |
| 91 | MP3A | X | 7.648 | .5 |
| 92 | MP3A | Z | -4.415 | .5 |
| 93 | MP3A | Mx | -.006 | .5 |
| 94 | MP3A | X | 7.648 | 4.5 |
| 95 | MP3A | Z | -4.415 | 4.5 |
| 96 | MP3A | Mx | -.006 | 4.5 |
| 97 | MP3B | X | 7.648 | .5 |
| 98 | MP3B | Z | -4.415 | .5 |

## Member Point Loads (BLC 29 : Antenna Wm (60 Deg)) (Continued)

| | Member Label | Direction | Magnitude[lb,k-ft] | Location[ft,%] |
|---|---|---|---|---|
| 99 | MP3B | Mx | .011 | .5 |
| 100 | MP3B | X | 7.648 | 4.5 |
| 101 | MP3B | Z | -4.415 | 4.5 |
| 102 | MP3B | Mx | .011 | 4.5 |
| 103 | MP3C | X | 10.299 | .5 |
| 104 | MP3C | Z | -5.946 | .5 |
| 105 | MP3C | Mx | -.007 | .5 |
| 106 | MP3C | X | 10.299 | 4.5 |
| 107 | MP3C | Z | -5.946 | 4.5 |
| 108 | MP3C | Mx | -.007 | 4.5 |
| 109 | MP1B | X | 6.403 | .5 |
| 110 | MP1B | Z | -3.697 | .5 |
| 111 | MP1B | Mx | .008 | .5 |
| 112 | MP1B | X | 6.403 | 3.5 |
| 113 | MP1B | Z | -3.697 | 3.5 |
| 114 | MP1B | Mx | .008 | 3.5 |
| 115 | MP5B | X | 6.403 | .5 |
| 116 | MP5B | Z | -3.697 | .5 |
| 117 | MP5B | Mx | .008 | .5 |
| 118 | MP5B | X | 6.403 | 3.5 |
| 119 | MP5B | Z | -3.697 | 3.5 |
| 120 | MP5B | Mx | .008 | 3.5 |
| 121 | MP3A | X | 2.64 | 2 |
| 122 | MP3A | Z | -1.524 | 2 |
| 123 | MP3A | Mx | .002 | 2 |
| 124 | MP3B | X | 2.64 | 2 |
| 125 | MP3B | Z | -1.524 | 2 |
| 126 | MP3B | Mx | -.002 | 2 |
| 127 | MP3C | X | 3.504 | 2 |
| 128 | MP3C | Z | -2.023 | 2 |
| 129 | MP3C | Mx | 0 | 2 |
| 130 | MP2A | X | 2.317 | 2 |
| 131 | MP2A | Z | -1.338 | 2 |
| 132 | MP2A | Mx | .002 | 2 |
| 133 | MP2B | X | 2.317 | 2 |
| 134 | MP2B | Z | -1.338 | 2 |
| 135 | MP2B | Mx | -.002 | 2 |
| 136 | MP2C | X | 3.504 | 2 |
| 137 | MP2C | Z | -2.023 | 2 |
| 138 | MP2C | Mx | 0 | 2 |

## Member Point Loads (BLC 30 : Antenna Wm (90 Deg))

| | Member Label | Direction | Magnitude[lb,k-ft] | Location[ft,%] |
|---|---|---|---|---|
| 1 | MP1A | X | 7.048 | .5 |
| 2 | MP1A | Z | 0 | .5 |
| 3 | MP1A | Mx | -.009 | .5 |
| 4 | MP1A | X | 7.048 | 3.5 |
| 5 | MP1A | Z | 0 | 3.5 |
| 6 | MP1A | Mx | -.009 | 3.5 |
| 7 | MP1C | X | 4.317 | .5 |
| 8 | MP1C | Z | 0 | .5 |

## Member Point Loads (BLC 30 : Antenna Wm (90 Deg)) (Continued)

| | Member Label | Direction | Magnitude[lb,k-ft] | Location[ft,%] |
|---|---|---|---|---|
| 9 | MP1C | Mx | .003 | .5 |
| 10 | MP1C | X | 4.317 | 3.5 |
| 11 | MP1C | Z | 0 | 3.5 |
| 12 | MP1C | Mx | .003 | 3.5 |
| 13 | MP5A | X | 7.048 | .5 |
| 14 | MP5A | Z | 0 | .5 |
| 15 | MP5A | Mx | -.009 | .5 |
| 16 | MP5A | X | 7.048 | 3.5 |
| 17 | MP5A | Z | 0 | 3.5 |
| 18 | MP5A | Mx | -.009 | 3.5 |
| 19 | MP5C | X | 4.317 | .5 |
| 20 | MP5C | Z | 0 | .5 |
| 21 | MP5C | Mx | .003 | .5 |
| 22 | MP5C | X | 4.317 | 3.5 |
| 23 | MP5C | Z | 0 | 3.5 |
| 24 | MP5C | Mx | .003 | 3.5 |
| 25 | MPA2 | X | .668 | 3 |
| 26 | MPA2 | Z | 0 | 3 |
| 27 | MPA2 | Mx | 0 | 3 |
| 28 | MP4A | X | 5.221 | 2 |
| 29 | MP4A | Z | 0 | 2 |
| 30 | MP4A | Mx | .003 | 2 |
| 31 | MPB2 | X | .892 | 3 |
| 32 | MPB2 | Z | 0 | 3 |
| 33 | MPB2 | Mx | .000193 | 3 |
| 34 | MPC2 | X | .892 | 3 |
| 35 | MPC2 | Z | 0 | 3 |
| 36 | MPC2 | Mx | -.000193 | 3 |
| 37 | MP3A | X | .76 | 4.5 |
| 38 | MP3A | Z | 0 | 4.5 |
| 39 | MP3A | Mx | .00076 | 4.5 |
| 40 | MP3B | X | 2.07 | 4.5 |
| 41 | MP3B | Z | 0 | 4.5 |
| 42 | MP3B | Mx | -.002 | 4.5 |
| 43 | MP3C | X | 2.07 | 4.5 |
| 44 | MP3C | Z | 0 | 4.5 |
| 45 | MP3C | Mx | -.000437 | 4.5 |
| 46 | MP3A | X | .76 | 4.5 |
| 47 | MP3A | Z | 0 | 4.5 |
| 48 | MP3A | Mx | .00076 | 4.5 |
| 49 | MP3B | X | 2.07 | 4.5 |
| 50 | MP3B | Z | 0 | 4.5 |
| 51 | MP3B | Mx | -.000437 | 4.5 |
| 52 | MP3C | X | 2.07 | 4.5 |
| 53 | MP3C | Z | 0 | 4.5 |
| 54 | MP3C | Mx | -.002 | 4.5 |
| 55 | MP4A | X | 1.762 | 1 |
| 56 | MP4A | Z | 0 | 1 |
| 57 | MP4A | Mx | -.000881 | 1 |
| 58 | MP4A | X | 1.762 | 3 |
| 59 | MP4A | Z | 0 | 3 |
| 60 | MP4A | Mx | -.000881 | 3 |

## Member Point Loads (BLC 30 : Antenna Wm (90 Deg)) (Continued)

| | Member Label | Direction | Magnitude[lb,k-ft] | Location[ft,%] |
|---|---|---|---|---|
| 61 | MP4B | X | 4.278 | 1 |
| 62 | MP4B | Z | 0 | 1 |
| 63 | MP4B | Mx | .001 | 1 |
| 64 | MP4B | X | 4.278 | 3 |
| 65 | MP4B | Z | 0 | 3 |
| 66 | MP4B | Mx | .001 | 3 |
| 67 | MP4C | X | 4.278 | 1 |
| 68 | MP4C | Z | 0 | 1 |
| 69 | MP4C | Mx | .001 | 1 |
| 70 | MP4C | X | 4.278 | 3 |
| 71 | MP4C | Z | 0 | 3 |
| 72 | MP4C | Mx | .001 | 3 |
| 73 | MP3A | X | 7.81 | .5 |
| 74 | MP3A | Z | 0 | .5 |
| 75 | MP3A | Mx | -.008 | .5 |
| 76 | MP3A | X | 7.81 | 4.5 |
| 77 | MP3A | Z | 0 | 4.5 |
| 78 | MP3A | Mx | -.008 | 4.5 |
| 79 | MP3B | X | 10.872 | .5 |
| 80 | MP3B | Z | 0 | .5 |
| 81 | MP3B | Mx | .000397 | .5 |
| 82 | MP3B | X | 10.872 | 4.5 |
| 83 | MP3B | Z | 0 | 4.5 |
| 84 | MP3B | Mx | .000397 | 4.5 |
| 85 | MP3C | X | 10.872 | .5 |
| 86 | MP3C | Z | 0 | .5 |
| 87 | MP3C | Mx | .011 | .5 |
| 88 | MP3C | X | 10.872 | 4.5 |
| 89 | MP3C | Z | 0 | 4.5 |
| 90 | MP3C | Mx | .011 | 4.5 |
| 91 | MP3A | X | 7.81 | .5 |
| 92 | MP3A | Z | 0 | .5 |
| 93 | MP3A | Mx | -.008 | .5 |
| 94 | MP3A | X | 7.81 | 4.5 |
| 95 | MP3A | Z | 0 | 4.5 |
| 96 | MP3A | Mx | -.008 | 4.5 |
| 97 | MP3B | X | 10.872 | .5 |
| 98 | MP3B | Z | 0 | .5 |
| 99 | MP3B | Mx | .011 | .5 |
| 100 | MP3B | X | 10.872 | 4.5 |
| 101 | MP3B | Z | 0 | 4.5 |
| 102 | MP3B | Mx | .011 | 4.5 |
| 103 | MP3C | X | 10.872 | .5 |
| 104 | MP3C | Z | 0 | .5 |
| 105 | MP3C | Mx | .000397 | .5 |
| 106 | MP3C | X | 10.872 | 4.5 |
| 107 | MP3C | Z | 0 | 4.5 |
| 108 | MP3C | Mx | .000397 | 4.5 |
| 109 | MP1B | X | 7.817 | .5 |
| 110 | MP1B | Z | 0 | .5 |
| 111 | MP1B | Mx | .005 | .5 |
| 112 | MP1B | X | 7.817 | 3.5 |

## Member Point Loads (BLC 30 : Antenna Wm (90 Deg)) (Continued)

| | Member Label | Direction | Magnitude[lb,k-ft] | Location[ft,%] |
|---|---|---|---|---|
| 113 | MP1B | Z | 0 | 3.5 |
| 114 | MP1B | Mx | .005 | 3.5 |
| 115 | MP5B | X | 7.817 | .5 |
| 116 | MP5B | Z | 0 | .5 |
| 117 | MP5B | Mx | .005 | .5 |
| 118 | MP5B | X | 7.817 | 3.5 |
| 119 | MP5B | Z | 0 | 3.5 |
| 120 | MP5B | Mx | .005 | 3.5 |
| 121 | MP3A | X | 2.715 | 2 |
| 122 | MP3A | Z | 0 | 2 |
| 123 | MP3A | Mx | .002 | 2 |
| 124 | MP3B | X | 3.714 | 2 |
| 125 | MP3B | Z | 0 | 2 |
| 126 | MP3B | Mx | -.001 | 2 |
| 127 | MP3C | X | 3.714 | 2 |
| 128 | MP3C | Z | 0 | 2 |
| 129 | MP3C | Mx | -.001 | 2 |
| 130 | MP2A | X | 2.219 | 2 |
| 131 | MP2A | Z | 0 | 2 |
| 132 | MP2A | Mx | .001 | 2 |
| 133 | MP2B | X | 3.59 | 2 |
| 134 | MP2B | Z | 0 | 2 |
| 135 | MP2B | Mx | -.001 | 2 |
| 136 | MP2C | X | 3.59 | 2 |
| 137 | MP2C | Z | 0 | 2 |
| 138 | MP2C | Mx | -.001 | 2 |

## Member Point Loads (BLC 31 : Antenna Wm (120 Deg))

| | Member Label | Direction | Magnitude[lb,k-ft] | Location[ft,%] |
|---|---|---|---|---|
| 1 | MP1A | X | 5.315 | .5 |
| 2 | MP1A | Z | 3.069 | .5 |
| 3 | MP1A | Mx | -.007 | .5 |
| 4 | MP1A | X | 5.315 | 3.5 |
| 5 | MP1A | Z | 3.069 | 3.5 |
| 6 | MP1A | Mx | -.007 | 3.5 |
| 7 | MP1C | X | 5.315 | .5 |
| 8 | MP1C | Z | 3.069 | .5 |
| 9 | MP1C | Mx | .007 | .5 |
| 10 | MP1C | X | 5.315 | 3.5 |
| 11 | MP1C | Z | 3.069 | 3.5 |
| 12 | MP1C | Mx | .007 | 3.5 |
| 13 | MP5A | X | 5.315 | .5 |
| 14 | MP5A | Z | 3.069 | .5 |
| 15 | MP5A | Mx | -.007 | .5 |
| 16 | MP5A | X | 5.315 | 3.5 |
| 17 | MP5A | Z | 3.069 | 3.5 |
| 18 | MP5A | Mx | -.007 | 3.5 |
| 19 | MP5C | X | 5.315 | .5 |
| 20 | MP5C | Z | 3.069 | .5 |
| 21 | MP5C | Mx | .007 | .5 |
| 22 | MP5C | X | 5.315 | 3.5 |

## Member Point Loads (BLC 31 : Antenna Wm (120 Deg)) (Continued)

| | Member Label | Direction | Magnitude[lb,k-ft] | Location[ft,%] |
|---|---|---|---|---|
| 23 | MP5C | Z | 3.069 | 3.5 |
| 24 | MP5C | Mx | .007 | 3.5 |
| 25 | MPA2 | X | .643 | 3 |
| 26 | MPA2 | Z | .371 | 3 |
| 27 | MPA2 | Mx | -9.3e-5 | 3 |
| 28 | MP4A | X | 6.105 | 2 |
| 29 | MP4A | Z | 3.524 | 2 |
| 30 | MP4A | Mx | .003 | 2 |
| 31 | MPB2 | X | .837 | 3 |
| 32 | MPB2 | Z | .483 | 3 |
| 33 | MPB2 | Mx | .000242 | 3 |
| 34 | MPC2 | X | .643 | 3 |
| 35 | MPC2 | Z | .371 | 3 |
| 36 | MPC2 | Mx | -9.3e-5 | 3 |
| 37 | MP3A | X | 1.036 | 4.5 |
| 38 | MP3A | Z | .598 | 4.5 |
| 39 | MP3A | Mx | .001 | 4.5 |
| 40 | MP3B | X | 2.171 | 4.5 |
| 41 | MP3B | Z | 1.253 | 4.5 |
| 42 | MP3B | Mx | -.000836 | 4.5 |
| 43 | MP3C | X | 1.036 | 4.5 |
| 44 | MP3C | Z | .598 | 4.5 |
| 45 | MP3C | Mx | -.000836 | 4.5 |
| 46 | MP3A | X | 1.036 | 4.5 |
| 47 | MP3A | Z | .598 | 4.5 |
| 48 | MP3A | Mx | .000837 | 4.5 |
| 49 | MP3B | X | 2.171 | 4.5 |
| 50 | MP3B | Z | 1.253 | 4.5 |
| 51 | MP3B | Mx | .000835 | 4.5 |
| 52 | MP3C | X | 1.036 | 4.5 |
| 53 | MP3C | Z | .598 | 4.5 |
| 54 | MP3C | Mx | -.001 | 4.5 |
| 55 | MP4A | X | 2.252 | 1 |
| 56 | MP4A | Z | 1.3 | 1 |
| 57 | MP4A | Mx | -.001 | 1 |
| 58 | MP4A | X | 2.252 | 3 |
| 59 | MP4A | Z | 1.3 | 3 |
| 60 | MP4A | Mx | -.001 | 3 |
| 61 | MP4B | X | 4.431 | 1 |
| 62 | MP4B | Z | 2.559 | 1 |
| 63 | MP4B | Mx | 0 | 1 |
| 64 | MP4B | X | 4.431 | 3 |
| 65 | MP4B | Z | 2.559 | 3 |
| 66 | MP4B | Mx | 0 | 3 |
| 67 | MP4C | X | 2.252 | 1 |
| 68 | MP4C | Z | 1.3 | 1 |
| 69 | MP4C | Mx | .001 | 1 |
| 70 | MP4C | X | 2.252 | 3 |
| 71 | MP4C | Z | 1.3 | 3 |
| 72 | MP4C | Mx | .001 | 3 |
| 73 | MP3A | X | 7.648 | .5 |
| 74 | MP3A | Z | 4.415 | .5 |

## Member Point Loads (BLC 31 : Antenna Wm (120 Deg)) (Continued)

| | Member Label | Direction | Magnitude[lb,k-ft] | Location[ft,%] |
|---|---|---|---|---|
| 75 | MP3A | Mx | -.006 | .5 |
| 76 | MP3A | X | 7.648 | 4.5 |
| 77 | MP3A | Z | 4.415 | 4.5 |
| 78 | MP3A | Mx | -.006 | 4.5 |
| 79 | MP3B | X | 10.299 | .5 |
| 80 | MP3B | Z | 5.946 | .5 |
| 81 | MP3B | Mx | -.007 | .5 |
| 82 | MP3B | X | 10.299 | 4.5 |
| 83 | MP3B | Z | 5.946 | 4.5 |
| 84 | MP3B | Mx | -.007 | 4.5 |
| 85 | MP3C | X | 7.648 | .5 |
| 86 | MP3C | Z | 4.415 | .5 |
| 87 | MP3C | Mx | .011 | .5 |
| 88 | MP3C | X | 7.648 | 4.5 |
| 89 | MP3C | Z | 4.415 | 4.5 |
| 90 | MP3C | Mx | .011 | 4.5 |
| 91 | MP3A | X | 7.648 | .5 |
| 92 | MP3A | Z | 4.415 | .5 |
| 93 | MP3A | Mx | -.011 | .5 |
| 94 | MP3A | X | 7.648 | 4.5 |
| 95 | MP3A | Z | 4.415 | 4.5 |
| 96 | MP3A | Mx | -.011 | 4.5 |
| 97 | MP3B | X | 10.299 | .5 |
| 98 | MP3B | Z | 5.946 | .5 |
| 99 | MP3B | Mx | .007 | .5 |
| 100 | MP3B | X | 10.299 | 4.5 |
| 101 | MP3B | Z | 5.946 | 4.5 |
| 102 | MP3B | Mx | .007 | 4.5 |
| 103 | MP3C | X | 7.648 | .5 |
| 104 | MP3C | Z | 4.415 | .5 |
| 105 | MP3C | Mx | .006 | .5 |
| 106 | MP3C | X | 7.648 | 4.5 |
| 107 | MP3C | Z | 4.415 | 4.5 |
| 108 | MP3C | Mx | .006 | 4.5 |
| 109 | MP1B | X | 6.952 | .5 |
| 110 | MP1B | Z | 4.014 | .5 |
| 111 | MP1B | Mx | 0 | .5 |
| 112 | MP1B | X | 6.952 | 3.5 |
| 113 | MP1B | Z | 4.014 | 3.5 |
| 114 | MP1B | Mx | 0 | 3.5 |
| 115 | MP5B | X | 6.952 | .5 |
| 116 | MP5B | Z | 4.014 | .5 |
| 117 | MP5B | Mx | 0 | .5 |
| 118 | MP5B | X | 6.952 | 3.5 |
| 119 | MP5B | Z | 4.014 | 3.5 |
| 120 | MP5B | Mx | 0 | 3.5 |
| 121 | MP3A | X | 2.64 | 2 |
| 122 | MP3A | Z | 1.524 | 2 |
| 123 | MP3A | Mx | .002 | 2 |
| 124 | MP3B | X | 3.504 | 2 |
| 125 | MP3B | Z | 2.023 | 2 |
| 126 | MP3B | Mx | 0 | 2 |

## Member Point Loads (BLC 31 : Antenna Wm (120 Deg)) (Continued)

| | Member Label | Direction | Magnitude[lb,k-ft] | Location[ft,%] |
|---|---|---|---|---|
| 127 | MP3C | X | 2.64 | 2 |
| 128 | MP3C | Z | 1.524 | 2 |
| 129 | MP3C | Mx | -.002 | 2 |
| 130 | MP2A | X | 2.317 | 2 |
| 131 | MP2A | Z | 1.338 | 2 |
| 132 | MP2A | Mx | .002 | 2 |
| 133 | MP2B | X | 3.504 | 2 |
| 134 | MP2B | Z | 2.023 | 2 |
| 135 | MP2B | Mx | 0 | 2 |
| 136 | MP2C | X | 2.317 | 2 |
| 137 | MP2C | Z | 1.338 | 2 |
| 138 | MP2C | Mx | -.002 | 2 |

## Member Point Loads (BLC 32 : Antenna Wm (150 Deg))

| | Member Label | Direction | Magnitude[lb,k-ft] | Location[ft,%] |
|---|---|---|---|---|
| 1 | MP1A | X | 2.159 | .5 |
| 2 | MP1A | Z | 3.739 | .5 |
| 3 | MP1A | Mx | -.003 | .5 |
| 4 | MP1A | X | 2.159 | 3.5 |
| 5 | MP1A | Z | 3.739 | 3.5 |
| 6 | MP1A | Mx | -.003 | 3.5 |
| 7 | MP1C | X | 3.524 | .5 |
| 8 | MP1C | Z | 6.103 | .5 |
| 9 | MP1C | Mx | .009 | .5 |
| 10 | MP1C | X | 3.524 | 3.5 |
| 11 | MP1C | Z | 6.103 | 3.5 |
| 12 | MP1C | Mx | .009 | 3.5 |
| 13 | MP5A | X | 2.159 | .5 |
| 14 | MP5A | Z | 3.739 | .5 |
| 15 | MP5A | Mx | -.003 | .5 |
| 16 | MP5A | X | 2.159 | 3.5 |
| 17 | MP5A | Z | 3.739 | 3.5 |
| 18 | MP5A | Mx | -.003 | 3.5 |
| 19 | MP5C | X | 3.524 | .5 |
| 20 | MP5C | Z | 6.103 | .5 |
| 21 | MP5C | Mx | .009 | .5 |
| 22 | MP5C | X | 3.524 | 3.5 |
| 23 | MP5C | Z | 6.103 | 3.5 |
| 24 | MP5C | Mx | .009 | 3.5 |
| 25 | MPA2 | X | .446 | 3 |
| 26 | MPA2 | Z | .772 | 3 |
| 27 | MPA2 | Mx | -.000193 | 3 |
| 28 | MP4A | X | 5.352 | 2 |
| 29 | MP4A | Z | 9.27 | 2 |
| 30 | MP4A | Mx | .003 | 2 |
| 31 | MPB2 | X | .446 | 3 |
| 32 | MPB2 | Z | .772 | 3 |
| 33 | MPB2 | Mx | .000193 | 3 |
| 34 | MPC2 | X | .334 | 3 |
| 35 | MPC2 | Z | .579 | 3 |
| 36 | MPC2 | Mx | 0 | 3 |

## Member Point Loads (BLC 32 : Antenna Wm (150 Deg)) (Continued)

| | Member Label | Direction | Magnitude[lb,k-ft] | Location[ft,%] |
|---|---|---|---|---|
| 37 | MP3A | X | 1.035 | 4.5 |
| 38 | MP3A | Z | 1.792 | 4.5 |
| 39 | MP3A | Mx | .002 | 4.5 |
| 40 | MP3B | X | 1.035 | 4.5 |
| 41 | MP3B | Z | 1.792 | 4.5 |
| 42 | MP3B | Mx | .000437 | 4.5 |
| 43 | MP3C | X | .38 | 4.5 |
| 44 | MP3C | Z | .658 | 4.5 |
| 45 | MP3C | Mx | -.00076 | 4.5 |
| 46 | MP3A | X | 1.035 | 4.5 |
| 47 | MP3A | Z | 1.792 | 4.5 |
| 48 | MP3A | Mx | .000438 | 4.5 |
| 49 | MP3B | X | 1.035 | 4.5 |
| 50 | MP3B | Z | 1.792 | 4.5 |
| 51 | MP3B | Mx | .002 | 4.5 |
| 52 | MP3C | X | .38 | 4.5 |
| 53 | MP3C | Z | .658 | 4.5 |
| 54 | MP3C | Mx | -.00076 | 4.5 |
| 55 | MP4A | X | 2.139 | 1 |
| 56 | MP4A | Z | 3.705 | 1 |
| 57 | MP4A | Mx | -.001 | 1 |
| 58 | MP4A | X | 2.139 | 3 |
| 59 | MP4A | Z | 3.705 | 3 |
| 60 | MP4A | Mx | -.001 | 3 |
| 61 | MP4B | X | 2.139 | 1 |
| 62 | MP4B | Z | 3.705 | 1 |
| 63 | MP4B | Mx | -.001 | 1 |
| 64 | MP4B | X | 2.139 | 3 |
| 65 | MP4B | Z | 3.705 | 3 |
| 66 | MP4B | Mx | -.001 | 3 |
| 67 | MP4C | X | .881 | 1 |
| 68 | MP4C | Z | 1.526 | 1 |
| 69 | MP4C | Mx | .000881 | 1 |
| 70 | MP4C | X | .881 | 3 |
| 71 | MP4C | Z | 1.526 | 3 |
| 72 | MP4C | Mx | .000881 | 3 |
| 73 | MP3A | X | 5.436 | .5 |
| 74 | MP3A | Z | 9.415 | .5 |
| 75 | MP3A | Mx | -.000397 | .5 |
| 76 | MP3A | X | 5.436 | 4.5 |
| 77 | MP3A | Z | 9.415 | 4.5 |
| 78 | MP3A | Mx | -.000397 | 4.5 |
| 79 | MP3B | X | 5.436 | .5 |
| 80 | MP3B | Z | 9.415 | .5 |
| 81 | MP3B | Mx | -.011 | .5 |
| 82 | MP3B | X | 5.436 | 4.5 |
| 83 | MP3B | Z | 9.415 | 4.5 |
| 84 | MP3B | Mx | -.011 | 4.5 |
| 85 | MP3C | X | 3.905 | .5 |
| 86 | MP3C | Z | 6.764 | .5 |
| 87 | MP3C | Mx | .008 | .5 |
| 88 | MP3C | X | 3.905 | 4.5 |

## Member Point Loads (BLC 32 : Antenna Wm (150 Deg)) (Continued)

| | Member Label | Direction | Magnitude[lb,k-ft] | Location[ft,%] |
|---|---|---|---|---|
| 89 | MP3C | Z | 6.764 | 4.5 |
| 90 | MP3C | Mx | .008 | 4.5 |
| 91 | MP3A | X | 5.436 | .5 |
| 92 | MP3A | Z | 9.415 | .5 |
| 93 | MP3A | Mx | -.011 | .5 |
| 94 | MP3A | X | 5.436 | 4.5 |
| 95 | MP3A | Z | 9.415 | 4.5 |
| 96 | MP3A | Mx | -.011 | 4.5 |
| 97 | MP3B | X | 5.436 | .5 |
| 98 | MP3B | Z | 9.415 | .5 |
| 99 | MP3B | Mx | -.000396 | .5 |
| 100 | MP3B | X | 5.436 | 4.5 |
| 101 | MP3B | Z | 9.415 | 4.5 |
| 102 | MP3B | Mx | -.000396 | 4.5 |
| 103 | MP3C | X | 3.905 | .5 |
| 104 | MP3C | Z | 6.764 | .5 |
| 105 | MP3C | Mx | .008 | .5 |
| 106 | MP3C | X | 3.905 | 4.5 |
| 107 | MP3C | Z | 6.764 | 4.5 |
| 108 | MP3C | Mx | .008 | 4.5 |
| 109 | MP1B | X | 3.908 | .5 |
| 110 | MP1B | Z | 6.769 | .5 |
| 111 | MP1B | Mx | -.005 | .5 |
| 112 | MP1B | X | 3.908 | 3.5 |
| 113 | MP1B | Z | 6.769 | 3.5 |
| 114 | MP1B | Mx | -.005 | 3.5 |
| 115 | MP5B | X | 3.908 | .5 |
| 116 | MP5B | Z | 6.769 | .5 |
| 117 | MP5B | Mx | -.005 | .5 |
| 118 | MP5B | X | 3.908 | 3.5 |
| 119 | MP5B | Z | 6.769 | 3.5 |
| 120 | MP5B | Mx | -.005 | 3.5 |
| 121 | MP3A | X | 1.857 | 2 |
| 122 | MP3A | Z | 3.216 | 2 |
| 123 | MP3A | Mx | .001 | 2 |
| 124 | MP3B | X | 1.857 | 2 |
| 125 | MP3B | Z | 3.216 | 2 |
| 126 | MP3B | Mx | .001 | 2 |
| 127 | MP3C | X | 1.358 | 2 |
| 128 | MP3C | Z | 2.351 | 2 |
| 129 | MP3C | Mx | -.002 | 2 |
| 130 | MP2A | X | 1.795 | 2 |
| 131 | MP2A | Z | 3.109 | 2 |
| 132 | MP2A | Mx | .001 | 2 |
| 133 | MP2B | X | 1.795 | 2 |
| 134 | MP2B | Z | 3.109 | 2 |
| 135 | MP2B | Mx | .001 | 2 |
| 136 | MP2C | X | 1.11 | 2 |
| 137 | MP2C | Z | 1.922 | 2 |
| 138 | MP2C | Mx | -.001 | 2 |

## Member Point Loads (BLC 33 : Antenna Wm (180 Deg))

| | Member Label | Direction | Magnitude[lb,k-ft] | Location[ft,%] |
|---|---|---|---|---|
| 1 | MP1A | X | 0 | .5 |
| 2 | MP1A | Z | 3.407 | .5 |
| 3 | MP1A | Mx | 0 | .5 |
| 4 | MP1A | X | 0 | 3.5 |
| 5 | MP1A | Z | 3.407 | 3.5 |
| 6 | MP1A | Mx | 0 | 3.5 |
| 7 | MP1C | X | 0 | .5 |
| 8 | MP1C | Z | 6.137 | .5 |
| 9 | MP1C | Mx | .007 | .5 |
| 10 | MP1C | X | 0 | 3.5 |
| 11 | MP1C | Z | 6.137 | 3.5 |
| 12 | MP1C | Mx | .007 | 3.5 |
| 13 | MP5A | X | 0 | .5 |
| 14 | MP5A | Z | 3.407 | .5 |
| 15 | MP5A | Mx | 0 | .5 |
| 16 | MP5A | X | 0 | 3.5 |
| 17 | MP5A | Z | 3.407 | 3.5 |
| 18 | MP5A | Mx | 0 | 3.5 |
| 19 | MP5C | X | 0 | .5 |
| 20 | MP5C | Z | 6.137 | .5 |
| 21 | MP5C | Mx | .007 | .5 |
| 22 | MP5C | X | 0 | 3.5 |
| 23 | MP5C | Z | 6.137 | 3.5 |
| 24 | MP5C | Mx | .007 | 3.5 |
| 25 | MPA2 | X | 0 | 3 |
| 26 | MPA2 | Z | .966 | 3 |
| 27 | MPA2 | Mx | -.000241 | 3 |
| 28 | MP4A | X | 0 | 2 |
| 29 | MP4A | Z | 12.532 | 2 |
| 30 | MP4A | Mx | 0 | 2 |
| 31 | MPB2 | X | 0 | 3 |
| 32 | MPB2 | Z | .743 | 3 |
| 33 | MPB2 | Mx | 9.3e-5 | 3 |
| 34 | MPC2 | X | 0 | 3 |
| 35 | MPC2 | Z | .743 | 3 |
| 36 | MPC2 | Mx | 9.3e-5 | 3 |
| 37 | MP3A | X | 0 | 4.5 |
| 38 | MP3A | Z | 2.506 | 4.5 |
| 39 | MP3A | Mx | .000835 | 4.5 |
| 40 | MP3B | X | 0 | 4.5 |
| 41 | MP3B | Z | 1.197 | 4.5 |
| 42 | MP3B | Mx | .000837 | 4.5 |
| 43 | MP3C | X | 0 | 4.5 |
| 44 | MP3C | Z | 1.197 | 4.5 |
| 45 | MP3C | Mx | -.001 | 4.5 |
| 46 | MP3A | X | 0 | 4.5 |
| 47 | MP3A | Z | 2.506 | 4.5 |
| 48 | MP3A | Mx | -.000835 | 4.5 |
| 49 | MP3B | X | 0 | 4.5 |
| 50 | MP3B | Z | 1.197 | 4.5 |
| 51 | MP3B | Mx | .001 | 4.5 |
| 52 | MP3C | X | 0 | 4.5 |

## Member Point Loads (BLC 33 : Antenna Wm (180 Deg)) (Continued)

| | Member Label | Direction | Magnitude[lb,k-ft] | Location[ft,%] |
|---|---|---|---|---|
| 53 | MP3C | Z | 1.197 | 4.5 |
| 54 | MP3C | Mx | -.000837 | 4.5 |
| 55 | MP4A | X | 0 | 1 |
| 56 | MP4A | Z | 5.117 | 1 |
| 57 | MP4A | Mx | 0 | 1 |
| 58 | MP4A | X | 0 | 3 |
| 59 | MP4A | Z | 5.117 | 3 |
| 60 | MP4A | Mx | 0 | 3 |
| 61 | MP4B | X | 0 | 1 |
| 62 | MP4B | Z | 2.601 | 1 |
| 63 | MP4B | Mx | -.001 | 1 |
| 64 | MP4B | X | 0 | 3 |
| 65 | MP4B | Z | 2.601 | 3 |
| 66 | MP4B | Mx | -.001 | 3 |
| 67 | MP4C | X | 0 | 1 |
| 68 | MP4C | Z | 2.601 | 1 |
| 69 | MP4C | Mx | .001 | 1 |
| 70 | MP4C | X | 0 | 3 |
| 71 | MP4C | Z | 2.601 | 3 |
| 72 | MP4C | Mx | .001 | 3 |
| 73 | MP3A | X | 0 | .5 |
| 74 | MP3A | Z | 11.892 | .5 |
| 75 | MP3A | Mx | .007 | .5 |
| 76 | MP3A | X | 0 | 4.5 |
| 77 | MP3A | Z | 11.892 | 4.5 |
| 78 | MP3A | Mx | .007 | 4.5 |
| 79 | MP3B | X | 0 | .5 |
| 80 | MP3B | Z | 8.831 | .5 |
| 81 | MP3B | Mx | -.011 | .5 |
| 82 | MP3B | X | 0 | 4.5 |
| 83 | MP3B | Z | 8.831 | 4.5 |
| 84 | MP3B | Mx | -.011 | 4.5 |
| 85 | MP3C | X | 0 | .5 |
| 86 | MP3C | Z | 8.831 | .5 |
| 87 | MP3C | Mx | .006 | .5 |
| 88 | MP3C | X | 0 | 4.5 |
| 89 | MP3C | Z | 8.831 | 4.5 |
| 90 | MP3C | Mx | .006 | 4.5 |
| 91 | MP3A | X | 0 | .5 |
| 92 | MP3A | Z | 11.892 | .5 |
| 93 | MP3A | Mx | -.007 | .5 |
| 94 | MP3A | X | 0 | 4.5 |
| 95 | MP3A | Z | 11.892 | 4.5 |
| 96 | MP3A | Mx | -.007 | 4.5 |
| 97 | MP3B | X | 0 | .5 |
| 98 | MP3B | Z | 8.831 | .5 |
| 99 | MP3B | Mx | -.006 | .5 |
| 100 | MP3B | X | 0 | 4.5 |
| 101 | MP3B | Z | 8.831 | 4.5 |
| 102 | MP3B | Mx | -.006 | 4.5 |
| 103 | MP3C | X | 0 | .5 |
| 104 | MP3C | Z | 8.831 | .5 |

## Member Point Loads (BLC 33 : Antenna Wm (180 Deg)) (Continued)

| | Member Label | Direction | Magnitude[lb,k-ft] | Location[ft,%] |
|---|---|---|---|---|
| 105 | MP3C | Mx | .011 | .5 |
| 106 | MP3C | X | 0 | 4.5 |
| 107 | MP3C | Z | 8.831 | 4.5 |
| 108 | MP3C | Mx | .011 | 4.5 |
| 109 | MP1B | X | 0 | .5 |
| 110 | MP1B | Z | 7.394 | .5 |
| 111 | MP1B | Mx | -.008 | .5 |
| 112 | MP1B | X | 0 | 3.5 |
| 113 | MP1B | Z | 7.394 | 3.5 |
| 114 | MP1B | Mx | -.008 | 3.5 |
| 115 | MP5B | X | 0 | .5 |
| 116 | MP5B | Z | 7.394 | .5 |
| 117 | MP5B | Mx | -.008 | .5 |
| 118 | MP5B | X | 0 | 3.5 |
| 119 | MP5B | Z | 7.394 | 3.5 |
| 120 | MP5B | Mx | -.008 | 3.5 |
| 121 | MP3A | X | 0 | 2 |
| 122 | MP3A | Z | 4.047 | 2 |
| 123 | MP3A | Mx | 0 | 2 |
| 124 | MP3B | X | 0 | 2 |
| 125 | MP3B | Z | 3.048 | 2 |
| 126 | MP3B | Mx | .002 | 2 |
| 127 | MP3C | X | 0 | 2 |
| 128 | MP3C | Z | 3.048 | 2 |
| 129 | MP3C | Mx | -.002 | 2 |
| 130 | MP2A | X | 0 | 2 |
| 131 | MP2A | Z | 4.047 | 2 |
| 132 | MP2A | Mx | 0 | 2 |
| 133 | MP2B | X | 0 | 2 |
| 134 | MP2B | Z | 2.676 | 2 |
| 135 | MP2B | Mx | .002 | 2 |
| 136 | MP2C | X | 0 | 2 |
| 137 | MP2C | Z | 2.676 | 2 |
| 138 | MP2C | Mx | -.002 | 2 |

## Member Point Loads (BLC 34 : Antenna Wm (210 Deg))

| | Member Label | Direction | Magnitude[lb,k-ft] | Location[ft,%] |
|---|---|---|---|---|
| 1 | MP1A | X | -2.159 | .5 |
| 2 | MP1A | Z | 3.739 | .5 |
| 3 | MP1A | Mx | .003 | .5 |
| 4 | MP1A | X | -2.159 | 3.5 |
| 5 | MP1A | Z | 3.739 | 3.5 |
| 6 | MP1A | Mx | .003 | 3.5 |
| 7 | MP1C | X | -2.159 | .5 |
| 8 | MP1C | Z | 3.739 | .5 |
| 9 | MP1C | Mx | .003 | .5 |
| 10 | MP1C | X | -2.159 | 3.5 |
| 11 | MP1C | Z | 3.739 | 3.5 |
| 12 | MP1C | Mx | .003 | 3.5 |
| 13 | MP5A | X | -2.159 | .5 |
| 14 | MP5A | Z | 3.739 | .5 |

## Member Point Loads (BLC 34 : Antenna Wm (210 Deg)) (Continued)

| | Member Label | Direction | Magnitude[lb,k-ft] | Location[ft,%] |
|---|---|---|---|---|
| 15 | MP5A | Mx | .003 | .5 |
| 16 | MP5A | X | -2.159 | 3.5 |
| 17 | MP5A | Z | 3.739 | 3.5 |
| 18 | MP5A | Mx | .003 | 3.5 |
| 19 | MP5C | X | -2.159 | .5 |
| 20 | MP5C | Z | 3.739 | .5 |
| 21 | MP5C | Mx | .003 | .5 |
| 22 | MP5C | X | -2.159 | 3.5 |
| 23 | MP5C | Z | 3.739 | 3.5 |
| 24 | MP5C | Mx | .003 | 3.5 |
| 25 | MPA2 | X | -.446 | 3 |
| 26 | MPA2 | Z | .772 | 3 |
| 27 | MPA2 | Mx | -.000193 | 3 |
| 28 | MP4A | X | -5.352 | 2 |
| 29 | MP4A | Z | 9.27 | 2 |
| 30 | MP4A | Mx | -.003 | 2 |
| 31 | MPB2 | X | -.334 | 3 |
| 32 | MPB2 | Z | .579 | 3 |
| 33 | MPB2 | Mx | 0 | 3 |
| 34 | MPC2 | X | -.446 | 3 |
| 35 | MPC2 | Z | .772 | 3 |
| 36 | MPC2 | Mx | .000193 | 3 |
| 37 | MP3A | X | -1.035 | 4.5 |
| 38 | MP3A | Z | 1.792 | 4.5 |
| 39 | MP3A | Mx | -.000438 | 4.5 |
| 40 | MP3B | X | -.38 | 4.5 |
| 41 | MP3B | Z | .658 | 4.5 |
| 42 | MP3B | Mx | .00076 | 4.5 |
| 43 | MP3C | X | -1.035 | 4.5 |
| 44 | MP3C | Z | 1.792 | 4.5 |
| 45 | MP3C | Mx | -.002 | 4.5 |
| 46 | MP3A | X | -1.035 | 4.5 |
| 47 | MP3A | Z | 1.792 | 4.5 |
| 48 | MP3A | Mx | -.002 | 4.5 |
| 49 | MP3B | X | -.38 | 4.5 |
| 50 | MP3B | Z | .658 | 4.5 |
| 51 | MP3B | Mx | .00076 | 4.5 |
| 52 | MP3C | X | -1.035 | 4.5 |
| 53 | MP3C | Z | 1.792 | 4.5 |
| 54 | MP3C | Mx | -.000437 | 4.5 |
| 55 | MP4A | X | -2.139 | 1 |
| 56 | MP4A | Z | 3.705 | 1 |
| 57 | MP4A | Mx | .001 | 1 |
| 58 | MP4A | X | -2.139 | 3 |
| 59 | MP4A | Z | 3.705 | 3 |
| 60 | MP4A | Mx | .001 | 3 |
| 61 | MP4B | X | -.881 | 1 |
| 62 | MP4B | Z | 1.526 | 1 |
| 63 | MP4B | Mx | -.000881 | 1 |
| 64 | MP4B | X | -.881 | 3 |
| 65 | MP4B | Z | 1.526 | 3 |
| 66 | MP4B | Mx | -.000881 | 3 |

## Member Point Loads (BLC 34 : Antenna Wm (210 Deg)) (Continued)

| | Member Label | Direction | Magnitude[lb,k-ft] | Location[ft,%] |
|---|---|---|---|---|
| 67 | MP4C | X | -2.139 | 1 |
| 68 | MP4C | Z | 3.705 | 1 |
| 69 | MP4C | Mx | .001 | 1 |
| 70 | MP4C | X | -2.139 | 3 |
| 71 | MP4C | Z | 3.705 | 3 |
| 72 | MP4C | Mx | .001 | 3 |
| 73 | MP3A | X | -5.436 | .5 |
| 74 | MP3A | Z | 9.415 | .5 |
| 75 | MP3A | Mx | .011 | .5 |
| 76 | MP3A | X | -5.436 | 4.5 |
| 77 | MP3A | Z | 9.415 | 4.5 |
| 78 | MP3A | Mx | .011 | 4.5 |
| 79 | MP3B | X | -3.905 | .5 |
| 80 | MP3B | Z | 6.764 | .5 |
| 81 | MP3B | Mx | -.008 | .5 |
| 82 | MP3B | X | -3.905 | 4.5 |
| 83 | MP3B | Z | 6.764 | 4.5 |
| 84 | MP3B | Mx | -.008 | 4.5 |
| 85 | MP3C | X | -5.436 | .5 |
| 86 | MP3C | Z | 9.415 | .5 |
| 87 | MP3C | Mx | .000396 | .5 |
| 88 | MP3C | X | -5.436 | 4.5 |
| 89 | MP3C | Z | 9.415 | 4.5 |
| 90 | MP3C | Mx | .000396 | 4.5 |
| 91 | MP3A | X | -5.436 | .5 |
| 92 | MP3A | Z | 9.415 | .5 |
| 93 | MP3A | Mx | .000397 | .5 |
| 94 | MP3A | X | -5.436 | 4.5 |
| 95 | MP3A | Z | 9.415 | 4.5 |
| 96 | MP3A | Mx | .000397 | 4.5 |
| 97 | MP3B | X | -3.905 | .5 |
| 98 | MP3B | Z | 6.764 | .5 |
| 99 | MP3B | Mx | -.008 | .5 |
| 100 | MP3B | X | -3.905 | 4.5 |
| 101 | MP3B | Z | 6.764 | 4.5 |
| 102 | MP3B | Mx | -.008 | 4.5 |
| 103 | MP3C | X | -5.436 | .5 |
| 104 | MP3C | Z | 9.415 | .5 |
| 105 | MP3C | Mx | .011 | .5 |
| 106 | MP3C | X | -5.436 | 4.5 |
| 107 | MP3C | Z | 9.415 | 4.5 |
| 108 | MP3C | Mx | .011 | 4.5 |
| 109 | MP1B | X | -3.591 | .5 |
| 110 | MP1B | Z | 6.22 | .5 |
| 111 | MP1B | Mx | -.009 | .5 |
| 112 | MP1B | X | -3.591 | 3.5 |
| 113 | MP1B | Z | 6.22 | 3.5 |
| 114 | MP1B | Mx | -.009 | 3.5 |
| 115 | MP5B | X | -3.591 | .5 |
| 116 | MP5B | Z | 6.22 | .5 |
| 117 | MP5B | Mx | -.009 | .5 |
| 118 | MP5B | X | -3.591 | 3.5 |

## Member Point Loads (BLC 34 : Antenna Wm (210 Deg)) (Continued)

| | Member Label | Direction | Magnitude[lb,k-ft] | Location[ft,%] |
|---|---|---|---|---|
| 119 | MP5B | Z | 6.22 | 3.5 |
| 120 | MP5B | Mx | -.009 | 3.5 |
| 121 | MP3A | X | -1.857 | 2 |
| 122 | MP3A | Z | 3.216 | 2 |
| 123 | MP3A | Mx | -.001 | 2 |
| 124 | MP3B | X | -1.358 | 2 |
| 125 | MP3B | Z | 2.351 | 2 |
| 126 | MP3B | Mx | .002 | 2 |
| 127 | MP3C | X | -1.857 | 2 |
| 128 | MP3C | Z | 3.216 | 2 |
| 129 | MP3C | Mx | -.001 | 2 |
| 130 | MP2A | X | -1.795 | 2 |
| 131 | MP2A | Z | 3.109 | 2 |
| 132 | MP2A | Mx | -.001 | 2 |
| 133 | MP2B | X | -1.11 | 2 |
| 134 | MP2B | Z | 1.922 | 2 |
| 135 | MP2B | Mx | .001 | 2 |
| 136 | MP2C | X | -1.795 | 2 |
| 137 | MP2C | Z | 3.109 | 2 |
| 138 | MP2C | Mx | -.001 | 2 |

## Member Point Loads (BLC 35 : Antenna Wm (240 Deg))

| | Member Label | Direction | Magnitude[lb,k-ft] | Location[ft,%] |
|---|---|---|---|---|
| 1 | MP1A | X | -5.315 | .5 |
| 2 | MP1A | Z | 3.069 | .5 |
| 3 | MP1A | Mx | .007 | .5 |
| 4 | MP1A | X | -5.315 | 3.5 |
| 5 | MP1A | Z | 3.069 | 3.5 |
| 6 | MP1A | Mx | .007 | 3.5 |
| 7 | MP1C | X | -2.951 | .5 |
| 8 | MP1C | Z | 1.704 | .5 |
| 9 | MP1C | Mx | 0 | .5 |
| 10 | MP1C | X | -2.951 | 3.5 |
| 11 | MP1C | Z | 1.704 | 3.5 |
| 12 | MP1C | Mx | 0 | 3.5 |
| 13 | MP5A | X | -5.315 | .5 |
| 14 | MP5A | Z | 3.069 | .5 |
| 15 | MP5A | Mx | .007 | .5 |
| 16 | MP5A | X | -5.315 | 3.5 |
| 17 | MP5A | Z | 3.069 | 3.5 |
| 18 | MP5A | Mx | .007 | 3.5 |
| 19 | MP5C | X | -2.951 | .5 |
| 20 | MP5C | Z | 1.704 | .5 |
| 21 | MP5C | Mx | 0 | .5 |
| 22 | MP5C | X | -2.951 | 3.5 |
| 23 | MP5C | Z | 1.704 | 3.5 |
| 24 | MP5C | Mx | 0 | 3.5 |
| 25 | MPA2 | X | -.643 | 3 |
| 26 | MPA2 | Z | .371 | 3 |
| 27 | MPA2 | Mx | -9.3e-5 | 3 |
| 28 | MP4A | X | -6.105 | 2 |

## Member Point Loads (BLC 35 : Antenna Wm (240 Deg)) (Continued)

| | Member Label | Direction | Magnitude[lb,k-ft] | Location[ft,%] |
|---|---|---|---|---|
| 29 | MP4A | Z | 3.524 | 2 |
| 30 | MP4A | Mx | -.003 | 2 |
| 31 | MPB2 | X | -.643 | 3 |
| 32 | MPB2 | Z | .371 | 3 |
| 33 | MPB2 | Mx | -9.3e-5 | 3 |
| 34 | MPC2 | X | -.837 | 3 |
| 35 | MPC2 | Z | .483 | 3 |
| 36 | MPC2 | Mx | .000242 | 3 |
| 37 | MP3A | X | -1.036 | 4.5 |
| 38 | MP3A | Z | .598 | 4.5 |
| 39 | MP3A | Mx | -.000837 | 4.5 |
| 40 | MP3B | X | -1.036 | 4.5 |
| 41 | MP3B | Z | .598 | 4.5 |
| 42 | MP3B | Mx | .001 | 4.5 |
| 43 | MP3C | X | -2.171 | 4.5 |
| 44 | MP3C | Z | 1.253 | 4.5 |
| 45 | MP3C | Mx | -.000835 | 4.5 |
| 46 | MP3A | X | -1.036 | 4.5 |
| 47 | MP3A | Z | .598 | 4.5 |
| 48 | MP3A | Mx | -.001 | 4.5 |
| 49 | MP3B | X | -1.036 | 4.5 |
| 50 | MP3B | Z | .598 | 4.5 |
| 51 | MP3B | Mx | .000836 | 4.5 |
| 52 | MP3C | X | -2.171 | 4.5 |
| 53 | MP3C | Z | 1.253 | 4.5 |
| 54 | MP3C | Mx | .000836 | 4.5 |
| 55 | MP4A | X | -2.252 | 1 |
| 56 | MP4A | Z | 1.3 | 1 |
| 57 | MP4A | Mx | .001 | 1 |
| 58 | MP4A | X | -2.252 | 3 |
| 59 | MP4A | Z | 1.3 | 3 |
| 60 | MP4A | Mx | .001 | 3 |
| 61 | MP4B | X | -2.252 | 1 |
| 62 | MP4B | Z | 1.3 | 1 |
| 63 | MP4B | Mx | -.001 | 1 |
| 64 | MP4B | X | -2.252 | 3 |
| 65 | MP4B | Z | 1.3 | 3 |
| 66 | MP4B | Mx | -.001 | 3 |
| 67 | MP4C | X | -4.431 | 1 |
| 68 | MP4C | Z | 2.559 | 1 |
| 69 | MP4C | Mx | 0 | 1 |
| 70 | MP4C | X | -4.431 | 3 |
| 71 | MP4C | Z | 2.559 | 3 |
| 72 | MP4C | Mx | 0 | 3 |
| 73 | MP3A | X | -7.648 | .5 |
| 74 | MP3A | Z | 4.415 | .5 |
| 75 | MP3A | Mx | .011 | .5 |
| 76 | MP3A | X | -7.648 | 4.5 |
| 77 | MP3A | Z | 4.415 | 4.5 |
| 78 | MP3A | Mx | .011 | 4.5 |
| 79 | MP3B | X | -7.648 | .5 |
| 80 | MP3B | Z | 4.415 | .5 |

## Member Point Loads (BLC 35 : Antenna Wm (240 Deg)) (Continued)

| | Member Label | Direction | Magnitude[lb,k-ft] | Location[ft,%] |
|---|---|---|---|---|
| 81 | MP3B | Mx | -.006 | .5 |
| 82 | MP3B | X | -7.648 | 4.5 |
| 83 | MP3B | Z | 4.415 | 4.5 |
| 84 | MP3B | Mx | -.006 | 4.5 |
| 85 | MP3C | X | -10.299 | .5 |
| 86 | MP3C | Z | 5.946 | .5 |
| 87 | MP3C | Mx | -.007 | .5 |
| 88 | MP3C | X | -10.299 | 4.5 |
| 89 | MP3C | Z | 5.946 | 4.5 |
| 90 | MP3C | Mx | -.007 | 4.5 |
| 91 | MP3A | X | -7.648 | .5 |
| 92 | MP3A | Z | 4.415 | .5 |
| 93 | MP3A | Mx | .006 | .5 |
| 94 | MP3A | X | -7.648 | 4.5 |
| 95 | MP3A | Z | 4.415 | 4.5 |
| 96 | MP3A | Mx | .006 | 4.5 |
| 97 | MP3B | X | -7.648 | .5 |
| 98 | MP3B | Z | 4.415 | .5 |
| 99 | MP3B | Mx | -.011 | .5 |
| 100 | MP3B | X | -7.648 | 4.5 |
| 101 | MP3B | Z | 4.415 | 4.5 |
| 102 | MP3B | Mx | -.011 | 4.5 |
| 103 | MP3C | X | -10.299 | .5 |
| 104 | MP3C | Z | 5.946 | .5 |
| 105 | MP3C | Mx | .007 | .5 |
| 106 | MP3C | X | -10.299 | 4.5 |
| 107 | MP3C | Z | 5.946 | 4.5 |
| 108 | MP3C | Mx | .007 | 4.5 |
| 109 | MP1B | X | -6.403 | .5 |
| 110 | MP1B | Z | 3.697 | .5 |
| 111 | MP1B | Mx | -.008 | .5 |
| 112 | MP1B | X | -6.403 | 3.5 |
| 113 | MP1B | Z | 3.697 | 3.5 |
| 114 | MP1B | Mx | -.008 | 3.5 |
| 115 | MP5B | X | -6.403 | .5 |
| 116 | MP5B | Z | 3.697 | .5 |
| 117 | MP5B | Mx | -.008 | .5 |
| 118 | MP5B | X | -6.403 | 3.5 |
| 119 | MP5B | Z | 3.697 | 3.5 |
| 120 | MP5B | Mx | -.008 | 3.5 |
| 121 | MP3A | X | -2.64 | 2 |
| 122 | MP3A | Z | 1.524 | 2 |
| 123 | MP3A | Mx | -.002 | 2 |
| 124 | MP3B | X | -2.64 | 2 |
| 125 | MP3B | Z | 1.524 | 2 |
| 126 | MP3B | Mx | .002 | 2 |
| 127 | MP3C | X | -3.504 | 2 |
| 128 | MP3C | Z | 2.023 | 2 |
| 129 | MP3C | Mx | 0 | 2 |
| 130 | MP2A | X | -2.317 | 2 |
| 131 | MP2A | Z | 1.338 | 2 |
| 132 | MP2A | Mx | -.002 | 2 |

## Member Point Loads (BLC 35 : Antenna Wm (240 Deg)) (Continued)

| | Member Label | Direction | Magnitude[lb,k-ft] | Location[ft,%] |
|---|---|---|---|---|
| 133 | MP2B | X | -2.317 | 2 |
| 134 | MP2B | Z | 1.338 | 2 |
| 135 | MP2B | Mx | .002 | 2 |
| 136 | MP2C | X | -3.504 | 2 |
| 137 | MP2C | Z | 2.023 | 2 |
| 138 | MP2C | Mx | 0 | 2 |

## Member Point Loads (BLC 36 : Antenna Wm (270 Deg))

| | Member Label | Direction | Magnitude[lb,k-ft] | Location[ft,%] |
|---|---|---|---|---|
| 1 | MP1A | X | -7.048 | .5 |
| 2 | MP1A | Z | 0 | .5 |
| 3 | MP1A | Mx | .009 | .5 |
| 4 | MP1A | X | -7.048 | 3.5 |
| 5 | MP1A | Z | 0 | 3.5 |
| 6 | MP1A | Mx | .009 | 3.5 |
| 7 | MP1C | X | -4.317 | .5 |
| 8 | MP1C | Z | 0 | .5 |
| 9 | MP1C | Mx | -.003 | .5 |
| 10 | MP1C | X | -4.317 | 3.5 |
| 11 | MP1C | Z | 0 | 3.5 |
| 12 | MP1C | Mx | -.003 | 3.5 |
| 13 | MP5A | X | -7.048 | .5 |
| 14 | MP5A | Z | 0 | .5 |
| 15 | MP5A | Mx | .009 | .5 |
| 16 | MP5A | X | -7.048 | 3.5 |
| 17 | MP5A | Z | 0 | 3.5 |
| 18 | MP5A | Mx | .009 | 3.5 |
| 19 | MP5C | X | -4.317 | .5 |
| 20 | MP5C | Z | 0 | .5 |
| 21 | MP5C | Mx | -.003 | .5 |
| 22 | MP5C | X | -4.317 | 3.5 |
| 23 | MP5C | Z | 0 | 3.5 |
| 24 | MP5C | Mx | -.003 | 3.5 |
| 25 | MPA2 | X | -.668 | 3 |
| 26 | MPA2 | Z | 0 | 3 |
| 27 | MPA2 | Mx | 0 | 3 |
| 28 | MP4A | X | -5.221 | 2 |
| 29 | MP4A | Z | 0 | 2 |
| 30 | MP4A | Mx | -.003 | 2 |
| 31 | MPB2 | X | -.892 | 3 |
| 32 | MPB2 | Z | 0 | 3 |
| 33 | MPB2 | Mx | -.000193 | 3 |
| 34 | MPC2 | X | -.892 | 3 |
| 35 | MPC2 | Z | 0 | 3 |
| 36 | MPC2 | Mx | .000193 | 3 |
| 37 | MP3A | X | -.76 | 4.5 |
| 38 | MP3A | Z | 0 | 4.5 |
| 39 | MP3A | Mx | -.00076 | 4.5 |
| 40 | MP3B | X | -2.07 | 4.5 |
| 41 | MP3B | Z | 0 | 4.5 |
| 42 | MP3B | Mx | .002 | 4.5 |

## Member Point Loads (BLC 36 : Antenna Wm (270 Deg)) (Continued)

| | Member Label | Direction | Magnitude[lb,k-ft] | Location[ft,%] |
|---|---|---|---|---|
| 43 | MP3C | X | -2.07 | 4.5 |
| 44 | MP3C | Z | 0 | 4.5 |
| 45 | MP3C | Mx | .000437 | 4.5 |
| 46 | MP3A | X | -.76 | 4.5 |
| 47 | MP3A | Z | 0 | 4.5 |
| 48 | MP3A | Mx | -.00076 | 4.5 |
| 49 | MP3B | X | -2.07 | 4.5 |
| 50 | MP3B | Z | 0 | 4.5 |
| 51 | MP3B | Mx | .000437 | 4.5 |
| 52 | MP3C | X | -2.07 | 4.5 |
| 53 | MP3C | Z | 0 | 4.5 |
| 54 | MP3C | Mx | .002 | 4.5 |
| 55 | MP4A | X | -1.762 | 1 |
| 56 | MP4A | Z | 0 | 1 |
| 57 | MP4A | Mx | .000881 | 1 |
| 58 | MP4A | X | -1.762 | 3 |
| 59 | MP4A | Z | 0 | 3 |
| 60 | MP4A | Mx | .000881 | 3 |
| 61 | MP4B | X | -4.278 | 1 |
| 62 | MP4B | Z | 0 | 1 |
| 63 | MP4B | Mx | -.001 | 1 |
| 64 | MP4B | X | -4.278 | 3 |
| 65 | MP4B | Z | 0 | 3 |
| 66 | MP4B | Mx | -.001 | 3 |
| 67 | MP4C | X | -4.278 | 1 |
| 68 | MP4C | Z | 0 | 1 |
| 69 | MP4C | Mx | -.001 | 1 |
| 70 | MP4C | X | -4.278 | 3 |
| 71 | MP4C | Z | 0 | 3 |
| 72 | MP4C | Mx | -.001 | 3 |
| 73 | MP3A | X | -7.81 | .5 |
| 74 | MP3A | Z | 0 | .5 |
| 75 | MP3A | Mx | .008 | .5 |
| 76 | MP3A | X | -7.81 | 4.5 |
| 77 | MP3A | Z | 0 | 4.5 |
| 78 | MP3A | Mx | .008 | 4.5 |
| 79 | MP3B | X | -10.872 | .5 |
| 80 | MP3B | Z | 0 | .5 |
| 81 | MP3B | Mx | -.000397 | .5 |
| 82 | MP3B | X | -10.872 | 4.5 |
| 83 | MP3B | Z | 0 | 4.5 |
| 84 | MP3B | Mx | -.000397 | 4.5 |
| 85 | MP3C | X | -10.872 | .5 |
| 86 | MP3C | Z | 0 | .5 |
| 87 | MP3C | Mx | -.011 | .5 |
| 88 | MP3C | X | -10.872 | 4.5 |
| 89 | MP3C | Z | 0 | 4.5 |
| 90 | MP3C | Mx | -.011 | 4.5 |
| 91 | MP3A | X | -7.81 | .5 |
| 92 | MP3A | Z | 0 | .5 |
| 93 | MP3A | Mx | .008 | .5 |
| 94 | MP3A | X | -7.81 | 4.5 |

## Member Point Loads (BLC 36 : Antenna Wm (270 Deg)) (Continued)

| | Member Label | Direction | Magnitude[lb,k-ft] | Location[ft,%] |
|---|---|---|---|---|
| 95 | MP3A | Z | 0 | 4.5 |
| 96 | MP3A | Mx | .008 | 4.5 |
| 97 | MP3B | X | -10.872 | .5 |
| 98 | MP3B | Z | 0 | .5 |
| 99 | MP3B | Mx | -.011 | .5 |
| 100 | MP3B | X | -10.872 | 4.5 |
| 101 | MP3B | Z | 0 | 4.5 |
| 102 | MP3B | Mx | -.011 | 4.5 |
| 103 | MP3C | X | -10.872 | .5 |
| 104 | MP3C | Z | 0 | .5 |
| 105 | MP3C | Mx | -.000397 | .5 |
| 106 | MP3C | X | -10.872 | 4.5 |
| 107 | MP3C | Z | 0 | 4.5 |
| 108 | MP3C | Mx | -.000397 | 4.5 |
| 109 | MP1B | X | -7.817 | .5 |
| 110 | MP1B | Z | 0 | .5 |
| 111 | MP1B | Mx | -.005 | .5 |
| 112 | MP1B | X | -7.817 | 3.5 |
| 113 | MP1B | Z | 0 | 3.5 |
| 114 | MP1B | Mx | -.005 | 3.5 |
| 115 | MP5B | X | -7.817 | .5 |
| 116 | MP5B | Z | 0 | .5 |
| 117 | MP5B | Mx | -.005 | .5 |
| 118 | MP5B | X | -7.817 | 3.5 |
| 119 | MP5B | Z | 0 | 3.5 |
| 120 | MP5B | Mx | -.005 | 3.5 |
| 121 | MP3A | X | -2.715 | 2 |
| 122 | MP3A | Z | 0 | 2 |
| 123 | MP3A | Mx | -.002 | 2 |
| 124 | MP3B | X | -3.714 | 2 |
| 125 | MP3B | Z | 0 | 2 |
| 126 | MP3B | Mx | .001 | 2 |
| 127 | MP3C | X | -3.714 | 2 |
| 128 | MP3C | Z | 0 | 2 |
| 129 | MP3C | Mx | .001 | 2 |
| 130 | MP2A | X | -2.219 | 2 |
| 131 | MP2A | Z | 0 | 2 |
| 132 | MP2A | Mx | -.001 | 2 |
| 133 | MP2B | X | -3.59 | 2 |
| 134 | MP2B | Z | 0 | 2 |
| 135 | MP2B | Mx | .001 | 2 |
| 136 | MP2C | X | -3.59 | 2 |
| 137 | MP2C | Z | 0 | 2 |
| 138 | MP2C | Mx | .001 | 2 |

## Member Point Loads (BLC 37 : Antenna Wm (300 Deg))

| | Member Label | Direction | Magnitude[lb,k-ft] | Location[ft,%] |
|---|---|---|---|---|
| 1 | MP1A | X | -5.315 | .5 |
| 2 | MP1A | Z | -3.069 | .5 |
| 3 | MP1A | Mx | .007 | .5 |
| 4 | MP1A | X | -5.315 | 3.5 |

## Member Point Loads (BLC 37 : Antenna Wm (300 Deg)) (Continued)

| | Member Label | Direction | Magnitude[lb,k-ft] | Location[ft,%] |
|---|---|---|---|---|
| 5 | MP1A | Z | -3.069 | 3.5 |
| 6 | MP1A | Mx | .007 | 3.5 |
| 7 | MP1C | X | -5.315 | .5 |
| 8 | MP1C | Z | -3.069 | .5 |
| 9 | MP1C | Mx | -.007 | .5 |
| 10 | MP1C | X | -5.315 | 3.5 |
| 11 | MP1C | Z | -3.069 | 3.5 |
| 12 | MP1C | Mx | -.007 | 3.5 |
| 13 | MP5A | X | -5.315 | .5 |
| 14 | MP5A | Z | -3.069 | .5 |
| 15 | MP5A | Mx | .007 | .5 |
| 16 | MP5A | X | -5.315 | 3.5 |
| 17 | MP5A | Z | -3.069 | 3.5 |
| 18 | MP5A | Mx | .007 | 3.5 |
| 19 | MP5C | X | -5.315 | .5 |
| 20 | MP5C | Z | -3.069 | .5 |
| 21 | MP5C | Mx | -.007 | .5 |
| 22 | MP5C | X | -5.315 | 3.5 |
| 23 | MP5C | Z | -3.069 | 3.5 |
| 24 | MP5C | Mx | -.007 | 3.5 |
| 25 | MPA2 | X | -.643 | 3 |
| 26 | MPA2 | Z | -.371 | 3 |
| 27 | MPA2 | Mx | 9.3e-5 | 3 |
| 28 | MP4A | X | -6.105 | 2 |
| 29 | MP4A | Z | -3.524 | 2 |
| 30 | MP4A | Mx | -.003 | 2 |
| 31 | MPB2 | X | -.837 | 3 |
| 32 | MPB2 | Z | -.483 | 3 |
| 33 | MPB2 | Mx | -.000242 | 3 |
| 34 | MPC2 | X | -.643 | 3 |
| 35 | MPC2 | Z | -.371 | 3 |
| 36 | MPC2 | Mx | 9.3e-5 | 3 |
| 37 | MP3A | X | -1.036 | 4.5 |
| 38 | MP3A | Z | -.598 | 4.5 |
| 39 | MP3A | Mx | -.001 | 4.5 |
| 40 | MP3B | X | -2.171 | 4.5 |
| 41 | MP3B | Z | -1.253 | 4.5 |
| 42 | MP3B | Mx | .000836 | 4.5 |
| 43 | MP3C | X | -1.036 | 4.5 |
| 44 | MP3C | Z | -.598 | 4.5 |
| 45 | MP3C | Mx | .000836 | 4.5 |
| 46 | MP3A | X | -1.036 | 4.5 |
| 47 | MP3A | Z | -.598 | 4.5 |
| 48 | MP3A | Mx | -.000837 | 4.5 |
| 49 | MP3B | X | -2.171 | 4.5 |
| 50 | MP3B | Z | -1.253 | 4.5 |
| 51 | MP3B | Mx | -.000835 | 4.5 |
| 52 | MP3C | X | -1.036 | 4.5 |
| 53 | MP3C | Z | -.598 | 4.5 |
| 54 | MP3C | Mx | .001 | 4.5 |
| 55 | MP4A | X | -2.252 | 1 |
| 56 | MP4A | Z | -1.3 | 1 |

## Member Point Loads (BLC 37 : Antenna Wm (300 Deg)) (Continued)

| | Member Label | Direction | Magnitude[lb,k-ft] | Location[ft,%] |
|---|---|---|---|---|
| 57 | MP4A | Mx | .001 | 1 |
| 58 | MP4A | X | -2.252 | 3 |
| 59 | MP4A | Z | -1.3 | 3 |
| 60 | MP4A | Mx | .001 | 3 |
| 61 | MP4B | X | -4.431 | 1 |
| 62 | MP4B | Z | -2.559 | 1 |
| 63 | MP4B | Mx | 0 | 1 |
| 64 | MP4B | X | -4.431 | 3 |
| 65 | MP4B | Z | -2.559 | 3 |
| 66 | MP4B | Mx | 0 | 3 |
| 67 | MP4C | X | -2.252 | 1 |
| 68 | MP4C | Z | -1.3 | 1 |
| 69 | MP4C | Mx | -.001 | 1 |
| 70 | MP4C | X | -2.252 | 3 |
| 71 | MP4C | Z | -1.3 | 3 |
| 72 | MP4C | Mx | -.001 | 3 |
| 73 | MP3A | X | -7.648 | .5 |
| 74 | MP3A | Z | -4.415 | .5 |
| 75 | MP3A | Mx | .006 | .5 |
| 76 | MP3A | X | -7.648 | 4.5 |
| 77 | MP3A | Z | -4.415 | 4.5 |
| 78 | MP3A | Mx | .006 | 4.5 |
| 79 | MP3B | X | -10.299 | .5 |
| 80 | MP3B | Z | -5.946 | .5 |
| 81 | MP3B | Mx | .007 | .5 |
| 82 | MP3B | X | -10.299 | 4.5 |
| 83 | MP3B | Z | -5.946 | 4.5 |
| 84 | MP3B | Mx | .007 | 4.5 |
| 85 | MP3C | X | -7.648 | .5 |
| 86 | MP3C | Z | -4.415 | .5 |
| 87 | MP3C | Mx | -.011 | .5 |
| 88 | MP3C | X | -7.648 | 4.5 |
| 89 | MP3C | Z | -4.415 | 4.5 |
| 90 | MP3C | Mx | -.011 | 4.5 |
| 91 | MP3A | X | -7.648 | .5 |
| 92 | MP3A | Z | -4.415 | .5 |
| 93 | MP3A | Mx | .011 | .5 |
| 94 | MP3A | X | -7.648 | 4.5 |
| 95 | MP3A | Z | -4.415 | 4.5 |
| 96 | MP3A | Mx | .011 | 4.5 |
| 97 | MP3B | X | -10.299 | .5 |
| 98 | MP3B | Z | -5.946 | .5 |
| 99 | MP3B | Mx | -.007 | .5 |
| 100 | MP3B | X | -10.299 | 4.5 |
| 101 | MP3B | Z | -5.946 | 4.5 |
| 102 | MP3B | Mx | -.007 | 4.5 |
| 103 | MP3C | X | -7.648 | .5 |
| 104 | MP3C | Z | -4.415 | .5 |
| 105 | MP3C | Mx | -.006 | .5 |
| 106 | MP3C | X | -7.648 | 4.5 |
| 107 | MP3C | Z | -4.415 | 4.5 |
| 108 | MP3C | Mx | -.006 | 4.5 |

## Member Point Loads (BLC 37 : Antenna Wm (300 Deg)) (Continued)

| | Member Label | Direction | Magnitude[lb,k-ft] | Location[ft,%] |
|---|---|---|---|---|
| 109 | MP1B | X | -6.952 | .5 |
| 110 | MP1B | Z | -4.014 | .5 |
| 111 | MP1B | Mx | 0 | .5 |
| 112 | MP1B | X | -6.952 | 3.5 |
| 113 | MP1B | Z | -4.014 | 3.5 |
| 114 | MP1B | Mx | 0 | 3.5 |
| 115 | MP5B | X | -6.952 | .5 |
| 116 | MP5B | Z | -4.014 | .5 |
| 117 | MP5B | Mx | 0 | .5 |
| 118 | MP5B | X | -6.952 | 3.5 |
| 119 | MP5B | Z | -4.014 | 3.5 |
| 120 | MP5B | Mx | 0 | 3.5 |
| 121 | MP3A | X | -2.64 | 2 |
| 122 | MP3A | Z | -1.524 | 2 |
| 123 | MP3A | Mx | -.002 | 2 |
| 124 | MP3B | X | -3.504 | 2 |
| 125 | MP3B | Z | -2.023 | 2 |
| 126 | MP3B | Mx | 0 | 2 |
| 127 | MP3C | X | -2.64 | 2 |
| 128 | MP3C | Z | -1.524 | 2 |
| 129 | MP3C | Mx | .002 | 2 |
| 130 | MP2A | X | -2.317 | 2 |
| 131 | MP2A | Z | -1.338 | 2 |
| 132 | MP2A | Mx | -.002 | 2 |
| 133 | MP2B | X | -3.504 | 2 |
| 134 | MP2B | Z | -2.023 | 2 |
| 135 | MP2B | Mx | 0 | 2 |
| 136 | MP2C | X | -2.317 | 2 |
| 137 | MP2C | Z | -1.338 | 2 |
| 138 | MP2C | Mx | .002 | 2 |

## Member Point Loads (BLC 38 : Antenna Wm (330 Deg))

| | Member Label | Direction | Magnitude[lb,k-ft] | Location[ft,%] |
|---|---|---|---|---|
| 1 | MP1A | X | -2.159 | .5 |
| 2 | MP1A | Z | -3.739 | .5 |
| 3 | MP1A | Mx | .003 | .5 |
| 4 | MP1A | X | -2.159 | 3.5 |
| 5 | MP1A | Z | -3.739 | 3.5 |
| 6 | MP1A | Mx | .003 | 3.5 |
| 7 | MP1C | X | -3.524 | .5 |
| 8 | MP1C | Z | -6.103 | .5 |
| 9 | MP1C | Mx | -.009 | .5 |
| 10 | MP1C | X | -3.524 | 3.5 |
| 11 | MP1C | Z | -6.103 | 3.5 |
| 12 | MP1C | Mx | -.009 | 3.5 |
| 13 | MP5A | X | -2.159 | .5 |
| 14 | MP5A | Z | -3.739 | .5 |
| 15 | MP5A | Mx | .003 | .5 |
| 16 | MP5A | X | -2.159 | 3.5 |
| 17 | MP5A | Z | -3.739 | 3.5 |
| 18 | MP5A | Mx | .003 | 3.5 |

## Member Point Loads (BLC 38 : Antenna Wm (330 Deg)) (Continued)

| | Member Label | Direction | Magnitude[lb,k-ft] | Location[ft,%] |
|---|---|---|---|---|
| 19 | MP5C | X | -3.524 | .5 |
| 20 | MP5C | Z | -6.103 | .5 |
| 21 | MP5C | Mx | -.009 | .5 |
| 22 | MP5C | X | -3.524 | 3.5 |
| 23 | MP5C | Z | -6.103 | 3.5 |
| 24 | MP5C | Mx | -.009 | 3.5 |
| 25 | MPA2 | X | -.446 | 3 |
| 26 | MPA2 | Z | -.772 | 3 |
| 27 | MPA2 | Mx | .000193 | 3 |
| 28 | MP4A | X | -5.352 | 2 |
| 29 | MP4A | Z | -9.27 | 2 |
| 30 | MP4A | Mx | -.003 | 2 |
| 31 | MPB2 | X | -.446 | 3 |
| 32 | MPB2 | Z | -.772 | 3 |
| 33 | MPB2 | Mx | -.000193 | 3 |
| 34 | MPC2 | X | -.334 | 3 |
| 35 | MPC2 | Z | -.579 | 3 |
| 36 | MPC2 | Mx | 0 | 3 |
| 37 | MP3A | X | -1.035 | 4.5 |
| 38 | MP3A | Z | -1.792 | 4.5 |
| 39 | MP3A | Mx | -.002 | 4.5 |
| 40 | MP3B | X | -1.035 | 4.5 |
| 41 | MP3B | Z | -1.792 | 4.5 |
| 42 | MP3B | Mx | -.000437 | 4.5 |
| 43 | MP3C | X | -.38 | 4.5 |
| 44 | MP3C | Z | -.658 | 4.5 |
| 45 | MP3C | Mx | .00076 | 4.5 |
| 46 | MP3A | X | -1.035 | 4.5 |
| 47 | MP3A | Z | -1.792 | 4.5 |
| 48 | MP3A | Mx | -.000438 | 4.5 |
| 49 | MP3B | X | -1.035 | 4.5 |
| 50 | MP3B | Z | -1.792 | 4.5 |
| 51 | MP3B | Mx | -.002 | 4.5 |
| 52 | MP3C | X | -.38 | 4.5 |
| 53 | MP3C | Z | -.658 | 4.5 |
| 54 | MP3C | Mx | .00076 | 4.5 |
| 55 | MP4A | X | -2.139 | 1 |
| 56 | MP4A | Z | -3.705 | 1 |
| 57 | MP4A | Mx | .001 | 1 |
| 58 | MP4A | X | -2.139 | 3 |
| 59 | MP4A | Z | -3.705 | 3 |
| 60 | MP4A | Mx | .001 | 3 |
| 61 | MP4B | X | -2.139 | 1 |
| 62 | MP4B | Z | -3.705 | 1 |
| 63 | MP4B | Mx | .001 | 1 |
| 64 | MP4B | X | -2.139 | 3 |
| 65 | MP4B | Z | -3.705 | 3 |
| 66 | MP4B | Mx | .001 | 3 |
| 67 | MP4C | X | -.881 | 1 |
| 68 | MP4C | Z | -1.526 | 1 |
| 69 | MP4C | Mx | -.000881 | 1 |
| 70 | MP4C | X | -.881 | 3 |

## Member Point Loads (BLC 38 : Antenna Wm (330 Deg)) (Continued)

| | Member Label | Direction | Magnitude[lb,k-ft] | Location[ft,%] |
|---|---|---|---|---|
| 71 | MP4C | Z | -1.526 | 3 |
| 72 | MP4C | Mx | -.000881 | 3 |
| 73 | MP3A | X | -5.436 | .5 |
| 74 | MP3A | Z | -9.415 | .5 |
| 75 | MP3A | Mx | .000397 | .5 |
| 76 | MP3A | X | -5.436 | 4.5 |
| 77 | MP3A | Z | -9.415 | 4.5 |
| 78 | MP3A | Mx | .000397 | 4.5 |
| 79 | MP3B | X | -5.436 | .5 |
| 80 | MP3B | Z | -9.415 | .5 |
| 81 | MP3B | Mx | .011 | .5 |
| 82 | MP3B | X | -5.436 | 4.5 |
| 83 | MP3B | Z | -9.415 | 4.5 |
| 84 | MP3B | Mx | .011 | 4.5 |
| 85 | MP3C | X | -3.905 | .5 |
| 86 | MP3C | Z | -6.764 | .5 |
| 87 | MP3C | Mx | -.008 | .5 |
| 88 | MP3C | X | -3.905 | 4.5 |
| 89 | MP3C | Z | -6.764 | 4.5 |
| 90 | MP3C | Mx | -.008 | 4.5 |
| 91 | MP3A | X | -5.436 | .5 |
| 92 | MP3A | Z | -9.415 | .5 |
| 93 | MP3A | Mx | .011 | .5 |
| 94 | MP3A | X | -5.436 | 4.5 |
| 95 | MP3A | Z | -9.415 | 4.5 |
| 96 | MP3A | Mx | .011 | 4.5 |
| 97 | MP3B | X | -5.436 | .5 |
| 98 | MP3B | Z | -9.415 | .5 |
| 99 | MP3B | Mx | .000396 | .5 |
| 100 | MP3B | X | -5.436 | 4.5 |
| 101 | MP3B | Z | -9.415 | 4.5 |
| 102 | MP3B | Mx | .000396 | 4.5 |
| 103 | MP3C | X | -3.905 | .5 |
| 104 | MP3C | Z | -6.764 | .5 |
| 105 | MP3C | Mx | -.008 | .5 |
| 106 | MP3C | X | -3.905 | 4.5 |
| 107 | MP3C | Z | -6.764 | 4.5 |
| 108 | MP3C | Mx | -.008 | 4.5 |
| 109 | MP1B | X | -3.908 | .5 |
| 110 | MP1B | Z | -6.769 | .5 |
| 111 | MP1B | Mx | .005 | .5 |
| 112 | MP1B | X | -3.908 | 3.5 |
| 113 | MP1B | Z | -6.769 | 3.5 |
| 114 | MP1B | Mx | .005 | 3.5 |
| 115 | MP5B | X | -3.908 | .5 |
| 116 | MP5B | Z | -6.769 | .5 |
| 117 | MP5B | Mx | .005 | .5 |
| 118 | MP5B | X | -3.908 | 3.5 |
| 119 | MP5B | Z | -6.769 | 3.5 |
| 120 | MP5B | Mx | .005 | 3.5 |
| 121 | MP3A | X | -1.857 | 2 |
| 122 | MP3A | Z | -3.216 | 2 |

## Member Point Loads (BLC 38 : Antenna Wm (330 Deg)) (Continued)

| | Member Label | Direction | Magnitude[lb,k-ft] | Location[ft,%] |
|---|---|---|---|---|
| 123 | MP3A | Mx | -.001 | 2 |
| 124 | MP3B | X | -1.857 | 2 |
| 125 | MP3B | Z | -3.216 | 2 |
| 126 | MP3B | Mx | -.001 | 2 |
| 127 | MP3C | X | -1.358 | 2 |
| 128 | MP3C | Z | -2.351 | 2 |
| 129 | MP3C | Mx | .002 | 2 |
| 130 | MP2A | X | -1.795 | 2 |
| 131 | MP2A | Z | -3.109 | 2 |
| 132 | MP2A | Mx | -.001 | 2 |
| 133 | MP2B | X | -1.795 | 2 |
| 134 | MP2B | Z | -3.109 | 2 |
| 135 | MP2B | Mx | -.001 | 2 |
| 136 | MP2C | X | -1.11 | 2 |
| 137 | MP2C | Z | -1.922 | 2 |
| 138 | MP2C | Mx | .001 | 2 |

## Member Point Loads (BLC 77 : Lm1)

| | Member Label | Direction | Magnitude[lb,k-ft] | Location[ft,%] |
|---|---|---|---|---|
| 1 | M40A | Y | -500 | 0 |

## Member Point Loads (BLC 78 : Lm2)

| | Member Label | Direction | Magnitude[lb,k-ft] | Location[ft,%] |
|---|---|---|---|---|
| 1 | M36 | Y | -500 | 0 |

## Member Point Loads (BLC 79 : Lv1)

| | Member Label | Direction | Magnitude[lb,k-ft] | Location[ft,%] |
|---|---|---|---|---|
| 1 | M60A | Y | -250 | 0 |

## Member Point Loads (BLC 80 : Lv2)

| | Member Label | Direction | Magnitude[lb,k-ft] | Location[ft,%] |
|---|---|---|---|---|
| 1 | M60A | Y | -250 | %50 |

## Member Point Loads (BLC 81 : Antenna Ev)

| | Member Label | Direction | Magnitude[lb,k-ft] | Location[ft,%] |
|---|---|---|---|---|
| 1 | MP1A | Y | -.14 | .5 |
| 2 | MP1A | My | -.000175 | .5 |
| 3 | MP1A | Mz | 0 | .5 |
| 4 | MP1A | Y | -.14 | 3.5 |
| 5 | MP1A | My | -.000175 | 3.5 |
| 6 | MP1A | Mz | 0 | 3.5 |
| 7 | MP1C | Y | -.14 | .5 |
| 8 | MP1C | My | 8.7e-5 | .5 |
| 9 | MP1C | Mz | .000151 | .5 |
| 10 | MP1C | Y | -.14 | 3.5 |
| 11 | MP1C | My | 8.7e-5 | 3.5 |
| 12 | MP1C | Mz | .000151 | 3.5 |
| 13 | MP5A | Y | -.14 | .5 |
| 14 | MP5A | My | -.000175 | .5 |

## Member Point Loads (BLC 81 : Antenna Ev) (Continued)

| | Member Label | Direction | Magnitude[lb,k-ft] | Location[ft,%] |
|---|---|---|---|---|
| 15 | MP5A | Mz | 0 | .5 |
| 16 | MP5A | Y | -.14 | 3.5 |
| 17 | MP5A | My | -.000175 | 3.5 |
| 18 | MP5A | Mz | 0 | 3.5 |
| 19 | MP5C | Y | -.14 | .5 |
| 20 | MP5C | My | 8.7e-5 | .5 |
| 21 | MP5C | Mz | .000151 | .5 |
| 22 | MP5C | Y | -.14 | 3.5 |
| 23 | MP5C | My | 8.7e-5 | 3.5 |
| 24 | MP5C | Mz | .000151 | 3.5 |
| 25 | MPA2 | Y | -.242 | 3 |
| 26 | MPA2 | My | 0 | 3 |
| 27 | MPA2 | Mz | -6.1e-5 | 3 |
| 28 | MP4A | Y | -.44 | 2 |
| 29 | MP4A | My | .00022 | 2 |
| 30 | MP4A | Mz | 0 | 2 |
| 31 | MPB2 | Y | -.242 | 3 |
| 32 | MPB2 | My | 5.2e-5 | 3 |
| 33 | MPB2 | Mz | 3e-5 | 3 |
| 34 | MPC2 | Y | -.242 | 3 |
| 35 | MPC2 | My | -5.2e-5 | 3 |
| 36 | MPC2 | Mz | 3e-5 | 3 |
| 37 | MP3A | Y | -.41 | 4.5 |
| 38 | MP3A | My | .00041 | 4.5 |
| 39 | MP3A | Mz | .000137 | 4.5 |
| 40 | MP3B | Y | -.41 | 4.5 |
| 41 | MP3B | My | -.000323 | 4.5 |
| 42 | MP3B | Mz | .000287 | 4.5 |
| 43 | MP3C | Y | -.41 | 4.5 |
| 44 | MP3C | My | -8.7e-5 | 4.5 |
| 45 | MP3C | Mz | -.000423 | 4.5 |
| 46 | MP3A | Y | -.41 | 4.5 |
| 47 | MP3A | My | .00041 | 4.5 |
| 48 | MP3A | Mz | -.000137 | 4.5 |
| 49 | MP3B | Y | -.41 | 4.5 |
| 50 | MP3B | My | -8.7e-5 | 4.5 |
| 51 | MP3B | Mz | .000423 | 4.5 |
| 52 | MP3C | Y | -.41 | 4.5 |
| 53 | MP3C | My | -.000323 | 4.5 |
| 54 | MP3C | Mz | -.000287 | 4.5 |
| 55 | MP4A | Y | -1.014 | 1 |
| 56 | MP4A | My | -.000507 | 1 |
| 57 | MP4A | Mz | 0 | 1 |
| 58 | MP4A | Y | -1.014 | 3 |
| 59 | MP4A | My | -.000507 | 3 |
| 60 | MP4A | Mz | 0 | 3 |
| 61 | MP4B | Y | -1.014 | 1 |
| 62 | MP4B | My | .000253 | 1 |
| 63 | MP4B | Mz | -.000439 | 1 |
| 64 | MP4B | Y | -1.014 | 3 |
| 65 | MP4B | My | .000253 | 3 |
| 66 | MP4B | Mz | -.000439 | 3 |

## Member Point Loads (BLC 81 : Antenna Ev) (Continued)

| | Member Label | Direction | Magnitude[lb,k-ft] | Location[ft,%] |
|---|---|---|---|---|
| 67 | MP4C | Y | -1.014 | 1 |
| 68 | MP4C | My | .000253 | 1 |
| 69 | MP4C | Mz | .000439 | 1 |
| 70 | MP4C | Y | -1.014 | 3 |
| 71 | MP4C | My | .000253 | 3 |
| 72 | MP4C | Mz | .000439 | 3 |
| 73 | MP3A | Y | -.737 | .5 |
| 74 | MP3A | My | -.000798 | .5 |
| 75 | MP3A | Mz | .00043 | .5 |
| 76 | MP3A | Y | -.737 | 4.5 |
| 77 | MP3A | My | -.000798 | 4.5 |
| 78 | MP3A | Mz | .00043 | 4.5 |
| 79 | MP3B | Y | -.737 | .5 |
| 80 | MP3B | My | 2.7e-5 | .5 |
| 81 | MP3B | Mz | -.000906 | .5 |
| 82 | MP3B | Y | -.737 | 4.5 |
| 83 | MP3B | My | 2.7e-5 | 4.5 |
| 84 | MP3B | Mz | -.000906 | 4.5 |
| 85 | MP3C | Y | -.737 | .5 |
| 86 | MP3C | My | .000771 | .5 |
| 87 | MP3C | Mz | .000476 | .5 |
| 88 | MP3C | Y | -.737 | 4.5 |
| 89 | MP3C | My | .000771 | 4.5 |
| 90 | MP3C | Mz | .000476 | 4.5 |
| 91 | MP3A | Y | -.737 | .5 |
| 92 | MP3A | My | -.000798 | .5 |
| 93 | MP3A | Mz | -.00043 | .5 |
| 94 | MP3A | Y | -.737 | 4.5 |
| 95 | MP3A | My | -.000798 | 4.5 |
| 96 | MP3A | Mz | -.00043 | 4.5 |
| 97 | MP3B | Y | -.737 | .5 |
| 98 | MP3B | My | .000771 | .5 |
| 99 | MP3B | Mz | -.000476 | .5 |
| 100 | MP3B | Y | -.737 | 4.5 |
| 101 | MP3B | My | .000771 | 4.5 |
| 102 | MP3B | Mz | -.000476 | 4.5 |
| 103 | MP3C | Y | -.737 | .5 |
| 104 | MP3C | My | 2.7e-5 | .5 |
| 105 | MP3C | Mz | .000906 | .5 |
| 106 | MP3C | Y | -.737 | 4.5 |
| 107 | MP3C | My | 2.7e-5 | 4.5 |
| 108 | MP3C | Mz | .000906 | 4.5 |
| 109 | MP1B | Y | -.233 | .5 |
| 110 | MP1B | My | .000146 | .5 |
| 111 | MP1B | Mz | -.000252 | .5 |
| 112 | MP1B | Y | -.233 | 3.5 |
| 113 | MP1B | My | .000146 | 3.5 |
| 114 | MP1B | Mz | -.000252 | 3.5 |
| 115 | MP5B | Y | -.233 | .5 |
| 116 | MP5B | My | .000146 | .5 |
| 117 | MP5B | Mz | -.000252 | .5 |
| 118 | MP5B | Y | -.233 | 3.5 |

## Member Point Loads (BLC 81 : Antenna Ev) (Continued)

| | Member Label | Direction | Magnitude[lb,k-ft] | Location[ft,%] |
|---|---|---|---|---|
| 119 | MP5B | My | .000146 | 3.5 |
| 120 | MP5B | Mz | -.000252 | 3.5 |
| 121 | MP3A | Y | -1.965 | 2 |
| 122 | MP3A | My | .001 | 2 |
| 123 | MP3A | Mz | 0 | 2 |
| 124 | MP3B | Y | -1.965 | 2 |
| 125 | MP3B | My | -.000737 | 2 |
| 126 | MP3B | Mz | .001 | 2 |
| 127 | MP3C | Y | -1.965 | 2 |
| 128 | MP3C | My | -.000737 | 2 |
| 129 | MP3C | Mz | -.001 | 2 |
| 130 | MP2A | Y | -1.637 | 2 |
| 131 | MP2A | My | .001 | 2 |
| 132 | MP2A | Mz | 0 | 2 |
| 133 | MP2B | Y | -1.637 | 2 |
| 134 | MP2B | My | -.000546 | 2 |
| 135 | MP2B | Mz | .000945 | 2 |
| 136 | MP2C | Y | -1.637 | 2 |
| 137 | MP2C | My | -.000546 | 2 |
| 138 | MP2C | Mz | -.000945 | 2 |

## Member Point Loads (BLC 82 : Antenna Eh (0 Deg))

| | Member Label | Direction | Magnitude[lb,k-ft] | Location[ft,%] |
|---|---|---|---|---|
| 1 | MP1A | Z | -.349 | .5 |
| 2 | MP1A | Mx | 0 | .5 |
| 3 | MP1A | Z | -.349 | 3.5 |
| 4 | MP1A | Mx | 0 | 3.5 |
| 5 | MP1C | Z | -.349 | .5 |
| 6 | MP1C | Mx | -.000378 | .5 |
| 7 | MP1C | Z | -.349 | 3.5 |
| 8 | MP1C | Mx | -.000378 | 3.5 |
| 9 | MP5A | Z | -.349 | .5 |
| 10 | MP5A | Mx | 0 | .5 |
| 11 | MP5A | Z | -.349 | 3.5 |
| 12 | MP5A | Mx | 0 | 3.5 |
| 13 | MP5C | Z | -.349 | .5 |
| 14 | MP5C | Mx | -.000378 | .5 |
| 15 | MP5C | Z | -.349 | 3.5 |
| 16 | MP5C | Mx | -.000378 | 3.5 |
| 17 | MPA2 | Z | -.605 | 3 |
| 18 | MPA2 | Mx | .000151 | 3 |
| 19 | MP4A | Z | -1.1 | 2 |
| 20 | MP4A | Mx | 0 | 2 |
| 21 | MPB2 | Z | -.605 | 3 |
| 22 | MPB2 | Mx | -7.6e-5 | 3 |
| 23 | MPC2 | Z | -.605 | 3 |
| 24 | MPC2 | Mx | -7.6e-5 | 3 |
| 25 | MP3A | Z | -1.024 | 4.5 |
| 26 | MP3A | Mx | -.000341 | 4.5 |
| 27 | MP3B | Z | -1.024 | 4.5 |
| 28 | MP3B | Mx | -.000716 | 4.5 |

## Member Point Loads (BLC 82 : Antenna Eh (0 Deg)) (Continued)

| | Member Label | Direction | Magnitude[lb,k-ft] | Location[ft,%] |
|---|---|---|---|---|
| 29 | MP3C | Z | -1.024 | 4.5 |
| 30 | MP3C | Mx | .001 | 4.5 |
| 31 | MP3A | Z | -1.024 | 4.5 |
| 32 | MP3A | Mx | .000341 | 4.5 |
| 33 | MP3B | Z | -1.024 | 4.5 |
| 34 | MP3B | Mx | -.001 | 4.5 |
| 35 | MP3C | Z | -1.024 | 4.5 |
| 36 | MP3C | Mx | .000716 | 4.5 |
| 37 | MP4A | Z | -2.535 | 1 |
| 38 | MP4A | Mx | 0 | 1 |
| 39 | MP4A | Z | -2.535 | 3 |
| 40 | MP4A | Mx | 0 | 3 |
| 41 | MP4B | Z | -2.535 | 1 |
| 42 | MP4B | Mx | .001 | 1 |
| 43 | MP4B | Z | -2.535 | 3 |
| 44 | MP4B | Mx | .001 | 3 |
| 45 | MP4C | Z | -2.535 | 1 |
| 46 | MP4C | Mx | -.001 | 1 |
| 47 | MP4C | Z | -2.535 | 3 |
| 48 | MP4C | Mx | -.001 | 3 |
| 49 | MP3A | Z | -1.842 | .5 |
| 50 | MP3A | Mx | -.001 | .5 |
| 51 | MP3A | Z | -1.842 | 4.5 |
| 52 | MP3A | Mx | -.001 | 4.5 |
| 53 | MP3B | Z | -1.842 | .5 |
| 54 | MP3B | Mx | .002 | .5 |
| 55 | MP3B | Z | -1.842 | 4.5 |
| 56 | MP3B | Mx | .002 | 4.5 |
| 57 | MP3C | Z | -1.842 | .5 |
| 58 | MP3C | Mx | -.001 | .5 |
| 59 | MP3C | Z | -1.842 | 4.5 |
| 60 | MP3C | Mx | -.001 | 4.5 |
| 61 | MP3A | Z | -1.842 | .5 |
| 62 | MP3A | Mx | .001 | .5 |
| 63 | MP3A | Z | -1.842 | 4.5 |
| 64 | MP3A | Mx | .001 | 4.5 |
| 65 | MP3B | Z | -1.842 | .5 |
| 66 | MP3B | Mx | .001 | .5 |
| 67 | MP3B | Z | -1.842 | 4.5 |
| 68 | MP3B | Mx | .001 | 4.5 |
| 69 | MP3C | Z | -1.842 | .5 |
| 70 | MP3C | Mx | -.002 | .5 |
| 71 | MP3C | Z | -1.842 | 4.5 |
| 72 | MP3C | Mx | -.002 | 4.5 |
| 73 | MP1B | Z | -.582 | .5 |
| 74 | MP1B | Mx | .00063 | .5 |
| 75 | MP1B | Z | -.582 | 3.5 |
| 76 | MP1B | Mx | .00063 | 3.5 |
| 77 | MP5B | Z | -.582 | .5 |
| 78 | MP5B | Mx | .00063 | .5 |
| 79 | MP5B | Z | -.582 | 3.5 |
| 80 | MP5B | Mx | .00063 | 3.5 |

## Member Point Loads (BLC 82 : Antenna Eh (0 Deg)) (Continued)

| | Member Label | Direction | Magnitude[lb,k-ft] | Location[ft,%] |
|---|---|---|---|---|
| 81 | MP3A | Z | -4.912 | 2 |
| 82 | MP3A | Mx | 0 | 2 |
| 83 | MP3B | Z | -4.912 | 2 |
| 84 | MP3B | Mx | -.003 | 2 |
| 85 | MP3C | Z | -4.912 | 2 |
| 86 | MP3C | Mx | .003 | 2 |
| 87 | MP2A | Z | -4.091 | 2 |
| 88 | MP2A | Mx | 0 | 2 |
| 89 | MP2B | Z | -4.091 | 2 |
| 90 | MP2B | Mx | -.002 | 2 |
| 91 | MP2C | Z | -4.091 | 2 |
| 92 | MP2C | Mx | .002 | 2 |

## Member Point Loads (BLC 83 : Antenna Eh (90 Deg))

| | Member Label | Direction | Magnitude[lb,k-ft] | Location[ft,%] |
|---|---|---|---|---|
| 1 | MP1A | X | .349 | .5 |
| 2 | MP1A | Mx | -.000437 | .5 |
| 3 | MP1A | X | .349 | 3.5 |
| 4 | MP1A | Mx | -.000437 | 3.5 |
| 5 | MP1C | X | .349 | .5 |
| 6 | MP1C | Mx | .000218 | .5 |
| 7 | MP1C | X | .349 | 3.5 |
| 8 | MP1C | Mx | .000218 | 3.5 |
| 9 | MP5A | X | .349 | .5 |
| 10 | MP5A | Mx | -.000437 | .5 |
| 11 | MP5A | X | .349 | 3.5 |
| 12 | MP5A | Mx | -.000437 | 3.5 |
| 13 | MP5C | X | .349 | .5 |
| 14 | MP5C | Mx | .000218 | .5 |
| 15 | MP5C | X | .349 | 3.5 |
| 16 | MP5C | Mx | .000218 | 3.5 |
| 17 | MPA2 | X | .605 | 3 |
| 18 | MPA2 | Mx | 0 | 3 |
| 19 | MP4A | X | 1.1 | 2 |
| 20 | MP4A | Mx | .00055 | 2 |
| 21 | MPB2 | X | .605 | 3 |
| 22 | MPB2 | Mx | .000131 | 3 |
| 23 | MPC2 | X | .605 | 3 |
| 24 | MPC2 | Mx | -.000131 | 3 |
| 25 | MP3A | X | 1.024 | 4.5 |
| 26 | MP3A | Mx | .001 | 4.5 |
| 27 | MP3B | X | 1.024 | 4.5 |
| 28 | MP3B | Mx | -.000808 | 4.5 |
| 29 | MP3C | X | 1.024 | 4.5 |
| 30 | MP3C | Mx | -.000216 | 4.5 |
| 31 | MP3A | X | 1.024 | 4.5 |
| 32 | MP3A | Mx | .001 | 4.5 |
| 33 | MP3B | X | 1.024 | 4.5 |
| 34 | MP3B | Mx | -.000216 | 4.5 |
| 35 | MP3C | X | 1.024 | 4.5 |
| 36 | MP3C | Mx | -.000808 | 4.5 |

## Member Point Loads (BLC 83 : Antenna Eh (90 Deg)) (Continued)

| | Member Label | Direction | Magnitude[lb,k-ft] | Location[ft,%] |
|---|---|---|---|---|
| 37 | MP4A | X | 2.535 | 1 |
| 38 | MP4A | Mx | -.001 | 1 |
| 39 | MP4A | X | 2.535 | 3 |
| 40 | MP4A | Mx | -.001 | 3 |
| 41 | MP4B | X | 2.535 | 1 |
| 42 | MP4B | Mx | .000634 | 1 |
| 43 | MP4B | X | 2.535 | 3 |
| 44 | MP4B | Mx | .000634 | 3 |
| 45 | MP4C | X | 2.535 | 1 |
| 46 | MP4C | Mx | .000634 | 1 |
| 47 | MP4C | X | 2.535 | 3 |
| 48 | MP4C | Mx | .000634 | 3 |
| 49 | MP3A | X | 1.842 | .5 |
| 50 | MP3A | Mx | -.002 | .5 |
| 51 | MP3A | X | 1.842 | 4.5 |
| 52 | MP3A | Mx | -.002 | 4.5 |
| 53 | MP3B | X | 1.842 | .5 |
| 54 | MP3B | Mx | 6.7e-5 | .5 |
| 55 | MP3B | X | 1.842 | 4.5 |
| 56 | MP3B | Mx | 6.7e-5 | 4.5 |
| 57 | MP3C | X | 1.842 | .5 |
| 58 | MP3C | Mx | .002 | .5 |
| 59 | MP3C | X | 1.842 | 4.5 |
| 60 | MP3C | Mx | .002 | 4.5 |
| 61 | MP3A | X | 1.842 | .5 |
| 62 | MP3A | Mx | -.002 | .5 |
| 63 | MP3A | X | 1.842 | 4.5 |
| 64 | MP3A | Mx | -.002 | 4.5 |
| 65 | MP3B | X | 1.842 | .5 |
| 66 | MP3B | Mx | .002 | .5 |
| 67 | MP3B | X | 1.842 | 4.5 |
| 68 | MP3B | Mx | .002 | 4.5 |
| 69 | MP3C | X | 1.842 | .5 |
| 70 | MP3C | Mx | 6.7e-5 | .5 |
| 71 | MP3C | X | 1.842 | 4.5 |
| 72 | MP3C | Mx | 6.7e-5 | 4.5 |
| 73 | MP1B | X | .582 | .5 |
| 74 | MP1B | Mx | .000364 | .5 |
| 75 | MP1B | X | .582 | 3.5 |
| 76 | MP1B | Mx | .000364 | 3.5 |
| 77 | MP5B | X | .582 | .5 |
| 78 | MP5B | Mx | .000364 | .5 |
| 79 | MP5B | X | .582 | 3.5 |
| 80 | MP5B | Mx | .000364 | 3.5 |
| 81 | MP3A | X | 4.912 | 2 |
| 82 | MP3A | Mx | .004 | 2 |
| 83 | MP3B | X | 4.912 | 2 |
| 84 | MP3B | Mx | -.002 | 2 |
| 85 | MP3C | X | 4.912 | 2 |
| 86 | MP3C | Mx | -.002 | 2 |
| 87 | MP2A | X | 4.091 | 2 |
| 88 | MP2A | Mx | .003 | 2 |

## Member Point Loads (BLC 83 : Antenna Eh (90 Deg)) (Continued)

| | Member Label | Direction | Magnitude[lb,k-ft] | Location[ft,%] |
|---|---|---|---|---|
| 89 | MP2B | X | 4.091 | 2 |
| 90 | MP2B | Mx | -.001 | 2 |
| 91 | MP2C | X | 4.091 | 2 |
| 92 | MP2C | Mx | -.001 | 2 |

## Member Distributed Loads (BLC 40 : Structure Di)

| | Member Label | Direction | Start Magnitude[lb/ft,... | End Magnitude[lb/ft,F... | Start Location[ft,%] | End Location[ft,%] |
|---|---|---|---|---|---|---|
| 1 | M1 | Y | -9.656 | -9.656 | 0 | %100 |
| 2 | M2 | Y | -10.658 | -10.658 | 0 | %100 |
| 3 | M5 | Y | -10.143 | -10.143 | 0 | %100 |
| 4 | M6 | Y | -10.143 | -10.143 | 0 | %100 |
| 5 | M7 | Y | -10.143 | -10.143 | 0 | %100 |
| 6 | M6A | Y | -7.653 | -7.653 | 0 | %100 |
| 7 | M7A | Y | -7.653 | -7.653 | 0 | %100 |
| 8 | MP1A | Y | -5.007 | -5.007 | 0 | %100 |
| 9 | M23A | Y | -7.653 | -7.653 | 0 | %100 |
| 10 | M24 | Y | -7.653 | -7.653 | 0 | %100 |
| 11 | M39A | Y | -7.653 | -7.653 | 0 | %100 |
| 12 | M40 | Y | -7.653 | -7.653 | 0 | %100 |
| 13 | M55 | Y | -10.658 | -10.658 | 0 | %100 |
| 14 | M56 | Y | -10.658 | -10.658 | 0 | %100 |
| 15 | M60A | Y | -5.007 | -5.007 | 0 | %100 |
| 16 | M61 | Y | -11.66 | -11.66 | 0 | %100 |
| 17 | M62 | Y | -11.66 | -11.66 | 0 | %100 |
| 18 | M63 | Y | -11.66 | -11.66 | 0 | %100 |
| 19 | M64 | Y | -7.653 | -7.653 | 0 | %100 |
| 20 | MP4A | Y | -5.007 | -5.007 | 0 | %100 |
| 21 | MP2A | Y | -5.007 | -5.007 | 0 | %100 |
| 22 | MP3A | Y | -5.007 | -5.007 | 0 | %100 |
| 23 | MPA2 | Y | -5.007 | -5.007 | 0 | %100 |
| 24 | MP5A | Y | -5.007 | -5.007 | 0 | %100 |
| 25 | M45 | Y | -5.007 | -5.007 | 0 | %100 |
| 26 | M46 | Y | -5.007 | -5.007 | 0 | %100 |
| 27 | MP1C | Y | -5.007 | -5.007 | 0 | %100 |
| 28 | M54A | Y | -7.653 | -7.653 | 0 | %100 |
| 29 | MP2C | Y | -5.007 | -5.007 | 0 | %100 |
| 30 | MP3C | Y | -5.007 | -5.007 | 0 | %100 |
| 31 | MP5C | Y | -5.007 | -5.007 | 0 | %100 |
| 32 | M82 | Y | -5.007 | -5.007 | 0 | %100 |
| 33 | M85 | Y | -7.653 | -7.653 | 0 | %100 |
| 34 | MP2B | Y | -5.007 | -5.007 | 0 | %100 |
| 35 | MP3B | Y | -5.007 | -5.007 | 0 | %100 |
| 36 | MP5B | Y | -5.007 | -5.007 | 0 | %100 |
| 37 | M107A | Y | -9.656 | -9.656 | 0 | %100 |
| 38 | M108A | Y | -9.656 | -9.656 | 0 | %100 |
| 39 | M105 | Y | -5.007 | -5.007 | 0 | %100 |
| 40 | M106A | Y | -5.007 | -5.007 | 0 | %100 |
| 41 | M107 | Y | -5.007 | -5.007 | 0 | %100 |
| 42 | M108 | Y | -5.007 | -5.007 | 0 | %100 |
| 43 | MP1B | Y | -5.007 | -5.007 | 0 | %100 |

## Member Distributed Loads (BLC 40 : Structure Di) (Continued)

| | Member Label | Direction | Start Magnitude[lb/ft,... | End Magnitude[lb/ft,F... | Start Location[ft,%] | End Location[ft,%] |
|---|---|---|---|---|---|---|
| 44 | M102B | Y | -5.007 | -5.007 | 0 | %100 |
| 45 | MP4C | Y | -5.007 | -5.007 | 0 | %100 |
| 46 | MP4B | Y | -5.007 | -5.007 | 0 | %100 |
| 47 | MPC2 | Y | -5.007 | -5.007 | 0 | %100 |
| 48 | MPB2 | Y | -5.007 | -5.007 | 0 | %100 |

## Member Distributed Loads (BLC 41 : Structure Wo (0 Deg))

| | Member Label | Direction | Start Magnitude[lb/ft,... | End Magnitude[lb/ft,F... | Start Location[ft,%] | End Location[ft,%] |
|---|---|---|---|---|---|---|
| 1 | M1 | X | 0 | 0 | 0 | %100 |
| 2 | M1 | Z | 0 | 0 | 0 | %100 |
| 3 | M2 | X | 0 | 0 | 0 | %100 |
| 4 | M2 | Z | 0 | 0 | 0 | %100 |
| 5 | M5 | X | 0 | 0 | 0 | %100 |
| 6 | M5 | Z | 0 | 0 | 0 | %100 |
| 7 | M6 | X | 0 | 0 | 0 | %100 |
| 8 | M6 | Z | -13.315 | -13.315 | 0 | %100 |
| 9 | M7 | X | 0 | 0 | 0 | %100 |
| 10 | M7 | Z | -13.315 | -13.315 | 0 | %100 |
| 11 | M6A | X | 0 | 0 | 0 | %100 |
| 12 | M6A | Z | -20.886 | -20.886 | 0 | %100 |
| 13 | M7A | X | 0 | 0 | 0 | %100 |
| 14 | M7A | Z | -20.886 | -20.886 | 0 | %100 |
| 15 | MP1A | X | 0 | 0 | 0 | %100 |
| 16 | MP1A | Z | -9.921 | -9.921 | 0 | %100 |
| 17 | M23A | X | 0 | 0 | 0 | %100 |
| 18 | M23A | Z | -5.221 | -5.221 | 0 | %100 |
| 19 | M24 | X | 0 | 0 | 0 | %100 |
| 20 | M24 | Z | -5.221 | -5.221 | 0 | %100 |
| 21 | M39A | X | 0 | 0 | 0 | %100 |
| 22 | M39A | Z | -5.221 | -5.221 | 0 | %100 |
| 23 | M40 | X | 0 | 0 | 0 | %100 |
| 24 | M40 | Z | -5.221 | -5.221 | 0 | %100 |
| 25 | M55 | X | 0 | 0 | 0 | %100 |
| 26 | M55 | Z | -11.661 | -11.661 | 0 | %100 |
| 27 | M56 | X | 0 | 0 | 0 | %100 |
| 28 | M56 | Z | -11.661 | -11.661 | 0 | %100 |
| 29 | M60A | X | 0 | 0 | 0 | %100 |
| 30 | M60A | Z | -9.921 | -9.921 | 0 | %100 |
| 31 | M61 | X | 0 | 0 | 0 | %100 |
| 32 | M61 | Z | -25.121 | -25.121 | 0 | %100 |
| 33 | M62 | X | 0 | 0 | 0 | %100 |
| 34 | M62 | Z | -25.121 | -25.121 | 0 | %100 |
| 35 | M63 | X | 0 | 0 | 0 | %100 |
| 36 | M63 | Z | -25.121 | -25.121 | 0 | %100 |
| 37 | M64 | X | 0 | 0 | 0 | %100 |
| 38 | M64 | Z | -20.886 | -20.886 | 0 | %100 |
| 39 | MP4A | X | 0 | 0 | 0 | %100 |
| 40 | MP4A | Z | -9.921 | -9.921 | 0 | %100 |
| 41 | MP2A | X | 0 | 0 | 0 | %100 |
| 42 | MP2A | Z | -9.921 | -9.921 | 0 | %100 |
| 43 | MP3A | X | 0 | 0 | 0 | %100 |

## Member Distributed Loads (BLC 41 : Structure Wo (0 Deg)) (Continued)

| | Member Label | Direction | Start Magnitude[lb/ft,... | End Magnitude[lb/ft,F... | Start Location[ft,%] | End Location[ft,%] |
|---|---|---|---|---|---|---|
| 44 | MP3A | Z | -9.921 | -9.921 | 0 | %100 |
| 45 | MPA2 | X | 0 | 0 | 0 | %100 |
| 46 | MPA2 | Z | -9.921 | -9.921 | 0 | %100 |
| 47 | MP5A | X | 0 | 0 | 0 | %100 |
| 48 | MP5A | Z | -9.921 | -9.921 | 0 | %100 |
| 49 | M45 | X | 0 | 0 | 0 | %100 |
| 50 | M45 | Z | -6.63 | -6.63 | 0 | %100 |
| 51 | M46 | X | 0 | 0 | 0 | %100 |
| 52 | M46 | Z | -6.63 | -6.63 | 0 | %100 |
| 53 | MP1C | X | 0 | 0 | 0 | %100 |
| 54 | MP1C | Z | -9.921 | -9.921 | 0 | %100 |
| 55 | M54A | X | 0 | 0 | 0 | %100 |
| 56 | M54A | Z | -5.221 | -5.221 | 0 | %100 |
| 57 | MP2C | X | 0 | 0 | 0 | %100 |
| 58 | MP2C | Z | -9.921 | -9.921 | 0 | %100 |
| 59 | MP3C | X | 0 | 0 | 0 | %100 |
| 60 | MP3C | Z | -9.921 | -9.921 | 0 | %100 |
| 61 | MP5C | X | 0 | 0 | 0 | %100 |
| 62 | MP5C | Z | -9.921 | -9.921 | 0 | %100 |
| 63 | M82 | X | 0 | 0 | 0 | %100 |
| 64 | M82 | Z | -2.48 | -2.48 | 0 | %100 |
| 65 | M85 | X | 0 | 0 | 0 | %100 |
| 66 | M85 | Z | -5.221 | -5.221 | 0 | %100 |
| 67 | MP2B | X | 0 | 0 | 0 | %100 |
| 68 | MP2B | Z | -9.921 | -9.921 | 0 | %100 |
| 69 | MP3B | X | 0 | 0 | 0 | %100 |
| 70 | MP3B | Z | -9.921 | -9.921 | 0 | %100 |
| 71 | MP5B | X | 0 | 0 | 0 | %100 |
| 72 | MP5B | Z | -9.921 | -9.921 | 0 | %100 |
| 73 | M107A | X | 0 | 0 | 0 | %100 |
| 74 | M107A | Z | -8.877 | -8.877 | 0 | %100 |
| 75 | M108A | X | 0 | 0 | 0 | %100 |
| 76 | M108A | Z | -8.876 | -8.876 | 0 | %100 |
| 77 | M105 | X | 0 | 0 | 0 | %100 |
| 78 | M105 | Z | -8.758 | -8.758 | 0 | %100 |
| 79 | M106A | X | 0 | 0 | 0 | %100 |
| 80 | M106A | Z | -2.536 | -2.536 | 0 | %100 |
| 81 | M107 | X | 0 | 0 | 0 | %100 |
| 82 | M107 | Z | -2.536 | -2.536 | 0 | %100 |
| 83 | M108 | X | 0 | 0 | 0 | %100 |
| 84 | M108 | Z | -8.758 | -8.758 | 0 | %100 |
| 85 | MP1B | X | 0 | 0 | 0 | %100 |
| 86 | MP1B | Z | -9.921 | -9.921 | 0 | %100 |
| 87 | M102B | X | 0 | 0 | 0 | %100 |
| 88 | M102B | Z | -2.48 | -2.48 | 0 | %100 |
| 89 | MP4C | X | 0 | 0 | 0 | %100 |
| 90 | MP4C | Z | -9.921 | -9.921 | 0 | %100 |
| 91 | MP4B | X | 0 | 0 | 0 | %100 |
| 92 | MP4B | Z | -9.921 | -9.921 | 0 | %100 |
| 93 | MPC2 | X | 0 | 0 | 0 | %100 |
| 94 | MPC2 | Z | -9.921 | -9.921 | 0 | %100 |
| 95 | MPB2 | X | 0 | 0 | 0 | %100 |

## Member Distributed Loads (BLC 41 : Structure Wo (0 Deg)) (Continued)

| | Member Label | Direction | Start Magnitude[lb/ft,... | End Magnitude[lb/ft,F... | Start Location[ft,%] | End Location[ft,%] |
|---|---|---|---|---|---|---|
| 96 | MPB2 | Z | -9.921 | -9.921 | 0 | %100 |

## Member Distributed Loads (BLC 42 : Structure Wo (30 Deg))

| | Member Label | Direction | Start Magnitude[lb/ft,... | End Magnitude[lb/ft,F... | Start Location[ft,%] | End Location[ft,%] |
|---|---|---|---|---|---|---|
| 1 | M1 | X | 1.479 | 1.479 | 0 | %100 |
| 2 | M1 | Z | -2.562 | -2.562 | 0 | %100 |
| 3 | M2 | X | 1.944 | 1.944 | 0 | %100 |
| 4 | M2 | Z | -3.366 | -3.366 | 0 | %100 |
| 5 | M5 | X | 2.219 | 2.219 | 0 | %100 |
| 6 | M5 | Z | -3.844 | -3.844 | 0 | %100 |
| 7 | M6 | X | 2.219 | 2.219 | 0 | %100 |
| 8 | M6 | Z | -3.844 | -3.844 | 0 | %100 |
| 9 | M7 | X | 8.877 | 8.877 | 0 | %100 |
| 10 | M7 | Z | -15.375 | -15.375 | 0 | %100 |
| 11 | M6A | X | 7.832 | 7.832 | 0 | %100 |
| 12 | M6A | Z | -13.566 | -13.566 | 0 | %100 |
| 13 | M7A | X | 7.832 | 7.832 | 0 | %100 |
| 14 | M7A | Z | -13.566 | -13.566 | 0 | %100 |
| 15 | MP1A | X | 4.96 | 4.96 | 0 | %100 |
| 16 | MP1A | Z | -8.592 | -8.592 | 0 | %100 |
| 17 | M23A | X | 7.832 | 7.832 | 0 | %100 |
| 18 | M23A | Z | -13.566 | -13.566 | 0 | %100 |
| 19 | M24 | X | 7.832 | 7.832 | 0 | %100 |
| 20 | M24 | Z | -13.566 | -13.566 | 0 | %100 |
| 21 | M39A | X | 0 | 0 | 0 | %100 |
| 22 | M39A | Z | 0 | 0 | 0 | %100 |
| 23 | M40 | X | 0 | 0 | 0 | %100 |
| 24 | M40 | Z | 0 | 0 | 0 | %100 |
| 25 | M55 | X | 1.944 | 1.944 | 0 | %100 |
| 26 | M55 | Z | -3.366 | -3.366 | 0 | %100 |
| 27 | M56 | X | 7.774 | 7.774 | 0 | %100 |
| 28 | M56 | Z | -13.465 | -13.465 | 0 | %100 |
| 29 | M60A | X | 3.72 | 3.72 | 0 | %100 |
| 30 | M60A | Z | -6.444 | -6.444 | 0 | %100 |
| 31 | M61 | X | 12.561 | 12.561 | 0 | %100 |
| 32 | M61 | Z | -21.755 | -21.755 | 0 | %100 |
| 33 | M62 | X | 12.561 | 12.561 | 0 | %100 |
| 34 | M62 | Z | -21.755 | -21.755 | 0 | %100 |
| 35 | M63 | X | 12.561 | 12.561 | 0 | %100 |
| 36 | M63 | Z | -21.755 | -21.755 | 0 | %100 |
| 37 | M64 | X | 7.832 | 7.832 | 0 | %100 |
| 38 | M64 | Z | -13.566 | -13.566 | 0 | %100 |
| 39 | MP4A | X | 4.96 | 4.96 | 0 | %100 |
| 40 | MP4A | Z | -8.592 | -8.592 | 0 | %100 |
| 41 | MP2A | X | 4.96 | 4.96 | 0 | %100 |
| 42 | MP2A | Z | -8.592 | -8.592 | 0 | %100 |
| 43 | MP3A | X | 4.96 | 4.96 | 0 | %100 |
| 44 | MP3A | Z | -8.592 | -8.592 | 0 | %100 |
| 45 | MPA2 | X | 4.96 | 4.96 | 0 | %100 |
| 46 | MPA2 | Z | -8.592 | -8.592 | 0 | %100 |
| 47 | MP5A | X | 4.96 | 4.96 | 0 | %100 |

## Member Distributed Loads (BLC 42 : Structure Wo (30 Deg)) (Continued)

| | Member Label | Direction | Start Magnitude[lb/ft,... | End Magnitude[lb/ft,F... | Start Location[ft,%] | End Location[ft,%] |
|---|---|---|---|---|---|---|
| 48 | MP5A | Z | -8.592 | -8.592 | 0 | %100 |
| 49 | M45 | X | 1.596 | 1.596 | 0 | %100 |
| 50 | M45 | Z | -2.764 | -2.764 | 0 | %100 |
| 51 | M46 | X | 4.707 | 4.707 | 0 | %100 |
| 52 | M46 | Z | -8.152 | -8.152 | 0 | %100 |
| 53 | MP1C | X | 4.96 | 4.96 | 0 | %100 |
| 54 | MP1C | Z | -8.592 | -8.592 | 0 | %100 |
| 55 | M54A | X | 7.832 | 7.832 | 0 | %100 |
| 56 | M54A | Z | -13.566 | -13.566 | 0 | %100 |
| 57 | MP2C | X | 4.96 | 4.96 | 0 | %100 |
| 58 | MP2C | Z | -8.592 | -8.592 | 0 | %100 |
| 59 | MP3C | X | 4.96 | 4.96 | 0 | %100 |
| 60 | MP3C | Z | -8.592 | -8.592 | 0 | %100 |
| 61 | MP5C | X | 4.96 | 4.96 | 0 | %100 |
| 62 | MP5C | Z | -8.592 | -8.592 | 0 | %100 |
| 63 | M82 | X | 0 | 0 | 0 | %100 |
| 64 | M82 | Z | 0 | 0 | 0 | %100 |
| 65 | M85 | X | 0 | 0 | 0 | %100 |
| 66 | M85 | Z | 0 | 0 | 0 | %100 |
| 67 | MP2B | X | 4.96 | 4.96 | 0 | %100 |
| 68 | MP2B | Z | -8.592 | -8.592 | 0 | %100 |
| 69 | MP3B | X | 4.96 | 4.96 | 0 | %100 |
| 70 | MP3B | Z | -8.592 | -8.592 | 0 | %100 |
| 71 | MP5B | X | 4.96 | 4.96 | 0 | %100 |
| 72 | MP5B | Z | -8.592 | -8.592 | 0 | %100 |
| 73 | M107A | X | 1.479 | 1.479 | 0 | %100 |
| 74 | M107A | Z | -2.562 | -2.562 | 0 | %100 |
| 75 | M108A | X | 5.918 | 5.918 | 0 | %100 |
| 76 | M108A | Z | -10.25 | -10.25 | 0 | %100 |
| 77 | M105 | X | 4.707 | 4.707 | 0 | %100 |
| 78 | M105 | Z | -8.152 | -8.152 | 0 | %100 |
| 79 | M106A | X | 1.596 | 1.596 | 0 | %100 |
| 80 | M106A | Z | -2.764 | -2.764 | 0 | %100 |
| 81 | M107 | X | 2.659 | 2.659 | 0 | %100 |
| 82 | M107 | Z | -4.606 | -4.606 | 0 | %100 |
| 83 | M108 | X | 2.659 | 2.659 | 0 | %100 |
| 84 | M108 | Z | -4.606 | -4.606 | 0 | %100 |
| 85 | MP1B | X | 4.96 | 4.96 | 0 | %100 |
| 86 | MP1B | Z | -8.592 | -8.592 | 0 | %100 |
| 87 | M102B | X | 3.72 | 3.72 | 0 | %100 |
| 88 | M102B | Z | -6.444 | -6.444 | 0 | %100 |
| 89 | MP4C | X | 4.96 | 4.96 | 0 | %100 |
| 90 | MP4C | Z | -8.592 | -8.592 | 0 | %100 |
| 91 | MP4B | X | 4.96 | 4.96 | 0 | %100 |
| 92 | MP4B | Z | -8.592 | -8.592 | 0 | %100 |
| 93 | MPC2 | X | 4.96 | 4.96 | 0 | %100 |
| 94 | MPC2 | Z | -8.592 | -8.592 | 0 | %100 |
| 95 | MPB2 | X | 4.96 | 4.96 | 0 | %100 |
| 96 | MPB2 | Z | -8.592 | -8.592 | 0 | %100 |

## Member Distributed Loads (BLC 43 : Structure Wo (60 Deg))

| | Member Label | Direction | Start Magnitude[lb/ft,... | End Magnitude[lb/ft,F... | Start Location[ft,%] | End Location[ft,%] |
|---|---|---|---|---|---|---|

## Member Distributed Loads (BLC 43 : Structure Wo (60 Deg)) (Continued)

| | Member Label | Direction | Start Magnitude[lb/ft,... | End Magnitude[lb/ft,F... | Start Location[ft,%] | End Location[ft,%] |
|---|---|---|---|---|---|---|
| 1 | M1 | X | 7.687 | 7.687 | 0 | %100 |
| 2 | M1 | Z | -4.438 | -4.438 | 0 | %100 |
| 3 | M2 | X | 10.099 | 10.099 | 0 | %100 |
| 4 | M2 | Z | -5.831 | -5.831 | 0 | %100 |
| 5 | M5 | X | 11.531 | 11.531 | 0 | %100 |
| 6 | M5 | Z | -6.657 | -6.657 | 0 | %100 |
| 7 | M6 | X | 0 | 0 | 0 | %100 |
| 8 | M6 | Z | 0 | 0 | 0 | %100 |
| 9 | M7 | X | 11.531 | 11.531 | 0 | %100 |
| 10 | M7 | Z | -6.657 | -6.657 | 0 | %100 |
| 11 | M6A | X | 4.522 | 4.522 | 0 | %100 |
| 12 | M6A | Z | -2.611 | -2.611 | 0 | %100 |
| 13 | M7A | X | 4.522 | 4.522 | 0 | %100 |
| 14 | M7A | Z | -2.611 | -2.611 | 0 | %100 |
| 15 | MP1A | X | 8.592 | 8.592 | 0 | %100 |
| 16 | MP1A | Z | -4.96 | -4.96 | 0 | %100 |
| 17 | M23A | X | 18.088 | 18.088 | 0 | %100 |
| 18 | M23A | Z | -10.443 | -10.443 | 0 | %100 |
| 19 | M24 | X | 18.088 | 18.088 | 0 | %100 |
| 20 | M24 | Z | -10.443 | -10.443 | 0 | %100 |
| 21 | M39A | X | 4.522 | 4.522 | 0 | %100 |
| 22 | M39A | Z | -2.611 | -2.611 | 0 | %100 |
| 23 | M40 | X | 4.522 | 4.522 | 0 | %100 |
| 24 | M40 | Z | -2.611 | -2.611 | 0 | %100 |
| 25 | M55 | X | 0 | 0 | 0 | %100 |
| 26 | M55 | Z | 0 | 0 | 0 | %100 |
| 27 | M56 | X | 10.099 | 10.099 | 0 | %100 |
| 28 | M56 | Z | -5.831 | -5.831 | 0 | %100 |
| 29 | M60A | X | 2.148 | 2.148 | 0 | %100 |
| 30 | M60A | Z | -1.24 | -1.24 | 0 | %100 |
| 31 | M61 | X | 21.755 | 21.755 | 0 | %100 |
| 32 | M61 | Z | -12.561 | -12.561 | 0 | %100 |
| 33 | M62 | X | 21.755 | 21.755 | 0 | %100 |
| 34 | M62 | Z | -12.561 | -12.561 | 0 | %100 |
| 35 | M63 | X | 21.755 | 21.755 | 0 | %100 |
| 36 | M63 | Z | -12.561 | -12.561 | 0 | %100 |
| 37 | M64 | X | 4.522 | 4.522 | 0 | %100 |
| 38 | M64 | Z | -2.611 | -2.611 | 0 | %100 |
| 39 | MP4A | X | 8.592 | 8.592 | 0 | %100 |
| 40 | MP4A | Z | -4.96 | -4.96 | 0 | %100 |
| 41 | MP2A | X | 8.592 | 8.592 | 0 | %100 |
| 42 | MP2A | Z | -4.96 | -4.96 | 0 | %100 |
| 43 | MP3A | X | 8.592 | 8.592 | 0 | %100 |
| 44 | MP3A | Z | -4.96 | -4.96 | 0 | %100 |
| 45 | MPA2 | X | 8.592 | 8.592 | 0 | %100 |
| 46 | MPA2 | Z | -4.96 | -4.96 | 0 | %100 |
| 47 | MP5A | X | 8.592 | 8.592 | 0 | %100 |
| 48 | MP5A | Z | -4.96 | -4.96 | 0 | %100 |
| 49 | M45 | X | 2.196 | 2.196 | 0 | %100 |
| 50 | M45 | Z | -1.268 | -1.268 | 0 | %100 |
| 51 | M46 | X | 7.584 | 7.584 | 0 | %100 |
| 52 | M46 | Z | -4.379 | -4.379 | 0 | %100 |

## Member Distributed Loads (BLC 43 : Structure Wo (60 Deg)) (Continued)

| | Member Label | Direction | Start Magnitude[lb/ft,... | End Magnitude[lb/ft,F... | Start Location[ft,%] | End Location[ft,%] |
|---|---|---|---|---|---|---|
| 53 | MP1C | X | 8.592 | 8.592 | 0 | %100 |
| 54 | MP1C | Z | -4.96 | -4.96 | 0 | %100 |
| 55 | M54A | X | 18.088 | 18.088 | 0 | %100 |
| 56 | M54A | Z | -10.443 | -10.443 | 0 | %100 |
| 57 | MP2C | X | 8.592 | 8.592 | 0 | %100 |
| 58 | MP2C | Z | -4.96 | -4.96 | 0 | %100 |
| 59 | MP3C | X | 8.592 | 8.592 | 0 | %100 |
| 60 | MP3C | Z | -4.96 | -4.96 | 0 | %100 |
| 61 | MP5C | X | 8.592 | 8.592 | 0 | %100 |
| 62 | MP5C | Z | -4.96 | -4.96 | 0 | %100 |
| 63 | M82 | X | 2.148 | 2.148 | 0 | %100 |
| 64 | M82 | Z | -1.24 | -1.24 | 0 | %100 |
| 65 | M85 | X | 4.522 | 4.522 | 0 | %100 |
| 66 | M85 | Z | -2.611 | -2.611 | 0 | %100 |
| 67 | MP2B | X | 8.592 | 8.592 | 0 | %100 |
| 68 | MP2B | Z | -4.96 | -4.96 | 0 | %100 |
| 69 | MP3B | X | 8.592 | 8.592 | 0 | %100 |
| 70 | MP3B | Z | -4.96 | -4.96 | 0 | %100 |
| 71 | MP5B | X | 8.592 | 8.592 | 0 | %100 |
| 72 | MP5B | Z | -4.96 | -4.96 | 0 | %100 |
| 73 | M107A | X | 0 | 0 | 0 | %100 |
| 74 | M107A | Z | 0 | 0 | 0 | %100 |
| 75 | M108A | X | 7.687 | 7.687 | 0 | %100 |
| 76 | M108A | Z | -4.438 | -4.438 | 0 | %100 |
| 77 | M105 | X | 5.742 | 5.742 | 0 | %100 |
| 78 | M105 | Z | -3.315 | -3.315 | 0 | %100 |
| 79 | M106A | X | 5.742 | 5.742 | 0 | %100 |
| 80 | M106A | Z | -3.315 | -3.315 | 0 | %100 |
| 81 | M107 | X | 7.584 | 7.584 | 0 | %100 |
| 82 | M107 | Z | -4.379 | -4.379 | 0 | %100 |
| 83 | M108 | X | 2.196 | 2.196 | 0 | %100 |
| 84 | M108 | Z | -1.268 | -1.268 | 0 | %100 |
| 85 | MP1B | X | 8.592 | 8.592 | 0 | %100 |
| 86 | MP1B | Z | -4.96 | -4.96 | 0 | %100 |
| 87 | M102B | X | 8.592 | 8.592 | 0 | %100 |
| 88 | M102B | Z | -4.96 | -4.96 | 0 | %100 |
| 89 | MP4C | X | 8.592 | 8.592 | 0 | %100 |
| 90 | MP4C | Z | -4.96 | -4.96 | 0 | %100 |
| 91 | MP4B | X | 8.592 | 8.592 | 0 | %100 |
| 92 | MP4B | Z | -4.96 | -4.96 | 0 | %100 |
| 93 | MPC2 | X | 8.592 | 8.592 | 0 | %100 |
| 94 | MPC2 | Z | -4.96 | -4.96 | 0 | %100 |
| 95 | MPB2 | X | 8.592 | 8.592 | 0 | %100 |
| 96 | MPB2 | Z | -4.96 | -4.96 | 0 | %100 |

## Member Distributed Loads (BLC 44 : Structure Wo (90 Deg))

| | Member Label | Direction | Start Magnitude[lb/ft,... | End Magnitude[lb/ft,F... | Start Location[ft,%] | End Location[ft,%] |
|---|---|---|---|---|---|---|
| 1 | M1 | X | 11.835 | 11.835 | 0 | %100 |
| 2 | M1 | Z | 0 | 0 | 0 | %100 |
| 3 | M2 | X | 15.548 | 15.548 | 0 | %100 |
| 4 | M2 | Z | 0 | 0 | 0 | %100 |

## Member Distributed Loads (BLC 44 : Structure Wo (90 Deg)) (Continued)

| | Member Label | Direction | Start Magnitude[lb/ft,... | End Magnitude[lb/ft,F... | Start Location[ft,%] | End Location[ft,%] |
|---|---|---|---|---|---|---|
| 5 | M5 | X | 17.753 | 17.753 | 0 | %100 |
| 6 | M5 | Z | 0 | 0 | 0 | %100 |
| 7 | M6 | X | 4.438 | 4.438 | 0 | %100 |
| 8 | M6 | Z | 0 | 0 | 0 | %100 |
| 9 | M7 | X | 4.438 | 4.438 | 0 | %100 |
| 10 | M7 | Z | 0 | 0 | 0 | %100 |
| 11 | M6A | X | 0 | 0 | 0 | %100 |
| 12 | M6A | Z | 0 | 0 | 0 | %100 |
| 13 | M7A | X | 0 | 0 | 0 | %100 |
| 14 | M7A | Z | 0 | 0 | 0 | %100 |
| 15 | MP1A | X | 9.921 | 9.921 | 0 | %100 |
| 16 | MP1A | Z | 0 | 0 | 0 | %100 |
| 17 | M23A | X | 15.664 | 15.664 | 0 | %100 |
| 18 | M23A | Z | 0 | 0 | 0 | %100 |
| 19 | M24 | X | 15.664 | 15.664 | 0 | %100 |
| 20 | M24 | Z | 0 | 0 | 0 | %100 |
| 21 | M39A | X | 15.664 | 15.664 | 0 | %100 |
| 22 | M39A | Z | 0 | 0 | 0 | %100 |
| 23 | M40 | X | 15.664 | 15.664 | 0 | %100 |
| 24 | M40 | Z | 0 | 0 | 0 | %100 |
| 25 | M55 | X | 3.887 | 3.887 | 0 | %100 |
| 26 | M55 | Z | 0 | 0 | 0 | %100 |
| 27 | M56 | X | 3.887 | 3.887 | 0 | %100 |
| 28 | M56 | Z | 0 | 0 | 0 | %100 |
| 29 | M60A | X | 0 | 0 | 0 | %100 |
| 30 | M60A | Z | 0 | 0 | 0 | %100 |
| 31 | M61 | X | 25.121 | 25.121 | 0 | %100 |
| 32 | M61 | Z | 0 | 0 | 0 | %100 |
| 33 | M62 | X | 25.121 | 25.121 | 0 | %100 |
| 34 | M62 | Z | 0 | 0 | 0 | %100 |
| 35 | M63 | X | 25.121 | 25.121 | 0 | %100 |
| 36 | M63 | Z | 0 | 0 | 0 | %100 |
| 37 | M64 | X | 0 | 0 | 0 | %100 |
| 38 | M64 | Z | 0 | 0 | 0 | %100 |
| 39 | MP4A | X | 9.921 | 9.921 | 0 | %100 |
| 40 | MP4A | Z | 0 | 0 | 0 | %100 |
| 41 | MP2A | X | 9.921 | 9.921 | 0 | %100 |
| 42 | MP2A | Z | 0 | 0 | 0 | %100 |
| 43 | MP3A | X | 9.921 | 9.921 | 0 | %100 |
| 44 | MP3A | Z | 0 | 0 | 0 | %100 |
| 45 | MPA2 | X | 9.921 | 9.921 | 0 | %100 |
| 46 | MPA2 | Z | 0 | 0 | 0 | %100 |
| 47 | MP5A | X | 9.921 | 9.921 | 0 | %100 |
| 48 | MP5A | Z | 0 | 0 | 0 | %100 |
| 49 | M45 | X | 5.319 | 5.319 | 0 | %100 |
| 50 | M45 | Z | 0 | 0 | 0 | %100 |
| 51 | M46 | X | 5.319 | 5.319 | 0 | %100 |
| 52 | M46 | Z | 0 | 0 | 0 | %100 |
| 53 | MP1C | X | 9.921 | 9.921 | 0 | %100 |
| 54 | MP1C | Z | 0 | 0 | 0 | %100 |
| 55 | M54A | X | 15.664 | 15.664 | 0 | %100 |
| 56 | M54A | Z | 0 | 0 | 0 | %100 |

## Member Distributed Loads (BLC 44 : Structure Wo (90 Deg)) (Continued)

| | Member Label | Direction | Start Magnitude[lb/ft,... | End Magnitude[lb/ft,F... | Start Location[ft,%] | End Location[ft,%] |
|---|---|---|---|---|---|---|
| 57 | MP2C | X | 9.921 | 9.921 | 0 | %100 |
| 58 | MP2C | Z | 0 | 0 | 0 | %100 |
| 59 | MP3C | X | 9.921 | 9.921 | 0 | %100 |
| 60 | MP3C | Z | 0 | 0 | 0 | %100 |
| 61 | MP5C | X | 9.921 | 9.921 | 0 | %100 |
| 62 | MP5C | Z | 0 | 0 | 0 | %100 |
| 63 | M82 | X | 7.441 | 7.441 | 0 | %100 |
| 64 | M82 | Z | 0 | 0 | 0 | %100 |
| 65 | M85 | X | 15.664 | 15.664 | 0 | %100 |
| 66 | M85 | Z | 0 | 0 | 0 | %100 |
| 67 | MP2B | X | 9.921 | 9.921 | 0 | %100 |
| 68 | MP2B | Z | 0 | 0 | 0 | %100 |
| 69 | MP3B | X | 9.921 | 9.921 | 0 | %100 |
| 70 | MP3B | Z | 0 | 0 | 0 | %100 |
| 71 | MP5B | X | 9.921 | 9.921 | 0 | %100 |
| 72 | MP5B | Z | 0 | 0 | 0 | %100 |
| 73 | M107A | X | 2.959 | 2.959 | 0 | %100 |
| 74 | M107A | Z | 0 | 0 | 0 | %100 |
| 75 | M108A | X | 2.959 | 2.959 | 0 | %100 |
| 76 | M108A | Z | 0 | 0 | 0 | %100 |
| 77 | M105 | X | 3.191 | 3.191 | 0 | %100 |
| 78 | M105 | Z | 0 | 0 | 0 | %100 |
| 79 | M106A | X | 9.413 | 9.413 | 0 | %100 |
| 80 | M106A | Z | 0 | 0 | 0 | %100 |
| 81 | M107 | X | 9.413 | 9.413 | 0 | %100 |
| 82 | M107 | Z | 0 | 0 | 0 | %100 |
| 83 | M108 | X | 3.191 | 3.191 | 0 | %100 |
| 84 | M108 | Z | 0 | 0 | 0 | %100 |
| 85 | MP1B | X | 9.921 | 9.921 | 0 | %100 |
| 86 | MP1B | Z | 0 | 0 | 0 | %100 |
| 87 | M102B | X | 7.441 | 7.441 | 0 | %100 |
| 88 | M102B | Z | 0 | 0 | 0 | %100 |
| 89 | MP4C | X | 9.921 | 9.921 | 0 | %100 |
| 90 | MP4C | Z | 0 | 0 | 0 | %100 |
| 91 | MP4B | X | 9.921 | 9.921 | 0 | %100 |
| 92 | MP4B | Z | 0 | 0 | 0 | %100 |
| 93 | MPC2 | X | 9.921 | 9.921 | 0 | %100 |
| 94 | MPC2 | Z | 0 | 0 | 0 | %100 |
| 95 | MPB2 | X | 9.921 | 9.921 | 0 | %100 |
| 96 | MPB2 | Z | 0 | 0 | 0 | %100 |

## Member Distributed Loads (BLC 45 : Structure Wo (120 Deg))

| | Member Label | Direction | Start Magnitude[lb/ft,... | End Magnitude[lb/ft,F... | Start Location[ft,%] | End Location[ft,%] |
|---|---|---|---|---|---|---|
| 1 | M1 | X | 7.687 | 7.687 | 0 | %100 |
| 2 | M1 | Z | 4.438 | 4.438 | 0 | %100 |
| 3 | M2 | X | 10.099 | 10.099 | 0 | %100 |
| 4 | M2 | Z | 5.831 | 5.831 | 0 | %100 |
| 5 | M5 | X | 11.531 | 11.531 | 0 | %100 |
| 6 | M5 | Z | 6.657 | 6.657 | 0 | %100 |
| 7 | M6 | X | 11.531 | 11.531 | 0 | %100 |
| 8 | M6 | Z | 6.657 | 6.657 | 0 | %100 |

## Member Distributed Loads (BLC 45 : Structure Wo (120 Deg)) (Continued)

| | Member Label | Direction | Start Magnitude[lb/ft,... | End Magnitude[lb/ft,F... | Start Location[ft,%] | End Location[ft,%] |
|---|---|---|---|---|---|---|
| 9 | M7 | X | 0 | 0 | 0 | %100 |
| 10 | M7 | Z | 0 | 0 | 0 | %100 |
| 11 | M6A | X | 4.522 | 4.522 | 0 | %100 |
| 12 | M6A | Z | 2.611 | 2.611 | 0 | %100 |
| 13 | M7A | X | 4.522 | 4.522 | 0 | %100 |
| 14 | M7A | Z | 2.611 | 2.611 | 0 | %100 |
| 15 | MP1A | X | 8.592 | 8.592 | 0 | %100 |
| 16 | MP1A | Z | 4.96 | 4.96 | 0 | %100 |
| 17 | M23A | X | 4.522 | 4.522 | 0 | %100 |
| 18 | M23A | Z | 2.611 | 2.611 | 0 | %100 |
| 19 | M24 | X | 4.522 | 4.522 | 0 | %100 |
| 20 | M24 | Z | 2.611 | 2.611 | 0 | %100 |
| 21 | M39A | X | 18.088 | 18.088 | 0 | %100 |
| 22 | M39A | Z | 10.443 | 10.443 | 0 | %100 |
| 23 | M40 | X | 18.088 | 18.088 | 0 | %100 |
| 24 | M40 | Z | 10.443 | 10.443 | 0 | %100 |
| 25 | M55 | X | 10.099 | 10.099 | 0 | %100 |
| 26 | M55 | Z | 5.831 | 5.831 | 0 | %100 |
| 27 | M56 | X | 0 | 0 | 0 | %100 |
| 28 | M56 | Z | 0 | 0 | 0 | %100 |
| 29 | M60A | X | 2.148 | 2.148 | 0 | %100 |
| 30 | M60A | Z | 1.24 | 1.24 | 0 | %100 |
| 31 | M61 | X | 21.755 | 21.755 | 0 | %100 |
| 32 | M61 | Z | 12.561 | 12.561 | 0 | %100 |
| 33 | M62 | X | 21.755 | 21.755 | 0 | %100 |
| 34 | M62 | Z | 12.561 | 12.561 | 0 | %100 |
| 35 | M63 | X | 21.755 | 21.755 | 0 | %100 |
| 36 | M63 | Z | 12.561 | 12.561 | 0 | %100 |
| 37 | M64 | X | 4.522 | 4.522 | 0 | %100 |
| 38 | M64 | Z | 2.611 | 2.611 | 0 | %100 |
| 39 | MP4A | X | 8.592 | 8.592 | 0 | %100 |
| 40 | MP4A | Z | 4.96 | 4.96 | 0 | %100 |
| 41 | MP2A | X | 8.592 | 8.592 | 0 | %100 |
| 42 | MP2A | Z | 4.96 | 4.96 | 0 | %100 |
| 43 | MP3A | X | 8.592 | 8.592 | 0 | %100 |
| 44 | MP3A | Z | 4.96 | 4.96 | 0 | %100 |
| 45 | MPA2 | X | 8.592 | 8.592 | 0 | %100 |
| 46 | MPA2 | Z | 4.96 | 4.96 | 0 | %100 |
| 47 | MP5A | X | 8.592 | 8.592 | 0 | %100 |
| 48 | MP5A | Z | 4.96 | 4.96 | 0 | %100 |
| 49 | M45 | X | 7.584 | 7.584 | 0 | %100 |
| 50 | M45 | Z | 4.379 | 4.379 | 0 | %100 |
| 51 | M46 | X | 2.196 | 2.196 | 0 | %100 |
| 52 | M46 | Z | 1.268 | 1.268 | 0 | %100 |
| 53 | MP1C | X | 8.592 | 8.592 | 0 | %100 |
| 54 | MP1C | Z | 4.96 | 4.96 | 0 | %100 |
| 55 | M54A | X | 4.522 | 4.522 | 0 | %100 |
| 56 | M54A | Z | 2.611 | 2.611 | 0 | %100 |
| 57 | MP2C | X | 8.592 | 8.592 | 0 | %100 |
| 58 | MP2C | Z | 4.96 | 4.96 | 0 | %100 |
| 59 | MP3C | X | 8.592 | 8.592 | 0 | %100 |
| 60 | MP3C | Z | 4.96 | 4.96 | 0 | %100 |

## Member Distributed Loads (BLC 45 : Structure Wo (120 Deg)) (Continued)

| | Member Label | Direction | Start Magnitude[lb/ft,... | End Magnitude[lb/ft,F... | Start Location[ft,%] | End Location[ft,%] |
|---|---|---|---|---|---|---|
| 61 | MP5C | X | 8.592 | 8.592 | 0 | %100 |
| 62 | MP5C | Z | 4.96 | 4.96 | 0 | %100 |
| 63 | M82 | X | 8.592 | 8.592 | 0 | %100 |
| 64 | M82 | Z | 4.96 | 4.96 | 0 | %100 |
| 65 | M85 | X | 18.088 | 18.088 | 0 | %100 |
| 66 | M85 | Z | 10.443 | 10.443 | 0 | %100 |
| 67 | MP2B | X | 8.592 | 8.592 | 0 | %100 |
| 68 | MP2B | Z | 4.96 | 4.96 | 0 | %100 |
| 69 | MP3B | X | 8.592 | 8.592 | 0 | %100 |
| 70 | MP3B | Z | 4.96 | 4.96 | 0 | %100 |
| 71 | MP5B | X | 8.592 | 8.592 | 0 | %100 |
| 72 | MP5B | Z | 4.96 | 4.96 | 0 | %100 |
| 73 | M107A | X | 7.687 | 7.687 | 0 | %100 |
| 74 | M107A | Z | 4.438 | 4.438 | 0 | %100 |
| 75 | M108A | X | 0 | 0 | 0 | %100 |
| 76 | M108A | Z | 0 | 0 | 0 | %100 |
| 77 | M105 | X | 2.196 | 2.196 | 0 | %100 |
| 78 | M105 | Z | 1.268 | 1.268 | 0 | %100 |
| 79 | M106A | X | 7.584 | 7.584 | 0 | %100 |
| 80 | M106A | Z | 4.379 | 4.379 | 0 | %100 |
| 81 | M107 | X | 5.742 | 5.742 | 0 | %100 |
| 82 | M107 | Z | 3.315 | 3.315 | 0 | %100 |
| 83 | M108 | X | 5.742 | 5.742 | 0 | %100 |
| 84 | M108 | Z | 3.315 | 3.315 | 0 | %100 |
| 85 | MP1B | X | 8.592 | 8.592 | 0 | %100 |
| 86 | MP1B | Z | 4.96 | 4.96 | 0 | %100 |
| 87 | M102B | X | 2.148 | 2.148 | 0 | %100 |
| 88 | M102B | Z | 1.24 | 1.24 | 0 | %100 |
| 89 | MP4C | X | 8.592 | 8.592 | 0 | %100 |
| 90 | MP4C | Z | 4.96 | 4.96 | 0 | %100 |
| 91 | MP4B | X | 8.592 | 8.592 | 0 | %100 |
| 92 | MP4B | Z | 4.96 | 4.96 | 0 | %100 |
| 93 | MPC2 | X | 8.592 | 8.592 | 0 | %100 |
| 94 | MPC2 | Z | 4.96 | 4.96 | 0 | %100 |
| 95 | MPB2 | X | 8.592 | 8.592 | 0 | %100 |
| 96 | MPB2 | Z | 4.96 | 4.96 | 0 | %100 |

## Member Distributed Loads (BLC 46 : Structure Wo (150 Deg))

| | Member Label | Direction | Start Magnitude[lb/ft,... | End Magnitude[lb/ft,F... | Start Location[ft,%] | End Location[ft,%] |
|---|---|---|---|---|---|---|
| 1 | M1 | X | 1.479 | 1.479 | 0 | %100 |
| 2 | M1 | Z | 2.562 | 2.562 | 0 | %100 |
| 3 | M2 | X | 1.944 | 1.944 | 0 | %100 |
| 4 | M2 | Z | 3.366 | 3.366 | 0 | %100 |
| 5 | M5 | X | 2.219 | 2.219 | 0 | %100 |
| 6 | M5 | Z | 3.844 | 3.844 | 0 | %100 |
| 7 | M6 | X | 8.877 | 8.877 | 0 | %100 |
| 8 | M6 | Z | 15.375 | 15.375 | 0 | %100 |
| 9 | M7 | X | 2.219 | 2.219 | 0 | %100 |
| 10 | M7 | Z | 3.844 | 3.844 | 0 | %100 |
| 11 | M6A | X | 7.832 | 7.832 | 0 | %100 |
| 12 | M6A | Z | 13.566 | 13.566 | 0 | %100 |

## Member Distributed Loads (BLC 46 : Structure Wo (150 Deg)) (Continued)

| | Member Label | Direction | Start Magnitude[lb/ft,... | End Magnitude[lb/ft,F... | Start Location[ft,%] | End Location[ft,%] |
|---|---|---|---|---|---|---|
| 13 | M7A | X | 7.832 | 7.832 | 0 | %100 |
| 14 | M7A | Z | 13.566 | 13.566 | 0 | %100 |
| 15 | MP1A | X | 4.96 | 4.96 | 0 | %100 |
| 16 | MP1A | Z | 8.592 | 8.592 | 0 | %100 |
| 17 | M23A | X | 0 | 0 | 0 | %100 |
| 18 | M23A | Z | 0 | 0 | 0 | %100 |
| 19 | M24 | X | 0 | 0 | 0 | %100 |
| 20 | M24 | Z | 0 | 0 | 0 | %100 |
| 21 | M39A | X | 7.832 | 7.832 | 0 | %100 |
| 22 | M39A | Z | 13.566 | 13.566 | 0 | %100 |
| 23 | M40 | X | 7.832 | 7.832 | 0 | %100 |
| 24 | M40 | Z | 13.566 | 13.566 | 0 | %100 |
| 25 | M55 | X | 7.774 | 7.774 | 0 | %100 |
| 26 | M55 | Z | 13.465 | 13.465 | 0 | %100 |
| 27 | M56 | X | 1.944 | 1.944 | 0 | %100 |
| 28 | M56 | Z | 3.366 | 3.366 | 0 | %100 |
| 29 | M60A | X | 3.72 | 3.72 | 0 | %100 |
| 30 | M60A | Z | 6.444 | 6.444 | 0 | %100 |
| 31 | M61 | X | 12.561 | 12.561 | 0 | %100 |
| 32 | M61 | Z | 21.755 | 21.755 | 0 | %100 |
| 33 | M62 | X | 12.561 | 12.561 | 0 | %100 |
| 34 | M62 | Z | 21.755 | 21.755 | 0 | %100 |
| 35 | M63 | X | 12.561 | 12.561 | 0 | %100 |
| 36 | M63 | Z | 21.755 | 21.755 | 0 | %100 |
| 37 | M64 | X | 7.832 | 7.832 | 0 | %100 |
| 38 | M64 | Z | 13.566 | 13.566 | 0 | %100 |
| 39 | MP4A | X | 4.96 | 4.96 | 0 | %100 |
| 40 | MP4A | Z | 8.592 | 8.592 | 0 | %100 |
| 41 | MP2A | X | 4.96 | 4.96 | 0 | %100 |
| 42 | MP2A | Z | 8.592 | 8.592 | 0 | %100 |
| 43 | MP3A | X | 4.96 | 4.96 | 0 | %100 |
| 44 | MP3A | Z | 8.592 | 8.592 | 0 | %100 |
| 45 | MPA2 | X | 4.96 | 4.96 | 0 | %100 |
| 46 | MPA2 | Z | 8.592 | 8.592 | 0 | %100 |
| 47 | MP5A | X | 4.96 | 4.96 | 0 | %100 |
| 48 | MP5A | Z | 8.592 | 8.592 | 0 | %100 |
| 49 | M45 | X | 4.707 | 4.707 | 0 | %100 |
| 50 | M45 | Z | 8.152 | 8.152 | 0 | %100 |
| 51 | M46 | X | 1.596 | 1.596 | 0 | %100 |
| 52 | M46 | Z | 2.764 | 2.764 | 0 | %100 |
| 53 | MP1C | X | 4.96 | 4.96 | 0 | %100 |
| 54 | MP1C | Z | 8.592 | 8.592 | 0 | %100 |
| 55 | M54A | X | 0 | 0 | 0 | %100 |
| 56 | M54A | Z | 0 | 0 | 0 | %100 |
| 57 | MP2C | X | 4.96 | 4.96 | 0 | %100 |
| 58 | MP2C | Z | 8.592 | 8.592 | 0 | %100 |
| 59 | MP3C | X | 4.96 | 4.96 | 0 | %100 |
| 60 | MP3C | Z | 8.592 | 8.592 | 0 | %100 |
| 61 | MP5C | X | 4.96 | 4.96 | 0 | %100 |
| 62 | MP5C | Z | 8.592 | 8.592 | 0 | %100 |
| 63 | M82 | X | 3.72 | 3.72 | 0 | %100 |
| 64 | M82 | Z | 6.444 | 6.444 | 0 | %100 |

## Member Distributed Loads (BLC 46 : Structure Wo (150 Deg)) (Continued)

| | Member Label | Direction | Start Magnitude[lb/ft,... | End Magnitude[lb/ft,F... | Start Location[ft,%] | End Location[ft,%] |
|---|---|---|---|---|---|---|
| 65 | M85 | X | 7.832 | 7.832 | 0 | %100 |
| 66 | M85 | Z | 13.566 | 13.566 | 0 | %100 |
| 67 | MP2B | X | 4.96 | 4.96 | 0 | %100 |
| 68 | MP2B | Z | 8.592 | 8.592 | 0 | %100 |
| 69 | MP3B | X | 4.96 | 4.96 | 0 | %100 |
| 70 | MP3B | Z | 8.592 | 8.592 | 0 | %100 |
| 71 | MP5B | X | 4.96 | 4.96 | 0 | %100 |
| 72 | MP5B | Z | 8.592 | 8.592 | 0 | %100 |
| 73 | M107A | X | 5.918 | 5.918 | 0 | %100 |
| 74 | M107A | Z | 10.25 | 10.25 | 0 | %100 |
| 75 | M108A | X | 1.479 | 1.479 | 0 | %100 |
| 76 | M108A | Z | 2.562 | 2.562 | 0 | %100 |
| 77 | M105 | X | 2.659 | 2.659 | 0 | %100 |
| 78 | M105 | Z | 4.606 | 4.606 | 0 | %100 |
| 79 | M106A | X | 2.659 | 2.659 | 0 | %100 |
| 80 | M106A | Z | 4.606 | 4.606 | 0 | %100 |
| 81 | M107 | X | 1.596 | 1.596 | 0 | %100 |
| 82 | M107 | Z | 2.764 | 2.764 | 0 | %100 |
| 83 | M108 | X | 4.707 | 4.707 | 0 | %100 |
| 84 | M108 | Z | 8.152 | 8.152 | 0 | %100 |
| 85 | MP1B | X | 4.96 | 4.96 | 0 | %100 |
| 86 | MP1B | Z | 8.592 | 8.592 | 0 | %100 |
| 87 | M102B | X | 0 | 0 | 0 | %100 |
| 88 | M102B | Z | 0 | 0 | 0 | %100 |
| 89 | MP4C | X | 4.96 | 4.96 | 0 | %100 |
| 90 | MP4C | Z | 8.592 | 8.592 | 0 | %100 |
| 91 | MP4B | X | 4.96 | 4.96 | 0 | %100 |
| 92 | MP4B | Z | 8.592 | 8.592 | 0 | %100 |
| 93 | MPC2 | X | 4.96 | 4.96 | 0 | %100 |
| 94 | MPC2 | Z | 8.592 | 8.592 | 0 | %100 |
| 95 | MPB2 | X | 4.96 | 4.96 | 0 | %100 |
| 96 | MPB2 | Z | 8.592 | 8.592 | 0 | %100 |

## Member Distributed Loads (BLC 47 : Structure Wo (180 Deg))

| | Member Label | Direction | Start Magnitude[lb/ft,... | End Magnitude[lb/ft,F... | Start Location[ft,%] | End Location[ft,%] |
|---|---|---|---|---|---|---|
| 1 | M1 | X | 0 | 0 | 0 | %100 |
| 2 | M1 | Z | 0 | 0 | 0 | %100 |
| 3 | M2 | X | 0 | 0 | 0 | %100 |
| 4 | M2 | Z | 0 | 0 | 0 | %100 |
| 5 | M5 | X | 0 | 0 | 0 | %100 |
| 6 | M5 | Z | 0 | 0 | 0 | %100 |
| 7 | M6 | X | 0 | 0 | 0 | %100 |
| 8 | M6 | Z | 13.315 | 13.315 | 0 | %100 |
| 9 | M7 | X | 0 | 0 | 0 | %100 |
| 10 | M7 | Z | 13.315 | 13.315 | 0 | %100 |
| 11 | M6A | X | 0 | 0 | 0 | %100 |
| 12 | M6A | Z | 20.886 | 20.886 | 0 | %100 |
| 13 | M7A | X | 0 | 0 | 0 | %100 |
| 14 | M7A | Z | 20.886 | 20.886 | 0 | %100 |
| 15 | MP1A | X | 0 | 0 | 0 | %100 |
| 16 | MP1A | Z | 9.921 | 9.921 | 0 | %100 |

## Member Distributed Loads (BLC 47 : Structure Wo (180 Deg)) (Continued)

| | Member Label | Direction | Start Magnitude[lb/ft,... | End Magnitude[lb/ft,F... | Start Location[ft,%] | End Location[ft,%] |
|---|---|---|---|---|---|---|
| 17 | M23A | X | 0 | 0 | 0 | %100 |
| 18 | M23A | Z | 5.221 | 5.221 | 0 | %100 |
| 19 | M24 | X | 0 | 0 | 0 | %100 |
| 20 | M24 | Z | 5.221 | 5.221 | 0 | %100 |
| 21 | M39A | X | 0 | 0 | 0 | %100 |
| 22 | M39A | Z | 5.221 | 5.221 | 0 | %100 |
| 23 | M40 | X | 0 | 0 | 0 | %100 |
| 24 | M40 | Z | 5.221 | 5.221 | 0 | %100 |
| 25 | M55 | X | 0 | 0 | 0 | %100 |
| 26 | M55 | Z | 11.661 | 11.661 | 0 | %100 |
| 27 | M56 | X | 0 | 0 | 0 | %100 |
| 28 | M56 | Z | 11.661 | 11.661 | 0 | %100 |
| 29 | M60A | X | 0 | 0 | 0 | %100 |
| 30 | M60A | Z | 9.921 | 9.921 | 0 | %100 |
| 31 | M61 | X | 0 | 0 | 0 | %100 |
| 32 | M61 | Z | 25.121 | 25.121 | 0 | %100 |
| 33 | M62 | X | 0 | 0 | 0 | %100 |
| 34 | M62 | Z | 25.121 | 25.121 | 0 | %100 |
| 35 | M63 | X | 0 | 0 | 0 | %100 |
| 36 | M63 | Z | 25.121 | 25.121 | 0 | %100 |
| 37 | M64 | X | 0 | 0 | 0 | %100 |
| 38 | M64 | Z | 20.886 | 20.886 | 0 | %100 |
| 39 | MP4A | X | 0 | 0 | 0 | %100 |
| 40 | MP4A | Z | 9.921 | 9.921 | 0 | %100 |
| 41 | MP2A | X | 0 | 0 | 0 | %100 |
| 42 | MP2A | Z | 9.921 | 9.921 | 0 | %100 |
| 43 | MP3A | X | 0 | 0 | 0 | %100 |
| 44 | MP3A | Z | 9.921 | 9.921 | 0 | %100 |
| 45 | MPA2 | X | 0 | 0 | 0 | %100 |
| 46 | MPA2 | Z | 9.921 | 9.921 | 0 | %100 |
| 47 | MP5A | X | 0 | 0 | 0 | %100 |
| 48 | MP5A | Z | 9.921 | 9.921 | 0 | %100 |
| 49 | M45 | X | 0 | 0 | 0 | %100 |
| 50 | M45 | Z | 6.63 | 6.63 | 0 | %100 |
| 51 | M46 | X | 0 | 0 | 0 | %100 |
| 52 | M46 | Z | 6.63 | 6.63 | 0 | %100 |
| 53 | MP1C | X | 0 | 0 | 0 | %100 |
| 54 | MP1C | Z | 9.921 | 9.921 | 0 | %100 |
| 55 | M54A | X | 0 | 0 | 0 | %100 |
| 56 | M54A | Z | 5.221 | 5.221 | 0 | %100 |
| 57 | MP2C | X | 0 | 0 | 0 | %100 |
| 58 | MP2C | Z | 9.921 | 9.921 | 0 | %100 |
| 59 | MP3C | X | 0 | 0 | 0 | %100 |
| 60 | MP3C | Z | 9.921 | 9.921 | 0 | %100 |
| 61 | MP5C | X | 0 | 0 | 0 | %100 |
| 62 | MP5C | Z | 9.921 | 9.921 | 0 | %100 |
| 63 | M82 | X | 0 | 0 | 0 | %100 |
| 64 | M82 | Z | 2.48 | 2.48 | 0 | %100 |
| 65 | M85 | X | 0 | 0 | 0 | %100 |
| 66 | M85 | Z | 5.221 | 5.221 | 0 | %100 |
| 67 | MP2B | X | 0 | 0 | 0 | %100 |
| 68 | MP2B | Z | 9.921 | 9.921 | 0 | %100 |

## Member Distributed Loads (BLC 47 : Structure Wo (180 Deg)) (Continued)

| | Member Label | Direction | Start Magnitude[lb/ft,... | End Magnitude[lb/ft,F... | Start Location[ft,%] | End Location[ft,%] |
|---|---|---|---|---|---|---|
| 69 | MP3B | X | 0 | 0 | 0 | %100 |
| 70 | MP3B | Z | 9.921 | 9.921 | 0 | %100 |
| 71 | MP5B | X | 0 | 0 | 0 | %100 |
| 72 | MP5B | Z | 9.921 | 9.921 | 0 | %100 |
| 73 | M107A | X | 0 | 0 | 0 | %100 |
| 74 | M107A | Z | 8.877 | 8.877 | 0 | %100 |
| 75 | M108A | X | 0 | 0 | 0 | %100 |
| 76 | M108A | Z | 8.876 | 8.876 | 0 | %100 |
| 77 | M105 | X | 0 | 0 | 0 | %100 |
| 78 | M105 | Z | 8.758 | 8.758 | 0 | %100 |
| 79 | M106A | X | 0 | 0 | 0 | %100 |
| 80 | M106A | Z | 2.536 | 2.536 | 0 | %100 |
| 81 | M107 | X | 0 | 0 | 0 | %100 |
| 82 | M107 | Z | 2.536 | 2.536 | 0 | %100 |
| 83 | M108 | X | 0 | 0 | 0 | %100 |
| 84 | M108 | Z | 8.758 | 8.758 | 0 | %100 |
| 85 | MP1B | X | 0 | 0 | 0 | %100 |
| 86 | MP1B | Z | 9.921 | 9.921 | 0 | %100 |
| 87 | M102B | X | 0 | 0 | 0 | %100 |
| 88 | M102B | Z | 2.48 | 2.48 | 0 | %100 |
| 89 | MP4C | X | 0 | 0 | 0 | %100 |
| 90 | MP4C | Z | 9.921 | 9.921 | 0 | %100 |
| 91 | MP4B | X | 0 | 0 | 0 | %100 |
| 92 | MP4B | Z | 9.921 | 9.921 | 0 | %100 |
| 93 | MPC2 | X | 0 | 0 | 0 | %100 |
| 94 | MPC2 | Z | 9.921 | 9.921 | 0 | %100 |
| 95 | MPB2 | X | 0 | 0 | 0 | %100 |
| 96 | MPB2 | Z | 9.921 | 9.921 | 0 | %100 |

## Member Distributed Loads (BLC 48 : Structure Wo (210 Deg))

| | Member Label | Direction | Start Magnitude[lb/ft,... | End Magnitude[lb/ft,F... | Start Location[ft,%] | End Location[ft,%] |
|---|---|---|---|---|---|---|
| 1 | M1 | X | -1.479 | -1.479 | 0 | %100 |
| 2 | M1 | Z | 2.562 | 2.562 | 0 | %100 |
| 3 | M2 | X | -1.944 | -1.944 | 0 | %100 |
| 4 | M2 | Z | 3.366 | 3.366 | 0 | %100 |
| 5 | M5 | X | -2.219 | -2.219 | 0 | %100 |
| 6 | M5 | Z | 3.844 | 3.844 | 0 | %100 |
| 7 | M6 | X | -2.219 | -2.219 | 0 | %100 |
| 8 | M6 | Z | 3.844 | 3.844 | 0 | %100 |
| 9 | M7 | X | -8.877 | -8.877 | 0 | %100 |
| 10 | M7 | Z | 15.375 | 15.375 | 0 | %100 |
| 11 | M6A | X | -7.832 | -7.832 | 0 | %100 |
| 12 | M6A | Z | 13.566 | 13.566 | 0 | %100 |
| 13 | M7A | X | -7.832 | -7.832 | 0 | %100 |
| 14 | M7A | Z | 13.566 | 13.566 | 0 | %100 |
| 15 | MP1A | X | -4.96 | -4.96 | 0 | %100 |
| 16 | MP1A | Z | 8.592 | 8.592 | 0 | %100 |
| 17 | M23A | X | -7.832 | -7.832 | 0 | %100 |
| 18 | M23A | Z | 13.566 | 13.566 | 0 | %100 |
| 19 | M24 | X | -7.832 | -7.832 | 0 | %100 |
| 20 | M24 | Z | 13.566 | 13.566 | 0 | %100 |

## Member Distributed Loads (BLC 48 : Structure Wo (210 Deg)) (Continued)

| | Member Label | Direction | Start Magnitude[lb/ft,... | End Magnitude[lb/ft,F... | Start Location[ft,%] | End Location[ft,%] |
|---|---|---|---|---|---|---|
| 21 | M39A | X | 0 | 0 | 0 | %100 |
| 22 | M39A | Z | 0 | 0 | 0 | %100 |
| 23 | M40 | X | 0 | 0 | 0 | %100 |
| 24 | M40 | Z | 0 | 0 | 0 | %100 |
| 25 | M55 | X | -1.944 | -1.944 | 0 | %100 |
| 26 | M55 | Z | 3.366 | 3.366 | 0 | %100 |
| 27 | M56 | X | -7.774 | -7.774 | 0 | %100 |
| 28 | M56 | Z | 13.465 | 13.465 | 0 | %100 |
| 29 | M60A | X | -3.72 | -3.72 | 0 | %100 |
| 30 | M60A | Z | 6.444 | 6.444 | 0 | %100 |
| 31 | M61 | X | -12.561 | -12.561 | 0 | %100 |
| 32 | M61 | Z | 21.755 | 21.755 | 0 | %100 |
| 33 | M62 | X | -12.561 | -12.561 | 0 | %100 |
| 34 | M62 | Z | 21.755 | 21.755 | 0 | %100 |
| 35 | M63 | X | -12.561 | -12.561 | 0 | %100 |
| 36 | M63 | Z | 21.755 | 21.755 | 0 | %100 |
| 37 | M64 | X | -7.832 | -7.832 | 0 | %100 |
| 38 | M64 | Z | 13.566 | 13.566 | 0 | %100 |
| 39 | MP4A | X | -4.96 | -4.96 | 0 | %100 |
| 40 | MP4A | Z | 8.592 | 8.592 | 0 | %100 |
| 41 | MP2A | X | -4.96 | -4.96 | 0 | %100 |
| 42 | MP2A | Z | 8.592 | 8.592 | 0 | %100 |
| 43 | MP3A | X | -4.96 | -4.96 | 0 | %100 |
| 44 | MP3A | Z | 8.592 | 8.592 | 0 | %100 |
| 45 | MPA2 | X | -4.96 | -4.96 | 0 | %100 |
| 46 | MPA2 | Z | 8.592 | 8.592 | 0 | %100 |
| 47 | MP5A | X | -4.96 | -4.96 | 0 | %100 |
| 48 | MP5A | Z | 8.592 | 8.592 | 0 | %100 |
| 49 | M45 | X | -1.596 | -1.596 | 0 | %100 |
| 50 | M45 | Z | 2.764 | 2.764 | 0 | %100 |
| 51 | M46 | X | -4.707 | -4.707 | 0 | %100 |
| 52 | M46 | Z | 8.152 | 8.152 | 0 | %100 |
| 53 | MP1C | X | -4.96 | -4.96 | 0 | %100 |
| 54 | MP1C | Z | 8.592 | 8.592 | 0 | %100 |
| 55 | M54A | X | -7.832 | -7.832 | 0 | %100 |
| 56 | M54A | Z | 13.566 | 13.566 | 0 | %100 |
| 57 | MP2C | X | -4.96 | -4.96 | 0 | %100 |
| 58 | MP2C | Z | 8.592 | 8.592 | 0 | %100 |
| 59 | MP3C | X | -4.96 | -4.96 | 0 | %100 |
| 60 | MP3C | Z | 8.592 | 8.592 | 0 | %100 |
| 61 | MP5C | X | -4.96 | -4.96 | 0 | %100 |
| 62 | MP5C | Z | 8.592 | 8.592 | 0 | %100 |
| 63 | M82 | X | 0 | 0 | 0 | %100 |
| 64 | M82 | Z | 0 | 0 | 0 | %100 |
| 65 | M85 | X | 0 | 0 | 0 | %100 |
| 66 | M85 | Z | 0 | 0 | 0 | %100 |
| 67 | MP2B | X | -4.96 | -4.96 | 0 | %100 |
| 68 | MP2B | Z | 8.592 | 8.592 | 0 | %100 |
| 69 | MP3B | X | -4.96 | -4.96 | 0 | %100 |
| 70 | MP3B | Z | 8.592 | 8.592 | 0 | %100 |
| 71 | MP5B | X | -4.96 | -4.96 | 0 | %100 |
| 72 | MP5B | Z | 8.592 | 8.592 | 0 | %100 |

## Member Distributed Loads (BLC 48 : Structure Wo (210 Deg)) (Continued)

| | Member Label | Direction | Start Magnitude[lb/ft,... | End Magnitude[lb/ft,F... | Start Location[ft,%] | End Location[ft,%] |
|---|---|---|---|---|---|---|
| 73 | M107A | X | -1.479 | -1.479 | 0 | %100 |
| 74 | M107A | Z | 2.562 | 2.562 | 0 | %100 |
| 75 | M108A | X | -5.918 | -5.918 | 0 | %100 |
| 76 | M108A | Z | 10.25 | 10.25 | 0 | %100 |
| 77 | M105 | X | -4.707 | -4.707 | 0 | %100 |
| 78 | M105 | Z | 8.152 | 8.152 | 0 | %100 |
| 79 | M106A | X | -1.596 | -1.596 | 0 | %100 |
| 80 | M106A | Z | 2.764 | 2.764 | 0 | %100 |
| 81 | M107 | X | -2.659 | -2.659 | 0 | %100 |
| 82 | M107 | Z | 4.606 | 4.606 | 0 | %100 |
| 83 | M108 | X | -2.659 | -2.659 | 0 | %100 |
| 84 | M108 | Z | 4.606 | 4.606 | 0 | %100 |
| 85 | MP1B | X | -4.96 | -4.96 | 0 | %100 |
| 86 | MP1B | Z | 8.592 | 8.592 | 0 | %100 |
| 87 | M102B | X | -3.72 | -3.72 | 0 | %100 |
| 88 | M102B | Z | 6.444 | 6.444 | 0 | %100 |
| 89 | MP4C | X | -4.96 | -4.96 | 0 | %100 |
| 90 | MP4C | Z | 8.592 | 8.592 | 0 | %100 |
| 91 | MP4B | X | -4.96 | -4.96 | 0 | %100 |
| 92 | MP4B | Z | 8.592 | 8.592 | 0 | %100 |
| 93 | MPC2 | X | -4.96 | -4.96 | 0 | %100 |
| 94 | MPC2 | Z | 8.592 | 8.592 | 0 | %100 |
| 95 | MPB2 | X | -4.96 | -4.96 | 0 | %100 |
| 96 | MPB2 | Z | 8.592 | 8.592 | 0 | %100 |

## Member Distributed Loads (BLC 49 : Structure Wo (240 Deg))

| | Member Label | Direction | Start Magnitude[lb/ft,... | End Magnitude[lb/ft,F... | Start Location[ft,%] | End Location[ft,%] |
|---|---|---|---|---|---|---|
| 1 | M1 | X | -7.687 | -7.687 | 0 | %100 |
| 2 | M1 | Z | 4.438 | 4.438 | 0 | %100 |
| 3 | M2 | X | -10.099 | -10.099 | 0 | %100 |
| 4 | M2 | Z | 5.831 | 5.831 | 0 | %100 |
| 5 | M5 | X | -11.531 | -11.531 | 0 | %100 |
| 6 | M5 | Z | 6.657 | 6.657 | 0 | %100 |
| 7 | M6 | X | 0 | 0 | 0 | %100 |
| 8 | M6 | Z | 0 | 0 | 0 | %100 |
| 9 | M7 | X | -11.531 | -11.531 | 0 | %100 |
| 10 | M7 | Z | 6.657 | 6.657 | 0 | %100 |
| 11 | M6A | X | -4.522 | -4.522 | 0 | %100 |
| 12 | M6A | Z | 2.611 | 2.611 | 0 | %100 |
| 13 | M7A | X | -4.522 | -4.522 | 0 | %100 |
| 14 | M7A | Z | 2.611 | 2.611 | 0 | %100 |
| 15 | MP1A | X | -8.592 | -8.592 | 0 | %100 |
| 16 | MP1A | Z | 4.96 | 4.96 | 0 | %100 |
| 17 | M23A | X | -18.088 | -18.088 | 0 | %100 |
| 18 | M23A | Z | 10.443 | 10.443 | 0 | %100 |
| 19 | M24 | X | -18.088 | -18.088 | 0 | %100 |
| 20 | M24 | Z | 10.443 | 10.443 | 0 | %100 |
| 21 | M39A | X | -4.522 | -4.522 | 0 | %100 |
| 22 | M39A | Z | 2.611 | 2.611 | 0 | %100 |
| 23 | M40 | X | -4.522 | -4.522 | 0 | %100 |
| 24 | M40 | Z | 2.611 | 2.611 | 0 | %100 |

## Member Distributed Loads (BLC 49 : Structure Wo (240 Deg)) (Continued)

| | Member Label | Direction | Start Magnitude[lb/ft,... | End Magnitude[lb/ft,F... | Start Location[ft,%] | End Location[ft,%] |
|---|---|---|---|---|---|---|
| 25 | M55 | X | 0 | 0 | 0 | %100 |
| 26 | M55 | Z | 0 | 0 | 0 | %100 |
| 27 | M56 | X | -10.099 | -10.099 | 0 | %100 |
| 28 | M56 | Z | 5.831 | 5.831 | 0 | %100 |
| 29 | M60A | X | -2.148 | -2.148 | 0 | %100 |
| 30 | M60A | Z | 1.24 | 1.24 | 0 | %100 |
| 31 | M61 | X | -21.755 | -21.755 | 0 | %100 |
| 32 | M61 | Z | 12.561 | 12.561 | 0 | %100 |
| 33 | M62 | X | -21.755 | -21.755 | 0 | %100 |
| 34 | M62 | Z | 12.561 | 12.561 | 0 | %100 |
| 35 | M63 | X | -21.755 | -21.755 | 0 | %100 |
| 36 | M63 | Z | 12.561 | 12.561 | 0 | %100 |
| 37 | M64 | X | -4.522 | -4.522 | 0 | %100 |
| 38 | M64 | Z | 2.611 | 2.611 | 0 | %100 |
| 39 | MP4A | X | -8.592 | -8.592 | 0 | %100 |
| 40 | MP4A | Z | 4.96 | 4.96 | 0 | %100 |
| 41 | MP2A | X | -8.592 | -8.592 | 0 | %100 |
| 42 | MP2A | Z | 4.96 | 4.96 | 0 | %100 |
| 43 | MP3A | X | -8.592 | -8.592 | 0 | %100 |
| 44 | MP3A | Z | 4.96 | 4.96 | 0 | %100 |
| 45 | MPA2 | X | -8.592 | -8.592 | 0 | %100 |
| 46 | MPA2 | Z | 4.96 | 4.96 | 0 | %100 |
| 47 | MP5A | X | -8.592 | -8.592 | 0 | %100 |
| 48 | MP5A | Z | 4.96 | 4.96 | 0 | %100 |
| 49 | M45 | X | -2.196 | -2.196 | 0 | %100 |
| 50 | M45 | Z | 1.268 | 1.268 | 0 | %100 |
| 51 | M46 | X | -7.584 | -7.584 | 0 | %100 |
| 52 | M46 | Z | 4.379 | 4.379 | 0 | %100 |
| 53 | MP1C | X | -8.592 | -8.592 | 0 | %100 |
| 54 | MP1C | Z | 4.96 | 4.96 | 0 | %100 |
| 55 | M54A | X | -18.088 | -18.088 | 0 | %100 |
| 56 | M54A | Z | 10.443 | 10.443 | 0 | %100 |
| 57 | MP2C | X | -8.592 | -8.592 | 0 | %100 |
| 58 | MP2C | Z | 4.96 | 4.96 | 0 | %100 |
| 59 | MP3C | X | -8.592 | -8.592 | 0 | %100 |
| 60 | MP3C | Z | 4.96 | 4.96 | 0 | %100 |
| 61 | MP5C | X | -8.592 | -8.592 | 0 | %100 |
| 62 | MP5C | Z | 4.96 | 4.96 | 0 | %100 |
| 63 | M82 | X | -2.148 | -2.148 | 0 | %100 |
| 64 | M82 | Z | 1.24 | 1.24 | 0 | %100 |
| 65 | M85 | X | -4.522 | -4.522 | 0 | %100 |
| 66 | M85 | Z | 2.611 | 2.611 | 0 | %100 |
| 67 | MP2B | X | -8.592 | -8.592 | 0 | %100 |
| 68 | MP2B | Z | 4.96 | 4.96 | 0 | %100 |
| 69 | MP3B | X | -8.592 | -8.592 | 0 | %100 |
| 70 | MP3B | Z | 4.96 | 4.96 | 0 | %100 |
| 71 | MP5B | X | -8.592 | -8.592 | 0 | %100 |
| 72 | MP5B | Z | 4.96 | 4.96 | 0 | %100 |
| 73 | M107A | X | 0 | 0 | 0 | %100 |
| 74 | M107A | Z | 0 | 0 | 0 | %100 |
| 75 | M108A | X | -7.687 | -7.687 | 0 | %100 |
| 76 | M108A | Z | 4.438 | 4.438 | 0 | %100 |

## Member Distributed Loads (BLC 49 : Structure Wo (240 Deg)) (Continued)

| | Member Label | Direction | Start Magnitude[lb/ft,... | End Magnitude[lb/ft,F... | Start Location[ft,%] | End Location[ft,%] |
|---|---|---|---|---|---|---|
| 77 | M105 | X | -5.742 | -5.742 | 0 | %100 |
| 78 | M105 | Z | 3.315 | 3.315 | 0 | %100 |
| 79 | M106A | X | -5.742 | -5.742 | 0 | %100 |
| 80 | M106A | Z | 3.315 | 3.315 | 0 | %100 |
| 81 | M107 | X | -7.584 | -7.584 | 0 | %100 |
| 82 | M107 | Z | 4.379 | 4.379 | 0 | %100 |
| 83 | M108 | X | -2.196 | -2.196 | 0 | %100 |
| 84 | M108 | Z | 1.268 | 1.268 | 0 | %100 |
| 85 | MP1B | X | -8.592 | -8.592 | 0 | %100 |
| 86 | MP1B | Z | 4.96 | 4.96 | 0 | %100 |
| 87 | M102B | X | -8.592 | -8.592 | 0 | %100 |
| 88 | M102B | Z | 4.96 | 4.96 | 0 | %100 |
| 89 | MP4C | X | -8.592 | -8.592 | 0 | %100 |
| 90 | MP4C | Z | 4.96 | 4.96 | 0 | %100 |
| 91 | MP4B | X | -8.592 | -8.592 | 0 | %100 |
| 92 | MP4B | Z | 4.96 | 4.96 | 0 | %100 |
| 93 | MPC2 | X | -8.592 | -8.592 | 0 | %100 |
| 94 | MPC2 | Z | 4.96 | 4.96 | 0 | %100 |
| 95 | MPB2 | X | -8.592 | -8.592 | 0 | %100 |
| 96 | MPB2 | Z | 4.96 | 4.96 | 0 | %100 |

## Member Distributed Loads (BLC 50 : Structure Wo (270 Deg))

| | Member Label | Direction | Start Magnitude[lb/ft,... | End Magnitude[lb/ft,F... | Start Location[ft,%] | End Location[ft,%] |
|---|---|---|---|---|---|---|
| 1 | M1 | X | -11.835 | -11.835 | 0 | %100 |
| 2 | M1 | Z | 0 | 0 | 0 | %100 |
| 3 | M2 | X | -15.548 | -15.548 | 0 | %100 |
| 4 | M2 | Z | 0 | 0 | 0 | %100 |
| 5 | M5 | X | -17.753 | -17.753 | 0 | %100 |
| 6 | M5 | Z | 0 | 0 | 0 | %100 |
| 7 | M6 | X | -4.438 | -4.438 | 0 | %100 |
| 8 | M6 | Z | 0 | 0 | 0 | %100 |
| 9 | M7 | X | -4.438 | -4.438 | 0 | %100 |
| 10 | M7 | Z | 0 | 0 | 0 | %100 |
| 11 | M6A | X | 0 | 0 | 0 | %100 |
| 12 | M6A | Z | 0 | 0 | 0 | %100 |
| 13 | M7A | X | 0 | 0 | 0 | %100 |
| 14 | M7A | Z | 0 | 0 | 0 | %100 |
| 15 | MP1A | X | -9.921 | -9.921 | 0 | %100 |
| 16 | MP1A | Z | 0 | 0 | 0 | %100 |
| 17 | M23A | X | -15.664 | -15.664 | 0 | %100 |
| 18 | M23A | Z | 0 | 0 | 0 | %100 |
| 19 | M24 | X | -15.664 | -15.664 | 0 | %100 |
| 20 | M24 | Z | 0 | 0 | 0 | %100 |
| 21 | M39A | X | -15.664 | -15.664 | 0 | %100 |
| 22 | M39A | Z | 0 | 0 | 0 | %100 |
| 23 | M40 | X | -15.664 | -15.664 | 0 | %100 |
| 24 | M40 | Z | 0 | 0 | 0 | %100 |
| 25 | M55 | X | -3.887 | -3.887 | 0 | %100 |
| 26 | M55 | Z | 0 | 0 | 0 | %100 |
| 27 | M56 | X | -3.887 | -3.887 | 0 | %100 |
| 28 | M56 | Z | 0 | 0 | 0 | %100 |

## Member Distributed Loads (BLC 50 : Structure Wo (270 Deg)) (Continued)

| | Member Label | Direction | Start Magnitude[lb/ft,... | End Magnitude[lb/ft,F... | Start Location[ft,%] | End Location[ft,%] |
|---|---|---|---|---|---|---|
| 29 | M60A | X | 0 | 0 | 0 | %100 |
| 30 | M60A | Z | 0 | 0 | 0 | %100 |
| 31 | M61 | X | -25.121 | -25.121 | 0 | %100 |
| 32 | M61 | Z | 0 | 0 | 0 | %100 |
| 33 | M62 | X | -25.121 | -25.121 | 0 | %100 |
| 34 | M62 | Z | 0 | 0 | 0 | %100 |
| 35 | M63 | X | -25.121 | -25.121 | 0 | %100 |
| 36 | M63 | Z | 0 | 0 | 0 | %100 |
| 37 | M64 | X | 0 | 0 | 0 | %100 |
| 38 | M64 | Z | 0 | 0 | 0 | %100 |
| 39 | MP4A | X | -9.921 | -9.921 | 0 | %100 |
| 40 | MP4A | Z | 0 | 0 | 0 | %100 |
| 41 | MP2A | X | -9.921 | -9.921 | 0 | %100 |
| 42 | MP2A | Z | 0 | 0 | 0 | %100 |
| 43 | MP3A | X | -9.921 | -9.921 | 0 | %100 |
| 44 | MP3A | Z | 0 | 0 | 0 | %100 |
| 45 | MPA2 | X | -9.921 | -9.921 | 0 | %100 |
| 46 | MPA2 | Z | 0 | 0 | 0 | %100 |
| 47 | MP5A | X | -9.921 | -9.921 | 0 | %100 |
| 48 | MP5A | Z | 0 | 0 | 0 | %100 |
| 49 | M45 | X | -5.319 | -5.319 | 0 | %100 |
| 50 | M45 | Z | 0 | 0 | 0 | %100 |
| 51 | M46 | X | -5.319 | -5.319 | 0 | %100 |
| 52 | M46 | Z | 0 | 0 | 0 | %100 |
| 53 | MP1C | X | -9.921 | -9.921 | 0 | %100 |
| 54 | MP1C | Z | 0 | 0 | 0 | %100 |
| 55 | M54A | X | -15.664 | -15.664 | 0 | %100 |
| 56 | M54A | Z | 0 | 0 | 0 | %100 |
| 57 | MP2C | X | -9.921 | -9.921 | 0 | %100 |
| 58 | MP2C | Z | 0 | 0 | 0 | %100 |
| 59 | MP3C | X | -9.921 | -9.921 | 0 | %100 |
| 60 | MP3C | Z | 0 | 0 | 0 | %100 |
| 61 | MP5C | X | -9.921 | -9.921 | 0 | %100 |
| 62 | MP5C | Z | 0 | 0 | 0 | %100 |
| 63 | M82 | X | -7.441 | -7.441 | 0 | %100 |
| 64 | M82 | Z | 0 | 0 | 0 | %100 |
| 65 | M85 | X | -15.664 | -15.664 | 0 | %100 |
| 66 | M85 | Z | 0 | 0 | 0 | %100 |
| 67 | MP2B | X | -9.921 | -9.921 | 0 | %100 |
| 68 | MP2B | Z | 0 | 0 | 0 | %100 |
| 69 | MP3B | X | -9.921 | -9.921 | 0 | %100 |
| 70 | MP3B | Z | 0 | 0 | 0 | %100 |
| 71 | MP5B | X | -9.921 | -9.921 | 0 | %100 |
| 72 | MP5B | Z | 0 | 0 | 0 | %100 |
| 73 | M107A | X | -2.959 | -2.959 | 0 | %100 |
| 74 | M107A | Z | 0 | 0 | 0 | %100 |
| 75 | M108A | X | -2.959 | -2.959 | 0 | %100 |
| 76 | M108A | Z | 0 | 0 | 0 | %100 |
| 77 | M105 | X | -3.191 | -3.191 | 0 | %100 |
| 78 | M105 | Z | 0 | 0 | 0 | %100 |
| 79 | M106A | X | -9.413 | -9.413 | 0 | %100 |
| 80 | M106A | Z | 0 | 0 | 0 | %100 |

## Member Distributed Loads (BLC 50 : Structure Wo (270 Deg)) (Continued)

| | Member Label | Direction | Start Magnitude[lb/ft,... | End Magnitude[lb/ft,F... | Start Location[ft,%] | End Location[ft,%] |
|---|---|---|---|---|---|---|
| 81 | M107 | X | -9.413 | -9.413 | 0 | %100 |
| 82 | M107 | Z | 0 | 0 | 0 | %100 |
| 83 | M108 | X | -3.191 | -3.191 | 0 | %100 |
| 84 | M108 | Z | 0 | 0 | 0 | %100 |
| 85 | MP1B | X | -9.921 | -9.921 | 0 | %100 |
| 86 | MP1B | Z | 0 | 0 | 0 | %100 |
| 87 | M102B | X | -7.441 | -7.441 | 0 | %100 |
| 88 | M102B | Z | 0 | 0 | 0 | %100 |
| 89 | MP4C | X | -9.921 | -9.921 | 0 | %100 |
| 90 | MP4C | Z | 0 | 0 | 0 | %100 |
| 91 | MP4B | X | -9.921 | -9.921 | 0 | %100 |
| 92 | MP4B | Z | 0 | 0 | 0 | %100 |
| 93 | MPC2 | X | -9.921 | -9.921 | 0 | %100 |
| 94 | MPC2 | Z | 0 | 0 | 0 | %100 |
| 95 | MPB2 | X | -9.921 | -9.921 | 0 | %100 |
| 96 | MPB2 | Z | 0 | 0 | 0 | %100 |

## Member Distributed Loads (BLC 51 : Structure Wo (300 Deg))

| | Member Label | Direction | Start Magnitude[lb/ft,... | End Magnitude[lb/ft,F... | Start Location[ft,%] | End Location[ft,%] |
|---|---|---|---|---|---|---|
| 1 | M1 | X | -7.687 | -7.687 | 0 | %100 |
| 2 | M1 | Z | -4.438 | -4.438 | 0 | %100 |
| 3 | M2 | X | -10.099 | -10.099 | 0 | %100 |
| 4 | M2 | Z | -5.831 | -5.831 | 0 | %100 |
| 5 | M5 | X | -11.531 | -11.531 | 0 | %100 |
| 6 | M5 | Z | -6.657 | -6.657 | 0 | %100 |
| 7 | M6 | X | -11.531 | -11.531 | 0 | %100 |
| 8 | M6 | Z | -6.657 | -6.657 | 0 | %100 |
| 9 | M7 | X | 0 | 0 | 0 | %100 |
| 10 | M7 | Z | 0 | 0 | 0 | %100 |
| 11 | M6A | X | -4.522 | -4.522 | 0 | %100 |
| 12 | M6A | Z | -2.611 | -2.611 | 0 | %100 |
| 13 | M7A | X | -4.522 | -4.522 | 0 | %100 |
| 14 | M7A | Z | -2.611 | -2.611 | 0 | %100 |
| 15 | MP1A | X | -8.592 | -8.592 | 0 | %100 |
| 16 | MP1A | Z | -4.96 | -4.96 | 0 | %100 |
| 17 | M23A | X | -4.522 | -4.522 | 0 | %100 |
| 18 | M23A | Z | -2.611 | -2.611 | 0 | %100 |
| 19 | M24 | X | -4.522 | -4.522 | 0 | %100 |
| 20 | M24 | Z | -2.611 | -2.611 | 0 | %100 |
| 21 | M39A | X | -18.088 | -18.088 | 0 | %100 |
| 22 | M39A | Z | -10.443 | -10.443 | 0 | %100 |
| 23 | M40 | X | -18.088 | -18.088 | 0 | %100 |
| 24 | M40 | Z | -10.443 | -10.443 | 0 | %100 |
| 25 | M55 | X | -10.099 | -10.099 | 0 | %100 |
| 26 | M55 | Z | -5.831 | -5.831 | 0 | %100 |
| 27 | M56 | X | 0 | 0 | 0 | %100 |
| 28 | M56 | Z | 0 | 0 | 0 | %100 |
| 29 | M60A | X | -2.148 | -2.148 | 0 | %100 |
| 30 | M60A | Z | -1.24 | -1.24 | 0 | %100 |
| 31 | M61 | X | -21.755 | -21.755 | 0 | %100 |
| 32 | M61 | Z | -12.561 | -12.561 | 0 | %100 |

## Member Distributed Loads (BLC 51 : Structure Wo (300 Deg)) (Continued)

| | Member Label | Direction | Start Magnitude[lb/ft,... | End Magnitude[lb/ft,F... | Start Location[ft,%] | End Location[ft,%] |
|---|---|---|---|---|---|---|
| 33 | M62 | X | -21.755 | -21.755 | 0 | %100 |
| 34 | M62 | Z | -12.561 | -12.561 | 0 | %100 |
| 35 | M63 | X | -21.755 | -21.755 | 0 | %100 |
| 36 | M63 | Z | -12.561 | -12.561 | 0 | %100 |
| 37 | M64 | X | -4.522 | -4.522 | 0 | %100 |
| 38 | M64 | Z | -2.611 | -2.611 | 0 | %100 |
| 39 | MP4A | X | -8.592 | -8.592 | 0 | %100 |
| 40 | MP4A | Z | -4.96 | -4.96 | 0 | %100 |
| 41 | MP2A | X | -8.592 | -8.592 | 0 | %100 |
| 42 | MP2A | Z | -4.96 | -4.96 | 0 | %100 |
| 43 | MP3A | X | -8.592 | -8.592 | 0 | %100 |
| 44 | MP3A | Z | -4.96 | -4.96 | 0 | %100 |
| 45 | MPA2 | X | -8.592 | -8.592 | 0 | %100 |
| 46 | MPA2 | Z | -4.96 | -4.96 | 0 | %100 |
| 47 | MP5A | X | -8.592 | -8.592 | 0 | %100 |
| 48 | MP5A | Z | -4.96 | -4.96 | 0 | %100 |
| 49 | M45 | X | -7.584 | -7.584 | 0 | %100 |
| 50 | M45 | Z | -4.379 | -4.379 | 0 | %100 |
| 51 | M46 | X | -2.196 | -2.196 | 0 | %100 |
| 52 | M46 | Z | -1.268 | -1.268 | 0 | %100 |
| 53 | MP1C | X | -8.592 | -8.592 | 0 | %100 |
| 54 | MP1C | Z | -4.96 | -4.96 | 0 | %100 |
| 55 | M54A | X | -4.522 | -4.522 | 0 | %100 |
| 56 | M54A | Z | -2.611 | -2.611 | 0 | %100 |
| 57 | MP2C | X | -8.592 | -8.592 | 0 | %100 |
| 58 | MP2C | Z | -4.96 | -4.96 | 0 | %100 |
| 59 | MP3C | X | -8.592 | -8.592 | 0 | %100 |
| 60 | MP3C | Z | -4.96 | -4.96 | 0 | %100 |
| 61 | MP5C | X | -8.592 | -8.592 | 0 | %100 |
| 62 | MP5C | Z | -4.96 | -4.96 | 0 | %100 |
| 63 | M82 | X | -8.592 | -8.592 | 0 | %100 |
| 64 | M82 | Z | -4.96 | -4.96 | 0 | %100 |
| 65 | M85 | X | -18.088 | -18.088 | 0 | %100 |
| 66 | M85 | Z | -10.443 | -10.443 | 0 | %100 |
| 67 | MP2B | X | -8.592 | -8.592 | 0 | %100 |
| 68 | MP2B | Z | -4.96 | -4.96 | 0 | %100 |
| 69 | MP3B | X | -8.592 | -8.592 | 0 | %100 |
| 70 | MP3B | Z | -4.96 | -4.96 | 0 | %100 |
| 71 | MP5B | X | -8.592 | -8.592 | 0 | %100 |
| 72 | MP5B | Z | -4.96 | -4.96 | 0 | %100 |
| 73 | M107A | X | -7.687 | -7.687 | 0 | %100 |
| 74 | M107A | Z | -4.438 | -4.438 | 0 | %100 |
| 75 | M108A | X | 0 | 0 | 0 | %100 |
| 76 | M108A | Z | 0 | 0 | 0 | %100 |
| 77 | M105 | X | -2.196 | -2.196 | 0 | %100 |
| 78 | M105 | Z | -1.268 | -1.268 | 0 | %100 |
| 79 | M106A | X | -7.584 | -7.584 | 0 | %100 |
| 80 | M106A | Z | -4.379 | -4.379 | 0 | %100 |
| 81 | M107 | X | -5.742 | -5.742 | 0 | %100 |
| 82 | M107 | Z | -3.315 | -3.315 | 0 | %100 |
| 83 | M108 | X | -5.742 | -5.742 | 0 | %100 |
| 84 | M108 | Z | -3.315 | -3.315 | 0 | %100 |

## Member Distributed Loads (BLC 51 : Structure Wo (300 Deg)) (Continued)

| | Member Label | Direction | Start Magnitude[lb/ft,... | End Magnitude[lb/ft,F... | Start Location[ft,%] | End Location[ft,%] |
|---|---|---|---|---|---|---|
| 85 | MP1B | X | -8.592 | -8.592 | 0 | %100 |
| 86 | MP1B | Z | -4.96 | -4.96 | 0 | %100 |
| 87 | M102B | X | -2.148 | -2.148 | 0 | %100 |
| 88 | M102B | Z | -1.24 | -1.24 | 0 | %100 |
| 89 | MP4C | X | -8.592 | -8.592 | 0 | %100 |
| 90 | MP4C | Z | -4.96 | -4.96 | 0 | %100 |
| 91 | MP4B | X | -8.592 | -8.592 | 0 | %100 |
| 92 | MP4B | Z | -4.96 | -4.96 | 0 | %100 |
| 93 | MPC2 | X | -8.592 | -8.592 | 0 | %100 |
| 94 | MPC2 | Z | -4.96 | -4.96 | 0 | %100 |
| 95 | MPB2 | X | -8.592 | -8.592 | 0 | %100 |
| 96 | MPB2 | Z | -4.96 | -4.96 | 0 | %100 |

## Member Distributed Loads (BLC 52 : Structure Wo (330 Deg))

| | Member Label | Direction | Start Magnitude[lb/ft,... | End Magnitude[lb/ft,F... | Start Location[ft,%] | End Location[ft,%] |
|---|---|---|---|---|---|---|
| 1 | M1 | X | -1.479 | -1.479 | 0 | %100 |
| 2 | M1 | Z | -2.562 | -2.562 | 0 | %100 |
| 3 | M2 | X | -1.944 | -1.944 | 0 | %100 |
| 4 | M2 | Z | -3.366 | -3.366 | 0 | %100 |
| 5 | M5 | X | -2.219 | -2.219 | 0 | %100 |
| 6 | M5 | Z | -3.844 | -3.844 | 0 | %100 |
| 7 | M6 | X | -8.877 | -8.877 | 0 | %100 |
| 8 | M6 | Z | -15.375 | -15.375 | 0 | %100 |
| 9 | M7 | X | -2.219 | -2.219 | 0 | %100 |
| 10 | M7 | Z | -3.844 | -3.844 | 0 | %100 |
| 11 | M6A | X | -7.832 | -7.832 | 0 | %100 |
| 12 | M6A | Z | -13.566 | -13.566 | 0 | %100 |
| 13 | M7A | X | -7.832 | -7.832 | 0 | %100 |
| 14 | M7A | Z | -13.566 | -13.566 | 0 | %100 |
| 15 | MP1A | X | -4.96 | -4.96 | 0 | %100 |
| 16 | MP1A | Z | -8.592 | -8.592 | 0 | %100 |
| 17 | M23A | X | 0 | 0 | 0 | %100 |
| 18 | M23A | Z | 0 | 0 | 0 | %100 |
| 19 | M24 | X | 0 | 0 | 0 | %100 |
| 20 | M24 | Z | 0 | 0 | 0 | %100 |
| 21 | M39A | X | -7.832 | -7.832 | 0 | %100 |
| 22 | M39A | Z | -13.566 | -13.566 | 0 | %100 |
| 23 | M40 | X | -7.832 | -7.832 | 0 | %100 |
| 24 | M40 | Z | -13.566 | -13.566 | 0 | %100 |
| 25 | M55 | X | -7.774 | -7.774 | 0 | %100 |
| 26 | M55 | Z | -13.465 | -13.465 | 0 | %100 |
| 27 | M56 | X | -1.944 | -1.944 | 0 | %100 |
| 28 | M56 | Z | -3.366 | -3.366 | 0 | %100 |
| 29 | M60A | X | -3.72 | -3.72 | 0 | %100 |
| 30 | M60A | Z | -6.444 | -6.444 | 0 | %100 |
| 31 | M61 | X | -12.561 | -12.561 | 0 | %100 |
| 32 | M61 | Z | -21.755 | -21.755 | 0 | %100 |
| 33 | M62 | X | -12.561 | -12.561 | 0 | %100 |
| 34 | M62 | Z | -21.755 | -21.755 | 0 | %100 |
| 35 | M63 | X | -12.561 | -12.561 | 0 | %100 |
| 36 | M63 | Z | -21.755 | -21.755 | 0 | %100 |

## Member Distributed Loads (BLC 52 : Structure Wo (330 Deg)) (Continued)

| | Member Label | Direction | Start Magnitude[lb/ft,... | End Magnitude[lb/ft,F... | Start Location[ft,%] | End Location[ft,%] |
|---|---|---|---|---|---|---|
| 37 | M64 | X | -7.832 | -7.832 | 0 | %100 |
| 38 | M64 | Z | -13.566 | -13.566 | 0 | %100 |
| 39 | MP4A | X | -4.96 | -4.96 | 0 | %100 |
| 40 | MP4A | Z | -8.592 | -8.592 | 0 | %100 |
| 41 | MP2A | X | -4.96 | -4.96 | 0 | %100 |
| 42 | MP2A | Z | -8.592 | -8.592 | 0 | %100 |
| 43 | MP3A | X | -4.96 | -4.96 | 0 | %100 |
| 44 | MP3A | Z | -8.592 | -8.592 | 0 | %100 |
| 45 | MPA2 | X | -4.96 | -4.96 | 0 | %100 |
| 46 | MPA2 | Z | -8.592 | -8.592 | 0 | %100 |
| 47 | MP5A | X | -4.96 | -4.96 | 0 | %100 |
| 48 | MP5A | Z | -8.592 | -8.592 | 0 | %100 |
| 49 | M45 | X | -4.707 | -4.707 | 0 | %100 |
| 50 | M45 | Z | -8.152 | -8.152 | 0 | %100 |
| 51 | M46 | X | -1.596 | -1.596 | 0 | %100 |
| 52 | M46 | Z | -2.764 | -2.764 | 0 | %100 |
| 53 | MP1C | X | -4.96 | -4.96 | 0 | %100 |
| 54 | MP1C | Z | -8.592 | -8.592 | 0 | %100 |
| 55 | M54A | X | 0 | 0 | 0 | %100 |
| 56 | M54A | Z | 0 | 0 | 0 | %100 |
| 57 | MP2C | X | -4.96 | -4.96 | 0 | %100 |
| 58 | MP2C | Z | -8.592 | -8.592 | 0 | %100 |
| 59 | MP3C | X | -4.96 | -4.96 | 0 | %100 |
| 60 | MP3C | Z | -8.592 | -8.592 | 0 | %100 |
| 61 | MP5C | X | -4.96 | -4.96 | 0 | %100 |
| 62 | MP5C | Z | -8.592 | -8.592 | 0 | %100 |
| 63 | M82 | X | -3.72 | -3.72 | 0 | %100 |
| 64 | M82 | Z | -6.444 | -6.444 | 0 | %100 |
| 65 | M85 | X | -7.832 | -7.832 | 0 | %100 |
| 66 | M85 | Z | -13.566 | -13.566 | 0 | %100 |
| 67 | MP2B | X | -4.96 | -4.96 | 0 | %100 |
| 68 | MP2B | Z | -8.592 | -8.592 | 0 | %100 |
| 69 | MP3B | X | -4.96 | -4.96 | 0 | %100 |
| 70 | MP3B | Z | -8.592 | -8.592 | 0 | %100 |
| 71 | MP5B | X | -4.96 | -4.96 | 0 | %100 |
| 72 | MP5B | Z | -8.592 | -8.592 | 0 | %100 |
| 73 | M107A | X | -5.918 | -5.918 | 0 | %100 |
| 74 | M107A | Z | -10.25 | -10.25 | 0 | %100 |
| 75 | M108A | X | -1.479 | -1.479 | 0 | %100 |
| 76 | M108A | Z | -2.562 | -2.562 | 0 | %100 |
| 77 | M105 | X | -2.659 | -2.659 | 0 | %100 |
| 78 | M105 | Z | -4.606 | -4.606 | 0 | %100 |
| 79 | M106A | X | -2.659 | -2.659 | 0 | %100 |
| 80 | M106A | Z | -4.606 | -4.606 | 0 | %100 |
| 81 | M107 | X | -1.596 | -1.596 | 0 | %100 |
| 82 | M107 | Z | -2.764 | -2.764 | 0 | %100 |
| 83 | M108 | X | -4.707 | -4.707 | 0 | %100 |
| 84 | M108 | Z | -8.152 | -8.152 | 0 | %100 |
| 85 | MP1B | X | -4.96 | -4.96 | 0 | %100 |
| 86 | MP1B | Z | -8.592 | -8.592 | 0 | %100 |
| 87 | M102B | X | 0 | 0 | 0 | %100 |
| 88 | M102B | Z | 0 | 0 | 0 | %100 |

## Member Distributed Loads (BLC 52 : Structure Wo (330 Deg)) (Continued)

| | Member Label | Direction | Start Magnitude[lb/ft,... | End Magnitude[lb/ft,F... | Start Location[ft,%] | End Location[ft,%] |
|---|---|---|---|---|---|---|
| 89 | MP4C | X | -4.96 | -4.96 | 0 | %100 |
| 90 | MP4C | Z | -8.592 | -8.592 | 0 | %100 |
| 91 | MP4B | X | -4.96 | -4.96 | 0 | %100 |
| 92 | MP4B | Z | -8.592 | -8.592 | 0 | %100 |
| 93 | MPC2 | X | -4.96 | -4.96 | 0 | %100 |
| 94 | MPC2 | Z | -8.592 | -8.592 | 0 | %100 |
| 95 | MPB2 | X | -4.96 | -4.96 | 0 | %100 |
| 96 | MPB2 | Z | -8.592 | -8.592 | 0 | %100 |

## Member Distributed Loads (BLC 53 : Structure Wi (0 Deg))

| | Member Label | Direction | Start Magnitude[lb/ft,... | End Magnitude[lb/ft,F... | Start Location[ft,%] | End Location[ft,%] |
|---|---|---|---|---|---|---|
| 1 | M1 | X | 0 | 0 | 0 | %100 |
| 2 | M1 | Z | 0 | 0 | 0 | %100 |
| 3 | M2 | X | 0 | 0 | 0 | %100 |
| 4 | M2 | Z | 0 | 0 | 0 | %100 |
| 5 | M5 | X | 0 | 0 | 0 | %100 |
| 6 | M5 | Z | 0 | 0 | 0 | %100 |
| 7 | M6 | X | 0 | 0 | 0 | %100 |
| 8 | M6 | Z | -3.472 | -3.472 | 0 | %100 |
| 9 | M7 | X | 0 | 0 | 0 | %100 |
| 10 | M7 | Z | -3.472 | -3.472 | 0 | %100 |
| 11 | M6A | X | 0 | 0 | 0 | %100 |
| 12 | M6A | Z | -5.308 | -5.308 | 0 | %100 |
| 13 | M7A | X | 0 | 0 | 0 | %100 |
| 14 | M7A | Z | -5.308 | -5.308 | 0 | %100 |
| 15 | MP1A | X | 0 | 0 | 0 | %100 |
| 16 | MP1A | Z | -3.404 | -3.404 | 0 | %100 |
| 17 | M23A | X | 0 | 0 | 0 | %100 |
| 18 | M23A | Z | -1.327 | -1.327 | 0 | %100 |
| 19 | M24 | X | 0 | 0 | 0 | %100 |
| 20 | M24 | Z | -1.327 | -1.327 | 0 | %100 |
| 21 | M39A | X | 0 | 0 | 0 | %100 |
| 22 | M39A | Z | -1.327 | -1.327 | 0 | %100 |
| 23 | M40 | X | 0 | 0 | 0 | %100 |
| 24 | M40 | Z | -1.327 | -1.327 | 0 | %100 |
| 25 | M55 | X | 0 | 0 | 0 | %100 |
| 26 | M55 | Z | -2.944 | -2.944 | 0 | %100 |
| 27 | M56 | X | 0 | 0 | 0 | %100 |
| 28 | M56 | Z | -2.944 | -2.944 | 0 | %100 |
| 29 | M60A | X | 0 | 0 | 0 | %100 |
| 30 | M60A | Z | -3.404 | -3.404 | 0 | %100 |
| 31 | M61 | X | 0 | 0 | 0 | %100 |
| 32 | M61 | Z | -5.822 | -5.822 | 0 | %100 |
| 33 | M62 | X | 0 | 0 | 0 | %100 |
| 34 | M62 | Z | -5.822 | -5.822 | 0 | %100 |
| 35 | M63 | X | 0 | 0 | 0 | %100 |
| 36 | M63 | Z | -5.822 | -5.822 | 0 | %100 |
| 37 | M64 | X | 0 | 0 | 0 | %100 |
| 38 | M64 | Z | -5.308 | -5.308 | 0 | %100 |
| 39 | MP4A | X | 0 | 0 | 0 | %100 |
| 40 | MP4A | Z | -3.404 | -3.404 | 0 | %100 |

## Member Distributed Loads (BLC 53 : Structure Wi (0 Deg)) (Continued)

| | Member Label | Direction | Start Magnitude[lb/ft,... | End Magnitude[lb/ft,F... | Start Location[ft,%] | End Location[ft,%] |
|---|---|---|---|---|---|---|
| 41 | MP2A | X | 0 | 0 | 0 | %100 |
| 42 | MP2A | Z | -3.404 | -3.404 | 0 | %100 |
| 43 | MP3A | X | 0 | 0 | 0 | %100 |
| 44 | MP3A | Z | -3.404 | -3.404 | 0 | %100 |
| 45 | MPA2 | X | 0 | 0 | 0 | %100 |
| 46 | MPA2 | Z | -3.404 | -3.404 | 0 | %100 |
| 47 | MP5A | X | 0 | 0 | 0 | %100 |
| 48 | MP5A | Z | -3.404 | -3.404 | 0 | %100 |
| 49 | M45 | X | 0 | 0 | 0 | %100 |
| 50 | M45 | Z | -2.287 | -2.287 | 0 | %100 |
| 51 | M46 | X | 0 | 0 | 0 | %100 |
| 52 | M46 | Z | -2.287 | -2.287 | 0 | %100 |
| 53 | MP1C | X | 0 | 0 | 0 | %100 |
| 54 | MP1C | Z | -3.404 | -3.404 | 0 | %100 |
| 55 | M54A | X | 0 | 0 | 0 | %100 |
| 56 | M54A | Z | -1.327 | -1.327 | 0 | %100 |
| 57 | MP2C | X | 0 | 0 | 0 | %100 |
| 58 | MP2C | Z | -3.404 | -3.404 | 0 | %100 |
| 59 | MP3C | X | 0 | 0 | 0 | %100 |
| 60 | MP3C | Z | -3.404 | -3.404 | 0 | %100 |
| 61 | MP5C | X | 0 | 0 | 0 | %100 |
| 62 | MP5C | Z | -3.404 | -3.404 | 0 | %100 |
| 63 | M82 | X | 0 | 0 | 0 | %100 |
| 64 | M82 | Z | -.851 | -.851 | 0 | %100 |
| 65 | M85 | X | 0 | 0 | 0 | %100 |
| 66 | M85 | Z | -1.327 | -1.327 | 0 | %100 |
| 67 | MP2B | X | 0 | 0 | 0 | %100 |
| 68 | MP2B | Z | -3.404 | -3.404 | 0 | %100 |
| 69 | MP3B | X | 0 | 0 | 0 | %100 |
| 70 | MP3B | Z | -3.404 | -3.404 | 0 | %100 |
| 71 | MP5B | X | 0 | 0 | 0 | %100 |
| 72 | MP5B | Z | -3.404 | -3.404 | 0 | %100 |
| 73 | M107A | X | 0 | 0 | 0 | %100 |
| 74 | M107A | Z | -2.289 | -2.289 | 0 | %100 |
| 75 | M108A | X | 0 | 0 | 0 | %100 |
| 76 | M108A | Z | -2.289 | -2.289 | 0 | %100 |
| 77 | M105 | X | 0 | 0 | 0 | %100 |
| 78 | M105 | Z | -3.021 | -3.021 | 0 | %100 |
| 79 | M106A | X | 0 | 0 | 0 | %100 |
| 80 | M106A | Z | -.875 | -.875 | 0 | %100 |
| 81 | M107 | X | 0 | 0 | 0 | %100 |
| 82 | M107 | Z | -.875 | -.875 | 0 | %100 |
| 83 | M108 | X | 0 | 0 | 0 | %100 |
| 84 | M108 | Z | -3.021 | -3.021 | 0 | %100 |
| 85 | MP1B | X | 0 | 0 | 0 | %100 |
| 86 | MP1B | Z | -3.404 | -3.404 | 0 | %100 |
| 87 | M102B | X | 0 | 0 | 0 | %100 |
| 88 | M102B | Z | -.851 | -.851 | 0 | %100 |
| 89 | MP4C | X | 0 | 0 | 0 | %100 |
| 90 | MP4C | Z | -3.404 | -3.404 | 0 | %100 |
| 91 | MP4B | X | 0 | 0 | 0 | %100 |
| 92 | MP4B | Z | -3.404 | -3.404 | 0 | %100 |

## Member Distributed Loads (BLC 53 : Structure Wi (0 Deg)) (Continued)

| | Member Label | Direction | Start Magnitude[lb/ft,... | End Magnitude[lb/ft,F... | Start Location[ft,%] | End Location[ft,%] |
|---|---|---|---|---|---|---|
| 93 | MPC2 | X | 0 | 0 | 0 | %100 |
| 94 | MPC2 | Z | -3.404 | -3.404 | 0 | %100 |
| 95 | MPB2 | X | 0 | 0 | 0 | %100 |
| 96 | MPB2 | Z | -3.404 | -3.404 | 0 | %100 |

## Member Distributed Loads (BLC 54 : Structure Wi (30 Deg))

| | Member Label | Direction | Start Magnitude[lb/ft,... | End Magnitude[lb/ft,F... | Start Location[ft,%] | End Location[ft,%] |
|---|---|---|---|---|---|---|
| 1 | M1 | X | .381 | .381 | 0 | %100 |
| 2 | M1 | Z | -.661 | -.661 | 0 | %100 |
| 3 | M2 | X | .491 | .491 | 0 | %100 |
| 4 | M2 | Z | -.85 | -.85 | 0 | %100 |
| 5 | M5 | X | .579 | .579 | 0 | %100 |
| 6 | M5 | Z | -1.002 | -1.002 | 0 | %100 |
| 7 | M6 | X | .579 | .579 | 0 | %100 |
| 8 | M6 | Z | -1.002 | -1.002 | 0 | %100 |
| 9 | M7 | X | 2.315 | 2.315 | 0 | %100 |
| 10 | M7 | Z | -4.01 | -4.01 | 0 | %100 |
| 11 | M6A | X | 1.99 | 1.99 | 0 | %100 |
| 12 | M6A | Z | -3.448 | -3.448 | 0 | %100 |
| 13 | M7A | X | 1.99 | 1.99 | 0 | %100 |
| 14 | M7A | Z | -3.448 | -3.448 | 0 | %100 |
| 15 | MP1A | X | 1.702 | 1.702 | 0 | %100 |
| 16 | MP1A | Z | -2.948 | -2.948 | 0 | %100 |
| 17 | M23A | X | 1.99 | 1.99 | 0 | %100 |
| 18 | M23A | Z | -3.448 | -3.448 | 0 | %100 |
| 19 | M24 | X | 1.99 | 1.99 | 0 | %100 |
| 20 | M24 | Z | -3.448 | -3.448 | 0 | %100 |
| 21 | M39A | X | 0 | 0 | 0 | %100 |
| 22 | M39A | Z | 0 | 0 | 0 | %100 |
| 23 | M40 | X | 0 | 0 | 0 | %100 |
| 24 | M40 | Z | 0 | 0 | 0 | %100 |
| 25 | M55 | X | .491 | .491 | 0 | %100 |
| 26 | M55 | Z | -.85 | -.85 | 0 | %100 |
| 27 | M56 | X | 1.962 | 1.962 | 0 | %100 |
| 28 | M56 | Z | -3.399 | -3.399 | 0 | %100 |
| 29 | M60A | X | 1.277 | 1.277 | 0 | %100 |
| 30 | M60A | Z | -2.211 | -2.211 | 0 | %100 |
| 31 | M61 | X | 2.911 | 2.911 | 0 | %100 |
| 32 | M61 | Z | -5.042 | -5.042 | 0 | %100 |
| 33 | M62 | X | 2.911 | 2.911 | 0 | %100 |
| 34 | M62 | Z | -5.042 | -5.042 | 0 | %100 |
| 35 | M63 | X | 2.911 | 2.911 | 0 | %100 |
| 36 | M63 | Z | -5.042 | -5.042 | 0 | %100 |
| 37 | M64 | X | 1.99 | 1.99 | 0 | %100 |
| 38 | M64 | Z | -3.448 | -3.448 | 0 | %100 |
| 39 | MP4A | X | 1.702 | 1.702 | 0 | %100 |
| 40 | MP4A | Z | -2.948 | -2.948 | 0 | %100 |
| 41 | MP2A | X | 1.702 | 1.702 | 0 | %100 |
| 42 | MP2A | Z | -2.948 | -2.948 | 0 | %100 |
| 43 | MP3A | X | 1.702 | 1.702 | 0 | %100 |
| 44 | MP3A | Z | -2.948 | -2.948 | 0 | %100 |

## Member Distributed Loads (BLC 54 : Structure Wi (30 Deg)) (Continued)

| | Member Label | Direction | Start Magnitude[lb/ft,... | End Magnitude[lb/ft,F... | Start Location[ft,%] | End Location[ft,%] |
|---|---|---|---|---|---|---|
| 45 | MPA2 | X | 1.702 | 1.702 | 0 | %100 |
| 46 | MPA2 | Z | -2.948 | -2.948 | 0 | %100 |
| 47 | MP5A | X | 1.702 | 1.702 | 0 | %100 |
| 48 | MP5A | Z | -2.948 | -2.948 | 0 | %100 |
| 49 | M45 | X | .55 | .55 | 0 | %100 |
| 50 | M45 | Z | -.953 | -.953 | 0 | %100 |
| 51 | M46 | X | 1.624 | 1.624 | 0 | %100 |
| 52 | M46 | Z | -2.812 | -2.812 | 0 | %100 |
| 53 | MP1C | X | 1.702 | 1.702 | 0 | %100 |
| 54 | MP1C | Z | -2.948 | -2.948 | 0 | %100 |
| 55 | M54A | X | 1.99 | 1.99 | 0 | %100 |
| 56 | M54A | Z | -3.448 | -3.448 | 0 | %100 |
| 57 | MP2C | X | 1.702 | 1.702 | 0 | %100 |
| 58 | MP2C | Z | -2.948 | -2.948 | 0 | %100 |
| 59 | MP3C | X | 1.702 | 1.702 | 0 | %100 |
| 60 | MP3C | Z | -2.948 | -2.948 | 0 | %100 |
| 61 | MP5C | X | 1.702 | 1.702 | 0 | %100 |
| 62 | MP5C | Z | -2.948 | -2.948 | 0 | %100 |
| 63 | M82 | X | 0 | 0 | 0 | %100 |
| 64 | M82 | Z | 0 | 0 | 0 | %100 |
| 65 | M85 | X | 0 | 0 | 0 | %100 |
| 66 | M85 | Z | 0 | 0 | 0 | %100 |
| 67 | MP2B | X | 1.702 | 1.702 | 0 | %100 |
| 68 | MP2B | Z | -2.948 | -2.948 | 0 | %100 |
| 69 | MP3B | X | 1.702 | 1.702 | 0 | %100 |
| 70 | MP3B | Z | -2.948 | -2.948 | 0 | %100 |
| 71 | MP5B | X | 1.702 | 1.702 | 0 | %100 |
| 72 | MP5B | Z | -2.948 | -2.948 | 0 | %100 |
| 73 | M107A | X | .381 | .381 | 0 | %100 |
| 74 | M107A | Z | -.661 | -.661 | 0 | %100 |
| 75 | M108A | X | 1.526 | 1.526 | 0 | %100 |
| 76 | M108A | Z | -2.643 | -2.643 | 0 | %100 |
| 77 | M105 | X | 1.624 | 1.624 | 0 | %100 |
| 78 | M105 | Z | -2.812 | -2.812 | 0 | %100 |
| 79 | M106A | X | .55 | .55 | 0 | %100 |
| 80 | M106A | Z | -.953 | -.953 | 0 | %100 |
| 81 | M107 | X | .917 | .917 | 0 | %100 |
| 82 | M107 | Z | -1.589 | -1.589 | 0 | %100 |
| 83 | M108 | X | .917 | .917 | 0 | %100 |
| 84 | M108 | Z | -1.589 | -1.589 | 0 | %100 |
| 85 | MP1B | X | 1.702 | 1.702 | 0 | %100 |
| 86 | MP1B | Z | -2.948 | -2.948 | 0 | %100 |
| 87 | M102B | X | 1.277 | 1.277 | 0 | %100 |
| 88 | M102B | Z | -2.211 | -2.211 | 0 | %100 |
| 89 | MP4C | X | 1.702 | 1.702 | 0 | %100 |
| 90 | MP4C | Z | -2.948 | -2.948 | 0 | %100 |
| 91 | MP4B | X | 1.702 | 1.702 | 0 | %100 |
| 92 | MP4B | Z | -2.948 | -2.948 | 0 | %100 |
| 93 | MPC2 | X | 1.702 | 1.702 | 0 | %100 |
| 94 | MPC2 | Z | -2.948 | -2.948 | 0 | %100 |
| 95 | MPB2 | X | 1.702 | 1.702 | 0 | %100 |
| 96 | MPB2 | Z | -2.948 | -2.948 | 0 | %100 |

## Member Distributed Loads (BLC 55 : Structure Wi (60 Deg))

| | Member Label | Direction | Start Magnitude[lb/ft,... | End Magnitude[lb/ft,F... | Start Location[ft,%] | End Location[ft,%] |
|---|---|---|---|---|---|---|
| 1 | M1 | X | 1.982 | 1.982 | 0 | %100 |
| 2 | M1 | Z | -1.144 | -1.144 | 0 | %100 |
| 3 | M2 | X | 2.549 | 2.549 | 0 | %100 |
| 4 | M2 | Z | -1.472 | -1.472 | 0 | %100 |
| 5 | M5 | X | 3.007 | 3.007 | 0 | %100 |
| 6 | M5 | Z | -1.736 | -1.736 | 0 | %100 |
| 7 | M6 | X | 0 | 0 | 0 | %100 |
| 8 | M6 | Z | 0 | 0 | 0 | %100 |
| 9 | M7 | X | 3.007 | 3.007 | 0 | %100 |
| 10 | M7 | Z | -1.736 | -1.736 | 0 | %100 |
| 11 | M6A | X | 1.149 | 1.149 | 0 | %100 |
| 12 | M6A | Z | -.663 | -.663 | 0 | %100 |
| 13 | M7A | X | 1.149 | 1.149 | 0 | %100 |
| 14 | M7A | Z | -.663 | -.663 | 0 | %100 |
| 15 | MP1A | X | 2.948 | 2.948 | 0 | %100 |
| 16 | MP1A | Z | -1.702 | -1.702 | 0 | %100 |
| 17 | M23A | X | 4.597 | 4.597 | 0 | %100 |
| 18 | M23A | Z | -2.654 | -2.654 | 0 | %100 |
| 19 | M24 | X | 4.597 | 4.597 | 0 | %100 |
| 20 | M24 | Z | -2.654 | -2.654 | 0 | %100 |
| 21 | M39A | X | 1.149 | 1.149 | 0 | %100 |
| 22 | M39A | Z | -.663 | -.663 | 0 | %100 |
| 23 | M40 | X | 1.149 | 1.149 | 0 | %100 |
| 24 | M40 | Z | -.663 | -.663 | 0 | %100 |
| 25 | M55 | X | 0 | 0 | 0 | %100 |
| 26 | M55 | Z | 0 | 0 | 0 | %100 |
| 27 | M56 | X | 2.549 | 2.549 | 0 | %100 |
| 28 | M56 | Z | -1.472 | -1.472 | 0 | %100 |
| 29 | M60A | X | .737 | .737 | 0 | %100 |
| 30 | M60A | Z | -.426 | -.426 | 0 | %100 |
| 31 | M61 | X | 5.042 | 5.042 | 0 | %100 |
| 32 | M61 | Z | -2.911 | -2.911 | 0 | %100 |
| 33 | M62 | X | 5.042 | 5.042 | 0 | %100 |
| 34 | M62 | Z | -2.911 | -2.911 | 0 | %100 |
| 35 | M63 | X | 5.042 | 5.042 | 0 | %100 |
| 36 | M63 | Z | -2.911 | -2.911 | 0 | %100 |
| 37 | M64 | X | 1.149 | 1.149 | 0 | %100 |
| 38 | M64 | Z | -.663 | -.663 | 0 | %100 |
| 39 | MP4A | X | 2.948 | 2.948 | 0 | %100 |
| 40 | MP4A | Z | -1.702 | -1.702 | 0 | %100 |
| 41 | MP2A | X | 2.948 | 2.948 | 0 | %100 |
| 42 | MP2A | Z | -1.702 | -1.702 | 0 | %100 |
| 43 | MP3A | X | 2.948 | 2.948 | 0 | %100 |
| 44 | MP3A | Z | -1.702 | -1.702 | 0 | %100 |
| 45 | MPA2 | X | 2.948 | 2.948 | 0 | %100 |
| 46 | MPA2 | Z | -1.702 | -1.702 | 0 | %100 |
| 47 | MP5A | X | 2.948 | 2.948 | 0 | %100 |
| 48 | MP5A | Z | -1.702 | -1.702 | 0 | %100 |
| 49 | M45 | X | .757 | .757 | 0 | %100 |
| 50 | M45 | Z | -.437 | -.437 | 0 | %100 |
| 51 | M46 | X | 2.616 | 2.616 | 0 | %100 |
| 52 | M46 | Z | -1.511 | -1.511 | 0 | %100 |

## Member Distributed Loads (BLC 55 : Structure Wi (60 Deg)) (Continued)

| | Member Label | Direction | Start Magnitude[lb/ft,... | End Magnitude[lb/ft,F... | Start Location[ft,%] | End Location[ft,%] |
|---|---|---|---|---|---|---|
| 53 | MP1C | X | 2.948 | 2.948 | 0 | %100 |
| 54 | MP1C | Z | -1.702 | -1.702 | 0 | %100 |
| 55 | M54A | X | 4.597 | 4.597 | 0 | %100 |
| 56 | M54A | Z | -2.654 | -2.654 | 0 | %100 |
| 57 | MP2C | X | 2.948 | 2.948 | 0 | %100 |
| 58 | MP2C | Z | -1.702 | -1.702 | 0 | %100 |
| 59 | MP3C | X | 2.948 | 2.948 | 0 | %100 |
| 60 | MP3C | Z | -1.702 | -1.702 | 0 | %100 |
| 61 | MP5C | X | 2.948 | 2.948 | 0 | %100 |
| 62 | MP5C | Z | -1.702 | -1.702 | 0 | %100 |
| 63 | M82 | X | .737 | .737 | 0 | %100 |
| 64 | M82 | Z | -.426 | -.426 | 0 | %100 |
| 65 | M85 | X | 1.149 | 1.149 | 0 | %100 |
| 66 | M85 | Z | -.663 | -.663 | 0 | %100 |
| 67 | MP2B | X | 2.948 | 2.948 | 0 | %100 |
| 68 | MP2B | Z | -1.702 | -1.702 | 0 | %100 |
| 69 | MP3B | X | 2.948 | 2.948 | 0 | %100 |
| 70 | MP3B | Z | -1.702 | -1.702 | 0 | %100 |
| 71 | MP5B | X | 2.948 | 2.948 | 0 | %100 |
| 72 | MP5B | Z | -1.702 | -1.702 | 0 | %100 |
| 73 | M107A | X | 0 | 0 | 0 | %100 |
| 74 | M107A | Z | 0 | 0 | 0 | %100 |
| 75 | M108A | X | 1.982 | 1.982 | 0 | %100 |
| 76 | M108A | Z | -1.144 | -1.144 | 0 | %100 |
| 77 | M105 | X | 1.981 | 1.981 | 0 | %100 |
| 78 | M105 | Z | -1.144 | -1.144 | 0 | %100 |
| 79 | M106A | X | 1.981 | 1.981 | 0 | %100 |
| 80 | M106A | Z | -1.144 | -1.144 | 0 | %100 |
| 81 | M107 | X | 2.616 | 2.616 | 0 | %100 |
| 82 | M107 | Z | -1.511 | -1.511 | 0 | %100 |
| 83 | M108 | X | .757 | .757 | 0 | %100 |
| 84 | M108 | Z | -.437 | -.437 | 0 | %100 |
| 85 | MP1B | X | 2.948 | 2.948 | 0 | %100 |
| 86 | MP1B | Z | -1.702 | -1.702 | 0 | %100 |
| 87 | M102B | X | 2.948 | 2.948 | 0 | %100 |
| 88 | M102B | Z | -1.702 | -1.702 | 0 | %100 |
| 89 | MP4C | X | 2.948 | 2.948 | 0 | %100 |
| 90 | MP4C | Z | -1.702 | -1.702 | 0 | %100 |
| 91 | MP4B | X | 2.948 | 2.948 | 0 | %100 |
| 92 | MP4B | Z | -1.702 | -1.702 | 0 | %100 |
| 93 | MPC2 | X | 2.948 | 2.948 | 0 | %100 |
| 94 | MPC2 | Z | -1.702 | -1.702 | 0 | %100 |
| 95 | MPB2 | X | 2.948 | 2.948 | 0 | %100 |
| 96 | MPB2 | Z | -1.702 | -1.702 | 0 | %100 |

## Member Distributed Loads (BLC 56 : Structure Wi (90 Deg))

| | Member Label | Direction | Start Magnitude[lb/ft,... | End Magnitude[lb/ft,F... | Start Location[ft,%] | End Location[ft,%] |
|---|---|---|---|---|---|---|
| 1 | M1 | X | 3.052 | 3.052 | 0 | %100 |
| 2 | M1 | Z | 0 | 0 | 0 | %100 |
| 3 | M2 | X | 3.925 | 3.925 | 0 | %100 |
| 4 | M2 | Z | 0 | 0 | 0 | %100 |

## Member Distributed Loads (BLC 56 : Structure Wi (90 Deg)) (Continued)

| | Member Label | Direction | Start Magnitude[lb/ft,... | End Magnitude[lb/ft,F... | Start Location[ft,%] | End Location[ft,%] |
|---|---|---|---|---|---|---|
| 5 | M5 | X | 4.63 | 4.63 | 0 | %100 |
| 6 | M5 | Z | 0 | 0 | 0 | %100 |
| 7 | M6 | X | 1.157 | 1.157 | 0 | %100 |
| 8 | M6 | Z | 0 | 0 | 0 | %100 |
| 9 | M7 | X | 1.157 | 1.157 | 0 | %100 |
| 10 | M7 | Z | 0 | 0 | 0 | %100 |
| 11 | M6A | X | 0 | 0 | 0 | %100 |
| 12 | M6A | Z | 0 | 0 | 0 | %100 |
| 13 | M7A | X | 0 | 0 | 0 | %100 |
| 14 | M7A | Z | 0 | 0 | 0 | %100 |
| 15 | MP1A | X | 3.404 | 3.404 | 0 | %100 |
| 16 | MP1A | Z | 0 | 0 | 0 | %100 |
| 17 | M23A | X | 3.981 | 3.981 | 0 | %100 |
| 18 | M23A | Z | 0 | 0 | 0 | %100 |
| 19 | M24 | X | 3.981 | 3.981 | 0 | %100 |
| 20 | M24 | Z | 0 | 0 | 0 | %100 |
| 21 | M39A | X | 3.981 | 3.981 | 0 | %100 |
| 22 | M39A | Z | 0 | 0 | 0 | %100 |
| 23 | M40 | X | 3.981 | 3.981 | 0 | %100 |
| 24 | M40 | Z | 0 | 0 | 0 | %100 |
| 25 | M55 | X | .981 | .981 | 0 | %100 |
| 26 | M55 | Z | 0 | 0 | 0 | %100 |
| 27 | M56 | X | .981 | .981 | 0 | %100 |
| 28 | M56 | Z | 0 | 0 | 0 | %100 |
| 29 | M60A | X | 0 | 0 | 0 | %100 |
| 30 | M60A | Z | 0 | 0 | 0 | %100 |
| 31 | M61 | X | 5.822 | 5.822 | 0 | %100 |
| 32 | M61 | Z | 0 | 0 | 0 | %100 |
| 33 | M62 | X | 5.822 | 5.822 | 0 | %100 |
| 34 | M62 | Z | 0 | 0 | 0 | %100 |
| 35 | M63 | X | 5.822 | 5.822 | 0 | %100 |
| 36 | M63 | Z | 0 | 0 | 0 | %100 |
| 37 | M64 | X | 0 | 0 | 0 | %100 |
| 38 | M64 | Z | 0 | 0 | 0 | %100 |
| 39 | MP4A | X | 3.404 | 3.404 | 0 | %100 |
| 40 | MP4A | Z | 0 | 0 | 0 | %100 |
| 41 | MP2A | X | 3.404 | 3.404 | 0 | %100 |
| 42 | MP2A | Z | 0 | 0 | 0 | %100 |
| 43 | MP3A | X | 3.404 | 3.404 | 0 | %100 |
| 44 | MP3A | Z | 0 | 0 | 0 | %100 |
| 45 | MPA2 | X | 3.404 | 3.404 | 0 | %100 |
| 46 | MPA2 | Z | 0 | 0 | 0 | %100 |
| 47 | MP5A | X | 3.404 | 3.404 | 0 | %100 |
| 48 | MP5A | Z | 0 | 0 | 0 | %100 |
| 49 | M45 | X | 1.835 | 1.835 | 0 | %100 |
| 50 | M45 | Z | 0 | 0 | 0 | %100 |
| 51 | M46 | X | 1.835 | 1.835 | 0 | %100 |
| 52 | M46 | Z | 0 | 0 | 0 | %100 |
| 53 | MP1C | X | 3.404 | 3.404 | 0 | %100 |
| 54 | MP1C | Z | 0 | 0 | 0 | %100 |
| 55 | M54A | X | 3.981 | 3.981 | 0 | %100 |
| 56 | M54A | Z | 0 | 0 | 0 | %100 |

## Member Distributed Loads (BLC 56 : Structure Wi (90 Deg)) (Continued)

| | Member Label | Direction | Start Magnitude[lb/ft,... | End Magnitude[lb/ft,F... | Start Location[ft,%] | End Location[ft,%] |
|---|---|---|---|---|---|---|
| 57 | MP2C | X | 3.404 | 3.404 | 0 | %100 |
| 58 | MP2C | Z | 0 | 0 | 0 | %100 |
| 59 | MP3C | X | 3.404 | 3.404 | 0 | %100 |
| 60 | MP3C | Z | 0 | 0 | 0 | %100 |
| 61 | MP5C | X | 3.404 | 3.404 | 0 | %100 |
| 62 | MP5C | Z | 0 | 0 | 0 | %100 |
| 63 | M82 | X | 2.553 | 2.553 | 0 | %100 |
| 64 | M82 | Z | 0 | 0 | 0 | %100 |
| 65 | M85 | X | 3.981 | 3.981 | 0 | %100 |
| 66 | M85 | Z | 0 | 0 | 0 | %100 |
| 67 | MP2B | X | 3.404 | 3.404 | 0 | %100 |
| 68 | MP2B | Z | 0 | 0 | 0 | %100 |
| 69 | MP3B | X | 3.404 | 3.404 | 0 | %100 |
| 70 | MP3B | Z | 0 | 0 | 0 | %100 |
| 71 | MP5B | X | 3.404 | 3.404 | 0 | %100 |
| 72 | MP5B | Z | 0 | 0 | 0 | %100 |
| 73 | M107A | X | .763 | .763 | 0 | %100 |
| 74 | M107A | Z | 0 | 0 | 0 | %100 |
| 75 | M108A | X | .763 | .763 | 0 | %100 |
| 76 | M108A | Z | 0 | 0 | 0 | %100 |
| 77 | M105 | X | 1.101 | 1.101 | 0 | %100 |
| 78 | M105 | Z | 0 | 0 | 0 | %100 |
| 79 | M106A | X | 3.247 | 3.247 | 0 | %100 |
| 80 | M106A | Z | 0 | 0 | 0 | %100 |
| 81 | M107 | X | 3.247 | 3.247 | 0 | %100 |
| 82 | M107 | Z | 0 | 0 | 0 | %100 |
| 83 | M108 | X | 1.101 | 1.101 | 0 | %100 |
| 84 | M108 | Z | 0 | 0 | 0 | %100 |
| 85 | MP1B | X | 3.404 | 3.404 | 0 | %100 |
| 86 | MP1B | Z | 0 | 0 | 0 | %100 |
| 87 | M102B | X | 2.553 | 2.553 | 0 | %100 |
| 88 | M102B | Z | 0 | 0 | 0 | %100 |
| 89 | MP4C | X | 3.404 | 3.404 | 0 | %100 |
| 90 | MP4C | Z | 0 | 0 | 0 | %100 |
| 91 | MP4B | X | 3.404 | 3.404 | 0 | %100 |
| 92 | MP4B | Z | 0 | 0 | 0 | %100 |
| 93 | MPC2 | X | 3.404 | 3.404 | 0 | %100 |
| 94 | MPC2 | Z | 0 | 0 | 0 | %100 |
| 95 | MPB2 | X | 3.404 | 3.404 | 0 | %100 |
| 96 | MPB2 | Z | 0 | 0 | 0 | %100 |

## Member Distributed Loads (BLC 57 : Structure Wi (120 Deg))

| | Member Label | Direction | Start Magnitude[lb/ft,... | End Magnitude[lb/ft,F... | Start Location[ft,%] | End Location[ft,%] |
|---|---|---|---|---|---|---|
| 1 | M1 | X | 1.982 | 1.982 | 0 | %100 |
| 2 | M1 | Z | 1.144 | 1.144 | 0 | %100 |
| 3 | M2 | X | 2.549 | 2.549 | 0 | %100 |
| 4 | M2 | Z | 1.472 | 1.472 | 0 | %100 |
| 5 | M5 | X | 3.007 | 3.007 | 0 | %100 |
| 6 | M5 | Z | 1.736 | 1.736 | 0 | %100 |
| 7 | M6 | X | 3.007 | 3.007 | 0 | %100 |
| 8 | M6 | Z | 1.736 | 1.736 | 0 | %100 |

## Member Distributed Loads (BLC 57 : Structure Wi (120 Deg)) (Continued)

| | Member Label | Direction | Start Magnitude[lb/ft,... | End Magnitude[lb/ft,F... | Start Location[ft,%] | End Location[ft,%] |
|---|---|---|---|---|---|---|
| 9 | M7 | X | 0 | 0 | 0 | %100 |
| 10 | M7 | Z | 0 | 0 | 0 | %100 |
| 11 | M6A | X | 1.149 | 1.149 | 0 | %100 |
| 12 | M6A | Z | .663 | .663 | 0 | %100 |
| 13 | M7A | X | 1.149 | 1.149 | 0 | %100 |
| 14 | M7A | Z | .663 | .663 | 0 | %100 |
| 15 | MP1A | X | 2.948 | 2.948 | 0 | %100 |
| 16 | MP1A | Z | 1.702 | 1.702 | 0 | %100 |
| 17 | M23A | X | 1.149 | 1.149 | 0 | %100 |
| 18 | M23A | Z | .663 | .663 | 0 | %100 |
| 19 | M24 | X | 1.149 | 1.149 | 0 | %100 |
| 20 | M24 | Z | .663 | .663 | 0 | %100 |
| 21 | M39A | X | 4.597 | 4.597 | 0 | %100 |
| 22 | M39A | Z | 2.654 | 2.654 | 0 | %100 |
| 23 | M40 | X | 4.597 | 4.597 | 0 | %100 |
| 24 | M40 | Z | 2.654 | 2.654 | 0 | %100 |
| 25 | M55 | X | 2.549 | 2.549 | 0 | %100 |
| 26 | M55 | Z | 1.472 | 1.472 | 0 | %100 |
| 27 | M56 | X | 0 | 0 | 0 | %100 |
| 28 | M56 | Z | 0 | 0 | 0 | %100 |
| 29 | M60A | X | .737 | .737 | 0 | %100 |
| 30 | M60A | Z | .426 | .426 | 0 | %100 |
| 31 | M61 | X | 5.042 | 5.042 | 0 | %100 |
| 32 | M61 | Z | 2.911 | 2.911 | 0 | %100 |
| 33 | M62 | X | 5.042 | 5.042 | 0 | %100 |
| 34 | M62 | Z | 2.911 | 2.911 | 0 | %100 |
| 35 | M63 | X | 5.042 | 5.042 | 0 | %100 |
| 36 | M63 | Z | 2.911 | 2.911 | 0 | %100 |
| 37 | M64 | X | 1.149 | 1.149 | 0 | %100 |
| 38 | M64 | Z | .663 | .663 | 0 | %100 |
| 39 | MP4A | X | 2.948 | 2.948 | 0 | %100 |
| 40 | MP4A | Z | 1.702 | 1.702 | 0 | %100 |
| 41 | MP2A | X | 2.948 | 2.948 | 0 | %100 |
| 42 | MP2A | Z | 1.702 | 1.702 | 0 | %100 |
| 43 | MP3A | X | 2.948 | 2.948 | 0 | %100 |
| 44 | MP3A | Z | 1.702 | 1.702 | 0 | %100 |
| 45 | MPA2 | X | 2.948 | 2.948 | 0 | %100 |
| 46 | MPA2 | Z | 1.702 | 1.702 | 0 | %100 |
| 47 | MP5A | X | 2.948 | 2.948 | 0 | %100 |
| 48 | MP5A | Z | 1.702 | 1.702 | 0 | %100 |
| 49 | M45 | X | 2.616 | 2.616 | 0 | %100 |
| 50 | M45 | Z | 1.511 | 1.511 | 0 | %100 |
| 51 | M46 | X | .757 | .757 | 0 | %100 |
| 52 | M46 | Z | .437 | .437 | 0 | %100 |
| 53 | MP1C | X | 2.948 | 2.948 | 0 | %100 |
| 54 | MP1C | Z | 1.702 | 1.702 | 0 | %100 |
| 55 | M54A | X | 1.149 | 1.149 | 0 | %100 |
| 56 | M54A | Z | .663 | .663 | 0 | %100 |
| 57 | MP2C | X | 2.948 | 2.948 | 0 | %100 |
| 58 | MP2C | Z | 1.702 | 1.702 | 0 | %100 |
| 59 | MP3C | X | 2.948 | 2.948 | 0 | %100 |
| 60 | MP3C | Z | 1.702 | 1.702 | 0 | %100 |

## Member Distributed Loads (BLC 57 : Structure Wi (120 Deg)) (Continued)

| | Member Label | Direction | Start Magnitude[lb/ft,... | End Magnitude[lb/ft,F... | Start Location[ft,%] | End Location[ft,%] |
|---|---|---|---|---|---|---|
| 61 | MP5C | X | 2.948 | 2.948 | 0 | %100 |
| 62 | MP5C | Z | 1.702 | 1.702 | 0 | %100 |
| 63 | M82 | X | 2.948 | 2.948 | 0 | %100 |
| 64 | M82 | Z | 1.702 | 1.702 | 0 | %100 |
| 65 | M85 | X | 4.597 | 4.597 | 0 | %100 |
| 66 | M85 | Z | 2.654 | 2.654 | 0 | %100 |
| 67 | MP2B | X | 2.948 | 2.948 | 0 | %100 |
| 68 | MP2B | Z | 1.702 | 1.702 | 0 | %100 |
| 69 | MP3B | X | 2.948 | 2.948 | 0 | %100 |
| 70 | MP3B | Z | 1.702 | 1.702 | 0 | %100 |
| 71 | MP5B | X | 2.948 | 2.948 | 0 | %100 |
| 72 | MP5B | Z | 1.702 | 1.702 | 0 | %100 |
| 73 | M107A | X | 1.982 | 1.982 | 0 | %100 |
| 74 | M107A | Z | 1.144 | 1.144 | 0 | %100 |
| 75 | M108A | X | 0 | 0 | 0 | %100 |
| 76 | M108A | Z | 0 | 0 | 0 | %100 |
| 77 | M105 | X | .757 | .757 | 0 | %100 |
| 78 | M105 | Z | .437 | .437 | 0 | %100 |
| 79 | M106A | X | 2.616 | 2.616 | 0 | %100 |
| 80 | M106A | Z | 1.511 | 1.511 | 0 | %100 |
| 81 | M107 | X | 1.981 | 1.981 | 0 | %100 |
| 82 | M107 | Z | 1.144 | 1.144 | 0 | %100 |
| 83 | M108 | X | 1.981 | 1.981 | 0 | %100 |
| 84 | M108 | Z | 1.144 | 1.144 | 0 | %100 |
| 85 | MP1B | X | 2.948 | 2.948 | 0 | %100 |
| 86 | MP1B | Z | 1.702 | 1.702 | 0 | %100 |
| 87 | M102B | X | .737 | .737 | 0 | %100 |
| 88 | M102B | Z | .426 | .426 | 0 | %100 |
| 89 | MP4C | X | 2.948 | 2.948 | 0 | %100 |
| 90 | MP4C | Z | 1.702 | 1.702 | 0 | %100 |
| 91 | MP4B | X | 2.948 | 2.948 | 0 | %100 |
| 92 | MP4B | Z | 1.702 | 1.702 | 0 | %100 |
| 93 | MPC2 | X | 2.948 | 2.948 | 0 | %100 |
| 94 | MPC2 | Z | 1.702 | 1.702 | 0 | %100 |
| 95 | MPB2 | X | 2.948 | 2.948 | 0 | %100 |
| 96 | MPB2 | Z | 1.702 | 1.702 | 0 | %100 |

## Member Distributed Loads (BLC 58 : Structure Wi (150 Deg))

| | Member Label | Direction | Start Magnitude[lb/ft,... | End Magnitude[lb/ft,F... | Start Location[ft,%] | End Location[ft,%] |
|---|---|---|---|---|---|---|
| 1 | M1 | X | .381 | .381 | 0 | %100 |
| 2 | M1 | Z | .661 | .661 | 0 | %100 |
| 3 | M2 | X | .491 | .491 | 0 | %100 |
| 4 | M2 | Z | .85 | .85 | 0 | %100 |
| 5 | M5 | X | .579 | .579 | 0 | %100 |
| 6 | M5 | Z | 1.002 | 1.002 | 0 | %100 |
| 7 | M6 | X | 2.315 | 2.315 | 0 | %100 |
| 8 | M6 | Z | 4.01 | 4.01 | 0 | %100 |
| 9 | M7 | X | .579 | .579 | 0 | %100 |
| 10 | M7 | Z | 1.002 | 1.002 | 0 | %100 |
| 11 | M6A | X | 1.99 | 1.99 | 0 | %100 |
| 12 | M6A | Z | 3.448 | 3.448 | 0 | %100 |

## Member Distributed Loads (BLC 58 : Structure Wi (150 Deg)) (Continued)

| | Member Label | Direction | Start Magnitude[lb/ft,... | End Magnitude[lb/ft,F... | Start Location[ft,%] | End Location[ft,%] |
|---|---|---|---|---|---|---|
| 13 | M7A | X | 1.99 | 1.99 | 0 | %100 |
| 14 | M7A | Z | 3.448 | 3.448 | 0 | %100 |
| 15 | MP1A | X | 1.702 | 1.702 | 0 | %100 |
| 16 | MP1A | Z | 2.948 | 2.948 | 0 | %100 |
| 17 | M23A | X | 0 | 0 | 0 | %100 |
| 18 | M23A | Z | 0 | 0 | 0 | %100 |
| 19 | M24 | X | 0 | 0 | 0 | %100 |
| 20 | M24 | Z | 0 | 0 | 0 | %100 |
| 21 | M39A | X | 1.99 | 1.99 | 0 | %100 |
| 22 | M39A | Z | 3.448 | 3.448 | 0 | %100 |
| 23 | M40 | X | 1.99 | 1.99 | 0 | %100 |
| 24 | M40 | Z | 3.448 | 3.448 | 0 | %100 |
| 25 | M55 | X | 1.962 | 1.962 | 0 | %100 |
| 26 | M55 | Z | 3.399 | 3.399 | 0 | %100 |
| 27 | M56 | X | .491 | .491 | 0 | %100 |
| 28 | M56 | Z | .85 | .85 | 0 | %100 |
| 29 | M60A | X | 1.277 | 1.277 | 0 | %100 |
| 30 | M60A | Z | 2.211 | 2.211 | 0 | %100 |
| 31 | M61 | X | 2.911 | 2.911 | 0 | %100 |
| 32 | M61 | Z | 5.042 | 5.042 | 0 | %100 |
| 33 | M62 | X | 2.911 | 2.911 | 0 | %100 |
| 34 | M62 | Z | 5.042 | 5.042 | 0 | %100 |
| 35 | M63 | X | 2.911 | 2.911 | 0 | %100 |
| 36 | M63 | Z | 5.042 | 5.042 | 0 | %100 |
| 37 | M64 | X | 1.99 | 1.99 | 0 | %100 |
| 38 | M64 | Z | 3.448 | 3.448 | 0 | %100 |
| 39 | MP4A | X | 1.702 | 1.702 | 0 | %100 |
| 40 | MP4A | Z | 2.948 | 2.948 | 0 | %100 |
| 41 | MP2A | X | 1.702 | 1.702 | 0 | %100 |
| 42 | MP2A | Z | 2.948 | 2.948 | 0 | %100 |
| 43 | MP3A | X | 1.702 | 1.702 | 0 | %100 |
| 44 | MP3A | Z | 2.948 | 2.948 | 0 | %100 |
| 45 | MPA2 | X | 1.702 | 1.702 | 0 | %100 |
| 46 | MPA2 | Z | 2.948 | 2.948 | 0 | %100 |
| 47 | MP5A | X | 1.702 | 1.702 | 0 | %100 |
| 48 | MP5A | Z | 2.948 | 2.948 | 0 | %100 |
| 49 | M45 | X | 1.624 | 1.624 | 0 | %100 |
| 50 | M45 | Z | 2.812 | 2.812 | 0 | %100 |
| 51 | M46 | X | .55 | .55 | 0 | %100 |
| 52 | M46 | Z | .953 | .953 | 0 | %100 |
| 53 | MP1C | X | 1.702 | 1.702 | 0 | %100 |
| 54 | MP1C | Z | 2.948 | 2.948 | 0 | %100 |
| 55 | M54A | X | 0 | 0 | 0 | %100 |
| 56 | M54A | Z | 0 | 0 | 0 | %100 |
| 57 | MP2C | X | 1.702 | 1.702 | 0 | %100 |
| 58 | MP2C | Z | 2.948 | 2.948 | 0 | %100 |
| 59 | MP3C | X | 1.702 | 1.702 | 0 | %100 |
| 60 | MP3C | Z | 2.948 | 2.948 | 0 | %100 |
| 61 | MP5C | X | 1.702 | 1.702 | 0 | %100 |
| 62 | MP5C | Z | 2.948 | 2.948 | 0 | %100 |
| 63 | M82 | X | 1.277 | 1.277 | 0 | %100 |
| 64 | M82 | Z | 2.211 | 2.211 | 0 | %100 |

## Member Distributed Loads (BLC 58 : Structure Wi (150 Deg)) (Continued)

| | Member Label | Direction | Start Magnitude[lb/ft,... | End Magnitude[lb/ft,F... | Start Location[ft,%] | End Location[ft,%] |
|---|---|---|---|---|---|---|
| 65 | M85 | X | 1.99 | 1.99 | 0 | %100 |
| 66 | M85 | Z | 3.448 | 3.448 | 0 | %100 |
| 67 | MP2B | X | 1.702 | 1.702 | 0 | %100 |
| 68 | MP2B | Z | 2.948 | 2.948 | 0 | %100 |
| 69 | MP3B | X | 1.702 | 1.702 | 0 | %100 |
| 70 | MP3B | Z | 2.948 | 2.948 | 0 | %100 |
| 71 | MP5B | X | 1.702 | 1.702 | 0 | %100 |
| 72 | MP5B | Z | 2.948 | 2.948 | 0 | %100 |
| 73 | M107A | X | 1.526 | 1.526 | 0 | %100 |
| 74 | M107A | Z | 2.643 | 2.643 | 0 | %100 |
| 75 | M108A | X | .381 | .381 | 0 | %100 |
| 76 | M108A | Z | .661 | .661 | 0 | %100 |
| 77 | M105 | X | .917 | .917 | 0 | %100 |
| 78 | M105 | Z | 1.589 | 1.589 | 0 | %100 |
| 79 | M106A | X | .917 | .917 | 0 | %100 |
| 80 | M106A | Z | 1.589 | 1.589 | 0 | %100 |
| 81 | M107 | X | .55 | .55 | 0 | %100 |
| 82 | M107 | Z | .953 | .953 | 0 | %100 |
| 83 | M108 | X | 1.624 | 1.624 | 0 | %100 |
| 84 | M108 | Z | 2.812 | 2.812 | 0 | %100 |
| 85 | MP1B | X | 1.702 | 1.702 | 0 | %100 |
| 86 | MP1B | Z | 2.948 | 2.948 | 0 | %100 |
| 87 | M102B | X | 0 | 0 | 0 | %100 |
| 88 | M102B | Z | 0 | 0 | 0 | %100 |
| 89 | MP4C | X | 1.702 | 1.702 | 0 | %100 |
| 90 | MP4C | Z | 2.948 | 2.948 | 0 | %100 |
| 91 | MP4B | X | 1.702 | 1.702 | 0 | %100 |
| 92 | MP4B | Z | 2.948 | 2.948 | 0 | %100 |
| 93 | MPC2 | X | 1.702 | 1.702 | 0 | %100 |
| 94 | MPC2 | Z | 2.948 | 2.948 | 0 | %100 |
| 95 | MPB2 | X | 1.702 | 1.702 | 0 | %100 |
| 96 | MPB2 | Z | 2.948 | 2.948 | 0 | %100 |

## Member Distributed Loads (BLC 59 : Structure Wi (180 Deg))

| | Member Label | Direction | Start Magnitude[lb/ft,... | End Magnitude[lb/ft,F... | Start Location[ft,%] | End Location[ft,%] |
|---|---|---|---|---|---|---|
| 1 | M1 | X | 0 | 0 | 0 | %100 |
| 2 | M1 | Z | 0 | 0 | 0 | %100 |
| 3 | M2 | X | 0 | 0 | 0 | %100 |
| 4 | M2 | Z | 0 | 0 | 0 | %100 |
| 5 | M5 | X | 0 | 0 | 0 | %100 |
| 6 | M5 | Z | 0 | 0 | 0 | %100 |
| 7 | M6 | X | 0 | 0 | 0 | %100 |
| 8 | M6 | Z | 3.472 | 3.472 | 0 | %100 |
| 9 | M7 | X | 0 | 0 | 0 | %100 |
| 10 | M7 | Z | 3.472 | 3.472 | 0 | %100 |
| 11 | M6A | X | 0 | 0 | 0 | %100 |
| 12 | M6A | Z | 5.308 | 5.308 | 0 | %100 |
| 13 | M7A | X | 0 | 0 | 0 | %100 |
| 14 | M7A | Z | 5.308 | 5.308 | 0 | %100 |
| 15 | MP1A | X | 0 | 0 | 0 | %100 |
| 16 | MP1A | Z | 3.404 | 3.404 | 0 | %100 |

## Member Distributed Loads (BLC 59 : Structure Wi (180 Deg)) (Continued)

| | Member Label | Direction | Start Magnitude[lb/ft,... | End Magnitude[lb/ft,F... | Start Location[ft,%] | End Location[ft,%] |
|---|---|---|---|---|---|---|
| 17 | M23A | X | 0 | 0 | 0 | %100 |
| 18 | M23A | Z | 1.327 | 1.327 | 0 | %100 |
| 19 | M24 | X | 0 | 0 | 0 | %100 |
| 20 | M24 | Z | 1.327 | 1.327 | 0 | %100 |
| 21 | M39A | X | 0 | 0 | 0 | %100 |
| 22 | M39A | Z | 1.327 | 1.327 | 0 | %100 |
| 23 | M40 | X | 0 | 0 | 0 | %100 |
| 24 | M40 | Z | 1.327 | 1.327 | 0 | %100 |
| 25 | M55 | X | 0 | 0 | 0 | %100 |
| 26 | M55 | Z | 2.944 | 2.944 | 0 | %100 |
| 27 | M56 | X | 0 | 0 | 0 | %100 |
| 28 | M56 | Z | 2.944 | 2.944 | 0 | %100 |
| 29 | M60A | X | 0 | 0 | 0 | %100 |
| 30 | M60A | Z | 3.404 | 3.404 | 0 | %100 |
| 31 | M61 | X | 0 | 0 | 0 | %100 |
| 32 | M61 | Z | 5.822 | 5.822 | 0 | %100 |
| 33 | M62 | X | 0 | 0 | 0 | %100 |
| 34 | M62 | Z | 5.822 | 5.822 | 0 | %100 |
| 35 | M63 | X | 0 | 0 | 0 | %100 |
| 36 | M63 | Z | 5.822 | 5.822 | 0 | %100 |
| 37 | M64 | X | 0 | 0 | 0 | %100 |
| 38 | M64 | Z | 5.308 | 5.308 | 0 | %100 |
| 39 | MP4A | X | 0 | 0 | 0 | %100 |
| 40 | MP4A | Z | 3.404 | 3.404 | 0 | %100 |
| 41 | MP2A | X | 0 | 0 | 0 | %100 |
| 42 | MP2A | Z | 3.404 | 3.404 | 0 | %100 |
| 43 | MP3A | X | 0 | 0 | 0 | %100 |
| 44 | MP3A | Z | 3.404 | 3.404 | 0 | %100 |
| 45 | MPA2 | X | 0 | 0 | 0 | %100 |
| 46 | MPA2 | Z | 3.404 | 3.404 | 0 | %100 |
| 47 | MP5A | X | 0 | 0 | 0 | %100 |
| 48 | MP5A | Z | 3.404 | 3.404 | 0 | %100 |
| 49 | M45 | X | 0 | 0 | 0 | %100 |
| 50 | M45 | Z | 2.287 | 2.287 | 0 | %100 |
| 51 | M46 | X | 0 | 0 | 0 | %100 |
| 52 | M46 | Z | 2.287 | 2.287 | 0 | %100 |
| 53 | MP1C | X | 0 | 0 | 0 | %100 |
| 54 | MP1C | Z | 3.404 | 3.404 | 0 | %100 |
| 55 | M54A | X | 0 | 0 | 0 | %100 |
| 56 | M54A | Z | 1.327 | 1.327 | 0 | %100 |
| 57 | MP2C | X | 0 | 0 | 0 | %100 |
| 58 | MP2C | Z | 3.404 | 3.404 | 0 | %100 |
| 59 | MP3C | X | 0 | 0 | 0 | %100 |
| 60 | MP3C | Z | 3.404 | 3.404 | 0 | %100 |
| 61 | MP5C | X | 0 | 0 | 0 | %100 |
| 62 | MP5C | Z | 3.404 | 3.404 | 0 | %100 |
| 63 | M82 | X | 0 | 0 | 0 | %100 |
| 64 | M82 | Z | .851 | .851 | 0 | %100 |
| 65 | M85 | X | 0 | 0 | 0 | %100 |
| 66 | M85 | Z | 1.327 | 1.327 | 0 | %100 |
| 67 | MP2B | X | 0 | 0 | 0 | %100 |
| 68 | MP2B | Z | 3.404 | 3.404 | 0 | %100 |

## Member Distributed Loads (BLC 59 : Structure Wi (180 Deg)) (Continued)

| | Member Label | Direction | Start Magnitude[lb/ft,... | End Magnitude[lb/ft,F... | Start Location[ft,%] | End Location[ft,%] |
|---|---|---|---|---|---|---|
| 69 | MP3B | X | 0 | 0 | 0 | %100 |
| 70 | MP3B | Z | 3.404 | 3.404 | 0 | %100 |
| 71 | MP5B | X | 0 | 0 | 0 | %100 |
| 72 | MP5B | Z | 3.404 | 3.404 | 0 | %100 |
| 73 | M107A | X | 0 | 0 | 0 | %100 |
| 74 | M107A | Z | 2.289 | 2.289 | 0 | %100 |
| 75 | M108A | X | 0 | 0 | 0 | %100 |
| 76 | M108A | Z | 2.289 | 2.289 | 0 | %100 |
| 77 | M105 | X | 0 | 0 | 0 | %100 |
| 78 | M105 | Z | 3.021 | 3.021 | 0 | %100 |
| 79 | M106A | X | 0 | 0 | 0 | %100 |
| 80 | M106A | Z | .875 | .875 | 0 | %100 |
| 81 | M107 | X | 0 | 0 | 0 | %100 |
| 82 | M107 | Z | .875 | .875 | 0 | %100 |
| 83 | M108 | X | 0 | 0 | 0 | %100 |
| 84 | M108 | Z | 3.021 | 3.021 | 0 | %100 |
| 85 | MP1B | X | 0 | 0 | 0 | %100 |
| 86 | MP1B | Z | 3.404 | 3.404 | 0 | %100 |
| 87 | M102B | X | 0 | 0 | 0 | %100 |
| 88 | M102B | Z | .851 | .851 | 0 | %100 |
| 89 | MP4C | X | 0 | 0 | 0 | %100 |
| 90 | MP4C | Z | 3.404 | 3.404 | 0 | %100 |
| 91 | MP4B | X | 0 | 0 | 0 | %100 |
| 92 | MP4B | Z | 3.404 | 3.404 | 0 | %100 |
| 93 | MPC2 | X | 0 | 0 | 0 | %100 |
| 94 | MPC2 | Z | 3.404 | 3.404 | 0 | %100 |
| 95 | MPB2 | X | 0 | 0 | 0 | %100 |
| 96 | MPB2 | Z | 3.404 | 3.404 | 0 | %100 |

## Member Distributed Loads (BLC 60 : Structure Wi (210 Deg))

| | Member Label | Direction | Start Magnitude[lb/ft,... | End Magnitude[lb/ft,F... | Start Location[ft,%] | End Location[ft,%] |
|---|---|---|---|---|---|---|
| 1 | M1 | X | -.381 | -.381 | 0 | %100 |
| 2 | M1 | Z | .661 | .661 | 0 | %100 |
| 3 | M2 | X | -.491 | -.491 | 0 | %100 |
| 4 | M2 | Z | .85 | .85 | 0 | %100 |
| 5 | M5 | X | -.579 | -.579 | 0 | %100 |
| 6 | M5 | Z | 1.002 | 1.002 | 0 | %100 |
| 7 | M6 | X | -.579 | -.579 | 0 | %100 |
| 8 | M6 | Z | 1.002 | 1.002 | 0 | %100 |
| 9 | M7 | X | -2.315 | -2.315 | 0 | %100 |
| 10 | M7 | Z | 4.01 | 4.01 | 0 | %100 |
| 11 | M6A | X | -1.99 | -1.99 | 0 | %100 |
| 12 | M6A | Z | 3.448 | 3.448 | 0 | %100 |
| 13 | M7A | X | -1.99 | -1.99 | 0 | %100 |
| 14 | M7A | Z | 3.448 | 3.448 | 0 | %100 |
| 15 | MP1A | X | -1.702 | -1.702 | 0 | %100 |
| 16 | MP1A | Z | 2.948 | 2.948 | 0 | %100 |
| 17 | M23A | X | -1.99 | -1.99 | 0 | %100 |
| 18 | M23A | Z | 3.448 | 3.448 | 0 | %100 |
| 19 | M24 | X | -1.99 | -1.99 | 0 | %100 |
| 20 | M24 | Z | 3.448 | 3.448 | 0 | %100 |

## Member Distributed Loads (BLC 60 : Structure Wi (210 Deg)) (Continued)

| | Member Label | Direction | Start Magnitude[lb/ft,... | End Magnitude[lb/ft,F... | Start Location[ft,%] | End Location[ft,%] |
|---|---|---|---|---|---|---|
| 21 | M39A | X | 0 | 0 | 0 | %100 |
| 22 | M39A | Z | 0 | 0 | 0 | %100 |
| 23 | M40 | X | 0 | 0 | 0 | %100 |
| 24 | M40 | Z | 0 | 0 | 0 | %100 |
| 25 | M55 | X | -.491 | -.491 | 0 | %100 |
| 26 | M55 | Z | .85 | .85 | 0 | %100 |
| 27 | M56 | X | -1.962 | -1.962 | 0 | %100 |
| 28 | M56 | Z | 3.399 | 3.399 | 0 | %100 |
| 29 | M60A | X | -1.277 | -1.277 | 0 | %100 |
| 30 | M60A | Z | 2.211 | 2.211 | 0 | %100 |
| 31 | M61 | X | -2.911 | -2.911 | 0 | %100 |
| 32 | M61 | Z | 5.042 | 5.042 | 0 | %100 |
| 33 | M62 | X | -2.911 | -2.911 | 0 | %100 |
| 34 | M62 | Z | 5.042 | 5.042 | 0 | %100 |
| 35 | M63 | X | -2.911 | -2.911 | 0 | %100 |
| 36 | M63 | Z | 5.042 | 5.042 | 0 | %100 |
| 37 | M64 | X | -1.99 | -1.99 | 0 | %100 |
| 38 | M64 | Z | 3.448 | 3.448 | 0 | %100 |
| 39 | MP4A | X | -1.702 | -1.702 | 0 | %100 |
| 40 | MP4A | Z | 2.948 | 2.948 | 0 | %100 |
| 41 | MP2A | X | -1.702 | -1.702 | 0 | %100 |
| 42 | MP2A | Z | 2.948 | 2.948 | 0 | %100 |
| 43 | MP3A | X | -1.702 | -1.702 | 0 | %100 |
| 44 | MP3A | Z | 2.948 | 2.948 | 0 | %100 |
| 45 | MPA2 | X | -1.702 | -1.702 | 0 | %100 |
| 46 | MPA2 | Z | 2.948 | 2.948 | 0 | %100 |
| 47 | MP5A | X | -1.702 | -1.702 | 0 | %100 |
| 48 | MP5A | Z | 2.948 | 2.948 | 0 | %100 |
| 49 | M45 | X | -.55 | -.55 | 0 | %100 |
| 50 | M45 | Z | .953 | .953 | 0 | %100 |
| 51 | M46 | X | -1.624 | -1.624 | 0 | %100 |
| 52 | M46 | Z | 2.812 | 2.812 | 0 | %100 |
| 53 | MP1C | X | -1.702 | -1.702 | 0 | %100 |
| 54 | MP1C | Z | 2.948 | 2.948 | 0 | %100 |
| 55 | M54A | X | -1.99 | -1.99 | 0 | %100 |
| 56 | M54A | Z | 3.448 | 3.448 | 0 | %100 |
| 57 | MP2C | X | -1.702 | -1.702 | 0 | %100 |
| 58 | MP2C | Z | 2.948 | 2.948 | 0 | %100 |
| 59 | MP3C | X | -1.702 | -1.702 | 0 | %100 |
| 60 | MP3C | Z | 2.948 | 2.948 | 0 | %100 |
| 61 | MP5C | X | -1.702 | -1.702 | 0 | %100 |
| 62 | MP5C | Z | 2.948 | 2.948 | 0 | %100 |
| 63 | M82 | X | 0 | 0 | 0 | %100 |
| 64 | M82 | Z | 0 | 0 | 0 | %100 |
| 65 | M85 | X | 0 | 0 | 0 | %100 |
| 66 | M85 | Z | 0 | 0 | 0 | %100 |
| 67 | MP2B | X | -1.702 | -1.702 | 0 | %100 |
| 68 | MP2B | Z | 2.948 | 2.948 | 0 | %100 |
| 69 | MP3B | X | -1.702 | -1.702 | 0 | %100 |
| 70 | MP3B | Z | 2.948 | 2.948 | 0 | %100 |
| 71 | MP5B | X | -1.702 | -1.702 | 0 | %100 |
| 72 | MP5B | Z | 2.948 | 2.948 | 0 | %100 |

## Member Distributed Loads (BLC 60 : Structure Wi (210 Deg)) (Continued)

| | Member Label | Direction | Start Magnitude[lb/ft,... | End Magnitude[lb/ft,F... | Start Location[ft,%] | End Location[ft,%] |
|---|---|---|---|---|---|---|
| 73 | M107A | X | -.381 | -.381 | 0 | %100 |
| 74 | M107A | Z | .661 | .661 | 0 | %100 |
| 75 | M108A | X | -1.526 | -1.526 | 0 | %100 |
| 76 | M108A | Z | 2.643 | 2.643 | 0 | %100 |
| 77 | M105 | X | -1.624 | -1.624 | 0 | %100 |
| 78 | M105 | Z | 2.812 | 2.812 | 0 | %100 |
| 79 | M106A | X | -.55 | -.55 | 0 | %100 |
| 80 | M106A | Z | .953 | .953 | 0 | %100 |
| 81 | M107 | X | -.917 | -.917 | 0 | %100 |
| 82 | M107 | Z | 1.589 | 1.589 | 0 | %100 |
| 83 | M108 | X | -.917 | -.917 | 0 | %100 |
| 84 | M108 | Z | 1.589 | 1.589 | 0 | %100 |
| 85 | MP1B | X | -1.702 | -1.702 | 0 | %100 |
| 86 | MP1B | Z | 2.948 | 2.948 | 0 | %100 |
| 87 | M102B | X | -1.277 | -1.277 | 0 | %100 |
| 88 | M102B | Z | 2.211 | 2.211 | 0 | %100 |
| 89 | MP4C | X | -1.702 | -1.702 | 0 | %100 |
| 90 | MP4C | Z | 2.948 | 2.948 | 0 | %100 |
| 91 | MP4B | X | -1.702 | -1.702 | 0 | %100 |
| 92 | MP4B | Z | 2.948 | 2.948 | 0 | %100 |
| 93 | MPC2 | X | -1.702 | -1.702 | 0 | %100 |
| 94 | MPC2 | Z | 2.948 | 2.948 | 0 | %100 |
| 95 | MPB2 | X | -1.702 | -1.702 | 0 | %100 |
| 96 | MPB2 | Z | 2.948 | 2.948 | 0 | %100 |

## Member Distributed Loads (BLC 61 : Structure Wi (240 Deg))

| | Member Label | Direction | Start Magnitude[lb/ft,... | End Magnitude[lb/ft,F... | Start Location[ft,%] | End Location[ft,%] |
|---|---|---|---|---|---|---|
| 1 | M1 | X | -1.982 | -1.982 | 0 | %100 |
| 2 | M1 | Z | 1.144 | 1.144 | 0 | %100 |
| 3 | M2 | X | -2.549 | -2.549 | 0 | %100 |
| 4 | M2 | Z | 1.472 | 1.472 | 0 | %100 |
| 5 | M5 | X | -3.007 | -3.007 | 0 | %100 |
| 6 | M5 | Z | 1.736 | 1.736 | 0 | %100 |
| 7 | M6 | X | 0 | 0 | 0 | %100 |
| 8 | M6 | Z | 0 | 0 | 0 | %100 |
| 9 | M7 | X | -3.007 | -3.007 | 0 | %100 |
| 10 | M7 | Z | 1.736 | 1.736 | 0 | %100 |
| 11 | M6A | X | -1.149 | -1.149 | 0 | %100 |
| 12 | M6A | Z | .663 | .663 | 0 | %100 |
| 13 | M7A | X | -1.149 | -1.149 | 0 | %100 |
| 14 | M7A | Z | .663 | .663 | 0 | %100 |
| 15 | MP1A | X | -2.948 | -2.948 | 0 | %100 |
| 16 | MP1A | Z | 1.702 | 1.702 | 0 | %100 |
| 17 | M23A | X | -4.597 | -4.597 | 0 | %100 |
| 18 | M23A | Z | 2.654 | 2.654 | 0 | %100 |
| 19 | M24 | X | -4.597 | -4.597 | 0 | %100 |
| 20 | M24 | Z | 2.654 | 2.654 | 0 | %100 |
| 21 | M39A | X | -1.149 | -1.149 | 0 | %100 |
| 22 | M39A | Z | .663 | .663 | 0 | %100 |
| 23 | M40 | X | -1.149 | -1.149 | 0 | %100 |
| 24 | M40 | Z | .663 | .663 | 0 | %100 |

## Member Distributed Loads (BLC 61 : Structure Wi (240 Deg)) (Continued)

| | Member Label | Direction | Start Magnitude[lb/ft,... | End Magnitude[lb/ft,F... | Start Location[ft,%] | End Location[ft,%] |
|---|---|---|---|---|---|---|
| 25 | M55 | X | 0 | 0 | 0 | %100 |
| 26 | M55 | Z | 0 | 0 | 0 | %100 |
| 27 | M56 | X | -2.549 | -2.549 | 0 | %100 |
| 28 | M56 | Z | 1.472 | 1.472 | 0 | %100 |
| 29 | M60A | X | -.737 | -.737 | 0 | %100 |
| 30 | M60A | Z | .426 | .426 | 0 | %100 |
| 31 | M61 | X | -5.042 | -5.042 | 0 | %100 |
| 32 | M61 | Z | 2.911 | 2.911 | 0 | %100 |
| 33 | M62 | X | -5.042 | -5.042 | 0 | %100 |
| 34 | M62 | Z | 2.911 | 2.911 | 0 | %100 |
| 35 | M63 | X | -5.042 | -5.042 | 0 | %100 |
| 36 | M63 | Z | 2.911 | 2.911 | 0 | %100 |
| 37 | M64 | X | -1.149 | -1.149 | 0 | %100 |
| 38 | M64 | Z | .663 | .663 | 0 | %100 |
| 39 | MP4A | X | -2.948 | -2.948 | 0 | %100 |
| 40 | MP4A | Z | 1.702 | 1.702 | 0 | %100 |
| 41 | MP2A | X | -2.948 | -2.948 | 0 | %100 |
| 42 | MP2A | Z | 1.702 | 1.702 | 0 | %100 |
| 43 | MP3A | X | -2.948 | -2.948 | 0 | %100 |
| 44 | MP3A | Z | 1.702 | 1.702 | 0 | %100 |
| 45 | MPA2 | X | -2.948 | -2.948 | 0 | %100 |
| 46 | MPA2 | Z | 1.702 | 1.702 | 0 | %100 |
| 47 | MP5A | X | -2.948 | -2.948 | 0 | %100 |
| 48 | MP5A | Z | 1.702 | 1.702 | 0 | %100 |
| 49 | M45 | X | -.757 | -.757 | 0 | %100 |
| 50 | M45 | Z | .437 | .437 | 0 | %100 |
| 51 | M46 | X | -2.616 | -2.616 | 0 | %100 |
| 52 | M46 | Z | 1.511 | 1.511 | 0 | %100 |
| 53 | MP1C | X | -2.948 | -2.948 | 0 | %100 |
| 54 | MP1C | Z | 1.702 | 1.702 | 0 | %100 |
| 55 | M54A | X | -4.597 | -4.597 | 0 | %100 |
| 56 | M54A | Z | 2.654 | 2.654 | 0 | %100 |
| 57 | MP2C | X | -2.948 | -2.948 | 0 | %100 |
| 58 | MP2C | Z | 1.702 | 1.702 | 0 | %100 |
| 59 | MP3C | X | -2.948 | -2.948 | 0 | %100 |
| 60 | MP3C | Z | 1.702 | 1.702 | 0 | %100 |
| 61 | MP5C | X | -2.948 | -2.948 | 0 | %100 |
| 62 | MP5C | Z | 1.702 | 1.702 | 0 | %100 |
| 63 | M82 | X | -.737 | -.737 | 0 | %100 |
| 64 | M82 | Z | .426 | .426 | 0 | %100 |
| 65 | M85 | X | -1.149 | -1.149 | 0 | %100 |
| 66 | M85 | Z | .663 | .663 | 0 | %100 |
| 67 | MP2B | X | -2.948 | -2.948 | 0 | %100 |
| 68 | MP2B | Z | 1.702 | 1.702 | 0 | %100 |
| 69 | MP3B | X | -2.948 | -2.948 | 0 | %100 |
| 70 | MP3B | Z | 1.702 | 1.702 | 0 | %100 |
| 71 | MP5B | X | -2.948 | -2.948 | 0 | %100 |
| 72 | MP5B | Z | 1.702 | 1.702 | 0 | %100 |
| 73 | M107A | X | 0 | 0 | 0 | %100 |
| 74 | M107A | Z | 0 | 0 | 0 | %100 |
| 75 | M108A | X | -1.982 | -1.982 | 0 | %100 |
| 76 | M108A | Z | 1.144 | 1.144 | 0 | %100 |

## Member Distributed Loads (BLC 61 : Structure Wi (240 Deg)) (Continued)

| | Member Label | Direction | Start Magnitude[lb/ft,... | End Magnitude[lb/ft,F... | Start Location[ft,%] | End Location[ft,%] |
|---|---|---|---|---|---|---|
| 77 | M105 | X | -1.981 | -1.981 | 0 | %100 |
| 78 | M105 | Z | 1.144 | 1.144 | 0 | %100 |
| 79 | M106A | X | -1.981 | -1.981 | 0 | %100 |
| 80 | M106A | Z | 1.144 | 1.144 | 0 | %100 |
| 81 | M107 | X | -2.616 | -2.616 | 0 | %100 |
| 82 | M107 | Z | 1.511 | 1.511 | 0 | %100 |
| 83 | M108 | X | -.757 | -.757 | 0 | %100 |
| 84 | M108 | Z | .437 | .437 | 0 | %100 |
| 85 | MP1B | X | -2.948 | -2.948 | 0 | %100 |
| 86 | MP1B | Z | 1.702 | 1.702 | 0 | %100 |
| 87 | M102B | X | -2.948 | -2.948 | 0 | %100 |
| 88 | M102B | Z | 1.702 | 1.702 | 0 | %100 |
| 89 | MP4C | X | -2.948 | -2.948 | 0 | %100 |
| 90 | MP4C | Z | 1.702 | 1.702 | 0 | %100 |
| 91 | MP4B | X | -2.948 | -2.948 | 0 | %100 |
| 92 | MP4B | Z | 1.702 | 1.702 | 0 | %100 |
| 93 | MPC2 | X | -2.948 | -2.948 | 0 | %100 |
| 94 | MPC2 | Z | 1.702 | 1.702 | 0 | %100 |
| 95 | MPB2 | X | -2.948 | -2.948 | 0 | %100 |
| 96 | MPB2 | Z | 1.702 | 1.702 | 0 | %100 |

## Member Distributed Loads (BLC 62 : Structure Wi (270 Deg))

| | Member Label | Direction | Start Magnitude[lb/ft,... | End Magnitude[lb/ft,F... | Start Location[ft,%] | End Location[ft,%] |
|---|---|---|---|---|---|---|
| 1 | M1 | X | -3.052 | -3.052 | 0 | %100 |
| 2 | M1 | Z | 0 | 0 | 0 | %100 |
| 3 | M2 | X | -3.925 | -3.925 | 0 | %100 |
| 4 | M2 | Z | 0 | 0 | 0 | %100 |
| 5 | M5 | X | -4.63 | -4.63 | 0 | %100 |
| 6 | M5 | Z | 0 | 0 | 0 | %100 |
| 7 | M6 | X | -1.157 | -1.157 | 0 | %100 |
| 8 | M6 | Z | 0 | 0 | 0 | %100 |
| 9 | M7 | X | -1.157 | -1.157 | 0 | %100 |
| 10 | M7 | Z | 0 | 0 | 0 | %100 |
| 11 | M6A | X | 0 | 0 | 0 | %100 |
| 12 | M6A | Z | 0 | 0 | 0 | %100 |
| 13 | M7A | X | 0 | 0 | 0 | %100 |
| 14 | M7A | Z | 0 | 0 | 0 | %100 |
| 15 | MP1A | X | -3.404 | -3.404 | 0 | %100 |
| 16 | MP1A | Z | 0 | 0 | 0 | %100 |
| 17 | M23A | X | -3.981 | -3.981 | 0 | %100 |
| 18 | M23A | Z | 0 | 0 | 0 | %100 |
| 19 | M24 | X | -3.981 | -3.981 | 0 | %100 |
| 20 | M24 | Z | 0 | 0 | 0 | %100 |
| 21 | M39A | X | -3.981 | -3.981 | 0 | %100 |
| 22 | M39A | Z | 0 | 0 | 0 | %100 |
| 23 | M40 | X | -3.981 | -3.981 | 0 | %100 |
| 24 | M40 | Z | 0 | 0 | 0 | %100 |
| 25 | M55 | X | -.981 | -.981 | 0 | %100 |
| 26 | M55 | Z | 0 | 0 | 0 | %100 |
| 27 | M56 | X | -.981 | -.981 | 0 | %100 |
| 28 | M56 | Z | 0 | 0 | 0 | %100 |

## Member Distributed Loads (BLC 62 : Structure Wi (270 Deg)) (Continued)

| | Member Label | Direction | Start Magnitude[lb/ft,... | End Magnitude[lb/ft,F... | Start Location[ft,%] | End Location[ft,%] |
|---|---|---|---|---|---|---|
| 29 | M60A | X | 0 | 0 | 0 | %100 |
| 30 | M60A | Z | 0 | 0 | 0 | %100 |
| 31 | M61 | X | -5.822 | -5.822 | 0 | %100 |
| 32 | M61 | Z | 0 | 0 | 0 | %100 |
| 33 | M62 | X | -5.822 | -5.822 | 0 | %100 |
| 34 | M62 | Z | 0 | 0 | 0 | %100 |
| 35 | M63 | X | -5.822 | -5.822 | 0 | %100 |
| 36 | M63 | Z | 0 | 0 | 0 | %100 |
| 37 | M64 | X | 0 | 0 | 0 | %100 |
| 38 | M64 | Z | 0 | 0 | 0 | %100 |
| 39 | MP4A | X | -3.404 | -3.404 | 0 | %100 |
| 40 | MP4A | Z | 0 | 0 | 0 | %100 |
| 41 | MP2A | X | -3.404 | -3.404 | 0 | %100 |
| 42 | MP2A | Z | 0 | 0 | 0 | %100 |
| 43 | MP3A | X | -3.404 | -3.404 | 0 | %100 |
| 44 | MP3A | Z | 0 | 0 | 0 | %100 |
| 45 | MPA2 | X | -3.404 | -3.404 | 0 | %100 |
| 46 | MPA2 | Z | 0 | 0 | 0 | %100 |
| 47 | MP5A | X | -3.404 | -3.404 | 0 | %100 |
| 48 | MP5A | Z | 0 | 0 | 0 | %100 |
| 49 | M45 | X | -1.835 | -1.835 | 0 | %100 |
| 50 | M45 | Z | 0 | 0 | 0 | %100 |
| 51 | M46 | X | -1.835 | -1.835 | 0 | %100 |
| 52 | M46 | Z | 0 | 0 | 0 | %100 |
| 53 | MP1C | X | -3.404 | -3.404 | 0 | %100 |
| 54 | MP1C | Z | 0 | 0 | 0 | %100 |
| 55 | M54A | X | -3.981 | -3.981 | 0 | %100 |
| 56 | M54A | Z | 0 | 0 | 0 | %100 |
| 57 | MP2C | X | -3.404 | -3.404 | 0 | %100 |
| 58 | MP2C | Z | 0 | 0 | 0 | %100 |
| 59 | MP3C | X | -3.404 | -3.404 | 0 | %100 |
| 60 | MP3C | Z | 0 | 0 | 0 | %100 |
| 61 | MP5C | X | -3.404 | -3.404 | 0 | %100 |
| 62 | MP5C | Z | 0 | 0 | 0 | %100 |
| 63 | M82 | X | -2.553 | -2.553 | 0 | %100 |
| 64 | M82 | Z | 0 | 0 | 0 | %100 |
| 65 | M85 | X | -3.981 | -3.981 | 0 | %100 |
| 66 | M85 | Z | 0 | 0 | 0 | %100 |
| 67 | MP2B | X | -3.404 | -3.404 | 0 | %100 |
| 68 | MP2B | Z | 0 | 0 | 0 | %100 |
| 69 | MP3B | X | -3.404 | -3.404 | 0 | %100 |
| 70 | MP3B | Z | 0 | 0 | 0 | %100 |
| 71 | MP5B | X | -3.404 | -3.404 | 0 | %100 |
| 72 | MP5B | Z | 0 | 0 | 0 | %100 |
| 73 | M107A | X | -.763 | -.763 | 0 | %100 |
| 74 | M107A | Z | 0 | 0 | 0 | %100 |
| 75 | M108A | X | -.763 | -.763 | 0 | %100 |
| 76 | M108A | Z | 0 | 0 | 0 | %100 |
| 77 | M105 | X | -1.101 | -1.101 | 0 | %100 |
| 78 | M105 | Z | 0 | 0 | 0 | %100 |
| 79 | M106A | X | -3.247 | -3.247 | 0 | %100 |
| 80 | M106A | Z | 0 | 0 | 0 | %100 |

## Member Distributed Loads (BLC 62 : Structure Wi (270 Deg)) (Continued)

| | Member Label | Direction | Start Magnitude[lb/ft,... | End Magnitude[lb/ft,F... | Start Location[ft,%] | End Location[ft,%] |
|---|---|---|---|---|---|---|
| 81 | M107 | X | -3.247 | -3.247 | 0 | %100 |
| 82 | M107 | Z | 0 | 0 | 0 | %100 |
| 83 | M108 | X | -1.101 | -1.101 | 0 | %100 |
| 84 | M108 | Z | 0 | 0 | 0 | %100 |
| 85 | MP1B | X | -3.404 | -3.404 | 0 | %100 |
| 86 | MP1B | Z | 0 | 0 | 0 | %100 |
| 87 | M102B | X | -2.553 | -2.553 | 0 | %100 |
| 88 | M102B | Z | 0 | 0 | 0 | %100 |
| 89 | MP4C | X | -3.404 | -3.404 | 0 | %100 |
| 90 | MP4C | Z | 0 | 0 | 0 | %100 |
| 91 | MP4B | X | -3.404 | -3.404 | 0 | %100 |
| 92 | MP4B | Z | 0 | 0 | 0 | %100 |
| 93 | MPC2 | X | -3.404 | -3.404 | 0 | %100 |
| 94 | MPC2 | Z | 0 | 0 | 0 | %100 |
| 95 | MPB2 | X | -3.404 | -3.404 | 0 | %100 |
| 96 | MPB2 | Z | 0 | 0 | 0 | %100 |

## Member Distributed Loads (BLC 63 : Structure Wi (300 Deg))

| | Member Label | Direction | Start Magnitude[lb/ft,... | End Magnitude[lb/ft,F... | Start Location[ft,%] | End Location[ft,%] |
|---|---|---|---|---|---|---|
| 1 | M1 | X | -1.982 | -1.982 | 0 | %100 |
| 2 | M1 | Z | -1.144 | -1.144 | 0 | %100 |
| 3 | M2 | X | -2.549 | -2.549 | 0 | %100 |
| 4 | M2 | Z | -1.472 | -1.472 | 0 | %100 |
| 5 | M5 | X | -3.007 | -3.007 | 0 | %100 |
| 6 | M5 | Z | -1.736 | -1.736 | 0 | %100 |
| 7 | M6 | X | -3.007 | -3.007 | 0 | %100 |
| 8 | M6 | Z | -1.736 | -1.736 | 0 | %100 |
| 9 | M7 | X | 0 | 0 | 0 | %100 |
| 10 | M7 | Z | 0 | 0 | 0 | %100 |
| 11 | M6A | X | -1.149 | -1.149 | 0 | %100 |
| 12 | M6A | Z | -.663 | -.663 | 0 | %100 |
| 13 | M7A | X | -1.149 | -1.149 | 0 | %100 |
| 14 | M7A | Z | -.663 | -.663 | 0 | %100 |
| 15 | MP1A | X | -2.948 | -2.948 | 0 | %100 |
| 16 | MP1A | Z | -1.702 | -1.702 | 0 | %100 |
| 17 | M23A | X | -1.149 | -1.149 | 0 | %100 |
| 18 | M23A | Z | -.663 | -.663 | 0 | %100 |
| 19 | M24 | X | -1.149 | -1.149 | 0 | %100 |
| 20 | M24 | Z | -.663 | -.663 | 0 | %100 |
| 21 | M39A | X | -4.597 | -4.597 | 0 | %100 |
| 22 | M39A | Z | -2.654 | -2.654 | 0 | %100 |
| 23 | M40 | X | -4.597 | -4.597 | 0 | %100 |
| 24 | M40 | Z | -2.654 | -2.654 | 0 | %100 |
| 25 | M55 | X | -2.549 | -2.549 | 0 | %100 |
| 26 | M55 | Z | -1.472 | -1.472 | 0 | %100 |
| 27 | M56 | X | 0 | 0 | 0 | %100 |
| 28 | M56 | Z | 0 | 0 | 0 | %100 |
| 29 | M60A | X | -.737 | -.737 | 0 | %100 |
| 30 | M60A | Z | -.426 | -.426 | 0 | %100 |
| 31 | M61 | X | -5.042 | -5.042 | 0 | %100 |
| 32 | M61 | Z | -2.911 | -2.911 | 0 | %100 |

## Member Distributed Loads (BLC 63 : Structure Wi (300 Deg)) (Continued)

| | Member Label | Direction | Start Magnitude[lb/ft,... | End Magnitude[lb/ft,F... | Start Location[ft,%] | End Location[ft,%] |
|---|---|---|---|---|---|---|
| 33 | M62 | X | -5.042 | -5.042 | 0 | %100 |
| 34 | M62 | Z | -2.911 | -2.911 | 0 | %100 |
| 35 | M63 | X | -5.042 | -5.042 | 0 | %100 |
| 36 | M63 | Z | -2.911 | -2.911 | 0 | %100 |
| 37 | M64 | X | -1.149 | -1.149 | 0 | %100 |
| 38 | M64 | Z | -.663 | -.663 | 0 | %100 |
| 39 | MP4A | X | -2.948 | -2.948 | 0 | %100 |
| 40 | MP4A | Z | -1.702 | -1.702 | 0 | %100 |
| 41 | MP2A | X | -2.948 | -2.948 | 0 | %100 |
| 42 | MP2A | Z | -1.702 | -1.702 | 0 | %100 |
| 43 | MP3A | X | -2.948 | -2.948 | 0 | %100 |
| 44 | MP3A | Z | -1.702 | -1.702 | 0 | %100 |
| 45 | MPA2 | X | -2.948 | -2.948 | 0 | %100 |
| 46 | MPA2 | Z | -1.702 | -1.702 | 0 | %100 |
| 47 | MP5A | X | -2.948 | -2.948 | 0 | %100 |
| 48 | MP5A | Z | -1.702 | -1.702 | 0 | %100 |
| 49 | M45 | X | -2.616 | -2.616 | 0 | %100 |
| 50 | M45 | Z | -1.511 | -1.511 | 0 | %100 |
| 51 | M46 | X | -.757 | -.757 | 0 | %100 |
| 52 | M46 | Z | -.437 | -.437 | 0 | %100 |
| 53 | MP1C | X | -2.948 | -2.948 | 0 | %100 |
| 54 | MP1C | Z | -1.702 | -1.702 | 0 | %100 |
| 55 | M54A | X | -1.149 | -1.149 | 0 | %100 |
| 56 | M54A | Z | -.663 | -.663 | 0 | %100 |
| 57 | MP2C | X | -2.948 | -2.948 | 0 | %100 |
| 58 | MP2C | Z | -1.702 | -1.702 | 0 | %100 |
| 59 | MP3C | X | -2.948 | -2.948 | 0 | %100 |
| 60 | MP3C | Z | -1.702 | -1.702 | 0 | %100 |
| 61 | MP5C | X | -2.948 | -2.948 | 0 | %100 |
| 62 | MP5C | Z | -1.702 | -1.702 | 0 | %100 |
| 63 | M82 | X | -2.948 | -2.948 | 0 | %100 |
| 64 | M82 | Z | -1.702 | -1.702 | 0 | %100 |
| 65 | M85 | X | -4.597 | -4.597 | 0 | %100 |
| 66 | M85 | Z | -2.654 | -2.654 | 0 | %100 |
| 67 | MP2B | X | -2.948 | -2.948 | 0 | %100 |
| 68 | MP2B | Z | -1.702 | -1.702 | 0 | %100 |
| 69 | MP3B | X | -2.948 | -2.948 | 0 | %100 |
| 70 | MP3B | Z | -1.702 | -1.702 | 0 | %100 |
| 71 | MP5B | X | -2.948 | -2.948 | 0 | %100 |
| 72 | MP5B | Z | -1.702 | -1.702 | 0 | %100 |
| 73 | M107A | X | -1.982 | -1.982 | 0 | %100 |
| 74 | M107A | Z | -1.144 | -1.144 | 0 | %100 |
| 75 | M108A | X | 0 | 0 | 0 | %100 |
| 76 | M108A | Z | 0 | 0 | 0 | %100 |
| 77 | M105 | X | -.757 | -.757 | 0 | %100 |
| 78 | M105 | Z | -.437 | -.437 | 0 | %100 |
| 79 | M106A | X | -2.616 | -2.616 | 0 | %100 |
| 80 | M106A | Z | -1.511 | -1.511 | 0 | %100 |
| 81 | M107 | X | -1.981 | -1.981 | 0 | %100 |
| 82 | M107 | Z | -1.144 | -1.144 | 0 | %100 |
| 83 | M108 | X | -1.981 | -1.981 | 0 | %100 |
| 84 | M108 | Z | -1.144 | -1.144 | 0 | %100 |

## Member Distributed Loads (BLC 63 : Structure Wi (300 Deg)) (Continued)

| | Member Label | Direction | Start Magnitude[lb/ft,... | End Magnitude[lb/ft,F... | Start Location[ft,%] | End Location[ft,%] |
|---|---|---|---|---|---|---|
| 85 | MP1B | X | -2.948 | -2.948 | 0 | %100 |
| 86 | MP1B | Z | -1.702 | -1.702 | 0 | %100 |
| 87 | M102B | X | -.737 | -.737 | 0 | %100 |
| 88 | M102B | Z | -.426 | -.426 | 0 | %100 |
| 89 | MP4C | X | -2.948 | -2.948 | 0 | %100 |
| 90 | MP4C | Z | -1.702 | -1.702 | 0 | %100 |
| 91 | MP4B | X | -2.948 | -2.948 | 0 | %100 |
| 92 | MP4B | Z | -1.702 | -1.702 | 0 | %100 |
| 93 | MPC2 | X | -2.948 | -2.948 | 0 | %100 |
| 94 | MPC2 | Z | -1.702 | -1.702 | 0 | %100 |
| 95 | MPB2 | X | -2.948 | -2.948 | 0 | %100 |
| 96 | MPB2 | Z | -1.702 | -1.702 | 0 | %100 |

## Member Distributed Loads (BLC 64 : Structure Wi (330 Deg))

| | Member Label | Direction | Start Magnitude[lb/ft,... | End Magnitude[lb/ft,F... | Start Location[ft,%] | End Location[ft,%] |
|---|---|---|---|---|---|---|
| 1 | M1 | X | -.381 | -.381 | 0 | %100 |
| 2 | M1 | Z | -.661 | -.661 | 0 | %100 |
| 3 | M2 | X | -.491 | -.491 | 0 | %100 |
| 4 | M2 | Z | -.85 | -.85 | 0 | %100 |
| 5 | M5 | X | -.579 | -.579 | 0 | %100 |
| 6 | M5 | Z | -1.002 | -1.002 | 0 | %100 |
| 7 | M6 | X | -2.315 | -2.315 | 0 | %100 |
| 8 | M6 | Z | -4.01 | -4.01 | 0 | %100 |
| 9 | M7 | X | -.579 | -.579 | 0 | %100 |
| 10 | M7 | Z | -1.002 | -1.002 | 0 | %100 |
| 11 | M6A | X | -1.99 | -1.99 | 0 | %100 |
| 12 | M6A | Z | -3.448 | -3.448 | 0 | %100 |
| 13 | M7A | X | -1.99 | -1.99 | 0 | %100 |
| 14 | M7A | Z | -3.448 | -3.448 | 0 | %100 |
| 15 | MP1A | X | -1.702 | -1.702 | 0 | %100 |
| 16 | MP1A | Z | -2.948 | -2.948 | 0 | %100 |
| 17 | M23A | X | 0 | 0 | 0 | %100 |
| 18 | M23A | Z | 0 | 0 | 0 | %100 |
| 19 | M24 | X | 0 | 0 | 0 | %100 |
| 20 | M24 | Z | 0 | 0 | 0 | %100 |
| 21 | M39A | X | -1.99 | -1.99 | 0 | %100 |
| 22 | M39A | Z | -3.448 | -3.448 | 0 | %100 |
| 23 | M40 | X | -1.99 | -1.99 | 0 | %100 |
| 24 | M40 | Z | -3.448 | -3.448 | 0 | %100 |
| 25 | M55 | X | -1.962 | -1.962 | 0 | %100 |
| 26 | M55 | Z | -3.399 | -3.399 | 0 | %100 |
| 27 | M56 | X | -.491 | -.491 | 0 | %100 |
| 28 | M56 | Z | -.85 | -.85 | 0 | %100 |
| 29 | M60A | X | -1.277 | -1.277 | 0 | %100 |
| 30 | M60A | Z | -2.211 | -2.211 | 0 | %100 |
| 31 | M61 | X | -2.911 | -2.911 | 0 | %100 |
| 32 | M61 | Z | -5.042 | -5.042 | 0 | %100 |
| 33 | M62 | X | -2.911 | -2.911 | 0 | %100 |
| 34 | M62 | Z | -5.042 | -5.042 | 0 | %100 |
| 35 | M63 | X | -2.911 | -2.911 | 0 | %100 |
| 36 | M63 | Z | -5.042 | -5.042 | 0 | %100 |

## Member Distributed Loads (BLC 64 : Structure Wi (330 Deg)) (Continued)

| | Member Label | Direction | Start Magnitude[lb/ft,... | End Magnitude[lb/ft,F... | Start Location[ft,%] | End Location[ft,%] |
|---|---|---|---|---|---|---|
| 37 | M64 | X | -1.99 | -1.99 | 0 | %100 |
| 38 | M64 | Z | -3.448 | -3.448 | 0 | %100 |
| 39 | MP4A | X | -1.702 | -1.702 | 0 | %100 |
| 40 | MP4A | Z | -2.948 | -2.948 | 0 | %100 |
| 41 | MP2A | X | -1.702 | -1.702 | 0 | %100 |
| 42 | MP2A | Z | -2.948 | -2.948 | 0 | %100 |
| 43 | MP3A | X | -1.702 | -1.702 | 0 | %100 |
| 44 | MP3A | Z | -2.948 | -2.948 | 0 | %100 |
| 45 | MPA2 | X | -1.702 | -1.702 | 0 | %100 |
| 46 | MPA2 | Z | -2.948 | -2.948 | 0 | %100 |
| 47 | MP5A | X | -1.702 | -1.702 | 0 | %100 |
| 48 | MP5A | Z | -2.948 | -2.948 | 0 | %100 |
| 49 | M45 | X | -1.624 | -1.624 | 0 | %100 |
| 50 | M45 | Z | -2.812 | -2.812 | 0 | %100 |
| 51 | M46 | X | -.55 | -.55 | 0 | %100 |
| 52 | M46 | Z | -.953 | -.953 | 0 | %100 |
| 53 | MP1C | X | -1.702 | -1.702 | 0 | %100 |
| 54 | MP1C | Z | -2.948 | -2.948 | 0 | %100 |
| 55 | M54A | X | 0 | 0 | 0 | %100 |
| 56 | M54A | Z | 0 | 0 | 0 | %100 |
| 57 | MP2C | X | -1.702 | -1.702 | 0 | %100 |
| 58 | MP2C | Z | -2.948 | -2.948 | 0 | %100 |
| 59 | MP3C | X | -1.702 | -1.702 | 0 | %100 |
| 60 | MP3C | Z | -2.948 | -2.948 | 0 | %100 |
| 61 | MP5C | X | -1.702 | -1.702 | 0 | %100 |
| 62 | MP5C | Z | -2.948 | -2.948 | 0 | %100 |
| 63 | M82 | X | -1.277 | -1.277 | 0 | %100 |
| 64 | M82 | Z | -2.211 | -2.211 | 0 | %100 |
| 65 | M85 | X | -1.99 | -1.99 | 0 | %100 |
| 66 | M85 | Z | -3.448 | -3.448 | 0 | %100 |
| 67 | MP2B | X | -1.702 | -1.702 | 0 | %100 |
| 68 | MP2B | Z | -2.948 | -2.948 | 0 | %100 |
| 69 | MP3B | X | -1.702 | -1.702 | 0 | %100 |
| 70 | MP3B | Z | -2.948 | -2.948 | 0 | %100 |
| 71 | MP5B | X | -1.702 | -1.702 | 0 | %100 |
| 72 | MP5B | Z | -2.948 | -2.948 | 0 | %100 |
| 73 | M107A | X | -1.526 | -1.526 | 0 | %100 |
| 74 | M107A | Z | -2.643 | -2.643 | 0 | %100 |
| 75 | M108A | X | -.381 | -.381 | 0 | %100 |
| 76 | M108A | Z | -.661 | -.661 | 0 | %100 |
| 77 | M105 | X | -.917 | -.917 | 0 | %100 |
| 78 | M105 | Z | -1.589 | -1.589 | 0 | %100 |
| 79 | M106A | X | -.917 | -.917 | 0 | %100 |
| 80 | M106A | Z | -1.589 | -1.589 | 0 | %100 |
| 81 | M107 | X | -.55 | -.55 | 0 | %100 |
| 82 | M107 | Z | -.953 | -.953 | 0 | %100 |
| 83 | M108 | X | -1.624 | -1.624 | 0 | %100 |
| 84 | M108 | Z | -2.812 | -2.812 | 0 | %100 |
| 85 | MP1B | X | -1.702 | -1.702 | 0 | %100 |
| 86 | MP1B | Z | -2.948 | -2.948 | 0 | %100 |
| 87 | M102B | X | 0 | 0 | 0 | %100 |
| 88 | M102B | Z | 0 | 0 | 0 | %100 |

## Member Distributed Loads (BLC 64 : Structure Wi (330 Deg)) (Continued)

| | Member Label | Direction | Start Magnitude[lb/ft,... | End Magnitude[lb/ft,F... | Start Location[ft,%] | End Location[ft,%] |
|---|---|---|---|---|---|---|
| 89 | MP4C | X | -1.702 | -1.702 | 0 | %100 |
| 90 | MP4C | Z | -2.948 | -2.948 | 0 | %100 |
| 91 | MP4B | X | -1.702 | -1.702 | 0 | %100 |
| 92 | MP4B | Z | -2.948 | -2.948 | 0 | %100 |
| 93 | MPC2 | X | -1.702 | -1.702 | 0 | %100 |
| 94 | MPC2 | Z | -2.948 | -2.948 | 0 | %100 |
| 95 | MPB2 | X | -1.702 | -1.702 | 0 | %100 |
| 96 | MPB2 | Z | -2.948 | -2.948 | 0 | %100 |

## Member Distributed Loads (BLC 65 : Structure Wm (0 Deg))

| | Member Label | Direction | Start Magnitude[lb/ft,... | End Magnitude[lb/ft,F... | Start Location[ft,%] | End Location[ft,%] |
|---|---|---|---|---|---|---|
| 1 | M1 | X | 0 | 0 | 0 | %100 |
| 2 | M1 | Z | 0 | 0 | 0 | %100 |
| 3 | M2 | X | 0 | 0 | 0 | %100 |
| 4 | M2 | Z | 0 | 0 | 0 | %100 |
| 5 | M5 | X | 0 | 0 | 0 | %100 |
| 6 | M5 | Z | 0 | 0 | 0 | %100 |
| 7 | M6 | X | 0 | 0 | 0 | %100 |
| 8 | M6 | Z | -.832 | -.832 | 0 | %100 |
| 9 | M7 | X | 0 | 0 | 0 | %100 |
| 10 | M7 | Z | -.832 | -.832 | 0 | %100 |
| 11 | M6A | X | 0 | 0 | 0 | %100 |
| 12 | M6A | Z | -1.305 | -1.305 | 0 | %100 |
| 13 | M7A | X | 0 | 0 | 0 | %100 |
| 14 | M7A | Z | -1.305 | -1.305 | 0 | %100 |
| 15 | MP1A | X | 0 | 0 | 0 | %100 |
| 16 | MP1A | Z | -.62 | -.62 | 0 | %100 |
| 17 | M23A | X | 0 | 0 | 0 | %100 |
| 18 | M23A | Z | -.326 | -.326 | 0 | %100 |
| 19 | M24 | X | 0 | 0 | 0 | %100 |
| 20 | M24 | Z | -.326 | -.326 | 0 | %100 |
| 21 | M39A | X | 0 | 0 | 0 | %100 |
| 22 | M39A | Z | -.326 | -.326 | 0 | %100 |
| 23 | M40 | X | 0 | 0 | 0 | %100 |
| 24 | M40 | Z | -.326 | -.326 | 0 | %100 |
| 25 | M55 | X | 0 | 0 | 0 | %100 |
| 26 | M55 | Z | -.729 | -.729 | 0 | %100 |
| 27 | M56 | X | 0 | 0 | 0 | %100 |
| 28 | M56 | Z | -.729 | -.729 | 0 | %100 |
| 29 | M60A | X | 0 | 0 | 0 | %100 |
| 30 | M60A | Z | -.62 | -.62 | 0 | %100 |
| 31 | M61 | X | 0 | 0 | 0 | %100 |
| 32 | M61 | Z | -1.57 | -1.57 | 0 | %100 |
| 33 | M62 | X | 0 | 0 | 0 | %100 |
| 34 | M62 | Z | -1.57 | -1.57 | 0 | %100 |
| 35 | M63 | X | 0 | 0 | 0 | %100 |
| 36 | M63 | Z | -1.57 | -1.57 | 0 | %100 |
| 37 | M64 | X | 0 | 0 | 0 | %100 |
| 38 | M64 | Z | -1.305 | -1.305 | 0 | %100 |
| 39 | MP4A | X | 0 | 0 | 0 | %100 |
| 40 | MP4A | Z | -.62 | -.62 | 0 | %100 |

## Member Distributed Loads (BLC 65 : Structure Wm (0 Deg)) (Continued)

| | Member Label | Direction | Start Magnitude[lb/ft,... | End Magnitude[lb/ft,F... | Start Location[ft,%] | End Location[ft,%] |
|---|---|---|---|---|---|---|
| 41 | MP2A | X | 0 | 0 | 0 | %100 |
| 42 | MP2A | Z | -.62 | -.62 | 0 | %100 |
| 43 | MP3A | X | 0 | 0 | 0 | %100 |
| 44 | MP3A | Z | -.62 | -.62 | 0 | %100 |
| 45 | MPA2 | X | 0 | 0 | 0 | %100 |
| 46 | MPA2 | Z | -.62 | -.62 | 0 | %100 |
| 47 | MP5A | X | 0 | 0 | 0 | %100 |
| 48 | MP5A | Z | -.62 | -.62 | 0 | %100 |
| 49 | M45 | X | 0 | 0 | 0 | %100 |
| 50 | M45 | Z | -.414 | -.414 | 0 | %100 |
| 51 | M46 | X | 0 | 0 | 0 | %100 |
| 52 | M46 | Z | -.414 | -.414 | 0 | %100 |
| 53 | MP1C | X | 0 | 0 | 0 | %100 |
| 54 | MP1C | Z | -.62 | -.62 | 0 | %100 |
| 55 | M54A | X | 0 | 0 | 0 | %100 |
| 56 | M54A | Z | -.326 | -.326 | 0 | %100 |
| 57 | MP2C | X | 0 | 0 | 0 | %100 |
| 58 | MP2C | Z | -.62 | -.62 | 0 | %100 |
| 59 | MP3C | X | 0 | 0 | 0 | %100 |
| 60 | MP3C | Z | -.62 | -.62 | 0 | %100 |
| 61 | MP5C | X | 0 | 0 | 0 | %100 |
| 62 | MP5C | Z | -.62 | -.62 | 0 | %100 |
| 63 | M82 | X | 0 | 0 | 0 | %100 |
| 64 | M82 | Z | -.155 | -.155 | 0 | %100 |
| 65 | M85 | X | 0 | 0 | 0 | %100 |
| 66 | M85 | Z | -.326 | -.326 | 0 | %100 |
| 67 | MP2B | X | 0 | 0 | 0 | %100 |
| 68 | MP2B | Z | -.62 | -.62 | 0 | %100 |
| 69 | MP3B | X | 0 | 0 | 0 | %100 |
| 70 | MP3B | Z | -.62 | -.62 | 0 | %100 |
| 71 | MP5B | X | 0 | 0 | 0 | %100 |
| 72 | MP5B | Z | -.62 | -.62 | 0 | %100 |
| 73 | M107A | X | 0 | 0 | 0 | %100 |
| 74 | M107A | Z | -.555 | -.555 | 0 | %100 |
| 75 | M108A | X | 0 | 0 | 0 | %100 |
| 76 | M108A | Z | -.555 | -.555 | 0 | %100 |
| 77 | M105 | X | 0 | 0 | 0 | %100 |
| 78 | M105 | Z | -.547 | -.547 | 0 | %100 |
| 79 | M106A | X | 0 | 0 | 0 | %100 |
| 80 | M106A | Z | -.158 | -.158 | 0 | %100 |
| 81 | M107 | X | 0 | 0 | 0 | %100 |
| 82 | M107 | Z | -.158 | -.158 | 0 | %100 |
| 83 | M108 | X | 0 | 0 | 0 | %100 |
| 84 | M108 | Z | -.547 | -.547 | 0 | %100 |
| 85 | MP1B | X | 0 | 0 | 0 | %100 |
| 86 | MP1B | Z | -.62 | -.62 | 0 | %100 |
| 87 | M102B | X | 0 | 0 | 0 | %100 |
| 88 | M102B | Z | -.155 | -.155 | 0 | %100 |
| 89 | MP4C | X | 0 | 0 | 0 | %100 |
| 90 | MP4C | Z | -.62 | -.62 | 0 | %100 |
| 91 | MP4B | X | 0 | 0 | 0 | %100 |
| 92 | MP4B | Z | -.62 | -.62 | 0 | %100 |

## Member Distributed Loads (BLC 65 : Structure Wm (0 Deg)) (Continued)

| | Member Label | Direction | Start Magnitude[lb/ft,... | End Magnitude[lb/ft,F... | Start Location[ft,%] | End Location[ft,%] |
|---|---|---|---|---|---|---|
| 93 | MPC2 | X | 0 | 0 | 0 | %100 |
| 94 | MPC2 | Z | -.62 | -.62 | 0 | %100 |
| 95 | MPB2 | X | 0 | 0 | 0 | %100 |
| 96 | MPB2 | Z | -.62 | -.62 | 0 | %100 |

## Member Distributed Loads (BLC 66 : Structure Wm (30 Deg))

| | Member Label | Direction | Start Magnitude[lb/ft,... | End Magnitude[lb/ft,F... | Start Location[ft,%] | End Location[ft,%] |
|---|---|---|---|---|---|---|
| 1 | M1 | X | .092 | .092 | 0 | %100 |
| 2 | M1 | Z | -.16 | -.16 | 0 | %100 |
| 3 | M2 | X | .121 | .121 | 0 | %100 |
| 4 | M2 | Z | -.21 | -.21 | 0 | %100 |
| 5 | M5 | X | .139 | .139 | 0 | %100 |
| 6 | M5 | Z | -.24 | -.24 | 0 | %100 |
| 7 | M6 | X | .139 | .139 | 0 | %100 |
| 8 | M6 | Z | -.24 | -.24 | 0 | %100 |
| 9 | M7 | X | .555 | .555 | 0 | %100 |
| 10 | M7 | Z | -.961 | -.961 | 0 | %100 |
| 11 | M6A | X | .49 | .49 | 0 | %100 |
| 12 | M6A | Z | -.848 | -.848 | 0 | %100 |
| 13 | M7A | X | .49 | .49 | 0 | %100 |
| 14 | M7A | Z | -.848 | -.848 | 0 | %100 |
| 15 | MP1A | X | .31 | .31 | 0 | %100 |
| 16 | MP1A | Z | -.537 | -.537 | 0 | %100 |
| 17 | M23A | X | .49 | .49 | 0 | %100 |
| 18 | M23A | Z | -.848 | -.848 | 0 | %100 |
| 19 | M24 | X | .49 | .49 | 0 | %100 |
| 20 | M24 | Z | -.848 | -.848 | 0 | %100 |
| 21 | M39A | X | 0 | 0 | 0 | %100 |
| 22 | M39A | Z | 0 | 0 | 0 | %100 |
| 23 | M40 | X | 0 | 0 | 0 | %100 |
| 24 | M40 | Z | 0 | 0 | 0 | %100 |
| 25 | M55 | X | .121 | .121 | 0 | %100 |
| 26 | M55 | Z | -.21 | -.21 | 0 | %100 |
| 27 | M56 | X | .486 | .486 | 0 | %100 |
| 28 | M56 | Z | -.842 | -.842 | 0 | %100 |
| 29 | M60A | X | .233 | .233 | 0 | %100 |
| 30 | M60A | Z | -.403 | -.403 | 0 | %100 |
| 31 | M61 | X | .785 | .785 | 0 | %100 |
| 32 | M61 | Z | -1.36 | -1.36 | 0 | %100 |
| 33 | M62 | X | .785 | .785 | 0 | %100 |
| 34 | M62 | Z | -1.36 | -1.36 | 0 | %100 |
| 35 | M63 | X | .785 | .785 | 0 | %100 |
| 36 | M63 | Z | -1.36 | -1.36 | 0 | %100 |
| 37 | M64 | X | .49 | .49 | 0 | %100 |
| 38 | M64 | Z | -.848 | -.848 | 0 | %100 |
| 39 | MP4A | X | .31 | .31 | 0 | %100 |
| 40 | MP4A | Z | -.537 | -.537 | 0 | %100 |
| 41 | MP2A | X | .31 | .31 | 0 | %100 |
| 42 | MP2A | Z | -.537 | -.537 | 0 | %100 |
| 43 | MP3A | X | .31 | .31 | 0 | %100 |
| 44 | MP3A | Z | -.537 | -.537 | 0 | %100 |

## Member Distributed Loads (BLC 66 : Structure Wm (30 Deg)) (Continued)

| | Member Label | Direction | Start Magnitude[lb/ft,... | End Magnitude[lb/ft,F... | Start Location[ft,%] | End Location[ft,%] |
|---|---|---|---|---|---|---|
| 45 | MPA2 | X | .31 | .31 | 0 | %100 |
| 46 | MPA2 | Z | -.537 | -.537 | 0 | %100 |
| 47 | MP5A | X | .31 | .31 | 0 | %100 |
| 48 | MP5A | Z | -.537 | -.537 | 0 | %100 |
| 49 | M45 | X | .1 | .1 | 0 | %100 |
| 50 | M45 | Z | -.173 | -.173 | 0 | %100 |
| 51 | M46 | X | .294 | .294 | 0 | %100 |
| 52 | M46 | Z | -.51 | -.51 | 0 | %100 |
| 53 | MP1C | X | .31 | .31 | 0 | %100 |
| 54 | MP1C | Z | -.537 | -.537 | 0 | %100 |
| 55 | M54A | X | .49 | .49 | 0 | %100 |
| 56 | M54A | Z | -.848 | -.848 | 0 | %100 |
| 57 | MP2C | X | .31 | .31 | 0 | %100 |
| 58 | MP2C | Z | -.537 | -.537 | 0 | %100 |
| 59 | MP3C | X | .31 | .31 | 0 | %100 |
| 60 | MP3C | Z | -.537 | -.537 | 0 | %100 |
| 61 | MP5C | X | .31 | .31 | 0 | %100 |
| 62 | MP5C | Z | -.537 | -.537 | 0 | %100 |
| 63 | M82 | X | 0 | 0 | 0 | %100 |
| 64 | M82 | Z | 0 | 0 | 0 | %100 |
| 65 | M85 | X | 0 | 0 | 0 | %100 |
| 66 | M85 | Z | 0 | 0 | 0 | %100 |
| 67 | MP2B | X | .31 | .31 | 0 | %100 |
| 68 | MP2B | Z | -.537 | -.537 | 0 | %100 |
| 69 | MP3B | X | .31 | .31 | 0 | %100 |
| 70 | MP3B | Z | -.537 | -.537 | 0 | %100 |
| 71 | MP5B | X | .31 | .31 | 0 | %100 |
| 72 | MP5B | Z | -.537 | -.537 | 0 | %100 |
| 73 | M107A | X | .092 | .092 | 0 | %100 |
| 74 | M107A | Z | -.16 | -.16 | 0 | %100 |
| 75 | M108A | X | .37 | .37 | 0 | %100 |
| 76 | M108A | Z | -.641 | -.641 | 0 | %100 |
| 77 | M105 | X | .294 | .294 | 0 | %100 |
| 78 | M105 | Z | -.51 | -.51 | 0 | %100 |
| 79 | M106A | X | .1 | .1 | 0 | %100 |
| 80 | M106A | Z | -.173 | -.173 | 0 | %100 |
| 81 | M107 | X | .166 | .166 | 0 | %100 |
| 82 | M107 | Z | -.288 | -.288 | 0 | %100 |
| 83 | M108 | X | .166 | .166 | 0 | %100 |
| 84 | M108 | Z | -.288 | -.288 | 0 | %100 |
| 85 | MP1B | X | .31 | .31 | 0 | %100 |
| 86 | MP1B | Z | -.537 | -.537 | 0 | %100 |
| 87 | M102B | X | .233 | .233 | 0 | %100 |
| 88 | M102B | Z | -.403 | -.403 | 0 | %100 |
| 89 | MP4C | X | .31 | .31 | 0 | %100 |
| 90 | MP4C | Z | -.537 | -.537 | 0 | %100 |
| 91 | MP4B | X | .31 | .31 | 0 | %100 |
| 92 | MP4B | Z | -.537 | -.537 | 0 | %100 |
| 93 | MPC2 | X | .31 | .31 | 0 | %100 |
| 94 | MPC2 | Z | -.537 | -.537 | 0 | %100 |
| 95 | MPB2 | X | .31 | .31 | 0 | %100 |
| 96 | MPB2 | Z | -.537 | -.537 | 0 | %100 |

## Member Distributed Loads (BLC 67 : Structure Wm (60 Deg))

| | Member Label | Direction | Start Magnitude[lb/ft,... | End Magnitude[lb/ft,F... | Start Location[ft,%] | End Location[ft,%] |
|---|---|---|---|---|---|---|
| 1 | M1 | X | .48 | .48 | 0 | %100 |
| 2 | M1 | Z | -.277 | -.277 | 0 | %100 |
| 3 | M2 | X | .631 | .631 | 0 | %100 |
| 4 | M2 | Z | -.364 | -.364 | 0 | %100 |
| 5 | M5 | X | .721 | .721 | 0 | %100 |
| 6 | M5 | Z | -.416 | -.416 | 0 | %100 |
| 7 | M6 | X | 0 | 0 | 0 | %100 |
| 8 | M6 | Z | 0 | 0 | 0 | %100 |
| 9 | M7 | X | .721 | .721 | 0 | %100 |
| 10 | M7 | Z | -.416 | -.416 | 0 | %100 |
| 11 | M6A | X | .283 | .283 | 0 | %100 |
| 12 | M6A | Z | -.163 | -.163 | 0 | %100 |
| 13 | M7A | X | .283 | .283 | 0 | %100 |
| 14 | M7A | Z | -.163 | -.163 | 0 | %100 |
| 15 | MP1A | X | .537 | .537 | 0 | %100 |
| 16 | MP1A | Z | -.31 | -.31 | 0 | %100 |
| 17 | M23A | X | 1.13 | 1.13 | 0 | %100 |
| 18 | M23A | Z | -.653 | -.653 | 0 | %100 |
| 19 | M24 | X | 1.13 | 1.13 | 0 | %100 |
| 20 | M24 | Z | -.653 | -.653 | 0 | %100 |
| 21 | M39A | X | .283 | .283 | 0 | %100 |
| 22 | M39A | Z | -.163 | -.163 | 0 | %100 |
| 23 | M40 | X | .283 | .283 | 0 | %100 |
| 24 | M40 | Z | -.163 | -.163 | 0 | %100 |
| 25 | M55 | X | 0 | 0 | 0 | %100 |
| 26 | M55 | Z | 0 | 0 | 0 | %100 |
| 27 | M56 | X | .631 | .631 | 0 | %100 |
| 28 | M56 | Z | -.364 | -.364 | 0 | %100 |
| 29 | M60A | X | .134 | .134 | 0 | %100 |
| 30 | M60A | Z | -.078 | -.078 | 0 | %100 |
| 31 | M61 | X | 1.36 | 1.36 | 0 | %100 |
| 32 | M61 | Z | -.785 | -.785 | 0 | %100 |
| 33 | M62 | X | 1.36 | 1.36 | 0 | %100 |
| 34 | M62 | Z | -.785 | -.785 | 0 | %100 |
| 35 | M63 | X | 1.36 | 1.36 | 0 | %100 |
| 36 | M63 | Z | -.785 | -.785 | 0 | %100 |
| 37 | M64 | X | .283 | .283 | 0 | %100 |
| 38 | M64 | Z | -.163 | -.163 | 0 | %100 |
| 39 | MP4A | X | .537 | .537 | 0 | %100 |
| 40 | MP4A | Z | -.31 | -.31 | 0 | %100 |
| 41 | MP2A | X | .537 | .537 | 0 | %100 |
| 42 | MP2A | Z | -.31 | -.31 | 0 | %100 |
| 43 | MP3A | X | .537 | .537 | 0 | %100 |
| 44 | MP3A | Z | -.31 | -.31 | 0 | %100 |
| 45 | MPA2 | X | .537 | .537 | 0 | %100 |
| 46 | MPA2 | Z | -.31 | -.31 | 0 | %100 |
| 47 | MP5A | X | .537 | .537 | 0 | %100 |
| 48 | MP5A | Z | -.31 | -.31 | 0 | %100 |
| 49 | M45 | X | .137 | .137 | 0 | %100 |
| 50 | M45 | Z | -.079 | -.079 | 0 | %100 |
| 51 | M46 | X | .474 | .474 | 0 | %100 |
| 52 | M46 | Z | -.274 | -.274 | 0 | %100 |

## Member Distributed Loads (BLC 67 : Structure Wm (60 Deg)) (Continued)

| | Member Label | Direction | Start Magnitude[lb/ft,... | End Magnitude[lb/ft,F... | Start Location[ft,%] | End Location[ft,%] |
|---|---|---|---|---|---|---|
| 53 | MP1C | X | .537 | .537 | 0 | %100 |
| 54 | MP1C | Z | -.31 | -.31 | 0 | %100 |
| 55 | M54A | X | 1.13 | 1.13 | 0 | %100 |
| 56 | M54A | Z | -.653 | -.653 | 0 | %100 |
| 57 | MP2C | X | .537 | .537 | 0 | %100 |
| 58 | MP2C | Z | -.31 | -.31 | 0 | %100 |
| 59 | MP3C | X | .537 | .537 | 0 | %100 |
| 60 | MP3C | Z | -.31 | -.31 | 0 | %100 |
| 61 | MP5C | X | .537 | .537 | 0 | %100 |
| 62 | MP5C | Z | -.31 | -.31 | 0 | %100 |
| 63 | M82 | X | .134 | .134 | 0 | %100 |
| 64 | M82 | Z | -.078 | -.078 | 0 | %100 |
| 65 | M85 | X | .283 | .283 | 0 | %100 |
| 66 | M85 | Z | -.163 | -.163 | 0 | %100 |
| 67 | MP2B | X | .537 | .537 | 0 | %100 |
| 68 | MP2B | Z | -.31 | -.31 | 0 | %100 |
| 69 | MP3B | X | .537 | .537 | 0 | %100 |
| 70 | MP3B | Z | -.31 | -.31 | 0 | %100 |
| 71 | MP5B | X | .537 | .537 | 0 | %100 |
| 72 | MP5B | Z | -.31 | -.31 | 0 | %100 |
| 73 | M107A | X | 0 | 0 | 0 | %100 |
| 74 | M107A | Z | 0 | 0 | 0 | %100 |
| 75 | M108A | X | .48 | .48 | 0 | %100 |
| 76 | M108A | Z | -.277 | -.277 | 0 | %100 |
| 77 | M105 | X | .359 | .359 | 0 | %100 |
| 78 | M105 | Z | -.207 | -.207 | 0 | %100 |
| 79 | M106A | X | .359 | .359 | 0 | %100 |
| 80 | M106A | Z | -.207 | -.207 | 0 | %100 |
| 81 | M107 | X | .474 | .474 | 0 | %100 |
| 82 | M107 | Z | -.274 | -.274 | 0 | %100 |
| 83 | M108 | X | .137 | .137 | 0 | %100 |
| 84 | M108 | Z | -.079 | -.079 | 0 | %100 |
| 85 | MP1B | X | .537 | .537 | 0 | %100 |
| 86 | MP1B | Z | -.31 | -.31 | 0 | %100 |
| 87 | M102B | X | .537 | .537 | 0 | %100 |
| 88 | M102B | Z | -.31 | -.31 | 0 | %100 |
| 89 | MP4C | X | .537 | .537 | 0 | %100 |
| 90 | MP4C | Z | -.31 | -.31 | 0 | %100 |
| 91 | MP4B | X | .537 | .537 | 0 | %100 |
| 92 | MP4B | Z | -.31 | -.31 | 0 | %100 |
| 93 | MPC2 | X | .537 | .537 | 0 | %100 |
| 94 | MPC2 | Z | -.31 | -.31 | 0 | %100 |
| 95 | MPB2 | X | .537 | .537 | 0 | %100 |
| 96 | MPB2 | Z | -.31 | -.31 | 0 | %100 |

## Member Distributed Loads (BLC 68 : Structure Wm (90 Deg))

| | Member Label | Direction | Start Magnitude[lb/ft,... | End Magnitude[lb/ft,F... | Start Location[ft,%] | End Location[ft,%] |
|---|---|---|---|---|---|---|
| 1 | M1 | X | .74 | .74 | 0 | %100 |
| 2 | M1 | Z | 0 | 0 | 0 | %100 |
| 3 | M2 | X | .972 | .972 | 0 | %100 |
| 4 | M2 | Z | 0 | 0 | 0 | %100 |

## Member Distributed Loads (BLC 68 : Structure Wm (90 Deg)) (Continued)

| | Member Label | Direction | Start Magnitude[lb/ft,... | End Magnitude[lb/ft,F... | Start Location[ft,%] | End Location[ft,%] |
|---|---|---|---|---|---|---|
| 5 | M5 | X | 1.11 | 1.11 | 0 | %100 |
| 6 | M5 | Z | 0 | 0 | 0 | %100 |
| 7 | M6 | X | .277 | .277 | 0 | %100 |
| 8 | M6 | Z | 0 | 0 | 0 | %100 |
| 9 | M7 | X | .277 | .277 | 0 | %100 |
| 10 | M7 | Z | 0 | 0 | 0 | %100 |
| 11 | M6A | X | 0 | 0 | 0 | %100 |
| 12 | M6A | Z | 0 | 0 | 0 | %100 |
| 13 | M7A | X | 0 | 0 | 0 | %100 |
| 14 | M7A | Z | 0 | 0 | 0 | %100 |
| 15 | MP1A | X | .62 | .62 | 0 | %100 |
| 16 | MP1A | Z | 0 | 0 | 0 | %100 |
| 17 | M23A | X | .979 | .979 | 0 | %100 |
| 18 | M23A | Z | 0 | 0 | 0 | %100 |
| 19 | M24 | X | .979 | .979 | 0 | %100 |
| 20 | M24 | Z | 0 | 0 | 0 | %100 |
| 21 | M39A | X | .979 | .979 | 0 | %100 |
| 22 | M39A | Z | 0 | 0 | 0 | %100 |
| 23 | M40 | X | .979 | .979 | 0 | %100 |
| 24 | M40 | Z | 0 | 0 | 0 | %100 |
| 25 | M55 | X | .243 | .243 | 0 | %100 |
| 26 | M55 | Z | 0 | 0 | 0 | %100 |
| 27 | M56 | X | .243 | .243 | 0 | %100 |
| 28 | M56 | Z | 0 | 0 | 0 | %100 |
| 29 | M60A | X | 0 | 0 | 0 | %100 |
| 30 | M60A | Z | 0 | 0 | 0 | %100 |
| 31 | M61 | X | 1.57 | 1.57 | 0 | %100 |
| 32 | M61 | Z | 0 | 0 | 0 | %100 |
| 33 | M62 | X | 1.57 | 1.57 | 0 | %100 |
| 34 | M62 | Z | 0 | 0 | 0 | %100 |
| 35 | M63 | X | 1.57 | 1.57 | 0 | %100 |
| 36 | M63 | Z | 0 | 0 | 0 | %100 |
| 37 | M64 | X | 0 | 0 | 0 | %100 |
| 38 | M64 | Z | 0 | 0 | 0 | %100 |
| 39 | MP4A | X | .62 | .62 | 0 | %100 |
| 40 | MP4A | Z | 0 | 0 | 0 | %100 |
| 41 | MP2A | X | .62 | .62 | 0 | %100 |
| 42 | MP2A | Z | 0 | 0 | 0 | %100 |
| 43 | MP3A | X | .62 | .62 | 0 | %100 |
| 44 | MP3A | Z | 0 | 0 | 0 | %100 |
| 45 | MPA2 | X | .62 | .62 | 0 | %100 |
| 46 | MPA2 | Z | 0 | 0 | 0 | %100 |
| 47 | MP5A | X | .62 | .62 | 0 | %100 |
| 48 | MP5A | Z | 0 | 0 | 0 | %100 |
| 49 | M45 | X | .332 | .332 | 0 | %100 |
| 50 | M45 | Z | 0 | 0 | 0 | %100 |
| 51 | M46 | X | .332 | .332 | 0 | %100 |
| 52 | M46 | Z | 0 | 0 | 0 | %100 |
| 53 | MP1C | X | .62 | .62 | 0 | %100 |
| 54 | MP1C | Z | 0 | 0 | 0 | %100 |
| 55 | M54A | X | .979 | .979 | 0 | %100 |
| 56 | M54A | Z | 0 | 0 | 0 | %100 |

## Member Distributed Loads (BLC 68 : Structure Wm (90 Deg)) (Continued)

| | Member Label | Direction | Start Magnitude[lb/ft,... | End Magnitude[lb/ft,F... | Start Location[ft,%] | End Location[ft,%] |
|---|---|---|---|---|---|---|
| 57 | MP2C | X | .62 | .62 | 0 | %100 |
| 58 | MP2C | Z | 0 | 0 | 0 | %100 |
| 59 | MP3C | X | .62 | .62 | 0 | %100 |
| 60 | MP3C | Z | 0 | 0 | 0 | %100 |
| 61 | MP5C | X | .62 | .62 | 0 | %100 |
| 62 | MP5C | Z | 0 | 0 | 0 | %100 |
| 63 | M82 | X | .465 | .465 | 0 | %100 |
| 64 | M82 | Z | 0 | 0 | 0 | %100 |
| 65 | M85 | X | .979 | .979 | 0 | %100 |
| 66 | M85 | Z | 0 | 0 | 0 | %100 |
| 67 | MP2B | X | .62 | .62 | 0 | %100 |
| 68 | MP2B | Z | 0 | 0 | 0 | %100 |
| 69 | MP3B | X | .62 | .62 | 0 | %100 |
| 70 | MP3B | Z | 0 | 0 | 0 | %100 |
| 71 | MP5B | X | .62 | .62 | 0 | %100 |
| 72 | MP5B | Z | 0 | 0 | 0 | %100 |
| 73 | M107A | X | .185 | .185 | 0 | %100 |
| 74 | M107A | Z | 0 | 0 | 0 | %100 |
| 75 | M108A | X | .185 | .185 | 0 | %100 |
| 76 | M108A | Z | 0 | 0 | 0 | %100 |
| 77 | M105 | X | .199 | .199 | 0 | %100 |
| 78 | M105 | Z | 0 | 0 | 0 | %100 |
| 79 | M106A | X | .588 | .588 | 0 | %100 |
| 80 | M106A | Z | 0 | 0 | 0 | %100 |
| 81 | M107 | X | .588 | .588 | 0 | %100 |
| 82 | M107 | Z | 0 | 0 | 0 | %100 |
| 83 | M108 | X | .199 | .199 | 0 | %100 |
| 84 | M108 | Z | 0 | 0 | 0 | %100 |
| 85 | MP1B | X | .62 | .62 | 0 | %100 |
| 86 | MP1B | Z | 0 | 0 | 0 | %100 |
| 87 | M102B | X | .465 | .465 | 0 | %100 |
| 88 | M102B | Z | 0 | 0 | 0 | %100 |
| 89 | MP4C | X | .62 | .62 | 0 | %100 |
| 90 | MP4C | Z | 0 | 0 | 0 | %100 |
| 91 | MP4B | X | .62 | .62 | 0 | %100 |
| 92 | MP4B | Z | 0 | 0 | 0 | %100 |
| 93 | MPC2 | X | .62 | .62 | 0 | %100 |
| 94 | MPC2 | Z | 0 | 0 | 0 | %100 |
| 95 | MPB2 | X | .62 | .62 | 0 | %100 |
| 96 | MPB2 | Z | 0 | 0 | 0 | %100 |

## Member Distributed Loads (BLC 69 : Structure Wm (120 Deg))

| | Member Label | Direction | Start Magnitude[lb/ft,... | End Magnitude[lb/ft,F... | Start Location[ft,%] | End Location[ft,%] |
|---|---|---|---|---|---|---|
| 1 | M1 | X | .48 | .48 | 0 | %100 |
| 2 | M1 | Z | .277 | .277 | 0 | %100 |
| 3 | M2 | X | .631 | .631 | 0 | %100 |
| 4 | M2 | Z | .364 | .364 | 0 | %100 |
| 5 | M5 | X | .721 | .721 | 0 | %100 |
| 6 | M5 | Z | .416 | .416 | 0 | %100 |
| 7 | M6 | X | .721 | .721 | 0 | %100 |
| 8 | M6 | Z | .416 | .416 | 0 | %100 |

## Member Distributed Loads (BLC 69 : Structure Wm (120 Deg)) (Continued)

| | Member Label | Direction | Start Magnitude[lb/ft,... | End Magnitude[lb/ft,F... | Start Location[ft,%] | End Location[ft,%] |
|---|---|---|---|---|---|---|
| 9 | M7 | X | 0 | 0 | 0 | %100 |
| 10 | M7 | Z | 0 | 0 | 0 | %100 |
| 11 | M6A | X | .283 | .283 | 0 | %100 |
| 12 | M6A | Z | .163 | .163 | 0 | %100 |
| 13 | M7A | X | .283 | .283 | 0 | %100 |
| 14 | M7A | Z | .163 | .163 | 0 | %100 |
| 15 | MP1A | X | .537 | .537 | 0 | %100 |
| 16 | MP1A | Z | .31 | .31 | 0 | %100 |
| 17 | M23A | X | .283 | .283 | 0 | %100 |
| 18 | M23A | Z | .163 | .163 | 0 | %100 |
| 19 | M24 | X | .283 | .283 | 0 | %100 |
| 20 | M24 | Z | .163 | .163 | 0 | %100 |
| 21 | M39A | X | 1.13 | 1.13 | 0 | %100 |
| 22 | M39A | Z | .653 | .653 | 0 | %100 |
| 23 | M40 | X | 1.13 | 1.13 | 0 | %100 |
| 24 | M40 | Z | .653 | .653 | 0 | %100 |
| 25 | M55 | X | .631 | .631 | 0 | %100 |
| 26 | M55 | Z | .364 | .364 | 0 | %100 |
| 27 | M56 | X | 0 | 0 | 0 | %100 |
| 28 | M56 | Z | 0 | 0 | 0 | %100 |
| 29 | M60A | X | .134 | .134 | 0 | %100 |
| 30 | M60A | Z | .078 | .078 | 0 | %100 |
| 31 | M61 | X | 1.36 | 1.36 | 0 | %100 |
| 32 | M61 | Z | .785 | .785 | 0 | %100 |
| 33 | M62 | X | 1.36 | 1.36 | 0 | %100 |
| 34 | M62 | Z | .785 | .785 | 0 | %100 |
| 35 | M63 | X | 1.36 | 1.36 | 0 | %100 |
| 36 | M63 | Z | .785 | .785 | 0 | %100 |
| 37 | M64 | X | .283 | .283 | 0 | %100 |
| 38 | M64 | Z | .163 | .163 | 0 | %100 |
| 39 | MP4A | X | .537 | .537 | 0 | %100 |
| 40 | MP4A | Z | .31 | .31 | 0 | %100 |
| 41 | MP2A | X | .537 | .537 | 0 | %100 |
| 42 | MP2A | Z | .31 | .31 | 0 | %100 |
| 43 | MP3A | X | .537 | .537 | 0 | %100 |
| 44 | MP3A | Z | .31 | .31 | 0 | %100 |
| 45 | MPA2 | X | .537 | .537 | 0 | %100 |
| 46 | MPA2 | Z | .31 | .31 | 0 | %100 |
| 47 | MP5A | X | .537 | .537 | 0 | %100 |
| 48 | MP5A | Z | .31 | .31 | 0 | %100 |
| 49 | M45 | X | .474 | .474 | 0 | %100 |
| 50 | M45 | Z | .274 | .274 | 0 | %100 |
| 51 | M46 | X | .137 | .137 | 0 | %100 |
| 52 | M46 | Z | .079 | .079 | 0 | %100 |
| 53 | MP1C | X | .537 | .537 | 0 | %100 |
| 54 | MP1C | Z | .31 | .31 | 0 | %100 |
| 55 | M54A | X | .283 | .283 | 0 | %100 |
| 56 | M54A | Z | .163 | .163 | 0 | %100 |
| 57 | MP2C | X | .537 | .537 | 0 | %100 |
| 58 | MP2C | Z | .31 | .31 | 0 | %100 |
| 59 | MP3C | X | .537 | .537 | 0 | %100 |
| 60 | MP3C | Z | .31 | .31 | 0 | %100 |

## Member Distributed Loads (BLC 69 : Structure Wm (120 Deg)) (Continued)

| | Member Label | Direction | Start Magnitude[lb/ft,... | End Magnitude[lb/ft,F... | Start Location[ft,%] | End Location[ft,%] |
|---|---|---|---|---|---|---|
| 61 | MP5C | X | .537 | .537 | 0 | %100 |
| 62 | MP5C | Z | .31 | .31 | 0 | %100 |
| 63 | M82 | X | .537 | .537 | 0 | %100 |
| 64 | M82 | Z | .31 | .31 | 0 | %100 |
| 65 | M85 | X | 1.13 | 1.13 | 0 | %100 |
| 66 | M85 | Z | .653 | .653 | 0 | %100 |
| 67 | MP2B | X | .537 | .537 | 0 | %100 |
| 68 | MP2B | Z | .31 | .31 | 0 | %100 |
| 69 | MP3B | X | .537 | .537 | 0 | %100 |
| 70 | MP3B | Z | .31 | .31 | 0 | %100 |
| 71 | MP5B | X | .537 | .537 | 0 | %100 |
| 72 | MP5B | Z | .31 | .31 | 0 | %100 |
| 73 | M107A | X | .48 | .48 | 0 | %100 |
| 74 | M107A | Z | .277 | .277 | 0 | %100 |
| 75 | M108A | X | 0 | 0 | 0 | %100 |
| 76 | M108A | Z | 0 | 0 | 0 | %100 |
| 77 | M105 | X | .137 | .137 | 0 | %100 |
| 78 | M105 | Z | .079 | .079 | 0 | %100 |
| 79 | M106A | X | .474 | .474 | 0 | %100 |
| 80 | M106A | Z | .274 | .274 | 0 | %100 |
| 81 | M107 | X | .359 | .359 | 0 | %100 |
| 82 | M107 | Z | .207 | .207 | 0 | %100 |
| 83 | M108 | X | .359 | .359 | 0 | %100 |
| 84 | M108 | Z | .207 | .207 | 0 | %100 |
| 85 | MP1B | X | .537 | .537 | 0 | %100 |
| 86 | MP1B | Z | .31 | .31 | 0 | %100 |
| 87 | M102B | X | .134 | .134 | 0 | %100 |
| 88 | M102B | Z | .078 | .078 | 0 | %100 |
| 89 | MP4C | X | .537 | .537 | 0 | %100 |
| 90 | MP4C | Z | .31 | .31 | 0 | %100 |
| 91 | MP4B | X | .537 | .537 | 0 | %100 |
| 92 | MP4B | Z | .31 | .31 | 0 | %100 |
| 93 | MPC2 | X | .537 | .537 | 0 | %100 |
| 94 | MPC2 | Z | .31 | .31 | 0 | %100 |
| 95 | MPB2 | X | .537 | .537 | 0 | %100 |
| 96 | MPB2 | Z | .31 | .31 | 0 | %100 |

## Member Distributed Loads (BLC 70 : Structure Wm (150 Deg))

| | Member Label | Direction | Start Magnitude[lb/ft,... | End Magnitude[lb/ft,F... | Start Location[ft,%] | End Location[ft,%] |
|---|---|---|---|---|---|---|
| 1 | M1 | X | .092 | .092 | 0 | %100 |
| 2 | M1 | Z | .16 | .16 | 0 | %100 |
| 3 | M2 | X | .121 | .121 | 0 | %100 |
| 4 | M2 | Z | .21 | .21 | 0 | %100 |
| 5 | M5 | X | .139 | .139 | 0 | %100 |
| 6 | M5 | Z | .24 | .24 | 0 | %100 |
| 7 | M6 | X | .555 | .555 | 0 | %100 |
| 8 | M6 | Z | .961 | .961 | 0 | %100 |
| 9 | M7 | X | .139 | .139 | 0 | %100 |
| 10 | M7 | Z | .24 | .24 | 0 | %100 |
| 11 | M6A | X | .49 | .49 | 0 | %100 |
| 12 | M6A | Z | .848 | .848 | 0 | %100 |

## Member Distributed Loads (BLC 70 : Structure Wm (150 Deg)) (Continued)

| | Member Label | Direction | Start Magnitude[lb/ft,... | End Magnitude[lb/ft,F... | Start Location[ft,%] | End Location[ft,%] |
|---|---|---|---|---|---|---|
| 13 | M7A | X | .49 | .49 | 0 | %100 |
| 14 | M7A | Z | .848 | .848 | 0 | %100 |
| 15 | MP1A | X | .31 | .31 | 0 | %100 |
| 16 | MP1A | Z | .537 | .537 | 0 | %100 |
| 17 | M23A | X | 0 | 0 | 0 | %100 |
| 18 | M23A | Z | 0 | 0 | 0 | %100 |
| 19 | M24 | X | 0 | 0 | 0 | %100 |
| 20 | M24 | Z | 0 | 0 | 0 | %100 |
| 21 | M39A | X | .49 | .49 | 0 | %100 |
| 22 | M39A | Z | .848 | .848 | 0 | %100 |
| 23 | M40 | X | .49 | .49 | 0 | %100 |
| 24 | M40 | Z | .848 | .848 | 0 | %100 |
| 25 | M55 | X | .486 | .486 | 0 | %100 |
| 26 | M55 | Z | .842 | .842 | 0 | %100 |
| 27 | M56 | X | .121 | .121 | 0 | %100 |
| 28 | M56 | Z | .21 | .21 | 0 | %100 |
| 29 | M60A | X | .233 | .233 | 0 | %100 |
| 30 | M60A | Z | .403 | .403 | 0 | %100 |
| 31 | M61 | X | .785 | .785 | 0 | %100 |
| 32 | M61 | Z | 1.36 | 1.36 | 0 | %100 |
| 33 | M62 | X | .785 | .785 | 0 | %100 |
| 34 | M62 | Z | 1.36 | 1.36 | 0 | %100 |
| 35 | M63 | X | .785 | .785 | 0 | %100 |
| 36 | M63 | Z | 1.36 | 1.36 | 0 | %100 |
| 37 | M64 | X | .49 | .49 | 0 | %100 |
| 38 | M64 | Z | .848 | .848 | 0 | %100 |
| 39 | MP4A | X | .31 | .31 | 0 | %100 |
| 40 | MP4A | Z | .537 | .537 | 0 | %100 |
| 41 | MP2A | X | .31 | .31 | 0 | %100 |
| 42 | MP2A | Z | .537 | .537 | 0 | %100 |
| 43 | MP3A | X | .31 | .31 | 0 | %100 |
| 44 | MP3A | Z | .537 | .537 | 0 | %100 |
| 45 | MPA2 | X | .31 | .31 | 0 | %100 |
| 46 | MPA2 | Z | .537 | .537 | 0 | %100 |
| 47 | MP5A | X | .31 | .31 | 0 | %100 |
| 48 | MP5A | Z | .537 | .537 | 0 | %100 |
| 49 | M45 | X | .294 | .294 | 0 | %100 |
| 50 | M45 | Z | .51 | .51 | 0 | %100 |
| 51 | M46 | X | .1 | .1 | 0 | %100 |
| 52 | M46 | Z | .173 | .173 | 0 | %100 |
| 53 | MP1C | X | .31 | .31 | 0 | %100 |
| 54 | MP1C | Z | .537 | .537 | 0 | %100 |
| 55 | M54A | X | 0 | 0 | 0 | %100 |
| 56 | M54A | Z | 0 | 0 | 0 | %100 |
| 57 | MP2C | X | .31 | .31 | 0 | %100 |
| 58 | MP2C | Z | .537 | .537 | 0 | %100 |
| 59 | MP3C | X | .31 | .31 | 0 | %100 |
| 60 | MP3C | Z | .537 | .537 | 0 | %100 |
| 61 | MP5C | X | .31 | .31 | 0 | %100 |
| 62 | MP5C | Z | .537 | .537 | 0 | %100 |
| 63 | M82 | X | .233 | .233 | 0 | %100 |
| 64 | M82 | Z | .403 | .403 | 0 | %100 |

## Member Distributed Loads (BLC 70 : Structure Wm (150 Deg)) (Continued)

| | Member Label | Direction | Start Magnitude[lb/ft,... | End Magnitude[lb/ft,F... | Start Location[ft,%] | End Location[ft,%] |
|---|---|---|---|---|---|---|
| 65 | M85 | X | .49 | .49 | 0 | %100 |
| 66 | M85 | Z | .848 | .848 | 0 | %100 |
| 67 | MP2B | X | .31 | .31 | 0 | %100 |
| 68 | MP2B | Z | .537 | .537 | 0 | %100 |
| 69 | MP3B | X | .31 | .31 | 0 | %100 |
| 70 | MP3B | Z | .537 | .537 | 0 | %100 |
| 71 | MP5B | X | .31 | .31 | 0 | %100 |
| 72 | MP5B | Z | .537 | .537 | 0 | %100 |
| 73 | M107A | X | .37 | .37 | 0 | %100 |
| 74 | M107A | Z | .641 | .641 | 0 | %100 |
| 75 | M108A | X | .092 | .092 | 0 | %100 |
| 76 | M108A | Z | .16 | .16 | 0 | %100 |
| 77 | M105 | X | .166 | .166 | 0 | %100 |
| 78 | M105 | Z | .288 | .288 | 0 | %100 |
| 79 | M106A | X | .166 | .166 | 0 | %100 |
| 80 | M106A | Z | .288 | .288 | 0 | %100 |
| 81 | M107 | X | .1 | .1 | 0 | %100 |
| 82 | M107 | Z | .173 | .173 | 0 | %100 |
| 83 | M108 | X | .294 | .294 | 0 | %100 |
| 84 | M108 | Z | .51 | .51 | 0 | %100 |
| 85 | MP1B | X | .31 | .31 | 0 | %100 |
| 86 | MP1B | Z | .537 | .537 | 0 | %100 |
| 87 | M102B | X | 0 | 0 | 0 | %100 |
| 88 | M102B | Z | 0 | 0 | 0 | %100 |
| 89 | MP4C | X | .31 | .31 | 0 | %100 |
| 90 | MP4C | Z | .537 | .537 | 0 | %100 |
| 91 | MP4B | X | .31 | .31 | 0 | %100 |
| 92 | MP4B | Z | .537 | .537 | 0 | %100 |
| 93 | MPC2 | X | .31 | .31 | 0 | %100 |
| 94 | MPC2 | Z | .537 | .537 | 0 | %100 |
| 95 | MPB2 | X | .31 | .31 | 0 | %100 |
| 96 | MPB2 | Z | .537 | .537 | 0 | %100 |

## Member Distributed Loads (BLC 71 : Structure Wm (180 Deg))

| | Member Label | Direction | Start Magnitude[lb/ft,... | End Magnitude[lb/ft,F... | Start Location[ft,%] | End Location[ft,%] |
|---|---|---|---|---|---|---|
| 1 | M1 | X | 0 | 0 | 0 | %100 |
| 2 | M1 | Z | 0 | 0 | 0 | %100 |
| 3 | M2 | X | 0 | 0 | 0 | %100 |
| 4 | M2 | Z | 0 | 0 | 0 | %100 |
| 5 | M5 | X | 0 | 0 | 0 | %100 |
| 6 | M5 | Z | 0 | 0 | 0 | %100 |
| 7 | M6 | X | 0 | 0 | 0 | %100 |
| 8 | M6 | Z | .832 | .832 | 0 | %100 |
| 9 | M7 | X | 0 | 0 | 0 | %100 |
| 10 | M7 | Z | .832 | .832 | 0 | %100 |
| 11 | M6A | X | 0 | 0 | 0 | %100 |
| 12 | M6A | Z | 1.305 | 1.305 | 0 | %100 |
| 13 | M7A | X | 0 | 0 | 0 | %100 |
| 14 | M7A | Z | 1.305 | 1.305 | 0 | %100 |
| 15 | MP1A | X | 0 | 0 | 0 | %100 |
| 16 | MP1A | Z | .62 | .62 | 0 | %100 |

## Member Distributed Loads (BLC 71 : Structure Wm (180 Deg)) (Continued)

| | Member Label | Direction | Start Magnitude[lb/ft,... | End Magnitude[lb/ft,F... | Start Location[ft,%] | End Location[ft,%] |
|---|---|---|---|---|---|---|
| 17 | M23A | X | 0 | 0 | 0 | %100 |
| 18 | M23A | Z | .326 | .326 | 0 | %100 |
| 19 | M24 | X | 0 | 0 | 0 | %100 |
| 20 | M24 | Z | .326 | .326 | 0 | %100 |
| 21 | M39A | X | 0 | 0 | 0 | %100 |
| 22 | M39A | Z | .326 | .326 | 0 | %100 |
| 23 | M40 | X | 0 | 0 | 0 | %100 |
| 24 | M40 | Z | .326 | .326 | 0 | %100 |
| 25 | M55 | X | 0 | 0 | 0 | %100 |
| 26 | M55 | Z | .729 | .729 | 0 | %100 |
| 27 | M56 | X | 0 | 0 | 0 | %100 |
| 28 | M56 | Z | .729 | .729 | 0 | %100 |
| 29 | M60A | X | 0 | 0 | 0 | %100 |
| 30 | M60A | Z | .62 | .62 | 0 | %100 |
| 31 | M61 | X | 0 | 0 | 0 | %100 |
| 32 | M61 | Z | 1.57 | 1.57 | 0 | %100 |
| 33 | M62 | X | 0 | 0 | 0 | %100 |
| 34 | M62 | Z | 1.57 | 1.57 | 0 | %100 |
| 35 | M63 | X | 0 | 0 | 0 | %100 |
| 36 | M63 | Z | 1.57 | 1.57 | 0 | %100 |
| 37 | M64 | X | 0 | 0 | 0 | %100 |
| 38 | M64 | Z | 1.305 | 1.305 | 0 | %100 |
| 39 | MP4A | X | 0 | 0 | 0 | %100 |
| 40 | MP4A | Z | .62 | .62 | 0 | %100 |
| 41 | MP2A | X | 0 | 0 | 0 | %100 |
| 42 | MP2A | Z | .62 | .62 | 0 | %100 |
| 43 | MP3A | X | 0 | 0 | 0 | %100 |
| 44 | MP3A | Z | .62 | .62 | 0 | %100 |
| 45 | MPA2 | X | 0 | 0 | 0 | %100 |
| 46 | MPA2 | Z | .62 | .62 | 0 | %100 |
| 47 | MP5A | X | 0 | 0 | 0 | %100 |
| 48 | MP5A | Z | .62 | .62 | 0 | %100 |
| 49 | M45 | X | 0 | 0 | 0 | %100 |
| 50 | M45 | Z | .414 | .414 | 0 | %100 |
| 51 | M46 | X | 0 | 0 | 0 | %100 |
| 52 | M46 | Z | .414 | .414 | 0 | %100 |
| 53 | MP1C | X | 0 | 0 | 0 | %100 |
| 54 | MP1C | Z | .62 | .62 | 0 | %100 |
| 55 | M54A | X | 0 | 0 | 0 | %100 |
| 56 | M54A | Z | .326 | .326 | 0 | %100 |
| 57 | MP2C | X | 0 | 0 | 0 | %100 |
| 58 | MP2C | Z | .62 | .62 | 0 | %100 |
| 59 | MP3C | X | 0 | 0 | 0 | %100 |
| 60 | MP3C | Z | .62 | .62 | 0 | %100 |
| 61 | MP5C | X | 0 | 0 | 0 | %100 |
| 62 | MP5C | Z | .62 | .62 | 0 | %100 |
| 63 | M82 | X | 0 | 0 | 0 | %100 |
| 64 | M82 | Z | .155 | .155 | 0 | %100 |
| 65 | M85 | X | 0 | 0 | 0 | %100 |
| 66 | M85 | Z | .326 | .326 | 0 | %100 |
| 67 | MP2B | X | 0 | 0 | 0 | %100 |
| 68 | MP2B | Z | .62 | .62 | 0 | %100 |

## Member Distributed Loads (BLC 71 : Structure Wm (180 Deg)) (Continued)

| | Member Label | Direction | Start Magnitude[lb/ft,... | End Magnitude[lb/ft,F... | Start Location[ft,%] | End Location[ft,%] |
|---|---|---|---|---|---|---|
| 69 | MP3B | X | 0 | 0 | 0 | %100 |
| 70 | MP3B | Z | .62 | .62 | 0 | %100 |
| 71 | MP5B | X | 0 | 0 | 0 | %100 |
| 72 | MP5B | Z | .62 | .62 | 0 | %100 |
| 73 | M107A | X | 0 | 0 | 0 | %100 |
| 74 | M107A | Z | .555 | .555 | 0 | %100 |
| 75 | M108A | X | 0 | 0 | 0 | %100 |
| 76 | M108A | Z | .555 | .555 | 0 | %100 |
| 77 | M105 | X | 0 | 0 | 0 | %100 |
| 78 | M105 | Z | .547 | .547 | 0 | %100 |
| 79 | M106A | X | 0 | 0 | 0 | %100 |
| 80 | M106A | Z | .158 | .158 | 0 | %100 |
| 81 | M107 | X | 0 | 0 | 0 | %100 |
| 82 | M107 | Z | .158 | .158 | 0 | %100 |
| 83 | M108 | X | 0 | 0 | 0 | %100 |
| 84 | M108 | Z | .547 | .547 | 0 | %100 |
| 85 | MP1B | X | 0 | 0 | 0 | %100 |
| 86 | MP1B | Z | .62 | .62 | 0 | %100 |
| 87 | M102B | X | 0 | 0 | 0 | %100 |
| 88 | M102B | Z | .155 | .155 | 0 | %100 |
| 89 | MP4C | X | 0 | 0 | 0 | %100 |
| 90 | MP4C | Z | .62 | .62 | 0 | %100 |
| 91 | MP4B | X | 0 | 0 | 0 | %100 |
| 92 | MP4B | Z | .62 | .62 | 0 | %100 |
| 93 | MPC2 | X | 0 | 0 | 0 | %100 |
| 94 | MPC2 | Z | .62 | .62 | 0 | %100 |
| 95 | MPB2 | X | 0 | 0 | 0 | %100 |
| 96 | MPB2 | Z | .62 | .62 | 0 | %100 |

## Member Distributed Loads (BLC 72 : Structure Wm (210 Deg))

| | Member Label | Direction | Start Magnitude[lb/ft,... | End Magnitude[lb/ft,F... | Start Location[ft,%] | End Location[ft,%] |
|---|---|---|---|---|---|---|
| 1 | M1 | X | -.092 | -.092 | 0 | %100 |
| 2 | M1 | Z | .16 | .16 | 0 | %100 |
| 3 | M2 | X | -.121 | -.121 | 0 | %100 |
| 4 | M2 | Z | .21 | .21 | 0 | %100 |
| 5 | M5 | X | -.139 | -.139 | 0 | %100 |
| 6 | M5 | Z | .24 | .24 | 0 | %100 |
| 7 | M6 | X | -.139 | -.139 | 0 | %100 |
| 8 | M6 | Z | .24 | .24 | 0 | %100 |
| 9 | M7 | X | -.555 | -.555 | 0 | %100 |
| 10 | M7 | Z | .961 | .961 | 0 | %100 |
| 11 | M6A | X | -.49 | -.49 | 0 | %100 |
| 12 | M6A | Z | .848 | .848 | 0 | %100 |
| 13 | M7A | X | -.49 | -.49 | 0 | %100 |
| 14 | M7A | Z | .848 | .848 | 0 | %100 |
| 15 | MP1A | X | -.31 | -.31 | 0 | %100 |
| 16 | MP1A | Z | .537 | .537 | 0 | %100 |
| 17 | M23A | X | -.49 | -.49 | 0 | %100 |
| 18 | M23A | Z | .848 | .848 | 0 | %100 |
| 19 | M24 | X | -.49 | -.49 | 0 | %100 |
| 20 | M24 | Z | .848 | .848 | 0 | %100 |

## Member Distributed Loads (BLC 72 : Structure Wm (210 Deg)) (Continued)

| | Member Label | Direction | Start Magnitude[lb/ft,... | End Magnitude[lb/ft,F... | Start Location[ft,%] | End Location[ft,%] |
|---|---|---|---|---|---|---|
| 21 | M39A | X | 0 | 0 | 0 | %100 |
| 22 | M39A | Z | 0 | 0 | 0 | %100 |
| 23 | M40 | X | 0 | 0 | 0 | %100 |
| 24 | M40 | Z | 0 | 0 | 0 | %100 |
| 25 | M55 | X | -.121 | -.121 | 0 | %100 |
| 26 | M55 | Z | .21 | .21 | 0 | %100 |
| 27 | M56 | X | -.486 | -.486 | 0 | %100 |
| 28 | M56 | Z | .842 | .842 | 0 | %100 |
| 29 | M60A | X | -.233 | -.233 | 0 | %100 |
| 30 | M60A | Z | .403 | .403 | 0 | %100 |
| 31 | M61 | X | -.785 | -.785 | 0 | %100 |
| 32 | M61 | Z | 1.36 | 1.36 | 0 | %100 |
| 33 | M62 | X | -.785 | -.785 | 0 | %100 |
| 34 | M62 | Z | 1.36 | 1.36 | 0 | %100 |
| 35 | M63 | X | -.785 | -.785 | 0 | %100 |
| 36 | M63 | Z | 1.36 | 1.36 | 0 | %100 |
| 37 | M64 | X | -.49 | -.49 | 0 | %100 |
| 38 | M64 | Z | .848 | .848 | 0 | %100 |
| 39 | MP4A | X | -.31 | -.31 | 0 | %100 |
| 40 | MP4A | Z | .537 | .537 | 0 | %100 |
| 41 | MP2A | X | -.31 | -.31 | 0 | %100 |
| 42 | MP2A | Z | .537 | .537 | 0 | %100 |
| 43 | MP3A | X | -.31 | -.31 | 0 | %100 |
| 44 | MP3A | Z | .537 | .537 | 0 | %100 |
| 45 | MPA2 | X | -.31 | -.31 | 0 | %100 |
| 46 | MPA2 | Z | .537 | .537 | 0 | %100 |
| 47 | MP5A | X | -.31 | -.31 | 0 | %100 |
| 48 | MP5A | Z | .537 | .537 | 0 | %100 |
| 49 | M45 | X | -.1 | -.1 | 0 | %100 |
| 50 | M45 | Z | .173 | .173 | 0 | %100 |
| 51 | M46 | X | -.294 | -.294 | 0 | %100 |
| 52 | M46 | Z | .51 | .51 | 0 | %100 |
| 53 | MP1C | X | -.31 | -.31 | 0 | %100 |
| 54 | MP1C | Z | .537 | .537 | 0 | %100 |
| 55 | M54A | X | -.49 | -.49 | 0 | %100 |
| 56 | M54A | Z | .848 | .848 | 0 | %100 |
| 57 | MP2C | X | -.31 | -.31 | 0 | %100 |
| 58 | MP2C | Z | .537 | .537 | 0 | %100 |
| 59 | MP3C | X | -.31 | -.31 | 0 | %100 |
| 60 | MP3C | Z | .537 | .537 | 0 | %100 |
| 61 | MP5C | X | -.31 | -.31 | 0 | %100 |
| 62 | MP5C | Z | .537 | .537 | 0 | %100 |
| 63 | M82 | X | 0 | 0 | 0 | %100 |
| 64 | M82 | Z | 0 | 0 | 0 | %100 |
| 65 | M85 | X | 0 | 0 | 0 | %100 |
| 66 | M85 | Z | 0 | 0 | 0 | %100 |
| 67 | MP2B | X | -.31 | -.31 | 0 | %100 |
| 68 | MP2B | Z | .537 | .537 | 0 | %100 |
| 69 | MP3B | X | -.31 | -.31 | 0 | %100 |
| 70 | MP3B | Z | .537 | .537 | 0 | %100 |
| 71 | MP5B | X | -.31 | -.31 | 0 | %100 |
| 72 | MP5B | Z | .537 | .537 | 0 | %100 |

## Member Distributed Loads (BLC 72 : Structure Wm (210 Deg)) (Continued)

| | Member Label | Direction | Start Magnitude[lb/ft,... | End Magnitude[lb/ft,F... | Start Location[ft,%] | End Location[ft,%] |
|---|---|---|---|---|---|---|
| 73 | M107A | X | -.092 | -.092 | 0 | %100 |
| 74 | M107A | Z | .16 | .16 | 0 | %100 |
| 75 | M108A | X | -.37 | -.37 | 0 | %100 |
| 76 | M108A | Z | .641 | .641 | 0 | %100 |
| 77 | M105 | X | -.294 | -.294 | 0 | %100 |
| 78 | M105 | Z | .51 | .51 | 0 | %100 |
| 79 | M106A | X | -.1 | -.1 | 0 | %100 |
| 80 | M106A | Z | .173 | .173 | 0 | %100 |
| 81 | M107 | X | -.166 | -.166 | 0 | %100 |
| 82 | M107 | Z | .288 | .288 | 0 | %100 |
| 83 | M108 | X | -.166 | -.166 | 0 | %100 |
| 84 | M108 | Z | .288 | .288 | 0 | %100 |
| 85 | MP1B | X | -.31 | -.31 | 0 | %100 |
| 86 | MP1B | Z | .537 | .537 | 0 | %100 |
| 87 | M102B | X | -.233 | -.233 | 0 | %100 |
| 88 | M102B | Z | .403 | .403 | 0 | %100 |
| 89 | MP4C | X | -.31 | -.31 | 0 | %100 |
| 90 | MP4C | Z | .537 | .537 | 0 | %100 |
| 91 | MP4B | X | -.31 | -.31 | 0 | %100 |
| 92 | MP4B | Z | .537 | .537 | 0 | %100 |
| 93 | MPC2 | X | -.31 | -.31 | 0 | %100 |
| 94 | MPC2 | Z | .537 | .537 | 0 | %100 |
| 95 | MPB2 | X | -.31 | -.31 | 0 | %100 |
| 96 | MPB2 | Z | .537 | .537 | 0 | %100 |

## Member Distributed Loads (BLC 73 : Structure Wm (240 Deg))

| | Member Label | Direction | Start Magnitude[lb/ft,... | End Magnitude[lb/ft,F... | Start Location[ft,%] | End Location[ft,%] |
|---|---|---|---|---|---|---|
| 1 | M1 | X | -.48 | -.48 | 0 | %100 |
| 2 | M1 | Z | .277 | .277 | 0 | %100 |
| 3 | M2 | X | -.631 | -.631 | 0 | %100 |
| 4 | M2 | Z | .364 | .364 | 0 | %100 |
| 5 | M5 | X | -.721 | -.721 | 0 | %100 |
| 6 | M5 | Z | .416 | .416 | 0 | %100 |
| 7 | M6 | X | 0 | 0 | 0 | %100 |
| 8 | M6 | Z | 0 | 0 | 0 | %100 |
| 9 | M7 | X | -.721 | -.721 | 0 | %100 |
| 10 | M7 | Z | .416 | .416 | 0 | %100 |
| 11 | M6A | X | -.283 | -.283 | 0 | %100 |
| 12 | M6A | Z | .163 | .163 | 0 | %100 |
| 13 | M7A | X | -.283 | -.283 | 0 | %100 |
| 14 | M7A | Z | .163 | .163 | 0 | %100 |
| 15 | MP1A | X | -.537 | -.537 | 0 | %100 |
| 16 | MP1A | Z | .31 | .31 | 0 | %100 |
| 17 | M23A | X | -1.13 | -1.13 | 0 | %100 |
| 18 | M23A | Z | .653 | .653 | 0 | %100 |
| 19 | M24 | X | -1.13 | -1.13 | 0 | %100 |
| 20 | M24 | Z | .653 | .653 | 0 | %100 |
| 21 | M39A | X | -.283 | -.283 | 0 | %100 |
| 22 | M39A | Z | .163 | .163 | 0 | %100 |
| 23 | M40 | X | -.283 | -.283 | 0 | %100 |
| 24 | M40 | Z | .163 | .163 | 0 | %100 |

## Member Distributed Loads (BLC 73 : Structure Wm (240 Deg)) (Continued)

| | Member Label | Direction | Start Magnitude[lb/ft,... | End Magnitude[lb/ft,F... | Start Location[ft,%] | End Location[ft,%] |
|---|---|---|---|---|---|---|
| 25 | M55 | X | 0 | 0 | 0 | %100 |
| 26 | M55 | Z | 0 | 0 | 0 | %100 |
| 27 | M56 | X | -.631 | -.631 | 0 | %100 |
| 28 | M56 | Z | .364 | .364 | 0 | %100 |
| 29 | M60A | X | -.134 | -.134 | 0 | %100 |
| 30 | M60A | Z | .078 | .078 | 0 | %100 |
| 31 | M61 | X | -1.36 | -1.36 | 0 | %100 |
| 32 | M61 | Z | .785 | .785 | 0 | %100 |
| 33 | M62 | X | -1.36 | -1.36 | 0 | %100 |
| 34 | M62 | Z | .785 | .785 | 0 | %100 |
| 35 | M63 | X | -1.36 | -1.36 | 0 | %100 |
| 36 | M63 | Z | .785 | .785 | 0 | %100 |
| 37 | M64 | X | -.283 | -.283 | 0 | %100 |
| 38 | M64 | Z | .163 | .163 | 0 | %100 |
| 39 | MP4A | X | -.537 | -.537 | 0 | %100 |
| 40 | MP4A | Z | .31 | .31 | 0 | %100 |
| 41 | MP2A | X | -.537 | -.537 | 0 | %100 |
| 42 | MP2A | Z | .31 | .31 | 0 | %100 |
| 43 | MP3A | X | -.537 | -.537 | 0 | %100 |
| 44 | MP3A | Z | .31 | .31 | 0 | %100 |
| 45 | MPA2 | X | -.537 | -.537 | 0 | %100 |
| 46 | MPA2 | Z | .31 | .31 | 0 | %100 |
| 47 | MP5A | X | -.537 | -.537 | 0 | %100 |
| 48 | MP5A | Z | .31 | .31 | 0 | %100 |
| 49 | M45 | X | -.137 | -.137 | 0 | %100 |
| 50 | M45 | Z | .079 | .079 | 0 | %100 |
| 51 | M46 | X | -.474 | -.474 | 0 | %100 |
| 52 | M46 | Z | .274 | .274 | 0 | %100 |
| 53 | MP1C | X | -.537 | -.537 | 0 | %100 |
| 54 | MP1C | Z | .31 | .31 | 0 | %100 |
| 55 | M54A | X | -1.13 | -1.13 | 0 | %100 |
| 56 | M54A | Z | .653 | .653 | 0 | %100 |
| 57 | MP2C | X | -.537 | -.537 | 0 | %100 |
| 58 | MP2C | Z | .31 | .31 | 0 | %100 |
| 59 | MP3C | X | -.537 | -.537 | 0 | %100 |
| 60 | MP3C | Z | .31 | .31 | 0 | %100 |
| 61 | MP5C | X | -.537 | -.537 | 0 | %100 |
| 62 | MP5C | Z | .31 | .31 | 0 | %100 |
| 63 | M82 | X | -.134 | -.134 | 0 | %100 |
| 64 | M82 | Z | .078 | .078 | 0 | %100 |
| 65 | M85 | X | -.283 | -.283 | 0 | %100 |
| 66 | M85 | Z | .163 | .163 | 0 | %100 |
| 67 | MP2B | X | -.537 | -.537 | 0 | %100 |
| 68 | MP2B | Z | .31 | .31 | 0 | %100 |
| 69 | MP3B | X | -.537 | -.537 | 0 | %100 |
| 70 | MP3B | Z | .31 | .31 | 0 | %100 |
| 71 | MP5B | X | -.537 | -.537 | 0 | %100 |
| 72 | MP5B | Z | .31 | .31 | 0 | %100 |
| 73 | M107A | X | 0 | 0 | 0 | %100 |
| 74 | M107A | Z | 0 | 0 | 0 | %100 |
| 75 | M108A | X | -.48 | -.48 | 0 | %100 |
| 76 | M108A | Z | .277 | .277 | 0 | %100 |

## Member Distributed Loads (BLC 73 : Structure Wm (240 Deg)) (Continued)

| | Member Label | Direction | Start Magnitude[lb/ft,... | End Magnitude[lb/ft,F... | Start Location[ft,%] | End Location[ft,%] |
|---|---|---|---|---|---|---|
| 77 | M105 | X | -.359 | -.359 | 0 | %100 |
| 78 | M105 | Z | .207 | .207 | 0 | %100 |
| 79 | M106A | X | -.359 | -.359 | 0 | %100 |
| 80 | M106A | Z | .207 | .207 | 0 | %100 |
| 81 | M107 | X | -.474 | -.474 | 0 | %100 |
| 82 | M107 | Z | .274 | .274 | 0 | %100 |
| 83 | M108 | X | -.137 | -.137 | 0 | %100 |
| 84 | M108 | Z | .079 | .079 | 0 | %100 |
| 85 | MP1B | X | -.537 | -.537 | 0 | %100 |
| 86 | MP1B | Z | .31 | .31 | 0 | %100 |
| 87 | M102B | X | -.537 | -.537 | 0 | %100 |
| 88 | M102B | Z | .31 | .31 | 0 | %100 |
| 89 | MP4C | X | -.537 | -.537 | 0 | %100 |
| 90 | MP4C | Z | .31 | .31 | 0 | %100 |
| 91 | MP4B | X | -.537 | -.537 | 0 | %100 |
| 92 | MP4B | Z | .31 | .31 | 0 | %100 |
| 93 | MPC2 | X | -.537 | -.537 | 0 | %100 |
| 94 | MPC2 | Z | .31 | .31 | 0 | %100 |
| 95 | MPB2 | X | -.537 | -.537 | 0 | %100 |
| 96 | MPB2 | Z | .31 | .31 | 0 | %100 |

## Member Distributed Loads (BLC 74 : Structure Wm (270 Deg))

| | Member Label | Direction | Start Magnitude[lb/ft,... | End Magnitude[lb/ft,F... | Start Location[ft,%] | End Location[ft,%] |
|---|---|---|---|---|---|---|
| 1 | M1 | X | -.74 | -.74 | 0 | %100 |
| 2 | M1 | Z | 0 | 0 | 0 | %100 |
| 3 | M2 | X | -.972 | -.972 | 0 | %100 |
| 4 | M2 | Z | 0 | 0 | 0 | %100 |
| 5 | M5 | X | -1.11 | -1.11 | 0 | %100 |
| 6 | M5 | Z | 0 | 0 | 0 | %100 |
| 7 | M6 | X | -.277 | -.277 | 0 | %100 |
| 8 | M6 | Z | 0 | 0 | 0 | %100 |
| 9 | M7 | X | -.277 | -.277 | 0 | %100 |
| 10 | M7 | Z | 0 | 0 | 0 | %100 |
| 11 | M6A | X | 0 | 0 | 0 | %100 |
| 12 | M6A | Z | 0 | 0 | 0 | %100 |
| 13 | M7A | X | 0 | 0 | 0 | %100 |
| 14 | M7A | Z | 0 | 0 | 0 | %100 |
| 15 | MP1A | X | -.62 | -.62 | 0 | %100 |
| 16 | MP1A | Z | 0 | 0 | 0 | %100 |
| 17 | M23A | X | -.979 | -.979 | 0 | %100 |
| 18 | M23A | Z | 0 | 0 | 0 | %100 |
| 19 | M24 | X | -.979 | -.979 | 0 | %100 |
| 20 | M24 | Z | 0 | 0 | 0 | %100 |
| 21 | M39A | X | -.979 | -.979 | 0 | %100 |
| 22 | M39A | Z | 0 | 0 | 0 | %100 |
| 23 | M40 | X | -.979 | -.979 | 0 | %100 |
| 24 | M40 | Z | 0 | 0 | 0 | %100 |
| 25 | M55 | X | -.243 | -.243 | 0 | %100 |
| 26 | M55 | Z | 0 | 0 | 0 | %100 |
| 27 | M56 | X | -.243 | -.243 | 0 | %100 |
| 28 | M56 | Z | 0 | 0 | 0 | %100 |

## Member Distributed Loads (BLC 74 : Structure Wm (270 Deg)) (Continued)

| | Member Label | Direction | Start Magnitude[lb/ft,... | End Magnitude[lb/ft,F... | Start Location[ft,%] | End Location[ft,%] |
|---|---|---|---|---|---|---|
| 29 | M60A | X | 0 | 0 | 0 | %100 |
| 30 | M60A | Z | 0 | 0 | 0 | %100 |
| 31 | M61 | X | -1.57 | -1.57 | 0 | %100 |
| 32 | M61 | Z | 0 | 0 | 0 | %100 |
| 33 | M62 | X | -1.57 | -1.57 | 0 | %100 |
| 34 | M62 | Z | 0 | 0 | 0 | %100 |
| 35 | M63 | X | -1.57 | -1.57 | 0 | %100 |
| 36 | M63 | Z | 0 | 0 | 0 | %100 |
| 37 | M64 | X | 0 | 0 | 0 | %100 |
| 38 | M64 | Z | 0 | 0 | 0 | %100 |
| 39 | MP4A | X | -.62 | -.62 | 0 | %100 |
| 40 | MP4A | Z | 0 | 0 | 0 | %100 |
| 41 | MP2A | X | -.62 | -.62 | 0 | %100 |
| 42 | MP2A | Z | 0 | 0 | 0 | %100 |
| 43 | MP3A | X | -.62 | -.62 | 0 | %100 |
| 44 | MP3A | Z | 0 | 0 | 0 | %100 |
| 45 | MPA2 | X | -.62 | -.62 | 0 | %100 |
| 46 | MPA2 | Z | 0 | 0 | 0 | %100 |
| 47 | MP5A | X | -.62 | -.62 | 0 | %100 |
| 48 | MP5A | Z | 0 | 0 | 0 | %100 |
| 49 | M45 | X | -.332 | -.332 | 0 | %100 |
| 50 | M45 | Z | 0 | 0 | 0 | %100 |
| 51 | M46 | X | -.332 | -.332 | 0 | %100 |
| 52 | M46 | Z | 0 | 0 | 0 | %100 |
| 53 | MP1C | X | -.62 | -.62 | 0 | %100 |
| 54 | MP1C | Z | 0 | 0 | 0 | %100 |
| 55 | M54A | X | -.979 | -.979 | 0 | %100 |
| 56 | M54A | Z | 0 | 0 | 0 | %100 |
| 57 | MP2C | X | -.62 | -.62 | 0 | %100 |
| 58 | MP2C | Z | 0 | 0 | 0 | %100 |
| 59 | MP3C | X | -.62 | -.62 | 0 | %100 |
| 60 | MP3C | Z | 0 | 0 | 0 | %100 |
| 61 | MP5C | X | -.62 | -.62 | 0 | %100 |
| 62 | MP5C | Z | 0 | 0 | 0 | %100 |
| 63 | M82 | X | -.465 | -.465 | 0 | %100 |
| 64 | M82 | Z | 0 | 0 | 0 | %100 |
| 65 | M85 | X | -.979 | -.979 | 0 | %100 |
| 66 | M85 | Z | 0 | 0 | 0 | %100 |
| 67 | MP2B | X | -.62 | -.62 | 0 | %100 |
| 68 | MP2B | Z | 0 | 0 | 0 | %100 |
| 69 | MP3B | X | -.62 | -.62 | 0 | %100 |
| 70 | MP3B | Z | 0 | 0 | 0 | %100 |
| 71 | MP5B | X | -.62 | -.62 | 0 | %100 |
| 72 | MP5B | Z | 0 | 0 | 0 | %100 |
| 73 | M107A | X | -.185 | -.185 | 0 | %100 |
| 74 | M107A | Z | 0 | 0 | 0 | %100 |
| 75 | M108A | X | -.185 | -.185 | 0 | %100 |
| 76 | M108A | Z | 0 | 0 | 0 | %100 |
| 77 | M105 | X | -.199 | -.199 | 0 | %100 |
| 78 | M105 | Z | 0 | 0 | 0 | %100 |
| 79 | M106A | X | -.588 | -.588 | 0 | %100 |
| 80 | M106A | Z | 0 | 0 | 0 | %100 |

## Member Distributed Loads (BLC 74 : Structure Wm (270 Deg)) (Continued)

| | Member Label | Direction | Start Magnitude[lb/ft,... | End Magnitude[lb/ft,F... | Start Location[ft,%] | End Location[ft,%] |
|---|---|---|---|---|---|---|
| 81 | M107 | X | -.588 | -.588 | 0 | %100 |
| 82 | M107 | Z | 0 | 0 | 0 | %100 |
| 83 | M108 | X | -.199 | -.199 | 0 | %100 |
| 84 | M108 | Z | 0 | 0 | 0 | %100 |
| 85 | MP1B | X | -.62 | -.62 | 0 | %100 |
| 86 | MP1B | Z | 0 | 0 | 0 | %100 |
| 87 | M102B | X | -.465 | -.465 | 0 | %100 |
| 88 | M102B | Z | 0 | 0 | 0 | %100 |
| 89 | MP4C | X | -.62 | -.62 | 0 | %100 |
| 90 | MP4C | Z | 0 | 0 | 0 | %100 |
| 91 | MP4B | X | -.62 | -.62 | 0 | %100 |
| 92 | MP4B | Z | 0 | 0 | 0 | %100 |
| 93 | MPC2 | X | -.62 | -.62 | 0 | %100 |
| 94 | MPC2 | Z | 0 | 0 | 0 | %100 |
| 95 | MPB2 | X | -.62 | -.62 | 0 | %100 |
| 96 | MPB2 | Z | 0 | 0 | 0 | %100 |

## Member Distributed Loads (BLC 75 : Structure Wm (300 Deg))

| | Member Label | Direction | Start Magnitude[lb/ft,... | End Magnitude[lb/ft,F... | Start Location[ft,%] | End Location[ft,%] |
|---|---|---|---|---|---|---|
| 1 | M1 | X | -.48 | -.48 | 0 | %100 |
| 2 | M1 | Z | -.277 | -.277 | 0 | %100 |
| 3 | M2 | X | -.631 | -.631 | 0 | %100 |
| 4 | M2 | Z | -.364 | -.364 | 0 | %100 |
| 5 | M5 | X | -.721 | -.721 | 0 | %100 |
| 6 | M5 | Z | -.416 | -.416 | 0 | %100 |
| 7 | M6 | X | -.721 | -.721 | 0 | %100 |
| 8 | M6 | Z | -.416 | -.416 | 0 | %100 |
| 9 | M7 | X | 0 | 0 | 0 | %100 |
| 10 | M7 | Z | 0 | 0 | 0 | %100 |
| 11 | M6A | X | -.283 | -.283 | 0 | %100 |
| 12 | M6A | Z | -.163 | -.163 | 0 | %100 |
| 13 | M7A | X | -.283 | -.283 | 0 | %100 |
| 14 | M7A | Z | -.163 | -.163 | 0 | %100 |
| 15 | MP1A | X | -.537 | -.537 | 0 | %100 |
| 16 | MP1A | Z | -.31 | -.31 | 0 | %100 |
| 17 | M23A | X | -.283 | -.283 | 0 | %100 |
| 18 | M23A | Z | -.163 | -.163 | 0 | %100 |
| 19 | M24 | X | -.283 | -.283 | 0 | %100 |
| 20 | M24 | Z | -.163 | -.163 | 0 | %100 |
| 21 | M39A | X | -1.13 | -1.13 | 0 | %100 |
| 22 | M39A | Z | -.653 | -.653 | 0 | %100 |
| 23 | M40 | X | -1.13 | -1.13 | 0 | %100 |
| 24 | M40 | Z | -.653 | -.653 | 0 | %100 |
| 25 | M55 | X | -.631 | -.631 | 0 | %100 |
| 26 | M55 | Z | -.364 | -.364 | 0 | %100 |
| 27 | M56 | X | 0 | 0 | 0 | %100 |
| 28 | M56 | Z | 0 | 0 | 0 | %100 |
| 29 | M60A | X | -.134 | -.134 | 0 | %100 |
| 30 | M60A | Z | -.078 | -.078 | 0 | %100 |
| 31 | M61 | X | -1.36 | -1.36 | 0 | %100 |
| 32 | M61 | Z | -.785 | -.785 | 0 | %100 |

## Member Distributed Loads (BLC 75 : Structure Wm (300 Deg)) (Continued)

| | Member Label | Direction | Start Magnitude[lb/ft,... | End Magnitude[lb/ft,F... | Start Location[ft,%] | End Location[ft,%] |
|---|---|---|---|---|---|---|
| 33 | M62 | X | -1.36 | -1.36 | 0 | %100 |
| 34 | M62 | Z | -.785 | -.785 | 0 | %100 |
| 35 | M63 | X | -1.36 | -1.36 | 0 | %100 |
| 36 | M63 | Z | -.785 | -.785 | 0 | %100 |
| 37 | M64 | X | -.283 | -.283 | 0 | %100 |
| 38 | M64 | Z | -.163 | -.163 | 0 | %100 |
| 39 | MP4A | X | -.537 | -.537 | 0 | %100 |
| 40 | MP4A | Z | -.31 | -.31 | 0 | %100 |
| 41 | MP2A | X | -.537 | -.537 | 0 | %100 |
| 42 | MP2A | Z | -.31 | -.31 | 0 | %100 |
| 43 | MP3A | X | -.537 | -.537 | 0 | %100 |
| 44 | MP3A | Z | -.31 | -.31 | 0 | %100 |
| 45 | MPA2 | X | -.537 | -.537 | 0 | %100 |
| 46 | MPA2 | Z | -.31 | -.31 | 0 | %100 |
| 47 | MP5A | X | -.537 | -.537 | 0 | %100 |
| 48 | MP5A | Z | -.31 | -.31 | 0 | %100 |
| 49 | M45 | X | -.474 | -.474 | 0 | %100 |
| 50 | M45 | Z | -.274 | -.274 | 0 | %100 |
| 51 | M46 | X | -.137 | -.137 | 0 | %100 |
| 52 | M46 | Z | -.079 | -.079 | 0 | %100 |
| 53 | MP1C | X | -.537 | -.537 | 0 | %100 |
| 54 | MP1C | Z | -.31 | -.31 | 0 | %100 |
| 55 | M54A | X | -.283 | -.283 | 0 | %100 |
| 56 | M54A | Z | -.163 | -.163 | 0 | %100 |
| 57 | MP2C | X | -.537 | -.537 | 0 | %100 |
| 58 | MP2C | Z | -.31 | -.31 | 0 | %100 |
| 59 | MP3C | X | -.537 | -.537 | 0 | %100 |
| 60 | MP3C | Z | -.31 | -.31 | 0 | %100 |
| 61 | MP5C | X | -.537 | -.537 | 0 | %100 |
| 62 | MP5C | Z | -.31 | -.31 | 0 | %100 |
| 63 | M82 | X | -.537 | -.537 | 0 | %100 |
| 64 | M82 | Z | -.31 | -.31 | 0 | %100 |
| 65 | M85 | X | -1.13 | -1.13 | 0 | %100 |
| 66 | M85 | Z | -.653 | -.653 | 0 | %100 |
| 67 | MP2B | X | -.537 | -.537 | 0 | %100 |
| 68 | MP2B | Z | -.31 | -.31 | 0 | %100 |
| 69 | MP3B | X | -.537 | -.537 | 0 | %100 |
| 70 | MP3B | Z | -.31 | -.31 | 0 | %100 |
| 71 | MP5B | X | -.537 | -.537 | 0 | %100 |
| 72 | MP5B | Z | -.31 | -.31 | 0 | %100 |
| 73 | M107A | X | -.48 | -.48 | 0 | %100 |
| 74 | M107A | Z | -.277 | -.277 | 0 | %100 |
| 75 | M108A | X | 0 | 0 | 0 | %100 |
| 76 | M108A | Z | 0 | 0 | 0 | %100 |
| 77 | M105 | X | -.137 | -.137 | 0 | %100 |
| 78 | M105 | Z | -.079 | -.079 | 0 | %100 |
| 79 | M106A | X | -.474 | -.474 | 0 | %100 |
| 80 | M106A | Z | -.274 | -.274 | 0 | %100 |
| 81 | M107 | X | -.359 | -.359 | 0 | %100 |
| 82 | M107 | Z | -.207 | -.207 | 0 | %100 |
| 83 | M108 | X | -.359 | -.359 | 0 | %100 |
| 84 | M108 | Z | -.207 | -.207 | 0 | %100 |

## Member Distributed Loads (BLC 75 : Structure Wm (300 Deg)) (Continued)

| | Member Label | Direction | Start Magnitude[lb/ft,... | End Magnitude[lb/ft,F... | Start Location[ft,%] | End Location[ft,%] |
|---|---|---|---|---|---|---|
| 85 | MP1B | X | -.537 | -.537 | 0 | %100 |
| 86 | MP1B | Z | -.31 | -.31 | 0 | %100 |
| 87 | M102B | X | -.134 | -.134 | 0 | %100 |
| 88 | M102B | Z | -.078 | -.078 | 0 | %100 |
| 89 | MP4C | X | -.537 | -.537 | 0 | %100 |
| 90 | MP4C | Z | -.31 | -.31 | 0 | %100 |
| 91 | MP4B | X | -.537 | -.537 | 0 | %100 |
| 92 | MP4B | Z | -.31 | -.31 | 0 | %100 |
| 93 | MPC2 | X | -.537 | -.537 | 0 | %100 |
| 94 | MPC2 | Z | -.31 | -.31 | 0 | %100 |
| 95 | MPB2 | X | -.537 | -.537 | 0 | %100 |
| 96 | MPB2 | Z | -.31 | -.31 | 0 | %100 |

## Member Distributed Loads (BLC 76 : Structure Wm (330 Deg))

| | Member Label | Direction | Start Magnitude[lb/ft,... | End Magnitude[lb/ft,F... | Start Location[ft,%] | End Location[ft,%] |
|---|---|---|---|---|---|---|
| 1 | M1 | X | -.092 | -.092 | 0 | %100 |
| 2 | M1 | Z | -.16 | -.16 | 0 | %100 |
| 3 | M2 | X | -.121 | -.121 | 0 | %100 |
| 4 | M2 | Z | -.21 | -.21 | 0 | %100 |
| 5 | M5 | X | -.139 | -.139 | 0 | %100 |
| 6 | M5 | Z | -.24 | -.24 | 0 | %100 |
| 7 | M6 | X | -.555 | -.555 | 0 | %100 |
| 8 | M6 | Z | -.961 | -.961 | 0 | %100 |
| 9 | M7 | X | -.139 | -.139 | 0 | %100 |
| 10 | M7 | Z | -.24 | -.24 | 0 | %100 |
| 11 | M6A | X | -.49 | -.49 | 0 | %100 |
| 12 | M6A | Z | -.848 | -.848 | 0 | %100 |
| 13 | M7A | X | -.49 | -.49 | 0 | %100 |
| 14 | M7A | Z | -.848 | -.848 | 0 | %100 |
| 15 | MP1A | X | -.31 | -.31 | 0 | %100 |
| 16 | MP1A | Z | -.537 | -.537 | 0 | %100 |
| 17 | M23A | X | 0 | 0 | 0 | %100 |
| 18 | M23A | Z | 0 | 0 | 0 | %100 |
| 19 | M24 | X | 0 | 0 | 0 | %100 |
| 20 | M24 | Z | 0 | 0 | 0 | %100 |
| 21 | M39A | X | -.49 | -.49 | 0 | %100 |
| 22 | M39A | Z | -.848 | -.848 | 0 | %100 |
| 23 | M40 | X | -.49 | -.49 | 0 | %100 |
| 24 | M40 | Z | -.848 | -.848 | 0 | %100 |
| 25 | M55 | X | -.486 | -.486 | 0 | %100 |
| 26 | M55 | Z | -.842 | -.842 | 0 | %100 |
| 27 | M56 | X | -.121 | -.121 | 0 | %100 |
| 28 | M56 | Z | -.21 | -.21 | 0 | %100 |
| 29 | M60A | X | -.233 | -.233 | 0 | %100 |
| 30 | M60A | Z | -.403 | -.403 | 0 | %100 |
| 31 | M61 | X | -.785 | -.785 | 0 | %100 |
| 32 | M61 | Z | -1.36 | -1.36 | 0 | %100 |
| 33 | M62 | X | -.785 | -.785 | 0 | %100 |
| 34 | M62 | Z | -1.36 | -1.36 | 0 | %100 |
| 35 | M63 | X | -.785 | -.785 | 0 | %100 |
| 36 | M63 | Z | -1.36 | -1.36 | 0 | %100 |

## Member Distributed Loads (BLC 76 : Structure Wm (330 Deg)) (Continued)

| | Member Label | Direction | Start Magnitude[lb/ft,... | End Magnitude[lb/ft,F... | Start Location[ft,%] | End Location[ft,%] |
|---|---|---|---|---|---|---|
| 37 | M64 | X | -.49 | -.49 | 0 | %100 |
| 38 | M64 | Z | -.848 | -.848 | 0 | %100 |
| 39 | MP4A | X | -.31 | -.31 | 0 | %100 |
| 40 | MP4A | Z | -.537 | -.537 | 0 | %100 |
| 41 | MP2A | X | -.31 | -.31 | 0 | %100 |
| 42 | MP2A | Z | -.537 | -.537 | 0 | %100 |
| 43 | MP3A | X | -.31 | -.31 | 0 | %100 |
| 44 | MP3A | Z | -.537 | -.537 | 0 | %100 |
| 45 | MPA2 | X | -.31 | -.31 | 0 | %100 |
| 46 | MPA2 | Z | -.537 | -.537 | 0 | %100 |
| 47 | MP5A | X | -.31 | -.31 | 0 | %100 |
| 48 | MP5A | Z | -.537 | -.537 | 0 | %100 |
| 49 | M45 | X | -.294 | -.294 | 0 | %100 |
| 50 | M45 | Z | -.51 | -.51 | 0 | %100 |
| 51 | M46 | X | -.1 | -.1 | 0 | %100 |
| 52 | M46 | Z | -.173 | -.173 | 0 | %100 |
| 53 | MP1C | X | -.31 | -.31 | 0 | %100 |
| 54 | MP1C | Z | -.537 | -.537 | 0 | %100 |
| 55 | M54A | X | 0 | 0 | 0 | %100 |
| 56 | M54A | Z | 0 | 0 | 0 | %100 |
| 57 | MP2C | X | -.31 | -.31 | 0 | %100 |
| 58 | MP2C | Z | -.537 | -.537 | 0 | %100 |
| 59 | MP3C | X | -.31 | -.31 | 0 | %100 |
| 60 | MP3C | Z | -.537 | -.537 | 0 | %100 |
| 61 | MP5C | X | -.31 | -.31 | 0 | %100 |
| 62 | MP5C | Z | -.537 | -.537 | 0 | %100 |
| 63 | M82 | X | -.233 | -.233 | 0 | %100 |
| 64 | M82 | Z | -.403 | -.403 | 0 | %100 |
| 65 | M85 | X | -.49 | -.49 | 0 | %100 |
| 66 | M85 | Z | -.848 | -.848 | 0 | %100 |
| 67 | MP2B | X | -.31 | -.31 | 0 | %100 |
| 68 | MP2B | Z | -.537 | -.537 | 0 | %100 |
| 69 | MP3B | X | -.31 | -.31 | 0 | %100 |
| 70 | MP3B | Z | -.537 | -.537 | 0 | %100 |
| 71 | MP5B | X | -.31 | -.31 | 0 | %100 |
| 72 | MP5B | Z | -.537 | -.537 | 0 | %100 |
| 73 | M107A | X | -.37 | -.37 | 0 | %100 |
| 74 | M107A | Z | -.641 | -.641 | 0 | %100 |
| 75 | M108A | X | -.092 | -.092 | 0 | %100 |
| 76 | M108A | Z | -.16 | -.16 | 0 | %100 |
| 77 | M105 | X | -.166 | -.166 | 0 | %100 |
| 78 | M105 | Z | -.288 | -.288 | 0 | %100 |
| 79 | M106A | X | -.166 | -.166 | 0 | %100 |
| 80 | M106A | Z | -.288 | -.288 | 0 | %100 |
| 81 | M107 | X | -.1 | -.1 | 0 | %100 |
| 82 | M107 | Z | -.173 | -.173 | 0 | %100 |
| 83 | M108 | X | -.294 | -.294 | 0 | %100 |
| 84 | M108 | Z | -.51 | -.51 | 0 | %100 |
| 85 | MP1B | X | -.31 | -.31 | 0 | %100 |
| 86 | MP1B | Z | -.537 | -.537 | 0 | %100 |
| 87 | M102B | X | 0 | 0 | 0 | %100 |
| 88 | M102B | Z | 0 | 0 | 0 | %100 |

## Member Distributed Loads (BLC 76 : Structure Wm (330 Deg)) (Continued)

| | Member Label | Direction | Start Magnitude[lb/ft,... | End Magnitude[lb/ft,F... | Start Location[ft,%] | End Location[ft,%] |
|---|---|---|---|---|---|---|
| 89 | MP4C | X | -.31 | -.31 | 0 | %100 |
| 90 | MP4C | Z | -.537 | -.537 | 0 | %100 |
| 91 | MP4B | X | -.31 | -.31 | 0 | %100 |
| 92 | MP4B | Z | -.537 | -.537 | 0 | %100 |
| 93 | MPC2 | X | -.31 | -.31 | 0 | %100 |
| 94 | MPC2 | Z | -.537 | -.537 | 0 | %100 |
| 95 | MPB2 | X | -.31 | -.31 | 0 | %100 |
| 96 | MPB2 | Z | -.537 | -.537 | 0 | %100 |

## Member Distributed Loads (BLC 87 : BLC 39 Transient Area Loads)

| | Member Label | Direction | Start Magnitude[lb/ft,... | End Magnitude[lb/ft,F... | Start Location[ft,%] | End Location[ft,%] |
|---|---|---|---|---|---|---|
| 1 | M5 | Y | -1.126 | -5.212 | 0 | 2 |
| 2 | M5 | Y | -5.212 | -9.298 | 2 | 4 |
| 3 | M6 | Y | -1.126 | -5.212 | 0 | 2 |
| 4 | M6 | Y | -5.212 | -9.298 | 2 | 4 |
| 5 | M39A | Y | -3.98 | -3.98 | .037 | 7.397 |
| 6 | M40 | Y | -.965 | -2.589 | 0 | 2.872 |
| 7 | M40 | Y | -2.589 | -3.453 | 2.872 | 5.745 |
| 8 | M40 | Y | -3.453 | -4.121 | 5.745 | 8.617 |
| 9 | M40 | Y | -4.121 | -3.257 | 8.617 | 11.489 |
| 10 | M40 | Y | -3.257 | -.298 | 11.489 | 14.362 |
| 11 | M56 | Y | -9.499 | -9.499 | 3.364e-14 | 2 |
| 12 | M105B | Y | -15.339 | -15.339 | 0 | .25 |
| 13 | M2 | Y | -9.499 | -9.499 | 0 | 2 |
| 14 | M7 | Y | -1.126 | -5.212 | 0 | 2 |
| 15 | M7 | Y | -5.212 | -9.298 | 2 | 4 |
| 16 | M6A | Y | -3.98 | -3.98 | .037 | 7.397 |
| 17 | M7A | Y | -.965 | -2.589 | 0 | 2.872 |
| 18 | M7A | Y | -2.589 | -3.453 | 2.872 | 5.745 |
| 19 | M7A | Y | -3.453 | -4.121 | 5.745 | 8.617 |
| 20 | M7A | Y | -4.121 | -3.257 | 8.617 | 11.489 |
| 21 | M7A | Y | -3.257 | -.298 | 11.489 | 14.362 |
| 22 | M38A | Y | -15.339 | -15.339 | 0 | .25 |
| 23 | M23A | Y | -3.98 | -3.98 | .037 | 7.397 |
| 24 | M24 | Y | -.965 | -2.589 | 0 | 2.872 |
| 25 | M24 | Y | -2.589 | -3.453 | 2.872 | 5.745 |
| 26 | M24 | Y | -3.453 | -4.121 | 5.745 | 8.617 |
| 27 | M24 | Y | -4.121 | -3.257 | 8.617 | 11.489 |
| 28 | M24 | Y | -3.257 | -.298 | 11.489 | 14.362 |
| 29 | M55 | Y | -9.499 | -9.499 | 0 | 2 |
| 30 | M101A | Y | -15.339 | -15.339 | 0 | .25 |

## Member Distributed Loads (BLC 88 : BLC 40 Transient Area Loads)

| | Member Label | Direction | Start Magnitude[lb/ft,... | End Magnitude[lb/ft,F... | Start Location[ft,%] | End Location[ft,%] |
|---|---|---|---|---|---|---|
| 1 | M5 | Y | -2.181 | -10.1 | 0 | 2 |
| 2 | M5 | Y | -10.1 | -18.019 | 2 | 4 |
| 3 | M6 | Y | -2.181 | -10.1 | 0 | 2 |
| 4 | M6 | Y | -10.1 | -18.019 | 2 | 4 |
| 5 | M39A | Y | -7.714 | -7.714 | .037 | 7.397 |
| 6 | M40 | Y | -1.871 | -5.018 | 0 | 2.872 |
| 7 | M40 | Y | -5.018 | -6.693 | 2.872 | 5.745 |

## Member Distributed Loads (BLC 88 : BLC 40 Transient Area Loads) (Continued)

| | Member Label | Direction | Start Magnitude[lb/ft,... | End Magnitude[lb/ft,F... | Start Location[ft,%] | End Location[ft,%] |
|---|---|---|---|---|---|---|
| 8 | M40 | Y | -6.693 | -7.986 | 5.745 | 8.617 |
| 9 | M40 | Y | -7.986 | -6.312 | 8.617 | 11.489 |
| 10 | M40 | Y | -6.312 | -.577 | 11.489 | 14.362 |
| 11 | M56 | Y | -18.41 | -18.41 | 3.364e-14 | 2 |
| 12 | M105B | Y | -29.727 | -29.727 | 0 | .25 |
| 13 | M2 | Y | -18.41 | -18.41 | 0 | 2 |
| 14 | M7 | Y | -2.181 | -10.1 | 0 | 2 |
| 15 | M7 | Y | -10.1 | -18.019 | 2 | 4 |
| 16 | M6A | Y | -7.714 | -7.714 | .037 | 7.397 |
| 17 | M7A | Y | -1.871 | -5.018 | 0 | 2.872 |
| 18 | M7A | Y | -5.018 | -6.693 | 2.872 | 5.745 |
| 19 | M7A | Y | -6.693 | -7.986 | 5.745 | 8.617 |
| 20 | M7A | Y | -7.986 | -6.312 | 8.617 | 11.489 |
| 21 | M7A | Y | -6.312 | -.577 | 11.489 | 14.362 |
| 22 | M38A | Y | -29.727 | -29.727 | 0 | .25 |
| 23 | M23A | Y | -7.714 | -7.714 | .037 | 7.397 |
| 24 | M24 | Y | -1.871 | -5.018 | 0 | 2.872 |
| 25 | M24 | Y | -5.018 | -6.693 | 2.872 | 5.745 |
| 26 | M24 | Y | -6.693 | -7.986 | 5.745 | 8.617 |
| 27 | M24 | Y | -7.986 | -6.312 | 8.617 | 11.489 |
| 28 | M24 | Y | -6.312 | -.577 | 11.489 | 14.362 |
| 29 | M55 | Y | -18.41 | -18.41 | 0 | 2 |
| 30 | M101A | Y | -29.727 | -29.727 | 0 | .25 |

## Member Distributed Loads (BLC 89 : BLC 84 Transient Area Loads)

| | Member Label | Direction | Start Magnitude[lb/ft,... | End Magnitude[lb/ft,F... | Start Location[ft,%] | End Location[ft,%] |
|---|---|---|---|---|---|---|
| 1 | M5 | Y | -.026 | -.121 | 0 | 2 |
| 2 | M5 | Y | -.121 | -.216 | 2 | 4 |
| 3 | M6 | Y | -.026 | -.121 | 0 | 2 |
| 4 | M6 | Y | -.121 | -.216 | 2 | 4 |
| 5 | M39A | Y | -.093 | -.093 | .037 | 7.397 |
| 6 | M40 | Y | -.022 | -.06 | 0 | 2.872 |
| 7 | M40 | Y | -.06 | -.08 | 2.872 | 5.745 |
| 8 | M40 | Y | -.08 | -.096 | 5.745 | 8.617 |
| 9 | M40 | Y | -.096 | -.076 | 8.617 | 11.489 |
| 10 | M40 | Y | -.076 | -.007 | 11.489 | 14.362 |
| 11 | M56 | Y | -.221 | -.221 | 3.364e-14 | 2 |
| 12 | M105B | Y | -.357 | -.357 | 0 | .25 |
| 13 | M2 | Y | -.221 | -.221 | 0 | 2 |
| 14 | M7 | Y | -.026 | -.121 | 0 | 2 |
| 15 | M7 | Y | -.121 | -.216 | 2 | 4 |
| 16 | M6A | Y | -.093 | -.093 | .037 | 7.397 |
| 17 | M7A | Y | -.022 | -.06 | 0 | 2.872 |
| 18 | M7A | Y | -.06 | -.08 | 2.872 | 5.745 |
| 19 | M7A | Y | -.08 | -.096 | 5.745 | 8.617 |
| 20 | M7A | Y | -.096 | -.076 | 8.617 | 11.489 |
| 21 | M7A | Y | -.076 | -.007 | 11.489 | 14.362 |
| 22 | M38A | Y | -.357 | -.357 | 0 | .25 |
| 23 | M23A | Y | -.093 | -.093 | .037 | 7.397 |
| 24 | M24 | Y | -.022 | -.06 | 0 | 2.872 |
| 25 | M24 | Y | -.06 | -.08 | 2.872 | 5.745 |

## Member Distributed Loads (BLC 89 : BLC 84 Transient Area Loads) (Continued)

| | Member Label | Direction | Start Magnitude[lb/ft,... | End Magnitude[lb/ft,F... | Start Location[ft,%] | End Location[ft,%] |
|---|---|---|---|---|---|---|
| 26 | M24 | Y | -.08 | -.096 | 5.745 | 8.617 |
| 27 | M24 | Y | -.096 | -.076 | 8.617 | 11.489 |
| 28 | M24 | Y | -.076 | -.007 | 11.489 | 14.362 |
| 29 | M55 | Y | -.221 | -.221 | 0 | 2 |
| 30 | M101A | Y | -.357 | -.357 | 0 | .25 |

## Member Distributed Loads (BLC 90 : BLC 85 Transient Area Loads)

| | Member Label | Direction | Start Magnitude[lb/ft,... | End Magnitude[lb/ft,F... | Start Location[ft,%] | End Location[ft,%] |
|---|---|---|---|---|---|---|
| 1 | M5 | Z | -.066 | -.304 | 0 | 2 |
| 2 | M5 | Z | -.304 | -.542 | 2 | 4 |
| 3 | M6 | Z | -.066 | -.304 | 0 | 2 |
| 4 | M6 | Z | -.304 | -.542 | 2 | 4 |
| 5 | M39A | Z | -.232 | -.232 | .037 | 7.397 |
| 6 | M40 | Z | -.056 | -.151 | 0 | 2.872 |
| 7 | M40 | Z | -.151 | -.201 | 2.872 | 5.745 |
| 8 | M40 | Z | -.201 | -.24 | 5.745 | 8.617 |
| 9 | M40 | Z | -.24 | -.19 | 8.617 | 11.489 |
| 10 | M40 | Z | -.19 | -.017 | 11.489 | 14.362 |
| 11 | M56 | Z | -.554 | -.554 | 3.364e-14 | 2 |
| 12 | M105B | Z | -.894 | -.894 | 0 | .25 |
| 13 | M2 | Z | -.554 | -.554 | 0 | 2 |
| 14 | M7 | Z | -.066 | -.304 | 0 | 2 |
| 15 | M7 | Z | -.304 | -.542 | 2 | 4 |
| 16 | M6A | Z | -.232 | -.232 | .037 | 7.397 |
| 17 | M7A | Z | -.056 | -.151 | 0 | 2.872 |
| 18 | M7A | Z | -.151 | -.201 | 2.872 | 5.745 |
| 19 | M7A | Z | -.201 | -.24 | 5.745 | 8.617 |
| 20 | M7A | Z | -.24 | -.19 | 8.617 | 11.489 |
| 21 | M7A | Z | -.19 | -.017 | 11.489 | 14.362 |
| 22 | M38A | Z | -.894 | -.894 | 0 | .25 |
| 23 | M23A | Z | -.232 | -.232 | .037 | 7.397 |
| 24 | M24 | Z | -.056 | -.151 | 0 | 2.872 |
| 25 | M24 | Z | -.151 | -.201 | 2.872 | 5.745 |
| 26 | M24 | Z | -.201 | -.24 | 5.745 | 8.617 |
| 27 | M24 | Z | -.24 | -.19 | 8.617 | 11.489 |
| 28 | M24 | Z | -.19 | -.017 | 11.489 | 14.362 |
| 29 | M55 | Z | -.554 | -.554 | 0 | 2 |
| 30 | M101A | Z | -.894 | -.894 | 0 | .25 |

## Member Distributed Loads (BLC 91 : BLC 86 Transient Area Loads)

| | Member Label | Direction | Start Magnitude[lb/ft,... | End Magnitude[lb/ft,F... | Start Location[ft,%] | End Location[ft,%] |
|---|---|---|---|---|---|---|
| 1 | M5 | X | .066 | .304 | 0 | 2 |
| 2 | M5 | X | .304 | .542 | 2 | 4 |
| 3 | M6 | X | .066 | .304 | 0 | 2 |
| 4 | M6 | X | .304 | .542 | 2 | 4 |
| 5 | M39A | X | .232 | .232 | .037 | 7.397 |
| 6 | M40 | X | .056 | .151 | 0 | 2.872 |
| 7 | M40 | X | .151 | .201 | 2.872 | 5.745 |
| 8 | M40 | X | .201 | .24 | 5.745 | 8.617 |
| 9 | M40 | X | .24 | .19 | 8.617 | 11.489 |
| 10 | M40 | X | .19 | .017 | 11.489 | 14.362 |

## Member Distributed Loads (BLC 91 : BLC 86 Transient Area Loads) (Continued)

| | Member Label | Direction | Start Magnitude[lb/ft,... | End Magnitude[lb/ft,F... | Start Location[ft,%] | End Location[ft,%] |
|---|---|---|---|---|---|---|
| 11 | M56 | X | .554 | .554 | 3.364e-14 | 2 |
| 12 | M105B | X | .894 | .894 | 0 | .25 |
| 13 | M2 | X | .554 | .554 | 0 | 2 |
| 14 | M7 | X | .066 | .304 | 0 | 2 |
| 15 | M7 | X | .304 | .542 | 2 | 4 |
| 16 | M6A | X | .232 | .232 | .037 | 7.397 |
| 17 | M7A | X | .056 | .151 | 0 | 2.872 |
| 18 | M7A | X | .151 | .201 | 2.872 | 5.745 |
| 19 | M7A | X | .201 | .24 | 5.745 | 8.617 |
| 20 | M7A | X | .24 | .19 | 8.617 | 11.489 |
| 21 | M7A | X | .19 | .017 | 11.489 | 14.362 |
| 22 | M38A | X | .894 | .894 | 0 | .25 |
| 23 | M23A | X | .232 | .232 | .037 | 7.397 |
| 24 | M24 | X | .056 | .151 | 0 | 2.872 |
| 25 | M24 | X | .151 | .201 | 2.872 | 5.745 |
| 26 | M24 | X | .201 | .24 | 5.745 | 8.617 |
| 27 | M24 | X | .24 | .19 | 8.617 | 11.489 |
| 28 | M24 | X | .19 | .017 | 11.489 | 14.362 |
| 29 | M55 | X | .554 | .554 | 0 | 2 |
| 30 | M101A | X | .894 | .894 | 0 | .25 |

## Member Area Loads (BLC 39 : Structure D)

| | Joint A | Joint B | Joint C | Joint D | Direction | Distribution | Magnitude[ksf] |
|---|---|---|---|---|---|---|---|
| 1 | N14 | N10 | N15 | N16 | Y | Two Way | -.005 |
| 2 | N16 | N15 | N17 | N18 | Y | Two Way | -.005 |
| 3 | N18 | N17 | N10 | N14 | Y | Two Way | -.005 |

## Member Area Loads (BLC 40 : Structure Di)

| | Joint A | Joint B | Joint C | Joint D | Direction | Distribution | Magnitude[ksf] |
|---|---|---|---|---|---|---|---|
| 1 | N14 | N10 | N15 | N16 | Y | Two Way | -.01 |
| 2 | N16 | N15 | N17 | N18 | Y | Two Way | -.01 |
| 3 | N18 | N17 | N10 | N14 | Y | Two Way | -.01 |

## Member Area Loads (BLC 84 : Structure Ev)

| | Joint A | Joint B | Joint C | Joint D | Direction | Distribution | Magnitude[ksf] |
|---|---|---|---|---|---|---|---|
| 1 | N14 | N10 | N15 | N16 | Y | Two Way | -.000121 |
| 2 | N16 | N15 | N17 | N18 | Y | Two Way | -.000121 |
| 3 | N18 | N17 | N10 | N14 | Y | Two Way | -.000121 |

## Member Area Loads (BLC 85 : Structure Eh (0 Deg))

| | Joint A | Joint B | Joint C | Joint D | Direction | Distribution | Magnitude[ksf] |
|---|---|---|---|---|---|---|---|
| 1 | N14 | N10 | N15 | N16 | Z | Two Way | -.000303 |
| 2 | N16 | N15 | N17 | N18 | Z | Two Way | -.000303 |
| 3 | N18 | N17 | N10 | N14 | Z | Two Way | -.000303 |

## Member Area Loads (BLC 86 : Structure Eh (90 Deg))

| | Joint A | Joint B | Joint C | Joint D | Direction | Distribution | Magnitude[ksf] |
|---|---|---|---|---|---|---|---|
| 1 | N14 | N10 | N15 | N16 | X | Two Way | .000303 |

## Member Area Loads (BLC 86 : Structure Eh (90 Deg)) (Continued)

| | Joint A | Joint B | Joint C | Joint D | Direction | Distribution | Magnitude[ksf] |
|---|---|---|---|---|---|---|---|
| 2 | N16 | N15 | N17 | N18 | X | Two Way | .000303 |
| 3 | N18 | N17 | N10 | N14 | X | Two Way | .000303 |

## Envelope Joint Reactions

| | Joint | | X [lb] | LC | Y [lb] | LC | Z [lb] | LC | MX [k-ft] | LC | MY [k-ft] | LC | MZ [k-ft] | LC |
|---|---|---|---|---|---|---|---|---|---|---|---|---|---|---|
| 1 | N2 | max | 4237.126 | 10 | 1434.995 | 24 | 1329.196 | 1 | -.436 | 6 | 2.228 | 11 | .18 | 3 |
| 2 | | min | -4290.335 | 4 | 297.785 | 6 | -2384.48 | 7 | -2.99 | 24 | -2.282 | 5 | -.161 | 33 |
| 3 | N91A | max | 1058.388 | 4 | 1637.251 | 19 | 1820.066 | 19 | .373 | 1 | .05 | 4 | .057 | 4 |
| 4 | | min | -952.797 | 10 | -71.117 | 1 | -73.145 | 1 | -.261 | 7 | -.06 | 34 | -.068 | 34 |
| 5 | N210A | max | 2123.248 | 10 | 1354.01 | 20 | 4023.127 | 1 | 1.513 | 21 | 1.959 | 5 | 2.326 | 20 |
| 6 | | min | -2949.621 | 4 | 312.764 | 2 | -3425.302 | 7 | .228 | 3 | -2.039 | 11 | .408 | 2 |
| 7 | N212A | max | 3184.149 | 10 | 1421.261 | 16 | 4062.822 | 1 | 1.339 | 16 | 2.163 | 1 | -.39 | 11 |
| 8 | | min | -2219.114 | 4 | 303.169 | 11 | -3670.995 | 7 | .217 | 10 | -2.257 | 7 | -2.619 | 16 |
| 9 | N212B | max | 1443.919 | 16 | 1597.841 | 15 | 590.343 | 7 | .106 | 3 | .053 | 11 | .221 | 3 |
| 10 | | min | -162.204 | 10 | -70.179 | 9 | -1435.507 | 1 | -.161 | 9 | -.056 | 5 | -.307 | 9 |
| 11 | N215A | max | 258.522 | 4 | 1606.996 | 23 | 541.657 | 7 | .152 | 12 | .053 | 7 | .311 | 5 |
| 12 | | min | -1714.227 | 22 | -91.03 | 5 | -1089.799 | 1 | -.203 | 6 | -.057 | 1 | -.212 | 11 |
| 13 | Totals: | max | 6843.495 | 10 | 8369.785 | 13 | 6816.694 | 1 | | | | | | |
| 14 | | min | -6843.496 | 4 | 2673.065 | 69 | -6816.663 | 7 | | | | | | |

## Envelope AISC 15th(360-16): LRFD Steel Code Checks

| | Member | Shape | Code Check | Loc[ft] | LC | Shear ... | Loc[ft] | Dir | LC | phi*Pnc ... | phi*Pnt [... | phi*Mn y... | phi*Mn z... | Cb | Eqn |
|---|---|---|---|---|---|---|---|---|---|---|---|---|---|---|---|
| 1 | M1 | HSS4X4X4 | .248 | 0 | 12 | .124 | 0 | z | 4 | 139319.... | 139518 | 16.181 | 16.181 | 1.... | H1-1b |
| 2 | M2 | HSS4.5X4.5... | .144 | 0 | 24 | .041 | 0 | y | 24 | 119784.... | 121302 | 16.25 | 16.25 | 1.... | H1-1b |
| 3 | M5 | LL3x3x4x0 | .312 | 0 | 9 | .046 | 4 | z | 4 | 76288.1... | 93312 | 6.48 | 4.357 | 1.... | H1-1b |
| 4 | M6 | LL3x3x4x0 | .339 | 0 | 5 | .049 | 4 | z | 6 | 76288.1... | 93312 | 6.48 | 4.357 | 1.... | H1-1b |
| 5 | M7 | LL3x3x4x0 | .312 | 0 | 12 | .044 | 4 | z | 2 | 76288.1... | 93312 | 6.48 | 4.357 | 1.... | H1-1b |
| 6 | M6A | L3X3X4 | .339 | 0 | 11 | .017 | 3.717 | z | 16 | 13991.9... | 46656 | 1.688 | 3.125 | 1.... | H2-1 |
| 7 | M7A | L3X3X4 | .761 | 3.142 | 8 | .758 | 7.181 | z | 48 | 13744.5... | 46656 | 1.688 | 2.127 | 1 | H2-1 |
| 8 | MP1A | PIPE_2.0 | .031 | .521 | 17 | .203 | .469 | | 2 | 23808.54 | 32130 | 1.872 | 1.872 | 1.... | H1-1b |
| 9 | M23A | L3X3X4 | .334 | 7.433 | 11 | .017 | 3.717 | z | 24 | 13991.9... | 46656 | 1.688 | 3.126 | 1.... | H2-1 |
| 10 | M24 | L3X3X4 | .733 | 7.181 | 3 | .629 | 7.181 | y | 8 | 13744.5... | 46656 | 1.688 | 3.389 | 1.... | H2-1 |
| 11 | M39A | L3X3X4 | .340 | 3.717 | 7 | .018 | 3.717 | z | 20 | 13991.9... | 46656 | 1.688 | 3.147 | 1.... | H2-1 |
| 12 | M40 | L3X3X4 | .745 | 7.181 | 11 | .660 | 7.181 | z | 16 | 13744.5... | 46656 | 1.688 | 3.405 | 1.... | H2-1 |
| 13 | M55 | HSS4.5X4.5... | .130 | 0 | 18 | .041 | 0 | y | 20 | 119784.... | 121302 | 16.25 | 16.25 | 1.... | H1-1b |
| 14 | M56 | HSS4.5X4.5... | .138 | 0 | 16 | .043 | 0 | y | 16 | 119784.... | 121302 | 16.25 | 16.25 | 1.... | H1-1b |
| 15 | M60A | PIPE_2.0 | .422 | 2.083 | 49 | .190 | 3.125 | | 34 | 6295.422 | 32130 | 1.872 | 1.872 | 2.... | H1-1b |
| 16 | M61 | L5X5X4 | .347 | 0 | 8 | .027 | 0 | y | 9 | 47250.0... | 78975 | 4.407 | 8.986 | 1.... | H2-1 |
| 17 | M62 | L5X5X4 | .356 | 0 | 4 | .028 | 0 | y | 5 | 47250.0... | 78975 | 4.407 | 8.986 | 1.... | H2-1 |
| 18 | M63 | L5X5X4 | .353 | 0 | 12 | .026 | 0 | y | 12 | 47250.0... | 78975 | 4.407 | 8.986 | 1.... | H2-1 |
| 19 | M64 | L3X3X4 | .427 | 7.779 | 7 | .222 | 0 | z | 1 | 3748.406 | 46656 | 1.688 | 2.908 | 1.... | H2-1 |
| 20 | MP4A | PIPE_2.0 | .520 | 4.219 | 49 | .259 | 3.542 | | 8 | 23808.54 | 32130 | 1.872 | 1.872 | 3.... | H1-1b |
| 21 | MP2A | PIPE_2.0 | .306 | 4.062 | 4 | .183 | 4.062 | | 1 | 23808.54 | 32130 | 1.872 | 1.872 | 2.... | H1-1b |
| 22 | MP3A | PIPE_2.0 | .431 | 3.802 | 7 | .254 | 4.531 | | 9 | 23808.54 | 32130 | 1.872 | 1.872 | 1.... | H1-1b |
| 23 | MPA2 | PIPE_2.0 | .308 | 3.49 | 4 | .242 | 3.542 | | 6 | 23808.54 | 32130 | 1.872 | 1.872 | 1.... | H1-1b |
| 24 | MP5A | PIPE_2.0 | .031 | .573 | 17 | .196 | .469 | | 12 | 23808.54 | 32130 | 1.872 | 1.872 | 1 | H1-1b |
| 25 | M45 | PIPE_2.0 | .066 | 4.631 | 21 | .166 | 4.631 | | 1 | 24846.31 | 32130 | 1.872 | 1.872 | 1.... | H1-1b* |
| 26 | M46 | PIPE_2.0 | .074 | 0 | 5 | .172 | 4.631 | | 1 | 24846.3... | 32130 | 1.872 | 1.872 | 1.... | H1-1b* |
| 27 | MP1C | PIPE_2.0 | .031 | .521 | 19 | .192 | .469 | | 11 | 23808.54 | 32130 | 1.872 | 1.872 | 2.... | H1-1b |

## Envelope AISC 15th(360-16): LRFD Steel Code Checks (Continued)

| | Member | Shape | Code Check | Loc[ft] | LC | Shear ... | Loc[ft] | Dir | LC | phi*Pnc ... | phi*Pnt [... | phi*Mn y... | phi*Mn z... | Cb | Eqn |
|---|---|---|---|---|---|---|---|---|---|---|---|---|---|---|---|
| 28 | M54A | L3X3X4 | .417 | 7.779 | 3 | .197 | 13.165 | z | 21 | 3748.406 | 46656 | 1.688 | 2.917 | 2.... | H2-1 |
| 29 | MP2C | PIPE_2.0 | .309 | 4.062 | 12 | .164 | 4.062 | | 3 | 23808.54 | 32130 | 1.872 | 1.872 | 2.... | H1-1b |
| 30 | MP3C | PIPE_2.0 | .397 | 3.802 | 3 | .253 | 4.531 | | 5 | 23808.54 | 32130 | 1.872 | 1.872 | 1.... | H1-1b |
| 31 | MP5C | PIPE_2.0 | .030 | .573 | 23 | .189 | .469 | | 7 | 23808.54 | 32130 | 1.872 | 1.872 | 2.... | H1-1b |
| 32 | M82 | PIPE_2.0 | .412 | 9.375 | 10 | .167 | 9.245 | | 18 | 6295.422 | 32130 | 1.872 | 1.872 | 1.... | H1-1b |
| 33 | M85 | L3X3X4 | .424 | 7.779 | 11 | .228 | 13.314 | z | 17 | 3748.406 | 46656 | 1.688 | 2.936 | 2.... | H2-1 |
| 34 | MP2B | PIPE_2.0 | .308 | 4.062 | 8 | .172 | 4.062 | | 5 | 23808.54 | 32130 | 1.872 | 1.872 | 2.... | H1-1b |
| 35 | MP3B | PIPE_2.0 | .429 | 3.802 | 11 | .254 | 4.531 | | 1 | 23808.54 | 32130 | 1.872 | 1.872 | 1.... | H1-1b |
| 36 | MP5B | PIPE_2.0 | .049 | .573 | 24 | .221 | .469 | | 4 | 23808.54 | 32130 | 1.872 | 1.872 | 2.... | H1-1b |
| 37 | M107A | HSS4X4X4 | .221 | 0 | 7 | .123 | 0 | z | 12 | 139319.... | 139518 | 16.181 | 16.181 | 1.... | H1-1b |
| 38 | M108A | HSS4X4X4 | .233 | 0 | 3 | .125 | 0 | z | 7 | 139319.... | 139518 | 16.181 | 16.181 | 1.... | H1-1b |
| 39 | M105 | PIPE_2.0 | .060 | 4.631 | 17 | .149 | 4.631 | | 9 | 24846.31 | 32130 | 1.872 | 1.872 | 1.... | H1-1b* |
| 40 | M106A | PIPE_2.0 | .074 | 4.631 | 13 | .167 | 0 | | 10 | 24846.3... | 32130 | 1.872 | 1.872 | 1.... | H1-1b* |
| 41 | M107 | PIPE_2.0 | .059 | 4.631 | 24 | .158 | 4.631 | | 5 | 24846.31 | 32130 | 1.872 | 1.872 | 1.... | H1-1b* |
| 42 | M108 | PIPE_2.0 | .075 | 4.631 | 21 | .174 | 0 | | 5 | 24846.3... | 32130 | 1.872 | 1.872 | 1.... | H1-1b* |
| 43 | MP1B | PIPE_2.0 | .049 | .573 | 24 | .222 | .469 | | 6 | 23808.54 | 32130 | 1.872 | 1.872 | 2.... | H1-1b |
| 44 | M102B | PIPE_2.0 | .404 | 9.375 | 2 | .162 | 9.115 | | 3 | 6295.422 | 32130 | 1.872 | 1.872 | 1.... | H1-1b |
| 45 | MP4C | PIPE_2.0 | .333 | 3.49 | 5 | .242 | 3.542 | | 4 | 23808.54 | 32130 | 1.872 | 1.872 | 1.... | H1-1b |
| 46 | MP4B | PIPE_2.0 | .329 | 3.49 | 1 | .248 | 3.542 | | 12 | 23808.54 | 32130 | 1.872 | 1.872 | 1.... | H1-1b |
| 47 | MPC2 | PIPE_2.0 | .306 | 3.49 | 12 | .230 | 3.542 | | 2 | 23808.54 | 32130 | 1.872 | 1.872 | 1.... | H1-1b |
| 48 | MPB2 | PIPE_2.0 | .301 | 3.49 | 8 | .236 | 3.542 | | 10 | 23808.54 | 32130 | 1.872 | 1.872 | 1.... | H1-1b |

| VzW SMART Tool© Vendor | | | |
|---|---|---|---|
| Client: | Verizon Wireless | Date: | 9/26/2023 |
| Site Name: | WOODBURY W CT | | |
| MDG #: | 5000245327 | | |
| Fuze ID #: | 17123973 | Page: | 1 |

Version 1.01

## I. Mount-to-Tower Connection Check

| | |
|---|---|
| *Custom Orientation Required* | No |
| *Tower Connection Baseplate Checks* | No |
| *Tower Connection Weld Checks* | Yes |

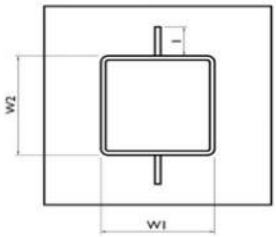


| | |
|---|---|
| Weld Shape: | Rectangle |
| Weld Stiffener Configuration: | (1) Stiffener on top/bottom |
| Stiffener Notch Present? | Yes |
| Stiffener Length, l (in): | 2 |
| Stiffener Spacing/Width, s (in): | |
| Stiffener Notch Length, n (in): | 0.5 |
| Weld Size (1/16 in): | 4 |
| W1 (in): | 4 |
| W2 (in): | 4 |
| Weld Total Length (in): | 24.00 |
| $Z_x$ ($in^3$/in): | 50.37 |
| $Z_y$ ($in^3$/in): | 21.33 |
| $J_p$ ($in^4$/in): | 216.00 |
| $c_x$ (in) | 4.5 |
| $c_y$ (in) | 4.5 |
| Required combined strength (kip/in): | 1.36 |
| Weld Capacity (kip/in): | 5.57 |
| Weld Utilization: | **24.5%** |

# EXHIBIT 5

# Non-Ionizing Electromagnetic Radiation (NIER) Study

*Site Number:*

411180

*Site Name:*

Good Hill CT

*Location:*

Woodbury, Connecticut

*Tenants:*

AT&T Mobility, T-Mobile, Dish Wireless, Woodbury Volunteer Fire Department, & Verizon Wireless

*Prepared For:*

American Tower, Inc.
Woburn, Massachusetts

September 10th, 2023

25636 P-405628


Prepared By:

Adam Carlson MS, CBRE, CPI
Program Manager RF Design & Service
Tower Engineering Professionals


Approved By:

09/13/2023

TOWER ENGINEERING PROFESSIONALS

# Contents


DISCLAIMER NOTICE ..... 3

INTRODUCTION ..... 4

SITE AND FACILITY CONSIDERATIONS ..... 4

POWER DENSITY CALCULATIONS ..... 4

SITE MITIGATION & CONTROL ..... 5

COMPLIANCE DETERMINATION ..... 5

APPENDIX 1 SITE PHOTOS ..... 6

APPENDIX 2.1 ANTENNA INVENTORY ..... 7

APPENDIX 2.2 ANTENNA INVENTORY ..... 8

APPENDIX 3.1 MPE LIMIT STUDY ..... 9

APPENDIX 3.2 MPE LIMIT STUDY ..... 10

APPENDIX 4 INFORMATION PERTAINING TO MPE STUDIES ..... 11

APPENDIX 5 MPE STANDARDS METHODOLOGY ..... 13

# Disclaimer Notice

This work is based upon our best interpretation of available information. However, these data and their interpretation are constantly changing. Therefore, we do not warrant that any undertaking based on this report will be successful, or that others will not require further research or actions in support of this proposal or future undertaking. In the event of errors, our liability is strictly limited to the replacement of this document with a corrected one. Liability for consequential damages is specifically denied. Any use of this document constitutes an agreement to hold Tower Engineering Professionals and its employees harmless and indemnify it for all liability, claims, demands, and litigation expenses and attorney's fees arising out of such use.

Work product documents released prior to account settlement remain the sole property of Tower Engineering Professionals and must be returned on demand. Underlying work notes and data relating to this document remain the property of Tower Engineering Professionals. This document shall not be reproduced in whole or part without the permission of Tower Engineering Professionals. Any dispute hereunder shall be adjudicated in North Carolina. Any use or retention of this document constitutes acceptance of these terms, the entire work product, and all charges associated therewith.

COPYRIGHT © 2023 BY

TOWER ENGINEERING PROFESSIONALS

RALIEGH, NORTH CAROLINA

TOWER ENGINEERING PROFESSIONALS

# Non-Ionizing Electromagnetic Radiation (NIER) Study

411180 Good Hill CT
Woodbury, Connecticut

## INTRODUCTION

Tower Engineering Professionals RF Design & Services Division (TEP-RF) of Raleigh, North Carolina, has been retained by American Tower, Inc. (ATC), of Woburn, Massachusetts to evaluate the RF emissions compared to the Maximum Permissible Exposure (MPE) limit for facilities at this location. This evaluation uses compliance standards as outlined in Federal Communications Commission (FCC) document OET-65.

## SITE AND FACILITY CONSIDERATIONS

Site 411180 Good Hill CT is located at 478 Good Hill., in Woodbury, Connecticut at coordinates 41.557273, -73.256773. The support structure is a 149' monoploe. An aerial view of the tower can be found in Appendix 1, Site Photos. The tenants are AT&T Mobility (AT&T), T-Mobile (T-Mobile), Dish Wireless (Dish), Woodbury Volunteer Fire Department (WVFD) & Verizon Wireless (VZW). A table listing all antennae and effective radiated power (ERP) levels that were used in this study may be found in Appendix 2, Antenna Inventory.

## POWER DENSITY CALCULATIONS

Power densities were calculated based on FCC MPE limits for both General Population/Uncontrolled and Occupational/Controlled environments.

For the purpose of this study, a radius of 200 from the base of the tower with a height of 6' above ground level was used, beyond 200' the MPE levels become *di minimus*. This study utilized FCC recognized and accepted software programs using the maximum ERP levels for the antenna models provided by ATC. Diagrams depicting the predicted spatial average power density level at any specific location may be found in Appendix 3, MPE Limit Study. A discussion regarding the FCC limits may be found in Appendix 4, Information Pertaining to MPE Studies. Study methodology describing Non-ionizing Radiation Prediction Models used in this study may be found in Appendix 5, MPE Standards Methodology.

All data used in this study was collected from one or more of the following sources:

- ATC furnished data and does not include other unidentified communication facilities.
- Load List at 411180 Good Hill CT.RF NIER Study 8/21/23.
- FCC databases.
- Carrier standard configurations.
- Empirical data collected by TEP.

## SITE MITIGATION & CONTROL

In order to comply with FCC, tenant, & ATC requirements, TEP recommends the placement of signage at the base of the tower and all compound access points to alert workers of potential exposure to RF fields while working on or near the antennae.

TEP recommends that all personnel working on this tower be trained in RF safety procedures and carry a personal RF monitor at all times.

## COMPLIANCE DETERMINATION

This installation ***IS*** in compliance with current FCC MPE limits as described in FCC OET-65.

TOWER ENGINEERING PROFESSIONALS

# APPENDIX 1 Site Photos

Aerial View of Site

TOWER ENGINEERING PROFESSIONALS

# Appendix 2.1 Antenna Inventory

| 411180 Good Hill CT | | | | | | | |
|---|---|---|---|---|---|---|---|
| Antenna Inventory | | | | | | | |
| Antenna # | Carrier | Antenna Manufacturer | Antenna Model | Frequency Band (MHz) | Azmiuth (°) | Effective Radiated Power (W) | Radiation Center (ft) |
| 1 | Verizon | Antel | LPA-80063/4CF | 800 | 010 | 7655 | 147 |
| 2 | Verizon | Antel | LPA-80063/4CF | 800 | 250 | 7655 | 147 |
| 3 | Verizon | Antel | LPA-80063/4CF | 800 | 010 | 7655 | 147 |
| 4 | Verizon | Antel | LPA-80063/4CF | 800 | 250 | 7655 | 147 |
| 5 | Verizon | Samsung | MT6407 | 3700/3800/3900 | 010 | 18286 | 147 |
| 6 | Verizon | Samsung | MT6407 | 3700/3800/3900 | 130 | 18286 | 147 |
| 7 | Verizon | Samsung | MT6407 | 3700/3800/3900 | 250 | 18286 | 147 |
| 8 | Verizon | Antel | LPA-80063/4CF | 800 | 130 | 7655 | 147 |
| 9 | Verizon | Antel | LPA-80063/4CF | 800 | 130 | 7655 | 147 |
| 10 | Verizon | Commscope | JAHH-65B-R3B | 700/1900/2100 | 060 | 59387 | 147 |
| 11 | Verizon | Commscope | JAHH-65B-R3B | 700/1900/2100 | 180 | 59387 | 147 |
| 12 | Verizon | Commscope | JAHH-65B-R3B | 700/1900/2100 | 300 | 59387 | 147 |
| 13 | Verizon | Commscope | JAHH-65B-R3B | 700/1900/2100 | 060 | 59387 | 147 |
| 14 | Verizon | Commscope | JAHH-65B-R3B | 700/1900/2100 | 180 | 59387 | 147 |
| 15 | Verizon | Commscope | JAHH-65B-R3B | 700/1900/2100 | 300 | 59387 | 147 |
| 16 | T-Mobile | RFS | SC2-W100BD | 11000 | 060 | 504591 | 135 |
| 17 | T-Mobile | Ericsson | Air 6419 | 2500/2600 | 030 | 20253 | 135 |
| 18 | T-Mobile | Ericsson | Air 6419 | 2500/2600 | 150 | 20253 | 135 |
| 19 | T-Mobile | Ericsson | Air 6419 | 2500/2600 | 270 | 20253 | 135 |
| 20 | T-Mobile | RFS | APXVAALL24 | 600 | 030 | 11065 | 135 |
| 21 | T-Mobile | RFS | APXVAALL24 | 600 | 150 | 11065 | 135 |
| 22 | T-Mobile | RFS | APXVAALL24 | 600 | 270 | 11065 | 135 |

TOWER ENGINEERING PROFESSIONALS

# Appendix 2.2 Antenna Inventory

| 411180 Good Hill CT | | | | | | | |
|---|---|---|---|---|---|---|---|
| Antenna Inventory | | | | | | | |
| Antenna # | Carrier | Antenna Manufacturer | Antenna Model | Frequency Band (MHz) | Azmiuth (°) | Effective Radiated Power (W) | Radiation Center (ft) |
| 23 | T-Mobile | Commscope | VV-65A-R1B | 1900/2100 | 030 | 25027 | 135 |
| 24 | T-Mobile | Commscope | VV-65A-R1B | 1900/2100 | 150 | 25027 | 135 |
| 25 | T-Mobile | Commscope | VV-65A-R1B | 1900/2100 | 270 | 25027 | 135 |
| 26 | AT&T | Allgon | 77770 | 700/1900 | 030 | 35334 | 124 |
| 27 | AT&T | Allgon | 77770 | 700/1900 | 150 | 35334 | 124 |
| 28 | AT&T | Allgon | 77770 | 700/1900 | 270 | 35334 | 124 |
| 29 | AT&T | Allgon | 77770 | 700/1900 | 030 | 35334 | 124 |
| 30 | AT&T | Allgon | 77770 | 700/1900 | 150 | 35334 | 124 |
| 31 | AT&T | Allgon | 77770 | 700/1900 | 270 | 35334 | 124 |
| 32 | AT&T | KMW | EPBQ-654L8H6 | 700/1900 | 030 | 61549 | 124 |
| 33 | AT&T | KMW | EPBQ-654L8H6 | 700/1900 | 150 | 61549 | 124 |
| 34 | AT&T | KMW | EPBQ-654L8H6 | 700/1900 | 270 | 61549 | 124 |
| 35 | AT&T | KMW | AM-X-CD-16-65 | 700/1900/2100 | 030 | 53762 | 124 |
| 36 | AT&T | KMW | AM-X-CD-16-65 | 700/1900/2100 | 150 | 19623 | 124 |
| 37 | AT&T | Scala | 800 10764 | 700/1900/2100 | 270 | 19623 | 124 |
| 38 | WVFD | Generic | 3' Omni-Grid | unknown | 000 | 1100 | 117.5 |
| 39 | WVFD | Generic | 3' Omni-Grid | unknown | 120 | 1100 | 117.5 |
| 40 | Dish | JMA | MX08FRO665-21 | 600/1900/2000/2100 | 000 | 48332 | 101 |
| 41 | Dish | JMA | MX08FRO665-21 | 600/1900/2000/2100 | 120 | 48332 | 101 |
| 42 | Dish | JMA | MX08FRO665-21 | 600/1900/2000/2100 | 240 | 48332 | 101 |

TOWER ENGINEERING PROFESSIONALS

# Appendix 3.1 MPE Limit Study

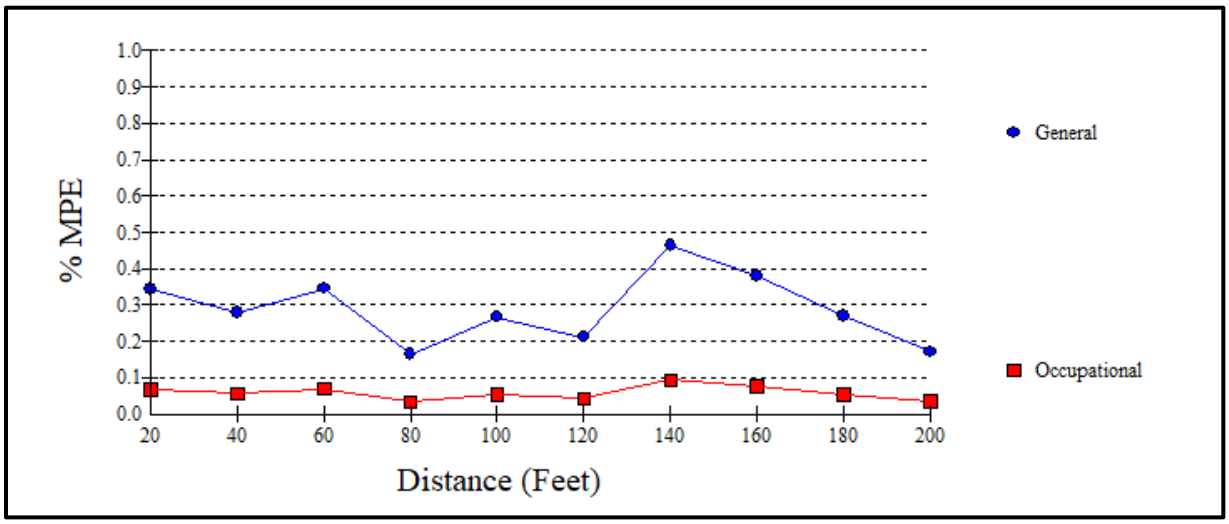


| | |
|---|---|
| Maximum Power Density (@140'): | 0.0029 mW/cm² |
| General Population MPE (@140'): | 0.4644% |
| Occupational MPE (@140'): | 0.0978% |

# Appendix 3.2 MPE Limit Study

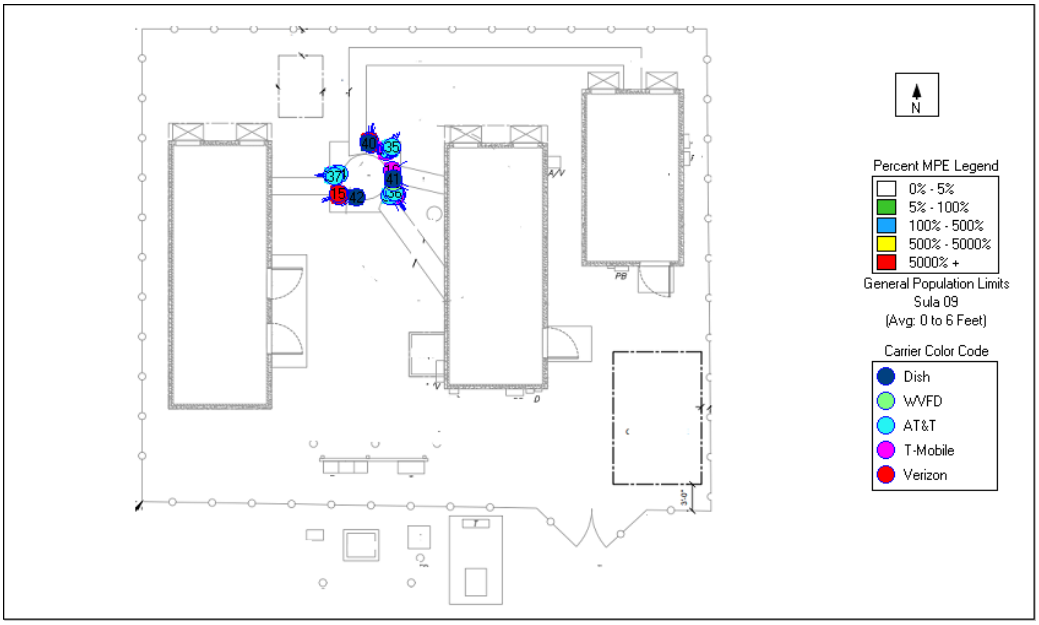

# Appendix 4 Information Pertaining to MPE Studies

In 1985, the FCC first adopted guidelines to be used for evaluating human exposure to RF emissions. The FCC revised and updated these guidelines on August 1, 1996, as a result of a rule-making proceeding initiated in 1993. The new guidelines incorporate limits for Maximum Permissible Exposure (MPE) in terms of electric and magnetic field strength and power density for transmitters operating at frequencies between 300 kHz and 100 GHz.

The FCC's MPE limits are based on exposure limits recommended by the National Council on Radiation Protection and Measurements (NCRP), and, over a wide range of frequencies, the exposure limits were developed by the Institute of Electrical and Electronics Engineers, Inc., (IEEE) and adopted by the American National Standards Institute (ANSI) to replace the 1982 ANSI guidelines. Limits for localized absorption are based on recommendations of both ANSI/IEEE and NCRP.

The FCC's limits, and the NCRP and ANSI/IEEE limits on which they are based, are derived from exposure criteria quantified in terms of specific absorption rate (SAR). The basis for these limits is a whole-body averaged SAR threshold level of 4 watts per kilogram (4 W/kg), as averaged over the entire mass of the body, above which expert organizations have determined that potentially hazardous exposures may occur. The MPE limits are derived by incorporating safety factors that lead, in some cases, to limits that are more conservative than the limits originally adopted by the FCC in 1985. Where more conservative limits exist, they do not arise from a fundamental change in the RF safety criteria for whole-body averaged SAR, but from a precautionary desire to protect subgroups of the general population who, potentially, may be more at risk.

The FCC exposure limits are also based on data showing that the human body absorbs RF energy at some frequencies more efficiently than at others. The most restrictive limits occur in the frequency range of 30-300 MHz where whole-body absorption of RF energy by human beings is most efficient. At other frequencies, whole-body absorption is less efficient, and consequently, the MPE limits are less restrictive.

MPE limits are defined in terms of power density (units of milliwatts per centimeter squared: $mW/cm^2$), electric field strength (units of volts per meter: V/m) and magnetic field strength (units of amperes per meter: A/m). The far-field of a transmitting antenna is where the electric field vector (E), the magnetic field vector (H), and the direction of propagation can be considered to be all mutually orthogonal ("plane-wave" conditions).

**Occupational/controlled exposure** limits apply to situations in which persons are exposed as a consequence of their employment and in which those persons who are exposed have been made fully aware of the potential for exposure and can exercise control over their exposure. Occupational/controlled exposure limits also apply where exposure is of a transient nature as a result of incidental passage through a location where exposure levels may be above general population/uncontrolled limits (see below), as long as the exposed person has been made fully aware of the potential for exposure and can exercise control over his or her exposure by leaving the area or by some other appropriate means.

**General population/uncontrolled exposure** limits apply to situations in which the general public may be exposed or in which persons who are exposed as a consequence of their employment may not be made fully aware of the potential for exposure or cannot exercise control over their exposure. Therefore, members of the general public would always be considered under this category when exposure is not employment-related, for example, in the case of a telecommunications tower that exposes persons in a nearby residential area. Additional details can be found in FCC OET 65.

# Appendix 5 MPE Standards Methodology

This study predicts RF field strength and power density levels that emanate from communications system antennae. It considers all transmitter power levels (less filter and line losses) delivered to each active transmitting antenna at the communications site. Calculations are performed to determine power density and MPE levels for each antenna as well as composite levels from all antennas. The calculated levels are based on where a human (Observer) would be standing at various locations at the site. The point of interest where the MPE level is predicted is based on the height of the Observer.

Compliance with the FCC limits on RF emissions are determined by spatially averaging a person's exposure over the projected area of an adult human body, that is approximately six-feet or two-meters, as defined in the ANSI/IEEE C95.1 standard. The MPE limits are specified as time-averaged exposure limits. This means that exposure is averaged over an identifiable time interval. It is 30 minutes for the general population/uncontrolled RF environment and 6 minutes for the occupational/controlled RF environment. However, in the case of the general public, time averaging should not be applied because the general public is typically not aware of RF exposure, and they do not have control of their exposure time. Therefore, it should be assumed that any RF exposure to the general public will be continuous.

The FCC's limits for exposure at different frequencies are shown in the following Tables.

| Limits for Occupational/Controlled Exposure | | | | |
|---|---|---|---|---|
| **Frequency Range (MHz)** | **Electric Field Strength (E) (V/m)** | **Magnetic Field Strength (H) (A/m)** | **Power Density (S) ($mW/cm^2$)** | **Averaging Time $\|E\|^2$, $\|H\|^2$ or S (minutes)** |
| 0.3 - 3.0 | 614 | 1.63 | 100* | 6 |
| 3.0 - 30 | 1842/f | 4.89/f | $900/F^2$ | 6 |
| 30 - 300 | 61.4 | 0.163 | 1.0 | 6 |
| 300 - 1500 | -- | -- | f/300 | 6 |
| 1500 - 100,000 | -- | -- | 5 | 6 |

f = frequency

* = Plane-wave equivalent power density

Occupational/controlled limits apply in situations in which persons are exposed as a consequence of their employment provided those persons are fully aware of the potential for exposure and can exercise control over their exposure. Limits for occupational/controlled exposure also apply in situations when an individual is transient through a location where occupational/controlled limits apply provided he or she is made aware of the potential for exposure.

| Limits for General Population/Uncontrolled Exposure | | | | |
|---|---|---|---|---|
| **Frequency Range (MHz)** | **Electric Field Strength (E) (V/m)** | **Magnetic Field Strength (H) (A/m)** | **Power Density (S) ($mW/cm^2$)** | **Averaging Time $\|E\|^2$, $\|H\|^2$ or S (minutes)** |
| 0.3 - 1.34 | 614 | 1.63 | 100* | 30 |
| 1.34 - 30 | 824/f | 2.19/f | $180/F^2$ | 30 |
| 30 -300 | 27.5 | 0.073 | 0.2 | 30 |
| 300 -1500 | -- | -- | f/1500 | 30 |
| 1500 -100,000 | -- | -- | 1.0 | 30 |

f = frequency

* = Plane-wave equivalent power density

General population/uncontrolled exposures apply in situations in which the general public may be exposed or in which persons that are exposed as a consequence of their employment may not be fully aware of the potential for exposure or cannot exercise control over their exposure.

It is important to understand that these limits apply cumulatively to all sources of RF emissions affecting a given area. For example, if several different communications system antennas occupy a shared facility such as a tower or rooftop, then the total exposure from all systems at the facility must be within compliance of the FCC guidelines.

The field strength emanating from an antenna can be estimated based on the characteristics of an antenna radiating in free space. There are basically two field areas associated with a radiating antenna. When close to the antenna, the region is known as the Near Field. Within this region, the characteristics of the RF fields are very complex, and the wave front is extremely curved. As you move further from the antenna, the wave front has less curvature and becomes planar. The wave front still has a curvature, but it appears to occupy a flat plane in space (plane-wave radiation). This region is known as the Far Field.

Two models are utilized to predict Near and Far field power densities. They are based on the formulae in FCC OET 65.

**Cylindrical Model (Near Field Predictions)**

Spatially averaged plane-wave equivalent power densities parallel to the antenna may be estimated by dividing the antenna input power by the surface area of an imaginary cylinder surrounding the length of the radiating antenna. While the actual power density will vary along the height of the antenna, the average value along its length will closely follow the relation given by the following equation:

$$S = P \div 2\pi RL$$

Where:

S = Power Density

P = Total Power into antenna

R = Distance from the antenna

L = Antenna aperture length

For directional-type antennas, power densities can be estimated by dividing the input power by that portion of a cylindrical surface area corresponding to the angular beam width of the antenna. For example, for the case of a 120-degree azimuthal beam width, the surface area should correspond to 1/3 that of a full cylinder. This would increase the power density near the antenna by a factor of three over that for a purely omni-directional antenna. Mathematically, this can be represented by the following formula:

$$S = (180 / \theta_{BW}) P \div \pi R L$$

Where:

S = Power Density

$\theta_{BW}$ = Beam width of antenna in degrees (3 dB half-power point)

P = Total Power into antenna

R = Distance from the antenna

L = Antenna aperture length

If the antenna is a 360-degree omni-directional antenna, this formula would be equivalent to the previous formula.

**Spherical Model (Far Field Predictions)**

Spatially averaged plane-wave power densities in the Far Field of an antenna may be estimated by considering the additional factors of antenna gain and reflective waves that would contribute to exposure.

The radiation pattern of an antenna has developed in the Far Field region and the power gain needs to be considered in exposure predictions. Also, if the vertical radiation pattern of the antenna is considered, the exposure predictions would most likely be reduced significantly at ground level, resulting in a more realistic estimate of the actual exposure levels.

Additionally, to model a truly "worst case" prediction of exposure levels at or near a surface, such as at ground-level or on a rooftop, reflection off the surface of antenna radiation power can be assumed, resulting in a potential four-fold increase in power density.

These additional factors are considered, and the Far Field prediction model is determined by the following equation:

$$S = EIRP \times Rc \div 4\pi R^2$$

Where:

S = Power Density

EIRP = Effective Radiated Power from antenna

Rc = Reflection Coefficient (2.56)

R = Distance from the antenna

The EIRP includes the antenna gain. If the antenna pattern is considered, the antenna gain is relative based on the horizontal and vertical pattern gain values at that particular location in space, on a rooftop or on the ground. However, it is recommended that the antenna radiation pattern characteristics not be considered to provide a conservative "worst case" prediction. This is the equation is utilized for the Far Field exposure predictions herein.

# EXHIBIT 6

**DOCKET NO. 183** - An application by Litchfield Acquisition Corporation d/b/a AT&T Wireless Services for a Certificate of Environmental Compatibility and Public Need for the construction, maintenance, and operation of a telecommunications tower and associated equipment located at 478 Good Hill Road (Route 317), Woodbury, Connecticut.

**Connecticut Siting Council**

May 13, 1998

**Decision and Order**

Pursuant to the foregoing Findings of Fact and Opinion, the Connecticut Siting Council (Council) finds that the effects associated with the construction, operation, and maintenance of a telecommunications facility at the proposed site in Woodbury, Connecticut, including effects on the natural environment; ecological integrity and balance; public health and safety; scenic, historic, and recreational values; forests and parks; air and water purity; and fish and wildlife are not disproportionate either alone or cumulatively with other effects when compared to need, are not in conflict with the policies of the State concerning such effects, and are not sufficient reason to deny the application and therefore directs that a Certificate of Environmental Compatibility and Public Need, as provided by General Statutes § 16-50k, be issued to Litchfield Acquisition Corporation (LAC) d/b/a AT&T Wireless Services, for the construction, operation, and maintenance of a telecommunications tower, associated equipment, and equipment building at the proposed site, located within a 471-acre parcel off Good Hill Road in Woodbury, Connecticut.

The facility shall be constructed, operated, and maintained substantially as specified in the Council's record in this matter, and subject to the following conditions:

1. The tower shall be constructed as a monopole, no taller than necessary to provide the proposed telecommunications services, sufficient to accommodate the antennas of LAC and other telecommunications providers, both public and private, but such tower shall not exceed a height of 150 feet above ground level (AGL).

2. The Certificate Holder shall prepare a Development and Management (D&M) Plan for this site in compliance with Sections 16-50j-75 through 16-50j-77 of the Regulations of Connecticut State Agencies. The D&M Plan shall be submitted to and

approved by the Council prior to the commencement of facility construction and shall include: a final site plan(s) for site development to include plans for vegetative screening; construction plans for site and grading, water drainage, and security fencing around the tower and equipment building; provisions for the installation of erosion and sedimentation controls consistent with the Connecticut Guidelines for Soil Erosion and Sediment Control, as amended, prior to construction; and specifications for the tower foundation, antennas, equipment building, access road, and underground utility lines.

3. Upon the establishment of any new State or federal radio frequency standards applicable to frequencies of this facility, the facility granted herein shall be brought into compliance with such standards.

4. The Certificate Holder shall provide the Council a recalculated report of electromagnetic radio frequency power density if and when circumstances in operation cause a change in power density above the levels originally calculated and provided in the application.

5. The Certificate Holder shall permit public or private entities to share space on the proposed tower for fair consideration, or shall provide any requesting entity with specific legal, technical, environmental, or economic reasons precluding such tower sharing.

6. If the facility does not initially provide, or permanently ceases to provide cellular services following completion of construction, this Decision and Order shall be void, and the Certificate Holder shall dismantle the tower and remove all associated equipment or reapplication for any continued or new use shall be made to the Council before any such use is made.

7. Any antenna that becomes obsolete and ceases to function shall be removed within 60 days after such antennas become obsolete and cease to function.

8. Unless otherwise approved by the Council, this Decision and Order shall be void if all construction authorized herein is not completed within three years of the effective date of this Decision and Order or within three years after all appeals to this Decision and Order have been resolved.

Pursuant to General Statutes § 16-50p, we hereby direct that a copy of the Findings of Fact, Opinion, and Decision and Order be served on each person listed below,

and notice of issuance shall be published in The Hartford Courant and Waterbury Republican-American.

By this Decision and Order, the Council disposes of the legal rights, duties, and privileges of each party named or admitted to the proceeding in accordance with Section 16-50j-17 of the Regulations of Connecticut State Agencies.

The parties and intervenors to this proceeding are:

**Applicant**

Litchfield Acquisition Corporation d/b/a AT&T Wireless Services

Its Representative

Douglas A. Cohen, Esq.
Brown, Rudnick, Freed & Gesmer, P.C.
185 Asylum Street, CityPlace I
Hartford, CT 06103-3402 (860) 509-6511

Mitchell Holmgren Site Development Coordinator
AT&T Wireless Services
15 East Midland Avenue
Paramus, NJ 07652 (201) 967-3130

**Intervenor**

Springwich Cellular Limited Partnership

Its Representative

Peter J. Tyrrell
Senior Counsel
Springwich Cellular Limited Partnership
500 Enterprise Drive
Rocky Hill, CT 06067-3900 (860) 513-7673

**Intervenor**

Nextel Communications of the Mid-Atlantic, Inc. d/b/a Nextel Communications

Its Representative

Christopher B. Fisher
Cuddy, Feder & Worby
90 Maple Avenue
White Plains, NY  10601-5196 (914) 761-1300

**Party**

Town of Woodbury

Its Representative

Honorable Richard CraneFirst Selectman
Town of Woodbury
P.O. Box 369281 Main Street
SouthWoodbury, CT  06798-0369 (203) 263-2141

# EXHIBIT 7

**From:** UPS
**To:** Barbara Kassabian
**Subject:** UPS Delivery Notification, Tracking Number 1Z9Y45030336233230
**Date:** Wednesday, October 18, 2023 12:39:38 PM

## Hello, your package has been delivered.

**Delivery Date:** Wednesday, 10/18/2023
**Delivery Time:** 12:37 PM
**Signed by:** ANCRI

## CENTERLINE SITE ACQUISITION

| | |
|---|---|
| **Tracking Number:** | 1Z9Y45030336233230 |
| **Ship To:** | AMERICAN TOWER<br>10 PRESIDENTIAL WAY<br>WOBURN, MA 018011053<br>US |
| **Number of Packages:** | 1 |
| **UPS Service:** | UPS Ground |
| **Package Weight:** | 1.0 LBS |
| **Reference Number:** | 14519465 |

## Discover more about UPS:

Visit www.ups.com

Sign Up For Additional E-Mail From UPS

Read Compass Online

© 2023 United Parcel Service of America, Inc. UPS, the UPS brandmark, and the color brown are trademarks of United Parcel Service of America, Inc. All rights reserved.

All trademarks, trade names, or service marks that appear in connection with UPS's services are the property of their respective owners.

Please do not reply directly to this email. UPS will not receive any reply message.

**From:** UPS
**To:** Barbara Kassabian
**Subject:** UPS Delivery Notification, Tracking Number 1Z9Y45030328775018
**Date:** Wednesday, October 18, 2023 11:27:14 AM

## Hello, your package has been delivered.

**Delivery Date:** Wednesday, 10/18/2023
**Delivery Time:** 10:35 AM
**Signed by:** PERKINSON

## CENTERLINE SITE ACQUISITION

| | |
|---|---|
| **Tracking Number:** | 1Z9Y45030328775018 |
| **Ship To:** | TOWN OF WOODBURY<br>281 MAIN STREET<br>WOODBURY, CT 067983449<br>US |
| **Number of Packages:** | 1 |
| **UPS Service:** | UPS Ground |
| **Package Weight:** | 1.0 LBS |
| **Reference Number:** | 14519465 |

## Discover more about UPS:

Visit www.ups.com

Sign Up For Additional E-Mail From UPS

Read Compass Online

© 2023 United Parcel Service of America, Inc. UPS, the UPS brandmark, and the color brown are trademarks of United Parcel Service of America, Inc. All rights reserved.

All trademarks, trade names, or service marks that appear in connection with UPS's services are the property of their respective owners.

Please do not reply directly to this email. UPS will not receive any reply message.

**From:** UPS
**To:** Barbara Kassabian
**Subject:** UPS Delivery Notification, Tracking Number 1Z9Y45030336307624
**Date:** Wednesday, October 18, 2023 11:27:11 AM

## Hello, your package has been delivered.

**Delivery Date:** Wednesday, 10/18/2023

**Delivery Time:** 10:35 AM

**Signed by:** PERKINSON

## CENTERLINE SITE ACQUISITION

| | |
|---|---|
| **Tracking Number:** | 1Z9Y45030336307624 |
| **Ship To:** | TOWN OF WOODBURY<br>281 MAIN STREET<br>WOODBURY, CT 067983449<br>US |
| **Number of Packages:** | 1 |
| **UPS Service:** | UPS Ground |
| **Package Weight:** | 1.0 LBS |
| **Reference Number:** | 14519465 |

## Discover more about UPS:

Visit www.ups.com

Sign Up For Additional E-Mail From UPS

Read Compass Online

© 2023 United Parcel Service of America, Inc. UPS, the UPS brandmark, and the color brown are trademarks of United Parcel Service of America, Inc. All rights reserved.

All trademarks, trade names, or service marks that appear in connection with UPS's services are the property of their respective owners.

Please do not reply directly to this email. UPS will not receive any reply message.

tools.usps.com/go/TrackConfirmAction?tRef=fullpage&tLc=3&text28777=&tLabels=9505513170423291465048%2C%2C&tABt=false

Google Maps | DAS/Small Cell Loc... | DAS/Small Cell Loc... | Employee Self-Serv... | COBUCS | Road Inventory | SHAPS | Vendor Portal Access | Home | Salesforce | Siterra Login | Connecticut Siting...

Track Packages Anytime, Anywhere
Get the free Informed Delivery® feature to receive automated notifications on your packages
Learn More

Remove ✕

Tracking Number:

**9505513170423291465048**

Copy  Add to Informed Delivery

**Latest Update**

Your item has been delivered and is available at a PO Box at 8:36 am on October 21, 2023 in ROXBURY, CT 06783.

**Get More Out of USPS Tracking:**

USPS Tracking Plus®

**Delivered**

**Delivered, PO Box**

ROXBURY, CT 06783
October 21, 2023, 8:36 am

See All Tracking History

What Do USPS Tracking Statuses Mean?

**Text & Email Updates**

**USPS Tracking Plus®**

**Product Information**

**See Less**

Track Another Package