SHEET INDEX

NO.	DESCRIPTION
T1	TITLE SHEET
C1	GENERAL NOTES
C2	GENERAL NOTES
Z1	SITE PLAN
C3	COMPOUND PLAN
C4	EQUIPMENT SITE PLAN
C5	ELEVATION VIEW
C6	EQUIPMENT DETAILS
C7	EQUIPMENT DETAILS
C8	LTE TOWER TOP CONFIGURATION
C9	SCHEMATICS, DIAGRAMS & NOTES
C10	PLUMBING DIAGRAM

DRIVING DIRECTIONS

START FROM 550 COCHITUATE ROAD
1. HEAD NORTHEAST TOWARD LEGGATT MCCALL CONN
2. TURN LEFT ONTO LEGGATT MCCALL CONN
3. CONTINUE ONTO BURR ST
4. TURN LEFT ONTO COCHITUATE RD
5. USE THE RIGHT LANE TO TAKE THE RAMP TO I-90 E/MASSPIKE W/SPRINGFIELD/BOSTON
6. KEEP LEFT AT THE FORK, FOLLOW SIGNS FOR INTERSTATE 90 W/MASSACHUSETTS TURNPIKE/WORCHESTER/SPRINGFIELD AND MERGE ONTO I-90 W/MASSACHUSETTS TURNPIKE
7. MERGE ONTO I-90 W/MASSACHUSETTS TURNPIKE
8. USE THE RIGHT 2 LANES TO TAKE EXIT 9 FOR I-84 TOWARD US-20/HARTFORD/NEW YORK CITY
9. CONTINUE ONTO I-84
10. KEEP RIGHT TO STAY ON I-84
11. KEEP LEFT TO STAY ON I-84
12. TAKE EXIT 17 FOR CT-64 TOWARD CT-63/MIDDLEBURY/WATERTOWN
13. CONTINUE ONTO CT-64 W/CHASE PKWY
14. CONTINUE TO FOLLOW CT-64 W
15. TURN RIGHT TO STAY ON CT-64 W
16. TURN RIGHT ONTO US-6 E/MAIN ST S
17. TURN LEFT ONTO HOLLOW RD
18. CONTINUE ONTO CT-317 W

LOCATION MAP

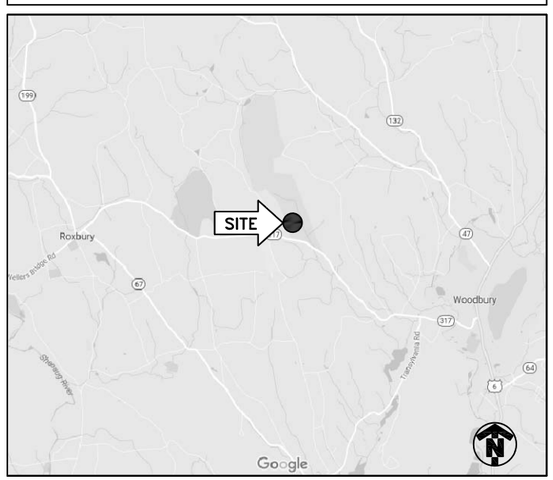

at&t

SITE NAME

WOODBURY GOOD HILL ROAD

SITE ID

CT1172

FA SITE NUMBER

10071346

PACE ID

MRCTB024478/MRCTB024406

SITE ADDRESS

478 GOOD HILL ROAD
WOODBURY, CT 06798

STRUCTURE TYPE

MONOPOLE TOWER

811 Know what's below. Call before you dig.

TO OBTAIN LOCATION OF PARTICIPANTS UNDERGROUND FACILITIES BEFORE YOU DIG IN CONNECTICUT, CONTACT CALL BEFORE YOU DIG
TOLL FREE: 1-800-922-4455 OR www.cbyd.com
CONNECTICUT STATUTE REQUIRES MIN OF 2 WORKING DAYS NOTICE BEFORE YOU EXCAVATE

PROJECT TEAM

CENTERLINE COMMUNICATIONS
95 Ryan Drive Suite 1 | Raynham, MA 02767
Office: 781.713.4725 - Fax: 413-541-8158
PROJECT MANAGER

INFINIGY
1033 Watervliet Shaker Rd
Albany, NY 12205
Office # (518) 690-0790
Fax # (518) 690-0793
ENGINEER

SCOPE OF WORK:

- HANDICAP ACCESS REQUIREMENTS ARE NOT REQUIRED.
- FACILITY IS UNMANNED AND NOT FOR HUMAN HABITATION.
- FACILITY HAS NO PLUMBING OR REFRIGERANTS.
- THIS FACILITY SHALL MEET OR EXCEED ALL FAA AND FCC REGULATORY REQUIREMENTS.
- ALL NEW MATERIAL SHALL BE FURNISHED AND INSTALLED BY CONTRACTOR UNLESS NOTED OTHERWISE. EQUIPMENT, ANTENNAS/RRU AND CABLES FURNISHED BY OWNER AND INSTALLED BY CONTRACTOR.
- ADD GROUND ISOLATION WHERE NEEDED.

TOWER SCOPING:
- INSTALL (3) PANEL ANTENNAS
- INSTALL (3) RRUS-32 B2
- INSTALL (3) B14 4478 RADIOS
- INSTALL (1) DC6 "SQUID" WITH (1) FIBER & (2) DC CABLES

GROUND SCOPING:
- SWAP EXISTING DUL WITH PROPOSED 5216
- ADD (1) XMU

PROJECT SUMMARY

SITE NAME:	WOODBURY GOOD HILL ROAD	
FA SITE NO.:	10071346	
PACE ID:	MRCTB024478/MRCTB024406	
SITE ADDRESS:	478 GOOD HILL ROAD WOODBURY, CT 06798	
COUNTY:	LITCHFIELD	
SITE COORDINATES:		
LATITUDE:	41° 33' 26.082" N	(NAD 83)
LONGITUDE:	73° 15' 24.38604" W	(NAD 83)
GROUND ELEVATION:	±888'	(AMSL)
ANTENNA RAD:	±124'	(AGL)
JURISDICTION:	TOWN OF WOODBURY	
PROPERTY OWNER:	AMERICAN TOWER CORPORATION	
APPLICANT:	AT&T MOBILITY 550 COCHITUATE ROAD FARMINGHAM, MA 01701	
PROJECT MANAGER:	CENTERLINE 95 RYAN DRIVE SUITE 1 RAYNHAM, MA 02767	
CONTACT:	PETER LAMONTAGNE (508) 341-7854	
ENGINEER:	INFINIGY 1033 WATERVLIET SHAKER ROAD ALBANY, NY 12205	
CONTACT:	ALEX WELLER (518) 690-0790	
BUILDING CODE:	CT BUILDING CODE UNIFORM BUILDING CODE BUILDING OFFICIALS & CODE ADMINISTRATORS UNIFORM MECHANICAL CODE UNIFORM PLUMBING CODE LOCAL BUILDING CODE CITY/COUNTY ORDINANCES	
ELECTRICAL CODE:	NATIONAL ELECTRICAL CODE (LATEST EDITION)	

ENGINEER'S LICENSE

CERTIFICATION STATEMENT:

I HEREBY CERTIFY THAT THESE DOCUMENTS WERE PREPARED OR APPROVED BY ME, AND THAT I AM A DULY LICENSED PROFESSIONAL ENGINEER UNDER THE LAWS OF THE STATE OF CONNECTICUT.

LICENSED ENGINEER – STATE OF CONNECTICUT

APPROVALS

CONSTRUCTION MGR.	DATE
AT&T PROJECT MGR.	DATE
SITE ACQ.	DATE
SITE OWNER	DATE NAME/COMPANY: TITLE:

INFINIGY
1033 Watervliet Shaker Rd
Albany, NY 12205
Office # (518) 690-0790
Fax # (518) 690-0793

at&t

UNAUTHORIZED ALTERATION OR ADDITION TO THIS DOCUMENT IS A VIOLATION OF APPLICABLE STATE AND/OR LOCAL LAWS

No.	Submittal / Revision	App'd	Date
A	ISSUED FOR REVIEW	MPS	11/10/17

Drawn: MPS Date: 11/10/17
Designed: ASW Date: 11/10/17
Checked: ASW Date: 11/10/17

Project Number: 550-000

Project Title:
FA# 10071346
SITE ID: CT1172
WOODBURY GOOD HILL ROAD
478 GOOD HILL ROAD
WOODBURY, CT 06798

Prepared For:
CENTERLINE COMMUNICATIONS

THIS DOCUMENT IS THE DESIGN PROPERTY AND COPYRIGHT OF INFINIGY ENGINEERING, PLLC AND MAY NOT BE USED BY ANYONE OTHER THAN THE CLIENT. ANY DUPLICATION OR USE WITHOUT EXPRESS WRITTEN CONSENT OF THE CREATOR IS STRICTLY PROHIBITED.

Drawing Scale: AS NOTED
Date: 11/10/17

Drawing Title
TITLE SHEET

Drawing Number
T1

GENERAL CONSTRUCTION NOTES:

1. FOR THE PURPOSE OF CONSTRUCTION DRAWINGS, THE FOLLOWING DEFINITIONS SHALL APPLY:
   GENERAL CONTRACTOR
   SUBCONTRACTOR – CONTRACTOR (CONSTRUCTION)
   OWNER – AT&T
2. ALL SITE WORK SHALL BE COMPLETED AS INDICATED ON THE DRAWINGS AND AT&T PROJECT SPECIFICATIONS.
3. GENERAL CONTRACTOR AND SUBCONTRACTOR SHALL VISIT THE SITE AND SHALL FAMILIARIZE HIMSELF WITH ALL CONDITIONS AFFECTING THE PROPOSED WORK AND SHALL MAKE PROVISIONS. GENERAL CONTRACTOR AND SUBCONTRACTOR SHALL BE RESPONSIBLE FOR FAMILIARIZING THEMSELVES WITH ALL CONTRACT DOCUMENTS, FIELD CONDITIONS, DIMENSIONS, AND CONFIRMING THAT THE WORK MAY BE ACCOMPLISHED AS SHOWN PRIOR TO PROCEEDING WITH CONSTRUCTION. ANY DISCREPANCIES SHALL BE BROUGHT TO THE ATTENTION OF THE ARCHITECT/ENGINEER PRIOR TO THE COMMENCEMENT OF WORK.
4. ALL MATERIALS FURNISHED AND INSTALLED SHALL BE IN STRICT ACCORDANCE WITH ALL APPLICABLE CODES, REGULATIONS, AND ORDINANCES. GENERAL CONTRACTOR SHALL ISSUE ALL APPROPRIATE NOTICES AND COMPLY WITH ALL LAWS, ORDINANCES, RULES, REGULATIONS, AND LAWFUL ORDERS OF ANY PUBLIC AUTHORITY REGARDING THE PERFORMANCE OF WORK.
5. ALL WORK CARRIED OUT SHALL COMPLY WITH ALL APPLICABLE MUNICIPAL AND UTILITY COMPANY SPECIFICATIONS AND LOCAL JURISDICTIONAL CODES, ORDINANCES, AND APPLICABLE REGULATIONS.
6. UNLESS NOTED OTHERWISE, THE WORK SHALL INCLUDE FURNISHING MATERIALS, EQUIPMENT, APPURTENANCES, AND LABOR NECESSARY TO COMPLETE ALL INSTALLATIONS AS INDICATED ON THE DRAWINGS.
7. PLANS ARE NOT TO BE SCALED. THESE PLANS ARE INTENDED TO BE A DIAGRAMMATIC OUTLINE ONLY UNLESS OTHERWISE NOTED. DIMENSIONS SHOWN ARE TO FINISH SURFACES UNLESS OTHERWISE NOTED. SPACING BETWEEN EQUIPMENT IS THE MINIMUM REQUIRED CLEARANCE. THEREFORE, IT IS CRITICAL TO FIELD VERIFY DIMENSIONS, SHOULD THERE BE ANY QUESTIONS REGARDING THE CONTRACT DOCUMENTS, THE SUBCONTRACTOR SHALL BE RESPONSIBLE FOR OBTAINING A CLARIFICATION FROM THE ARCHIETCT/ENGINEER PRIOR TO PROCEEDING WITH THE WORK. DETAILS ARE INTENDED TO SHOW DESIGN INTENT. MODIFICATIONS MAY BE REQUIRED TO SUIT JOB DIMENSIONS OR CONDITIONS AND SUCH MODIFICATIONS SHALL BE INCLUDED AS PART OF WORK AND PREPARED BY THE ARCHITECT/ENGINEER PRIOR TO PROCEEDING WITH WORK.
8. THE SUBCONTRACTOR SHALL INSTALL ALL EQUIPMENT AND MATERIALS IN ACCORDANCE WITH MANUFACTURER'S RECOMMENDATIONS UNLESS SPECIFICALLY STATED OTHERWISE.
9. IF THE SPECIFIED EQUIPMENT CANNOT BE INSTALLED AS SHOWN ON THESE DRAWINGS. THE SUBCONTRACTOR SHALL PROPOSE AN ALTERNATIVE SPACE FOR APPROVAL BY THE ARCHITECT/ENGINEER PRIOR TO PROCEEDING.
10. GENERAL CONTRACTOR SHALL BE RESPONSIBLE FOR THE SAFETY OF WORK AREA, ADJACENT AREAS AND BUILDING OCCUPANTS THAT ARE LIKELY TO BE AFFECTED BY THE WORK UNDER THIS CONTRACT. WORK SHALL CONFORM TO ALL OSHA REQUIREMENTS AND THE LOCAL JURISDICTION.
11. GENERAL CONTRACTOR SHALL COORDINATE WORK AND SCHEDULE WORK ACTIVITIES WITH OTHER DISCIPLINE.
12. ERECTION SHALL BE DONE IN A WORKMANLIKE MANNER BY COMPETENT EXPERIENCED WORKMEN IN ACCORDANCE WITH APPLICABLE CODES AND THE BEST ACCEPTED PRACTICE. ALL MEMBERS SHALL BE LAID PLUMB AND TRUE AS INDICATED ON THE DRAWINGS.
13. SEAL PENETRATIONS THROUGH FIRE RATED AREAS WITH UL LISTED MATERIALS APPROVED BY LOCAL JURISDICTION. SUBCONTRACTOR SHALL KEEP AREA CLEAN, HAZARD FREE, AND DISPOSE OF ALL DEBRIS.
14. WORK PREVIOUSLY COMPLETED IS REPRESENTED BY LIGHT SHADED LINES AND NOTES. THE SCOPE OF WORK FOR THIS PROJECT IS REPRESENTED BY DARK SHADED LINES AND NOTES. SUBCONTRACTOR SHALL NOTIFY THE GENERAL CONTRACTOR OF ANY EXISTING CONDITIONS THAT DEVIATE FROM THE DRAWINGS PRIOR TO BEGINNING CONSTRUCTION.
15. SUBCONTRACTOR SHALL PROVIDE WRITTEN NOTICE TO THE CONSTRUCTION MANAGER 48 HOURS PRIOR TO COMMENCEMENT OF WORK.
16. THE SUBCONTRACTOR SHALL PROTECT EXISTING IMPROVEMENTS, PAVEMENTS, CURBS, LANDSCAPING AND STRUCTURES. ANY DAMAGED PART SHALL BE REPAIRED AT SUBCONTRACTOR'S EXPENSE TO THE SATISFACTION OF THE OWNER.
17. THE SUBCONTRACTOR SHALL CONTACT UTILITY LOCATING SERVICES PRIOR TO THE START OF CONSTRUCTION.
18. GENERAL CONTRACTOR SHALL COORDINATE AND MAINTAIN ACCESS FOR ALL TRADES AND SUBCONTRACTORS TO THE SITE AND/OR BUILDING.
19. THE GENERAL CONTRACTOR SHALL BE RESPONSIBLE FOR SECURITY OF THE SITE FOR THE DURATION OF CONSTRUCTION UNTIL JOB COMPLETION.
20. THE GENERAL CONTRACTOR SHALL MAINTAIN IN GOOD CONDITION ONE COMPLETE SET OF PLANS WITH ALL REVISIONS, ADDENDA, AND CHANGE ORDERS ON THE PREMISES AT ALL TIMES.
21. THE GENERAL CONTRACTOR AND SUBCONTRACTOR SHALL PROVIDE PORTABLE FIRE EXTINGUISHERS WITH A RATING OF NOT LESS THAN 2–A OT 2–A:10–B:C AND SHALL BE WITHIN 25 FEET OF TRAVEL DISTANCE TO ALL PORTIONS OF WHERE THE WORK IS BEING COMPLETED DURING CONSTRUCTION.
22. ALL EXISTING ACTIVE SEWER, WATER, GAS, ELECTRIC, AND OTHER UTILITIES SHALL BE PROTECTED AT ALL TIMES, AND WHERE REQUIRED FOR THE PROPER EXECUTION OF THE WORK, SHALL BE RELOCATED AS DIRECTED BY THE ARCHITECT/ENGINEER. EXTREME CAUTION SHOULD BE USED BY THE SUBCONTRACTOR WHEN EXCAVATING OR DRILLING PIERS AROUND OR NEAR UTILITIES. SUBCONTRACTOR SHALL PROVIDE SAFETY TRAINING FOR THE WORKING CREW. THIS SHALL INCLUDE BUT NOT BE LIMITED TO A) FALL PROTECTION, B) CONFINED SPACE, C) ELECTRICAL SAFETY, D) TRENCHING & EXCAVATION.
23. ALL EXISTING INACTIVE SEWER, WATER, GAS, ELECTRIC, AND OTHER UTILITIES, WHICH INTERFERE WITH THE EXECUTION OF THE WORK, SHALL BE REMOVED, CAPPED, PLUGGED OR OTHERWISE DISCONNECTED AT POINTS WHICH WILL NOT INTERFERE WITH THE EXECUTION OF THE WORK, AS DIRECTED BY THE RESPONSIBLE ARCHITECT/ENGINEER, AND SUBJECT TO THE APPROVAL OF THE OWNER AND/OR LOCAL UTILITIES.
24. THE AREAS OF THE OWNER'S PROPERTY DISTURBED BY THE WORK AND NOT COVERED BY THE TOWER, EQUIPMENT OR DRIVEWAY, SHALL BE GRADED TO A UNIFORM SLOPE, AND STABILIZED TO PREVENT EROSION.
25. SUBCONTRACTOR SHALL MINIMIZE DISTURBANCE TO THE EXISTING SITE DURING CONSTRUCTION. EROSION CONTROL MEASURES, IF REQUIRED DURING CONSTRUCTION, SHALL BE IN CONFORMANCE WITH THE FEDERAL AND LOCAL JURISDICTION FOR EROSION AND SEDIMENT CONTROL.
26. NO FILL OR EMBANKMENT MATERIAL SHALL BE PLACED ON FROZEN GROUNDING. FROZEN MATERIALS, SNOW OR ICE SHALL NOT BE PLACED IN ANY FILL OR EMBANKMENT.
27. THE SUBGRADE SHALL BE BROUGHT TO A SMOOTH UNIFORM GRADE AND COMPACTED TO 95 PERCENT STANDARD PROCTOR DENSITY UNDER PAVEMENT AND STRUCTURES AND 80 PERCENT STANDARD PROCTOR DENSITY IN OPEN SPACE. ALL TRENCHES IN PUBLIC RIGHT OF WAY SHALL BE BACKFILLED WITH FLOWABLE FILL OR OTHER MATERIAL PRE–APPROVED BY THE LOCAL JURISDICTION.
28. ALL NECESSARY RUBBISH, STUMPS, DEBRIS, STICKS, STONES AND OTHER REFUSE SHALL BE REMOVED FROM THE SITE AND DISPOSED OF IN A LAWFUL MANNER.
29. ALL BROCHURES, OPERATING AND MAINTENANCE MANUALS, CATALOGS, SHOP DRAWINGS, AND OTHER DOCUMENTS SHALL BE TURNED OVER TO THE GENERAL CONTRACTOR AT COMPLETION OF CONSTRUCTION AND PRIOR TO PAYMENT.
30. SUBCONTRACTOR SHALL SUBMIT A COMPLETE SET OF AS–BUILT REDLINES TO THE GENERAL CONTRACTOR UPON COMPLETION OF PROJECT AND PRIOR TO FINAL PAYMENT.
31. SUBCONTRACTOR SHALL LEAVE PREMISES IN A CLEAN CONDITION.
32. THE PROPOSED FACILITY WILL BE UNMANNED AND DOES NOT REQUIRE POTABLE WATER OR SEWER SERVICE, AND IS NOT FOR HUMAN HABITAT (NO HANDICAP ACCESS REQUIRED).
33. OCCUPANCY IS LIMITED TO PERIODIC MAINTENANCE AND INSPECTION, APPROXIMATELY 2 TIMES PER MONTH, BY AT&T TECHNICIANS.
34. NO OUTDOOR STORAGE OR SOLID WASTE CONTAINERS ARE PROPOSED.
35. ALL MATERIAL SHALL BE FURNISHED AND WORK SHALL BE PERFORMED IN ACCORDANCE WITH THE LATEST REVISION OF AT&T MOBILITY GROUNDING STANDARD "TECHNICAL SPECIFICATION FOR CONSTRUCTION OF GSM/GPRS WIRELESS SITES" AND "TECHNICAL SPECIFICATION FOR FACILITY GROUNDING." IN CASE OF A CONFLICT BETWEEN THE CONSTRUCTION SPECIFICATION AND THE DRAWINGS, THE DRAWINGS SHALL GOVERN.
35. SUBCONTRACTORS SHALL BE RESPONSIBLE FOR OBTAINING ALL PERMITS AND INSPECTIONS REQUIRED FOR CONSTRUCTION. IF SUBCONTRACTOR CANNOT OBTAIN A PERMIT, THEY MUST NOTIFY THE GENERAL CONTRACTOR IMMEDIATELY.
36. SUBCONTRACTOR SHALL REMOVED ALL TRASH AND DEBRIS FROM THE SITE ON A DAILY BASIS.
37. INFORMATION SHOWN ON THESE DRAWINGS WAS OBTAINED FROM SITE VISITS AND/OR DRAWINGS PROVIDED BY THE SITE OWNER. CONTRACTORS SHALL NOTIFY THE ENGINEER OF ANY DISCREPANCIES PRIOR TO ORDERING MATERIAL OR PROCEEDING WITH CONSTRUCTION.
38. NO WHITE STROBE LIGHTS ARE PERMITTED. ANY REQUIRED LIGHTING MUST MEET FAA STANDARDS AND REQUIREMENTS.
39. ALL COAXIAL CABLE INSTALLATIONS TO FOLLOW MANUFACTURER'S INSTRUCTIONS AND RECOMMENDATIONS.
40. NO SIGNIFICANT NOISE, SMOKE, DUST OR VIBRATIONS WILL RESULT FROM THIS FACILITY. (DISREGARD THIS NOTE IF THIS SITE HAS A GENERATOR)
41. NO ADDITIONAL PARKING TO BE PROPOSED. EXISTING ACCESS AND PARKING TO REMAIN, UNLESS NOTED OTHERWISE.
42. NO LANDSCAPING IS PROPOSED AT THIS SITE, UNLESS NOTED OTHERWISE.

ELECTRICAL NOTES:

1. ELECTRICAL CONTRACTOR SHALL SUPPLY AND INSTALL ANY/ALL ELECTRICAL WORK INDICATED. ANY/ALL CONSTRUCTION SHALL BE IN ACCORDANCE WITH DRAWINGS AND ANY/ALL APPLICABLE SPECIFICATIONS. IF ANY PROBLEMS ARE ENCOUNTERED BY COMPLYING WITH THESE REQUIREMENTS, CONTRACTOR SHALL NOTIFY 'CONSTRUCTION MANAGER' AS SOON AS POSSIBLE, AFTER THE DISCOVERY OF THE PROBLEMS, AND SHALL NOT PROCEED WITH THAT PORTION OF WORK, UNTIL THE 'CONSTRUCTION MANAGER' HAS DIRECTED THE CORRECTIVE ACTIONS TO BE TAKEN.
2. ELECTRICAL CONTRACTOR SHALL VISIT THE JOB SITE AND FAMILIARIZE HIMSELF WITH ANY/ALL CONDITIONS AFFECTING ELECTRICAL AND COMMUNICATION INSTALLATION AND MAKE PROVISIONS AS TO THE COST THEREOF. ALL EXISTING CONDITIONS OF ELECTRICAL EQUIP., LIGHT FIXTURES, ETC., THAT ARE PART OF THE FINAL SYSTEM, SHALL BE VERIFIED BY THE CONTRACTOR, PRIOR TO THE SUBMITTING OF HIS BID. FAILURE TO COMPLY WITH THIS PARAGRAPH WILL IN NO WAY RELIEVE CONTRACTOR OF PERFORMING ALL WORK NECESSARY FOR A COMPLETE AND WORKING SYSTEM.
3. ALL WORK SHALL BE PERFORMED IN ACCORDANCE WITH THE LATEST EDITION OF THE NEC AND ALL CODES AND LOCAL ORDINANCES OF THE LOCAL POWER & TELEPHONE COMPANIES HAVING JURISDICTION AND SHALL INCLUDE BUT NOT BE LIMITED TO:
   C – NATIONAL FIRE CODES
   A. UL – UNDERWRITERS LABORATORIES
   B. NEC – NATIONAL ELECTRICAL CODE
   C. NEMA – NATIONAL ELECTRICAL MANUFACTURERS ASSOC.
   D. OSHA – OCCUPATIONAL SAFETY AND HEALTH ACT
   E. SBC – STANDARD BUILDING CODE
4. DO NOT SCALE ELECTRICAL DRAWINGS; REFER TO SITE PLANS AND ELEVATIONS FOR EXACT LOCATIONS OF ALL EQUIPMENT, AND CONFIRM WITH CONSTRUCTION MANAGER' ANY SIZES AND LOCATIONS WHEN NEEDED.
5. EXISTING SERVICES: CONTRACTOR SHALL NOT INTERRUPT EXISTING SERVICES WITHOUT WRITTEN PERMISSION OF THE OWNER.
6. CONTRACTOR SHALL PAY FOR ANY/ALL PERMITS, FEES, INSPECTIONS, AND TESTING. CONTRACTOR IS TO OBTAIN PERMITS AND APPROVED SUBMITTALS PRIOR TO THE WORK BEGINNING OR ORDERING EQUIPMENT.
7. THE TERM "PROVIDE" USED IN CONSTRUCTION DOCUMENTS AND SPECIFICATIONS, INDICATES THAT THE CONTRACTOR SHALL FURNISH AND INSTALL.
8. CONTRACTOR SHALL CONFIRM WITH LOCAL UTILITY COMPANY ANY/ALL REQUIREMENTS, SUCH AS THE: LUG SIZE RESTRICTIONS, CONDUIT ENTRY, SIZE OF TRANSFORMERS, SCHEDULED DOWNTIME FOR THE OWNERS' CONFIRMATION, ETC... ANY/ALL CONFLICTS SHALL BE BROUGHT TO THE ATTENTION OF THE CONSTRUCTION MANAGER, PRIOR TO BEGINNING ANY WORK.
9. MINIMUM WIRE SIZE SHALL BE #12 AWG, NOT INCLUDING CONTROL WIRING, UNLESS NOTED OTHERWISE. ALL CONDUCTORS SHALL BE COPPER WITH THWN INSULATION.
10. OUTLET BOXES SHALL BE PRESSED STEEL IN DRY LOCATIONS, CAST ALLOY WITH THREADED HUBS IN WET/DAMP LOCATIONS AND SPECIAL ENCLOSURES FOR OTHER CLASSIFIED AREAS.
11. IT IS NOT THE INTENT OF THESE PLANS TO SHOW EVERY MINOR DETAIL OF THE CONSTRUCTION. CONTRACTOR IS EXPECTED TO FURNISH AND INSTALL ALL ITEMS FOR A COMPLETE ELECTRICAL SYSTEM AND PROVIDE ALL REQUIREMENTS FOR THE EQUIPMENT TO BE PLACED IN PROPER WORKING ORDER.
12. ELECTRICAL SYSTEM SHALL BE AS COMPLETELY AND EFFECTIVELY GROUNDED, AS REQUIRED BY SPECIFICATIONS, SET FORTY BY AT&T.
13. ALL WORK SHALL BE PERFORMED BY A LICENSED ELECTRICAL CONTRACTOR IN A FIRST CLASS, WORKMANLIKE MANNER. THE COMPLETED SYSTEM SHALL BE FULLY OPERATIVE AND SUBJECT TO REGULATORY INSPECTION & APPROVAL BY CONSTRUCTION MANAGER.
14. ALL WORK SHALL BE COORDINATED WITH OTHER TRADES TO AVOID INTERFERENCE WITH THE PROGRESS OF CONSTRUCTION.
15. CONTRACTOR SHALL GUARANTEE ANY/ALL MATERIALS AND WORK FREE FROM DEFECTS FOR A PERIOD OF NOT LESS THAN ONE YEAR FROM DATE OF ACCEPTANCE.
16. THE CORRECTION OF ANY DEFECTS SHALL BE COMPLETED WITHOUT ANY ADDITIONAL CHARGE AND SHALL INCLUDE THE REPLACEMENT OR THE REPAIR OF ANY OTHER PHASE OF THE INSTALLATION, WHICH MAY HAVE BEEN DAMAGED THEREIN.
17. ADEQUATE AND REQUIRED LIABILITY INSURANCE SHALL BE PROVIDED FOR PROTECTION AGAINST PUBLIC LOSS AND ANY/ALL PROPERTY DAMAGE FOR THE DURATION OF WORK.
18. PROVIDE AND INSTALL CONDUIT, CONDUCTORS, PULL WIRES, BOXES, COVER PLATES AND DEVICES FOR ALL OUTLETS AS INDICATED.
19. DITCHING AND BACK FILL: CONTRACTOR SHALL PROVIDE FOR ALL UNDERGROUND INSTALLED CONDUIT AND/OR CABLES INCLUDING EXCAVATION, BACKFILLING AND COMPACTION. REFER TO 'FOUNDATION, EXCAVATION, AND BACKFILLING NOTES.'
20. MATERIALS, PRODUCTS AND EQUIPMENT, INCLUDING ALL COMPONENTS THEREOF, SHALL BE NEW AND SHALL APPEAR ON THE LIST OF U.L. APPROVED ITEMS AND SHALL MEET OR EXCEED THE REQUIREMENTS OF THE NEC, NEMA, AND IECE.
21. CONTRACTOR SHALL SUBMIT SHOP DRAWINGS OR MANUFACTURERS CATALOG INFORMATION OF ANY/ALL LIGHTING FIXTURES, SWITCHES, AND ALL OTHER ELECTRICAL ITEMS FOR APPROVAL BY THE CONSTRUCTION MANAGER PRIOR TO INSTALLATION.
22. ANY CUTTING OR PATCHING DEEMED NECESSARY FOR ELECTRICAL WORK IS THE ELECTRICAL CONTRACTORS RESPONSIBILITY AND SHALL BE INCLUDED IN THE COST FOR WORK AND PERFORMED TO THE SATISFACTION OF THE 'CONSTRUCTION MANAGER' UPON FINAL ACCEPTANCE.
23. THE ELECTRICAL CONTRACTOR SHALL LABEL AL PANELS WITH ONLY TYPEWRITTEN DIRECTORIES. ALL ELECTRICAL WIRING SHALL BE THE RESPONSIBILITY OF THE ELECTRICAL CONTRACTOR.
24. DISCONNECT SWITCHES SHALL BE H.P. RATED HEAVY–DUTY, QUICK–MADE AND QUICK–BREAK ENCLOSURES, AS REQUIRED BY EXPOSURE TYPE.
25. ALL CONNECTIONS SHALL BE MADE WITH A PROTECTIVE COATING OF AN ANTI–OXIDE COMPOUND SUCH AS "NO–OXIDE A" BY DEARBORNE CHEMICAL CO. COAT ALL WIRE SURFACES BEFORE CONNECTING. EXPOSED COPPER SURFACES, INCLUDING GROUND BARS, SHALL BE TREATED – NO SUBSTITUTIONS.
26. RACEWAYS: CONDUIT SHALL BE SCHEDULE 40 PVC MEETING OR EXCEEDING NEMA TC2 – 1990. CONTRACTOR SHALL PLUG AND CAP EACH END OF SPARE AND EMPTY CONDUITS AND PROVIDE TWO SEPARATE PULL STRINGS – 200 LBS TEST POLYETHYLENE CORD. ALL CONDUIT BENDS SHALL BE A MINIMUM OF 2 FT. RADIUS. RGS CONDUITS WHEN SPECIFIED, SHALL MEET UL–6 FOR GALVANIZED STEEL. ALL FITTINGS SHALL BE SUITABLE FOR USE WITH THREADING RIGID CONDUIT. COAT ALL THREADS WITH 'BRITE ZINC' OR 'GOLD CALV.'
27. SUPPORT OF ALL ELECTRICAL WORK SHALL BE AS REQUIRED BY NEC.
28. CONDUCTORS: CONTRACTOR SHALL USE 98% CONDUCTIVITY COPPER WITH TYPE THWN INSULATION, 800 VOLT, COLOR CODED. USE SOLID CONDUCTORS FOR WIRE UP TO AND INCLUDING NO. 8 AWG. USE STRANDED CONDUCTORS FOR WIRE ABOVE NO. 8 AWG.
29. CONNECTORS FOR POWER CONDUCTORS: CONTRACTOR SHALL USE PRESSURE TYPE INSULATED TWIST–ON CONNECTORS FOR NO. 10 AWG AND SMALLER. USE SOLDERLESS MECHANICAL TERMINAL LUGS FOR NO. 8 AWG AND LARGER.
30. SERVICES: 240/120V, SINGLE PHASE, 3 WIRE CONNECTION AVAILABLE FROM UTILITY COMPANY. OWNER OR OWNERS AGENT WILL APPLY FOR POWER.
31. TELEPHONE SERVICE: CONTRACTOR SHALL PROVIDE EMPTY CONDUITS WITH PULL STRINGS AS INDICATED ON DRAWINGS.
32. ELECTRICAL AND TELCO RACEWAYS TO BE BURIED A MINIMUM OF 2' DEPTH.
33. CONTRACTOR SHALL PLACE TWO LENGTHS OF WARNING TAPE AT A DEPTH OF 12" BELOW GROUND AND DIRECTLY ABOVE ELECTRICAL AND TELCO SERVICE CONDUITS. CAUTION TAPE TO READ "CAUTION BURIED ELECTRIC" OR "BURIED TELECOMM."
34. ALL BOLTS SHALL BE STAINLESS STEEL

GROUNDING NOTES:

1. COMPRESSION CONNECTIONS (2), 2 AWG BARE TINNED SOLID COPPER CONDUCTORS TO GROUNDING BAR. ROUTE CONDUCTORS TO BURIED GROUNDING RING AND PROVIDE PARALLEL EXOTHERMIC WELD.
2. EC SHALL USE PERMANENT MARKER TO DRAW THE LINES BETWEEN EACH SECTION AND LABEL EACH SECTION ("P," "A," "N," "I") WITH 1" LETTERS.
3. ALL HARDWARE 18–8 STAINLESS STEEL, INCLUDING LOCK WASHERS, COAT ALL SURFACES WITH AN ANTI–OXIDANT COMPOUND BEFORE MATING. ALL HARDWARE SHALL BE STAINLESS STEEL 3/8 INCH DIAMETER OR LARGER.
4. FOR GROUND BOND TO STEEL ONLY: INSERT A CADMIUM FLAT WASHER BETWEEN LUG AND STEEL, COAT ALL SURFACES WITH AN ANTI–OXIDANT COMPOUND BEFORE MATING.
5. NUT & WASHER SHALL BE PLACED ON THE FRONT SIDE OF THE GROUNDING BAR AND BOLTED ON THE BACK SIDE.
6. NUMBER OF GROUNDING BARS MAY VARY DEPENDING ON THE TYPE OF TOWER, ANTENNA LOCATION, AND CONNECTION ORIENTATION. PROVIDE AS REQUIRED.
7. WHEN THE SCOPE OF WORK REQUIRES THE ADDITION OF A GROUNDING BAR TO AN EXISTING TOWER, THE SUBCONTRACTOR SHALL OBTAIN APPROVAL FROM THE TOWER OWNER PRIOR TO MOUNTING THE GROUNDING BAR TO THE TOWER.
8. ALL ELECTRICAL AND GROUNDING AT THE CELL SITE SHALL COMPLY WITH THE NATIONAL ELECTRICAL CODE (NEC), NATIONAL FIRE PROTECTION ASSOCIATION (NFPA) 780 (LATEST EDITION), AND MANUFACTURER.

FOUNDATION, EXCAVATION, & BACKFILL NOTES:

1. ALL FINAL GRADED SLOPES SHALL BE A MAXIMUM OF 3 HORIZONTAL TO 1 VERTICAL.
2. ALL EXCAVATIONS PREPARED FOR PLACEMENT OF CONCRETE SHALL BE OF UNDISTURBED SOILS, SUBSTANTIALLY HORIZONTAL, AND FREE FROM ANY LOOSE, UNSUITABLE MATERIAL OR FROZEN SOILS, AND WITHOUT THE PRESENCE OF POUNDING WATER. DEWATERING FOR EXCESS GROUND WATER SHALL BE PROVIDED WHEN REQUIRED. COMPACTION OF SOILS UNDER CONCRETE PAD FOUNDATIONS SHALL NOT BE LESS THAN 95% OF THE MODIFIED PROCTOR MAXIMUM DRY DENSITY FOR THE SOIL IN ACCORDANCE WITH ASTM D1557.
3. CONCRETE FOUNDATIONS SHALL NOT BE PLACED ON ORGANIC OR UNSUITABLE MATERIAL. IF INADEQUATE BEARING CAPACITY IS REACHED AT THE DESIGNED EXCAVATION DEPTH, THE UNSATISFACTORY SOIL SHALL BE EXCAVATED TO ITS FULL DEPTH AND EITHER BE REPLACED WITH MECHANICALLY COMPACTED GRANULAR MATERIAL OR THE EXCAVATION SHALL BE FILLED WITH CONCRETE OF THE SAME TYPE SPECIFIED FOR THE FOUNDATION. CRUSHED STONE MAY BE USED TO STABILIZE THE BOTTOM OF THE EXCAVATION. ANY STONE SUB BASE MATERIAL, IF USED, SHALL NOT SUBSTITUTE FOR REQUIRED THICKNESS OF CONCRETE.
4. ALL EXCAVATIONS SHALL BE CLEAN OF UNSUITABLE MATERIAL SUCH AS VEGETATION, TRASH, DEBRIS, AND SO FORTH PRIOR TO BACK FILLING. BACK FILL SHALL CONSIST OF APPROVED MATERIALS SUCH AS EARTH, LOAM, SANDY CLAY, SAND AND GRAVEL, OR SOFT SHALE, FREE FROM CLODS OR LARGE STONES OVER 2 1/2 MAX DIMENSIONS. ALL BACK FILL SHALL BE PLACED IN COMPACTED LAYERS.
5. ALL FILL MATERIALS AND FOUNDATION BACK FILL SHALL BE PLACED IN MAXIMUM 6" THICK LIFTS BEFORE COMPACTION. EACH LIFT SHALL BE WETTED IF REQUIRED AND COMPACTED TO NOT LESS THAN 95% OF THE MODIFIED PROCTOR MAXIMUM DRY DENSITY FOR SOIL IN ACCORDANCE WITH ASTM D1557
6. NEWLY PLACED CONCRETE FOUNDATIONS SHALL CURE A MINIMUM OF 72 HOURS PRIOR TO BACK FILLING.
7. FINISHED GRADING SHALL BE SLOPED TO PROVIDE POSITIVE DRAINAGE AND PREVENT STANDING WATER. THE FINAL (FINISH) ELEVATION OF SLAB FOUNDATIONS SHALL SLOPE AWAY IN ALL DIRECTIONS FROM THE CENTER. FINISH GRADE OF CONCRETE PADS SHALL BE A MAXIMUM OF 4 INCHES ABOVE FINAL FINISH GRADE ELEVATIONS. PROVIDE SURFACE FILL GRAVEL TO ESTABLISH SPECIFIED ELEVATIONS WHERE REQUIRED.
8. NEWLY GRADED SURFACE AREAS TO RECEIVE GRAVEL SHALL BE COVERED WITH GEOTEXTILE FABRIC TYPE: TYPAR–3401 AS MANUFACTURED BY "CONSTRUCTION MATERIAL 1–800–239–3841" OR AN APPROVED EQUIVALENT, SHOWN ON PLANS. THE GEOTEXTILE FABRIC SHALL BE BLACK IN COLOR TO CONTROL THE RECURRENCE OF VEGETATIVE GROWTH AND EXTEND TO WITHIN 1 FOOT OUTSIDE THE SITE FENCING OR ELECTRICAL GROUNDING SYSTEM PERIMETER WHICHEVER IS GREATER. ALL FABRIC SHALL BE COVERED WITH A MINIMUM OF 4" DEEP COMPACTED STONE OR GRAVEL AS SPECIFIED. I.E. FDOT TYPE NO.57 FOR FENCED COMPOUND; FDOT TYPE NO. 67 FOR ACCESS DRIVE AREA.
9. IN ALL AREAS TO RECEIVE FILL, REMOVE ALL VEGETATION, TOPSOIL, DEBRIS, WET AND UNSATISFACTORY SOIL MATERIALS, OBSTRUCTIONS, AND DELETERIOUS MATERIALS FROM GROUND SURFACE. PLOW STRIP OR BREAK UP SLOPED SURFACES STEEPER THAN 1 VERTICAL TO 4 HORIZONTAL SUCH THAT FILL MATERIAL WILL BIND WITH EXISTING/PREPARED SOIL SURFACE.

INFINIGY
1033 Watervliet Shaker Rd
Albany, NY 12205
Office # (518) 690-0790
Fax # (518) 690-0793

at&t

UNAUTHORIZED ALTERATION OR ADDITION TO THIS DOCUMENT IS A VIOLATION OF APPLICABLE STATE AND/OR LOCAL LAWS

No.	Submittal / Revision	App'd	Date
A	ISSUED FOR REVIEW	MPS	11/10/17

Drawn: MPS Date: 11/10/17
Designed: ASW Date: 11/10/17
Checked: ASW Date: 11/10/17

Project Number: 550-000

Project Title:
FA# 10071346
SITE ID: CT1172
WOODBURY GOOD HILL ROAD
478 GOOD HILL ROAD
WOODBURY, CT 06798

Prepared For:
CENTERLINE COMMUNICATIONS

THIS DOCUMENT IS THE DESIGN PROPERTY AND COPYRIGHT OF INFINIGY ENGINEERING, PLLC AND IS TO BE USED FOR USE ON THIS SITE BY CLIENT. ANY DUPLICATION OR USE WITHOUT EXPRESS WRITTEN CONSENT OF THE CREATOR IS STRICTLY PROHIBITED.

Drawing Scale: AS NOTED
Date: 11/10/17

Drawing Title
GENERAL NOTES

Drawing Number
C1

10. WHEN SUBGRADE OR PREPARED GROUND SURFACE HAS A DENSITY LESS THAN THAT REQUIRED FOR THE FILL MATERIAL, SCARIFY THE GROUND SURFACE TO DEPTH REQUIRED, PULVERIZE, MOISTURE-CONDITION AND/OR AERATE THE SOILS AND RE-COMPACT TO THE REQUIRED DENSITY PRIOR TO PLACEMENT OR FILLS.
11. IN AREAS WHICH EXISTING GRAVEL SURFACING IS REMOVED OR DISTURBED DURING CONSTRUCTION OPERATIONS, REPLACE GRAVEL SURFACING TO MATCH ADJACENT GRAVEL SURFACING AND RESTORED TO THE SAME THICKNESS AND COMPACTION AS SPECIFIED. ALL RESTORED GRAVEL SURFACING SHALL BE FREE FROM CORRUGATIONS AND WAVES.
12. EXISTING GRAVEL SURFACING MAY BE EXCAVATED SEPARATELY AND REUSED WITH THE CONDITION THAT ANY UNFAVORABLE AMOUNTS OF ORGANIC MATTER, OR OTHER DELETERIOUS MATERIALS ARE REMOVED PRIOR TO REUSE. FURNISH ANY ADDITIONAL GRAVEL RESURFACING MATERIAL AS NEEDED TO PROVIDE A FULL DEPTH COMPACTED SURFACE THROUGHOUT SITE.
13. GRAVEL SUB SURFACE SHALL BE PREPARED TO REQUIRED COMPACTION AND SUBGRADE ELEVATIONS BEFORE GRAVEL SURFACING IS PLACED AND/OR RESTORED. ANY LOOSE OR DISTURBED MATERIALS SHALL BE THOROUGHLY COMPACTED AND ANY DEPRESSIONS IN THE SUBGRADE SHALL BE FILLED AND COMPACTED WITH APPROVED SELECTED MATERIAL. GRAVEL SURFACING MATERIAL SHALL NOT BE USED FOR FILLING DEPRESSIONS IN THE SUBGRADE.
14. PROTECT EXISTING GRAVEL SURFACING AND SUBGRADE IN AREAS WHERE EQUIPMENT LOADS WILL OPERATE. USE PLANKING 'MATTS' OR OTHER SUITABLE PROTECTION DESIGNED TO SPREAD EQUIPMENT LOADS AS MAY BE NECESSARY. REPAIR ANY DAMAGE TO EXISTING GRAVEL SURFACING OR SUB GRADE WHERE SUCH DAMAGE IS DUE TO THE CONTRACTORS OPERATIONS.
15. DAMAGE TO EXISTING STRUCTURES AND/OR UTILITIES RESULTING FROM CONTRACTORS NEGLIGENCE SHALL BE REPAIRED AND/OR REPLACED TO THE OWNERS SATISFACTION AT NO ADDITIONAL COST TO THE CONTRACT.
16. ALL SUITABLE BORROW MATERIAL FOR BACK FILL OF THE SITE SHALL BE INCLUDED IN THE BID. EXCESS TOPSOIL AND UNSUITABLE MATERIAL SHALL BE DISPOSED OF OFF SITE AT LOCATIONS APPROVED BY GOVERNING AGENCIES AT NO ADDITIONAL COST TO THE CONTRACT.

ENVIRONMENTAL NOTES:

1. ALL WORK PERFORMED SHALL BE DONE IN ACCORDANCE WITH ISSUED PERMITS. THE CONTRACTOR SHALL BE RESPONSIBLE FOR PAYMENT OF FINES AND PROPER CLEAN UP FOR AREAS IN VIOLATION.
2. CONTRACTOR AND/OR DEVELOPER SHALL BE RESPONSIBLE FOR CONSTRUCTION AND MAINTENANCE OF EROSION AND SEDIMENTATION CONTROLS DURING CONSTRUCTION FOR PROTECTION OF ADJACENT PROPERTIES, ROADWAYS AND WATERWAYS AND SHALL BE MAINTAINED IN PLACE THROUGH FINAL JURISDICTIONAL INSPECTION & RELEASE OF SITE.
3. CONTRACTOR SHALL INSTALL/CONSTRUCT ALL NECESSARY SEDIMENT/SILT CONTROL FENCING AND PROTECTIVE MEASURES WITHIN THE LIMITS OF SITE DISTURBANCE PRIOR TO CONSTRUCTION.
4. NO SEDIMENT SHALL BE ALLOWED TO EXIT THE PROPERTY. THE CONTRACTOR IS RESPONSIBLE FOR TAKING ADEQUATE MEASURES FOR CONTROLLING EROSION. ADDITIONAL SEDIMENT CONTROL FENCING MAY BE REQUIRED IN ANY AREAS SUBJECT TO EROSION.
5. CONTRACTOR SHALL BE RESPONSIBLE FOR DAILY INSPECTIONS AND ANY REPAIRS OF ALL SEDIMENT CONTROL MEASURES INCLUDING SEDIMENT REMOVAL AS NECESSARY.
6. CLEARING OF VEGETATION AND TREE REMOVAL SHALL BE ONLY AS PERMITTED AND BE HELD TO A MINIMUM. ONLY TREES NECESSARY FOR CONSTRUCTION OF THE FACILITIES SHALL BE REMOVED.
7. SEEDING AND MULCHING AND/OR SODDING OF THE SITE WILL BE ACCOMPLISHED AS SOON AS POSSIBLE AFTER COMPLETION OF THE PROJECT FACILITIES AFFECTING LAND DISTURBANCE.
8. CONTRACTOR SHALL PROVIDE ALL EROSION AND SEDIMENTATION CONTROL MEASURES AS REQUIRED BY LOCAL, COUNTY AND STATE CODES AND ORDINANCES TO PROTECT EMBANKMENTS FROM SOIL LOSS AND TO PREVENT ACCUMULATION OF SOIL AND SILT IN STREAMS AND DRAINAGE PATHS LEAVING THE CONSTRUCTION AREA. THIS MAY INCLUDE SUCH MEASURES AS SILT FENCES, STRAW BALE SEDIMENT BARRIERS, AND CHECK DAMS.
9. RIP RAP OF SIZES INDICATED SHALL CONSIST OF CLEAN, HARD, SOUND, DURABLE, UNIFORM IN QUALITY STONE FREE OF ANY DETRIMENTAL QUANTITY OF SOFT, FRIABLE, THIN, ELONGATED OR LAMINATED PIECES, DISINTEGRATED MATERIAL, ORGANIC MATTER, OIL, ALKALI, OR OTHER DELETERIOUS SUBSTANCES.

CONCRETE MASONRY NOTES:

1. CONCRETE MASONRY UNITS SHALL BE MEDIUM WEIGHT UNITS CONFORMING TO ASTM C90, GRADE N-1, (F'M=1,500 PSI). MEDIUM WEIGHT (115).
2. MORTAR SHALL BE TYPE "S" (MINIMUM 1,800 PSI AT 28 DAYS).
3. GROUT SHALL HAVE A MINIMUM COMPRESSIVE STRENGTH OF 2,000 PSI AT 28 DAYS.
4. ALL CELLS CONTAINING REINFORCING STEEL OR EMBEDDED ITEMS AND ALL CELLS IN RETAINING WALLS AND WALLS BELOW GRADE SHALL BE SOLID GROUTED.
5. ALL HORIZONTAL REINFORCING STEEL SHALL BE PLACED IN BOND BEAM OR LINTEL BEAM UNITS.
6. WHEN GROUTING IS STOPPED FOR ONE HOUR OR LONGER, HORIZONTAL CONSTRUCTION JOINTS SHALL BE FORMED BY STOPPING THE GROUT POUR 1-1/2" BELOW TOP OF THE UPPERMOST UNIT.
7. ALL BOND BEAM BLOCK SHALL BE "DEEP CUT" UNITS.
8. PROVIDE INSPECTION AND CLEAN-OUT HOLES AT BASE OF VERTICAL CELLS HAVING GROUT LIFTS IN EXCESS OF 4'-0" OF HEIGHT.
9. ALL GROUT SHALL BE CONSOLIDATED WITH A MECHANICAL VIBRATOR.
10. CEMENT SHALL BE AS SPECIFIED FOR CONCRETE.
11. REINFORCING BARS – SEE NOTES UNDER "REINFORCING STEEL" FOR REQUIREMENTS.
31. PROVIDE ONE BAR DIAMETER (A MINIMUM OF 1/2") GROUT BETWEEN MAIN REINFORCING AND MASONRY UNITS.
32. LOW LIFT CONSTRUCTION, MAXIMUM GROUT POUR HEIGHT IS 4 FEET.
33. LIFT GROUTED CONSTRUCTION MAY BE USED IN CONFORMANCE WITH PROJECT SPECIFICATIONS AND SECTION 2104.6.1 OF CURRENT BUILDING CODE.
34. ALL CELLS IN CONCRETE BLOCKS SHALL BE FILLED SOLID WITH GROUT, EXCEPT AS NOTED IN THE DRAWINGS OR SPECIFICATIONS.
35. CELLS SHALL BE IN VERTICAL ALIGNMENT, DOWELS IN FOOTINGS SHALL BE SET TO ALIGN WITH CORES CONTAINING REINFORCING STEEL.
36. REFER TO ARCHITECTURAL DRAWINGS FOR SURFACE AND HEIGHT OF UNITS, LAYING PATTERN AND JOINT TYPE.
37. SAND SHALL BE CLEAN, SHARP AND WELL GRADED, FREE FROM INJURIOUS AMOUNTS OF DUST, LUMPS, SHALE, ALKAU OR ORGANIC MATERIAL.
38. BRICK SHALL CONFORM TO ASTM C-62 AND SHALL BE GRADE MW OR BETTER.

STRUCTURAL CONCRETE NOTES:

1. ALL CONCRETE WORK SHALL BE IN ACCORDANCE WITH THE ACI-301-10
2. ALL CONCRETE SHALL HAVE A MINIMUM COMPRESSIVE STRENGTH fc'=2,500 PSI AT 28 DAYS UNLESS NOTED OTHERWISE.
3. REINFORCING STEEL SHALL CONFORM TO ASTM A 615, GRADE 60, DEFORMED UNLESS NOTED OTHERWISE. WELDED WIRE FABRIC SHALL CONFORM TO ASTM A 185 WELDED STEEL WIRE FABRIC UNLESS NOTED OTHERWISE.
4. THE FOLLOWING MINIMUM CONCRETE COVER SHALL BE PROVIDED FOR REINFORCING STEEL UNLESS SHOWN OTHERWISE ON DRAWINGS:

CONCRETE CAST AGAINST EARTH	3 IN.
CONCRETE EXPOSED TO EARTH OR WEATHER:	
#6 AND LARGER	2 IN.
#5 AND SMALLER & WWF	1-1/2 IN.
CONCRETE NOT EXPOSED TO EARTH OR WEATHER, NOR CAST AGAINST THE GROUND:	
SLAB AND WALL	3/4 IN.
BEAMS AND COLUMNS	1-1/2 IN.

5. A 3/4" CHAMFER SHALL BE PROVIDED AT ALL EXPOSED EDGES OF CONCRETE U.N.O. IN ACCORDANCE WITH ACI 301 SECTION 4.2.4.
6. HOLES TO RECEIVE EXPANSION/WEDGE ANCHORS SHALL BE 1/8" LARGER IN DIAMETER THAN THE ANCHOR BOLD, DOWEL OR ROD AND SHALL CONFORM TO MANUFACTURER'S RECOMMENDATION FOR EMBEDMENT DEPTH OR AS SHOWN ON THE DRAWINGS. LOCATE AND AVOID CUTTING EXISTING REBAR WHEN DRILLING HOLES IN ELEVATED CONCRETE SLABS.
7. USE AND INSTALLATION OF CONCRETE EXPANSION/WEDGE ANCHOR, SHALL BE PER ICBO & MANUFACTURER'S WRITTEN RECOMMENDED PROCEDURES.

STRUCTURAL STEEL NOTES:

1. ALL STEEL WORK SHALL BE IN ACCORDANCE WITH THE LATEST EDITION OF THE AISC MANUAL OF STEEL CONSTRUCTION. STEEL SECTIONS SHALL BE IN ACCORDANCE WITH ASTM AS INDICATED BELOW:
   W-SHAPES: ASTM A992, 50 KSI
   ANGLES, BARS CHANNELS: ASTM A36, 36 KSI
   HSS SECTIONS: ASTM 500, 46 KSI
   PIPE SECTIONS: ASTM A53-E, 35 KSI
2. ALL EXTERIOR EXPOSED STEEL AND HARDWARE SHALL BE HOT DIPPED GALVANIZED.
3. ALL WELDING SHALL BE PERFORMED USING E70XX ELECTRODES AND WELDING SHALL CONFORM TO AISC. WHERE FILLET WELD SIZES ARE NOT SHOWN, PROVIDE THE MINIMUM SIZE PER TABLE J2.4 IN THE AISC "MANUAL OF STEEL CONSTRUCTION." PAINTED SURFACES SHALL BE TOUCHED UP.
4. BOLTED CONNECTIONS SHALL BE ASTM A325 BEARING TYPE 3/4" Ø CONNECTIONS AND SHALL HAVE MINIMUM OF TWO BOLTS UNLESS NOTED OTHERWISE.
5. NON-STRUCTURAL CONNECTIONS FOR STEEL GRATING MAY USE 5/8" Ø ASTM A307 BOLTS UNLESS NOTED OTHERWISE.
6. FIELD MODIFICATIONS ARE TO BE COATED WITH ZINC ENRICHED PAINT.

SITE WORK & DRAINAGE:

PART 1 – GENERAL

CLEARING, GRUBBING, STRIPPING, EROSION CONTROL, SURVEY, LAYOUT, SUBGRADE PREPARATION AND FINISH GRADING AS REQUIRED TO COMPLETE THE PROPOSED WORK SHOWN IN THESE PLANS.

1.1 REFERENCES:
A. DOT (STATE DEPARTMENT OF TRANSPORTATION STANDARD SPECIFICATIONS FOR WAY CONSTRUCTION – CURRENT EDITION)
B. ASTM (AMERICAN SOCIETY FOR TESTING AND MATERIALS)
C. OSHA (OCCUPATION SAFETY AND HEALTH ADMINISTRATION)

1.2 INSPECTION AND TESTING:
A. FIELD TESTING OF EARTHWORK COMPACTION AND CONCRETE CYLINDERS
B. ALL WORK SHALL BE INSPECTED AND RELEASED BY THE GENERAL CONTRACTOR WHO SHALL CARRY OUT THE GENERAL INSPECTION OF THE WORK WITH SPECIFIC CONCERN TO PROPER PERFORMANCE OF THE WORK AS SPECIFIED AND/OR CALLED FOR ON THE DRAWINGS. IT IS THE SUBCONTRACTOR'S RESPONSIBILITY TO REQUEST TIMELY INSPECTIONS PRIOR TO PROCEEDING WITH FURTHER WORK THAT WOULD MAKE PARTS OF WORK INACCESSIBLE OR DIFFICULT TO INSPECT.

1.3 SITE MAINTENANCE AND PROTECTION:
A. PROVIDE ALL NECESSARY JOB SITE MAINTENANCE FROM COMMENCEMENT OF WORK UNTIL COMPLETION OF THE SUBCONTRACT.
B. AVOID DAMAGE TO THE SITE AND TO EXISTING FACILITIES, STRUCTURES, TREES, AND SHRUBS DESIGNATED TO REMAIN. TAKE PROTECTIVE MEASURES TO PREVENT EXISTING FACILITIES THAT ARE NOT DESIGNATED FOR REMOVAL FROM BEING DAMAGED BY THE WORK.
C. KEEP SITE FREE OF ALL PONDING WATER.
D. PROVIDE EROSION CONTROL MEASURES IN ACCORDANCE WITH STATE DOT AND EPA REQUIREMENTS.
E. PROVIDE AND MAINTAIN ALL TEMPORARY FENCING, BARRICADES, WARNING SIGNALS AND SIMILAR DEVICES NECESSARY TO PROTECT AGAINST THEFT FROM PROPERTY DURING THE ENTIRE PERIOD OF CONSTRUCTION. REMOVE ALL SUCH DEVICES UPON COMPLETION OF THE WORK.
F. EXISTING UTILITIES: DO NOT INTERRUPT EXISTING UTILITIES SERVING FACILITIES OCCUPIED BY THE OWNER OR OTHERS, EXCEPT WHEN PERMITTED IN WRITING BY THE ENGINEER, AND THEN ONLY AFTER ACCEPTABLE TEMPORARY UTILITY SERVICES HAVE BEEN PROVIDED.

   PROVIDE A MINIMUM 48-HOUR NOTICE TO THE ENGINEER AND RECEIVE WRITTEN NOTICE TO PROCEED BEFORE INTERRUPTING ANY UTILITY SERVICE.

PART 2 – PRODUCTS

2.1 SUITABLE BACKFILL: ASTM D2321 (CLASS I, II, III, OR IVA) FREE FROM FROZEN LUMPS, REFUSE, STONES OR ROCKS LARGER THAN 3 INCHES IN ANY DIMENSION OR OTHER MATERIAL THAT MAY MAKE THE INORGANIC MATERIAL UNSUITABLE FOR BACKFILL.
2.2 NON-POROUS GRANULAR EMBANKMENT AND BACKFILL: ASTM D2321 (CLASS III, IVA OR IVB) COARSE AGGREGATE. FREE FROM FROZEN LUMPS, REFUSE, STONES, OR ROCKS LARGER THAN 3 INCHES IN ANY DIMENSION OR OTHER MATERIAL THAT MAY MAKE THE INORGANIC MATERIAL UNSUITABLE FOR BACKFILL.
2.3 POROUS GRANULAR EMBANKMENT AND BACKFILL: ASTM D2321 (CLASS IA, IB, OR II) COARSE AGGREGATE FREE FROM FROZEN LUMPS, REFUSE, STONES, OR ROCKS LARGER THAN 3 INCHES IN ANY DIMENSION OR OTHER MATERIAL THAT MAY MAKE THE INORGANIC MATERIAL UNSUITABLE FOR BACKFILL.
2.4 SELECT STRUCTURAL FILL: GRANULAR FILL MATERIAL MEETING THE REQUIREMENTS OF ASTM E850-95. FOR USE AROUND AND UNDER STRUCTURES WHERE STRUCTURAL FILL MATERIAL ARE REQUIRED.
2.5 GRANULAR BEDDING AND TRENCH BACKFILL: WELL-GRADED SAND MEETING THE GRADATION REQUIREMENTS OF ASTM D2487 (SE OR SW-SM).
2.6 COARSE AGGREGATE FOR ACCESS ROAD SUB BASE COURSE SHALL CONFORM TO ASTM D2940.
2.7 UNSUITABLE MATERIAL: AND MODERATELY PLASTIC SILTS AND CLAYS (LL>45). MATERIAL CONTAINING REFUSE, FROZEN LUMPS, DEMOLISHED BITUMINOUS MATERIAL, VEGETATIVE MATTER, WOOD, STONES IN EXCESS OF 3 INCHES IN ANY DIMENSION, AND DEBRIS AS DETERMINED BY THE CONSTRUCTION MANAGER. TYPICAL THESE WILL BE SOILS CLASSIFIED BY ASTM AS PT, MH, CH, OH, ML, AND OL.
2.8 GEOTEXTILE FABRIC: MIRAFI 500X OR APPROVED EQUAL.
2.9 PLASTIC MARKING TAPE: SHALL BE ACID AND ALKALI RESISTANT POLYETHYLENE FILM SPECIFICALLY MANUFACTURED FOR MARKING AND LOCATING UNDERGROUND UTILITIES, 6 INCHES WIDE WITH A MINIMUM THICKNESS OF 0.004 INCH. TAPE SHALL HAVE MINIMUM STRENGTH OF 1500 PSI IN BOTH DIRECTIONS AND MANUFACTURED WITH INTEGRAL CONDUCTORS, FOIL BACKING OR OTHER MEANS TO ENABLE DETECTION BY A METAL DETECTOR WHEN BURIED UP TO 3 FEET DEEP. THE METALLIC CORE OF THE TAPE SHALL BE ENCASED IN A PROTECTIVE JACKET OR PROVIDED WITH OTHER MEANS TO PROTECT IT FROM CORROSION. TAPE COLOR SHALL BE RED FOR ELECTRIC UTILITIES AND ORANGE FOR TELECOMMUNICATION UTILITIES.

PART 2 – EXECUTION

3.1 GENERAL:
A. BEFORE STARTING GENERAL SITE PREPARATION ACTIVITIES, INSTALL EROSION AND SEDIMENT CONTROL MEASURES. THE WORK AREA SHALL BE CONSTRUCTED AND MAINTAINED IN SUCH A CONDITION THAT IN THE EVENT OF RAIN THE SITE WILL BE DRAINED AT ANY TIME.
B. BEFORE ALL SURVEY, LAYOUT, STAKING, AND MARKING, ESTABLISH AND MAINTAIN ALL LINES, GRADES, ELEVATIONS AND BENCHMARKS NEEDED FOR EXECUTION OF THE WORK.
C. CLEAR AND GRUB THE AREA WITHIN THE LIMITS OF THE SITE. REMOVE TREES, BRUSH, STUMPS, RUBBISH AND OTHER DEBRIS AND VEGETATION RESTING ON OR PROTRUDING THROUGH THE SURFACE OF THE SITE AREA TO BE CLEARED.
   1. REMOVE THE FOLLOWING MATERIALS TO A DEPTH OF NO LESS THAN 12 INCHES BELOW THE ORIGINAL GROUND SURFACE: ROOTS, STUMPS, AND OTHER DEBRIS, BRUSH, AND REFUSE EMBEDDED IN OR PROTRUDING THROUGH THE GROUND SURFACE, RAKE, DISK OR PLOW THE AREA TO A DEPTH OF NO LESS THAN 6 INCHES, AND REMOVE TO A DEPTH OF 12 INCHES ALL ROOTS AND OTHER DEBRIS THEREBY EXPOSED.
   2. REMOVE TOPSOIL MATERIAL COMPLETELY FROM THE SURFACE UNTIL THE SOIL NO LONGER MEETS THE DEFINITION OF TOPSOIL. AVOID MIXING TOPSOIL WITH SUBSOIL OR OTHER UNDESIRABLE MATERIALS.
   3. EXCEPT WHERE EXCAVATION TO GREATER DEPTH IS INDICATED, FILL DEPRESSIONS RESULTING FROM CLEARING, GRUBBING, AND DEMOLITION WORK COMPLETELY WITH SUITABLE FILL.
D. REMOVE FROM THE SITE AND DISPOSE IN AN AUTHORIZED LANDFILL ALL DEBRIS RESULTING FROM CLEARING AND GRUBBING OPERATIONS. BURNING WILL NOT BE PERMITTED.
E. PRIOR TO EXCAVATING, THOROUGHLY EXAMINE THE AREA TO BE EXCAVATED AND/OR TRENCHED TO VERIFY THE LOCATIONS OF FEATURES INDICATED ON THE DRAWINGS AND TO ASCERTAIN THE EXISTENCE AND LOCATION OF ANY STRUCTURE, UNDERGROUND STRUCTURE, OR OTHER ITEM NOT SHOWN THAT MIGHT INTERFERE WITH THE PROPOSED CONSTRUCTION. NOTIFY THE CONSTRUCTION MANAGER OF ANY OBSTRUCTIONS THAT WILL PREVENT ACCOMPLISHMENT OF THE WORK AS INDICATED ON THE DRAWINGS.
F. SEPARATE AND STOCK PILE AL EXCAVATED MATERIALS SUITABLE FOR BACKFILL. ALL EXCESS EXCAVATED AND UNSUITABLE MATERIALS SHALL BE DISPOSED OF OFF-SITE IN A LEGAL MANNER.

3.2 BACKFILL:
A. AS SOON AS PRACTICAL, AFTER COMPLETING CONSTRUCTION OF THE RELATED STRUCTURE, INCLUDING EXPIRATION OF THE SPECIFIED MINIMUM CURING PERIOD FOR CAST-IN-PLACE CONCRETE, BACKFILL THE EXCAVATION WITH APPROVED MATERIAL TO RESTORE THE REQUIRED FINISHED GRADE.
B. PRIOR TO PLACING BACKFILL AROUND STRUCTURES, ALL FORMS SHALL BE REMOVED AND THE EXCAVATION CLEANED OF ALL TRASH, DEBRIS, AND UNSUITABLE MATERIALS.
C. BACKFILL BY PLACING AND COMPACTING SUITABLE BACKFILL MATERIAL OR SELECT GRANULAR BACKFILL MATERIAL WHEN REQUIRED IN UNIFORM HORIZONTAL LAYERS OF NO GREATER THAN 8-INCHES LOOSE THICKNESS AND COMPACTED. WHERE HAND OPERATED COMPACTORS ARE USED, THE FILL MATERIAL SHALL BE PLACED IN LIFTS NOT TO EXCEED 4 INCHES IN LOOSE DEPTH AND COMPACTED.
D. WHENEVER THE DENSITY TESTING INDICATES THAT THE CONTRACTOR HAS NOT OBTAINED THE SPECIFIED DENSITY, THE SUCCEEDING LAYER SHALL NOT BE PLACED UNTIL THE SPECIFICATION REQUIREMENTS ARE MET UNLESS OTHERWISE AUTHORIZED BY THE GEOTECHNICAL ENGINEER. THE CONTRACTOR SHALL TAKE WHATEVER APPROPRIATE ACTION IS NECESSARY , SUCH AS DISKING AND DRYING, ADDING WATER, OR INCREASING THE COMPACTIVE EFFORT TO MEET THE MINIMUM COMPACTION REQUIREMENTS.
E. THOROUGHLY COMPACT EACH LAYER OF BACKFILL TO A MINIMUM 95% OF THE MAXIMUM DRY DENSITY AS PROVIDED BY THE STANDARD PROCTOR TEST, ASTM D 698.

3.3 TRENCH EXCAVATION:
A. UTILITY TRENCHES SHALL BE EXCAVATED TO THE LINES AND GRADES SHOWN ON THE DRAWINGS OR AS DIRECTED BY THE GENERAL CONTRACTOR. PROVIDE SHORING, SHEETING AND BRACING AS REQUIRED TO PREVENT CAVING OR SLOUGHING OF THE TRENCH WALLS.
B. EXTEND THE TRENCH WIDTH A MINIMUM OF 6 INCHES BEYOND THE OUTSIDE EDGE OF THE OUTERMOST CONDUIT.
C. WHEN SOFT YIELDING, OR OTHERWISE UNSTABLE SOIL CONDITIONS ARE ENCOUNTERED, BACKFILL AT THE REQUIRED TRENCH TO A DEPTH OF NO LESS THAN 12 INCHES BELOW THE REQUIRED ELEVATION AND BACKFILL WITH GRANULAR BEDDING MATERIAL.

3.4 TRENCH BACKFILL:
A. PROVIDE GRANULAR BEDDING MATERIAL IN ACCORDANCE WITH THE DRAWINGS AND THE UTILITY REQUIREMENTS.
B. NOTIFY THE GENERAL CONTRACTOR 24 HOURS IN ADVANCE OF BACKFILLING.
C. CONDUCT UTILITY CHECK TESTS BEFORE BACKFILLING. BACKFILL AND COMPACT TRENCH BEFORE ACCEPTANCE TESTING.
D. PLACE GRANULAR TRENCH BACKFILL UNIFORMLY ON BOTH SIDES OF THE CONDUITS IN 6-INCH UNCOMPACTED LIFTS UNTIL 12 INCHES OVER THE CONDUITS. SOLIDLY RAM AND TAMP BACKFILL INTO SPACE AROUND CONDUITS.
E. PROTECT CONDUIT FROM LATERAL MOVEMENT, IMPACT DAMAGE, OR UNBALANCED LOADING.
F. ABOVE THE CONDUIT EMBEDMENT ZONE, PLACE AND COMPACT SATISFACTORY BACKFILL MATERIAL IN 8-INCH MAXIMUM LOOSE THICKNESS LIFTS TO RESTORE THE REQUIRED FINISHED SURFACE GRADE.
G. COMPACT FINAL TRENCH BACKFILL TO A DENSITY EQUAL TO OR GREATER THAN THAT OF THE EXISTING UNDISTURBED MATERIAL IMMEDIATELY ADJACENT TO THE TRENCH BUT NO LESS THAN A MINIMUM OF 95% OF THE MAXIMUM DRY DENSITY AS PROVIDED BY THE STANDARD PROCTOR TEST, ASTM D 698.

3.5 FINISH GRADING:
A. PERFORM ALL GRADING TO PROVIDE POSITIVE DRAINAGE AWAY FROM STRUCTURES AND SMOOTH, EVEN SURFACE DRAINAGE OF THE ENTIRE AREA WITHIN THE IMITS OF CONSTRUCTION. GRADING SHALL BE COMPATIBLE WITH ALL SURROUNDING TOPOGRAPHY AND STRUCTURES.
B. UTILIZE SATISFACTORY FILL MATERIAL RESULTING FROM THE EXCAVATION WORK IN THE CONSTRUCTION OF FILLS, EMBANKMENTS AND FOR REPLACEMENT OF REMOVED UNSUITABLE MATERIALS.
C. ACHIEVE FINISHED GRADE BY PLACING A MINIMUM OF 4 INCHES OF 1/2" – 3/4" CRUSHED STONE ON TOP SOIL STABILIZER FABRIC.
D. REPAIR ALL ACCESS ROADS AND SURROUNDING AREAS USED DURING THE CORSE OF THIS WORK TO THEIR ORIGINAL CONDITION.

3.7 ASPHALT PAVING ROAD:
A. DIVISION 600 – KDOT FLEXIBLE PAVEMENT. (UPDATE PER LOCAL DOT)
B. SECTION 403 – MODOT ASPHALT CONCRETE PAVEMENT.

INFINIGY2
1033 Watervliet Shaker Rd
Albany, NY 12205
Office # (518) 690-0790
Fax # (518) 690-0793

at&t

UNAUTHORIZED ALTERATION OR ADDITION TO THIS DOCUMENT IS A VIOLATION OF APPLICABLE STATE AND/OR LOCAL LAWS

No.	Submittal / Revision	App'd	Date
A	ISSUED FOR REVIEW	MPS	11/10/17

Drawn: MPS Date: 11/10/17
Designed: ASW Date: 11/10/17
Checked: ASW Date: 11/10/17

Project Number: 550-000

Project Title:
FA# 10071346
SITE ID: CT1172
WOODBURY GOOD HILL ROAD
478 GOOD HILL ROAD
WOODBURY, CT 06798

Prepared For:
CENTERLINE COMMUNICATIONS

THIS DOCUMENT IS THE DESIGN PROPERTY AND COPYRIGHT OF INFINIGY ENGINEERING, PLLC AND IS TO BE USED FOR USE ON THIS PROJECT CLIENT. ANY DUPLICATION OR USE WITHOUT EXPRESS WRITTEN CONSENT OF THE CREATOR IS STRICTLY PROHIBITED.

Drawing Scale: AS NOTED
Date: 11/10/17

Drawing Title
GENERAL NOTES

Drawing Number
C2

NOTE:
INFINIGY ENGINEERING HAS NOT EVALUATED THE EXISTING TOWER STRUCTURE OR MOUNT FOR THIS SITE, AND ASSUMES NO RESPONSIBILITY FOR ITS STRUCTURAL INTEGRITY. STRUCTURAL AND MOUNT ANALYSIS TO BE COMPLETED PRIOR TO INSTALLATION.

NOTES:
1. EXISTING CONDITIONS INFORMATION BASED ON INFORMATION PROVIDED TO INFINIGY.
2. THESE DRAWINGS DO NOT REFLECT ADEQUACY OF EXISTING OR PROPOSED ANTENNA MOUNTS, MOUNT CONNECTIONS, OR CABLE ATTACHMENTS. INFINIGY DOES NOT ACCEPT LIABILITY FOR ANY OF THESE STRUCTURAL ELEMENTS.
3. ROUTE ALL PROPOSED CABLING ON EXISTING CABLE LADDER. ACTUAL ROUTE ON DRAWINGS MAY VARY FROM FIELD LOCATION OF EXISTING CABLE LADDER.
4. INSTALLER SHALL PROVIDE ALL NECESSARY CONDUITS AND CIRCUITS AS REQUIRED FOR A COMPLETED INSTALLATION AND SHALL COMPLY WITH EQUIPMENT MANUFACTURER'S INSTALLATION REQUIREMENTS.
5. INSTALLER SHALL PROVIDE ALL STRAIN RELIEF FOR ALL CABLE ASSEMBLIES ROUTING TO THE ANTENNAS. UTILIZATION OF HOISTING GRIPS ON ALL DC POWER AND FIBER OPTIC CABLES SHALL BE UTILIZED.

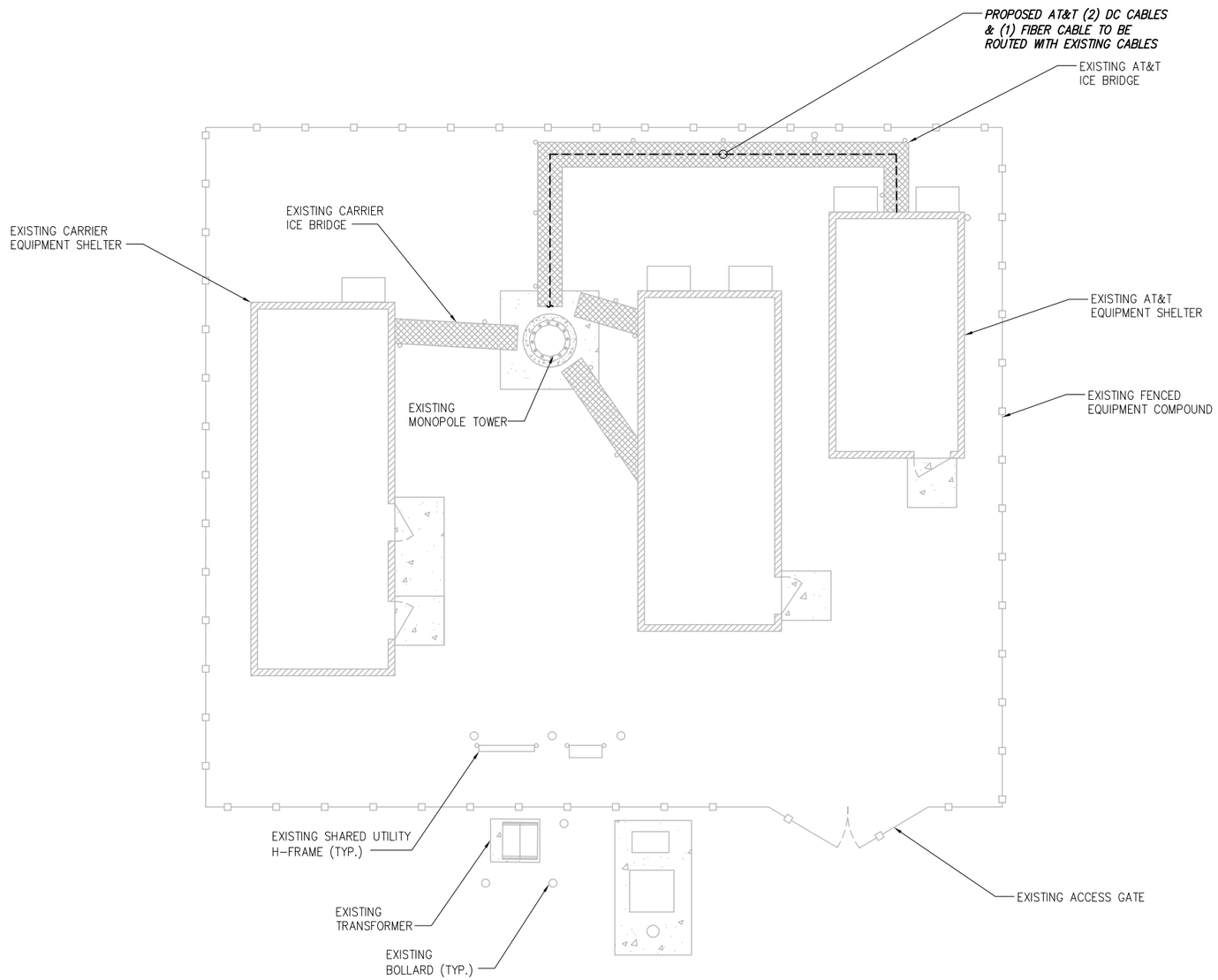

CALLED NORTH

1 OVERALL SITE PLAN
SCALE: AS NOTED

GRAPHIC SCALE:
10' 5' 0 5' 10'
SCALE (11x17): 1" = 10'-0"
SCALE (22x34): 1" = 5'-0"

INFINIGY
1033 Watervliet Shaker Rd
Albany, NY 12205
Office # (518) 690-0790
Fax # (518) 690-0793

at&t

UNAUTHORIZED ALTERATION OR ADDITION TO THIS DOCUMENT IS A VIOLATION OF APPLICABLE STATE AND/OR LOCAL LAWS

No.	Submittal / Revision	App'd	Date
A	ISSUED FOR REVIEW	MPS	11/10/17

Drawn: MPS Date: 11/10/17
Designed: ASW Date: 11/10/17
Checked: ASW Date: 11/10/17

Project Number: 550-000

Project Title:
FA# 10071346
SITE ID: CT1172
WOODBURY GOOD HILL ROAD
478 GOOD HILL ROAD
WOODBURY, CT 06798

Prepared For:
CENTERLINE COMMUNICATIONS

THIS DOCUMENT IS THE DESIGN PROPERTY AND COPYRIGHT OF INFINIGY ENGINEERING, PLLC AND WAS PREPARED FOR THE USE OF THE CLIENT. ANY DUPLICATION OR USE WITHOUT EXPRESS WRITTEN CONSENT OF THE CREATOR IS STRICTLY PROHIBITED.

Drawing Scale: AS NOTED
Date: 11/10/17

Drawing Title
COMPOUND PLAN

Drawing Number
C3

CODED NOTES:

(1) *EXISTING GALAXY POWER RACK:*
- *REPLACE EXISTING DUL WITH PROPOSED 5216*
- *INSTALL (1) XMU*

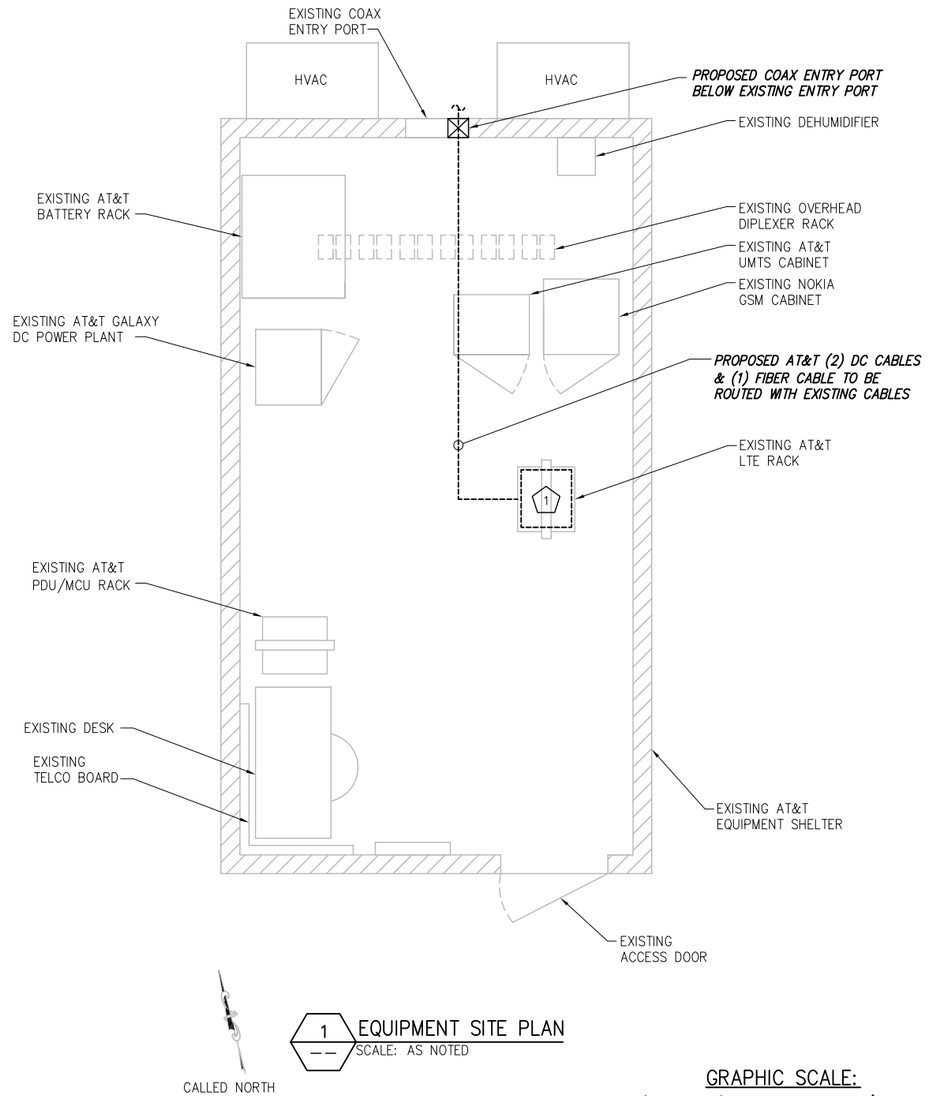

1 EQUIPMENT SITE PLAN
SCALE: AS NOTED

NOTES:
CONTRACTOR TO GROUND ALL EQUIPMENT IN ACCORDANCE WITH MANUFACTURER'S SPECIFICATIONS.

SYMBOL	
⊗	COPPER GROUND ROD
▸	CONNECT PER MANUFACTURER SPECS
■	CADWELD CONNECTION
●	MECHANICAL CONNECTION
▬	GROUND BAR
—·—·—	ELECTRICAL CONDUIT
—·—·—	GROUND WIRE
—·—·—	DC/FIBER LINE

NOTES:
1. EXISTING CONDITIONS INFORMATION BASED ON INFORMATION PROVIDED TO INFINIGY.
2. THESE DRAWINGS DO NOT REFLECT ADEQUACY OF EXISTING OR PROPOSED ANTENNA MOUNTS, MOUNT CONNECTIONS, OR CABLE ATTACHMENTS. INFINIGY DOES NOT ACCEPT LIABILITY FOR ANY OF THESE STRUCTURAL ELEMENTS.
3. ROUTE ALL PROPOSED CABLING ON EXISTING CABLE LADDER. ACTUAL ROUTE ON DRAWINGS MAY VARY FROM FIELD LOCATION OF EXISTING CABLE LADDER.
4. INSTALLER SHALL PROVIDE ALL NECESSARY CONDUITS AND CIRCUITS AS REQUIRED FOR A COMPLETED INSTALLATION AND SHALL COMPLY WITH EQUIPMENT MANUFACTURER'S INSTALLATION REQUIREMENTS.
5. INSTALLER SHALL PROVIDE ALL STRAIN RELIEF FOR ALL CABLE ASSEMBLIES ROUTING TO THE ANTENNAS. UTILIZATION OF HOISTING GRIPS ON ALL DC POWER AND FIBER OPTIC CABLES SHALL BE UTILIZED.

ABBREVIATIONS:

CIGBE	COAX ISOLATED GROUND BAR EXTERNAL
MIGB	MASTER ISOLATED GROUND BAR
SST	SELF SUPPORTING TOWER
GPS	GLOBAL POSITIONING SYSTEM
TYP.	TYPICAL
DWG	DRAWING
BCW	BARE COPPER WIRE
BFG	BELOW FINISH GRADE
PVC	POLYVINYL CHLORIDE
CAB	CABINET
C	CONDUIT
SS	STAINLESS STEEL
G	GROUND
AWG	AMERICAN WIRE GAUGE
RGS	RIGID GALVANIZED STEEL
AHJ	AUTHORITY HAVING JURISDICTION
TTLNA	TOWER TOP LOW NOISE AMPLIFIER
UNO	UNLESS NOTED OTHERWISE
EMT	ELECTRICAL METALLIC TUBING
AGL	ABOVE GROUND LEVEL

NOTE:
INFINIGY ENGINEERING HAS NOT CONDUCTED AN ELECTRICAL LOAD STUDY FOR THIS SITE. CONTRACTOR IS TO VERIFY EXISTING ELECTRICAL LOADS PRIOR TO CONSTRUCTION TO ENSURE THERE IS AMPLE SERVICE AVAILABLE TO ACCOMMODATE THE EXISTING AND PROPOSED EQUIPMENT.

GRAPHIC SCALE:
4' 2' 0 2' 4'
SCALE (11x17): 1" = 4'-0"
SCALE (22x34): 1" = 2'-0"

ELECTRICAL NOTES:

1. ALL ELECTRICAL WORK SHALL CONFORM TO THE LATEST EDITION OF THE NATIONAL ELECTRICAL CODE (N.E.C.), AND APPLICABLE LOCAL CODES.
2. GROUNDING SHALL COMPLY WITH THE ARTICLE 250 OF NATIONAL ELECTRICAL CODE.
3. ALL ELECTRICAL ITEMS SHALL BE U.L. APPROVED OR LISTED.
4. ALL WIRES SHALL BE AWG MIN #12 THHN COPPER UNLESS NOTED.
5. CONDUCTORS SHALL BE INSTALLED IN SCHEDULE 40 PVC CONDUIT UNLESS NOTED OTHERWISE.
6. LABEL AT&T SERVICE DISCONNECTS WITH SWITCH AND PANEL WITH ENGRAVED LAMACOID LABELS, LETTERS 1" IN HEIGHT.
7. ROUTE GROUNDING CONDUCTORS ALONG THE SHORTEST AND STRAIGHTEST PATH POSSIBLE. BEND GROUNDING LEADS WITH A MINIMUM 8" RADIUS.
8. ENGAGE AN INDEPENDENT TESTING FIRM TO TEST AND VERIFY THAT RESISTANCE DOES NOT EXCEED 5 OHMS TO GROUND. TEST GROUND RING RESISTANCE PRIOR TO MAKING FINAL GROUND CONNECTIONS TO INFRASTRUCTURE AND EQUIPMENT. GROUNDING AND OTHER OPERATIONAL TESTING SHALL BE WITNESSED BY AT&TS REPRESENTATIVE.
9. PROVIDE PULL BOXES AND JUNCTION BOXES WHERE REQUIRED SO THAT CONDUIT BENDS DO NOT EXCEED 360 DEGREES.
10. OBTAIN PERMITS AND PAY FEES RELATED TO ELECTRICAL WORK PERFORMED ON THIS PROJECT. DELIVER COPIES OF ALL PERMITS TO AT&T REPRESENTATIVE.
11. SCHEDULE AND ATTEND INSPECTIONS RELATED TO ELECTRICAL WORK REQUIRED BY JURISDICTION HAVING AUTHORITY. CORRECT AND PAY FOR ANY WORK REQUIRED TO PASS ANY FAILED INSPECTION.
12. REDLINED AS-BUILTS ARE TO BE DELIVERED TO AN AT&T REPRESENTATIVE.
13. PROVIDE TWO COPIES OF OPERATION AND MAINTENANCE MANUALS IN THREE-RING BINDER.
14. FURNISH AND INSTALL THE COMPLETE ELECTRICAL SERVICE, TELCO CONDUIT, AND THE COMPLETE GROUNDING SYSTEM.
15. ALL WORK SHALL BE PERFORMED IN STRICT ACCORDANCE WITH ALL APPLICABLE BUILDING CODES AND LOCAL ORDINANCES, INSTALLED IN A NEAT MANNER AND SHALL BE SUBJECT TO APPROVAL BY AN AT&T REPRESENTATIVE.
16. CONDUCT A PRE-CONSTRUCTION SITE VISIT AND VERIFY EXISTING SITE CONDITIONS AFFECTING THIS WORK. REPORT ANY OMISSIONS OR DISCREPANCIES FOR CLARIFICATION PRIOR TO THE START OF CONSTRUCTION.
17. PROJECT ADJACENT STRUCTURES AND FINISHES FROM DAMAGE, REPAIR TO ORIGINAL CONDITION ANY DAMAGED AREA.
18. REMOVE DEBRIS ON A DAILY BASIS. DEBRIS NOT REMOVED IN A TIMELY FASHION WILL BE REMOVED BY OTHERS AND THE RESPONSIBLE SUBCONTRACTOR SHALL BE CHARGED ACCORDINGLY. REMOVAL OF DEBRIS SHALL BE COORDINATED WITH THE OWNER'S REPRESENTATIVE. DEBRIS SHALL BE REMOVED FROM THE PROPERTY AND DISPOSED OF LEGALLY.
19. UPON COMPLETION OF WORK, THE SITE SHALL BE CLEAN AND FREE OF DUST AND FINGERPRINTS.
20. PRIOR TO ANY TRENCHING, CONTACT LOCAL UTILITY TO VERIFY LOCATION OF ANY EXISTING BURIED SERVICE CONDUITS.
21. DOCUMENT GROUND RING INSTALLATION AND CONNECTIONS TO IT WITH PHOTOGRAPHS PRIOR TO BACKFILLING SITE. PRESENT PHOTO ARCHIVE A SITE "PUNCH LIST" WALK TO AT&T'S REPRESENTATIVE.
22. ALL ABOVE GRADE CONDUIT TO BE RIGID METALLIC.

GROUNDING NOTES:

1. ALL DOWN CONDUCTORS AND GROUND RING AND CONDUCTOR SHALL BE #2 AWG, SOLID, BARE, TINNED COPPER, UNO. ALL CONNECTIONS TO GROUND RING SHALL BE EXOTHERMICALLY WELDED. CONDUCTOR SHALL BE A MINIMUM DEPTH BELOW GRADE OF 30 INCHES OR TO THE LEDGE. MINIMUM BEND RADIUS SHALL BE 8 INCHES. CONDUCTOR SHALL BE AT LEAST 24 INCHES FROM ANY FOUNDATION, UNO.
2. WHERE MECHANICAL CONDUCTOR CONNECTIONS ARE SPECIFIED, BOLTED, COMPRESSION-TYPE CLAMPS OR SPLIT-BOLT TYPE CONNECTORS SHALL BE USED.
3. GRIND OFF GALVANIZING IN AFFECTED AREA. EXOTHERMICALLY WELD #2 CONDUCTOR AT 6 INCHES ABOVE GRADE R FOUNDATION, WHICHEVER IS HIGHER. COLD-GALY AFTER. EXOTHERMICALLY WELD OTHER END TO THE GROUND.
4. GROUND CONDUCTORS ON EXTERIOR WALL OF SHELTER SHALL BE ENCASED IN ¾" PVC CONDUIT TO GRADE. MOUNT PVC WITH GALVANIZED "C" CLAMPS. SEAL TOP ENDS.
5. FOLLOWING COMPLETION OF WORK, CONDUCT GROUND TEST. SUBMIT WRITTEN TEST TO CONSTRUCTION MANAGER AND PROJECT MANAGER.
6. ALL GROUNDING WORK SHALL COMPLY WITH CARRIER(S) STANDARDS.
7. GROUNDING REQUIREMENTS SHOWN ON THIS PLAN ARE FOR ITEMS THAT ARE LOCATED NEAR GRADE LEVEL AND THAT NEED TO BE TIED TO THE BELOW GRADE GROUND RING.
8. UNLESS NOTED OTHERWISE, ALL GROUNDING SHALL BE IN ACCORDANCE WITH AT&T'S SSEQ DOCUMENTS 3.018.02.004 "BONDING, GROUNDING AND TRANSIENT PROTECTION FOR CELL SITES", AND 3.018.10.002 "SITE RESISTANCE TO EARTH TESTING". ALL GROUNDING SHALL ALSO COMPLY WITH ALL STATE AND LOCAL CODES, AND THE NATIONAL ELECTRICAL CODE (NEC).
9. UNLESS NOTED OTHERWISE, ALL GROUNDING CONNECTIONS SHALL BE MADE BY AN EXOTHERMIC WELD.
10. RESISTANCE TO EARTH TESTING IS REQUIRED PER AT&T STANDARDS ON ALL NEW SITES.

INFINIGY
1033 Watervliet Shaker Rd
Albany, NY 12205
Office # (518) 690-0790
Fax # (518) 690-0793

at&t

UNAUTHORIZED ALTERATION OR ADDITION TO THIS DOCUMENT IS A VIOLATION OF APPLICABLE STATE AND/OR LOCAL LAWS

No.	Submittal / Revision	App'd	Date
A	ISSUED FOR REVIEW	MPS	11/10/17

Drawn: MPS Date: 11/10/17
Designed: ASW Date: 11/10/17
Checked: ASW Date: 11/10/17

Project Number: 550-000

Project Title:
FA# 10071346
SITE ID: CT1172
WOODBURY GOOD HILL ROAD
478 GOOD HILL ROAD
WOODBURY, CT 06798

Prepared For:
CENTERLINE COMMUNICATIONS

THIS DOCUMENT IS THE DESIGN PROPERTY AND COPYRIGHT OF INFINIGY ENGINEERING, PLLC AND SHALL NOT BE USED BY ANY PERSON OTHER THAN THE CLIENT, ANY DUPLICATION OR USE WITHOUT EXPRESS WRITTEN CONSENT OF THE CREATOR IS STRICTLY PROHIBITED.

Drawing Scale: AS NOTED
Date: 11/10/17

Drawing Title
EQUIPMENT SITE PLAN

Drawing Number
C4

NOTE:
INFINIGY ENGINEERING HAS NOT EVALUATED THE EXISTING STRUCTURE OR MOUNT FOR THIS SITE, AND ASSUMES NO RESPONSIBILITY FOR ITS STRUCTURAL INTEGRITY. STRUCTURAL AND MOUNT ANALYSIS TO BE COMPLETED PRIOR TO INSTALLATION.

NOTES:

1. EXISTING CONDITIONS INFORMATION BASED ON INFORMATION PROVIDED TO INFINIGY.
2. THESE DRAWINGS DO NOT REFLECT ADEQUACY OF EXISTING OR PROPOSED ANTENNA MOUNTS, MOUNT CONNECTIONS, OR CABLE ATTACHMENTS. INFINIGY DOES NOT ACCEPT LIABILITY FOR ANY OF THESE STRUCTURAL ELEMENTS.
3. ROUTE ALL PROPOSED CABLING ON EXISTING CABLE LADDER. ACTUAL ROUTE ON DRAWINGS MAY VARY FROM FIELD LOCATION OF EXISTING CABLE LADDER.
4. INSTALLER SHALL PROVIDE ALL NECESSARY CONDUITS AND CIRCUITS AS REQUIRED FOR A COMPLETED INSTALLATION AND SHALL COMPLY WITH EQUIPMENT MANUFACTURER'S INSTALLATION REQUIREMENTS.
5. INSTALLER SHALL PROVIDE ALL STRAIN RELIEF FOR ALL CABLE ASSEMBLIES ROUTING TO THE ANTENNAS. UTILIZATION OF HOISTING GRIPS ON ALL DC POWER AND FIBER OPTIC CABLES SHALL BE UTILIZED.

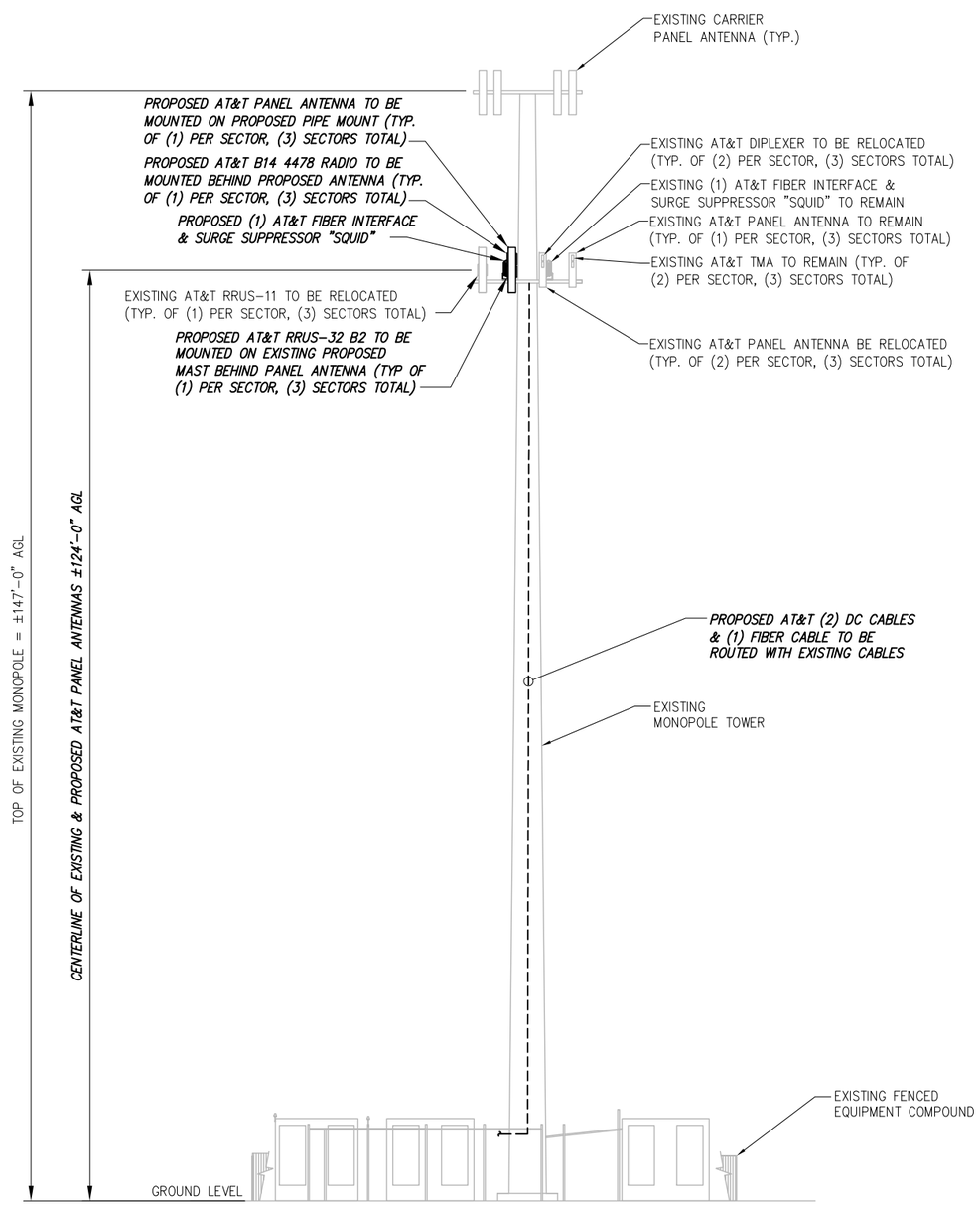

1 ELEVATION VIEW
NOT TO SCALE

INFINIGY
1033 Watervliet Shaker Rd
Albany, NY 12205
Office # (518) 690-0790
Fax # (518) 690-0793

at&t

UNAUTHORIZED ALTERATION OR ADDITION TO THIS DOCUMENT IS A VIOLATION OF APPLICABLE STATE AND/OR LOCAL LAWS

No.	Submittal / Revision	App'd	Date
A	ISSUED FOR REVIEW	MPS	11/10/17

Drawn: MPS Date: 11/10/17
Designed: ASW Date: 11/10/17
Checked: ASW Date: 11/10/17

Project Number: 550-000

Project Title:
FA# 10071346
SITE ID: CT1172
WOODBURY GOOD HILL ROAD
478 GOOD HILL ROAD
WOODBURY, CT 06798

Prepared For:
CENTERLINE COMMUNICATIONS

THIS DOCUMENT IS THE DESIGN PROPERTY AND COPYRIGHT OF INFINIGY ENGINEERING, PLLC AND SHALL NOT BE LOANED OR PUT TO THE CLIENT'S ANY DUPLICATION OR USE WITHOUT EXPRESS WRITTEN CONSENT OF THE CREATOR IS STRICTLY PROHIBITED.

Drawing Scale: AS NOTED
Date: 11/10/17

Drawing Title
ELEVATION VIEW

Drawing Number
C5

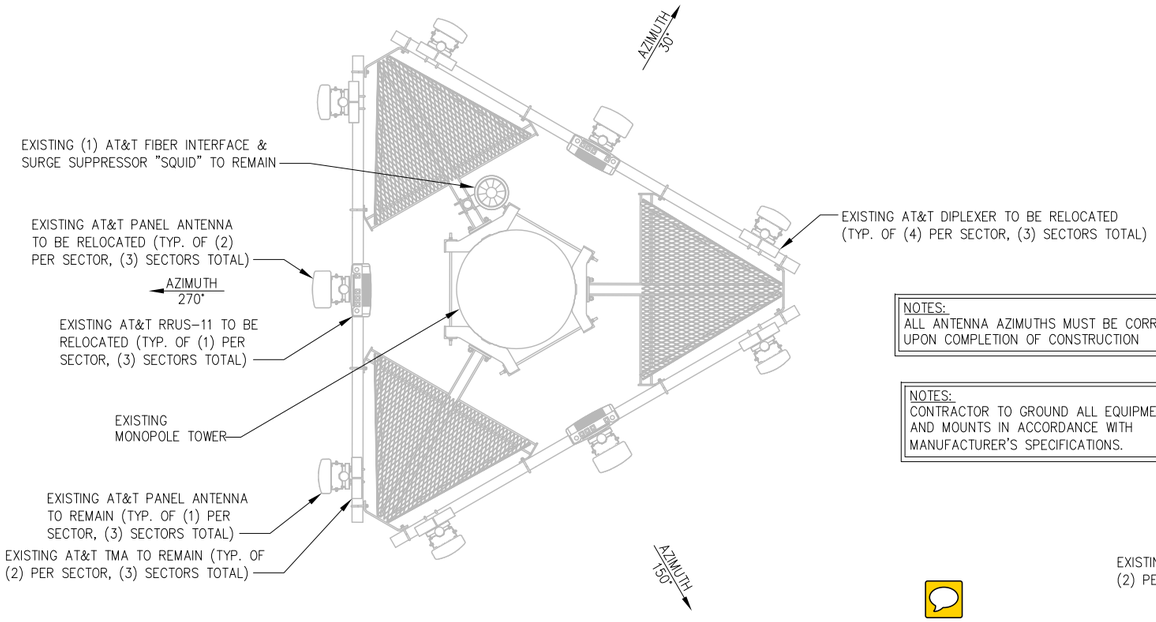

CALLED NORTH

1 ANTENNA ORIENTATION PLAN (EXISTING)
NOT TO SCALE

NOTES:
ALL ANTENNA AZIMUTHS MUST BE CORRECT UPON COMPLETION OF CONSTRUCTION

NOTES:
CONTRACTOR TO GROUND ALL EQUIPMENT AND MOUNTS IN ACCORDANCE WITH MANUFACTURER'S SPECIFICATIONS.

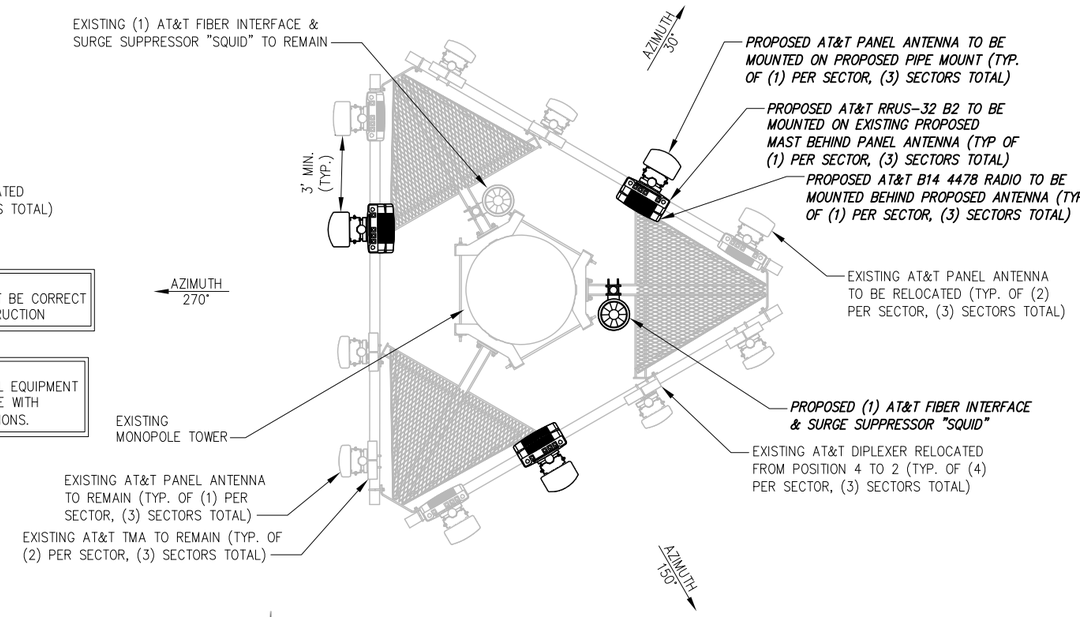

CALLED NORTH

2 ANTENNA ORIENTATION PLAN (PROPOSED)
NOT TO SCALE

EXISTING AND PROPOSED ANTENNA, TMA AND DIPLEXER MODEL NUMBERS

SECTOR	EXISTING/ PROPOSED	BAND	ANTENNA	ANTENNA ℄ HEIGHT	AZIMUTH	TMA/DIPLEXER	RRU	CABLE	CABLE LENGTH
ALPHA	EXISTING	UMTS 850	POWERWAVE 7770	±124'	30°	(2) LGP 21401	–	COAX	EXISTING
	EXISTING	GSM 850	POWERWAVE 7770	±124'	30°	(2) LGP 21901	–	–	–
	PROPOSED	***LTE 700/1900***	***KMW EPBQ-64L8H6-L2***	**±124'**	**30°**	–	***(1) (P) B14 4478 RADIO (700) (1) (P) RRUS-32 B2 (PCS)***	FIBER	±200'
	EXISTING	LTE 700	KMW AM-X-CD-16-65-00T-RET	±124'	30°	–	(1) (E) RRUS-11 (700)	FIBER	EXISTING
BETA	EXISTING	UMTS 850	POWERWAVE 7770	±124'	150°	(2) LGP 21401	–	COAX	EXISTING
	EXISTING	GSM 850	POWERWAVE 7770	±124'	150°	(2) LGP 21901	–	–	–
	PROPOSED	***LTE 700/1900***	***KMW EPBQ-64L8H6-L2***	**±124'**	**150°**	–	***(1) (P) B14 4478 RADIO (700) (1) (P) RRUS-32 B2 (PCS)***	FIBER	±200'
	EXISTING	LTE 700	KMW AM-X-CD-16-65-00T-RET	±124'	150°	–	(1) (E) RRUS-11 (700)	FIBER	EXISTING
GAMMA	EXISTING	UMTS 850	POWERWAVE 7770	±124'	270°	(2) LGP 21401	–	COAX	EXISTING
	EXISTING	GSM 850	POWERWAVE 7770	±124'	270°	(2) LGP 21901	–	–	–
	PROPOSED	***LTE 700/1900***	***KMW EPBQ-64L8H6-L2***	**±124'**	**270°**	–	***(1) (P) B14 4478 RADIO (700) (1) (P) RRUS-32 B2 (PCS)***	FIBER	±200'
	EXISTING	LTE 700	KMW AM-X-CD-16-65-00T-RET	±124'	270°	–	(1) (E) RRUS-11 (700)	FIBER	EXISTING

3 RF EQUIPMENT SCHEDULE
NOT TO SCALE

PROPOSED RRU AND CABLE SCHEDULE

SECTOR	FIBER TRUNK	SINGLE FIBER	DC 3-PAIR	DC 1-PAIR	RRU'S
ALPHA	***(1) 18P, ±200'***	(4), ±15'	***(2) #8AWG, ±200'***	(2), ±15'	***(1) (P) B14 4478 RADIO (700) (1) (P) RRUS-32 B2 (PCS)*** (1) (E) RRUS-11 (700)
BETA		(4), ±15'		(2), ±15'	***(1) (P) B14 4478 RADIO (700) (1) (P) RRUS-32 B2 (PCS)*** (1) (E) RRUS-11 (700)
GAMMA		(4), ±15'		(2), ±15'	***(1) (P) B14 4478 RADIO (700) (1) (P) RRUS-32 B2 (PCS)*** (1) (E) RRUS-11 (700)

INFINIGY
1033 Watervliet Shaker Rd
Albany, NY 12205
Office # (518) 690-0790
Fax # (518) 690-0793

at&t

UNAUTHORIZED ALTERATION OR ADDITION TO THIS DOCUMENT IS A VIOLATION OF APPLICABLE STATE AND/OR LOCAL LAWS

No.	Submittal / Revision	App'd	Date
A	ISSUED FOR REVIEW	MPS	11/10/17

Drawn: MPS Date: 11/10/17
Designed: ASW Date: 11/10/17
Checked: ASW Date: 11/10/17

Project Number: 550-000

Project Title:
FA# 10071346
SITE ID: CT1172
WOODBURY GOOD HILL ROAD
478 GOOD HILL ROAD
WOODBURY, CT 06798

Prepared For:
CENTERLINE COMMUNICATIONS

THIS DOCUMENT IS THE DESIGN PROPERTY AND COPYRIGHT OF INFINIGY ENGINEERING, PLLC AND WAS PREPARED FOR THE SPECIFIC TITLE CLIENT. ANY DUPLICATION OR USE WITHOUT EXPRESS WRITTEN CONSENT OF THE CREATOR IS STRICTLY PROHIBITED.

Drawing Scale: AS NOTED
Date: 11/10/17

Drawing Title
EQUIPMENT DETAILS

Drawing Number
C6

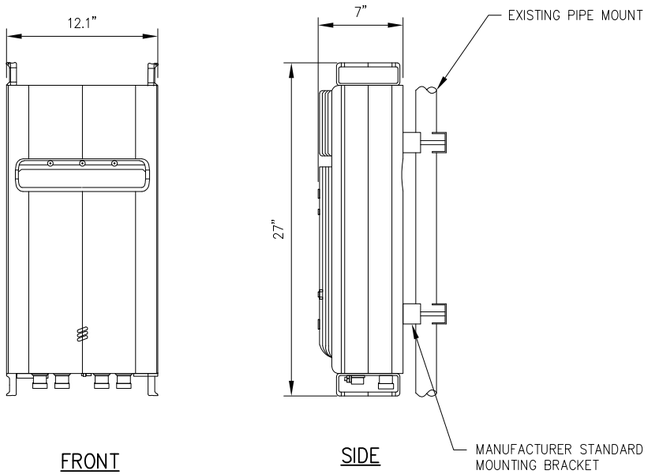

RRUS-32 B2 SPECIFICATIONS

- HXWXD, (INCHES) : 27.2"x12.1"x7"
- WEIGHT (LBS) : 53
- COLOR : GRAY
- MOUNTING BRACKET: SXK-125-0245/1

1 RRUS-32 B2 DETAIL
NOT TO SCALE

ERICSSON RADIO
P/N: RADIO 4478 B71
DIMENSIONS: 15"X13.2"X7.4"(HXWXD)
WEIGHT: 60.0 LBS
MOUNTING BRACKET: SXK-125-0244/1

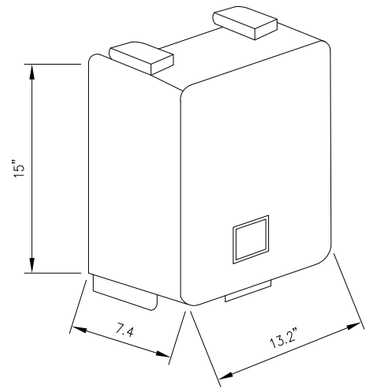

2 RRUS 4478 DETAIL
NOT TO SCALE

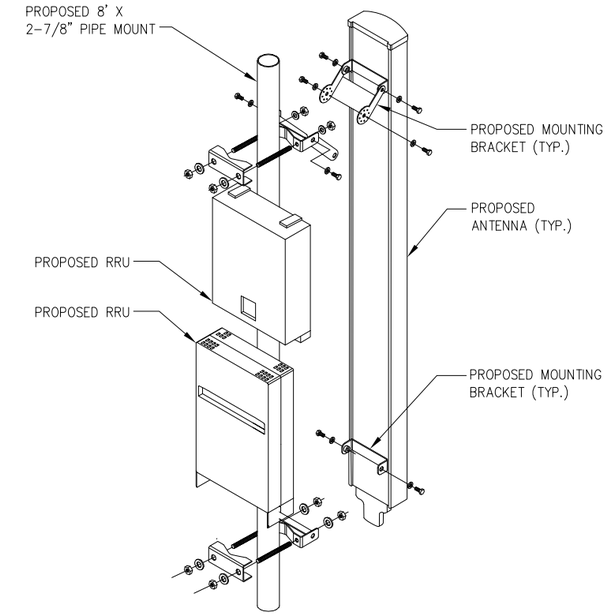

3 MOUNTING DETAIL
NOT TO SCALE

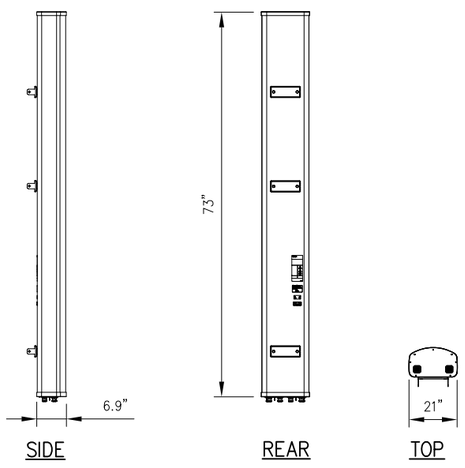

KMW MODEL NO.:	EPBQ-654L8H6-L2
RADOME MATERIAL:	FIBERGLASS, UV RESISTANT
RADOME COLOR:	LIGHT GRAY
DIMENSIONS, HxWxD:	73"x21"x6.9"
WEIGHT, W/ PRE-MOUNTED BRACKETS:	72.8 LBS
CONNECTOR:	7-16 DIN FEMALE

4 ANTENNA DETAIL
NOT TO SCALE

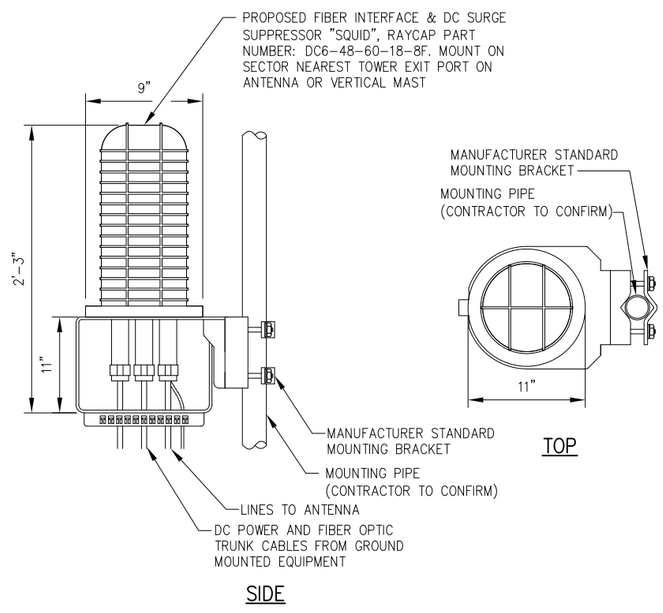

5 SQUID DETAIL
NOT TO SCALE

6 DETAIL NOT USED
NOT TO SCALE

INFINIGY
1033 Watervliet Shaker Rd
Albany, NY 12205
Office # (518) 690-0790
Fax # (518) 690-0793

at&t

UNAUTHORIZED ALTERATION OR ADDITION TO THIS DOCUMENT IS A VIOLATION OF APPLICABLE STATE AND/OR LOCAL LAWS

No.	Submittal / Revision	App'd	Date
A	ISSUED FOR REVIEW	MPS	11/10/17

Drawn: MPS Date: 11/10/17
Designed: ASW Date: 11/10/17
Checked: ASW Date: 11/10/17

Project Number: 550-000

Project Title:
FA# 10071346
SITE ID: CT1172
WOODBURY GOOD HILL ROAD
478 GOOD HILL ROAD
WOODBURY, CT 06798

Prepared For:
CENTERLINE COMMUNICATIONS

THIS DOCUMENT IS THE DESIGN PROPERTY AND COPYRIGHT OF INFINIGY ENGINEERING, PLLC AND MUST BE RETURNED UPON REQUEST. TITLE TO THE DESIGN VESTS IN THE CLIENT. ANY DUPLICATION OR USE WITHOUT EXPRESS WRITTEN CONSENT OF THE CREATOR IS STRICTLY PROHIBITED.

Drawing Scale: AS NOTED
Date: 11/10/17

Drawing Title
EQUIPMENT DETAILS

Drawing Number
C7

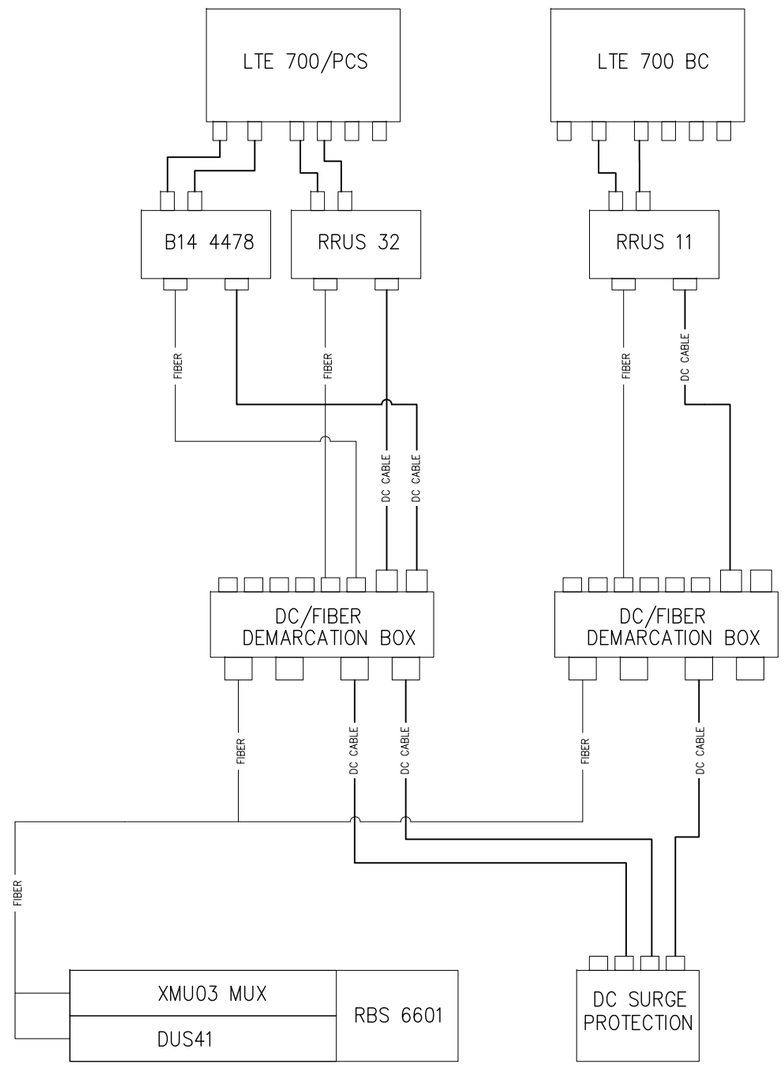

1 LTE TOWER TOP CONFIGURATION
SCALE: NOT TO SCALE

NOTE:
THIS DIAGRAM REPRESENTS A SINGLE SECTOR

CONTRACTOR TO REFER TO LATEST RFDS PROVIDED BY AT&T FOR FINAL CONFIGURATION.

NOTES:
CONTRACTOR SHALL LABEL THE FOLLOWING:
- ALL RADIOS
- EACH SQUID 1-3
- ALL FIBER JUMPERS TO AND FROM THE SQUID AND RRU
- CONTRACTOR TO USE PERMANENT MARKER TO IDENTIFY THE SINGLE MODE FIBER JUMPER

INFINIGY
1033 Watervliet Shaker Rd
Albany, NY 12205
Office # (518) 690-0790
Fax # (518) 690-0793

at&t

UNAUTHORIZED ALTERATION OR ADDITION TO THIS DOCUMENT IS A VIOLATION OF APPLICABLE STATE AND/OR LOCAL LAWS

No.	Submittal / Revision	App'd	Date
A	ISSUED FOR REVIEW	MPS	11/10/17

Drawn: MPS Date: 11/10/17
Designed: ASW Date: 11/10/17
Checked: ASW Date: 11/10/17

Project Number: 550-000

Project Title:
FA# 10071346
SITE ID: CT1172
WOODBURY GOOD HILL ROAD
478 GOOD HILL ROAD
WOODBURY, CT 06798

Prepared For:
CENTERLINE COMMUNICATIONS

THIS DOCUMENT IS THE DESIGN PROPERTY AND COPYRIGHT OF INFINIGY ENGINEERING, PLLC AND MUST BE RETURNED ON REQUEST. TITLE TO THE CLIENT. ANY DUPLICATION OR USE WITHOUT EXPRESS WRITTEN CONSENT OF THE CREATOR IS STRICTLY PROHIBITED.

Drawing Scale: AS NOTED
Date: 11/10/17

Drawing Title
LTE TOWER TOP CONFIGURATION

Drawing Number
C8

	CABLE MARKING LOCATIONS TABLE
NO.	LOCATIONS
1	EACH TOP JUMPER SHALL BE COLOR CODED WITH ONE (1) SET OF 3" WIDE BANDS
2	EACH MAIN COAX SHALL BE COLOR CODED WITH (1) SET OF 3" WIDE BANDS NEAR THE TOP OF THE JUMPER CONNECTION AND WITH (1) SET OF 3/4" WIDE COLOR BANDS JUST PRIOR TO ENTERING THE BTS OR TRANSMITTER BUILDING
3	CABLE ENTRY PORT ON THE INTERIOR OF THE SHELTER
4	ALL BOTTOM JUMPERS SHALL BE COLOR CODED WITH (1) SET OF 3/4" WIDE BANDS ON EACH END OF THE BOTTOM JUMPER
5	ALL BOTTOM JUMPERS SHALL BE COLOR CODED WITH (1) SET OF 3/4" WIDE BANDS ON EACH END OF THE BOTTOM JUMPER

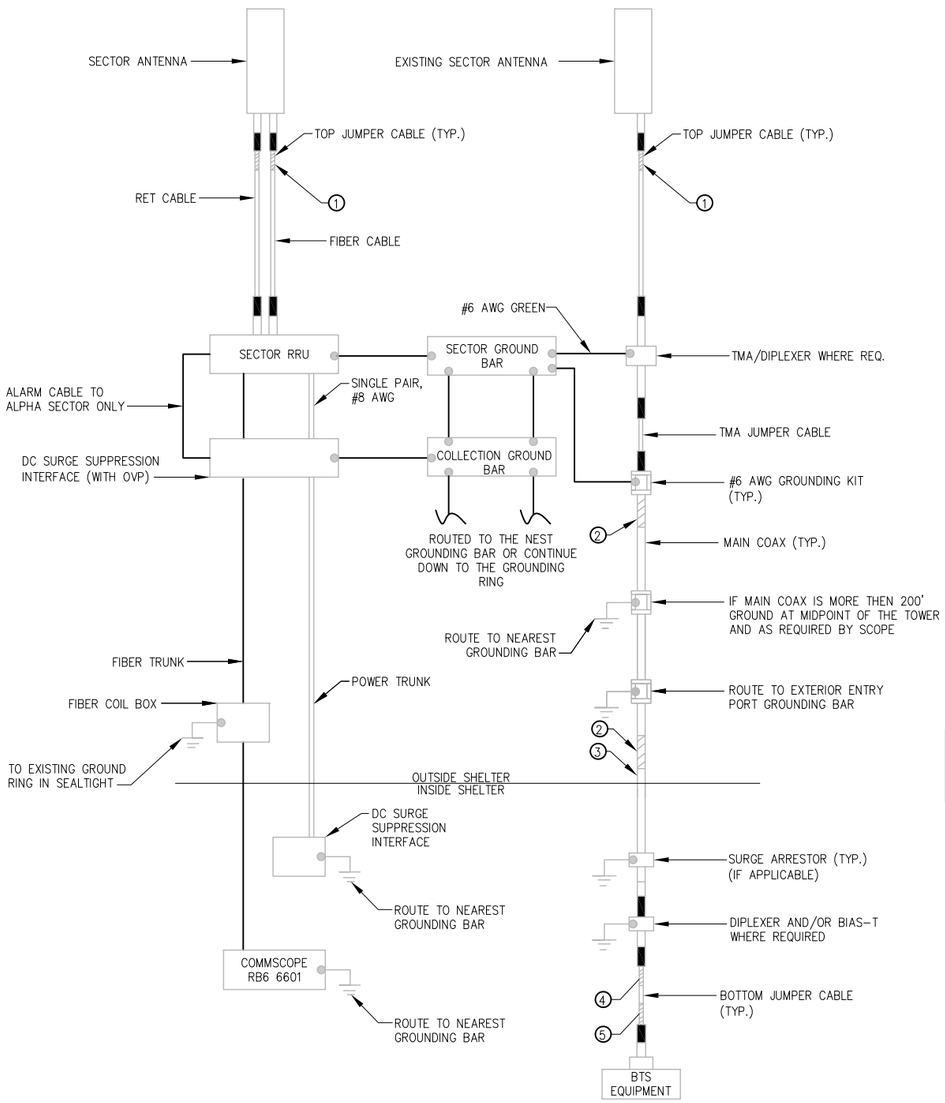

1 CABLE MARKING LOCATIONS DIAGRAM
SCALE: NOT TO SCALE

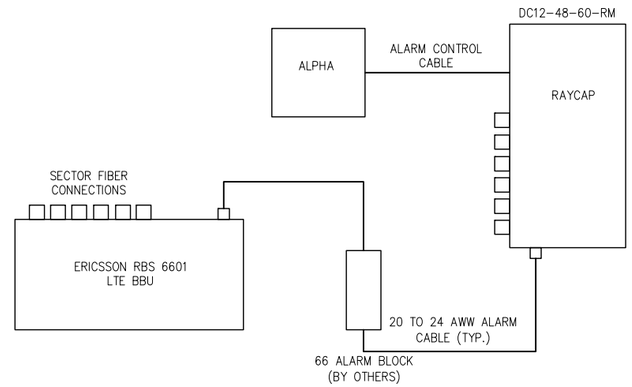

2 ALARM BLOCK CONNECTIONS
SCALE: NOT TO SCALE

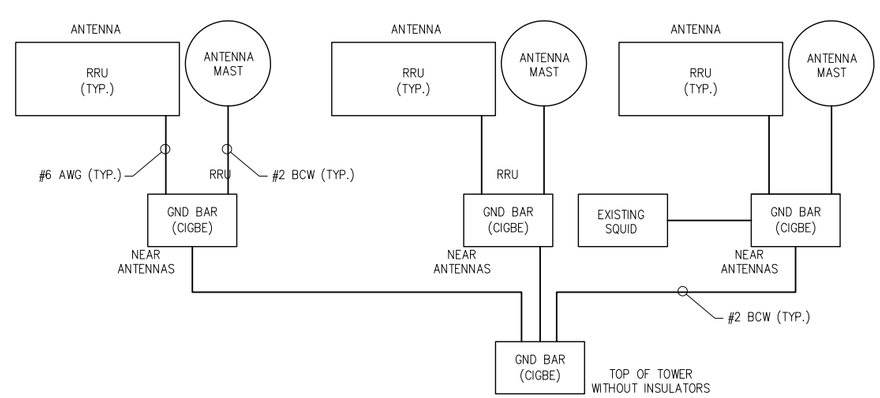

3 SCHEMATIC DIAGRAM GROUNDING SYSTEM
SCALE: NOT TO SCALE

COAX COLOR CODING & IDENTIFICATION NOTES:

1. SECTOR ORIENTATION/ AZIMUTH WILL VARY FROM REGION AND IS SITE SPECIFIC. REFER TO RF REPORT FOR EACH SITE TO DETERMINE THE ANTENNA LOCATION AND FUNCTION OF EACH TOWER SECTOR FACE.
2. THE ANTENNA SYSTEM COAX SHALL BE LABELED WITH VINYL TAPE EXCEPT IN LOCATIONS WHERE ENVIRONMENTAL CONDITIONS CAUSE PHYSICAL DAMAGE, THEN PHYSICAL TAGS ARE PREFERRED.
3. THE STANDARD IS BASED ON EIGHT COLORED TAPES– RED, BLUE, GREEN, YELLOW, ORANGE, BROWN, WHITE AND VIOLET. THESE TAPES MUST BE 3/4" WIDE AND UV RESISTANT SUCH AS SCOTCH 35 VINYL ELECTRICAL COLOR CODING TAPE AND SHOULD BE READILY AVAILABLE TO THE ELECTRICIAN OR SUBCONTRACTOR ON SITE.
4. USING COLOR BANDS ON THE CABLES MARK ALL RF CABLE BY SECTOR AND NUMBER AS SHOWN ON "CABLE MARKING COLOR CONVENTION TABLE".
5. WHEN AN EXISTING COAXIAL LINE THAT IS INTENDED TO BE A SHARED LINE BETWEEN GSM/3G TDMA IS ENCOUNTERED, THE SUBCONTRACTOR SHALL REMOVE THE COLOR CODING SCHEME AND REPLACE IT WITH THE COLOR CODING AND TAGGING STANDARD THAT IS OUTLINED IN THE CURRENT VERSION OF THE STANDARD. IN THE ABSENCE OF AN EXISTING COLOR CODING AND TAGGING SCHEME, OR WHEN INSTALLING PROPOSED COAXIAL CABLES, THIS GUIDELINE SHALL BE IMPLEMENTED AT THAT SITE REGARDLESS OF TECHNOLOGY.
6. ALL COLOR CODE TAPE SHALL BE 3M–35 AND SHALL BE A MINIMUM OF (3) THREE WRAPS OF TAPE AND SHALL BE NEATLY TRIMMED AND SMOOTHED OUT SO AS TO AVOID ANY UNRAVELING.
7. ALL COLOR BANDS INSTALLED AT THE TOP OF THE TOWER SHALL BE A MINIMUM IF 3" WIDE, AND SHALL HAVE A MINIMUM OF 3/4" OF SPACE IN BETWEEN EACH COLOR.
8. ALL COLOR CODES SHALL BE INSTALLED AS TO ALIGN NEATLY WITH ONE ANOTHER FROM SIDE TO SIDE.
9. IF EXISTING CABLES AT THE SITE ALREADY HAVE A COLOR CODING SCHEME AND THEY ARE NOT INTENDED TO BE REUSED OR SHARED WITH THE GSM TECHNOLOGY, THE EXISTING COLOR CODING SCHEME SHALL REMAIN UNTOUCHED.

CABLE MARKING TAGS:

WHEN USING THE ALTERNATIVE LABELING METHOD, EACH RF CABLE SHALL BE IDENTIFIED WITH A METAL ID TAG MADE OF STAINLESS STEEL OR BRASS. THE TAG SHALL BE 1' 1–1/2" IN DIAMETER WITH ¼" STAMPED LETTERS AND NUMBERS INDICATING THE SECTOR, ANTENNA POSITION, AND CABLE NUMBER. THE ID MARKING LOCATIONS SHOULD BE AS PER "CABLE MARKING LOCATIONS TABLE". THE TAG SHOULD BE ATTACHED WITH CORROSION PROOF WIRE AROUND THE CABLE AT THE SAME LOCATIONS AS DEFINED ABOVE. THE TAG SHOULD BE LABELED AS SHOWN ON THE "GSM AND UMTS LINE TAG" DETAIL.

INFINIGY
1033 Watervliet Shaker Rd
Albany, NY 12205
Office # (518) 690-0790
Fax # (518) 690-0793

at&t

UNAUTHORIZED ALTERATION OR ADDITION TO THIS DOCUMENT IS A VIOLATION OF APPLICABLE STATE AND/OR LOCAL LAWS

No.	Submittal / Revision	App'd	Date
A	ISSUED FOR REVIEW	MPS	11/10/17

Drawn: MPS Date: 11/10/17
Designed: ASW Date: 11/10/17
Checked: ASW Date: 11/10/17

Project Number: 550-000

Project Title:
FA# 10071346
SITE ID: CT1172
WOODBURY GOOD HILL ROAD
478 GOOD HILL ROAD
WOODBURY, CT 06798

Prepared For:
CENTERLINE COMMUNICATIONS

THIS DOCUMENT IS THE DESIGN PROPERTY AND COPYRIGHT OF INFINIGY ENGINEERING, PLLC AND SHALL NOT BE USED FOR OTHER THAN THE CLIENT, ANY DUPLICATION OR USE WITHOUT EXPRESS WRITTEN CONSENT OF THE CREATOR IS STRICTLY PROHIBITED.

Drawing Scale: AS NOTED
Date: 11/10/17

Drawing Title
SCHEMATICS, DIAGRAMS & NOTES

Drawing Number
C9

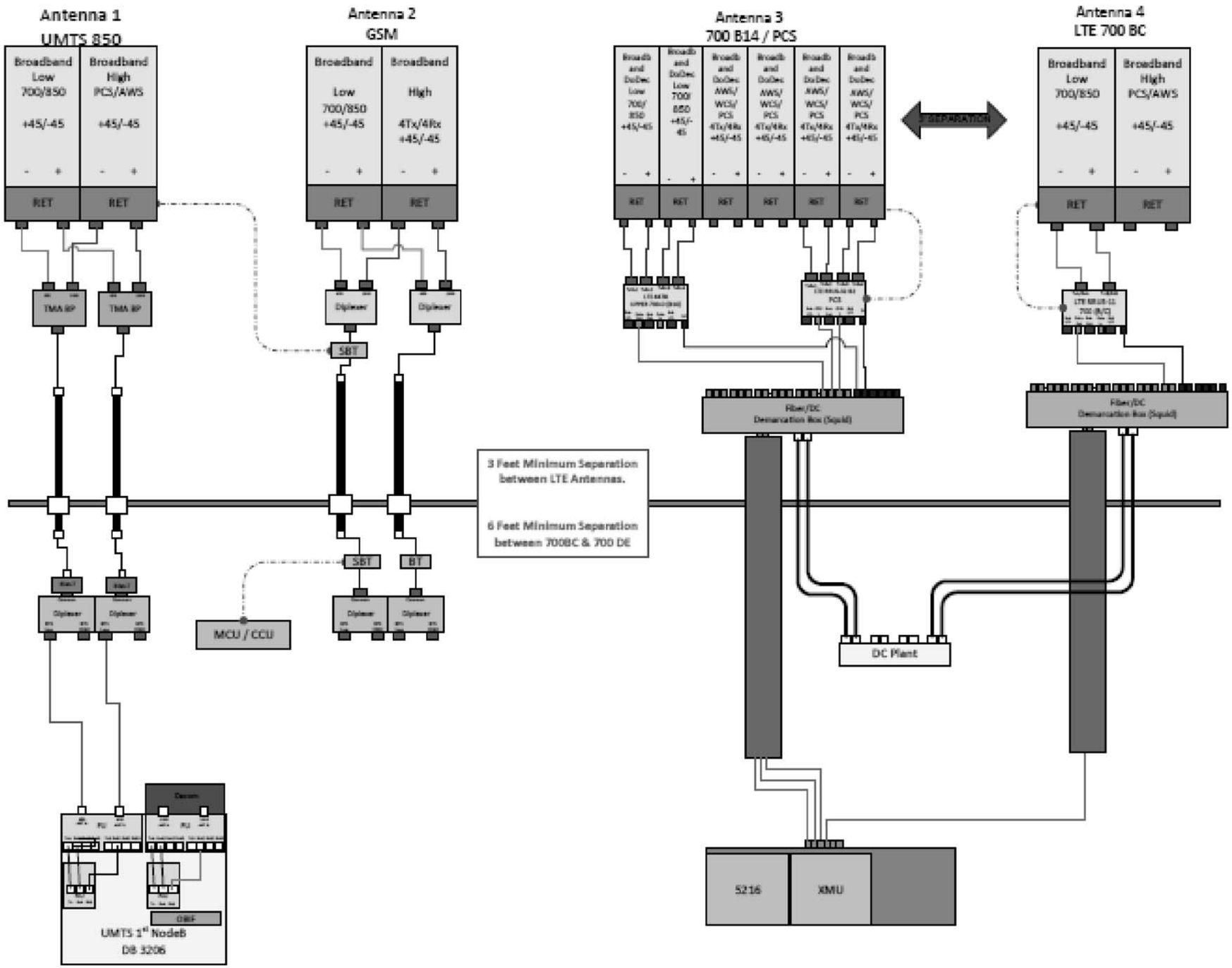

1 PLUMBING DIAGRAM
SCALE: NOT TO SCALE

CONTRACTOR TO REFER TO LATEST RFDS PROVIDED BY AT&T FOR FINAL CONFIGURATION.

INFINIGY
1033 Watervliet Shaker Rd
Albany, NY 12205
Office # (518) 690-0790
Fax # (518) 690-0793

at&t

UNAUTHORIZED ALTERATION OR ADDITION TO THIS DOCUMENT IS A VIOLATION OF APPLICABLE STATE AND/OR LOCAL LAWS

No.	Submittal / Revision	App'd	Date
A	ISSUED FOR REVIEW	MPS	11/10/17

Drawn: MPS Date: 11/10/17
Designed: ASW Date: 11/10/17
Checked: ASW Date: 11/10/17

Project Number: 550-000

Project Title:
FA# 10071346
SITE ID: CT1172
WOODBURY GOOD HILL ROAD
478 GOOD HILL ROAD
WOODBURY, CT 06798

Prepared For:
CENTERLINE COMMUNICATIONS

THIS DOCUMENT IS THE DESIGN PROPERTY AND COPYRIGHT OF INFINIGY ENGINEERING, PLLC AND MUST BE RETURNED UPON REQUEST OF THE CLIENT. ANY DUPLICATION OR USE WITHOUT EXPRESS WRITTEN CONSENT OF THE CREATOR IS STRICTLY PROHIBITED.

Drawing Scale: AS NOTED
Date: 11/10/17

Drawing Title
PLUMBING DIAGRAM

Drawing Number
C10