AMERICAN TOWER®
CORPORATION

This report was prepared for American Tower Corporation by

TOWER ENGINEERING PROFESSIONALS

Structural Analysis Report

Structure	:	**147 ft Monopole**
ATC Site Name	:	**Good Hill CT, CT**
ATC Site Number	:	**411180**
Engineering Number	:	**OAA716290_C3_01**
Proposed Carrier	:	**AT&T Mobility**
Carrier Site Name	:	**Woodbury West CT**
Carrier Site Number	:	**CT1172**
Site Location	:	**481 Good Hill Road** **Woodbury, CT 06798-2507** **41.557200,-73.256800**
County	:	**Litchfield**
Date	:	**November 10, 2017**
Max Usage	:	**40%**
Result	:	**Pass**

Prepared By:
Sean Rock, E.I.
TEP

Reviewed By:

STATE OF CONNECTICUT
AARON THOMAS RUCKER
32608
LICENSED
PROFESSIONAL ENGINEER

11/10/2017

COA: PEC.0001553

Table of Contents

Introduction 1

Supporting Documents 1

Analysis 1

Conclusion 1

Existing and Reserved Equipment 2

Equipment to be Removed 2

Proposed Equipment 2

Structure Usages 3

Foundations 3

Deflection, Twist, and Sway 3

Standard Conditions 4

Calculations ..... Attached

Introduction

The purpose of this report is to summarize results of a structural analysis performed on the 147 ft monopole to reflect the change in loading by AT&T Mobility.

Supporting Documents

Tower Drawings	Summit, PJF Job #29200-1379, dated September 15, 2000
Foundation Drawing	Summit, PJF Job #29200-1300, dated September 14, 2000
Geotechnical Report	AWS Project 301-228-8086, dated March 27, 2000

Analysis

The tower was analyzed using American Tower Corporation's tower analysis software. This program considers an elastic three-dimensional model and second-order effects per ANSI/TIA-222.

Basic Wind Speed:	93 mph (3-Second Gust, V_{ASD}) / 120 mph (3-Second Gust, V_{ULT})
Basic Wind Speed w/ Ice:	40 mph (3-Second Gust) w/ 3/4" radial ice concurrent
Code:	ANSI/TIA-222-G / 2012 IBC / 2016 Connecticut State Building Code
Structure Class:	II
Exposure Category:	B
Topographic Category:	1
Crest Height:	0 ft
Spectral Response:	Ss = 0.19, S_1 = 0.06
Site Class:	D - Stiff Soil

Conclusion

Based on the analysis results, the structure meets the requirements per the applicable codes listed above. The tower and foundation can support the equipment as described in this report.

If you have any questions or require additional information, please contact American Tower via email at Engineering@americantower.com. Please include the American Tower site name, site number, and engineering number in the subject line for any questions.

Existing and Reserved Equipment

Elevation[1] (ft) Mount	Elevation[1] (ft) RAD	Qty	Antenna	Mount Type	Lines	Carrier
146.0	147.0	1	VZW Unused Reserve: 18,232 sq in	Platform w/ Handrails	(18) 1 5/8" Coax (2) 1 5/8" Fiber	Verizon
	146.0	3	Alcatel-Lucent RRH2x60 - AWS Band 4 (20" Height)			
		3	Alcatel-Lucent RRH2X60-1900A-4R			
		3	Alcatel-Lucent RRH2x60 700			
		1	RFS DB-T1-6Z-8AB-0Z			
		4	Antel LPA-80080/4CF ___			
		2	Antel LPA-80063/4CF			
		6	Commscope SBNHH-1D65B (40.6 lb)			
	147.0	1	3' Yagi		(1) 1/2" Coax	Woodbury Volunteer Fire Depart
124.0	124.0	6	Powerwave LGP2140X	Low Profile Platform	(12) 1 5/8" Coax (1) 0.39" Fiber Trunk	AT&T Mobility
		1	Raycap DC6-48-60-18-8F(32.8 lbs)			
		6	Ericsson RRUS-11			
		6	Powerwave 7770.00			
		1	Kathrein 800 10764			
		2	KMW AM-X-CD-16-65-00T-RET			
117.5	117.5	2	3' Omni-Grid	Stand-Offs	(2) 1/2" Coax	Woodbury Fire Department
110.0	110.0	1	8' Yagi	Stand-Off	(1) 1/2" Coax	

Equipment to be Removed

Elevation[1] (ft) Mount	Elevation[1] (ft) RAD	Qty	Antenna	Mount Type	Lines	Carrier
124.0	124.0	6	Powerwave LGP2140X	-	(2) 0.78" 8 AWG 6	AT&T Mobility
		1	Andrew ABT-DMDF-ADBH			

Proposed Equipment

Elevation[1] (ft) Mount	Elevation[1] (ft) RAD	Qty	Antenna	Mount Type	Lines	Carrier
124.0	124.0	6	Powerwave LGP21901	Low Profile Platform	(2) 0.76" 8 AWG 6 (2) 0.45" Fiber (1) 0.39" Fiber Trunk	AT&T Mobility
		1	Raycap DC6-48-60-18-8F ("Squid")			
		3	Ericsson RRUS 4478 B14			
		3	Ericsson RRUS 32 B2			
		3	KMW EPBQ-654L8H6-L2			

[1]Mount elevation is defined as height above bottom of steel structure to the bottom of mount, RAD elevation is defined as center of antenna above ground level (AGL).

Install proposed coax inside the pole shaft.

Structure Usages

Structural Component	Controlling Usage	Pass/Fail
Anchor Bolts	34%	Pass
Shaft	40%	Pass
Base Plate	31%	Pass

Foundations

Reaction Component	Original Design Reactions	Factored Design Reactions*	Analysis Reactions	% of Design
Moment (Kips-Ft)	5,700.0	7,695.0	2,863.4	37%
Shear (Kips)	41.0	55.4	26.0	47%

*** The design reactions are factored by 1.35 per ANSI/TIA-222-G, Sec. 15.5.1**

The structure base reactions resulting from this analysis are acceptable when compared to those shown on the original structure drawings, therefore no modification or reinforcement of the foundation will be required.

Deflection and Sway*

Antenna Elevation (ft)	Antenna	Carrier	Deflection (ft)	Sway (Rotation) (°)
124.0	Powerwave LGP21901	AT&T Mobility	0.625	0.528
	Raycap DC6-48-60-18-8F ("Squid")			
	Ericsson RRUS 4478 B14			
	Ericsson RRUS 32 B2			
	KMW EPBQ-654L8H6-L2			

***Deflection and Sway was evaluated considering a design wind speed of 60 mph (3-Second Gust) per ANSI/TIA-222-G**

Standard Conditions

All engineering services are performed on the basis that the information used is current and correct. This information may consist of, but is not necessary limited, to:

-- Information supplied by the client regarding the structure itself, antenna, mounts and feed line loading on the structure and its components, or other relevant information.

-- Information from drawings in the possession of American Tower Corporation, or generated by field inspections or measurements of the structure.

It is the responsibility of the client to ensure that the information provided to A.T. Engineering Service, PLLC and used in the performance of our engineering services is correct and complete. In the absence of information to the contrary, we assume that all structures were constructed in accordance with the drawings and specifications and that their capacity has not significantly changed from the "as new" condition.

Unless explicitly agreed by both the client and American Tower Corporation, all services will be performed in accordance with the current revision of ANSI/TIA -222. The design basic wind speed will be determined based on the minimum basic wind speed as prescribed in ANSI/TIA-222. Although every effort is taken to ensure that the loading considered is adequate to meet the requirements of all applicable regulatory entities, we can provide no assurance to meet any other local and state codes or requirements. If wind and ice loads or other relevant parameters are to be different from the minimum values recommended by the codes, the client shall specify the exact requirement.

All services are performed, results obtained, and recommendations made in accordance with generally accepted engineering principles and practices. A.T. Engineering Service, PLLC is not responsible for the conclusions, opinions and recommendations made by others based on the information we supply.

© 2007 - 2017 by ATC IP LLC. All rights reserved.

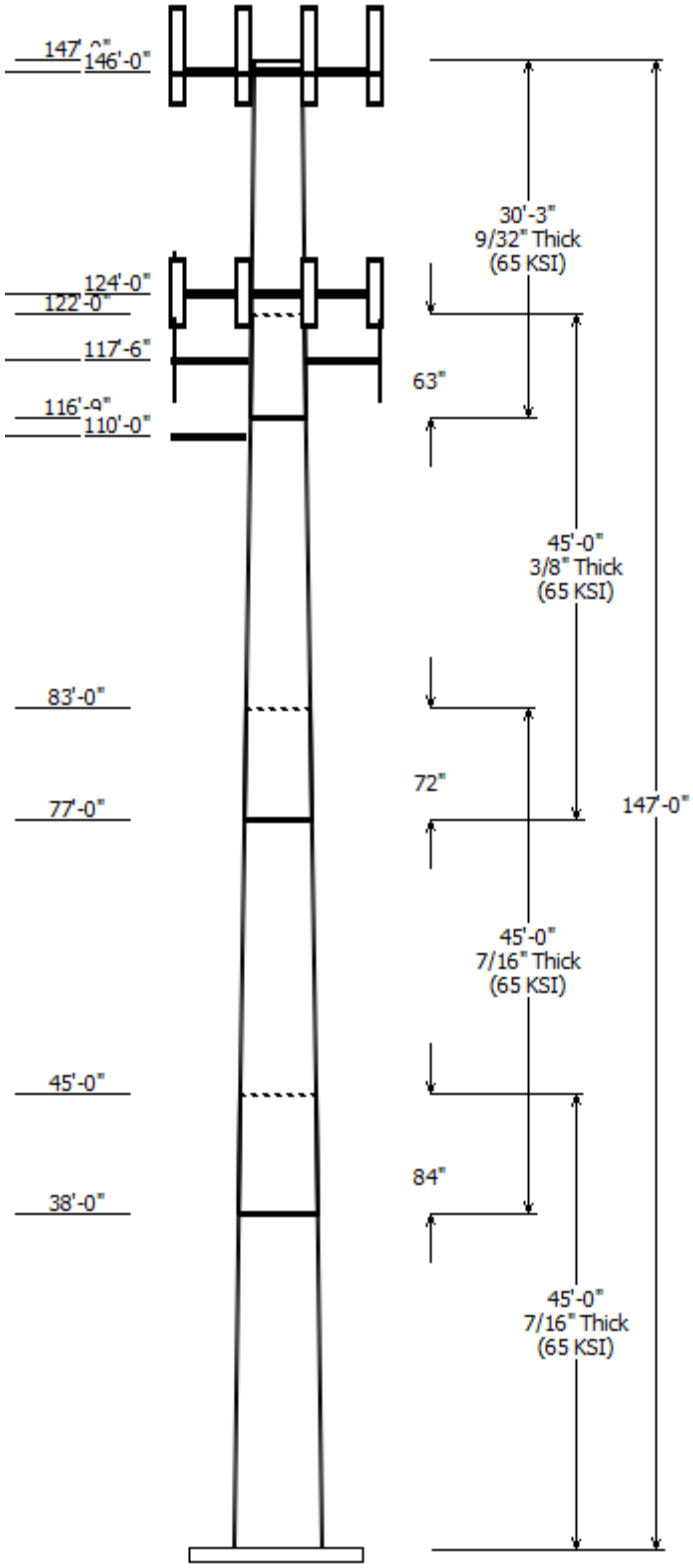

Job Information

Pole :	411180	Code:	ANSI/TIA-222-G
Description :			
Client :	AT&T MOBILITY	Struct Class :	II
Location :	Good Hill CT, CT		
Shape :	18 Sides	Exposure :	B
Height :	147.00 (ft)	Topo :	1
Base Elev (ft):	0.00		
Taper:	0.207297 (in/ft)		

Sections Properties

Shaft Section	Length (ft)	Diameter (in) Accross Flats Top	Bottom	Thick (in)	Joint Type	Overlap Length (in)	Taper (in/ft)	Steel Grade (ksi)
1	45.000	53.32	62.65	0.438		0.000	0.207300	65
2	45.000	46.31	55.64	0.438	Slip Joint	84.000	0.207300	65
3	45.000	38.98	48.31	0.375	Slip Joint	72.000	0.207300	65
4	30.250	34.36	40.63	0.281	Slip Joint	63.000	0.207300	65

Discrete Appurtenance

Attach Elev (ft)	Force Elev (ft)	Qty	Description
146.000	146.000	6	Commscope SBNHH-1D65B
146.000	146.000	1	RFS DB-T1-6Z-8AB-0Z
146.000	146.000	3	Alcatel-Lucent RRH2x60 700
146.000	146.000	3	Alcatel-Lucent RRH2x60 - AWS
146.000	146.000	3	Alcatel-Lucent RRH2X60-1900A-
146.000	147.000	1	3' Yagi
146.000	146.000	1	Flat Platform w/ Handrails
146.000	146.000	2	Antel LPA-80063/4CF
146.000	146.000	4	Antel LPA-80080/4CF ___
146.000	147.000	1	VZW Unused Reserve: 18,232
124.000	124.000	3	KMW EPBQ-654L8H6-L2
124.000	124.000	3	Ericsson RRUS 32 B2
124.000	124.000	3	Ericsson RRUS 4478 B14
124.000	124.000	1	Raycap DC6-48-60-18-8F
124.000	124.000	6	Powerwave LGP21901
124.000	124.000	1	Round Low Profile Platform
124.000	124.000	2	KMW AM-X-CD-16-65-00T-RET
124.000	124.000	1	Kathrein 800 10764
124.000	124.000	6	Powerwave 7770.00
124.000	124.000	6	Ericsson RRUS-11
124.000	124.000	1	Raycap DC6-48-60-18-8F(32.8 lb
124.000	124.000	6	Powerwave LGP2140X
117.500	117.500	2	3' Omni-Grid
117.500	117.500	2	Stand-Off
110.000	110.000	1	8' Yagi
110.000	110.000	1	Stand-Off

Linear Appurtenance

Elev (ft) From	To	Description	Exposed To Wind
0.000	110.0	1/2" Coax	No
0.000	117.5	1/2" Coax	No
0.000	124.0	0.39" (10mm)	No
0.000	124.0	0.39" (10mm)	No
0.000	124.0	0.45" (11.5mm)	No
0.000	124.0	0.76" 8 AWG 6	No
0.000	124.0	1 5/8" Coax	No
0.000	146.0	1 5/8" (1.63"-	No
0.000	146.0	1 5/8" Coax	No
0.000	146.0	1/2" Coax	No

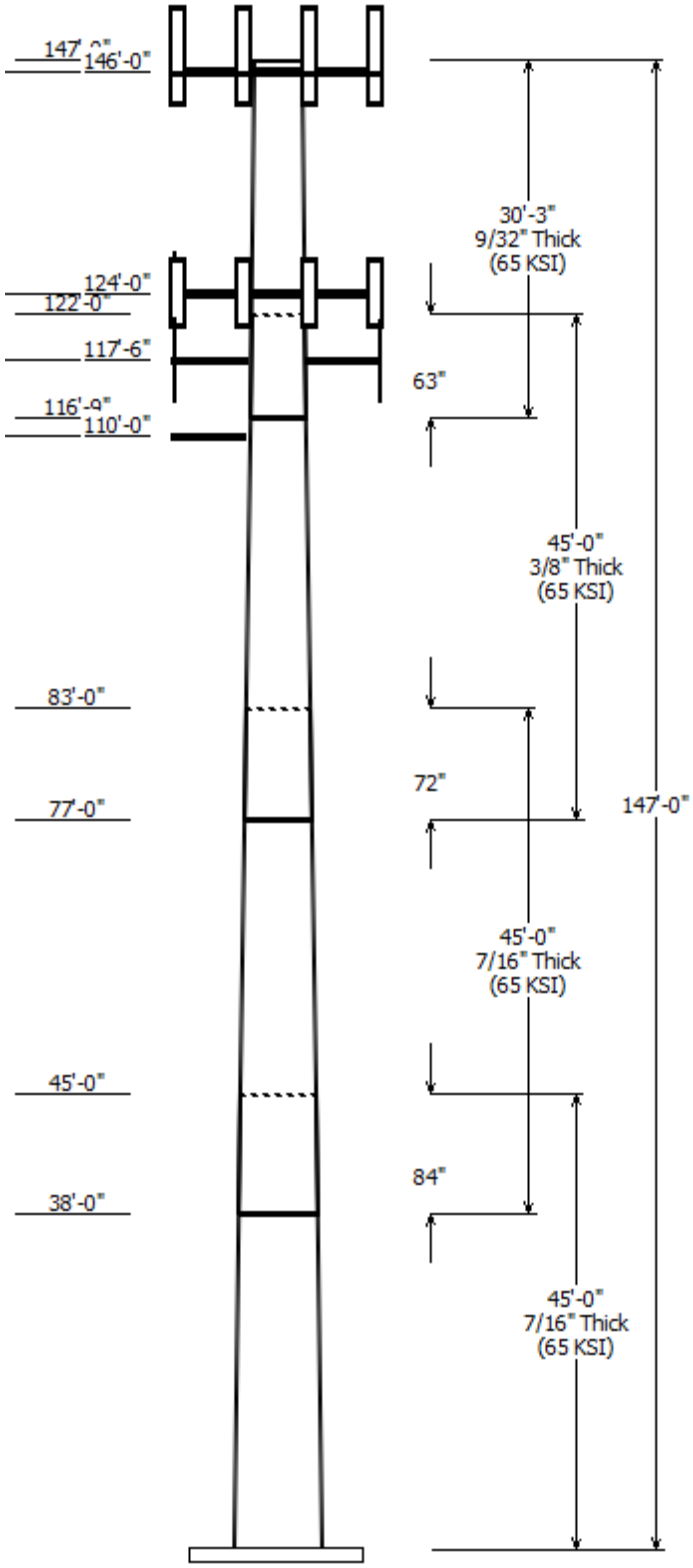

Load Cases

1.2D + 1.6W	93 mph with No Ice
0.9D + 1.6W	93 mph with No Ice (Reduced DL)
1.2D + 1.0Di + 1.0Wi	40 mph with 0.75 in Radial Ice
(1.2 + 0.2Sds) * DL + E	Seismic Equivalent Lateral Forces Method
(1.2 + 0.2Sds) * DL + E	Seismic Equivalent Modal Analysis Method
(0.9 - 0.2Sds) * DL + E	Seismic (Reduced DL) Equivalent Lateral
(0.9 - 0.2Sds) * DL + E	Seismic (Reduced DL) Equivalent Modal
1.0D + 1.0W	Serviceability 60 mph

Reactions

Load Case	Moment (kip-ft)	Shear (kip)	Axial (kip)
1.2D + 1.6W	2863.44	25.95	55.32
0.9D + 1.6W	2845.77	25.94	41.48
1.2D + 1.0Di + 1.0Wi	570.65	5.29	77.59
(1.2 + 0.2Sds) * DL + E ELFM	281.00	2.49	55.26
(1.2 + 0.2Sds) * DL + E EMAM	377.80	3.22	55.26
(0.9 - 0.2Sds) * DL + E ELFM	278.96	2.49	38.21
(0.9 - 0.2Sds) * DL + E EMAM	374.87	3.22	38.21
1.0D + 1.0W	741.90	6.75	46.12

Dish Deflections

Load Case	Attach Elev (ft)	Deflection (in)	Rotation (deg)
	0.00	0.000	0.000

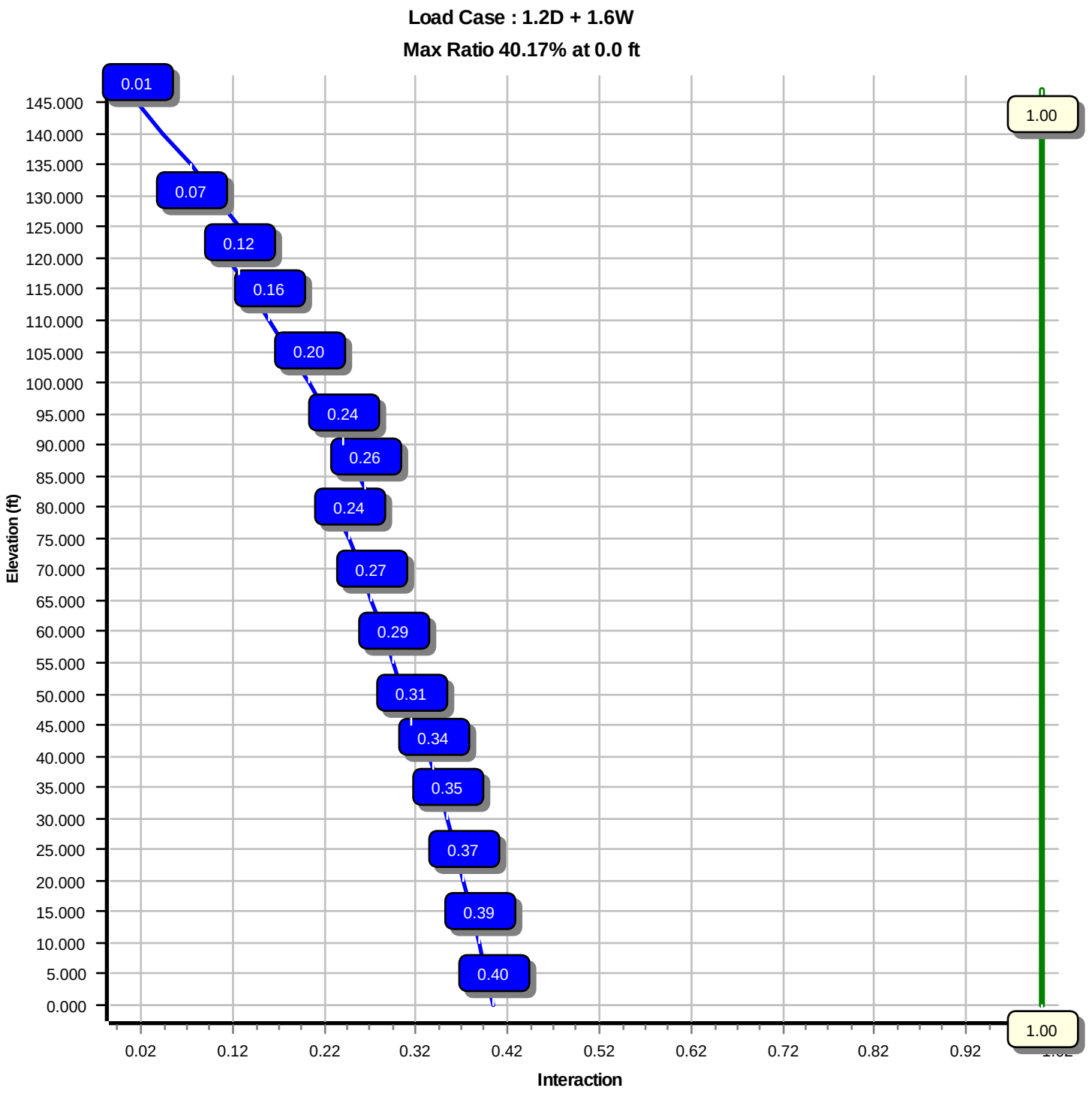
Load Case : 1.2D + 1.6W
Max Ratio 40.17% at 0.0 ft
0.01
0.07
0.12
0.16
0.20
0.24
0.26
0.24
0.27
0.29
0.31
0.34
0.35
0.37
0.39
0.40
1.00
1.00
Elevation (ft)
145.000
140.000
135.000
130.000
125.000
120.000
115.000
110.000
105.000
100.000
95.000
90.000
85.000
80.000
75.000
70.000
65.000
60.000
55.000
50.000
45.000
40.000
35.000
30.000
25.000
20.000
15.000
10.000
5.000
0.000
0.02
0.12
0.22
0.32
0.42
0.52
0.62
0.72
0.82
0.92
Interaction

Site Number:	411180	Code: ANSI/TIA-222-G	© 2007 - 2017 by ATC IP LLC. All rights reserved.
Site Name:	Good Hill CT, CT	Engineering Number:OAA716290_C3_01	11/10/2017 10:13:54 AM
Customer:	AT&T MOBILITY		

Analysis Parameters

Location:	LITCHFIELD County, CT	Height (ft):	147
Code:	ANSI/TIA-222-G	Base Diameter (in):	62.65
Shape:	18 Sides	Top Diameter (in):	34.37
Pole Type:	Taper	Taper (in/ft) :	0.207
Pole Manfacturer:	Summit Manuf	Rotation (deg) :	0.00

Ice & Wind Parameters

Structure Class:	II	Design Wind Speed Without Ice:	93 mph
Exposure Category:	B	Design Wind Speed With Ice:	40 mph
Topographic Category:	1	Operational Wind Speed:	60 mph
Crest Height:	0.0 ft	Design Ice Thickness:	0.75 in

Seismic Parameters

Analysis Method:	Equivalent Modal Analysis & Equivalent Lateral Force Methods
Site Class:	D - Stiff Soil
Period Based on Rayleigh Method (sec):	1.67

T_L (sec):	6	p:	1.3	C_s:	0.041
S_s:	0.195	S_1:	0.065	C_s Max:	0.041
F_a:	1.600	F_v :	2.400	C_s Min:	0.030
S_{ds}:	0.208	S_{d1}:	0.104		

Load Cases

1.2D + 1.6W	93 mph with No Ice
0.9D + 1.6W	93 mph with No Ice (Reduced DL)
1.2D + 1.0Di + 1.0Wi	40 mph with 0.75 in Radial Ice
(1.2 + 0.2Sds) * DL + E ELFM	Seismic Equivalent Lateral Forces Method
(1.2 + 0.2Sds) * DL + E EMAM	Seismic Equivalent Modal Analysis Method
(0.9 - 0.2Sds) * DL + E ELFM	Seismic (Reduced DL) Equivalent Lateral Forces Method
(0.9 - 0.2Sds) * DL + E EMAM	Seismic (Reduced DL) Equivalent Modal Analysis Method
1.0D + 1.0W	Serviceability 60 mph

© 2007 - 2017 by ATC IP LLC. All rights reserved.

Shaft Section Properties

Sect Info	Length (ft)	Thick (in)	Fy (ksi)	Joint Type	Slip Joint Len (in)	Weight (lb)	Bottom Dia (in)	Bottom Elev (ft)	Bottom Area (in²)	Bottom Ix (in⁴)	Bottom W/t Ratio	Bottom D/t Ratio	Top Dia (in)	Top Elev (ft)	Top Area (in²)	Top Ix (in⁴)	Top W/t Ratio	Top D/t Ratio	Taper (in/ft)
1-18	45.000	0.4375	65		0.00	12,236	62.65	0.00	86.39	42243.1	23.84	143.20	53.32	45.00	73.43	25947.7	20.08	121.88	0.207297
2-18	45.000	0.4375	65	Slip	84.00	10,747	55.64	38.00	76.66	29524.4	21.02	127.19	46.31	83.00	63.71	16945.2	17.26	105.87	0.207297
3-18	45.000	0.3750	65	Slip	72.00	7,887	48.31	77.00	57.06	16566.1	21.31	128.84	38.98	122.00	45.95	8655.0	16.92	103.96	0.207297
4-18	30.250	0.2813	65	Slip	63.00	3,420	40.63	116.75	36.03	7412.9	24.06	144.46	34.36	147.00	30.43	4466.4	20.13	122.16	0.207297
				Shaft Weight		34,291													

Discrete Appurtenance Properties

Attach Elev (ft)	Description	Qty	No Ice Weight (lb)	No Ice EPAa (sf)	No Ice Orientation Factor	Ice Weight (lb)	Ice EPAa (sf)	Ice Orientation Factor	Distance From Face (ft)	Vert Ecc (ft)
146.00	3' Yagi	1	10.00	2.980	1.00	99.74	9.239	1.00	0.000	1.000
146.00	Alcatel-Lucent RRH2x60 -	3	44.00	1.870	0.50	113.00	2.471	0.50	0.000	0.000
146.00	Alcatel-Lucent RRH2x60 700	3	56.70	2.150	0.67	137.78	2.773	0.67	0.000	0.000
146.00	Alcatel-Lucent RRH2X60-	3	46.00	1.870	0.50	114.69	2.458	0.50	0.000	0.000
146.00	Antel LPA-80063/4CF	2	20.00	6.140	0.76	225.61	7.186	0.76	0.000	0.000
146.00	Antel LPA-80080/4CF ___	4	12.00	5.400	0.64	146.95	6.394	0.64	0.000	0.000
146.00	Commscope SBNHH-1D65B	6	40.60	8.080	0.69	241.48	9.368	0.69	0.000	0.000
146.00	Flat Platform w/ Handrails	1	2000.00	42.400	1.00	3,419.75	63.351	1.00	0.000	0.000
146.00	RFS DB-T1-6Z-8AB-0Z	1	44.00	4.800	0.67	137.64	3.161	0.67	0.000	0.000
146.00	VZW Unused Reserve:	1	1684.30	126.72	1.00	2,856.51	214.912	1.00	0.000	1.000
124.00	Ericsson RRUS 32 B2	3	53.00	2.740	0.67	138.97	3.458	0.67	0.000	0.000
124.00	Ericsson RRUS 4478 B14	3	59.90	1.840	0.50	119.81	2.176	0.50	0.000	0.000
124.00	Ericsson RRUS-11	6	55.00	3.790	0.67	157.77	4.567	0.67	0.000	0.000
124.00	Kathrein 800 10764	1	40.80	5.870	0.68	186.61	6.921	0.68	0.000	0.000
124.00	KMW AM-X-CD-16-65-00T-	2	48.50	8.020	0.67	232.88	9.288	0.67	0.000	0.000
124.00	KMW EPBQ-654L8H6-L2	3	72.80	13.240	0.61	347.69	14.717	0.61	0.000	0.000
124.00	Powerwave 7770.00	6	35.00	5.510	0.65	166.84	6.538	0.65	0.000	0.000
124.00	Powerwave LGP2140X	6	19.00	1.080	0.50	51.58	1.526	0.50	0.000	0.000
124.00	Powerwave LGP21901	6	5.50	0.230	0.50	17.72	0.423	0.50	0.000	0.000
124.00	Raycap DC6-48-60-18-8F	1	31.80	1.280	1.00	122.52	1.922	1.00	0.000	0.000
124.00	Raycap DC6-48-60-18-	1	32.80	1.280	1.00	123.52	2.839	1.00	0.000	0.000
124.00	Round Low Profile Platform	1	1500.00	21.700	1.00	2,136.46	40.560	1.00	0.000	0.000
117.50	3' Omni-Grid	2	15.00	2.460	0.67	113.04	3.526	0.67	0.000	0.000
117.50	Stand-Off	2	75.00	2.500	0.67	136.29	4.577	0.67	0.000	0.000
110.00	8' Yagi	1	30.00	12.000	1.00	358.25	44.370	1.00	0.000	0.000
110.00	Stand-Off	1	75.00	2.500	0.67	135.77	4.559	0.67	0.000	0.000
	Totals	70	7741.50			18,308.39			Number of Loadings :	26

Linear Appurtenance Properties

Elev From (ft)	Elev To (ft)	Qty	Description	Coax Diameter (in)	Coax Weight (lb/ft)	Flat	Projected Width (in)	Exposed To Wind	Carrier
0.00	146.00	2	1 5/8" (1.63"-41.3mm)	1.63	1.61	N	0.00	N	Verizon
0.00	146.00	18	1 5/8" Coax	1.98	0.82	N	0.00	N	Verizon
0.00	146.00	1	1/2" Coax	0.63	0.15	N	0.00	N	Verizon
0.00	124.00	1	0.39" (10mm) Fiber	0.39	0.06	N	0.00	N	AT&T Mobility
0.00	124.00	1	0.39" (10mm) Fiber	0.39	0.06	N	0.00	N	AT&T Mobility
0.00	124.00	2	0.45" (11.5mm) Fiber	0.45	0.08	N	0.00	N	AT&T Mobility
0.00	124.00	2	0.76" 8 AWG 6	0.76	0.53	N	0.00	N	AT&T Mobility
0.00	124.00	12	1 5/8" Coax	1.98	0.82	N	0.00	N	AT&T Mobility
0.00	117.50	2	1/2" Coax	0.63	0.15	N	0.00	N	Woodbury Fire Department

© 2007 - 2017 by ATC IP LLC. All rights reserved.

0.00	110.00	1 1/2" Coax	0.63	0.15	N	0.00	N	Woodbury Fire Department

© 2007 - 2017 by ATC IP LLC. All rights reserved.

Segment Properties (Max Len : 5. ft)

Seg Top Elev (ft)	Description	Thick (in)	Flat Dia (in)	Area (in^2)	Ix (in^4)	W/t Ratio	D/t Ratio	F'y (ksi)	S (in^3)	Z (in^3)	Weight (lb)
0.00		0.4375	62.650	86.387	42,243.1	23.84	143.20	73.4	1328.	0.0	0.0
5.00		0.4375	61.614	84.947	40,166.7	23.42	140.83	73.9	1284.	0.0	1,457.5
10.00		0.4375	60.577	83.508	38,159.5	23.00	138.46	74.3	1240.	0.0	1,433.0
15.00		0.4375	59.541	82.069	36,220.3	22.59	136.09	74.8	1198.	0.0	1,408.6
20.00		0.4375	58.504	80.630	34,348.0	22.17	133.72	75.3	1156.	0.0	1,384.1
25.00		0.4375	57.468	79.191	32,541.3	21.75	131.35	75.8	1115.	0.0	1,359.6
30.00		0.4375	56.431	77.751	30,799.1	21.33	128.99	76.3	1075.	0.0	1,335.1
35.00		0.4375	55.395	76.312	29,120.2	20.92	126.62	76.8	1035.	0.0	1,310.6
38.00	Bot - Section 2	0.4375	54.773	75.449	28,142.8	20.66	125.19	77.1	1012.	0.0	774.6
40.00		0.4375	54.358	74.873	27,503.5	20.50	124.25	77.3	996.6	0.0	1,031.3
45.00	Top - Section 1	0.4375	54.197	74.649	27,257.1	20.43	123.88	77.4	990.6	0.0	2,543.9
50.00		0.4375	53.160	73.209	25,710.7	20.01	121.51	77.9	952.6	0.0	1,257.8
55.00		0.4375	52.124	71.770	24,224.0	19.60	119.14	78.4	915.4	0.0	1,233.3
60.00		0.4375	51.087	70.331	22,795.7	19.18	116.77	78.8	878.9	0.0	1,208.8
65.00		0.4375	50.051	68.892	21,424.7	18.76	114.40	79.3	843.1	0.0	1,184.4
70.00		0.4375	49.014	67.452	20,109.8	18.34	112.03	79.8	808.1	0.0	1,159.9
75.00		0.4375	47.978	66.013	18,849.8	17.93	109.66	80.3	773.8	0.0	1,135.4
77.00	Bot - Section 3	0.4375	47.563	65.438	18,360.9	17.76	108.72	80.5	760.3	0.0	447.3
80.00		0.4375	46.941	64.574	17,643.6	17.51	107.29	80.8	740.3	0.0	1,242.3
83.00	Top - Section 2	0.3750	47.069	55.576	15,309.8	20.72	125.52	77.0	640.6	0.0	1,225.9
85.00		0.3750	46.655	55.083	14,905.6	20.53	124.41	77.3	629.3	0.0	376.5
90.00		0.3750	45.618	53.849	13,926.4	20.04	121.65	77.8	601.3	0.0	926.7
95.00		0.3750	44.582	52.615	12,991.0	19.55	118.88	78.4	573.9	0.0	905.7
100.0		0.3750	43.545	51.382	12,098.5	19.06	116.12	79.0	547.2	0.0	884.7
105.0		0.3750	42.509	50.148	11,247.8	18.58	113.36	79.6	521.2	0.0	863.7
110.0		0.3750	41.472	48.914	10,438.0	18.09	110.59	80.1	495.7	0.0	842.7
115.0		0.3750	40.436	47.681	9,668.0	17.60	107.83	80.7	470.9	0.0	821.7
116.7	Bot - Section 4	0.3750	40.073	47.249	9,407.7	17.43	106.86	80.9	462.4	0.0	282.6
117.5		0.3750	39.918	47.064	9,297.6	17.36	106.45	81.0	458.8	0.0	212.1
120.0		0.3750	39.399	46.447	8,936.9	17.12	105.07	81.3	446.8	0.0	701.1
122.0	Top - Section 3	0.2813	39.547	35.057	6,829.2	23.38	140.59	73.9	340.1	0.0	554.3
124.0		0.2813	39.133	34.687	6,615.1	23.12	139.11	74.2	332.9	0.0	237.3
125.0		0.2813	38.926	34.502	6,509.8	22.99	138.38	74.4	329.4	0.0	117.7
130.0		0.2813	37.889	33.577	5,999.9	22.34	134.69	75.1	311.9	0.0	579.1
135.0		0.2813	36.853	32.651	5,517.4	21.69	131.01	75.9	294.9	0.0	563.4
140.0		0.2813	35.816	31.726	5,061.4	21.04	127.32	76.7	278.3	0.0	547.7
145.0		0.2813	34.780	30.801	4,631.3	20.39	123.64	77.4	262.3	0.0	531.9
146.0		0.2813	34.572	30.615	4,548.4	20.26	122.90	77.6	259.1	0.0	104.5
147.0		0.2813	34.365	30.430	4,466.4	20.13	122.16	77.7	256.0	0.0	103.9
											34,290.8

Site Number: 411180 Code: ANSI/TIA-222-G © 2007 - 2017 by ATC IP LLC. All rights reserved.

Site Name: Good Hill CT, CT Engineering Number:OAA716290_C3_01 11/10/2017 10:13:54 AM

Customer: AT&T MOBILITY

Load Case: 1.2D + 1.6W 93 mph with No Ice 20 Iterations

Gust Response Factor :1.10 Wind Importance Factor 1.00

Dead Load Factor :1.20

Wind Load Factor :1.60

Applied Segment Forces Summary

		Shaft Forces		Discrete Forces				Linear Forces		Sum of Forces			
Seg Elev (ft)	Description	Wind FX (lb)	Dead Load (lb)	Wind FX (lb)	Torsion MY (lb-ft)	Moment MZ (lb-ft)	Dead Load (lb)	Wind FX (lb)	Dead Load (lb)	Wind FX (lb)	Dead Load (lb)	Torsion MY (lb-ft)	Moment MZ (lb)
0.00		221.4	0.0					0.0	0.0	221.4	0.0	0.0	0.0
5.00		439.1	1,749.0					0.0	178.6	439.1	1,927.6	0.0	0.0
10.00		431.7	1,719.7					0.0	178.6	431.7	1,898.2	0.0	0.0
15.00		424.3	1,690.3					0.0	178.6	424.3	1,868.8	0.0	0.0
20.00		416.9	1,660.9					0.0	178.6	416.9	1,839.4	0.0	0.0
25.00		409.6	1,631.5					0.0	178.6	409.6	1,810.1	0.0	0.0
30.00		407.0	1,602.1					0.0	178.6	407.0	1,780.7	0.0	0.0
35.00		328.7	1,572.7					0.0	178.6	328.7	1,751.3	0.0	0.0
38.00	Bot - Section 2	209.9	929.5					0.0	107.1	209.9	1,036.7	0.0	0.0
40.00		300.8	1,237.5					0.0	71.4	300.8	1,309.0	0.0	0.0
45.00	Top - Section 1	433.8	3,052.7					0.0	178.6	433.8	3,231.3	0.0	0.0
50.00		438.6	1,509.4					0.0	178.6	438.6	1,687.9	0.0	0.0
55.00		441.9	1,480.0					0.0	178.6	441.9	1,658.6	0.0	0.0
60.00		444.1	1,450.6					0.0	178.6	444.1	1,629.2	0.0	0.0
65.00		445.1	1,421.2					0.0	178.6	445.1	1,599.8	0.0	0.0
70.00		445.3	1,391.8					0.0	178.6	445.3	1,570.4	0.0	0.0
75.00		311.4	1,362.5					0.0	178.6	311.4	1,541.0	0.0	0.0
77.00	Bot - Section 3	224.1	536.8					0.0	71.4	224.1	608.2	0.0	0.0
80.00		270.1	1,490.7					0.0	107.1	270.1	1,597.9	0.0	0.0
83.00	Top - Section 2	224.6	1,471.1					0.0	107.1	224.6	1,578.2	0.0	0.0
85.00		313.1	451.9					0.0	71.4	313.1	523.3	0.0	0.0
90.00		445.3	1,112.0					0.0	178.6	445.3	1,290.6	0.0	0.0
95.00		442.0	1,086.8					0.0	178.6	442.0	1,265.4	0.0	0.0
100.00		438.1	1,061.6					0.0	178.6	438.1	1,240.2	0.0	0.0
105.00		433.6	1,036.4					0.0	178.6	433.6	1,215.0	0.0	0.0
110.00	Appertunance(s)	428.7	1,011.3	514.1	0.0	0.0	126.0	0.0	178.6	942.8	1,315.8	0.0	0.0
115.00		287.0	986.1					0.0	177.7	287.0	1,163.7	0.0	0.0
116.75	Bot - Section 4	105.9	339.2					0.0	62.2	105.9	401.4	0.0	0.0
117.50	Appertunance(s)	138.3	254.5	229.2	0.0	0.0	216.0	0.0	26.6	367.4	497.2	0.0	0.0
120.00		190.7	841.3					0.0	87.9	190.7	929.2	0.0	0.0
122.00	Top - Section 3	168.5	665.1					0.0	70.3	168.5	735.5	0.0	0.0
124.00	Appertunance(s)	125.8	284.8	3,658.6	0.0	0.0	3,535.8	0.0	70.3	3,784.3	3,890.9	0.0	0.0
125.00		248.9	141.3					0.0	21.8	248.9	163.0	0.0	0.0
130.00		410.8	695.0					0.0	108.8	410.8	803.8	0.0	0.0
135.00		403.9	676.1					0.0	108.8	403.9	784.9	0.0	0.0
140.00		396.7	657.2					0.0	108.8	396.7	766.0	0.0	0.0
145.00		235.3	638.3					0.0	108.8	235.3	747.1	0.0	0.0
146.00	Appertunance(s)	77.5	125.4	9,127.2	0.0	5,266.8	5,412.0	0.0	21.8	9,204.7	5,559.1	0.0	0.0
147.00		38.7	124.6					0.0	0.0	38.7	124.6	0.0	0.0
									Totals:	26,126.2	55,340.8	0.00	0.00

 © 2007 - 2017 by ATC IP LLC. All rights reserved.

Load Case: 1.2D + 1.6W 93 mph with No Ice 20 Iterations

Gust Response Factor :1.10 Wind Importance Factor 1.00
Dead Load Factor :1.20
Wind Load Factor :1.60

Calculated Forces

Seg Elev (ft)	Pu FY (-) (kips)	Vu FX (-) (kips)	Tu MY (ft-kips)	Mu MZ (ft-kips)	Mu MX (ft-kips)	Resultant Moment (ft-kips)	phi Pn (kips)	phi Vn (kips)	phi Tn (ft-kips)	phi Mn (ft-kips)	Total Deflect (in)	Rotation (deg)	Ratio
0.00	-55.32	-25.95	0.00	-2,863.44	0.00	2,863.44	5,703.70	2,851.85	14,592.4	7,307.09	0.00	0.00	0.402
5.00	-53.35	-25.60	0.00	-2,733.69	0.00	2,733.69	5,646.24	2,823.12	14,203.1	7,112.12	0.05	-0.09	0.394
10.00	-51.41	-25.25	0.00	-2,605.70	0.00	2,605.70	5,587.50	2,793.75	13,815.5	6,918.04	0.20	-0.19	0.386
15.00	-49.50	-24.90	0.00	-2,479.48	0.00	2,479.48	5,527.49	2,763.75	13,429.9	6,724.94	0.45	-0.28	0.378
20.00	-47.62	-24.55	0.00	-2,355.00	0.00	2,355.00	5,466.21	2,733.11	13,046.4	6,532.90	0.80	-0.38	0.369
25.00	-45.78	-24.20	0.00	-2,232.26	0.00	2,232.26	5,403.66	2,701.83	12,665.1	6,342.00	1.25	-0.47	0.361
30.00	-43.96	-23.85	0.00	-2,111.26	0.00	2,111.26	5,339.83	2,669.92	12,286.3	6,152.32	1.79	-0.57	0.351
35.00	-42.18	-23.56	0.00	-1,992.01	0.00	1,992.01	5,274.73	2,637.37	11,910.2	5,963.95	2.44	-0.66	0.342
38.00	-41.13	-23.37	0.00	-1,921.34	0.00	1,921.34	5,235.06	2,617.53	11,685.8	5,851.59	2.88	-0.72	0.336
40.00	-39.80	-23.10	0.00	-1,874.60	0.00	1,874.60	5,208.36	2,604.18	11,536.7	5,776.96	3.19	-0.76	0.332
45.00	-36.54	-22.68	0.00	-1,759.11	0.00	1,759.11	5,197.90	2,598.95	11,478.8	5,747.96	4.03	-0.85	0.313
50.00	-34.82	-22.27	0.00	-1,645.71	0.00	1,645.71	5,130.06	2,565.03	11,108.8	5,562.68	4.98	-0.95	0.303
55.00	-33.14	-21.85	0.00	-1,534.37	0.00	1,534.37	5,060.94	2,530.47	10,741.9	5,378.96	6.01	-1.03	0.292
60.00	-31.48	-21.42	0.00	-1,425.12	0.00	1,425.12	4,990.55	2,495.28	10,378.3	5,196.89	7.14	-1.12	0.281
65.00	-29.86	-20.99	0.00	-1,318.01	0.00	1,318.01	4,918.89	2,459.45	10,018.2	5,016.55	8.36	-1.21	0.269
70.00	-28.27	-20.55	0.00	-1,213.07	0.00	1,213.07	4,845.96	2,422.98	9,661.67	4,838.01	9.67	-1.29	0.257
75.00	-26.72	-20.23	0.00	-1,110.32	0.00	1,110.32	4,771.75	2,385.87	9,308.91	4,661.37	11.07	-1.37	0.244
77.00	-26.10	-20.01	0.00	-1,069.86	0.00	1,069.86	4,741.71	2,370.85	9,168.90	4,591.26	11.65	-1.41	0.239
80.00	-24.49	-19.72	0.00	-1,009.83	0.00	1,009.83	4,696.27	2,348.13	8,960.09	4,486.71	12.55	-1.45	0.230
83.00	-22.91	-19.47	0.00	-950.67	0.00	950.67	3,852.83	1,926.42	7,391.10	3,701.04	13.48	-1.50	0.263
85.00	-22.37	-19.17	0.00	-911.73	0.00	911.73	3,829.99	1,914.99	7,281.52	3,646.17	14.12	-1.53	0.256
90.00	-21.07	-18.72	0.00	-815.90	0.00	815.90	3,771.99	1,886.00	7,009.36	3,509.89	15.77	-1.62	0.238
95.00	-19.79	-18.26	0.00	-722.32	0.00	722.32	3,712.72	1,856.36	6,739.87	3,374.94	17.50	-1.69	0.219
100.00	-18.55	-17.81	0.00	-631.01	0.00	631.01	3,652.18	1,826.09	6,473.21	3,241.42	19.32	-1.77	0.200
105.00	-17.32	-17.36	0.00	-541.95	0.00	541.95	3,590.36	1,795.18	6,209.55	3,109.39	21.21	-1.84	0.179
110.00	-16.02	-16.39	0.00	-455.15	0.00	455.15	3,527.28	1,763.64	5,949.04	2,978.94	23.17	-1.90	0.157
115.00	-14.86	-16.07	0.00	-373.20	0.00	373.20	3,462.92	1,731.46	5,691.86	2,850.16	25.19	-1.96	0.135
116.75	-14.46	-15.96	0.00	-345.07	0.00	345.07	3,440.09	1,720.04	5,602.67	2,805.50	25.91	-1.97	0.127
117.50	-13.97	-15.58	0.00	-333.10	0.00	333.10	3,430.26	1,715.13	5,564.57	2,786.42	26.22	-1.98	0.124
120.00	-13.04	-15.36	0.00	-294.15	0.00	294.15	3,397.28	1,698.64	5,438.17	2,723.13	27.26	-2.01	0.112
122.00	-12.31	-15.17	0.00	-263.44	0.00	263.44	2,331.76	1,165.88	3,764.78	1,885.19	28.11	-2.02	0.145
124.00	-8.55	-11.25	0.00	-233.10	0.00	233.10	2,316.68	1,158.34	3,700.66	1,853.08	28.96	-2.04	0.130
125.00	-8.39	-11.00	0.00	-221.85	0.00	221.85	2,309.07	1,154.53	3,668.68	1,837.06	29.39	-2.05	0.124
130.00	-7.60	-10.57	0.00	-166.84	0.00	166.84	2,270.23	1,135.11	3,509.52	1,757.37	31.56	-2.09	0.098
135.00	-6.82	-10.14	0.00	-114.01	0.00	114.01	2,230.11	1,115.06	3,351.79	1,678.39	33.77	-2.13	0.071
140.00	-6.07	-9.71	0.00	-63.33	0.00	63.33	2,188.73	1,094.36	3,195.65	1,600.20	36.01	-2.15	0.042
145.00	-5.33	-9.45	0.00	-14.76	0.00	14.76	2,146.07	1,073.03	3,041.25	1,522.89	38.27	-2.16	0.012
146.00	-0.12	-0.04	0.00	-0.04	0.00	0.04	2,137.38	1,068.69	3,010.60	1,507.54	38.72	-2.16	0.000
147.00	0.00	-0.04	0.00	0.00	0.00	0.00	2,128.65	1,064.32	2,980.02	1,492.23	39.17	-2.16	0.000

Site Number: 411180 Code: ANSI/TIA-222-G © 2007 - 2017 by ATC IP LLC. All rights reserved.

Site Name: Good Hill CT, CT Engineering Number:OAA716290_C3_01 11/10/2017 10:13:56 AM

Customer: AT&T MOBILITY

Load Case: 0.9D + 1.6W 93 mph with No Ice (Reduced DL) 20 Iterations

Gust Response Factor :1.10 Wind Importance Factor 1.00

Dead Load Factor :0.90

Wind Load Factor :1.60

Applied Segment Forces Summary

Seg Elev (ft)	Description	Shaft Forces Wind FX (lb)	Shaft Forces Dead Load (lb)	Discrete Forces Wind FX (lb)	Discrete Forces Torsion MY (lb-ft)	Discrete Forces Moment MZ (lb-ft)	Discrete Forces Dead Load (lb)	Linear Forces Wind FX (lb)	Linear Forces Dead Load (lb)	Sum of Forces Wind FX (lb)	Sum of Forces Dead Load (lb)	Sum of Forces Torsion MY (lb-ft)	Sum of Forces Moment MZ (lb)
0.00		221.4	0.0					0.0	0.0	221.4	0.0	0.0	0.0
5.00		439.1	1,311.8					0.0	133.9	439.1	1,445.7	0.0	0.0
10.00		431.7	1,289.7					0.0	133.9	431.7	1,423.7	0.0	0.0
15.00		424.3	1,267.7					0.0	133.9	424.3	1,401.6	0.0	0.0
20.00		416.9	1,245.7					0.0	133.9	416.9	1,379.6	0.0	0.0
25.00		409.6	1,223.6					0.0	133.9	409.6	1,357.5	0.0	0.0
30.00		407.0	1,201.6					0.0	133.9	407.0	1,335.5	0.0	0.0
35.00		328.7	1,179.5					0.0	133.9	328.7	1,313.5	0.0	0.0
38.00	Bot - Section 2	209.9	697.2					0.0	80.4	209.9	777.5	0.0	0.0
40.00		300.8	928.2					0.0	53.6	300.8	981.7	0.0	0.0
45.00	Top - Section 1	433.8	2,289.5					0.0	133.9	433.8	2,423.5	0.0	0.0
50.00		438.6	1,132.0					0.0	133.9	438.6	1,266.0	0.0	0.0
55.00		441.9	1,110.0					0.0	133.9	441.9	1,243.9	0.0	0.0
60.00		444.1	1,088.0					0.0	133.9	444.1	1,221.9	0.0	0.0
65.00		445.1	1,065.9					0.0	133.9	445.1	1,199.8	0.0	0.0
70.00		445.3	1,043.9					0.0	133.9	445.3	1,177.8	0.0	0.0
75.00		311.4	1,021.8					0.0	133.9	311.4	1,155.8	0.0	0.0
77.00	Bot - Section 3	224.1	402.6					0.0	53.6	224.1	456.1	0.0	0.0
80.00		270.1	1,118.0					0.0	80.4	270.1	1,198.4	0.0	0.0
83.00	Top - Section 2	224.6	1,103.3					0.0	80.4	224.6	1,183.7	0.0	0.0
85.00		313.1	338.9					0.0	53.6	313.1	392.5	0.0	0.0
90.00		445.3	834.0					0.0	133.9	445.3	967.9	0.0	0.0
95.00		442.0	815.1					0.0	133.9	442.0	949.0	0.0	0.0
100.00		438.1	796.2					0.0	133.9	438.1	930.1	0.0	0.0
105.00		433.6	777.3					0.0	133.9	433.6	911.3	0.0	0.0
110.00	Appertunance(s)	428.7	758.4	514.1	0.0	0.0	94.5	0.0	133.9	942.8	986.9	0.0	0.0
115.00		287.0	739.6					0.0	133.2	287.0	872.8	0.0	0.0
116.75	Bot - Section 4	105.9	254.4					0.0	46.6	105.9	301.0	0.0	0.0
117.50	Appertunance(s)	138.3	190.9	229.2	0.0	0.0	162.0	0.0	20.0	367.4	372.9	0.0	0.0
120.00		190.7	631.0					0.0	65.9	190.7	696.9	0.0	0.0
122.00	Top - Section 3	168.5	498.8					0.0	52.8	168.5	551.6	0.0	0.0
124.00	Appertunance(s)	125.8	213.6	3,658.6	0.0	0.0	2,651.8	0.0	52.8	3,784.3	2,918.2	0.0	0.0
125.00		248.9	105.9					0.0	16.3	248.9	122.3	0.0	0.0
130.00		410.8	521.2					0.0	81.6	410.8	602.8	0.0	0.0
135.00		403.9	507.1					0.0	81.6	403.9	588.6	0.0	0.0
140.00		396.7	492.9					0.0	81.6	396.7	574.5	0.0	0.0
145.00		235.3	478.7					0.0	81.6	235.3	560.3	0.0	0.0
146.00	Appertunance(s)	77.5	94.0	9,127.2	0.0	5,266.8	4,059.0	0.0	16.3	9,204.7	4,169.4	0.0	0.0
147.00		38.7	93.5					0.0	0.0	38.7	93.5	0.0	0.0
									Totals:	26,126.2	41,505.6	0.00	0.00

 © 2007 - 2017 by ATC IP LLC. All rights reserved.

Load Case: 0.9D + 1.6W 93 mph with No Ice (Reduced DL) 20 Iterations

Gust Response Factor :1.10 Wind Importance Factor 1.00
Dead Load Factor :0.90
Wind Load Factor :1.60

Calculated Forces

Seg Elev (ft)	Pu FY (-) (kips)	Vu FX (-) (kips)	Tu MY (ft-kips)	Mu MZ (ft-kips)	Mu MX (ft-kips)	Resultant Moment (ft-kips)	phi Pn (kips)	phi Vn (kips)	phi Tn (ft-kips)	phi Mn (ft-kips)	Total Deflect (in)	Rotation (deg)	Ratio
0.00	-41.48	-25.94	0.00	-2,845.77	0.00	2,845.77	5,703.70	2,851.85	14,592.4	7,307.09	0.00	0.00	0.397
5.00	-40.00	-25.56	0.00	-2,716.08	0.00	2,716.08	5,646.24	2,823.12	14,203.1	7,112.12	0.05	-0.09	0.389
10.00	-38.53	-25.19	0.00	-2,588.26	0.00	2,588.26	5,587.50	2,793.75	13,815.5	6,918.04	0.20	-0.19	0.381
15.00	-37.09	-24.82	0.00	-2,462.30	0.00	2,462.30	5,527.49	2,763.75	13,429.9	6,724.94	0.45	-0.28	0.373
20.00	-35.67	-24.46	0.00	-2,338.19	0.00	2,338.19	5,466.21	2,733.11	13,046.4	6,532.90	0.79	-0.38	0.365
25.00	-34.28	-24.09	0.00	-2,215.91	0.00	2,215.91	5,403.66	2,701.83	12,665.1	6,342.00	1.24	-0.47	0.356
30.00	-32.91	-23.73	0.00	-2,095.44	0.00	2,095.44	5,339.83	2,669.92	12,286.3	6,152.32	1.78	-0.56	0.347
35.00	-31.57	-23.43	0.00	-1,976.80	0.00	1,976.80	5,274.73	2,637.37	11,910.2	5,963.95	2.42	-0.66	0.338
38.00	-30.78	-23.23	0.00	-1,906.52	0.00	1,906.52	5,235.06	2,617.53	11,685.8	5,851.59	2.86	-0.72	0.332
40.00	-29.77	-22.95	0.00	-1,860.05	0.00	1,860.05	5,208.36	2,604.18	11,536.7	5,776.96	3.16	-0.75	0.328
45.00	-27.32	-22.53	0.00	-1,745.28	0.00	1,745.28	5,197.90	2,598.95	11,478.8	5,747.96	4.00	-0.85	0.309
50.00	-26.02	-22.11	0.00	-1,632.63	0.00	1,632.63	5,130.06	2,565.03	11,108.8	5,562.68	4.94	-0.94	0.299
55.00	-24.75	-21.69	0.00	-1,522.06	0.00	1,522.06	5,060.94	2,530.47	10,741.9	5,378.96	5.97	-1.03	0.288
60.00	-23.51	-21.26	0.00	-1,413.62	0.00	1,413.62	4,990.55	2,495.28	10,378.3	5,196.89	7.09	-1.11	0.277
65.00	-22.29	-20.82	0.00	-1,307.34	0.00	1,307.34	4,918.89	2,459.45	10,018.2	5,016.55	8.31	-1.20	0.265
70.00	-21.09	-20.38	0.00	-1,203.24	0.00	1,203.24	4,845.96	2,422.98	9,661.67	4,838.01	9.61	-1.28	0.253
75.00	-19.92	-20.06	0.00	-1,101.35	0.00	1,101.35	4,771.75	2,385.87	9,308.91	4,661.37	10.99	-1.36	0.241
77.00	-19.46	-19.84	0.00	-1,061.22	0.00	1,061.22	4,741.71	2,370.85	9,168.90	4,591.26	11.57	-1.40	0.235
80.00	-18.25	-19.56	0.00	-1,001.70	0.00	1,001.70	4,696.27	2,348.13	8,960.09	4,486.71	12.46	-1.44	0.227
83.00	-17.06	-19.31	0.00	-943.04	0.00	943.04	3,852.83	1,926.42	7,391.10	3,701.04	13.38	-1.49	0.259
85.00	-16.66	-19.01	0.00	-904.41	0.00	904.41	3,829.99	1,914.99	7,281.52	3,646.17	14.02	-1.52	0.252
90.00	-15.68	-18.56	0.00	-809.39	0.00	809.39	3,771.99	1,886.00	7,009.36	3,509.89	15.65	-1.60	0.235
95.00	-14.72	-18.11	0.00	-716.61	0.00	716.61	3,712.72	1,856.36	6,739.87	3,374.94	17.37	-1.68	0.216
100.00	-13.78	-17.66	0.00	-626.08	0.00	626.08	3,652.18	1,826.09	6,473.21	3,241.42	19.18	-1.75	0.197
105.00	-12.86	-17.21	0.00	-537.79	0.00	537.79	3,590.36	1,795.18	6,209.55	3,109.39	21.05	-1.82	0.177
110.00	-11.89	-16.25	0.00	-451.74	0.00	451.74	3,527.28	1,763.64	5,949.04	2,978.94	22.99	-1.89	0.155
115.00	-11.02	-15.94	0.00	-370.49	0.00	370.49	3,462.92	1,731.46	5,691.86	2,850.16	25.00	-1.94	0.133
116.75	-10.71	-15.83	0.00	-342.60	0.00	342.60	3,440.09	1,720.04	5,602.67	2,805.50	25.72	-1.96	0.125
117.50	-10.35	-15.45	0.00	-330.73	0.00	330.73	3,430.26	1,715.13	5,564.57	2,786.42	26.02	-1.97	0.122
120.00	-9.65	-15.24	0.00	-292.11	0.00	292.11	3,397.28	1,698.64	5,438.17	2,723.13	27.06	-1.99	0.110
122.00	-9.11	-15.05	0.00	-261.63	0.00	261.63	2,331.76	1,165.88	3,764.78	1,885.19	27.90	-2.01	0.143
124.00	-6.32	-11.17	0.00	-231.53	0.00	231.53	2,316.68	1,158.34	3,700.66	1,853.08	28.74	-2.03	0.128
125.00	-6.20	-10.92	0.00	-220.36	0.00	220.36	2,309.07	1,154.53	3,668.68	1,837.06	29.17	-2.03	0.123
130.00	-5.61	-10.49	0.00	-165.76	0.00	165.76	2,270.23	1,135.11	3,509.52	1,757.37	31.32	-2.08	0.097
135.00	-5.03	-10.07	0.00	-113.31	0.00	113.31	2,230.11	1,115.06	3,351.79	1,678.39	33.52	-2.11	0.070
140.00	-4.47	-9.65	0.00	-62.96	0.00	62.96	2,188.73	1,094.36	3,195.65	1,600.20	35.74	-2.13	0.041
145.00	-3.91	-9.40	0.00	-14.71	0.00	14.71	2,146.07	1,073.03	3,041.25	1,522.89	37.98	-2.14	0.012
146.00	-0.09	-0.04	0.00	-0.04	0.00	0.04	2,137.38	1,068.69	3,010.60	1,507.54	38.43	-2.14	0.000
147.00	0.00	-0.04	0.00	0.00	0.00	0.00	2,128.65	1,064.32	2,980.02	1,492.23	38.88	-2.14	0.000

Site Number: 411180 Code: ANSI/TIA-222-G © 2007 - 2017 by ATC IP LLC. All rights reserved.

Site Name: Good Hill CT, CT Engineering Number:OAA716290_C3_01 11/10/2017 10:13:58 AM

Customer: AT&T MOBILITY

Load Case: 1.2D + 1.0Di + 1.0Wi 40 mph with 0.75 in Radial Ice 19 Iterations

Gust Response Factor :1.10 Ice Dead Load Factor 1.00 Wind Importance Factor 1.00

Dead Load Factor :1.20 Ice Importance Factor :1.00

Wind Load Factor :1.00

Applied Segment Forces Summary

		Shaft Forces		Discrete Forces				Linear Forces		Sum of Forces			
Seg Elev (ft)	Description	Wind FX (lb)	Dead Load (lb)	Wind FX (lb)	Torsion MY (lb-ft)	Moment MZ (lb-ft)	Dead Load (lb)	Wind FX (lb)	Dead Load (lb)	Wind FX (lb)	Dead Load (lb)	Torsion MY (lb-ft)	Moment MZ (lb)
0.00		49.0	0.0					0.0	0.0	49.0	0.0	0.0	0.0
5.00		97.4	2,204.8					0.0	178.6	97.4	2,383.3	0.0	0.0
10.00		96.1	2,221.0					0.0	178.6	96.1	2,399.5	0.0	0.0
15.00		94.7	2,209.6					0.0	178.6	94.7	2,388.2	0.0	0.0
20.00		93.3	2,189.3					0.0	178.6	93.3	2,367.8	0.0	0.0
25.00		91.8	2,164.3					0.0	178.6	91.8	2,342.8	0.0	0.0
30.00		91.4	2,136.4					0.0	178.6	91.4	2,314.9	0.0	0.0
35.00		73.9	2,106.5					0.0	178.6	73.9	2,285.0	0.0	0.0
38.00	Bot - Section 2	47.2	1,250.1					0.0	107.1	47.2	1,357.2	0.0	0.0
40.00		67.7	1,454.5					0.0	71.4	67.7	1,525.9	0.0	0.0
45.00	Top - Section 1	97.8	3,589.8					0.0	178.6	97.8	3,768.4	0.0	0.0
50.00		99.0	2,042.6					0.0	178.6	99.0	2,221.1	0.0	0.0
55.00		100.0	2,008.5					0.0	178.6	100.0	2,187.0	0.0	0.0
60.00		100.6	1,973.8					0.0	178.6	100.6	2,152.3	0.0	0.0
65.00		101.0	1,938.5					0.0	178.6	101.0	2,117.1	0.0	0.0
70.00		101.2	1,902.8					0.0	178.6	101.2	2,081.3	0.0	0.0
75.00		70.9	1,866.6					0.0	178.6	70.9	2,045.2	0.0	0.0
77.00	Bot - Section 3	51.0	737.7					0.0	71.4	51.0	809.1	0.0	0.0
80.00		61.6	1,794.0					0.0	107.1	61.6	1,901.1	0.0	0.0
83.00	Top - Section 2	51.2	1,771.7					0.0	107.1	51.2	1,878.8	0.0	0.0
85.00		71.5	651.2					0.0	71.4	71.5	722.6	0.0	0.0
90.00		101.9	1,601.6					0.0	178.6	101.9	1,780.2	0.0	0.0
95.00		101.3	1,568.5					0.0	178.6	101.3	1,747.0	0.0	0.0
100.00		100.6	1,535.0					0.0	178.6	100.6	1,713.6	0.0	0.0
105.00		99.8	1,501.4					0.0	178.6	99.8	1,680.0	0.0	0.0
110.00	Appertunance(s)	98.9	1,467.6	206.1	0.0	0.0	492.8	0.0	178.6	305.0	2,138.9	0.0	0.0
115.00		66.3	1,433.5					0.0	177.7	66.3	1,611.2	0.0	0.0
116.75	Bot - Section 4	24.5	494.9					0.0	62.2	24.5	557.1	0.0	0.0
117.50	Appertunance(s)	32.0	322.0	43.3	0.0	0.0	56.7	0.0	26.6	75.3	405.3	0.0	0.0
120.00		44.1	1,063.8					0.0	87.9	44.1	1,151.7	0.0	0.0
122.00	Top - Section 3	39.0	841.6					0.0	70.3	39.0	912.0	0.0	0.0
124.00	Appertunance(s)	29.2	459.8	573.7	0.0	0.0	7,607.1	0.0	70.3	602.9	8,137.2	0.0	0.0
125.00		57.8	228.5					0.0	21.8	57.8	250.2	0.0	0.0
130.00		95.5	1,120.9					0.0	108.8	95.5	1,229.6	0.0	0.0
135.00		94.2	1,092.5					0.0	108.8	94.2	1,201.3	0.0	0.0
140.00		92.7	1,064.0					0.0	108.8	92.7	1,172.8	0.0	0.0
145.00		55.1	1,035.3					0.0	108.8	55.1	1,144.1	0.0	0.0
146.00	Appertunance(s)	18.2	204.5	1,633.0	0.0	1,047.6	9,083.5	0.0	21.8	1,651.2	9,309.8	0.0	0.0
147.00		9.1	203.4					0.0	0.0	9.1	203.4	0.0	0.0
									Totals:	5,324.65	77,594.2	0.00	0.00

© 2007 - 2017 by ATC IP LLC. All rights reserved.

Load Case: 1.2D + 1.0Di + 1.0Wi 40 mph with 0.75 in Radial Ice 19 Iterations

Gust Response Factor :1.10 Ice Dead Load Factor 1.00 Wind Importance Factor 1.00
Dead Load Factor :1.20 Ice Importance Factor :1.00
Wind Load Factor :1.00

Calculated Forces

Seg Elev (ft)	Pu FY (-) (kips)	Vu FX (-) (kips)	Tu MY (ft-kips)	Mu MZ (ft-kips)	Mu MX (ft-kips)	Resultant Moment (ft-kips)	phi Pn (kips)	phi Vn (kips)	phi Tn (ft-kips)	phi Mn (ft-kips)	Total Deflect (in)	Rotation (deg)	Ratio
0.00	-77.59	-5.29	0.00	-570.65	0.00	570.65	5,703.70	2,851.85	14,592.4	7,307.09	0.00	0.00	0.092
5.00	-75.21	-5.21	0.00	-544.21	0.00	544.21	5,646.24	2,823.12	14,203.1	7,112.12	0.01	-0.02	0.090
10.00	-72.81	-5.14	0.00	-518.14	0.00	518.14	5,587.50	2,793.75	13,815.5	6,918.04	0.04	-0.04	0.088
15.00	-70.42	-5.07	0.00	-492.44	0.00	492.44	5,527.49	2,763.75	13,429.9	6,724.94	0.09	-0.06	0.086
20.00	-68.05	-4.99	0.00	-467.10	0.00	467.10	5,466.21	2,733.11	13,046.4	6,532.90	0.16	-0.08	0.084
25.00	-65.70	-4.92	0.00	-442.13	0.00	442.13	5,403.66	2,701.83	12,665.1	6,342.00	0.25	-0.09	0.082
30.00	-63.39	-4.85	0.00	-417.53	0.00	417.53	5,339.83	2,669.92	12,286.3	6,152.32	0.36	-0.11	0.080
35.00	-61.10	-4.78	0.00	-393.30	0.00	393.30	5,274.73	2,637.37	11,910.2	5,963.95	0.48	-0.13	0.078
38.00	-59.74	-4.74	0.00	-378.95	0.00	378.95	5,235.06	2,617.53	11,685.8	5,851.59	0.57	-0.14	0.076
40.00	-58.22	-4.68	0.00	-369.47	0.00	369.47	5,208.36	2,604.18	11,536.7	5,776.96	0.63	-0.15	0.075
45.00	-54.45	-4.59	0.00	-346.05	0.00	346.05	5,197.90	2,598.95	11,478.8	5,747.96	0.80	-0.17	0.071
50.00	-52.22	-4.50	0.00	-323.09	0.00	323.09	5,130.06	2,565.03	11,108.8	5,562.68	0.99	-0.19	0.068
55.00	-50.04	-4.41	0.00	-300.57	0.00	300.57	5,060.94	2,530.47	10,741.9	5,378.96	1.19	-0.20	0.066
60.00	-47.88	-4.32	0.00	-278.52	0.00	278.52	4,990.55	2,495.28	10,378.3	5,196.89	1.42	-0.22	0.063
65.00	-45.77	-4.22	0.00	-256.94	0.00	256.94	4,918.89	2,459.45	10,018.2	5,016.55	1.66	-0.24	0.061
70.00	-43.68	-4.12	0.00	-235.84	0.00	235.84	4,845.96	2,422.98	9,661.67	4,838.01	1.92	-0.25	0.058
75.00	-41.64	-4.05	0.00	-215.23	0.00	215.23	4,771.75	2,385.87	9,308.91	4,661.37	2.19	-0.27	0.055
77.00	-40.83	-4.00	0.00	-207.13	0.00	207.13	4,741.71	2,370.85	9,168.90	4,591.26	2.31	-0.28	0.054
80.00	-38.93	-3.94	0.00	-195.13	0.00	195.13	4,696.27	2,348.13	8,960.09	4,486.71	2.48	-0.29	0.052
83.00	-37.05	-3.88	0.00	-183.32	0.00	183.32	3,852.83	1,926.42	7,391.10	3,701.04	2.67	-0.30	0.059
85.00	-36.33	-3.81	0.00	-175.56	0.00	175.56	3,829.99	1,914.99	7,281.52	3,646.17	2.79	-0.30	0.058
90.00	-34.54	-3.71	0.00	-156.51	0.00	156.51	3,771.99	1,886.00	7,009.36	3,509.89	3.12	-0.32	0.054
95.00	-32.80	-3.61	0.00	-137.96	0.00	137.96	3,712.72	1,856.36	6,739.87	3,374.94	3.46	-0.33	0.050
100.00	-31.08	-3.50	0.00	-119.92	0.00	119.92	3,652.18	1,826.09	6,473.21	3,241.42	3.81	-0.35	0.046
105.00	-29.40	-3.40	0.00	-102.41	0.00	102.41	3,590.36	1,795.18	6,209.55	3,109.39	4.18	-0.36	0.041
110.00	-27.27	-3.09	0.00	-85.41	0.00	85.41	3,527.28	1,763.64	5,949.04	2,978.94	4.57	-0.37	0.036
115.00	-25.65	-3.01	0.00	-69.98	0.00	69.98	3,462.92	1,731.46	5,691.86	2,850.16	4.96	-0.38	0.032
116.75	-25.10	-2.99	0.00	-64.70	0.00	64.70	3,440.09	1,720.04	5,602.67	2,805.50	5.10	-0.39	0.030
117.50	-24.69	-2.91	0.00	-62.46	0.00	62.46	3,430.26	1,715.13	5,564.57	2,786.42	5.16	-0.39	0.030
120.00	-23.54	-2.86	0.00	-55.19	0.00	55.19	3,397.28	1,698.64	5,438.17	2,723.13	5.37	-0.39	0.027
122.00	-22.63	-2.81	0.00	-49.47	0.00	49.47	2,331.76	1,165.88	3,764.78	1,885.19	5.53	-0.39	0.036
124.00	-14.50	-2.16	0.00	-43.85	0.00	43.85	2,316.68	1,158.34	3,700.66	1,853.08	5.70	-0.40	0.030
125.00	-14.25	-2.10	0.00	-41.69	0.00	41.69	2,309.07	1,154.53	3,668.68	1,837.06	5.78	-0.40	0.029
130.00	-13.02	-2.00	0.00	-31.20	0.00	31.20	2,270.23	1,135.11	3,509.52	1,757.37	6.20	-0.41	0.023
135.00	-11.82	-1.89	0.00	-21.22	0.00	21.22	2,230.11	1,115.06	3,351.79	1,678.39	6.63	-0.41	0.018
140.00	-10.64	-1.79	0.00	-11.75	0.00	11.75	2,188.73	1,094.36	3,195.65	1,600.20	7.07	-0.42	0.012
145.00	-9.50	-1.73	0.00	-2.79	0.00	2.79	2,146.07	1,073.03	3,041.25	1,522.89	7.51	-0.42	0.006
146.00	-0.20	-0.01	0.00	-0.01	0.00	0.01	2,137.38	1,068.69	3,010.60	1,507.54	7.60	-0.42	0.000
147.00	0.00	-0.01	0.00	0.00	0.00	0.00	2,128.65	1,064.32	2,980.02	1,492.23	7.69	-0.42	0.000

© 2007 - 2017 by ATC IP LLC. All rights reserved.

Load Case: 1.0D + 1.0W Serviceability 60 mph 19 Iterations

Gust Response Factor :1.10 Wind Importance Factor 1.00
Dead Load Factor :1.00
Wind Load Factor :1.00

Applied Segment Forces Summary

		Shaft Forces		Discrete Forces				Linear Forces		Sum of Forces			
Seg Elev (ft)	Description	Wind FX (lb)	Dead Load (lb)	Wind FX (lb)	Torsion MY (lb-ft)	Moment MZ (lb-ft)	Dead Load (lb)	Wind FX (lb)	Dead Load (lb)	Wind FX (lb)	Dead Load (lb)	Torsion MY (lb-ft)	Moment MZ (lb)
0.00		57.6	0.0					0.0	0.0	57.6	0.0	0.0	0.0
5.00		114.2	1,457.5					0.0	148.8	114.2	1,606.3	0.0	0.0
10.00		112.3	1,433.0					0.0	148.8	112.3	1,581.8	0.0	0.0
15.00		110.4	1,408.6					0.0	148.8	110.4	1,557.4	0.0	0.0
20.00		108.5	1,384.1					0.0	148.8	108.5	1,532.9	0.0	0.0
25.00		106.5	1,359.6					0.0	148.8	106.5	1,508.4	0.0	0.0
30.00		105.9	1,335.1					0.0	148.8	105.9	1,483.9	0.0	0.0
35.00		85.5	1,310.6					0.0	148.8	85.5	1,459.4	0.0	0.0
38.00	Bot - Section 2	54.6	774.6					0.0	89.3	54.6	863.9	0.0	0.0
40.00		78.3	1,031.3					0.0	59.5	78.3	1,090.8	0.0	0.0
45.00	Top - Section 1	112.9	2,543.9					0.0	148.8	112.9	2,692.7	0.0	0.0
50.00		114.1	1,257.8					0.0	148.8	114.1	1,406.6	0.0	0.0
55.00		115.0	1,233.3					0.0	148.8	115.0	1,382.1	0.0	0.0
60.00		115.5	1,208.8					0.0	148.8	115.5	1,357.6	0.0	0.0
65.00		115.8	1,184.4					0.0	148.8	115.8	1,333.2	0.0	0.0
70.00		115.8	1,159.9					0.0	148.8	115.8	1,308.7	0.0	0.0
75.00		81.0	1,135.4					0.0	148.8	81.0	1,284.2	0.0	0.0
77.00	Bot - Section 3	58.3	447.3					0.0	59.5	58.3	506.8	0.0	0.0
80.00		70.3	1,242.3					0.0	89.3	70.3	1,331.6	0.0	0.0
83.00	Top - Section 2	58.4	1,225.9					0.0	89.3	58.4	1,315.2	0.0	0.0
85.00		81.5	376.5					0.0	59.5	81.5	436.1	0.0	0.0
90.00		115.8	926.7					0.0	148.8	115.8	1,075.5	0.0	0.0
95.00		115.0	905.7					0.0	148.8	115.0	1,054.5	0.0	0.0
100.00		114.0	884.7					0.0	148.8	114.0	1,033.5	0.0	0.0
105.00		112.8	863.7					0.0	148.8	112.8	1,012.5	0.0	0.0
110.00	Appertunance(s)	111.5	842.7	133.7	0.0	0.0	105.0	0.0	148.8	245.3	1,096.5	0.0	0.0
115.00		74.7	821.7					0.0	148.1	74.7	969.8	0.0	0.0
116.75	Bot - Section 4	27.6	282.6					0.0	51.8	27.6	334.5	0.0	0.0
117.50	Appertunance(s)	36.0	212.1	59.6	0.0	0.0	180.0	0.0	22.2	95.6	414.3	0.0	0.0
120.00		49.6	701.1					0.0	73.3	49.6	774.4	0.0	0.0
122.00	Top - Section 3	43.8	554.3					0.0	58.6	43.8	612.9	0.0	0.0
124.00	Appertunance(s)	32.7	237.3	951.8	0.0	0.0	2,946.5	0.0	58.6	984.5	3,242.4	0.0	0.0
125.00		64.8	117.7					0.0	18.1	64.8	135.8	0.0	0.0
130.00		106.9	579.1					0.0	90.7	106.9	669.8	0.0	0.0
135.00		105.1	563.4					0.0	90.7	105.1	654.0	0.0	0.0
140.00		103.2	547.7					0.0	90.7	103.2	638.3	0.0	0.0
145.00		61.2	531.9					0.0	90.7	61.2	622.6	0.0	0.0
146.00	Appertunance(s)	20.2	104.5	2,374.4	0.0	1,370.1	4,510.0	0.0	18.1	2,394.6	4,632.6	0.0	0.0
147.00		10.1	103.9					0.0	0.0	10.1	103.9	0.0	0.0
									Totals:	6,796.64	46,117.3	0.00	0.00

 © 2007 - 2017 by ATC IP LLC. All rights reserved.

Load Case: 1.0D + 1.0W Serviceability 60 mph 19 Iterations

Gust Response Factor :1.10 Wind Importance Factor 1.00
Dead Load Factor :1.00
Wind Load Factor :1.00

Calculated Forces

Seg Elev (ft)	Pu FY (-) (kips)	Vu FX (-) (kips)	Tu MY (ft-kips)	Mu MZ (ft-kips)	Mu MX (ft-kips)	Resultant Moment (ft-kips)	phi Pn (kips)	phi Vn (kips)	phi Tn (ft-kips)	phi Mn (ft-kips)	Total Deflect (in)	Rotation (deg)	Ratio
0.00	-46.12	-6.75	0.00	-741.90	0.00	741.90	5,703.70	2,851.85	14,592.4	7,307.09	0.00	0.00	0.110
5.00	-44.51	-6.65	0.00	-708.16	0.00	708.16	5,646.24	2,823.12	14,203.1	7,112.12	0.01	-0.02	0.107
10.00	-42.92	-6.56	0.00	-674.90	0.00	674.90	5,587.50	2,793.75	13,815.5	6,918.04	0.05	-0.05	0.105
15.00	-41.36	-6.46	0.00	-642.11	0.00	642.11	5,527.49	2,763.75	13,429.9	6,724.94	0.12	-0.07	0.103
20.00	-39.83	-6.37	0.00	-609.80	0.00	609.80	5,466.21	2,733.11	13,046.4	6,532.90	0.21	-0.10	0.101
25.00	-38.32	-6.28	0.00	-577.95	0.00	577.95	5,403.66	2,701.83	12,665.1	6,342.00	0.32	-0.12	0.098
30.00	-36.83	-6.18	0.00	-546.57	0.00	546.57	5,339.83	2,669.92	12,286.3	6,152.32	0.46	-0.15	0.096
35.00	-35.37	-6.11	0.00	-515.66	0.00	515.66	5,274.73	2,637.37	11,910.2	5,963.95	0.63	-0.17	0.093
38.00	-34.50	-6.06	0.00	-497.34	0.00	497.34	5,235.06	2,617.53	11,685.8	5,851.59	0.74	-0.19	0.092
40.00	-33.41	-5.98	0.00	-485.23	0.00	485.23	5,208.36	2,604.18	11,536.7	5,776.96	0.83	-0.20	0.090
45.00	-30.72	-5.87	0.00	-455.31	0.00	455.31	5,197.90	2,598.95	11,478.8	5,747.96	1.04	-0.22	0.085
50.00	-29.31	-5.77	0.00	-425.94	0.00	425.94	5,130.06	2,565.03	11,108.8	5,562.68	1.29	-0.24	0.082
55.00	-27.92	-5.66	0.00	-397.11	0.00	397.11	5,060.94	2,530.47	10,741.9	5,378.96	1.56	-0.27	0.079
60.00	-26.56	-5.54	0.00	-368.84	0.00	368.84	4,990.55	2,495.28	10,378.3	5,196.89	1.85	-0.29	0.076
65.00	-25.23	-5.43	0.00	-341.11	0.00	341.11	4,918.89	2,459.45	10,018.2	5,016.55	2.17	-0.31	0.073
70.00	-23.92	-5.32	0.00	-313.96	0.00	313.96	4,845.96	2,422.98	9,661.67	4,838.01	2.51	-0.33	0.070
75.00	-22.63	-5.23	0.00	-287.38	0.00	287.38	4,771.75	2,385.87	9,308.91	4,661.37	2.87	-0.36	0.066
77.00	-22.13	-5.18	0.00	-276.91	0.00	276.91	4,741.71	2,370.85	9,168.90	4,591.26	3.02	-0.36	0.065
80.00	-20.80	-5.10	0.00	-261.38	0.00	261.38	4,696.27	2,348.13	8,960.09	4,486.71	3.25	-0.38	0.063
83.00	-19.48	-5.04	0.00	-246.07	0.00	246.07	3,852.83	1,926.42	7,391.10	3,701.04	3.49	-0.39	0.072
85.00	-19.04	-4.96	0.00	-236.00	0.00	236.00	3,829.99	1,914.99	7,281.52	3,646.17	3.66	-0.40	0.070
90.00	-17.97	-4.84	0.00	-211.20	0.00	211.20	3,771.99	1,886.00	7,009.36	3,509.89	4.08	-0.42	0.065
95.00	-16.91	-4.73	0.00	-186.99	0.00	186.99	3,712.72	1,856.36	6,739.87	3,374.94	4.53	-0.44	0.060
100.00	-15.88	-4.61	0.00	-163.37	0.00	163.37	3,652.18	1,826.09	6,473.21	3,241.42	5.00	-0.46	0.055
105.00	-14.86	-4.49	0.00	-140.32	0.00	140.32	3,590.36	1,795.18	6,209.55	3,109.39	5.49	-0.48	0.049
110.00	-13.77	-4.24	0.00	-117.87	0.00	117.87	3,527.28	1,763.64	5,949.04	2,978.94	6.00	-0.49	0.043
115.00	-12.80	-4.16	0.00	-96.66	0.00	96.66	3,462.92	1,731.46	5,691.86	2,850.16	6.52	-0.51	0.038
116.75	-12.46	-4.13	0.00	-89.38	0.00	89.38	3,440.09	1,720.04	5,602.67	2,805.50	6.71	-0.51	0.035
117.50	-12.05	-4.03	0.00	-86.28	0.00	86.28	3,430.26	1,715.13	5,564.57	2,786.42	6.79	-0.51	0.034
120.00	-11.28	-3.98	0.00	-76.21	0.00	76.21	3,397.28	1,698.64	5,438.17	2,723.13	7.06	-0.52	0.031
122.00	-10.66	-3.93	0.00	-68.25	0.00	68.25	2,331.76	1,165.88	3,764.78	1,885.19	7.28	-0.52	0.041
124.00	-7.43	-2.91	0.00	-60.40	0.00	60.40	2,316.68	1,158.34	3,700.66	1,853.08	7.50	-0.53	0.036
125.00	-7.29	-2.85	0.00	-57.48	0.00	57.48	2,309.07	1,154.53	3,668.68	1,837.06	7.61	-0.53	0.034
130.00	-6.63	-2.74	0.00	-43.24	0.00	43.24	2,270.23	1,135.11	3,509.52	1,757.37	8.17	-0.54	0.028
135.00	-5.97	-2.63	0.00	-29.55	0.00	29.55	2,230.11	1,115.06	3,351.79	1,678.39	8.74	-0.55	0.020
140.00	-5.33	-2.52	0.00	-16.42	0.00	16.42	2,188.73	1,094.36	3,195.65	1,600.20	9.32	-0.56	0.013
145.00	-4.71	-2.45	0.00	-3.83	0.00	3.83	2,146.07	1,073.03	3,041.25	1,522.89	9.91	-0.56	0.005
146.00	-0.10	-0.01	0.00	-0.01	0.00	0.01	2,137.38	1,068.69	3,010.60	1,507.54	10.03	-0.56	0.000
147.00	0.00	-0.01	0.00	0.00	0.00	0.00	2,128.65	1,064.32	2,980.02	1,492.23	10.14	-0.56	0.000

© 2007 - 2017 by ATC IP LLC. All rights reserved.

Equivalent Lateral Forces Method Analysis

(Based on ASCE7-10 Chapters 11, 12, 15)

Spectral Response Acceleration for Short Period (S_s):	0.19	
Spectral Response Acceleration at 1.0 Second Period (S_1):	0.06	
Long-Period Transition Period (T_L):	6	
Importance Factor (I_E):	1.00	
Site Coefficient F_a:	1.60	
Site Coeffiecient F_v:	2.40	
Response Modification Coefficient (R):	1.50	
Design Spectral Response Acceleration at Short Period (S_{ds}):	0.21	
Design Spectral Response Acceleration at 1.0 Second Period (S_{d1}):	0.10	
Seismic Response Coefficient (C_s):	0.04	
Upper Limit C_s	0.04	
Lower Limit C_s	0.03	
Period based on Rayleigh Method (sec):	1.67	
Redundancy Factor (p):	1.30	
Seismic Force Distribution Exponent (k):	1.59	
Total Unfactored Dead Load:	46.12	k
Seismic Base Shear (E):	2.49	k

Load Case (1.2 + 0.2Sds) * DL + E ELFM Seismic Equivalent Lateral Forces Method

Segment	Height Above Base (ft)	Weight (lb)	W_z (lb-ft)	C_{vx}	Horizontal Force (lb)	Vertical Force (lb)
38	146.50	104	282	0.006	14	129
37	145.50	123	329	0.006	16	152
36	142.50	623	1,618	0.032	79	773
35	137.50	638	1,567	0.031	76	793
34	132.50	654	1,514	0.030	74	812
33	127.50	670	1,459	0.028	71	832
32	124.50	136	285	0.006	14	169
31	123.00	296	609	0.012	30	367
30	121.00	613	1,229	0.024	60	761
29	118.75	774	1,507	0.029	73	961
28	117.13	234	446	0.009	22	291
27	115.88	334	626	0.012	30	415
26	112.50	970	1,732	0.034	84	1,204
25	107.50	992	1,648	0.032	80	1,231
24	102.50	1,013	1,561	0.030	76	1,257
23	97.50	1,033	1,471	0.029	71	1,283
22	92.50	1,054	1,381	0.027	67	1,309
21	87.50	1,075	1,290	0.025	63	1,335
20	84.00	436	490	0.010	24	541
19	81.50	1,315	1,409	0.027	68	1,633
18	78.50	1,332	1,345	0.026	65	1,653
17	76.00	507	486	0.009	24	629
16	72.50	1,284	1,143	0.022	55	1,594

 © 2007 - 2017 by ATC IP LLC. All rights reserved.

15	67.50	1,309	1,040	0.020	50	1,625
14	62.50	1,333	938	0.018	46	1,655
13	57.50	1,358	837	0.016	41	1,686
12	52.50	1,382	737	0.014	36	1,716
11	47.50	1,407	640	0.012	31	1,746
10	42.50	2,693	1,028	0.020	50	3,343
9	39.00	1,091	363	0.007	18	1,354
8	36.50	864	259	0.005	13	1,073
7	32.50	1,459	364	0.007	18	1,812
6	27.50	1,484	284	0.006	14	1,842
5	22.50	1,508	210	0.004	10	1,873
4	17.50	1,533	143	0.003	7	1,903
3	12.50	1,557	85	0.002	4	1,934
2	7.50	1,582	39	0.001	2	1,964
1	2.50	1,606	7	0.000	0	1,994
Alcatel-Lucent RRH2X	146.00	138	373	0.007	18	171
Alcatel-Lucent RRH2x	146.00	132	356	0.007	17	164
Alcatel-Lucent RRH2x	146.00	170	459	0.009	22	211
3' Yagi	146.00	10	27	0.001	1	12
RFS DB-T1-6Z-8AB-0Z	146.00	44	119	0.002	6	55
Antel LPA-80080/4CF	146.00	48	130	0.003	6	60
Antel LPA-80063/4CF	146.00	40	108	0.002	5	50
Commscope SBNHH-1D65	146.00	244	658	0.013	32	302
Flat Platform w/ Han	146.00	2,000	5,401	0.105	262	2,483
VZW Unused Reserve:	146.00	1,684	4,549	0.089	221	2,091
Powerwave LGP21901	124.00	33	69	0.001	3	41
Powerwave LGP2140X	124.00	114	238	0.005	12	142
Raycap DC6-48-60-18-	124.00	33	68	0.001	3	41
Raycap DC6-48-60-18-	124.00	32	66	0.001	3	39
Ericsson RRUS 4478 B	124.00	180	375	0.007	18	223
Ericsson RRUS 32 B2	124.00	159	331	0.006	16	197
Ericsson RRUS-11	124.00	330	688	0.013	33	410
Powerwave 7770.00	124.00	210	438	0.009	21	261
Kathrein 800 10764	124.00	41	85	0.002	4	51
KMW AM-X-CD-16-65-00	124.00	97	202	0.004	10	120
KMW EPBQ-654L8H6-L2	124.00	218	455	0.009	22	271
Round Low Profile Pl	124.00	1,500	3,127	0.061	152	1,862
3' Omni-Grid	117.50	30	57	0.001	3	37
Stand-Off	117.50	150	287	0.006	14	186
Stand-Off	110.00	75	129	0.003	6	93
8' Yagi	110.00	30	52	0.001	3	37
		46,117	51,252	1.000	2,488	57,259

Load Case (0.9 - 0.2Sds) * DL + E ELFM Seismic (Reduced DL) Equivalent Lateral Forces Method

Segment	Height Above Base (ft)	Weight (lb)	W_z (lb-ft)	C_{vx}	Horizontal Force (lb)	Vertical Force (lb)
38	146.50	104	282	0.006	14	89
37	145.50	123	329	0.006	16	105
36	142.50	623	1,618	0.032	79	534
35	137.50	638	1,567	0.031	76	548
34	132.50	654	1,514	0.030	74	561
33	127.50	670	1,459	0.028	71	575
32	124.50	136	285	0.006	14	117
31	123.00	296	609	0.012	30	254
30	121.00	613	1,229	0.024	60	526
29	118.75	774	1,507	0.029	73	665
28	117.13	234	446	0.009	22	201
27	115.88	334	626	0.012	30	287
26	112.50	970	1,732	0.034	84	832

© 2007 - 2017 by ATC IP LLC. All rights reserved.

25	107.50	992	1,648	0.032	80	851
24	102.50	1,013	1,561	0.030	76	869
23	97.50	1,033	1,471	0.029	71	887
22	92.50	1,054	1,381	0.027	67	905
21	87.50	1,075	1,290	0.025	63	923
20	84.00	436	490	0.010	24	374
19	81.50	1,315	1,409	0.027	68	1,129
18	78.50	1,332	1,345	0.026	65	1,143
17	76.00	507	486	0.009	24	435
16	72.50	1,284	1,143	0.022	55	1,102
15	67.50	1,309	1,040	0.020	50	1,123
14	62.50	1,333	938	0.018	46	1,144
13	57.50	1,358	837	0.016	41	1,165
12	52.50	1,382	737	0.014	36	1,186
11	47.50	1,407	640	0.012	31	1,207
10	42.50	2,693	1,028	0.020	50	2,311
9	39.00	1,091	363	0.007	18	936
8	36.50	864	259	0.005	13	742
7	32.50	1,459	364	0.007	18	1,253
6	27.50	1,484	284	0.006	14	1,274
5	22.50	1,508	210	0.004	10	1,295
4	17.50	1,533	143	0.003	7	1,316
3	12.50	1,557	85	0.002	4	1,337
2	7.50	1,582	39	0.001	2	1,358
1	2.50	1,606	7	0.000	0	1,379
Alcatel-Lucent RRH2X	146.00	138	373	0.007	18	118
Alcatel-Lucent RRH2x	146.00	132	356	0.007	17	113
Alcatel-Lucent RRH2x	146.00	170	459	0.009	22	146
3' Yagi	146.00	10	27	0.001	1	9
RFS DB-T1-6Z-8AB-0Z	146.00	44	119	0.002	6	38
Antel LPA-80080/4CF	146.00	48	130	0.003	6	41
Antel LPA-80063/4CF	146.00	40	108	0.002	5	34
Commscope SBNHH-1D65	146.00	244	658	0.013	32	209
Flat Platform w/ Han	146.00	2,000	5,401	0.105	262	1,717
VZW Unused Reserve:	146.00	1,684	4,549	0.089	221	1,446
Powerwave LGP21901	124.00	33	69	0.001	3	28
Powerwave LGP2140X	124.00	114	238	0.005	12	98
Raycap DC6-48-60-18-	124.00	33	68	0.001	3	28
Raycap DC6-48-60-18-	124.00	32	66	0.001	3	27
Ericsson RRUS 4478 B	124.00	180	375	0.007	18	154
Ericsson RRUS 32 B2	124.00	159	331	0.006	16	136
Ericsson RRUS-11	124.00	330	688	0.013	33	283
Powerwave 7770.00	124.00	210	438	0.009	21	180
Kathrein 800 10764	124.00	41	85	0.002	4	35
KMW AM-X-CD-16-65-00	124.00	97	202	0.004	10	83
KMW EPBQ-654L8H6-L2	124.00	218	455	0.009	22	187
Round Low Profile Pl	124.00	1,500	3,127	0.061	152	1,288
3' Omni-Grid	117.50	30	57	0.001	3	26
Stand-Off	117.50	150	287	0.006	14	129
Stand-Off	110.00	75	129	0.003	6	64
8' Yagi	110.00	30	52	0.001	3	26
		46,117	51,252	1.000	2,488	39,587

 © 2007 - 2017 by ATC IP LLC. All rights reserved.

Load Case (1.2 + 0.2Sds) * DL + E ELFM Seismic Equivalent Lateral Forces Method

Calculated Forces

Seg Elev (ft)	Pu FY (-) (kips)	Vu FX (-) (kips)	Tu MY (ft-kips)	Mu MZ (ft-kips)	Mu MX (ft-kips)	Resultant Moment (ft-kips)	phi Pn (kips)	phi Vn (kips)	phi Tn (ft-kips)	phi Mn (ft-kips)	Total Deflect (in)	Rotation (deg)	Ratio
0.00	-55.26	-2.49	0.00	-281.00	0.00	281.00	5,703.70	2,851.85	14,592.4	7,307.09	0.00	0.00	0.048
5.00	-53.30	-2.50	0.00	-268.54	0.00	268.54	5,646.24	2,823.12	14,203.1	7,112.12	0.01	-0.01	0.047
10.00	-51.37	-2.50	0.00	-256.05	0.00	256.05	5,587.50	2,793.75	13,815.5	6,918.04	0.02	-0.02	0.046
15.00	-49.46	-2.50	0.00	-243.54	0.00	243.54	5,527.49	2,763.75	13,429.9	6,724.94	0.04	-0.03	0.045
20.00	-47.59	-2.50	0.00	-231.03	0.00	231.03	5,466.21	2,733.11	13,046.4	6,532.90	0.08	-0.04	0.044
25.00	-45.75	-2.49	0.00	-218.54	0.00	218.54	5,403.66	2,701.83	12,665.1	6,342.00	0.12	-0.05	0.043
30.00	-43.93	-2.48	0.00	-206.08	0.00	206.08	5,339.83	2,669.92	12,286.3	6,152.32	0.18	-0.06	0.042
35.00	-42.86	-2.47	0.00	-193.69	0.00	193.69	5,274.73	2,637.37	11,910.2	5,963.95	0.24	-0.06	0.041
38.00	-41.51	-2.45	0.00	-186.28	0.00	186.28	5,235.06	2,617.53	11,685.8	5,851.59	0.28	-0.07	0.040
40.00	-38.16	-2.40	0.00	-181.37	0.00	181.37	5,208.36	2,604.18	11,536.7	5,776.96	0.31	-0.07	0.039
45.00	-36.42	-2.38	0.00	-169.35	0.00	169.35	5,197.90	2,598.95	11,478.8	5,747.96	0.40	-0.08	0.036
50.00	-34.70	-2.34	0.00	-157.46	0.00	157.46	5,130.06	2,565.03	11,108.8	5,562.68	0.49	-0.09	0.035
55.00	-33.01	-2.31	0.00	-145.74	0.00	145.74	5,060.94	2,530.47	10,741.9	5,378.96	0.59	-0.10	0.034
60.00	-31.36	-2.26	0.00	-134.22	0.00	134.22	4,990.55	2,495.28	10,378.3	5,196.89	0.70	-0.11	0.032
65.00	-29.73	-2.21	0.00	-122.91	0.00	122.91	4,918.89	2,459.45	10,018.2	5,016.55	0.82	-0.12	0.031
70.00	-28.14	-2.16	0.00	-111.85	0.00	111.85	4,845.96	2,422.98	9,661.67	4,838.01	0.94	-0.12	0.029
75.00	-27.51	-2.13	0.00	-101.07	0.00	101.07	4,771.75	2,385.87	9,308.91	4,661.37	1.08	-0.13	0.027
77.00	-25.86	-2.07	0.00	-96.80	0.00	96.80	4,741.71	2,370.85	9,168.90	4,591.26	1.13	-0.14	0.027
80.00	-24.22	-2.00	0.00	-90.60	0.00	90.60	4,696.27	2,348.13	8,960.09	4,486.71	1.22	-0.14	0.025
83.00	-23.68	-1.97	0.00	-84.62	0.00	84.62	3,852.83	1,926.42	7,391.10	3,701.04	1.31	-0.14	0.029
85.00	-22.35	-1.91	0.00	-80.67	0.00	80.67	3,829.99	1,914.99	7,281.52	3,646.17	1.37	-0.15	0.028
90.00	-21.04	-1.84	0.00	-71.13	0.00	71.13	3,771.99	1,886.00	7,009.36	3,509.89	1.53	-0.15	0.026
95.00	-19.75	-1.77	0.00	-61.93	0.00	61.93	3,712.72	1,856.36	6,739.87	3,374.94	1.69	-0.16	0.024
100.00	-18.50	-1.69	0.00	-53.09	0.00	53.09	3,652.18	1,826.09	6,473.21	3,241.42	1.87	-0.17	0.021
105.00	-17.27	-1.61	0.00	-44.64	0.00	44.64	3,590.36	1,795.18	6,209.55	3,109.39	2.04	-0.17	0.019
110.00	-15.93	-1.51	0.00	-36.60	0.00	36.60	3,527.28	1,763.64	5,949.04	2,978.94	2.23	-0.18	0.017
115.00	-15.52	-1.48	0.00	-29.03	0.00	29.03	3,462.92	1,731.46	5,691.86	2,850.16	2.42	-0.18	0.015
116.75	-15.23	-1.46	0.00	-26.44	0.00	26.44	3,440.09	1,720.04	5,602.67	2,805.50	2.48	-0.18	0.014
117.50	-14.04	-1.37	0.00	-25.34	0.00	25.34	3,430.26	1,715.13	5,564.57	2,786.42	2.51	-0.18	0.013
120.00	-13.28	-1.30	0.00	-21.93	0.00	21.93	3,397.28	1,698.64	5,438.17	2,723.13	2.61	-0.19	0.012
122.00	-12.91	-1.27	0.00	-19.32	0.00	19.32	2,331.76	1,165.88	3,764.78	1,885.19	2.69	-0.19	0.016
124.00	-9.09	-0.95	0.00	-16.77	0.00	16.77	2,316.68	1,158.34	3,700.66	1,853.08	2.77	-0.19	0.013
125.00	-8.26	-0.88	0.00	-15.82	0.00	15.82	2,309.07	1,154.53	3,668.68	1,837.06	2.81	-0.19	0.012
130.00	-7.44	-0.80	0.00	-11.44	0.00	11.44	2,270.23	1,135.11	3,509.52	1,757.37	3.01	-0.19	0.010
135.00	-6.65	-0.72	0.00	-7.44	0.00	7.44	2,230.11	1,115.06	3,351.79	1,678.39	3.21	-0.19	0.007
140.00	-5.88	-0.64	0.00	-3.83	0.00	3.83	2,188.73	1,094.36	3,195.65	1,600.20	3.41	-0.20	0.005
145.00	-5.73	-0.62	0.00	-0.62	0.00	0.62	2,146.07	1,073.03	3,041.25	1,522.89	3.62	-0.20	0.003
146.00	0.00	0.00	0.00	0.00	0.00	0.00	2,137.38	1,068.69	3,010.60	1,507.54	3.66	-0.20	0.000
147.00	0.00	0.00	0.00	0.00	0.00	0.00	2,128.65	1,064.32	2,980.02	1,492.23	3.70	-0.20	0.000

 © 2007 - 2017 by ATC IP LLC. All rights reserved.

Load Case (0.9 - 0.2Sds) * DL + E ELFM Seismic (Reduced DL) Equivalent Lateral Forces Method

Calculated Forces

Seg Elev (ft)	Pu FY (-) (kips)	Vu FX (-) (kips)	Tu MY (ft-kips)	Mu MZ (ft-kips)	Mu MX (ft-kips)	Resultant Moment (ft-kips)	phi Pn (kips)	phi Vn (kips)	phi Tn (ft-kips)	phi Mn (ft-kips)	Total Deflect (in)	Rotation (deg)	Ratio
0.00	-38.21	-2.49	0.00	-278.96	0.00	278.96	5,703.70	2,851.85	14,592.4	7,307.09	0.00	0.00	0.045
5.00	-36.85	-2.49	0.00	-266.51	0.00	266.51	5,646.24	2,823.12	14,203.1	7,112.12	0.00	-0.01	0.044
10.00	-35.51	-2.50	0.00	-254.04	0.00	254.04	5,587.50	2,793.75	13,815.5	6,918.04	0.02	-0.02	0.043
15.00	-34.20	-2.49	0.00	-241.57	0.00	241.57	5,527.49	2,763.75	13,429.9	6,724.94	0.04	-0.03	0.042
20.00	-32.90	-2.49	0.00	-229.10	0.00	229.10	5,466.21	2,733.11	13,046.4	6,532.90	0.08	-0.04	0.041
25.00	-31.63	-2.48	0.00	-216.66	0.00	216.66	5,403.66	2,701.83	12,665.1	6,342.00	0.12	-0.05	0.040
30.00	-30.37	-2.46	0.00	-204.27	0.00	204.27	5,339.83	2,669.92	12,286.3	6,152.32	0.17	-0.06	0.039
35.00	-29.63	-2.45	0.00	-191.95	0.00	191.95	5,274.73	2,637.37	11,910.2	5,963.95	0.24	-0.06	0.038
38.00	-28.70	-2.44	0.00	-184.59	0.00	184.59	5,235.06	2,617.53	11,685.8	5,851.59	0.28	-0.07	0.037
40.00	-26.38	-2.39	0.00	-179.71	0.00	179.71	5,208.36	2,604.18	11,536.7	5,776.96	0.31	-0.07	0.036
45.00	-25.18	-2.36	0.00	-167.77	0.00	167.77	5,197.90	2,598.95	11,478.8	5,747.96	0.39	-0.08	0.034
50.00	-23.99	-2.33	0.00	-155.97	0.00	155.97	5,130.06	2,565.03	11,108.8	5,562.68	0.48	-0.09	0.033
55.00	-22.82	-2.29	0.00	-144.34	0.00	144.34	5,060.94	2,530.47	10,741.9	5,378.96	0.58	-0.10	0.031
60.00	-21.68	-2.24	0.00	-132.91	0.00	132.91	4,990.55	2,495.28	10,378.3	5,196.89	0.69	-0.11	0.030
65.00	-20.56	-2.19	0.00	-121.70	0.00	121.70	4,918.89	2,459.45	10,018.2	5,016.55	0.81	-0.12	0.028
70.00	-19.45	-2.14	0.00	-110.75	0.00	110.75	4,845.96	2,422.98	9,661.67	4,838.01	0.94	-0.12	0.027
75.00	-19.02	-2.11	0.00	-100.06	0.00	100.06	4,771.75	2,385.87	9,308.91	4,661.37	1.07	-0.13	0.025
77.00	-17.87	-2.05	0.00	-95.84	0.00	95.84	4,741.71	2,370.85	9,168.90	4,591.26	1.13	-0.13	0.025
80.00	-16.75	-1.98	0.00	-89.69	0.00	89.69	4,696.27	2,348.13	8,960.09	4,486.71	1.21	-0.14	0.024
83.00	-16.37	-1.95	0.00	-83.76	0.00	83.76	3,852.83	1,926.42	7,391.10	3,701.04	1.30	-0.14	0.027
85.00	-15.45	-1.89	0.00	-79.86	0.00	79.86	3,829.99	1,914.99	7,281.52	3,646.17	1.36	-0.15	0.026
90.00	-14.54	-1.82	0.00	-70.41	0.00	70.41	3,771.99	1,886.00	7,009.36	3,509.89	1.52	-0.15	0.024
95.00	-13.66	-1.75	0.00	-61.30	0.00	61.30	3,712.72	1,856.36	6,739.87	3,374.94	1.68	-0.16	0.022
100.00	-12.79	-1.67	0.00	-52.55	0.00	52.55	3,652.18	1,826.09	6,473.21	3,241.42	1.85	-0.17	0.020
105.00	-11.94	-1.59	0.00	-44.18	0.00	44.18	3,590.36	1,795.18	6,209.55	3,109.39	2.03	-0.17	0.018
110.00	-11.01	-1.50	0.00	-36.22	0.00	36.22	3,527.28	1,763.64	5,949.04	2,978.94	2.21	-0.18	0.015
115.00	-10.73	-1.47	0.00	-28.74	0.00	28.74	3,462.92	1,731.46	5,691.86	2,850.16	2.39	-0.18	0.013
116.75	-10.53	-1.44	0.00	-26.17	0.00	26.17	3,440.09	1,720.04	5,602.67	2,805.50	2.46	-0.18	0.012
117.50	-9.71	-1.35	0.00	-25.09	0.00	25.09	3,430.26	1,715.13	5,564.57	2,786.42	2.49	-0.18	0.012
120.00	-9.18	-1.29	0.00	-21.71	0.00	21.71	3,397.28	1,698.64	5,438.17	2,723.13	2.59	-0.18	0.011
122.00	-8.93	-1.26	0.00	-19.13	0.00	19.13	2,331.76	1,165.88	3,764.78	1,885.19	2.66	-0.19	0.014
124.00	-6.28	-0.94	0.00	-16.61	0.00	16.61	2,316.68	1,158.34	3,700.66	1,853.08	2.74	-0.19	0.012
125.00	-5.71	-0.87	0.00	-15.67	0.00	15.67	2,309.07	1,154.53	3,668.68	1,837.06	2.78	-0.19	0.011
130.00	-5.15	-0.79	0.00	-11.33	0.00	11.33	2,270.23	1,135.11	3,509.52	1,757.37	2.98	-0.19	0.009
135.00	-4.60	-0.71	0.00	-7.37	0.00	7.37	2,230.11	1,115.06	3,351.79	1,678.39	3.18	-0.19	0.006
140.00	-4.06	-0.63	0.00	-3.79	0.00	3.79	2,188.73	1,094.36	3,195.65	1,600.20	3.38	-0.19	0.004
145.00	-3.96	-0.62	0.00	-0.62	0.00	0.62	2,146.07	1,073.03	3,041.25	1,522.89	3.59	-0.19	0.002
146.00	0.00	0.00	0.00	0.00	0.00	0.00	2,137.38	1,068.69	3,010.60	1,507.54	3.63	-0.19	0.000
147.00	0.00	0.00	0.00	0.00	0.00	0.00	2,128.65	1,064.32	2,980.02	1,492.23	3.67	-0.19	0.000

 © 2007 - 2017 by ATC IP LLC. All rights reserved.

Equivalent Modal Forces Analysis

(Based on ASCE7-10 Chapters 11, 12 & 15 and ANSI/TIA-G, section 2.7)

Spectral Response Acceleration for Short Period (S_s):	0.19
Spectral Response Acceleration at 1.0 Second Period (S_1):	0.06
Importance Factor (I_E):	1.00
Site Coefficient F_a:	1.60
Site Coefficient F_v	2.40
Response Modification Coefficient (R):	1.50
Design Spectral Response Acceleration at Short Period (S_{ds}):	0.21
Desing Spectral Response Acceleration at 1.0 Second Period (S_{d1}):	0.10
Period Based on Rayleigh Method (sec):	1.67
Redundancy Factor (p):	1.30

Load Case (1.2 + 0.2Sds) * DL + E EMAM Seismic Equivalent Modal Analysis Method

Segment	Height Above Base (ft)	Weight (lb)	a	b	c	Saz	Horizontal Force (lb)	Vertical Force (lb)
38	146.50	104	1.877	1.913	1.116	0.394	35	129
37	145.50	123	1.852	1.784	1.069	0.377	40	152
36	142.50	623	1.776	1.432	0.937	0.327	176	773
35	137.50	638	1.654	0.954	0.745	0.251	139	793
34	132.50	654	1.536	0.592	0.586	0.185	105	812
33	127.50	670	1.422	0.326	0.455	0.128	74	832
32	124.50	136	1.356	0.205	0.388	0.098	12	169
31	123.00	296	1.323	0.154	0.357	0.085	22	367
30	121.00	613	1.281	0.094	0.319	0.068	36	761
29	118.75	774	1.233	0.038	0.280	0.051	34	961
28	117.13	234	1.200	0.005	0.255	0.040	8	291
27	115.88	334	1.174	-0.018	0.236	0.032	9	415
26	112.50	970	1.107	-0.066	0.191	0.013	11	1,204
25	107.50	992	1.011	-0.107	0.137	-0.007	-6	1,231
24	102.50	1,013	0.919	-0.121	0.095	-0.019	-17	1,257
23	97.50	1,033	0.831	-0.117	0.063	-0.023	-20	1,283
22	92.50	1,054	0.748	-0.100	0.040	-0.019	-18	1,309
21	87.50	1,075	0.670	-0.077	0.024	-0.011	-10	1,335
20	84.00	436	0.617	-0.059	0.017	-0.002	-1	541
19	81.50	1,315	0.581	-0.046	0.013	0.004	4	1,633
18	78.50	1,332	0.539	-0.030	0.009	0.012	14	1,653
17	76.00	507	0.505	-0.018	0.007	0.018	8	629
16	72.50	1,284	0.460	-0.002	0.006	0.027	30	1,594
15	67.50	1,309	0.399	0.019	0.007	0.036	41	1,625
14	62.50	1,333	0.342	0.035	0.009	0.043	50	1,655
13	57.50	1,358	0.289	0.048	0.013	0.048	56	1,686
12	52.50	1,382	0.241	0.057	0.018	0.050	60	1,716
11	47.50	1,407	0.197	0.063	0.024	0.050	61	1,746
10	42.50	2,693	0.158	0.067	0.029	0.049	115	3,343
9	39.00	1,091	0.133	0.069	0.033	0.048	46	1,354
8	36.50	864	0.117	0.070	0.035	0.048	36	1,073
7	32.50	1,459	0.092	0.071	0.038	0.046	59	1,812
6	27.50	1,484	0.066	0.072	0.041	0.045	57	1,842
5	22.50	1,508	0.044	0.071	0.042	0.043	56	1,873

 © 2007 - 2017 by ATC IP LLC. All rights reserved.

4	17.50	1,533	0.027	0.067	0.040	0.040	53	1,903
3	12.50	1,557	0.014	0.059	0.035	0.036	48	1,934
2	7.50	1,582	0.005	0.044	0.025	0.028	38	1,964
1	2.50	1,606	0.001	0.019	0.010	0.012	17	1,994
Alcatel-Lucent RRH2X	146.00	138	1.864	1.848	1.092	0.385	46	171
Alcatel-Lucent RRH2x	146.00	132	1.864	1.848	1.092	0.385	44	164
Alcatel-Lucent RRH2x	146.00	170	1.864	1.848	1.092	0.385	57	211
3' Yagi	146.00	10	1.864	1.848	1.092	0.385	3	12
RFS DB-T1-6Z-8AB-0Z	146.00	44	1.864	1.848	1.092	0.385	15	55
Antel LPA-80080/4CF	146.00	48	1.864	1.848	1.092	0.385	16	60
Antel LPA-80063/4CF	146.00	40	1.864	1.848	1.092	0.385	13	50
Commscope SBNHH-	146.00	244	1.864	1.848	1.092	0.385	81	302
Flat Platform w/ Han	146.00	2,000	1.864	1.848	1.092	0.385	668	2,483
VZW Unused Reserve:	146.00	1,684	1.864	1.848	1.092	0.385	563	2,091
Powerwave LGP21901	124.00	33	1.345	0.187	0.377	0.094	3	41
Powerwave LGP2140X	124.00	114	1.345	0.187	0.377	0.094	9	142
Raycap DC6-48-60-18-	124.00	33	1.345	0.187	0.377	0.094	3	41
Raycap DC6-48-60-18-	124.00	32	1.345	0.187	0.377	0.094	3	39
Ericsson RRUS 4478 B	124.00	180	1.345	0.187	0.377	0.094	15	223
Ericsson RRUS 32 B2	124.00	159	1.345	0.187	0.377	0.094	13	197
Ericsson RRUS-11	124.00	330	1.345	0.187	0.377	0.094	27	410
Powerwave 7770.00	124.00	210	1.345	0.187	0.377	0.094	17	261
Kathrein 800 10764	124.00	41	1.345	0.187	0.377	0.094	3	51
KMW AM-X-CD-16-65-00	124.00	97	1.345	0.187	0.377	0.094	8	120
KMW EPBQ-654L8H6-L2	124.00	218	1.345	0.187	0.377	0.094	18	271
Round Low Profile Pl	124.00	1,500	1.345	0.187	0.377	0.094	122	1,862
3' Omni-Grid	117.50	30	1.208	0.012	0.260	0.042	1	37
Stand-Off	117.50	150	1.208	0.012	0.260	0.042	5	186
Stand-Off	110.00	75	1.058	-0.090	0.162	0.002	0	93
8' Yagi	110.00	30	1.058	-0.090	0.162	0.002	0	37
		46,117	67.108	28.135	24.033	7.717	3,231	57,259

Load Case (0.9 - 0.2Sds) * DL + E EMAM Seismic (Reduced DL) Equivalent Modal Analysis Method

Segment	Height Above Base (ft)	Weight (lb)	a	b	c	Saz	Horizontal Force (lb)	Vertical Force (lb)
38	146.50	104	1.877	1.913	1.116	0.394	35	89
37	145.50	123	1.852	1.784	1.069	0.377	40	105
36	142.50	623	1.776	1.432	0.937	0.327	176	534
35	137.50	638	1.654	0.954	0.745	0.251	139	548
34	132.50	654	1.536	0.592	0.586	0.185	105	561
33	127.50	670	1.422	0.326	0.455	0.128	74	575
32	124.50	136	1.356	0.205	0.388	0.098	12	117
31	123.00	296	1.323	0.154	0.357	0.085	22	254
30	121.00	613	1.281	0.094	0.319	0.068	36	526
29	118.75	774	1.233	0.038	0.280	0.051	34	665
28	117.13	234	1.200	0.005	0.255	0.040	8	201
27	115.88	334	1.174	-0.018	0.236	0.032	9	287
26	112.50	970	1.107	-0.066	0.191	0.013	11	832
25	107.50	992	1.011	-0.107	0.137	-0.007	-6	851
24	102.50	1,013	0.919	-0.121	0.095	-0.019	-17	869
23	97.50	1,033	0.831	-0.117	0.063	-0.023	-20	887
22	92.50	1,054	0.748	-0.100	0.040	-0.019	-18	905
21	87.50	1,075	0.670	-0.077	0.024	-0.011	-10	923
20	84.00	436	0.617	-0.059	0.017	-0.002	-1	374
19	81.50	1,315	0.581	-0.046	0.013	0.004	4	1,129
18	78.50	1,332	0.539	-0.030	0.009	0.012	14	1,143
17	76.00	507	0.505	-0.018	0.007	0.018	8	435
16	72.50	1,284	0.460	-0.002	0.006	0.027	30	1,102

© 2007 - 2017 by ATC IP LLC. All rights reserved.

15	67.50	1,309	0.399	0.019	0.007	0.036	41	1,123
14	62.50	1,333	0.342	0.035	0.009	0.043	50	1,144
13	57.50	1,358	0.289	0.048	0.013	0.048	56	1,165
12	52.50	1,382	0.241	0.057	0.018	0.050	60	1,186
11	47.50	1,407	0.197	0.063	0.024	0.050	61	1,207
10	42.50	2,693	0.158	0.067	0.029	0.049	115	2,311
9	39.00	1,091	0.133	0.069	0.033	0.048	46	936
8	36.50	864	0.117	0.070	0.035	0.048	36	742
7	32.50	1,459	0.092	0.071	0.038	0.046	59	1,253
6	27.50	1,484	0.066	0.072	0.041	0.045	57	1,274
5	22.50	1,508	0.044	0.071	0.042	0.043	56	1,295
4	17.50	1,533	0.027	0.067	0.040	0.040	53	1,316
3	12.50	1,557	0.014	0.059	0.035	0.036	48	1,337
2	7.50	1,582	0.005	0.044	0.025	0.028	38	1,358
1	2.50	1,606	0.001	0.019	0.010	0.012	17	1,379
Alcatel-Lucent RRH2X	146.00	138	1.864	1.848	1.092	0.385	46	118
Alcatel-Lucent RRH2x	146.00	132	1.864	1.848	1.092	0.385	44	113
Alcatel-Lucent RRH2x	146.00	170	1.864	1.848	1.092	0.385	57	146
3' Yagi	146.00	10	1.864	1.848	1.092	0.385	3	9
RFS DB-T1-6Z-8AB-0Z	146.00	44	1.864	1.848	1.092	0.385	15	38
Antel LPA-80080/4CF	146.00	48	1.864	1.848	1.092	0.385	16	41
Antel LPA-80063/4CF	146.00	40	1.864	1.848	1.092	0.385	13	34
Commscope SBNHH-	146.00	244	1.864	1.848	1.092	0.385	81	209
Flat Platform w/ Han	146.00	2,000	1.864	1.848	1.092	0.385	668	1,717
VZW Unused Reserve:	146.00	1,684	1.864	1.848	1.092	0.385	563	1,446
Powerwave LGP21901	124.00	33	1.345	0.187	0.377	0.094	3	28
Powerwave LGP2140X	124.00	114	1.345	0.187	0.377	0.094	9	98
Raycap DC6-48-60-18-	124.00	33	1.345	0.187	0.377	0.094	3	28
Raycap DC6-48-60-18-	124.00	32	1.345	0.187	0.377	0.094	3	27
Ericsson RRUS 4478 B	124.00	180	1.345	0.187	0.377	0.094	15	154
Ericsson RRUS 32 B2	124.00	159	1.345	0.187	0.377	0.094	13	136
Ericsson RRUS-11	124.00	330	1.345	0.187	0.377	0.094	27	283
Powerwave 7770.00	124.00	210	1.345	0.187	0.377	0.094	17	180
Kathrein 800 10764	124.00	41	1.345	0.187	0.377	0.094	3	35
KMW AM-X-CD-16-65-00	124.00	97	1.345	0.187	0.377	0.094	8	83
KMW EPBQ-654L8H6-L2	124.00	218	1.345	0.187	0.377	0.094	18	187
Round Low Profile Pl	124.00	1,500	1.345	0.187	0.377	0.094	122	1,288
3' Omni-Grid	117.50	30	1.208	0.012	0.260	0.042	1	26
Stand-Off	117.50	150	1.208	0.012	0.260	0.042	5	129
Stand-Off	110.00	75	1.058	-0.090	0.162	0.002	0	64
8' Yagi	110.00	30	1.058	-0.090	0.162	0.002	0	26
		46,117	67.108	28.135	24.033	7.717	3,231	39,587

 © 2007 - 2017 by ATC IP LLC. All rights reserved.

Load Case (1.2 + 0.2Sds) * DL + E EMAM Seismic Equivalent Modal Analysis Method

Calculated Forces

Seg Elev (ft)	Pu FY (-) (kips)	Vu FX (-) (kips)	Tu MY (ft-kips)	Mu MZ (ft-kips)	Mu MX (ft-kips)	Resultant Moment (ft-kips)	phi Pn (kips)	phi Vn (kips)	phi Tn (ft-kips)	phi Mn (ft-kips)	Total Deflect (in)	Rotation (deg)	Ratio
0.00	-55.26	-3.22	0.00	-377.80	0.00	377.80	5,703.70	2,851.85	14,592.4	7,307.09	0.00	0.00	0.061
5.00	-53.30	-3.19	0.00	-361.70	0.00	361.70	5,646.24	2,823.12	14,203.1	7,112.12	0.01	-0.01	0.060
10.00	-51.37	-3.16	0.00	-345.74	0.00	345.74	5,587.50	2,793.75	13,815.5	6,918.04	0.03	-0.02	0.059
15.00	-49.46	-3.11	0.00	-329.97	0.00	329.97	5,527.49	2,763.75	13,429.9	6,724.94	0.06	-0.04	0.058
20.00	-47.59	-3.06	0.00	-314.41	0.00	314.41	5,466.21	2,733.11	13,046.4	6,532.90	0.11	-0.05	0.057
25.00	-45.75	-3.02	0.00	-299.08	0.00	299.08	5,403.66	2,701.83	12,665.1	6,342.00	0.17	-0.06	0.056
30.00	-43.93	-2.96	0.00	-284.01	0.00	284.01	5,339.83	2,669.92	12,286.3	6,152.32	0.24	-0.08	0.054
35.00	-42.86	-2.94	0.00	-269.18	0.00	269.18	5,274.73	2,637.37	11,910.2	5,963.95	0.32	-0.09	0.053
38.00	-41.50	-2.89	0.00	-260.38	0.00	260.38	5,235.06	2,617.53	11,685.8	5,851.59	0.38	-0.10	0.052
40.00	-38.16	-2.78	0.00	-254.59	0.00	254.59	5,208.36	2,604.18	11,536.7	5,776.96	0.42	-0.10	0.051
45.00	-36.41	-2.72	0.00	-240.71	0.00	240.71	5,197.90	2,598.95	11,478.8	5,747.96	0.54	-0.11	0.049
50.00	-34.70	-2.67	0.00	-227.10	0.00	227.10	5,130.06	2,565.03	11,108.8	5,562.68	0.66	-0.13	0.048
55.00	-33.01	-2.61	0.00	-213.77	0.00	213.77	5,060.94	2,530.47	10,741.9	5,378.96	0.80	-0.14	0.046
60.00	-31.36	-2.57	0.00	-200.70	0.00	200.70	4,990.55	2,495.28	10,378.3	5,196.89	0.96	-0.15	0.045
65.00	-29.73	-2.53	0.00	-187.88	0.00	187.88	4,918.89	2,459.45	10,018.2	5,016.55	1.12	-0.16	0.043
70.00	-28.14	-2.50	0.00	-175.25	0.00	175.25	4,845.96	2,422.98	9,661.67	4,838.01	1.30	-0.18	0.042
75.00	-27.51	-2.49	0.00	-162.76	0.00	162.76	4,771.75	2,385.87	9,308.91	4,661.37	1.49	-0.19	0.041
77.00	-25.85	-2.48	0.00	-157.78	0.00	157.78	4,741.71	2,370.85	9,168.90	4,591.26	1.57	-0.19	0.040
80.00	-24.22	-2.47	0.00	-150.35	0.00	150.35	4,696.27	2,348.13	8,960.09	4,486.71	1.69	-0.20	0.039
83.00	-23.68	-2.47	0.00	-142.95	0.00	142.95	3,852.83	1,926.42	7,391.10	3,701.04	1.82	-0.21	0.045
85.00	-22.34	-2.48	0.00	-138.01	0.00	138.01	3,829.99	1,914.99	7,281.52	3,646.17	1.91	-0.21	0.044
90.00	-21.03	-2.50	0.00	-125.62	0.00	125.62	3,771.99	1,886.00	7,009.36	3,509.89	2.14	-0.22	0.041
95.00	-19.75	-2.51	0.00	-113.15	0.00	113.15	3,712.72	1,856.36	6,739.87	3,374.94	2.38	-0.24	0.039
100.00	-18.49	-2.53	0.00	-100.57	0.00	100.57	3,652.18	1,826.09	6,473.21	3,241.42	2.63	-0.25	0.036
105.00	-17.26	-2.53	0.00	-87.93	0.00	87.93	3,590.36	1,795.18	6,209.55	3,109.39	2.90	-0.26	0.033
110.00	-15.92	-2.52	0.00	-75.26	0.00	75.26	3,527.28	1,763.64	5,949.04	2,978.94	3.17	-0.27	0.030
115.00	-15.51	-2.51	0.00	-62.67	0.00	62.67	3,462.92	1,731.46	5,691.86	2,850.16	3.46	-0.28	0.026
116.75	-15.22	-2.50	0.00	-58.27	0.00	58.27	3,440.09	1,720.04	5,602.67	2,805.50	3.56	-0.28	0.025
117.50	-14.03	-2.45	0.00	-56.40	0.00	56.40	3,430.26	1,715.13	5,564.57	2,786.42	3.61	-0.28	0.024
120.00	-13.27	-2.42	0.00	-50.26	0.00	50.26	3,397.28	1,698.64	5,438.17	2,723.13	3.76	-0.29	0.022
122.00	-12.91	-2.39	0.00	-45.43	0.00	45.43	2,331.76	1,165.88	3,764.78	1,885.19	3.88	-0.29	0.030
124.00	-9.08	-2.12	0.00	-40.65	0.00	40.65	2,316.68	1,158.34	3,700.66	1,853.08	4.00	-0.29	0.026
125.00	-8.25	-2.04	0.00	-38.52	0.00	38.52	2,309.07	1,154.53	3,668.68	1,837.06	4.06	-0.29	0.025
130.00	-7.44	-1.94	0.00	-28.30	0.00	28.30	2,270.23	1,135.11	3,509.52	1,757.37	4.37	-0.30	0.019
135.00	-6.64	-1.79	0.00	-18.62	0.00	18.62	2,230.11	1,115.06	3,351.79	1,678.39	4.69	-0.31	0.014
140.00	-5.87	-1.61	0.00	-9.64	0.00	9.64	2,188.73	1,094.36	3,195.65	1,600.20	5.02	-0.31	0.009
145.00	-5.72	-1.57	0.00	-1.57	0.00	1.57	2,146.07	1,073.03	3,041.25	1,522.89	5.35	-0.31	0.004
146.00	0.00	0.00	0.00	0.00	0.00	0.00	2,137.38	1,068.69	3,010.60	1,507.54	5.41	-0.31	0.000
147.00	0.00	0.00	0.00	0.00	0.00	0.00	2,128.65	1,064.32	2,980.02	1,492.23	5.48	-0.31	0.000

 © 2007 - 2017 by ATC IP LLC. All rights reserved.

Load Case (0.9 - 0.2Sds) * DL + E EMAM Seismic (Reduced DL) Equivalent Modal Analysis Method

Calculated Forces

Seg Elev (ft)	Pu FY (-) (kips)	Vu FX (-) (kips)	Tu MY (ft-kips)	Mu MZ (ft-kips)	Mu MX (ft-kips)	Resultant Moment (ft-kips)	phi Pn (kips)	phi Vn (kips)	phi Tn (ft-kips)	phi Mn (ft-kips)	Total Deflect (in)	Rotation (deg)	Ratio
0.00	-38.21	-3.22	0.00	-374.87	0.00	374.87	5,703.70	2,851.85	14,592.4	7,307.09	0.00	0.00	0.058
5.00	-36.85	-3.19	0.00	-358.79	0.00	358.79	5,646.24	2,823.12	14,203.1	7,112.12	0.01	-0.01	0.057
10.00	-35.51	-3.15	0.00	-342.85	0.00	342.85	5,587.50	2,793.75	13,815.5	6,918.04	0.03	-0.02	0.056
15.00	-34.20	-3.10	0.00	-327.12	0.00	327.12	5,527.49	2,763.75	13,429.9	6,724.94	0.06	-0.04	0.055
20.00	-32.90	-3.05	0.00	-311.62	0.00	311.62	5,466.21	2,733.11	13,046.4	6,532.90	0.10	-0.05	0.054
25.00	-31.63	-3.00	0.00	-296.37	0.00	296.37	5,403.66	2,701.83	12,665.1	6,342.00	0.16	-0.06	0.053
30.00	-30.37	-2.94	0.00	-281.38	0.00	281.38	5,339.83	2,669.92	12,286.3	6,152.32	0.24	-0.08	0.051
35.00	-29.63	-2.91	0.00	-266.66	0.00	266.66	5,274.73	2,637.37	11,910.2	5,963.95	0.32	-0.09	0.050
38.00	-28.69	-2.87	0.00	-257.92	0.00	257.92	5,235.06	2,617.53	11,685.8	5,851.59	0.38	-0.10	0.050
40.00	-26.38	-2.76	0.00	-252.18	0.00	252.18	5,208.36	2,604.18	11,536.7	5,776.96	0.42	-0.10	0.049
45.00	-25.17	-2.70	0.00	-238.40	0.00	238.40	5,197.90	2,598.95	11,478.8	5,747.96	0.53	-0.11	0.046
50.00	-23.99	-2.64	0.00	-224.92	0.00	224.92	5,130.06	2,565.03	11,108.8	5,562.68	0.66	-0.13	0.045
55.00	-22.82	-2.59	0.00	-211.71	0.00	211.71	5,060.94	2,530.47	10,741.9	5,378.96	0.80	-0.14	0.044
60.00	-21.68	-2.54	0.00	-198.78	0.00	198.78	4,990.55	2,495.28	10,378.3	5,196.89	0.95	-0.15	0.043
65.00	-20.55	-2.50	0.00	-186.09	0.00	186.09	4,918.89	2,459.45	10,018.2	5,016.55	1.11	-0.16	0.041
70.00	-19.45	-2.47	0.00	-173.60	0.00	173.60	4,845.96	2,422.98	9,661.67	4,838.01	1.29	-0.17	0.040
75.00	-19.01	-2.46	0.00	-161.25	0.00	161.25	4,771.75	2,385.87	9,308.91	4,661.37	1.48	-0.19	0.039
77.00	-17.87	-2.45	0.00	-156.33	0.00	156.33	4,741.71	2,370.85	9,168.90	4,591.26	1.55	-0.19	0.038
80.00	-16.74	-2.44	0.00	-148.99	0.00	148.99	4,696.27	2,348.13	8,960.09	4,486.71	1.68	-0.20	0.037
83.00	-16.37	-2.44	0.00	-141.66	0.00	141.66	3,852.83	1,926.42	7,391.10	3,701.04	1.80	-0.20	0.043
85.00	-15.44	-2.45	0.00	-136.78	0.00	136.78	3,829.99	1,914.99	7,281.52	3,646.17	1.89	-0.21	0.042
90.00	-14.54	-2.47	0.00	-124.52	0.00	124.52	3,771.99	1,886.00	7,009.36	3,509.89	2.12	-0.22	0.039
95.00	-13.65	-2.49	0.00	-112.18	0.00	112.18	3,712.72	1,856.36	6,739.87	3,374.94	2.35	-0.23	0.037
100.00	-12.78	-2.50	0.00	-99.74	0.00	99.74	3,652.18	1,826.09	6,473.21	3,241.42	2.61	-0.25	0.034
105.00	-11.93	-2.51	0.00	-87.22	0.00	87.22	3,590.36	1,795.18	6,209.55	3,109.39	2.87	-0.26	0.031
110.00	-11.01	-2.49	0.00	-74.68	0.00	74.68	3,527.28	1,763.64	5,949.04	2,978.94	3.14	-0.27	0.028
115.00	-10.72	-2.49	0.00	-62.21	0.00	62.21	3,462.92	1,731.46	5,691.86	2,850.16	3.43	-0.28	0.025
116.75	-10.52	-2.48	0.00	-57.86	0.00	57.86	3,440.09	1,720.04	5,602.67	2,805.50	3.53	-0.28	0.024
117.50	-9.70	-2.43	0.00	-56.00	0.00	56.00	3,430.26	1,715.13	5,564.57	2,786.42	3.57	-0.28	0.023
120.00	-9.17	-2.39	0.00	-49.92	0.00	49.92	3,397.28	1,698.64	5,438.17	2,723.13	3.72	-0.28	0.021
122.00	-8.92	-2.37	0.00	-45.13	0.00	45.13	2,331.76	1,165.88	3,764.78	1,885.19	3.84	-0.29	0.028
124.00	-6.27	-2.11	0.00	-40.38	0.00	40.38	2,316.68	1,158.34	3,700.66	1,853.08	3.96	-0.29	0.025
125.00	-5.70	-2.03	0.00	-38.28	0.00	38.28	2,309.07	1,154.53	3,668.68	1,837.06	4.02	-0.29	0.023
130.00	-5.14	-1.92	0.00	-28.12	0.00	28.12	2,270.23	1,135.11	3,509.52	1,757.37	4.33	-0.30	0.018
135.00	-4.59	-1.78	0.00	-18.50	0.00	18.50	2,230.11	1,115.06	3,351.79	1,678.39	4.65	-0.30	0.013
140.00	-4.06	-1.60	0.00	-9.58	0.00	9.58	2,188.73	1,094.36	3,195.65	1,600.20	4.97	-0.31	0.008
145.00	-3.95	-1.56	0.00	-1.56	0.00	1.56	2,146.07	1,073.03	3,041.25	1,522.89	5.30	-0.31	0.003
146.00	0.00	0.00	0.00	0.00	0.00	0.00	2,137.38	1,068.69	3,010.60	1,507.54	5.36	-0.31	0.000
147.00	0.00	0.00	0.00	0.00	0.00	0.00	2,128.65	1,064.32	2,980.02	1,492.23	5.43	-0.31	0.000

© 2007 - 2017 by ATC IP LLC. All rights reserved.

Analysis Summary

	Reactions						Max Usage	
Load Case	Shear FX (kips)	Shear FZ (kips)	Axial FY (kips)	Moment MX (ft-kips)	Moment MY (ft-kips)	Moment MZ (ft-kips)	Elev (ft)	Interaction Ratio
1.2D + 1.6W	25.95	0.00	55.32	0.00	0.00	2863.44	0.00	0.40
0.9D + 1.6W	25.94	0.00	41.48	0.00	0.00	2845.77	0.00	0.40
1.2D + 1.0Di + 1.0Wi	5.29	0.00	77.59	0.00	0.00	570.65	0.00	0.09
(1.2 + 0.2Sds) * DL + E ELFM	2.49	0.00	55.26	0.00	0.00	281.00	0.00	0.05
(1.2 + 0.2Sds) * DL + E EMAM	3.22	0.00	55.26	0.00	0.00	377.80	0.00	0.06
(0.9 - 0.2Sds) * DL + E ELFM	2.49	0.00	38.21	0.00	0.00	278.96	0.00	0.04
(0.9 - 0.2Sds) * DL + E EMAM	3.22	0.00	38.21	0.00	0.00	374.87	0.00	0.06
1.0D + 1.0W	6.75	0.00	46.12	0.00	0.00	741.90	0.00	0.11

Site Number:	**411180**	*Last Updated:*	*9/1/2017*
Site Name:	**Good Hill CT, CT**		
Job Number:	**OAA716290**		
Engineer:	**Sean.Rock**		
Date:	**11/10/2017**		

Base Plate and Bolt Analysis

Moment:	2863.4	k-ft
Shear/Leg:	26.0	k
Compression/Leg:	77.6	k

TIA-222 Code Revision (F/G):	G	
Anchor Bolt Arrangement:	Corners	
Monopole Shaft Diameter (Across Flats):	62.7	in
Lower Monopole Thickness:	0.438	in
# of Sides of Pole:	18	
Monopole Shaft Yield Strength:	65	ksi
Baseplate Diameter / Length:	70.00	
Base Plate Thickness:	3.00	in
Base Plate Yield Strength:	55	ksi
Baseplate Detail Type:	D	
Include Plate Thickness Beyond Bolt Circle:	Y	
Stress Increase:	1.00	
Fillet Weld Size:	0.313	in
Weld Type (CJP or F/F):	CJP	
Weld Strength:	70	ksi

Anchor Bolts

Anchor Bolt Yield Strength:	75	ksi
Anchor Bolt Ultimate Strength:	100	ksi
Anchor Bolt Diameter:	2.25	in
Anchor Bolt Circle:	70.00	in
# of Anchor Bolts:	24	
Minimum Anchor Bolt Separation:	6.00	in
Additional Anchor Bolts Installed:	N	

	Baseplate Flexural Capacity					Baseplate Shear Capacity			
Failure Mode:	Effective Width (in)	Moment (k-in)	S/Z (in^3)	Capacity (k-in)	Usage	Shear (k)	Area (in^2)	Capacity (k)	Usage
AA	35.21	859.1	79.2	3921.0	**0.22**	489.3	105.6	3136.8	**0.16**
BA	37.22	1095.6	83.8	4145.9	**0.26**	489.3	111.7	3316.7	**0.15**

Anchor Bolt Capacity

Area of Bolt:	3.25	in^2
Inertia of Bolt:	0.84	in^4
Total Bolt Inertia:	47761.1	in^4
Maximum Bolt Tension:	78.5	k
Maximum Bolt Compression:	85.0	k
Bolt Shear:	1.1	k
Tensile Bolt Capacity:	259.8	k
Compressive Bolt Capacity:	259.8	k
Shear Bolt Capacity:	140.3	k
Interaction Equation:	**0.34**	Result: OK

Base Weld Capacity

Force / Weld:	8.9	k/in
Weld Capacity:	28.5	k/in
Interaction Equation:	**0.31**	Result: OK