Colliers Engineering & Design, Architecture,
Landscape Architecture, Surveying, CT P.C.
5141 Virginia Way Suite 420
Brentwood, TN 37027
615.686.2575
sean.osullivan@collierseng.com

New Antenna Mount Analysis Report and PII Requirements

Mount Analysis-N
SMART Tool Project #: 10346370
Colliers Engineering & Design Project #: 25777822 (Rev. 1)

April 13, 2026

Site Information	*Site ID:*	*5000992841-VZW / WILLINGTON HILL CT*
	Site Name:	*WILLINGTON HILL CT*
	Carrier Name:	*Verizon Wireless*
	Address:	*196 Tolland Turnpike* *Willington, Connecticut 06279* *Tolland County*
	Latitude:	*41.87565°*
	Longitude:	*-72.26937°*
Structure Information	*Tower Type:*	*159-Ft Monopole*
	Mount Type:	*12.50-Ft Platform*

FUZE ID # 17488523

Analysis Results

Platform: **22.6% Pass w/ New Mount Install***
((1) Site Pro 1 P/N: RMQP-496-HK)

***Antennas and equipment to be installed in compliance with PII Requirements of this mount analysis.**

******Contractor PII Requirements*:**
Included at the end of this MA report
Available & Submitted via portal at https://pmi.vzwsmart.com
For additional questions and support, please reach out to:
pmisupport@colliersengineering.com

Report Prepared By: Dan Palmadessa

Kayla Weimert
STATE OF CONNECTICUT
39270
LICENSED PROFESSIONAL ENGINEER

Digitally signed by Kayla Weimert
Date: 2026.04.13 15:16:12-04'00'

Executive Summary:

The objective of this report is to determine the capacity of the proposed antenna support mount at the subject facility for the final wireless telecommunications configuration, per the applicable codes and standards. The proposed mount was assumed to be installed properly to the existing tower per the manufacturer's instructions. Colliers Engineering & Design cannot verify that the proposed mount will fit properly and is not liable for any fit-up issues during installation.

This analysis is inclusive of the mount structure only and does not address the structural capacity of the supporting structure. This mounting frame was not analyzed as an anchor attachment point for fall protection. All climbing activities are required to have a fall protection plan completed by a competent person.

Sources of Information:

Document Type	Remarks
Radio Frequency Data Sheet (RFDS)	*Verizon RFDS, Site ID: 617500242, dated: February 26, 2026*
Structural Analysis	*American Tower Corporation, Eng #: 15445313_C3_03, dated: January 6, 2026*
Mount Specifications	*Site Pro 1, P/N: RMQP-496-HK*

Analysis Criteria:

Codes and Standards:	ANSI/TIA-222-H 2022 Connecticut State Building Code (CSBC), Effective October 1, 2022	
Wind Parameters:	Basic Wind Speed (Ultimate 3-sec. Gust), V_{ULT}:	120 mph
	Ice Wind Speed (3-sec. Gust):	50 mph
	Design Ice Thickness:	1.50 in
	Risk Category:	II
	Exposure Category:	C
	Topographic Category:	1
	Topographic Feature Considered:	N/A
	Topographic Method:	N/A
	Ground Elevation Factor, K_e:	0.973
Seismic Parameters:	S_S:	0.181 g
	S_1:	0.055 g
Maintenance Parameters:	Wind Speed (3-sec. Gust):	30 mph
	Maintenance Load, Lv:	250 lbs.
	Maintenance Load, Lm:	500 lbs.
Analysis Software:	RISA-3D (V22)	

Final Loading Configuration:

The following equipment has been considered for the analysis of the mount:

Mount Elevation (ft)	Equipment Elevation (ft)	Quantity	Manufacturer	Model	Status
147.00	147.00	6	Commscope	NHH-65B-HG-R2B	Added
		3	Samsung	MT6413-77A	
		3	Samsung	RF4461d-13A	
		1	Raycap	RRVZDC-6600-PF-48	
		3	Samsung	MF3208d	

Any proposed antennas not currently installed should be mounted such that the centerline of the antennas does not exceed 6 inches vertically from the center of the antenna mount(s).

It is acceptable to install up to three (3) OVPs with dimensions not to exceed 30” x 17” x 13” and 40 lbs. at any location, other than the mount face, without affecting the structural capacity of the mount. If OVP units are installed on the mount face, a mount re-analysis may be required unless replacing an existing OVP.

Standard Conditions:

1. All engineering services are performed on the basis that the information provided to Colliers Engineering & Design and used in this analysis is current and correct. Any deviation from the loading locations specified in this report shall be communicated to Colliers Engineering & Design to verify deviation will not adversely impact the analysis.

2. Mounts are assumed to have been properly fabricated, installed and maintained in good condition, twist free and plumb in accordance with its original design and manufacturer’s specifications.

3. All member connections are assumed to have been designed to meet or exceed the load carrying capacity of the connected member unless otherwise specified in this report.

4. The mount was checked up to, and including, the bolts that fasten it to the mount collar/attachment and threaded rod connections in collar members if applicable. Local deformation and interaction between the mount collar/attachment and the supporting tower structure are outside the scope of this analysis.

5. All services are performed, results obtained, and recommendations made in accordance with generally accepted engineering principles and practices. Colliers Engineering & Design is not responsible for the conclusion, opinions, and recommendations made by others based on the information supplied.

6. Structural Steel Grades have been assumed as follows, if applicable, unless otherwise noted in this analysis:
   - Channel, Solid Round, Angle, Plate — ASTM A36 (Gr. 36)
   - HSS (Rectangular) — ASTM 500 (Gr. B-46)
   - Pipe — ASTM A53 (Gr. B-35)
   - Threaded Rod — F1554 (Gr. 36)
   - Bolts — ASTM A325

Discrepancies between in-field conditions and the assumptions listed above may render this analysis invalid unless explicitly approved by Colliers Engineering & Design.

Analysis Results:

Component	Utilization %	Pass/Fail
Face Horizontal	10.2 %	Pass
Standoff Horizontal	13.6 %	Pass
Platform Crossmember	11.5 %	Pass
Corner Plate	19.8 %	Pass
Grating Support	14.0 %	Pass
Cross Arm Plate	22.6 %	Pass
Support Rail	8.8 %	Pass
Kicker	5.5 %	Pass
Support Rail Corner	13.1 %	Pass
Mount Pipe	22.4 %	Pass
Mount Connection	14.1 %	Pass
Mount-Tower Interaction	13.2 %	Pass

Structure Rating – *(Controlling Utilization of all Components)*	**22.6%**

Considered Equipment Dimensions, Weight, and EPA:

Manufacturer	Model	Height (In)	Width (In)	Depth (In)	Weight (Lbs)	(EPA)n (Sq. Ft.)	(EPA)t (Sq. Ft.)
Commscope	*NHH-65B-HG-R2B	72.0	11.9	7.1	58.9	5.43	2.33
Samsung	*MT6413-77A	28.9	15.8	5.5	57.3	3.16	1.11
Samsung	RF4461d-13A	15.0	15.0	10.2	79.1	1.88	1.28
Raycap	*RRVZDC-6600-PF-48	29.5	16.5	12.6	32.0	3.17	2.41
Samsung	*MF3208d	39.0	25.5	8.5	127.2	6.89	2.29

*Appurtenance equivalent projected area has been established through data provided by the specific manufacturer, consistent with direction per ANSI/TIA-222 Section 2.6.11.2.

Requirements:

The proposed antenna mount is **SUFFICIENT** for the final loading configuration (attachment 2) upon completion of the mount installation (attachment 3) and requirements below.

- Contractor shall install the proposed mounts (Site Pro Part #: RMQP-496-HK) in accordance with manufacturer specifications and the New Mount Sketch. Contact EOR if these documents are not available.
- Contractor shall install included kicker kit 30'' below platform collar. Refer to Mount New Mount Sketch.
- Contractor shall install proposed OVP(s) in accordance with page 3 of the mount analysis. Utilize galvanized SCH 40 equipment pipe(s) and VZWSMART attachment hardware as needed.
- Threaded rod from proposed kits shall be trimmed to extend no more than 3" beyond the lock nut.
- Contractor shall inspect climbing facilities and safety climb and ensure they are in good condition and install safety climb wire rope guides in locations where wire rope is rubbing against the mount or mount-to-tower connection steel.
- Treat all damaged or cut steel with (2) coats of zinga or zinc kote as needed.

ANSI/ASSP rigging plan review services compliant with the requirements of ANSI/TIA 322 are available for a Construction Class IV site or other, if required. Separate review fees will apply.

Attachments:

1. **Contractor Required Post Installation Inspection (PII) Report Deliverables**
2. Antenna Placement Diagrams
3. Mount Manufacturer Drawings
4. Analysis Calculations
5. Mount-Tower Interaction

Mount Desktop – Post Modification Inspection (PII) Report Requirements

Documents & Photos Required from Contractor – New Mount Passing MA

Electronic pdf version of this can be downloaded at https://pmi.vzwsmart.com
For additional questions and support, please reach out to pmisupport@colliersengineering.com

---

MDG #: 5000992841 SMART Project #: 10346370 Fuze Project ID: 17488523

Purpose – to provide SMART Tool structural vendor the proper documentation in order to complete the required Mount Desktop review of the Post Modification Inspection Report.

- Contractor is responsible for making certain the photos provided as noted below provide confirmation that the installation was completed in accordance with this Passing Mount Analysis.
- Contractor shall relay any data that can impact the performance of the mount, this includes safety issues.

Base Requirements:

- If installation will cause damage to the structure, the climbing facility, or safety climb if present or any installed system, SMART Tool vendor to be notified prior to install. Any special photos outside of the standard requirements will be indicated on the drawings.
- Provide "as built mount drawings" showing contractor's name, contact information, preparer's signature, and date. Any deviations from the drawings (Proposed modification) shall be shown. NOTE: If loading is different than what is conveyed in the passing mount analysis (MA) contact the SMART Tool vendor immediately.
- Each photo should be time and date stamped.
- Photos should be high resolution.
- Contractor shall ensure that the safety climb wire rope is supported and not adversely impacted by the install of the modification components. This may involve the install of wire rope guides, or other items to protect the wire rope. If there is conflict, contact the SMART Tool engineer for recommendations.
- The PMI can be accessed at the following portal: ***https://pmi.vzwsmart.com***

Photo Requirements:

- *Photos taken at ground level*
  - Photo of Gate Signs showing the tower owner, site name, and number.
  - Overall tower structure after installation.
  - Photos of the mount after installation; if the mounts are at different rad elevations, pictures must be provided for all elevations that equipment was installed.
- *Photos taken at Mount Elevation*
  - Photos showing the safety climb wire rope above and below the mount prior to installation.
  - Photos showing the climbing facility and safety climb if present.
  - Photos showing each individual sector after installation of mounts. Each entire sector shall be in one photo to show the interconnection of members.

        - These photos shall also certify that the placement and geometry of the equipment on the mount is as depicted in the antenna placement diagram in this form.
    - Photos that show the model number of each antenna and piece of equipment installed per sector.
    - Photos of each installed mount; pictures shall also include connection hardware (U-bolts, bolts, nuts, all-threaded rods, etc.)
    - Photos showing the installed mount elevation.

Antenna & Equipment Placement and Geometry Confirmation:

- The contractor shall certify that the antenna & equipment placement and geometry is in accordance with the sketch and table as included in the mount analysis and noted below.

☐ The contractor certifies that the photos support and the equipment on the mount is as depicted on the sketch and table included in this form and with the mount analysis provided.

OR

☐ The contractor notes that the equipment on the mount is not in accordance with the sketch and has noted the differences below and provided photo documentation of any alterations.

Special Instructions / Validation as required from the MA or any other information the contractor deems necessary to share that was identified:

Issue:

• Contractor shall install the proposed mounts (Site Pro Part #: RMQP-496-HK) in accordance with manufacturer specifications and the New Mount Sketch. Contact EOR if these documents are not available. • Contractor shall install included kicker kit 30'' below platform collar. Refer to Mount New Mount Sketch. • Contractor shall install proposed OVP(s) in accordance with page 3 of the mount analysis. Utilize galvanized SCH 40 equipment pipe(s) and VZWSMART attachment hardware as needed. • Threaded rod from proposed kits shall be trimmed to extend no more than 3" beyond the lock nut. • Contractor shall inspect climbing facilities and safety climb and ensure they are in good condition and install safety climb wire rope guides in locations where wire rope is rubbing against the mount or mount-to-tower connection steel. • Treat all damaged or cut steel with (2) coats of zinga or zinc kote as needed.

Response:

Special Instruction Confirmation:

☐ The contractor has read and acknowledges the above special instructions.

Contractor certifies that the climbing facility / safety climb was not damaged prior to starting work:

☐ Yes ☐ No

Contractor certifies no new damage created during the current installation:

☐ Yes ☐ No

Contractor to certify the condition of the safety climb and verify no damage when leaving the site:

☐ Safety Climb in Good Condition ☐ Safety Climb Damaged

Comments:

New Mount Certification:

☐ The contractor certifies that the New Mount installed is as specified in the Passing Mount Analysis.
☐ The contractor notes that the New Mount installed is not as specified and engineering approval was received for the New Mount installed.

Contractor to provide measurement from top of the highest equipment/steel to the bottom of the lowest equipment/steel by documenting it using the most appropriate illustration below along with supporting photos (highest and lowest measurement across all sectors):

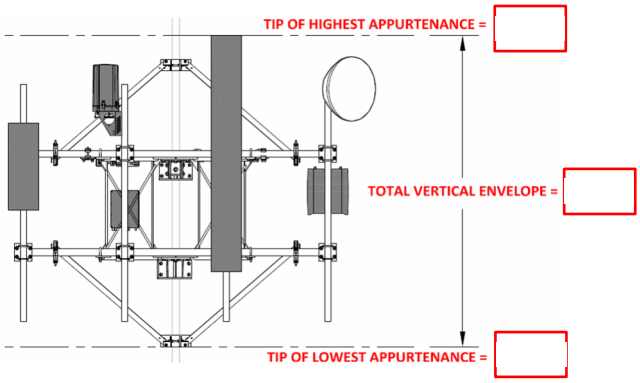

Illustration #1

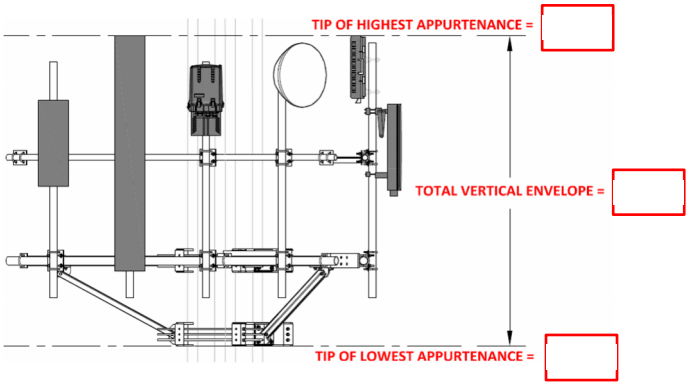

Illustration #2

Certifying Individual:

Company:	
Employee Name:	
Contact Phone:	
Email:	
Date:	

Mount Installation Sketch

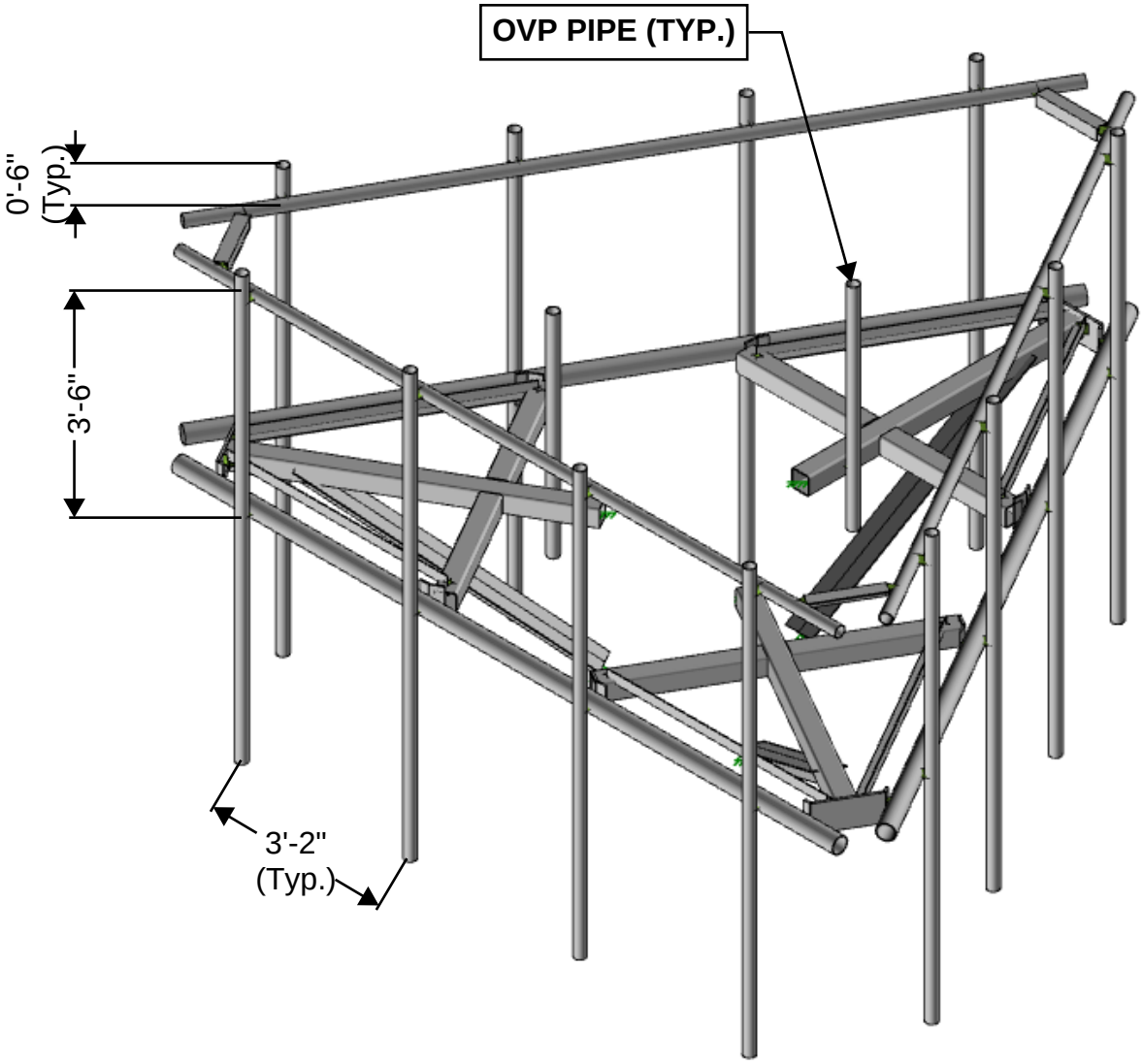

Mount Installation Sketch

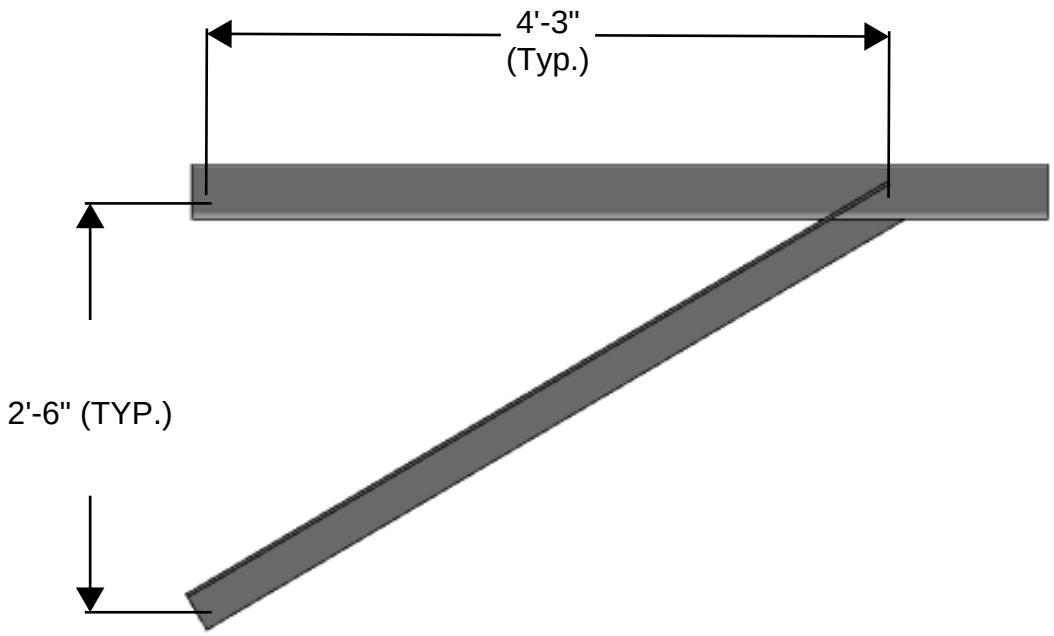

Structure: 5000992841-VZW - WILLINGTON HILL CT

Sector:	**A**	Nominal Mount Azimuth: **90.00°**	4/10/2026
Structure Type:	Monopole	10331993	
Mount Elev:	147.00		Page: 1

Plan View

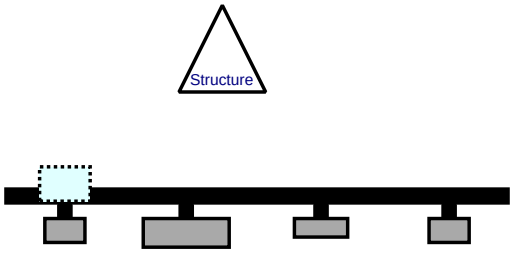

Front View - Looking at Structure

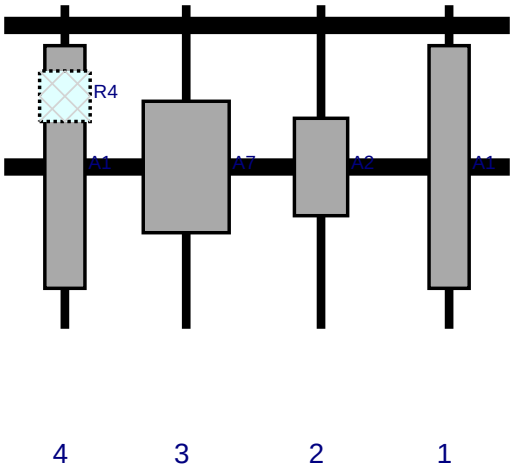

Ref#	Model	Height (in)	Width (in)	H Dist Frm L.	Pipe #	Pipe Pos V	Ant Pos	C. Ant Frm T.	Ant H Off	Status	Validation
OVP	RRVZDC-6600-PF-48	29.5	16.5		Member					Added	
A1	NHH-65B-HG-R2B	72	11.9	132	1	a	Front	48	0	Added	
A2	MT6413-77A	28.9	15.8	94	2	a	Front	48	0	Added	
A7	MF3208d	39	25.5	54	3	a	Front	48	0	Added	
A1	NHH-65B-HG-R2B	72	11.9	18	4	a	Front	48	0	Added	
R4	RF4461d-13A	15	15	18	4	a	Behind	27	0	Added	

*The Nominal Mount Azimuth provided on this document is intended for guidance and planning purposes only and may deviate from the Actual Mount Azimuth due to several real-world factors, including but not limited to Magnetic vs. True North.

Copyright 2026 by Tower Engineering Solutions, LLC. All Rights Reserved

Sector: **B** Nominal Mount Azimuth: **210.00°** 4/10/2026

Structure Type: Monopole 10331993

Mount Elev: 147.00 Page: 2

Plan View

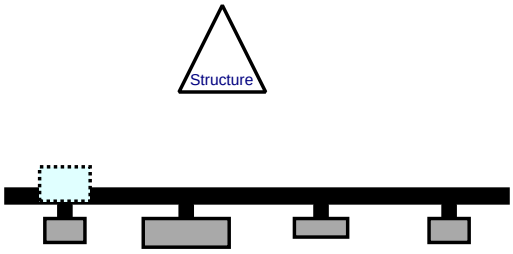

Front View - Looking at Structure

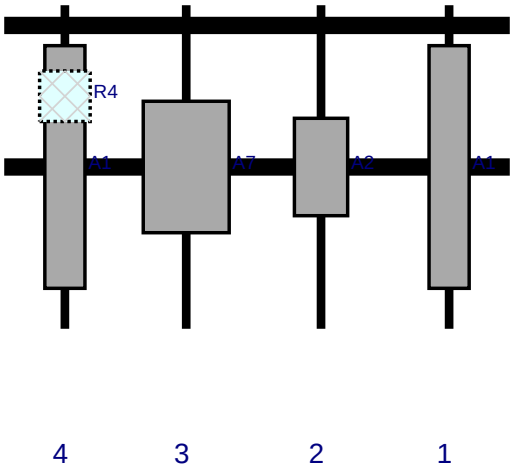

Ref#	Model	Height (in)	Width (in)	H Dist Frm L.	Pipe #	Pipe Pos V	Ant Pos	C. Ant Frm T.	Ant H Off	Status	Validation
A1	NHH-65B-HG-R2B	72	11.9	132	1	a	Front	48	0	Added	
A2	MT6413-77A	28.9	15.8	94	2	a	Front	48	0	Added	
A7	MF3208d	39	25.5	54	3	a	Front	48	0	Added	
A1	NHH-65B-HG-R2B	72	11.9	18	4	a	Front	48	0	Added	
R4	RF4461d-13A	15	15	18	4	a	Behind	27	0	Added	

*The Nominal Mount Azimuth provided on this document is intended for guidance and planning purposes only and may deviate from the Actual Mount Azimuth due to several real-world factors, including but not limited to Magnetic vs. True North.

Copyright 2026 by Tower Engineering Solutions, LLC. All Rights Reserved

Sector: **C** Nominal Mount Azimuth: **330.00°** 4/10/2026

Structure Type: Monopole 10331993

Mount Elev: 147.00 Page: 3

Plan View

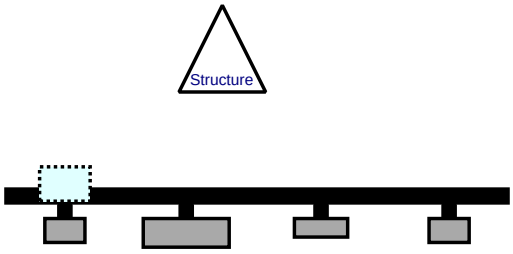

Front View - Looking at Structure

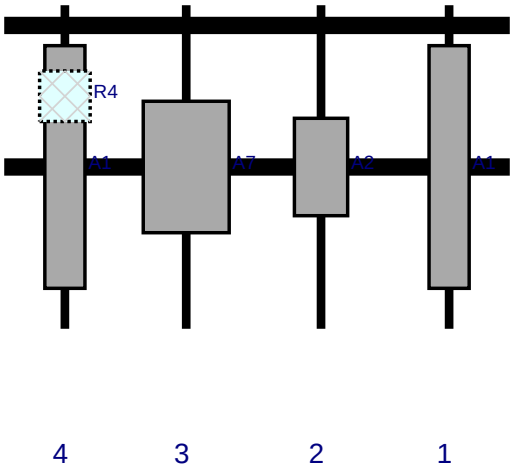

Ref#	Model	Height (in)	Width (in)	H Dist Frm L.	Pipe #	Pipe Pos V	Ant Pos	C. Ant Frm T.	Ant H Off	Status	Validation
A1	NHH-65B-HG-R2B	72	11.9	132	1	a	Front	48	0	Added	
A2	MT6413-77A	28.9	15.8	94	2	a	Front	48	0	Added	
A7	MF3208d	39	25.5	54	3	a	Front	48	0	Added	
A1	NHH-65B-HG-R2B	72	11.9	18	4	a	Front	48	0	Added	
R4	RF4461d-13A	15	15	18	4	a	Behind	27	0	Added	

*The Nominal Mount Azimuth provided on this document is intended for guidance and planning purposes only and may deviate from the Actual Mount Azimuth due to several real-world factors, including but not limited to Magnetic vs. True North.

Copyright 2026 by Tower Engineering Solutions, LLC. All Rights Reserved

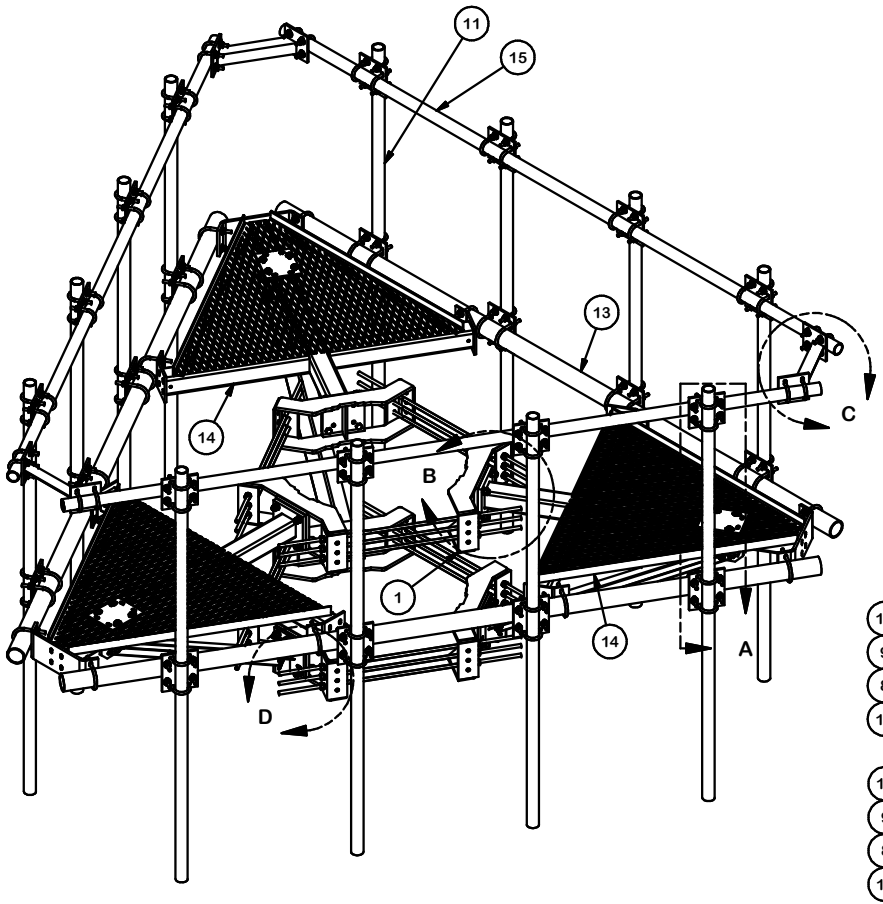

PARTS LIST						
ITEM	QTY	PART NO.	PART DESCRIPTION	LENGTH	UNIT WT.	NET WT.
1	6	X-LWRM	RING MOUNT WELDMENT		68.81	412.85
2	66	G58LW	5/8" HDG LOCKWASHER		0.03	1.72
3	60	A58NUT	5/8" HDG A325 HEX NUT		0.13	7.79
4	18	G58R-24	5/8" x 24" THREADED ROD (HDG.)		2.09	37.63
4	18	G58R-48	5/8" x 48" THREADED ROD (HDG.)		4.18	75.27
5	24	A58234	5/8" x 2-3/4" HDG A325 HEX BOLT	2 3/4 in	0.36	8.54
6	24	A58FW	5/8" HDG A325 FLATWASHER		0.03	0.82
7	36	X-UB1306	1/2" X 3-5/8" X 6" X 3" U-BOLT (HDG.)		0.83	29.82
8	264	G12FW	1/2" HDG USS FLATWASHER	3/32 in	0.03	9.00
9	252	G12LW	1/2" HDG LOCKWASHER	1/8 in	0.01	3.50
10	252	G12NUT	1/2" HDG HEAVY 2H HEX NUT		0.07	18.05
11	12	P296	2-3/8" X 96" SCH. 40 GALVANIZED PIPE	96 in	30.76	369.08
12	84	X-UB1212	1/2" X 2-1/2" X 4-1/2" X 2" U-BOLT (HDG.)		0.63	52.51
13	3	P3150	3-1/2" X 150" (3" SCH 40) GALVANIZED PIPE	150 in	94.80	284.40
14	3	X-SV196	LOW PROFILE PLATFORM CORNER		212.10	636.31
15	3	P2150	2-3/8" O.D. X 150" SCH 40 GALVANIZED PIPE	150 in	45.77	137.31
16	12	SCX2	CROSSOVER PLATE	7 in	4.80	57.56
17	15	SCX4	CROSSOVER PLATE	8 1/2 in	6.02	90.32
18	6	G58NUT	5/8" HDG HEAVY 2H HEX NUT		0.13	0.78
19	6	X-253993	PLATFORM REINFORCEMENT KIT ANGLE	52 25/32 in	14.33	85.99
20	6	X-TBW	T-BRACKET WELDMENT		13.60	81.60
21	6	G5802	5/8" x 2" HDG HEX BOLT GR5		0.27	1.62
22	12	G12065	1/2" x 6-1/2" HDG HEX BOLT GR5 FULL THREAD	5 1/2 in	0.41	4.91
23	3	X-AHCP	ANGLE HANDRAIL CORNER PLATE		12.92	38.76
					TOTAL WT. #	2445.81

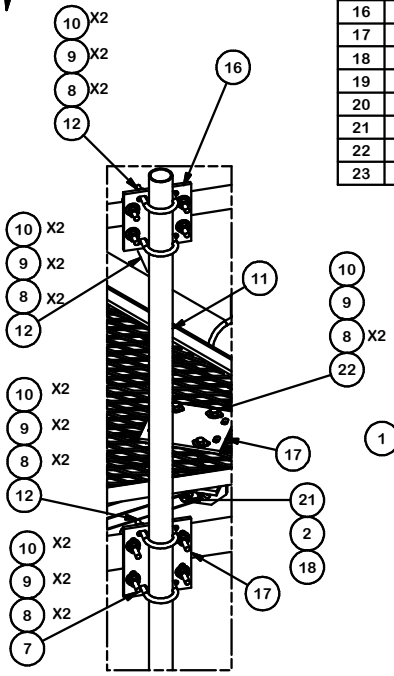

DETAIL A

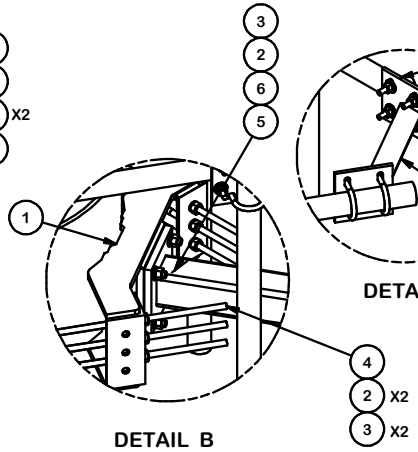

DETAIL B

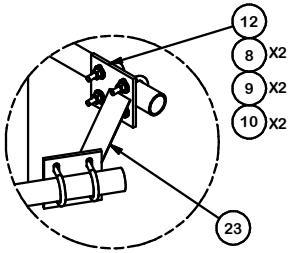

DETAIL C

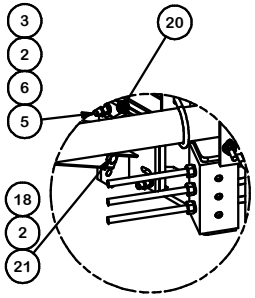

DETAIL D

REV	DESCRIPTION OF REVISIONS	CPD	BY	DATE
B	RELOCATED MOUNT PIPE POSITIONS	4488	JET	5/23/2021
A	CHANGED X-253992 TO X-TBW	4488	CEK	9/20/2018

REVISION HISTORY

TOLERANCE NOTES

TOLERANCES ON DIMENSIONS, UNLESS OTHERWISE NOTED ARE:
SAWED, SHEARED AND GAS CUT EDGES *(± 0.030")*
DRILLED AND GAS CUT HOLES *(± 0.030")* - NO CONING OF HOLES
LASER CUT EDGES AND HOLES *(± 0.010")* - NO CONING OF HOLES
BENDS ARE ± 1/2 DEGREE
ALL OTHER MACHINING *(± 0.030")*
ALL OTHER ASSEMBLY *(± 0.060")*

PROPRIETARY NOTE:
THE DATA AND TECHNIQUES CONTAINED IN THIS DRAWING ARE PROPRIETARY INFORMATION OF VALMONT INDUSTRIES AND CONSIDERED A TRADE SECRET. ANY USE OR DISCLOSURE WITHOUT THE CONSENT OF VALMONT INDUSTRIES IS STRICTLY PROHIBITED.

DESCRIPTION
12' 6" LOW PROFILE PLATFORM
WITH TWELVE 2-3/8" ANTENNA MOUNTING
PIPES, AND SUPPORT RAIL

SITE PRO 1
A valmont COMPANY

Engineering Support Team:
1-888-753-7446

Locations:
New York, NY
Atlanta, GA
Los Angeles, CA
Plymouth, IN
Salem, OR
Dallas, TX

CPD NO.	DRAWN BY	ENG. APPROVAL	PART NO.	PAGE
4488	CEK 7/14/2014		RMQP-496-HK	1 OF 3

CLASS	SUB	DRAWING USAGE	CHECKED BY	DWG. NO.
81	02	CUSTOMER	BMC 7/14/2014	RMQP-496-HK

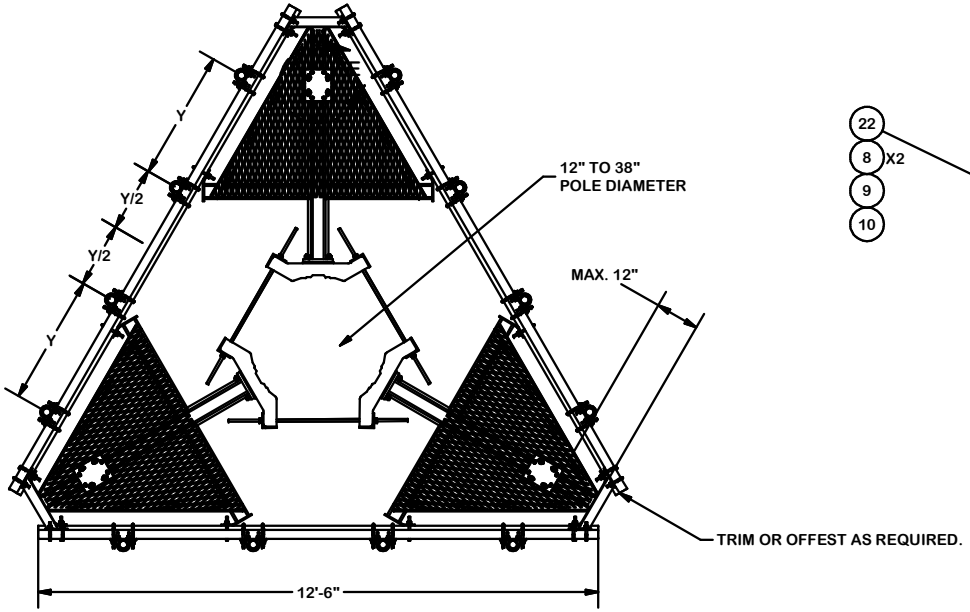

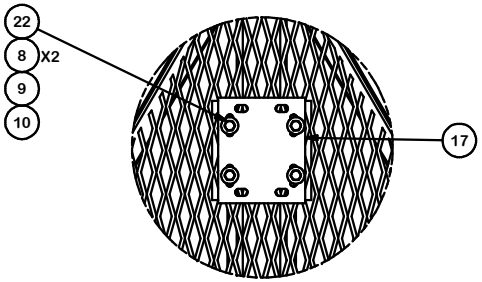

DETAIL E

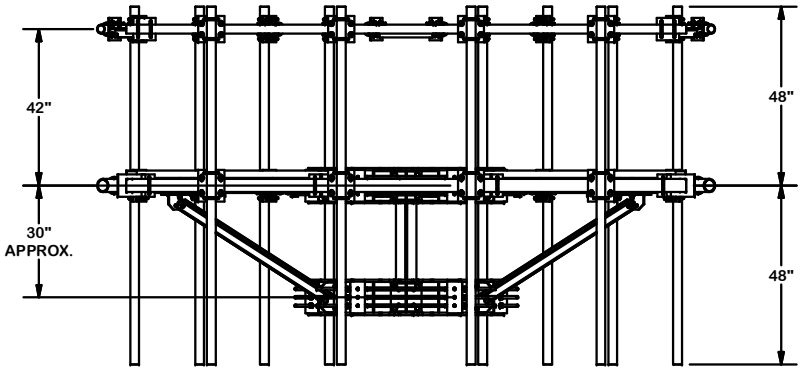

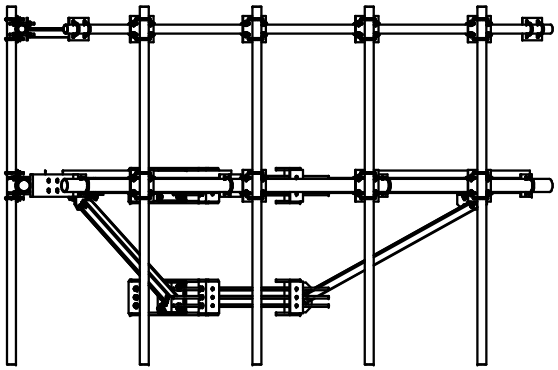

REV	DESCRIPTION OF REVISIONS	CPD	BY	DATE
B	RELOCATED MOUNT PIPE POSITIONS	4488	JET	5/23/2021
A	CHANGED X-253992 TO X-TBW	4488	CEK	9/20/2018

REVISION HISTORY

TOLERANCE NOTES

TOLERANCES ON DIMENSIONS, UNLESS OTHERWISE NOTED ARE:
SAWED, SHEARED AND GAS CUT EDGES *(± 0.030")*
DRILLED AND GAS CUT HOLES *(± 0.030")* - NO CONING OF HOLES
LASER CUT EDGES AND HOLES *(± 0.010")* - NO CONING OF HOLES
BENDS ARE ± 1/2 DEGREE
ALL OTHER MACHINING *(± 0.030")*
ALL OTHER ASSEMBLY *(± 0.060")*

PROPRIETARY NOTE:
THE DATA AND TECHNIQUES CONTAINED IN THIS DRAWING ARE PROPRIETARY INFORMATION OF VALMONT INDUSTRIES AND CONSIDERED A TRADE SECRET. ANY USE OR DISCLOSURE WITHOUT THE CONSENT OF VALMONT INDUSTRIES IS STRICTLY PROHIBITED.

DESCRIPTION
12' 6" LOW PROFILE PLATFORM
WITH TWELVE 2-3/8" ANTENNA MOUNTING
PIPES, AND SUPPORT RAIL

SITE PRO 1
A valmont COMPANY
Engineering Support Team: 1-888-753-7446
Locations:
New York, NY
Atlanta, GA
Los Angeles, CA
Plymouth, IN
Salem, OR
Dallas, TX

CPD NO.	DRAWN BY	ENG. APPROVAL	PART NO.
4488	CEK 7/14/2014		RMQP-496-HK

CLASS	SUB	DRAWING USAGE	CHECKED BY	DWG. NO.
81	02	CUSTOMER	BMC 7/14/2014	RMQP-496-HK

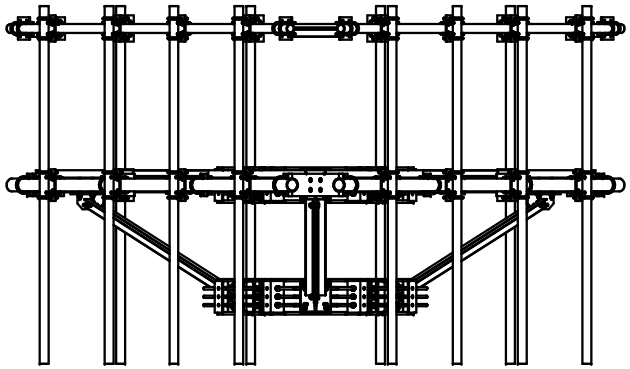

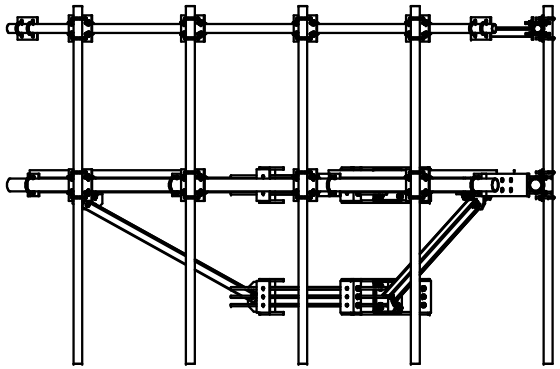

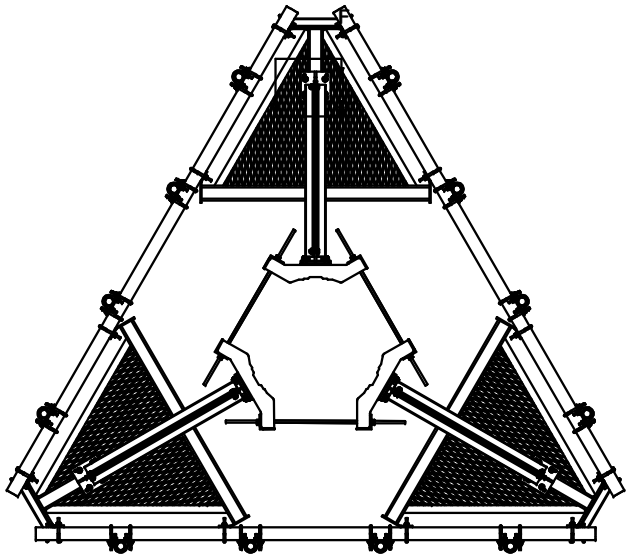

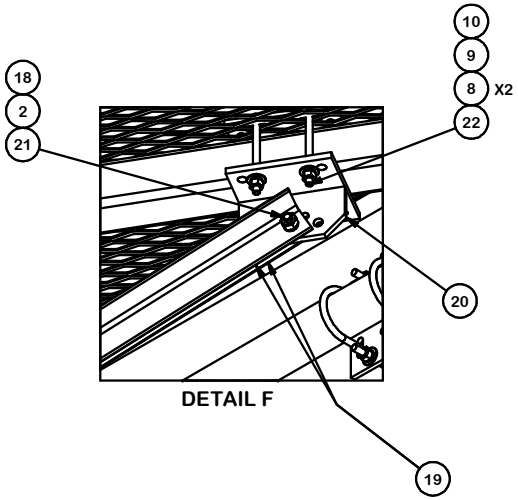

DETAIL F

TOLERANCE NOTES

TOLERANCES ON DIMENSIONS, UNLESS OTHERWISE NOTED ARE:
SAWED, SHEARED AND GAS CUT EDGES *(± 0.030")*
DRILLED AND GAS CUT HOLES *(± 0.030")* - NO CONING OF HOLES
LASER CUT EDGES AND HOLES *(± 0.010")* - NO CONING OF HOLES
BENDS ARE ± 1/2 DEGREE
ALL OTHER MACHINING *(± 0.030")*
ALL OTHER ASSEMBLY *(± 0.060")*

REV	DESCRIPTION OF REVISIONS	CPD	BY	DATE
B	RELOCATED MOUNT PIPE POSITIONS	4488	JET	5/23/2021
A	CHANGED X-253992 TO X-TBW	4488	CEK	9/20/2018

REVISION HISTORY

PROPRIETARY NOTE:
THE DATA AND TECHNIQUES CONTAINED IN THIS DRAWING ARE PROPRIETARY INFORMATION OF VALMONT INDUSTRIES AND CONSIDERED A TRADE SECRET. ANY USE OR DISCLOSURE WITHOUT THE CONSENT OF VALMONT INDUSTRIES IS STRICTLY PROHIBITED.

DESCRIPTION
12' 6" LOW PROFILE PLATFORM
WITH TWELVE 2-3/8" ANTENNA MOUNTING
PIPES, AND SUPPORT RAIL

SITE PRO 1
A valmont COMPANY

Engineering Support Team:
1-888-753-7446

Locations:
New York, NY
Atlanta, GA
Los Angeles, CA
Plymouth, IN
Salem, OR
Dallas, TX

CPD NO.	DRAWN BY	ENG. APPROVAL	PART NO.
4488	CEK 7/14/2014		RMQP-496-HK

CLASS	SUB	DRAWING USAGE	CHECKED BY	DWG. NO.
81	02	CUSTOMER	BMC 7/14/2014	RMQP-496-HK

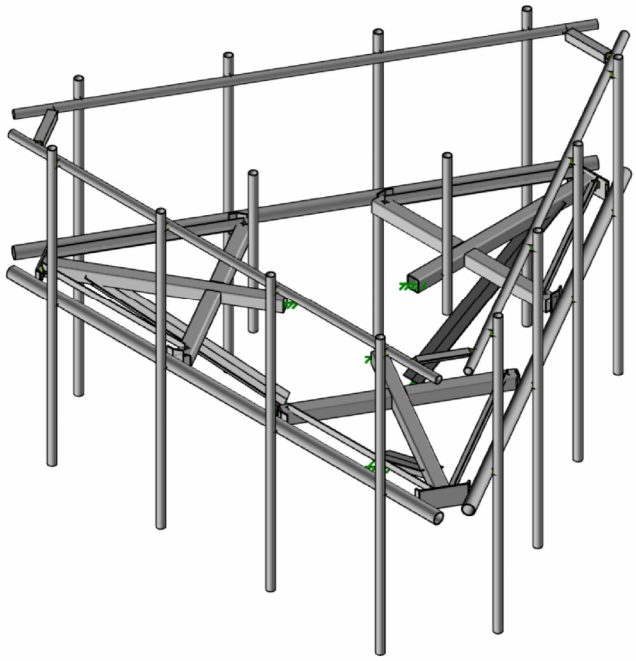

Envelope Only Solution

RISA A NEMETSCHEK COMPANY			SK-1
			Apr 10, 2026 at 04:19 PM
			5000992841-VZW_MT_LO_...

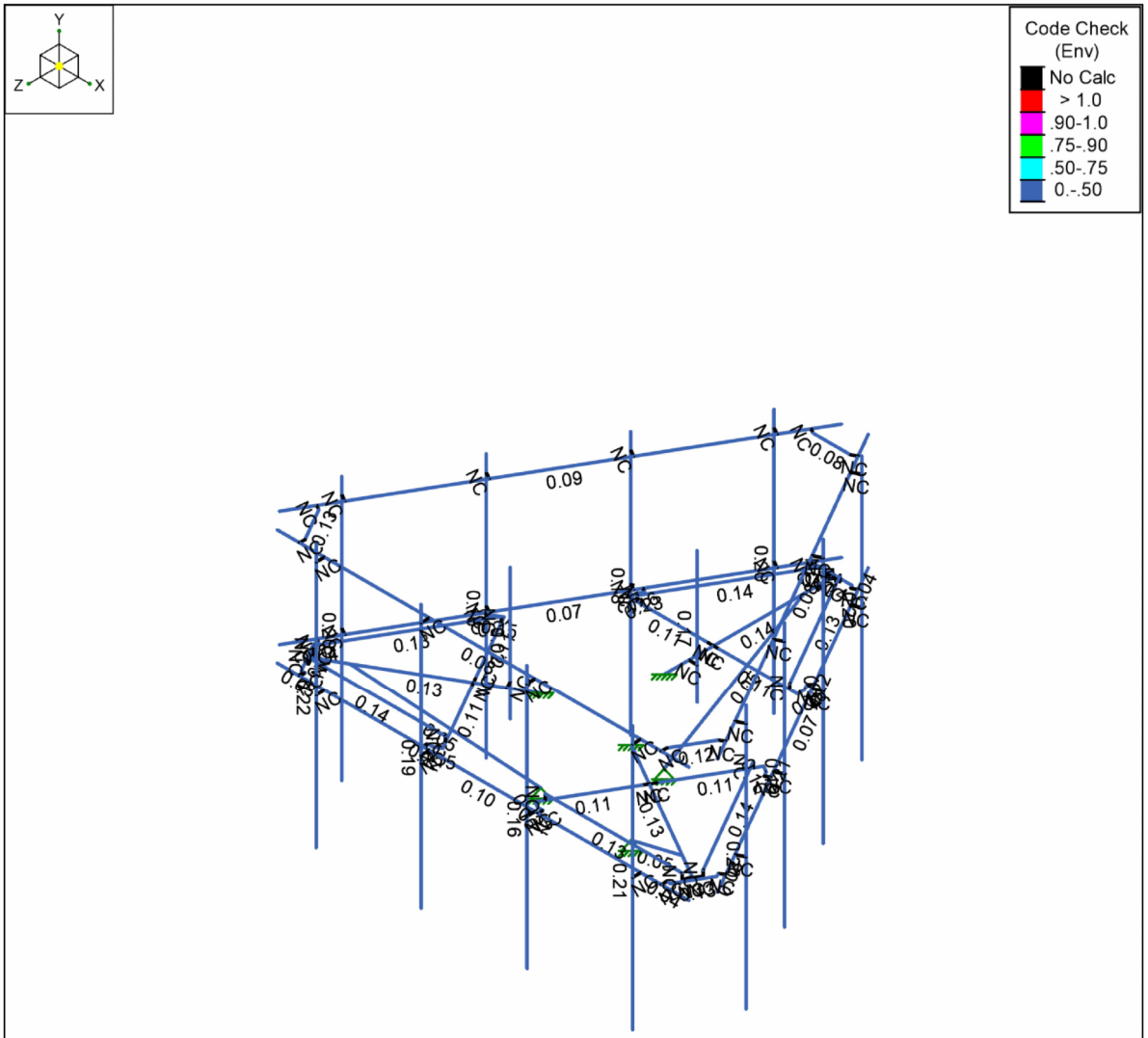

Member Code Checks Displayed (Enveloped)
Envelope Only Solution

RISA			SK-2
			Apr 10, 2026 at 04:20 PM
			5000992841-VZW_MT_LO_...

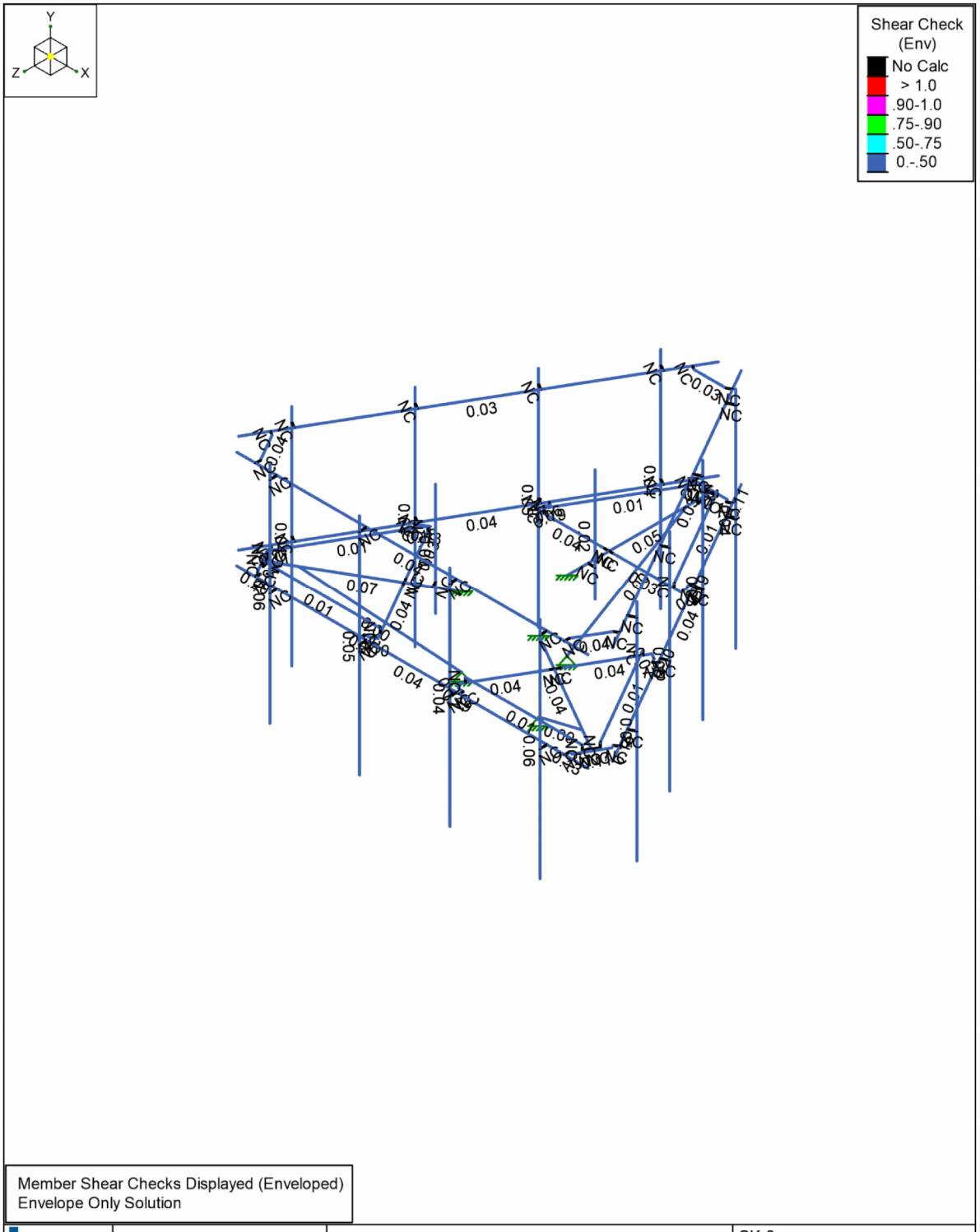

		SK-3
		Apr 10, 2026 at 04:20 PM
		5000992841-VZW_MT_LO_...

Basic Load Cases

	BLC Description	Category	X Gravity	Y Gravity	Z Gravity	Point	Distributed	Area(Member)
1	Antenna D	None				84		
2	Antenna Di	None				84		
3	Antenna Wo (0 Deg)	None				84		
4	Antenna Wo (30 Deg)	None				84		
5	Antenna Wo (60 Deg)	None				84		
6	Antenna Wo (90 Deg)	None				84		
7	Antenna Wo (120 Deg)	None				84		
8	Antenna Wo (150 Deg)	None				84		
9	Antenna Wo (180 Deg)	None				84		
10	Antenna Wo (210 Deg)	None				84		
11	Antenna Wo (240 Deg)	None				84		
12	Antenna Wo (270 Deg)	None				84		
13	Antenna Wo (300 Deg)	None				84		
14	Antenna Wo (330 Deg)	None				84		
15	Antenna Wi (0 Deg)	None				84		
16	Antenna Wi (30 Deg)	None				84		
17	Antenna Wi (60 Deg)	None				84		
18	Antenna Wi (90 Deg)	None				84		
19	Antenna Wi (120 Deg)	None				84		
20	Antenna Wi (150 Deg)	None				84		
21	Antenna Wi (180 Deg)	None				84		
22	Antenna Wi (210 Deg)	None				84		
23	Antenna Wi (240 Deg)	None				84		
24	Antenna Wi (270 Deg)	None				84		
25	Antenna Wi (300 Deg)	None				84		
26	Antenna Wi (330 Deg)	None				84		
27	Antenna Wm (0 Deg)	None				84		
28	Antenna Wm (30 Deg)	None				84		
29	Antenna Wm (60 Deg)	None				84		
30	Antenna Wm (90 Deg)	None				84		
31	Antenna Wm (120 Deg)	None				84		
32	Antenna Wm (150 Deg)	None				84		
33	Antenna Wm (180 Deg)	None				84		
34	Antenna Wm (210 Deg)	None				84		
35	Antenna Wm (240 Deg)	None				84		
36	Antenna Wm (270 Deg)	None				84		
37	Antenna Wm (300 Deg)	None				84		
38	Antenna Wm (330 Deg)	None				84		
39	Structure D	None		-1				3
40	Structure Di	None					62	3
41	Structure Wo (0 Deg)	None					124	
42	Structure Wo (30 Deg)	None					124	
43	Structure Wo (60 Deg)	None					124	
44	Structure Wo (90 Deg)	None					124	
45	Structure Wo (120 Deg)	None					124	
46	Structure Wo (150 Deg)	None					124	
47	Structure Wo (180 Deg)	None					124	
48	Structure Wo (210 Deg)	None					124	
49	Structure Wo (240 Deg)	None					124	
50	Structure Wo (270 Deg)	None					124	
51	Structure Wo (300 Deg)	None					124	
52	Structure Wo (330 Deg)	None					124	
53	Structure Wi (0 Deg)	None					124	
54	Structure Wi (30 Deg)	None					124	
55	Structure Wi (60 Deg)	None					124	

Basic Load Cases (Continued)

	BLC Description	Category	X Gravity	Y Gravity	Z Gravity	Point	Distributed	Area(Member)
56	Structure Wi (90 Deg)	None					124	
57	Structure Wi (120 Deg)	None					124	
58	Structure Wi (150 Deg)	None					124	
59	Structure Wi (180 Deg)	None					124	
60	Structure Wi (210 Deg)	None					124	
61	Structure Wi (240 Deg)	None					124	
62	Structure Wi (270 Deg)	None					124	
63	Structure Wi (300 Deg)	None					124	
64	Structure Wi (330 Deg)	None					124	
65	Structure Wm (0 Deg)	None					124	
66	Structure Wm (30 Deg)	None					124	
67	Structure Wm (60 Deg)	None					124	
68	Structure Wm (90 Deg)	None					124	
69	Structure Wm (120 Deg)	None					124	
70	Structure Wm (150 Deg)	None					124	
71	Structure Wm (180 Deg)	None					124	
72	Structure Wm (210 Deg)	None					124	
73	Structure Wm (240 Deg)	None					124	
74	Structure Wm (270 Deg)	None					124	
75	Structure Wm (300 Deg)	None					124	
76	Structure Wm (330 Deg)	None					124	
77	Lm1	None				1		
78	Lm2	None				1		
79	Lv1	None				1		
80	Lv2	None				1		
81	Antenna Ev	None				84		
82	Antenna Eh (0 Deg)	None				56		
83	Antenna Eh (90 Deg)	None				56		
84	Structure Ev	ELY		-0.039				3
85	Structure Eh (0 Deg)	ELZ			-0.097			3
86	Structure Eh (90 Deg)	ELX	0.097					3
87	BLC 39 Transient Area Loads	None					30	
88	BLC 40 Transient Area Loads	None					30	
89	BLC 84 Transient Area Loads	None					30	
90	BLC 85 Transient Area Loads	None					30	
91	BLC 86 Transient Area Loads	None					30	

Load Combinations

	Description	Solve	P-Delta	BLC	Factor	BLC	Factor	BLC	Factor	BLC	Factor	BLC	Factor	BLC	Factor	BLC	Factor	BLC	Factor
1	1.2D+1.0Wo (0 Deg)	Yes	Y	1	1.2	39	1.2	3	1	41	1								
2	1.2D+1.0Wo (30 Deg)	Yes	Y	1	1.2	39	1.2	4	1	42	1								
3	1.2D+1.0Wo (60 Deg)	Yes	Y	1	1.2	39	1.2	5	1	43	1								
4	1.2D+1.0Wo (90 Deg)	Yes	Y	1	1.2	39	1.2	6	1	44	1								
5	1.2D+1.0Wo (120 Deg)	Yes	Y	1	1.2	39	1.2	7	1	45	1								
6	1.2D+1.0Wo (150 Deg)	Yes	Y	1	1.2	39	1.2	8	1	46	1								
7	1.2D+1.0Wo (180 Deg)	Yes	Y	1	1.2	39	1.2	9	1	47	1								
8	1.2D+1.0Wo (210 Deg)	Yes	Y	1	1.2	39	1.2	10	1	48	1								
9	1.2D+1.0Wo (240 Deg)	Yes	Y	1	1.2	39	1.2	11	1	49	1								
10	1.2D+1.0Wo (270 Deg)	Yes	Y	1	1.2	39	1.2	12	1	50	1								
11	1.2D+1.0Wo (300 Deg)	Yes	Y	1	1.2	39	1.2	13	1	51	1								
12	1.2D+1.0Wo (330 Deg)	Yes	Y	1	1.2	39	1.2	14	1	52	1								
13	1.2D + 1.0Di + 1.0Wi (0 Deg)	Yes	Y	1	1.2	39	1.2	2	1	40	1	15	1	53	1				
14	1.2D + 1.0Di + 1.0Wi (30 Deg)	Yes	Y	1	1.2	39	1.2	2	1	40	1	16	1	54	1				
15	1.2D + 1.0Di + 1.0Wi (60 Deg)	Yes	Y	1	1.2	39	1.2	2	1	40	1	17	1	55	1				
16	1.2D + 1.0Di + 1.0Wi (90 Deg)	Yes	Y	1	1.2	39	1.2	2	1	40	1	18	1	56	1				

Load Combinations (Continued)

	Description	Solve	P-Delta	BLC	Factor	BLC	Factor	BLC	Factor	BLC	Factor	BLC	Factor	BLC	Factor	BLC	Factor	BLC	Factor
17	1.2D + 1.0Di + 1.0Wi (120 Deg)	Yes	Y	1	1.2	39	1.2	2	1	40	1	19	1	57	1				
18	1.2D + 1.0Di + 1.0Wi (150 Deg)	Yes	Y	1	1.2	39	1.2	2	1	40	1	20	1	58	1				
19	1.2D + 1.0Di + 1.0Wi (180 Deg)	Yes	Y	1	1.2	39	1.2	2	1	40	1	21	1	59	1				
20	1.2D + 1.0Di + 1.0Wi (210 Deg)	Yes	Y	1	1.2	39	1.2	2	1	40	1	22	1	60	1				
21	1.2D + 1.0Di + 1.0Wi (240 Deg)	Yes	Y	1	1.2	39	1.2	2	1	40	1	23	1	61	1				
22	1.2D + 1.0Di + 1.0Wi (270 Deg)	Yes	Y	1	1.2	39	1.2	2	1	40	1	24	1	62	1				
23	1.2D + 1.0Di + 1.0Wi (300 Deg)	Yes	Y	1	1.2	39	1.2	2	1	40	1	25	1	63	1				
24	1.2D + 1.0Di + 1.0Wi (330 Deg)	Yes	Y	1	1.2	39	1.2	2	1	40	1	26	1	64	1				
25	1.2D + 1.5Lm1 + 1.0Wm (0 Deg)	Yes	Y	1	1.2	39	1.2	77	1.5	27	1	65	1						
26	1.2D + 1.5Lm1 + 1.0Wm (30 Deg)	Yes	Y	1	1.2	39	1.2	77	1.5	28	1	66	1						
27	1.2D + 1.5Lm1 + 1.0Wm (60 Deg)	Yes	Y	1	1.2	39	1.2	77	1.5	29	1	67	1						
28	1.2D + 1.5Lm1 + 1.0Wm (90 Deg)	Yes	Y	1	1.2	39	1.2	77	1.5	30	1	68	1						
29	1.2D + 1.5Lm1 + 1.0Wm (120 Deg)	Yes	Y	1	1.2	39	1.2	77	1.5	31	1	69	1						
30	1.2D + 1.5Lm1 + 1.0Wm (150 Deg)	Yes	Y	1	1.2	39	1.2	77	1.5	32	1	70	1						
31	1.2D + 1.5Lm1 + 1.0Wm (180 Deg)	Yes	Y	1	1.2	39	1.2	77	1.5	33	1	71	1						
32	1.2D + 1.5Lm1 + 1.0Wm (210 Deg)	Yes	Y	1	1.2	39	1.2	77	1.5	34	1	72	1						
33	1.2D + 1.5Lm1 + 1.0Wm (240 Deg)	Yes	Y	1	1.2	39	1.2	77	1.5	35	1	73	1						
34	1.2D + 1.5Lm1 + 1.0Wm (270 Deg)	Yes	Y	1	1.2	39	1.2	77	1.5	36	1	74	1						
35	1.2D + 1.5Lm1 + 1.0Wm (300 Deg)	Yes	Y	1	1.2	39	1.2	77	1.5	37	1	75	1						
36	1.2D + 1.5Lm1 + 1.0Wm (330 Deg)	Yes	Y	1	1.2	39	1.2	77	1.5	38	1	76	1						
37	1.2D + 1.5Lm2 + 1.0Wm (0 Deg)	Yes	Y	1	1.2	39	1.2	78	1.5	27	1	65	1						
38	1.2D + 1.5Lm2 + 1.0Wm (30 Deg)	Yes	Y	1	1.2	39	1.2	78	1.5	28	1	66	1						
39	1.2D + 1.5Lm2 + 1.0Wm (60 Deg)	Yes	Y	1	1.2	39	1.2	78	1.5	29	1	67	1						
40	1.2D + 1.5Lm2 + 1.0Wm (90 Deg)	Yes	Y	1	1.2	39	1.2	78	1.5	30	1	68	1						
41	1.2D + 1.5Lm2 + 1.0Wm (120 Deg)	Yes	Y	1	1.2	39	1.2	78	1.5	31	1	69	1						
42	1.2D + 1.5Lm2 + 1.0Wm (150 Deg)	Yes	Y	1	1.2	39	1.2	78	1.5	32	1	70	1						
43	1.2D + 1.5Lm2 + 1.0Wm (180 Deg)	Yes	Y	1	1.2	39	1.2	78	1.5	33	1	71	1						
44	1.2D + 1.5Lm2 + 1.0Wm (210 Deg)	Yes	Y	1	1.2	39	1.2	78	1.5	34	1	72	1						
45	1.2D + 1.5Lm2 + 1.0Wm (240 Deg)	Yes	Y	1	1.2	39	1.2	78	1.5	35	1	73	1						
46	1.2D + 1.5Lm2 + 1.0Wm (270 Deg)	Yes	Y	1	1.2	39	1.2	78	1.5	36	1	74	1						
47	1.2D + 1.5Lm2 + 1.0Wm (300 Deg)	Yes	Y	1	1.2	39	1.2	78	1.5	37	1	75	1						
48	1.2D + 1.5Lm2 + 1.0Wm (330 Deg)	Yes	Y	1	1.2	39	1.2	78	1.5	38	1	76	1						
49	1.2D + 1.5Lv1	Yes	Y	1	1.2	39	1.2	79	1.5										
50	1.2D + 1.5Lv2	Yes	Y	1	1.2	39	1.2	80	1.5										
51	1.4D	Yes	Y	1	1.4	39	1.4												
52	1.2D + 1.0Ev + 1.0Eh (0 Deg)	Yes	Y	1	1.2	39	1.2	81	1	ELY	1	82	1	83		ELZ	1	ELX	
53	1.2D + 1.0Ev + 1.0Eh (30 Deg)	Yes	Y	1	1.2	39	1.2	81	1	ELY	1	82	0.866	83	0.5	ELZ	0.866	ELX	0.5
54	1.2D + 1.0Ev + 1.0Eh (60 Deg)	Yes	Y	1	1.2	39	1.2	81	1	ELY	1	82	0.5	83	0.866	ELZ	0.5	ELX	0.866
55	1.2D + 1.0Ev + 1.0Eh (90 Deg)	Yes	Y	1	1.2	39	1.2	81	1	ELY	1	82		83	1	ELZ		ELX	1
56	1.2D + 1.0Ev + 1.0Eh (120 Deg)	Yes	Y	1	1.2	39	1.2	81	1	ELY	1	82	-0.5	83	0.866	ELZ	-0.5	ELX	0.866
57	1.2D + 1.0Ev + 1.0Eh (150 Deg)	Yes	Y	1	1.2	39	1.2	81	1	ELY	1	82	-0.866	83	0.5	ELZ	-0.866	ELX	0.5
58	1.2D + 1.0Ev + 1.0Eh (180 Deg)	Yes	Y	1	1.2	39	1.2	81	1	ELY	1	82	-1	83		ELZ	-1	ELX	
59	1.2D + 1.0Ev + 1.0Eh (210 Deg)	Yes	Y	1	1.2	39	1.2	81	1	ELY	1	82	-0.866	83	-0.5	ELZ	-0.866	ELX	-0.5
60	1.2D + 1.0Ev + 1.0Eh (240 Deg)	Yes	Y	1	1.2	39	1.2	81	1	ELY	1	82	-0.5	83	-0.866	ELZ	-0.5	ELX	-0.866
61	1.2D + 1.0Ev + 1.0Eh (270 Deg)	Yes	Y	1	1.2	39	1.2	81	1	ELY	1	82		83	-1	ELZ		ELX	-1
62	1.2D + 1.0Ev + 1.0Eh (300 Deg)	Yes	Y	1	1.2	39	1.2	81	1	ELY	1	82	0.5	83	-0.866	ELZ	0.5	ELX	-0.866
63	1.2D + 1.0Ev + 1.0Eh (330 Deg)	Yes	Y	1	1.2	39	1.2	81	1	ELY	1	82	0.866	83	-0.5	ELZ	0.866	ELX	-0.5
64	0.9D - 1.0Ev + 1.0Eh (0 Deg)	Yes	Y	1	0.9	39	0.9	81	-1	ELY	-1	82	1	83		ELZ	1	ELX	
65	0.9D - 1.0Ev + 1.0Eh (30 Deg)	Yes	Y	1	0.9	39	0.9	81	-1	ELY	-1	82	0.866	83	0.5	ELZ	0.866	ELX	0.5
66	0.9D - 1.0Ev + 1.0Eh (60 Deg)	Yes	Y	1	0.9	39	0.9	81	-1	ELY	-1	82	0.5	83	0.866	ELZ	0.5	ELX	0.866
67	0.9D - 1.0Ev + 1.0Eh (90 Deg)	Yes	Y	1	0.9	39	0.9	81	-1	ELY	-1	82		83	1	ELZ		ELX	1
68	0.9D - 1.0Ev + 1.0Eh (120 Deg)	Yes	Y	1	0.9	39	0.9	81	-1	ELY	-1	82	-0.5	83	0.866	ELZ	-0.5	ELX	0.866
69	0.9D - 1.0Ev + 1.0Eh (150 Deg)	Yes	Y	1	0.9	39	0.9	81	-1	ELY	-1	82	-0.866	83	0.5	ELZ	-0.866	ELX	0.5
70	0.9D - 1.0Ev + 1.0Eh (180 Deg)	Yes	Y	1	0.9	39	0.9	81	-1	ELY	-1	82	-1	83		ELZ	-1	ELX	
71	0.9D - 1.0Ev + 1.0Eh (210 Deg)	Yes	Y	1	0.9	39	0.9	81	-1	ELY	-1	82	-0.866	83	-0.5	ELZ	-0.866	ELX	-0.5

Load Combinations (Continued)

	Description	Solve	P-Delta	BLC	Factor	BLC	Factor	BLC	Factor	BLC	Factor	BLC	Factor	BLC	Factor	BLC	Factor	BLC	Factor
72	0.9D - 1.0Ev + 1.0Eh (240 Deg)	Yes	Y	1	0.9	39	0.9	81	-1	ELY	-1	82	-0.5	83	-0.866	ELZ	-0.5	ELX	-0.866
73	0.9D - 1.0Ev + 1.0Eh (270 Deg)	Yes	Y	1	0.9	39	0.9	81	-1	ELY	-1	82		83	-1	ELZ		ELX	-1
74	0.9D - 1.0Ev + 1.0Eh (300 Deg)	Yes	Y	1	0.9	39	0.9	81	-1	ELY	-1	82	0.5	83	-0.866	ELZ	0.5	ELX	-0.866
75	0.9D - 1.0Ev + 1.0Eh (330 Deg)	Yes	Y	1	0.9	39	0.9	81	-1	ELY	-1	82	0.866	83	-0.5	ELZ	0.866	ELX	-0.5

Hot Rolled Steel Section Sets

	Label	Shape	Type	Design List	Material	Design Rule	Area [in²]	Iyy [in⁴]	Izz [in⁴]	J [in⁴]
1	Face Horizontal	PIPE_3.0	Beam	Pipe	A53 Gr.B	Typical	2.07	2.85	2.85	5.69
2	Standoff Horizontal	HSS4X4X4	Beam	SquareTube	A500 Gr.B Rect	Typical	3.37	7.8	7.8	12.8
3	Corner Plate	PL1/2X6	Beam	BAR	A36 Gr.36	Typical	3	0.062	9	0.237
4	Platform Crossmember	HSS4X4X4	Beam	SquareTube	A500 Gr.B Rect	Typical	3.37	7.8	7.8	12.8
5	Grating Support	L2X2X3	Beam	Single Angle	A36 Gr.36	Typical	0.722	0.271	0.271	0.009
6	Mount Pipe	PIPE_2.0	Column	Pipe	A53 Gr.B	Typical	1.02	0.627	0.627	1.25
7	Cross Arm Plate	PL3/8X6	Column	RECT	A36 Gr.36	Typical	2.25	0.026	6.75	0.101
8	Kicker	LL3X3X4X0	Column	Double Angle (No Gap)	A36 Gr.36	Typical	2.88	4.5	2.46	0.063
9	Support Rail Corner	L2.5X2.5X4	Column	Single Angle	A36 Gr.36	Typical	1.19	0.692	0.692	0.026
10	Support Rail	PIPE_2.0	Column	HSS Pipe	A53 Gr.B	Typical	1.02	0.627	0.627	1.25

Node Coordinates

	Label	X [ft]	Y [ft]	Z [ft]	Detach From Diaphragm
1	N1	1.371207	0	0.791666	
2	N2	3.941078	0	-0.659482	
3	N3	1.512693	0.166667	3.546605	
4	N4	3.827797	0.166667	-0.463273	
5	N5	2.670245	0	1.541666	
6	N6	5.863714	0	3.385416	
7	N7	0	0	0	
8	N8	1.512693	0	3.546605	
9	N9	3.827797	0	-0.463273	
10	N10	1.399412	0	3.742814	
11	N11	2.753578	0	1.397329	
12	N12	2.586912	0	1.686004	
13	N13	4.130521	0	-0.550107	
14	N14	1.588855	0	3.852189	
15	N15	1.755521	0	3.852189	
16	N16	5.493922	0	3.831961	
17	N17	4.213855	0	-0.405769	
18	N18	6.065537	0	2.841895	
19	N19	1.755521	0	3.998023	
20	N20	4.34015	0	-0.478686	
21	N21	6.121526	0	2.938872	
22	N22	5.605901	0	3.831961	
23	N23	5.493922	0	3.998023	
24	N24	6.209351	0	2.758864	
25	N25	5.791545	0	3.34375	
26	N26	5.674426	0.166667	3.546605	
27	N27	5.674426	0	3.546605	
28	N28	5.908664	0.166667	3.140894	
29	N29	5.908664	0	3.140894	
30	N30	0	0	-1.583334	
31	N31	-2.541667	0	-3.083334	
32	N32	2.315104	0.166667	-3.083334	
33	N33	-2.315104	0.166667	-3.083334	

Node Coordinates (Continued)

	Label	X [ft]	Y [ft]	Z [ft]	Detach From Diaphragm
34	N34	0	0	-3.083334	
35	N35	0	0	-6.770834	
36	N36	2.315104	0	-3.083334	
37	N37	-2.315104	0	-3.083334	
38	N38	2.541667	0	-3.083334	
39	N39	-0.166667	0	-3.083334	
40	N40	0.166667	0	-3.083334	
41	N41	-2.541667	0	-3.302084	
42	N42	2.541667	0	-3.302084	
43	N43	2.458333	0	-3.446421	
44	N44	0.571615	0	-6.673857	
45	N45	-2.458333	0	-3.446421	
46	N46	-0.571615	0	-6.673857	
47	N47	2.584629	0	-3.519338	
48	N48	-2.584629	0	-3.519338	
49	N49	-0.515625	0	-6.770834	
50	N50	0.515625	0	-6.770834	
51	N51	0.715429	0	-6.756888	
52	N52	-0.715429	0	-6.756888	
53	N53	0	0	-6.6875	
54	N54	0.234238	0.166667	-6.6875	
55	N55	0.234238	0	-6.6875	
56	N56	-0.234238	0.166667	-6.6875	
57	N57	-0.234238	0	-6.6875	
58	N58	-1.371207	0	0.791666	
59	N59	-1.399412	0	3.742814	
60	N60	-3.827797	0.166667	-0.463273	
61	N61	-1.512693	0.166667	3.546605	
62	N62	-2.670245	0	1.541666	
63	N63	-5.863714	0	3.385416	
64	N64	-3.827797	0	-0.463273	
65	N65	-1.512693	0	3.546605	
66	N66	-3.941078	0	-0.659482	
67	N67	-2.586912	0	1.686004	
68	N68	-2.753578	0	1.397329	
69	N69	-1.588855	0	3.852189	
70	N70	-4.130521	0	-0.550107	
71	N71	-4.213855	0	-0.405769	
72	N72	-6.065537	0	2.841895	
73	N73	-1.755521	0	3.852189	
74	N74	-5.493922	0	3.831961	
75	N75	-4.34015	0	-0.478686	
76	N76	-1.755521	0	3.998023	
77	N77	-5.605901	0	3.831961	
78	N78	-6.121526	0	2.938872	
79	N79	-6.209351	0	2.758864	
80	N80	-5.493922	0	3.998023	
81	N81	-5.791545	0	3.34375	
82	N82	-5.908664	0.166667	3.140894	
83	N83	-5.908664	0	3.140894	
84	N84	-5.674426	0.166667	3.546605	
85	N85	-5.674426	0	3.546605	
86	N86	6.327255	0	3.998023	
87	N87	-6.172745	0	3.998023	
88	N88	0.298762	0	-7.478576	

Node Coordinates (Continued)

	Label	X [ft]	Y [ft]	Z [ft]	Detach From Diaphragm
89	N89	6.548762	0	3.346742	
90	N90	-6.626017	0	3.480552	
91	N91	-0.376017	0	-7.344766	
92	N92	4.868922	0	3.998023	
93	N93	4.868922	0	4.248023	
94	N94	4.868922	3.979167	4.248023	
95	N95	4.868922	-4.020833	4.248023	
96	N96	1.660589	0	3.998023	
97	N97	1.660589	0	4.248023	
98	N98	1.660589	3.979167	4.248023	
99	N99	1.660589	-4.020833	4.248023	
100	N100	-1.551911	0	3.998023	
101	N101	-1.551911	0	4.248023	
102	N102	-1.551911	3.979167	4.248023	
103	N103	-1.551911	-4.020833	4.248023	
104	N104	-4.735245	0	3.998023	
105	N105	-4.735245	0	4.248023	
106	N106	-4.735245	3.979167	4.248023	
107	N107	-4.735245	-4.020833	4.248023	
108	N108	1.027929	0	-6.215622	
109	N109	1.244435	0	-6.340622	
110	N110	1.244435	3.979167	-6.340622	
111	N111	1.244435	-4.020833	-6.340622	
112	N120	5.830012	0	2.10183	
113	N121	6.046518	0	1.97683	
114	N122	6.046518	3.979167	1.97683	
115	N123	6.046518	-4.020833	1.97683	
116	N124	-5.896851	0	2.217598	
117	N125	-6.113357	0	2.092598	
118	N126	-6.113357	3.979167	2.092598	
119	N127	-6.113357	-4.020833	2.092598	
120	N136	-1.094767	0	-6.099854	
121	N137	-1.311274	0	-6.224854	
122	N138	-1.311274	3.979167	-6.224854	
123	N139	-1.311274	-4.020833	-6.224854	
124	N142	0	0	-2.333334	
125	N143	0.25	0	-2.333334	
126	N144	0.25	3	-2.333334	
127	N145	0.25	-1	-2.333334	
128	N146	6.327255	3.5	3.998023	
129	N147	-6.172745	3.5	3.998023	
130	N148	0.298762	3.5	-7.478576	
131	N149	6.548762	3.5	3.346742	
132	N150	-6.626017	3.5	3.480552	
133	N151	-0.376017	3.5	-7.344766	
134	N152	4.868922	3.5	3.998023	
135	N153	4.868922	3.5	4.248023	
136	N154	1.660589	3.5	3.998023	
137	N155	1.660589	3.5	4.248023	
138	N156	-1.551911	3.5	3.998023	
139	N157	-1.551911	3.5	4.248023	
140	N158	-4.735245	3.5	3.998023	
141	N159	-4.735245	3.5	4.248023	
142	N160	1.027929	3.5	-6.215622	
143	N161	1.244435	3.5	-6.340622	

Node Coordinates (Continued)

	Label	X [ft]	Y [ft]	Z [ft]	Detach From Diaphragm
144	N166	5.830012	3.5	2.10183	
145	N167	6.046518	3.5	1.97683	
146	N168	-5.896851	3.5	2.217598	
147	N169	-6.113357	3.5	2.092598	
148	N174	-1.094767	3.5	-6.099854	
149	N175	-1.311274	3.5	-6.224854	
150	N177	4.740587	0	2.736979	
151	N178	0	0	-5.833334	
152	N179	0	-2.5	-1.583334	
153	N182	-4.402296	0	2.541666	
154	N183	4.402296	0	2.541666	
155	N162	4.238345	3.5	-0.655017	
156	N163	2.848602	0	-3.562124	
157	N164	2.632095	3.5	-3.437124	
158	N165	2.632095	0	-3.437124	
159	N170	2.848602	3.979167	-3.562124	
160	N171	2.848602	3.5	-3.562124	
161	N172	2.848602	-4.020833	-3.562124	
162	N173	4.238345	0	-0.655017	
163	N184	4.454852	0	-0.780017	
164	N185	4.454852	3.979167	-0.780017	
165	N186	4.454852	3.5	-0.780017	
166	N187	4.454852	-4.020833	-0.780017	
167	N188	-2.686434	3.5	-3.343007	
168	N189	-4.50919	0	-0.6859	
169	N190	-4.292684	3.5	-0.5609	
170	N191	-4.292684	0	-0.5609	
171	N192	-4.50919	3.979167	-0.6859	
172	N193	-4.50919	3.5	-0.6859	
173	N194	-4.50919	-4.020833	-0.6859	
174	N195	-2.686434	0	-3.343007	
175	N196	-2.90294	0	-3.468007	
176	N197	-2.90294	3.979167	-3.468007	
177	N198	-2.90294	3.5	-3.468007	
178	N199	-2.90294	-4.020833	-3.468007	
179	N180	-1.371207	-2.5	0.791666	
180	N181	-5.051815	0	2.916666	
181	N200	1.371207	-2.5	0.791666	
182	N201	5.051815	0	2.916666	
183	N202	5.494255	3.5	3.998023	
184	N203	-5.493922	3.5	3.998023	
185	N204	5.493922	3.5	3.831961	
186	N206	-5.493922	3.5	3.831961	
187	N205	0.571615	3.5	-6.673857	
188	N207	0.715262	3.5	-6.757177	
189	N208	6.065537	3.5	2.841895	
190	N209	6.209351	3.5	2.758864	
191	N210	-6.065537	3.5	2.841895	
192	N211	-6.209517	3.5	2.759153	
193	N212	-0.571615	3.5	-6.673857	
194	N213	-0.715429	3.5	-6.756888	
195	N214	-2.020726	0	1.166666	
196	N215	-2.145726	0	0.95016	
197	N216	-2.145726	3	0.95016	
198	N217	-2.145726	-1	0.95016	

Node Coordinates (Continued)

Label	X [ft]	Y [ft]	Z [ft]	Detach From Diaphragm

Node Boundary Conditions

	Node Label	X [k/in]	Y [k/in]	Z [k/in]	X Rot [k-ft/rad]	Y Rot [k-ft/rad]	Z Rot [k-ft/rad]
1	N1	Reaction	Reaction	Reaction	Reaction	Reaction	Reaction
2	N30	Reaction	Reaction	Reaction	Reaction	Reaction	Reaction
3	N58	Reaction	Reaction	Reaction	Reaction	Reaction	Reaction
4	N179	Reaction	Reaction	Reaction			
5	N180	Reaction	Reaction	Reaction			
6	N200	Reaction	Reaction	Reaction			

Hot Rolled Steel Properties

	Label	E [ksi]	G [ksi]	Nu	Therm. Coeff. [1e⁵°F⁻¹]	Density [k/ft³]	Yield [ksi]	Ry	Fu [ksi]	Rt
1	A992	29000	11154	0.3	0.65	0.49	50	1.1	65	1.1
2	A36 Gr.36	29000	11154	0.3	0.65	0.49	36	1.5	58	1.2
3	A572 Gr.50	29000	11154	0.3	0.65	0.49	50	1.1	65	1.1
4	A500 Gr.B RND	29000	11154	0.3	0.65	0.527	42	1.4	58	1.3
5	A500 Gr.B Rect	29000	11154	0.3	0.65	0.527	46	1.4	58	1.3
6	A53 Gr.B	29000	11154	0.3	0.65	0.49	35	1.6	60	1.2
7	A1085	29000	11154	0.3	0.65	0.49	50	1.4	65	1.3
8	Q235	29000	11154	0.3	0.65	0.49	35	1.5	58	1.2

Member Primary Data

	Label	I Node	J Node	Rotate(deg)	Section/Shape	Type	Design List	Material	Design Rule
1	Face	N86	N87		Face Horizontal	Beam	Pipe	A53 Gr.B	Typical
2	L1	N100	N101		RIGID	None	None	RIGID	Typical
3	L2	N104	N105		RIGID	None	None	RIGID	Typical
4	L3	N92	N93		RIGID	None	None	RIGID	Typical
5	L4	N96	N97		RIGID	None	None	RIGID	Typical
6	M1	N1	N6		Standoff Horizontal	Beam	SquareTube	A500 Gr.B Rect	Typical
7	M2	N10	N12		Platform Crossmember	Beam	SquareTube	A500 Gr.B Rect	Typical
8	M3	N11	N2		Platform Crossmember	Beam	SquareTube	A500 Gr.B Rect	Typical
9	M4	N21	N22		Corner Plate	Beam	BAR	A36 Gr.36	Typical
10	M5	N4	N9	240	RIGID	None	None	RIGID	Typical
11	M6	N3	N8	240	RIGID	None	None	RIGID	Typical
12	M7	N26	N3		Grating Support	Beam	Single Angle	A36 Gr.36	Typical
13	M8	N4	N28		Grating Support	Beam	Single Angle	A36 Gr.36	Typical
14	M9	N28	N29	240	RIGID	None	None	RIGID	Typical
15	M10	N11	N5		RIGID	None	None	RIGID	Typical
16	M11	N5	N12		RIGID	None	None	RIGID	Typical
17	M12	N10	N14		Cross Arm Plate	Column	RECT	A36 Gr.36	Typical
18	M13	N14	N15		Cross Arm Plate	Column	RECT	A36 Gr.36	Typical
19	M14	N15	N19		RIGID	None	None	RIGID	Typical
20	M15	N22	N16		Corner Plate	Beam	BAR	A36 Gr.36	Typical
21	M16	N16	N23		RIGID	None	None	RIGID	Typical
22	M17	N2	N13		Cross Arm Plate	Column	RECT	A36 Gr.36	Typical
23	M18	N13	N17		Cross Arm Plate	Column	RECT	A36 Gr.36	Typical
24	M19	N17	N20		RIGID	None	None	RIGID	Typical
25	M20	N21	N18		Corner Plate	Beam	BAR	A36 Gr.36	Typical
26	M21	N18	N24		RIGID	None	None	RIGID	Typical
27	M22	N29	N25		RIGID	None	None	RIGID	Typical
28	M23	N25	N27		RIGID	None	None	RIGID	Typical
29	M24	N26	N27	240	RIGID	None	None	RIGID	Typical
30	M25	N30	N35		Standoff Horizontal	Beam	SquareTube	A500 Gr.B Rect	Typical
31	M26	N38	N40		Platform Crossmember	Beam	SquareTube	A500 Gr.B Rect	Typical
32	M27	N39	N31		Platform Crossmember	Beam	SquareTube	A500 Gr.B Rect	Typical

Member Primary Data (Continued)

	Label	I Node	J Node	Rotate(deg)	Section/Shape	Type	Design List	Material	Design Rule
33	M28	N49	N50		Corner Plate	Beam	BAR	A36 Gr.36	Typical
34	M29	N33	N37	240	RIGID	None	None	RIGID	Typical
35	M30	N32	N36	240	RIGID	None	None	RIGID	Typical
36	M31	N54	N32		Grating Support	Beam	Single Angle	A36 Gr.36	Typical
37	M32	N33	N56		Grating Support	Beam	Single Angle	A36 Gr.36	Typical
38	M33	N56	N57	240	RIGID	None	None	RIGID	Typical
39	M34	N39	N34		RIGID	None	None	RIGID	Typical
40	M35	N34	N40		RIGID	None	None	RIGID	Typical
41	M36	N38	N42		Cross Arm Plate	Column	RECT	A36 Gr.36	Typical
42	M37	N42	N43		Cross Arm Plate	Column	RECT	A36 Gr.36	Typical
43	M38	N43	N47		RIGID	None	None	RIGID	Typical
44	M39	N50	N44		Corner Plate	Beam	BAR	A36 Gr.36	Typical
45	M40	N44	N51		RIGID	None	None	RIGID	Typical
46	M41	N31	N41		Cross Arm Plate	Column	RECT	A36 Gr.36	Typical
47	M42	N41	N45		Cross Arm Plate	Column	RECT	A36 Gr.36	Typical
48	M43	N45	N48		RIGID	None	None	RIGID	Typical
49	M44	N49	N46		Corner Plate	Beam	BAR	A36 Gr.36	Typical
50	M45	N46	N52		RIGID	None	None	RIGID	Typical
51	M46	N57	N53		RIGID	None	None	RIGID	Typical
52	M47	N53	N55		RIGID	None	None	RIGID	Typical
53	M48	N54	N55	240	RIGID	None	None	RIGID	Typical
54	M49	N58	N63		Standoff Horizontal	Beam	SquareTube	A500 Gr.B Rect	Typical
55	M50	N66	N68		Platform Crossmember	Beam	SquareTube	A500 Gr.B Rect	Typical
56	M51	N67	N59		Platform Crossmember	Beam	SquareTube	A500 Gr.B Rect	Typical
57	M52	N77	N78		Corner Plate	Beam	BAR	A36 Gr.36	Typical
58	M53	N61	N65	240	RIGID	None	None	RIGID	Typical
59	M54	N60	N64	240	RIGID	None	None	RIGID	Typical
60	M55	N82	N60		Grating Support	Beam	Single Angle	A36 Gr.36	Typical
61	M56	N61	N84		Grating Support	Beam	Single Angle	A36 Gr.36	Typical
62	M57	N84	N85	240	RIGID	None	None	RIGID	Typical
63	M58	N67	N62		RIGID	None	None	RIGID	Typical
64	M59	N62	N68		RIGID	None	None	RIGID	Typical
65	M60	N66	N70		Cross Arm Plate	Column	RECT	A36 Gr.36	Typical
66	M61	N70	N71		Cross Arm Plate	Column	RECT	A36 Gr.36	Typical
67	M62	N71	N75		RIGID	None	None	RIGID	Typical
68	M63	N78	N72		Corner Plate	Beam	BAR	A36 Gr.36	Typical
69	M64	N72	N79		RIGID	None	None	RIGID	Typical
70	M65	N59	N69		Cross Arm Plate	Column	RECT	A36 Gr.36	Typical
71	M66	N69	N73		Cross Arm Plate	Column	RECT	A36 Gr.36	Typical
72	M67	N73	N76		RIGID	None	None	RIGID	Typical
73	M68	N77	N74		Corner Plate	Beam	BAR	A36 Gr.36	Typical
74	M69	N74	N80		RIGID	None	None	RIGID	Typical
75	M70	N85	N81		RIGID	None	None	RIGID	Typical
76	M71	N81	N83		RIGID	None	None	RIGID	Typical
77	M72	N82	N83	240	RIGID	None	None	RIGID	Typical
78	M74	N88	N89		Face Horizontal	Beam	Pipe	A53 Gr.B	Typical
79	M75	N90	N91		Face Horizontal	Beam	Pipe	A53 Gr.B	Typical
80	M84	N108	N109		RIGID	None	None	RIGID	Typical
81	M90	N120	N121		RIGID	None	None	RIGID	Typical
82	M92	N124	N125		RIGID	None	None	RIGID	Typical
83	M98	N136	N137		RIGID	None	None	RIGID	Typical
84	M101	N142	N143		RIGID	None	None	RIGID	Typical
85	M103	N146	N147		Support Rail	Column	HSS Pipe	A53 Gr.B	Typical
86	M104	N148	N149		Support Rail	Column	HSS Pipe	A53 Gr.B	Typical
87	M105	N150	N151		Support Rail	Column	HSS Pipe	A53 Gr.B	Typical

Member Primary Data (Continued)

	Label	I Node	J Node	Rotate(deg)	Section/Shape	Type	Design List	Material	Design Rule
88	M106	N152	N153		RIGID	None	None	RIGID	Typical
89	M107	N154	N155		RIGID	None	None	RIGID	Typical
90	M108	N156	N157		RIGID	None	None	RIGID	Typical
91	M109	N158	N159		RIGID	None	None	RIGID	Typical
92	M110	N160	N161		RIGID	None	None	RIGID	Typical
93	M112	N162	N186		RIGID	None	None	RIGID	Typical
94	M113	N166	N167		RIGID	None	None	RIGID	Typical
95	M114	N168	N169		RIGID	None	None	RIGID	Typical
96	M115	N165	N163		RIGID	None	None	RIGID	Typical
97	M116	N164	N171		RIGID	None	None	RIGID	Typical
98	M117	N174	N175		RIGID	None	None	RIGID	Typical
99	M118	N178	N179		Kicker	Column	Double Angle (No Gap)	A36 Gr.36	Typical
100	M119	N181	N180		Kicker	Column	Double Angle (No Gap)	A36 Gr.36	Typical
101	M120	N201	N200		Kicker	Column	Double Angle (No Gap)	A36 Gr.36	Typical
102	M121	N173	N184		RIGID	None	None	RIGID	Typical
103	M122	N204	N202		RIGID	None	None	RIGID	Typical
104	M123	N206	N203		RIGID	None	None	RIGID	Typical
105	M124	N188	N198		RIGID	None	None	RIGID	Typical
106	M125	N191	N189		RIGID	None	None	RIGID	Typical
107	M126	N190	N193		RIGID	None	None	RIGID	Typical
108	M127	N195	N196		RIGID	None	None	RIGID	Typical
109	M128	N205	N207		RIGID	None	None	RIGID	Typical
110	M129	N208	N209		RIGID	None	None	RIGID	Typical
111	M130	N210	N211		RIGID	None	None	RIGID	Typical
112	M131	N212	N213		RIGID	None	None	RIGID	Typical
113	M132	N206	N210	180	Support Rail Corner	Column	Single Angle	A36 Gr.36	Typical
114	M133	N208	N204	180	Support Rail Corner	Column	Single Angle	A36 Gr.36	Typical
115	M134	N212	N205	180	Support Rail Corner	Column	Single Angle	A36 Gr.36	Typical
116	M135	N214	N215		RIGID	None	None	RIGID	Typical
117	MP1A	N94	N95		Mount Pipe	Column	Pipe	A53 Gr.B	Typical
118	MP1B	N126	N127	120	Mount Pipe	Column	Pipe	A53 Gr.B	Typical
119	MP1C	N110	N111	240	Mount Pipe	Column	Pipe	A53 Gr.B	Typical
120	MP2A	N98	N99		Mount Pipe	Column	Pipe	A53 Gr.B	Typical
121	MP2B	N192	N194	120	Mount Pipe	Column	Pipe	A53 Gr.B	Typical
122	MP2C	N170	N172	240	Mount Pipe	Column	Pipe	A53 Gr.B	Typical
123	MP3A	N102	N103		Mount Pipe	Column	Pipe	A53 Gr.B	Typical
124	MP3B	N197	N199	120	Mount Pipe	Column	Pipe	A53 Gr.B	Typical
125	MP3C	N185	N187	240	Mount Pipe	Column	Pipe	A53 Gr.B	Typical
126	MP4A	N106	N107		Mount Pipe	Column	Pipe	A53 Gr.B	Typical
127	MP4B	N138	N139	120	Mount Pipe	Column	Pipe	A53 Gr.B	Typical
128	MP4C	N122	N123	240	Mount Pipe	Column	Pipe	A53 Gr.B	Typical
129	OVP	N144	N145		Mount Pipe	Column	Pipe	A53 Gr.B	Typical
130	OVP2	N216	N217	240	Mount Pipe	Column	Pipe	A53 Gr.B	Typical

Member Point Loads (BLC 1 : Antenna D)

	Member Label	Direction	Magnitude [lb, k-ft]	Location [(ft, %)]
1	MP1A	Y	-29.45	1.5
2	MP1A	My	-0.015	1.5
3	MP1A	Mz	0	1.5
4	MP1A	Y	-29.45	6.5
5	MP1A	My	-0.015	6.5
6	MP1A	Mz	0	6.5
7	MP1B	Y	-29.45	1.5
8	MP1B	My	0.007	1.5
9	MP1B	Mz	-0.013	1.5

Member Point Loads (BLC 1 : Antenna D) (Continued)

	Member Label	Direction	Magnitude [lb, k-ft]	Location [(ft, %)]
10	MP1B	Y	-29.45	6.5
11	MP1B	My	0.007	6.5
12	MP1B	Mz	-0.013	6.5
13	MP1C	Y	-29.45	1.5
14	MP1C	My	0.009	1.5
15	MP1C	Mz	0.011	1.5
16	MP1C	Y	-29.45	6.5
17	MP1C	My	0.009	6.5
18	MP1C	Mz	0.011	6.5
19	MP4A	Y	-29.45	1.5
20	MP4A	My	-0.015	1.5
21	MP4A	Mz	0	1.5
22	MP4A	Y	-29.45	6.5
23	MP4A	My	-0.015	6.5
24	MP4A	Mz	0	6.5
25	MP4B	Y	-29.45	1.5
26	MP4B	My	0.007	1.5
27	MP4B	Mz	-0.013	1.5
28	MP4B	Y	-29.45	6.5
29	MP4B	My	0.007	6.5
30	MP4B	Mz	-0.013	6.5
31	MP4C	Y	-29.45	1.5
32	MP4C	My	0.009	1.5
33	MP4C	Mz	0.011	1.5
34	MP4C	Y	-29.45	6.5
35	MP4C	My	0.009	6.5
36	MP4C	Mz	0.011	6.5
37	MP2A	Y	-28.65	3
38	MP2A	My	-0.014	3
39	MP2A	Mz	0	3
40	MP2A	Y	-28.65	5
41	MP2A	My	-0.014	5
42	MP2A	Mz	0	5
43	MP2B	Y	-28.65	3
44	MP2B	My	0.007	3
45	MP2B	Mz	-0.012	3
46	MP2B	Y	-28.65	5
47	MP2B	My	0.007	5
48	MP2B	Mz	-0.012	5
49	MP2C	Y	-28.65	3
50	MP2C	My	0.009	3
51	MP2C	Mz	0.011	3
52	MP2C	Y	-28.65	5
53	MP2C	My	0.009	5
54	MP2C	Mz	0.011	5
55	MP4A	Y	-79.1	2.25
56	MP4A	My	0.04	2.25
57	MP4A	Mz	0	2.25
58	MP4B	Y	-79.1	2.25
59	MP4B	My	-0.02	2.25
60	MP4B	Mz	0.034	2.25
61	MP4C	Y	-79.1	2.25
62	MP4C	My	-0.02	2.25
63	MP4C	Mz	-0.034	2.25
64	OVP	Y	-32	1

Member Point Loads (BLC 1 : Antenna D) (Continued)

	Member Label	Direction	Magnitude [lb, k-ft]	Location [(ft, %)]
65	OVP	My	0	1
66	OVP	Mz	0	1
67	MP3A	Y	-63.6	3
68	MP3A	My	-0.032	3
69	MP3A	Mz	0	3
70	MP3A	Y	-63.6	5
71	MP3A	My	-0.032	5
72	MP3A	Mz	0	5
73	MP3B	Y	-63.6	3
74	MP3B	My	0.016	3
75	MP3B	Mz	-0.028	3
76	MP3B	Y	-63.6	5
77	MP3B	My	0.016	5
78	MP3B	Mz	-0.028	5
79	MP3C	Y	-63.6	3
80	MP3C	My	0.02	3
81	MP3C	Mz	0.024	3
82	MP3C	Y	-63.6	5
83	MP3C	My	0.02	5
84	MP3C	Mz	0.024	5

Member Point Loads (BLC 2 : Antenna Di)

	Member Label	Direction	Magnitude [lb, k-ft]	Location [(ft, %)]
1	MP1A	Y	-96.395	1.5
2	MP1A	My	-0.048	1.5
3	MP1A	Mz	0	1.5
4	MP1A	Y	-96.395	6.5
5	MP1A	My	-0.048	6.5
6	MP1A	Mz	0	6.5
7	MP1B	Y	-96.395	1.5
8	MP1B	My	0.024	1.5
9	MP1B	Mz	-0.042	1.5
10	MP1B	Y	-96.395	6.5
11	MP1B	My	0.024	6.5
12	MP1B	Mz	-0.042	6.5
13	MP1C	Y	-96.395	1.5
14	MP1C	My	0.031	1.5
15	MP1C	Mz	0.037	1.5
16	MP1C	Y	-96.395	6.5
17	MP1C	My	0.031	6.5
18	MP1C	Mz	0.037	6.5
19	MP4A	Y	-96.395	1.5
20	MP4A	My	-0.048	1.5
21	MP4A	Mz	0	1.5
22	MP4A	Y	-96.395	6.5
23	MP4A	My	-0.048	6.5
24	MP4A	Mz	0	6.5
25	MP4B	Y	-96.395	1.5
26	MP4B	My	0.024	1.5
27	MP4B	Mz	-0.042	1.5
28	MP4B	Y	-96.395	6.5
29	MP4B	My	0.024	6.5
30	MP4B	Mz	-0.042	6.5
31	MP4C	Y	-96.395	1.5
32	MP4C	My	0.031	1.5

Member Point Loads (BLC 2 : Antenna Di) (Continued)

	Member Label	Direction	Magnitude [lb, k-ft]	Location [(ft, %)]
33	MP4C	Mz	0.037	1.5
34	MP4C	Y	-96.395	6.5
35	MP4C	My	0.031	6.5
36	MP4C	Mz	0.037	6.5
37	MP2A	Y	-47.761	3
38	MP2A	My	-0.024	3
39	MP2A	Mz	0	3
40	MP2A	Y	-47.761	5
41	MP2A	My	-0.024	5
42	MP2A	Mz	0	5
43	MP2B	Y	-47.761	3
44	MP2B	My	0.012	3
45	MP2B	Mz	-0.021	3
46	MP2B	Y	-47.761	5
47	MP2B	My	0.012	5
48	MP2B	Mz	-0.021	5
49	MP2C	Y	-47.761	3
50	MP2C	My	0.015	3
51	MP2C	Mz	0.018	3
52	MP2C	Y	-47.761	5
53	MP2C	My	0.015	5
54	MP2C	Mz	0.018	5
55	MP4A	Y	-73.076	2.25
56	MP4A	My	0.037	2.25
57	MP4A	Mz	0	2.25
58	MP4B	Y	-73.076	2.25
59	MP4B	My	-0.018	2.25
60	MP4B	Mz	0.032	2.25
61	MP4C	Y	-73.076	2.25
62	MP4C	My	-0.018	2.25
63	MP4C	Mz	-0.032	2.25
64	OVP	Y	-139.193	1
65	OVP	My	0	1
66	OVP	Mz	0	1
67	MP3A	Y	-98.71	3
68	MP3A	My	-0.049	3
69	MP3A	Mz	0	3
70	MP3A	Y	-98.71	5
71	MP3A	My	-0.049	5
72	MP3A	Mz	0	5
73	MP3B	Y	-98.71	3
74	MP3B	My	0.025	3
75	MP3B	Mz	-0.043	3
76	MP3B	Y	-98.71	5
77	MP3B	My	0.025	5
78	MP3B	Mz	-0.043	5
79	MP3C	Y	-98.71	3
80	MP3C	My	0.032	3
81	MP3C	Mz	0.038	3
82	MP3C	Y	-98.71	5
83	MP3C	My	0.032	5
84	MP3C	Mz	0.038	5

Member Point Loads (BLC 3 : Antenna Wo (0 Deg))

	Member Label	Direction	Magnitude [lb, k-ft]	Location [(ft, %)]
1	MP1A	X	0	1.5
2	MP1A	Z	-114.233	1.5
3	MP1A	Mx	0	1.5
4	MP1A	X	0	6.5
5	MP1A	Z	-114.233	6.5
6	MP1A	Mx	0	6.5
7	MP1B	X	0	1.5
8	MP1B	Z	-65.321	1.5
9	MP1B	Mx	0.028	1.5
10	MP1B	X	0	6.5
11	MP1B	Z	-65.321	6.5
12	MP1B	Mx	0.028	6.5
13	MP1C	X	0	1.5
14	MP1C	Z	-75.963	1.5
15	MP1C	Mx	-0.029	1.5
16	MP1C	X	0	6.5
17	MP1C	Z	-75.963	6.5
18	MP1C	Mx	-0.029	6.5
19	MP4A	X	0	1.5
20	MP4A	Z	-114.233	1.5
21	MP4A	Mx	0	1.5
22	MP4A	X	0	6.5
23	MP4A	Z	-114.233	6.5
24	MP4A	Mx	0	6.5
25	MP4B	X	0	1.5
26	MP4B	Z	-65.321	1.5
27	MP4B	Mx	0.028	1.5
28	MP4B	X	0	6.5
29	MP4B	Z	-65.321	6.5
30	MP4B	Mx	0.028	6.5
31	MP4C	X	0	1.5
32	MP4C	Z	-75.963	1.5
33	MP4C	Mx	-0.029	1.5
34	MP4C	X	0	6.5
35	MP4C	Z	-75.963	6.5
36	MP4C	Mx	-0.029	6.5
37	MP2A	X	0	3
38	MP2A	Z	-66.478	3
39	MP2A	Mx	0	3
40	MP2A	X	0	5
41	MP2A	Z	-66.478	5
42	MP2A	Mx	0	5
43	MP2B	X	0	3
44	MP2B	Z	-34.133	3
45	MP2B	Mx	0.015	3
46	MP2B	X	0	5
47	MP2B	Z	-34.133	5
48	MP2B	Mx	0.015	5
49	MP2C	X	0	3
50	MP2C	Z	-41.171	3
51	MP2C	Mx	-0.016	3
52	MP2C	X	0	5
53	MP2C	Z	-41.171	5
54	MP2C	Mx	-0.016	5
55	MP4A	X	0	2.25

Member Point Loads (BLC 3 : Antenna Wo (0 Deg)) (Continued)

	Member Label	Direction	Magnitude [lb, k-ft]	Location [(ft, %)]
56	MP4A	Z	-78.68	2.25
57	MP4A	Mx	0	2.25
58	MP4B	X	0	2.25
59	MP4B	Z	-59.904	2.25
60	MP4B	Mx	-0.026	2.25
61	MP4C	X	0	2.25
62	MP4C	Z	-59.904	2.25
63	MP4C	Mx	0.026	2.25
64	OVP	X	0	1
65	OVP	Z	-101.4	1
66	OVP	Mx	0	1
67	MP3A	X	0	3
68	MP3A	Z	-144.948	3
69	MP3A	Mx	0	3
70	MP3A	X	0	5
71	MP3A	Z	-144.948	5
72	MP3A	Mx	0	5
73	MP3B	X	0	3
74	MP3B	Z	-72.369	3
75	MP3B	Mx	0.031	3
76	MP3B	X	0	5
77	MP3B	Z	-72.369	5
78	MP3B	Mx	0.031	5
79	MP3C	X	0	3
80	MP3C	Z	-88.16	3
81	MP3C	Mx	-0.034	3
82	MP3C	X	0	5
83	MP3C	Z	-88.16	5
84	MP3C	Mx	-0.034	5

Member Point Loads (BLC 4 : Antenna Wo (30 Deg))

	Member Label	Direction	Magnitude [lb, k-ft]	Location [(ft, %)]
1	MP1A	X	48.965	1.5
2	MP1A	Z	-84.809	1.5
3	MP1A	Mx	-0.024	1.5
4	MP1A	X	48.965	6.5
5	MP1A	Z	-84.809	6.5
6	MP1A	Mx	-0.024	6.5
7	MP1B	X	24.509	1.5
8	MP1B	Z	-42.45	1.5
9	MP1B	Mx	0.025	1.5
10	MP1B	X	24.509	6.5
11	MP1B	Z	-42.45	6.5
12	MP1B	Mx	0.025	6.5
13	MP1C	X	53.302	1.5
14	MP1C	Z	-92.322	1.5
15	MP1C	Mx	-0.018	1.5
16	MP1C	X	53.302	6.5
17	MP1C	Z	-92.322	6.5
18	MP1C	Mx	-0.018	6.5
19	MP4A	X	48.965	1.5
20	MP4A	Z	-84.809	1.5
21	MP4A	Mx	-0.024	1.5
22	MP4A	X	48.965	6.5
23	MP4A	Z	-84.809	6.5

Member Point Loads (BLC 4 : Antenna Wo (30 Deg)) (Continued)

	Member Label	Direction	Magnitude [lb, k-ft]	Location [(ft, %)]
24	MP4A	Mx	-0.024	6.5
25	MP4B	X	24.509	1.5
26	MP4B	Z	-42.45	1.5
27	MP4B	Mx	0.025	1.5
28	MP4B	X	24.509	6.5
29	MP4B	Z	-42.45	6.5
30	MP4B	Mx	0.025	6.5
31	MP4C	X	53.302	1.5
32	MP4C	Z	-92.322	1.5
33	MP4C	Mx	-0.018	1.5
34	MP4C	X	53.302	6.5
35	MP4C	Z	-92.322	6.5
36	MP4C	Mx	-0.018	6.5
37	MP2A	X	27.848	3
38	MP2A	Z	-48.235	3
39	MP2A	Mx	-0.014	3
40	MP2A	X	27.848	5
41	MP2A	Z	-48.235	5
42	MP2A	Mx	-0.014	5
43	MP2B	X	11.676	3
44	MP2B	Z	-20.223	3
45	MP2B	Mx	0.012	3
46	MP2B	X	11.676	5
47	MP2B	Z	-20.223	5
48	MP2B	Mx	0.012	5
49	MP2C	X	30.717	3
50	MP2C	Z	-53.203	3
51	MP2C	Mx	-0.011	3
52	MP2C	X	30.717	5
53	MP2C	Z	-53.203	5
54	MP2C	Mx	-0.011	5
55	MP4A	X	36.211	2.25
56	MP4A	Z	-62.719	2.25
57	MP4A	Mx	0.018	2.25
58	MP4B	X	26.823	2.25
59	MP4B	Z	-46.458	2.25
60	MP4B	Mx	-0.027	2.25
61	MP4C	X	36.211	2.25
62	MP4C	Z	-62.719	2.25
63	MP4C	Mx	0.018	2.25
64	OVP	X	54.697	1
65	OVP	Z	-94.739	1
66	OVP	Mx	0	1
67	MP3A	X	60.377	3
68	MP3A	Z	-104.577	3
69	MP3A	Mx	-0.03	3
70	MP3A	X	60.377	5
71	MP3A	Z	-104.577	5
72	MP3A	Mx	-0.03	5
73	MP3B	X	24.088	3
74	MP3B	Z	-41.721	3
75	MP3B	Mx	0.024	3
76	MP3B	X	24.088	5
77	MP3B	Z	-41.721	5
78	MP3B	Mx	0.024	5

Member Point Loads (BLC 4 : Antenna Wo (30 Deg)) (Continued)

	Member Label	Direction	Magnitude [lb, k-ft]	Location [(ft, %)]
79	MP3C	X	66.814	3
80	MP3C	Z	-115.725	3
81	MP3C	Mx	-0.023	3
82	MP3C	X	66.814	5
83	MP3C	Z	-115.725	5
84	MP3C	Mx	-0.023	5

Member Point Loads (BLC 5 : Antenna Wo (60 Deg))

	Member Label	Direction	Magnitude [lb, k-ft]	Location [(ft, %)]
1	MP1A	X	56.57	1.5
2	MP1A	Z	-32.661	1.5
3	MP1A	Mx	-0.028	1.5
4	MP1A	X	56.57	6.5
5	MP1A	Z	-32.661	6.5
6	MP1A	Mx	-0.028	6.5
7	MP1B	X	56.57	1.5
8	MP1B	Z	-32.661	1.5
9	MP1B	Mx	0.028	1.5
10	MP1B	X	56.57	6.5
11	MP1B	Z	-32.661	6.5
12	MP1B	Mx	0.028	6.5
13	MP1C	X	97.226	1.5
14	MP1C	Z	-56.133	1.5
15	MP1C	Mx	0.01	1.5
16	MP1C	X	97.226	6.5
17	MP1C	Z	-56.133	6.5
18	MP1C	Mx	0.01	6.5
19	MP4A	X	56.57	1.5
20	MP4A	Z	-32.661	1.5
21	MP4A	Mx	-0.028	1.5
22	MP4A	X	56.57	6.5
23	MP4A	Z	-32.661	6.5
24	MP4A	Mx	-0.028	6.5
25	MP4B	X	56.57	1.5
26	MP4B	Z	-32.661	1.5
27	MP4B	Mx	0.028	1.5
28	MP4B	X	56.57	6.5
29	MP4B	Z	-32.661	6.5
30	MP4B	Mx	0.028	6.5
31	MP4C	X	97.226	1.5
32	MP4C	Z	-56.133	1.5
33	MP4C	Mx	0.01	1.5
34	MP4C	X	97.226	6.5
35	MP4C	Z	-56.133	6.5
36	MP4C	Mx	0.01	6.5
37	MP2A	X	29.56	3
38	MP2A	Z	-17.067	3
39	MP2A	Mx	-0.015	3
40	MP2A	X	29.56	5
41	MP2A	Z	-17.067	5
42	MP2A	Mx	-0.015	5
43	MP2B	X	29.56	3
44	MP2B	Z	-17.067	3
45	MP2B	Mx	0.015	3
46	MP2B	X	29.56	5

Member Point Loads (BLC 5 : Antenna Wo (60 Deg)) (Continued)

	Member Label	Direction	Magnitude [lb, k-ft]	Location [(ft, %)]
47	MP2B	Z	-17.067	5
48	MP2B	Mx	0.015	5
49	MP2C	X	56.446	3
50	MP2C	Z	-32.589	3
51	MP2C	Mx	0.006	3
52	MP2C	X	56.446	5
53	MP2C	Z	-32.589	5
54	MP2C	Mx	0.006	5
55	MP4A	X	51.879	2.25
56	MP4A	Z	-29.952	2.25
57	MP4A	Mx	0.026	2.25
58	MP4B	X	51.879	2.25
59	MP4B	Z	-29.952	2.25
60	MP4B	Mx	-0.026	2.25
61	MP4C	X	68.139	2.25
62	MP4C	Z	-39.34	2.25
63	MP4C	Mx	0	2.25
64	OVP	X	108.585	1
65	OVP	Z	-62.692	1
66	OVP	Mx	0	1
67	MP3A	X	62.673	3
68	MP3A	Z	-36.184	3
69	MP3A	Mx	-0.031	3
70	MP3A	X	62.673	5
71	MP3A	Z	-36.184	5
72	MP3A	Mx	-0.031	5
73	MP3B	X	62.673	3
74	MP3B	Z	-36.184	3
75	MP3B	Mx	0.031	3
76	MP3B	X	62.673	5
77	MP3B	Z	-36.184	5
78	MP3B	Mx	0.031	5
79	MP3C	X	123.002	3
80	MP3C	Z	-71.015	3
81	MP3C	Mx	0.012	3
82	MP3C	X	123.002	5
83	MP3C	Z	-71.015	5
84	MP3C	Mx	0.012	5

Member Point Loads (BLC 6 : Antenna Wo (90 Deg))

	Member Label	Direction	Magnitude [lb, k-ft]	Location [(ft, %)]
1	MP1A	X	49.017	1.5
2	MP1A	Z	0	1.5
3	MP1A	Mx	-0.025	1.5
4	MP1A	X	49.017	6.5
5	MP1A	Z	0	6.5
6	MP1A	Mx	-0.025	6.5
7	MP1B	X	97.929	1.5
8	MP1B	Z	0	1.5
9	MP1B	Mx	0.024	1.5
10	MP1B	X	97.929	6.5
11	MP1B	Z	0	6.5
12	MP1B	Mx	0.024	6.5
13	MP1C	X	87.288	1.5
14	MP1C	Z	0	1.5

Member Point Loads (BLC 6 : Antenna Wo (90 Deg)) (Continued)

	Member Label	Direction	Magnitude [lb, k-ft]	Location [(ft, %)]
15	MP1C	Mx	0.028	1.5
16	MP1C	X	87.288	6.5
17	MP1C	Z	0	6.5
18	MP1C	Mx	0.028	6.5
19	MP4A	X	49.017	1.5
20	MP4A	Z	0	1.5
21	MP4A	Mx	-0.025	1.5
22	MP4A	X	49.017	6.5
23	MP4A	Z	0	6.5
24	MP4A	Mx	-0.025	6.5
25	MP4B	X	97.929	1.5
26	MP4B	Z	0	1.5
27	MP4B	Mx	0.024	1.5
28	MP4B	X	97.929	6.5
29	MP4B	Z	0	6.5
30	MP4B	Mx	0.024	6.5
31	MP4C	X	87.288	1.5
32	MP4C	Z	0	1.5
33	MP4C	Mx	0.028	1.5
34	MP4C	X	87.288	6.5
35	MP4C	Z	0	6.5
36	MP4C	Mx	0.028	6.5
37	MP2A	X	23.352	3
38	MP2A	Z	0	3
39	MP2A	Mx	-0.012	3
40	MP2A	X	23.352	5
41	MP2A	Z	0	5
42	MP2A	Mx	-0.012	5
43	MP2B	X	55.697	3
44	MP2B	Z	0	3
45	MP2B	Mx	0.014	3
46	MP2B	X	55.697	5
47	MP2B	Z	0	5
48	MP2B	Mx	0.014	5
49	MP2C	X	48.659	3
50	MP2C	Z	0	3
51	MP2C	Mx	0.016	3
52	MP2C	X	48.659	5
53	MP2C	Z	0	5
54	MP2C	Mx	0.016	5
55	MP4A	X	53.645	2.25
56	MP4A	Z	0	2.25
57	MP4A	Mx	0.027	2.25
58	MP4B	X	72.421	2.25
59	MP4B	Z	0	2.25
60	MP4B	Mx	-0.018	2.25
61	MP4C	X	72.421	2.25
62	MP4C	Z	0	2.25
63	MP4C	Mx	-0.018	2.25
64	OVP	X	133.377	1
65	OVP	Z	0	1
66	OVP	Mx	0	1
67	MP3A	X	48.176	3
68	MP3A	Z	0	3
69	MP3A	Mx	-0.024	3

Member Point Loads (BLC 6 : Antenna Wo (90 Deg)) (Continued)

	Member Label	Direction	Magnitude [lb, k-ft]	Location [(ft, %)]
70	MP3A	X	48.176	5
71	MP3A	Z	0	5
72	MP3A	Mx	-0.024	5
73	MP3B	X	120.755	3
74	MP3B	Z	0	3
75	MP3B	Mx	0.03	3
76	MP3B	X	120.755	5
77	MP3B	Z	0	5
78	MP3B	Mx	0.03	5
79	MP3C	X	104.964	3
80	MP3C	Z	0	3
81	MP3C	Mx	0.034	3
82	MP3C	X	104.964	5
83	MP3C	Z	0	5
84	MP3C	Mx	0.034	5

Member Point Loads (BLC 7 : Antenna Wo (120 Deg))

	Member Label	Direction	Magnitude [lb, k-ft]	Location [(ft, %)]
1	MP1A	X	56.57	1.5
2	MP1A	Z	32.661	1.5
3	MP1A	Mx	-0.028	1.5
4	MP1A	X	56.57	6.5
5	MP1A	Z	32.661	6.5
6	MP1A	Mx	-0.028	6.5
7	MP1B	X	98.929	1.5
8	MP1B	Z	57.117	1.5
9	MP1B	Mx	0	1.5
10	MP1B	X	98.929	6.5
11	MP1B	Z	57.117	6.5
12	MP1B	Mx	0	6.5
13	MP1C	X	49.057	1.5
14	MP1C	Z	28.323	1.5
15	MP1C	Mx	0.027	1.5
16	MP1C	X	49.057	6.5
17	MP1C	Z	28.323	6.5
18	MP1C	Mx	0.027	6.5
19	MP4A	X	56.57	1.5
20	MP4A	Z	32.661	1.5
21	MP4A	Mx	-0.028	1.5
22	MP4A	X	56.57	6.5
23	MP4A	Z	32.661	6.5
24	MP4A	Mx	-0.028	6.5
25	MP4B	X	98.929	1.5
26	MP4B	Z	57.117	1.5
27	MP4B	Mx	0	1.5
28	MP4B	X	98.929	6.5
29	MP4B	Z	57.117	6.5
30	MP4B	Mx	0	6.5
31	MP4C	X	49.057	1.5
32	MP4C	Z	28.323	1.5
33	MP4C	Mx	0.027	1.5
34	MP4C	X	49.057	6.5
35	MP4C	Z	28.323	6.5
36	MP4C	Mx	0.027	6.5
37	MP2A	X	29.56	3

Member Point Loads (BLC 7 : Antenna Wo (120 Deg)) (Continued)

	Member Label	Direction	Magnitude [lb, k-ft]	Location [(ft, %)]
38	MP2A	Z	17.067	3
39	MP2A	Mx	-0.015	3
40	MP2A	X	29.56	5
41	MP2A	Z	17.067	5
42	MP2A	Mx	-0.015	5
43	MP2B	X	57.572	3
44	MP2B	Z	33.239	3
45	MP2B	Mx	0	3
46	MP2B	X	57.572	5
47	MP2B	Z	33.239	5
48	MP2B	Mx	0	5
49	MP2C	X	24.592	3
50	MP2C	Z	14.198	3
51	MP2C	Mx	0.013	3
52	MP2C	X	24.592	5
53	MP2C	Z	14.198	5
54	MP2C	Mx	0.013	5
55	MP4A	X	51.879	2.25
56	MP4A	Z	29.952	2.25
57	MP4A	Mx	0.026	2.25
58	MP4B	X	68.139	2.25
59	MP4B	Z	39.34	2.25
60	MP4B	Mx	0	2.25
61	MP4C	X	51.879	2.25
62	MP4C	Z	29.952	2.25
63	MP4C	Mx	-0.026	2.25
64	OVP	X	108.585	1
65	OVP	Z	62.692	1
66	OVP	Mx	0	1
67	MP3A	X	62.673	3
68	MP3A	Z	36.184	3
69	MP3A	Mx	-0.031	3
70	MP3A	X	62.673	5
71	MP3A	Z	36.184	5
72	MP3A	Mx	-0.031	5
73	MP3B	X	125.529	3
74	MP3B	Z	72.474	3
75	MP3B	Mx	0	3
76	MP3B	X	125.529	5
77	MP3B	Z	72.474	5
78	MP3B	Mx	0	5
79	MP3C	X	51.525	3
80	MP3C	Z	29.748	3
81	MP3C	Mx	0.028	3
82	MP3C	X	51.525	5
83	MP3C	Z	29.748	5
84	MP3C	Mx	0.028	5

Member Point Loads (BLC 8 : Antenna Wo (150 Deg))

	Member Label	Direction	Magnitude [lb, k-ft]	Location [(ft, %)]
1	MP1A	X	48.965	1.5
2	MP1A	Z	84.809	1.5
3	MP1A	Mx	-0.024	1.5
4	MP1A	X	48.965	6.5
5	MP1A	Z	84.809	6.5

Member Point Loads (BLC 8 : Antenna Wo (150 Deg)) (Continued)

	Member Label	Direction	Magnitude [lb, k-ft]	Location [(ft, %)]
6	MP1A	Mx	-0.024	6.5
7	MP1B	X	48.965	1.5
8	MP1B	Z	84.809	1.5
9	MP1B	Mx	-0.024	1.5
10	MP1B	X	48.965	6.5
11	MP1B	Z	84.809	6.5
12	MP1B	Mx	-0.024	6.5
13	MP1C	X	25.492	1.5
14	MP1C	Z	44.153	1.5
15	MP1C	Mx	0.025	1.5
16	MP1C	X	25.492	6.5
17	MP1C	Z	44.153	6.5
18	MP1C	Mx	0.025	6.5
19	MP4A	X	48.965	1.5
20	MP4A	Z	84.809	1.5
21	MP4A	Mx	-0.024	1.5
22	MP4A	X	48.965	6.5
23	MP4A	Z	84.809	6.5
24	MP4A	Mx	-0.024	6.5
25	MP4B	X	48.965	1.5
26	MP4B	Z	84.809	1.5
27	MP4B	Mx	-0.024	1.5
28	MP4B	X	48.965	6.5
29	MP4B	Z	84.809	6.5
30	MP4B	Mx	-0.024	6.5
31	MP4C	X	25.492	1.5
32	MP4C	Z	44.153	1.5
33	MP4C	Mx	0.025	1.5
34	MP4C	X	25.492	6.5
35	MP4C	Z	44.153	6.5
36	MP4C	Mx	0.025	6.5
37	MP2A	X	27.848	3
38	MP2A	Z	48.235	3
39	MP2A	Mx	-0.014	3
40	MP2A	X	27.848	5
41	MP2A	Z	48.235	5
42	MP2A	Mx	-0.014	5
43	MP2B	X	27.848	3
44	MP2B	Z	48.235	3
45	MP2B	Mx	-0.014	3
46	MP2B	X	27.848	5
47	MP2B	Z	48.235	5
48	MP2B	Mx	-0.014	5
49	MP2C	X	12.326	3
50	MP2C	Z	21.349	3
51	MP2C	Mx	0.012	3
52	MP2C	X	12.326	5
53	MP2C	Z	21.349	5
54	MP2C	Mx	0.012	5
55	MP4A	X	36.211	2.25
56	MP4A	Z	62.719	2.25
57	MP4A	Mx	0.018	2.25
58	MP4B	X	36.211	2.25
59	MP4B	Z	62.719	2.25
60	MP4B	Mx	0.018	2.25

Member Point Loads (BLC 8 : Antenna Wo (150 Deg)) (Continued)

	Member Label	Direction	Magnitude [lb, k-ft]	Location [(ft, %)]
61	MP4C	X	26.823	2.25
62	MP4C	Z	46.458	2.25
63	MP4C	Mx	-0.027	2.25
64	OVP	X	54.697	1
65	OVP	Z	94.739	1
66	OVP	Mx	0	1
67	MP3A	X	60.377	3
68	MP3A	Z	104.577	3
69	MP3A	Mx	-0.03	3
70	MP3A	X	60.377	5
71	MP3A	Z	104.577	5
72	MP3A	Mx	-0.03	5
73	MP3B	X	60.377	3
74	MP3B	Z	104.577	3
75	MP3B	Mx	-0.03	3
76	MP3B	X	60.377	5
77	MP3B	Z	104.577	5
78	MP3B	Mx	-0.03	5
79	MP3C	X	25.547	3
80	MP3C	Z	44.249	3
81	MP3C	Mx	0.025	3
82	MP3C	X	25.547	5
83	MP3C	Z	44.249	5
84	MP3C	Mx	0.025	5

Member Point Loads (BLC 9 : Antenna Wo (180 Deg))

	Member Label	Direction	Magnitude [lb, k-ft]	Location [(ft, %)]
1	MP1A	X	0	1.5
2	MP1A	Z	114.233	1.5
3	MP1A	Mx	0	1.5
4	MP1A	X	0	6.5
5	MP1A	Z	114.233	6.5
6	MP1A	Mx	0	6.5
7	MP1B	X	0	1.5
8	MP1B	Z	65.321	1.5
9	MP1B	Mx	-0.028	1.5
10	MP1B	X	0	6.5
11	MP1B	Z	65.321	6.5
12	MP1B	Mx	-0.028	6.5
13	MP1C	X	0	1.5
14	MP1C	Z	75.963	1.5
15	MP1C	Mx	0.029	1.5
16	MP1C	X	0	6.5
17	MP1C	Z	75.963	6.5
18	MP1C	Mx	0.029	6.5
19	MP4A	X	0	1.5
20	MP4A	Z	114.233	1.5
21	MP4A	Mx	0	1.5
22	MP4A	X	0	6.5
23	MP4A	Z	114.233	6.5
24	MP4A	Mx	0	6.5
25	MP4B	X	0	1.5
26	MP4B	Z	65.321	1.5
27	MP4B	Mx	-0.028	1.5
28	MP4B	X	0	6.5

Member Point Loads (BLC 9 : Antenna Wo (180 Deg)) (Continued)

	Member Label	Direction	Magnitude [lb, k-ft]	Location [(ft, %)]
29	MP4B	Z	65.321	6.5
30	MP4B	Mx	-0.028	6.5
31	MP4C	X	0	1.5
32	MP4C	Z	75.963	1.5
33	MP4C	Mx	0.029	1.5
34	MP4C	X	0	6.5
35	MP4C	Z	75.963	6.5
36	MP4C	Mx	0.029	6.5
37	MP2A	X	0	3
38	MP2A	Z	66.478	3
39	MP2A	Mx	0	3
40	MP2A	X	0	5
41	MP2A	Z	66.478	5
42	MP2A	Mx	0	5
43	MP2B	X	0	3
44	MP2B	Z	34.133	3
45	MP2B	Mx	-0.015	3
46	MP2B	X	0	5
47	MP2B	Z	34.133	5
48	MP2B	Mx	-0.015	5
49	MP2C	X	0	3
50	MP2C	Z	41.171	3
51	MP2C	Mx	0.016	3
52	MP2C	X	0	5
53	MP2C	Z	41.171	5
54	MP2C	Mx	0.016	5
55	MP4A	X	0	2.25
56	MP4A	Z	78.68	2.25
57	MP4A	Mx	0	2.25
58	MP4B	X	0	2.25
59	MP4B	Z	59.904	2.25
60	MP4B	Mx	0.026	2.25
61	MP4C	X	0	2.25
62	MP4C	Z	59.904	2.25
63	MP4C	Mx	-0.026	2.25
64	OVP	X	0	1
65	OVP	Z	101.4	1
66	OVP	Mx	0	1
67	MP3A	X	0	3
68	MP3A	Z	144.948	3
69	MP3A	Mx	0	3
70	MP3A	X	0	5
71	MP3A	Z	144.948	5
72	MP3A	Mx	0	5
73	MP3B	X	0	3
74	MP3B	Z	72.369	3
75	MP3B	Mx	-0.031	3
76	MP3B	X	0	5
77	MP3B	Z	72.369	5
78	MP3B	Mx	-0.031	5
79	MP3C	X	0	3
80	MP3C	Z	88.16	3
81	MP3C	Mx	0.034	3
82	MP3C	X	0	5
83	MP3C	Z	88.16	5

Member Point Loads (BLC 9 : Antenna Wo (180 Deg)) (Continued)

	Member Label	Direction	Magnitude [lb, k-ft]	Location [(ft, %)]
84	MP3C	Mx	0.034	5

Member Point Loads (BLC 10 : Antenna Wo (210 Deg))

	Member Label	Direction	Magnitude [lb, k-ft]	Location [(ft, %)]
1	MP1A	X	-48.965	1.5
2	MP1A	Z	84.809	1.5
3	MP1A	Mx	0.024	1.5
4	MP1A	X	-48.965	6.5
5	MP1A	Z	84.809	6.5
6	MP1A	Mx	0.024	6.5
7	MP1B	X	-24.509	1.5
8	MP1B	Z	42.45	1.5
9	MP1B	Mx	-0.025	1.5
10	MP1B	X	-24.509	6.5
11	MP1B	Z	42.45	6.5
12	MP1B	Mx	-0.025	6.5
13	MP1C	X	-53.302	1.5
14	MP1C	Z	92.322	1.5
15	MP1C	Mx	0.018	1.5
16	MP1C	X	-53.302	6.5
17	MP1C	Z	92.322	6.5
18	MP1C	Mx	0.018	6.5
19	MP4A	X	-48.965	1.5
20	MP4A	Z	84.809	1.5
21	MP4A	Mx	0.024	1.5
22	MP4A	X	-48.965	6.5
23	MP4A	Z	84.809	6.5
24	MP4A	Mx	0.024	6.5
25	MP4B	X	-24.509	1.5
26	MP4B	Z	42.45	1.5
27	MP4B	Mx	-0.025	1.5
28	MP4B	X	-24.509	6.5
29	MP4B	Z	42.45	6.5
30	MP4B	Mx	-0.025	6.5
31	MP4C	X	-53.302	1.5
32	MP4C	Z	92.322	1.5
33	MP4C	Mx	0.018	1.5
34	MP4C	X	-53.302	6.5
35	MP4C	Z	92.322	6.5
36	MP4C	Mx	0.018	6.5
37	MP2A	X	-27.848	3
38	MP2A	Z	48.235	3
39	MP2A	Mx	0.014	3
40	MP2A	X	-27.848	5
41	MP2A	Z	48.235	5
42	MP2A	Mx	0.014	5
43	MP2B	X	-11.676	3
44	MP2B	Z	20.223	3
45	MP2B	Mx	-0.012	3
46	MP2B	X	-11.676	5
47	MP2B	Z	20.223	5
48	MP2B	Mx	-0.012	5
49	MP2C	X	-30.717	3
50	MP2C	Z	53.203	3
51	MP2C	Mx	0.011	3

Member Point Loads (BLC 10 : Antenna Wo (210 Deg)) (Continued)

	Member Label	Direction	Magnitude [lb, k-ft]	Location [(ft, %)]
52	MP2C	X	-30.717	5
53	MP2C	Z	53.203	5
54	MP2C	Mx	0.011	5
55	MP4A	X	-36.211	2.25
56	MP4A	Z	62.719	2.25
57	MP4A	Mx	-0.018	2.25
58	MP4B	X	-26.823	2.25
59	MP4B	Z	46.458	2.25
60	MP4B	Mx	0.027	2.25
61	MP4C	X	-36.211	2.25
62	MP4C	Z	62.719	2.25
63	MP4C	Mx	-0.018	2.25
64	OVP	X	-54.697	1
65	OVP	Z	94.739	1
66	OVP	Mx	0	1
67	MP3A	X	-60.377	3
68	MP3A	Z	104.577	3
69	MP3A	Mx	0.03	3
70	MP3A	X	-60.377	5
71	MP3A	Z	104.577	5
72	MP3A	Mx	0.03	5
73	MP3B	X	-24.088	3
74	MP3B	Z	41.721	3
75	MP3B	Mx	-0.024	3
76	MP3B	X	-24.088	5
77	MP3B	Z	41.721	5
78	MP3B	Mx	-0.024	5
79	MP3C	X	-66.814	3
80	MP3C	Z	115.725	3
81	MP3C	Mx	0.023	3
82	MP3C	X	-66.814	5
83	MP3C	Z	115.725	5
84	MP3C	Mx	0.023	5

Member Point Loads (BLC 11 : Antenna Wo (240 Deg))

	Member Label	Direction	Magnitude [lb, k-ft]	Location [(ft, %)]
1	MP1A	X	-56.57	1.5
2	MP1A	Z	32.661	1.5
3	MP1A	Mx	0.028	1.5
4	MP1A	X	-56.57	6.5
5	MP1A	Z	32.661	6.5
6	MP1A	Mx	0.028	6.5
7	MP1B	X	-56.57	1.5
8	MP1B	Z	32.661	1.5
9	MP1B	Mx	-0.028	1.5
10	MP1B	X	-56.57	6.5
11	MP1B	Z	32.661	6.5
12	MP1B	Mx	-0.028	6.5
13	MP1C	X	-97.226	1.5
14	MP1C	Z	56.133	1.5
15	MP1C	Mx	-0.01	1.5
16	MP1C	X	-97.226	6.5
17	MP1C	Z	56.133	6.5
18	MP1C	Mx	-0.01	6.5
19	MP4A	X	-56.57	1.5

Member Point Loads (BLC 11 : Antenna Wo (240 Deg)) (Continued)

	Member Label	Direction	Magnitude [lb, k-ft]	Location [(ft, %)]
20	MP4A	Z	32.661	1.5
21	MP4A	Mx	0.028	1.5
22	MP4A	X	-56.57	6.5
23	MP4A	Z	32.661	6.5
24	MP4A	Mx	0.028	6.5
25	MP4B	X	-56.57	1.5
26	MP4B	Z	32.661	1.5
27	MP4B	Mx	-0.028	1.5
28	MP4B	X	-56.57	6.5
29	MP4B	Z	32.661	6.5
30	MP4B	Mx	-0.028	6.5
31	MP4C	X	-97.226	1.5
32	MP4C	Z	56.133	1.5
33	MP4C	Mx	-0.01	1.5
34	MP4C	X	-97.226	6.5
35	MP4C	Z	56.133	6.5
36	MP4C	Mx	-0.01	6.5
37	MP2A	X	-29.56	3
38	MP2A	Z	17.067	3
39	MP2A	Mx	0.015	3
40	MP2A	X	-29.56	5
41	MP2A	Z	17.067	5
42	MP2A	Mx	0.015	5
43	MP2B	X	-29.56	3
44	MP2B	Z	17.067	3
45	MP2B	Mx	-0.015	3
46	MP2B	X	-29.56	5
47	MP2B	Z	17.067	5
48	MP2B	Mx	-0.015	5
49	MP2C	X	-56.446	3
50	MP2C	Z	32.589	3
51	MP2C	Mx	-0.006	3
52	MP2C	X	-56.446	5
53	MP2C	Z	32.589	5
54	MP2C	Mx	-0.006	5
55	MP4A	X	-51.879	2.25
56	MP4A	Z	29.952	2.25
57	MP4A	Mx	-0.026	2.25
58	MP4B	X	-51.879	2.25
59	MP4B	Z	29.952	2.25
60	MP4B	Mx	0.026	2.25
61	MP4C	X	-68.139	2.25
62	MP4C	Z	39.34	2.25
63	MP4C	Mx	0	2.25
64	OVP	X	-108.585	1
65	OVP	Z	62.692	1
66	OVP	Mx	0	1
67	MP3A	X	-62.673	3
68	MP3A	Z	36.184	3
69	MP3A	Mx	0.031	3
70	MP3A	X	-62.673	5
71	MP3A	Z	36.184	5
72	MP3A	Mx	0.031	5
73	MP3B	X	-62.673	3
74	MP3B	Z	36.184	3

Member Point Loads (BLC 11 : Antenna Wo (240 Deg)) (Continued)

	Member Label	Direction	Magnitude [lb, k-ft]	Location [(ft, %)]
75	MP3B	Mx	-0.031	3
76	MP3B	X	-62.673	5
77	MP3B	Z	36.184	5
78	MP3B	Mx	-0.031	5
79	MP3C	X	-123.002	3
80	MP3C	Z	71.015	3
81	MP3C	Mx	-0.012	3
82	MP3C	X	-123.002	5
83	MP3C	Z	71.015	5
84	MP3C	Mx	-0.012	5

Member Point Loads (BLC 12 : Antenna Wo (270 Deg))

	Member Label	Direction	Magnitude [lb, k-ft]	Location [(ft, %)]
1	MP1A	X	-49.017	1.5
2	MP1A	Z	0	1.5
3	MP1A	Mx	0.025	1.5
4	MP1A	X	-49.017	6.5
5	MP1A	Z	0	6.5
6	MP1A	Mx	0.025	6.5
7	MP1B	X	-97.929	1.5
8	MP1B	Z	0	1.5
9	MP1B	Mx	-0.024	1.5
10	MP1B	X	-97.929	6.5
11	MP1B	Z	0	6.5
12	MP1B	Mx	-0.024	6.5
13	MP1C	X	-87.288	1.5
14	MP1C	Z	0	1.5
15	MP1C	Mx	-0.028	1.5
16	MP1C	X	-87.288	6.5
17	MP1C	Z	0	6.5
18	MP1C	Mx	-0.028	6.5
19	MP4A	X	-49.017	1.5
20	MP4A	Z	0	1.5
21	MP4A	Mx	0.025	1.5
22	MP4A	X	-49.017	6.5
23	MP4A	Z	0	6.5
24	MP4A	Mx	0.025	6.5
25	MP4B	X	-97.929	1.5
26	MP4B	Z	0	1.5
27	MP4B	Mx	-0.024	1.5
28	MP4B	X	-97.929	6.5
29	MP4B	Z	0	6.5
30	MP4B	Mx	-0.024	6.5
31	MP4C	X	-87.288	1.5
32	MP4C	Z	0	1.5
33	MP4C	Mx	-0.028	1.5
34	MP4C	X	-87.288	6.5
35	MP4C	Z	0	6.5
36	MP4C	Mx	-0.028	6.5
37	MP2A	X	-23.352	3
38	MP2A	Z	0	3
39	MP2A	Mx	0.012	3
40	MP2A	X	-23.352	5
41	MP2A	Z	0	5
42	MP2A	Mx	0.012	5

Member Point Loads (BLC 12 : Antenna Wo (270 Deg)) (Continued)

	Member Label	Direction	Magnitude [lb, k-ft]	Location [(ft, %)]
43	MP2B	X	-55.697	3
44	MP2B	Z	0	3
45	MP2B	Mx	-0.014	3
46	MP2B	X	-55.697	5
47	MP2B	Z	0	5
48	MP2B	Mx	-0.014	5
49	MP2C	X	-48.659	3
50	MP2C	Z	0	3
51	MP2C	Mx	-0.016	3
52	MP2C	X	-48.659	5
53	MP2C	Z	0	5
54	MP2C	Mx	-0.016	5
55	MP4A	X	-53.645	2.25
56	MP4A	Z	0	2.25
57	MP4A	Mx	-0.027	2.25
58	MP4B	X	-72.421	2.25
59	MP4B	Z	0	2.25
60	MP4B	Mx	0.018	2.25
61	MP4C	X	-72.421	2.25
62	MP4C	Z	0	2.25
63	MP4C	Mx	0.018	2.25
64	OVP	X	-133.377	1
65	OVP	Z	0	1
66	OVP	Mx	0	1
67	MP3A	X	-48.176	3
68	MP3A	Z	0	3
69	MP3A	Mx	0.024	3
70	MP3A	X	-48.176	5
71	MP3A	Z	0	5
72	MP3A	Mx	0.024	5
73	MP3B	X	-120.755	3
74	MP3B	Z	0	3
75	MP3B	Mx	-0.03	3
76	MP3B	X	-120.755	5
77	MP3B	Z	0	5
78	MP3B	Mx	-0.03	5
79	MP3C	X	-104.964	3
80	MP3C	Z	0	3
81	MP3C	Mx	-0.034	3
82	MP3C	X	-104.964	5
83	MP3C	Z	0	5
84	MP3C	Mx	-0.034	5

Member Point Loads (BLC 13 : Antenna Wo (300 Deg))

	Member Label	Direction	Magnitude [lb, k-ft]	Location [(ft, %)]
1	MP1A	X	-56.57	1.5
2	MP1A	Z	-32.661	1.5
3	MP1A	Mx	0.028	1.5
4	MP1A	X	-56.57	6.5
5	MP1A	Z	-32.661	6.5
6	MP1A	Mx	0.028	6.5
7	MP1B	X	-98.929	1.5
8	MP1B	Z	-57.117	1.5
9	MP1B	Mx	0	1.5
10	MP1B	X	-98.929	6.5

Member Point Loads (BLC 13 : Antenna Wo (300 Deg)) (Continued)

	Member Label	Direction	Magnitude [lb, k-ft]	Location [(ft, %)]
11	MP1B	Z	-57.117	6.5
12	MP1B	Mx	0	6.5
13	MP1C	X	-49.057	1.5
14	MP1C	Z	-28.323	1.5
15	MP1C	Mx	-0.027	1.5
16	MP1C	X	-49.057	6.5
17	MP1C	Z	-28.323	6.5
18	MP1C	Mx	-0.027	6.5
19	MP4A	X	-56.57	1.5
20	MP4A	Z	-32.661	1.5
21	MP4A	Mx	0.028	1.5
22	MP4A	X	-56.57	6.5
23	MP4A	Z	-32.661	6.5
24	MP4A	Mx	0.028	6.5
25	MP4B	X	-98.929	1.5
26	MP4B	Z	-57.117	1.5
27	MP4B	Mx	0	1.5
28	MP4B	X	-98.929	6.5
29	MP4B	Z	-57.117	6.5
30	MP4B	Mx	0	6.5
31	MP4C	X	-49.057	1.5
32	MP4C	Z	-28.323	1.5
33	MP4C	Mx	-0.027	1.5
34	MP4C	X	-49.057	6.5
35	MP4C	Z	-28.323	6.5
36	MP4C	Mx	-0.027	6.5
37	MP2A	X	-29.56	3
38	MP2A	Z	-17.067	3
39	MP2A	Mx	0.015	3
40	MP2A	X	-29.56	5
41	MP2A	Z	-17.067	5
42	MP2A	Mx	0.015	5
43	MP2B	X	-57.572	3
44	MP2B	Z	-33.239	3
45	MP2B	Mx	0	3
46	MP2B	X	-57.572	5
47	MP2B	Z	-33.239	5
48	MP2B	Mx	0	5
49	MP2C	X	-24.592	3
50	MP2C	Z	-14.198	3
51	MP2C	Mx	-0.013	3
52	MP2C	X	-24.592	5
53	MP2C	Z	-14.198	5
54	MP2C	Mx	-0.013	5
55	MP4A	X	-51.879	2.25
56	MP4A	Z	-29.952	2.25
57	MP4A	Mx	-0.026	2.25
58	MP4B	X	-68.139	2.25
59	MP4B	Z	-39.34	2.25
60	MP4B	Mx	0	2.25
61	MP4C	X	-51.879	2.25
62	MP4C	Z	-29.952	2.25
63	MP4C	Mx	0.026	2.25
64	OVP	X	-108.585	1
65	OVP	Z	-62.692	1

Member Point Loads (BLC 13 : Antenna Wo (300 Deg)) (Continued)

	Member Label	Direction	Magnitude [lb, k-ft]	Location [(ft, %)]
66	OVP	Mx	0	1
67	MP3A	X	-62.673	3
68	MP3A	Z	-36.184	3
69	MP3A	Mx	0.031	3
70	MP3A	X	-62.673	5
71	MP3A	Z	-36.184	5
72	MP3A	Mx	0.031	5
73	MP3B	X	-125.529	3
74	MP3B	Z	-72.474	3
75	MP3B	Mx	0	3
76	MP3B	X	-125.529	5
77	MP3B	Z	-72.474	5
78	MP3B	Mx	0	5
79	MP3C	X	-51.525	3
80	MP3C	Z	-29.748	3
81	MP3C	Mx	-0.028	3
82	MP3C	X	-51.525	5
83	MP3C	Z	-29.748	5
84	MP3C	Mx	-0.028	5

Member Point Loads (BLC 14 : Antenna Wo (330 Deg))

	Member Label	Direction	Magnitude [lb, k-ft]	Location [(ft, %)]
1	MP1A	X	-48.965	1.5
2	MP1A	Z	-84.809	1.5
3	MP1A	Mx	0.024	1.5
4	MP1A	X	-48.965	6.5
5	MP1A	Z	-84.809	6.5
6	MP1A	Mx	0.024	6.5
7	MP1B	X	-48.965	1.5
8	MP1B	Z	-84.809	1.5
9	MP1B	Mx	0.024	1.5
10	MP1B	X	-48.965	6.5
11	MP1B	Z	-84.809	6.5
12	MP1B	Mx	0.024	6.5
13	MP1C	X	-25.492	1.5
14	MP1C	Z	-44.153	1.5
15	MP1C	Mx	-0.025	1.5
16	MP1C	X	-25.492	6.5
17	MP1C	Z	-44.153	6.5
18	MP1C	Mx	-0.025	6.5
19	MP4A	X	-48.965	1.5
20	MP4A	Z	-84.809	1.5
21	MP4A	Mx	0.024	1.5
22	MP4A	X	-48.965	6.5
23	MP4A	Z	-84.809	6.5
24	MP4A	Mx	0.024	6.5
25	MP4B	X	-48.965	1.5
26	MP4B	Z	-84.809	1.5
27	MP4B	Mx	0.024	1.5
28	MP4B	X	-48.965	6.5
29	MP4B	Z	-84.809	6.5
30	MP4B	Mx	0.024	6.5
31	MP4C	X	-25.492	1.5
32	MP4C	Z	-44.153	1.5
33	MP4C	Mx	-0.025	1.5

Member Point Loads (BLC 14 : Antenna Wo (330 Deg)) (Continued)

	Member Label	Direction	Magnitude [lb, k-ft]	Location [(ft, %)]
34	MP4C	X	-25.492	6.5
35	MP4C	Z	-44.153	6.5
36	MP4C	Mx	-0.025	6.5
37	MP2A	X	-27.848	3
38	MP2A	Z	-48.235	3
39	MP2A	Mx	0.014	3
40	MP2A	X	-27.848	5
41	MP2A	Z	-48.235	5
42	MP2A	Mx	0.014	5
43	MP2B	X	-27.848	3
44	MP2B	Z	-48.235	3
45	MP2B	Mx	0.014	3
46	MP2B	X	-27.848	5
47	MP2B	Z	-48.235	5
48	MP2B	Mx	0.014	5
49	MP2C	X	-12.326	3
50	MP2C	Z	-21.349	3
51	MP2C	Mx	-0.012	3
52	MP2C	X	-12.326	5
53	MP2C	Z	-21.349	5
54	MP2C	Mx	-0.012	5
55	MP4A	X	-36.211	2.25
56	MP4A	Z	-62.719	2.25
57	MP4A	Mx	-0.018	2.25
58	MP4B	X	-36.211	2.25
59	MP4B	Z	-62.719	2.25
60	MP4B	Mx	-0.018	2.25
61	MP4C	X	-26.823	2.25
62	MP4C	Z	-46.458	2.25
63	MP4C	Mx	0.027	2.25
64	OVP	X	-54.697	1
65	OVP	Z	-94.739	1
66	OVP	Mx	0	1
67	MP3A	X	-60.377	3
68	MP3A	Z	-104.577	3
69	MP3A	Mx	0.03	3
70	MP3A	X	-60.377	5
71	MP3A	Z	-104.577	5
72	MP3A	Mx	0.03	5
73	MP3B	X	-60.377	3
74	MP3B	Z	-104.577	3
75	MP3B	Mx	0.03	3
76	MP3B	X	-60.377	5
77	MP3B	Z	-104.577	5
78	MP3B	Mx	0.03	5
79	MP3C	X	-25.547	3
80	MP3C	Z	-44.249	3
81	MP3C	Mx	-0.025	3
82	MP3C	X	-25.547	5
83	MP3C	Z	-44.249	5
84	MP3C	Mx	-0.025	5

Member Point Loads (BLC 15 : Antenna Wi (0 Deg))

	Member Label	Direction	Magnitude [lb, k-ft]	Location [(ft, %)]
1	MP1A	X	0	1.5
2	MP1A	Z	-34.219	1.5
3	MP1A	Mx	0	1.5
4	MP1A	X	0	6.5
5	MP1A	Z	-34.219	6.5
6	MP1A	Mx	0	6.5
7	MP1B	X	0	1.5
8	MP1B	Z	-26.606	1.5
9	MP1B	Mx	0.012	1.5
10	MP1B	X	0	6.5
11	MP1B	Z	-26.606	6.5
12	MP1B	Mx	0.012	6.5
13	MP1C	X	0	1.5
14	MP1C	Z	-28.262	1.5
15	MP1C	Mx	-0.011	1.5
16	MP1C	X	0	6.5
17	MP1C	Z	-28.262	6.5
18	MP1C	Mx	-0.011	6.5
19	MP4A	X	0	1.5
20	MP4A	Z	-34.219	1.5
21	MP4A	Mx	0	1.5
22	MP4A	X	0	6.5
23	MP4A	Z	-34.219	6.5
24	MP4A	Mx	0	6.5
25	MP4B	X	0	1.5
26	MP4B	Z	-26.606	1.5
27	MP4B	Mx	0.012	1.5
28	MP4B	X	0	6.5
29	MP4B	Z	-26.606	6.5
30	MP4B	Mx	0.012	6.5
31	MP4C	X	0	1.5
32	MP4C	Z	-28.262	1.5
33	MP4C	Mx	-0.011	1.5
34	MP4C	X	0	6.5
35	MP4C	Z	-28.262	6.5
36	MP4C	Mx	-0.011	6.5
37	MP2A	X	0	3
38	MP2A	Z	-16.878	3
39	MP2A	Mx	0	3
40	MP2A	X	0	5
41	MP2A	Z	-16.878	5
42	MP2A	Mx	0	5
43	MP2B	X	0	3
44	MP2B	Z	-9.815	3
45	MP2B	Mx	0.004	3
46	MP2B	X	0	5
47	MP2B	Z	-9.815	5
48	MP2B	Mx	0.004	5
49	MP2C	X	0	3
50	MP2C	Z	-11.352	3
51	MP2C	Mx	-0.004	3
52	MP2C	X	0	5
53	MP2C	Z	-11.352	5
54	MP2C	Mx	-0.004	5
55	MP4A	X	0	2.25

Member Point Loads (BLC 15 : Antenna Wi (0 Deg)) (Continued)

	Member Label	Direction	Magnitude [lb, k-ft]	Location [(ft, %)]
56	MP4A	Z	-17.838	2.25
57	MP4A	Mx	0	2.25
58	MP4B	X	0	2.25
59	MP4B	Z	-14.105	2.25
60	MP4B	Mx	-0.006	2.25
61	MP4C	X	0	2.25
62	MP4C	Z	-14.105	2.25
63	MP4C	Mx	0.006	2.25
64	OVP	X	0	1
65	OVP	Z	-28.264	1
66	OVP	Mx	0	1
67	MP3A	X	0	3
68	MP3A	Z	-34.473	3
69	MP3A	Mx	0	3
70	MP3A	X	0	5
71	MP3A	Z	-34.473	5
72	MP3A	Mx	0	5
73	MP3B	X	0	3
74	MP3B	Z	-18.922	3
75	MP3B	Mx	0.008	3
76	MP3B	X	0	5
77	MP3B	Z	-18.922	5
78	MP3B	Mx	0.008	5
79	MP3C	X	0	3
80	MP3C	Z	-22.305	3
81	MP3C	Mx	-0.009	3
82	MP3C	X	0	5
83	MP3C	Z	-22.305	5
84	MP3C	Mx	-0.009	5

Member Point Loads (BLC 16 : Antenna Wi (30 Deg))

	Member Label	Direction	Magnitude [lb, k-ft]	Location [(ft, %)]
1	MP1A	X	15.841	1.5
2	MP1A	Z	-27.437	1.5
3	MP1A	Mx	-0.008	1.5
4	MP1A	X	15.841	6.5
5	MP1A	Z	-27.437	6.5
6	MP1A	Mx	-0.008	6.5
7	MP1B	X	12.034	1.5
8	MP1B	Z	-20.843	1.5
9	MP1B	Mx	0.012	1.5
10	MP1B	X	12.034	6.5
11	MP1B	Z	-20.843	6.5
12	MP1B	Mx	0.012	6.5
13	MP1C	X	16.516	1.5
14	MP1C	Z	-28.606	1.5
15	MP1C	Mx	-0.006	1.5
16	MP1C	X	16.516	6.5
17	MP1C	Z	-28.606	6.5
18	MP1C	Mx	-0.006	6.5
19	MP4A	X	15.841	1.5
20	MP4A	Z	-27.437	1.5
21	MP4A	Mx	-0.008	1.5
22	MP4A	X	15.841	6.5
23	MP4A	Z	-27.437	6.5

Member Point Loads (BLC 16 : Antenna Wi (30 Deg)) (Continued)

	Member Label	Direction	Magnitude [lb, k-ft]	Location [(ft, %)]
24	MP4A	Mx	-0.008	6.5
25	MP4B	X	12.034	1.5
26	MP4B	Z	-20.843	1.5
27	MP4B	Mx	0.012	1.5
28	MP4B	X	12.034	6.5
29	MP4B	Z	-20.843	6.5
30	MP4B	Mx	0.012	6.5
31	MP4C	X	16.516	1.5
32	MP4C	Z	-28.606	1.5
33	MP4C	Mx	-0.006	1.5
34	MP4C	X	16.516	6.5
35	MP4C	Z	-28.606	6.5
36	MP4C	Mx	-0.006	6.5
37	MP2A	X	7.262	3
38	MP2A	Z	-12.578	3
39	MP2A	Mx	-0.004	3
40	MP2A	X	7.262	5
41	MP2A	Z	-12.578	5
42	MP2A	Mx	-0.004	5
43	MP2B	X	3.73	3
44	MP2B	Z	-6.461	3
45	MP2B	Mx	0.004	3
46	MP2B	X	3.73	5
47	MP2B	Z	-6.461	5
48	MP2B	Mx	0.004	5
49	MP2C	X	7.888	3
50	MP2C	Z	-13.663	3
51	MP2C	Mx	-0.003	3
52	MP2C	X	7.888	5
53	MP2C	Z	-13.663	5
54	MP2C	Mx	-0.003	5
55	MP4A	X	8.297	2.25
56	MP4A	Z	-14.371	2.25
57	MP4A	Mx	0.004	2.25
58	MP4B	X	6.431	2.25
59	MP4B	Z	-11.138	2.25
60	MP4B	Mx	-0.006	2.25
61	MP4C	X	8.297	2.25
62	MP4C	Z	-14.371	2.25
63	MP4C	Mx	0.004	2.25
64	OVP	X	15.068	1
65	OVP	Z	-26.098	1
66	OVP	Mx	0	1
67	MP3A	X	14.645	3
68	MP3A	Z	-25.365	3
69	MP3A	Mx	-0.007	3
70	MP3A	X	14.645	5
71	MP3A	Z	-25.365	5
72	MP3A	Mx	-0.007	5
73	MP3B	X	6.869	3
74	MP3B	Z	-11.897	3
75	MP3B	Mx	0.007	3
76	MP3B	X	6.869	5
77	MP3B	Z	-11.897	5
78	MP3B	Mx	0.007	5

Member Point Loads (BLC 16 : Antenna Wi (30 Deg)) (Continued)

	Member Label	Direction	Magnitude [lb, k-ft]	Location [(ft, %)]
79	MP3C	X	16.024	3
80	MP3C	Z	-27.754	3
81	MP3C	Mx	-0.005	3
82	MP3C	X	16.024	5
83	MP3C	Z	-27.754	5
84	MP3C	Mx	-0.005	5

Member Point Loads (BLC 17 : Antenna Wi (60 Deg))

	Member Label	Direction	Magnitude [lb, k-ft]	Location [(ft, %)]
1	MP1A	X	23.041	1.5
2	MP1A	Z	-13.303	1.5
3	MP1A	Mx	-0.012	1.5
4	MP1A	X	23.041	6.5
5	MP1A	Z	-13.303	6.5
6	MP1A	Mx	-0.012	6.5
7	MP1B	X	23.041	1.5
8	MP1B	Z	-13.303	1.5
9	MP1B	Mx	0.012	1.5
10	MP1B	X	23.041	6.5
11	MP1B	Z	-13.303	6.5
12	MP1B	Mx	0.012	6.5
13	MP1C	X	29.37	1.5
14	MP1C	Z	-16.957	1.5
15	MP1C	Mx	0.003	1.5
16	MP1C	X	29.37	6.5
17	MP1C	Z	-16.957	6.5
18	MP1C	Mx	0.003	6.5
19	MP4A	X	23.041	1.5
20	MP4A	Z	-13.303	1.5
21	MP4A	Mx	-0.012	1.5
22	MP4A	X	23.041	6.5
23	MP4A	Z	-13.303	6.5
24	MP4A	Mx	-0.012	6.5
25	MP4B	X	23.041	1.5
26	MP4B	Z	-13.303	1.5
27	MP4B	Mx	0.012	1.5
28	MP4B	X	23.041	6.5
29	MP4B	Z	-13.303	6.5
30	MP4B	Mx	0.012	6.5
31	MP4C	X	29.37	1.5
32	MP4C	Z	-16.957	1.5
33	MP4C	Mx	0.003	1.5
34	MP4C	X	29.37	6.5
35	MP4C	Z	-16.957	6.5
36	MP4C	Mx	0.003	6.5
37	MP2A	X	8.5	3
38	MP2A	Z	-4.908	3
39	MP2A	Mx	-0.004	3
40	MP2A	X	8.5	5
41	MP2A	Z	-4.908	5
42	MP2A	Mx	-0.004	5
43	MP2B	X	8.5	3
44	MP2B	Z	-4.908	3
45	MP2B	Mx	0.004	3
46	MP2B	X	8.5	5

Member Point Loads (BLC 17 : Antenna Wi (60 Deg)) (Continued)

	Member Label	Direction	Magnitude [lb, k-ft]	Location [(ft, %)]
47	MP2B	Z	-4.908	5
48	MP2B	Mx	0.004	5
49	MP2C	X	14.371	3
50	MP2C	Z	-8.297	3
51	MP2C	Mx	0.001	3
52	MP2C	X	14.371	5
53	MP2C	Z	-8.297	5
54	MP2C	Mx	0.001	5
55	MP4A	X	12.216	2.25
56	MP4A	Z	-7.053	2.25
57	MP4A	Mx	0.006	2.25
58	MP4B	X	12.216	2.25
59	MP4B	Z	-7.053	2.25
60	MP4B	Mx	-0.006	2.25
61	MP4C	X	15.448	2.25
62	MP4C	Z	-8.919	2.25
63	MP4C	Mx	0	2.25
64	OVP	X	29.34	1
65	OVP	Z	-16.939	1
66	OVP	Mx	0	1
67	MP3A	X	16.387	3
68	MP3A	Z	-9.461	3
69	MP3A	Mx	-0.008	3
70	MP3A	X	16.387	5
71	MP3A	Z	-9.461	5
72	MP3A	Mx	-0.008	5
73	MP3B	X	16.387	3
74	MP3B	Z	-9.461	3
75	MP3B	Mx	0.008	3
76	MP3B	X	16.387	5
77	MP3B	Z	-9.461	5
78	MP3B	Mx	0.008	5
79	MP3C	X	29.313	3
80	MP3C	Z	-16.924	3
81	MP3C	Mx	0.003	3
82	MP3C	X	29.313	5
83	MP3C	Z	-16.924	5
84	MP3C	Mx	0.003	5

Member Point Loads (BLC 18 : Antenna Wi (90 Deg))

	Member Label	Direction	Magnitude [lb, k-ft]	Location [(ft, %)]
1	MP1A	X	24.068	1.5
2	MP1A	Z	0	1.5
3	MP1A	Mx	-0.012	1.5
4	MP1A	X	24.068	6.5
5	MP1A	Z	0	6.5
6	MP1A	Mx	-0.012	6.5
7	MP1B	X	31.682	1.5
8	MP1B	Z	0	1.5
9	MP1B	Mx	0.008	1.5
10	MP1B	X	31.682	6.5
11	MP1B	Z	0	6.5
12	MP1B	Mx	0.008	6.5
13	MP1C	X	30.025	1.5
14	MP1C	Z	0	1.5

Member Point Loads (BLC 18 : Antenna Wi (90 Deg)) (Continued)

	Member Label	Direction	Magnitude [lb, k-ft]	Location [(ft, %)]
15	MP1C	Mx	0.01	1.5
16	MP1C	X	30.025	6.5
17	MP1C	Z	0	6.5
18	MP1C	Mx	0.01	6.5
19	MP4A	X	24.068	1.5
20	MP4A	Z	0	1.5
21	MP4A	Mx	-0.012	1.5
22	MP4A	X	24.068	6.5
23	MP4A	Z	0	6.5
24	MP4A	Mx	-0.012	6.5
25	MP4B	X	31.682	1.5
26	MP4B	Z	0	1.5
27	MP4B	Mx	0.008	1.5
28	MP4B	X	31.682	6.5
29	MP4B	Z	0	6.5
30	MP4B	Mx	0.008	6.5
31	MP4C	X	30.025	1.5
32	MP4C	Z	0	1.5
33	MP4C	Mx	0.01	1.5
34	MP4C	X	30.025	6.5
35	MP4C	Z	0	6.5
36	MP4C	Mx	0.01	6.5
37	MP2A	X	7.461	3
38	MP2A	Z	0	3
39	MP2A	Mx	-0.004	3
40	MP2A	X	7.461	5
41	MP2A	Z	0	5
42	MP2A	Mx	-0.004	5
43	MP2B	X	14.523	3
44	MP2B	Z	0	3
45	MP2B	Mx	0.004	3
46	MP2B	X	14.523	5
47	MP2B	Z	0	5
48	MP2B	Mx	0.004	5
49	MP2C	X	12.987	3
50	MP2C	Z	0	3
51	MP2C	Mx	0.004	3
52	MP2C	X	12.987	5
53	MP2C	Z	0	5
54	MP2C	Mx	0.004	5
55	MP4A	X	12.861	2.25
56	MP4A	Z	0	2.25
57	MP4A	Mx	0.006	2.25
58	MP4B	X	16.594	2.25
59	MP4B	Z	0	2.25
60	MP4B	Mx	-0.004	2.25
61	MP4C	X	16.594	2.25
62	MP4C	Z	0	2.25
63	MP4C	Mx	-0.004	2.25
64	OVP	X	35.75	1
65	OVP	Z	0	1
66	OVP	Mx	0	1
67	MP3A	X	13.738	3
68	MP3A	Z	0	3
69	MP3A	Mx	-0.007	3

Member Point Loads (BLC 18 : Antenna Wi (90 Deg)) (Continued)

	Member Label	Direction	Magnitude [lb, k-ft]	Location [(ft, %)]
70	MP3A	X	13.738	5
71	MP3A	Z	0	5
72	MP3A	Mx	-0.007	5
73	MP3B	X	29.289	3
74	MP3B	Z	0	3
75	MP3B	Mx	0.007	3
76	MP3B	X	29.289	5
77	MP3B	Z	0	5
78	MP3B	Mx	0.007	5
79	MP3C	X	25.906	3
80	MP3C	Z	0	3
81	MP3C	Mx	0.008	3
82	MP3C	X	25.906	5
83	MP3C	Z	0	5
84	MP3C	Mx	0.008	5

Member Point Loads (BLC 19 : Antenna Wi (120 Deg))

	Member Label	Direction	Magnitude [lb, k-ft]	Location [(ft, %)]
1	MP1A	X	23.041	1.5
2	MP1A	Z	13.303	1.5
3	MP1A	Mx	-0.012	1.5
4	MP1A	X	23.041	6.5
5	MP1A	Z	13.303	6.5
6	MP1A	Mx	-0.012	6.5
7	MP1B	X	29.635	1.5
8	MP1B	Z	17.11	1.5
9	MP1B	Mx	0	1.5
10	MP1B	X	29.635	6.5
11	MP1B	Z	17.11	6.5
12	MP1B	Mx	0	6.5
13	MP1C	X	21.872	1.5
14	MP1C	Z	12.628	1.5
15	MP1C	Mx	0.012	1.5
16	MP1C	X	21.872	6.5
17	MP1C	Z	12.628	6.5
18	MP1C	Mx	0.012	6.5
19	MP4A	X	23.041	1.5
20	MP4A	Z	13.303	1.5
21	MP4A	Mx	-0.012	1.5
22	MP4A	X	23.041	6.5
23	MP4A	Z	13.303	6.5
24	MP4A	Mx	-0.012	6.5
25	MP4B	X	29.635	1.5
26	MP4B	Z	17.11	1.5
27	MP4B	Mx	0	1.5
28	MP4B	X	29.635	6.5
29	MP4B	Z	17.11	6.5
30	MP4B	Mx	0	6.5
31	MP4C	X	21.872	1.5
32	MP4C	Z	12.628	1.5
33	MP4C	Mx	0.012	1.5
34	MP4C	X	21.872	6.5
35	MP4C	Z	12.628	6.5
36	MP4C	Mx	0.012	6.5
37	MP2A	X	8.5	3

Member Point Loads (BLC 19 : Antenna Wi (120 Deg)) (Continued)

	Member Label	Direction	Magnitude [lb, k-ft]	Location [(ft, %)]
38	MP2A	Z	4.908	3
39	MP2A	Mx	-0.004	3
40	MP2A	X	8.5	5
41	MP2A	Z	4.908	5
42	MP2A	Mx	-0.004	5
43	MP2B	X	14.616	3
44	MP2B	Z	8.439	3
45	MP2B	Mx	0	3
46	MP2B	X	14.616	5
47	MP2B	Z	8.439	5
48	MP2B	Mx	0	5
49	MP2C	X	7.415	3
50	MP2C	Z	4.281	3
51	MP2C	Mx	0.004	3
52	MP2C	X	7.415	5
53	MP2C	Z	4.281	5
54	MP2C	Mx	0.004	5
55	MP4A	X	12.216	2.25
56	MP4A	Z	7.053	2.25
57	MP4A	Mx	0.006	2.25
58	MP4B	X	15.448	2.25
59	MP4B	Z	8.919	2.25
60	MP4B	Mx	0	2.25
61	MP4C	X	12.216	2.25
62	MP4C	Z	7.053	2.25
63	MP4C	Mx	-0.006	2.25
64	OVP	X	29.34	1
65	OVP	Z	16.939	1
66	OVP	Mx	0	1
67	MP3A	X	16.387	3
68	MP3A	Z	9.461	3
69	MP3A	Mx	-0.008	3
70	MP3A	X	16.387	5
71	MP3A	Z	9.461	5
72	MP3A	Mx	-0.008	5
73	MP3B	X	29.855	3
74	MP3B	Z	17.237	3
75	MP3B	Mx	0	3
76	MP3B	X	29.855	5
77	MP3B	Z	17.237	5
78	MP3B	Mx	0	5
79	MP3C	X	13.998	3
80	MP3C	Z	8.082	3
81	MP3C	Mx	0.008	3
82	MP3C	X	13.998	5
83	MP3C	Z	8.082	5
84	MP3C	Mx	0.008	5

Member Point Loads (BLC 20 : Antenna Wi (150 Deg))

	Member Label	Direction	Magnitude [lb, k-ft]	Location [(ft, %)]
1	MP1A	X	15.841	1.5
2	MP1A	Z	27.437	1.5
3	MP1A	Mx	-0.008	1.5
4	MP1A	X	15.841	6.5
5	MP1A	Z	27.437	6.5

Member Point Loads (BLC 20 : Antenna Wi (150 Deg)) (Continued)

	Member Label	Direction	Magnitude [lb, k-ft]	Location [(ft, %)]
6	MP1A	Mx	-0.008	6.5
7	MP1B	X	15.841	1.5
8	MP1B	Z	27.437	1.5
9	MP1B	Mx	-0.008	1.5
10	MP1B	X	15.841	6.5
11	MP1B	Z	27.437	6.5
12	MP1B	Mx	-0.008	6.5
13	MP1C	X	12.187	1.5
14	MP1C	Z	21.108	1.5
15	MP1C	Mx	0.012	1.5
16	MP1C	X	12.187	6.5
17	MP1C	Z	21.108	6.5
18	MP1C	Mx	0.012	6.5
19	MP4A	X	15.841	1.5
20	MP4A	Z	27.437	1.5
21	MP4A	Mx	-0.008	1.5
22	MP4A	X	15.841	6.5
23	MP4A	Z	27.437	6.5
24	MP4A	Mx	-0.008	6.5
25	MP4B	X	15.841	1.5
26	MP4B	Z	27.437	1.5
27	MP4B	Mx	-0.008	1.5
28	MP4B	X	15.841	6.5
29	MP4B	Z	27.437	6.5
30	MP4B	Mx	-0.008	6.5
31	MP4C	X	12.187	1.5
32	MP4C	Z	21.108	1.5
33	MP4C	Mx	0.012	1.5
34	MP4C	X	12.187	6.5
35	MP4C	Z	21.108	6.5
36	MP4C	Mx	0.012	6.5
37	MP2A	X	7.262	3
38	MP2A	Z	12.578	3
39	MP2A	Mx	-0.004	3
40	MP2A	X	7.262	5
41	MP2A	Z	12.578	5
42	MP2A	Mx	-0.004	5
43	MP2B	X	7.262	3
44	MP2B	Z	12.578	3
45	MP2B	Mx	-0.004	3
46	MP2B	X	7.262	5
47	MP2B	Z	12.578	5
48	MP2B	Mx	-0.004	5
49	MP2C	X	3.872	3
50	MP2C	Z	6.707	3
51	MP2C	Mx	0.004	3
52	MP2C	X	3.872	5
53	MP2C	Z	6.707	5
54	MP2C	Mx	0.004	5
55	MP4A	X	8.297	2.25
56	MP4A	Z	14.371	2.25
57	MP4A	Mx	0.004	2.25
58	MP4B	X	8.297	2.25
59	MP4B	Z	14.371	2.25
60	MP4B	Mx	0.004	2.25

Member Point Loads (BLC 20 : Antenna Wi (150 Deg)) (Continued)

	Member Label	Direction	Magnitude [lb, k-ft]	Location [(ft, %)]
61	MP4C	X	6.431	2.25
62	MP4C	Z	11.138	2.25
63	MP4C	Mx	-0.006	2.25
64	OVP	X	15.068	1
65	OVP	Z	26.098	1
66	OVP	Mx	0	1
67	MP3A	X	14.645	3
68	MP3A	Z	25.365	3
69	MP3A	Mx	-0.007	3
70	MP3A	X	14.645	5
71	MP3A	Z	25.365	5
72	MP3A	Mx	-0.007	5
73	MP3B	X	14.645	3
74	MP3B	Z	25.365	3
75	MP3B	Mx	-0.007	3
76	MP3B	X	14.645	5
77	MP3B	Z	25.365	5
78	MP3B	Mx	-0.007	5
79	MP3C	X	7.182	3
80	MP3C	Z	12.439	3
81	MP3C	Mx	0.007	3
82	MP3C	X	7.182	5
83	MP3C	Z	12.439	5
84	MP3C	Mx	0.007	5

Member Point Loads (BLC 21 : Antenna Wi (180 Deg))

	Member Label	Direction	Magnitude [lb, k-ft]	Location [(ft, %)]
1	MP1A	X	0	1.5
2	MP1A	Z	34.219	1.5
3	MP1A	Mx	0	1.5
4	MP1A	X	0	6.5
5	MP1A	Z	34.219	6.5
6	MP1A	Mx	0	6.5
7	MP1B	X	0	1.5
8	MP1B	Z	26.606	1.5
9	MP1B	Mx	-0.012	1.5
10	MP1B	X	0	6.5
11	MP1B	Z	26.606	6.5
12	MP1B	Mx	-0.012	6.5
13	MP1C	X	0	1.5
14	MP1C	Z	28.262	1.5
15	MP1C	Mx	0.011	1.5
16	MP1C	X	0	6.5
17	MP1C	Z	28.262	6.5
18	MP1C	Mx	0.011	6.5
19	MP4A	X	0	1.5
20	MP4A	Z	34.219	1.5
21	MP4A	Mx	0	1.5
22	MP4A	X	0	6.5
23	MP4A	Z	34.219	6.5
24	MP4A	Mx	0	6.5
25	MP4B	X	0	1.5
26	MP4B	Z	26.606	1.5
27	MP4B	Mx	-0.012	1.5
28	MP4B	X	0	6.5

Member Point Loads (BLC 21 : Antenna Wi (180 Deg)) (Continued)

	Member Label	Direction	Magnitude [lb, k-ft]	Location [(ft, %)]
29	MP4B	Z	26.606	6.5
30	MP4B	Mx	-0.012	6.5
31	MP4C	X	0	1.5
32	MP4C	Z	28.262	1.5
33	MP4C	Mx	0.011	1.5
34	MP4C	X	0	6.5
35	MP4C	Z	28.262	6.5
36	MP4C	Mx	0.011	6.5
37	MP2A	X	0	3
38	MP2A	Z	16.878	3
39	MP2A	Mx	0	3
40	MP2A	X	0	5
41	MP2A	Z	16.878	5
42	MP2A	Mx	0	5
43	MP2B	X	0	3
44	MP2B	Z	9.815	3
45	MP2B	Mx	-0.004	3
46	MP2B	X	0	5
47	MP2B	Z	9.815	5
48	MP2B	Mx	-0.004	5
49	MP2C	X	0	3
50	MP2C	Z	11.352	3
51	MP2C	Mx	0.004	3
52	MP2C	X	0	5
53	MP2C	Z	11.352	5
54	MP2C	Mx	0.004	5
55	MP4A	X	0	2.25
56	MP4A	Z	17.838	2.25
57	MP4A	Mx	0	2.25
58	MP4B	X	0	2.25
59	MP4B	Z	14.105	2.25
60	MP4B	Mx	0.006	2.25
61	MP4C	X	0	2.25
62	MP4C	Z	14.105	2.25
63	MP4C	Mx	-0.006	2.25
64	OVP	X	0	1
65	OVP	Z	28.264	1
66	OVP	Mx	0	1
67	MP3A	X	0	3
68	MP3A	Z	34.473	3
69	MP3A	Mx	0	3
70	MP3A	X	0	5
71	MP3A	Z	34.473	5
72	MP3A	Mx	0	5
73	MP3B	X	0	3
74	MP3B	Z	18.922	3
75	MP3B	Mx	-0.008	3
76	MP3B	X	0	5
77	MP3B	Z	18.922	5
78	MP3B	Mx	-0.008	5
79	MP3C	X	0	3
80	MP3C	Z	22.305	3
81	MP3C	Mx	0.009	3
82	MP3C	X	0	5
83	MP3C	Z	22.305	5

Member Point Loads (BLC 21 : Antenna Wi (180 Deg)) (Continued)

	Member Label	Direction	Magnitude [lb, k-ft]	Location [(ft, %)]
84	MP3C	Mx	0.009	5

Member Point Loads (BLC 22 : Antenna Wi (210 Deg))

	Member Label	Direction	Magnitude [lb, k-ft]	Location [(ft, %)]
1	MP1A	X	-15.841	1.5
2	MP1A	Z	27.437	1.5
3	MP1A	Mx	0.008	1.5
4	MP1A	X	-15.841	6.5
5	MP1A	Z	27.437	6.5
6	MP1A	Mx	0.008	6.5
7	MP1B	X	-12.034	1.5
8	MP1B	Z	20.843	1.5
9	MP1B	Mx	-0.012	1.5
10	MP1B	X	-12.034	6.5
11	MP1B	Z	20.843	6.5
12	MP1B	Mx	-0.012	6.5
13	MP1C	X	-16.516	1.5
14	MP1C	Z	28.606	1.5
15	MP1C	Mx	0.006	1.5
16	MP1C	X	-16.516	6.5
17	MP1C	Z	28.606	6.5
18	MP1C	Mx	0.006	6.5
19	MP4A	X	-15.841	1.5
20	MP4A	Z	27.437	1.5
21	MP4A	Mx	0.008	1.5
22	MP4A	X	-15.841	6.5
23	MP4A	Z	27.437	6.5
24	MP4A	Mx	0.008	6.5
25	MP4B	X	-12.034	1.5
26	MP4B	Z	20.843	1.5
27	MP4B	Mx	-0.012	1.5
28	MP4B	X	-12.034	6.5
29	MP4B	Z	20.843	6.5
30	MP4B	Mx	-0.012	6.5
31	MP4C	X	-16.516	1.5
32	MP4C	Z	28.606	1.5
33	MP4C	Mx	0.006	1.5
34	MP4C	X	-16.516	6.5
35	MP4C	Z	28.606	6.5
36	MP4C	Mx	0.006	6.5
37	MP2A	X	-7.262	3
38	MP2A	Z	12.578	3
39	MP2A	Mx	0.004	3
40	MP2A	X	-7.262	5
41	MP2A	Z	12.578	5
42	MP2A	Mx	0.004	5
43	MP2B	X	-3.73	3
44	MP2B	Z	6.461	3
45	MP2B	Mx	-0.004	3
46	MP2B	X	-3.73	5
47	MP2B	Z	6.461	5
48	MP2B	Mx	-0.004	5
49	MP2C	X	-7.888	3
50	MP2C	Z	13.663	3
51	MP2C	Mx	0.003	3

Member Point Loads (BLC 22 : Antenna Wi (210 Deg)) (Continued)

	Member Label	Direction	Magnitude [lb, k-ft]	Location [(ft, %)]
52	MP2C	X	-7.888	5
53	MP2C	Z	13.663	5
54	MP2C	Mx	0.003	5
55	MP4A	X	-8.297	2.25
56	MP4A	Z	14.371	2.25
57	MP4A	Mx	-0.004	2.25
58	MP4B	X	-6.431	2.25
59	MP4B	Z	11.138	2.25
60	MP4B	Mx	0.006	2.25
61	MP4C	X	-8.297	2.25
62	MP4C	Z	14.371	2.25
63	MP4C	Mx	-0.004	2.25
64	OVP	X	-15.068	1
65	OVP	Z	26.098	1
66	OVP	Mx	0	1
67	MP3A	X	-14.645	3
68	MP3A	Z	25.365	3
69	MP3A	Mx	0.007	3
70	MP3A	X	-14.645	5
71	MP3A	Z	25.365	5
72	MP3A	Mx	0.007	5
73	MP3B	X	-6.869	3
74	MP3B	Z	11.897	3
75	MP3B	Mx	-0.007	3
76	MP3B	X	-6.869	5
77	MP3B	Z	11.897	5
78	MP3B	Mx	-0.007	5
79	MP3C	X	-16.024	3
80	MP3C	Z	27.754	3
81	MP3C	Mx	0.005	3
82	MP3C	X	-16.024	5
83	MP3C	Z	27.754	5
84	MP3C	Mx	0.005	5

Member Point Loads (BLC 23 : Antenna Wi (240 Deg))

	Member Label	Direction	Magnitude [lb, k-ft]	Location [(ft, %)]
1	MP1A	X	-23.041	1.5
2	MP1A	Z	13.303	1.5
3	MP1A	Mx	0.012	1.5
4	MP1A	X	-23.041	6.5
5	MP1A	Z	13.303	6.5
6	MP1A	Mx	0.012	6.5
7	MP1B	X	-23.041	1.5
8	MP1B	Z	13.303	1.5
9	MP1B	Mx	-0.012	1.5
10	MP1B	X	-23.041	6.5
11	MP1B	Z	13.303	6.5
12	MP1B	Mx	-0.012	6.5
13	MP1C	X	-29.37	1.5
14	MP1C	Z	16.957	1.5
15	MP1C	Mx	-0.003	1.5
16	MP1C	X	-29.37	6.5
17	MP1C	Z	16.957	6.5
18	MP1C	Mx	-0.003	6.5
19	MP4A	X	-23.041	1.5

Member Point Loads (BLC 23 : Antenna Wi (240 Deg)) (Continued)

	Member Label	Direction	Magnitude [lb, k-ft]	Location [(ft, %)]
20	MP4A	Z	13.303	1.5
21	MP4A	Mx	0.012	1.5
22	MP4A	X	-23.041	6.5
23	MP4A	Z	13.303	6.5
24	MP4A	Mx	0.012	6.5
25	MP4B	X	-23.041	1.5
26	MP4B	Z	13.303	1.5
27	MP4B	Mx	-0.012	1.5
28	MP4B	X	-23.041	6.5
29	MP4B	Z	13.303	6.5
30	MP4B	Mx	-0.012	6.5
31	MP4C	X	-29.37	1.5
32	MP4C	Z	16.957	1.5
33	MP4C	Mx	-0.003	1.5
34	MP4C	X	-29.37	6.5
35	MP4C	Z	16.957	6.5
36	MP4C	Mx	-0.003	6.5
37	MP2A	X	-8.5	3
38	MP2A	Z	4.908	3
39	MP2A	Mx	0.004	3
40	MP2A	X	-8.5	5
41	MP2A	Z	4.908	5
42	MP2A	Mx	0.004	5
43	MP2B	X	-8.5	3
44	MP2B	Z	4.908	3
45	MP2B	Mx	-0.004	3
46	MP2B	X	-8.5	5
47	MP2B	Z	4.908	5
48	MP2B	Mx	-0.004	5
49	MP2C	X	-14.371	3
50	MP2C	Z	8.297	3
51	MP2C	Mx	-0.001	3
52	MP2C	X	-14.371	5
53	MP2C	Z	8.297	5
54	MP2C	Mx	-0.001	5
55	MP4A	X	-12.216	2.25
56	MP4A	Z	7.053	2.25
57	MP4A	Mx	-0.006	2.25
58	MP4B	X	-12.216	2.25
59	MP4B	Z	7.053	2.25
60	MP4B	Mx	0.006	2.25
61	MP4C	X	-15.448	2.25
62	MP4C	Z	8.919	2.25
63	MP4C	Mx	0	2.25
64	OVP	X	-29.34	1
65	OVP	Z	16.939	1
66	OVP	Mx	0	1
67	MP3A	X	-16.387	3
68	MP3A	Z	9.461	3
69	MP3A	Mx	0.008	3
70	MP3A	X	-16.387	5
71	MP3A	Z	9.461	5
72	MP3A	Mx	0.008	5
73	MP3B	X	-16.387	3
74	MP3B	Z	9.461	3

Member Point Loads (BLC 23 : Antenna Wi (240 Deg)) (Continued)

	Member Label	Direction	Magnitude [lb, k-ft]	Location [(ft, %)]
75	MP3B	Mx	-0.008	3
76	MP3B	X	-16.387	5
77	MP3B	Z	9.461	5
78	MP3B	Mx	-0.008	5
79	MP3C	X	-29.313	3
80	MP3C	Z	16.924	3
81	MP3C	Mx	-0.003	3
82	MP3C	X	-29.313	5
83	MP3C	Z	16.924	5
84	MP3C	Mx	-0.003	5

Member Point Loads (BLC 24 : Antenna Wi (270 Deg))

	Member Label	Direction	Magnitude [lb, k-ft]	Location [(ft, %)]
1	MP1A	X	-24.068	1.5
2	MP1A	Z	0	1.5
3	MP1A	Mx	0.012	1.5
4	MP1A	X	-24.068	6.5
5	MP1A	Z	0	6.5
6	MP1A	Mx	0.012	6.5
7	MP1B	X	-31.682	1.5
8	MP1B	Z	0	1.5
9	MP1B	Mx	-0.008	1.5
10	MP1B	X	-31.682	6.5
11	MP1B	Z	0	6.5
12	MP1B	Mx	-0.008	6.5
13	MP1C	X	-30.025	1.5
14	MP1C	Z	0	1.5
15	MP1C	Mx	-0.01	1.5
16	MP1C	X	-30.025	6.5
17	MP1C	Z	0	6.5
18	MP1C	Mx	-0.01	6.5
19	MP4A	X	-24.068	1.5
20	MP4A	Z	0	1.5
21	MP4A	Mx	0.012	1.5
22	MP4A	X	-24.068	6.5
23	MP4A	Z	0	6.5
24	MP4A	Mx	0.012	6.5
25	MP4B	X	-31.682	1.5
26	MP4B	Z	0	1.5
27	MP4B	Mx	-0.008	1.5
28	MP4B	X	-31.682	6.5
29	MP4B	Z	0	6.5
30	MP4B	Mx	-0.008	6.5
31	MP4C	X	-30.025	1.5
32	MP4C	Z	0	1.5
33	MP4C	Mx	-0.01	1.5
34	MP4C	X	-30.025	6.5
35	MP4C	Z	0	6.5
36	MP4C	Mx	-0.01	6.5
37	MP2A	X	-7.461	3
38	MP2A	Z	0	3
39	MP2A	Mx	0.004	3
40	MP2A	X	-7.461	5
41	MP2A	Z	0	5
42	MP2A	Mx	0.004	5

Member Point Loads (BLC 24 : Antenna Wi (270 Deg)) (Continued)

	Member Label	Direction	Magnitude [lb, k-ft]	Location [(ft, %)]
43	MP2B	X	-14.523	3
44	MP2B	Z	0	3
45	MP2B	Mx	-0.004	3
46	MP2B	X	-14.523	5
47	MP2B	Z	0	5
48	MP2B	Mx	-0.004	5
49	MP2C	X	-12.987	3
50	MP2C	Z	0	3
51	MP2C	Mx	-0.004	3
52	MP2C	X	-12.987	5
53	MP2C	Z	0	5
54	MP2C	Mx	-0.004	5
55	MP4A	X	-12.861	2.25
56	MP4A	Z	0	2.25
57	MP4A	Mx	-0.006	2.25
58	MP4B	X	-16.594	2.25
59	MP4B	Z	0	2.25
60	MP4B	Mx	0.004	2.25
61	MP4C	X	-16.594	2.25
62	MP4C	Z	0	2.25
63	MP4C	Mx	0.004	2.25
64	OVP	X	-35.75	1
65	OVP	Z	0	1
66	OVP	Mx	0	1
67	MP3A	X	-13.738	3
68	MP3A	Z	0	3
69	MP3A	Mx	0.007	3
70	MP3A	X	-13.738	5
71	MP3A	Z	0	5
72	MP3A	Mx	0.007	5
73	MP3B	X	-29.289	3
74	MP3B	Z	0	3
75	MP3B	Mx	-0.007	3
76	MP3B	X	-29.289	5
77	MP3B	Z	0	5
78	MP3B	Mx	-0.007	5
79	MP3C	X	-25.906	3
80	MP3C	Z	0	3
81	MP3C	Mx	-0.008	3
82	MP3C	X	-25.906	5
83	MP3C	Z	0	5
84	MP3C	Mx	-0.008	5

Member Point Loads (BLC 25 : Antenna Wi (300 Deg))

	Member Label	Direction	Magnitude [lb, k-ft]	Location [(ft, %)]
1	MP1A	X	-23.041	1.5
2	MP1A	Z	-13.303	1.5
3	MP1A	Mx	0.012	1.5
4	MP1A	X	-23.041	6.5
5	MP1A	Z	-13.303	6.5
6	MP1A	Mx	0.012	6.5
7	MP1B	X	-29.635	1.5
8	MP1B	Z	-17.11	1.5
9	MP1B	Mx	0	1.5
10	MP1B	X	-29.635	6.5

Member Point Loads (BLC 25 : Antenna Wi (300 Deg)) (Continued)

	Member Label	Direction	Magnitude [lb, k-ft]	Location [(ft, %)]
11	MP1B	Z	-17.11	6.5
12	MP1B	Mx	0	6.5
13	MP1C	X	-21.872	1.5
14	MP1C	Z	-12.628	1.5
15	MP1C	Mx	-0.012	1.5
16	MP1C	X	-21.872	6.5
17	MP1C	Z	-12.628	6.5
18	MP1C	Mx	-0.012	6.5
19	MP4A	X	-23.041	1.5
20	MP4A	Z	-13.303	1.5
21	MP4A	Mx	0.012	1.5
22	MP4A	X	-23.041	6.5
23	MP4A	Z	-13.303	6.5
24	MP4A	Mx	0.012	6.5
25	MP4B	X	-29.635	1.5
26	MP4B	Z	-17.11	1.5
27	MP4B	Mx	0	1.5
28	MP4B	X	-29.635	6.5
29	MP4B	Z	-17.11	6.5
30	MP4B	Mx	0	6.5
31	MP4C	X	-21.872	1.5
32	MP4C	Z	-12.628	1.5
33	MP4C	Mx	-0.012	1.5
34	MP4C	X	-21.872	6.5
35	MP4C	Z	-12.628	6.5
36	MP4C	Mx	-0.012	6.5
37	MP2A	X	-8.5	3
38	MP2A	Z	-4.908	3
39	MP2A	Mx	0.004	3
40	MP2A	X	-8.5	5
41	MP2A	Z	-4.908	5
42	MP2A	Mx	0.004	5
43	MP2B	X	-14.616	3
44	MP2B	Z	-8.439	3
45	MP2B	Mx	0	3
46	MP2B	X	-14.616	5
47	MP2B	Z	-8.439	5
48	MP2B	Mx	0	5
49	MP2C	X	-7.415	3
50	MP2C	Z	-4.281	3
51	MP2C	Mx	-0.004	3
52	MP2C	X	-7.415	5
53	MP2C	Z	-4.281	5
54	MP2C	Mx	-0.004	5
55	MP4A	X	-12.216	2.25
56	MP4A	Z	-7.053	2.25
57	MP4A	Mx	-0.006	2.25
58	MP4B	X	-15.448	2.25
59	MP4B	Z	-8.919	2.25
60	MP4B	Mx	0	2.25
61	MP4C	X	-12.216	2.25
62	MP4C	Z	-7.053	2.25
63	MP4C	Mx	0.006	2.25
64	OVP	X	-29.34	1
65	OVP	Z	-16.939	1

Member Point Loads (BLC 25 : Antenna Wi (300 Deg)) (Continued)

	Member Label	Direction	Magnitude [lb, k-ft]	Location [(ft, %)]
66	OVP	Mx	0	1
67	MP3A	X	-16.387	3
68	MP3A	Z	-9.461	3
69	MP3A	Mx	0.008	3
70	MP3A	X	-16.387	5
71	MP3A	Z	-9.461	5
72	MP3A	Mx	0.008	5
73	MP3B	X	-29.855	3
74	MP3B	Z	-17.237	3
75	MP3B	Mx	0	3
76	MP3B	X	-29.855	5
77	MP3B	Z	-17.237	5
78	MP3B	Mx	0	5
79	MP3C	X	-13.998	3
80	MP3C	Z	-8.082	3
81	MP3C	Mx	-0.008	3
82	MP3C	X	-13.998	5
83	MP3C	Z	-8.082	5
84	MP3C	Mx	-0.008	5

Member Point Loads (BLC 26 : Antenna Wi (330 Deg))

	Member Label	Direction	Magnitude [lb, k-ft]	Location [(ft, %)]
1	MP1A	X	-15.841	1.5
2	MP1A	Z	-27.437	1.5
3	MP1A	Mx	0.008	1.5
4	MP1A	X	-15.841	6.5
5	MP1A	Z	-27.437	6.5
6	MP1A	Mx	0.008	6.5
7	MP1B	X	-15.841	1.5
8	MP1B	Z	-27.437	1.5
9	MP1B	Mx	0.008	1.5
10	MP1B	X	-15.841	6.5
11	MP1B	Z	-27.437	6.5
12	MP1B	Mx	0.008	6.5
13	MP1C	X	-12.187	1.5
14	MP1C	Z	-21.108	1.5
15	MP1C	Mx	-0.012	1.5
16	MP1C	X	-12.187	6.5
17	MP1C	Z	-21.108	6.5
18	MP1C	Mx	-0.012	6.5
19	MP4A	X	-15.841	1.5
20	MP4A	Z	-27.437	1.5
21	MP4A	Mx	0.008	1.5
22	MP4A	X	-15.841	6.5
23	MP4A	Z	-27.437	6.5
24	MP4A	Mx	0.008	6.5
25	MP4B	X	-15.841	1.5
26	MP4B	Z	-27.437	1.5
27	MP4B	Mx	0.008	1.5
28	MP4B	X	-15.841	6.5
29	MP4B	Z	-27.437	6.5
30	MP4B	Mx	0.008	6.5
31	MP4C	X	-12.187	1.5
32	MP4C	Z	-21.108	1.5
33	MP4C	Mx	-0.012	1.5

Member Point Loads (BLC 26 : Antenna Wi (330 Deg)) (Continued)

	Member Label	Direction	Magnitude [lb, k-ft]	Location [(ft, %)]
34	MP4C	X	-12.187	6.5
35	MP4C	Z	-21.108	6.5
36	MP4C	Mx	-0.012	6.5
37	MP2A	X	-7.262	3
38	MP2A	Z	-12.578	3
39	MP2A	Mx	0.004	3
40	MP2A	X	-7.262	5
41	MP2A	Z	-12.578	5
42	MP2A	Mx	0.004	5
43	MP2B	X	-7.262	3
44	MP2B	Z	-12.578	3
45	MP2B	Mx	0.004	3
46	MP2B	X	-7.262	5
47	MP2B	Z	-12.578	5
48	MP2B	Mx	0.004	5
49	MP2C	X	-3.872	3
50	MP2C	Z	-6.707	3
51	MP2C	Mx	-0.004	3
52	MP2C	X	-3.872	5
53	MP2C	Z	-6.707	5
54	MP2C	Mx	-0.004	5
55	MP4A	X	-8.297	2.25
56	MP4A	Z	-14.371	2.25
57	MP4A	Mx	-0.004	2.25
58	MP4B	X	-8.297	2.25
59	MP4B	Z	-14.371	2.25
60	MP4B	Mx	-0.004	2.25
61	MP4C	X	-6.431	2.25
62	MP4C	Z	-11.138	2.25
63	MP4C	Mx	0.006	2.25
64	OVP	X	-15.068	1
65	OVP	Z	-26.098	1
66	OVP	Mx	0	1
67	MP3A	X	-14.645	3
68	MP3A	Z	-25.365	3
69	MP3A	Mx	0.007	3
70	MP3A	X	-14.645	5
71	MP3A	Z	-25.365	5
72	MP3A	Mx	0.007	5
73	MP3B	X	-14.645	3
74	MP3B	Z	-25.365	3
75	MP3B	Mx	0.007	3
76	MP3B	X	-14.645	5
77	MP3B	Z	-25.365	5
78	MP3B	Mx	0.007	5
79	MP3C	X	-7.182	3
80	MP3C	Z	-12.439	3
81	MP3C	Mx	-0.007	3
82	MP3C	X	-7.182	5
83	MP3C	Z	-12.439	5
84	MP3C	Mx	-0.007	5

Member Point Loads (BLC 27 : Antenna Wm (0 Deg))

	Member Label	Direction	Magnitude [lb, k-ft]	Location [(ft, %)]
1	MP1A	X	0	1.5
2	MP1A	Z	-7.14	1.5
3	MP1A	Mx	0	1.5
4	MP1A	X	0	6.5
5	MP1A	Z	-7.14	6.5
6	MP1A	Mx	0	6.5
7	MP1B	X	0	1.5
8	MP1B	Z	-4.083	1.5
9	MP1B	Mx	0.002	1.5
10	MP1B	X	0	6.5
11	MP1B	Z	-4.083	6.5
12	MP1B	Mx	0.002	6.5
13	MP1C	X	0	1.5
14	MP1C	Z	-4.748	1.5
15	MP1C	Mx	-0.002	1.5
16	MP1C	X	0	6.5
17	MP1C	Z	-4.748	6.5
18	MP1C	Mx	-0.002	6.5
19	MP4A	X	0	1.5
20	MP4A	Z	-7.14	1.5
21	MP4A	Mx	0	1.5
22	MP4A	X	0	6.5
23	MP4A	Z	-7.14	6.5
24	MP4A	Mx	0	6.5
25	MP4B	X	0	1.5
26	MP4B	Z	-4.083	1.5
27	MP4B	Mx	0.002	1.5
28	MP4B	X	0	6.5
29	MP4B	Z	-4.083	6.5
30	MP4B	Mx	0.002	6.5
31	MP4C	X	0	1.5
32	MP4C	Z	-4.748	1.5
33	MP4C	Mx	-0.002	1.5
34	MP4C	X	0	6.5
35	MP4C	Z	-4.748	6.5
36	MP4C	Mx	-0.002	6.5
37	MP2A	X	0	3
38	MP2A	Z	-4.155	3
39	MP2A	Mx	0	3
40	MP2A	X	0	5
41	MP2A	Z	-4.155	5
42	MP2A	Mx	0	5
43	MP2B	X	0	3
44	MP2B	Z	-2.133	3
45	MP2B	Mx	0.000924	3
46	MP2B	X	0	5
47	MP2B	Z	-2.133	5
48	MP2B	Mx	0.000924	5
49	MP2C	X	0	3
50	MP2C	Z	-2.573	3
51	MP2C	Mx	-0.000986	3
52	MP2C	X	0	5
53	MP2C	Z	-2.573	5
54	MP2C	Mx	-0.000986	5
55	MP4A	X	0	2.25

Member Point Loads (BLC 27 : Antenna Wm (0 Deg)) (Continued)

	Member Label	Direction	Magnitude [lb, k-ft]	Location [(ft, %)]
56	MP4A	Z	-4.918	2.25
57	MP4A	Mx	0	2.25
58	MP4B	X	0	2.25
59	MP4B	Z	-3.744	2.25
60	MP4B	Mx	-0.002	2.25
61	MP4C	X	0	2.25
62	MP4C	Z	-3.744	2.25
63	MP4C	Mx	0.002	2.25
64	OVP	X	0	1
65	OVP	Z	-6.338	1
66	OVP	Mx	0	1
67	MP3A	X	0	3
68	MP3A	Z	-9.059	3
69	MP3A	Mx	0	3
70	MP3A	X	0	5
71	MP3A	Z	-9.059	5
72	MP3A	Mx	0	5
73	MP3B	X	0	3
74	MP3B	Z	-4.523	3
75	MP3B	Mx	0.002	3
76	MP3B	X	0	5
77	MP3B	Z	-4.523	5
78	MP3B	Mx	0.002	5
79	MP3C	X	0	3
80	MP3C	Z	-5.51	3
81	MP3C	Mx	-0.002	3
82	MP3C	X	0	5
83	MP3C	Z	-5.51	5
84	MP3C	Mx	-0.002	5

Member Point Loads (BLC 28 : Antenna Wm (30 Deg))

	Member Label	Direction	Magnitude [lb, k-ft]	Location [(ft, %)]
1	MP1A	X	3.06	1.5
2	MP1A	Z	-5.301	1.5
3	MP1A	Mx	-0.002	1.5
4	MP1A	X	3.06	6.5
5	MP1A	Z	-5.301	6.5
6	MP1A	Mx	-0.002	6.5
7	MP1B	X	1.532	1.5
8	MP1B	Z	-2.653	1.5
9	MP1B	Mx	0.002	1.5
10	MP1B	X	1.532	6.5
11	MP1B	Z	-2.653	6.5
12	MP1B	Mx	0.002	6.5
13	MP1C	X	3.331	1.5
14	MP1C	Z	-5.77	1.5
15	MP1C	Mx	-0.001	1.5
16	MP1C	X	3.331	6.5
17	MP1C	Z	-5.77	6.5
18	MP1C	Mx	-0.001	6.5
19	MP4A	X	3.06	1.5
20	MP4A	Z	-5.301	1.5
21	MP4A	Mx	-0.002	1.5
22	MP4A	X	3.06	6.5
23	MP4A	Z	-5.301	6.5

Member Point Loads (BLC 28 : Antenna Wm (30 Deg)) (Continued)

	Member Label	Direction	Magnitude [lb, k-ft]	Location [(ft, %)]
24	MP4A	Mx	-0.002	6.5
25	MP4B	X	1.532	1.5
26	MP4B	Z	-2.653	1.5
27	MP4B	Mx	0.002	1.5
28	MP4B	X	1.532	6.5
29	MP4B	Z	-2.653	6.5
30	MP4B	Mx	0.002	6.5
31	MP4C	X	3.331	1.5
32	MP4C	Z	-5.77	1.5
33	MP4C	Mx	-0.001	1.5
34	MP4C	X	3.331	6.5
35	MP4C	Z	-5.77	6.5
36	MP4C	Mx	-0.001	6.5
37	MP2A	X	1.741	3
38	MP2A	Z	-3.015	3
39	MP2A	Mx	-0.000871	3
40	MP2A	X	1.741	5
41	MP2A	Z	-3.015	5
42	MP2A	Mx	-0.000871	5
43	MP2B	X	0.73	3
44	MP2B	Z	-1.264	3
45	MP2B	Mx	0.00073	3
46	MP2B	X	0.73	5
47	MP2B	Z	-1.264	5
48	MP2B	Mx	0.00073	5
49	MP2C	X	1.92	3
50	MP2C	Z	-3.325	3
51	MP2C	Mx	-0.000656	3
52	MP2C	X	1.92	5
53	MP2C	Z	-3.325	5
54	MP2C	Mx	-0.000656	5
55	MP4A	X	2.263	2.25
56	MP4A	Z	-3.92	2.25
57	MP4A	Mx	0.001	2.25
58	MP4B	X	1.676	2.25
59	MP4B	Z	-2.904	2.25
60	MP4B	Mx	-0.002	2.25
61	MP4C	X	2.263	2.25
62	MP4C	Z	-3.92	2.25
63	MP4C	Mx	0.001	2.25
64	OVP	X	3.419	1
65	OVP	Z	-5.921	1
66	OVP	Mx	0	1
67	MP3A	X	3.774	3
68	MP3A	Z	-6.536	3
69	MP3A	Mx	-0.002	3
70	MP3A	X	3.774	5
71	MP3A	Z	-6.536	5
72	MP3A	Mx	-0.002	5
73	MP3B	X	1.505	3
74	MP3B	Z	-2.608	3
75	MP3B	Mx	0.002	3
76	MP3B	X	1.505	5
77	MP3B	Z	-2.608	5
78	MP3B	Mx	0.002	5

Member Point Loads (BLC 28 : Antenna Wm (30 Deg)) (Continued)

	Member Label	Direction	Magnitude [lb, k-ft]	Location [(ft, %)]
79	MP3C	X	4.176	3
80	MP3C	Z	-7.233	3
81	MP3C	Mx	-0.001	3
82	MP3C	X	4.176	5
83	MP3C	Z	-7.233	5
84	MP3C	Mx	-0.001	5

Member Point Loads (BLC 29 : Antenna Wm (60 Deg))

	Member Label	Direction	Magnitude [lb, k-ft]	Location [(ft, %)]
1	MP1A	X	3.536	1.5
2	MP1A	Z	-2.041	1.5
3	MP1A	Mx	-0.002	1.5
4	MP1A	X	3.536	6.5
5	MP1A	Z	-2.041	6.5
6	MP1A	Mx	-0.002	6.5
7	MP1B	X	3.536	1.5
8	MP1B	Z	-2.041	1.5
9	MP1B	Mx	0.002	1.5
10	MP1B	X	3.536	6.5
11	MP1B	Z	-2.041	6.5
12	MP1B	Mx	0.002	6.5
13	MP1C	X	6.077	1.5
14	MP1C	Z	-3.508	1.5
15	MP1C	Mx	0.000609	1.5
16	MP1C	X	6.077	6.5
17	MP1C	Z	-3.508	6.5
18	MP1C	Mx	0.000609	6.5
19	MP4A	X	3.536	1.5
20	MP4A	Z	-2.041	1.5
21	MP4A	Mx	-0.002	1.5
22	MP4A	X	3.536	6.5
23	MP4A	Z	-2.041	6.5
24	MP4A	Mx	-0.002	6.5
25	MP4B	X	3.536	1.5
26	MP4B	Z	-2.041	1.5
27	MP4B	Mx	0.002	1.5
28	MP4B	X	3.536	6.5
29	MP4B	Z	-2.041	6.5
30	MP4B	Mx	0.002	6.5
31	MP4C	X	6.077	1.5
32	MP4C	Z	-3.508	1.5
33	MP4C	Mx	0.000609	1.5
34	MP4C	X	6.077	6.5
35	MP4C	Z	-3.508	6.5
36	MP4C	Mx	0.000609	6.5
37	MP2A	X	1.848	3
38	MP2A	Z	-1.067	3
39	MP2A	Mx	-0.000924	3
40	MP2A	X	1.848	5
41	MP2A	Z	-1.067	5
42	MP2A	Mx	-0.000924	5
43	MP2B	X	1.848	3
44	MP2B	Z	-1.067	3
45	MP2B	Mx	0.000924	3
46	MP2B	X	1.848	5

Member Point Loads (BLC 29 : Antenna Wm (60 Deg)) (Continued)

	Member Label	Direction	Magnitude [lb, k-ft]	Location [(ft, %)]
47	MP2B	Z	-1.067	5
48	MP2B	Mx	0.000924	5
49	MP2C	X	3.528	3
50	MP2C	Z	-2.037	3
51	MP2C	Mx	0.000354	3
52	MP2C	X	3.528	5
53	MP2C	Z	-2.037	5
54	MP2C	Mx	0.000354	5
55	MP4A	X	3.242	2.25
56	MP4A	Z	-1.872	2.25
57	MP4A	Mx	0.002	2.25
58	MP4B	X	3.242	2.25
59	MP4B	Z	-1.872	2.25
60	MP4B	Mx	-0.002	2.25
61	MP4C	X	4.259	2.25
62	MP4C	Z	-2.459	2.25
63	MP4C	Mx	0	2.25
64	OVP	X	6.787	1
65	OVP	Z	-3.918	1
66	OVP	Mx	0	1
67	MP3A	X	3.917	3
68	MP3A	Z	-2.262	3
69	MP3A	Mx	-0.002	3
70	MP3A	X	3.917	5
71	MP3A	Z	-2.262	5
72	MP3A	Mx	-0.002	5
73	MP3B	X	3.917	3
74	MP3B	Z	-2.262	3
75	MP3B	Mx	0.002	3
76	MP3B	X	3.917	5
77	MP3B	Z	-2.262	5
78	MP3B	Mx	0.002	5
79	MP3C	X	7.688	3
80	MP3C	Z	-4.438	3
81	MP3C	Mx	0.000771	3
82	MP3C	X	7.688	5
83	MP3C	Z	-4.438	5
84	MP3C	Mx	0.000771	5

Member Point Loads (BLC 30 : Antenna Wm (90 Deg))

	Member Label	Direction	Magnitude [lb, k-ft]	Location [(ft, %)]
1	MP1A	X	3.064	1.5
2	MP1A	Z	0	1.5
3	MP1A	Mx	-0.002	1.5
4	MP1A	X	3.064	6.5
5	MP1A	Z	0	6.5
6	MP1A	Mx	-0.002	6.5
7	MP1B	X	6.121	1.5
8	MP1B	Z	0	1.5
9	MP1B	Mx	0.002	1.5
10	MP1B	X	6.121	6.5
11	MP1B	Z	0	6.5
12	MP1B	Mx	0.002	6.5
13	MP1C	X	5.455	1.5
14	MP1C	Z	0	1.5

Member Point Loads (BLC 30 : Antenna Wm (90 Deg)) (Continued)

	Member Label	Direction	Magnitude [lb, k-ft]	Location [(ft, %)]
15	MP1C	Mx	0.002	1.5
16	MP1C	X	5.455	6.5
17	MP1C	Z	0	6.5
18	MP1C	Mx	0.002	6.5
19	MP4A	X	3.064	1.5
20	MP4A	Z	0	1.5
21	MP4A	Mx	-0.002	1.5
22	MP4A	X	3.064	6.5
23	MP4A	Z	0	6.5
24	MP4A	Mx	-0.002	6.5
25	MP4B	X	6.121	1.5
26	MP4B	Z	0	1.5
27	MP4B	Mx	0.002	1.5
28	MP4B	X	6.121	6.5
29	MP4B	Z	0	6.5
30	MP4B	Mx	0.002	6.5
31	MP4C	X	5.455	1.5
32	MP4C	Z	0	1.5
33	MP4C	Mx	0.002	1.5
34	MP4C	X	5.455	6.5
35	MP4C	Z	0	6.5
36	MP4C	Mx	0.002	6.5
37	MP2A	X	1.459	3
38	MP2A	Z	0	3
39	MP2A	Mx	-0.00073	3
40	MP2A	X	1.459	5
41	MP2A	Z	0	5
42	MP2A	Mx	-0.00073	5
43	MP2B	X	3.481	3
44	MP2B	Z	0	3
45	MP2B	Mx	0.00087	3
46	MP2B	X	3.481	5
47	MP2B	Z	0	5
48	MP2B	Mx	0.00087	5
49	MP2C	X	3.041	3
50	MP2C	Z	0	3
51	MP2C	Mx	0.000977	3
52	MP2C	X	3.041	5
53	MP2C	Z	0	5
54	MP2C	Mx	0.000977	5
55	MP4A	X	3.353	2.25
56	MP4A	Z	0	2.25
57	MP4A	Mx	0.002	2.25
58	MP4B	X	4.526	2.25
59	MP4B	Z	0	2.25
60	MP4B	Mx	-0.001	2.25
61	MP4C	X	4.526	2.25
62	MP4C	Z	0	2.25
63	MP4C	Mx	-0.001	2.25
64	OVP	X	8.336	1
65	OVP	Z	0	1
66	OVP	Mx	0	1
67	MP3A	X	3.011	3
68	MP3A	Z	0	3
69	MP3A	Mx	-0.002	3

Member Point Loads (BLC 30 : Antenna Wm (90 Deg)) (Continued)

	Member Label	Direction	Magnitude [lb, k-ft]	Location [(ft, %)]
70	MP3A	X	3.011	5
71	MP3A	Z	0	5
72	MP3A	Mx	-0.002	5
73	MP3B	X	7.547	3
74	MP3B	Z	0	3
75	MP3B	Mx	0.002	3
76	MP3B	X	7.547	5
77	MP3B	Z	0	5
78	MP3B	Mx	0.002	5
79	MP3C	X	6.56	3
80	MP3C	Z	0	3
81	MP3C	Mx	0.002	3
82	MP3C	X	6.56	5
83	MP3C	Z	0	5
84	MP3C	Mx	0.002	5

Member Point Loads (BLC 31 : Antenna Wm (120 Deg))

	Member Label	Direction	Magnitude [lb, k-ft]	Location [(ft, %)]
1	MP1A	X	3.536	1.5
2	MP1A	Z	2.041	1.5
3	MP1A	Mx	-0.002	1.5
4	MP1A	X	3.536	6.5
5	MP1A	Z	2.041	6.5
6	MP1A	Mx	-0.002	6.5
7	MP1B	X	6.183	1.5
8	MP1B	Z	3.57	1.5
9	MP1B	Mx	0	1.5
10	MP1B	X	6.183	6.5
11	MP1B	Z	3.57	6.5
12	MP1B	Mx	0	6.5
13	MP1C	X	3.066	1.5
14	MP1C	Z	1.77	1.5
15	MP1C	Mx	0.002	1.5
16	MP1C	X	3.066	6.5
17	MP1C	Z	1.77	6.5
18	MP1C	Mx	0.002	6.5
19	MP4A	X	3.536	1.5
20	MP4A	Z	2.041	1.5
21	MP4A	Mx	-0.002	1.5
22	MP4A	X	3.536	6.5
23	MP4A	Z	2.041	6.5
24	MP4A	Mx	-0.002	6.5
25	MP4B	X	6.183	1.5
26	MP4B	Z	3.57	1.5
27	MP4B	Mx	0	1.5
28	MP4B	X	6.183	6.5
29	MP4B	Z	3.57	6.5
30	MP4B	Mx	0	6.5
31	MP4C	X	3.066	1.5
32	MP4C	Z	1.77	1.5
33	MP4C	Mx	0.002	1.5
34	MP4C	X	3.066	6.5
35	MP4C	Z	1.77	6.5
36	MP4C	Mx	0.002	6.5
37	MP2A	X	1.848	3

Member Point Loads (BLC 31 : Antenna Wm (120 Deg)) (Continued)

	Member Label	Direction	Magnitude [lb, k-ft]	Location [(ft, %)]
38	MP2A	Z	1.067	3
39	MP2A	Mx	-0.000924	3
40	MP2A	X	1.848	5
41	MP2A	Z	1.067	5
42	MP2A	Mx	-0.000924	5
43	MP2B	X	3.598	3
44	MP2B	Z	2.077	3
45	MP2B	Mx	0	3
46	MP2B	X	3.598	5
47	MP2B	Z	2.077	5
48	MP2B	Mx	0	5
49	MP2C	X	1.537	3
50	MP2C	Z	0.887	3
51	MP2C	Mx	0.000834	3
52	MP2C	X	1.537	5
53	MP2C	Z	0.887	5
54	MP2C	Mx	0.000834	5
55	MP4A	X	3.242	2.25
56	MP4A	Z	1.872	2.25
57	MP4A	Mx	0.002	2.25
58	MP4B	X	4.259	2.25
59	MP4B	Z	2.459	2.25
60	MP4B	Mx	0	2.25
61	MP4C	X	3.242	2.25
62	MP4C	Z	1.872	2.25
63	MP4C	Mx	-0.002	2.25
64	OVP	X	6.787	1
65	OVP	Z	3.918	1
66	OVP	Mx	0	1
67	MP3A	X	3.917	3
68	MP3A	Z	2.262	3
69	MP3A	Mx	-0.002	3
70	MP3A	X	3.917	5
71	MP3A	Z	2.262	5
72	MP3A	Mx	-0.002	5
73	MP3B	X	7.846	3
74	MP3B	Z	4.53	3
75	MP3B	Mx	0	3
76	MP3B	X	7.846	5
77	MP3B	Z	4.53	5
78	MP3B	Mx	0	5
79	MP3C	X	3.22	3
80	MP3C	Z	1.859	3
81	MP3C	Mx	0.002	3
82	MP3C	X	3.22	5
83	MP3C	Z	1.859	5
84	MP3C	Mx	0.002	5

Member Point Loads (BLC 32 : Antenna Wm (150 Deg))

	Member Label	Direction	Magnitude [lb, k-ft]	Location [(ft, %)]
1	MP1A	X	3.06	1.5
2	MP1A	Z	5.301	1.5
3	MP1A	Mx	-0.002	1.5
4	MP1A	X	3.06	6.5
5	MP1A	Z	5.301	6.5

Member Point Loads (BLC 32 : Antenna Wm (150 Deg)) (Continued)

	Member Label	Direction	Magnitude [lb, k-ft]	Location [(ft, %)]
6	MP1A	Mx	-0.002	6.5
7	MP1B	X	3.06	1.5
8	MP1B	Z	5.301	1.5
9	MP1B	Mx	-0.002	1.5
10	MP1B	X	3.06	6.5
11	MP1B	Z	5.301	6.5
12	MP1B	Mx	-0.002	6.5
13	MP1C	X	1.593	1.5
14	MP1C	Z	2.76	1.5
15	MP1C	Mx	0.002	1.5
16	MP1C	X	1.593	6.5
17	MP1C	Z	2.76	6.5
18	MP1C	Mx	0.002	6.5
19	MP4A	X	3.06	1.5
20	MP4A	Z	5.301	1.5
21	MP4A	Mx	-0.002	1.5
22	MP4A	X	3.06	6.5
23	MP4A	Z	5.301	6.5
24	MP4A	Mx	-0.002	6.5
25	MP4B	X	3.06	1.5
26	MP4B	Z	5.301	1.5
27	MP4B	Mx	-0.002	1.5
28	MP4B	X	3.06	6.5
29	MP4B	Z	5.301	6.5
30	MP4B	Mx	-0.002	6.5
31	MP4C	X	1.593	1.5
32	MP4C	Z	2.76	1.5
33	MP4C	Mx	0.002	1.5
34	MP4C	X	1.593	6.5
35	MP4C	Z	2.76	6.5
36	MP4C	Mx	0.002	6.5
37	MP2A	X	1.741	3
38	MP2A	Z	3.015	3
39	MP2A	Mx	-0.000871	3
40	MP2A	X	1.741	5
41	MP2A	Z	3.015	5
42	MP2A	Mx	-0.000871	5
43	MP2B	X	1.741	3
44	MP2B	Z	3.015	3
45	MP2B	Mx	-0.00087	3
46	MP2B	X	1.741	5
47	MP2B	Z	3.015	5
48	MP2B	Mx	-0.00087	5
49	MP2C	X	0.77	3
50	MP2C	Z	1.334	3
51	MP2C	Mx	0.000758	3
52	MP2C	X	0.77	5
53	MP2C	Z	1.334	5
54	MP2C	Mx	0.000758	5
55	MP4A	X	2.263	2.25
56	MP4A	Z	3.92	2.25
57	MP4A	Mx	0.001	2.25
58	MP4B	X	2.263	2.25
59	MP4B	Z	3.92	2.25
60	MP4B	Mx	0.001	2.25

Member Point Loads (BLC 32 : Antenna Wm (150 Deg)) (Continued)

	Member Label	Direction	Magnitude [lb, k-ft]	Location [(ft, %)]
61	MP4C	X	1.676	2.25
62	MP4C	Z	2.904	2.25
63	MP4C	Mx	-0.002	2.25
64	OVP	X	3.419	1
65	OVP	Z	5.921	1
66	OVP	Mx	0	1
67	MP3A	X	3.774	3
68	MP3A	Z	6.536	3
69	MP3A	Mx	-0.002	3
70	MP3A	X	3.774	5
71	MP3A	Z	6.536	5
72	MP3A	Mx	-0.002	5
73	MP3B	X	3.774	3
74	MP3B	Z	6.536	3
75	MP3B	Mx	-0.002	3
76	MP3B	X	3.774	5
77	MP3B	Z	6.536	5
78	MP3B	Mx	-0.002	5
79	MP3C	X	1.597	3
80	MP3C	Z	2.766	3
81	MP3C	Mx	0.002	3
82	MP3C	X	1.597	5
83	MP3C	Z	2.766	5
84	MP3C	Mx	0.002	5

Member Point Loads (BLC 33 : Antenna Wm (180 Deg))

	Member Label	Direction	Magnitude [lb, k-ft]	Location [(ft, %)]
1	MP1A	X	0	1.5
2	MP1A	Z	7.14	1.5
3	MP1A	Mx	0	1.5
4	MP1A	X	0	6.5
5	MP1A	Z	7.14	6.5
6	MP1A	Mx	0	6.5
7	MP1B	X	0	1.5
8	MP1B	Z	4.083	1.5
9	MP1B	Mx	-0.002	1.5
10	MP1B	X	0	6.5
11	MP1B	Z	4.083	6.5
12	MP1B	Mx	-0.002	6.5
13	MP1C	X	0	1.5
14	MP1C	Z	4.748	1.5
15	MP1C	Mx	0.002	1.5
16	MP1C	X	0	6.5
17	MP1C	Z	4.748	6.5
18	MP1C	Mx	0.002	6.5
19	MP4A	X	0	1.5
20	MP4A	Z	7.14	1.5
21	MP4A	Mx	0	1.5
22	MP4A	X	0	6.5
23	MP4A	Z	7.14	6.5
24	MP4A	Mx	0	6.5
25	MP4B	X	0	1.5
26	MP4B	Z	4.083	1.5
27	MP4B	Mx	-0.002	1.5
28	MP4B	X	0	6.5

Member Point Loads (BLC 33 : Antenna Wm (180 Deg)) (Continued)

	Member Label	Direction	Magnitude [lb, k-ft]	Location [(ft, %)]
29	MP4B	Z	4.083	6.5
30	MP4B	Mx	-0.002	6.5
31	MP4C	X	0	1.5
32	MP4C	Z	4.748	1.5
33	MP4C	Mx	0.002	1.5
34	MP4C	X	0	6.5
35	MP4C	Z	4.748	6.5
36	MP4C	Mx	0.002	6.5
37	MP2A	X	0	3
38	MP2A	Z	4.155	3
39	MP2A	Mx	0	3
40	MP2A	X	0	5
41	MP2A	Z	4.155	5
42	MP2A	Mx	0	5
43	MP2B	X	0	3
44	MP2B	Z	2.133	3
45	MP2B	Mx	-0.000924	3
46	MP2B	X	0	5
47	MP2B	Z	2.133	5
48	MP2B	Mx	-0.000924	5
49	MP2C	X	0	3
50	MP2C	Z	2.573	3
51	MP2C	Mx	0.000986	3
52	MP2C	X	0	5
53	MP2C	Z	2.573	5
54	MP2C	Mx	0.000986	5
55	MP4A	X	0	2.25
56	MP4A	Z	4.918	2.25
57	MP4A	Mx	0	2.25
58	MP4B	X	0	2.25
59	MP4B	Z	3.744	2.25
60	MP4B	Mx	0.002	2.25
61	MP4C	X	0	2.25
62	MP4C	Z	3.744	2.25
63	MP4C	Mx	-0.002	2.25
64	OVP	X	0	1
65	OVP	Z	6.338	1
66	OVP	Mx	0	1
67	MP3A	X	0	3
68	MP3A	Z	9.059	3
69	MP3A	Mx	0	3
70	MP3A	X	0	5
71	MP3A	Z	9.059	5
72	MP3A	Mx	0	5
73	MP3B	X	0	3
74	MP3B	Z	4.523	3
75	MP3B	Mx	-0.002	3
76	MP3B	X	0	5
77	MP3B	Z	4.523	5
78	MP3B	Mx	-0.002	5
79	MP3C	X	0	3
80	MP3C	Z	5.51	3
81	MP3C	Mx	0.002	3
82	MP3C	X	0	5
83	MP3C	Z	5.51	5

Member Point Loads (BLC 33 : Antenna Wm (180 Deg)) (Continued)

	Member Label	Direction	Magnitude [lb, k-ft]	Location [(ft, %)]
84	MP3C	Mx	0.002	5

Member Point Loads (BLC 34 : Antenna Wm (210 Deg))

	Member Label	Direction	Magnitude [lb, k-ft]	Location [(ft, %)]
1	MP1A	X	-3.06	1.5
2	MP1A	Z	5.301	1.5
3	MP1A	Mx	0.002	1.5
4	MP1A	X	-3.06	6.5
5	MP1A	Z	5.301	6.5
6	MP1A	Mx	0.002	6.5
7	MP1B	X	-1.532	1.5
8	MP1B	Z	2.653	1.5
9	MP1B	Mx	-0.002	1.5
10	MP1B	X	-1.532	6.5
11	MP1B	Z	2.653	6.5
12	MP1B	Mx	-0.002	6.5
13	MP1C	X	-3.331	1.5
14	MP1C	Z	5.77	1.5
15	MP1C	Mx	0.001	1.5
16	MP1C	X	-3.331	6.5
17	MP1C	Z	5.77	6.5
18	MP1C	Mx	0.001	6.5
19	MP4A	X	-3.06	1.5
20	MP4A	Z	5.301	1.5
21	MP4A	Mx	0.002	1.5
22	MP4A	X	-3.06	6.5
23	MP4A	Z	5.301	6.5
24	MP4A	Mx	0.002	6.5
25	MP4B	X	-1.532	1.5
26	MP4B	Z	2.653	1.5
27	MP4B	Mx	-0.002	1.5
28	MP4B	X	-1.532	6.5
29	MP4B	Z	2.653	6.5
30	MP4B	Mx	-0.002	6.5
31	MP4C	X	-3.331	1.5
32	MP4C	Z	5.77	1.5
33	MP4C	Mx	0.001	1.5
34	MP4C	X	-3.331	6.5
35	MP4C	Z	5.77	6.5
36	MP4C	Mx	0.001	6.5
37	MP2A	X	-1.741	3
38	MP2A	Z	3.015	3
39	MP2A	Mx	0.000871	3
40	MP2A	X	-1.741	5
41	MP2A	Z	3.015	5
42	MP2A	Mx	0.000871	5
43	MP2B	X	-0.73	3
44	MP2B	Z	1.264	3
45	MP2B	Mx	-0.00073	3
46	MP2B	X	-0.73	5
47	MP2B	Z	1.264	5
48	MP2B	Mx	-0.00073	5
49	MP2C	X	-1.92	3
50	MP2C	Z	3.325	3
51	MP2C	Mx	0.000656	3

Member Point Loads (BLC 34 : Antenna Wm (210 Deg)) (Continued)

	Member Label	Direction	Magnitude [lb, k-ft]	Location [(ft, %)]
52	MP2C	X	-1.92	5
53	MP2C	Z	3.325	5
54	MP2C	Mx	0.000656	5
55	MP4A	X	-2.263	2.25
56	MP4A	Z	3.92	2.25
57	MP4A	Mx	-0.001	2.25
58	MP4B	X	-1.676	2.25
59	MP4B	Z	2.904	2.25
60	MP4B	Mx	0.002	2.25
61	MP4C	X	-2.263	2.25
62	MP4C	Z	3.92	2.25
63	MP4C	Mx	-0.001	2.25
64	OVP	X	-3.419	1
65	OVP	Z	5.921	1
66	OVP	Mx	0	1
67	MP3A	X	-3.774	3
68	MP3A	Z	6.536	3
69	MP3A	Mx	0.002	3
70	MP3A	X	-3.774	5
71	MP3A	Z	6.536	5
72	MP3A	Mx	0.002	5
73	MP3B	X	-1.505	3
74	MP3B	Z	2.608	3
75	MP3B	Mx	-0.002	3
76	MP3B	X	-1.505	5
77	MP3B	Z	2.608	5
78	MP3B	Mx	-0.002	5
79	MP3C	X	-4.176	3
80	MP3C	Z	7.233	3
81	MP3C	Mx	0.001	3
82	MP3C	X	-4.176	5
83	MP3C	Z	7.233	5
84	MP3C	Mx	0.001	5

Member Point Loads (BLC 35 : Antenna Wm (240 Deg))

	Member Label	Direction	Magnitude [lb, k-ft]	Location [(ft, %)]
1	MP1A	X	-3.536	1.5
2	MP1A	Z	2.041	1.5
3	MP1A	Mx	0.002	1.5
4	MP1A	X	-3.536	6.5
5	MP1A	Z	2.041	6.5
6	MP1A	Mx	0.002	6.5
7	MP1B	X	-3.536	1.5
8	MP1B	Z	2.041	1.5
9	MP1B	Mx	-0.002	1.5
10	MP1B	X	-3.536	6.5
11	MP1B	Z	2.041	6.5
12	MP1B	Mx	-0.002	6.5
13	MP1C	X	-6.077	1.5
14	MP1C	Z	3.508	1.5
15	MP1C	Mx	-0.000609	1.5
16	MP1C	X	-6.077	6.5
17	MP1C	Z	3.508	6.5
18	MP1C	Mx	-0.000609	6.5
19	MP4A	X	-3.536	1.5

Member Point Loads (BLC 35 : Antenna Wm (240 Deg)) (Continued)

	Member Label	Direction	Magnitude [lb, k-ft]	Location [(ft, %)]
20	MP4A	Z	2.041	1.5
21	MP4A	Mx	0.002	1.5
22	MP4A	X	-3.536	6.5
23	MP4A	Z	2.041	6.5
24	MP4A	Mx	0.002	6.5
25	MP4B	X	-3.536	1.5
26	MP4B	Z	2.041	1.5
27	MP4B	Mx	-0.002	1.5
28	MP4B	X	-3.536	6.5
29	MP4B	Z	2.041	6.5
30	MP4B	Mx	-0.002	6.5
31	MP4C	X	-6.077	1.5
32	MP4C	Z	3.508	1.5
33	MP4C	Mx	-0.000609	1.5
34	MP4C	X	-6.077	6.5
35	MP4C	Z	3.508	6.5
36	MP4C	Mx	-0.000609	6.5
37	MP2A	X	-1.848	3
38	MP2A	Z	1.067	3
39	MP2A	Mx	0.000924	3
40	MP2A	X	-1.848	5
41	MP2A	Z	1.067	5
42	MP2A	Mx	0.000924	5
43	MP2B	X	-1.848	3
44	MP2B	Z	1.067	3
45	MP2B	Mx	-0.000924	3
46	MP2B	X	-1.848	5
47	MP2B	Z	1.067	5
48	MP2B	Mx	-0.000924	5
49	MP2C	X	-3.528	3
50	MP2C	Z	2.037	3
51	MP2C	Mx	-0.000354	3
52	MP2C	X	-3.528	5
53	MP2C	Z	2.037	5
54	MP2C	Mx	-0.000354	5
55	MP4A	X	-3.242	2.25
56	MP4A	Z	1.872	2.25
57	MP4A	Mx	-0.002	2.25
58	MP4B	X	-3.242	2.25
59	MP4B	Z	1.872	2.25
60	MP4B	Mx	0.002	2.25
61	MP4C	X	-4.259	2.25
62	MP4C	Z	2.459	2.25
63	MP4C	Mx	0	2.25
64	OVP	X	-6.787	1
65	OVP	Z	3.918	1
66	OVP	Mx	0	1
67	MP3A	X	-3.917	3
68	MP3A	Z	2.262	3
69	MP3A	Mx	0.002	3
70	MP3A	X	-3.917	5
71	MP3A	Z	2.262	5
72	MP3A	Mx	0.002	5
73	MP3B	X	-3.917	3
74	MP3B	Z	2.262	3

Member Point Loads (BLC 35 : Antenna Wm (240 Deg)) (Continued)

	Member Label	Direction	Magnitude [lb, k-ft]	Location [(ft, %)]
75	MP3B	Mx	-0.002	3
76	MP3B	X	-3.917	5
77	MP3B	Z	2.262	5
78	MP3B	Mx	-0.002	5
79	MP3C	X	-7.688	3
80	MP3C	Z	4.438	3
81	MP3C	Mx	-0.000771	3
82	MP3C	X	-7.688	5
83	MP3C	Z	4.438	5
84	MP3C	Mx	-0.000771	5

Member Point Loads (BLC 36 : Antenna Wm (270 Deg))

	Member Label	Direction	Magnitude [lb, k-ft]	Location [(ft, %)]
1	MP1A	X	-3.064	1.5
2	MP1A	Z	0	1.5
3	MP1A	Mx	0.002	1.5
4	MP1A	X	-3.064	6.5
5	MP1A	Z	0	6.5
6	MP1A	Mx	0.002	6.5
7	MP1B	X	-6.121	1.5
8	MP1B	Z	0	1.5
9	MP1B	Mx	-0.002	1.5
10	MP1B	X	-6.121	6.5
11	MP1B	Z	0	6.5
12	MP1B	Mx	-0.002	6.5
13	MP1C	X	-5.455	1.5
14	MP1C	Z	0	1.5
15	MP1C	Mx	-0.002	1.5
16	MP1C	X	-5.455	6.5
17	MP1C	Z	0	6.5
18	MP1C	Mx	-0.002	6.5
19	MP4A	X	-3.064	1.5
20	MP4A	Z	0	1.5
21	MP4A	Mx	0.002	1.5
22	MP4A	X	-3.064	6.5
23	MP4A	Z	0	6.5
24	MP4A	Mx	0.002	6.5
25	MP4B	X	-6.121	1.5
26	MP4B	Z	0	1.5
27	MP4B	Mx	-0.002	1.5
28	MP4B	X	-6.121	6.5
29	MP4B	Z	0	6.5
30	MP4B	Mx	-0.002	6.5
31	MP4C	X	-5.455	1.5
32	MP4C	Z	0	1.5
33	MP4C	Mx	-0.002	1.5
34	MP4C	X	-5.455	6.5
35	MP4C	Z	0	6.5
36	MP4C	Mx	-0.002	6.5
37	MP2A	X	-1.459	3
38	MP2A	Z	0	3
39	MP2A	Mx	0.00073	3
40	MP2A	X	-1.459	5
41	MP2A	Z	0	5
42	MP2A	Mx	0.00073	5

Member Point Loads (BLC 36 : Antenna Wm (270 Deg)) (Continued)

	Member Label	Direction	Magnitude [lb, k-ft]	Location [(ft, %)]
43	MP2B	X	-3.481	3
44	MP2B	Z	0	3
45	MP2B	Mx	-0.00087	3
46	MP2B	X	-3.481	5
47	MP2B	Z	0	5
48	MP2B	Mx	-0.00087	5
49	MP2C	X	-3.041	3
50	MP2C	Z	0	3
51	MP2C	Mx	-0.000977	3
52	MP2C	X	-3.041	5
53	MP2C	Z	0	5
54	MP2C	Mx	-0.000977	5
55	MP4A	X	-3.353	2.25
56	MP4A	Z	0	2.25
57	MP4A	Mx	-0.002	2.25
58	MP4B	X	-4.526	2.25
59	MP4B	Z	0	2.25
60	MP4B	Mx	0.001	2.25
61	MP4C	X	-4.526	2.25
62	MP4C	Z	0	2.25
63	MP4C	Mx	0.001	2.25
64	OVP	X	-8.336	1
65	OVP	Z	0	1
66	OVP	Mx	0	1
67	MP3A	X	-3.011	3
68	MP3A	Z	0	3
69	MP3A	Mx	0.002	3
70	MP3A	X	-3.011	5
71	MP3A	Z	0	5
72	MP3A	Mx	0.002	5
73	MP3B	X	-7.547	3
74	MP3B	Z	0	3
75	MP3B	Mx	-0.002	3
76	MP3B	X	-7.547	5
77	MP3B	Z	0	5
78	MP3B	Mx	-0.002	5
79	MP3C	X	-6.56	3
80	MP3C	Z	0	3
81	MP3C	Mx	-0.002	3
82	MP3C	X	-6.56	5
83	MP3C	Z	0	5
84	MP3C	Mx	-0.002	5

Member Point Loads (BLC 37 : Antenna Wm (300 Deg))

	Member Label	Direction	Magnitude [lb, k-ft]	Location [(ft, %)]
1	MP1A	X	-3.536	1.5
2	MP1A	Z	-2.041	1.5
3	MP1A	Mx	0.002	1.5
4	MP1A	X	-3.536	6.5
5	MP1A	Z	-2.041	6.5
6	MP1A	Mx	0.002	6.5
7	MP1B	X	-6.183	1.5
8	MP1B	Z	-3.57	1.5
9	MP1B	Mx	0	1.5
10	MP1B	X	-6.183	6.5

Member Point Loads (BLC 37 : Antenna Wm (300 Deg)) (Continued)

	Member Label	Direction	Magnitude [lb, k-ft]	Location [(ft, %)]
11	MP1B	Z	-3.57	6.5
12	MP1B	Mx	0	6.5
13	MP1C	X	-3.066	1.5
14	MP1C	Z	-1.77	1.5
15	MP1C	Mx	-0.002	1.5
16	MP1C	X	-3.066	6.5
17	MP1C	Z	-1.77	6.5
18	MP1C	Mx	-0.002	6.5
19	MP4A	X	-3.536	1.5
20	MP4A	Z	-2.041	1.5
21	MP4A	Mx	0.002	1.5
22	MP4A	X	-3.536	6.5
23	MP4A	Z	-2.041	6.5
24	MP4A	Mx	0.002	6.5
25	MP4B	X	-6.183	1.5
26	MP4B	Z	-3.57	1.5
27	MP4B	Mx	0	1.5
28	MP4B	X	-6.183	6.5
29	MP4B	Z	-3.57	6.5
30	MP4B	Mx	0	6.5
31	MP4C	X	-3.066	1.5
32	MP4C	Z	-1.77	1.5
33	MP4C	Mx	-0.002	1.5
34	MP4C	X	-3.066	6.5
35	MP4C	Z	-1.77	6.5
36	MP4C	Mx	-0.002	6.5
37	MP2A	X	-1.848	3
38	MP2A	Z	-1.067	3
39	MP2A	Mx	0.000924	3
40	MP2A	X	-1.848	5
41	MP2A	Z	-1.067	5
42	MP2A	Mx	0.000924	5
43	MP2B	X	-3.598	3
44	MP2B	Z	-2.077	3
45	MP2B	Mx	0	3
46	MP2B	X	-3.598	5
47	MP2B	Z	-2.077	5
48	MP2B	Mx	0	5
49	MP2C	X	-1.537	3
50	MP2C	Z	-0.887	3
51	MP2C	Mx	-0.000834	3
52	MP2C	X	-1.537	5
53	MP2C	Z	-0.887	5
54	MP2C	Mx	-0.000834	5
55	MP4A	X	-3.242	2.25
56	MP4A	Z	-1.872	2.25
57	MP4A	Mx	-0.002	2.25
58	MP4B	X	-4.259	2.25
59	MP4B	Z	-2.459	2.25
60	MP4B	Mx	0	2.25
61	MP4C	X	-3.242	2.25
62	MP4C	Z	-1.872	2.25
63	MP4C	Mx	0.002	2.25
64	OVP	X	-6.787	1
65	OVP	Z	-3.918	1

Member Point Loads (BLC 37 : Antenna Wm (300 Deg)) (Continued)

	Member Label	Direction	Magnitude [lb, k-ft]	Location [(ft, %)]
66	OVP	Mx	0	1
67	MP3A	X	-3.917	3
68	MP3A	Z	-2.262	3
69	MP3A	Mx	0.002	3
70	MP3A	X	-3.917	5
71	MP3A	Z	-2.262	5
72	MP3A	Mx	0.002	5
73	MP3B	X	-7.846	3
74	MP3B	Z	-4.53	3
75	MP3B	Mx	0	3
76	MP3B	X	-7.846	5
77	MP3B	Z	-4.53	5
78	MP3B	Mx	0	5
79	MP3C	X	-3.22	3
80	MP3C	Z	-1.859	3
81	MP3C	Mx	-0.002	3
82	MP3C	X	-3.22	5
83	MP3C	Z	-1.859	5
84	MP3C	Mx	-0.002	5

Member Point Loads (BLC 38 : Antenna Wm (330 Deg))

	Member Label	Direction	Magnitude [lb, k-ft]	Location [(ft, %)]
1	MP1A	X	-3.06	1.5
2	MP1A	Z	-5.301	1.5
3	MP1A	Mx	0.002	1.5
4	MP1A	X	-3.06	6.5
5	MP1A	Z	-5.301	6.5
6	MP1A	Mx	0.002	6.5
7	MP1B	X	-3.06	1.5
8	MP1B	Z	-5.301	1.5
9	MP1B	Mx	0.002	1.5
10	MP1B	X	-3.06	6.5
11	MP1B	Z	-5.301	6.5
12	MP1B	Mx	0.002	6.5
13	MP1C	X	-1.593	1.5
14	MP1C	Z	-2.76	1.5
15	MP1C	Mx	-0.002	1.5
16	MP1C	X	-1.593	6.5
17	MP1C	Z	-2.76	6.5
18	MP1C	Mx	-0.002	6.5
19	MP4A	X	-3.06	1.5
20	MP4A	Z	-5.301	1.5
21	MP4A	Mx	0.002	1.5
22	MP4A	X	-3.06	6.5
23	MP4A	Z	-5.301	6.5
24	MP4A	Mx	0.002	6.5
25	MP4B	X	-3.06	1.5
26	MP4B	Z	-5.301	1.5
27	MP4B	Mx	0.002	1.5
28	MP4B	X	-3.06	6.5
29	MP4B	Z	-5.301	6.5
30	MP4B	Mx	0.002	6.5
31	MP4C	X	-1.593	1.5
32	MP4C	Z	-2.76	1.5
33	MP4C	Mx	-0.002	1.5

Member Point Loads (BLC 38 : Antenna Wm (330 Deg)) (Continued)

	Member Label	Direction	Magnitude [lb, k-ft]	Location [(ft, %)]
34	MP4C	X	-1.593	6.5
35	MP4C	Z	-2.76	6.5
36	MP4C	Mx	-0.002	6.5
37	MP2A	X	-1.741	3
38	MP2A	Z	-3.015	3
39	MP2A	Mx	0.000871	3
40	MP2A	X	-1.741	5
41	MP2A	Z	-3.015	5
42	MP2A	Mx	0.000871	5
43	MP2B	X	-1.741	3
44	MP2B	Z	-3.015	3
45	MP2B	Mx	0.00087	3
46	MP2B	X	-1.741	5
47	MP2B	Z	-3.015	5
48	MP2B	Mx	0.00087	5
49	MP2C	X	-0.77	3
50	MP2C	Z	-1.334	3
51	MP2C	Mx	-0.000758	3
52	MP2C	X	-0.77	5
53	MP2C	Z	-1.334	5
54	MP2C	Mx	-0.000758	5
55	MP4A	X	-2.263	2.25
56	MP4A	Z	-3.92	2.25
57	MP4A	Mx	-0.001	2.25
58	MP4B	X	-2.263	2.25
59	MP4B	Z	-3.92	2.25
60	MP4B	Mx	-0.001	2.25
61	MP4C	X	-1.676	2.25
62	MP4C	Z	-2.904	2.25
63	MP4C	Mx	0.002	2.25
64	OVP	X	-3.419	1
65	OVP	Z	-5.921	1
66	OVP	Mx	0	1
67	MP3A	X	-3.774	3
68	MP3A	Z	-6.536	3
69	MP3A	Mx	0.002	3
70	MP3A	X	-3.774	5
71	MP3A	Z	-6.536	5
72	MP3A	Mx	0.002	5
73	MP3B	X	-3.774	3
74	MP3B	Z	-6.536	3
75	MP3B	Mx	0.002	3
76	MP3B	X	-3.774	5
77	MP3B	Z	-6.536	5
78	MP3B	Mx	0.002	5
79	MP3C	X	-1.597	3
80	MP3C	Z	-2.766	3
81	MP3C	Mx	-0.002	3
82	MP3C	X	-1.597	5
83	MP3C	Z	-2.766	5
84	MP3C	Mx	-0.002	5

Member Point Loads (BLC 77 : Lm1)

	Member Label	Direction	Magnitude [lb, k-ft]	Location [(ft, %)]
1	L1	Y	-500	0

Member Point Loads (BLC 78 : Lm2)

	Member Label	Direction	Magnitude [lb, k-ft]	Location [(ft, %)]
1	L2	Y	-500	0

Member Point Loads (BLC 79 : Lv1)

	Member Label	Direction	Magnitude [lb, k-ft]	Location [(ft, %)]
1	Face	Y	-250	%50

Member Point Loads (BLC 80 : Lv2)

	Member Label	Direction	Magnitude [lb, k-ft]	Location [(ft, %)]
1	Face	Y	-250	0

Member Point Loads (BLC 81 : Antenna Ev)

	Member Label	Direction	Magnitude [lb, k-ft]	Location [(ft, %)]
1	MP1A	Y	-1.137	1.5
2	MP1A	My	-0.000569	1.5
3	MP1A	Mz	0	1.5
4	MP1A	Y	-1.137	6.5
5	MP1A	My	-0.000569	6.5
6	MP1A	Mz	0	6.5
7	MP1B	Y	-1.137	1.5
8	MP1B	My	0.000284	1.5
9	MP1B	Mz	-0.000492	1.5
10	MP1B	Y	-1.137	6.5
11	MP1B	My	0.000284	6.5
12	MP1B	Mz	-0.000492	6.5
13	MP1C	Y	-1.137	1.5
14	MP1C	My	0.000365	1.5
15	MP1C	Mz	0.000436	1.5
16	MP1C	Y	-1.137	6.5
17	MP1C	My	0.000365	6.5
18	MP1C	Mz	0.000436	6.5
19	MP4A	Y	-1.137	1.5
20	MP4A	My	-0.000569	1.5
21	MP4A	Mz	0	1.5
22	MP4A	Y	-1.137	6.5
23	MP4A	My	-0.000569	6.5
24	MP4A	Mz	0	6.5
25	MP4B	Y	-1.137	1.5
26	MP4B	My	0.000284	1.5
27	MP4B	Mz	-0.000492	1.5
28	MP4B	Y	-1.137	6.5
29	MP4B	My	0.000284	6.5
30	MP4B	Mz	-0.000492	6.5
31	MP4C	Y	-1.137	1.5
32	MP4C	My	0.000365	1.5
33	MP4C	Mz	0.000436	1.5

Member Point Loads (BLC 81 : Antenna Ev) (Continued)

	Member Label	Direction	Magnitude [lb, k-ft]	Location [(ft, %)]
34	MP4C	Y	-1.137	6.5
35	MP4C	My	0.000365	6.5
36	MP4C	Mz	0.000436	6.5
37	MP2A	Y	-1.106	3
38	MP2A	My	-0.000553	3
39	MP2A	Mz	0	3
40	MP2A	Y	-1.106	5
41	MP2A	My	-0.000553	5
42	MP2A	Mz	0	5
43	MP2B	Y	-1.106	3
44	MP2B	My	0.000277	3
45	MP2B	Mz	-0.000479	3
46	MP2B	Y	-1.106	5
47	MP2B	My	0.000277	5
48	MP2B	Mz	-0.000479	5
49	MP2C	Y	-1.106	3
50	MP2C	My	0.000356	3
51	MP2C	Mz	0.000424	3
52	MP2C	Y	-1.106	5
53	MP2C	My	0.000356	5
54	MP2C	Mz	0.000424	5
55	MP4A	Y	-3.054	2.25
56	MP4A	My	0.002	2.25
57	MP4A	Mz	0	2.25
58	MP4B	Y	-3.054	2.25
59	MP4B	My	-0.000764	2.25
60	MP4B	Mz	0.001	2.25
61	MP4C	Y	-3.054	2.25
62	MP4C	My	-0.000764	2.25
63	MP4C	Mz	-0.001	2.25
64	OVP	Y	-1.236	1
65	OVP	My	0	1
66	OVP	Mz	0	1
67	MP3A	Y	-2.456	3
68	MP3A	My	-0.001	3
69	MP3A	Mz	0	3
70	MP3A	Y	-2.456	5
71	MP3A	My	-0.001	5
72	MP3A	Mz	0	5
73	MP3B	Y	-2.456	3
74	MP3B	My	0.000614	3
75	MP3B	Mz	-0.001	3
76	MP3B	Y	-2.456	5
77	MP3B	My	0.000614	5
78	MP3B	Mz	-0.001	5
79	MP3C	Y	-2.456	3
80	MP3C	My	0.000789	3
81	MP3C	Mz	0.000941	3
82	MP3C	Y	-2.456	5
83	MP3C	My	0.000789	5
84	MP3C	Mz	0.000941	5

Member Point Loads (BLC 82 : Antenna Eh (0 Deg))

	Member Label	Direction	Magnitude [lb, k-ft]	Location [(ft, %)]
1	MP1A	Z	-2.843	1.5
2	MP1A	Mx	0	1.5
3	MP1A	Z	-2.843	6.5
4	MP1A	Mx	0	6.5
5	MP1B	Z	-2.843	1.5
6	MP1B	Mx	0.001	1.5
7	MP1B	Z	-2.843	6.5
8	MP1B	Mx	0.001	6.5
9	MP1C	Z	-2.843	1.5
10	MP1C	Mx	-0.001	1.5
11	MP1C	Z	-2.843	6.5
12	MP1C	Mx	-0.001	6.5
13	MP4A	Z	-2.843	1.5
14	MP4A	Mx	0	1.5
15	MP4A	Z	-2.843	6.5
16	MP4A	Mx	0	6.5
17	MP4B	Z	-2.843	1.5
18	MP4B	Mx	0.001	1.5
19	MP4B	Z	-2.843	6.5
20	MP4B	Mx	0.001	6.5
21	MP4C	Z	-2.843	1.5
22	MP4C	Mx	-0.001	1.5
23	MP4C	Z	-2.843	6.5
24	MP4C	Mx	-0.001	6.5
25	MP2A	Z	-2.766	3
26	MP2A	Mx	0	3
27	MP2A	Z	-2.766	5
28	MP2A	Mx	0	5
29	MP2B	Z	-2.766	3
30	MP2B	Mx	0.001	3
31	MP2B	Z	-2.766	5
32	MP2B	Mx	0.001	5
33	MP2C	Z	-2.766	3
34	MP2C	Mx	-0.001	3
35	MP2C	Z	-2.766	5
36	MP2C	Mx	-0.001	5
37	MP4A	Z	-7.636	2.25
38	MP4A	Mx	0	2.25
39	MP4B	Z	-7.636	2.25
40	MP4B	Mx	-0.003	2.25
41	MP4C	Z	-7.636	2.25
42	MP4C	Mx	0.003	2.25
43	OVP	Z	-3.089	1
44	OVP	Mx	0	1
45	MP3A	Z	-6.14	3
46	MP3A	Mx	0	3
47	MP3A	Z	-6.14	5
48	MP3A	Mx	0	5
49	MP3B	Z	-6.14	3
50	MP3B	Mx	0.003	3
51	MP3B	Z	-6.14	5
52	MP3B	Mx	0.003	5
53	MP3C	Z	-6.14	3
54	MP3C	Mx	-0.002	3
55	MP3C	Z	-6.14	5

Member Point Loads (BLC 82 : Antenna Eh (0 Deg)) (Continued)

	Member Label	Direction	Magnitude [lb, k-ft]	Location [(ft, %)]
56	MP3C	Mx	-0.002	5

Member Point Loads (BLC 83 : Antenna Eh (90 Deg))

	Member Label	Direction	Magnitude [lb, k-ft]	Location [(ft, %)]
1	MP1A	X	2.843	1.5
2	MP1A	Mx	-0.001	1.5
3	MP1A	X	2.843	6.5
4	MP1A	Mx	-0.001	6.5
5	MP1B	X	2.843	1.5
6	MP1B	Mx	0.000711	1.5
7	MP1B	X	2.843	6.5
8	MP1B	Mx	0.000711	6.5
9	MP1C	X	2.843	1.5
10	MP1C	Mx	0.000914	1.5
11	MP1C	X	2.843	6.5
12	MP1C	Mx	0.000914	6.5
13	MP4A	X	2.843	1.5
14	MP4A	Mx	-0.001	1.5
15	MP4A	X	2.843	6.5
16	MP4A	Mx	-0.001	6.5
17	MP4B	X	2.843	1.5
18	MP4B	Mx	0.000711	1.5
19	MP4B	X	2.843	6.5
20	MP4B	Mx	0.000711	6.5
21	MP4C	X	2.843	1.5
22	MP4C	Mx	0.000914	1.5
23	MP4C	X	2.843	6.5
24	MP4C	Mx	0.000914	6.5
25	MP2A	X	2.766	3
26	MP2A	Mx	-0.001	3
27	MP2A	X	2.766	5
28	MP2A	Mx	-0.001	5
29	MP2B	X	2.766	3
30	MP2B	Mx	0.000691	3
31	MP2B	X	2.766	5
32	MP2B	Mx	0.000691	5
33	MP2C	X	2.766	3
34	MP2C	Mx	0.000889	3
35	MP2C	X	2.766	5
36	MP2C	Mx	0.000889	5
37	MP4A	X	7.636	2.25
38	MP4A	Mx	0.004	2.25
39	MP4B	X	7.636	2.25
40	MP4B	Mx	-0.002	2.25
41	MP4C	X	7.636	2.25
42	MP4C	Mx	-0.002	2.25
43	OVP	X	3.089	1
44	OVP	Mx	0	1
45	MP3A	X	6.14	3
46	MP3A	Mx	-0.003	3
47	MP3A	X	6.14	5
48	MP3A	Mx	-0.003	5
49	MP3B	X	6.14	3
50	MP3B	Mx	0.002	3
51	MP3B	X	6.14	5

Member Point Loads (BLC 83 : Antenna Eh (90 Deg)) (Continued)

	Member Label	Direction	Magnitude [lb, k-ft]	Location [(ft, %)]
52	MP3B	Mx	0.002	5
53	MP3C	X	6.14	3
54	MP3C	Mx	0.002	3
55	MP3C	X	6.14	5
56	MP3C	Mx	0.002	5

Member Area Loads (BLC 39 : Structure D)

	Node A	Node B	Node C	Node D	Direction	Load Direction	A Magnitude [ksf]	B Magnitude [ksf]	C Magnitude [ksf]	D Magnitude [ksf]	Exclude Braces
1	N60	N61	N84	N82	Y	Two Way	-0.005	-0.005	-0.005	-0.005	Yes
2	N33	N32	N54	N56	Y	Two Way	-0.005	-0.005	-0.005	-0.005	Yes
3	N4	N3	N26	N28	Y	Two Way	-0.005	-0.005	-0.005	-0.005	Yes

Member Area Loads (BLC 40 : Structure Di)

	Node A	Node B	Node C	Node D	Direction	Load Direction	A Magnitude [ksf]	B Magnitude [ksf]	C Magnitude [ksf]	D Magnitude [ksf]	Exclude Braces
1	N60	N61	N84	N82	Y	Two Way	-0.016	-0.016	-0.016	-0.016	Yes
2	N33	N32	N54	N56	Y	Two Way	-0.016	-0.016	-0.016	-0.016	Yes
3	N4	N3	N26	N28	Y	Two Way	-0.016	-0.016	-0.016	-0.016	Yes

Member Area Loads (BLC 84 : Structure Ev)

	Node A	Node B	Node C	Node D	Direction	Load Direction	A Magnitude [ksf]	B Magnitude [ksf]	C Magnitude [ksf]	D Magnitude [ksf]	Exclude Braces
1	N60	N61	N84	N82	Y	Two Way	-0.000201	-0.000201	-0.000201	-0.000201	Yes
2	N33	N32	N54	N56	Y	Two Way	-0.000201	-0.000201	-0.000201	-0.000201	Yes
3	N4	N3	N26	N28	Y	Two Way	-0.000201	-0.000201	-0.000201	-0.000201	Yes

Member Area Loads (BLC 85 : Structure Eh (0 Deg))

	Node A	Node B	Node C	Node D	Direction	Load Direction	A Magnitude [ksf]	B Magnitude [ksf]	C Magnitude [ksf]	D Magnitude [ksf]	Exclude Braces
1	N60	N61	N84	N82	Z	Two Way	-0.000502	-0.000502	-0.000502	-0.000502	Yes
2	N33	N32	N54	N56	Z	Two Way	-0.000502	-0.000502	-0.000502	-0.000502	Yes
3	N4	N3	N26	N28	Z	Two Way	-0.000502	-0.000502	-0.000502	-0.000502	Yes

Member Area Loads (BLC 86 : Structure Eh (90 Deg))

	Node A	Node B	Node C	Node D	Direction	Load Direction	A Magnitude [ksf]	B Magnitude [ksf]	C Magnitude [ksf]	D Magnitude [ksf]	Exclude Braces
1	N60	N61	N84	N82	X	Two Way	0.000502	0.000502	0.000502	0.000502	Yes
2	N33	N32	N54	N56	X	Two Way	0.000502	0.000502	0.000502	0.000502	Yes
3	N4	N3	N26	N28	X	Two Way	0.000502	0.000502	0.000502	0.000502	Yes

Envelope Node Reactions

	Node Label		X [lb]	LC	Y [lb]	LC	Z [lb]	LC	MX [k-ft]	LC	MY [k-ft]	LC	MZ [k-ft]	LC
1	N1	max	644.51	10	808.834	13	676.761	1	-0.046	7	1.706	8	0.885	21
2		min	-3361.705	17	196.142	50	-1961.396	19	-0.54	25	-1.75	2	0.183	50
3	N30	max	1227.939	10	1036.244	19	3862.344	13	1.056	13	1.738	4	0.091	4
4		min	-1236.533	4	260.889	25	-1033.275	7	0.271	31	-1.729	10	-0.192	10
5	N58	max	3414.973	21	840.136	13	755.373	1	-0.165	70	1.696	12	-0.081	47
6		min	-655.548	3	236.55	72	-2012.819	19	-1.026	25	-1.675	6	-0.749	17
7	N179	max	46.145	10	2115.361	13	-844.679	70	0	75	0	75	0	75
8		min	-46.134	4	516.266	70	-3474.408	13	0	1	0	1	0	1
9	N180	max	-743.855	66	2131.138	21	1750.553	21	0	75	0	75	0	75

Envelope Node Reactions (Continued)

	Node Label		X [lb]	LC	Y [lb]	LC	Z [lb]	LC	MX [k-ft]	LC	MY [k-ft]	LC	MZ [k-ft]	LC
10		min	-3032.227	21	524.645	66	429.46	66	0	1	0	1	0	1
11	N200	max	3000.462	17	2109.563	17	1732.147	17	0	75	0	75	0	75
12		min	735.286	74	518.825	74	424.511	74	0	1	0	1	0	1
13	Totals:	max	4238.744	10	8858.364	20	4383.224	1						
14		min	-4238.743	4	2341.954	64	-4383.234	7						

Node Reactions

	LC	Node Label	X [lb]	Y [lb]	Z [lb]	MX [k-ft]	MY [k-ft]	MZ [k-ft]
1	1	N1	-331.941	331.467	676.761	-0.188	-0.904	0.345
2	1	N30	33.46	333.474	3264.511	0.463	-0.096	-0.05
3	1	N58	305.685	344.915	755.373	-0.284	0.839	-0.287
4	1	N179	-0.081	912.994	-1483.247	0	0	0
5	1	N180	-947.346	672.306	587.031	0	0	0
6	1	N200	940.222	667.431	582.794	0	0	0
7	1	Totals:	0	3262.588	4383.224			
8	1	COG (ft):	X: -0.007	Y: 0.307	Z: -0.035			
9	2	N1	-1607.032	328.611	388.763	-0.186	-1.75	0.314
10	2	N30	-235.538	334.932	3101.308	0.455	-0.261	0.014
11	2	N58	-477.461	345.369	573.254	-0.265	-0.208	-0.3
12	2	N179	-14.012	892.764	-1445.577	0	0	0
13	2	N180	-880.976	618.409	524.574	0	0	0
14	2	N200	1027.574	742.503	646.461	0	0	0
15	2	Totals:	-2187.446	3262.588	3788.782			
16	2	COG (ft):	X: -0.007	Y: 0.307	Z: -0.035			
17	3	N1	-2461.518	326.855	-512.38	-0.153	-0.868	0.303
18	3	N30	-843.383	349.516	2389.278	0.433	0.877	0.068
19	3	N58	-655.548	342.694	433.327	-0.252	0.046	-0.3
20	3	N179	-34.567	829.72	-1341.282	0	0	0
21	3	N180	-855.007	597.996	493.625	0	0	0
22	3	N200	1123.804	815.808	688.771	0	0	0
23	3	Totals:	-3726.219	3262.589	2151.338			
24	3	COG (ft):	X: -0.007	Y: 0.307	Z: -0.035			
25	4	N1	-2626.943	324.424	-1259.101	-0.117	0.188	0.311
26	4	N30	-1236.533	379.247	1067.398	0.397	1.738	0.091
27	4	N58	-645.917	339.11	182.527	-0.241	0.259	-0.304
28	4	N179	-46.134	736.397	-1202.747	0	0	0
29	4	N180	-891.024	615.861	498.511	0	0	0
30	4	N200	1207.807	867.552	713.407	0	0	0
31	4	Totals:	-4238.743	3262.591	-0.004			
32	4	COG (ft):	X: -0.007	Y: 0.307	Z: -0.035			
33	5	N1	-2610.621	320.452	-1455.924	-0.093	-0.079	0.32
34	5	N30	-901.749	407.384	-225.241	0.36	0.906	0.07
35	5	N58	-396.473	333.475	-619.663	-0.214	-0.838	-0.311
36	5	N179	-34.716	644.625	-1066.873	0	0	0
37	5	N180	-979.445	670.549	525.464	0	0	0
38	5	N200	1244.954	886.106	718.695	0	0	0
39	5	Totals:	-3678.051	3262.591	-2123.543			
40	5	COG (ft):	X: -0.007	Y: 0.307	Z: -0.035			
41	6	N1	-2455.567	318.156	-1579.641	-0.07	-0.278	0.331
42	6	N30	-316.275	420.476	-889.133	0.334	-0.127	0.015
43	6	N58	487.25	325.845	-1566.061	-0.185	-1.675	-0.303
44	6	N179	-13.744	583.376	-965.668	0	0	0
45	6	N180	-1081.807	748.03	571.325	0	0	0
46	6	N200	1220.509	866.709	688.542	0	0	0
47	6	Totals:	-2159.634	3262.592	-3740.636			

Node Reactions (Continued)

	LC	Node Label	X [lb]	Y [lb]	Z [lb]	MX [k-ft]	MY [k-ft]	MZ [k-ft]
48	6	COG (ft):	X: -0.007	Y: 0.307	Z: -0.035			
49	7	N1	-1655.55	319.608	-1793.448	-0.046	0.859	0.358
50	7	N30	-42.322	423.786	-1033.275	0.327	0.105	-0.05
51	7	N58	1715.267	320.444	-1891.987	-0.184	-0.816	-0.282
52	7	N179	0.06	562.213	-926.426	0	0	0
53	7	N180	-1170.749	824.175	635.92	0	0	0
54	7	N200	1153.294	812.367	625.982	0	0	0
55	7	Totals:	0.001	3262.592	-4383.234			
56	7	COG (ft):	X: -0.007	Y: 0.307	Z: -0.035			
57	8	N1	-383.008	322.346	-1507.695	-0.049	1.706	0.389
58	8	N30	230.438	422.275	-871.64	0.335	0.267	-0.115
59	8	N58	2497.296	320.162	-1705.743	-0.203	0.232	-0.27
60	8	N179	13.801	582.448	-964.09	0	0	0
61	8	N180	-1237.164	877.998	698.1	0	0	0
62	8	N200	1066.084	737.364	562.275	0	0	0
63	8	Totals:	2187.447	3262.593	-3788.793			
64	8	COG (ft):	X: -0.007	Y: 0.307	Z: -0.035			
65	9	N1	475.251	324.237	-605.868	-0.082	0.826	0.4
66	9	N30	835.516	407.537	-156.502	0.357	-0.869	-0.168
67	9	N58	2674.034	322.915	-1569.568	-0.216	-0.024	-0.269
68	9	N179	34.689	645.546	-1068.441	0	0	0
69	9	N180	-1263.029	898.399	729.208	0	0	0
70	9	N200	969.758	663.958	519.823	0	0	0
71	9	Totals:	3726.22	3262.592	-2151.348			
72	9	COG (ft):	X: -0.007	Y: 0.307	Z: -0.035			
73	10	N1	644.51	326.824	139.823	-0.118	-0.229	0.392
74	10	N30	1227.939	377.718	1168.588	0.393	-1.729	-0.192
75	10	N58	2661.495	326.455	-1321.21	-0.227	-0.24	-0.265
76	10	N179	46.145	738.915	-1207.033	0	0	0
77	10	N180	-1226.905	880.526	724.46	0	0	0
78	10	N200	885.56	612.153	495.365	0	0	0
79	10	Totals:	4238.744	3262.59	-0.006			
80	10	COG (ft):	X: -0.007	Y: 0.307	Z: -0.035			
81	11	N1	625.857	330.851	339.501	-0.141	0.036	0.383
82	11	N30	891.93	349.664	2458.025	0.43	-0.895	-0.17
83	11	N58	2415.804	331.926	-518.398	-0.254	0.857	-0.258
84	11	N179	34.636	830.635	-1342.842	0	0	0
85	11	N180	-1138.699	825.909	697.32	0	0	0
86	11	N200	848.524	593.605	489.926	0	0	0
87	11	Totals:	3678.052	3262.589	2123.533			
88	11	COG (ft):	X: -0.007	Y: 0.307	Z: -0.035			
89	12	N1	469.875	333.1	466.815	-0.165	0.232	0.372
90	12	N30	303.473	336.712	3119.568	0.456	0.138	-0.115
91	12	N58	1535.687	339.42	426.688	-0.282	1.696	-0.266
92	12	N179	13.961	891.835	-1443.999	0	0	0
93	12	N180	-1036.404	748.515	651.605	0	0	0
94	12	N200	873.043	613.007	519.949	0	0	0
95	12	Totals:	2159.635	3262.589	3740.626			
96	12	COG (ft):	X: -0.007	Y: 0.307	Z: -0.035			
97	13	N1	-2541.499	808.834	-1146.611	-0.346	-0.355	0.862
98	13	N30	-0.806	1011.757	3862.344	1.056	-0.012	-0.078
99	13	N58	2569.466	840.136	-1141.593	-0.574	0.329	-0.738
100	13	N179	0.005	2115.361	-3474.408	0	0	0
101	13	N180	-2917.463	2050.369	1695.219	0	0	0
102	13	N200	2890.298	2031.905	1679.444	0	0	0

Node Reactions (Continued)

	LC	Node Label	X [lb]	Y [lb]	Z [lb]	MX [k-ft]	MY [k-ft]	MZ [k-ft]
103	13	Totals:	0.002	8858.362	1474.395			
104	13	COG (ft):	X: -0.006	Y: 0.312	Z: -0.055			
105	14	N1	-2957.372	808.327	-1263.04	-0.346	-0.584	0.852
106	14	N30	-99.227	1012.239	3796.083	1.054	-0.018	-0.064
107	14	N58	2292.916	839.881	-1172.698	-0.567	0.029	-0.742
108	14	N179	-3.772	2108.077	-3460.766	0	0	0
109	14	N180	-2892.383	2031.214	1674.194	0	0	0
110	14	N200	2923.223	2058.623	1702.071	0	0	0
111	14	Totals:	-736.615	8858.362	1275.844			
112	14	COG (ft):	X: -0.006	Y: 0.312	Z: -0.055			
113	15	N1	-3260.174	808.085	-1552.215	-0.335	-0.348	0.849
114	15	N30	-280.532	1016.197	3542.212	1.047	0.305	-0.051
115	15	N58	2209.559	838.811	-1218.985	-0.56	0.057	-0.744
116	15	N179	-9.381	2086.228	-3423.945	0	0	0
117	15	N180	-2882.855	2024.188	1664.296	0	0	0
118	15	N200	2958.547	2084.853	1718.885	0	0	0
119	15	Totals:	-1264.836	8858.362	730.248			
120	15	COG (ft):	X: -0.006	Y: 0.312	Z: -0.055			
121	16	N1	-3357.128	808.126	-1799.056	-0.323	-0.046	0.852
122	16	N30	-391.349	1024.159	3097.648	1.037	0.541	-0.046
123	16	N58	2219.424	837.884	-1319.84	-0.554	0.076	-0.746
124	16	N179	-12.521	2054.343	-3375.326	0	0	0
125	16	N180	-2895.415	2030.695	1667.182	0	0	0
126	16	N200	2988.031	2103.155	1729.378	0	0	0
127	16	Totals:	-1448.957	8858.363	-0.015			
128	16	COG (ft):	X: -0.006	Y: 0.312	Z: -0.055			
129	17	N1	-3361.705	807.537	-1885.189	-0.312	-0.079	0.857
130	17	N30	-293.052	1031.753	2659.807	1.027	0.313	-0.051
131	17	N58	2334.409	836.511	-1583.052	-0.546	-0.236	-0.749
132	17	N179	-9.421	2022.886	-3327.437	0	0	0
133	17	N180	-2926.538	2050.113	1678.634	0	0	0
134	17	N200	3000.462	2109.563	1732.147	0	0	0
135	17	Totals:	-1255.846	8858.363	-725.089			
136	17	COG (ft):	X: -0.006	Y: 0.312	Z: -0.055			
137	18	N1	-3284.272	806.509	-1925.453	-0.301	-0.099	0.862
138	18	N30	-116.477	1035.358	2417.252	1.02	0.011	-0.063
139	18	N58	2645.67	834.396	-1886.163	-0.538	-0.468	-0.747
140	18	N179	-3.731	2001.611	-3291.599	0	0	0
141	18	N180	-2963.888	2077.71	1696.588	0	0	0
142	18	N200	2991.272	2102.779	1722.487	0	0	0
143	18	Totals:	-731.426	8858.363	-1266.888			
144	18	COG (ft):	X: -0.006	Y: 0.312	Z: -0.055			
145	19	N1	-3006.456	806.215	-1961.396	-0.293	0.217	0.871
146	19	N30	-17.627	1036.244	2356.49	1.018	0.031	-0.077
147	19	N58	3055.38	832.951	-2012.819	-0.538	-0.237	-0.741
148	19	N179	0.077	1994.298	-3277.91	0	0	0
149	19	N180	-2997.626	2104.968	1719.646	0	0	0
150	19	N200	2966.254	2083.687	1701.564	0	0	0
151	19	Totals:	0.003	8858.364	-1474.425			
152	19	COG (ft):	X: -0.006	Y: 0.312	Z: -0.055			
153	20	N1	-2590.813	806.707	-1845.23	-0.294	0.447	0.881
154	20	N30	81.174	1035.755	2422.656	1.02	0.037	-0.092
155	20	N58	3331.781	833.228	-1981.326	-0.545	0.063	-0.737
156	20	N179	3.84	2001.582	-3291.55	0	0	0
157	20	N180	-3022.708	2124.114	1740.643	0	0	0

Node Reactions (Continued)

	LC	Node Label	X [lb]	Y [lb]	Z [lb]	MX [k-ft]	MY [k-ft]	MZ [k-ft]
158	20	N200	2933.346	2056.978	1678.933	0	0	0
159	20	Totals:	736.62	8858.364	-1275.874			
160	20	COG (ft):	X: -0.006	Y: 0.312	Z: -0.055			
161	21	N1	-2287.632	806.966	-1556.015	-0.304	0.211	0.885
162	21	N30	262.236	1031.775	2676.855	1.027	-0.286	-0.104
163	21	N58	3414.973	834.309	-1935.395	-0.551	0.035	-0.735
164	21	N179	9.478	2023.438	-3328.378	0	0	0
165	21	N180	-3032.227	2131.138	1750.553	0	0	0
166	21	N200	2898.013	2030.737	1662.102	0	0	0
167	21	Totals:	1264.841	8858.363	-730.278			
168	21	COG (ft):	X: -0.006	Y: 0.312	Z: -0.055			
169	22	N1	-2190.286	806.947	-1309.239	-0.317	-0.09	0.881
170	22	N30	372.939	1023.801	3121.747	1.036	-0.522	-0.11
171	22	N58	3404.855	835.229	-1834.819	-0.558	0.015	-0.733
172	22	N179	12.605	2055.329	-3377.006	0	0	0
173	22	N180	-3019.659	2124.63	1747.677	0	0	0
174	22	N200	2868.508	2012.427	1651.624	0	0	0
175	22	Totals:	1448.962	8858.363	-0.015			
176	22	COG (ft):	X: -0.006	Y: 0.312	Z: -0.055			
177	23	N1	-2185.922	807.544	-1222.799	-0.328	-0.058	0.876
178	23	N30	274.494	1016.219	3559.263	1.047	-0.294	-0.105
179	23	N58	3290.258	836.58	-1571.571	-0.566	0.328	-0.73
180	23	N179	9.493	2086.78	-3424.887	0	0	0
181	23	N180	-2988.558	2105.221	1736.209	0	0	0
182	23	N200	2856.085	2006.019	1648.844	0	0	0
183	23	Totals:	1255.85	8858.362	725.059			
184	23	COG (ft):	X: -0.006	Y: 0.312	Z: -0.055			
185	24	N1	-2263.49	808.563	-1182.185	-0.338	-0.039	0.871
186	24	N30	97.656	1012.635	3801.539	1.054	0.008	-0.093
187	24	N58	2979.369	838.679	-1268.545	-0.574	0.559	-0.732
188	24	N179	3.83	2108.048	-3460.718	0	0	0
189	24	N180	-2951.215	2077.634	1718.272	0	0	0
190	24	N200	2865.281	2012.804	1658.494	0	0	0
191	24	Totals:	731.431	8858.362	1266.858			
192	24	COG (ft):	X: -0.006	Y: 0.312	Z: -0.055			
193	25	N1	-1028.225	545.743	-525.992	-0.54	-0.078	0.376
194	25	N30	-2.233	260.889	1218.843	0.28	-0.003	0.012
195	25	N58	1365.507	666.551	-716.184	-1.026	0.063	-0.272
196	25	N179	0.002	732.354	-1194.635	0	0	0
197	25	N180	-1455.296	1017.274	842.672	0	0	0
198	25	N200	1120.246	789.778	649.248	0	0	0
199	25	Totals:	0.001	4012.59	273.952			
200	25	COG (ft):	X: -0.295	Y: 0.249	Z: 0.719			
201	26	N1	-1107.837	545.564	-543.919	-0.54	-0.131	0.374
202	26	N30	-19.156	260.986	1208.686	0.279	-0.013	0.016
203	26	N58	1316.571	666.59	-727.701	-1.025	-0.002	-0.273
204	26	N179	-0.863	731.088	-1192.277	0	0	0
205	26	N180	-1451.123	1013.899	838.787	0	0	0
206	26	N200	1125.694	794.462	653.22	0	0	0
207	26	Totals:	-136.714	4012.589	236.797			
208	26	COG (ft):	X: -0.295	Y: 0.249	Z: 0.719			
209	27	N1	-1161.333	545.463	-600.254	-0.538	-0.075	0.374
210	27	N30	-57.066	261.909	1164.087	0.278	0.058	0.019
211	27	N58	1305.466	666.435	-736.316	-1.024	0.013	-0.273
212	27	N179	-2.159	727.141	-1185.749	0	0	0

Node Reactions (Continued)

	LC	Node Label	X [lb]	Y [lb]	Z [lb]	MX [k-ft]	MY [k-ft]	MZ [k-ft]
213	27	N180	-1449.49	1012.611	836.827	0	0	0
214	27	N200	1131.686	799.031	655.859	0	0	0
215	27	Totals:	-232.895	4012.59	134.453			
216	27	COG (ft):	X: -0.295	Y: 0.249	Z: 0.719			
217	28	N1	-1171.758	545.322	-646.882	-0.536	-0.01	0.374
218	28	N30	-81.613	263.773	1081.371	0.276	0.112	0.021
219	28	N58	1306.143	666.23	-751.903	-1.023	0.027	-0.273
220	28	N179	-2.879	721.302	-1177.08	0	0	0
221	28	N180	-1451.728	1013.713	837.106	0	0	0
222	28	N200	1136.916	802.25	657.383	0	0	0
223	28	Totals:	-264.919	4012.59	-0.004			
224	28	COG (ft):	X: -0.295	Y: 0.249	Z: 0.719			
225	29	N1	-1170.654	545.077	-659.255	-0.534	-0.026	0.375
226	29	N30	-60.658	265.529	1000.677	0.273	0.06	0.019
227	29	N58	1321.585	665.915	-802.062	-1.021	-0.042	-0.273
228	29	N179	-2.162	715.565	-1168.585	0	0	0
229	29	N180	-1457.206	1017.107	838.797	0	0	0
230	29	N200	1139.216	803.396	657.704	0	0	0
231	29	Totals:	-229.879	4012.59	-132.725			
232	29	COG (ft):	X: -0.295	Y: 0.249	Z: 0.719			
233	30	N1	-1160.917	544.936	-667.082	-0.533	-0.039	0.376
234	30	N30	-23.98	266.346	959.254	0.272	-0.005	0.016
235	30	N58	1376.674	665.474	-861.176	-1.02	-0.094	-0.273
236	30	N179	-0.859	711.739	-1162.263	0	0	0
237	30	N180	-1463.562	1021.924	841.656	0	0	0
238	30	N200	1137.667	802.17	655.81	0	0	0
239	30	Totals:	-134.976	4012.59	-233.801			
240	30	COG (ft):	X: -0.295	Y: 0.249	Z: 0.719			
241	31	N1	-1110.851	545.039	-680.329	-0.531	0.033	0.377
242	31	N30	-6.972	266.552	950.227	0.271	0.01	0.012
243	31	N58	1453.484	665.139	-881.603	-1.019	-0.04	-0.272
244	31	N179	0.01	710.419	-1159.814	0	0	0
245	31	N180	-1469.124	1026.677	845.67	0	0	0
246	31	N200	1133.453	798.764	651.889	0	0	0
247	31	Totals:	0.001	4012.59	-273.961			
248	31	COG (ft):	X: -0.295	Y: 0.249	Z: 0.719			
249	32	N1	-1031.248	545.217	-662.411	-0.531	0.085	0.379
250	32	N30	9.966	266.454	960.377	0.272	0.02	0.008
251	32	N58	1502.416	665.102	-870.07	-1.021	0.025	-0.271
252	32	N179	0.874	711.686	-1162.173	0	0	0
253	32	N180	-1473.297	1030.052	849.554	0	0	0
254	32	N200	1128.005	794.08	647.917	0	0	0
255	32	Totals:	136.716	4012.59	-236.806			
256	32	COG (ft):	X: -0.295	Y: 0.249	Z: 0.719			
257	33	N1	-977.738	545.319	-606.074	-0.533	0.03	0.38
258	33	N30	47.865	265.53	1004.989	0.273	-0.051	0.004
259	33	N58	1513.515	665.257	-861.47	-1.022	0.009	-0.271
260	33	N179	2.171	715.632	-1168.7	0	0	0
261	33	N180	-1474.93	1031.34	851.515	0	0	0
262	33	N200	1122.013	789.511	645.278	0	0	0
263	33	Totals:	232.897	4012.59	-134.462			
264	33	COG (ft):	X: -0.295	Y: 0.249	Z: 0.719			
265	34	N1	-967.298	545.46	-559.449	-0.536	-0.036	0.379
266	34	N30	72.409	263.666	1087.717	0.275	-0.105	0.003
267	34	N58	1512.828	665.462	-845.892	-1.022	-0.004	-0.271

Node Reactions (Continued)

	LC	Node Label	X [lb]	Y [lb]	Z [lb]	MX [k-ft]	MY [k-ft]	MZ [k-ft]
268	34	N179	2.891	721.472	-1177.37	0	0	0
269	34	N180	-1472.691	1030.238	851.236	0	0	0
270	34	N200	1116.782	786.291	643.754	0	0	0
271	34	Totals:	264.921	4012.59	-0.005			
272	34	COG (ft):	X: -0.295	Y: 0.249	Z: 0.719			
273	35	N1	-968.411	545.705	-547.065	-0.537	-0.019	0.379
274	35	N30	51.449	261.91	1168.398	0.278	-0.053	0.004
275	35	N58	1497.401	665.776	-795.73	-1.024	0.064	-0.27
276	35	N179	2.174	727.209	-1185.864	0	0	0
277	35	N180	-1467.214	1026.844	849.545	0	0	0
278	35	N200	1114.483	785.146	643.432	0	0	0
279	35	Totals:	229.881	4012.59	132.716			
280	35	COG (ft):	X: -0.295	Y: 0.249	Z: 0.719			
281	36	N1	-978.151	545.847	-539.224	-0.539	-0.007	0.378
282	36	N30	14.76	261.094	1209.812	0.279	0.012	0.008
283	36	N58	1442.325	666.216	-736.622	-1.026	0.117	-0.271
284	36	N179	0.872	731.034	-1192.186	0	0	0
285	36	N180	-1460.859	1022.027	846.686	0	0	0
286	36	N200	1116.032	786.372	645.326	0	0	0
287	36	Totals:	134.978	4012.59	233.792			
288	36	COG (ft):	X: -0.295	Y: 0.249	Z: 0.719			
289	37	N1	-906.851	403.035	-461.327	-0.237	-0.066	0.377
290	37	N30	1.801	312.468	1205.421	0.334	-0.014	0.024
291	37	N58	2076.747	318.58	-1125.487	-0.625	0.06	-0.083
292	37	N179	-0.009	738.362	-1204.849	0	0	0
293	37	N180	-2192.596	1517.815	1268.277	0	0	0
294	37	N200	1020.909	722.331	591.915	0	0	0
295	37	Totals:	0	4012.592	273.951			
296	37	COG (ft):	X: -0.89	Y: 0.249	Z: 0.719			
297	38	N1	-986.463	402.855	-479.261	-0.236	-0.119	0.375
298	38	N30	-15.125	312.566	1195.263	0.334	-0.025	0.028
299	38	N58	2027.806	318.607	-1137.044	-0.624	-0.005	-0.084
300	38	N179	-0.874	737.094	-1202.489	0	0	0
301	38	N180	-2188.418	1514.452	1264.433	0	0	0
302	38	N200	1026.36	727.018	595.894	0	0	0
303	38	Totals:	-136.715	4012.591	236.797			
304	38	COG (ft):	X: -0.89	Y: 0.249	Z: 0.719			
305	39	N1	-1039.977	402.742	-535.599	-0.234	-0.064	0.374
306	39	N30	-53.033	313.489	1150.663	0.332	0.047	0.031
307	39	N58	2016.726	318.442	-1145.648	-0.623	0.011	-0.084
308	39	N179	-2.169	733.148	-1195.962	0	0	0
309	39	N180	-2186.811	1513.174	1262.461	0	0	0
310	39	N200	1032.369	731.597	598.537	0	0	0
311	39	Totals:	-232.896	4012.592	134.453			
312	39	COG (ft):	X: -0.89	Y: 0.249	Z: 0.719			
313	40	N1	-1050.421	402.589	-582.23	-0.232	0.002	0.374
314	40	N30	-77.578	315.353	1067.948	0.33	0.1	0.032
315	40	N58	2017.428	318.228	-1161.226	-0.623	0.024	-0.084
316	40	N179	-2.89	727.31	-1187.295	0	0	0
317	40	N180	-2189.075	1514.286	1262.731	0	0	0
318	40	N200	1037.617	734.827	600.066	0	0	0
319	40	Totals:	-264.92	4012.592	-0.005			
320	40	COG (ft):	X: -0.89	Y: 0.249	Z: 0.719			
321	41	N1	-1049.327	402.339	-594.613	-0.231	-0.015	0.375
322	41	N30	-56.624	317.109	987.253	0.328	0.048	0.031

Node Reactions (Continued)

	LC	Node Label	X [lb]	Y [lb]	Z [lb]	MX [k-ft]	MY [k-ft]	MZ [k-ft]
323	41	N58	2032.868	317.897	-1211.426	-0.621	-0.044	-0.084
324	41	N179	-2.172	721.574	-1178.803	0	0	0
325	41	N180	-2194.551	1517.69	1264.467	0	0	0
326	41	N200	1039.927	735.981	600.397	0	0	0
327	41	Totals:	-229.879	4012.592	-132.725			
328	41	COG (ft):	X: -0.89	Y: 0.249	Z: 0.719			
329	42	N1	-1039.602	402.194	-602.449	-0.229	-0.027	0.376
330	42	N30	-19.946	317.925	945.823	0.326	-0.016	0.028
331	42	N58	2087.953	317.445	-1270.569	-0.619	-0.097	-0.084
332	42	N179	-0.87	717.749	-1172.481	0	0	0
333	42	N180	-2200.903	1522.514	1267.362	0	0	0
334	42	N200	1038.391	734.765	598.513	0	0	0
335	42	Totals:	-134.977	4012.592	-233.801			
336	42	COG (ft):	X: -0.89	Y: 0.249	Z: 0.719			
337	43	N1	-989.55	402.292	-615.694	-0.228	0.044	0.377
338	43	N30	-2.934	318.129	936.79	0.326	-0.002	0.024
339	43	N58	2164.777	317.114	-1290.961	-0.619	-0.043	-0.083
340	43	N179	0	716.429	-1170.033	0	0	0
341	43	N180	-2206.482	1527.263	1271.343	0	0	0
342	43	N200	1034.19	731.365	594.593	0	0	0
343	43	Totals:	0	4012.592	-273.961			
344	43	COG (ft):	X: -0.89	Y: 0.249	Z: 0.719			
345	44	N1	-909.948	402.471	-597.768	-0.228	0.097	0.379
346	44	N30	14.006	318.031	946.942	0.326	0.008	0.02
347	44	N58	2213.715	317.089	-1279.388	-0.62	0.022	-0.082
348	44	N179	0.864	717.697	-1172.392	0	0	0
349	44	N180	-2210.66	1530.626	1275.186	0	0	0
350	44	N200	1028.74	726.678	590.614	0	0	0
351	44	Totals:	136.715	4012.592	-236.807			
352	44	COG (ft):	X: -0.89	Y: 0.249	Z: 0.719			
353	45	N1	-856.419	402.585	-541.428	-0.23	0.042	0.38
354	45	N30	51.903	317.108	991.555	0.328	-0.063	0.016
355	45	N58	2224.788	317.253	-1270.799	-0.621	0.006	-0.082
356	45	N179	2.16	721.643	-1178.92	0	0	0
357	45	N180	-2212.266	1531.904	1277.158	0	0	0
358	45	N200	1022.73	722.098	587.97	0	0	0
359	45	Totals:	232.896	4012.592	-134.463			
360	45	COG (ft):	X: -0.89	Y: 0.249	Z: 0.719			
361	46	N1	-845.96	402.739	-494.801	-0.232	-0.024	0.379
362	46	N30	76.446	315.243	1074.282	0.33	-0.116	0.015
363	46	N58	2224.075	317.468	-1255.23	-0.622	-0.007	-0.081
364	46	N179	2.88	727.481	-1187.587	0	0	0
365	46	N180	-2210.002	1530.792	1276.889	0	0	0
366	46	N200	1017.481	718.868	586.442	0	0	0
367	46	Totals:	264.92	4012.592	-0.005			
368	46	COG (ft):	X: -0.89	Y: 0.249	Z: 0.719			
369	47	N1	-847.063	402.988	-482.407	-0.234	-0.007	0.379
370	47	N30	55.486	313.487	1154.965	0.332	-0.064	0.016
371	47	N58	2208.65	317.798	-1205.027	-0.623	0.061	-0.081
372	47	N179	2.162	733.217	-1196.079	0	0	0
373	47	N180	-2204.527	1527.388	1275.153	0	0	0
374	47	N200	1015.171	717.714	586.111	0	0	0
375	47	Totals:	229.88	4012.592	132.715			
376	47	COG (ft):	X: -0.89	Y: 0.249	Z: 0.719			
377	48	N1	-856.792	403.133	-474.557	-0.235	0.005	0.378

Node Reactions (Continued)

	LC	Node Label	X [lb]	Y [lb]	Z [lb]	MX [k-ft]	MY [k-ft]	MZ [k-ft]
378	48	N30	18.797	312.672	1196.386	0.334	0	0.02
379	48	N58	2153.579	318.249	-1145.89	-0.625	0.114	-0.081
380	48	N179	0.861	737.042	-1202.4	0	0	0
381	48	N180	-2198.175	1522.565	1272.258	0	0	0
382	48	N200	1016.708	718.931	587.994	0	0	0
383	48	Totals:	134.977	4012.592	233.791			
384	48	COG (ft):	X: -0.89	Y: 0.249	Z: 0.719			
385	49	N1	-1096.236	480.147	-618.269	-0.444	-0.023	0.356
386	49	N30	-4.537	317.494	1098.703	0.332	0.004	-0.052
387	49	N58	1104.594	484.827	-623.224	-0.551	0.011	-0.291
388	49	N179	0.008	729.053	-1190.261	0	0	0
389	49	N180	-1156.395	814.334	667.63	0	0	0
390	49	N200	1152.568	811.734	665.415	0	0	0
391	49	Totals:	0.001	3637.589	-0.005			
392	49	COG (ft):	X: 0.002	Y: 0.275	Z: 0.381			
393	50	N1	-1748.687	196.142	-993.516	-0.142	-0.02	0.183
394	50	N30	-8.553	362.706	1083.286	0.379	0.016	-0.08
395	50	N58	961.444	342.06	-546.124	-0.234	0	-0.295
396	50	N179	0.019	733.319	-1197.514	0	0	0
397	50	N180	-1034.444	731.53	597.238	0	0	0
398	50	N200	1830.223	1271.832	1056.623	0	0	0
399	50	Totals:	0.001	3637.589	-0.006			
400	50	COG (ft):	X: 0.646	Y: 0.275	Z: 0.381			
401	51	N1	-1156.388	379.775	-650.504	-0.137	-0.026	0.41
402	51	N30	-5.297	441.564	1299.766	0.461	0.005	-0.058
403	51	N58	1176.012	388.117	-661.998	-0.273	0.012	-0.332
404	51	N179	0.01	860.634	-1405.796	0	0	0
405	51	N180	-1235.676	873.001	713.405	0	0	0
406	51	N200	1221.339	863.264	705.121	0	0	0
407	51	Totals:	0.001	3806.355	-0.006			
408	51	COG (ft):	X: -0.007	Y: 0.307	Z: -0.035			
409	52	N1	-984.591	337.209	-507.854	-0.125	-0.069	0.363
410	52	N30	-1.493	387.354	1295.973	0.407	0.001	-0.051
411	52	N58	998.831	344.542	-510.795	-0.245	0.061	-0.294
412	52	N179	0.008	774.703	-1263.976	0	0	0
413	52	N180	-1084.167	766.217	628.237	0	0	0
414	52	N200	1071.412	757.555	620.869	0	0	0
415	52	Totals:	0.001	3367.578	262.454			
416	52	COG (ft):	X: -0.007	Y: 0.307	Z: -0.035			
417	53	N1	-1049.562	336.242	-536.189	-0.124	-0.077	0.361
418	53	N30	-27.996	387.726	1274.796	0.407	0.031	-0.051
419	53	N58	946.678	345.336	-499.802	-0.245	0.042	-0.296
420	53	N179	-1.143	772.958	-1261.32	0	0	0
421	53	N180	-1078.529	761.601	624.008	0	0	0
422	53	N200	1079.322	763.715	625.792	0	0	0
423	53	Totals:	-131.228	3367.578	227.284			
424	53	COG (ft):	X: -0.007	Y: 0.307	Z: -0.035			
425	54	N1	-1107.429	335.21	-575.057	-0.123	-0.071	0.359
426	54	N30	-48.252	388.885	1220.168	0.407	0.053	-0.05
427	54	N58	919.648	345.604	-511.82	-0.244	0.014	-0.297
428	54	N179	-1.986	768.125	-1253.952	0	0	0
429	54	N180	-1076.826	759.871	621.695	0	0	0
430	54	N200	1087.557	769.885	630.189	0	0	0
431	54	Totals:	-227.288	3367.578	131.224			
432	54	COG (ft):	X: -0.007	Y: 0.307	Z: -0.035			

Node Reactions (Continued)

	LC	Node Label	X [lb]	Y [lb]	Z [lb]	MX [k-ft]	MY [k-ft]	MZ [k-ft]
433	55	N1	-1142.698	334.387	-614.048	-0.121	-0.052	0.359
434	55	N30	-56.838	390.519	1146.714	0.408	0.063	-0.05
435	55	N58	924.978	345.274	-543.629	-0.242	-0.014	-0.297
436	55	N179	-2.294	761.497	-1243.844	0	0	0
437	55	N180	-1079.515	761.489	621.917	0	0	0
438	55	N200	1093.91	774.413	632.884	0	0	0
439	55	Totals:	-262.457	3367.579	-0.006			
440	55	COG (ft):	X: -0.007	Y: 0.307	Z: -0.035			
441	56	N1	-1145.91	333.995	-642.711	-0.119	-0.025	0.359
442	56	N30	-51.447	392.192	1074.118	0.408	0.056	-0.05
443	56	N58	961.252	344.434	-586.706	-0.24	-0.036	-0.296
444	56	N179	-1.986	754.851	-1233.705	0	0	0
445	56	N180	-1085.875	766.022	624.617	0	0	0
446	56	N200	1096.678	776.085	633.152	0	0	0
447	56	Totals:	-227.288	3367.579	-131.235			
448	56	COG (ft):	X: -0.007	Y: 0.307	Z: -0.035			
449	57	N1	-1116.213	334.138	-653.369	-0.117	0.003	0.36
450	57	N30	-33.527	393.454	1021.837	0.409	0.036	-0.051
451	57	N58	1018.736	343.31	-629.503	-0.239	-0.045	-0.295
452	57	N179	-1.143	749.968	-1226.253	0	0	0
453	57	N180	-1094.202	772.256	629.069	0	0	0
454	57	N200	1095.121	774.453	630.923	0	0	0
455	57	Totals:	-131.228	3367.579	-227.295			
456	57	COG (ft):	X: -0.007	Y: 0.307	Z: -0.035			
457	58	N1	-1061.559	334.779	-643.169	-0.117	0.023	0.362
458	58	N30	-7.876	393.968	1003.872	0.409	0.008	-0.052
459	58	N58	1082.036	342.203	-660.561	-0.238	-0.039	-0.293
460	58	N179	0.008	748.155	-1223.482	0	0	0
461	58	N180	-1102.265	778.519	634.081	0	0	0
462	58	N200	1089.655	769.955	626.794	0	0	0
463	58	Totals:	0.001	3367.579	-262.465			
464	58	COG (ft):	X: -0.007	Y: 0.307	Z: -0.035			
465	59	N1	-996.588	335.745	-614.838	-0.118	0.032	0.365
466	59	N30	18.631	393.595	1025.05	0.409	-0.022	-0.053
467	59	N58	1134.185	341.409	-671.55	-0.238	-0.02	-0.292
468	59	N179	1.16	749.9	-1226.138	0	0	0
469	59	N180	-1107.903	783.134	638.31	0	0	0
470	59	N200	1081.745	763.796	621.871	0	0	0
471	59	Totals:	131.23	3367.579	-227.295			
472	59	COG (ft):	X: -0.007	Y: 0.307	Z: -0.035			
473	60	N1	-938.718	336.778	-575.973	-0.119	0.026	0.366
474	60	N30	38.887	392.436	1079.683	0.408	-0.044	-0.053
475	60	N58	1161.212	341.142	-659.535	-0.239	0.007	-0.291
476	60	N179	2.002	754.733	-1233.506	0	0	0
477	60	N180	-1109.606	784.865	640.622	0	0	0
478	60	N200	1073.511	757.625	617.473	0	0	0
479	60	Totals:	227.289	3367.579	-131.235			
480	60	COG (ft):	X: -0.007	Y: 0.307	Z: -0.035			
481	61	N1	-903.443	337.601	-536.979	-0.121	0.007	0.367
482	61	N30	47.47	390.801	1153.14	0.408	-0.054	-0.053
483	61	N58	1155.881	341.471	-627.73	-0.241	0.036	-0.29
484	61	N179	2.311	761.361	-1243.614	0	0	0
485	61	N180	-1106.917	783.247	640.399	0	0	0
486	61	N200	1067.158	753.097	614.779	0	0	0
487	61	Totals:	262.459	3367.579	-0.005			

Node Reactions (Continued)

	LC	Node Label	X [lb]	Y [lb]	Z [lb]	MX [k-ft]	MY [k-ft]	MZ [k-ft]
488	61	COG (ft):	X: -0.007	Y: 0.307	Z: -0.035			
489	62	N1	-900.231	337.993	-508.312	-0.123	-0.02	0.367
490	62	N30	42.075	389.129	1225.734	0.407	-0.047	-0.053
491	62	N58	1119.611	342.311	-584.655	-0.242	0.057	-0.291
492	62	N179	2.002	768.007	-1253.753	0	0	0
493	62	N180	-1100.557	778.714	637.7	0	0	0
494	62	N200	1064.389	751.425	614.511	0	0	0
495	62	Totals:	227.289	3367.579	131.224			
496	62	COG (ft):	X: -0.007	Y: 0.307	Z: -0.035			
497	63	N1	-929.931	337.85	-497.652	-0.125	-0.048	0.365
498	63	N30	24.155	387.867	1278.01	0.407	-0.027	-0.052
499	63	N58	1062.131	343.434	-541.857	-0.244	0.066	-0.292
500	63	N179	1.159	772.89	-1261.205	0	0	0
501	63	N180	-1092.23	772.481	633.248	0	0	0
502	63	N200	1065.946	753.056	616.74	0	0	0
503	63	Totals:	131.23	3367.578	227.284			
504	63	COG (ft):	X: -0.007	Y: 0.307	Z: -0.035			
505	64	N1	-672.978	234.876	-332.571	-0.088	-0.062	0.253
506	64	N30	-0.063	268.364	945.715	0.283	0	-0.036
507	64	N58	681.926	239.962	-332.41	-0.171	0.057	-0.205
508	64	N179	0.004	542.809	-885.157	0	0	0
509	64	N180	-751.189	530.99	436.006	0	0	0
510	64	N200	742.301	524.954	430.873	0	0	0
511	64	Totals:	0	2341.954	262.456			
512	64	COG (ft):	X: -0.007	Y: 0.307	Z: -0.035			
513	65	N1	-737.945	233.905	-360.904	-0.088	-0.07	0.251
514	65	N30	-26.563	268.738	924.54	0.283	0.03	-0.035
515	65	N58	629.778	240.758	-321.419	-0.171	0.038	-0.206
516	65	N179	-1.152	541.065	-882.503	0	0	0
517	65	N180	-745.555	526.375	431.776	0	0	0
518	65	N200	750.208	531.113	435.795	0	0	0
519	65	Totals:	-131.229	2341.954	227.286			
520	65	COG (ft):	X: -0.007	Y: 0.307	Z: -0.035			
521	66	N1	-795.808	232.87	-399.767	-0.086	-0.064	0.249
522	66	N30	-46.817	269.899	869.916	0.283	0.052	-0.035
523	66	N58	602.75	241.026	-333.434	-0.17	0.011	-0.207
524	66	N179	-1.998	536.233	-875.138	0	0	0
525	66	N180	-743.855	524.645	429.46	0	0	0
526	66	N200	758.439	537.282	440.19	0	0	0
527	66	Totals:	-227.288	2341.954	131.226			
528	66	COG (ft):	X: -0.007	Y: 0.307	Z: -0.035			
529	67	N1	-831.075	232.045	-438.754	-0.084	-0.045	0.248
530	67	N30	-55.402	271.537	796.467	0.284	0.061	-0.034
531	67	N58	608.081	240.694	-365.24	-0.169	-0.017	-0.208
532	67	N179	-2.308	529.606	-865.034	0	0	0
533	67	N180	-746.545	526.263	429.678	0	0	0
534	67	N200	764.792	541.809	442.88	0	0	0
535	67	Totals:	-262.457	2341.954	-0.004			
536	67	COG (ft):	X: -0.007	Y: 0.307	Z: -0.035			
537	68	N1	-834.287	231.653	-467.415	-0.082	-0.018	0.249
538	68	N30	-50.012	273.213	723.877	0.284	0.055	-0.035
539	68	N58	644.352	239.851	-408.314	-0.167	-0.039	-0.207
540	68	N179	-1.998	522.961	-854.899	0	0	0
541	68	N180	-752.905	530.795	432.373	0	0	0
542	68	N200	767.562	543.481	443.145	0	0	0

Node Reactions (Continued)

	LC	Node Label	X [lb]	Y [lb]	Z [lb]	MX [k-ft]	MY [k-ft]	MZ [k-ft]
543	68	Totals:	-227.288	2341.955	-131.234			
544	68	COG (ft):	X: -0.007	Y: 0.307	Z: -0.035			
545	69	N1	-804.593	231.798	-478.072	-0.081	0.01	0.25
546	69	N30	-32.094	274.477	671.6	0.284	0.035	-0.035
547	69	N58	701.831	238.723	-451.107	-0.165	-0.048	-0.206
548	69	N179	-1.152	518.078	-847.449	0	0	0
549	69	N180	-761.229	537.027	436.821	0	0	0
550	69	N200	766.008	541.85	440.913	0	0	0
551	69	Totals:	-131.228	2341.955	-227.294			
552	69	COG (ft):	X: -0.007	Y: 0.307	Z: -0.035			
553	70	N1	-749.942	232.442	-467.873	-0.08	0.03	0.252
554	70	N30	-6.446	274.991	653.636	0.285	0.006	-0.036
555	70	N58	765.126	237.613	-482.162	-0.165	-0.042	-0.204
556	70	N179	0.004	516.266	-844.679	0	0	0
557	70	N180	-769.288	543.29	441.832	0	0	0
558	70	N200	760.547	537.353	436.782	0	0	0
559	70	Totals:	0.001	2341.955	-262.463			
560	70	COG (ft):	X: -0.007	Y: 0.307	Z: -0.035			
561	71	N1	-684.977	233.411	-439.545	-0.081	0.039	0.254
562	71	N30	20.057	274.616	674.813	0.285	-0.023	-0.037
563	71	N58	817.27	236.818	-493.151	-0.165	-0.023	-0.202
564	71	N179	1.16	518.01	-847.333	0	0	0
565	71	N180	-774.921	547.904	446.062	0	0	0
566	71	N200	752.641	531.195	431.86	0	0	0
567	71	Totals:	131.23	2341.955	-227.294			
568	71	COG (ft):	X: -0.007	Y: 0.307	Z: -0.035			
569	72	N1	-627.11	234.447	-400.684	-0.082	0.032	0.256
570	72	N30	40.311	273.454	729.442	0.284	-0.046	-0.037
571	72	N58	844.294	236.55	-481.136	-0.166	0.004	-0.201
572	72	N179	2.006	522.843	-854.698	0	0	0
573	72	N180	-776.621	549.634	448.378	0	0	0
574	72	N200	744.409	525.025	427.465	0	0	0
575	72	Totals:	227.289	2341.955	-131.233			
576	72	COG (ft):	X: -0.007	Y: 0.307	Z: -0.035			
577	73	N1	-591.838	235.273	-361.695	-0.084	0.013	0.257
578	73	N30	48.893	271.816	802.894	0.284	-0.055	-0.037
579	73	N58	838.963	236.881	-449.335	-0.167	0.032	-0.201
580	73	N179	2.315	529.47	-864.802	0	0	0
581	73	N180	-773.932	548.017	448.16	0	0	0
582	73	N200	738.057	520.498	424.775	0	0	0
583	73	Totals:	262.459	2341.954	-0.004			
584	73	COG (ft):	X: -0.007	Y: 0.307	Z: -0.035			
585	74	N1	-588.626	235.665	-333.03	-0.086	-0.013	0.256
586	74	N30	43.499	270.141	875.482	0.283	-0.049	-0.037
587	74	N58	802.696	237.724	-406.264	-0.169	0.054	-0.202
588	74	N179	2.005	536.115	-874.937	0	0	0
589	74	N180	-767.572	543.485	445.465	0	0	0
590	74	N200	735.286	518.825	424.511	0	0	0
591	74	Totals:	227.289	2341.954	131.226			
592	74	COG (ft):	X: -0.007	Y: 0.307	Z: -0.035			
593	75	N1	-618.324	235.52	-322.371	-0.088	-0.041	0.255
594	75	N30	25.581	268.878	927.754	0.283	-0.029	-0.037
595	75	N58	745.221	238.851	-363.47	-0.17	0.063	-0.203
596	75	N179	1.159	540.997	-882.387	0	0	0
597	75	N180	-759.248	537.253	441.017	0	0	0

Node Reactions (Continued)

	LC	Node Label	X [lb]	Y [lb]	Z [lb]	MX [k-ft]	MY [k-ft]	MZ [k-ft]
598	75	N200	736.84	520.457	426.743	0	0	0
599	75	Totals:	131.229	2341.954	227.286			
600	75	COG (ft):	X: -0.007	Y: 0.307	Z: -0.035			

Envelope AISC 15TH (360-16): LRFD Member Steel Code Checks

	Member	Shape	Code Check	Loc[ft]	LC	Shear Check	Loc[ft]	Dir	LC	phi*Pnc [lb]	phi*Pnt [lb]	phi*Mn y-y [k-ft]	phi*Mn z-z [k-ft]	Cb	Eqn
1	Face	PIPE_3.0	0.102	11.068	48	0.043	8.073		7	28250.554	65205	5.749	5.749	1	H1-1b
2	M1	HSS4X4X4	0.135	0	2	0.042	4.269	y	20	124657.752	139518	16.181	16.181	2.262	H1-1b
3	M2	HSS4X4X4	0.111	2.375	18	0.035	2.375	y	13	136263.03	139518	16.181	16.181	1.68	H1-1b
4	M3	HSS4X4X4	0.115	0	16	0.04	0	y	21	136263.03	139518	16.181	16.181	1.693	H1-1b
5	M4	PL1/2X6	0.133	0.516	12	0.11	0.516	y	18	66009.234	97200	1.012	12.15	1.284	H1-1b
6	M7	L2X2X3	0.133	0	7	0.014	4.162	y	21	9823.122	23392.8	0.558	1.069	1.114	H2-1
7	M8	L2X2X3	0.14	0	3	0.013	0	y	13	9823.122	23392.8	0.558	1.068	1.112	H2-1
8	M12	PL3/8X6	0.161	0	12	0.123	0	y	23	70677.939	72900	0.57	9.113	2.242	H1-1b
9	M13	PL3/8X6	0.219	0.167	12	0.186	0	y	16	71601.728	72900	0.57	9.113	1.207	H1-1b
10	M15	PL1/2X6	0.036	0	6	0.134	0	y	50	96757.507	97200	1.012	12.15	1.135	H1-1b
11	M17	PL3/8X6	0.16	0	2	0.065	0	y	35	70677.939	72900	0.57	9.113	1.223	H1-1b
12	M18	PL3/8X6	0.207	0.167	10	0.197	0	y	18	71601.728	72900	0.57	9.113	1.618	H1-1b
13	M20	PL1/2X6	0.034	0	4	0.147	0	y	17	96757.507	97200	1.012	12.15	1.206	H1-1b
14	M25	HSS4X4X4	0.136	0	4	0.046	0	z	10	124657.752	139518	16.181	16.181	2.358	H1-1b
15	M26	HSS4X4X4	0.111	2.375	14	0.035	2.375	y	21	136263.03	139518	16.181	16.181	1.677	H1-1b
16	M27	HSS4X4X4	0.111	0	24	0.04	0	y	17	136263.03	139518	16.181	16.181	1.698	H1-1b
17	M28	PL1/2X6	0.135	0.516	2	0.111	0.516	y	13	66009.234	97200	1.012	12.15	1.262	H1-1b
18	M31	L2X2X3	0.132	0	3	0.014	4.162	y	17	9823.122	23392.8	0.558	1.068	1.112	H2-1
19	M32	L2X2X3	0.135	0	11	0.013	0	y	21	9823.122	23392.8	0.558	1.069	1.114	H2-1
20	M36	PL3/8X6	0.163	0	8	0.124	0	y	19	70677.939	72900	0.57	9.113	2.24	H1-1b
21	M37	PL3/8X6	0.223	0.167	8	0.186	0	y	23	71601.728	72900	0.57	9.113	1.222	H1-1b
22	M39	PL1/2X6	0.038	0	2	0.11	0	y	13	96757.507	97200	1.012	12.15	1.134	H1-1b
23	M41	PL3/8X6	0.157	0	10	0.063	0	y	6	70677.939	72900	0.57	9.113	1.204	H1-1b
24	M42	PL3/8X6	0.226	0.167	6	0.195	0	y	15	71601.728	72900	0.57	9.113	1.613	H1-1b
25	M44	PL1/2X6	0.035	0	6	0.147	0	y	13	96757.507	97200	1.012	12.15	1.473	H1-1b
26	M49	HSS4X4X4	0.132	0	12	0.072	0	y	36	124657.752	139518	16.181	16.181	2.292	H1-1b
27	M50	HSS4X4X4	0.112	2.375	22	0.034	2.375	y	17	136263.03	139518	16.181	16.181	1.676	H1-1b
28	M51	HSS4X4X4	0.111	0	20	0.04	0	y	13	136263.03	139518	16.181	16.181	1.7	H1-1b
29	M52	PL1/2X6	0.134	0.516	10	0.119	0.516	y	46	66009.234	97200	1.012	12.15	1.261	H1-1b
30	M55	L2X2X3	0.135	0	11	0.014	4.162	y	13	9823.122	23392.8	0.558	1.068	1.112	H2-1
31	M56	L2X2X3	0.138	0	7	0.013	0	y	17	9823.122	23392.8	0.558	1.069	1.114	H2-1
32	M60	PL3/8X6	0.151	0	4	0.133	0	y	27	70677.939	72900	0.57	9.113	2.265	H1-1b
33	M61	PL3/8X6	0.21	0.167	4	0.184	0	y	20	71601.728	72900	0.57	9.113	1.212	H1-1b
34	M63	PL1/2X6	0.038	0	10	0.113	0	y	21	96757.507	97200	1.012	12.15	1.136	H1-1b
35	M65	PL3/8X6	0.151	0	6	0.099	0	y	44	70677.939	72900	0.57	9.113	1.213	H1-1b
36	M66	PL3/8X6	0.224	0.167	2	0.202	0	y	34	71601.728	72900	0.57	9.113	1.552	H1-1b
37	M68	PL1/2X6	0.035	0	2	0.198	0	y	46	96757.507	97200	1.012	12.15	1.494	H1-1b
38	M74	PIPE_3.0	0.067	11.068	20	0.041	8.073		9	28250.554	65205	5.749	5.749	1	H1-1b
39	M75	PIPE_3.0	0.065	11.068	16	0.044	8.073		5	28250.554	65205	5.749	5.749	1	H1-1b
40	M103	PIPE_2.0	0.083	7.943	33	0.042	10.938		20	6295.422	32130	1.872	1.872	1	H1-1b
41	M104	PIPE_2.0	0.081	11.719	19	0.032	10.938		4	6295.422	32130	1.872	1.872	1	H1-1b
42	M105	PIPE_2.0	0.088	0.911	19	0.029	1.562		10	6295.422	32130	1.872	1.872	1	H1-1b
43	M118	LL3X3X4X0	0.054	4.931	13	0.002	4.931	y	24	74992.051	93312	6.48	4.911	1	H1-1b*
44	M119	LL3X3X4X0	0.055	4.931	21	0.002	4.931	y	22	74992.051	93312	6.48	4.911	1	H1-1b*
45	M120	LL3X3X4X0	0.054	4.931	17	0.002	4.931	y	16	74992.051	93312	6.48	4.911	1	H1-1b*
46	M132	L2.5X2.5X4	0.131	1.143	19	0.038	1.143	z	48	36946.275	38556	1.114	2.537	1.451	H2-1
47	M133	L2.5X2.5X4	0.118	0	19	0.035	1.143	z	8	36946.275	38556	1.114	2.537	1.5	H2-1
48	M134	L2.5X2.5X4	0.076	1.143	11	0.033	1.143	z	4	36946.275	38556	1.114	2.537	1.5	H2-1
49	MP1A	PIPE_2.0	0.205	4	1	0.057	0.5		19	14916.096	32130	1.872	1.872	1	H1-1b

Envelope AISC 15TH (360-16): LRFD Member Steel Code Checks (Continued)

	Member	Shape	Code Check	Loc[ft]	LC	Shear Check	Loc[ft]	Dir	LC	phi*Pnc [lb]	phi*Pnt [lb]	phi*Mn y-y [k-ft]	phi*Mn z-z [k-ft]	Cb	Eqn
50	MP1B	PIPE_2.0	0.201	4	11	0.041	3.917		4	14916.096	32130	1.872	1.872	1	H1-1b
51	MP1C	PIPE_2.0	0.199	4	3	0.041	3.917		8	14916.096	32130	1.872	1.872	1	H1-1b
52	MP2A	PIPE_2.0	0.158	3.917	1	0.038	3.917		6	14916.096	32130	1.872	1.872	1	H1-1b
53	MP2B	PIPE_2.0	0.159	3.917	5	0.037	3.917		10	14916.096	32130	1.872	1.872	1	H1-1b
54	MP2C	PIPE_2.0	0.152	3.917	9	0.035	3.917		8	14916.096	32130	1.872	1.872	1	H1-1b
55	MP3A	PIPE_2.0	0.186	3.917	1	0.048	3.917		8	14916.096	32130	1.872	1.872	1	H1-1b
56	MP3B	PIPE_2.0	0.182	3.917	5	0.047	3.917		6	14916.096	32130	1.872	1.872	1	H1-1b
57	MP3C	PIPE_2.0	0.185	3.917	9	0.045	3.917		4	14916.096	32130	1.872	1.872	1	H1-1b
58	MP4A	PIPE_2.0	0.224	3.917	24	0.059	1.5		20	14916.096	32130	1.872	1.872	1	H1-1b
59	MP4B	PIPE_2.0	0.201	4	11	0.042	2.167		12	14916.096	32130	1.872	1.872	1	H1-1b
60	MP4C	PIPE_2.0	0.199	4	3	0.048	3.917		9	14916.096	32130	1.872	1.872	1	H1-1b
61	OVP	PIPE_2.0	0.165	3	10	0.017	3		10	26521.424	32130	1.872	1.872	1	H1-1b
62	OVP2	PIPE_2.0	0.022	3	9	0.003	3		9	26521.424	32130	1.872	1.872	1	H1-1b

VzW SMART Tool© Vendor			
Client:	Verizon Wireless	Date:	4/13/2026
Site Name:	WILLINGTON HILL CT		
MDG #:	5000992841		
Fuze ID #:	17488523	Page:	1

Version 2.00

I. Mount-to-Tower Connection Check

Custom Orientation Required	No
Tower Connection Bolt Checks	Yes
Bolt Orientation	Parallel
Bolt Quantity per Reaction:	4
d_x (in) *(Delta X of typ. bolt config. sketch)* :	6
d_y (in) *(Delta Y of typ. bolt config. sketch)* :	6
Bolt Type:	A325N
Bolt Diameter (in):	0.625
Required Tensile Strength / bolt (kips):	1.2
Required Shear Strength / bolt (kips):	1.3
Tensile Capacity / bolt (kips):	20.7
Shear Capacity / bolt (kips):	12.4
Bolt Overall Utilization:	**11.0%**

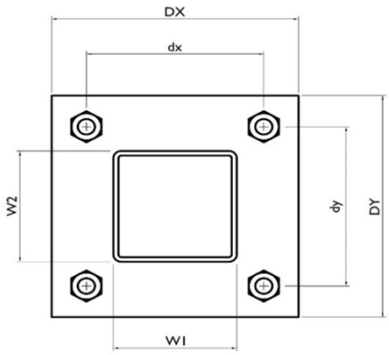

Tower Connection Baseplate Checks	Yes
Connecting Standoff Member Shape:	Rect Tube
Weld Stiffener Configuration:	No Stiffeners
Plate Width, D_x (in):	8
Plate Height, D_y (in):	8
W1(in):	4
W2 (in):	4
Member Thickness (in):	0.25
Stiffener location a_1 (in):	
Stiffener location b_1 (in):	
Stiffener location a_2 (in):	
Stiffener location b_2 (in):	
F_y (ksi, plate):	36
Plate Thickness (in):	0.75
Length of Yield Line, L_y (in):	5.85
Bolt Eccentricity, e (in):	1.65
M_u (kip-in):	3.76
Phi*M_n (kip-in):	26.65
Plate Bending Utilization:	**14.1%**

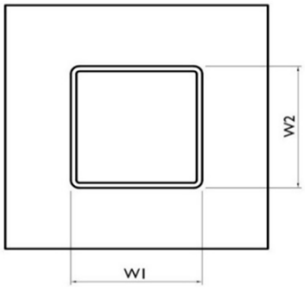

VzW SMART Tool© Vendor			
Client:	Verizon Wireless	Date:	4/13/2026
Site Name:	WILLINGTON HILL CT		
MDG #:	5000992841		
Fuze ID #:	17488523	Page:	2

Version 2.00

Tower Connection Weld Checks	Yes
Weld Shape:	Rectangle
Weld Stiffener Configuration:	None
Stiffener Notch Length, n (in):	-
Weld Size (1/16 in):	4
W1 (in):	4
W2 (in):	4
Weld Total Length (in):	16.00
Z_x (in^3/in):	21.33
Z_y (in^3/in):	21.33
J_p (in^4/in):	85.33
c_x (in)	2.25
c_y (in)	2.25
Required combined strength (kip/in):	0.79
Weld Capacity (kip/in):	5.57
Weld Utilization:	**14.1%**

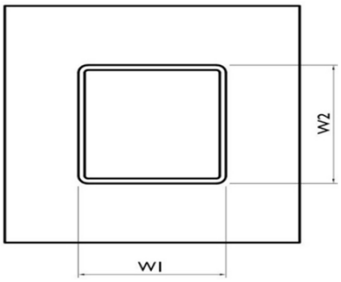

Colliers Engineering & Design	Mount to Tower Interaction Check: Collar # 1			
	Customer:	Verizon	Project No:	25777822
	Carrier:	Verizon	Date:	4/10/2026
	Site Name:	WILLINGTON HILL CT	TIA Standard:	ANSI/TIA-222-I
	Site Number:	5000992841	Engineer Name:	D.Palmadessa

Collar Mount and Pole Shaft Data:

Max Moment, Mh [K-Ft] =	1.562
Collar Shape	3-sided
Vertical or Horizontal Bearing	Horizontal
# of Vert. Levels of Thread Rods	3
Collar Height, hv [In]	9.5625
Thread Rod Vert. Spacing, Sv [In]	2.25
Thread Rod Width, Wt [In]	20.57
Bearing Width, Wb [In]	9
Add'l Horiz. Offset from Pole [In]	6
Pole Shaft Diameter, D [In]	25
Pole Thickness, t [In]	0.219
Pole Fy [KSI]	65
Thread Rod	0.625" SAE J429 Gr 5
Thread Rod Diameter [In]	0.625
Thread Rod Fy [KSI]	92
Thread Rod Fu [KSI]	120
Thread Rod Threads Per Inch	11

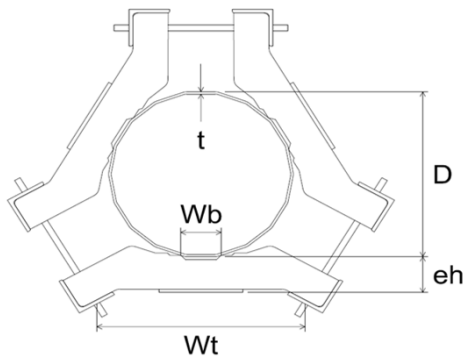

Typical Collar Mount Configuration
Top View

Thread Rod Check:

S1 [In] =	7.03	
S2 [In] =	4.78	
S3 [In] =	2.53	
y [In] =	6.05	
δ [K] =	0.45	
β =	0.44	
T1 [K] =	0.91	
T2 [K] =	0.49	
T3 [K] =	0.26	
Thread Rod ϕ =	0.65	
Thread Rod Capacity, ϕRnt [K] =	17.63	
Max Thread Rod Usage [%] =	5.18	Pass

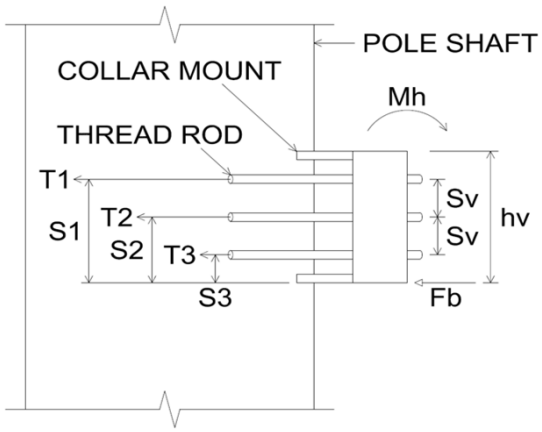

Typical Collar Mount Configuration
Side View

Pole Shaft Check:

Bearing Force, Fb [K] =	2.88	
Pole Shaft ϕ =	0.90	
Pole Shaft ϕRn [K] =	21.784	
Max Pole Shaft Usage [%] =	13.23	Pass