SAMSUNG

310 MMU
Installation Manual

for MT6413-77A

Describes the product installation and requirement procedure.

72617

Radio Access Network

Document Version 1.0
May 2023

Document Number: 2600-00XMC4GAA

© 2023 SAMSUNG Electronics Co., Ltd.

All Rights Reserved. The contents of this document/presentation contain proprietary information that must be kept confidential. No part of this document shall be photocopied, reproduced, stored in a retrieval system, or transmitted, in any form or by any means whether, electronic, mechanical, or otherwise without the prior written permission of SAMSUNG Electronics Co., Ltd.

No warranty of accuracy is given concerning the contents of the information contained in this publication. To the extent permitted by law no liability (including liability to any person by reason of negligence) will be accepted by SAMSUNG Electronics Co., Ltd., its subsidiaries or employees for any direct or indirect loss or damage caused by omissions from or inaccuracies in this document. SAMSUNG Electronics Co., Ltd. reserves the right to change details in this publication without notice.

72617

This manual should be read and used as a guideline for properly installing and/or operating the product.

This manual may be changed for system improvement, standardization and other technical reasons without prior notice.

Updated manuals are available at:

https://systems.samsungwireless.com/

For questions on the manuals or their content, contact

TIMS@sea.samsung.com

Contents

Preface **ix**

Relevance ix
Conventions in this Document ix
Revision History x
Organization of This Document x
Related Documentation x
Personal and Product Safety xi
Equipment Markings xv

Chapter 1 Introduction **1**

Chapter 2 Before Installation **2**
System View and External Interface 2
MMU View *2*
MMU External Interface *3*
Specifications 4
Cautions for Installation 6
Before Installing *6*
While Installing *7*
After Installing *9*
Installation Tools 10

Chapter 3 Installing System **14**
Installation Procedure 14
System Arrangement 15
Transporting and Unpacking 20
Transporting Items *20*
Unpacking Items *21*
MMU Handling 22
Installing System 23
Installing the Unit Bracket *24*
Installing the Pole Type *25*
Installing the Wall Type *55*
Tilting and Swiveling *80*

Chapter 4 Connecting Cables **98**
Cabling Procedure 98
Guidelines for Cable Connections 99
Cable Path Inspection *100*
Cable Cutting *100*
Cable Installation *100*
Connector Attachment *103*
Cable Binding *104*
Identification Tag Attachment *104*
Cabling Diagram 106
Grounding 107
Connecting Ground Cable *108*
Power Cabling 112

72617

Copyright © 2023, All Rights Reserved.

Assembling Power Connector *113*
Connecting Power Cable *122*
Connecting Interface Cable 126
Remove/Insert Optical Module *126*
Connecting CPRI Cable *129*
Connecting UDA Cable *151*
Connecting ALD Cable *157*

Chapter 5 Inspecting Installation 161
Installation Inspection 161
Power-on Check 165

Appendix A Acronyms 166

Appendix B Cleaning the Optical Connector 167
Introduction 167
Measuring the Optical Output and Connecting the Optical Connector *168*

Appendix C Standard Torque 169

72617

Copyright © 2023, All Rights Reserved.

List of Figures

Figure 1. Installation Overview 1
Figure 2. MMU View 2
Figure 3. MMU External Interface 3
Figure 4. Procedure to Install the MMU 14
Figure 5. MMU Arrangement for Pole Type (Tilting 0°) 15
Figure 6. MMU Arrangement for Pole Type (Tilting 15°) 16
Figure 7. MMU Arrangement for Wall Type (Tilting 0°) 17
Figure 8. MMU Arrangement for Wall Type (Tilting 15°) 18
Figure 9. MMU Arrangement for Wall Type (Swiveling 30°) 19
Figure 10. Transporting the MMU 22
Figure 11. Installing Unit Bracket 24
Figure 12. Down Tilting Pole Type Bracket Installation (1) 26
Figure 13. Down Tilting Pole Type Bracket Installation (2) 28
Figure 14. Down Tilting Pole Type Bracket Installation (3) 29
Figure 15. Down Tilting Pole Type Bracket Installation (4) 29
Figure 16. Down Tilting Pole Type Bracket Installation (5) 30
Figure 17. Down Tilting Pole Type Bracket Installation (6) 31
Figure 18. Lifting MMU and Pole Mount A Bracket Assembly_Carrying Point 32
Figure 19. Lifting MMU and Pole Mount A Bracket Assembly_Rooftop 33
Figure 20. Lifting MMU and Pole Mount A Bracket Assembly_Tower 33
Figure 21. Down Tilting Pole Mount A Bracket Assembly Installation (1) 35
Figure 22. Down Tilting Pole Mount A Bracket Assembly Installation (2) 36
Figure 23. Down Tilting Pole Mount A Bracket Assembly Installation (3) 37
Figure 24. Down Tilting Pole Type MMU Installation (1) 38
Figure 25. Down Tilting Pole Type MMU Installation (2) 39
Figure 26. Down Tilting Pole Type MMU Installation (3) 40
Figure 27. Up Tilting Pole Type Bracket Installation (1) 42
Figure 28. Up Tilting Pole Type Bracket Installation (2) 43
Figure 29. Up Tilting Pole Type Bracket Installation (3) 44
Figure 30. Up Tilting Pole Type Bracket Installation (4) 44
Figure 31. Up Tilting Pole Type Bracket Installation (5) 45
Figure 32. Up Tilting Pole Type Bracket Installation (6) 46
Figure 33. Up Tilting Pole Mount A Bracket Assembly Installation (1) 48
Figure 34. Up Tilting Pole Mount A Bracket Assembly Installation (2) 49
Figure 35. Up Tilting Pole Mount A Bracket Assembly Installation (3) 50
Figure 36. Up Tilting Pole Type MMU Installation (1) 52
Figure 37. Up Tilting Pole Type MMU Installation (2) 53
Figure 38. Up Tilting Pole Type MMU Installation (3) 54
Figure 39. MMU Marking Dimensions_Wall Type 56
Figure 40. Marking 57
Figure 41. Drilling & Anchoring 58
Figure 42. Down Tilting Wall Type Bracket Installation (1) 59
Figure 43. Down Tilting Wall Type Bracket Installation (2) 61
Figure 44. Down Tilting Wall Type Bracket Installation (3) 62
Figure 45. Down Tilting Wall Type Bracket Installation (4) 62

Copyright © 2023, All Rights Reserved.

Figure 46. Down Tilting Wall Type Bracket Installation (5) 63
Figure 47. Down Tilting Wall Mount A Bracket Assembly Installation (1) 64
Figure 48. Down Tilting Wall Mount A Bracket Assembly Installation (2) 65
Figure 49. Down Tilting Wall Mount A Bracket Assembly Installation (3) 65
Figure 50. Down Tilting Wall Type MMU Installation (1) 67
Figure 51. Down Tilting Wall Type MMU Installation (2) 68
Figure 52. Down Tilting Wall Type MMU Installation (3) 69
Figure 53. Up Tilting Wall Type Bracket Installation (1) 71
Figure 54. Up Tilting Wall Type Bracket Installation (2) 72
Figure 55. Up Tilting Wall Type Bracket Installation (3) 73
Figure 56. Up Tilting Wall Type Bracket Installation (4) 73
Figure 57. Up Tilting Wall Type Bracket Installation (5) 74
Figure 58. Up Tilting Wall Mount A Bracket Assembly Installation (1) 75
Figure 59. Up Tilting Wall Mount A Bracket Assembly Installation (2) 76
Figure 60. Up Tilting Wall Mount A Bracket Assembly Installation (3) 76
Figure 61. Up Tilting Wall Type MMU Installation (1) 78
Figure 62. Up Tilting Wall Type MMU Installation (2) 79
Figure 63. Up Tilting Wall Type MMU Installation (3) 80
Figure 64. Pole Type MMU Down Tilting (1) 81
Figure 65. Pole Type MMU Down Tilting (2) 82
Figure 66. Pole Type MMU Down Tilting (3) 83
Figure 67. Pole Type MMU Down Tilting (4) 84
Figure 68. Pole Type MMU Down Tilting (5) 85
Figure 69. Pole Type MMU Down Tilting (6) 86
Figure 70. Pole Type MMU Up Tilting (1) 88
Figure 71. Pole Type MMU Up Tilting (2) 89
Figure 72. Pole Type MMU Up Tilting (3) 90
Figure 73. Pole Type MMU Up Tilting (4) 91
Figure 74. Pole Type MMU Up Tilting (5) 92
Figure 75. Pole Type MMU Up Tilting (6) 93
Figure 76. MMU Swiveling (1) 96
Figure 77. MMU Swiveling (2) 97
Figure 78. MMU Swiveling (3) 97
Figure 79. Procedure to Connect System Cable 98
Figure 80. Cable Connection Procedure 99
Figure 81. Cable Diagram 106
Figure 82. Connecting Ground Cable (1) 109
Figure 83. Connecting Ground Cable (2) 109
Figure 84. Connecting Ground Cable (3) 111
Figure 85. Power Equipment Diagram 112
Figure 86. Assembling Power Connector (1) 114
Figure 87. Assembling Power Connector (2) 115
Figure 88. Assembling Power Connector (3) 116
Figure 89. Assembling Power Connector (4) 117
Figure 90. Assembling Power Connector (5) 117
Figure 91. Assembling Power Connector (6) 118
Figure 92. Assembling Power Connector (7) 119
Figure 93. Assembling Power Connector (8) 119
Figure 94. Assembling Power Connector (9) 120
Figure 95. Assembling Power Connector (10) 121
Figure 96. Assembling Power Connector (11) 121
Figure 97. Connecting Power Cable (1) 123

K2617

Copyright © 2023, All Rights Reserved.

Figure 98. Connecting Power Cable (2) ... 123
Figure 99. Connecting Power Cable (3) ... 124
Figure 100. Optical Module Removal (1) ... 126
Figure 101. Optical Module Removal (2) ... 127
Figure 102. Optical Module Removal (3) ... 127
Figure 103. Optical Module Insert ... 128
Figure 104. Connecting CPRI Cable (1) ... 130
Figure 105. Connecting CPRI Cable (2) ... 131
Figure 106. Connecting CPRI Cable (3) ... 131
Figure 107. Connecting CPRI Cable (4) ... 132
Figure 108. Remove CPRI Cable (1) ... 134
Figure 109. Remove CPRI Cable (2) ... 135
Figure 110. Connecting CPRI Cable Using Field Installable Connector (1) ... 138
Figure 111. Connecting CPRI Cable Using Field Installable Connector (2) ... 139
Figure 112. Connecting CPRI Cable Using Field Installable Connector (3) ... 140
Figure 113. Connecting CPRI Cable Using Field Installable Connector (4) ... 141
Figure 114. Connecting CPRI Cable Using Field Installable Connector (5) ... 142
Figure 115. Connecting CPRI Cable Using Field Installable Connector (6) ... 143
Figure 116. Connecting CPRI Cable Using Field Installable Connector (7) ... 144
Figure 117. Connecting CPRI Cable Using Field Installable Connector (8) ... 145
Figure 118. Remove CPRI Cable_Field Installable Connector (1) ... 147
Figure 119. Remove CPRI Cable_Field Installable Connector (2) ... 148
Figure 120. Remove CPRI Cable_Field Installable Connector (3) ... 149
Figure 121. Remove CPRI Cable_Field Installable Connector (4) ... 149
Figure 122. Connecting UDA Cable (1) ... 152
Figure 123. Connecting UDA Cable (2) ... 152
Figure 124. Connecting UDA Cable (3) ... 153
Figure 125. Remove UDA Cable (1) ... 155
Figure 126. Remove UDA Cable (2) ... 156
Figure 127. Connecting ALD Cable (1) ... 158
Figure 128. Connecting ALD Cable (2) ... 159
Figure 129. Connecting ALD Cable (3) ... 159
Figure 130. Connecting ALD Cable (4) ... 160
Figure 131. Connecting ALD Cable (5) ... 160
Figure 132. Installation Inspection Procedure ... 161
Figure 133. Power-on Check Procedure ... 165
Figure 134. Measuring the Optical Power meter and optical cable ... 168

72617

Copyright © 2023, All Rights Reserved.

List of Tables

Table 1. Specifications of the MT6413-77A 4
Table 2. Basic Installation Tools 10
Table 3. Parts and Tools for Installing the Unit Bracket on MMU 24
Table 4. Parts and Tools for Assembling the Down Tilting Bracket (Pole Type) 26
Table 5. Parts and Tools for Installing the Pole Mount A Bracket Assembly 34
Table 6. Parts and Tools for Down Tilting MMU Installation (Pole Type) 37
Table 7. Parts and Tools for Up Tilting Bracket Installation (Pole Type) 42
Table 8. Parts and Tools for Installing the Pole Mount A Bracket Assembly 46
Table 9. Parts and Tools for Up Tilting MMU Installation (Pole Type) 50
Table 10. Tools for Marking 55
Table 11. Parts and Tools for Drilling and Anchoring 57
Table 12. Anchor Bolt Drill Bits and Hole Depth 58
Table 13. Parts and Tools for Assembling the Down-Tilting Bracket (Wall Type) 59
Table 14. Parts and Tools for Installing the Wall Mount A Bracket Assembly 64
Table 15. Parts and Tools for Down Tilting MMU Fastening (Wall Type) 66
Table 16. Parts and Tools for Assembling the Up Tilting Bracket (Wall Type) 70
Table 17. Parts and Tools for Installing the Wall Mount A Bracket Assembly 75
Table 18. Parts and Tools for Up Tilting MMU Fastening (Wall Type) 77
Table 19. Parts and Tools for Down Tilting MMU Fastening 80
Table 20. Parts and Tools for Up Tilting MMU Fastening 87
Table 21. Parts and Tools for MMU Swiveling Fastening 96
Table 22. Recommended Minimum Allowed Cable Bending Radius 101
Table 23. MMU Connection Cable 106
Table 24. Parts and Tools for connecting Ground Cable 108
Table 25. Parts and Tools for Assembling Power Connector 113
Table 26. Sealing Rubber Specification 113
Table 27. Parts and Tools for Connecting Power Cable 122
Table 28. Power Cable/Connector Pin Map 122
Table 29. Parts and Tools for CPRI Cable Connection 129
Table 30. Parts and Tools for Remove CPRI Cable 133
Table 31. Parts and Tools for connecting Field Installable Connector 137
Table 32. Parts and Tools for Remove CPRI Cable_Field Installable Connector 146
Table 33. Parts and Tools for Connecting UDA Cable 151
Table 34. UDA Cable Pin Map 151
Table 35. Parts and Tools for Remove UDA Cable 154
Table 36. Parts and Tools for Connecting the ALD Cable 157
Table 37. ALD Cable Pin Map 158
Table 38. Construction Situation Checklist 162
Table 39. Standard Torque Value for Fastening Bolts 169
Table 40. Connector Connection Torque Value 169

T26017

Copyright © 2023, All Rights Reserved.

Preface

This manual describes the installation procedures for MT6413-77A Massive MIMO Unit (MMU). It also provides the procedures for connecting the power and interface cables.

Relevance

This manual applies to the following products/software.

Name	Type
MT6413-77A (3.5 GHz)	Hardware

Conventions in this Document

Samsung Networks product documentation uses the following conventions.

Symbols

72617

Symbol	Description
	Indicates a task.
	Indicates a shortcut or an alternative method.
	Provides additional information.
	Provides information or instructions that you should follow to avoid service failure or damage to equipment.
	Provides information or instructions that you should follow to avoid personal injury or fatality.
	Provides antistatic precautions that you should observe.

Menu Commands

menu | command

This indicates that you must select a command on a menu, where **menu** is the name of the menu, and **command** is the name of the command on that menu.

File Names and Paths

These are indicated by a bold typeface. For example:

Copy **filename.ext** into the **/home/folder1/folder2/bin/** folder.

Copyright © 2023, All Rights Reserved.

User Input and Console Screen Output Text

- The input and output text is presented in the Courier New font. For example, `context <designated epc-context-name>`
- The command and counter are presented in Courier New font and bold style. For example, **`RTRV-NE-STS`**, **`eutran-cell-conf-idle`**, or **`CSL`**.
- The alarm is presented in bold style. For example, **A2100216R ump temperature-high**.

Revision History

The following table lists all versions of this document.

Document Version	Publication Date	Remarks
1.0	May 2023	First version

Organization of This Document

Section	Title	Description
Chapter 1	Introduction	This chapter provides an introduction to the installation manual.
Chapter 2	Before Installation	This chapter introduces an MMU and describes items that should be understood before installation.
Chapter 3	Installing System	This chapter describes the procedures for installing the MMU.
Chapter 4	Connecting Cables	This chapter describes the procedures to connect the cables to the installed MMU.
Chapter 5	Inspecting Installation	This chapter describes the procedures for inspecting the installation status after completing the MMU installation and cabling.
Appendix A	Acronyms	This appendix spells out the acronyms used in this manual.
Appendix B	Cleaning the Optical Connector	This appendix describes the cleaning tool and the procedure for cleaning the optical connector.
Appendix C	Standard Torque	This appendix describes standard torque values for fastening bolts.

Related Documentation

- 101 5G gNB System Description for MT6413-77A
- 102 MMU Product Specification for MT6413-77A

Copyright © 2023, All Rights Reserved.

Personal and Product Safety

This product safety information includes European directives, which you must follow. If these do not apply in your country, please follow similar directives that do apply in your country.

Electrical

All structural parts are grounded and all input and output have built-in isolation from the network. All input and output ports that connect to external power sources are designed to meet relevant national safety requirements.

The product contains hazardous energy levels as defined by IEC/EN/UL/CSA 62368 or 60950. Care must be taken when maintaining this equipment as injury to personnel or damage to the equipment could result from mistakes. Maintenance should only be carried out by trained and competent engineers who are familiar with the relevant procedures and instructions.

Lasers

The product is fitted with optical modules rated as Class 1 radiation-emitting devices under IEC/EN 60825-1. During installation, operation, and maintenance, never look into the end of an optical fiber directly or by reflection either with the naked eye or through an optical instrument. Do not operate equipment with exposed fiber connectors-cover these with fiber cables or blanking caps. Do not remove equipment covers during operation unless requested to do so in the documentation. Carry out normal safety precautions when trimming fibers during installation.

72417

Manual Handling

Care should be taken when handling equipment. Give due consideration to the weight of the equipment, the physical capability of the individual(s) handling the equipment, and movements such as twisting, bending and stooping, which could lead to skeletal and muscular injuries.

Installation

Installation must be carried out by trained and competent engineers only. All relevant safety measures should be taken to ensure equipment is not connected to live power and transmission sources during installation. Equipment must be correctly installed in order to meet the relevant safety standards and approval conditions.

Each power feed to the unit requires a separate fused feed from the provided power supply. The cable between the power distribution point and the installed equipment must have a minimum cross-sectional area of 2.5 mm^2.

These products are installed on the Outside Plant and the Locations where the NEC applies.

Copyright © 2023, All Rights Reserved.

Maintenance

Maintenance must only be carried out by a suitably trained and competent technician. All safety instructions must be carefully observed at all times. Equipment covers should not be removed while live power and transmission is connected unless in a controlled environment by trained technicians.

Fire

To protect against potential fire due to current overload, the equipment is fused.

Environment

The product must be operated in an environment with the specified relative humidity and ambient temperature ranges.

Keep all liquids away from the equipment as accidental spillage can cause severe damage.

Cooling

The product is natural convection cooling type.

Anti-Static Precautions

72617

The circuit boards and other modules in the product are sensitive to and easily damaged by static electricity. If any card or sub-assembly is removed from the unit, the following anti-static precautions must be observed at all times:

- Service personnel must wear anti-static wrist straps.
- Circuit boards and sub-assemblies must be placed on ground conductive mats or in conductive bags.
- All tools must be discharged to ground before use.
- The anti-static wrist strap and cord must be checked at regular intervals for their suitability for use.

Grounding

To comply with IEC/EN/UL/CSA 62368 or 60950, the equipment must be connected to a safety grounding point via a permanent link. Grounding points are located on the product for this purpose. Always connect the ground cable before fitting other cables. The product must remain grounded continuously unless all connections to the power supply and data network are all removed.

If equipment is grounded through a cabinet or rack, make sure it is done so properly.

The MMU product is suitable for installation as part of the Common Bonding Network (CBN) or an Isolated Bonding Network (IBN) or both.

Copyright © 2023, All Rights Reserved.

Power Supply Connection

Power connections and installation of associated wiring must be carried out by a suitably qualified technician.

Only devices that comply with all relevant national safety requirements should be connected to the unit's power supply inlets. Other usage will invalidate any approval given to this equipment.

Connection of this equipment to devices that are not marked with all relevant national safety requirements may produce hazardous conditions on the network.

When the power supply is obtained by a rectifier/safety isolation transformer, the supply must meet the requirements of UL 62368 providing double/reinforced insulation between hazardous voltages and SELV/TNV circuits. Any battery must be separated from hazardous voltages by reinforced insulation.
The battery return of the terminals is an Isolated DC return.
The RTN of the product is not connected to Grounding.

Indirect Connection

Before indirectly connecting any equipment to another device through a shared power supply, ALWAYS seek advice from a competent engineer.

Devices that are not marked according to the relevant national safety standards may produce hazardous conditions on the network.

72617

Product Disposal

To reduce the environmental impact of products, Samsung has joined WEEE compliance activities.

The WEEE symbol on the product indicates that the product is covered by the European Directive 2002/96/CE for the disposal of Waste Electrical and Electronic Equipment (WEEE). This means that the product should be disposed of separately from the municipal waste stream via designated collection facilities appointed by the government or the local authorities. This will help prevent potential negative consequences for the environment and human health. Please check the terms and conditions of the purchase contract for information about correct disposal.

Battery Disposal

The product contains a battery on the processor card. The battery should not be disposed of with other household waste. Where marked, the chemical symbols Hg, Cd or Pb indicate that the battery contains mercury, cadmium or lead above the reference levels in EC Directive 2006/66. The battery incorporated in this product is not user replaceable. For information on its replacement, please contact your service provider. Do not attempt to remove the battery or dispose of it in a fire. Do not disassemble, crush, or puncture the battery.

End-of-life recycling materials information is available from Samsung.

Copyright © 2023, All Rights Reserved.

California USA Only

This Perchlorate warning applies only to primary CR (Manganese Dioxide) Lithium coin cells in the product sold or distributed ONLY in California, USA.

‘Perchlorate Material-special handling may apply; see www.dtsc.ca.gov/hazardouswaste/perchlorate.’

FCC Statement

This equipment has been tested and found to comply with the limits for a Class A digital device, pursuant to part 15 of the FCC Rules. These limits are designed to provide reasonable protection against harmful interference when the equipment is operated in a commercial environment. This equipment generates, uses, and can radiate radio frequency energy and, if not installed and used in accordance with the instruction manual, may cause harmful interference to radio communications. Operation of this equipment in a residential area is likely to cause harmful interference, in which case the user will be required to correct the interference.

Any changes or modifications not expressly approved by the party responsible for compliance could void the user's authority to operate this equipment.

RF Connection

Installation must be in accordance with applicable parts of Chapter 8 of ANSI/NFPA 70.

72617

Copyright © 2023, All Rights Reserved.

Equipment Markings

This marking on the product, accessories or literature indicates that the product and its electronic accessories (e.g. charger, headset, USB cable) should not be disposed of with other household waste at the end of their working life. To prevent possible harm to the environment or human health from uncontrolled waste disposal, please separate these items from other types of waste and recycle them responsibly to promote the sustainable reuse of material resources.

Household users should contact either the retailer where they purchased this product, or their local government office, for details of where and how they can take these items for environmentally safe recycling.

Business users should contact their supplier and check the terms and conditions of the purchase contract. This product and its electronic accessories should not be mixed with other commercial wastes for disposal.

Correct disposal of batteries in this product

(Applicable in countries with separate collection systems.)

The marking on the battery, manual or packaging indicates that the battery in this product should not be disposed of with other household waste. Where marked, the chemical symbols Hg, Cd or Pb indicate that the battery contains mercury, cadmium or lead above the reference levels in EC Directive 2006/66.

The battery incorporated in this product is not user replaceable. For information on its replacement, please contact your service provider. Do not attempt to remove the battery or dispose of it in a fire. Do not disassemble, crush, or puncture the battery. If you intend to discard the product, the waste collection site will take the appropriate measures for the recycling and treatment of the product, including the battery.

Hot surface warning

Allow to cool before servicing.

Do not touch before cooling.

Notice! Be careful not to touch due to high temperature.

The system must be installed in a restricted area, and make sure the work is done by personnel properly trained for the job.

Protective earth

MMU should be grounded.

Copyright © 2023, All Rights Reserved.

Chapter 1 Introduction

This document provides the procedures for system installation, and this section summarizes the information covered in each chapter.

The following figure depicts the procedural content herein.

Figure 1. Installation Overview

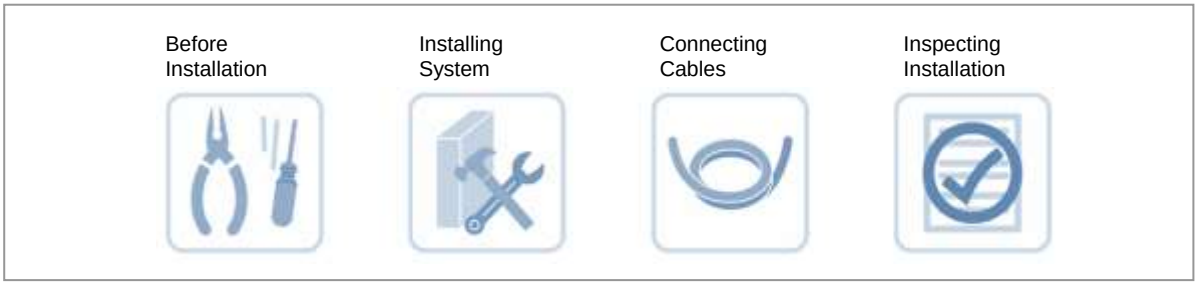

A summary of each chapter is provided in the following:

- Before Installation

  This chapter introduces the system and describes the items you must understand before installing.

- Installing System

  This chapter describes the procedures for installing the system.

- Connecting Cables

  This chapter describes the cabling procedure, the guidelines for handling cabling, the cabling diagram, the grounding process, and the external interface connection.

- Inspecting Installation

  This chapter explains the procedures to check installation status.

72617

Copyright © 2023, All Rights Reserved.

Chapter 2 Before Installation

This chapter introduces the MMU system and describes items you should know before installation.

System View and External Interface

This section describes the configuration of the system and interface.

MMU View

The following figure depicts the view of the MMU:

Figure 2. MMU View

Copyright © 2023, All Rights Reserved.

MMU External Interface

The following figure depicts the external interfaces of the MMU.

Figure 3. MMU External Interface

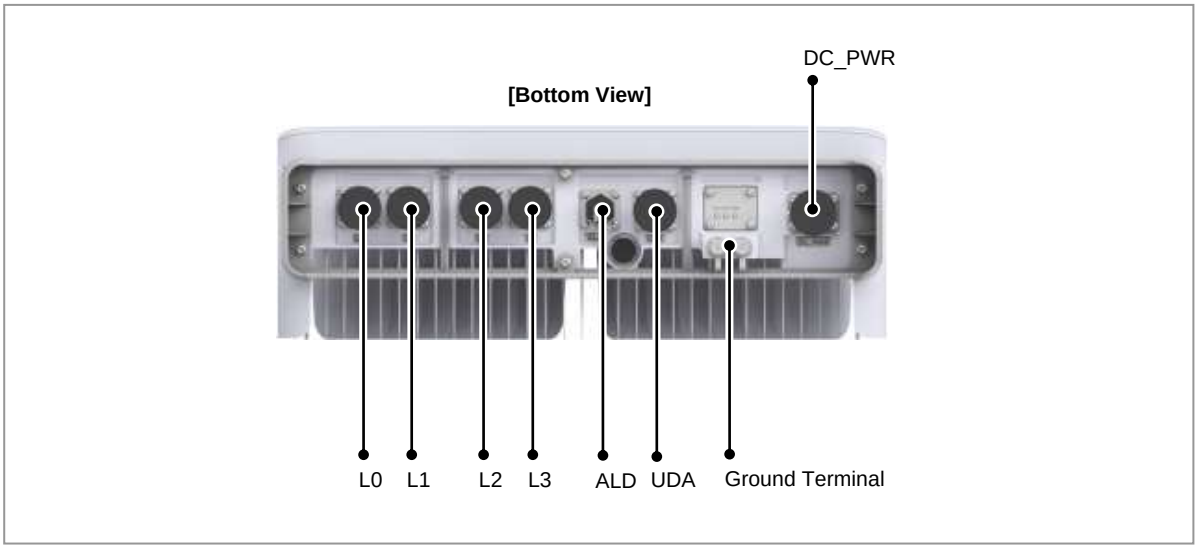

72617

Copyright © 2023, All Rights Reserved.

Specifications

The following table outlines the main specifications of the MMU.

Table 1. Specifications of the MT6413-77A

Item		MT6413-77A
Air Technology		5G
Band/Duplex		n77/TDD
OFR		3,700 to 3,980 MHz
IBW		200 MHz
OBW		200 MHz
Carrier Configuration	Ch. BW	NR 20/40/60/80/100 MHz
	Number of carriers (per unit)	2CC
TRX Path Configuration		64T64R
Antenna Configuration		4V16H 192 AE (3 x 1 sub-array)
Conductive Power		320 W
MIMO Capacity		DL 16L, UL 16RX (8L)
Function Split		Opt. 7-2x
Optic Interface		20 km, 25 Gbps × 4 ports
Input Voltage		-48 V DC (-36 to -58 V DC)
Power Consumption [a)]		• 882 W @ 40 % room temp • 1,260 W @ 100 % room temp • 1,299 W @ 100 % all temp
Volume / Dimension (W x H x D)		41.1 L/15.75 x 28.9 x 5.51 in. (400 x 734 x 140 mm)
Weight		57.32 lb (26 kg) or less (without a Bracket)
Operating Temperature [b)]		-104 °F to +131 °F (-40 °C to +55 °C), (without solar load)
Cooling Scheme		Natural Convection
Installation		Pole, Wall
Operating Humidity [b)]		5% to 100% RH (non-condensing, not to exceed 30 g/m^3 absolute humidity)
Altitude		Telcordia GR-63-CORE, Issue 5, Section 4.1.3
Noise		Telcordia GR-487-CORE, Issue 5, Section 3.34 (45 dBA)
Ingress Protection Rating		IEC 60529 (IP65)
Salt Fog / Salt Spray		Telcordia GR-487-CORE, Issue 5, Section 3.40.1
Wind Resistance		Telcordia GR-487-CORE, Issue 5, Section 3.36
Earthquake		Telcordia GR-63-CORE, Issue 5, Section 4.4.1 (Zone 4)
Vibration		Telcordia GR-63-CORE, Issue 5, Section 4.4.4/4.4.5
EMC		FCC Title 47 CFR Part 15 Subpart B

Copyright © 2023, All Rights Reserved.

Item	MT6413-77A
Safety	UL 62368-1
RF	FCC Title 47, CFR Part 27

1) These values are predictive of simulation. When development is completed, measurement data can change by +/- 10%.

2) Temperature and humidity are measured 1.5 m above the floor and 400 mm from the equipment's front panel.

72617

Copyright © 2023, All Rights Reserved.

Cautions for Installation

This section describes the safety instructions that must be observed while installing the system.

Installation should be per the applicable local electric codes.

Before Installing

Before starting the installation, ensure the following:

- Post warning signs in areas where high-voltage cables are installed.
- Post ‘off limit’ signs in areas where accidents are most expected.
- With guardrails or fences, block open areas such as connecting parts, roofs, and scaffolds.
- The power must be cut off before installation.

Install the system in the Restricted Access Area.

Check the electric leakage before system installation.

72617

Do not work at heights for the following situations:
- Thunder, lightning, rain, or wind speed 10.8 m/s.
- Water remains on the surface of the steel tube.
- Any other danger.

The worker must be aware of the safety requirement before working.

Anyone who enters the site should always wear a safety helmet and shoes to prevent serious injury from unexpected accidents.

After completing cable installation, unused ports should be capped.

Copyright © 2023, All Rights Reserved.

While Installing

During installation, ensure the following:

- Ensure that the power switch of the power supply is OFF.
- Ensure the power switches of the power supply and system are OFF when installing the system. Installing the system with a power switch ON may cause system damage or fatal human injury when connecting or disconnecting cables.
- Wear gloves when touching the equipment in operation to prevent getting burned.
- Ensure that the workers wear protection gloves and goggles to prevent injury from debris while drilling holes in a wall or ceiling.
- Wear gloves when touching Samsung/other company systems.

72617

Copyright © 2023, All Rights Reserved.

Cover unused ports with dust caps or weatherproof caps to prevent foreign substances from entering the ports.

To prevent foreign substances, outdoor air, and moisture from entering the cable inlet (including cable gland and conduit), do the following:
- Unused inlet: Finish using hole finishing materials such as cap and rubber packing.
- Cable-installed inlet: After installing the cable, finish using silicon.

This product must be installed in a place (ceiling or wall) that can withstand four times the weight, including all components.

This product must avoid excessive impact during transportation, installation, and operation.

The rope that satisfies the following specifications must be used:
- Material: Polyethylene (P.E) rope
- Thickness: 0.39 in. to 0.47 in. (10 to 12 mm)
- Tensile strength: 1.11 to 1.2 ton
- Rope usage period: within 2 years

Equipment can be damaged if a strong impact or force is applied to the product during installation or operation.

When fastening bolts or connectors, check the torque value suggested in the appendix of the installation manual and use a suitable tool. If it is not fastened with the correct torque, the bolts and connectors can be damaged, and the performance of the equipment can deteriorate.

This product must not be installed in any other form than the installation method described in the installation manual.

Workers must not work alone in any key process.

At the safety points, it must be specified that work on rooftops closer than 2 meters to the rooftop's edge is forbidden if a fence, metallic structure, and so on do not protect the edge. This product complies with the safety standards of customers.

Keep a safe distance between the base station antenna (MMU) and people.

MMU	Description
Safe Distance	125 ft. (38 m)

Do not co-locate or operate in conjunction with any other antenna or transmitter to protect the general public from exposure to radio frequency electromagnetic fields.

Copyright © 2023, All Rights Reserved.

After Installing

After installation, remove any debris produced during the work and clean up the installation site.

Optical modules and cables used in the system have laser beams that emit light. Be careful with handling, as exposure to laser beams can cause serious eye damage.

Be careful not to damage installed cables while cleaning the system.

Cover the cable holes drilled on a floor or a wall with a solid cover.

While cleaning the power supply device, take caution that it is not in contact with any external objects as it may cause power failure.

The system and antennas must be installed within the protection angle (within 45° of the central axis) to prevent damage caused by lightning.

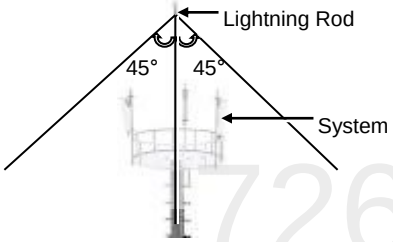

72617

The technician should wear gloves when touching the equipment in operation. Otherwise, a burn could result.

Ensure proper protection from RF radiation at all times.

Copyright © 2023, All Rights Reserved.

Installation Tools

The basic tools required for installation are listed in the following table. The additional tools required for each site must be identified and arranged during a site survey before installation.

Table 2. Basic Installation Tools

No.	Name	Specification	Purpose of use
1	Torque Driver	Apply a torque range : 6 to 22 lbf·in	For tightening field installable power connector screw
		Apply a torque range : 20 to 90 lbf·in	For fastening M6 Screw
2	Screw Driver Bit	'+', No. 2	For fastening MMU ground compression terminal (M6) installation screw
3	Hex. Screw Driver Bit	Hex. Type, H3	For tightening field installable power connector screw
4	Screw Driver	'+', No. 2	For loosening the M5 screws and MMU ground compression terminal installation screw (M6)
5	Torque Wrench	Apply a torque range : 20 to 100 lbf·in	For tightening field installable connector and M6 hex bolt
		Apply a torque range : 100 to 450 lbf·in	For tightening the M10 hex bolt
6	Torque Wrench Spanner Head	Apply hex bolt head: 10 mm (for 20 to 100 lbf·in)	For tightening the M6 hex bolt
		Apply hex bolt head: 17 mm (for 100 to 400 lbf·in)	For tightening the M10 hex bolt
7	Torque Wrench Adjustable Spanner Head	Apply hex bolt head: 50 mm (for 10 to 50 lbf·in)	Tightening field installable power connector
8	Spanner	10 mm	For loosening the M6 hex bolt
		17 mm	For loosening the M10 hex bolt
9	Adjustable Spanner	50 mm	Tightening field installable power connector
10	Ratchet Wrench	10 × 13/17 × 19 (4 in 1)	For fastening hex bolt
11	Tape Measure	16/150 ft. (5 m/50 m)	Tape measure for length measurement

72617

Copyright © 2023, All Rights Reserved.

No.	Name	Specification	Purpose of use
12	Power Extension Cable	98 ft. (30 m)	Basic tool
13	Level	Normal	For horizontality and verticality
14	Hammer Drill	Normal	Wall type drilling
15	Concrete Drill Bit	0.55 in. (14 mm)	For the M10 Set anchor
16	Anchor Punch	M10	For the M10 Set anchor
17	Hammer	Normal	Anchor attachment
18	Vacuum Cleaner	Normal	For removing dust during the drilling work
19	Heating Gun	122 to 572 °F (50 to 300°C)	Shrinking the feeder cable tube
20	Cable Cutter	0.24 to 1.26 in. (6 to 32 mm)	Cable cutting
21	Crimping Tool	14 to 4 AWG (1.5 to 16 mm^2)	Compression terminal for crimping
22	Cable Stripper	Apply cable thickness : 1.5 to 6.2 in. (4 to 16 mm)	For removing cable sheath
23	Flush Cutter	Basic Tool	For cutting cable tie
24	Nipper	Basic Tool	For cutting cable and cable tie

72617

Copyright © 2023, All Rights Reserved.

No.	Name	Specification	Purpose of use
25	Industrial Scissor	Basic Tool	Cutting
26	Knife	Basic Tool	Cutting
27	Optical Connector Cleaner	For LC Connector	For optical connector cleaning
28	Optical Transceiver Removal Tool	Normal	For separating the optical module
29	Multi tester	Digital Pocket Tester	To check the voltage and current measurements when cable disconnection is suspected
30	Fiber Optical Test Set	• Multi-mode, Single-mode Fiber • Wave length: 850 nm, 1310 nm, 1550 nm	Optical level check
31	Angle Meter	Normal	Antenna angle measurement
32	Multi master (VSWR & RF Power)	Normal	Feeder VSWR measurement
33	Compass	Normal	Check azimuth during installation
34	ESD Gloves	Normal	Electrostatic Protection
35	Marker	Normal	For Marking

72617

Copyright © 2023, All Rights Reserved.

The required installation tools may vary depending on the conditions at the site. In addition to the basic tools, a protractor, ladder, safety equipment, cleaning tools, and so on must also be prepared considering the site conditions.

72617

Copyright © 2023, All Rights Reserved.

Chapter 3 Installing System

This chapter describes the installation procedures of the MMU.

Installation Procedure

The following figure depicts the overall procedures for installing the MMU.

Figure 4. Procedure to Install the MMU

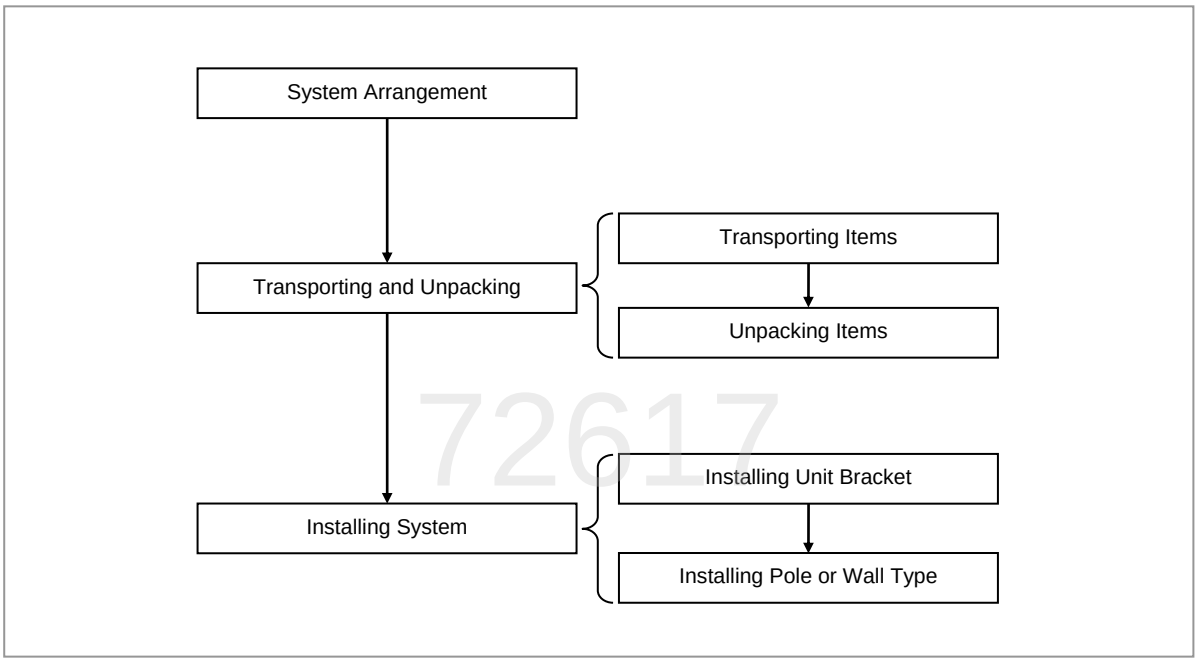

72617

Ensure that the power switch of the power supply is OFF when installing the system. Installing the system with the power switch ON can cause system damage or fatal human injury when connecting or disconnecting the cables.

Do not wear metallic accessories such as watches and rings to prevent electric shock.

Copyright © 2023, All Rights Reserved.

System Arrangement

Minimum clearance must be secured around the MMU for installation and maintenance in each direction.

The recommended clearance for installing the MMU is outlined in the following table.

Direction	Recommended Distances	Remarks
Front	≥ 32 in. (800 mm)	-
Sides	≥ 16 in. (400 mm)	-
Top	≥ 32 in. (800 mm)	-
Bottom	≥ 16 in. (400 mm)	-

Figure 5. MMU Arrangement for Pole Type (Tilting 0°)

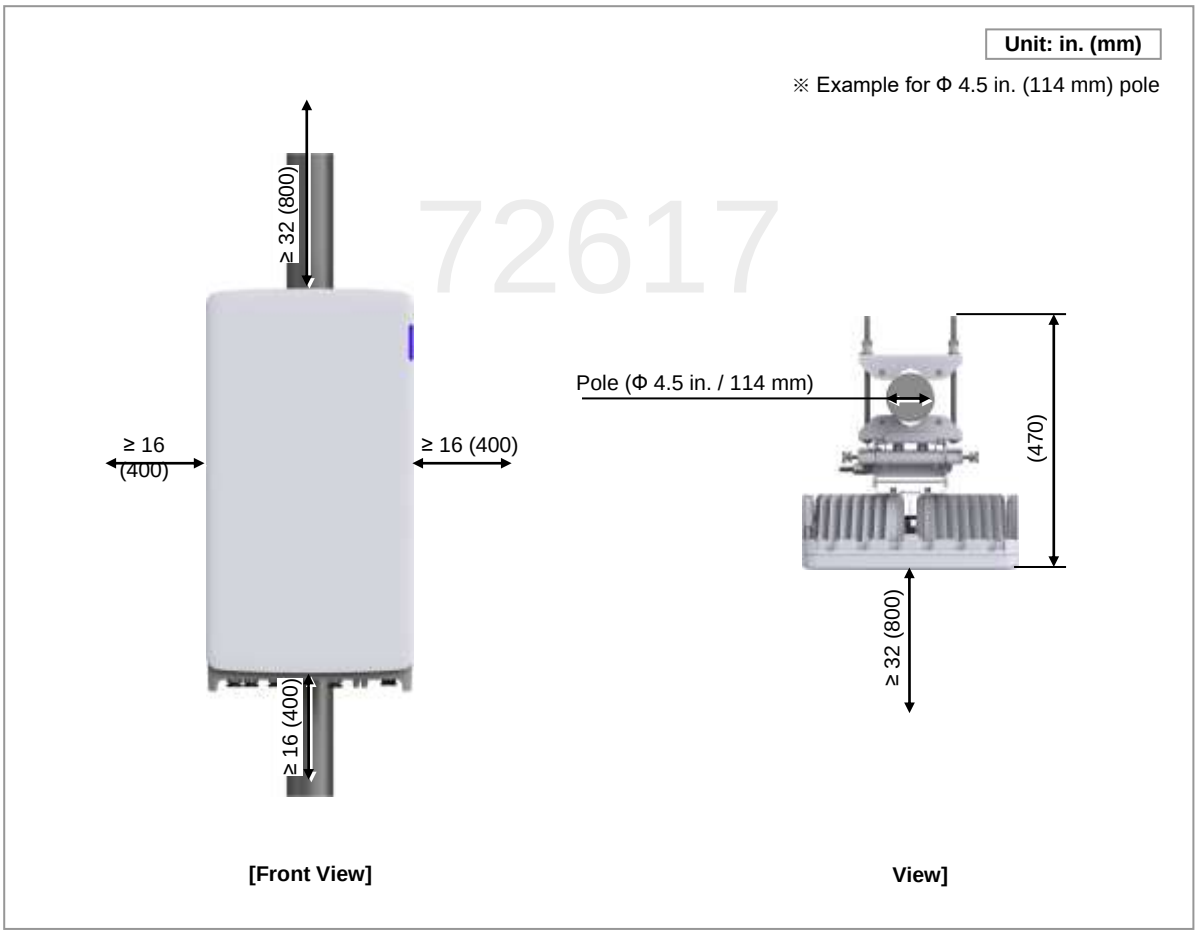

Copyright © 2023, All Rights Reserved.

When mounting the mounting bracket, the pole specification is from 2.4 in. to 4.5 in. (60 mm to 114 mm), and the specification of the carriage bolt is M10 × L230.

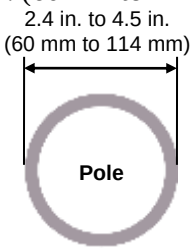

Figure 6. MMU Arrangement for Pole Type (Tilting 15°)

The dimensions of the front of the MMU change according to the tilt angle, and the maximum dimensions are described in the following figure (MMU Arrangement_ Down Tilting 15°/Up Tilting 15°).

Copyright © 2023, All Rights Reserved.

Figure 7. MMU Arrangement for Wall Type (Tilting 0º)

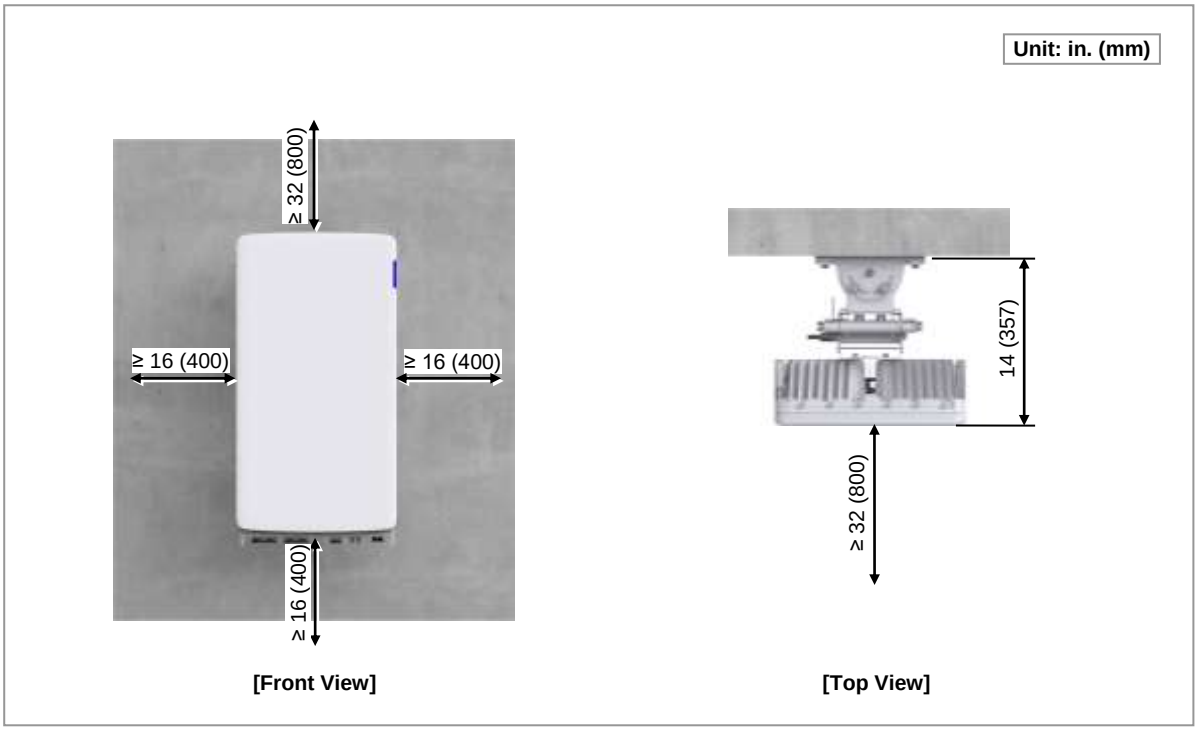

72617

Copyright © 2023, All Rights Reserved.

Figure 8. MMU Arrangement for Wall Type (Tilting 15°)

Unit: in. (mm)

[Down Tilting 15º]

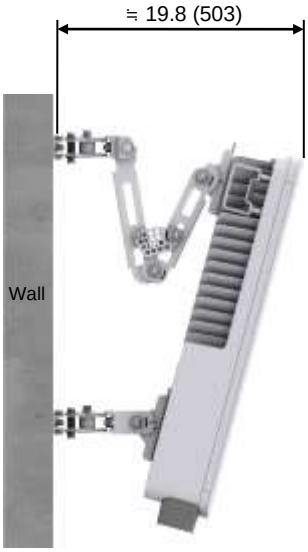

[Left View]

[Up Tilting 15º]

[Right View]

The dimensions of the installation space differ based on the tilting angle of the MMU. The dimensions when the tilting of the MMU is 15° are depicted in the figure above.

722617

Copyright © 2023, All Rights Reserved.

Figure 9. MMU Arrangement for Wall Type (Swiveling 30º)

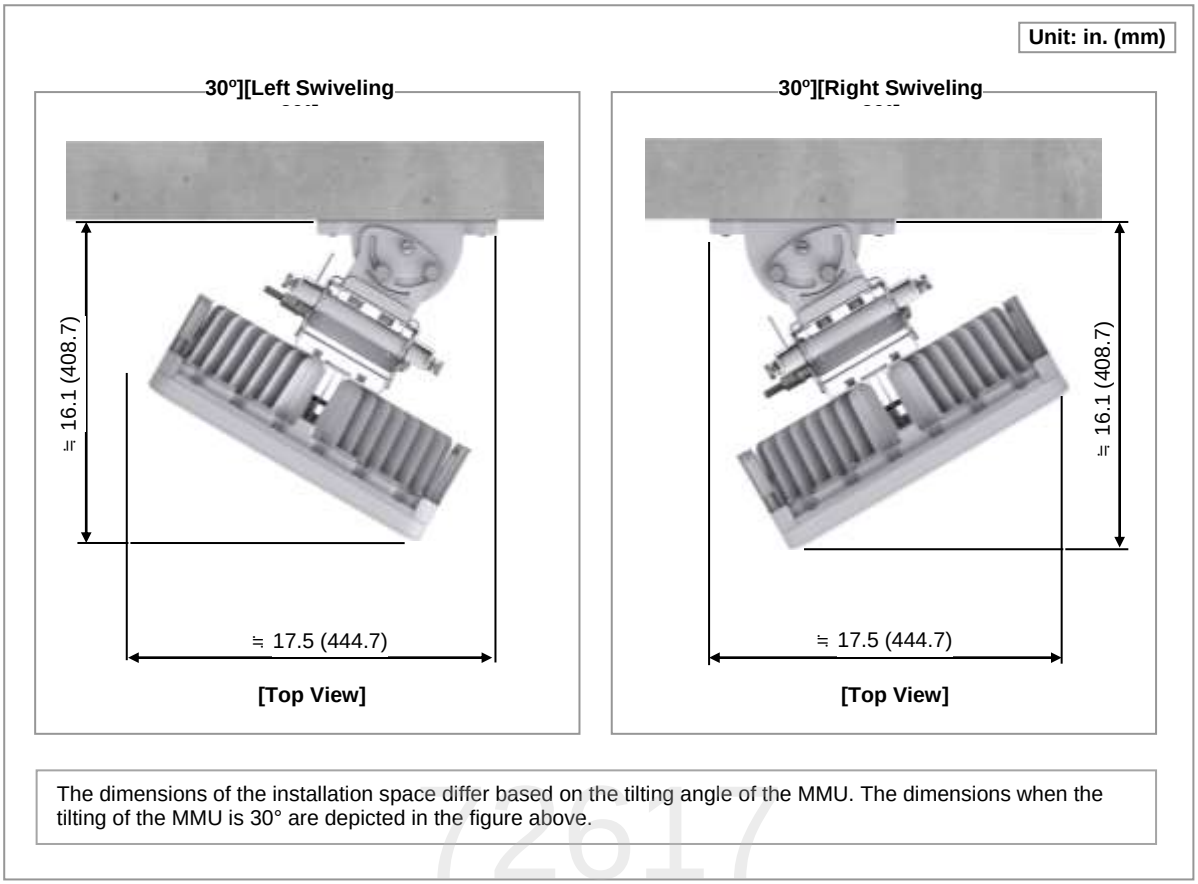

The dimensions of the installation space differ based on the tilting angle of the MMU. The dimensions when the tilting of the MMU is 30° are depicted in the figure above.

Copyright © 2023, All Rights Reserved.

Transporting and Unpacking

This section describes how to transport the equipment to the installation site and provides the procedure to unpack the cabinets and other components.

Transporting Items

To transport the items, take care of the following:

- When carrying the system:
  - Fasten the system firmly to the transport vehicle or carrier to prevent damage to the system from vibration or shock.

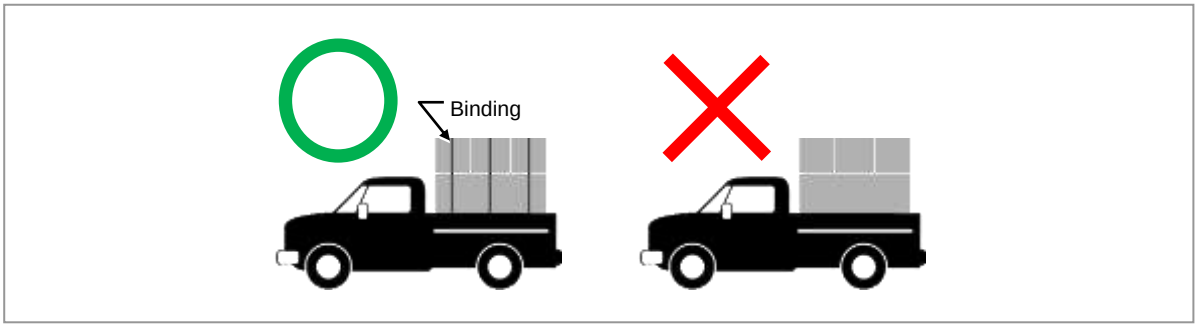

  - Use an elevator to prevent accidents. However, if people carry the system, ensure that there are enough people to carry the system.
- Before transporting the system, secure storage space for the system and remove obstacles in advance
- While transporting the system, ensure the system, boards, and other devices are not damaged by physical impacts, dust, and static electricity.
- Carrying heavy equipment alone may cause damage to the equipment, so two or more people must carry it together, or tools must be used.

Copyright © 2023, All Rights Reserved.

Weight		Worker	Remark
kg	lb		
≤ 18	≤ 40	More than 1	
19 to 36	41 to 79	More than 2	
37 to 72	80 to 158	More than 4	
72 <	158 <	More than 4 or Tools	

- Holding the middle of the box for transportation may cause sliding and damage to the equipment, so hold the bottom of the box and carry it.

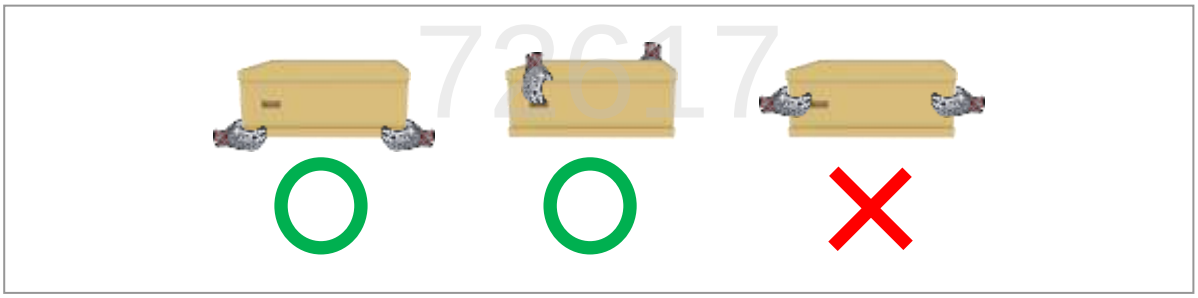

Unpacking Items

To unpack the items, ensure the following:

- The items must be packed until they reach the installation place.
- The items are classified in accordance with the job specification and stored at a place that does not interfere with working.
- The unpacked systems must be installed immediately. If the system is not installed immediately, it must be stored in the installation place temporarily.
- Unpack only external packing, leaving the internal packing in packed status.
- Unpack the inner packaging after each system is placed in its installation location.
- The by-products (packaging waste) must be disposed of in accordance with waste management rules. Do not recycle the by-products.

Copyright © 2023, All Rights Reserved.

MMU Handling

When moving the MMU or its packaging box, use the handles located on both sides of the MMU or its packaging box.

Lifting Hazard
Do not work alone when transporting items. Moving items alone can cause injury.

Figure 10. Transporting the MMU

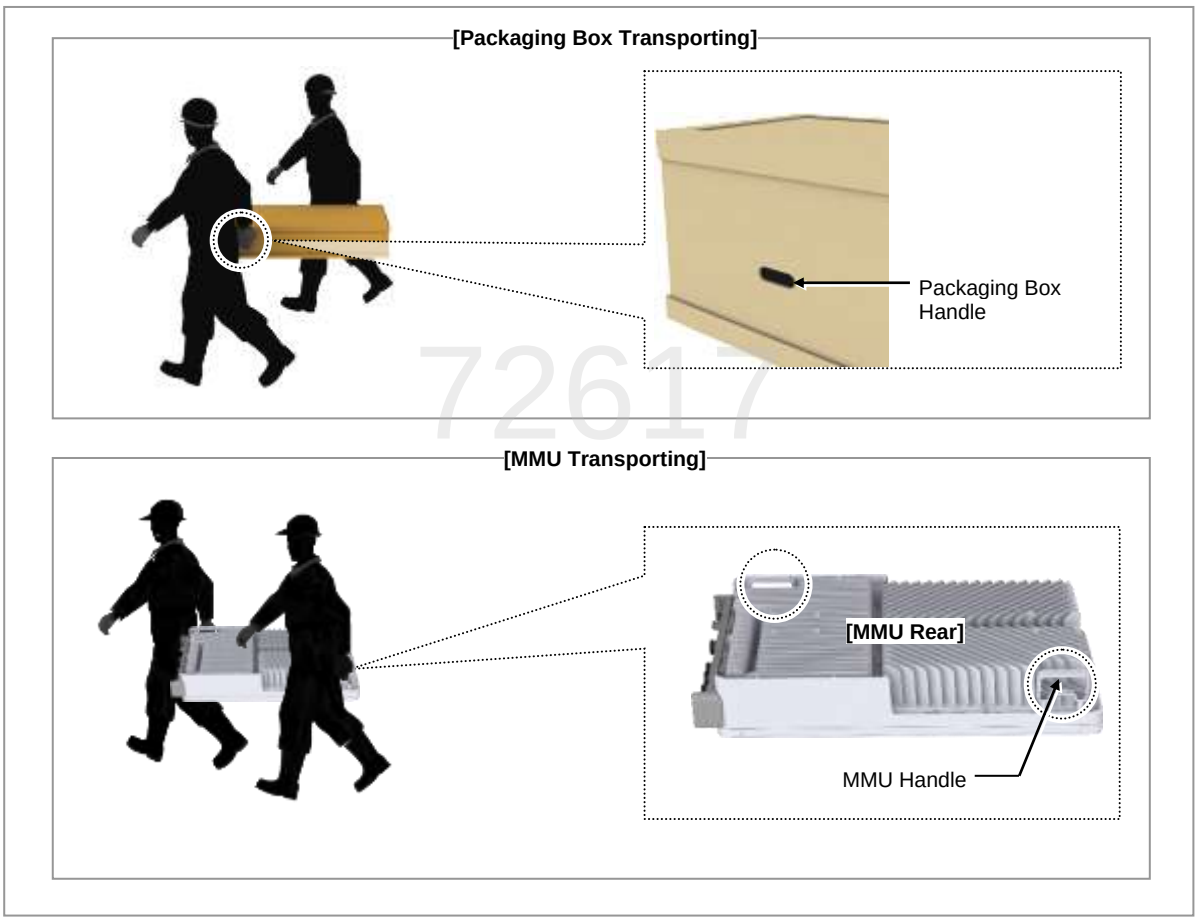

72617

Copyright © 2023, All Rights Reserved.

Installing System

Samsung's system does not support horizontal installation as it may cause problems. If it is necessary to install the system horizontally, consult with Samsung.

If installing the product outside the range of the mentioned installation angle is necessary, please consult with Samsung. (OR concerned technical team)

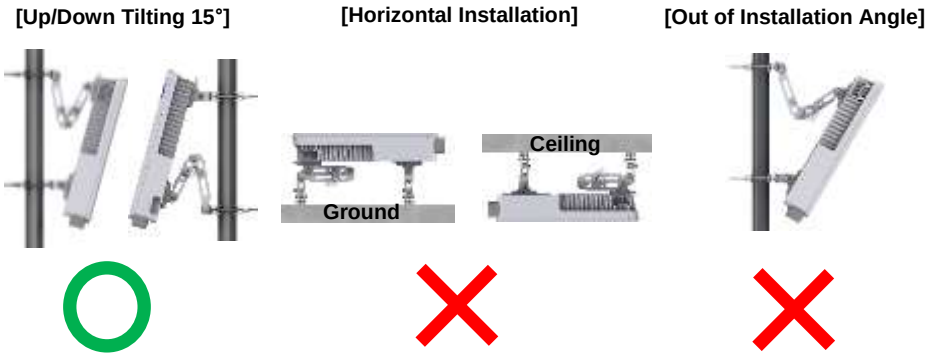

Be careful not to damage the ports of the system.

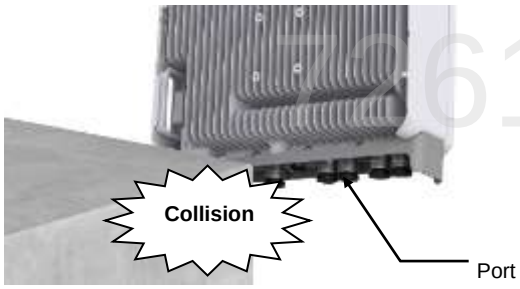

Copyright © 2023, All Rights Reserved.

Installing the Unit Bracket

To install the unit bracket, do the following:

1 Ensure that the items described in the following table are available.

Table 3. Parts and Tools for Installing the Unit Bracket on MMU

Category	Description		
Parts	Unit bracket		2 EA
	Fasteners	M6 × L20 hex bolt (Washer Assembly)	8 EA
Recommended Torque Value	M6 hex bolt		34 to 52 lbf·in
Working Tools	• Torque Wrench (20 to 100 lbf·in) • Torque Wrench Spanner Head (apply Hex. Head: 10 mm) • Spanner (10 mm)		

2 Check the position for mounting the unit bracket on the back of the MMU and place it in that position.

3 Mount the unit bracket using fasteners.

Figure 11. Installing Unit Bracket

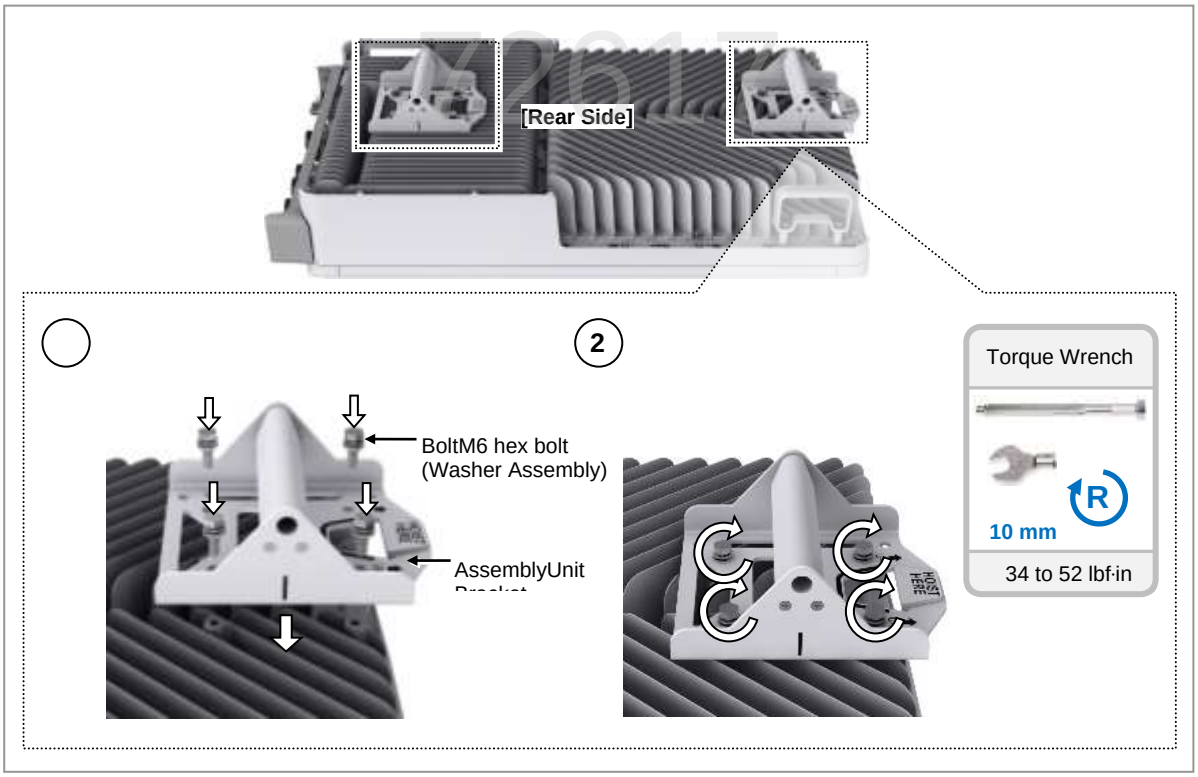

Copyright © 2023, All Rights Reserved.

The 'UP' silk of the unit brackets should be oriented toward the top of the MMU.

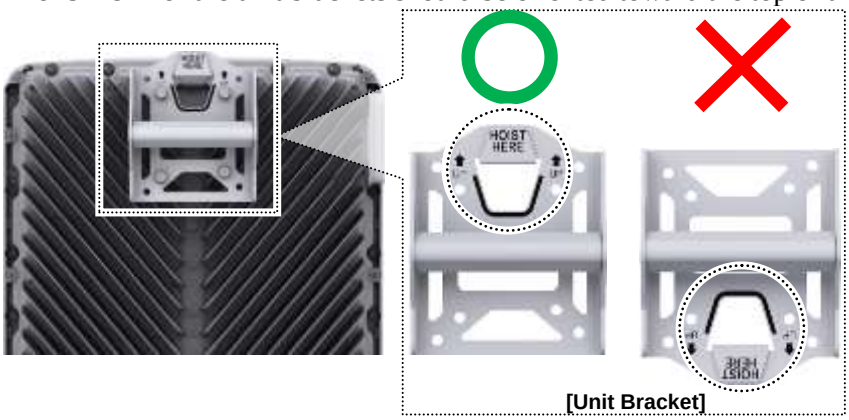

[Unit Bracket]

Installing the Pole Type

There are two installation types (installation for the up-tilting and installation for the down-tilting) to install the MMU on a pole.

[For Down Tilting]

[For Up Tilting]

Copyright © 2023, All Rights Reserved.

MMU Installation (Down Tilting Pole Type)

To install Down Tilting Bracket (Pole Type), do the following:

1 Ensure that the items described in the following table are available.

Table 4. Parts and Tools for Assembling the Down Tilting Bracket (Pole Type)

Category	Description	
Parts	Scissors Bracket Assembly	1 EA
	Pole Mount B Bracket Assembly	1 EA
Recommended Torque Value	M10 Flange Nut M10 Hex. Nut	177 to 221 lbf·in
Working Tools	• Torque Wrench (100 to 450 lbf·in) • Torque Wrench Spanner head (apply Hex. Head: 17 mm) • Spanner (Hex. Head: 17 mm)	

2 Remove the fastening materials from the scissors bracket assembly.

Figure 12. Down Tilting Pole Type Bracket Installation (1)

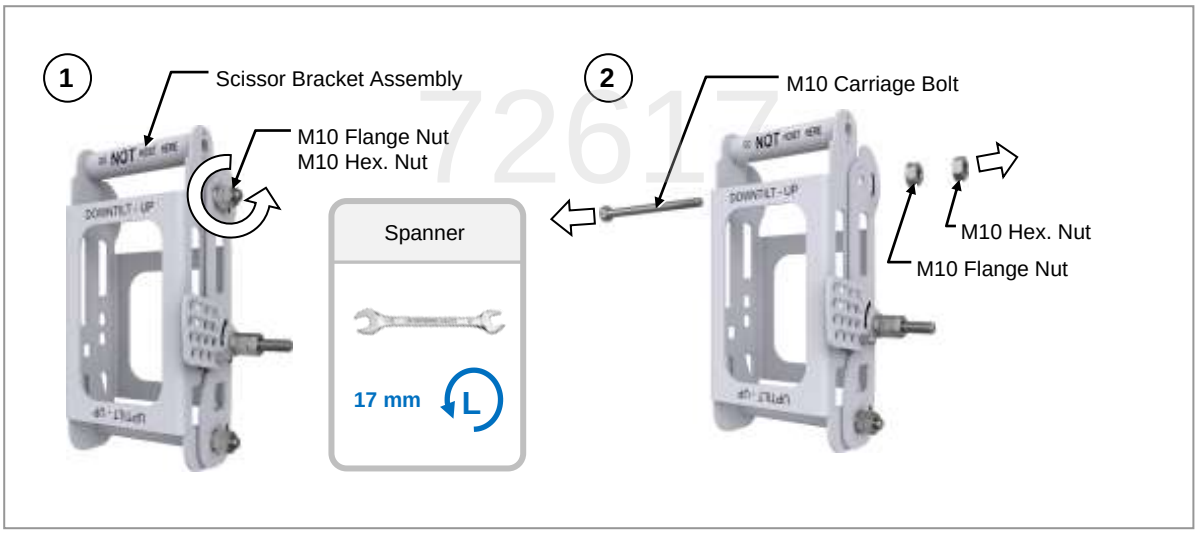

3 Align the scissors bracket assembly with the top installation holes of the unit bracket.

4 Install the unit bracket and scissors bracket using fasteners.

Copyright © 2023, All Rights Reserved.

Position the scissors bracket assembly so the ‘DOWN TILT-UP’ silk printing points upward.

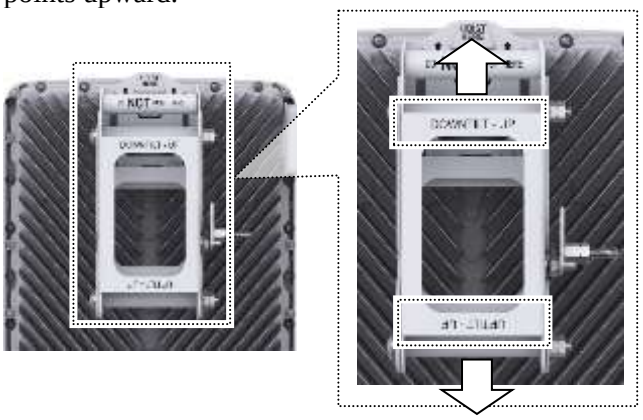

72617

Copyright © 2023, All Rights Reserved.

Figure 13. Down Tilting Pole Type Bracket Installation (2)

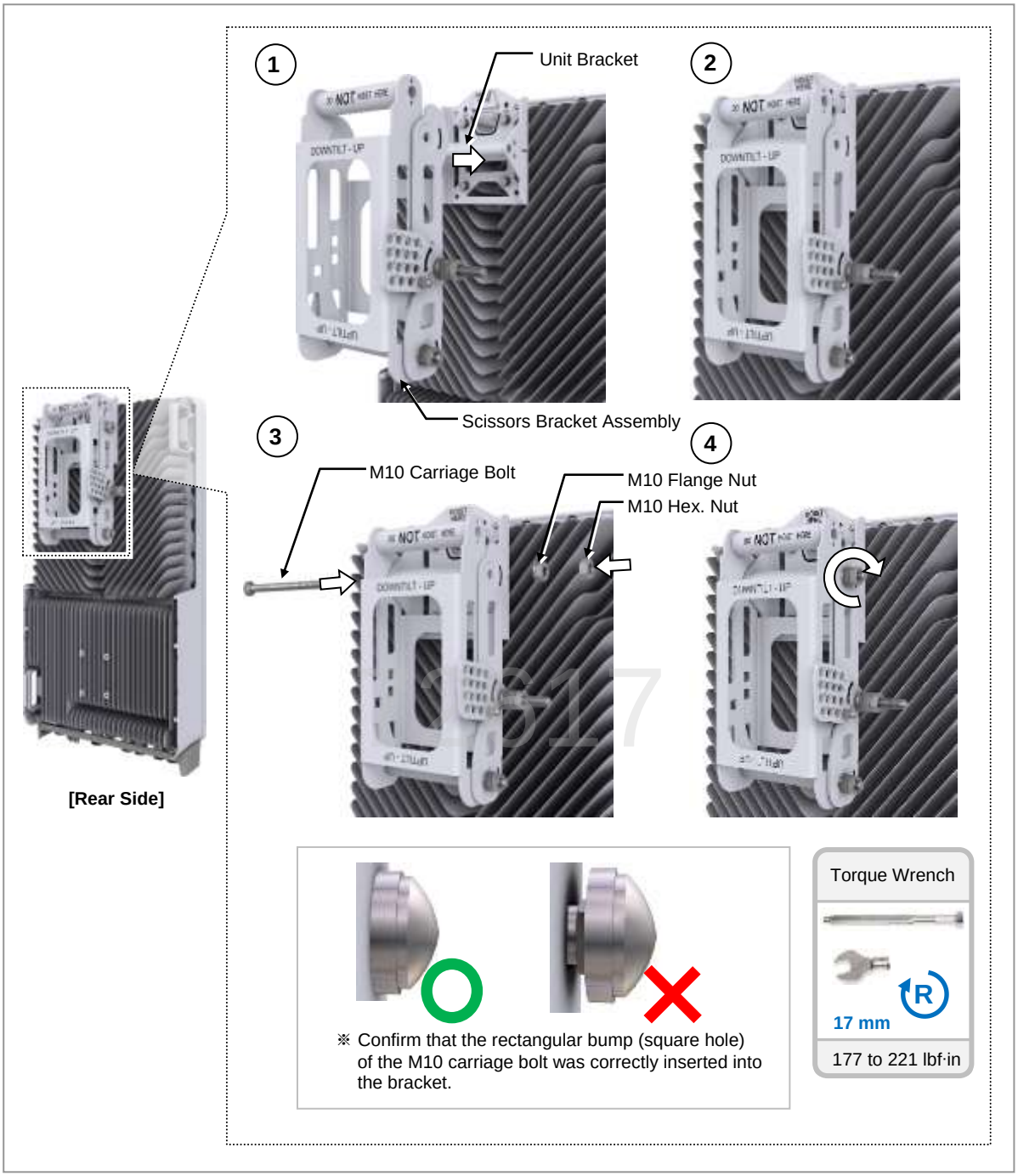

5 Remove the fastening materials from the unit bracket of the pole mount B bracket assembly.

Copyright © 2023, All Rights Reserved.

Figure 14. Down Tilting Pole Type Bracket Installation (3)

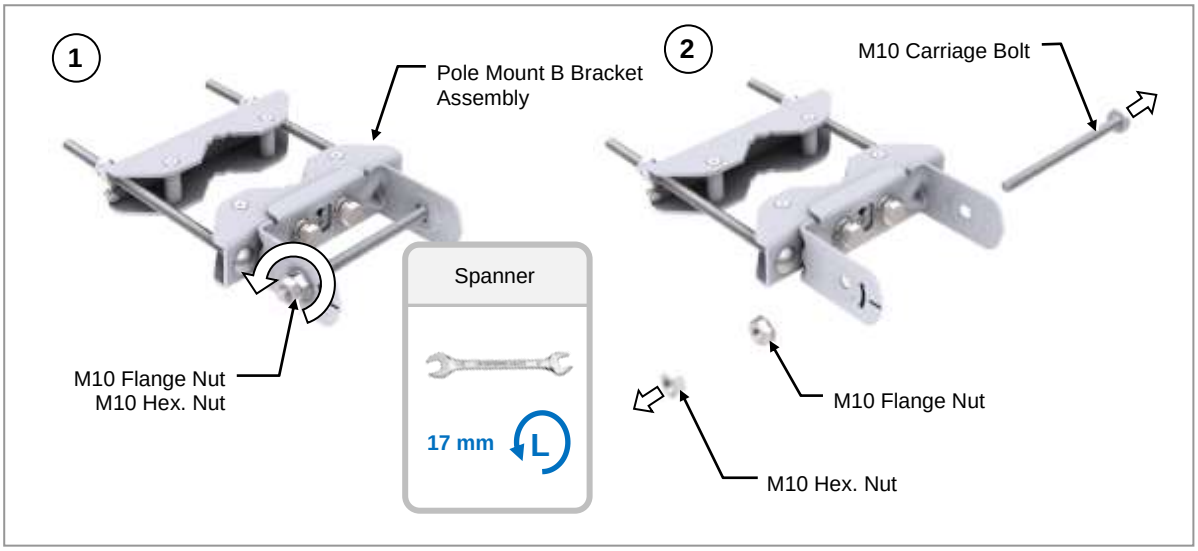

6 Align the pole mount B bracket assembly with the bottom installation holes of the unit bracket.

Figure 15. Down Tilting Pole Type Bracket Installation (4)

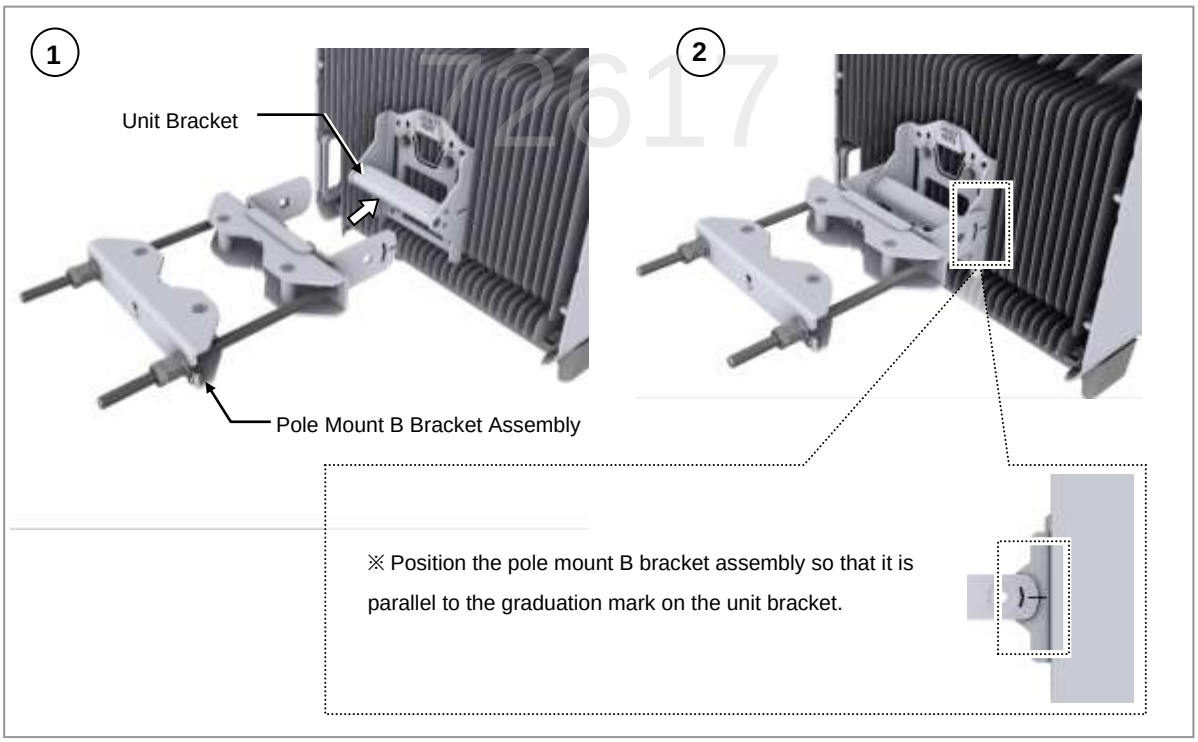

Copyright © 2023, All Rights Reserved.

Confirm that the arrow of the ‘UP’ silk printing points upward when positioning the pole mount B bracket assembly on the unit bracket.

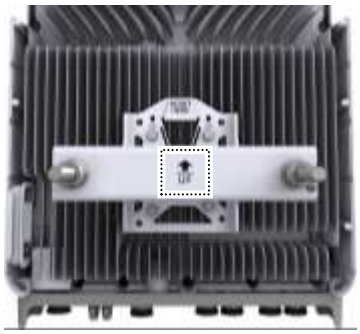

7 Install the fastening materials removed from the pole mount B bracket assembly by fastening them to the connector of the unit bracket and the scissors bracket assembly.

Figure 16. Down Tilting Pole Type Bracket Installation (5)

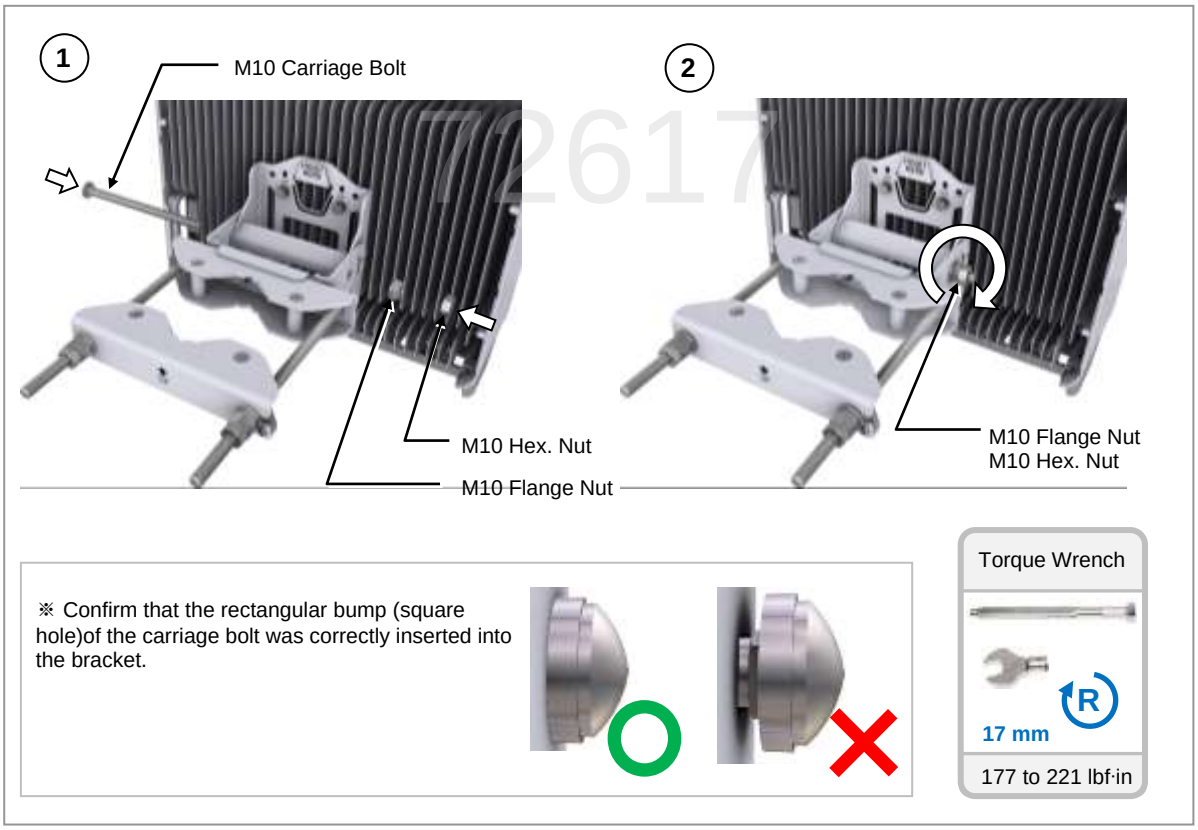

8 Remove the M10 carriage bolt assembly from the rear right side of the pole mount rear bracket.

Copyright © 2023, All Rights Reserved.

Figure 17. Down Tilting Pole Type Bracket Installation (6)

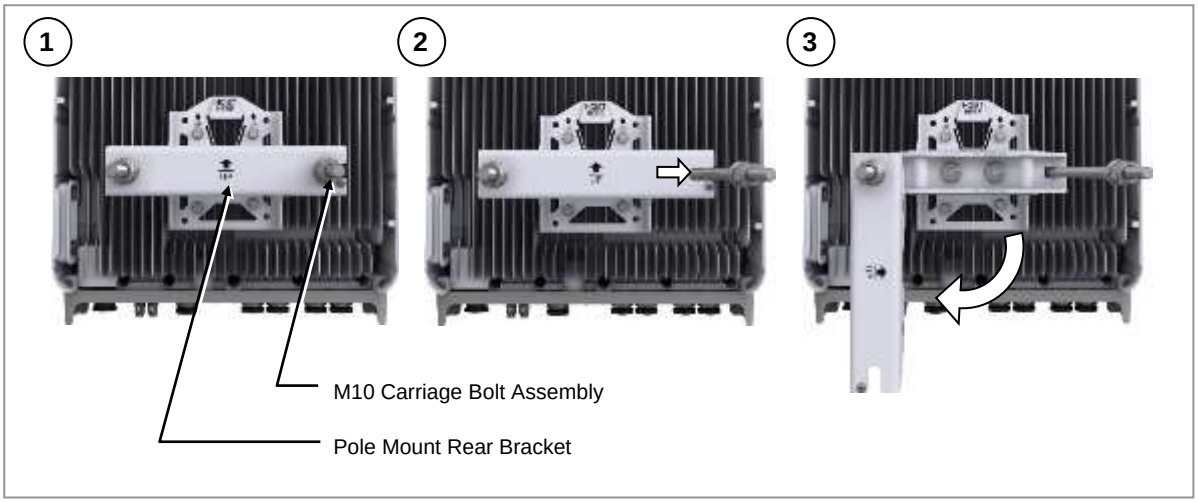

To lift the MMU/ Pole Mount A bracket assembly, do the following:

1 Tie the rope to the three carrying points of the MMU and the pole mount A bracket assembly.

72617

Copyright © 2023, All Rights Reserved.

Figure 18. Lifting MMU and Pole Mount A Bracket Assembly_Carrying Point

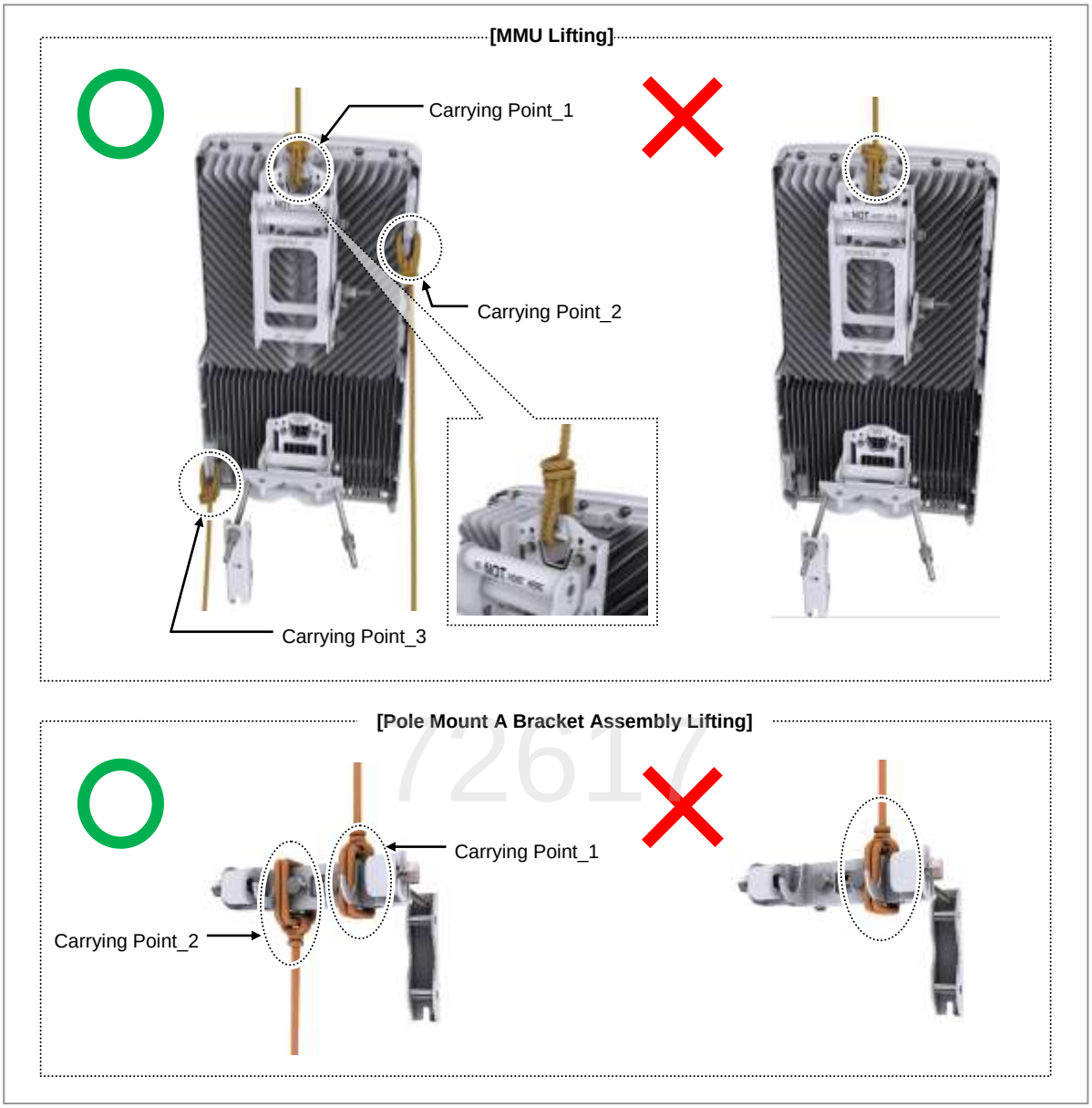

2 While worker A pulls the rope to pull up the MMU, workers B and D, pull the rope outward so that the MMU and pole mount A bracket assembly do not hit the surrounding objects.

3 When the MMU and the pole mount A bracket assembly arrive at the installation site, worker C catches it so that it does not hit the surrounding objects.

Copyright © 2023, All Rights Reserved.

Figure 19. Lifting MMU and Pole Mount A Bracket Assembly_Rooftop

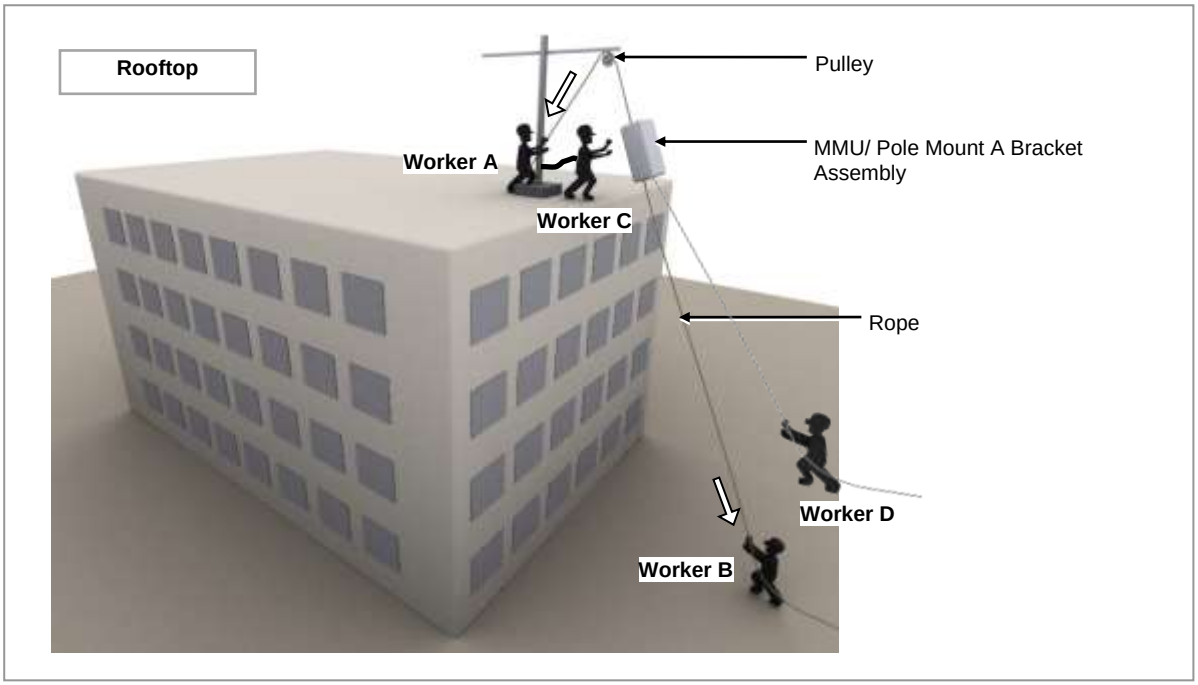

Figure 20. Lifting MMU and Pole Mount A Bracket Assembly_Tower

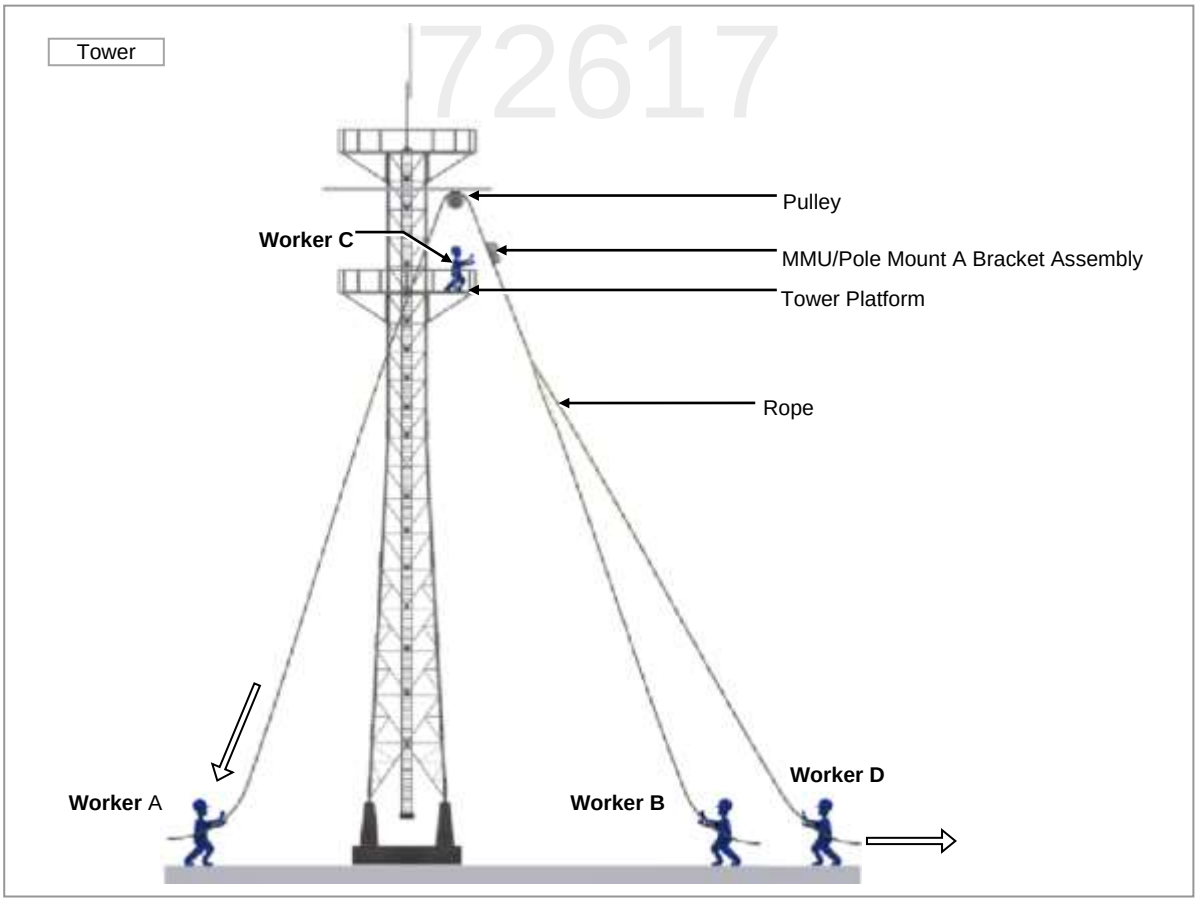

Copyright © 2023, All Rights Reserved.

To install the Pole Mount A Bracket Assembly, do the following:

1 Ensure that the items described in the following table are available.

Table 5. Parts and Tools for Installing the Pole Mount A Bracket Assembly

Category	Description	
Parts	Pole Mount A Bracket Assembly	1 EA
Recommended Torque Value	M10 Flange Nut M10 Hex. Nut	177 to 221 lbf·in
Working Tools	• Torque Wrench (100 to 450 lbf·in) • Torque Wrench Spanner head (apply Hex. Head: 17 mm) • Spanner (Hex. Head: 17 mm) • Level	

Select the position of the top pole mount bracket assembly, considering the distance between the top and bottom brackets before mounting the pole mount bracket assembly. The distance between the top and bottom brackets is 21.7 in. (552 mm.).

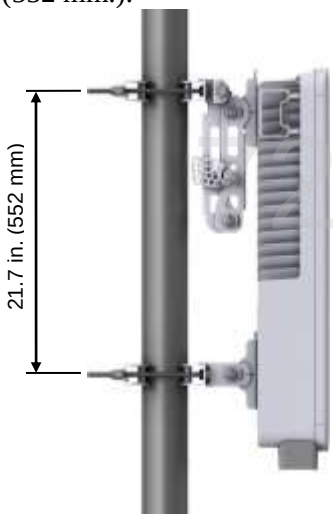

When mounting the mounting bracket, the pole specification is from 2.4 in. to 4.5 in. (60 mm to 114 mm), and the specification of the carriage bolt is M10 × L230.

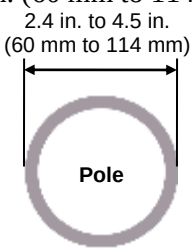

2 Place the pole mount A bracket assembly on the mounting positions for the pole.

Copyright © 2023, All Rights Reserved.

Figure 21. Down Tilting Pole Mount A Bracket Assembly Installation (1)

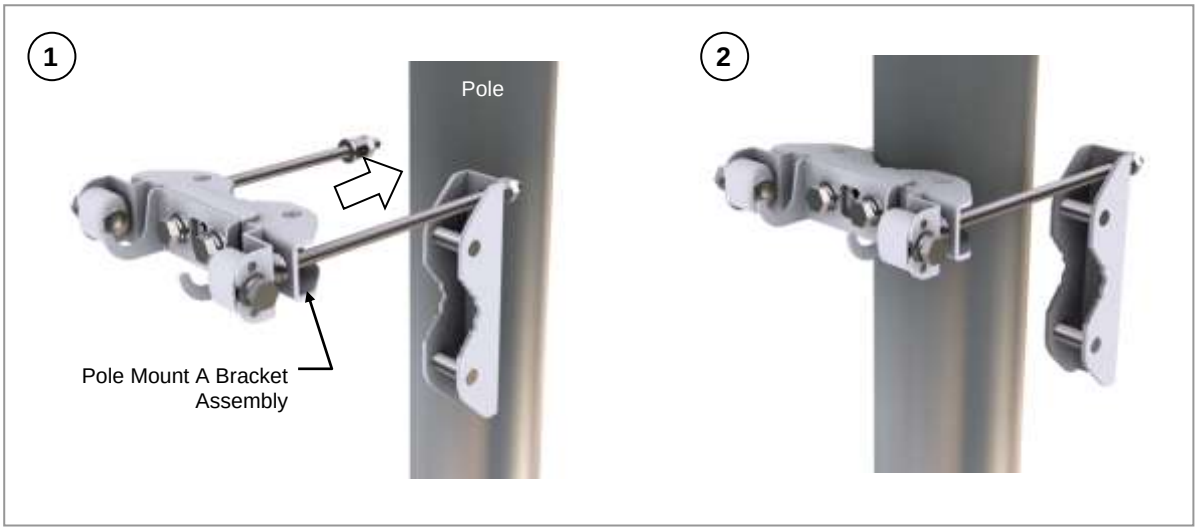

Position the pole mount rear bracket so the ‘UP’ silk printing points upward.

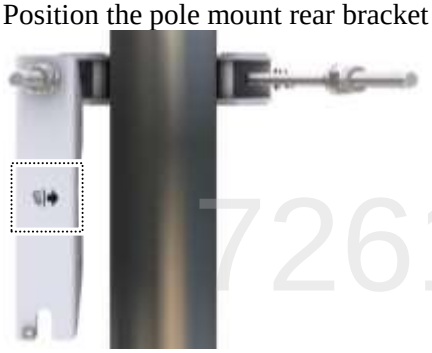

72617

3 Place the pole mount rear bracket horizontally in the mounting position.

4 Insert the unfastened M10 carriage bolt assembly into the mounting holes of the Pole mount rear bracket.

5 Tighten the M10 flange nut and M10 hex nut fastened on the M10 carriage bolt assembly.

Copyright © 2023, All Rights Reserved.

Figure 22. Down Tilting Pole Mount A Bracket Assembly Installation (2)

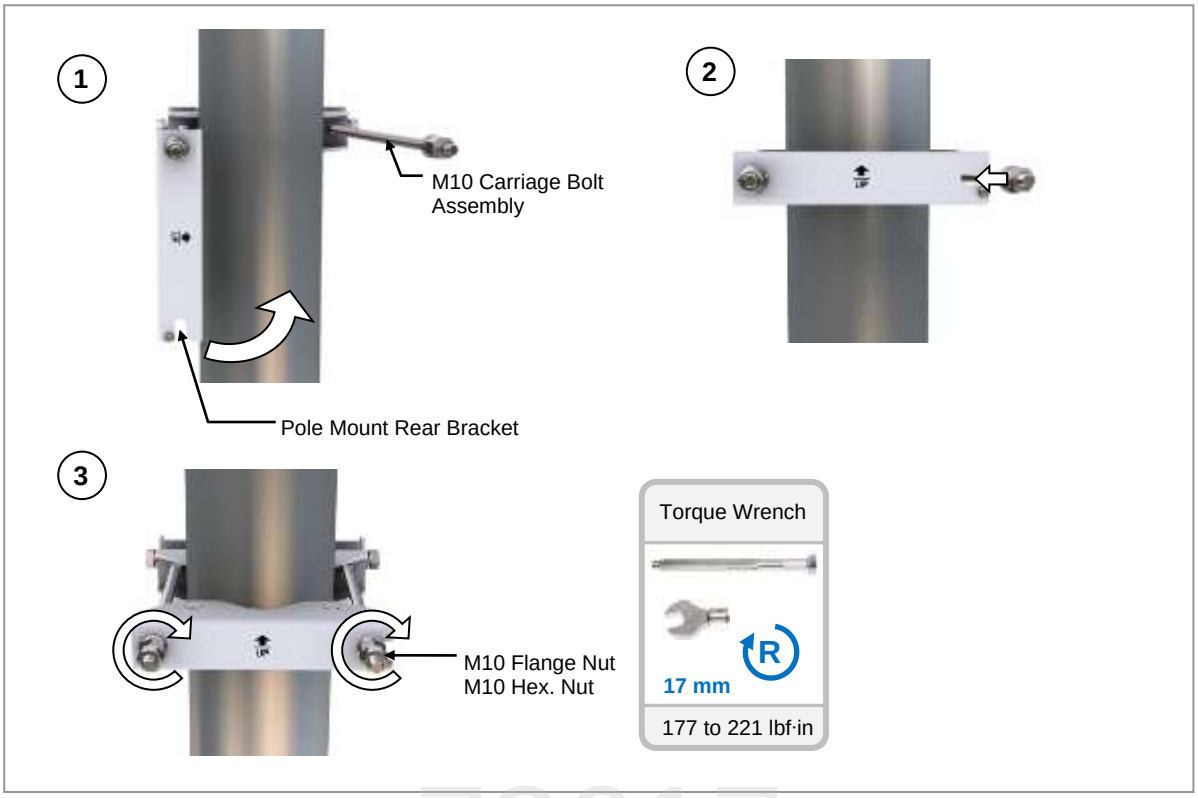

72617

After fastening the left and right bolts, the length of the left and right bolt protrusions at the end of the bracket must be less than 0.39 in. (10 mm).

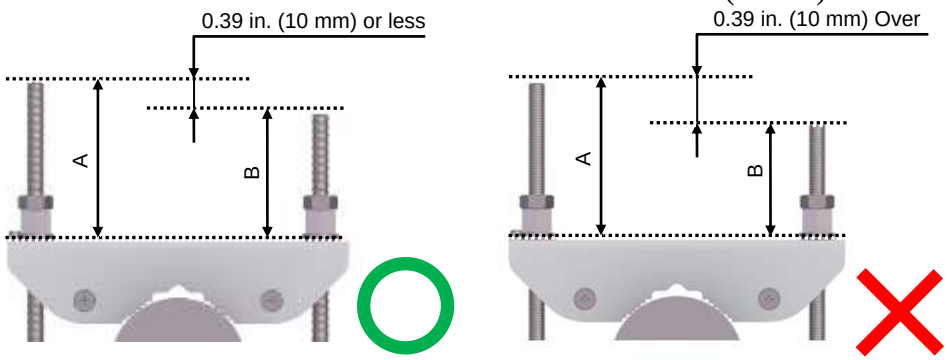

6 Confirm that pole mount A bracket assembly is level using a spirit level.

Copyright © 2023, All Rights Reserved.

Figure 23. Down Tilting Pole Mount A Bracket Assembly Installation (3)

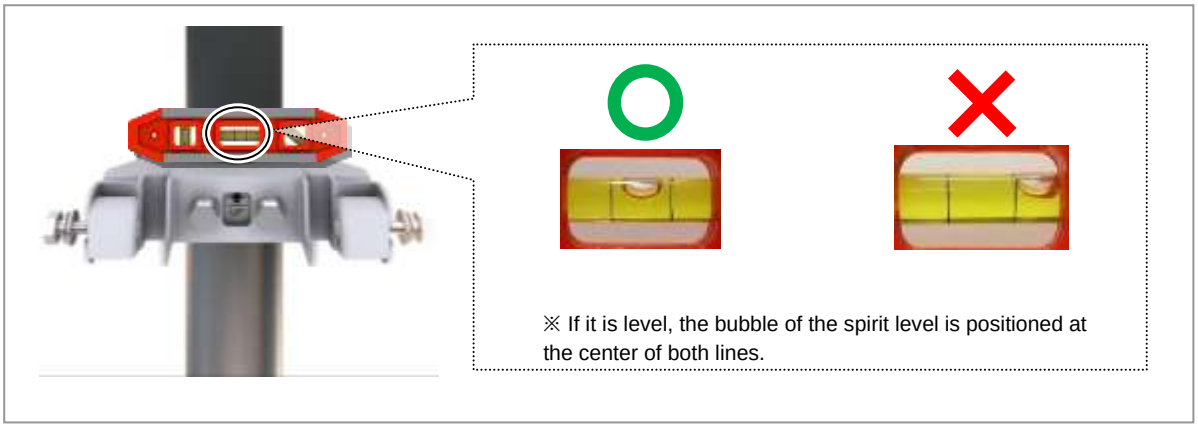

To install the down-tilting MMU to the pole, do the following:

1 Ensure that the items described in the following table are available.

Table 6. Parts and Tools for Down Tilting MMU Installation (Pole Type)

Category	Description	
Recommended Torque Value	M10 Flange Nut M10 Hex. Nut	177 to 221 lbf·in
Working Tools	• Torque Wrench (100 to 450 lbf·in) • Torque Wrench Spanner head (apply Hex. Head: 17 mm) • Spanner (Hex. Head: 17 mm)	

72617

2 Align the MMU with the installation position of the pole mount A bracket assembly installed on the pole.

Interference may occur if the M10 hex bolt for installing the scissors bracket and the pole mount A bracket assembly is protruded.

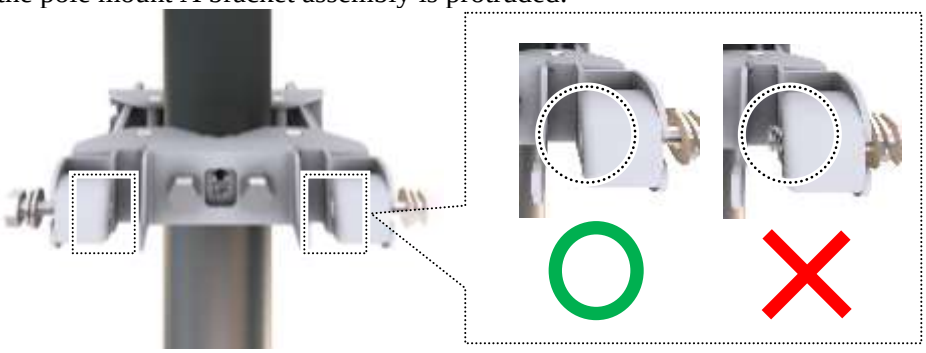

3 Place the pipe of the scissors bracket assembly assembled at the top of the MMU in the mounting groove of the pole mount A bracket assembly.

Copyright © 2023, All Rights Reserved.

Figure 24. Down Tilting Pole Type MMU Installation (1)

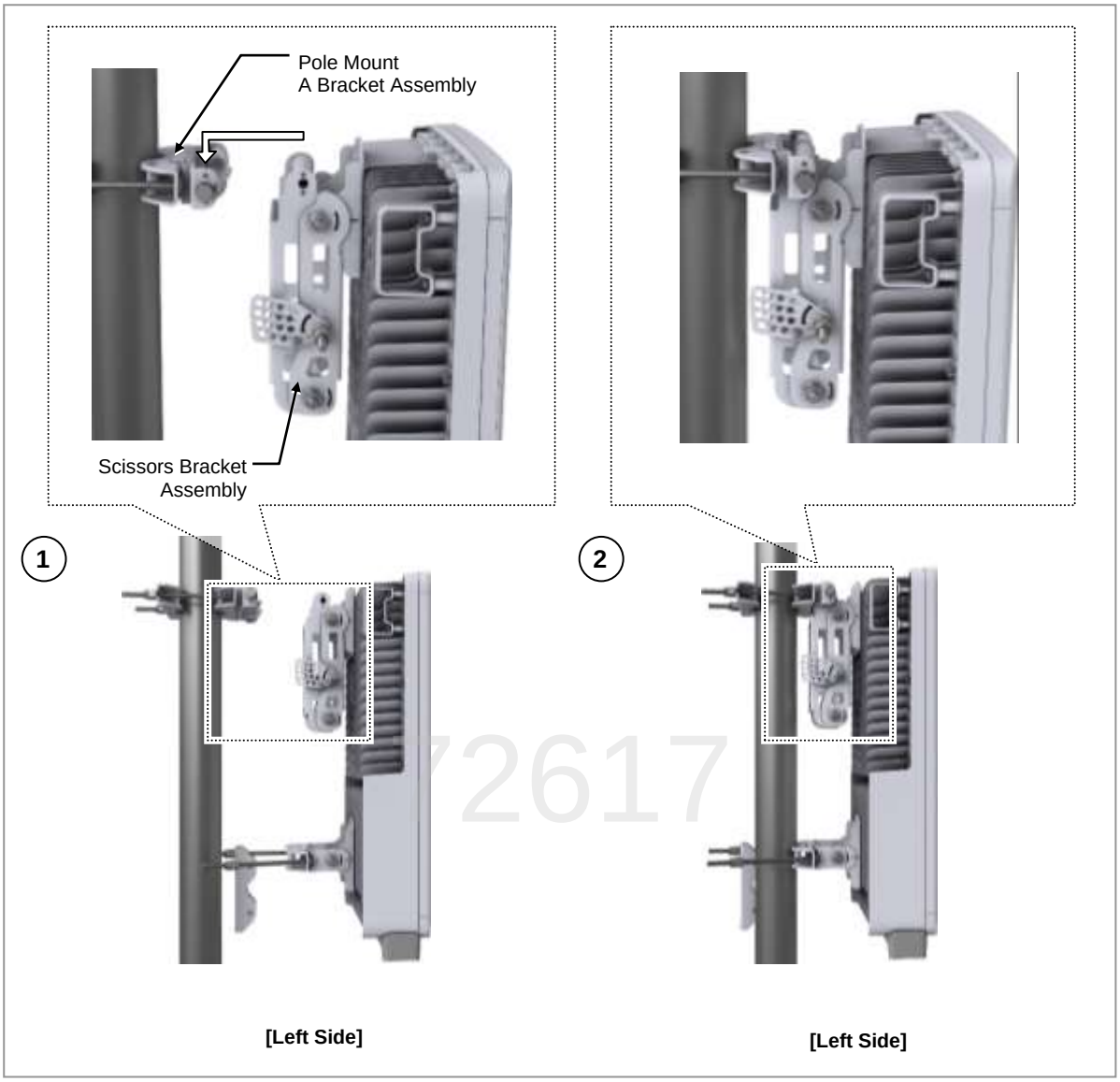

4 Install the scissors bracket by tightening the M10 hex bolt of the pole mount A bracket assembly.

Copyright © 2023, All Rights Reserved.

Figure 25. Down Tilting Pole Type MMU Installation (2)

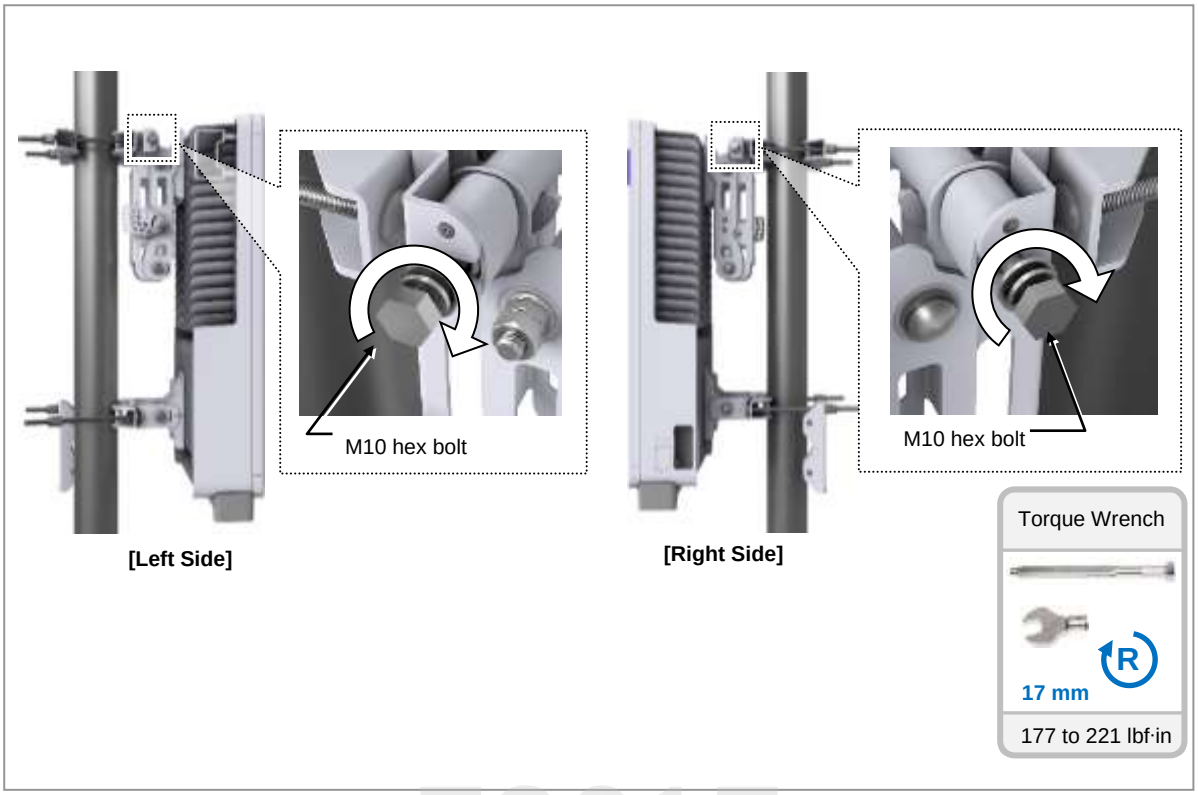

72617

5 Horizontally place the pole mount rear bracket assembled in the pole mount A bracket assembly at the mounting position. Insert the unfastened M10 carriage bolt assembly into the mounting hole of the pole mount rear bracket. Then, attach the M10 flange nut and M10 hex nut.

Copyright © 2023, All Rights Reserved.

Figure 26. Down Tilting Pole Type MMU Installation (3)

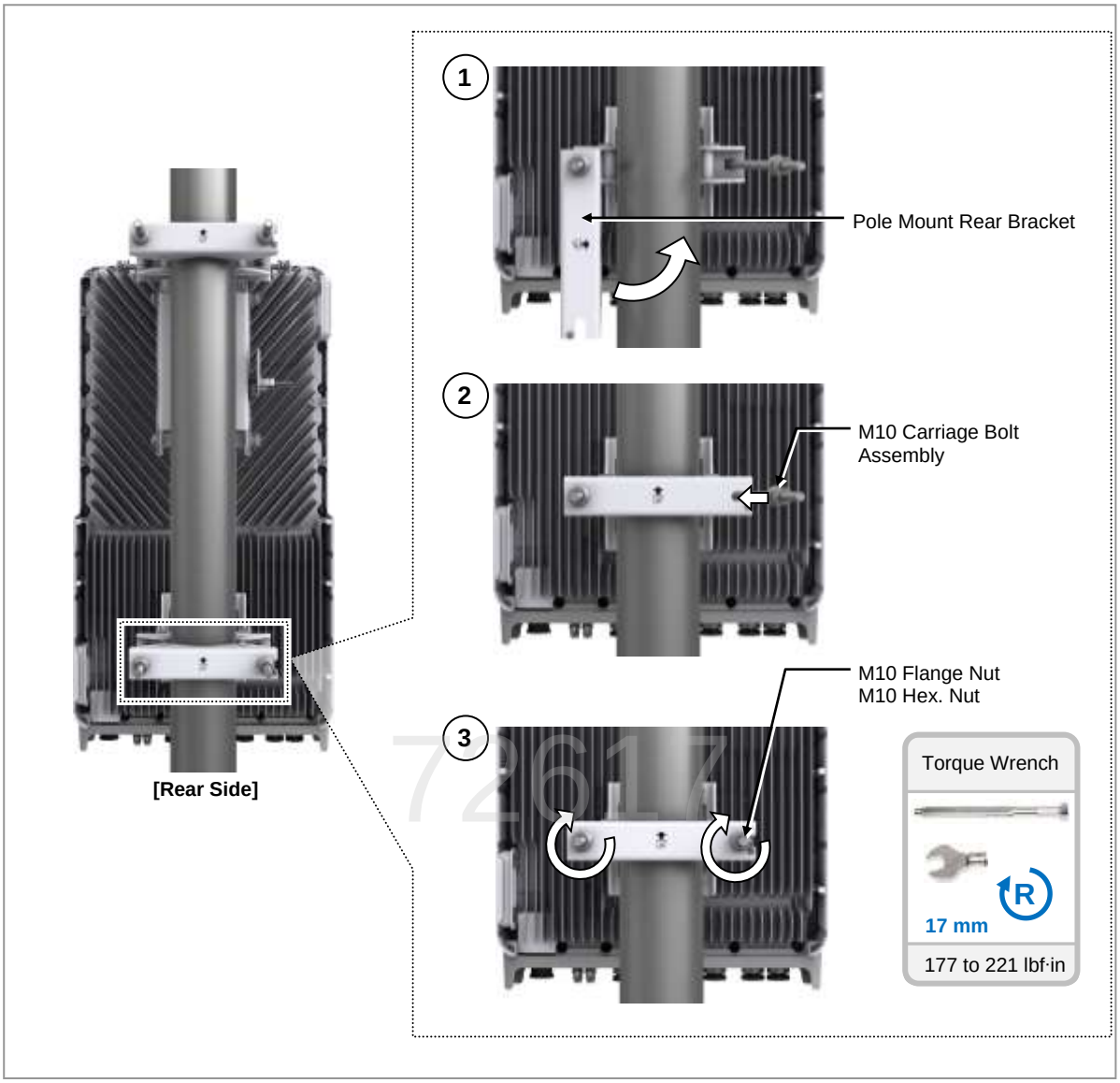

Copyright © 2023, All Rights Reserved.

After fastening the left and right bolts, the length of the left and right bolt protrusions at the end of the bracket must be less than 0.39 in. (10 mm).

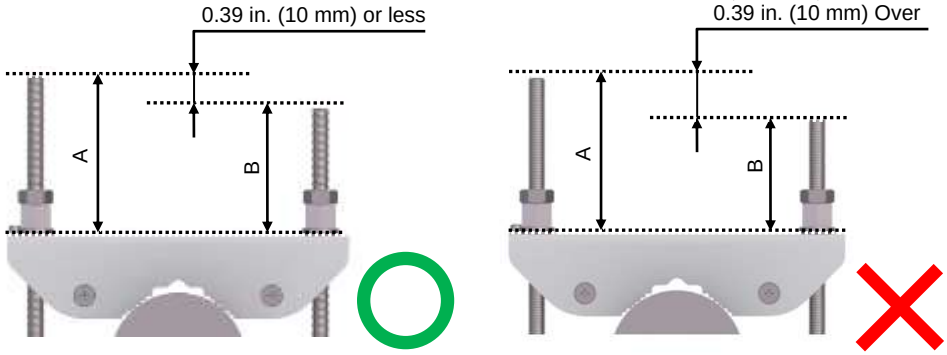

MMU Installation (Up Tilting Pole Type)

The parts of the scissors bracket assembly should be swapped with each other to tilt the MMU upward.

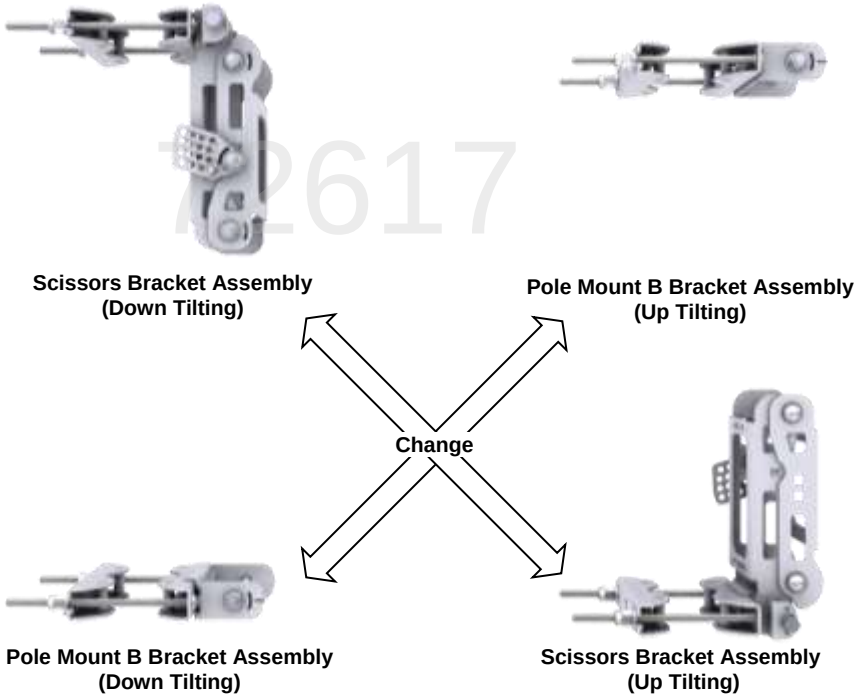

72617

To install the up-tilting bracket, do the following:

1 Ensure that the items described in the following table are available.

Copyright © 2023, All Rights Reserved.

Table 7. Parts and Tools for Up Tilting Bracket Installation (Pole Type)

Category	Description	
Parts	Scissors Bracket Assembly	1 EA
	Pole Mount A Bracket Assembly	1 EA
Recommended Torque Value	M10 Flange Nut M10 Hex. Nut	177 to 221 lbf·in
Working Tools	• Torque Wrench (100 to 450 lbf·in) • Torque Wrench Spanner head (apply Hex. Head: 17 mm) • Spanner (Hex. Head: 17 mm)	

2 Remove the fastening materials from the scissors bracket assembly.

Figure 27. Up Tilting Pole Type Bracket Installation (1)

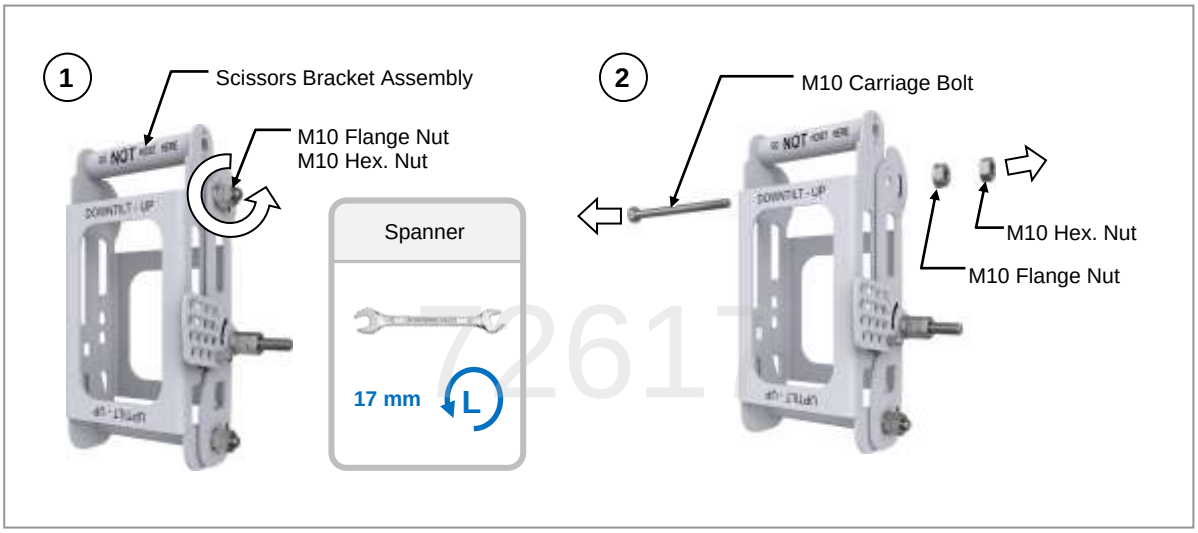

3 Align the scissors bracket with the installation holes of the unit bracket.

Position the scissors bracket so the 'UP TILT-UP' silk printing points upward.

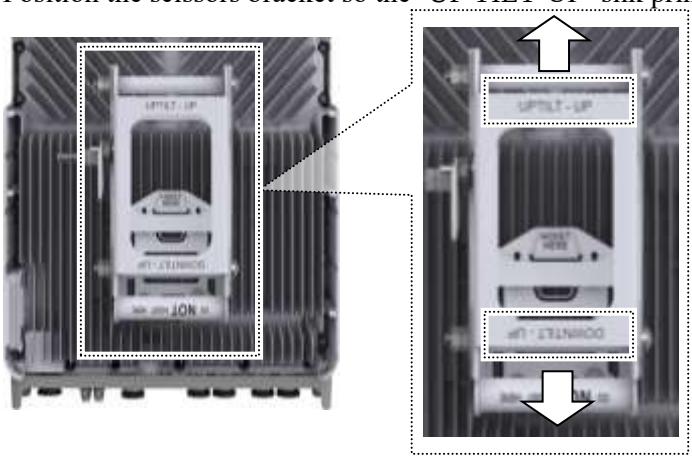

Copyright © 2023, All Rights Reserved.

4 Insert the fastening materials removed from the scissors bracket into the connector of the unit bracket and the scissors bracket.

Figure 28. Up Tilting Pole Type Bracket Installation (2)

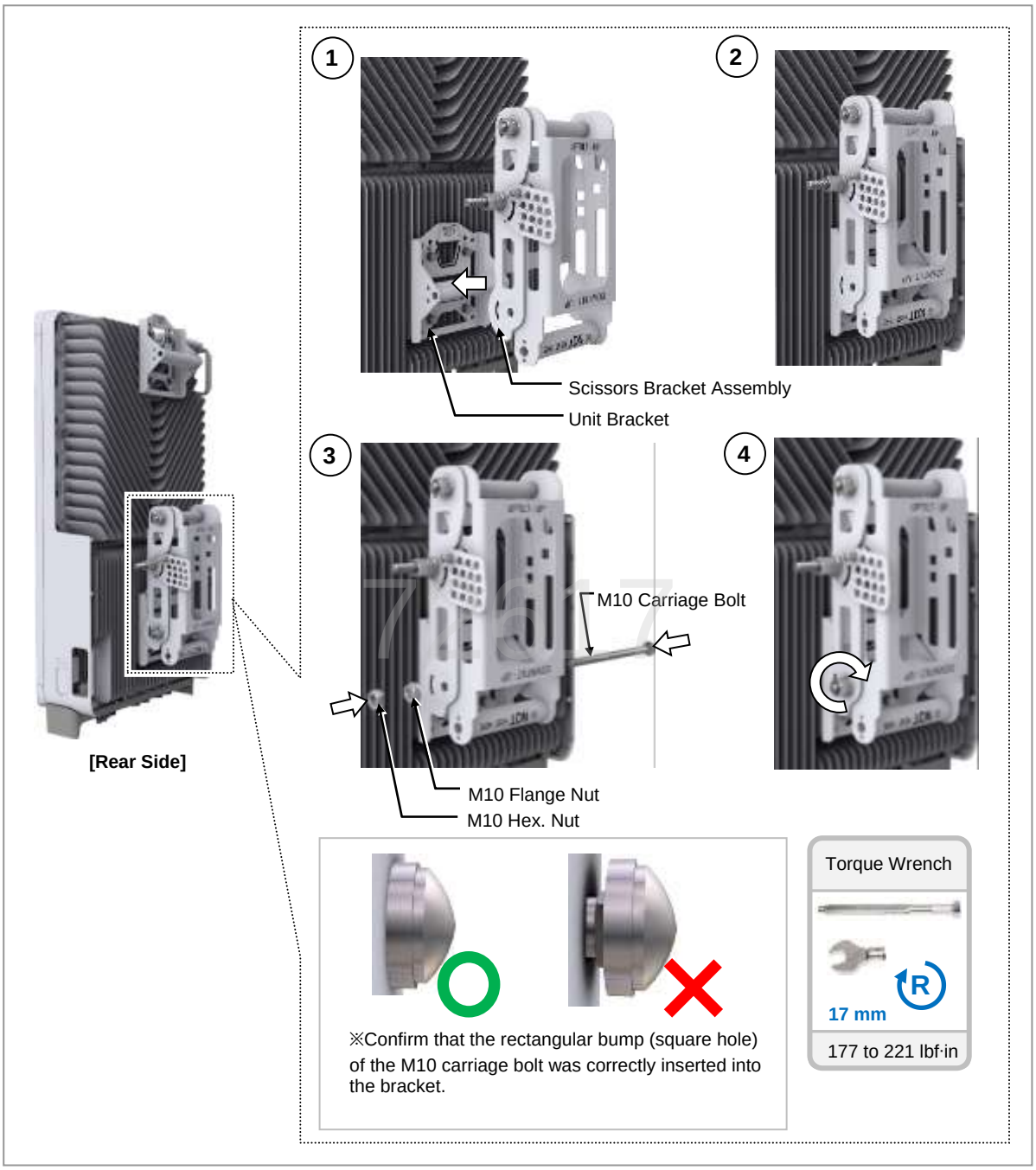

5 Remove the fastening materials from the unit bracket of the pole mount B bracket assembly.

Copyright © 2023, All Rights Reserved.

Figure 29. Up Tilting Pole Type Bracket Installation (3)

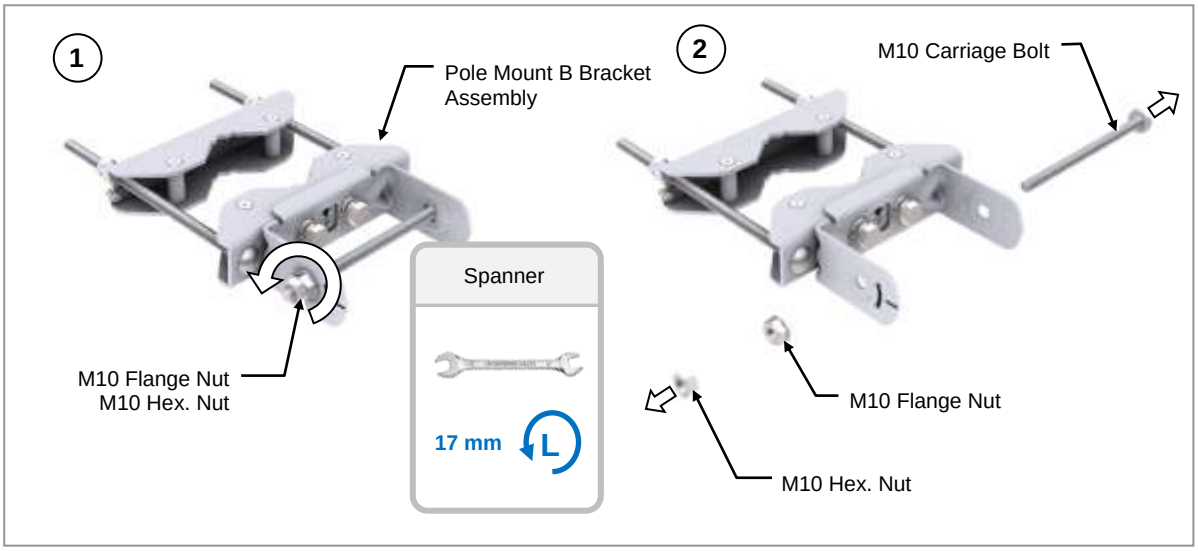

6 Align the pole mount B bracket assembly with the mounting holes of the unit bracket.

Figure 30. Up Tilting Pole Type Bracket Installation (4)

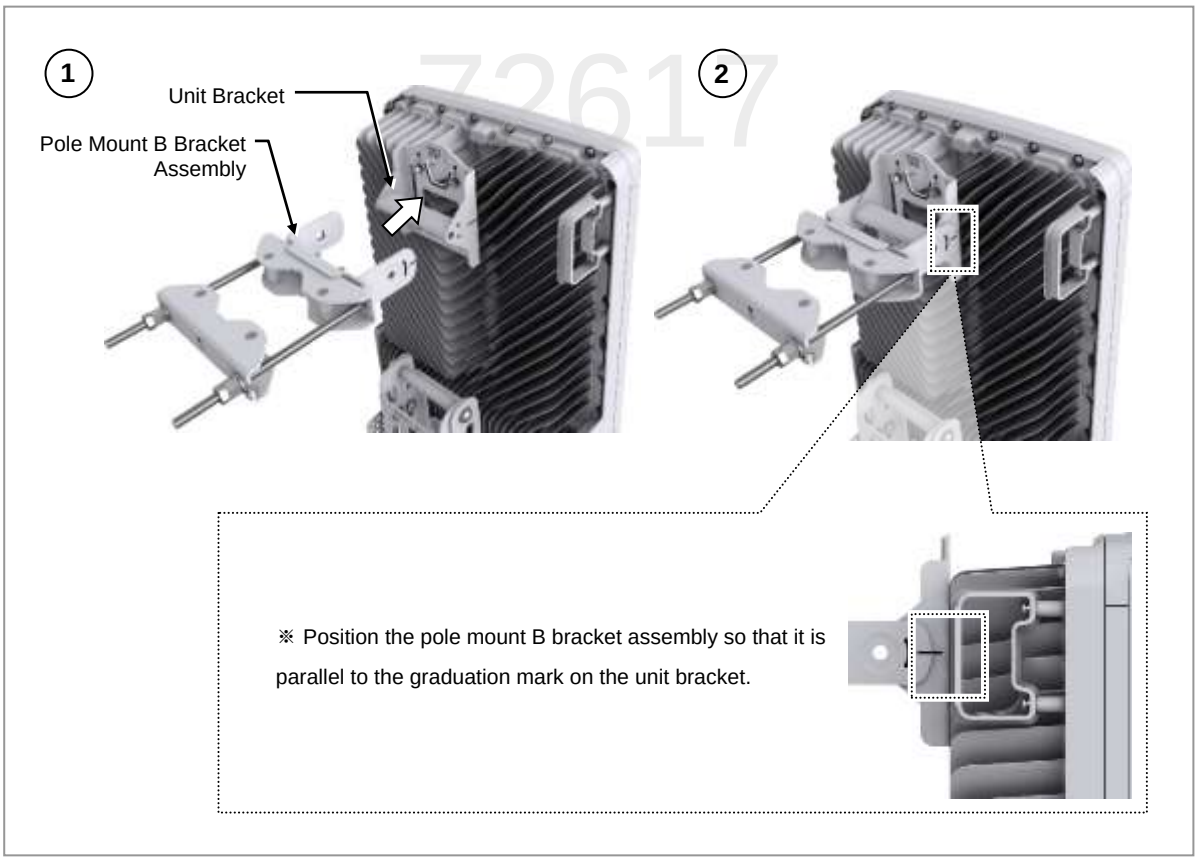

Copyright © 2023, All Rights Reserved.

Confirm that the arrow of the ‘UP’ silk printing points upward when positioning the pole mount B bracket assembly on the unit bracket.

7 Insert the fastening materials removed from the pole mount B bracket assembly into the unit bracket.

Figure 31. Up Tilting Pole Type Bracket Installation (5)

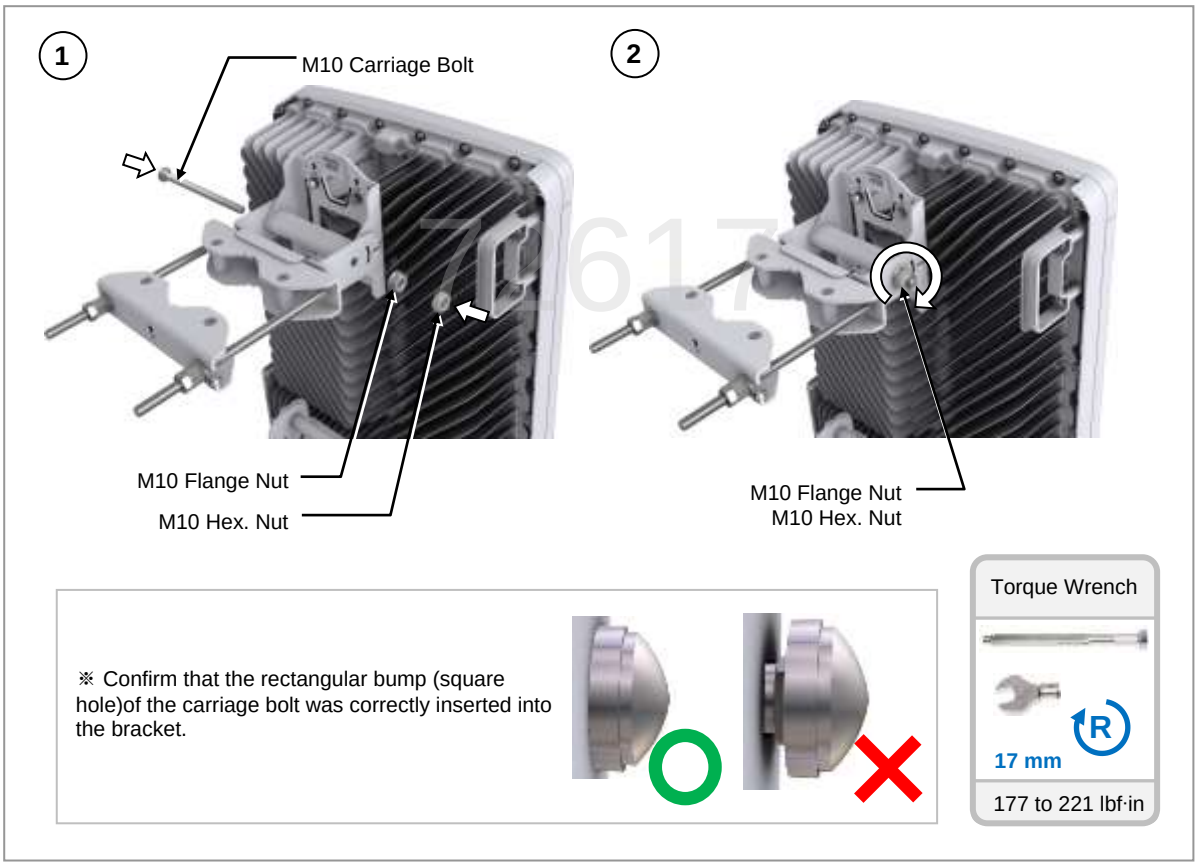

8 Remove the M10 carriage bolt assembly from the right side of the pole mount rear bracket.

Copyright © 2023, All Rights Reserved.

Figure 32. Up Tilting Pole Type Bracket Installation (6)

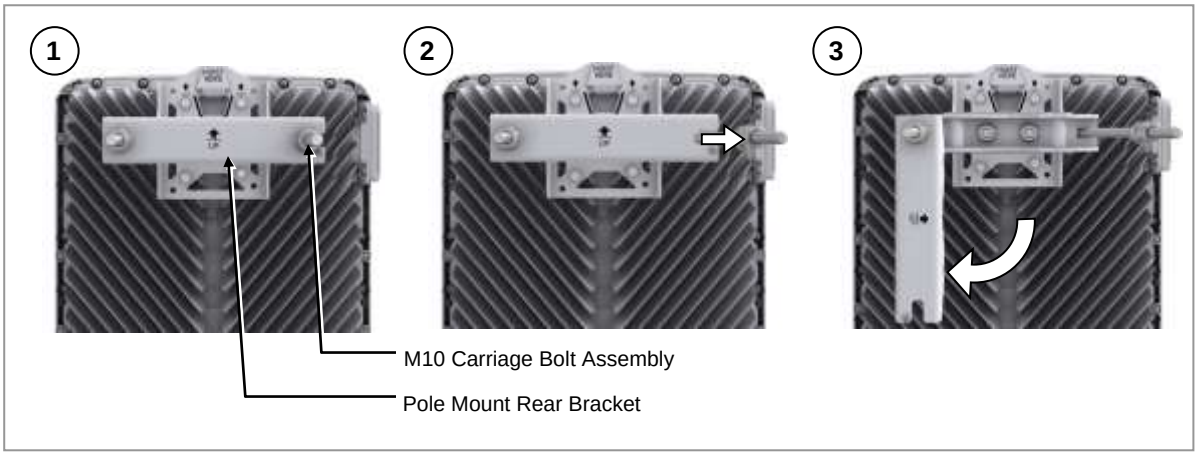

To Lift MMU and Pole Mount B Bracket Assembly, do the following:

Refer to the lifting procedure of the MMU and pole mount B bracket assembly (pole type) for how to lift them.

To install the Pole Mount A Bracket Assembly, do the following:

1 Ensure that the items described in the following table are available.

72617

Table 8. Parts and Tools for Installing the Pole Mount A Bracket Assembly

Category	Description	
Parts	Pole Mount A Bracket Assembly	1 EA
Recommended Torque Value	M10 Flange Nut M10 Hex. Nut	177 to 221 lbf·in
Working Tools	• Torque Wrench (100 to 450 lbf·in) • Torque Wrench Spanner head (apply Hex. Head: 17 mm) • Spanner (Hex. Head: 17 mm)	

Copyright © 2023, All Rights Reserved.

Select the position of the top pole mount bracket-bottom, considering the distance between the top and bottom brackets before mounting the pole mount bracket-bottom. The distance between the top and bottom brackets is 21.7 in. (552 mm.).

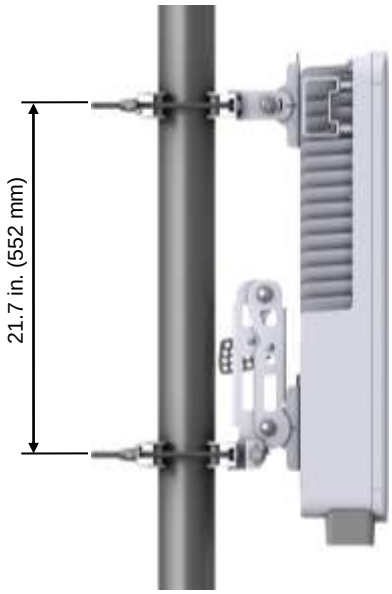

When mounting the mounting bracket, the pole specification is from 2.4 in. to 4.5 in. (60 mm to 114 mm), and the specification of the carriage bolt is M10 × L230.

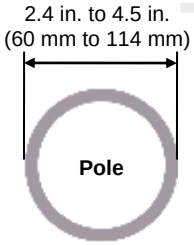

72617

2 Place the pole mount A bracket assembly on the mounting positions for the pole.

Copyright © 2023, All Rights Reserved.

Figure 33. Up Tilting Pole Mount A Bracket Assembly Installation (1)

Position the pole mount rear bracket so the ‘UP’ silk printing points upward.

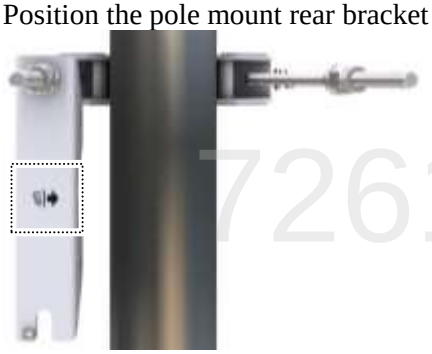

72617

3 Place the pole mount rear bracket horizontally in the mounting position.

4 Insert the unfastened M10 carriage bolt assembly into the mounting holes of the Pole mount rear bracket.

5 Tighten the M10 flange nut and M10 hex nut fastened on the M10 carriage bolt assembly.

Copyright © 2023, All Rights Reserved.

Figure 34. Up Tilting Pole Mount A Bracket Assembly Installation (2)

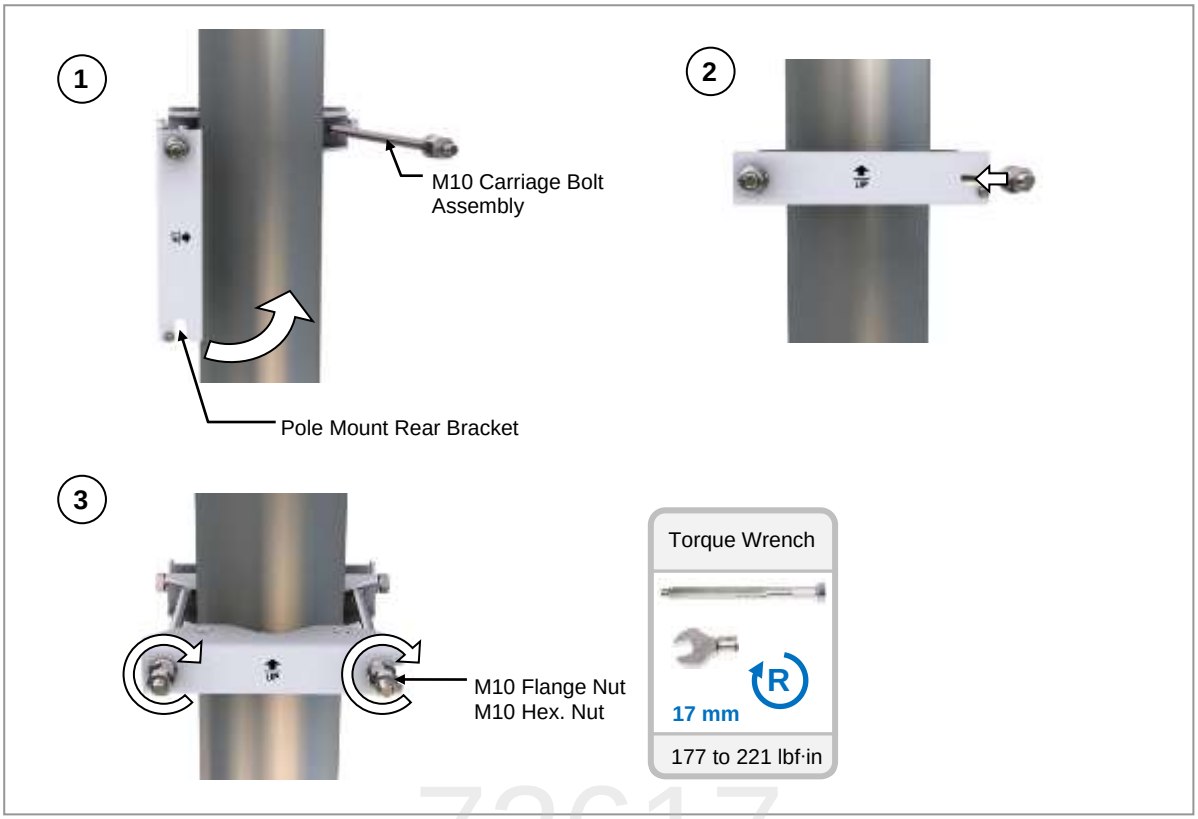

72617

Copyright © 2023, All Rights Reserved.

After fastening the left and right bolts, the length of the left and right bolt protrusions at the end of the bracket must be less than 0.39 in. (10 mm).

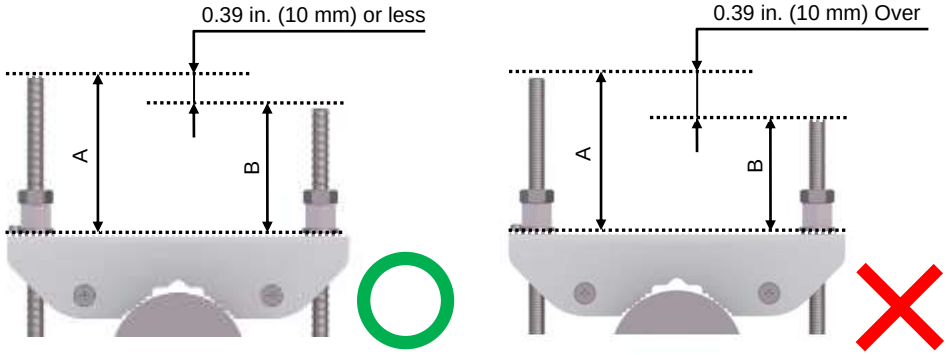

6 Confirm that the pole mount bracket assembly is level using a spirit level.

Figure 35. Up Tilting Pole Mount A Bracket Assembly Installation (3)

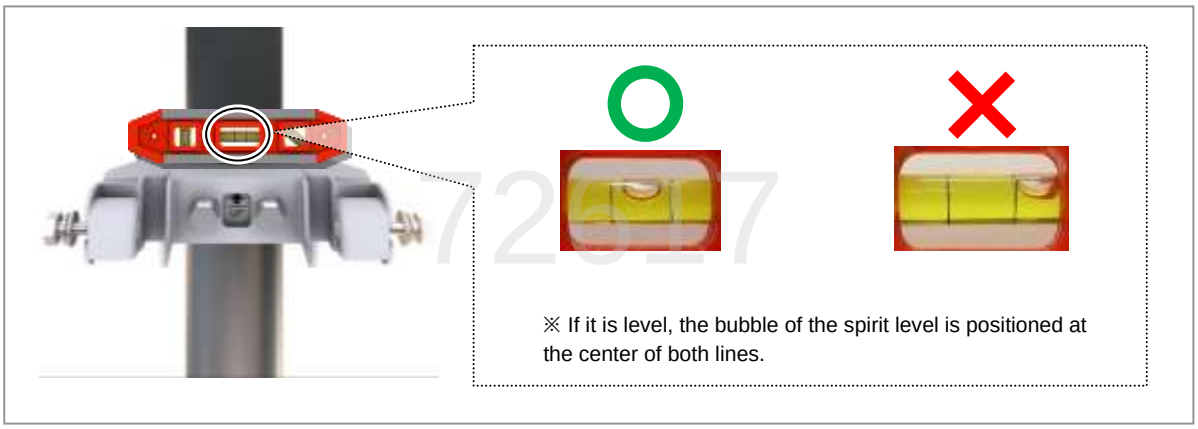

To install the up-tilting MMU to the pole, do the following:

1 Ensure that the items described in the following table are available.

Table 9. Parts and Tools for Up Tilting MMU Installation (Pole Type)

Category	Description	
Recommended Torque Value	M10 Flange Nut M10 Hex. Nut	177 to 221 lbf·in
Working Tools	• Torque Wrench (100 to 450 lbf·in) • Torque Wrench Spanner head (apply Hex. Head: 17 mm) • Spanner (Hex. Head: 17 mm)	

2 Align the MMU with the mounting position of the pole mount A bracket assembly installed on the pole.

Copyright © 2023, All Rights Reserved.

Interference may occur if the M10 hex bolt for installing the scissors bracket and the pole mount A bracket assembly is protruded.

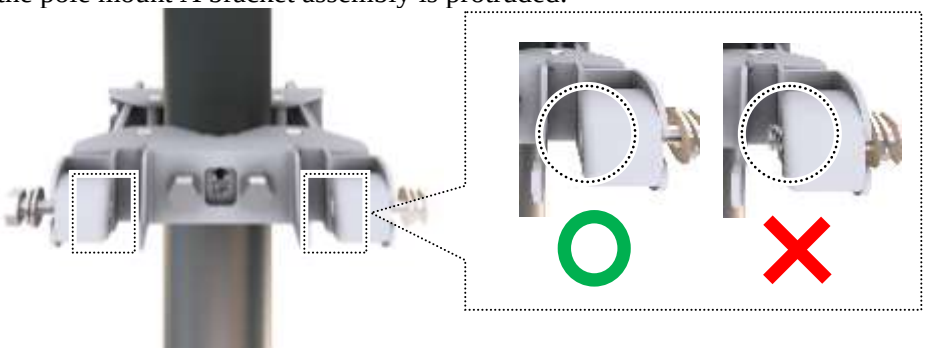

3 Place the pipe of the scissors bracket assembled at the bottom of the MMU in the mounting groove of the pole mount A bracket assembly.

72617

Copyright © 2023, All Rights Reserved.

Figure 36. Up Tilting Pole Type MMU Installation (1)

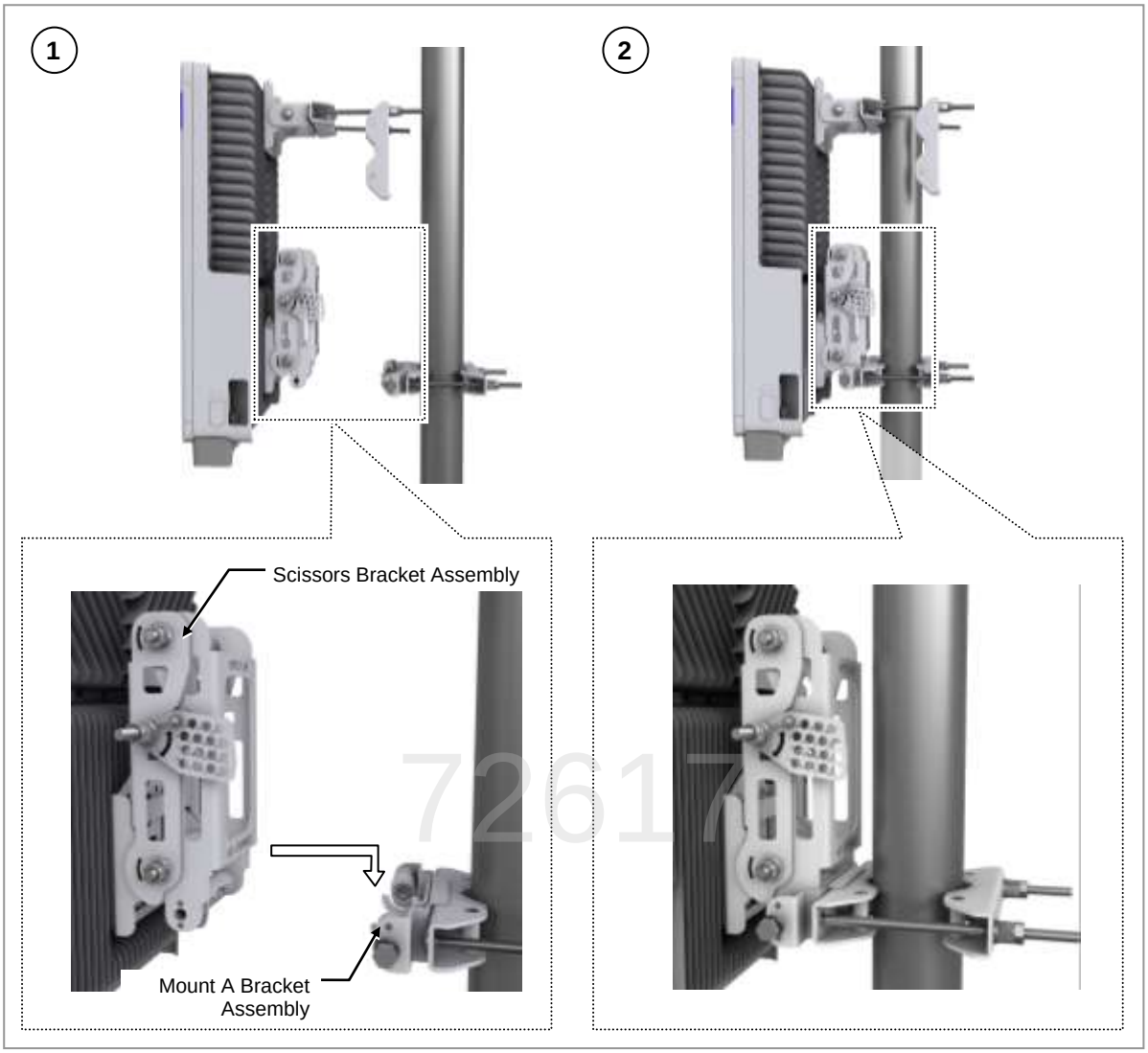

4 Horizontally place the pole mount rear bracket assembled in the top pole mount bracket assembly at the mounting position. Insert the unfastened M10 carriage bolt assembly into the mounting hole of the pole mount rear bracket. Then, attach the M10 flange nut and M10 hex nut fastened to the M10 carriage bolt assembly.

Copyright © 2023, All Rights Reserved.

Figure 37. Up Tilting Pole Type MMU Installation (2)

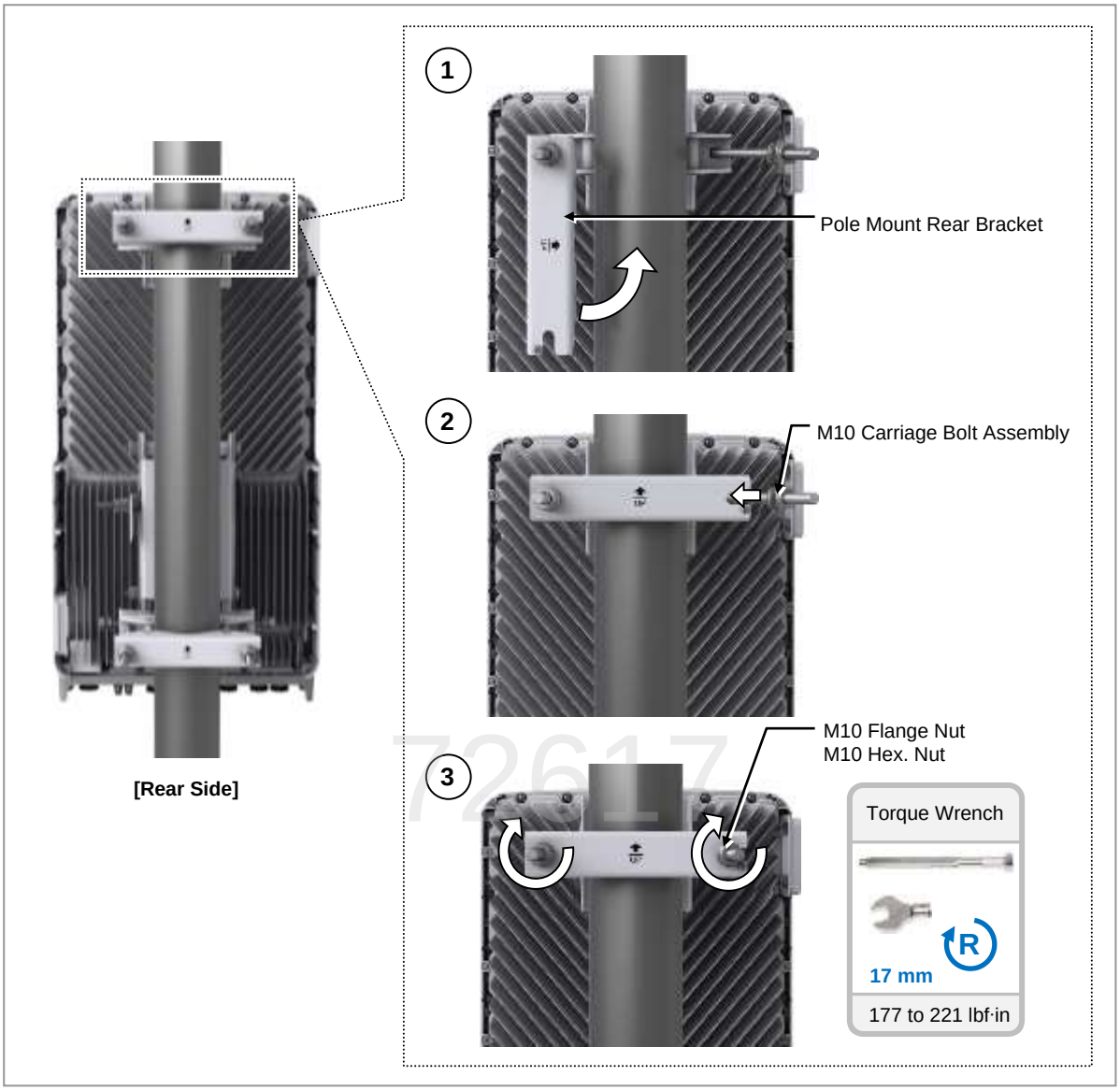

Copyright © 2023, All Rights Reserved.

After fastening the left and right bolts, the length of the left and right bolt protrusions at the end of the bracket must be less than 0.39 in. (10 mm).

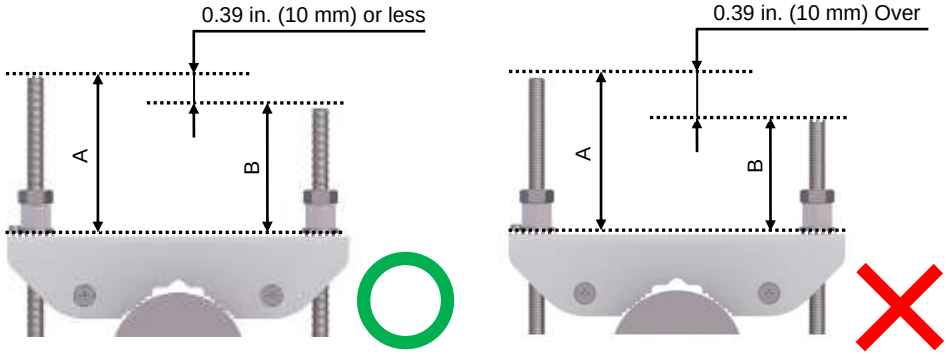

5 Install the scissors bracket by tightening the M10 hex bolt of the pole mount A bracket assembly.

Figure 38. Up Tilting Pole Type MMU Installation (3)

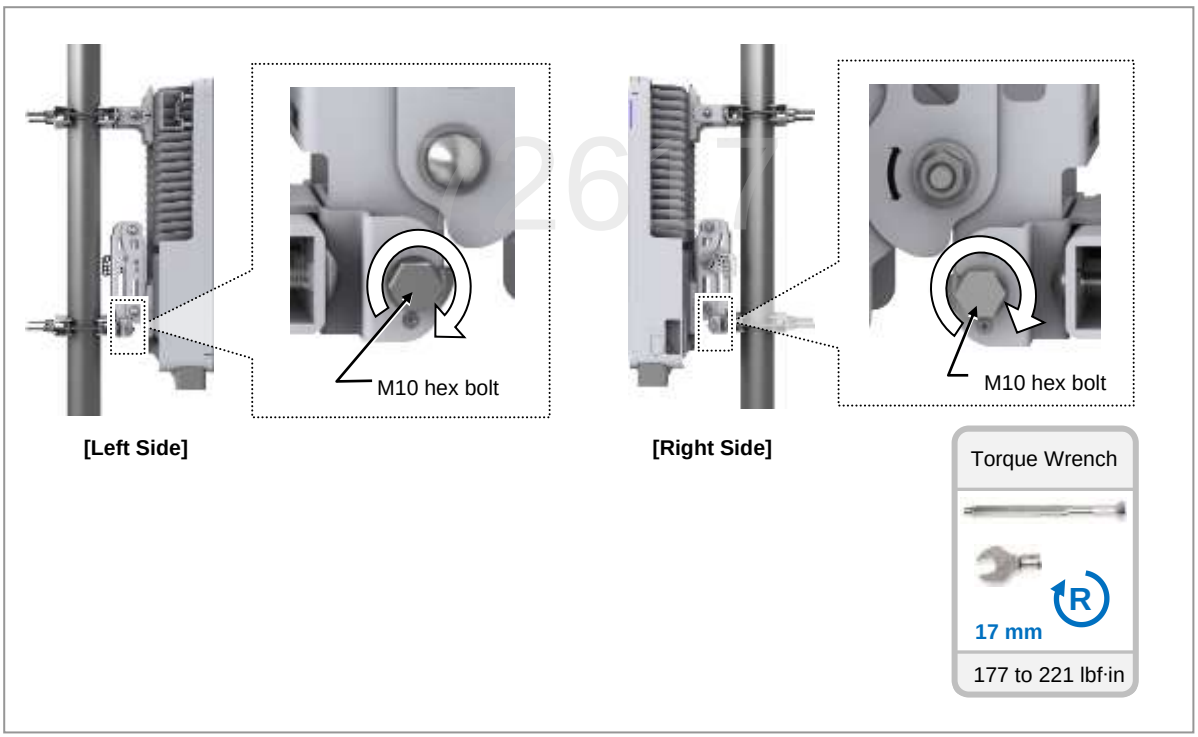

Copyright © 2023, All Rights Reserved.

Installing the Wall Type

There are two installation types (installation for the up-tilting and installation for the down-tilting) to install the MMU on a wall.

[Down Tilting]

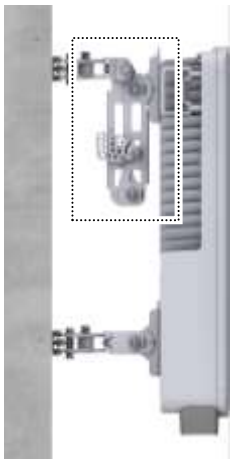

[Left View]

[Up Tilting]

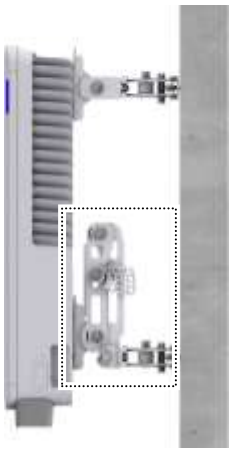

[Right View]

Marking and Drilling

72617

To mark on a wall, do the following:

1 Ensure that the items described in the following table are available.

Table 10. Tools for Marking

Category	Description
Working Tools	• Tape Measure • Permanent Maker • Level

To mount the system on a wall, perform the leveling test by referring to System Leveling to check the positions marked as horizontal or vertical before drilling. If the result displays that they are not horizontal or vertical, modify the marking positions.

When the position where the system is to be placed is determined, place the system in that position, and then mark the positions where anchor bolts are to be inserted. It reduces the marking error range.

Copyright © 2023, All Rights Reserved.

2 Check the distance between the locations for installing the MMU and the anchor bolt hole.

Figure 39. MMU Marking Dimensions_Wall Type

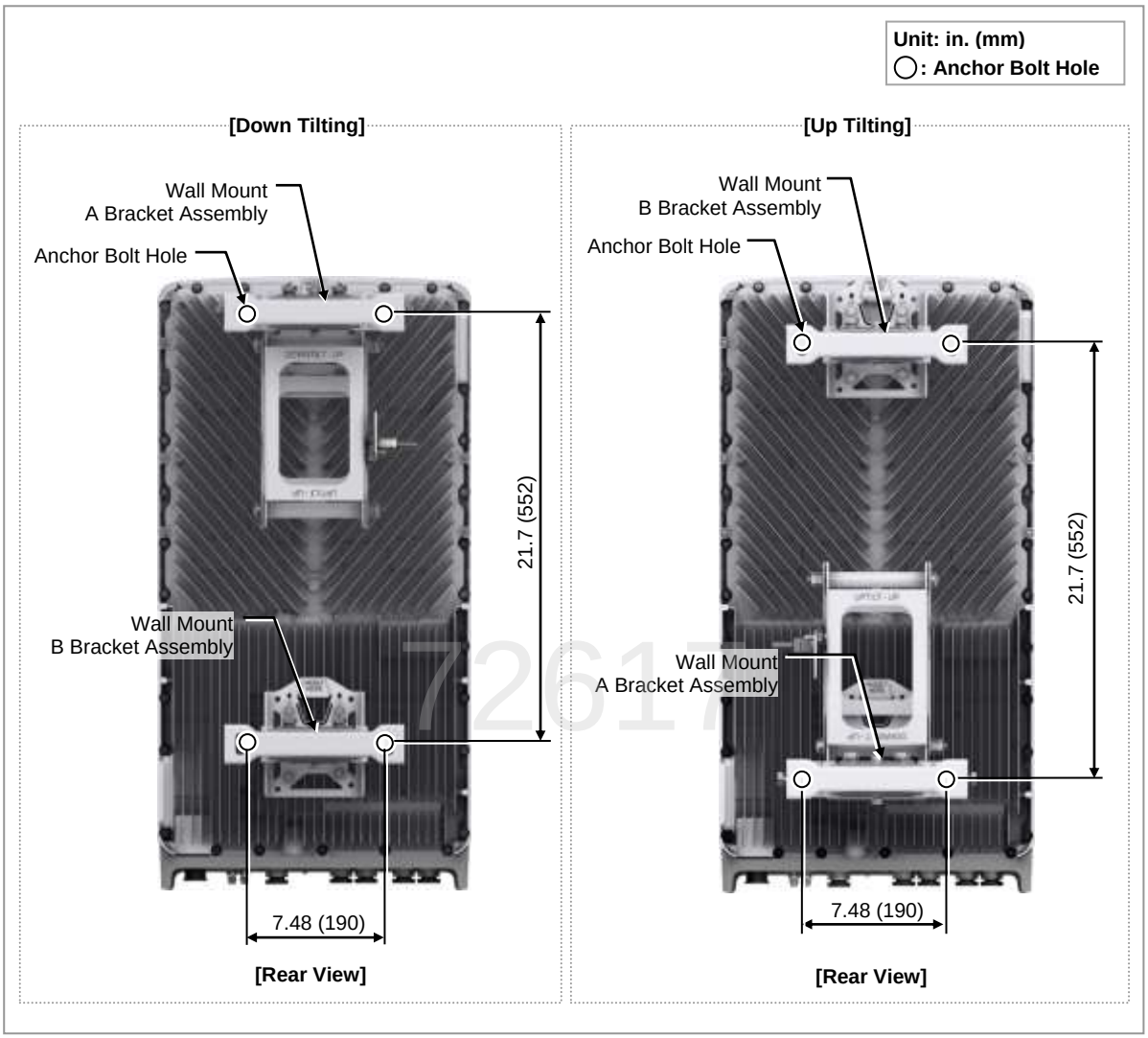

3 Place a marking paper at the installation position, check the level status using a level, and adjust the level of marking paper.

4 If the level status is normal, mark the anchor bolt holes on a wall.

Copyright © 2023, All Rights Reserved.

Figure 40. Marking

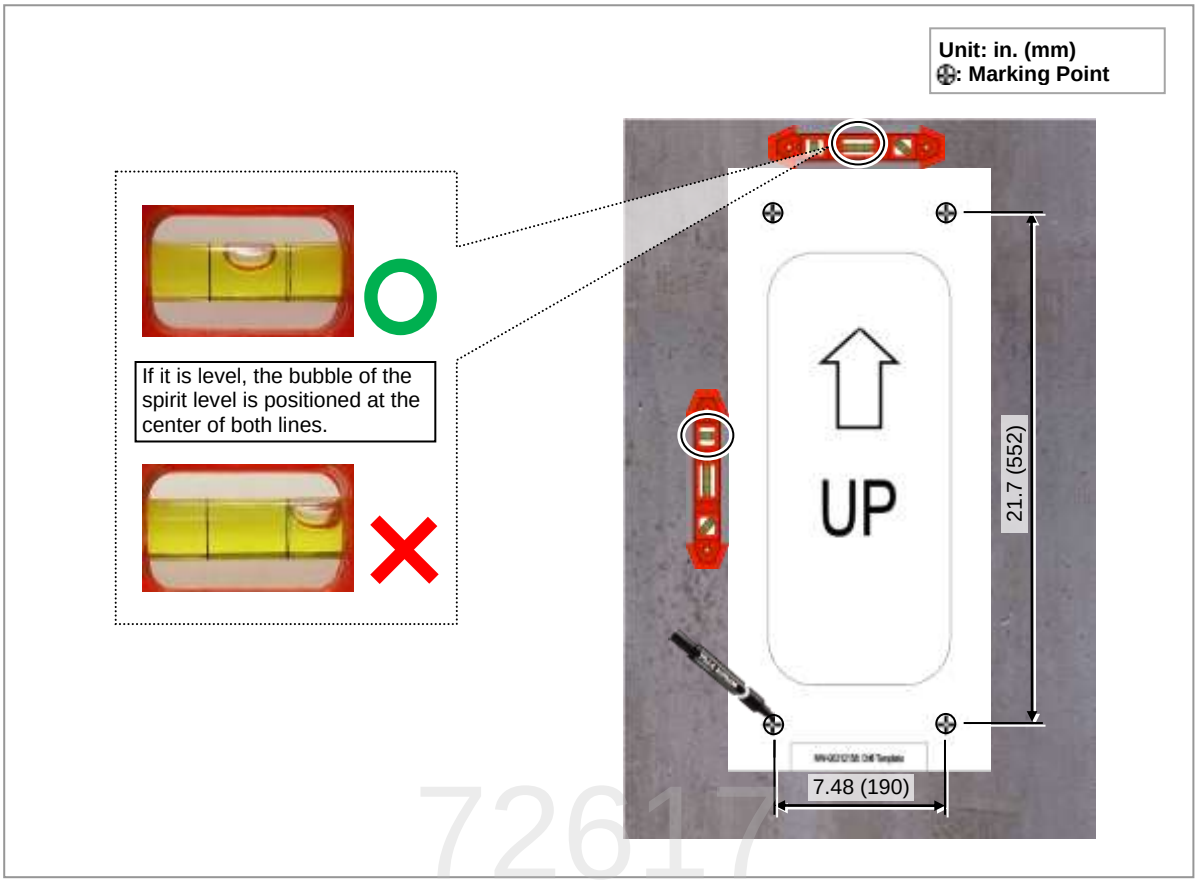

To drill an anchor hole, do the following:

1 Ensure that the items described in the following table are available.

Table 11. Parts and Tools for Drilling and Anchoring

Category	Description	
Parts	M10 Set Anchor Assembly	4 EA
Working Tools	• Hammer Drill • Concrete Drill Bit (0.55 in. (14 mm)) • Vacuum Cleaner • Hammer • Anchor Punch (for M10 Set Anchor)	

Copyright © 2023, All Rights Reserved.

Table 12. Anchor Bolt Drill Bits and Hole Depth

Category	Anchor Bolt	Drill Bits	Hole Depth
Wall Type	M10	0.55 in. (14 mm)	1.73 in. (44 mm)

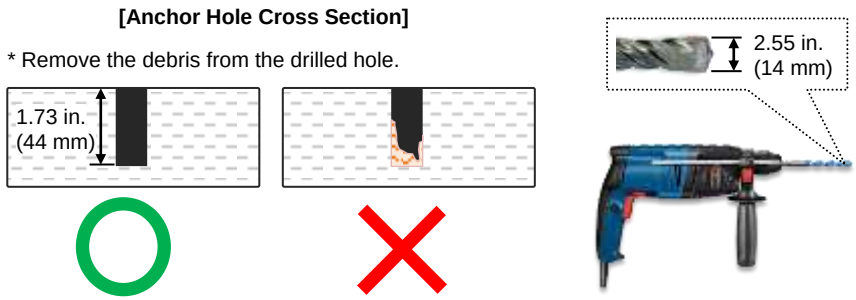

2 Drill anchor holes at the marked points by removing dust from the holes using a cleaner.

The worker may drill after drill template is removed or remove the drill template after drilling according to the installation site conditions.

3 Insert set anchor to the drilled hole.

Figure 41. Drilling & Anchoring

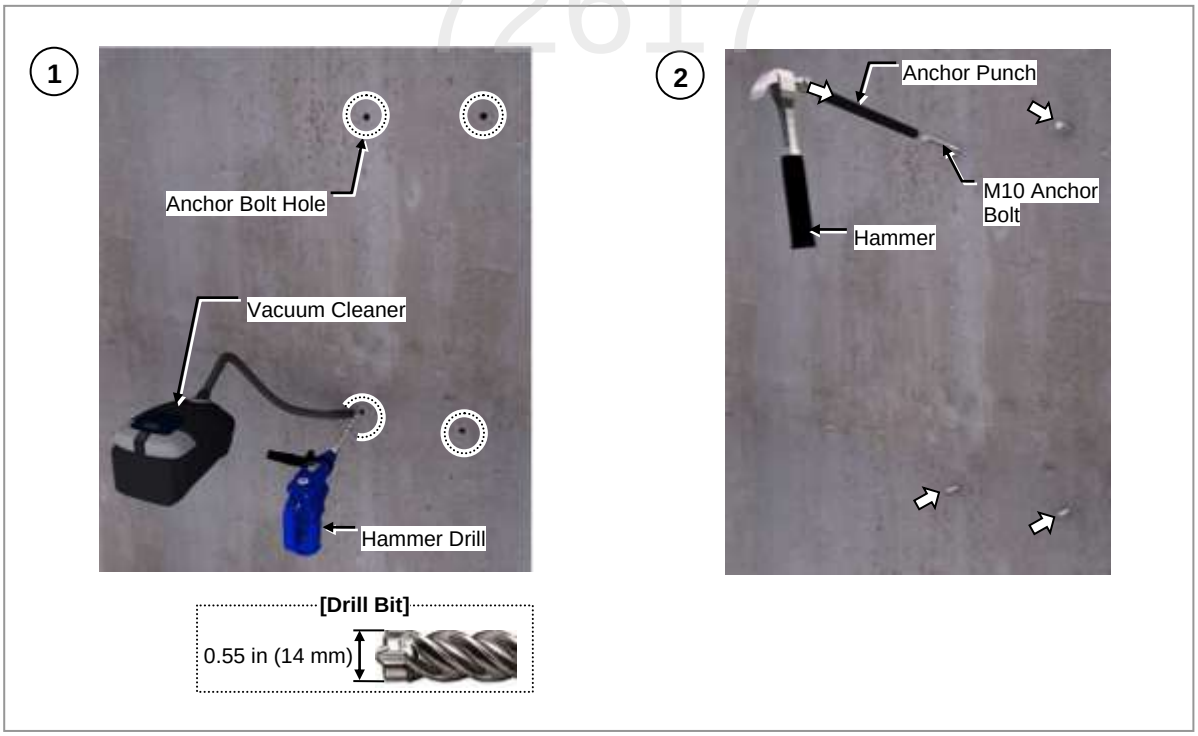

Copyright © 2023, All Rights Reserved.

Down Tilting MMU Installation (Wall Type)

To install the Down Tilting Bracket (Wall Type), do the following:

1 Ensure that the items described in the following table are available.

Table 13. Parts and Tools for Assembling the Down-Tilting Bracket (Wall Type)

Category	Description	
Parts	Scissors Bracket Assembly	1 EA
	Wall Mount B Bracket Assembly	1 EA
Recommended Torque Value	M10 Flange Nut M10 Hex. Nut	177 to 221 lbf·in
Working Tools	• Torque Wrench (100 to 450 lbf·in) • Torque Wrench Spanner head (apply Hex. Head: 17 mm) • Spanner (Hex. Head: 17 mm) • Level	

2 Remove the fastening materials from the unit bracket of the scissors bracket assembly.

Figure 42. Down Tilting Wall Type Bracket Installation (1)

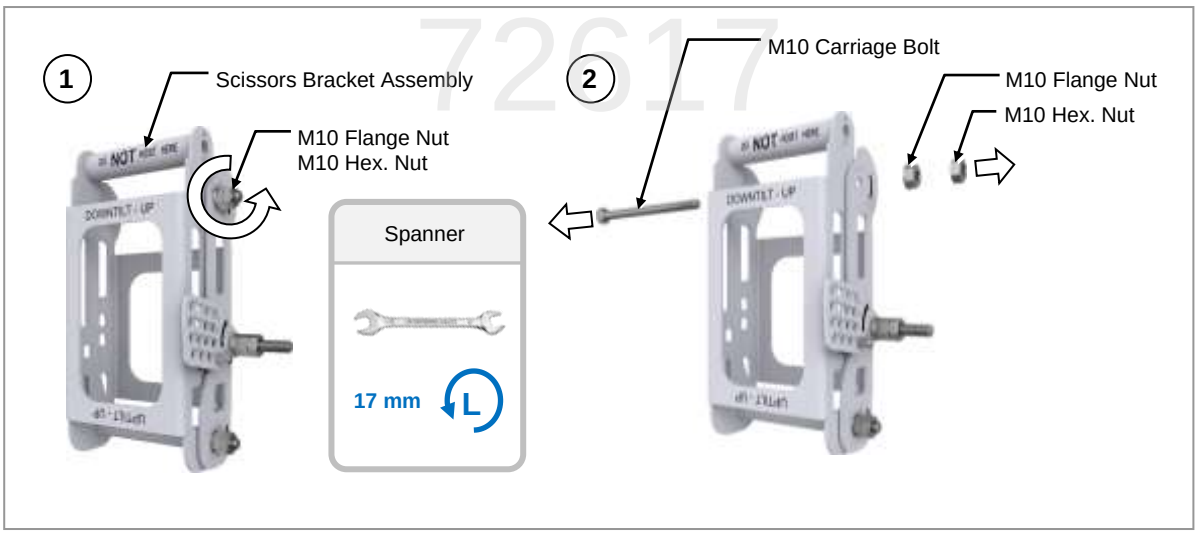

3 Align the scissors bracket assembly with the top installation holes of the unit bracket.

4 Install the unit bracket and scissors bracket using fasteners.

Copyright © 2023, All Rights Reserved.

Position the scissors bracket assembly so the ‘DOWN TILT-UP’ silk printing points upward.

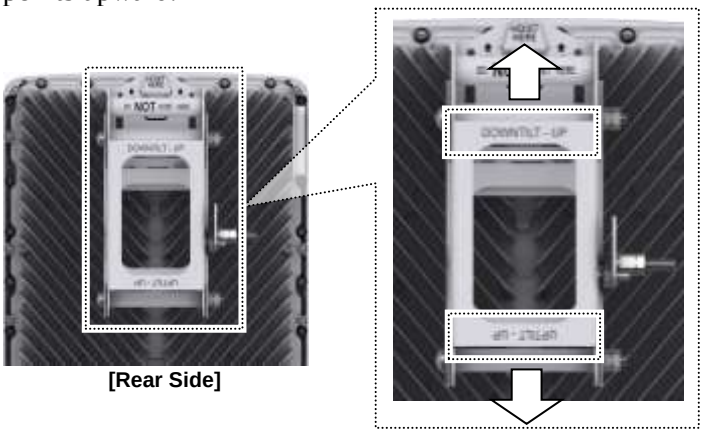

[Rear Side]

72617

Copyright © 2023, All Rights Reserved.

Figure 43. Down Tilting Wall Type Bracket Installation (2)

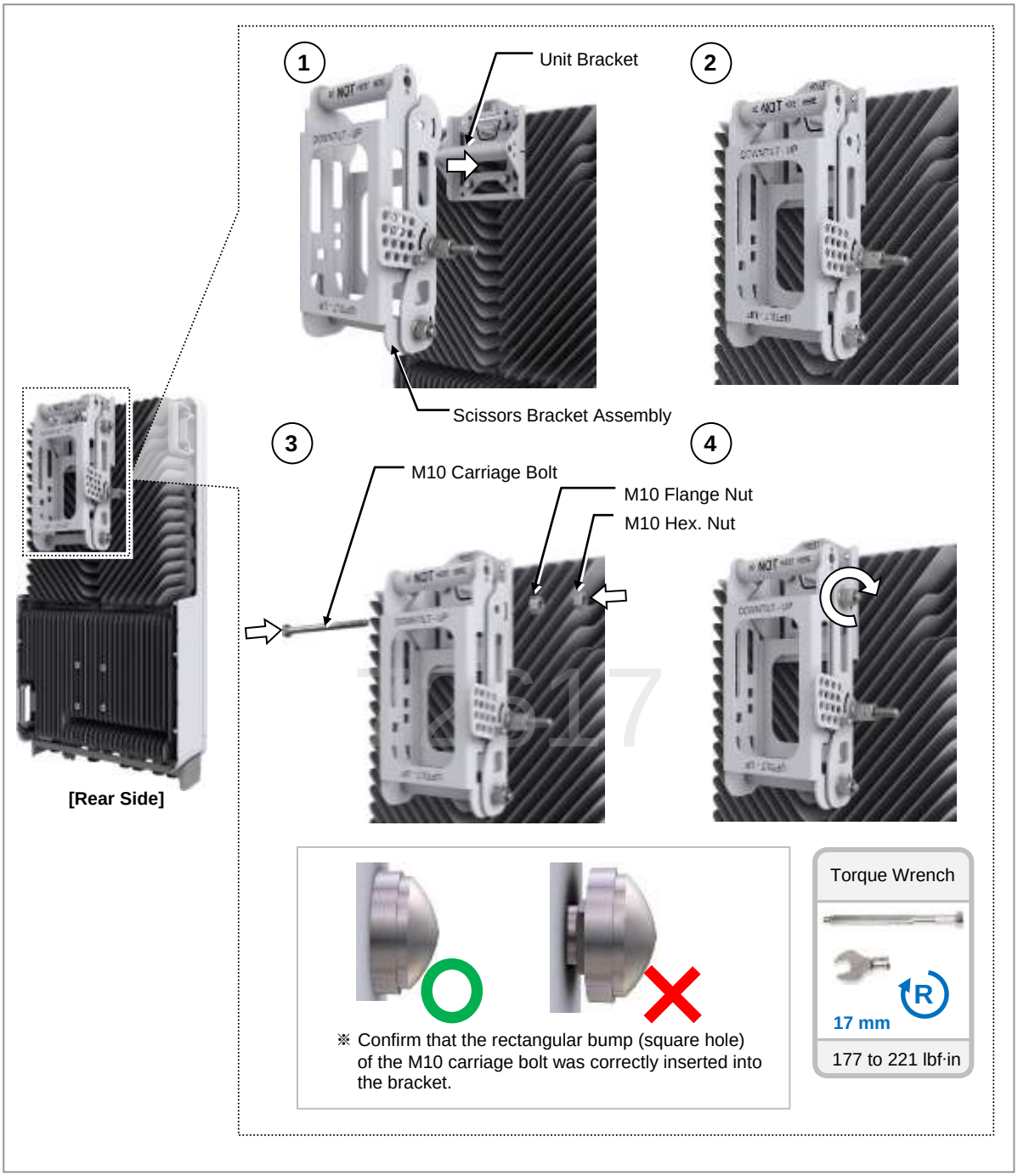

5 Remove the fastening materials from the unit bracket of the wall mount B bracket assembly.

Copyright © 2023, All Rights Reserved.

Figure 44. Down Tilting Wall Type Bracket Installation (3)

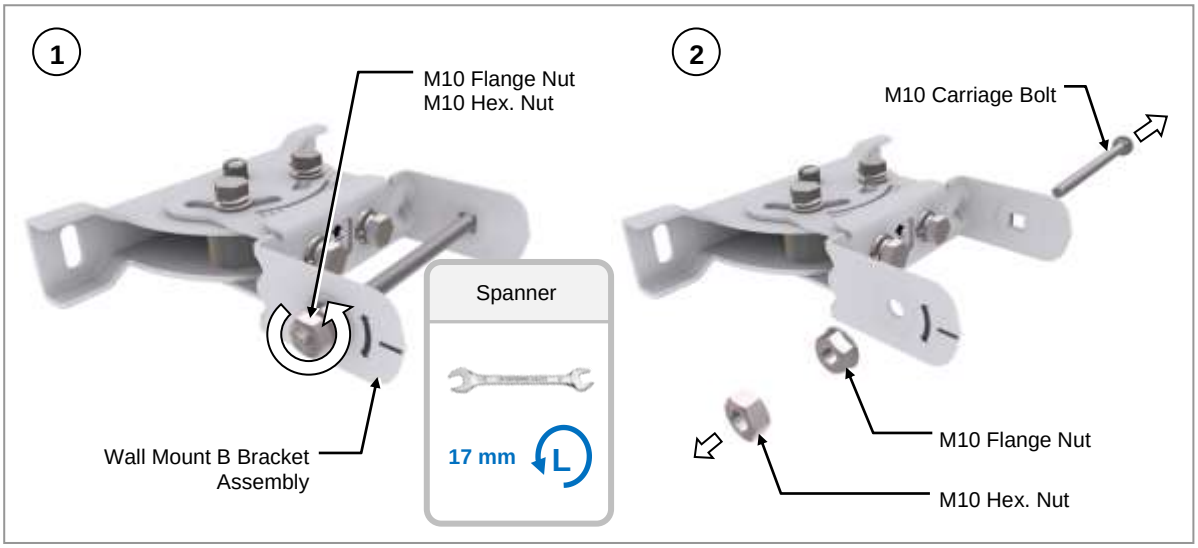

6 Align the wall mount B bracket assembly with the bottom mounting holes of the unit bracket.

Figure 45. Down Tilting Wall Type Bracket Installation (4)

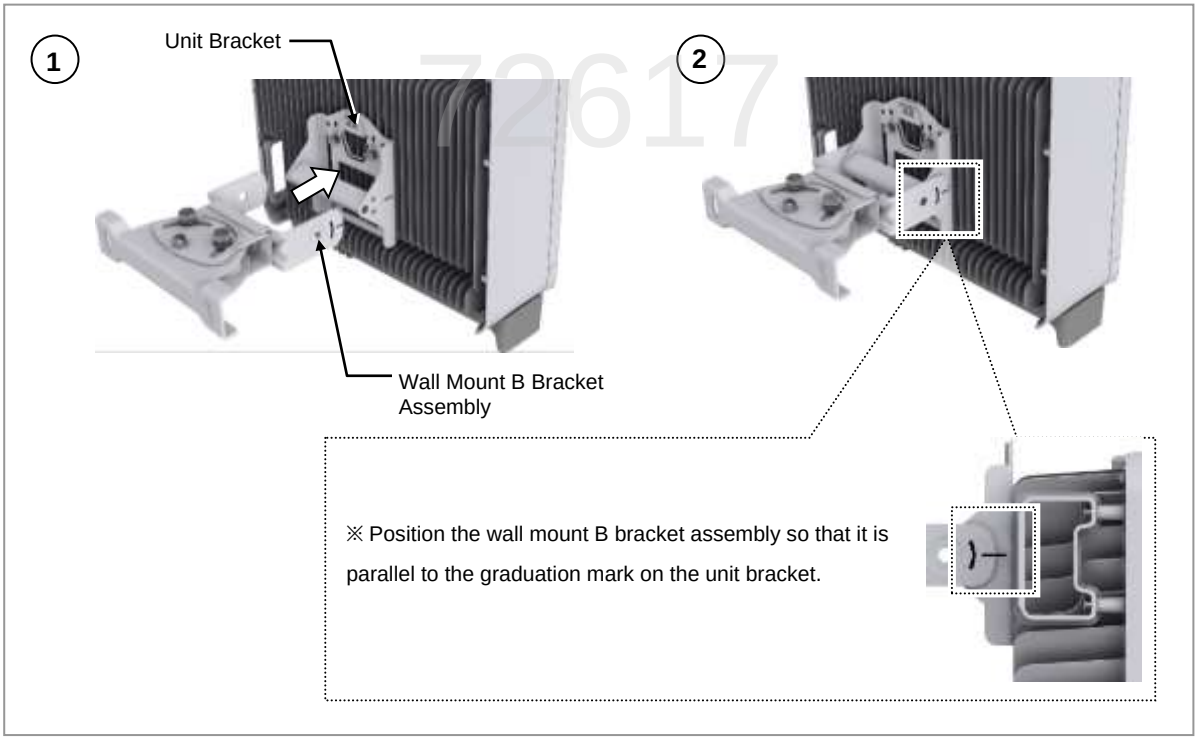

Copyright © 2023, All Rights Reserved.

The heads of the M10 hex bolts attached to the wall mount B bracket assembly should face upwards.

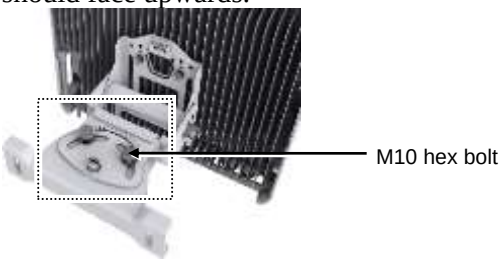

7 Install the unit bracket and wall mount B bracket assembly using fasteners.

Figure 46. Down Tilting Wall Type Bracket Installation (5)

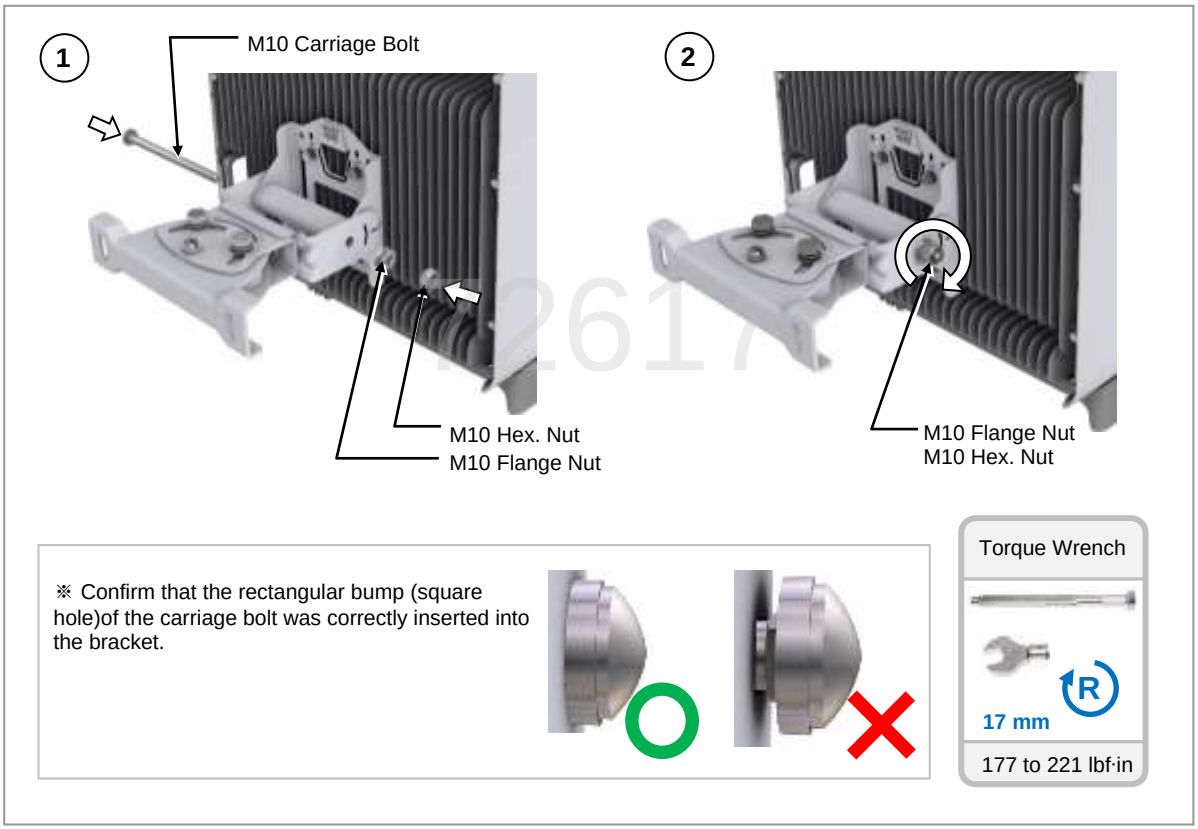

To install the Wall Mount A Bracket Assembly to the wall, do the following:

1 Ensure that the items described in the following table are available.

Copyright © 2023, All Rights Reserved.

Table 14. Parts and Tools for Installing the Wall Mount A Bracket Assembly

Category	Description	
Parts	Wall Mount A Bracket Assembly	1 EA
Recommended Torque Value	M10 Hex. Nut	177 to 221 lbf·in
Working Tools	• Torque Wrench (100 to 450 lbf·in) • Torque Wrench Spanner head (apply Hex. head: 17 mm) • Spanner (Hex. Head: 17 mm)	

2 Place the wall mount A bracket assembly on the mounting position of the anchor bolt.

Figure 47. Down Tilting Wall Mount A Bracket Assembly Installation (1)

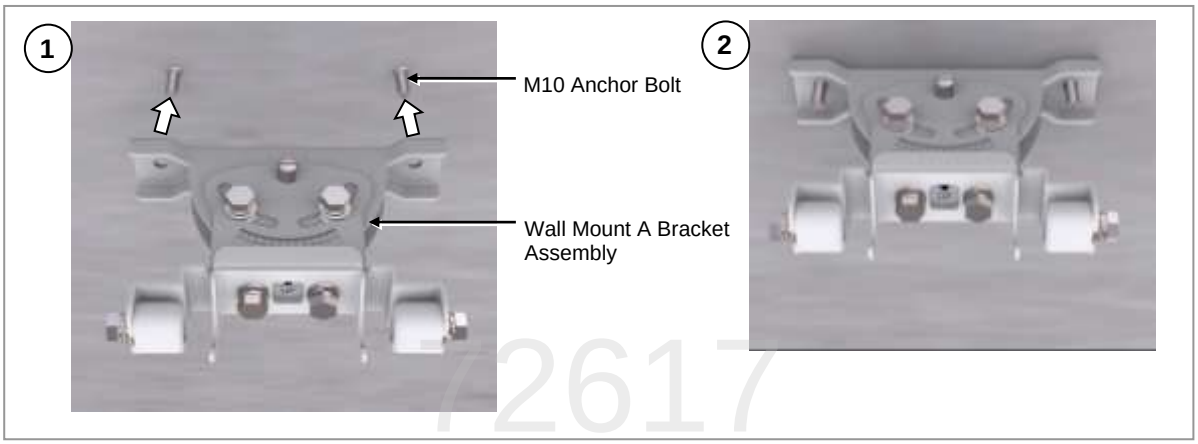

3 Mount the wall mount A bracket assembly using the fastening materials.

Copyright © 2023, All Rights Reserved.

Figure 48. Down Tilting Wall Mount A Bracket Assembly Installation (2)

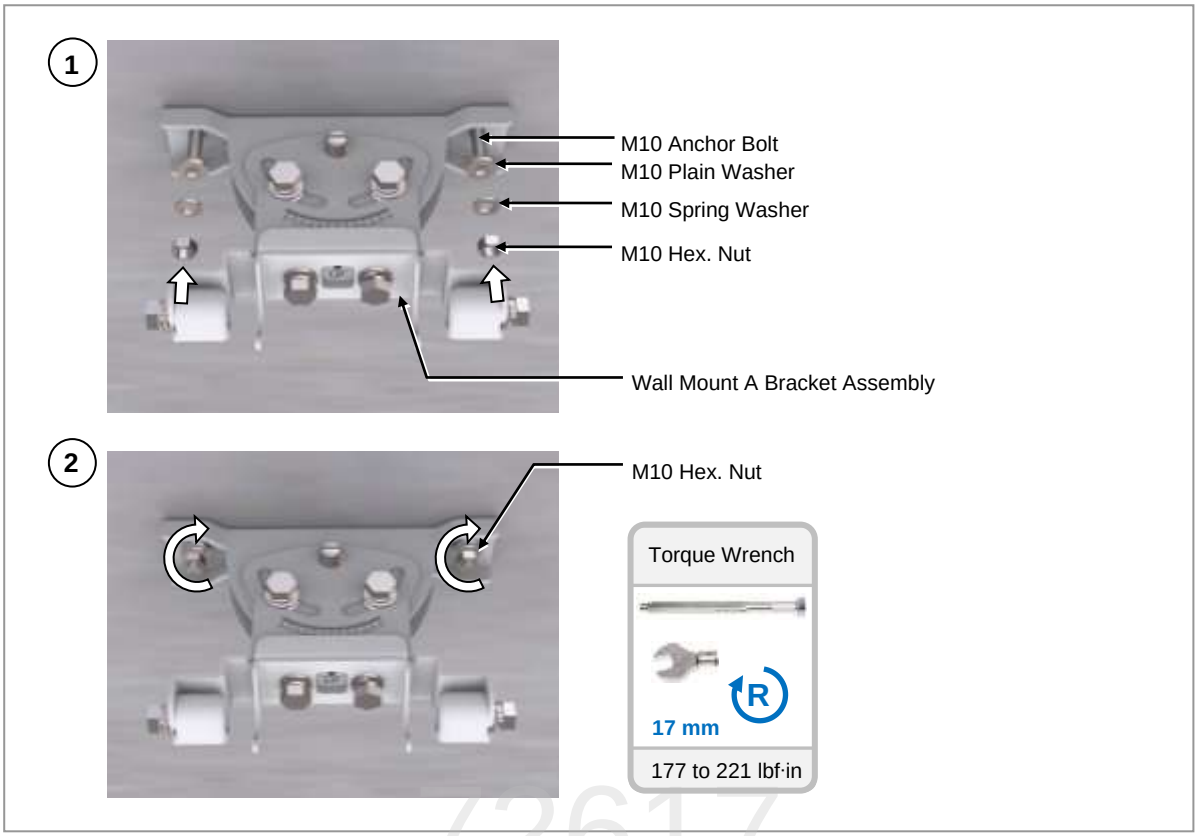

4 Confirm that the wall mount A bracket assembly is level using a spirit level.

Figure 49. Down Tilting Wall Mount A Bracket Assembly Installation (3)

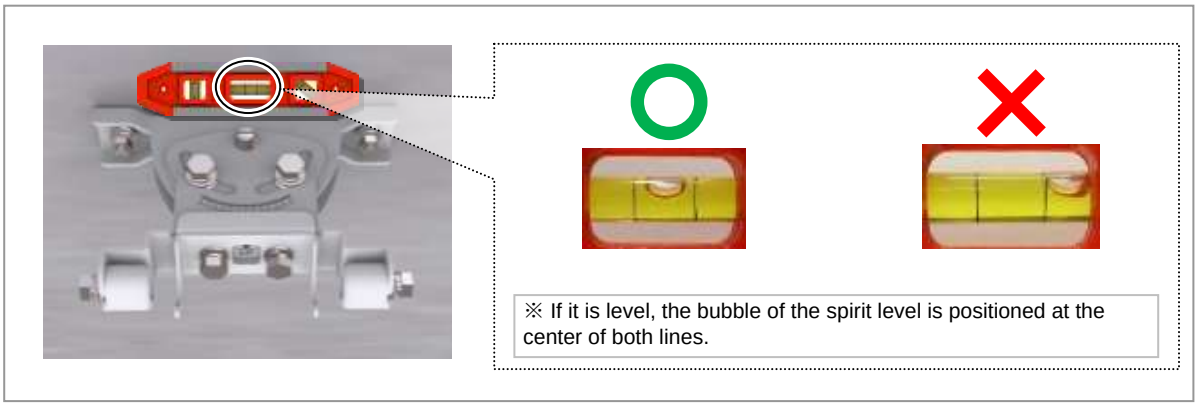

When mounting the wall mount A bracket assembly, you must perform a levelness test for the bracket, as only small adjustments can be made after installation.

Copyright © 2023, All Rights Reserved.

To install the Down Tilting MMU to the wall, do the following:

1 Ensure that the items described in the following table are available.

Table 15. Parts and Tools for Down Tilting MMU Fastening (Wall Type)

Category	Description	
Recommended Torque Value	M10 hex bolt M10 Hex. Nut	177 to 221 lbf·in
Working Tools	• Torque Wrench (100 to 450 lbf·in) • Torque Wrench Spanner head (apply Hex. head: 17 mm) • Spanner (Hex. Head: 17 mm)	

2 Align the MMU to the installation position of the wall mount A bracket assembly attached to the wall.

3 Place the pipe of the scissors bracket assembly assembled at the top of the MMU in the mounting groove of the wall mount A bracket assembly.

Interference may occur if the M10 hex bolt for installing the scissors bracket and the Wall mount A bracket assembly is protruded.

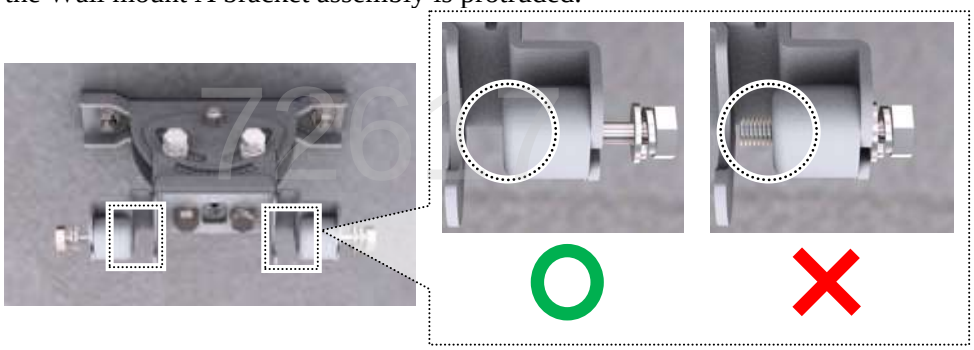

Copyright © 2023, All Rights Reserved.

Figure 50. Down Tilting Wall Type MMU Installation (1)

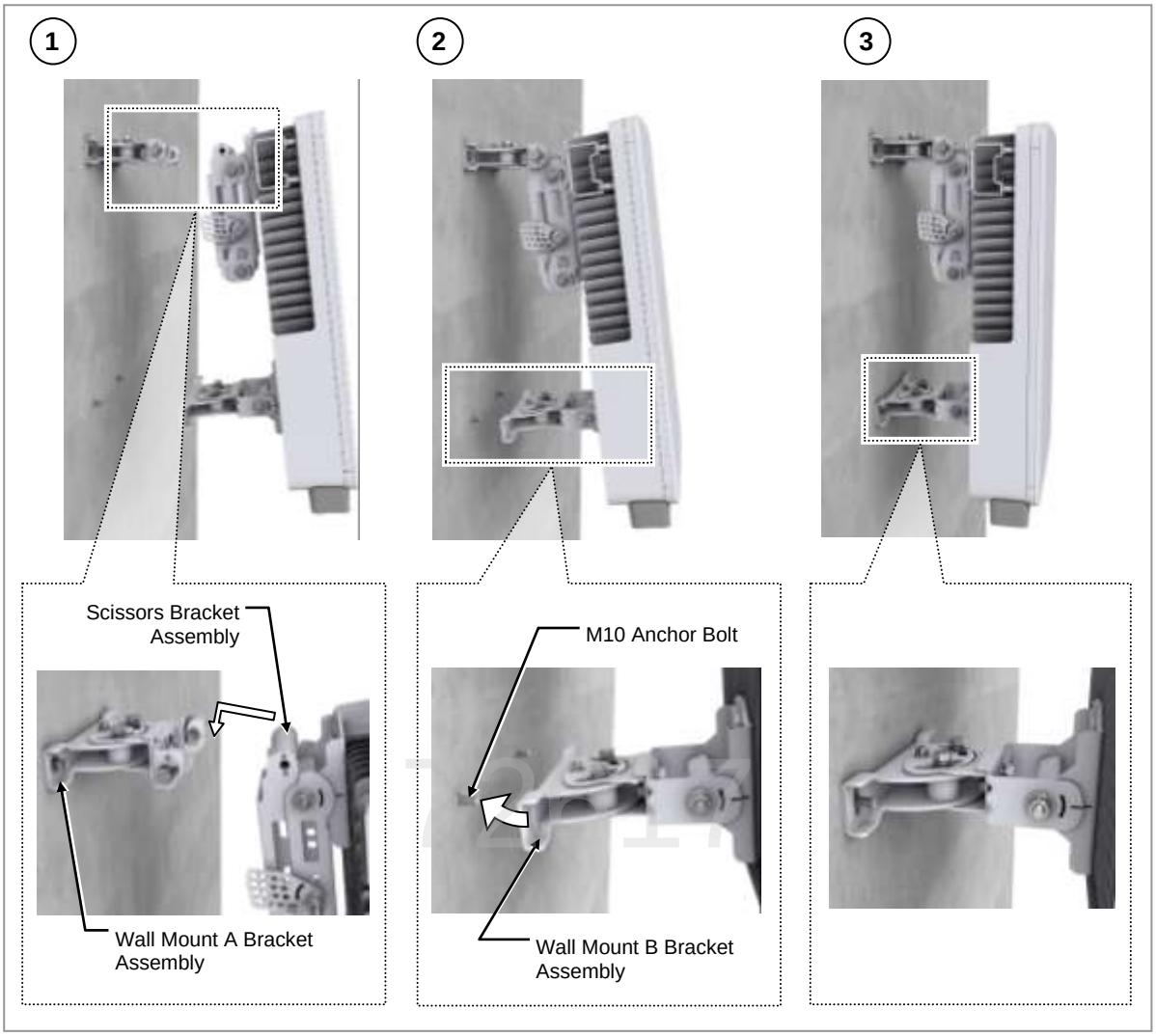

4 Install the scissors bracket by tightening the M10 hex bolt of the wall mount A bracket assembly.

Copyright © 2023, All Rights Reserved.

Figure 51. Down Tilting Wall Type MMU Installation (2)

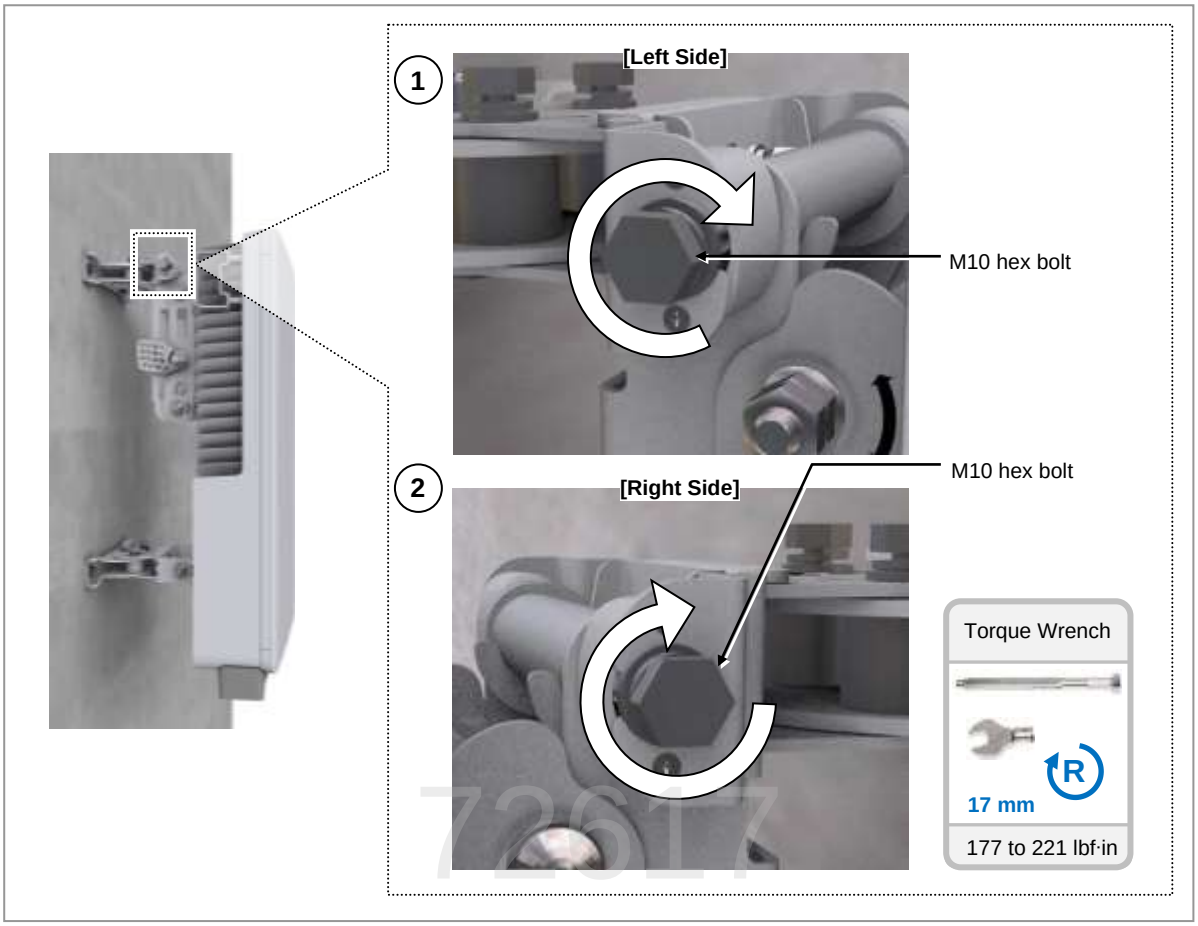

5 Mount the wall mount B bracket assembly to the anchor bolt using the fastening materials.

Copyright © 2023, All Rights Reserved.

Figure 52. Down Tilting Wall Type MMU Installation (3)

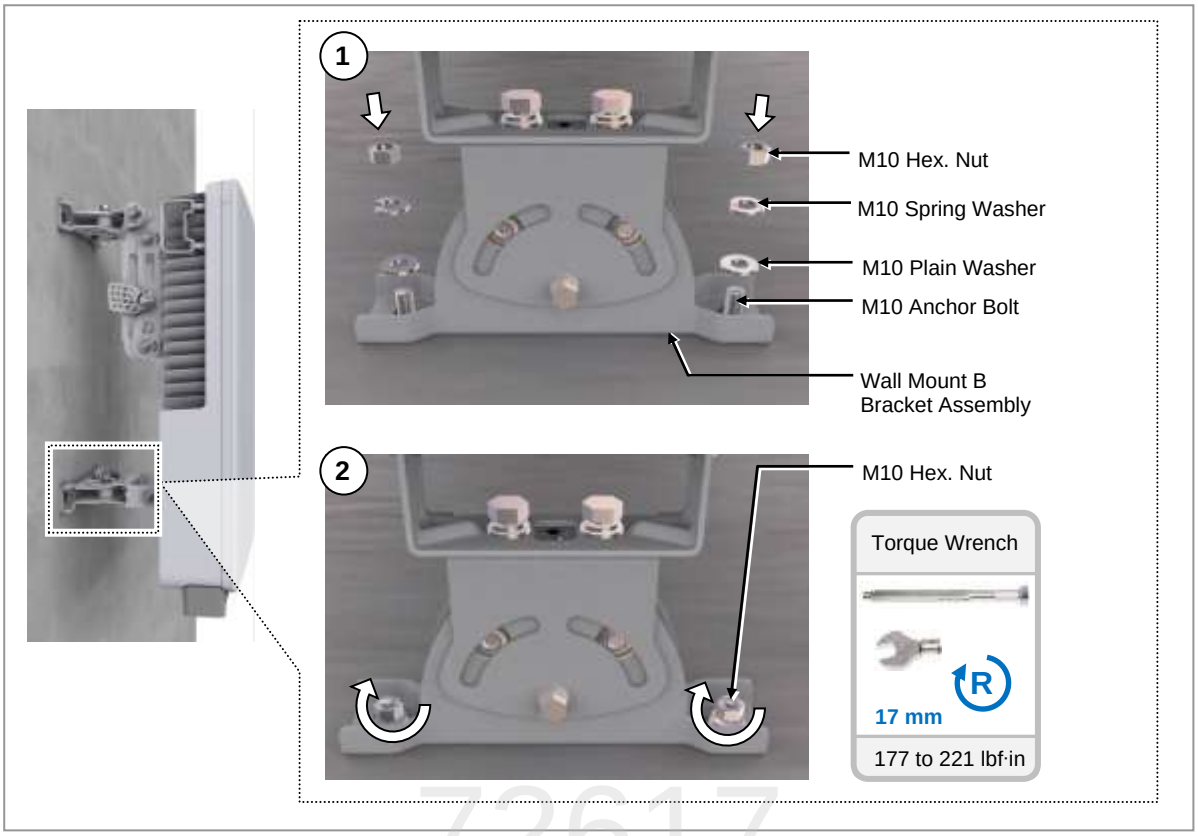

72617

Copyright © 2023, All Rights Reserved.

Up Tilting MMU Installation (Wall Type)

The scissors bracket assemblies must be swapped with each other to tilt the MMU upward.

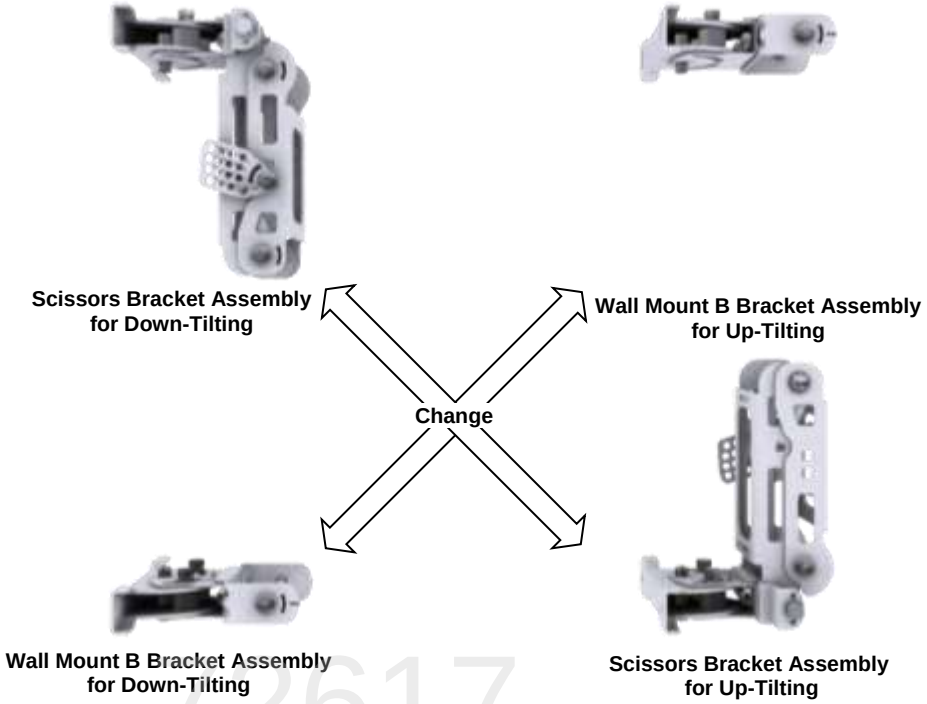

72617

To install the Up Tilting Bracket (Wall Type), do the following:

1 Ensure that the items described in the following table are available.

Table 16. Parts and Tools for Assembling the Up Tilting Bracket (Wall Type)

Category	Description	
Parts	Scissors Bracket Assembly	1 EA
	Wall Mount B Bracket Assembly	1 EA
Recommended Torque Value	M10 Flange Nut M10 Hex. Nut	177 to 221 lbf·in
Working Tools	• Torque Wrench (100 to 450 lbf·in) • Torque Wrench Spanner head (apply Hex. Head: 17 mm) • Spanner (Hex. Head: 17 mm)	

2 Remove the fastening materials from the unit bracket of the scissors bracket assembly.

Copyright © 2023, All Rights Reserved.

Figure 53. Up Tilting Wall Type Bracket Installation (1)

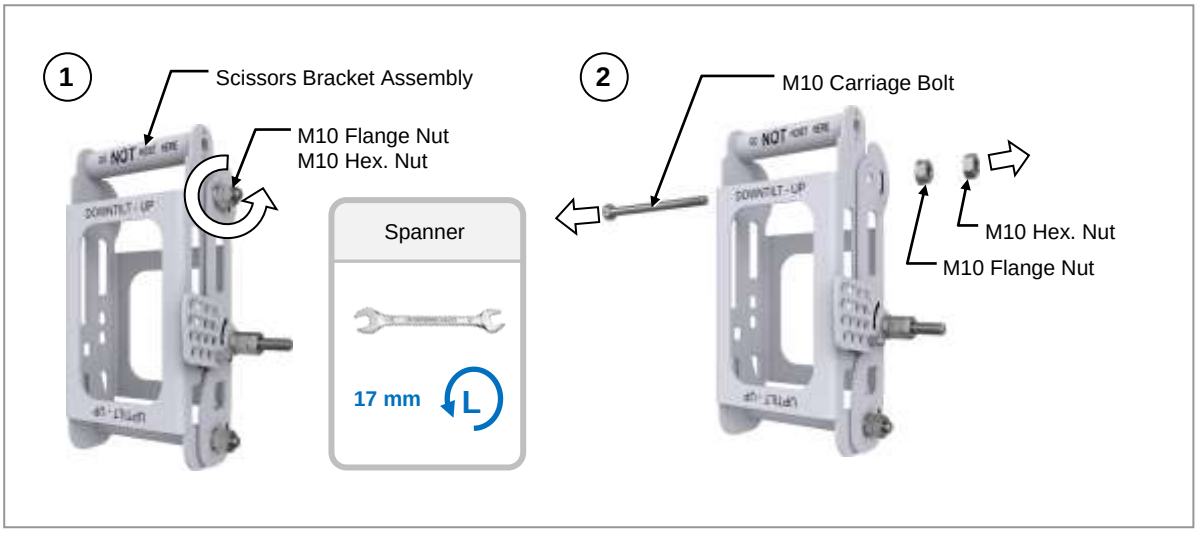

3 Align the scissors bracket with the installation holes of the unit bracket.

4 Install the unit bracket and scissors bracket using fasteners.

Position the scissors bracket so the ‘UP TILT-UP’ silk printing points upward.

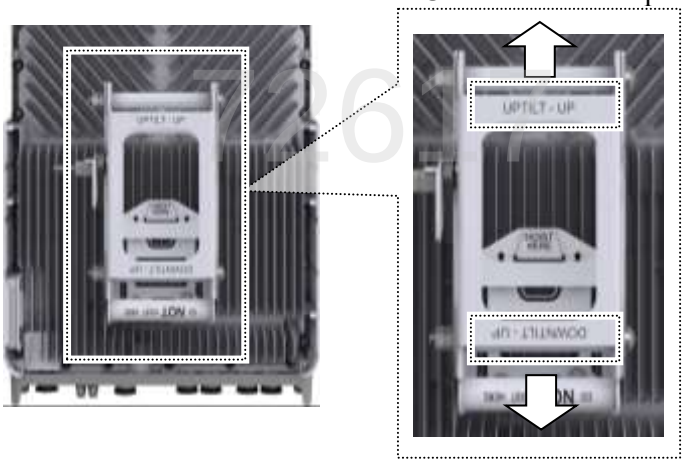

Copyright © 2023, All Rights Reserved.

Figure 54. Up Tilting Wall Type Bracket Installation (2)

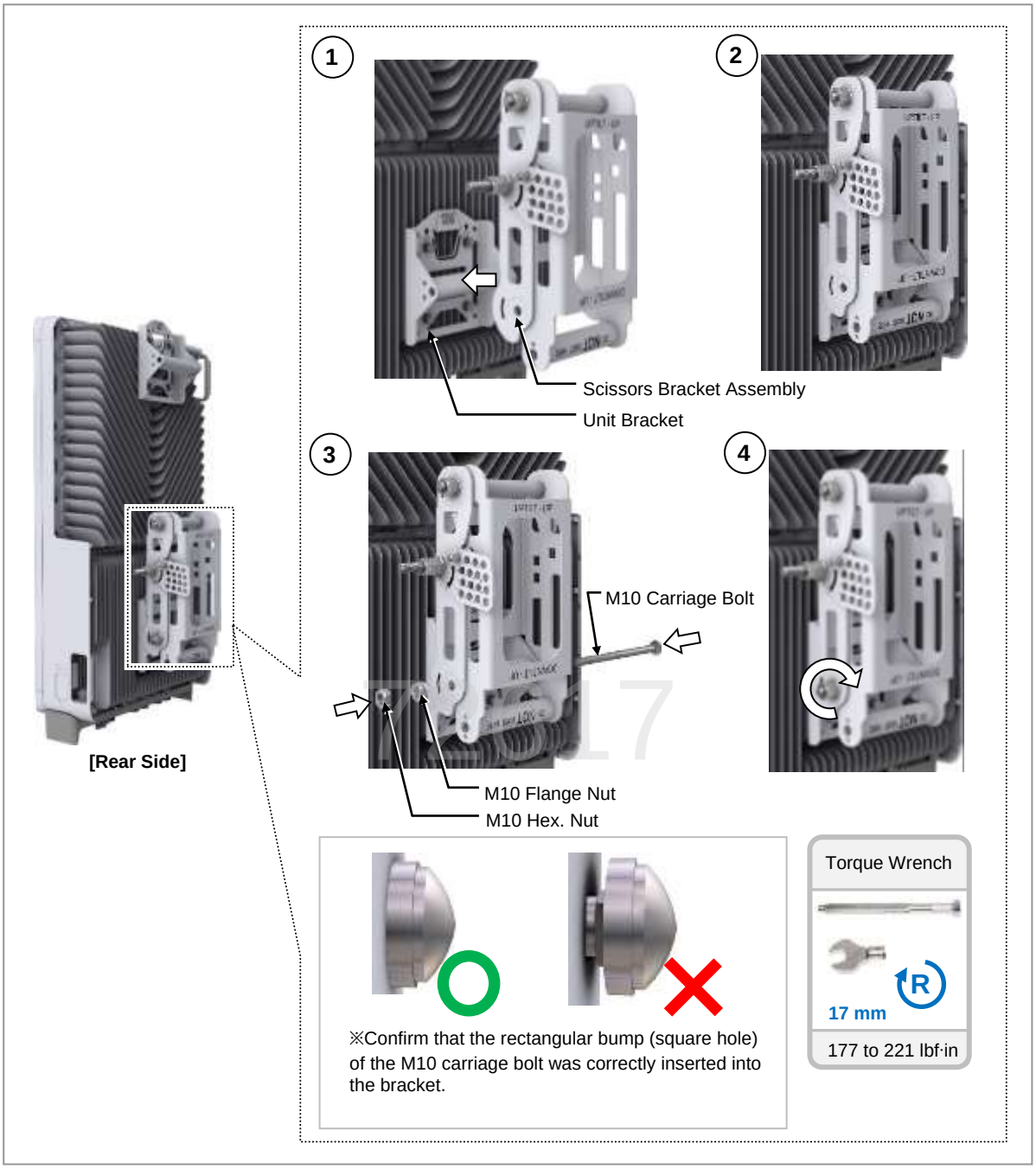

5 Remove the fastening materials from the unit bracket of the wall mount B bracket assembly.

Copyright © 2023, All Rights Reserved.

Figure 55. Up Tilting Wall Type Bracket Installation (3)

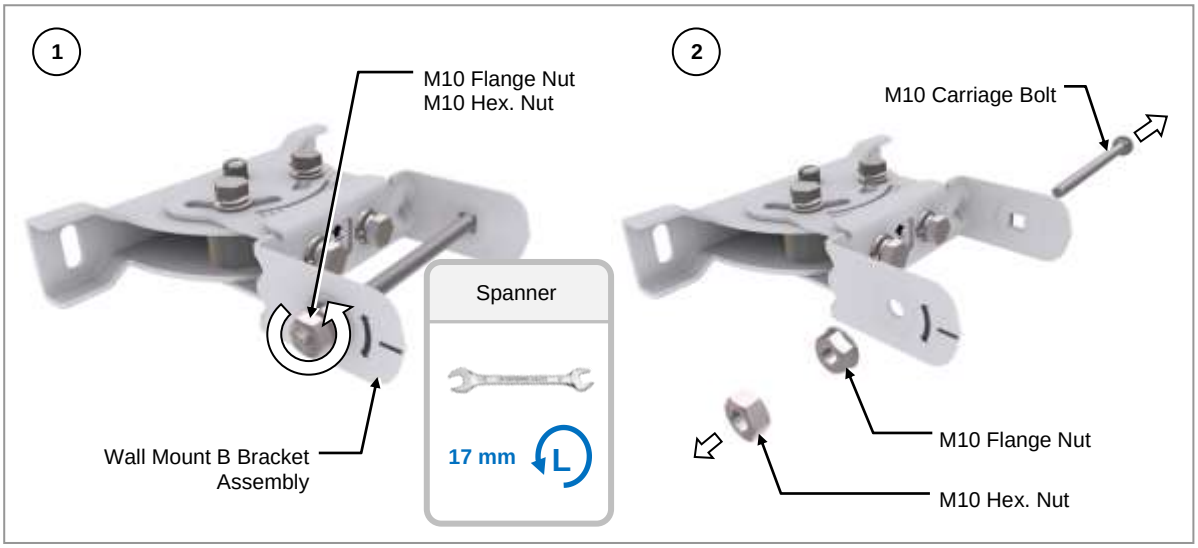

6 Align the wall mount B bracket assembly with the mounting holes of the unit bracket.

Figure 56. Up Tilting Wall Type Bracket Installation (4)

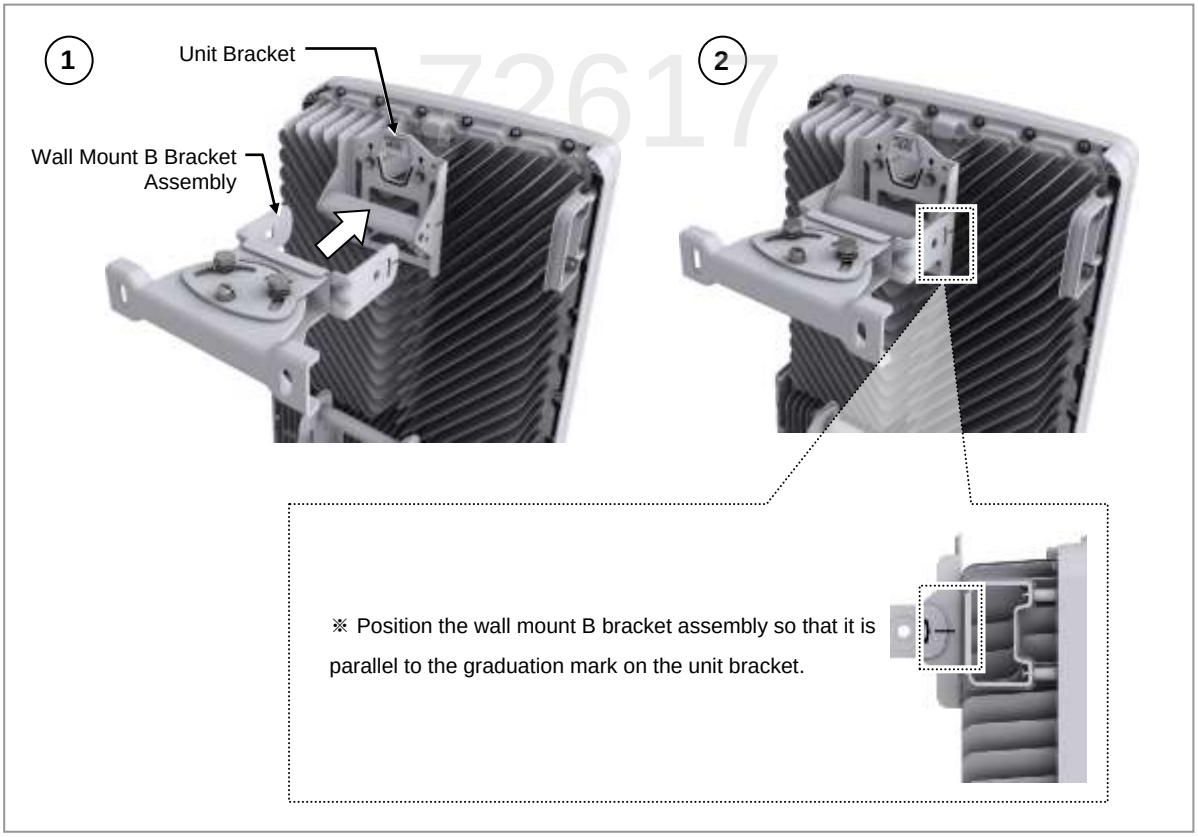

Copyright © 2023, All Rights Reserved.

The heads of the M10 hex bolt attached to the wall mount B bracket assembly should face upwards.

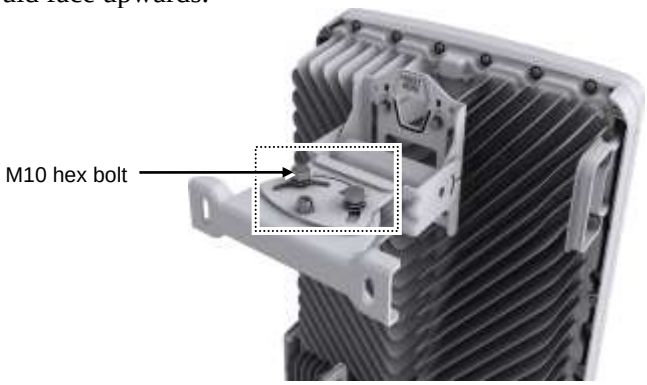

7 Attach the fastening materials removed from the wall mount B bracket assembly to the unit bracket.

Figure 57. Up Tilting Wall Type Bracket Installation (5)

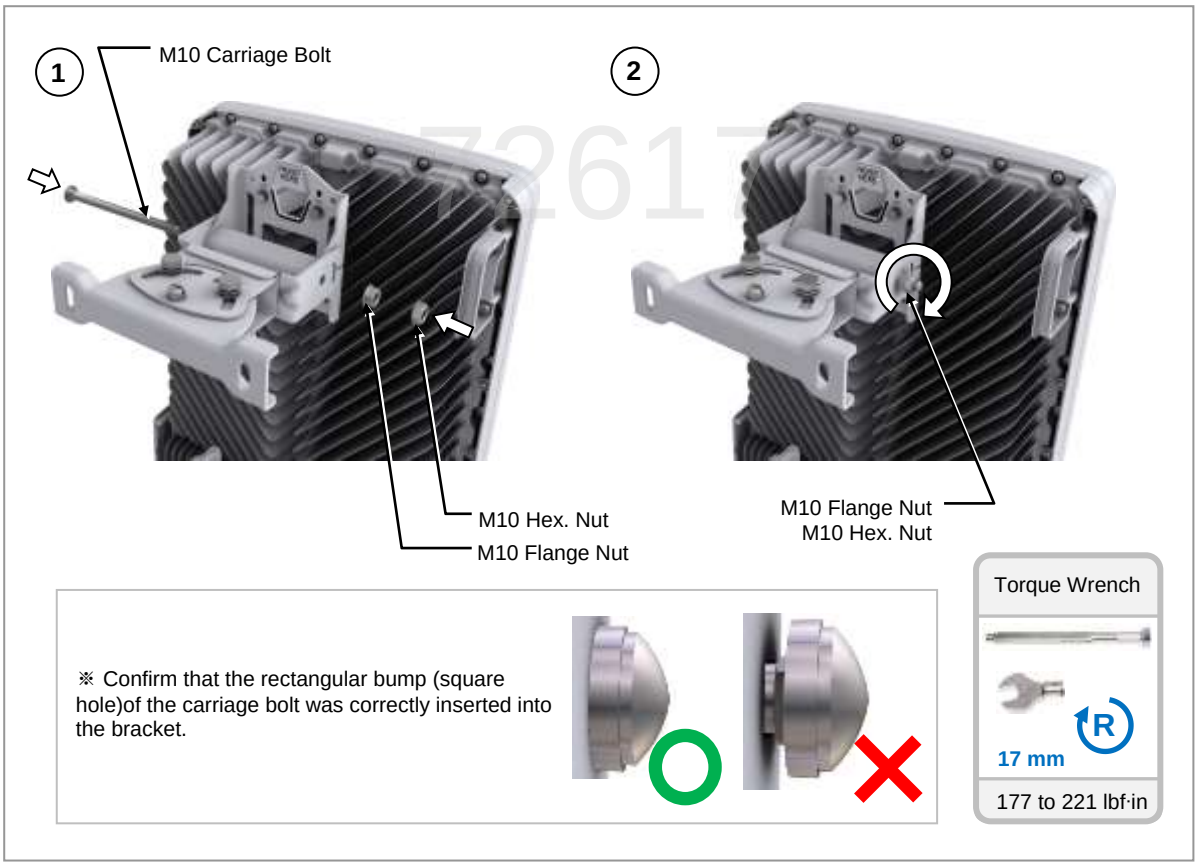

Copyright © 2023, All Rights Reserved.

To install the Wall Mount A Bracket Assembly to the wall, do the following:

1 Ensure that the items described in the following table are available.

Table 17. Parts and Tools for Installing the Wall Mount A Bracket Assembly

Category	Description	
Parts	Wall Mount A Bracket Assembly	1 EA
Recommended Torque Value	M10 Hex. Nut	177 to 221 lbf·in
Working Tools	• Torque Wrench (100 to 450 lbf·in) • Torque Wrench Spanner head (apply Hex. head: 17 mm) • Spanner (Hex. Head: 17 mm) • Level	

2 Place the wall mount A bracket assembly on the mounting position of the anchor bolt.

Figure 58. Up Tilting Wall Mount A Bracket Assembly Installation (1)

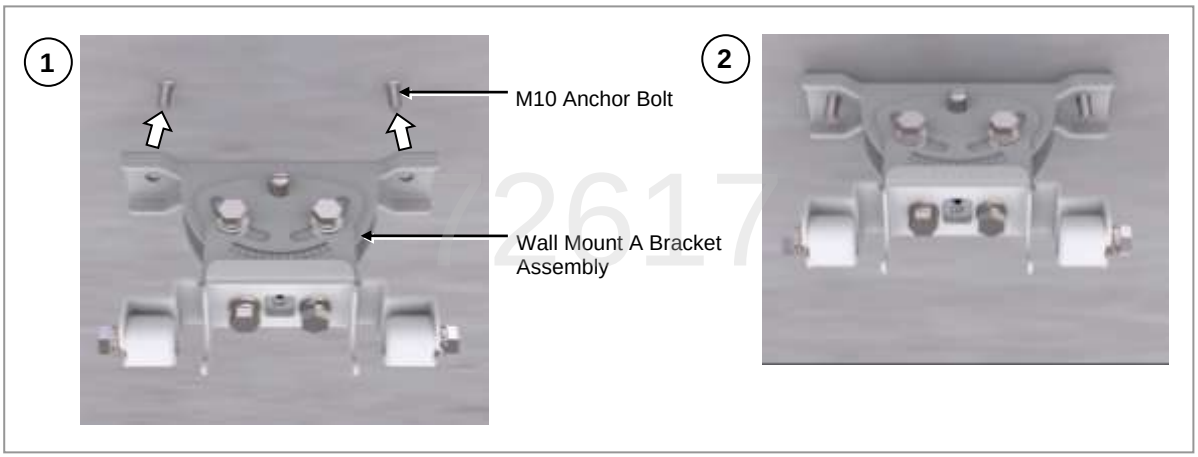

3 Install the wall mount A bracket assembly using the fastening materials.

Copyright © 2023, All Rights Reserved.

Figure 59. Up Tilting Wall Mount A Bracket Assembly Installation (2)

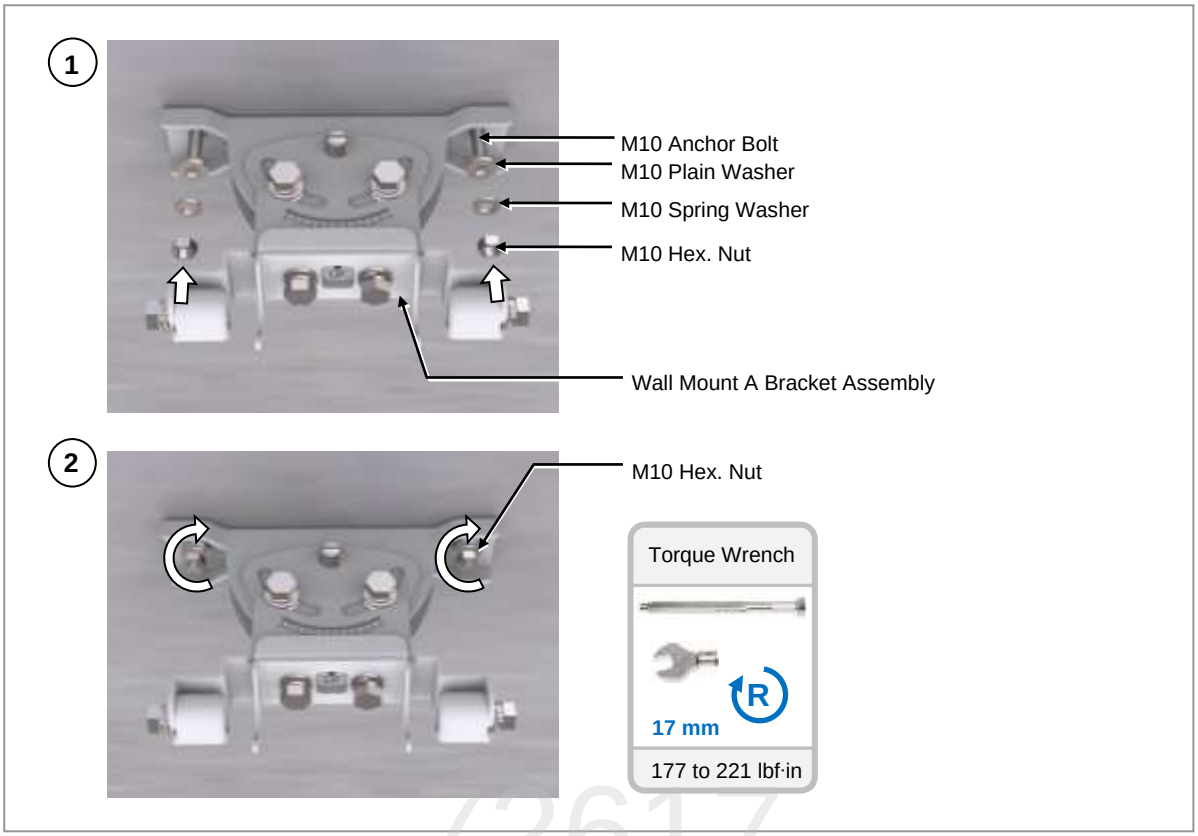

4 Confirm that the wall mount A bracket assembly is level using a spirit level.

Figure 60. Up Tilting Wall Mount A Bracket Assembly Installation (3)

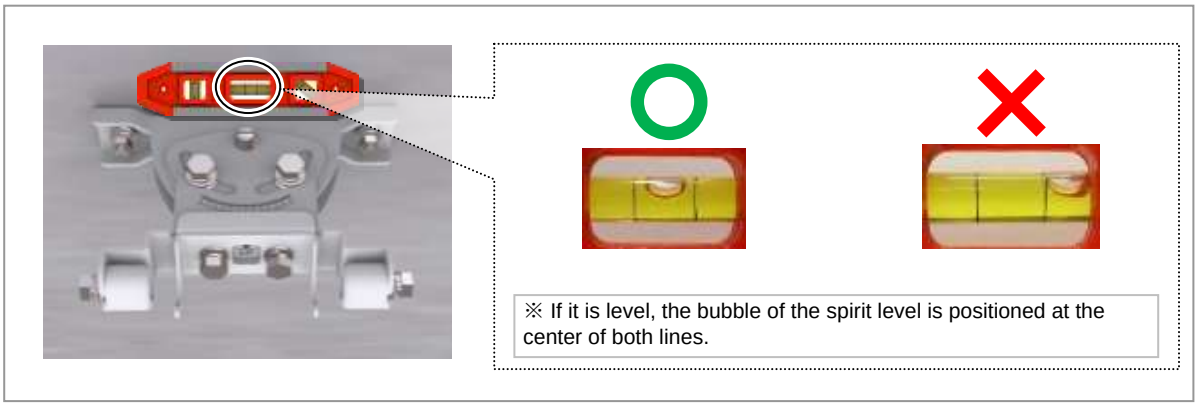

When mounting the wall mount A bracket assembly, you must perform a levelness test for the bracket, as only small adjustments can be made after installation.

Copyright © 2023, All Rights Reserved.

To install the Up Tilting MMU to the wall, do the following:

1 Ensure that the items described in the following table are available.

Table 18. Parts and Tools for Up Tilting MMU Fastening (Wall Type)

Category	Description	
Recommended Torque Value	M10 hex bolt M10 Hex. Nut	177 to 221 lbf·in
Working Tools	• Torque Wrench (100 to 450 lbf·in) • Torque Wrench Spanner head (apply Hex. head: 17 mm) • Spanner (Hex. Head: 17 mm)	

2 Align the MMU to the mounting position of the wall mount A bracket assembly installed on the wall.

3 Place the pipe of the scissors bracket assembly assembled at the top of the MMU in the mounting groove of the wall mount A bracket assembly.

Interference may occur if the M10 hex bolt for installing the scissors bracket and the Wall mount A bracket assembly is protruded.

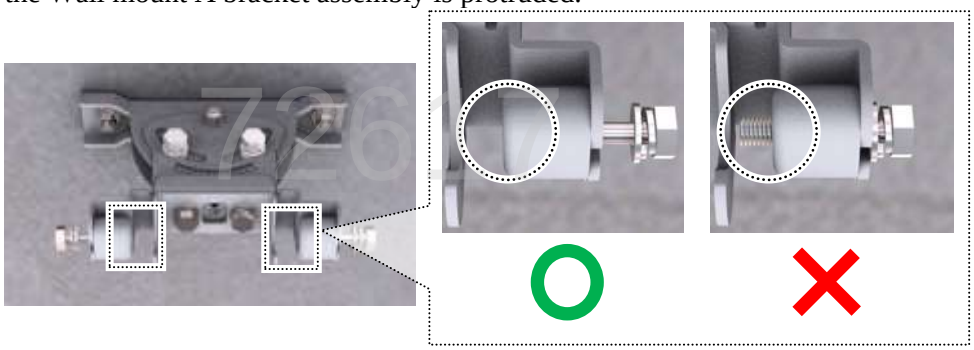

Copyright © 2023, All Rights Reserved.

Figure 61. Up Tilting Wall Type MMU Installation (1)

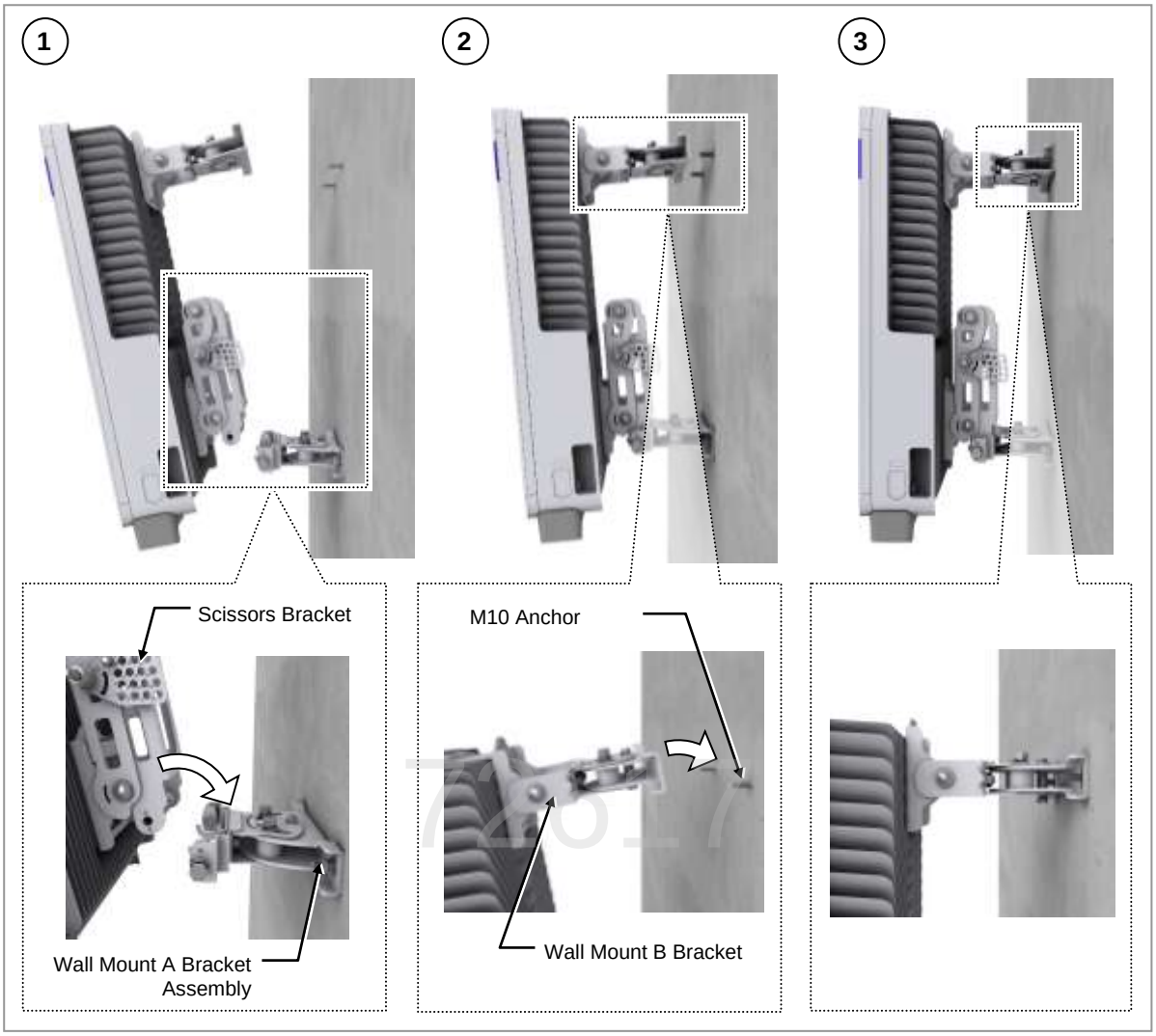

4 Mount the wall mount B bracket assembly to the anchor bolt using the fastening materials.

Copyright © 2023, All Rights Reserved.

Figure 62. Up Tilting Wall Type MMU Installation (2)

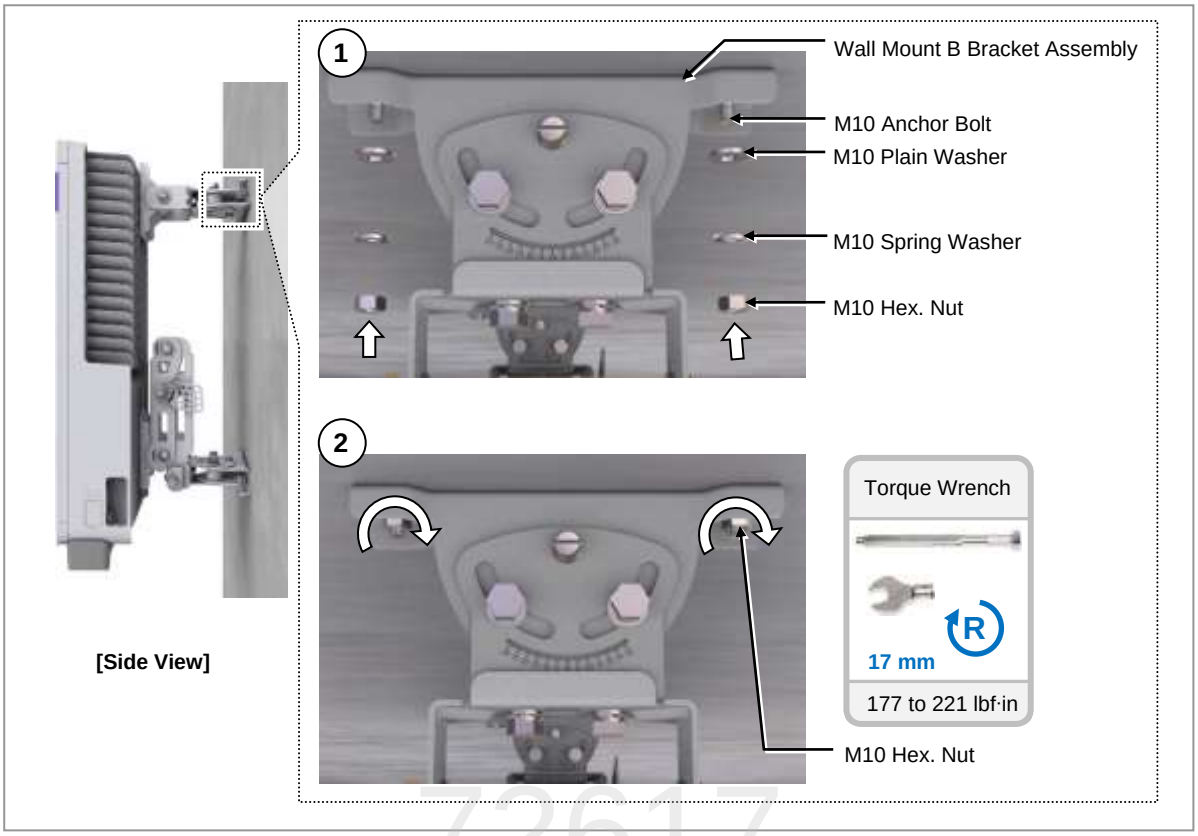

72617

5 Install the scissors bracket by tightening the M10 hex bolt of the wall mount A bracket assembly.

Copyright © 2023, All Rights Reserved.

Figure 63. Up Tilting Wall Type MMU Installation (3)

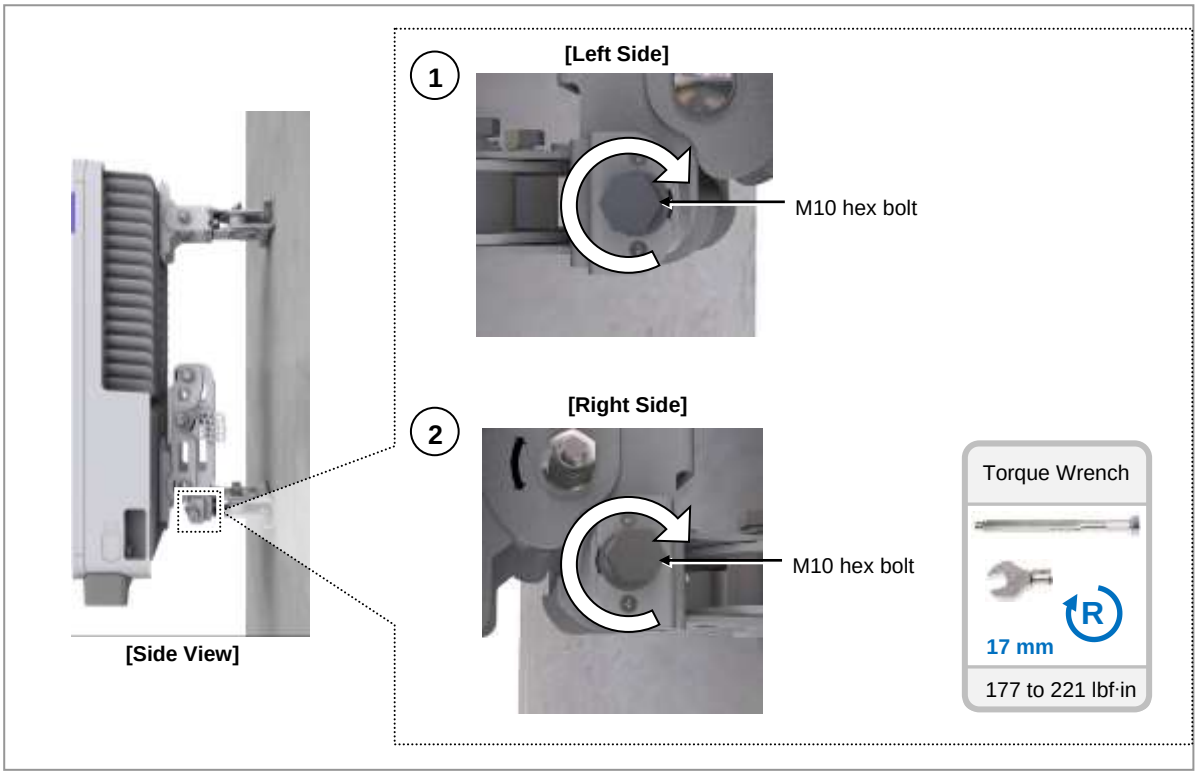

Tilting and Swiveling

72617

This section describes the tilting and swiveling process.

MMU Down Tilting (Pole Type)

For MMU Down Tilting, do the following:

1 Ensure that the items described in the following table are available.

Table 19. Parts and Tools for Down Tilting MMU Fastening

Category	Description	
Recommended Torque Value	M10 Flange Nut M10 Hex. Nut	177 to 221 lbf·in
Working Tools	• Torque Wrench (100 to 450 lbf·in) • Torque Wrench Spanner head (apply Hex. Head: 17 mm) • Spanner (Hex. Head: 17 mm)	

Copyright © 2023, All Rights Reserved.

It is possible to adjust the pole-type MMU tilting between 0° and 15°.

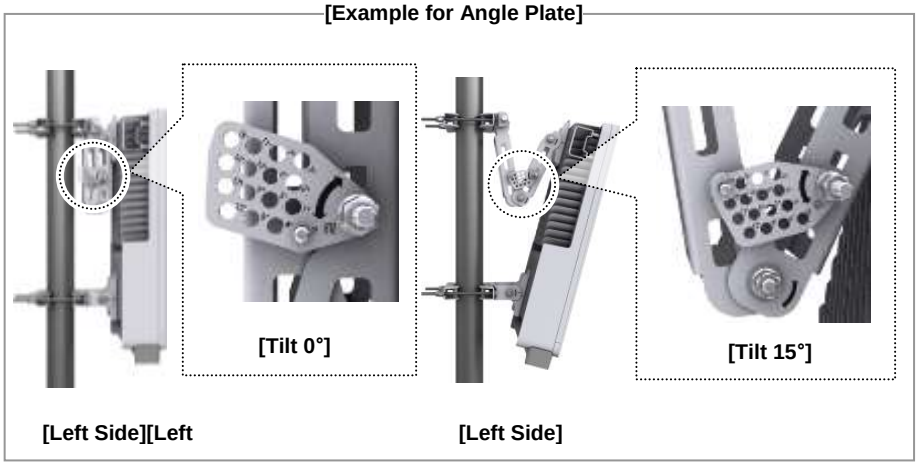

2 Turn the rotating shaft fastening materials (1) of the pole mount bracket assembly counter-clockwise one or two rotations to loosen it.

Figure 64. Pole Type MMU Down Tilting (1)

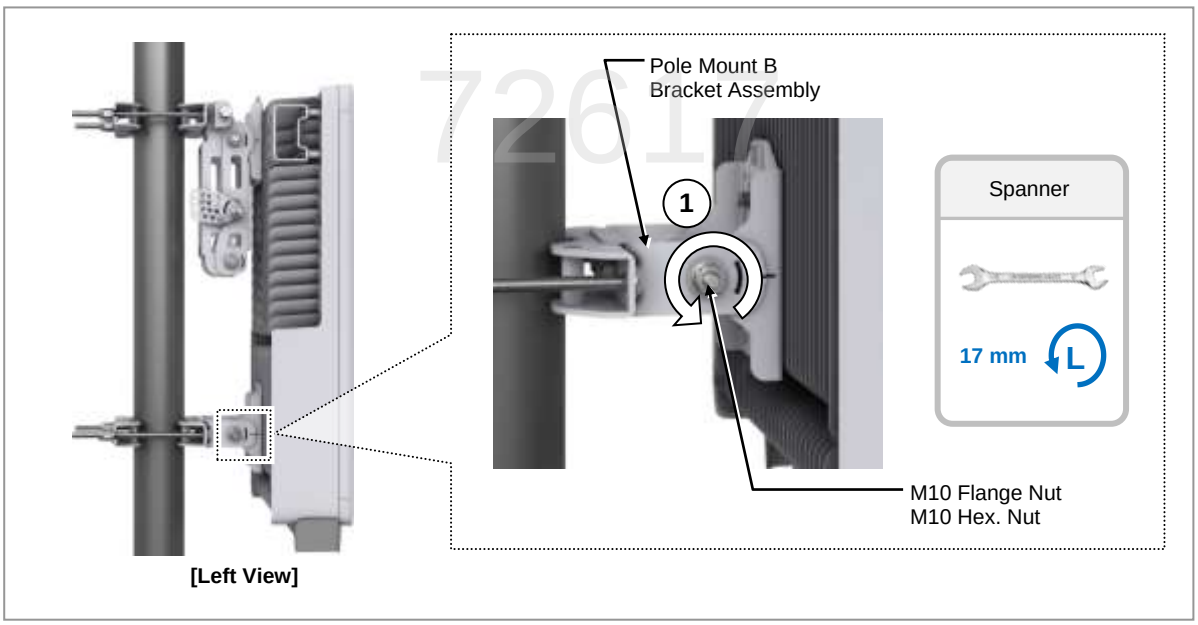

3 Turn the four rotating shaft fastening materials (2, 3, and 4) of the pole mount bracket assembly counter-clockwise one or two rotations to loosen it.

Copyright © 2023, All Rights Reserved.

Figure 65. Pole Type MMU Down Tilting (2)

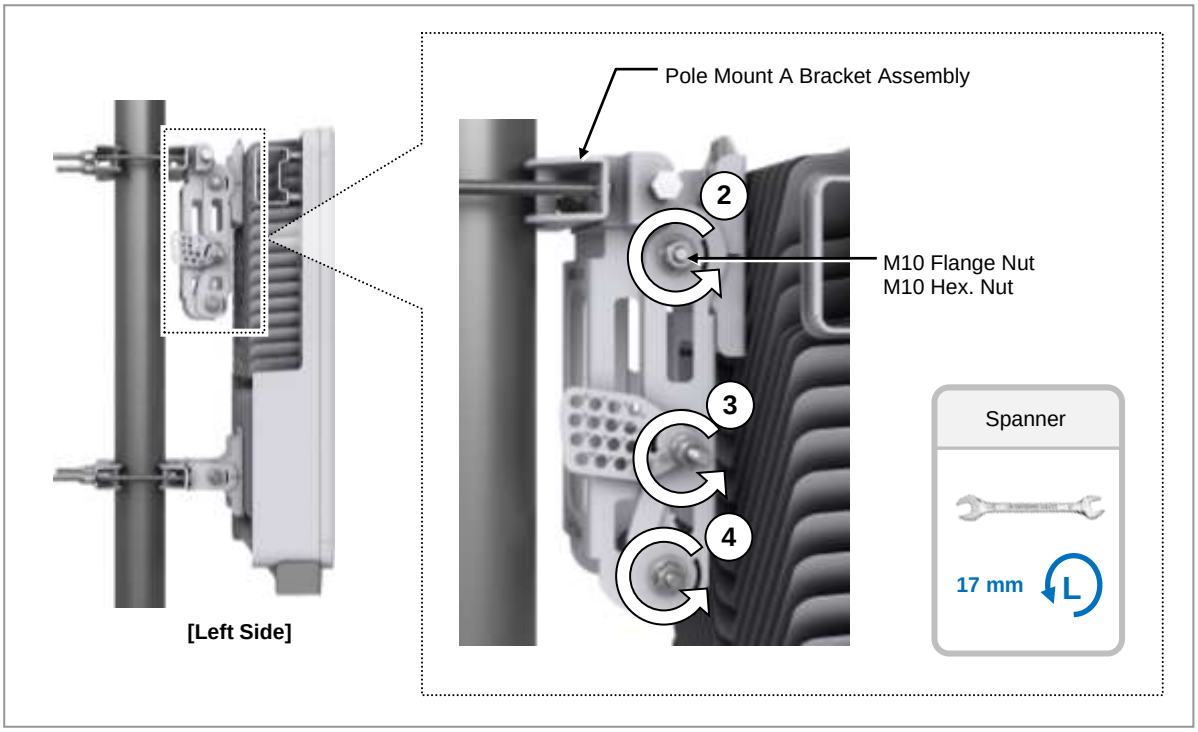

72617

Do not detach the fasteners completely; loosen the 0.78 in. (20 mm) of the angle plate's fasteners (number 3).

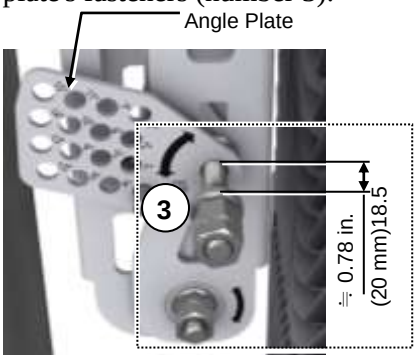

4 Remove the angle plate from the angle plate installation bolt.

Copyright © 2023, All Rights Reserved.

Figure 66. Pole Type MMU Down Tilting (3)

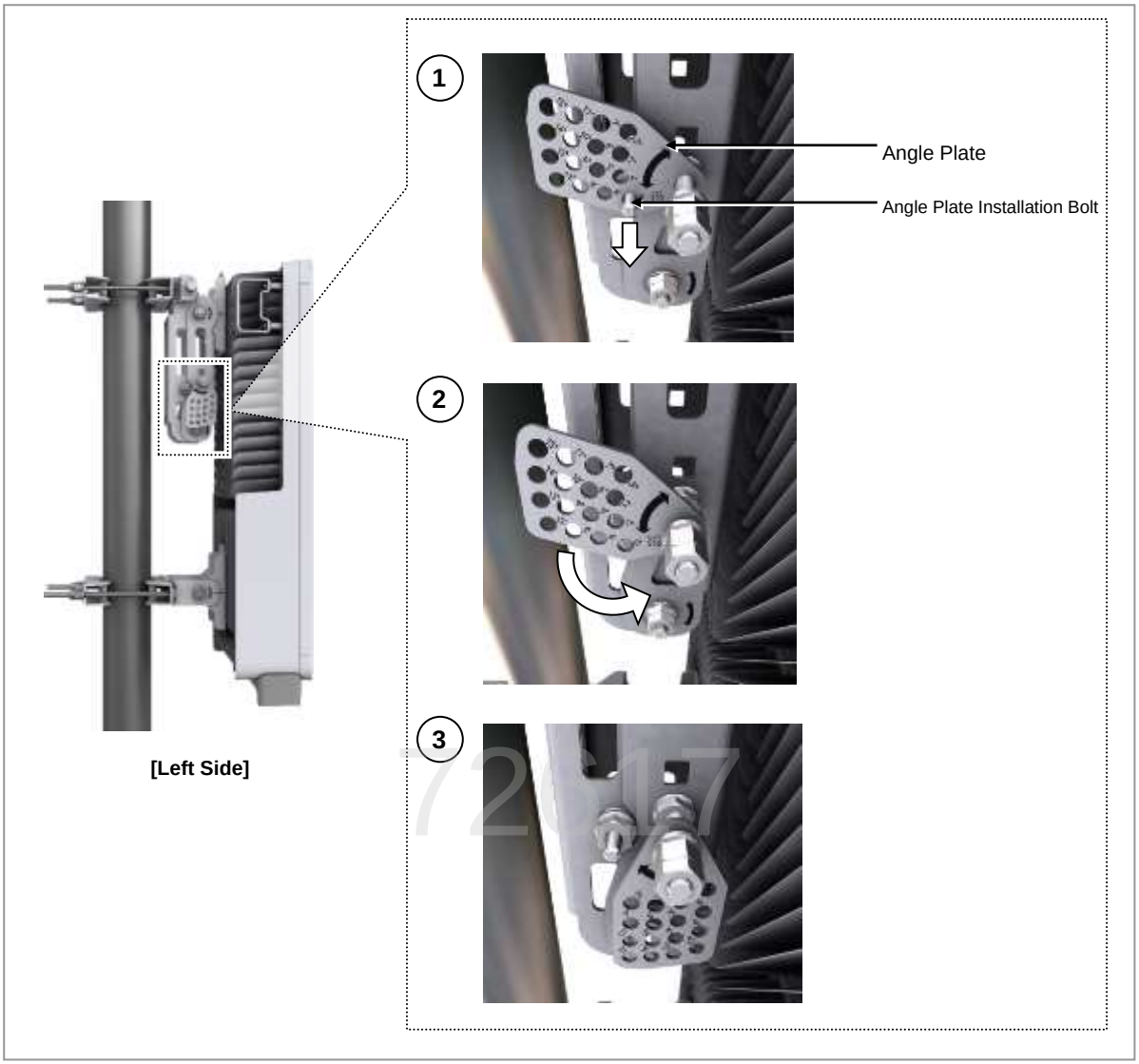

5 Push the MMU forward to adjust the tilting angle.

Copyright © 2023, All Rights Reserved.

Figure 67. Pole Type MMU Down Tilting (4)

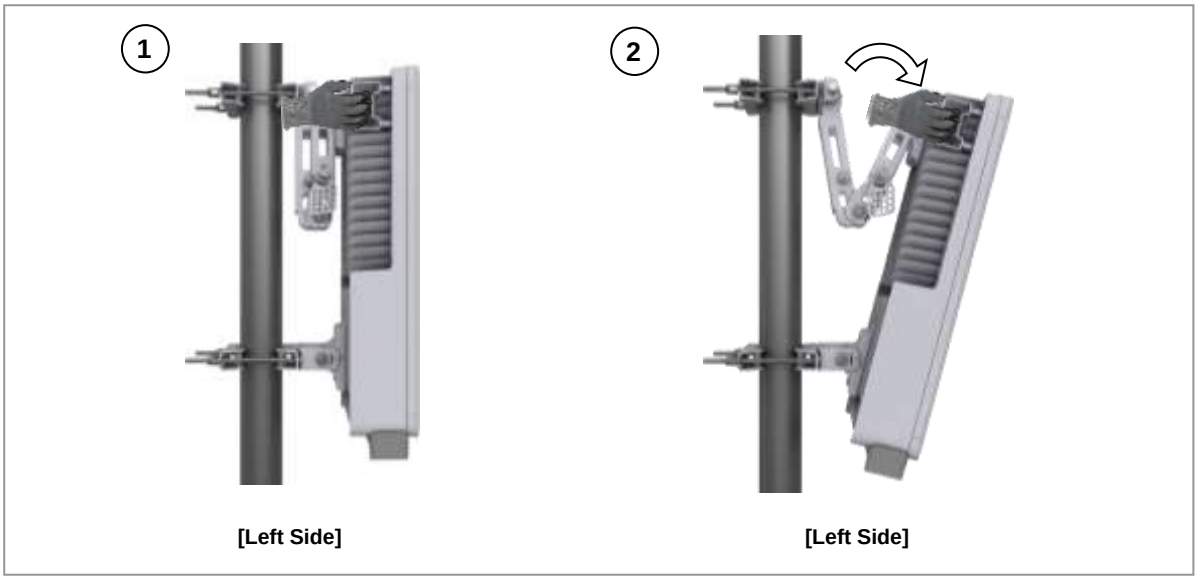

6 Insert the angle plate according to the tilting angle marked on the angle plate to the angle plate installation bolt.

72617

Copyright © 2023, All Rights Reserved.

Figure 68. Pole Type MMU Down Tilting (5)

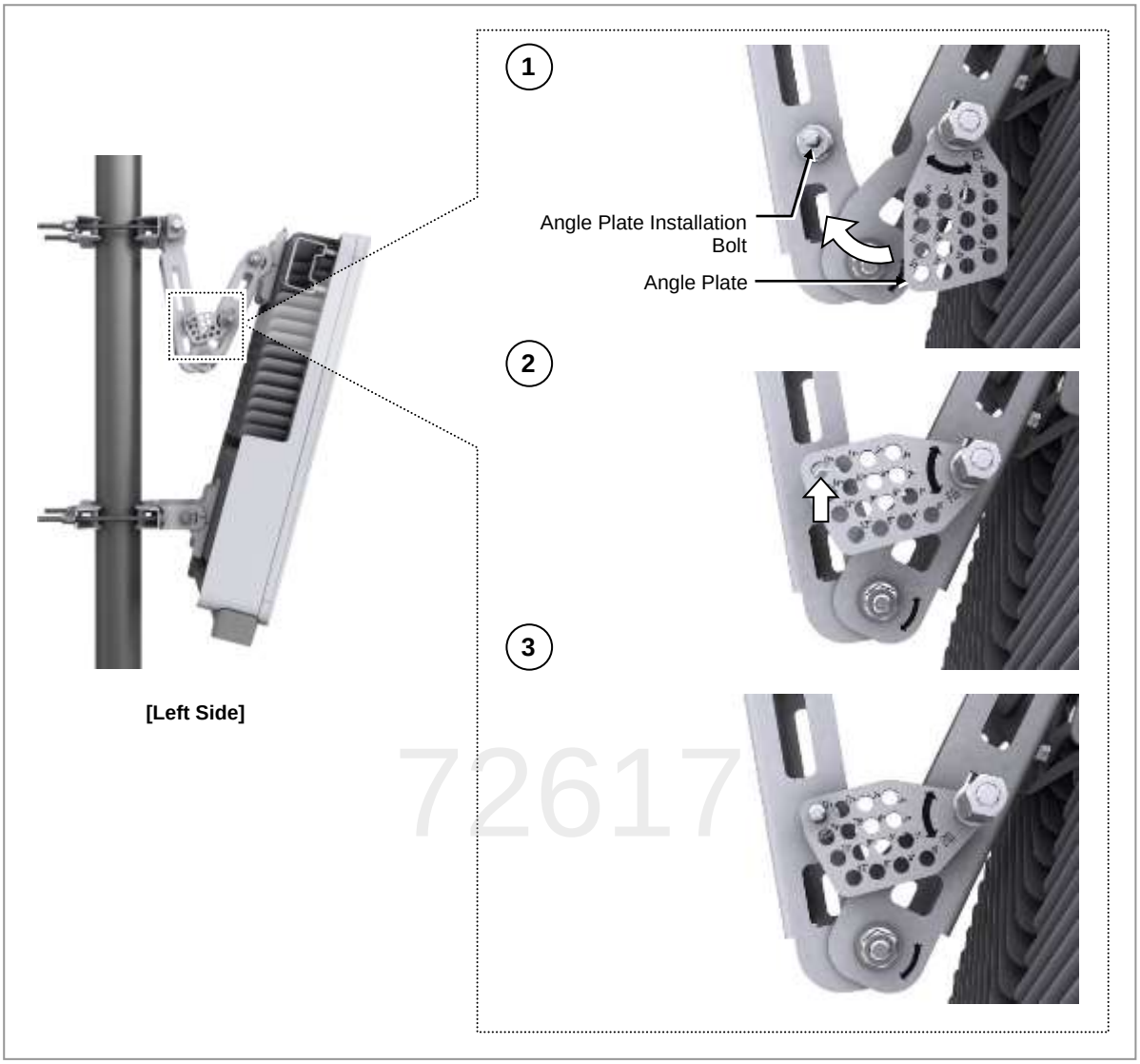

7 Tighten the pole mount bracket assembly's fastening materials (1 to 4) in the reverse order of loosening (4 to 1) to install it.

Copyright © 2023, All Rights Reserved.

Figure 69. Pole Type MMU Down Tilting (6)

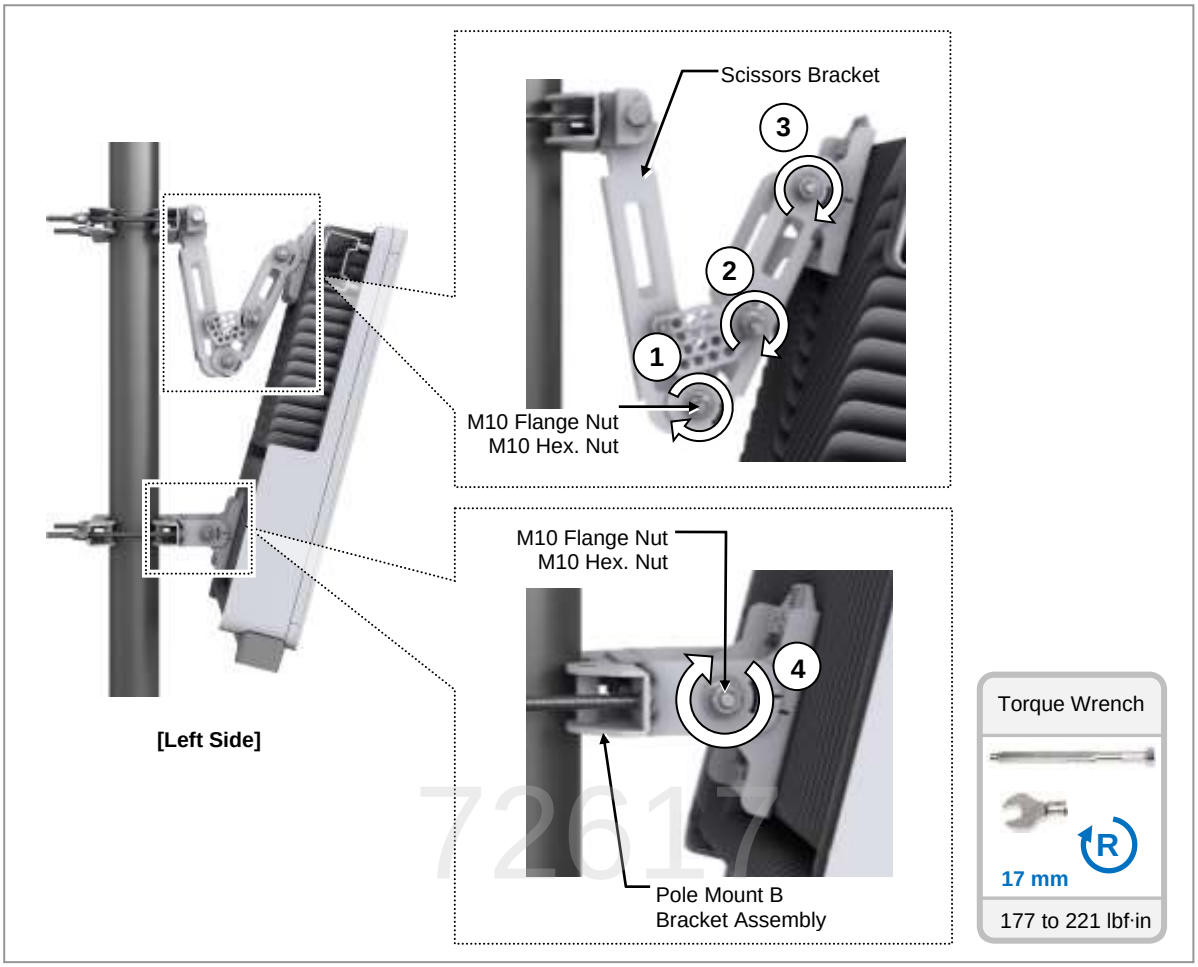

Confirm that the M10 carriage bolt is correctly inserted into the right hole of the scissors bracket and pole mount B bracket assembly.

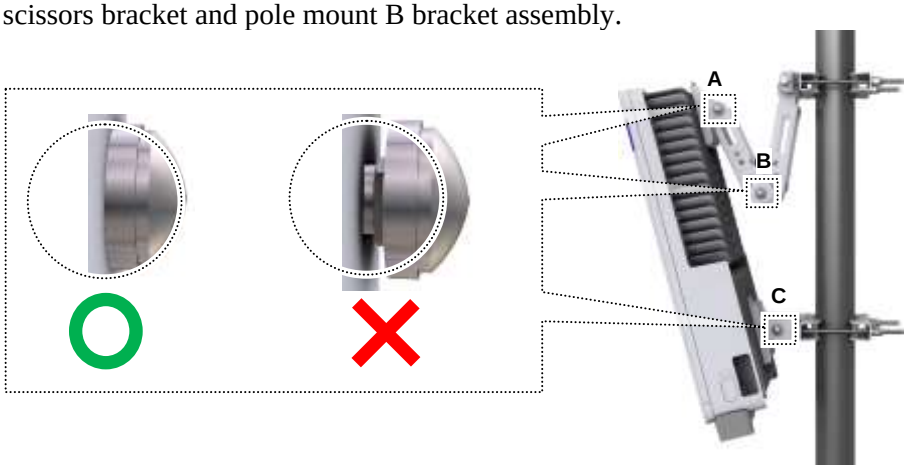

Copyright © 2023, All Rights Reserved.

MMU Up Tilting (Pole Type)

For MMU Up Tilting, do the following:

1 Ensure that the items described in the following table are available.

Table 20. Parts and Tools for Up Tilting MMU Fastening

Category	Description	
Recommended Torque Value	M10 Flange Nut M10 Hex. Nut	177 to 221 lbf·in
Working Tools	• Torque Wrench (100 to 450 lbf·in) • Torque Wrench Spanner head (apply Hex. Head: 17 mm) • Spanner (Hex. Head: 17 mm)	

It is possible to adjust the pole-type MMU tilting between 0° and 15°.

[Example for Angle Plate]

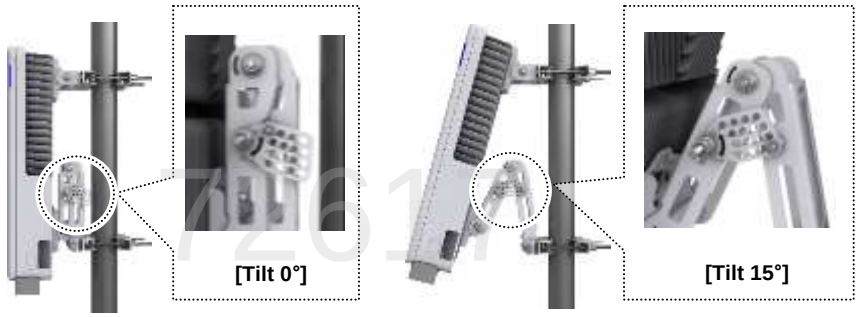

[Right Side] **[Right Side]**

2 Turn the rotating shaft fastening materials (1) of the pole mount bracket assembly and pole mount bracket assembly counter-clockwise one or two rotations to loosen it.

Copyright © 2023, All Rights Reserved.

Figure 70. Pole Type MMU Up Tilting (1)

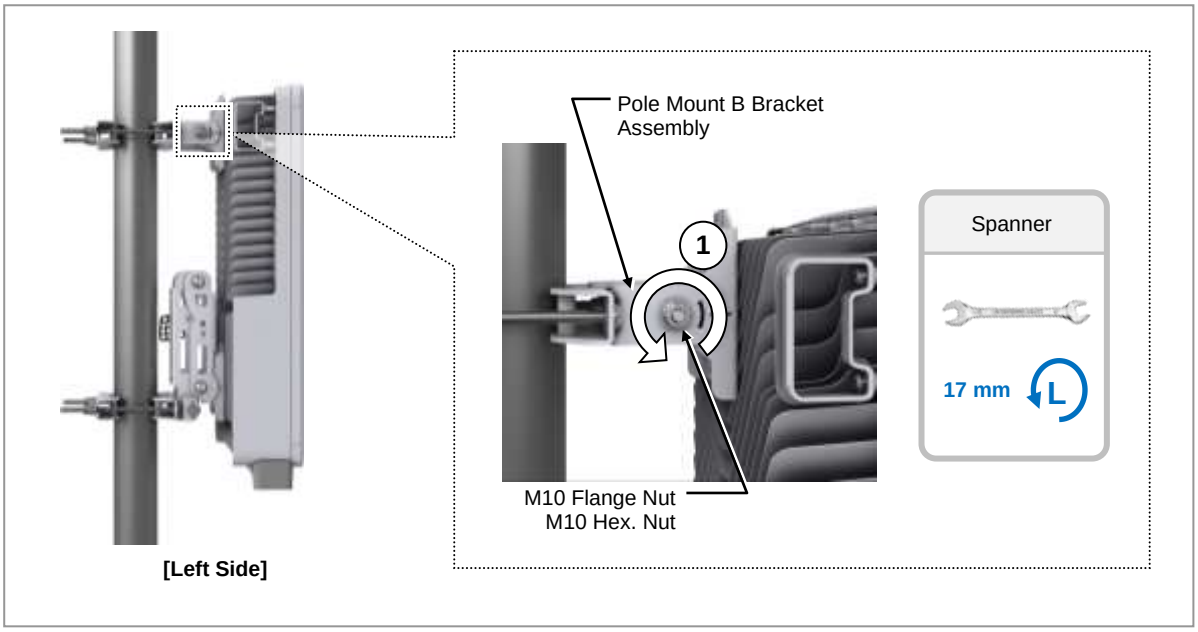

3 Turn the three rotating shaft fastening materials (2, 3, and 4) of the pole mount bracket assembly counter-clockwise one or two rotations to loosen it.

Do not detach the fasteners completely; loosen the 0.78 in. (20 mm) of the angle plate's fasteners (number 3).

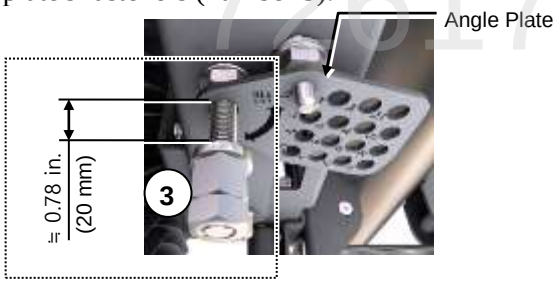

Copyright © 2023, All Rights Reserved.

Figure 71. Pole Type MMU Up Tilting (2)

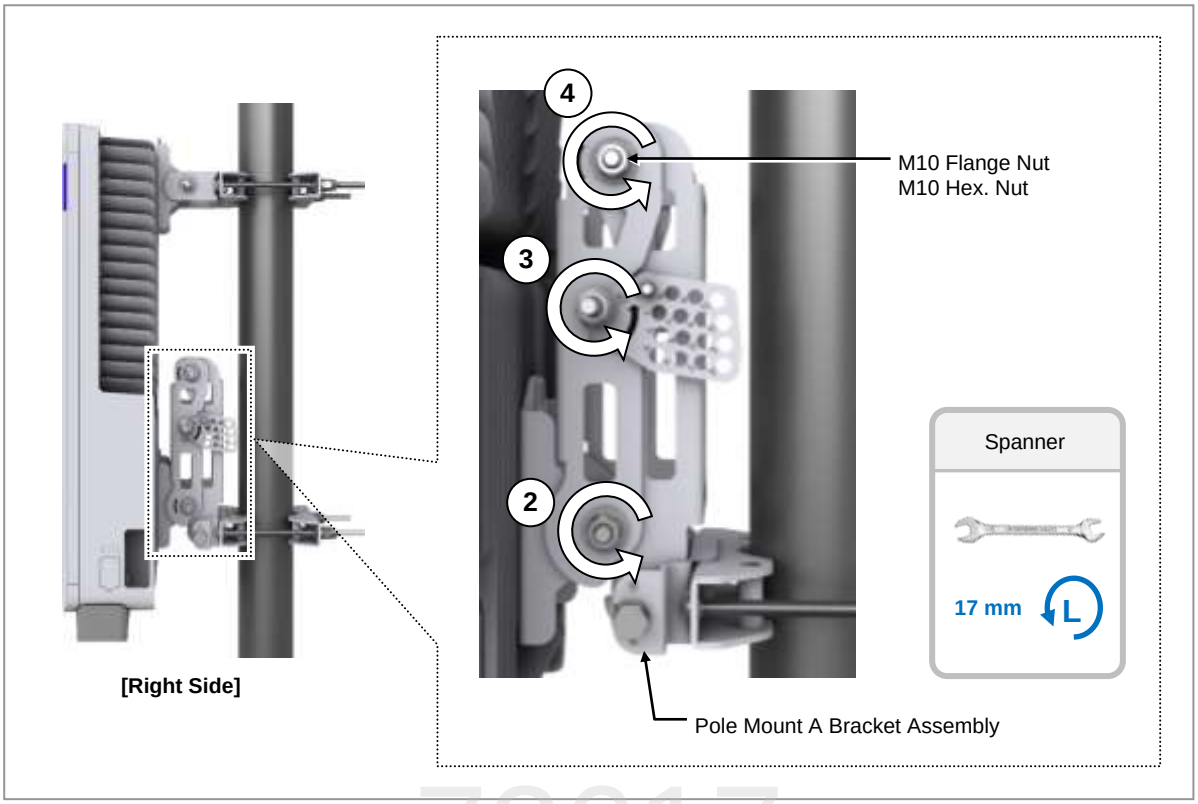

72617

4 Remove the angle plate from the angle plate installation bolt.

Copyright © 2023, All Rights Reserved.

Figure 72. Pole Type MMU Up Tilting (3)

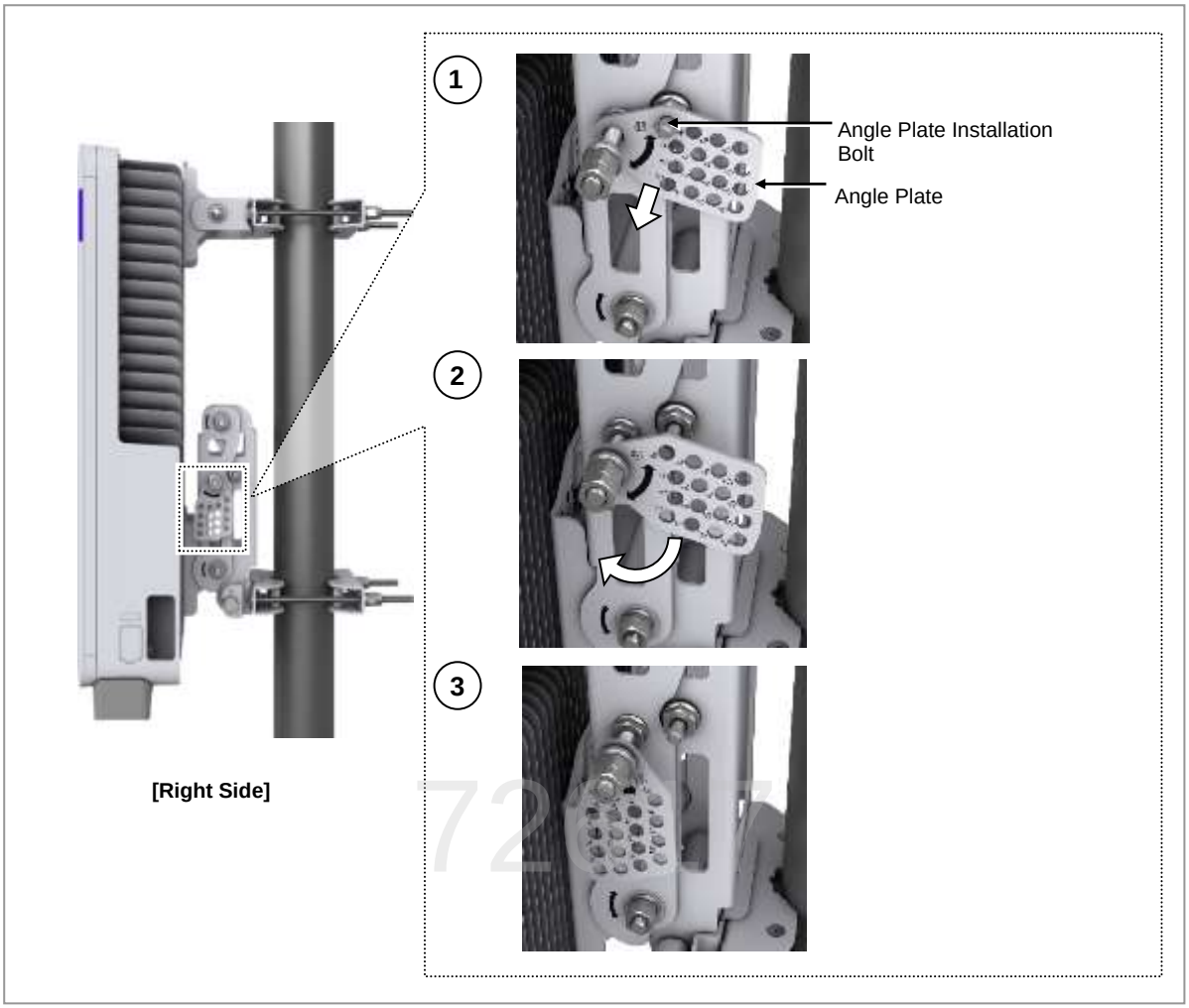

5 Push the MMU forward to adjust the tilting angle.

Copyright © 2023, All Rights Reserved.

Figure 73. Pole Type MMU Up Tilting (4)

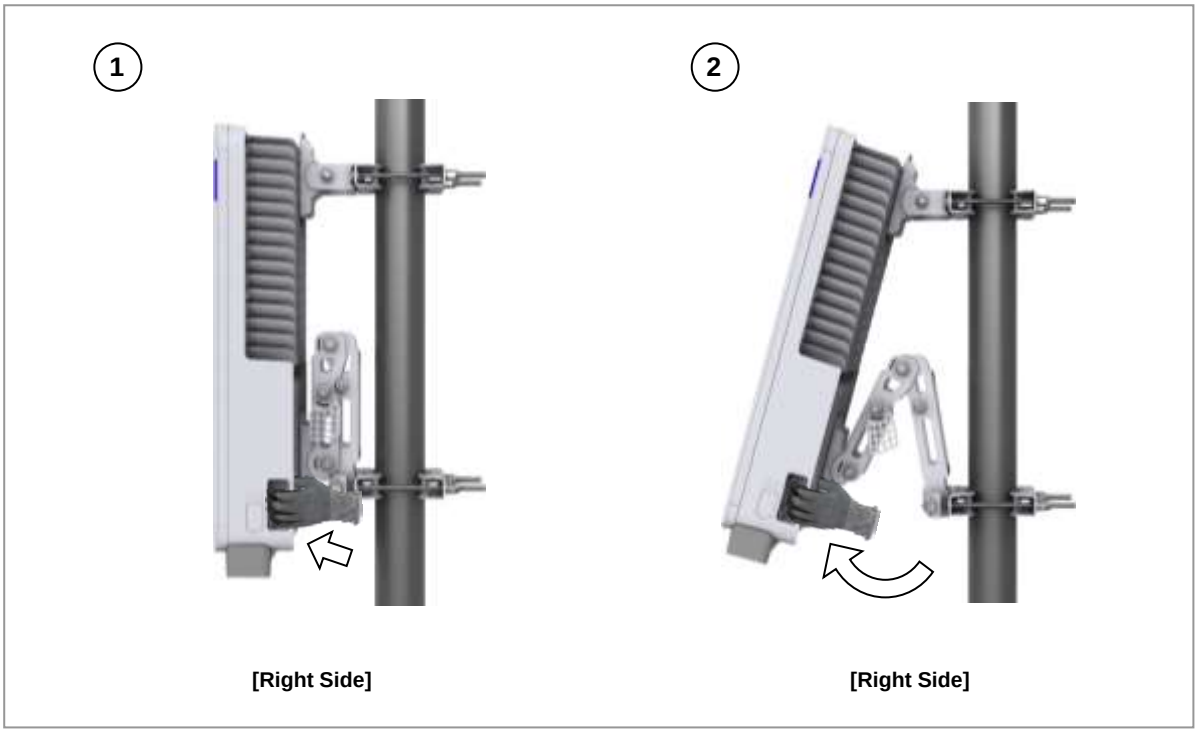

6 Insert the angle plate according to the tilting angle marked on the angle plate to the angle plate installation bolt.

72617

Copyright © 2023, All Rights Reserved.

Figure 74. Pole Type MMU Up Tilting (5)

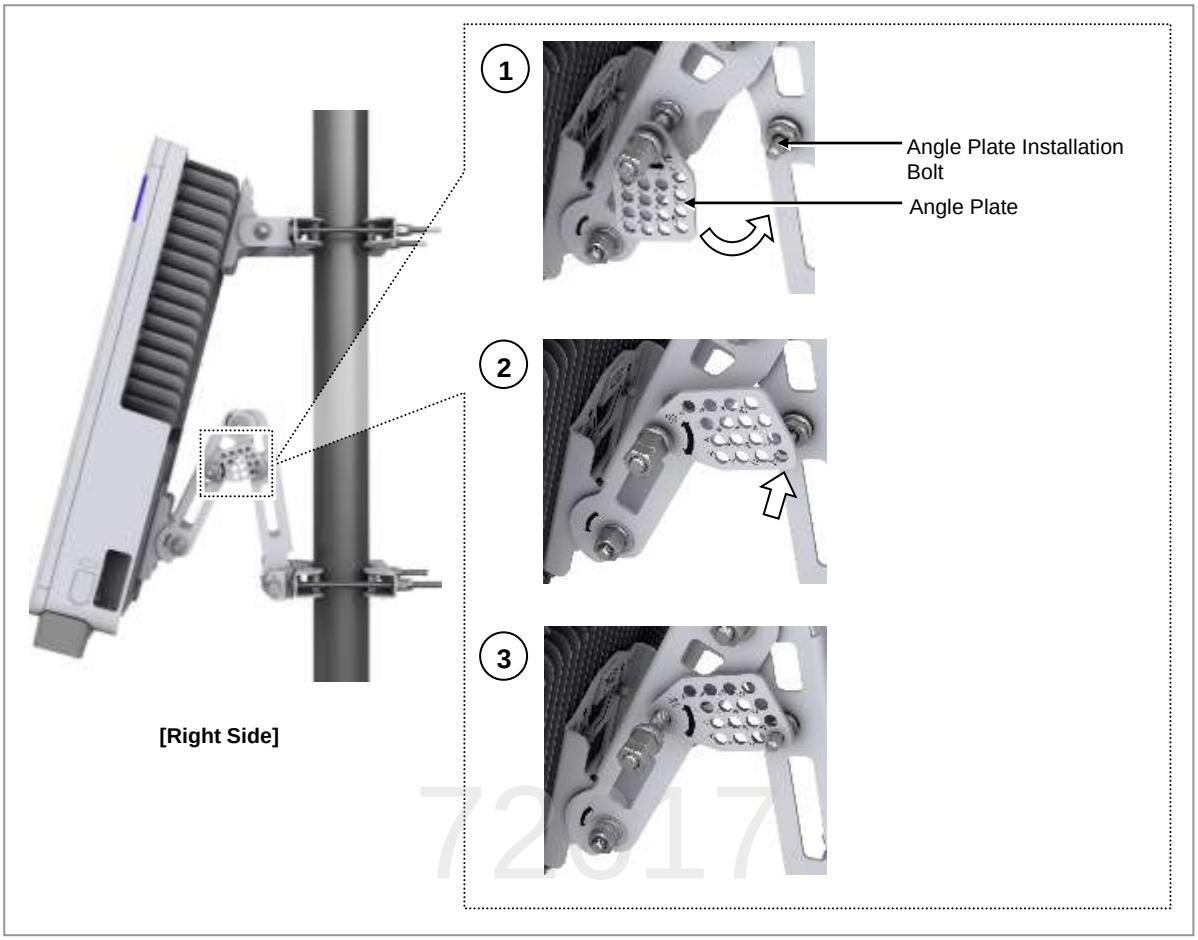

7 Attach the fastening materials of the pole mount bracket assembly and pole mount bracket assembly according to the sequence (1 to 4) and tighten them to install them.

Copyright © 2023, All Rights Reserved.

Figure 75. Pole Type MMU Up Tilting (6)

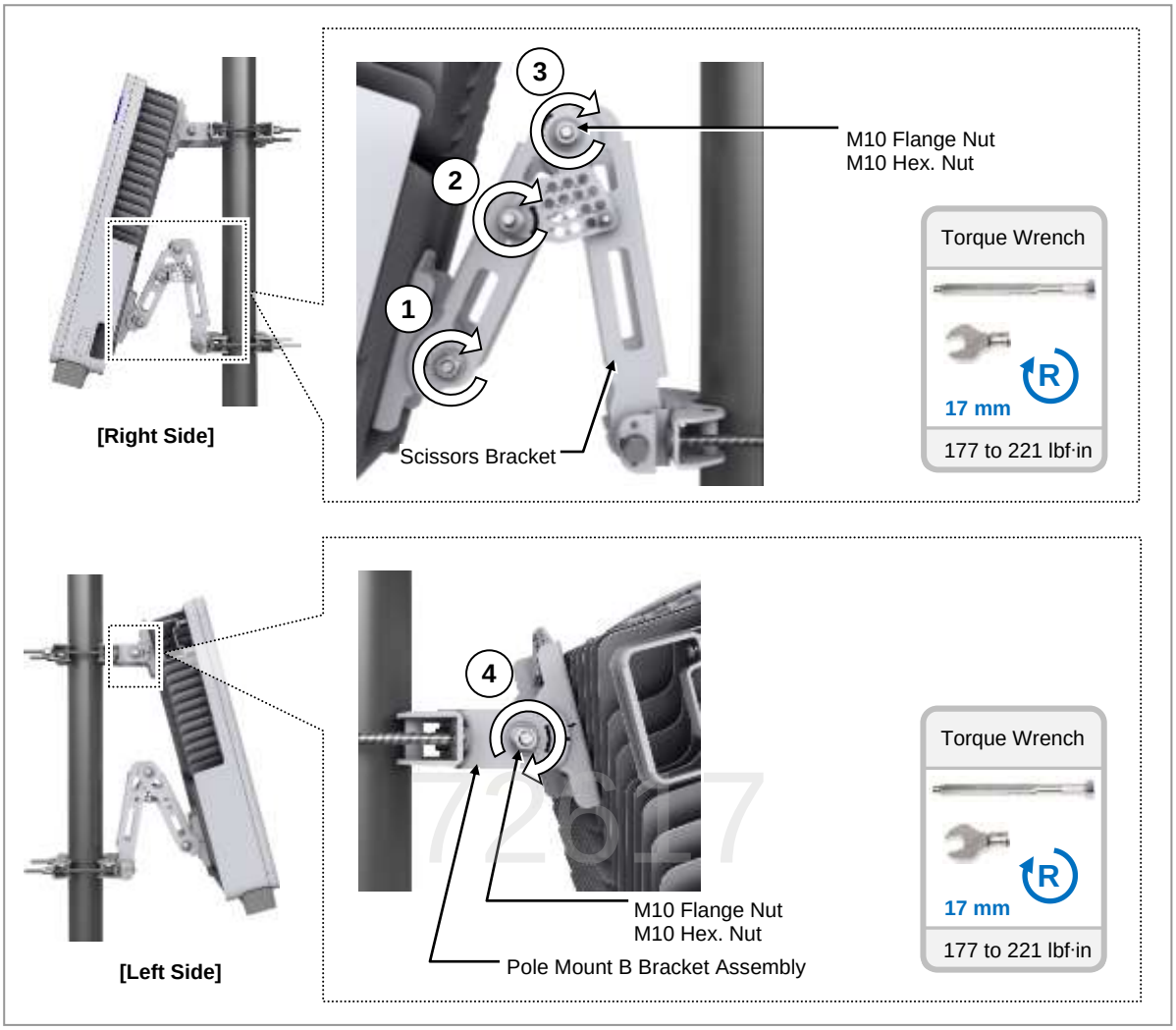

Copyright © 2023, All Rights Reserved.

Confirm that the M10 carriage bolt is correctly inserted into the right hole of the scissors bracket and pole mount B bracket assembly.

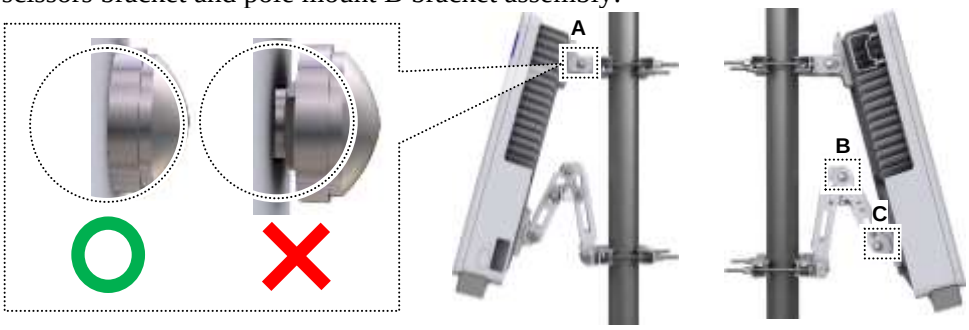

[Right Side] [Left Side]

MMU removal: First, set the angle of the MMU to 0° to remove the MMU and then proceed in the reverse order of the MMU installation process.

[Tilt 0°] [Tilt 15°]

Copyright © 2023, All Rights Reserved.

MMU Down/Up Tilting (Wall Type)

For MMU Down/Up Tilting (Wall Type), do the following:

Refer to the tilting process of the pole-type MMU for how to tilt the wall-type MMU upward/downward.

[Up Tilting]

[Right View]

[Down Tilting]

[Left View]

/2617

MMU removal: First, set the angle of the MMU to 0° to remove the MMU, and then proceed in the reverse order of the MMU installation process.

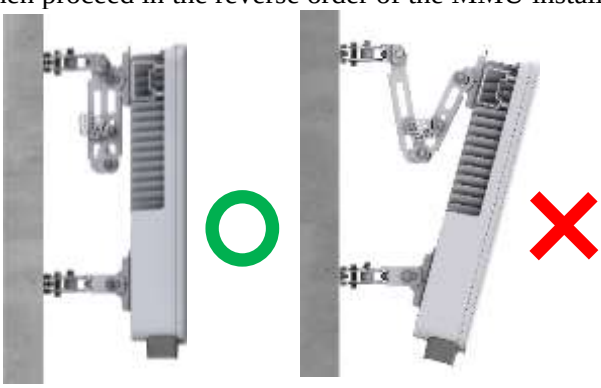

[Tilt 0°]

Copyright © 2023, All Rights Reserved.

MMU Swiveling (Wall Type)

For Wall Type MMU Swiveling, do the following:

1 Ensure that the items described in the following table are available.

Table 21. Parts and Tools for MMU Swiveling Fastening

Category	Description	
Recommended Torque Value	M10 Hex. Nut	177 to 221 lbf·in
Working Tools	• Torque Wrench (100 to 450 lbf·in) • Torque Wrench Spanner head (apply Hex. Head: 17 mm) • Spanner (17 mm)	

2 Turn the rotating shaft fastening materials of the wall mount A bracket assembly and wall mount B bracket assembly counter-clockwise one or two rotations to loosen it.

Figure 76. MMU Swiveling (1)

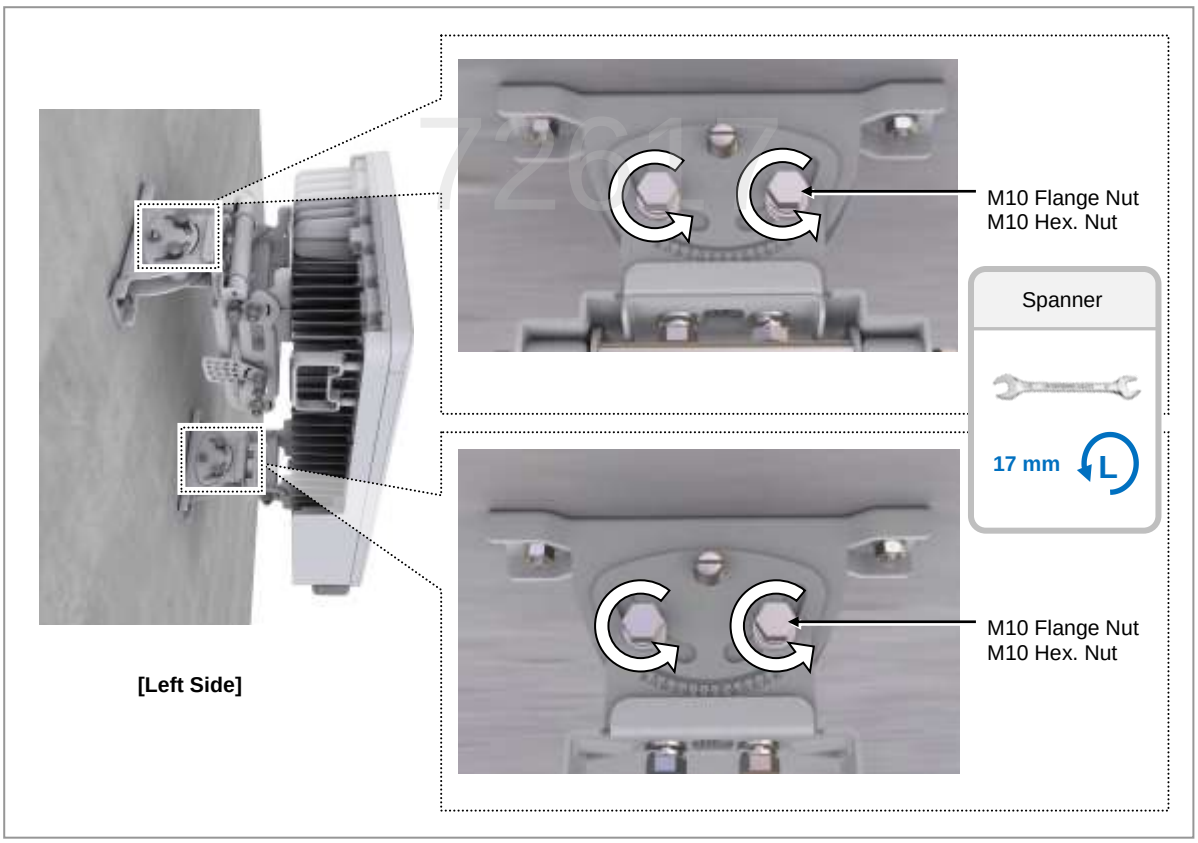

3 Set the MMU to the angle (left/right 0 to 30°) to rotate and turn it.

Copyright © 2023, All Rights Reserved.

Figure 77. MMU Swiveling (2)

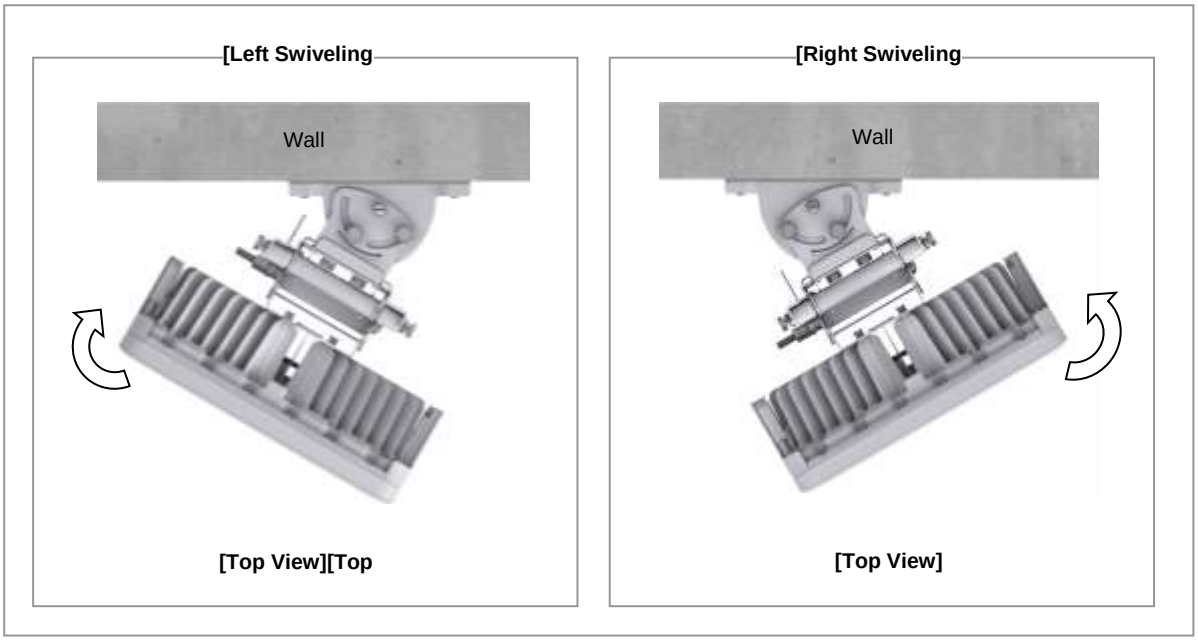

4 Tighten the rotating shaft fastening materials of the wall mount A bracket assembly and wall mount B bracket assembly to install it.

Figure 78. MMU Swiveling (3)

72617

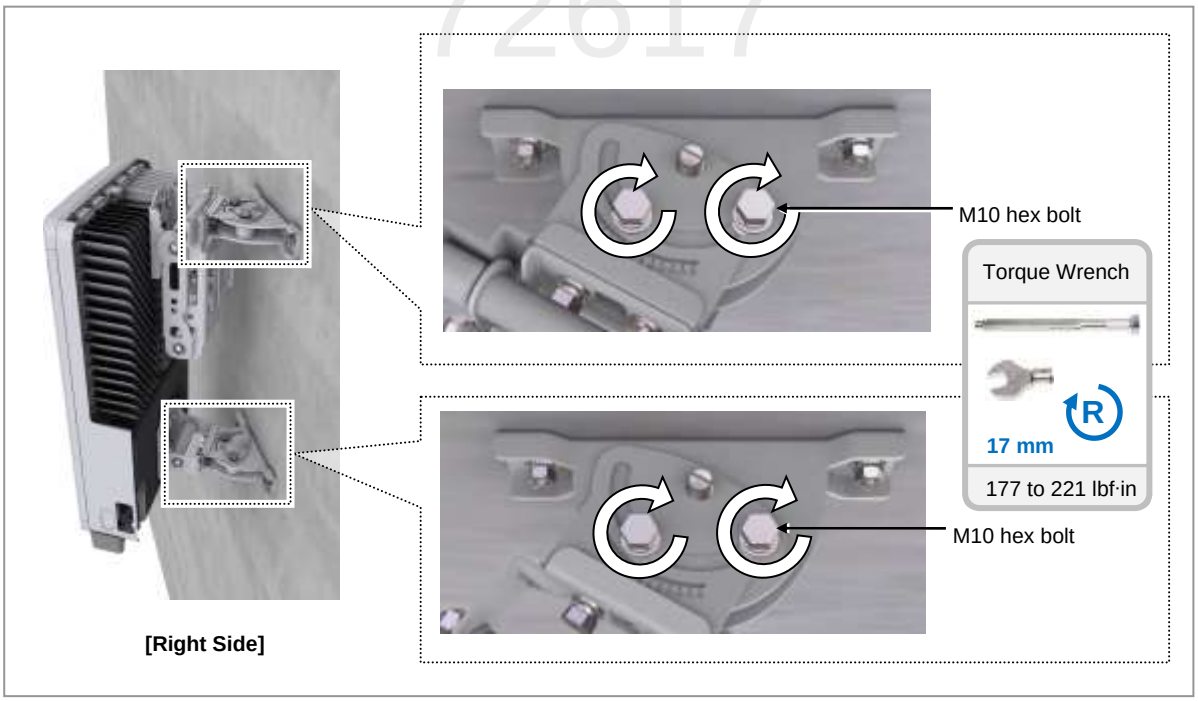

Copyright © 2023, All Rights Reserved.

Chapter 4 Connecting Cables

This chapter describes the procedures to connect the cables to the system and label the cables.

Cabling Procedure

The following figure depicts the procedure to connect system cables.

Figure 79. Procedure to Connect System Cable

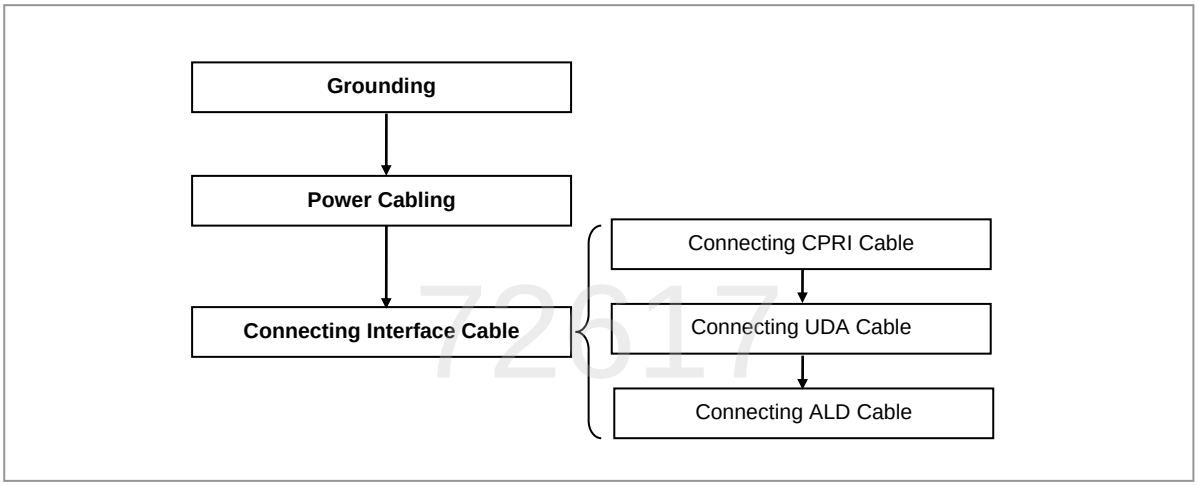

Copyright © 2023, All Rights Reserved.

Guidelines for Cable Connections

The cabling consists of the following procedures:

- Cable path inspection
- Cable cutting
- Cable installation
- Connector attachment
- Cable binding
- Identification tag attachment

The following figure depicts the cable connection procedure.

Figure 80. Cable Connection Procedure

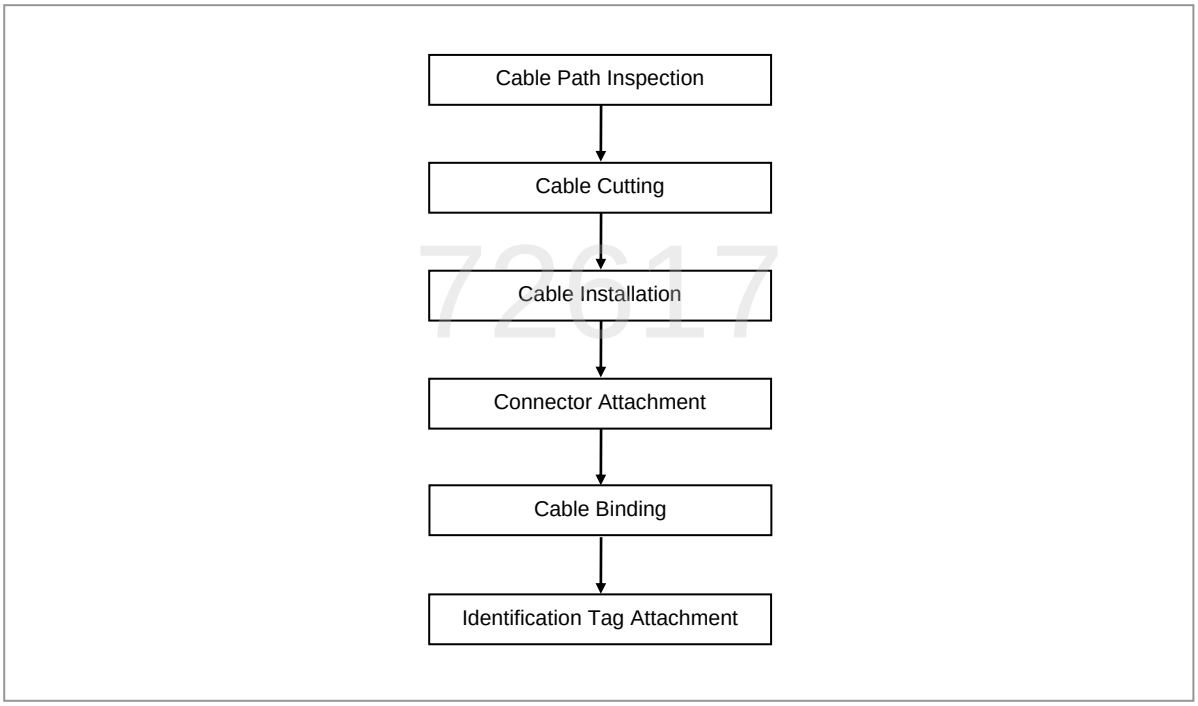

When cutting the cable after installation, ensure the connector is disconnected from the equipment. Installation of the cable with the connector connected to the system can cause contact failure or damage to the assembled connector and the cable due to cable tension or the operator's mistakes.

If the cable and module are assembled (disassembled) without following the method described in the installation manual, the operation of the product cannot be guaranteed.

Copyright © 2023, All Rights Reserved.

The cable workflow's sequence of cable cutting and installation can be changed depending on the field situation, such as cutting after installing or installing after cutting.

Cable Path Inspection

While installing the cable that interconnects the rectifier, Main Ground Bar (MGB), backhaul device, and so on within the system, the cable path, length, and cable installation method must be inspected.

To inspect the cable path, ensure the following.

- A minimum cable length must be selected so that the length does not affect the cable installation and maintenance.
- The cable must be placed where it is not damaged by external factors such as power lines, flooding, and footpaths.
- In areas where external factors may damage the cable, ensure that measures are taken to prevent damage to the cable, such as cable tray, ducts, and flexible pipe.

Cable Cutting

After carefully checking the route, measure the exact distance and cut the cable using a cutting tool.

72617

To cut the cable, follow these guidelines:

- Cut the cable to the length determined in the Cable Path Inspection step.
- Use a dedicated cable-cutting tool.
- Cut the cable at right angles.
- Keep the cable away from moisture, iron, lead, dust, or other foreign material when cutting.
- Remove any foreign material attached to the cable using solvent or brush.

Cable Installation

This process involves laying the cable along the cabling path to the target connector of the system or an auxiliary device. It is done after cable path inspection and cable cutting are complete.

To install the cable, follow these guidelines:

- Be careful not to damage the cable.
- Cut out the damaged section before installing or replacing the cable if the cable is damaged.

Copyright © 2023, All Rights Reserved.

- Lay the cable so that it is not tangled. In particular, when installing the cable from a horizontal section to a vertical section, be careful not to reverse the upper and lower lines of the cable.
- If the cabling must be protected, use a PVC channel, spiral sleeve, flexible conduit, or cable tray.
- Install the DC and data transmission cables away from the AC power cables to prevent electromagnetic induction.
- Follow the instructions for installing the cables and modules/connectors described in the installation manual. Or the operation of the system is not guaranteed.
- When installing cables in a small area, do not apply excessive force. Workers may bump against a wall or equipment.
- Ensure the cable bend radius equals or exceeds the minimum allowed value specified in the following table.

Table 22. Recommended Minimum Allowed Cable Bending Radius

No	Type	Allowed Cable Bending Radius	
1	Ground Cable	Installed: 8 × OD	During Installation: 12 × OD
2	Power Cable	Installed: 8 × OD	During Installation: 12 × OD
3	Optical Cable	Installed: 10 × OD	During Installation: 20 × OD
4	UDA Cable	Installed: 5 × OD	During Installation: 10 × OD
5	ALD Cable	Installed: 8 × OD	During Installation: 12 × OD

If the manufacturer specifies the allowed cable bending radius, comply with the bending radius specified.
OD: Outer Diameter

72617

Copyright © 2023, All Rights Reserved.

The cable may be damaged if not lifted, as depicted in the following figure.

The Lifting (or transporting) method may vary depending on the system. The Lifting (or transporting) method depends on the type of cable used.

The shape and taping length of each connector type can be different from the following figure:

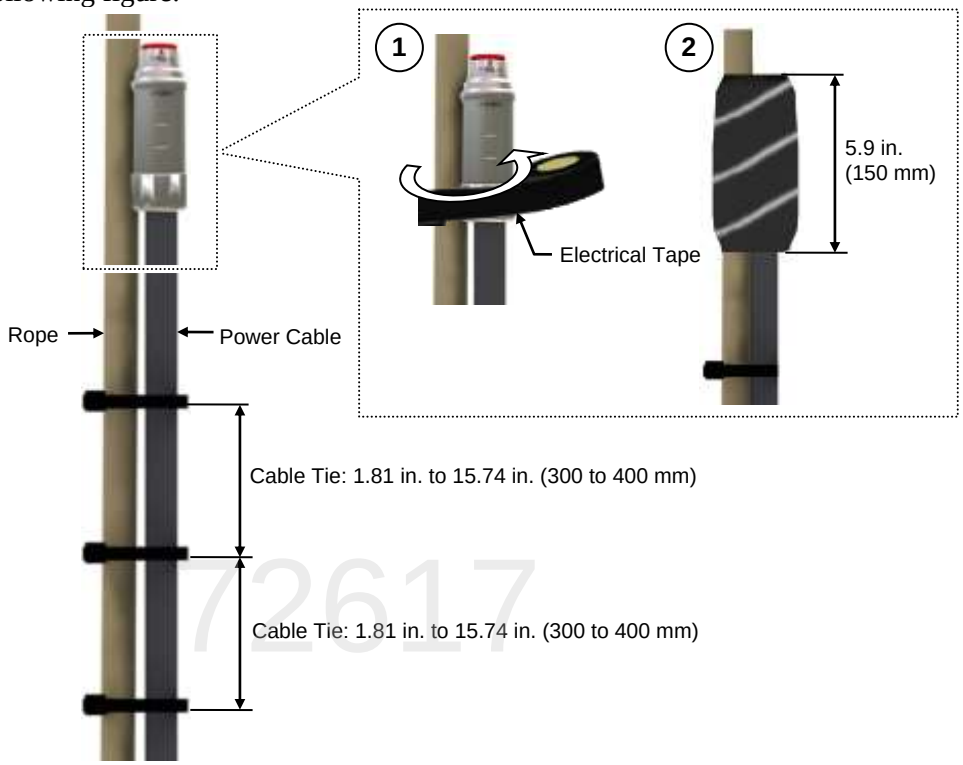

72617

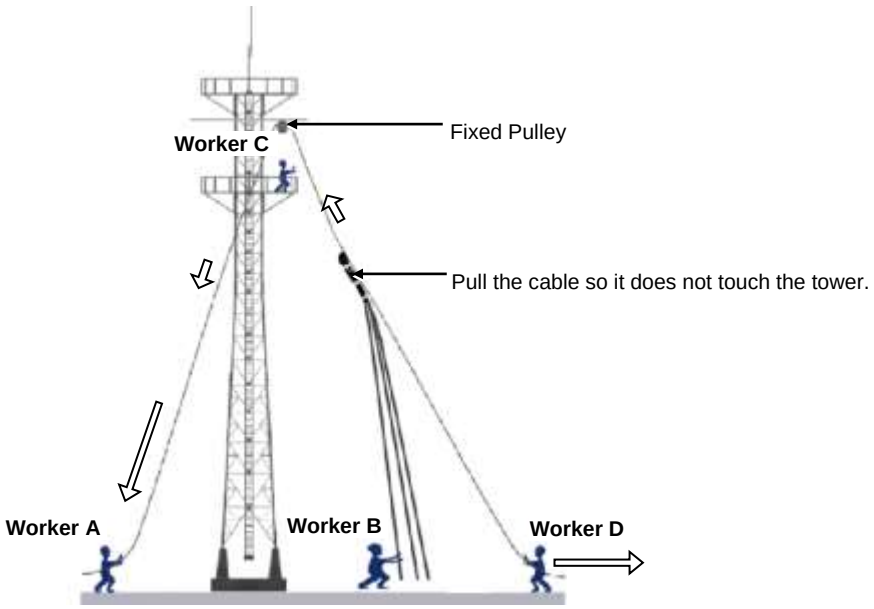

Copyright © 2023, All Rights Reserved.

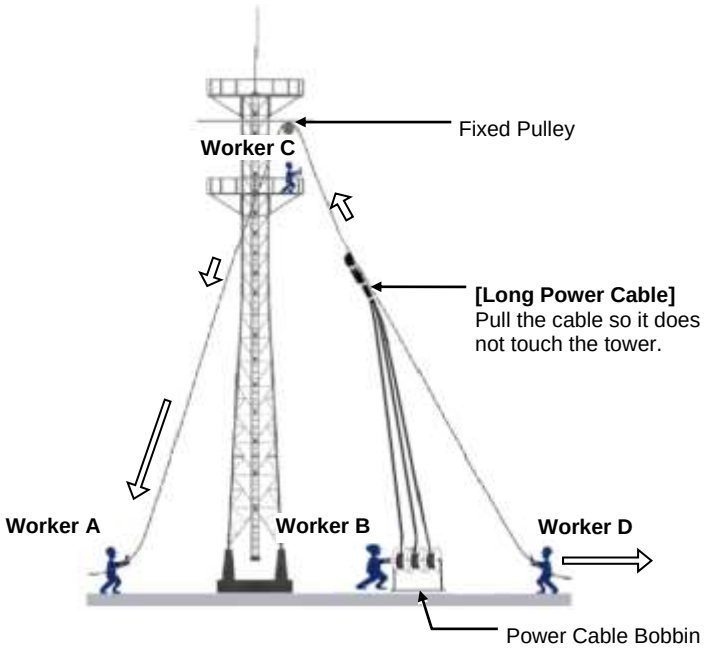

Connector Attachment

This process involves assembling a connector to an installed cable or a device on the site.

72617

The following guidelines should be taken care of while attaching a connector:

- Ensure that the operator is fully aware of the connector assembly method before assembling the connector. Assemble the connector in accordance with its pin map.
- Each connector has a hook to prevent its core positions from being changed.
- Check the corresponding grooves before connecting the connector to another connector.
- Use weatherproof tape at the connector connection for cables installed outdoors, such as feeder lines, to prevent water leakage and corrosion from occurring at the part exposed to the outside.
- Connect each cable of the connector assembly in a straight line.
- Be careful while connecting the cable so that contact failure does not occur at the connector connection due to tension.
- Ensure there is no cable strain by using extra cable length or cable ties.

Copyright © 2023, All Rights Reserved.

Cable Binding

This process involves securing and arranging an installed cable using binding thread, cable ties, binding wire, and ram clamps.

The following are the guidelines while binding a cable:

- Be careful not to damage the cable during binding.
- Use proper cable binding tools according to the target location (indoor or outdoor) and the cable type (power supply cable, optical cable, or feeder line).
- Ensure that the cut end of cable ties and binding lines are positioned to the inside. It may cause damage to the cables or personal injury.
- Cut off the remainder of the cable thread by leaving about 50 mm of extra length to prevent the knot from easily getting untied.
- If contact failure occurs in the connector connection due to tension, bind the cable at the closest location to the connector.

Identification Tag Attachment

This process involves attaching a marker cable tie, a nameplate, and a label to both ends of a cable (connections to a connector) to identify the use of the cable and the cabling path.

The following are the guidelines when attaching an identification tag.

- When installing the cable outdoors, use relief engraving and coated labels to prevent the markings from being erased.
- Since the form and attachment method for identification tags differ for each provider, consult with the provider before attaching the tags.

When connecting the cables, always connect the ground cable first. If a worker comes in contact with the equipment, connects a cable, or performs maintenance without connecting the ground cable, the system can be damaged, or the worker can be injured due to static electricity and short circuit.

When performing the cabling tasks on the system, establish the ground cable installation before any other cabling tasks to avoid static electricity or other related issues.

After completing cable installation, unused ports should be capped.

Copyright © 2023, All Rights Reserved.

When installing, ensure not to overlap or tangle the cables. In addition, consider future expansion. Install the DC and data transmission cables away from the AC power cables to prevent electromagnetic induction.

The cable installation process requires trained and experienced personnel trained in industry-standard installation and field services procedures to include cable installation activities such as cable installation, securing, tying, and binding.

72617

Copyright © 2023, All Rights Reserved.

Cabling Diagram

The following figure depicts the cabling connections of the MMU.

Figure 81. Cable Diagram

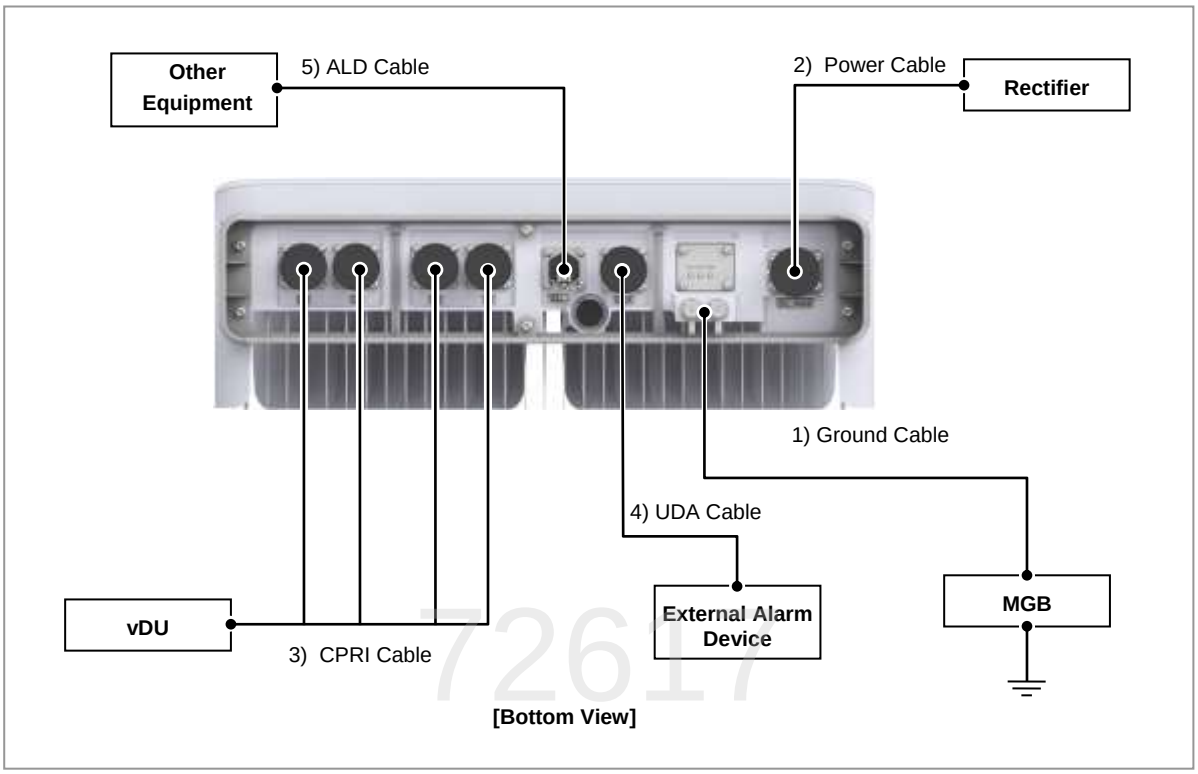

Table 23. MMU Connection Cable

From	To	Cable
MMU	MGB	**1** Ground Cable: 6 AWG × 1C
	Rectifier	**2** Power Cable: 6 AWG x 2C
	vDU	**3** CPRI Cable: Optical Cable Assembly (Single Mode, Outdoor Type)
	External Alarm Device	**4** UDA Cable: S-FTP, 24AWG, 4Pair
	Other Equipment	**5** ALD Cable: ALD Cable Assembly

If the cable is connected to external equipment, such as an optical distribution box, the inlet hole finishing method of the external equipment must be done after consultation with the equipment manufacturer.
- Optical distribution box, Power Cable, CPRI Cable, and so on.

Copyright © 2023, All Rights Reserved.

Grounding

Grounding is operating an electronic system (for example, a power supplying system, communication system, and control system) stably from lightning, transient-current, transient-voltage, and electric noise to prevent injury from electric shock.

Equipment grounding decreases the electrical potential of the electronic device, which is of zero electrical potential, to prevent device damage or physical injury due to electrification.

Connect the ground cable first. In cabling, cables without a connection to the ground cable may cause damage to the equipment or physical injury to personnel.

The purposes for establishing a common electrical ground during construction are as follows:

- To protect human life and the system from over-current, over-voltage, and lightning strikes.
- To provide a discharge path for surge voltage generated by lightning and power surges.
- To protect the system from static electricity.
- To eliminate or minimize the high-frequency potential in the system housing.
- To provide a conductor for the balance and stability of high-frequency currents.
- To stabilize the potential of the circuit against the ground.

726617

Copyright © 2023, All Rights Reserved.

Connecting Ground Cable

To connect the ground cable, do the following:

1 Ensure that the items described in the following table are available.

Table 24. Parts and Tools for connecting Ground Cable

Category	Description		
Installation Section	MMU Ground		MGB to MMU Ground Terminal
Cable	6 AWG × 1C, Green		
Bending Radius	Installed: 8 × OD		During Installation: 12 × OD
Heat Shrink Tube (Spec/Color/Length)	Φ 0.47 in. (12 mm)/Clear/1.96 in. (50 mm)		
Compression Terminal	MMU Ground	MGB	Checking MGB specifications per site and preparing connecting parts
		MMU	6 AWG, 2 Hole (90°), Hole diameter: 1/4 in. (6.4 mm), Hole spacing: 0.63 in. (16 mm)
Fastener	MGB		Checking MGB specifications per site and preparing connecting parts
	MMU		M6 x L14 SEMS (Hex. +)/2 EA
Recommended Torque Value	M6 SEMS		34 to 52 lbf·in
Working Tools	• When using Driver ○ Torque Driver (20 to 90 lbf·in.) ○ Screw Driver Bit ('+', No. 2) ○ Screw Driver ('+', No. 2) • When using Wrench ○ Torque Wrench (20 to 100 lbf·in.) ○ Torque wrench Spanner head (apply Hex. Head: 10 mm) ○ Spanner (10 mm) • Cable Cutter • Wire Stripper • Crimping tool • Heating Gun • Nipper		

The UL-listed products or equivalent should be used for the cable's compression terminal.
- MMU: 6 AWG Compression Terminal

2 Install the ground cable from the MGB to the MMU ground terminal.

Copyright © 2023, All Rights Reserved.

Figure 82. Connecting Ground Cable (1)

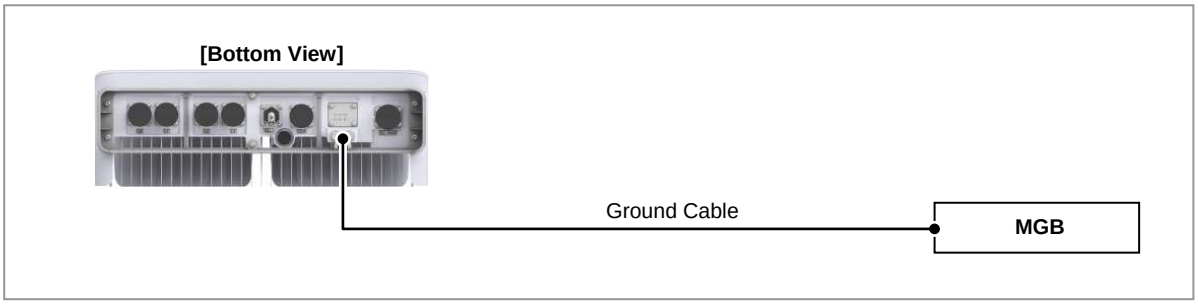

3 Remove the fastener (M6 SEMS) from the MMU ground terminal.

Figure 83. Connecting Ground Cable (2)

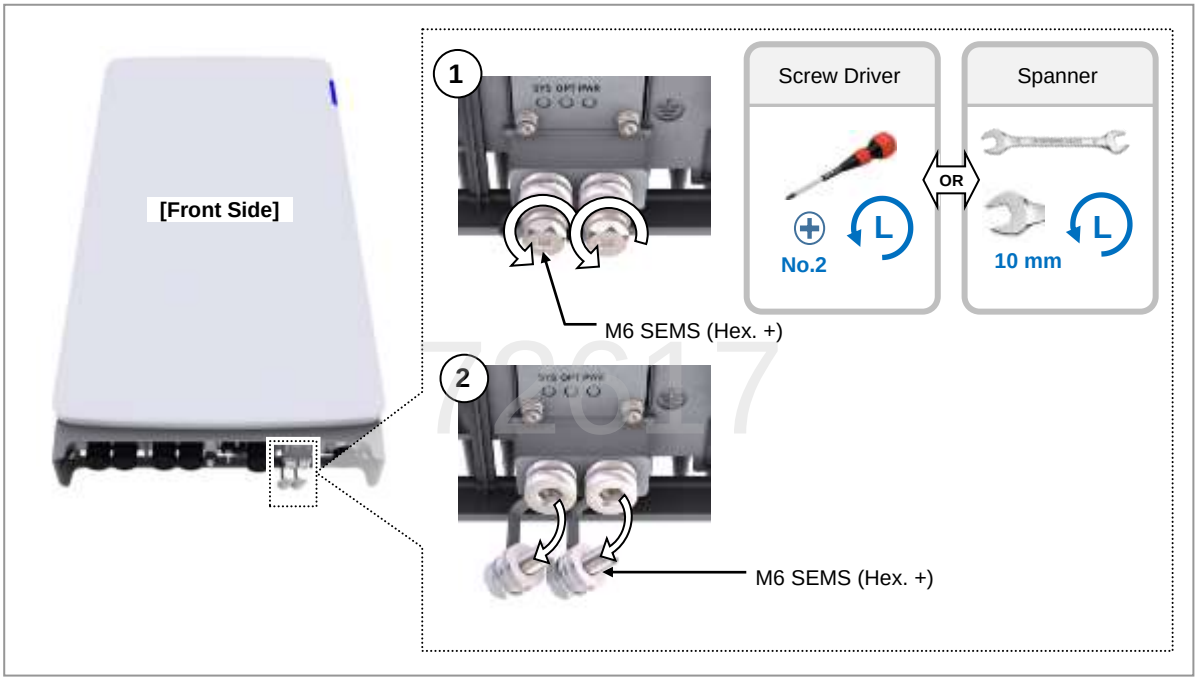

4 Align the compression terminal to the mounting hole of the MMU ground terminal.

5 Firmly attach the compression terminal to the MMU ground terminal using the fasteners.

Copyright © 2023, All Rights Reserved.

Apply antioxidants (for example, No-Oxide 2 oz) to prevent oxidation before connecting the compression terminal.

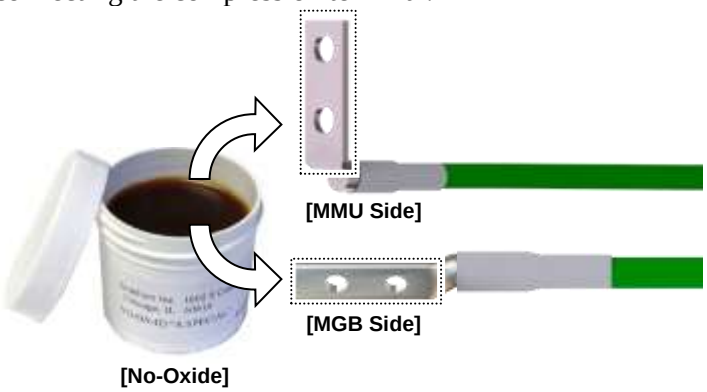

When connecting to the compression terminal, the ground cable must be positioned to face the left side of the system and then assembled.

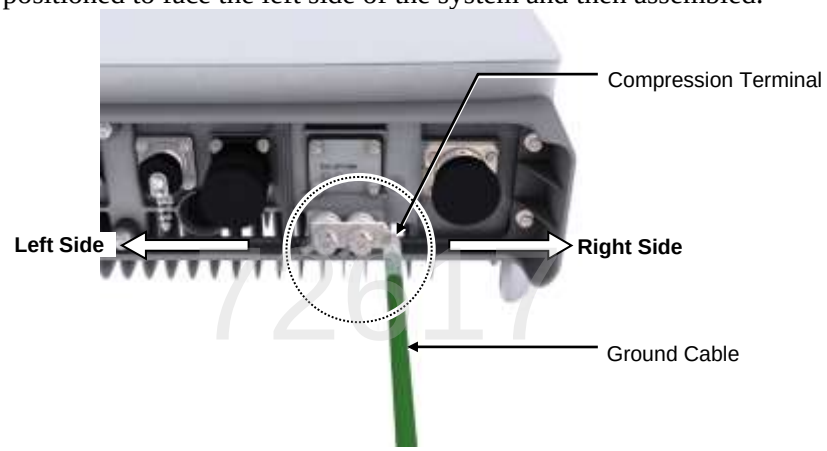

Copyright © 2023, All Rights Reserved.

Figure 84. Connecting Ground Cable (3)

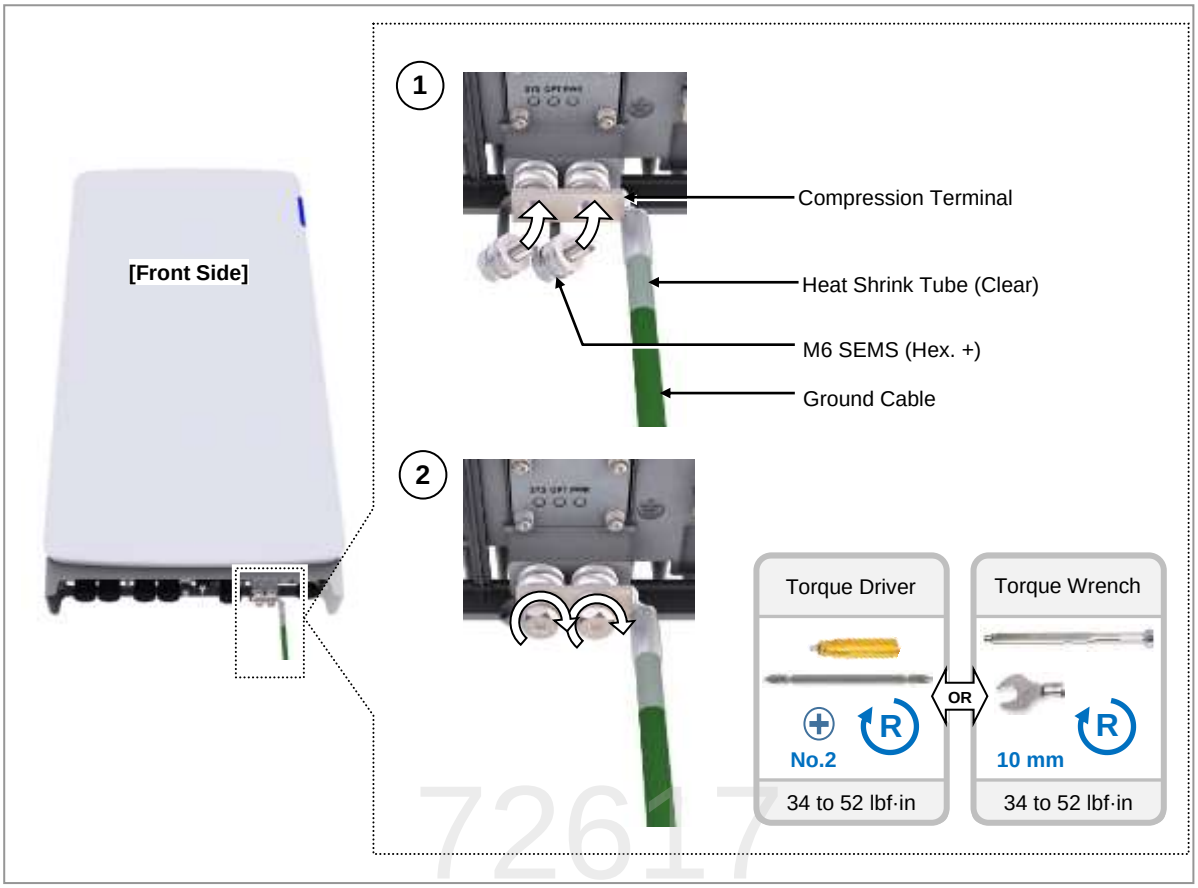

Copyright © 2023, All Rights Reserved.

Power Cabling

The following figure depicts elements of the power supply device.

Figure 85. Power Equipment Diagram

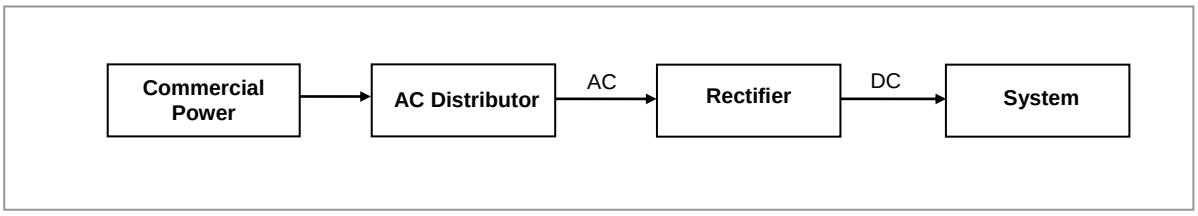

As power is supplied to the system by manipulating the circuit breaker of the rectifier, ensure the circuit breaker is turned off (open) before connecting a power cable to the power connector.
The worker may be critically injured when connecting or disconnecting cables if the system is installed while the circuit breaker is on.

Handling the power cable incorrectly may damage the rack or cause an electric short-circuit through the cable. Ensure the power switch of the rectifier or the system is turned off before handling the power.

The fasteners for the power cable must be tightly secured to prevent electrical accidents.

The heat-resistant temperature of the power cable should be 90°C or more.

When using the same DC power source with an outdoor device, discuss with an installation engineer of the manufacturer to protect the system from residual surge energy.

Install the power cable to the power port of the system by considering the radius of curvature of its cable specification and then cut the cable. If the operator installs the cable after cutting, there may be a length difference among the core wires at the end of the cable as of cable curvature. It may result in poor contact after the cable is connected to the power port.

Before connecting the power cable, ensure the power system has enough capacity for the Samsung equipment to operate normally.

Ground Kit should be used for the shielded power cable.

Install a circuit breaker to a rectifier (or power distributor) for stable power. The capacity of the circuit breaker is 50 A. (Use UL-listed circuit breakers.)

Copyright © 2023, All Rights Reserved.

Assembling Power Connector

To assemble the power connector, do the following:

1 Ensure that the items described in the following table are available.

Table 25. Parts and Tools for Assembling Power Connector

Category	Description	
Connector	Push Pull Type, 2P	
Cable	6 AWG x 2C	
Recommended Torque Value	M6 Hex. Screw	17.1 to 21.3 lbf·in
	Back shell/Nut	21.3 to 25.6 lbf·in
Working Tools	• Cable Cutter • Cable Stripper • Nipper • Torque Driver (6 to 22 lbf·in, 20 to 90 lbf·in) • Hex. Head Driver Bit (H3) • Torque Wrench (10 to 50 lbf·in) • Adjustable Spanner Head (Adjustable Head: 50 mm) • Multi Tester • Adjustable Spanner (50 mm)	

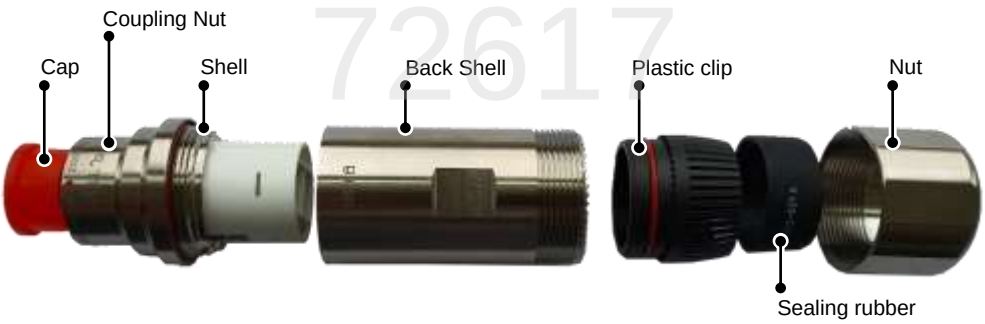

[DC Power Connector Components]

2 Check the OD (Outer Diameter) of the cable jacket; if it is not within Φ0.9 in. (23 mm) to Φ1.08 in. (27.5 mm), please change the sealing rubber to that marking is Φ0.78 in. (20 mm) to Φ0.96 in. (24.6 mm) or Φ0.7 in. (18 mm) to Φ0.88 in. (22.5 mm).

Table 26. Sealing Rubber Specification

Sealing Rubber Spec	Match the outside diameter of the cable jacket	Remark
Φ 23 to 27.5	Φ0.9 in. (23 mm) to Φ1.08 in. (27.5 mm)	Assembled in connector
Φ 20 to 24.6	Φ0.78 in. (20 mm) to Φ0.96 in. (24.6 mm)	Packed separately
Φ 18 to 22.5	Φ0.7 in. (18 mm) to Φ0.88 in. (22.5 mm)	

Copyright © 2023, All Rights Reserved.

When replacing the sealing rubber, replace and match it with the outside diameter of the cable jacket according to the steps mentioned in the following figure.

3 Remove the nut and plastic clip.

Figure 86. Assembling Power Connector (1)

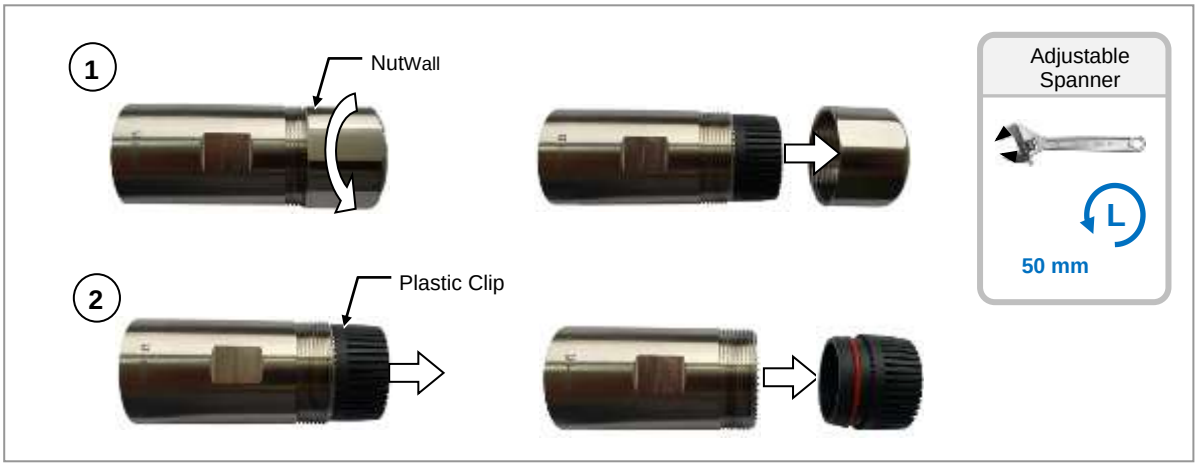

4 Remove a sealing rubber for Φ0.9 in. (23 mm) to Φ1.08 in. (27.5 mm) from the clip and insert a sealing rubber for Φ0.78 in. (20 mm) to Φ0.96 in. (24.6 mm) or Φ0.7 in. (18 mm) to Φ0.88 in. (22.5 mm) to the clip.

72617

Copyright © 2023, All Rights Reserved.

Figure 87. Assembling Power Connector (2)

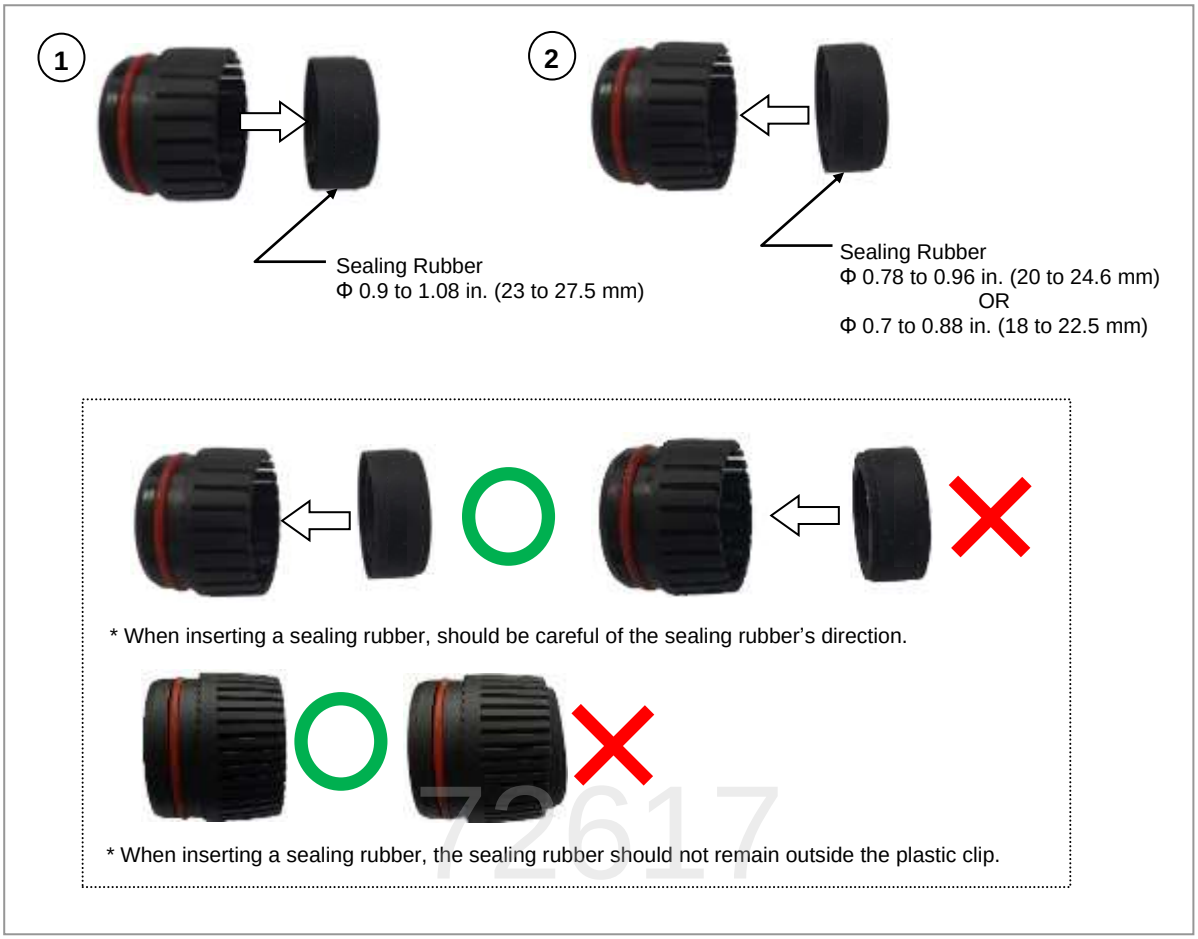

5 Insert the plastic clip into the back shell and tighten the nut.

Copyright © 2023, All Rights Reserved.

Figure 88. Assembling Power Connector (3)

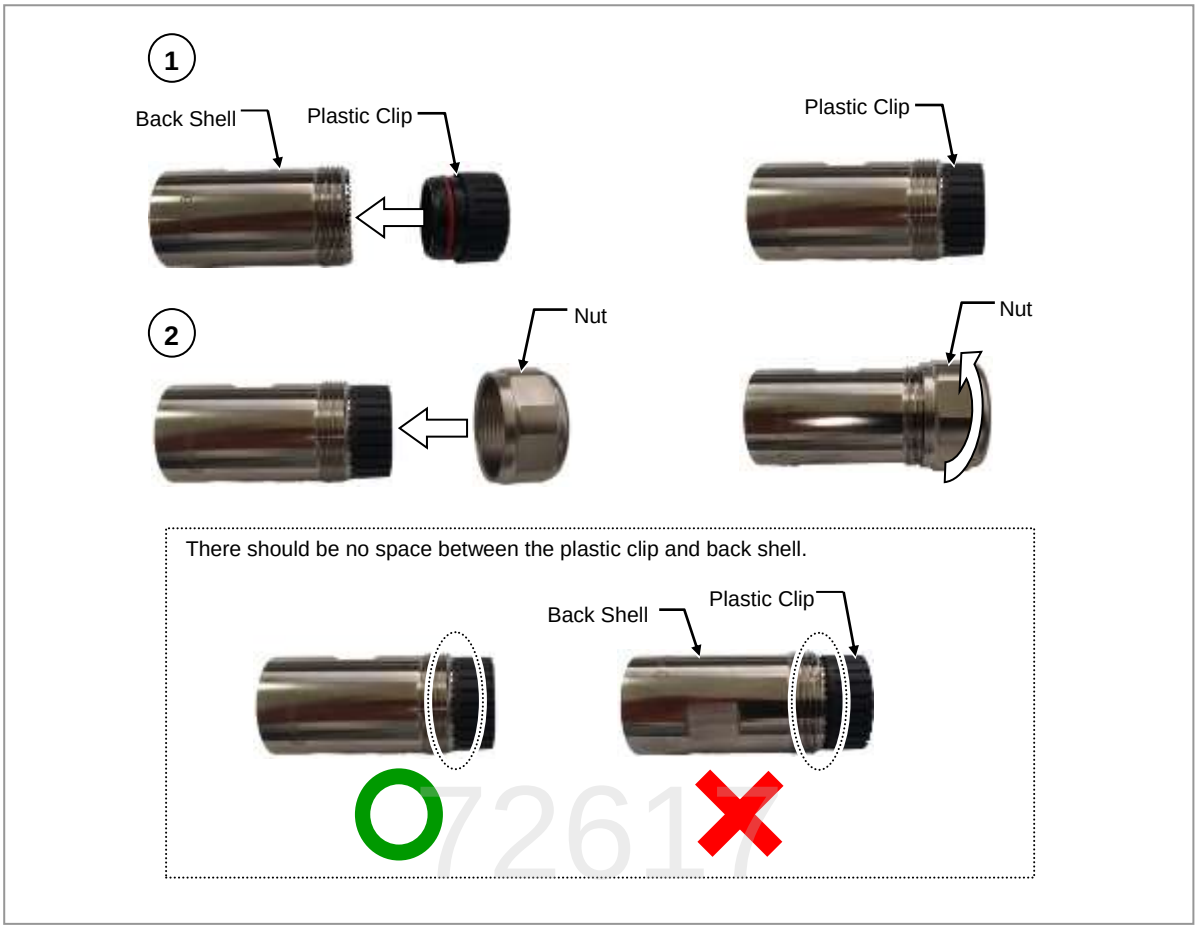

6 Attach a cable tie about 11.8 in. (300 mm) point from the end of the power cable.

7 Insert the back shell of the power connector into the power cable. (Put the nut of the back shell down.)

Copyright © 2023, All Rights Reserved.

Figure 89. Assembling Power Connector (4)

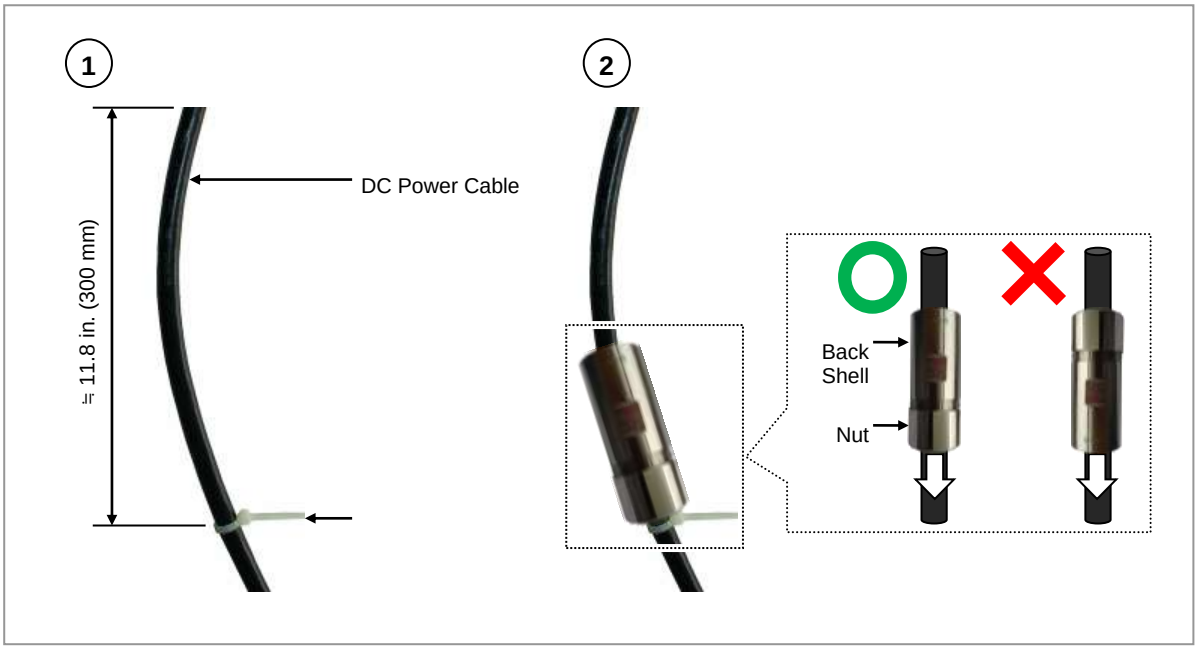

8 Remove the sheaths of the power cable and core wire according to the measurements shown in the following figure.

Figure 90. Assembling Power Connector (5)

72617

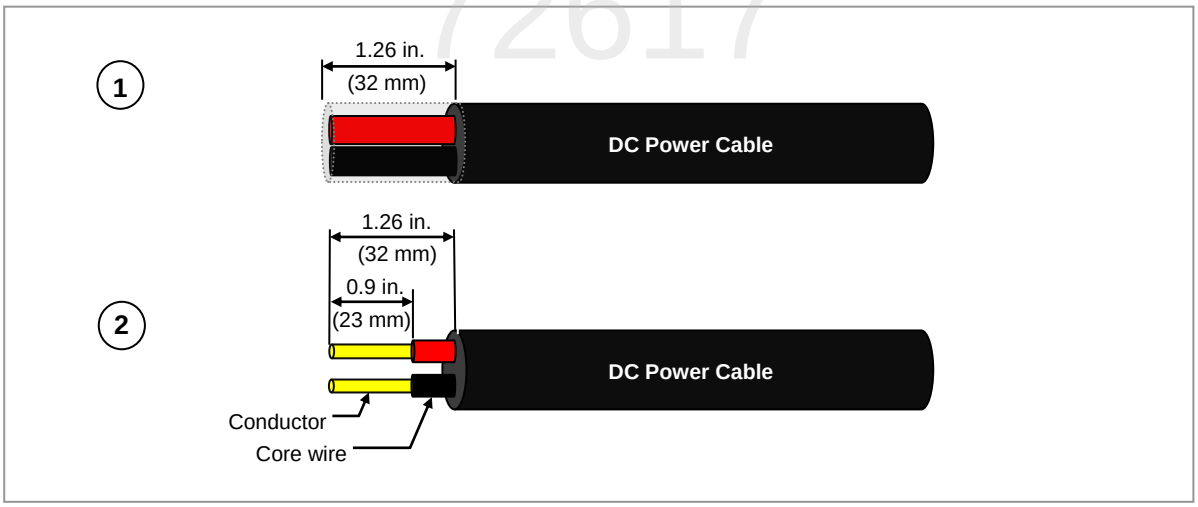

When striping the cable, avoid damaging the core wire and the conductor.

Copyright © 2023, All Rights Reserved.

When there is no working tool to check the length, cut the conductor by referring to the image on the shell (Insulator) of the power cable.

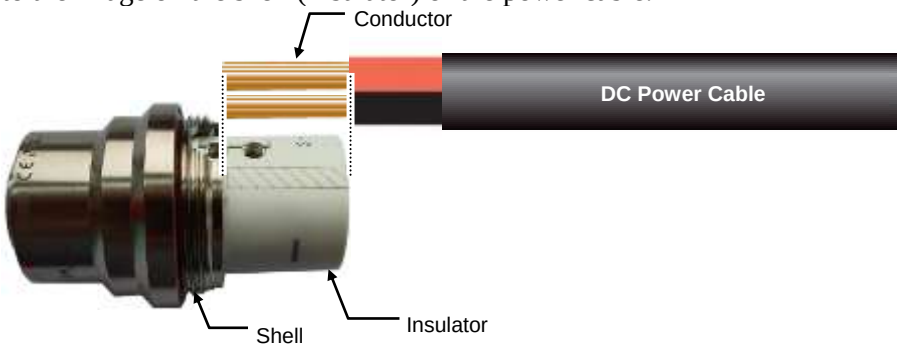

9 Twist the cable's conductor six times by hand.

Figure 91. Assembling Power Connector (6)

72617

10 After checking the core wire color, insert the core wires into pins 1 and 2 according to the proper polarity.

Copyright © 2023, All Rights Reserved.

Figure 92. Assembling Power Connector (7)

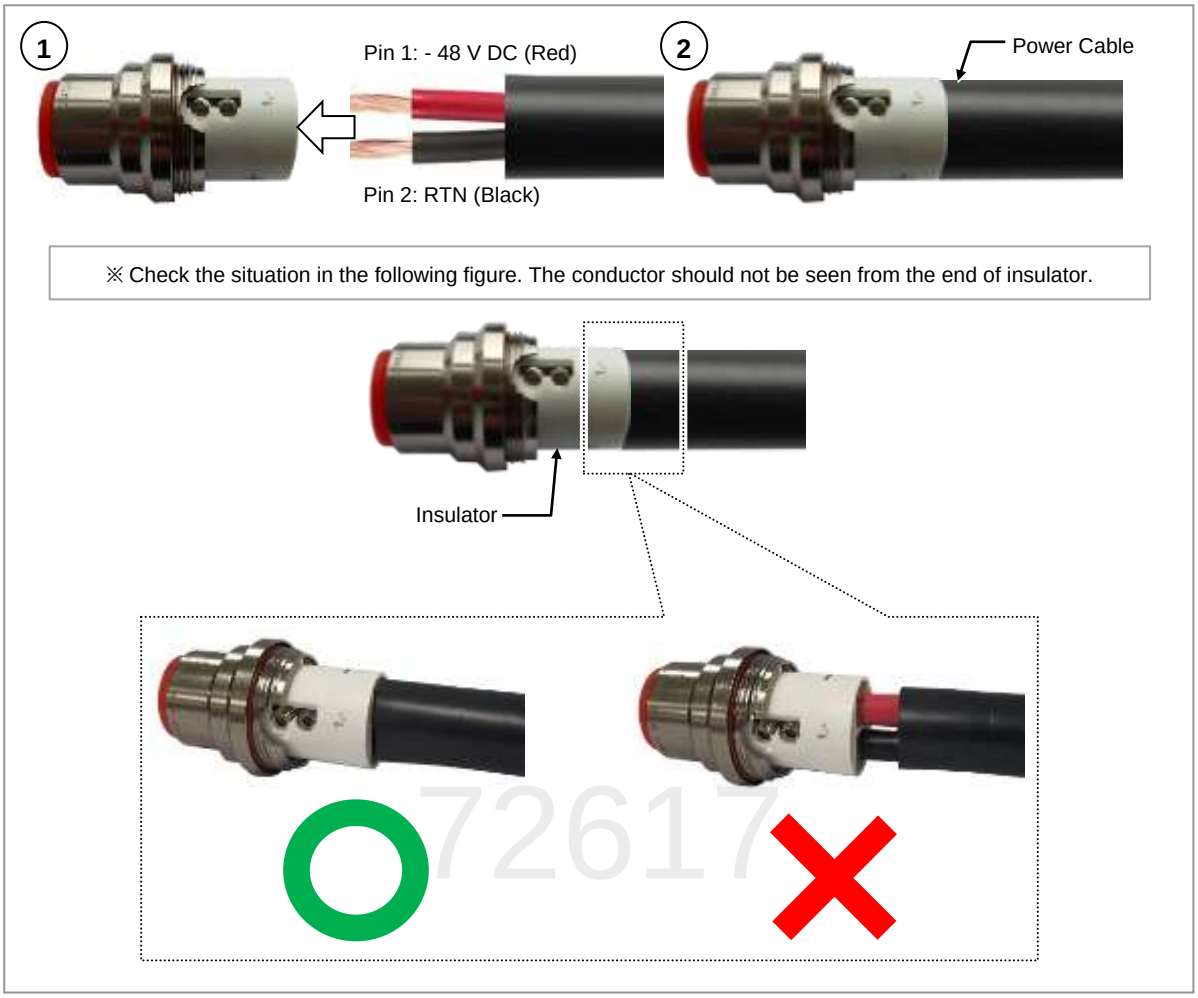

11 Tighten the screws in the two holes by using a hex torque driver.

Figure 93. Assembling Power Connector (8)

Copyright © 2023, All Rights Reserved.

If you use the spanner head as it is, you may break the connector, so use a torque wrench with rubber tape on the spanner head when assembling the power connector.

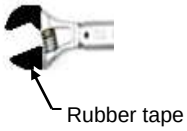

12 Applying the Loctite 454 on the first ring groove of the shell screw thread at 3 to 4 points.

13 Install the back shell with a wrench and set the torque force of torque wrench within 21.3 to 25.6 lbf·in. Then rotate the back shell in a clockwise direction.

Figure 94. Assembling Power Connector (9)

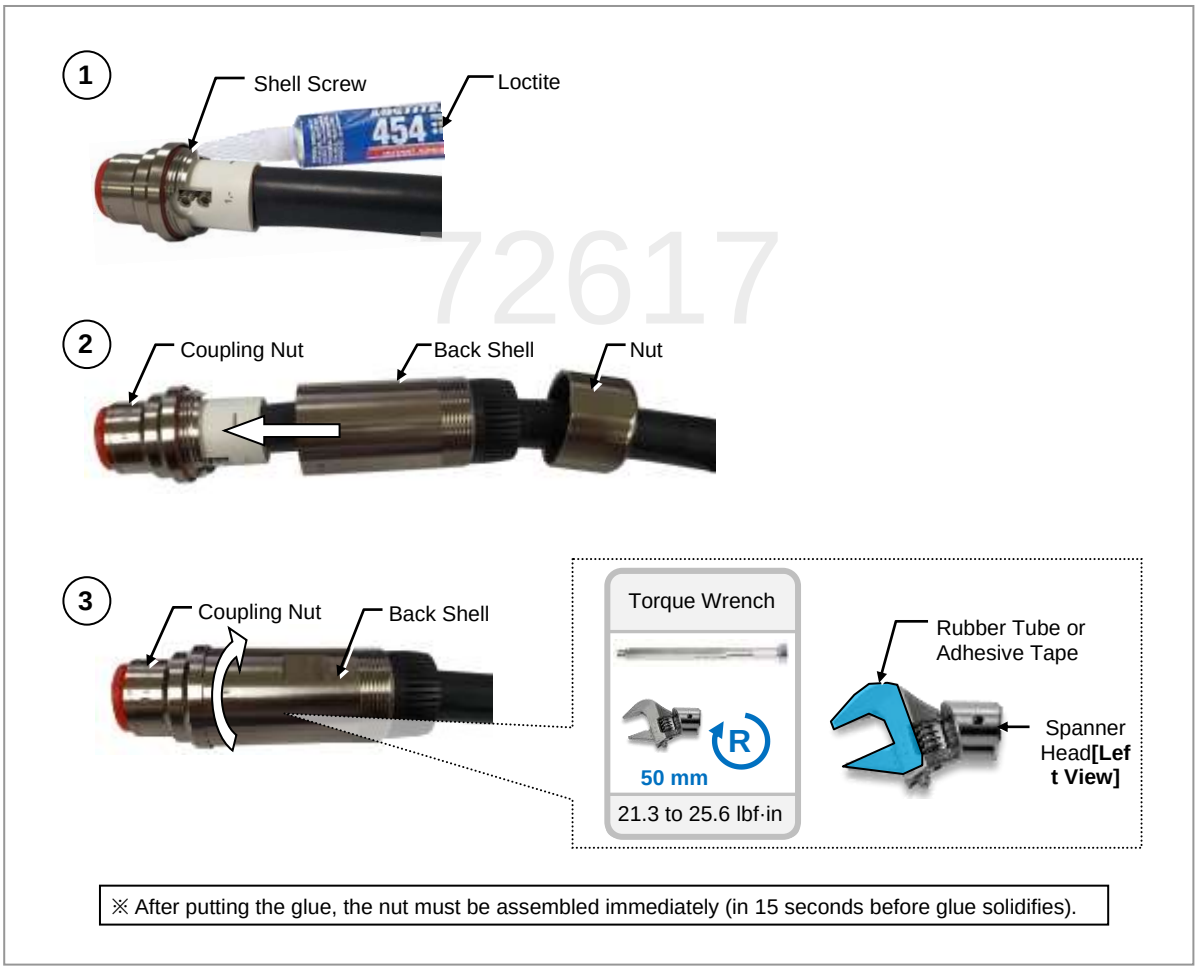

14 Applying the Loctite 454 on the first ring groove of the back shell screw thread at 3 to 4 points.

Copyright © 2023, All Rights Reserved.

15 Insert the nut by wrench, and set the torque force of torque wrench within 21.3 to 25.6 lbf·in. Then rotate the nut in a clockwise direction.

Figure 95. Assembling Power Connector (10)

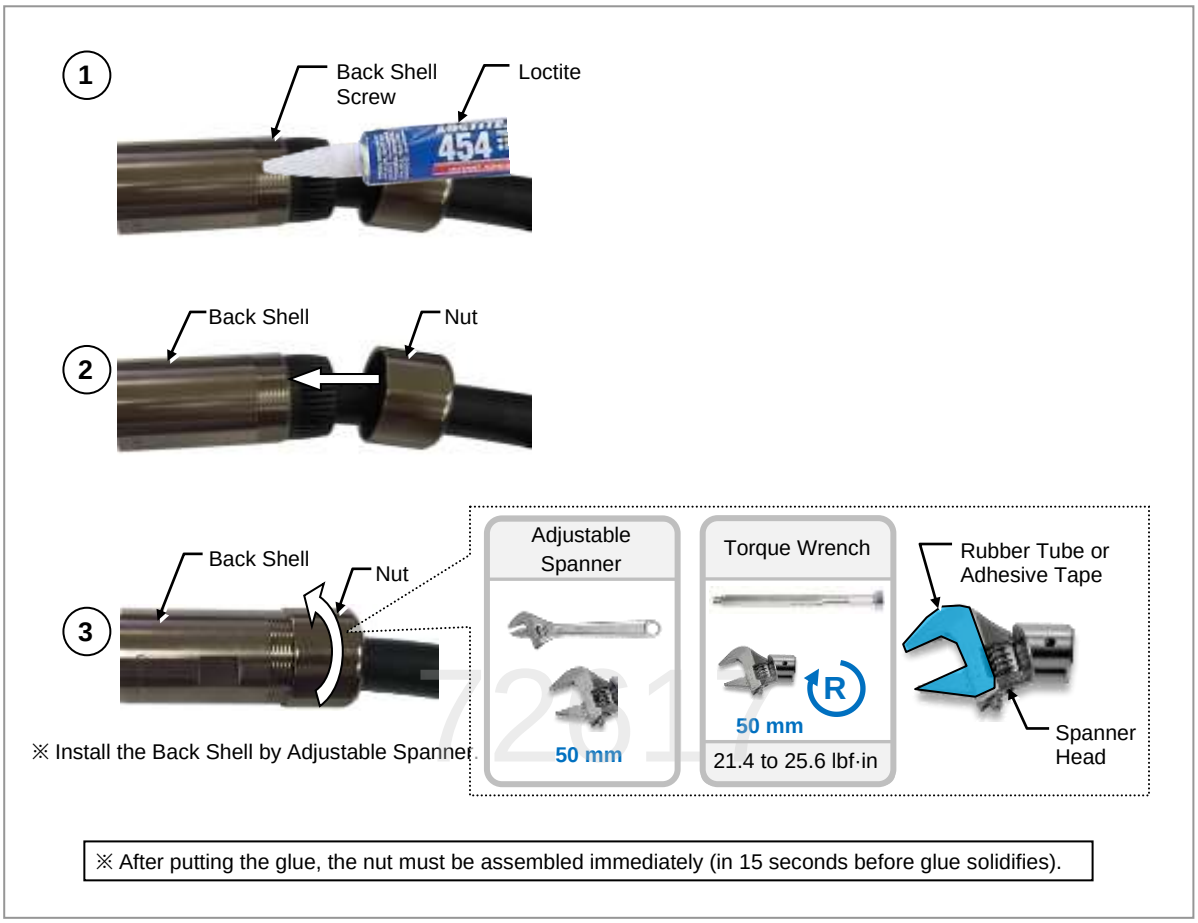

16 Check the electrical isolation using a multi tester.

- Pin 1 and Pin 2
- Pin 1/Pin 2 and back shell

Figure 96. Assembling Power Connector (11)

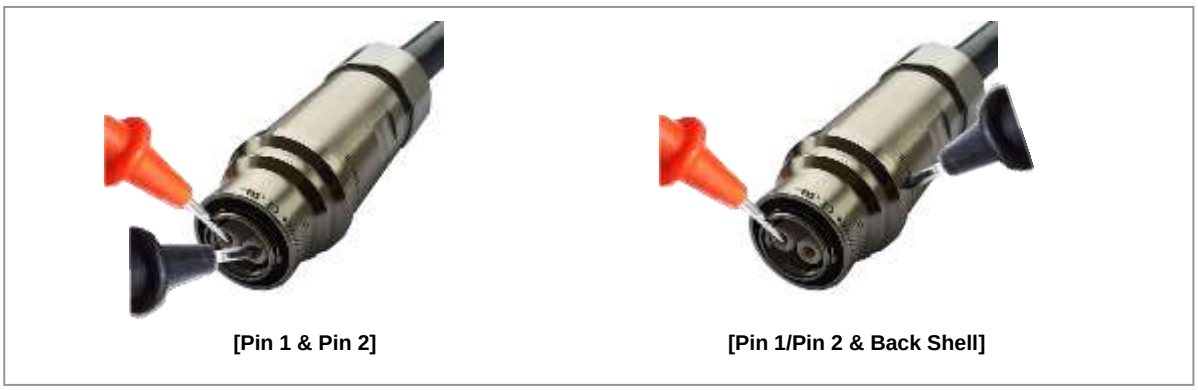

Copyright © 2023, All Rights Reserved.

Connecting Power Cable

This section describes the procedure to connect the power cable.

To connect the power cable, do the following:

1 Ensure that the items described in the following table are available.

Table 27. Parts and Tools for Connecting Power Cable

Category	Description	
Installation Section	Rectifier to MMU_PWR port	
Cable	6 AWG x 2C	
Bending Radius	Installed: 8 × OD	During Installation: 12 × OD
Connector	Rectifier	Check specifications of the Rectifier output terminal per site and prepare fasteners.
	MMU	Push Pull, 2P
Working Tools	• Cable Cutter • Wire Stripper • Compressor • Heating Gun • Nipper	

72617

2 The following table outlines the power cable connector pin map:

Table 28. Power Cable/Connector Pin Map

Power Connector Pin Number	Description	Color
Pin 1	-48 V DC	Red
Pin 2	RTN	Black

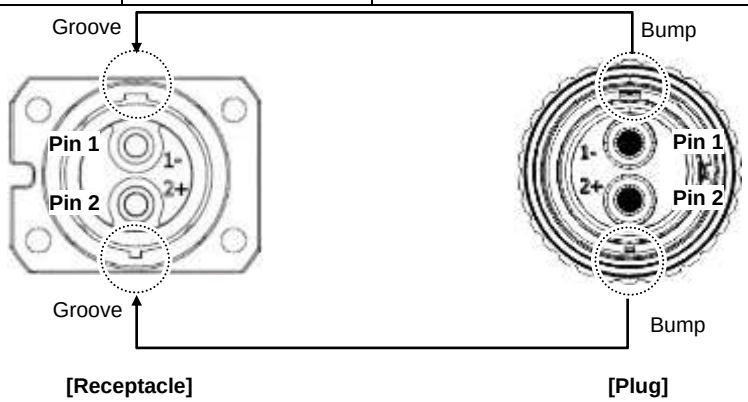

3 Install the power cable from the rectifier to the MMU.

Copyright © 2023, All Rights Reserved.

Figure 97. Connecting Power Cable (1)

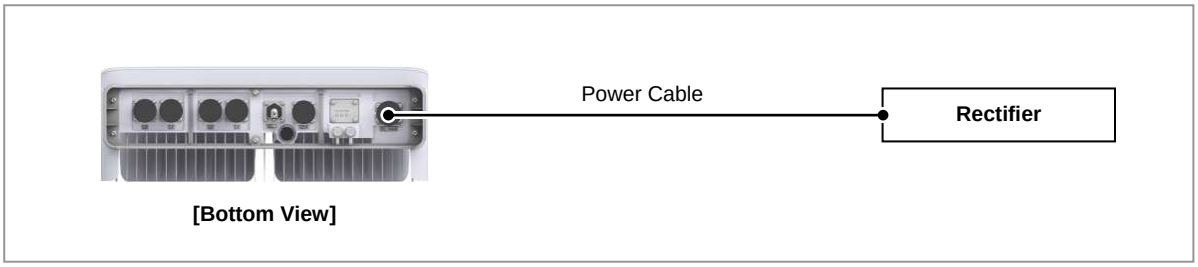

4 Separate the cap from the receptacle (PWR port) and plug it in.

Figure 98. Connecting Power Cable (2)

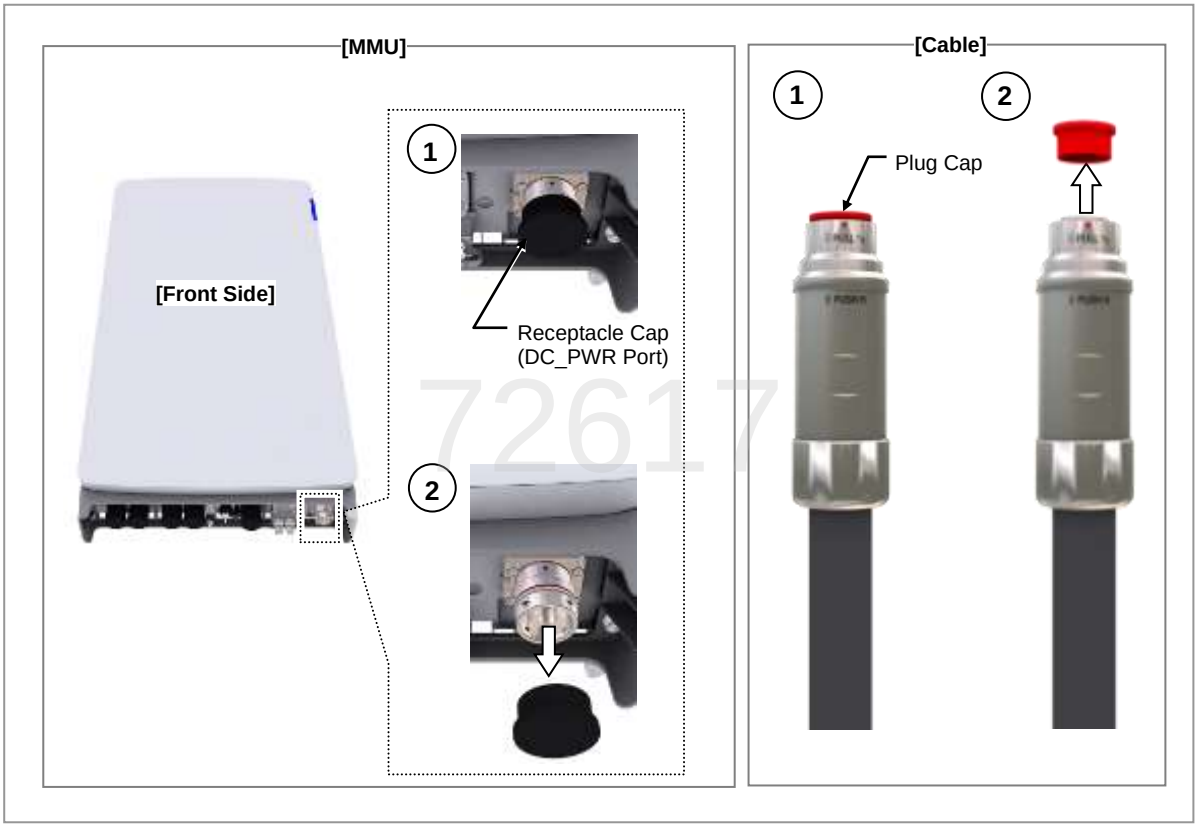

5 Insert the connector aligning red mark of the plug and red mark of the receptacle.

6 When inserting the plug, push the shell to the upper side.

Copyright © 2023, All Rights Reserved.

Figure 99. Connecting Power Cable (3)

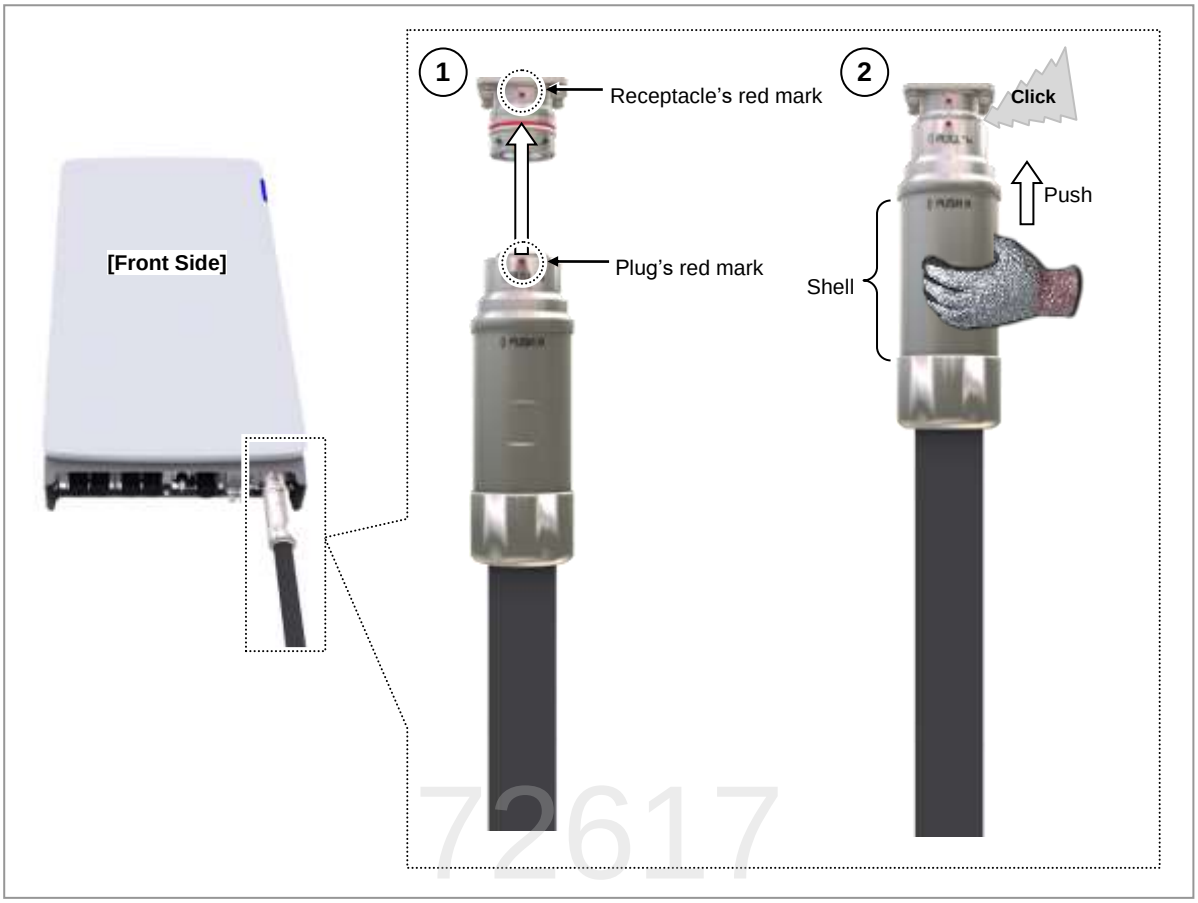

Copyright © 2023, All Rights Reserved.

When the connector is fastened tight, the red line on the receptacle becomes invisible.

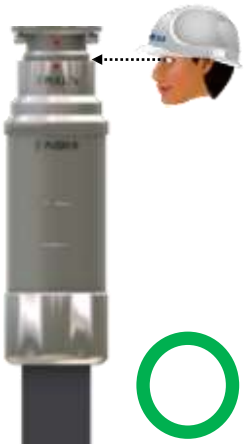

[Red Line is invisible]

[Red Line is visible]

The method for connecting or disconnecting the plug is as follows:
- For connecting the plug, push the shell to the upper side.
- Pull the coupling nut to the lower side to disconnect the plug.

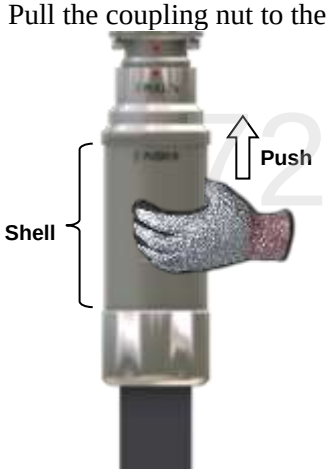

[Connecting Plug]

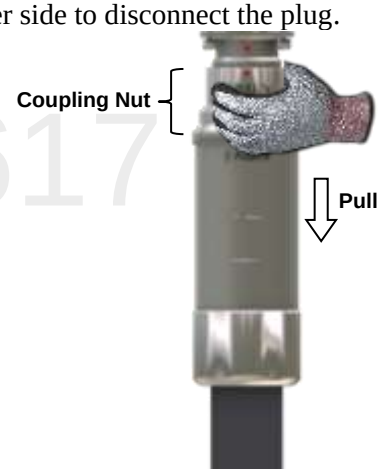

[Detach Plug]

42617

Copyright © 2023, All Rights Reserved.

Connecting Interface Cable

This section describes the procedure to connect the interface cables.

Remove/Insert Optical Module

If the optical module is required to be removed or inserted before connecting the cable, perform the following procedure.

Port quantity (Duplex/Simplex) and Bail of Optical module may differ from the figure.

To remove the optical module, do the following:

1 Hang the hook of the optical transceiver removal tool on the bail of the optical module within the system.

Figure 100. Optical Module Removal (1)

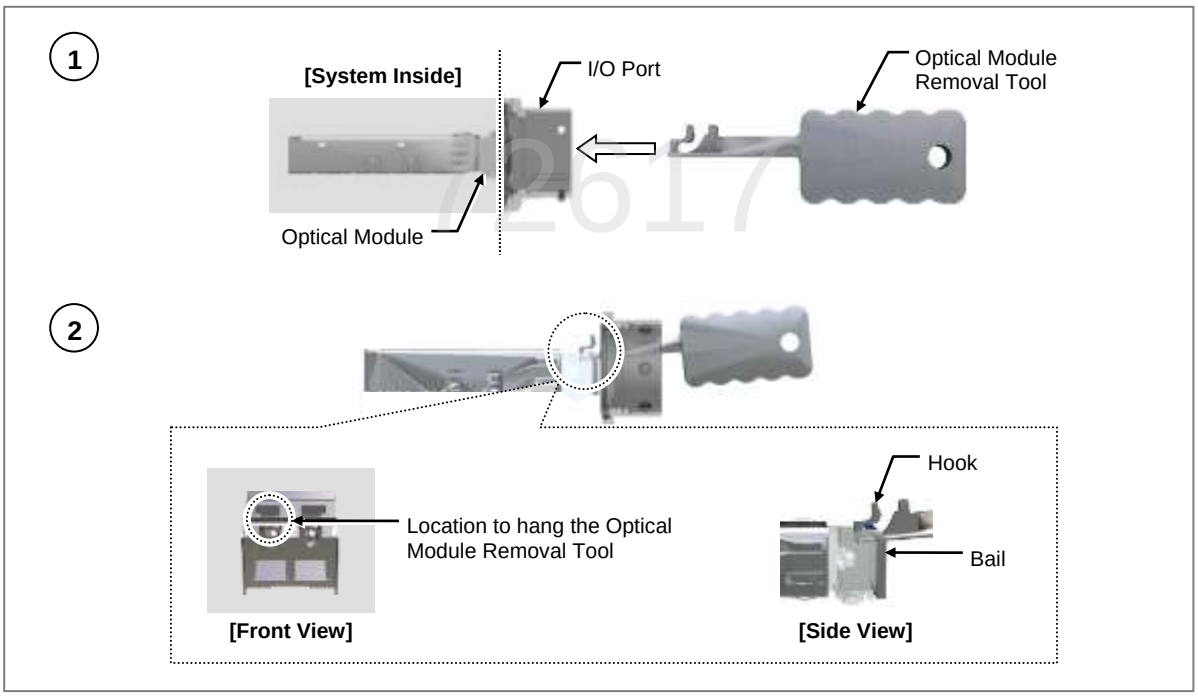

2 Completely remove the optical module from the optical module cage by pulling the optical module removal tool.

Copyright © 2023, All Rights Reserved.

Figure 101. Optical Module Removal (2)

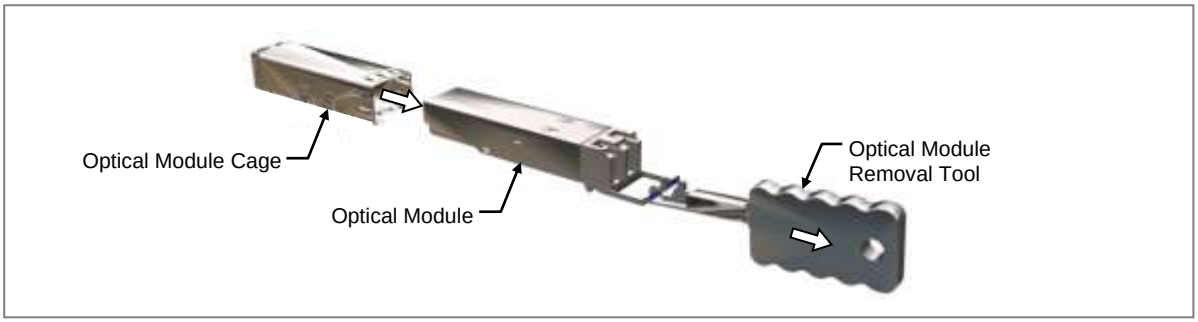

When removing an optical module, open the handle about 90º and remove the optical module using the dedicated tool (optical module removing tool).

If the optical module is detached without using a dedicated tool, the optical module may be jammed, and the handle may be damaged due to insufficient opening of the handle.

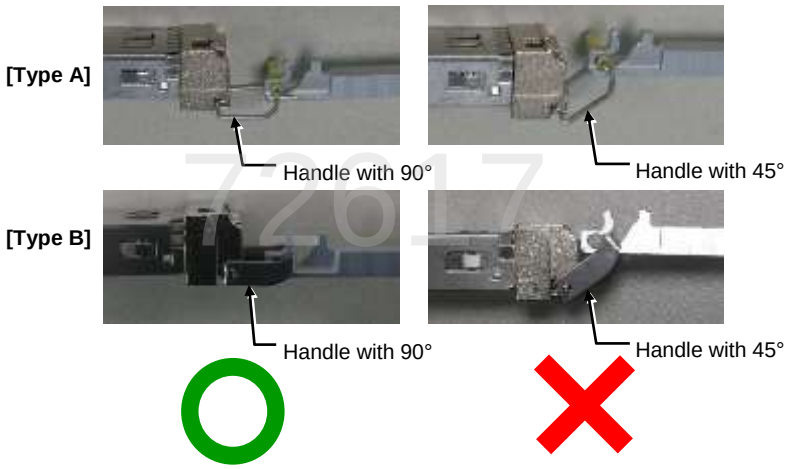

72617

3 Remove the optical module and the jig by pressing the optical module Removal Tool's hook grip.

Figure 102. Optical Module Removal (3)

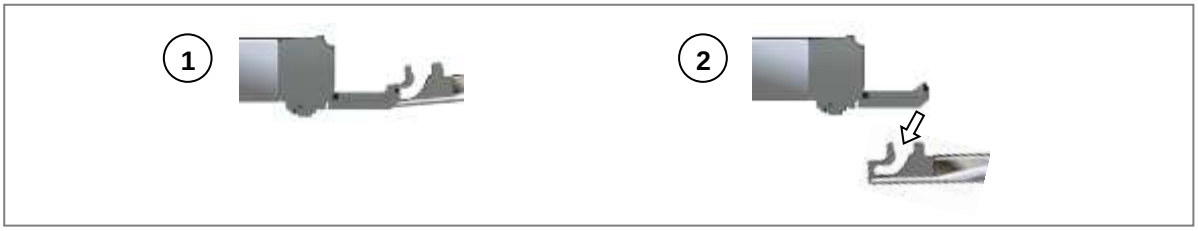

Copyright © 2023, All Rights Reserved.

To insert the optical module, do the following:

- Push the optical module into the optical module cage within the connector.

Figure 103. Optical Module Insert

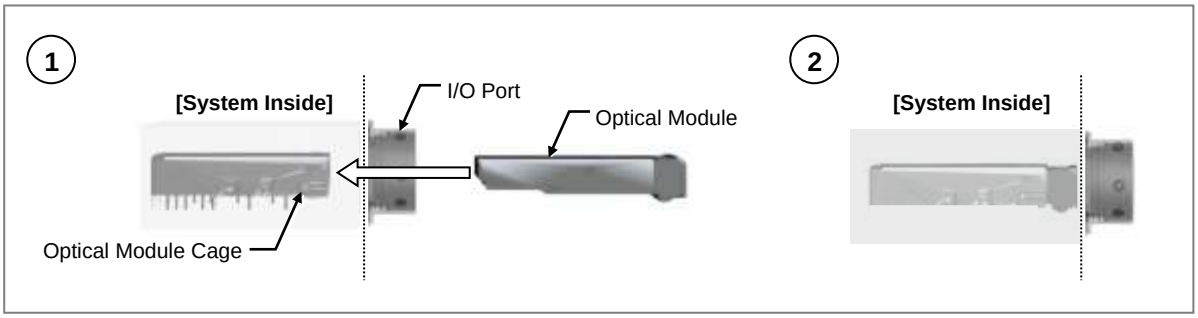

Inset the optical module's bail facing the rear of the system to the port.

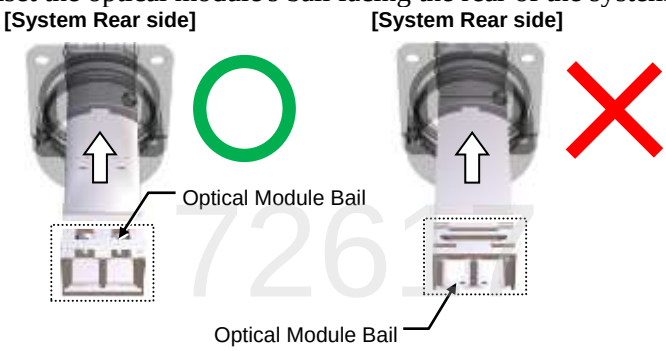

Do not insert when the optical module's bail is unlocked.

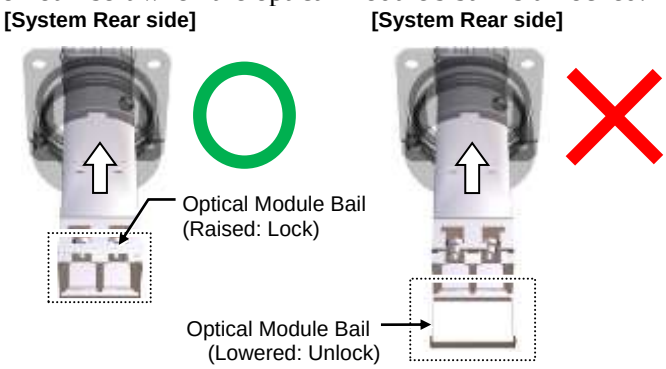

Copyright © 2023, All Rights Reserved.

Connecting CPRI Cable

This section describes the connection of the CPRI cable.

Using CPRI Cable Assembly

To connect the CPRI cable assembly, do the following:

1 Ensure that the items described in the following table are available.

Table 29. Parts and Tools for CPRI Cable Connection

Category	Description	
Installation Section	vDU to MMU L0, L1, L2, L3 Port	
Cable	Optical Cable (Single Mode, Outdoor Type)	
Bending Radius	Installed: 10 × OD	During Installation: 20 × OD
Connector	MMU	Push Pull, DLC/UPC, or LC/UPC
	vDU	DLC/UPC or LC/UPC
Working Tools	• Optical Connector Cleaner • SFP Tool (Jig)	

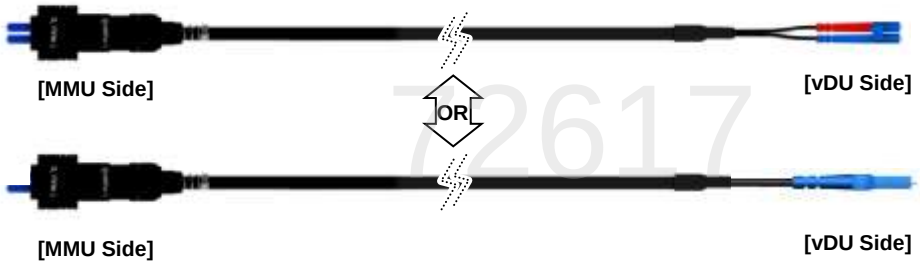

In the system, the laser beam light runs through the optical cable.
Exposure to the laser beam on the worker's eye may cause serious injury, so it should be handled carefully.

Copyright © 2023, All Rights Reserved.

Before connecting the optical cable, verify that the optical module and the optical cable are compatible with each other.

Remove the cap of the optical connector before connecting.
Remove the cap of the optical plug before connecting.
- Before connecting the optical plug, verify that the ferrule of the optical plug is soiled. Be careful to keep the cutting section away from dust or foreign material. If the optical plug is soiled with foreign material, do not blow to remove them.
- Ensure to clean the connector per the cleaning directions in *Appendix B: Cleaning the Optical Connectors*.
- Do not touch the ferrule at the end of the optical plug, as it is easily damaged.

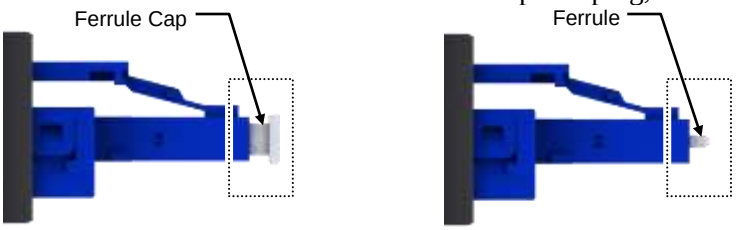

[Before Removing Cap] **[After Removing**

Before connecting the CPRI cable connector, the ferrule of the connecter of the cable side should be cleaned first by using the optical connector cleaner. (For more details, refer to *Appendix B: Cleaning the Optical Connector*.)

The CPRI cable can use both Simplex Type and Duplex Type. The following installation processes are described based on Duplex Type.

2 Install the CPRI cable from the vDU to the MMU.

Figure 104. Connecting CPRI Cable (1)

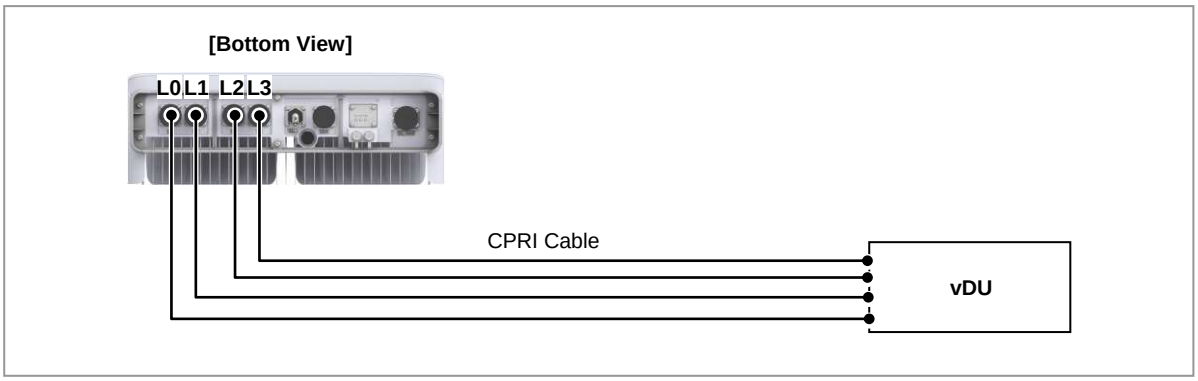

3 Separate the cap from the receptacle (L0, L1, L2, and L3 ports.)

Copyright © 2023, All Rights Reserved.

Figure 105. Connecting CPRI Cable (2)

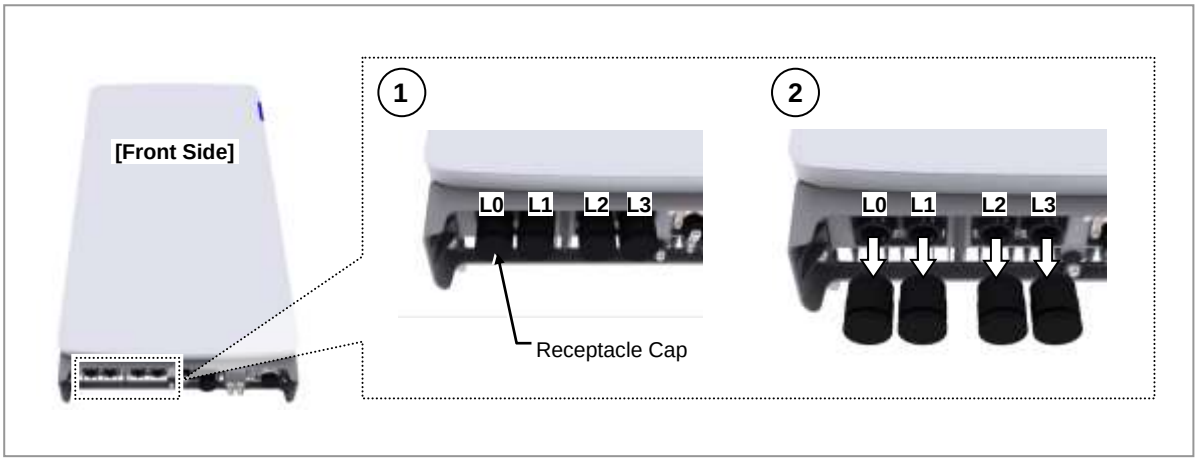

4 Separate the cap from the plug.

Figure 106. Connecting CPRI Cable (3)

5 Insert the DLC plug into the receptacle.

6 Insert the plug aligning the plug's white and receptacle's white dots. When inserting the plug, push the shell to the upper side.

Before connecting the CPRI cable connector, the ferrule of the connecter of the cable side should be cleaned first by using the optical connector cleaner. (For more details, refer to *Appendix B: Cleaning the Optical Connector*.)

Copyright © 2023, All Rights Reserved.

Figure 107. Connecting CPRI Cable (4)

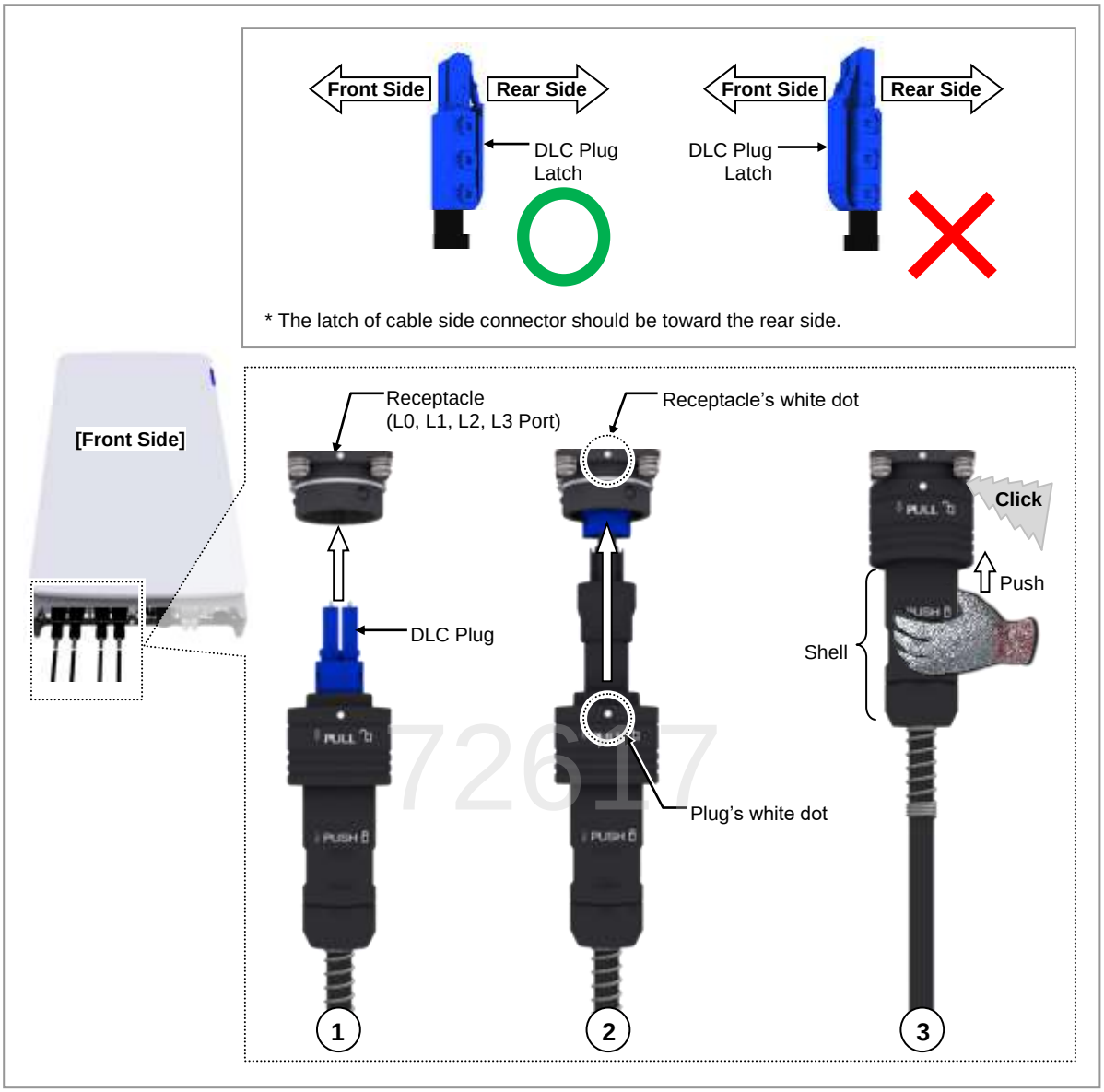

Copyright © 2023, All Rights Reserved.

The receptacle's white line becomes invisible (or hidden) when the plug is tightened.

[White Line is invisible]

[White Line is visible]

The method for connecting or disconnecting the plug is as follows:
- For connecting the plug, push the shell to the upper side.
- Pull the coupling nut to the lower side to disconnect the plug.

[Connecting Plug]

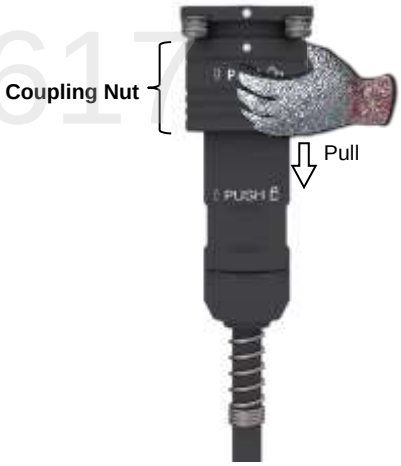

[Detach Plug]

Remove CPRI cable Assembly

To remove the CPRI cable, do the following:

1 Ensure that the items described in the following table are available.

Table 30. Parts and Tools for Remove CPRI Cable

Category	Description
Working Tools	• Nipper • Screw Driver (-)

Copyright © 2023, All Rights Reserved.

2 Pull the plug coupling nut to the bottom to disconnect the CPRI plug from the system.

3 Unlock the latch of the DLC plug by hand or using a screwdriver (-), and then remove the cable.

Figure 108. Remove CPRI Cable (1)

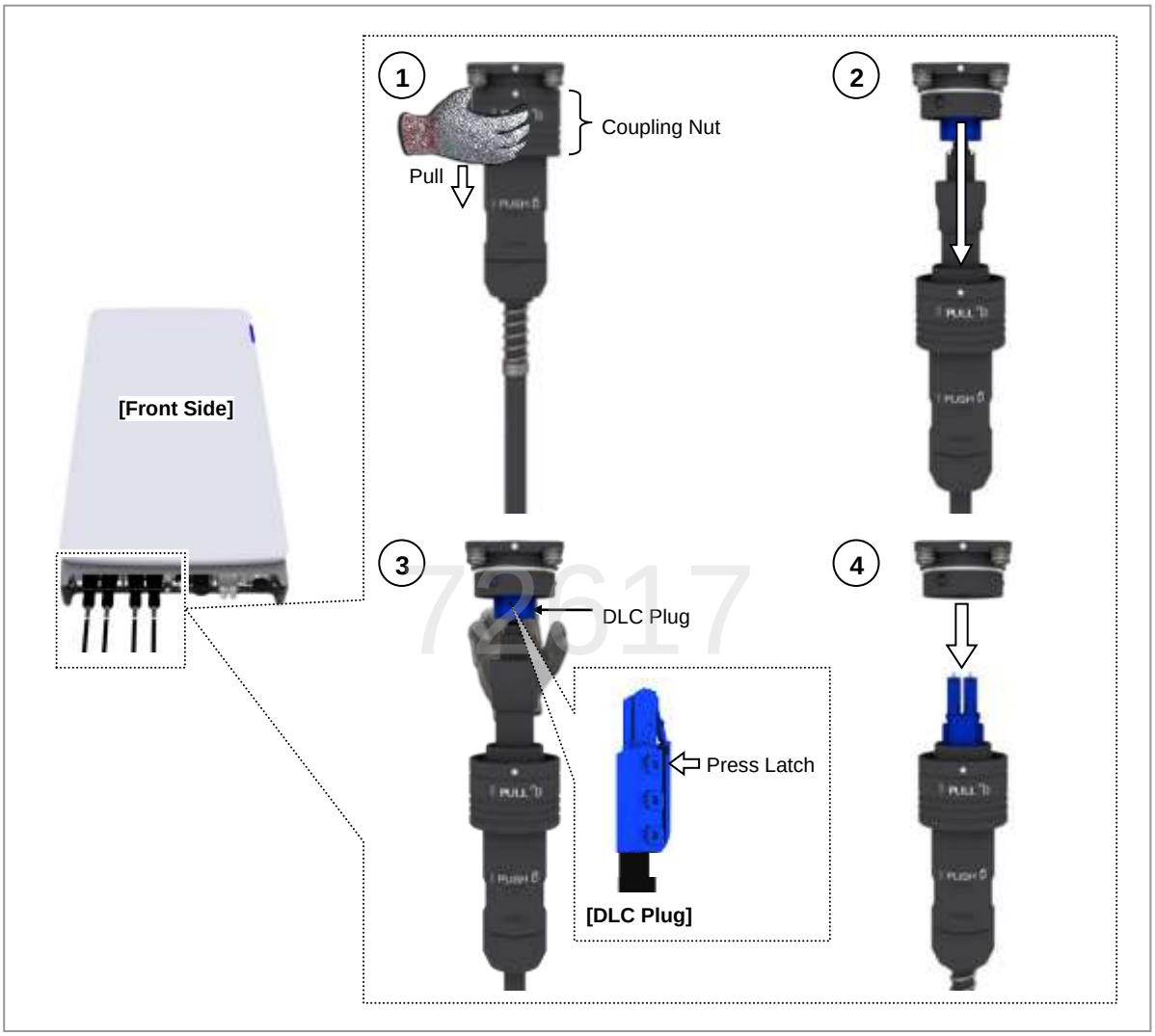

4 Fit the cap on the separated plug and the receptacle.

Copyright © 2023, All Rights Reserved.

Figure 109. Remove CPRI Cable (2)

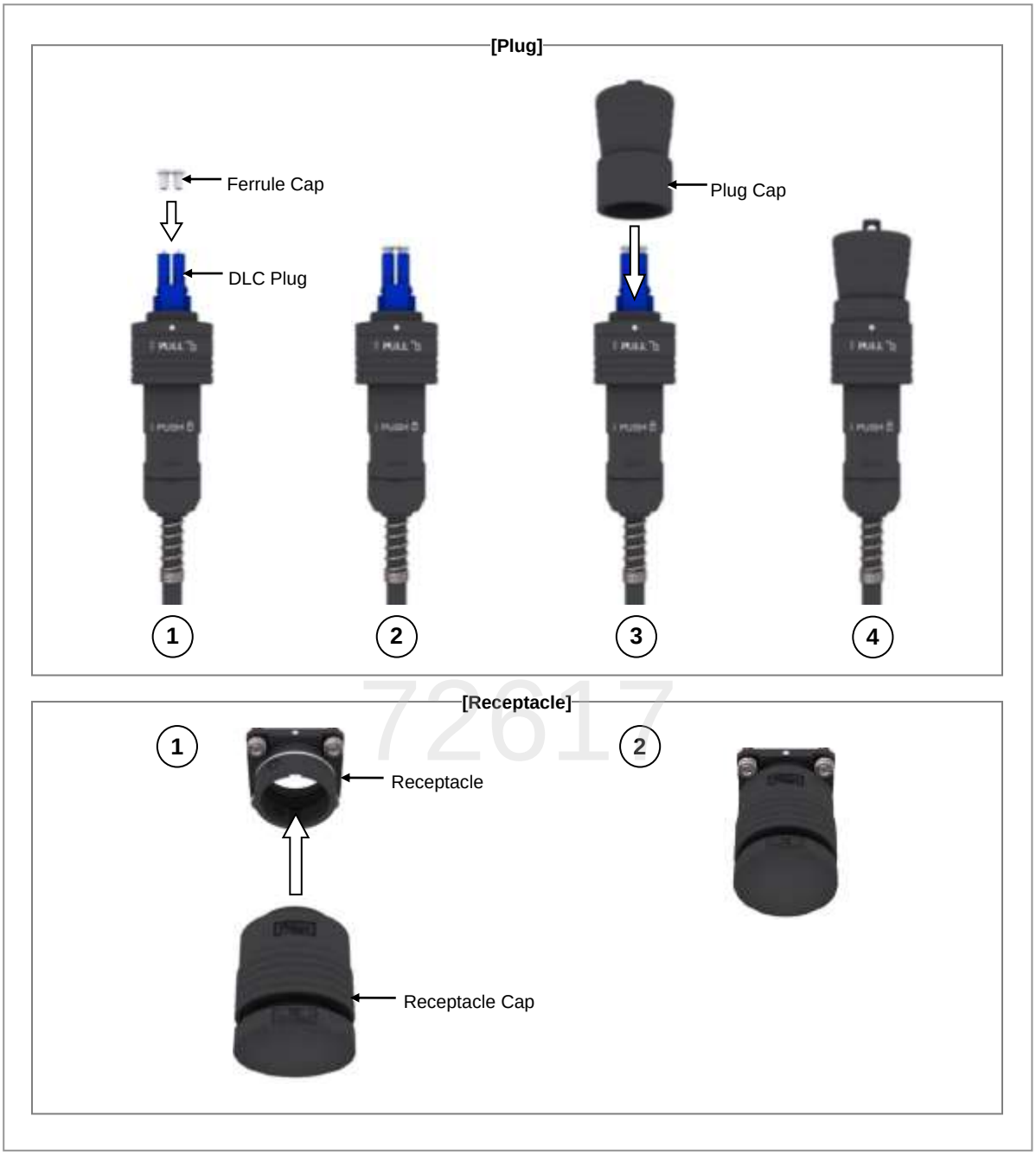

Copyright © 2023, All Rights Reserved.

1) When removing the CPRI cable, be sure to release the lock by pressing the latch of the DLC plug first.

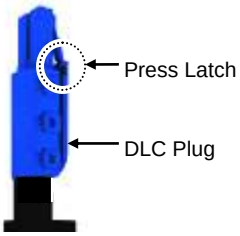

2) Avoid touching the ferrule (white part) at the end of the connector, as it can be easily damaged. It should be sealed using the cap.

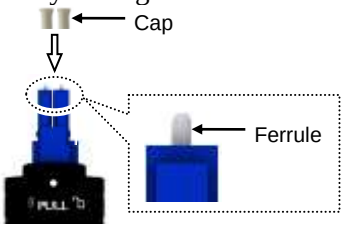

3) When removing or storing the cable, keep it at no less than its minimum bending radius and free of damage caused by other objects.

- Bending radius: 10 × OD

72617

Copyright © 2023, All Rights Reserved.

Using Field Installable Connector (FJ50 Connector)

To connect field installable connector, do the following:

1 Ensure that the items described in the following table are available.

Table 31. Parts and Tools for connecting Field Installable Connector

Category	Description	
Installation Section	vDU to MMU L0, L1, L2, L3 Port	
Cable	Optical Cable (Single Mode)	
Bending Radius	Installed: 10 × OD	During Installation: 20 × OD
Connector	MMU	FJ50 Field Installable Connector
	vDU	DLC/UPC or LC/UPC
Recommended Torque Value	Nut(for FJ50 Field Installable Connector)	
	Ø 0.24 in. to 0.26 in. (Ø 6.1 to 6.5 mm)	25.7 lbf·in
	Ø 0.21 in. to 0.24 in. (Ø 5.3 to 6.1 mm)	
	Ø 0.18 in. to 0.21 in. (Ø 4.6 to 5.3 mm)	29.9 lbf·in
Working Tools	• Optical Connector Cleaner • SFP Tool (Jig) • Torque Wrench (20 to 100 lbf·in.) • Torque Wrench Adjustable Spanner head (apply Hex. Head: 50 mm) • Adjustable Spanner (50 mm)	

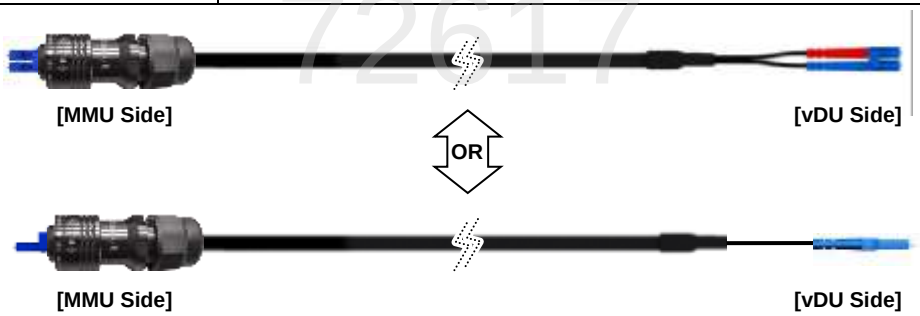

In the system, the laser beam light runs through the optical cable. The installation engineers should handle the optical cables carefully, as the laser beam can seriously damage the eyes.

Copyright © 2023, All Rights Reserved.

Remove the cap of the optical connector before connecting.
Before connecting the optical cable, verify that the connector's ferrule is soiled. Be careful to keep the cutting section away from dust or foreign material.
If the cable is soiled with foreign material, do not blow to remove them.
Ensure to clean the connector per the cleaning directions in *Appendix B: Cleaning the Optical Connectors*.
Do not touch the ferrule at the end of the optical cable, as it can easily be damaged.

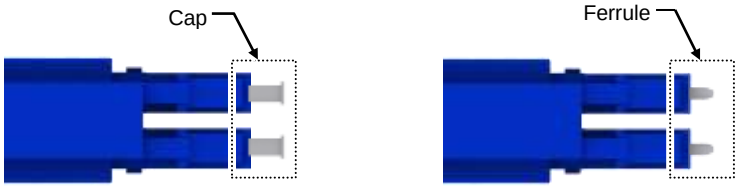

[Before Removing Cap] **[After Removing Cap]**

The CPRI cable can use both Simplex Type and Duplex Type. Check the optical module according to the field situation and perform the operation.

Before connecting the CPRI cable connector, the ferrule of the connecter of the cable side should be cleaned first by using the optical connector cleaner. (For more details, refer to *Appendix B: Cleaning the Optical Connector*.)

The CPRI cable can use both Simplex Type and Duplex Type. The following installation processes are described based on Duplex Type.

72617

2 Install the CPRI cable from the vDU to the MMU (L0, L1, L2, L3 ports).

Figure 110. Connecting CPRI Cable Using Field Installable Connector (1)

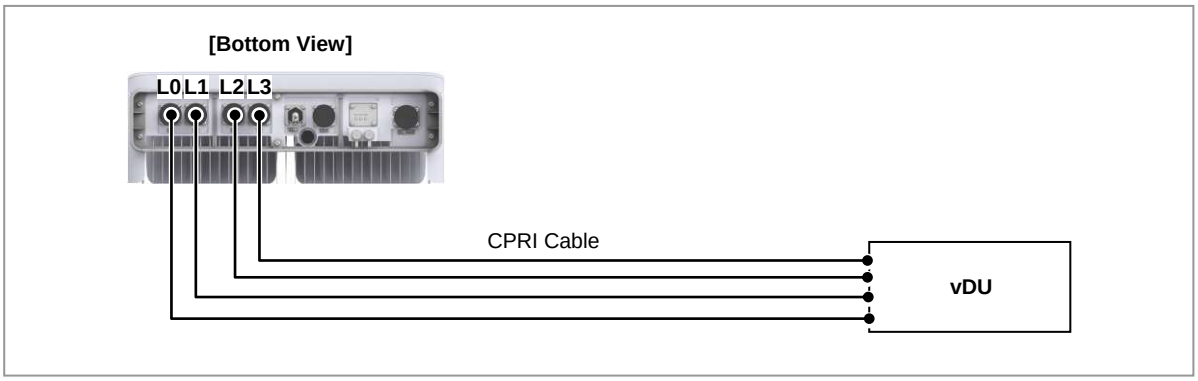

3 Separate the cap from the receptacle (L0, L1, L2, and L3 ports).

Copyright © 2023, All Rights Reserved.

Figure 111. Connecting CPRI Cable Using Field Installable Connector (2)

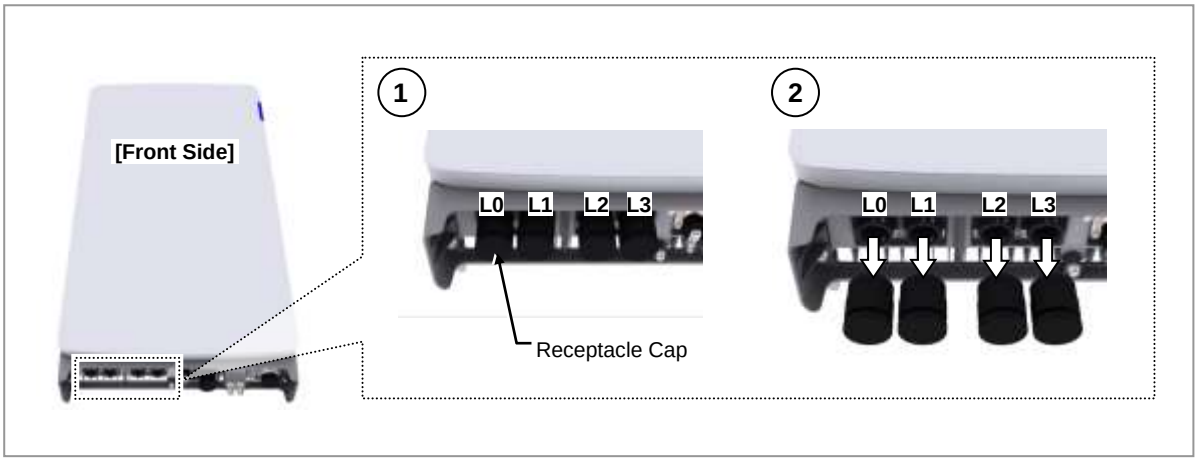

4 Prepare the FJ50 field installable connector.

5 Check the condition of the cable.
. Cable boot length: 0.67 in. (17 mm) or less.

. Cable outer diameter: Ø 0.18 in. to 0.26 in. (Φ4.6 to Φ6.5 mm)

. The cable should be round and clean.

6 Assemble the block part on the boot.

72617

Copyright © 2023, All Rights Reserved.

Figure 112. Connecting CPRI Cable Using Field Installable Connector (3)

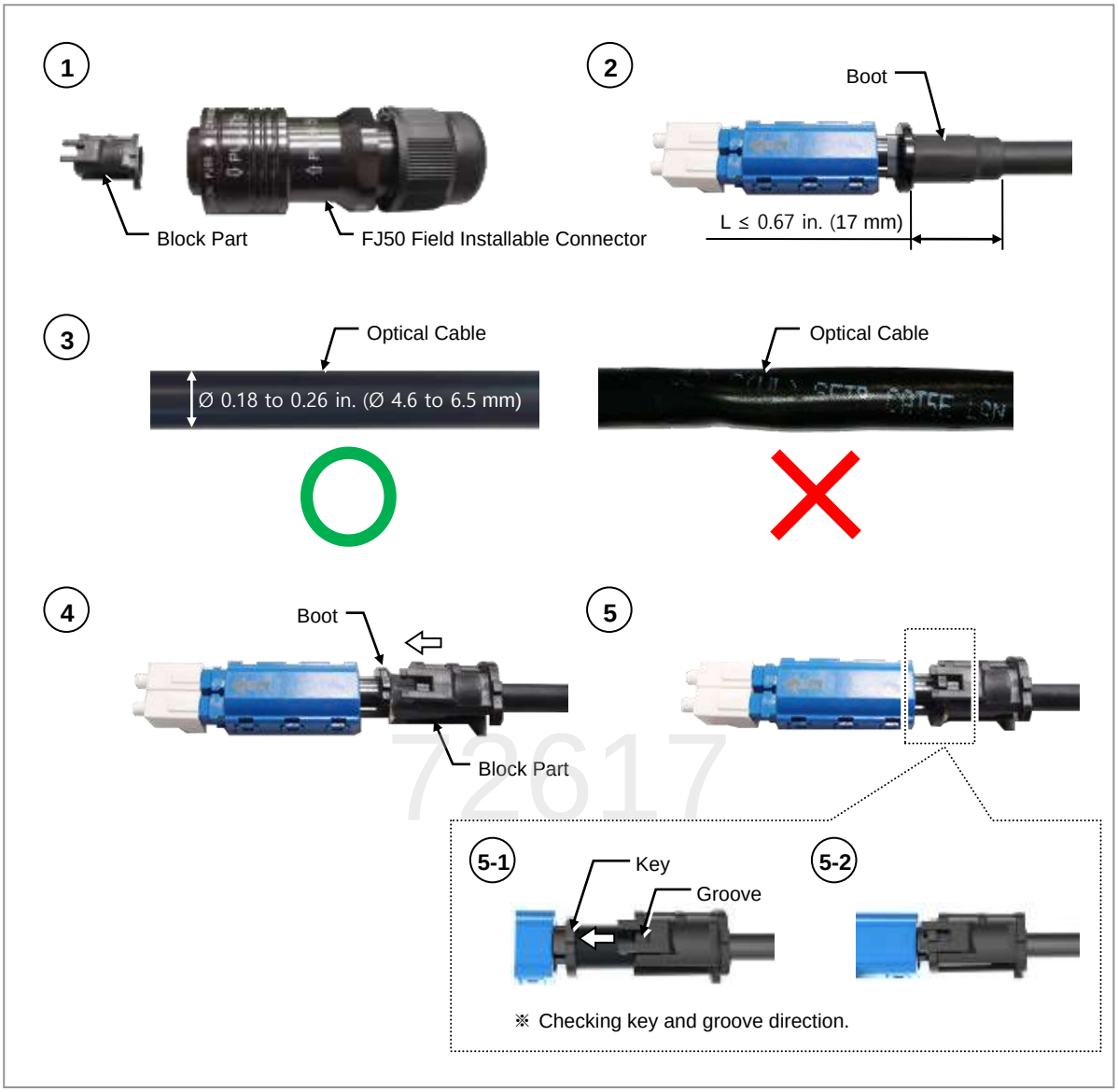

7 Unscrew the 'Nut' of the connector and separate the 'Sealing Rubber & Claw' from the transfer sleeve assembly.

8 Separate sealing rubber and claw.

Copyright © 2023, All Rights Reserved.

Figure 113. Connecting CPRI Cable Using Field Installable Connector (4)

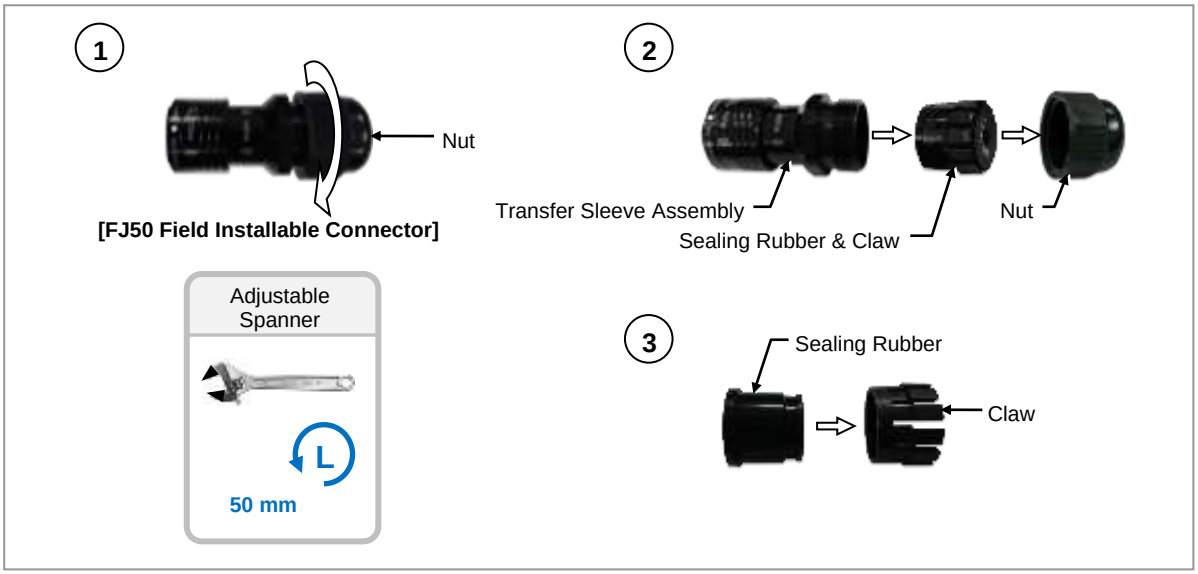

9 Insert separated nut, claw, and sealing rubber on the CPRI cable.

10 Combine sealing rubber and claw.

11 Transfer sleeve assembly into the CPRI cable.

12 Remove the cap of the DLC plug.

72617

Copyright © 2023, All Rights Reserved.

Figure 114. Connecting CPRI Cable Using Field Installable Connector (5)

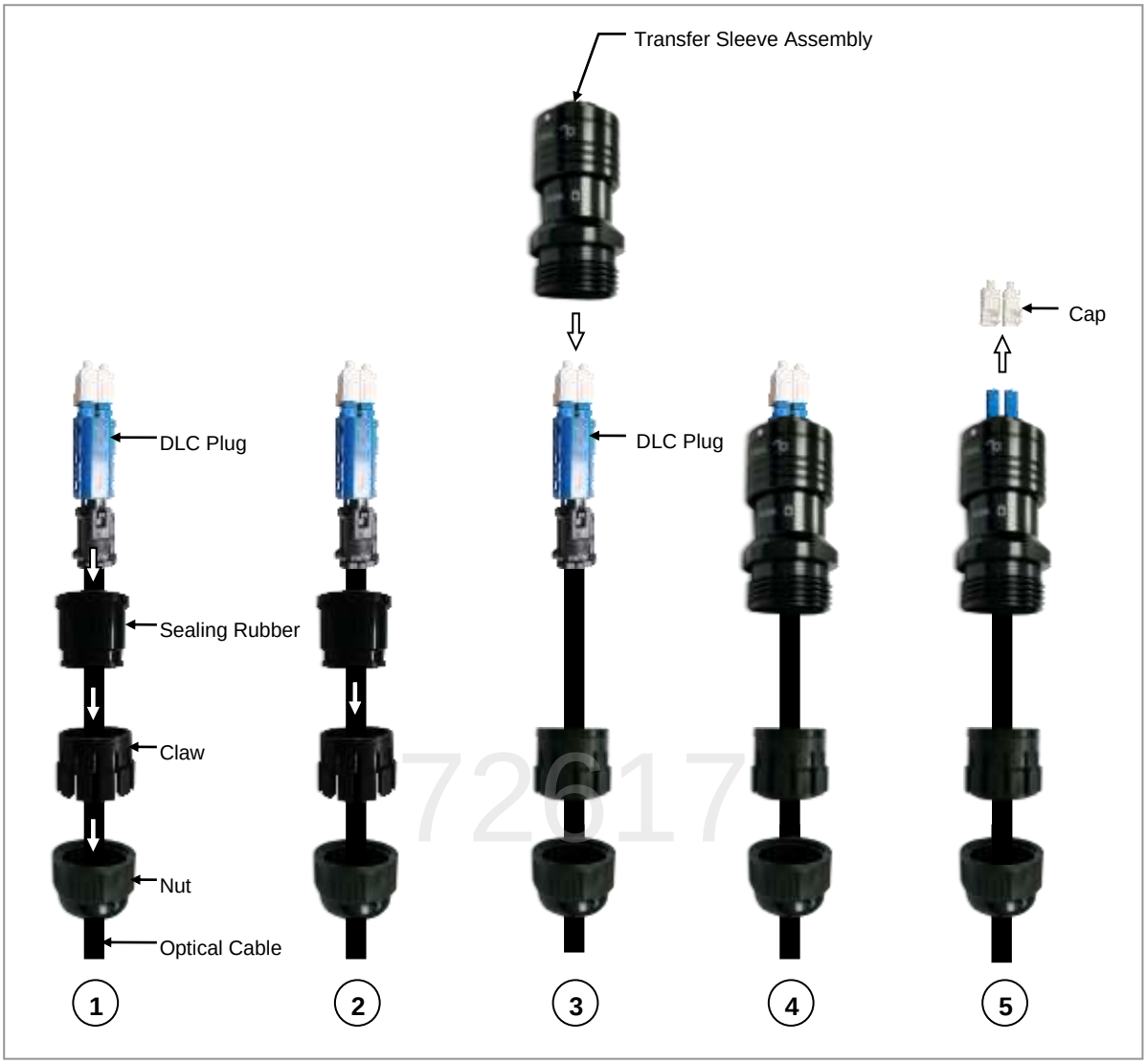

13 Insert the DLC plug into the receptacle.

14 Insert the connector aligning the plug's white and receptacle's white dots. When inserting the plug, push the shell to the upper side.

Before connecting the CPRI cable connector, the ferrule of the connecter of the cable side should be cleaned first by using the optical connector cleaner. (For more details, refer to *Appendix B: Cleaning the Optical Connector*.)

Copyright © 2023, All Rights Reserved.

Figure 115. Connecting CPRI Cable Using Field Installable Connector (6)

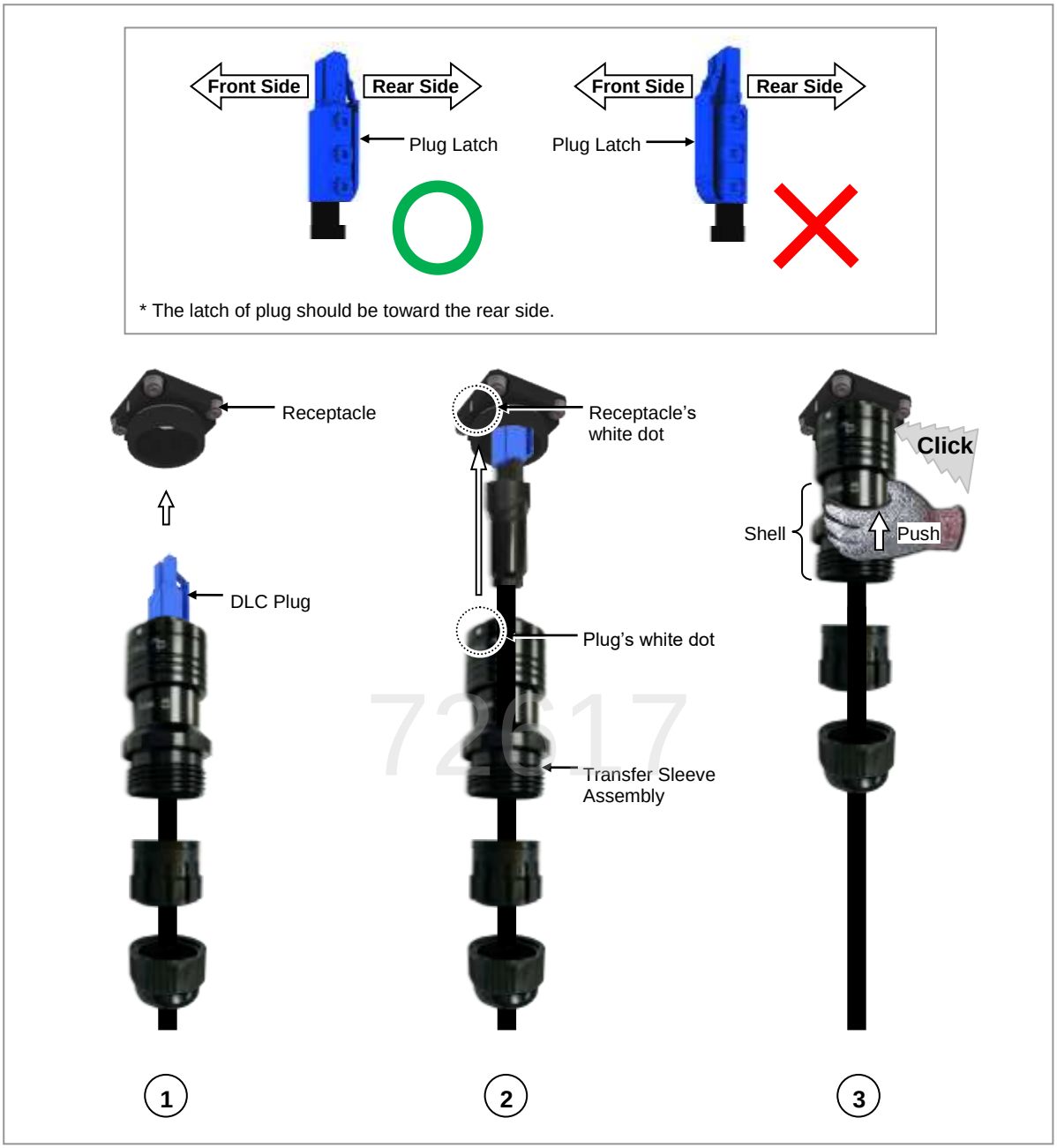

15 Recombine 'Sealing Rubber & Claw' in 'Transfer Sleeve Assembly'.

16 The nut is signed into the transfer sleeve assembly.

Copyright © 2023, All Rights Reserved.

Figure 116. Connecting CPRI Cable Using Field Installable Connector (7)

17 Check the tightening status of the nut.

Copyright © 2023, All Rights Reserved.

Figure 117. Connecting CPRI Cable Using Field Installable Connector (8)

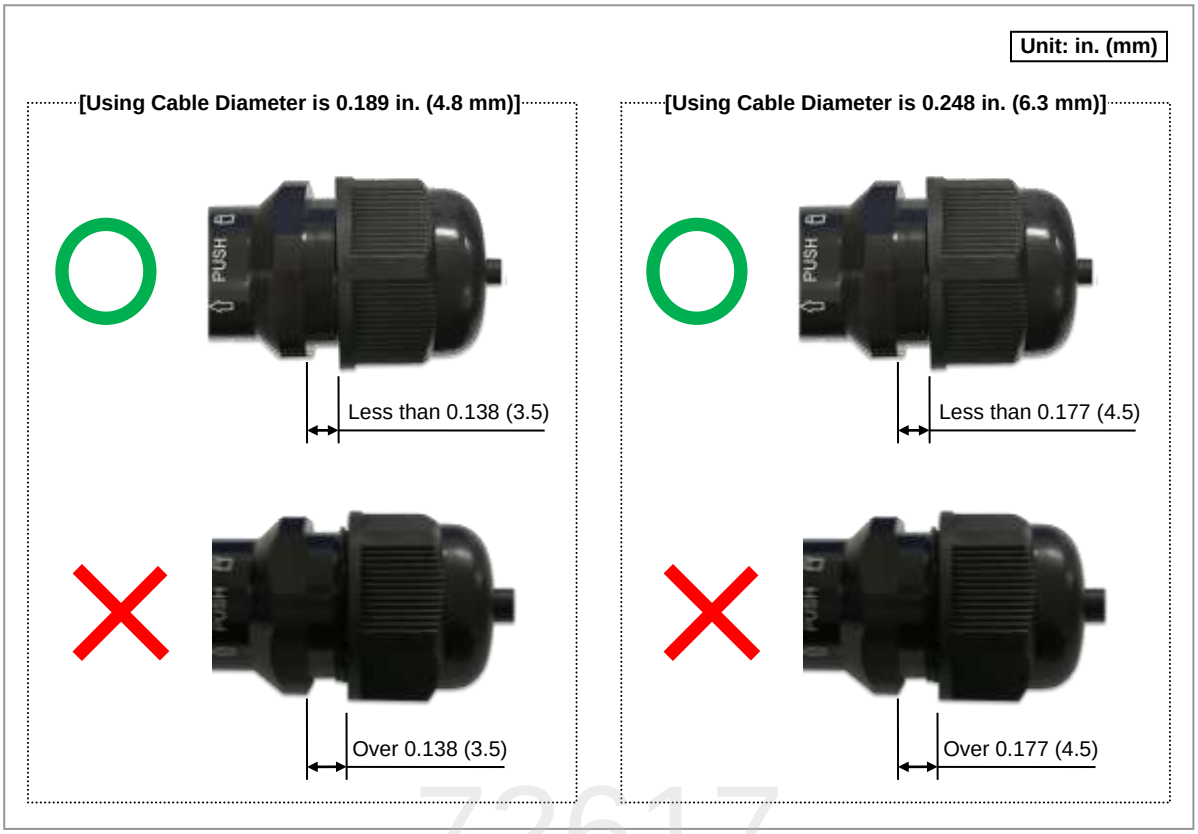

72617

The receptacle's white line becomes invisible (or hidden) when the plug is tightened.

[White Line is invisible] **[White Line is visible]**

The method for connecting or disconnecting the optical connector is as follows: The nut can be connected or disconnected with the release.

Copyright © 2023, All Rights Reserved.

To connect the plug, push the shell to the upper side.
For disconnecting the plug, pull the coupling nut to the lower side.

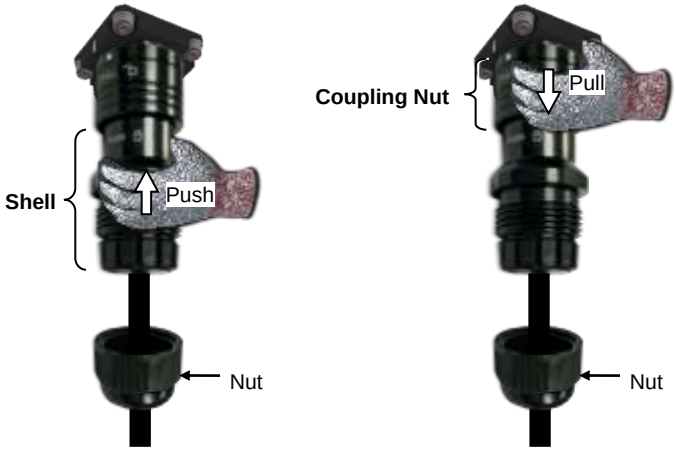

[Connecting Plug] [Detach Plug]

Removing CPRI cable (FJ50 Connector):

To remove the CPRI cable (FJ50 Connector), do the following:

1 Ensure that the items described in the following table are available.

72617

Table 32. Parts and Tools for Remove CPRI Cable_Field Installable Connector

Category	Description
Working Tools	• Nipper • Screw Driver (-) • Adjustable Spanner (50 mm)

2 Release the nut of the connector.

3 Separate sealing rubber and claw assembly from transfer sleeve.

4 Pull the plug coupling nut to the bottom to disconnect the plug from the receptacle.

Copyright © 2023, All Rights Reserved.

Figure 118. Remove CPRI Cable_Field Installable Connector (1)

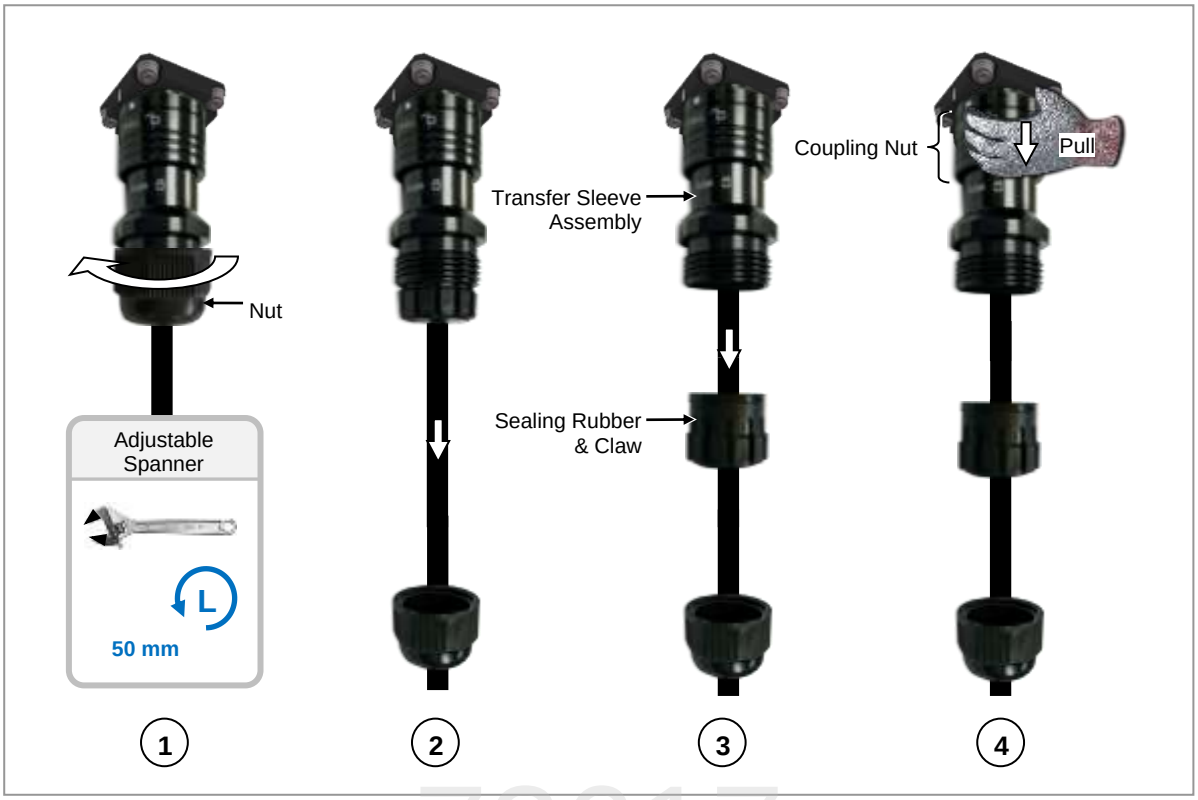

72617

5 Unlock the latch of the DLC plug by hand or using a screwdriver (-), and then remove the cable.

6 Fit the cap on the separated CPRI cable connector.

7 Remove the Transfer sleeve assembly from the cable.

8 Separate sealing rubber and claw.

9 Sealing rubber, claw, and nut is separated from the cable.

Copyright © 2023, All Rights Reserved.

Figure 119. Remove CPRI Cable_Field Installable Connector (2)

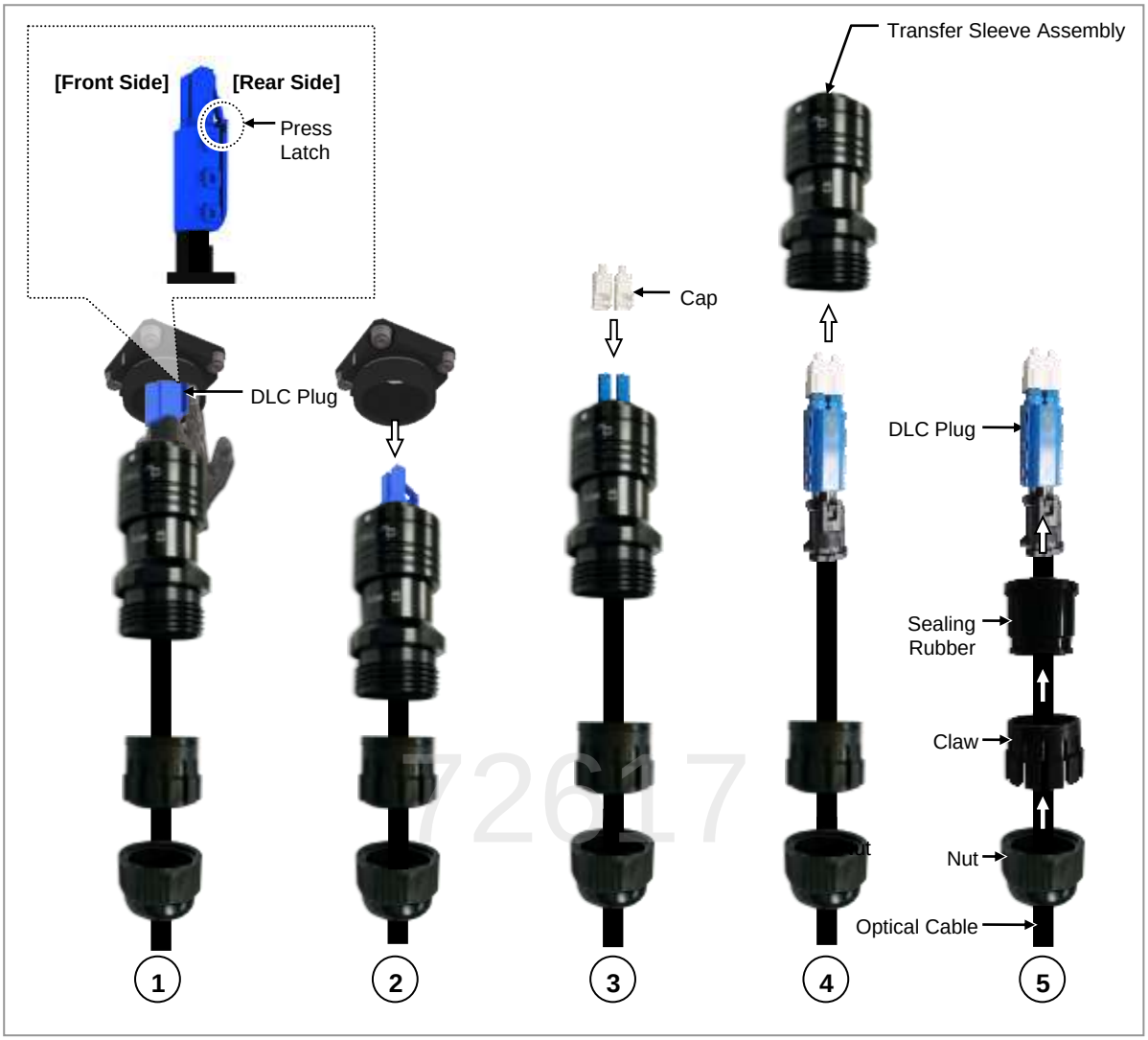

10 Separate block part.

11 Sealing rubber and claw are reassembled.

12 Assemble sealing rubber and claw assembly, nut on Transfer sleeve assembly.

Copyright © 2023, All Rights Reserved.

Figure 120. Remove CPRI Cable_Field Installable Connector (3)

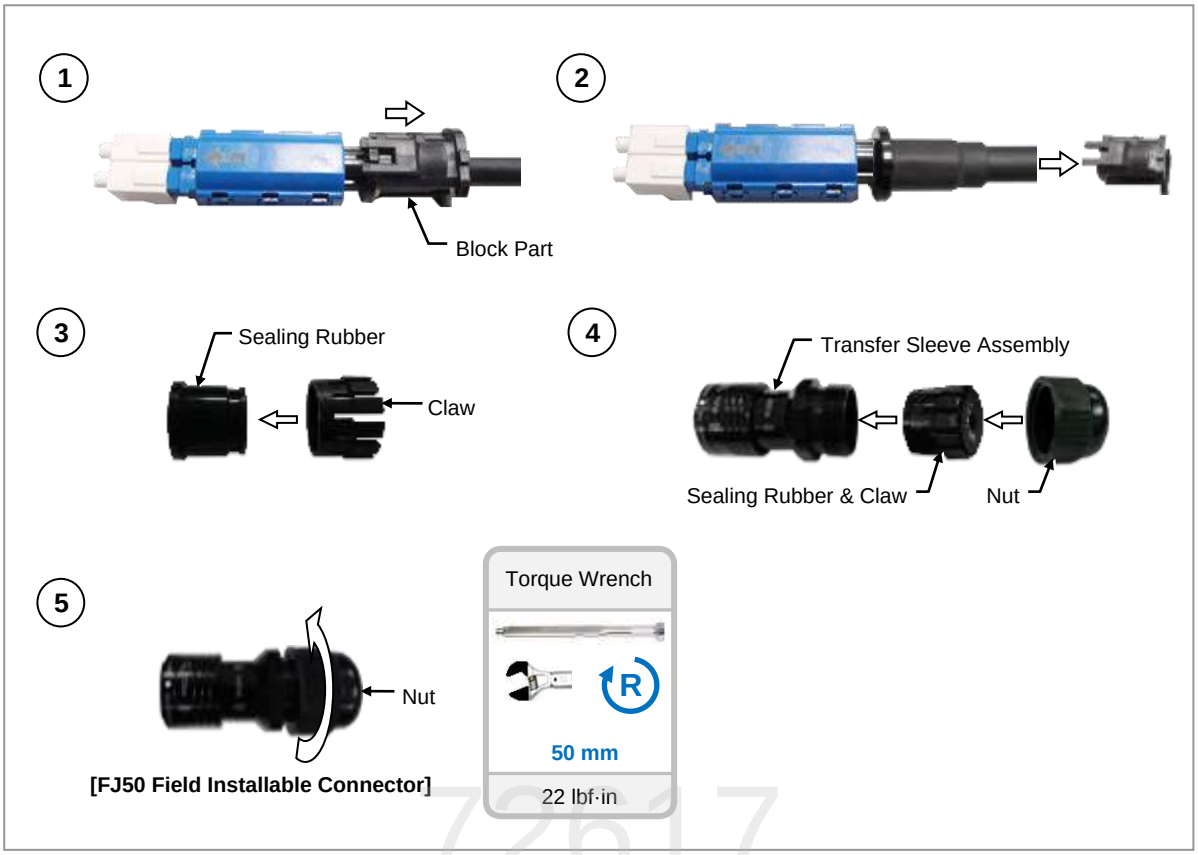

72617

13 Fit the cap on the separated receptacle.

Figure 121. Remove CPRI Cable_Field Installable Connector (4)

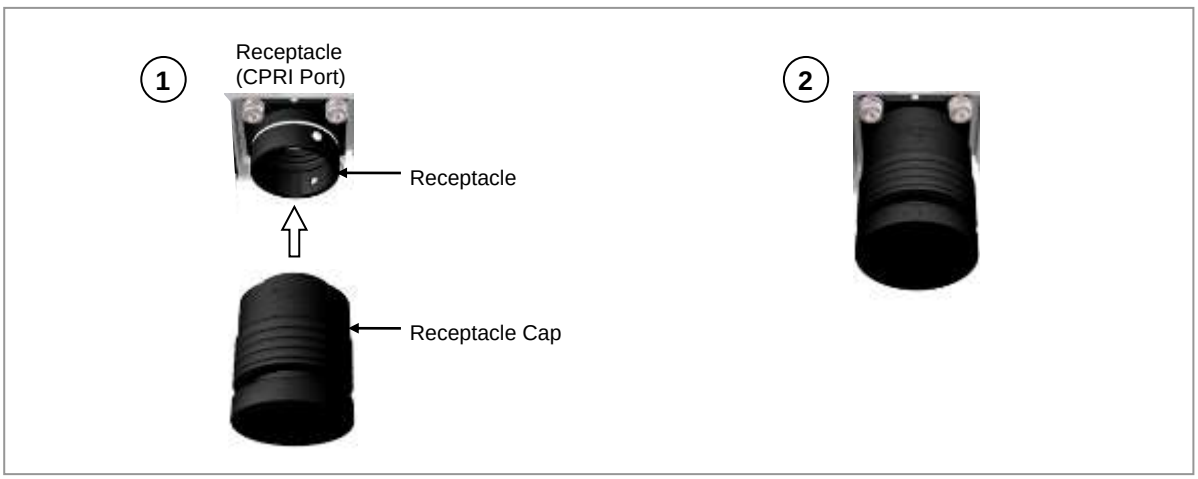

Copyright © 2023, All Rights Reserved.

1) When removing the CPRI cable, be sure to release the lock by pressing the latch of the DLC plug first.

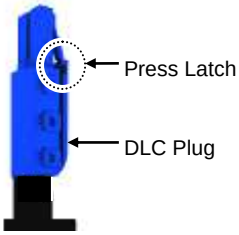

2) Avoid touching the ferrule (white part) at the end of the connector, as it can be easily damaged. It should be sealed using the cap.

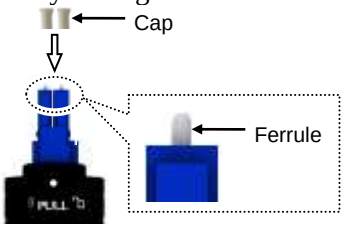

3) When removing or storing the cable, keep it at no less than its minimum bending radius and free of damage caused by other objects.

- Bending radius: 10 × OD

72617

Copyright © 2023, All Rights Reserved.

Connecting UDA Cable

To connect the UDA cable, do the following:

1 Ensure that the items described in the following table are available.

Table 33. Parts and Tools for Connecting UDA Cable

Category	Description	
Installation Section	External alarm device to MMU UDA Port	
Cable	UDA Cable Assembly (SFTP, 24 AWG, 8C for Outdoor Type)	
Bending Radius	Installed: 5 × OD	During Installation: 10 × OD
Connector	External alarm device	Check specifications of external alarm device output terminal per site and prepare fasteners.
	MMU	Push Pull, RJ45
Working Tools	• Cable Cutter • Wire Stripper • Nipper • LAN Tool	

[MMU Side] **[External Alarm Device Side]**

72617

Table 34. UDA Cable Pin Map

System Side	Color Map	Description
1	White/Blue	UDA0
2	Blue	UDA0_RTN
3	White/Orange	UDA1
6	Orange	UDA1_RTN
4	White/Green	UDA2
5	Green	UDA2_RTN
7	White/Brown	UDA3
8	Brown	UDA3_RTN

2 Install a UDA cable from the external alarm device to the MMU.

Copyright © 2023, All Rights Reserved.

Figure 122. Connecting UDA Cable (1)

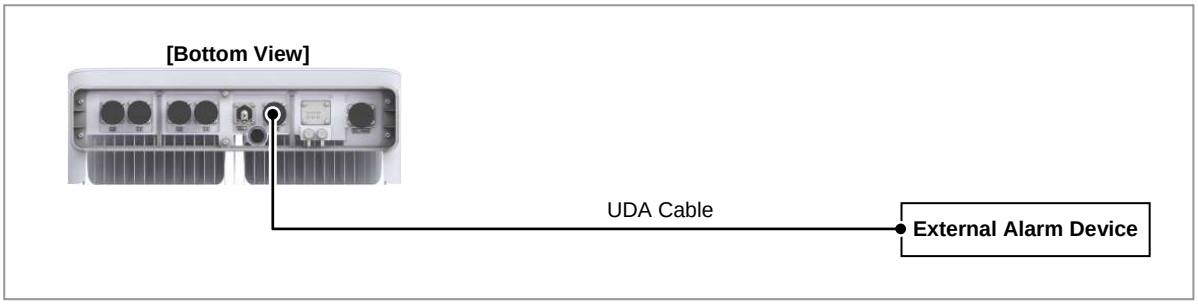

3 Separate the cap from the receptacle (UDA port) and plug it in.

Figure 123. Connecting UDA Cable (2)

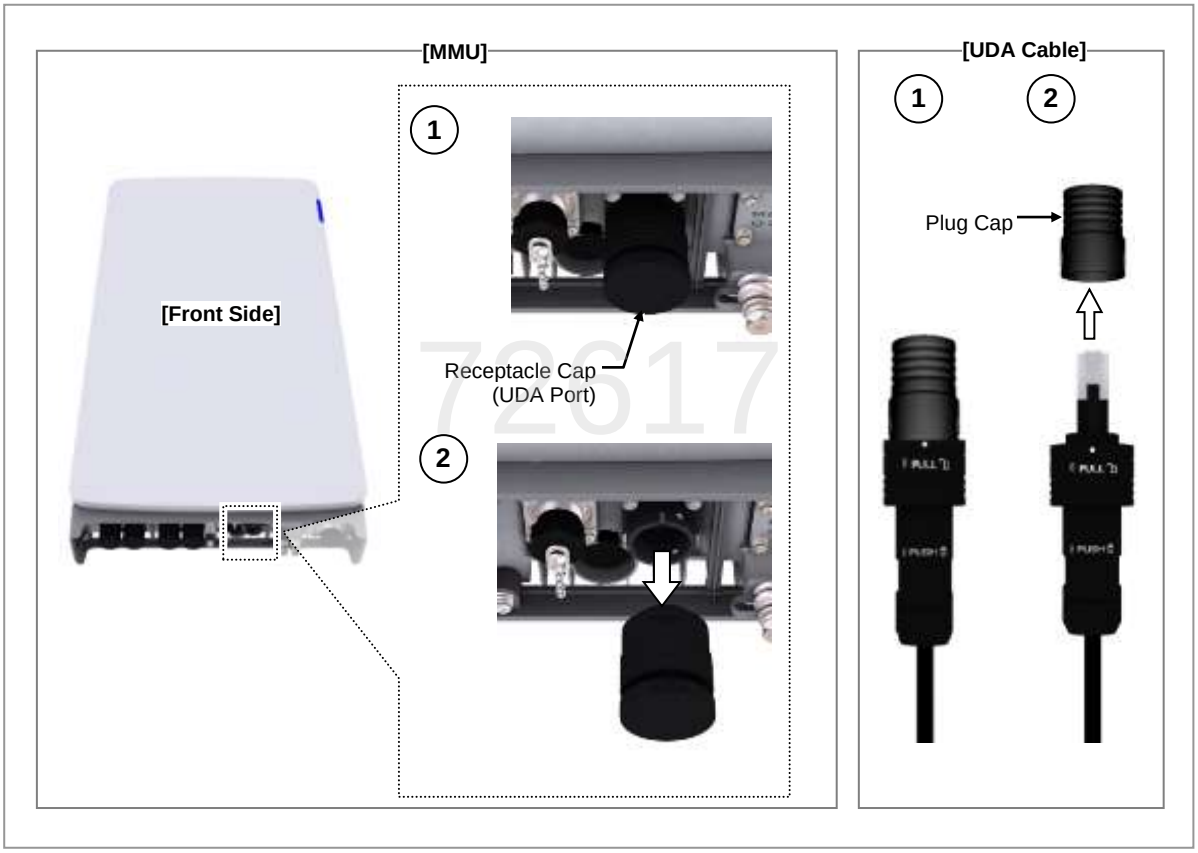

4 Insert the RJ-45 plug into the receptacle.

5 Insert the plug aligning the plug's white and receptacle's white dots. When inserting the plug, push the shell to the upper side.

Copyright © 2023, All Rights Reserved.

Figure 124. Connecting UDA Cable (3)

Copyright © 2023, All Rights Reserved.

When the plug is tightened, the receptacle's white line becomes invisible.

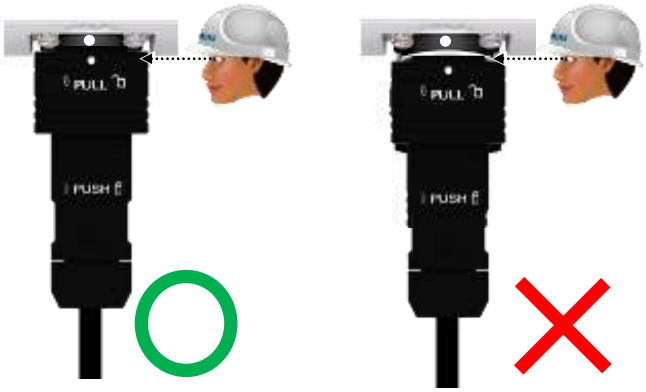

[White Line is invisible] **[White Line is visible]**

The method for connecting or disconnecting the plug is as follows:
- For connecting the plug, push the shell to the upper side.
- Pull the coupling nut to the lower side to disconnect the plug.

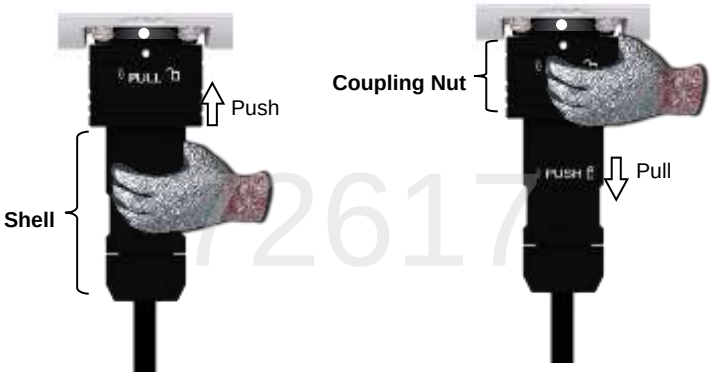

[Connecting Plug] **[Detach Plug]**

Removing UDA cable

To remove the UDA cable, do the following:

1 Ensure that the items described in the following table are available.

Table 35. Parts and Tools for Remove UDA Cable

Category	Description
Working Tools	• Nipper • Screw Driver (-)

Copyright © 2023, All Rights Reserved.

2 Pull the plug coupling nut to the bottom to disconnect the plug from the system.

3 Unlock the latch of the RJ-45 plug using your hand or a screwdriver (-), and then remove the cable.

Figure 125. Remove UDA Cable (1)

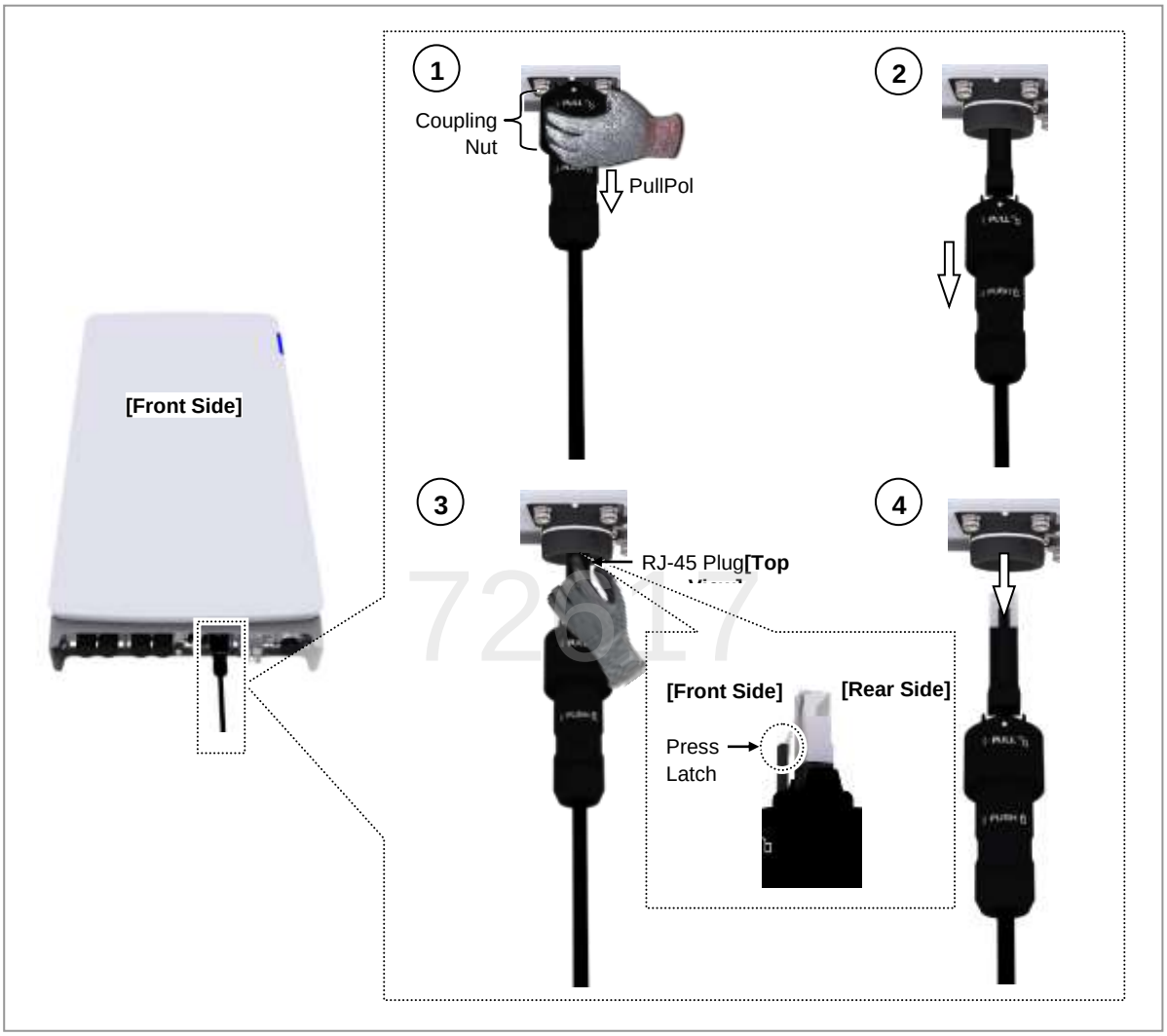

4 Fit the cap on the separated plug and receptacle.

Copyright © 2023, All Rights Reserved.

Figure 126. Remove UDA Cable (2)

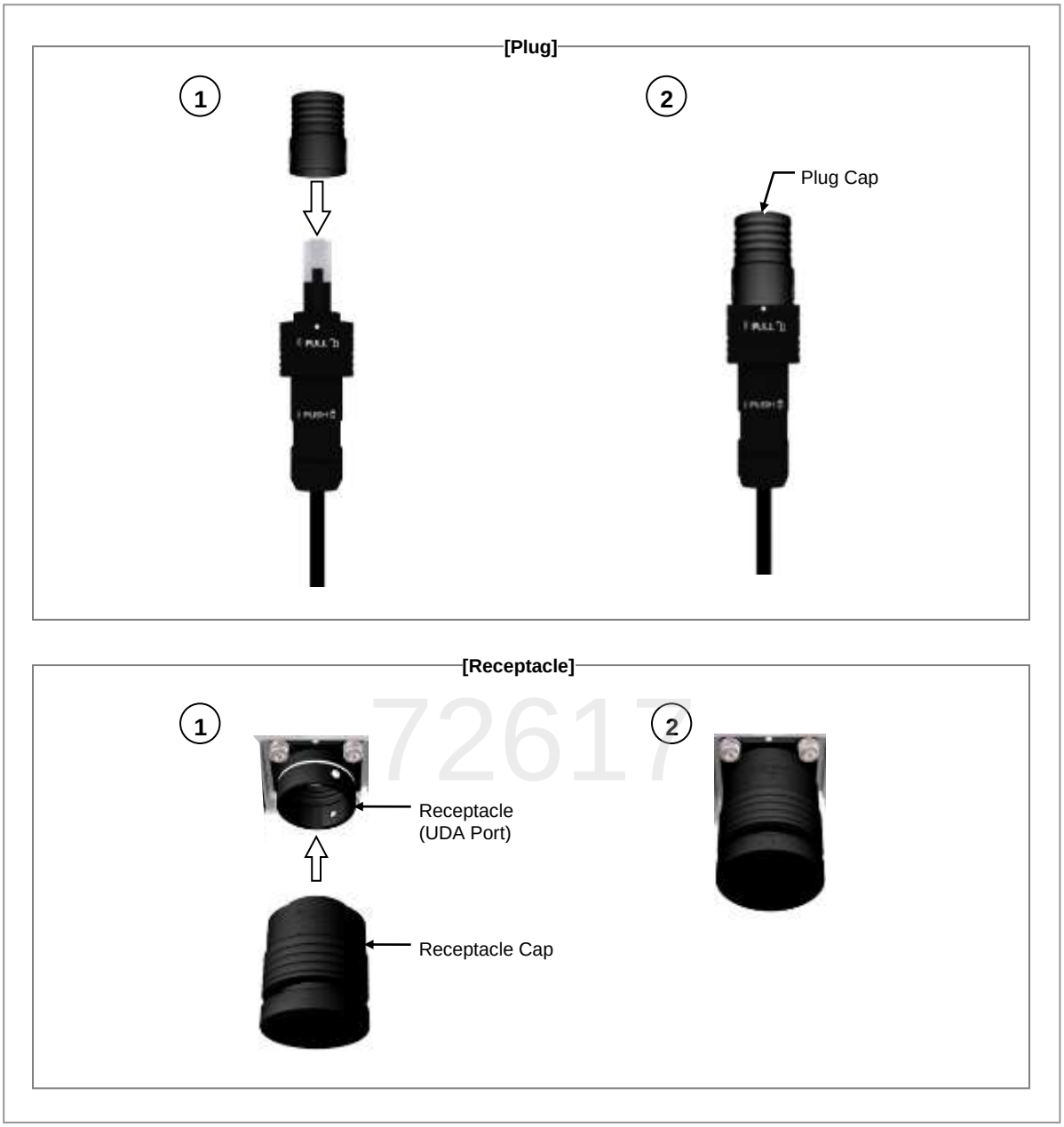

Copyright © 2023, All Rights Reserved.

1) When removing the plug, release the lock by pressing the latch of the RJ-45 plug.

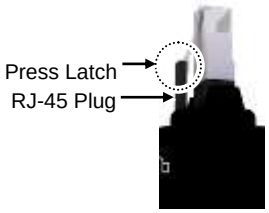

2) Once the plug has been removed, it must be sealed using the cap.
3) When removing or storing the cable, keep it at no less than its minimum bending radius and free of damage caused by other objects.
- Bending radius: 5 × OD

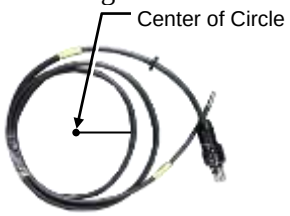

Connecting ALD Cable

To connect an ALD cable, do the following:

1 Ensure that the items described in the following table are available.

Table 36. Parts and Tools for Connecting the ALD Cable

Category	Description	
Installation Section	other Equipment to MMU ALD Port	
Cable	18 AWG × 4C + 24AWG × 2C	
Bending Radius	Installed: 8 × OD	During Installation: 12 × OD
Connectors	MMU	8 Pin Circular (IEC 61076-2)
	Other Equipment	
Working Tools	Nipper	

Copyright © 2023, All Rights Reserved.

Table 37. ALD Cable Pin Map

Pin No	Description	Cable Color
1	N/C (Not Connected)	Blue
2	N/C (Not Connected)	-
3	RS485 B	White
4	GND	Green
5	RS485 A	Brown
6	+24 V DC	Red
7	DC Return	Black
8	N/C (Not Connected)	-

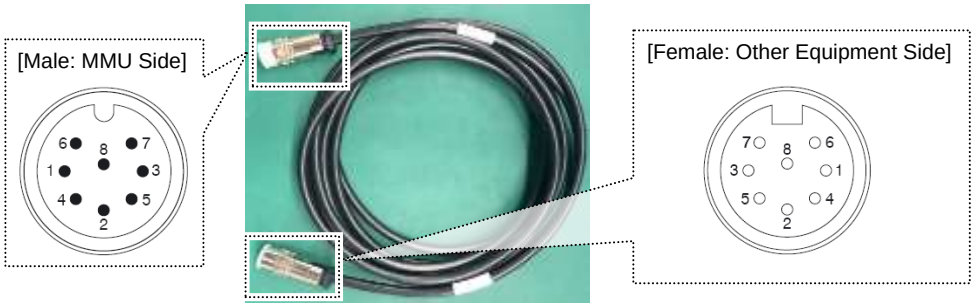

Before connecting the ALD connector, align the female connector's hole with the male connector's pin.

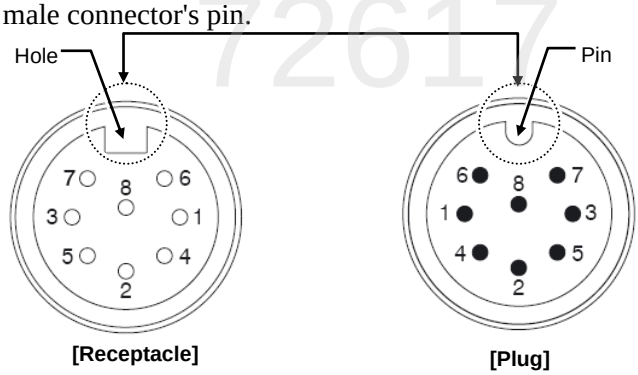

2 Install an ALD cable from the other Equipment to the MMU ALD port.

Figure 127. Connecting ALD Cable (1)

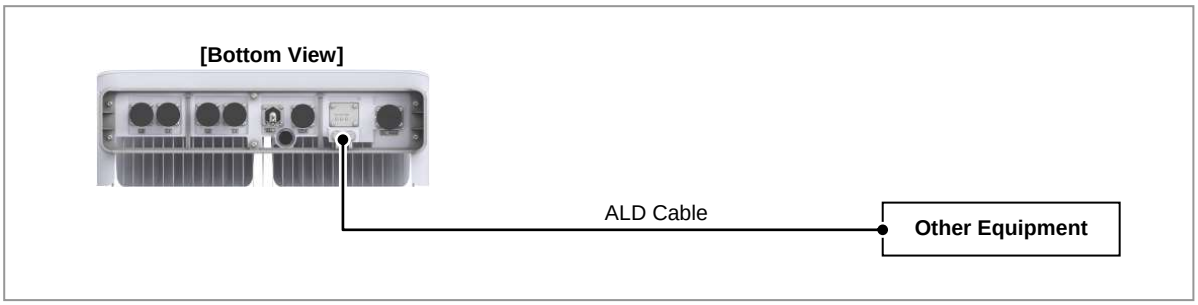

Copyright © 2023, All Rights Reserved.

3 Remove the cap from the receptacle (ALD port).

Figure 128. Connecting ALD Cable (2)

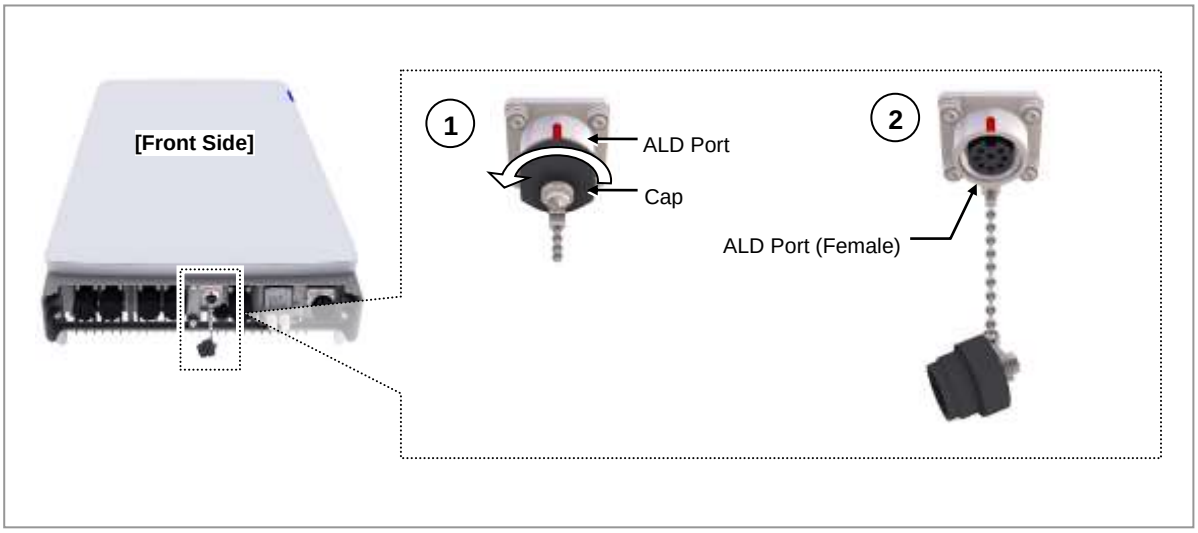

4 Separate the cap from the plug.

Figure 129. Connecting ALD Cable (3)

5 Insert the plug into the receptacle (ALD port).

Copyright © 2023, All Rights Reserved.

Figure 130. Connecting ALD Cable (4)

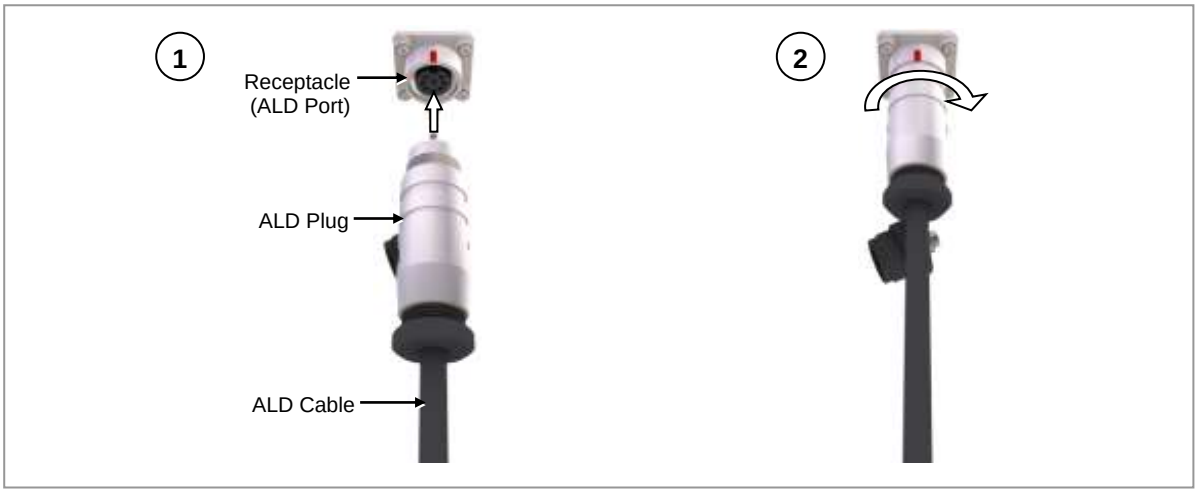

6 Bind the cap to the plug using a cable tie.

Figure 131. Connecting ALD Cable (5)

Copyright © 2023, All Rights Reserved.

Chapter 5 Inspecting Installation

This chapter describes the procedures to check the installation status.

Installation Inspection

The following figure depicts the overall procedure for inspecting the installation status.

Figure 132. Installation Inspection Procedure

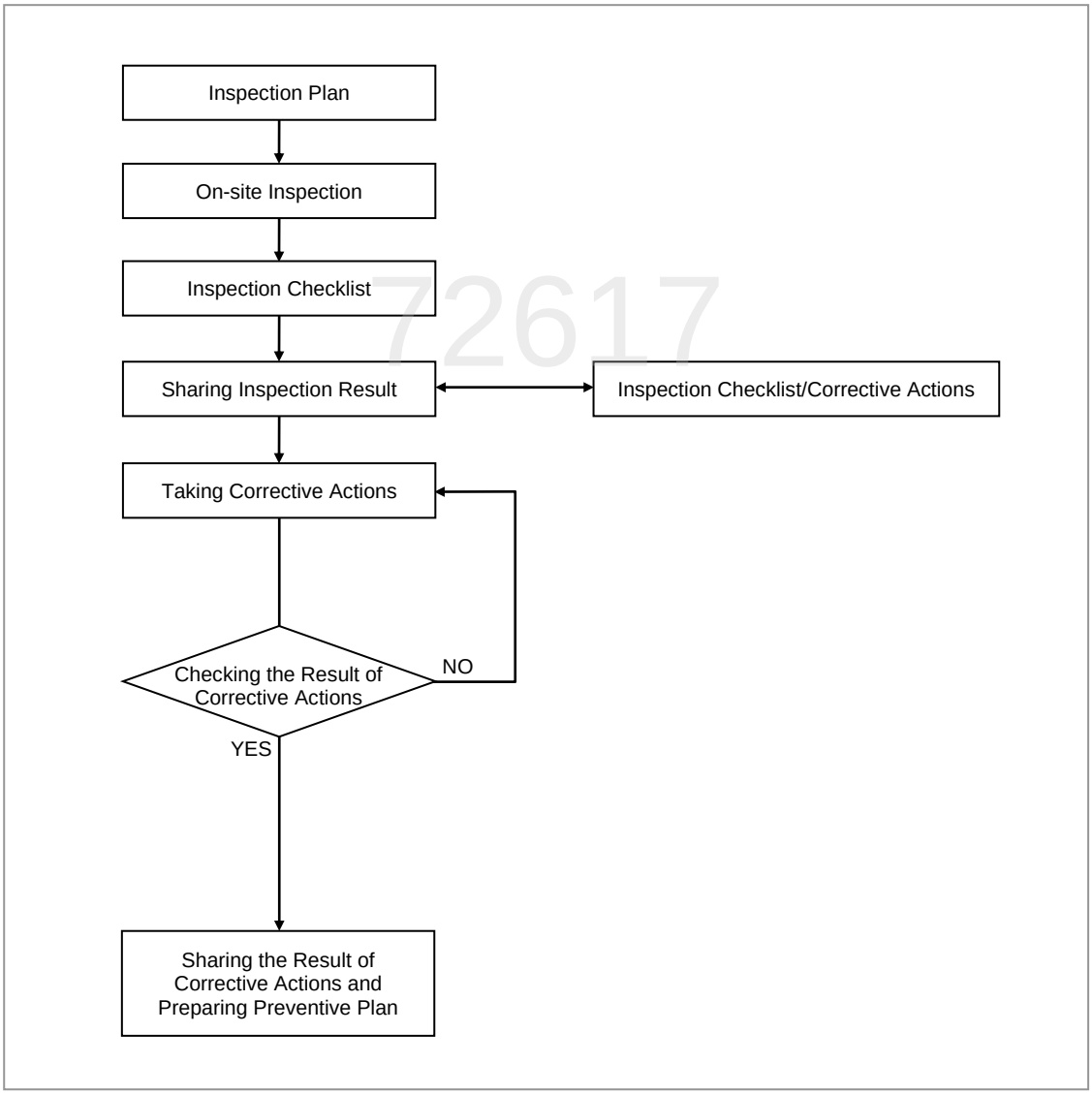

72617

Copyright © 2023, All Rights Reserved.

Inspection Plan

Create an inspection sheet per system and select an inspector to set an inspection schedule per site.

On-site Inspection and Inspection Checklist

The on-site inspection is to perform inspection visually or using instruments for each specification, standard, and installation status based on the inspection checklist at the site where the system is installed.

The inspector must record the results on the inspection checklist during or after field inspection.

Sharing Inspection Results and Taking Corrective Actions

The inspector must share the inspection results (inspection checklist/corrective actions) with an installation operator, and the installation operator must take the corrective actions, if necessary, after reviewing the requirements.

Checking the Results of Corrective Actions

The inspector must verify that the corrective actions are properly taken. If insufficient, the inspector must ask the installation operator to take the corrective actions again.

Sharing the Results of Corrective Actions and Preparing a Preventive Plan

After the corrective actions are all completed, the inspector must share the results with the installation operator and relevant departments. The inspector must prepare a preventive plan to avoid the recurrence of the same or similar problems.

Construction Situation Checklist

The following table outlines the checklist for checking the installation of the MMU and other devices.

Table 38. Construction Situation Checklist

Category	Check Items	Criteria	Result	
			Pass	Fail
Installing Equipment	Appearance of equipment and mechanical parts	Equipment damage such as dent, scratch, and crack.		
	Placement of equipment and mechanical parts	Maintenance and horizontal/vertical placement		
	Leveling condition of equipment and mechanical parts	Horizontal/vertical status		
	Validity of status and fastening bolt/nut/washer specifications, and so on.	Checking fasteners omission		
		Compliance with assembly order of fasteners		
		Compliance with fastening torque value		
	Insulation status	Checking electrical contact between insulators (insulation resistance tester)		
Grounding	Cable specification	Checking the specification		

Copyright © 2023, All Rights Reserved.

Category	Check Items	Criteria	Result	
			Pass	Fail
	Cabling	Cable damage		
		Proper installation route		
		Compliance with the radius of curvature		
	Cable binding status	Binding status		
		Binding interval		
		Checking binding materials		
	Cable connection	Assembly condition of a compression terminal		
		Fastening condition of a compression terminal		
		Checking compliance with fastening torque value		
	Installation status of cable tag	Position		
		Marking content		
		Checking tag installation method		
Power	Installation status of power supply	Power supply capacity		
		Output voltage (tester)		
	Installation of circuit breaker	Checking circuit breaker capacity		
	Cable specification	Checking the specification		
		Checking the limit distance		
	Cabling	Cable damage		
		Proper installation route		
		Compliance with the radius of curvature		
	Cable binding status	Binding status		
		Binding interval		
		Checking binding materials		
	Cable connection	Checking cable connection (Pin Map)		
		Input voltage		
		Assembly condition of a compression terminal and connector		
		Fastening condition of a compression terminal and connector		
		Checking compliance with fastening torque value		
	Installation status of cable tag	Position		
		Marking content		
		Checking tag installation method		
Other data cables	Cable specification	Checking the specification		
	Cabling	Cable damage		
		Proper installation route		

72917

Copyright © 2023, All Rights Reserved.

Category	Check Items	Criteria	Result	
			Pass	Fail
		Compliance with the radius of curvature		
	Cable binding status	Binding status		
		Binding interval		
		Checking binding materials		
	Cable connection	Checking cable connection (Pin Map)		
		Assembly condition of a connector		
		Fastening condition of a connector		
		Checking compliance with fastening torque value		
	Installation status of cable tag	Position		
		Marking content		
		Checking tag installation method		
Others	Reserved ports	Checking port cap fastening status		
	Cable inlet status/Connection of equipment I/O port	Checking fastening status (Conduit/Cable Gland)		
	Cable tray and duct	Checking installation status		
	Status of interior or exterior of the equipment and system surrounding area	Checking the stocking condition (waste parts, waste materials, packing materials, and so on.)		
Opinion				

72617

Copyright © 2023, All Rights Reserved.

Power-on Check

After installing all the equipment, perform a visual inspection and supply power to the system to verify that the LED is on.

After installing the equipment, the system should be powered up within 24 hours to verify that the system is receiving power as expected.

The following figure depicts the overall procedure for power-on status.

Figure 133. Power-on Check Procedure

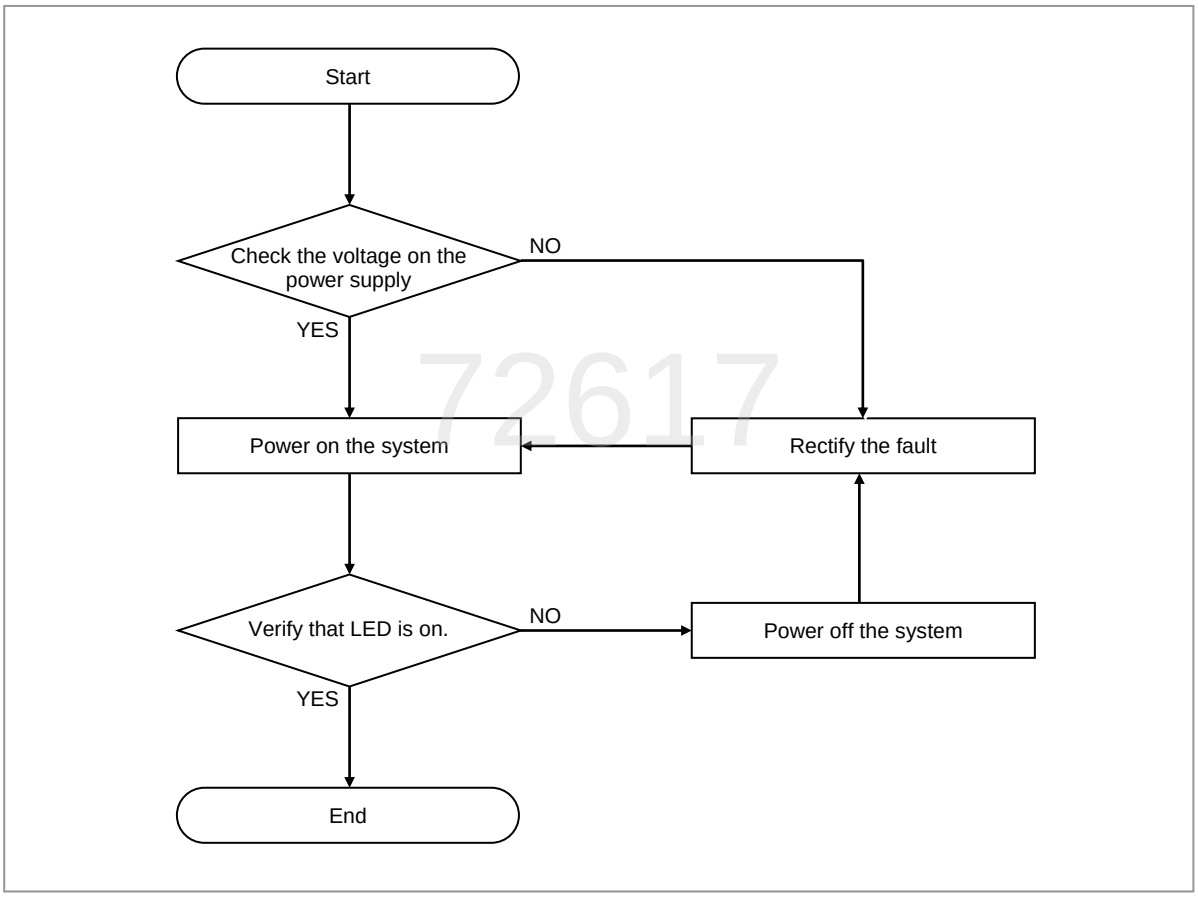

1. Check the input voltage on the system side. Refer to the system specification for rated input voltage and operating voltage range.
2. Verify that the LED is on. For more details, refer to the LED information section of 'Product Specification'.

■

Copyright © 2023, All Rights Reserved.

Appendix A Acronyms

CPRI	Common Public Radio Interface
CPRI	Common Public Radio Interface
DC	Direct Current
EMC	Electro Magnetic Compatibility
EN	European Norm
IBW	Instantaneous Band Width
IEC	International Electrotechnical Commission
IP65	Ingress Protection 65
MGB	Main Ground Bar
MMU	Massive MIMO Unit
OD	Outer Diameter
PVC	Polyvinyl Chloride
PWR	Power
RF	Radio Frequency
RTN	Return
SELV	Safe Extra Low Voltage
SEMS	pre-asSEMbled washers and Screws
SFP	Small Form-factor Pluggable
TNV	Telephone Network Voltage
UL	Underwriters Laboratories
vDU	Verizon Digital Unit
WEEE	Waste Electrical and Electronic Equipment

72517

Copyright © 2023, All Rights Reserved.

Appendix B Cleaning the Optical Connector

This appendix provides the following:

- Information about the tools that can be used to clean an optical connector.
- A procedure for checking an optical connector before it is connected.

Introduction

When connecting an optical cable to the system, the system's performance can be degraded, or failures can occur—if the core elements of an optical connector are dirty—due to dust or other foreign material. Therefore, the operator must clean the optical connector before connecting an optical cable to the system.

When using an optical connector cleaner, use the products given in the following example or their equivalent.

Manufacturer – USCONEC (**http://www.usconec.com**)

- IBC™ Brand Cleaner (P/N: 9393): For LC-LC and MU Connector Cleaning
- IBC™ Brand Cleaner (P/N: 9392): For SC Connector Cleaning
- IBC™ Brand Cleaner (P/N: 12910): For ODC Connector Cleaning

/2617

Manufacturer – The Fibers (**www.thefibers.com**)

- HuxCleaner 1.25 mm Type: For LC and MU Connector Cleaning
- HuxCleaner 2.5 mm Type: For SC, FC, and ST Connector Cleaning

Follow the manufacturer's instructions for cleaning the optical connectors.

Copyright © 2023, All Rights Reserved.

Measuring the Optical Output and Connecting the Optical Connector

To measure the optical output, do the following:

1. Using an optical power meter, check the optical output.
2. If the optical output measurement result meets the reference value, clean the connector again and connect it.
3. If the measurement result does not meet the reference value, discard the cable and replace it with a new cable. Clean the new cable and repeat this procedure before connecting it to the system.

Figure 134. Measuring the Optical Power meter and optical cable

[DLC/PC Plug]

[LC/PC Plug]

[Optical Power meter]

72617

Copyright © 2023, All Rights Reserved.

Appendix C Standard Torque

To fasten a bolt, refer to the standard torque values in the following tables to prevent the equipment and bolt from being damaged. When a manufacturer already defines the torque value for a connection part, use the manufacturer's value.

Table 39. Standard Torque Value for Fastening Bolts

Bolt Spec.	Torque Value		
	N·m	lbf·in	kgf·cm
M3	0.5 to 0.8	4.5 to 6.7	5.1 to 7.7
M4	1.2 to 1.8	10 to 16	12 to 18
M5	2.2 to 3.4	20 to 30	23 to 35
M6	3.9 to 5.9	34 to 52	40 to 60
M8	10 to 14	88 to 132	102 to 152
M10	20 to 30	174 to 260	200 to 300
M12	34 to 50	298 to 446	342 to 514

Table 40. Connector Connection Torque Value

Connector	Torque Value		
	N·m	lbf·in	kgf·cm
SMA connector	0.8 to 1.1	7.0 to 10	8.2 to 11.2
TNC connector	0.46 to 0.69	4.1 to 6.1	4.1 to 7.0
N-type connector	0.7 to 1.1	6.2 to 9.7	7.1 to 11.2
7-16 DIN-type connector	25 to 30	221 to 265	255 to 306
4.3-10-type connector	5.0 to 11	44 to 97	51 to 112
2.25-5/NEX10 connector	3.0	26.6	30.6

72617

The torque values can differ depending on the equipment, fastener material, characteristics, and specifications. Ensure you check the proper torque value for each equipment specification and fastener.

Copyright © 2023, All Rights Reserved.

SAMSUNG

72617

310 MMU
Installation Manual for MT6413-77A

Document Version 1.0

© 2023 Samsung Electronics Co., Ltd.
All rights reserved.