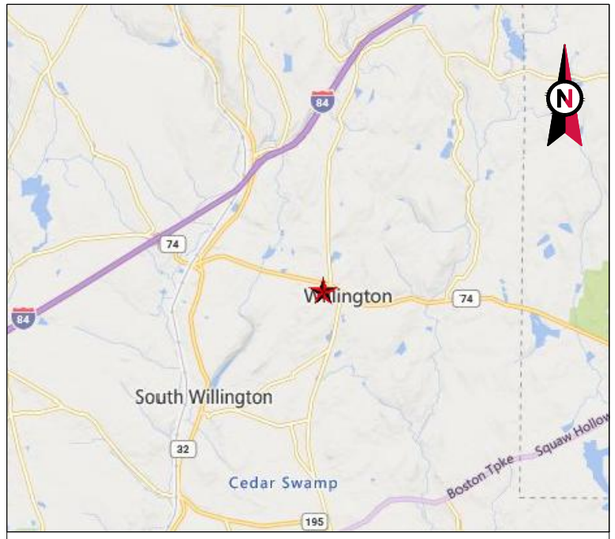

VICINITY MAP

AMERICAN TOWER®

ATC SITE NAME: WILLINGTON CT
ATC SITE NUMBER: 281416
VERIZON SITE NAME: WILLINGTON HILL CT
VERIZON SITE NUMBER: 5000992841
VERIZON FUZE PID: 17488523
SITE ADDRESS: 196 TOLLAND TURNPIKE
WILLINGTON, CT 06279

LOCATION MAP

VERIZON COLLOCATION PLAN

COMPLIANCE CODE

ALL WORK SHALL BE PERFORMED AND MATERIALS INSTALLED IN ACCORDANCE WITH THE CURRENT EDITIONS OF THE FOLLOWING CODES AS ADOPTED BY THE LOCAL GOVERNMENT AUTHORITIES. NOTHING IN THESE PLANS IS TO BE CONSTRUED TO PERMIT WORK NOT CONFORMING TO THESE CODES.

1. 2020 NFPA 70, NATIONAL ELECTRIC CODE (NEC)
2. 2022 CONNECTICUT STATE BUILDING CODE
3. 2021 INTERNATIONAL BUILDING CODE (IBC)

DESIGN CRITERIA FROM TOWER STRUCTURAL ANALYSIS:

BASIC WIND SPEED:	116 MPH (3- SECOND GUST)
BASIC WIND SPEED W/ ICE:	48 MPH (3- SECOND GUST) W/ 1.19" RADIAL ICE CONCURRENT
CODE(S):	ANSI/TIA-222-I / 2021 IBC / 2022 CONNECTICUT STATE BUILDING CODE
EXPOSURE CATEGORY:	C
RISK CATEGORY:	II
TOPO FACTOR PROCEDURE:	METHOD 1
FEATURE:	FLAT
SPECTRAL RESPONSE:	S_S=0.16, S_1=0.07
SITE CLASS:	DEFAULT

INFORMATION TAKEN FROM STRUCTURAL ANALYSIS COMPLETED BY ATC, DATED 01/07/26.

UTILITY COMPANIES

POWER COMPANY: EVERSOURCE
PHONE: (877) 659-6326

TELEPHONE COMPANY: FRONTIER COMMUNICATIONS
PHONE: (877) 641-3250

811 Know what's below. Call before you dig.

PROJECT SUMMARY

SITE ADDRESS:

196 TOLLAND TURNPIKE
WILLINGTON, CT 06279
COUNTY: TOLLAND

REGISTERED COORDINATES:

LATITUDE: 41.87566667
41° 52' 32.4" N
LONGITUDE: -72.26936111
72° 16' 9.7" W
REGISTERED GROUND ELEVATION: 768' AMSL

PROJECT TEAM

TOWER OWNER / TOWER OWNER REPRESENTATIVE:

AMERICAN TOWER
10 PRESIDENTIAL WAY
WOBURN, MA 01801

ENGINEER:

A.T. ENGINEERING SERVICES LLC
1 FENTON MAIN, STE 300
CARY, NC 27511

PROPERTY OWNER:

HOLT MOUNTAIN LLC
196 TOLLAND TURNPIKE
WILLINGTON,CT 06279

APPLICANT:

VERIZON WIRELESS

PROJECT DESCRIPTION

THE PROPOSED PROJECT INCLUDES PLACING EQUIPMENT CABINETS ON A PROPOSED CONCRETE PAD INSIDE A 12' X 30' GROUND SPACE WITHIN THE EXISTING COMPOUND, AND PLACING NEW ANTENNAS ON A PROPOSED PLATFORM MOUNTED TO THE EXISTING TOWER.

PROJECT NOTES

1. THE FACILITY IS UNMANNED.
2. A TECHNICIAN WILL VISIT THE SITE APPROXIMATELY ONCE A MONTH FOR ROUTINE INSPECTION AND MAINTENANCE.
3. THE PROJECT WILL NOT RESULT IN ANY SIGNIFICANT LAND DISTURBANCE OR EFFECT OF STORM WATER DRAINAGE.
4. NO SANITARY SEWER, POTABLE WATER OR TRASH DISPOSAL IS REQUIRED.
5. HANDICAP ACCESS IS NOT REQUIRED.
6. THE PROJECT DEPICTED IN THESE PLANS QUALIFIES AS AN ELIGIBLE FACILITIES REQUEST ENTITLED TO EXPEDITED REVIEW UNDER 47 U.S.C. § 1455(A) AS A MODIFICATION OF AN EXISTING WIRELESS TOWER THAT INVOLVES THE COLLOCATION, REMOVAL, AND/OR REPLACEMENT OF TRANSMISSION EQUIPMENT THAT IS NOT A SUBSTANTIAL CHANGE UNDER CFR § 1.61000 (B)(7).

PROJECT LOCATION DIRECTIONS

FROM DOWNTOWN HARTFORD START OUT GOING NORTH ON MAIN ST TOWARD ATHENEUM SQ N. TAKE THE 2ND RIGHT ONTO CENTRAL ROW CENTRAL ROW BECOMES AMERICAN ROW. AMERICAN ROW BECOMES STATE ST. STAY STRAIGHT TO GO ONTO RAMP. MERGE ONTO CT-2 E. MERGE ONTO I-84 E/US-6 E VIA EXIT 2 TOWARD E HARTFORD/BOSTON. KEEP LEFT TO TAKE I-84 E/WILBUR CROSS HWY N TOWARD BOSTON. TAKE THE CT-74 EXIT, EXIT 69, TOWARD US-44/WILLINGTON. TURN RIGHT ONTO TOLLAND STAGE RD/CT-74. CONTINUE TO FOLLOW CT-74. 194 TOLLAND TPKE. IS ON THE RIGHT

SHEET INDEX

SHEET NO:	DESCRIPTION:	REV:	DATE:	BY:
G-001	TITLE SHEET	0	05/08/26	JM
G-002	GENERAL NOTES	0	05/08/26	JM
-	EXISTING SURVEY			
C-101	DETAILED SITE PLAN	0	05/08/26	JM
C-102	DETAILED EQUIPMENT PLAN	0	05/08/26	JM
C-201	TOWER ELEVATION	0	05/08/26	JM
C-401	ANTENNA INFORMATION & SCHEDULE	0	05/08/26	JM
C-501	MOUNT DETAILS	0	05/08/26	JM
C-502	CONSTRUCTION DETAILS	0	05/08/26	JM
C-503	CONSTRUCTION DETAILS	0	05/08/26	JM
E-101	GROUNDING PLAN AND NOTES	0	05/08/26	JM
E-501	GROUNDING DETAILS	0	05/08/26	JM
E-601	ONE-LINE AND PANEL SCHEDULE	0	05/08/26	JM

CONTRACTOR PMI REQUIREMENTS

PMI ACCESSED AT:	HTTPS://PMI.VZWSMART.COM
SMART TOOL VENDOR PROJECT NUMBER:	10346370
VZW LOCATION CODE (PSLC):	5000992841

***PMI AND REQUIREMENTS ALSO EMBEDDED IN MOUNT ANALYSIS REPORT

MOUNT MODIFICATION REQUIRED:	YES
VZW APPROVED SMART KIT VENDORS:	REFER TO MOUNT MODIFICATION DRAWINGS PAGES FOR VZW SMART KIT APPROVED VENDORS

AMERICAN TOWER®
A.T. ENGINEERING SERVICES LLC
1 FENTON MAIN
SUITE 300
CARY, NC 27511
PHONE: (919) 468-0112
PEC.0001553

THE USE AND PUBLICATION OF THESE DRAWINGS SHALL BE RESTRICTED TO THE ORIGINAL SITE FOR WHICH THEY ARE PREPARED. ANY USE OR DISCLOSURE OTHER THAN THAT WHICH RELATES TO AMERICAN TOWER OR THE SPECIFIED CARRIER IS STRICTLY PROHIBITED. NEITHER THE ARCHITECT NOR THE ENGINEER WILL BE PROVIDING ON-SITE CONSTRUCTION REVIEW OF THIS PROJECT. CONTRACTOR(S) MUST VERIFY ALL DIMENSIONS AND ADVISE AMERICAN TOWER OR THE SPECIFIED CARRIER OF ANY DISCREPANCIES. ANY PRIOR ISSUANCE OF THIS DRAWING IS SUPERSEDED BY THE LATEST VERSION.

REV.	DESCRIPTION	BY	DATE
0	FOR CONSTRUCTION	JM	05/08/26

ATC SITE NUMBER:
281416
ATC SITE NAME:
WILLINGTON CT
VERIZON SITE NAME:
WILLINGTON HILL CT
SITE ADDRESS:
196 TOLLAND TURNPIKE
WILLINGTON, CT 06279

SEAL:

STATE OF CONNECTICUT · SCOTT A. WIRGAU · 30575 · LICENSED · PROFESSIONAL ENGINEER

Scott Wirgau
Digitally signed by Scott Wirgau
Date: 2026.05.11 14:00:21 -04'00'

verizon

ATC JOB NO:	15445313_D2
CUSTOMER ID:	WILLINGTON HILL CT
CUSTOMER #:	5000992841

TITLE SHEET

SHEET NUMBER:	REVISION:
G-001	0

Copyright © 2026 ATC IP LLC. All Rights Reserved.

GENERAL CONSTRUCTION NOTES:

1. OWNER FURNISHED MATERIALS, VERIZON "THE COMPANY" WILL PROVIDE AND THE CONTRACTOR WILL INSTALL
   - A. BTS EQUIPMENT FRAME (PLATFORM) AND ICEBRIDGE SHELTER (GROUND BUILD/CO-LOCATE ONLY)
   - B. AC/TELCO INTERFACE BOX (PPC)
   - C. ICE BRIDGE (CABLE TRAY WITH COVER) (GROUND BUILD/CO-LOCATE ONLY, GC TO FURNISH AND INSTALL FOR ROOFTOP INSTALLATION)
   - D. TOWERS, MONOPOLES
   - E. TOWER LIGHTING
   - F. GENERATORS & LIQUID PROPANE TANK
   - G. ANTENNA STANDARD BRACKETS, FRAMES AND PIPES FOR MOUNTING
   - H. ANTENNAS (INSTALLED BY OTHERS)
   - I. TRANSMISSION LINE
   - J. TRANSMISSION LINE JUMPERS
   - K. TRANSMISSION LINE CONNECTORS WITH WEATHERPROOFING KITS
   - L. TRANSMISSION LINE GROUND KITS
   - M. HANGERS
   - N. HOISTING GRIPS
   - O. BTS EQUIPMENT
2. THE CONTRACTOR IS RESPONSIBLE TO PROVIDE ALL OTHER MATERIALS FOR THE COMPLETE INSTALLATION OF THE SITE INCLUDING, BUT NOT LIMITED TO, SUCH MATERIALS AS FENCING, STRUCTURAL STEEL SUPPORTING SUB-FRAME FOR PLATFORM, ROOFING LABOR AND MATERIALS, GROUNDING RINGS, GROUNDING WIRES, COPPER-CLAD OR XIT CHEMICAL GROUND ROD(S), BUSS BARS, TRANSFORMERS AND DISCONNECT SWITCHES WHERE APPLICABLE, TEMPORARY ELECTRICAL POWER, CONDUIT, LANDSCAPING COMPOUND STONE, CRANES, CORE DRILLING, SLEEPERS AND RUBBER MATTING, REBAR, CONCRETE CAISSONS, PADS AND/OR AUGER MOUNTS, MISCELLANEOUS FASTENERS, CABLE TRAYS, NON-STANDARD ANTENNA FRAMES AND ALL OTHER MATERIAL AND LABOR REQUIRED TO COMPLETE THE JOB ACCORDING TO THE DRAWINGS AND SPECIFICATIONS. IT IS THE POSITION OF VERIZON TO APPLY FOR PERMITTING AND CONTRACTOR RESPONSIBLE FOR PICKUP AND PAYMENT OF REQUIRED PERMITS.
3. ALL WORK SHALL CONFORM TO ALL CURRENT APPLICABLE FEDERAL, STATE, AND LOCAL CODES, INCLUDING ANSI/EIA/TIA-222, AND COMPLY WITH ATC CONSTRUCTION SPECIFICATIONS.
4. CONTRACTOR SHALL CONTACT LOCAL 811 FOR IDENTIFICATION OF UNDERGROUND UTILITIES PRIOR TO START OF CONSTRUCTION.
5. CONTRACTOR SHALL BE RESPONSIBLE FOR COORDINATING ALL REQUIRED INSPECTIONS.
6. ALL DIMENSIONS TO, OF, AND ON EXISTING BUILDINGS, DRAINAGE STRUCTURES, AND SITE IMPROVEMENTS SHALL BE VERIFIED IN FIELD BY CONTRACTOR WITH ALL DISCREPANCIES REPORTED TO THE ENGINEER.
7. DO NOT CHANGE SIZE OR SPACING OF STRUCTURAL ELEMENTS.
8. DETAILS SHOWN ARE TYPICAL; SIMILAR DETAILS APPLY TO SIMILAR CONDITIONS UNLESS OTHERWISE NOTED.
9. THESE DRAWINGS DO NOT INCLUDE NECESSARY COMPONENTS FOR CONSTRUCTION SAFETY WHICH SHALL BE THE SOLE RESPONSIBILITY OF THE CONTRACTOR.
10. CONTRACTOR SHALL BRACE STRUCTURES UNTIL ALL STRUCTURAL ELEMENTS NEEDED FOR STABILITY ARE INSTALLED. THESE ELEMENTS ARE AS FOLLOWS: LATERAL BRACING, ANCHOR BOLTS, ETC.
11. CONTRACTOR SHALL DETERMINE EXACT LOCATION OF EXISTING UTILITIES, GROUNDS DRAINS, DRAIN PIPES, VENTS, ETC. BEFORE COMMENCING WORK.
12. INCORRECTLY FABRICATED, DAMAGED, OR OTHERWISE MISFITTING OR NONCONFORMING MATERIALS OR CONDITIONS SHALL BE REPORTED TO THE VERIZON REP PRIOR TO REMEDIAL OR CORRECTIVE ACTION. ANY SUCH REMEDIAL ACTION SHALL REQUIRE WRITTEN APPROVAL BY THE VERIZON REP PRIOR TO PROCEEDING.
13. EACH CONTRACTOR SHALL COOPERATE WITH THE VERIZON REP, AND COORDINATE HIS WORK WITH THE WORK OF OTHERS.
14. CONTRACTOR SHALL REPAIR ANY DAMAGE CAUSED BY CONSTRUCTION OF THIS PROJECT TO MATCH EXISTING PRE-CONSTRUCTION CONDITIONS TO THE SATISFACTION OF THE VERIZON CONSTRUCTION MANAGER.
15. ALL CABLE/CONDUIT ENTRY/EXIT PORTS SHALL BE WEATHERPROOFED DURING INSTALLATION USING A SILICONE SEALANT.
16. WHERE EXISTING CONDITIONS DO NOT MATCH THOSE SHOWN IN THIS PLAN SET, CONTRACTOR SHALL NOTIFY THE VERIZON REP AND ENGINEER OF RECORD IMMEDIATELY.
17. CONTRACTOR SHALL ENSURE ALL SUBCONTRACTORS ARE PROVIDED WITH A COMPLETE AND CURRENT SET OF DRAWINGS AND SPECIFICATIONS FOR THIS PROJECT.
18. CONTRACTOR SHALL REMOVE ALL RUBBISH AND DEBRIS FROM THE SITE AT THE END OF EACH DAY.
19. CONTRACTOR SHALL COORDINATE WORK SCHEDULE WITH AMERICAN TOWER CORPORATION (ATC) AND TAKE PRECAUTIONS TO MINIMIZE IMPACT AND DISRUPTION OF OTHER OCCUPANTS OF THE FACILITY.
20. CONTRACTOR SHALL FURNISH VERIZON AND AMERICAN TOWER CORPORATION (ATC) WITH A PDF MARKED UP AS-BUILT SET OF DRAWINGS UPON COMPLETION OF WORK.
21. PRIOR TO SUBMISSION OF BID, CONTRACTOR SHALL COORDINATE WITH VERIZON REP TO DETERMINE WHAT, IF ANY, ITEMS WILL BE PROVIDED. ALL ITEMS NOT PROVIDED SHALL BE PROVIDED AND INSTALLED BY THE CONTRACTOR. CONTRACTOR WILL INSTALL ALL ITEMS PROVIDED.
22. PRIOR TO SUBMISSION OF BID, CONTRACTOR SHALL COORDINATE WITH VERIZON REP TO DETERMINE IF ANY PERMITS WILL BE OBTAINED BY CONTRACTOR. ALL REQUIRED PERMITS NOT OBTAINED BY VERIZON MUST BE OBTAINED, AND PAID FOR, BY THE CONTRACTOR.
23. CONTRACTOR SHALL INSTALL ALL SITE SIGNAGE IN ACCORDANCE WITH VERIZON SPECIFICATIONS AND REQUIREMENTS.
24. CONTRACTOR SHALL SUBMIT ALL SHOP DRAWINGS TO VERIZON FOR REVIEW AND APPROVAL PRIOR TO FABRICATION.
25. ALL EQUIPMENT SHALL BE INSTALLED ACCORDING TO MANUFACTURER'S SPECIFICATIONS AND LOCATED ACCORDING TO VERIZON SPECIFICATIONS, AND AS SHOWN IN THESE PLANS.
26. THE CONTRACTOR SHALL SUPERVISE AND DIRECT THE PROJECT DESCRIBED HEREIN. THE CONTRACTOR SHALL BE SOLELY RESPONSIBLE FOR ALL THE CONSTRUCTION MEANS, METHODS, TECHNIQUES, SEQUENCES AND PROCEDURES AND FOR COORDINATING ALL PORTIONS OF THE WORK UNDER THE CONTRACT.
27. CONTRACTOR SHALL NOTIFY VERIZON REP A MINIMUM OF 48 HOURS IN ADVANCE OF POURING CONCRETE OR BACKFILLING ANY UNDERGROUND UTILITIES, FOUNDATIONS OR SEALING ANY WALL, FLOOR OR ROOF PENETRATIONS FOR ENGINEERING REVIEW AND APPROVAL.
28. CONTRACTOR SHALL BE RESPONSIBLE FOR SITE SAFETY INCLUDING COMPLIANCE WITH ALL APPLICABLE OSHA STANDARDS AND RECOMMENDATIONS AND SHALL PROVIDE ALL NECESSARY SAFETY DEVICES INCLUDING PPE AND PPM AND CONSTRUCTION DEVICES SUCH AS WELDING AND FIRE PREVENTION, TEMPORARY SHORING, SCAFFOLDING, TRENCH BOXES/SLOPING, BARRIERS, ETC.
29. THE CONTRACTOR SHALL PROTECT AT HIS OWN EXPENSE, ALL EXISTING FACILITIES AND SUCH OF HIS NEW WORK LIABLE TO INJURY DURING THE CONSTRUCTION PERIOD. ANY DAMAGE CAUSED BY NEGLECT ON THE PART OF THIS CONTRACTOR OR HIS REPRESENTATIVES, OR BY THE ELEMENTS DUE TO NEGLECT ON THE PART OF THIS CONTRACTOR OR HIS REPRESENTATIVES, EITHER TO THE EXISTING WORK, OR TO HIS WORK OR THE WORK OF ANY OTHER CONTRACTOR, SHALL BE REPAIRED AT HIS EXPENSE TO THE OWNER'S SATISFACTION.
30. ALL WORK SHALL BE INSTALLED IN A FIRST CLASS, NEAT AND WORKMANLIKE MANNER BY MECHANICS SKILLED IN THE TRADE INVOLVED. THE QUALITY OF WORKMANSHIP SHALL BE SUBJECT TO THE APPROVAL OF THE VERIZON REP. ANY WORK FOUND BY THE VERIZON REP TO BE OF INFERIOR QUALITY AND/OR WORKMANSHIP SHALL BE REPLACED AND/OR REWORKED AT CONTRACTOR EXPENSE UNTIL APPROVAL IS OBTAINED.
31. IN ORDER TO ESTABLISH STANDARDS OF QUALITY AND PERFORMANCE, ALL TYPES OF MATERIALS LISTED HEREINAFTER BY MANUFACTURER'S NAMES AND/OR MANUFACTURER'S CATALOG NUMBER SHALL BE PROVIDED BY THESE MANUFACTURERS AS SPECIFIED.
32. VERIZON FURNISHED EQUIPMENT SHALL BE PICKED-UP AT THE VERIZON WAREHOUSE, NO LATER THAN 48HR AFTER BEING NOTIFIED INSURED, STORED, UNCRATE, PROTECTED AND INSTALLED BY THE CONTRACTOR WITH ALL APPURTENANCES REQUIRED TO PLACE THE EQUIPMENT IN OPERATION, READY FOR USE. THE CONTRACTOR SHALL BE RESPONSIBLE FOR THE EQUIPMENT AFTER PICKING IT UP.
33. VERIZON OR HIS ARCHITECT/ENGINEER RESERVES THE RIGHT TO REJECT ANY EQUIPMENT OR MATERIALS WHICH, IN HIS OWN OPINION ARE NOT IN COMPLIANCE WITH THE CONTRACT DOCUMENTS, EITHER BEFORE OR AFTER INSTALLATION AND THE EQUIPMENT SHALL BE REPLACED WITH EQUIPMENT CONFORMING TO THE REQUIREMENTS OF THE CONTRACT DOCUMENTS BY THE CONTRACTOR AT NO COST TO VERIZON OR THEIR ARCHITECT/ENGINEER.

STRUCTURAL STEEL NOTES:

1. STRUCTURAL STEEL SHALL CONFORM TO THE LATEST EDITION OF THE AISC "SPECIFICATION FOR THE DESIGN, FABRICATION AND ERECTION OF STRUCTURAL STEEL FOR BUILDINGS."
2. STRUCTURAL STEEL ROLLED SHAPES, PLATES AND BARS SHALL CONFORM TO THE FOLLOWING ASTM DESIGNATIONS:
   - A. ASTM A-572, GRADE 50 - ALL W SHAPES, UNLESS NOTED OR A992 OTHERWISE
   - B. ASTM A-36 - ALL OTHER ROLLED SHAPES, PLATES AND BARS UNLESS NOTED OTHERWISE.
   - C. ASTM A-500, GRADE B - HSS SECTION (SQUARE, RECTANGULAR, AND ROUND)
   - D. ASTM A-325, TYPE SC OR N - ALL BOLTS FOR CONNECTING STRUCTURAL MEMBERS
   - E. ASTM F-1554 07 - ALL ANCHOR BOLTS, UNLESS NOTED OTHERWISE
3. ALL EXPOSED STRUCTURAL STEEL MEMBERS SHALL BE HOT-DIPPED GALVANIZED AFTER FABRICATION PER ASTM A123. EXPOSED STEEL HARDWARE AND ANCHOR BOLTS SHALL BE GALVANIZED PER ASTM A153 OR B695.
4. ALL FIELD CUT SURFACES, FIELD DRILLED HOLES AND GROUND SURFACES WHERE EXISTING PAINT OR GALVANIZATION REMOVAL WAS REQUIRED SHALL BE REPAIRED WITH (2) BRUSHED COATS OF ZRC GALVILITE COLD GALVANIZING COMPOUND PER ASTM A780 AND MANUFACTURER'S RECOMMENDATIONS.
5. DO NOT DRILL HOLES THROUGH STRUCTURAL STEEL MEMBERS EXCEPT AS SHOWN AND DETAILED ON STRUCTURAL DRAWINGS.
6. CONNECTIONS:
   - A. ALL WELDING TO BE PERFORMED BY AWS CERTIFIED WELDERS AND CONDUCTED IN ACCORDANCE WITH THE LATEST EDITION OF THE AWS WELDING CODE D1.1.
   - B. ALL WELDS SHALL BE INSPECTED VISUALLY. 25% OF WELDS SHALL BE INSPECTED WITH DYE PENETRANT OR MAGNETIC PARTICLE TO MEET THE ACCEPTANCE CRITERIA OF AWS D1.1. REPAIR ALL WELDS AS NECESSARY.
   - C. INSPECTION SHALL BE PERFORMED BY AN AWS CERTIFIED WELD INSPECTOR.
   - D. IT IS THE CONTRACTORS RESPONSIBILITY TO PROVIDE BURNING/WELDING PERMITS AS REQUIRED BY LOCAL GOVERNING AUTHORITY AND IF REQUIRED SHALL HAVE FIRE DEPARTMENT DETAIL FOR ANY WELDING ACTIVITY.
   - E. ALL ELECTRODES TO BE LOW HYDROGEN, MATCHING FILLER METAL, PER AWS D1.1, UNLESS NOTED OTHERWISE.
   - F. MINIMUM WELD SIZE TO BE 0.1875 INCH FILLET WELDS, UNLESS NOTED OTHERWISE.
   - G. PRIOR TO FIELD WELDING GALVANIZING MATERIAL, CONTRACTOR SHALL GRIND OFF GALVANIZING ½" BEYOND ALL FIELD WELD SURFACES. AFTER WELD AND WELD INSPECTION IS COMPLETE, REPAIR ALL GROUND AND WELDED SURFACES WITH ZRC GALVILITE COLD GALVANIZING COMPOUND PER ASTM A780 AND MANUFACTURERS RECOMMENDATIONS.
   - H. THE CONTRACTOR SHALL PROVIDE ADEQUATE SHORING AND/OR BRACING WHERE REQUIRED DURING CONSTRUCTION UNTIL ALL CONNECTIONS ARE COMPLETE.
   - I. ANY FIELD CHANGES OR SUBSTITUTIONS SHALL HAVE PRIOR APPROVAL FROM THE ENGINEER, AND VERIZON PROJECT MANAGER IN WRITING

SPECIAL CONSTRUCTION ANTENNA INSTALLATION NOTES:

1. WORK INCLUDED:
   - A. ANTENNA AND COAXIAL CABLES ARE FURNISHED BY VERIZON UNDER A SEPARATE CONTRACT. THE CONTRACTOR SHALL ASSIST ANTENNA INSTALLATION CONTRACTOR IN TERMS OF COORDINATION AND SITE ACCESS. ERECTION SUBCONTRACTOR SHALL BE RESPONSIBLE FOR THE PROTECTION OF PERSONNEL
   - B. INSTALL ANTENNAS AS INDICATED ON DRAWINGS AND VERIZON SPECIFICATIONS.
   - C. INSTALL GALVANIZED STEEL ANTENNA MOUNTS AS INDICATED ON DRAWINGS.
   - D. INSTALL FURNISHED GALVANIZED STEEL OR ALUMINUM WAVEGUIDE AND PROVIDE PRINTOUT OF THAT TEST.
   - E. CONTRACTOR SHALL PROVIDE FOUR (4) SETS OF SWEEP TESTS USING ANRITZU-PACKARD 8713B RF SCALAR NETWORK ANALYZER. SUBMIT FREQUENCY DOMAIN REFLECTOMETER(FDR) TESTS RESULTS TO THE PROJECT MANAGER. SWEEP TESTS SHALL BE AS PER ATTACHED RFS "MINIMUM FIELD TESTING RECOMMENDED FOR ANTENNA AND HELIAX COAXIAL CABLE SYSTEMS" DATED 10/5/93. TESTING SHALL BE PERFORMED BY AN INDEPENDENT TESTING SERVICE AND BE BOUND AND SUBMITTED WITHIN ONE WEEK OF WORK COMPLETION.
   - F. INSTALL COAXIAL CABLES AND TERMINATING BETWEEN ANTENNAS AND EQUIPMENT PER MANUFACTURER'S RECOMMENDATIONS. WEATHERPROOF ALL CONNECTIONS BETWEEN THE ANTENNA AND EQUIPMENT PER MANUFACTURER'S REQUIREMENTS. TERMINATE ALL COAXIAL CABLE THREE (3) FEET IN EXCESS OF ENTRY PORT LOCATION UNLESS OTHERWISE STATED.
   - G. ANTENNA AND COAXIAL CABLE GROUNDING:
2. ALL EXTERIOR #6 GREEN GROUND WIRE "DAISY CHAIN" CONNECTIONS ARE TO BE WEATHER SEALED WITH RFS CONNECTORS/SPLICE WEATHERPROOFING KIT #221213 OR EQUAL.
3. ALL COAXIAL CABLE GROUNDING KITS ARE TO BE INSTALLED ON STRAIGHT RUNS OF COAXIAL CABLE (NOT WITHIN BENDS).

CONCRETE AND REINFORCING STEEL NOTES:

1. DESIGN AND CONSTRUCTION OF ALL CONCRETE ELEMENTS SHALL CONFORM TO THE LATEST EDITIONS OF ALL APPLICABLE CODES INCLUDING: ACI 301 "SPECIFICATIONS FOR STRUCTURAL CONCRETE FOR BUILDINGS", ACI 117 "SPECIFICATIONS FOR TOLERANCES FOR CONCRETE CONSTRUCTION AND MATERIALS", AND ACI 318 "BUILDING CODE REQUIREMENTS FOR REINFORCED CONCRETE."
2. MIX DESIGN SHALL BE APPROVED BY VERIZON REP PRIOR TO PLACING CONCRETE.
3. CONCRETE SHALL BE NORMAL WEIGHT, 6 % AIR ENTRAINED (+/- 1.5%) WITH A SLUMP RANGE OF 3-6" AND HAVE A MINIMUM 28-DAY COMPRESSIVE STRENGTH OF 4500 PSI UNLESS OTHERWISE NOTED.
4. THE FOLLOWING MATERIALS SHALL BE USED:

PORTLAND CEMENT:	ASTM C150, TYPE 2
REINFORCEMENT:	ASTM A185, PLAIN STEEL WELDED WIRE FABRIC
REINFORCEMENT BARS:	ASTM A615, GRADE 60, DEFORMED
NORMAL WEIGHT AGGREGATE:	ASTM C33
WATER:	ASTM C 94/C 94M
WELDED WIRE FABRIC:	ASTM A185
ADMIXTURES:	
-WATER-REDUCING AGENT:	ASTM C 494/C 494M, TYPE A
-AIR-ENTERING AGENT:	ASTM C 260/C 260M
-SUPERPLASTICIZER:	ASTM C494, TYPE F OR TYPE G
-RETARDING:	ASTM C 494/C 494M, TYPE B

5. MINIMUM CONCRETE COVER FOR REINFORCING STEEL SHALL BE NO LESS THAN 3".
6. A 3/4" CHAMFER SHALL BE PROVIDED AT ALL EXPOSED EDGES OF CONCRETE IN ACCORDANCE WITH ACI 301 SECTION 4.2.4, UNLESS NOTED OTHERWISE.
7. INSTALLATION OF CONCRETE EXPANSION/WEDGE ANCHOR SHALL BE PER MANUFACTURER'S WRITTEN RECOMMENDED PROCEDURE. THE ANCHOR BOLT, DOWEL, OR ROD SHALL CONFORM TO MANUFACTURER'S RECOMMENDATION FOR EMBEDMENT DEPTH OR AS SHOWN ON THE DRAWINGS. NO REBAR SHALL BE CUT WITHOUT PRIOR APPROVAL FROM AN ATC ENGINEER WHEN DRILLING HOLES IN CONCRETE.
8. ADMIXTURES SHALL CONFORM TO THE APPROPRIATE ASTM STANDARD AS REFERENCED IN "METHOD 1" OF ACI 301.
9. DO NOT WELD OR TACK WELD REINFORCING STEEL.
10. ALL DOWELS, ANCHOR BOLTS, EMBEDDED STEEL, ELECTRICAL CONDUITS, PIPE SLEEVES, GROUNDS AND ALL OTHER EMBEDDED ITEMS AND FORMED DETAILS SHALL BE IN PLACE BEFORE START OF CONCRETE PLACEMENT.
11. REINFORCEMENT SHALL BE COLD BENT WHENEVER BENDING IS REQUIRED.
12. DO NOT PLACE CONCRETE IN WATER, ICE, OR ON FROZEN GROUND.
13. FOR COLD-WEATHER (ACI 306) AND HOT-WEATHER (ACI 301M) CONCRETE PLACEMENT, CONFORM TO APPLICABLE ACI CODES AND RECOMMENDATIONS. IN EITHER CASE, MATERIALS CONTAINING CHLORIDE, CALCIUM, SALTS, ETC. SHALL NOT BE USED. PROTECT FRESH CONCRETE FROM WEATHER FOR 7 DAYS, MINIMUM.
14. ALL CONCRETE SHALL HAVE A "SMOOTH FORM FINISH."
15. SPLICING OF REINFORCEMENT IS PERMITTED ONLY AT LOCATIONS SHOWN IN THE CONTRACT DRAWINGS OR AS ACCEPTED BY THE ENGINEER. UNLESS OTHERWISE SHOWN OR NOTED REINFORCING STEEL SHALL BE SPLICED TO DEVELOP ITS FULL TENSILE CAPACITY (CLASS A) IN ACCORDANCE WITH ACI 318.
16. DETAILING OF REINFORCING STEEL SHALL CONFORM TO "ACI MANUAL OF STANDARD PRACTICE FOR DETAILING REINFORCED CONCRETE STRUCTURES" (ACI 315).
17. ALL SLAB CONSTRUCTION SHALL BE CAST MONOLITHICALLY WITHOUT HORIZONTAL CONSTRUCTION JOINTS, UNLESS SHOWN IN THE CONTRACT DRAWINGS.
18. LOCATION OF ALL CONSTRUCTION JOINTS ARE SUBJECT TO THE REQUIREMENTS OF THE CONTRACT DOCUMENTS, CONFORMANCE WITH ACI 318, AND ACCEPTANCE OF THE ENGINEER. DRAWINGS SHOWING LOCATION OF DETAILS OF THE PROPOSED CONSTRUCTION JOINTS SHALL BE SUBMITTED WITH REINFORCING STEEL PLACEMENT DRAWINGS.
19. SPLICES OF WWF, AT ALL SPLICED EDGES, SHALL BE SUCH THAT THE OVERLAP MEASURED BETWEEN OUTERMOST CROSS WIRES OF EACH FABRIC SHEET IS NOT LESS THAN THE SPACING OF THE CROSS WIRE PLUS 2 INCHES, NOR LESS THAN 6".
20. BAR SUPPORTS SHALL BE ALL-GALVANIZED METAL WITH PLASTIC TIPS.
21. ALL REINFORCEMENT SHALL BE SECURELY TIED IN PLACE TO PREVENT DISPLACEMENT BY CONSTRUCTION TRAFFIC OR CONCRETE. TIE WIRE SHALL BE OF SUFFICIENT STRENGTH FOR INTENDED PURPOSE, BUT NOT LESS THAN NO. 18 GAUGE.
22. SLAB ON GROUND: COMPACT STRUCTURAL FILL TO 95% DENSITY AND THEN PLACE 6" GRAVEL BENEATH SLAB.

ELECTRICAL NOTES:

1. ELECTRICAL WORK SHALL BE PERFORMED BY ELECTRICAL CONTRACTOR. ELECTRICAL CONTRACTOR SHALL ENSURE THAT ALL WORK COMPLIES WITH ALL APPLICABLE LOCAL AND STATE CODES AND NATIONAL ELECTRICAL CODE.
2. ALL SUGGESTED ELECTRICAL ELEMENTS (SUCH AS BREAKER SIZES, WIRE SIZES, CONDUITS SIZES) ARE FOR ZONING PURPOSES ONLY. IT IS THE RESPONSIBILITY TO OF THE ELECTRICAL CONTRACTOR TO CONFIRM COMPLIANCE WITH LOCAL ELECTRICAL CODES AND PASS ALL APPLICABLE AND NECESSARY INSPECTIONS. IN SOME EVENTS, IT MAY BE NECESSARY TO PERFORM AN ELECTRICAL LOAD STUDY TO VERIFY THE CAPACITY OF THE EXISTING SERVICE. THIS IS NOT THE RESPONSIBILITY OF ATC. IT IS THE RESPONSIBILITY OF THE ELECTRICAL CONTRACTOR.
3. CONTRACTOR SHALL FIELD LOCATE ALL BELOW GRADE GROUNDING CABLES AND UTILITY LINES PRIOR TO CONSTRUCTION. CONTRACTOR IS RESPONSIBLE FOR RELOCATION OF ALL UTILITIES AND GROUNDING LINES THAT MAY BECOME DISTURBED OR CONFLICTING IN THE COURSE OF CONSTRUCTION.

ALL DISCREPANCIES FROM WHAT IS SHOWN ON THESE CONSTRUCTION DRAWINGS SHALL BE COMMUNICATED TO ATC ENGINEERING IMMEDIATELY FOR CORRECTION OR RE-DESIGN. FAILURE TO COMMUNICATE DIRECTLY WITH ATC ENGINEERING OR ANY CHANGES FROM THE DESIGN CONDUCTED WITHOUT PRIOR APPROVAL FROM ATC ENGINEERING SHALL BE THE SOLE RESPONSIBILITY OF THE GENERAL CONTRACTOR.

AMERICAN TOWER®
A.T. ENGINEERING SERVICES LLC
1 FENTON MAIN
SUITE 300
CARY, NC 27511
PHONE: (919) 468-0112
PEC.0001553

THE USE AND PUBLICATION OF THESE DRAWINGS SHALL BE RESTRICTED TO THE ORIGINAL SITE FOR WHICH THEY ARE PREPARED. ANY USE OR DISCLOSURE OTHER THAN THAT WHICH RELATES TO AMERICAN TOWER OR THE SPECIFIED CARRIER IS STRICTLY PROHIBITED. NEITHER THE ARCHITECT NOR THE ENGINEER WILL BE PROVIDING ON-SITE CONSTRUCTION REVIEW OF THIS PROJECT. CONTRACTOR(S) MUST VERIFY ALL DIMENSIONS AND ADVISE AMERICAN TOWER OR THE SPECIFIED CARRIER OF ANY DISCREPANCIES. ANY PRIOR ISSUANCE OF THIS DRAWING IS SUPERSEDED BY THE LATEST VERSION.

REV.	DESCRIPTION	BY	DATE
0	FOR CONSTRUCTION	JM	05/08/26

ATC SITE NUMBER:
281416
ATC SITE NAME:
WILLINGTON CT
VERIZON SITE NAME:
WILLINGTON HILL CT
SITE ADDRESS:
196 TOLLAND TURNPIKE
WILLINGTON, CT 06279

SEAL:

Digitally Signed: 2026-05-11

verizon

ATC JOB NO:	15445313_D2
CUSTOMER ID:	WILLINGTON HILL CT
CUSTOMER #:	5000992841

GENERAL NOTES

SHEET NUMBER:	REVISION:
G-002	0

Copyright © 2026 ATC IP LLC, All Rights Reserved.

SITE LOCATION MAP
(NOT TO SCALE)

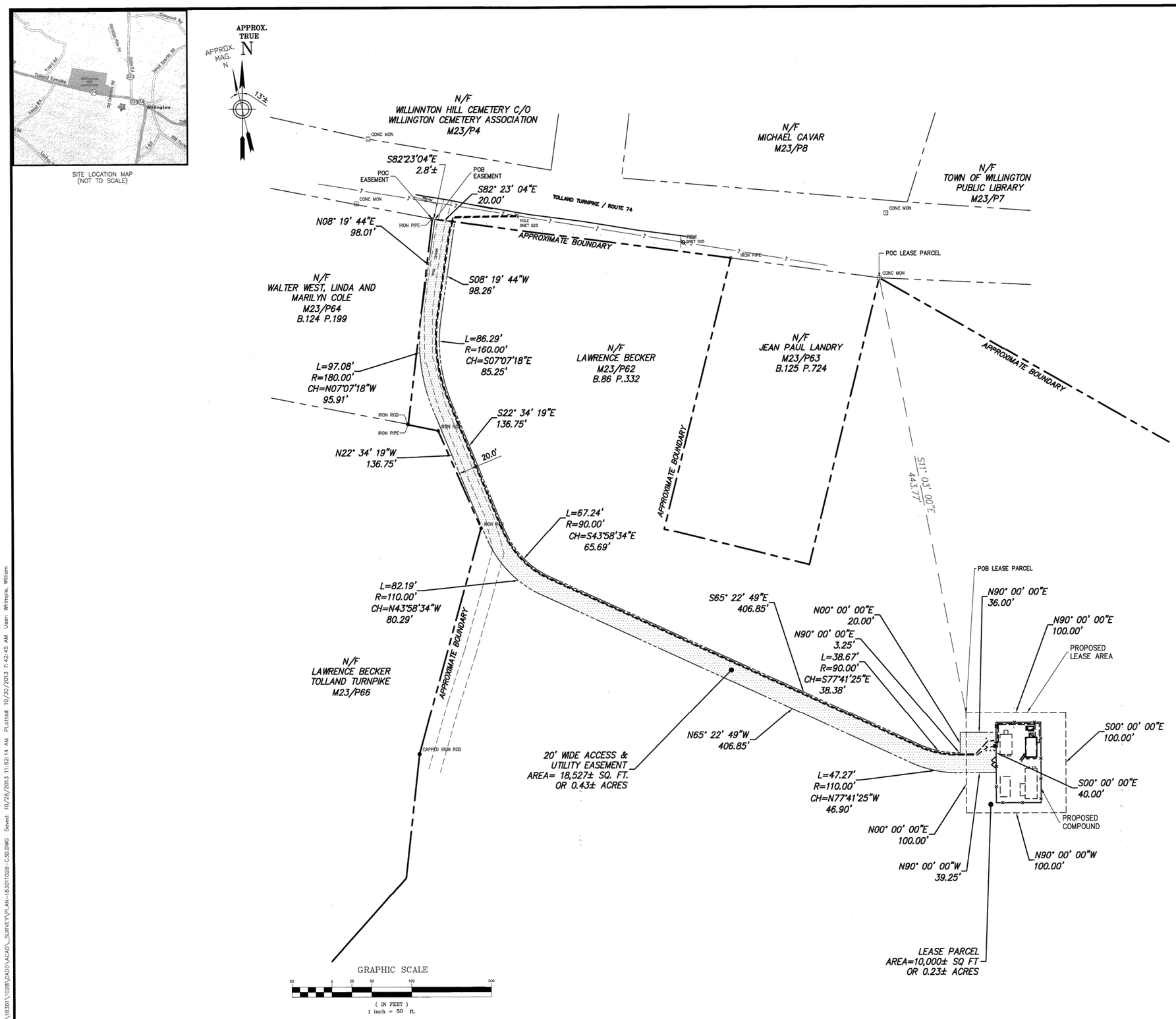

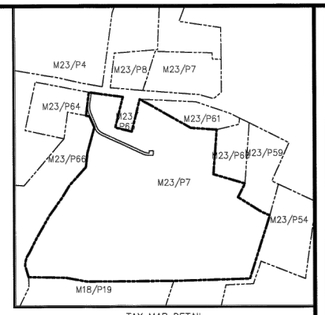

TAX MAP DETAIL
(SCALE: NONE)

NOTES:

1. THIS SURVEY HAS BEEN PREPARED PURSUANT TO THE REGULATIONS OF CONNECTICUT STATE AGENCIES SECTIONS 20–300b–1 THROUGH 20–300b–20 AND THE "STANDARDS FOR SURVEYS AND MAPS IN THE STATE OF CONNECTICUT" AS ADOPTED BY THE CONNECTICUT ASSOCIATION OF LAND SURVEYORS INC. ON SEPTEMBER 28, 1996. THE BOUNDARY LINES SHOWN ON THIS PLAN WERE COMPILED FROM OTHER MAPS, RECORD RESEARCH OR OTHER SOURCES OF INFORMATION. IT IS NOT TO BE CONSTRUED AS HAVING BEEN OBTAINED AS THE RESULT OF A FIELD SURVEY, AND IS SUBJECT TO SUCH CHANGE AS AN ACCURATE FIELD SURVEY MAY DISCLOSE.

TYPE OF SURVEY: EASEMENT PLAN

BOUNDARY DETERMINATION CATEGORY: NONE

CLASS OF ACCURACY: HORIZONTAL CLASS A–2

3. BASE MAPPING PREPARED BY CHA FROM AN OCTOBER 2009 AND MARCH 2013 FIELD SURVEY.

4. NORTH ORIENTATION IS TRUE NORTH BASED ON GPS OBSERVATIONS TAKEN AT THE TIME OF THE FIELD SURVEY.

5. UNDERGROUND UTILITIES, STRUCTURES AND FACILITIES, IF ANY, HAVE BEEN SHOWN FROM SURFACE LOCATIONS AND MEASUREMENTS OBTAINED FROM A FIELD SURVEY. THEREFORE THEIR LOCATIONS MUST BE CONSIDERED APPROXIMATE ONLY. THERE MAY BE OTHER UTILITIES WHICH THE EXISTENCE OF ARE NOT KNOWN. SIZE, TYPE AND LOCATION OF ALL UTILITIES AND STRUCTURES MUST BE VERIFIED BY PROPER AUTHORITIES PRIOR TO ANY AND ALL CONSTRUCTION. CALL DIG SAFE PRIOR.

6. SUBJECT TO ANY STATEMENT OF FACTS THAT AN UP–TO–DATE ABSTRACT OF TITLE WOULD DISCLOSE.

7. SUBJECT TO ALL RIGHTS, EASEMENTS, COVENANTS OR RESTRICTIONS OF RECORD.

8. REFERENCE IS MADE TO INFORMATION CONTAINED IN COMMITMENT FOR TITLE 01–13095229–01T, EFFECTIVE DATE JUNE 27, 2013 AS PREPARED BY OLD REPUBLIC NATIONAL TITLE INSURANCE COMPANY.

MAP REFERENCES:

1. MAP ENTITLED "PLAN OF LAND OWNED BY THOMAS J. OWENS" AS PREPARED BY GILBERT F. PERRY, DATED JULY 12, 1967 AND FILED AS MAP BOOK 5 PAGE 25.

PARENT PARCEL

ALL THAT TRACT OR PARCEL OF LAND SITUATE, LYING AND BEING SOUTHERLY OF TOLLAND TURNPIKE (AKA ROUTE 74), IN THE TOWN OF WILLINGTON, COUNTY OF TOLLAND, STATE OF CONNECTICUT, AND BEING THE SAME PREMISES AS DESCRIBED IN BOOK 86 OF DEEDS ON PAGE 332 AS FILED IN OFFICE OF THE WILLINGTON TOWN CLERK.

ACCESS AND UTILITY EASEMENT

ALL THAT TRACT OR PARCEL OF LAND SITUATE, LYING AND BEING SOUTHERLY OF TOLLAND TURNPIKE (AKA ROUTE 74), IN THE TOWN OF WILLINGTON, COUNTY OF TOLLAND, STATE OF CONNECTICUT, BEING MORE PARTICULARLY BOUNDED AND DESCRIBED AS FOLLOWS:

COMMENCING ON AT A IRON ROD ON THE SOUTHERLY HIGHWAY BOUNDARY OF TOLLAND TURNPIKE AT ITS INTERSECTION WITH THE PROPERTY DIVISION LINE BETWEEN LANDS NOW OR FORMERLY OF WALTER WEST, LINDA AND MARILYN COLE AS DESCRIBED IN BOOK 124 OF DEEDS AT PAGE 199 ON THE WEST AND LANDS NOW OR FORMERLY OF LAWRENCE BECKER AS DESCRIBED IN BOOK 86 OF DEEDS AT PAGE 332 ON THE EAST; THENCE SOUTH 82°–23'–04" EAST, ALONG SAID HIGHWAY BOUNDARY A DISTANCE OF 2.8± FEET TO THE POINT OR PLACE OF BEGINNING; THENCE SOUTH 82°–23'–04" EAST, CONTINUING ALONG SAID HIGHWAY BOUNDARY A DISTANCE OF 20.00 FEET TO A POINT; THENCE THROUGH THE SAID LANDS OF LAWRENCE BECKER THE FOLLOWING SEVENTEEN (17) COURSES AND DISTANCE:

1. SOUTH 08°–19'–44" WEST, A DISTANCE OF 98.26 FEET TO A POINT,
2. ALONG A CURVE TO THE LEFT HAVING A RADIUS OF 160.00, LENGTH OF 86.29 AND CHORD OF SOUTH 07°–07'–18" EAST, A DISTANCE OF 85.25 FEET TO A POINT,
3. SOUTH 22°–34'–19" EAST, A DISTANCE OF 136.75 FEET TO A POINT,
4. ALONG A CURVE TO THE LEFT HAVING A RADIUS OF 90.00, LENGTH OF 67.24 AND CHORD OF SOUTH 43°–58'–34" EAST, A DISTANCE OF 65.69 FEET TO A POINT,
5. SOUTH 65°–22'–49" EAST, A DISTANCE OF 406.85 FEET TO POINT,
6. ALONG A CURVE TO THE LEFT HAVING A RADIUS OF 90.00, LENGTH OF 38.67 AND CHORD OF SOUTH 77°–41'–25" EAST, A DISTANCE OF 38.38 FEET TO A POINT,
7. NORTH 90°–00'–00" EAST, A DISTANCE OF 3.25 FEET TO A POINT,
8. NORTH 00°–00'–00" EAST, A DISTANCE OF 20.00 FEET TO A POINT,
9. NORTH 90°–00'–00" EAST, A DISTANCE OF 36.00 FEET TO A POINT ON A COMPOUND,
10. SOUTH 00°–00'–00" EAST, ALONG A PROPOSED COMPOUND, A DISTANCE OF 40.00 FEET TO A POINT,
11. NORTH 90°–00'–00" WEST, A DISTANCE OF 39.25 FEET TO A POINT,
12. ALONG A CURVE TO THE RIGHT HAVING A RADIUS OF 110.00, LENGTH OF 47.27 AND CHORD OF NORTH 77°–41'–25" WEST, A DISTANCE OF 46.90 FEET TO A POINT,
13. NORTH 65°–22'–49" WEST, A DISTANCE OF 406.85 FEET TO A POINT,
14. ALONG A CURVE TO THE RIGHT HAVING A RADIUS OF 110.00, LENGTH OF 82.19 AND CHORD OF NORTH 43°–58'–34" WEST, A DISTANCE OF 80.29 FEET TO A POINT,
15. NORTH 22°–34'–19" WEST, A DISTANCE OF 136.75 FEET TO A POINT,
16. ALONG A CURVE TO THE RIGHT HAVING A RADIUS OF 180.00, LENGTH OF 97.08 AND CHORD OF NORTH 07°–07'–18" WEST, A DISTANCE OF 95.91 FEET TO A POINT,
17. NORTH 08°–19'–44" EAST, A DISTANCE OF 98.01 FEET TO A POINT

THE POINT OR PLACE OF BEGINNING. BEING 18,527± SQUARE FEET OR 0.43± ACRES OF LAND MORE OF LESS.

LEASE AREA

ALL THAT TRACT OR PARCEL OF LAND SITUATE, LYING AND BEING SOUTHERLY OF TOLLAND TURNPIKE (AKA ROUTE 74), IN THE TOWN OF WILLINGTON, COUNTY OF TOLLAND, STATE OF CONNECTICUT, BEING MORE PARTICULARLY BOUNDED AND DESCRIBED AS FOLLOWS:

COMMENCING ON AT A CONCRETE MONUMENT ON THE SOUTHERLY HIGHWAY BOUNDARY OF TOLLAND TURNPIKE AT ITS INTERSECTION WITH THE PROPERTY DIVISION LINE BETWEEN LANDS NOW OR FORMERLY OF JEAN PAUL LANDRY AS DESCRIBED IN BOOK 125 OF DEEDS AT PAGE 724 ON THE WEST AND LANDS NOW OR FORMERLY OF LAWRENCE BECKER AS DESCRIBED IN BOOK 86 OF DEEDS AT PAGE 332 ON THE EAST; THENCE SOUTH 11°–03'–00" EAST, THROUGH THE SAID LANDS OF BECKER, A DISTANCE OF 443.77 FEET TO THE POINT OR PLACE OF BEGINNING; THENCE CONTINUING THROUGH THE SAID LANDS OF LAWRENCE BECKER THE FOLLOWING FOUR COURSES (4) AND DISTANCE:

1. NORTH 90°–00'–00" EAST, A DISTANCE OF 100.00 FEET TO A POINT,
2. SOUTH 00°–00'–00" EAST, A DISTANCE OF 100.00 FEET TO A POINT,
3. NORTH 90°–00'–00" WEST, A DISTANCE OF 100.00 FEET TO A POINT AND
4. NORTH 00°–00'–00" EAST, A DISTANCE OF 100.00 FEET TO A POINT

THE POINT OR PLACE OF BEGINNING. BEING 10,000± SQUARE FEET OR 0.23± ACRES OF LAND MORE OF LESS.

at&t
Your world. Delivered.

NEW CINGULAR WIRELESS PCS, LLC
500 ENTERPRISE DRIVE, ROCKY HILL, CT 06067

Drawing Copyright © 2013 CHA

CHA

2139 Silas Deane Highway, Suite 212 Rocky Hill, CT 06067-2336

CHA PROJECT NO:
18301– 1028 – 43000

NO.	REVISIONS
1	10/28/13 – MISC. REVISIONS

"TO MY KNOWLEDGE AND BELIEF, MAP IS SUBSTANTIALLY CORRECT AS NOTED HEREON"

STATE OF CONNECTICUT
WILLIAM S. LUCARELLI
No. 16529
LICENSED
LAND SURVEYOR

William

WILLIAM S. LUCARELLI
CT LS 16529

SITE ID:
SR1107
SITE NAME:
WILLINGTON

SITE ADDRESS:
TOLLAND TURNPIKE
WILLINGTON, CT
06279
TOLLAND COUNTY

PLAN SHOWING
SURVEY PREPARED FOR
AMERICAN TOWER CORPORATION

SEPTEMBER 25, 2013

SCALE: 1" = 50'

File: O:\18301\1028\CADD\ACAD_SURVEY\PLAN-183011028-C3D.DWG Saved: 10/28/2013 11:52:14 AM Plotted: 10/30/2013 7:42:45 AM User: Whimple, William

SITE PLAN NOTES:

1. THIS SITE PLAN REPRESENTS THE BEST PRESENT KNOWLEDGE AVAILABLE TO THE ENGINEER AT THE TIME OF THIS DESIGN. THE CONTRACTOR SHALL VISIT THE SITE PRIOR TO CONSTRUCTION AND VERIFY ALL EXISTING CONDITIONS RELATED TO THE SCOPE OF WORK FOR THIS PROJECT.

2. ICE BRIDGE, CABLE LADDER, COAX PORT, AND COAX CABLE ARE SHOWN FOR REFERENCE ONLY. CONTRACTOR SHALL CONFIRM THE EXACT LOCATION OF ALL PROPOSED AND EXISTING EQUIPMENT AND STRUCTURES DEPICTED ON THIS PLAN. BEFORE UTILIZING EXISTING CABLE SUPPORTS, COAX PORTS, INSTALLING NEW PORTS OR ANY OTHER EQUIPMENT, CONTRACTOR SHALL VERIFY ALL ASPECTS OF THE COMPONENTS MEET THE ATC SPECIFICATIONS.

3. ALL CONDUITS SHALL BE INSTALLED UNDERGROUND AND PER APPLICABLE NEC AND LOCAL REQUIREMENTS UNLESS SHOWN OTHERWISE ON THESE PLANS. ANY CONDUITS INSTALLED ABOVE GRADE SHALL BE SECURED PER NEC 344 (MAX INTERVAL 10') AND THE ENTIRE CONDUIT SHALL BE PAINTED SAFETY/REFLECTIVE YELLOW OR ORANGE TO INCREASE VISIBILITY AND REDUCE TRIP HAZARDS.

4. IT IS THE RESPONSIBILITY OF THE CONTRACTOR TO COORDINATE WITH THE VERIZON REPRESENTATIVE AND LOCAL UTILITY COMPANY FOR THE INSTALLATION OF CONDUITS, CONDUCTORS, BREAKERS, DISCONNECTS, OR ANY OTHER EQUIPMENT REQUIRED FOR ELECTRICAL SERVICE. ALL ELECTRICAL WORK SHALL BE PERFORMED IN ACCORDANCE WITH LATEST EDITION OF THE STATE AND NATIONAL CODES, ORDINANCES AND REGULATIONS APPLICABLE TO THIS PROJECT.

LEGEND

⊗	GROUNDING TEST WELL
ATS	AUTOMATIC TRANSFER SWITCH
B	BOLLARD
CSC	CELL SITE CABINET
D	DISCONNECT
E	ELECTRICAL
F	FIBER
GEN	GENERATOR
G	GENERATOR RECEPTACLE
HH, V	HAND HOLE, VAULT
IB	ICE BRIDGE
K	KENTROX BOX
LC	LIGHTING CONTROL
M	METER
PB	PULL BOX
PP	POWER POLE
T	TELCO
TRN	TRANSFORMER
	CHAINLINK FENCE

PROPOSED CABLE NOTES:

1. ESTIMATED LENGTH OF PROPOSED CABLE IS **197' (60M)**. ESTIMATED LENGTH OF CABLE WAS PROVIDED BY CUSTOMER OR CALCULATED BY ADDING THE RAD CENTER AND THE DISTANCE FROM THE SHELTER ENTRY PLATE TO THE TOWER (ALONG THE ICE BRIDGE) AND A SAFETY FACTOR MEASUREMENT OF 15% (OF THE TWO PREVIOUS VALUES), CDS DEFER TO GREATEST CABLE LENGTH.
2. ROUTE PROPOSED CABLES ALONG SAME PATH AS EXISTING CABLES AND IN ACCORDANCE WITH STRUCTURAL ANALYSIS. IF ADEQUATE SPACE EXISTS, ROUTE CABLES THROUGH ENTRY PORT HOLE, UP INSIDE OF MONOPOLE, AND THROUGH EXIT PORT HOLE. IF ROUTING OUTSIDE THE MONOPOLE, ATTACH CABLES USING STAND-OFF ADAPTERS MOUNTED TO TOWER USING STAINLESS STEEL BANDING. ADEQUATELY SECURE CABLES USING EITHER APPROPRIATELY SIZED STAINLESS STEEL SNAP-INS OR MOUNTING HARDWARE AND BRACKETS AS SPECIFIED BY CABLE MANUFACTURER.

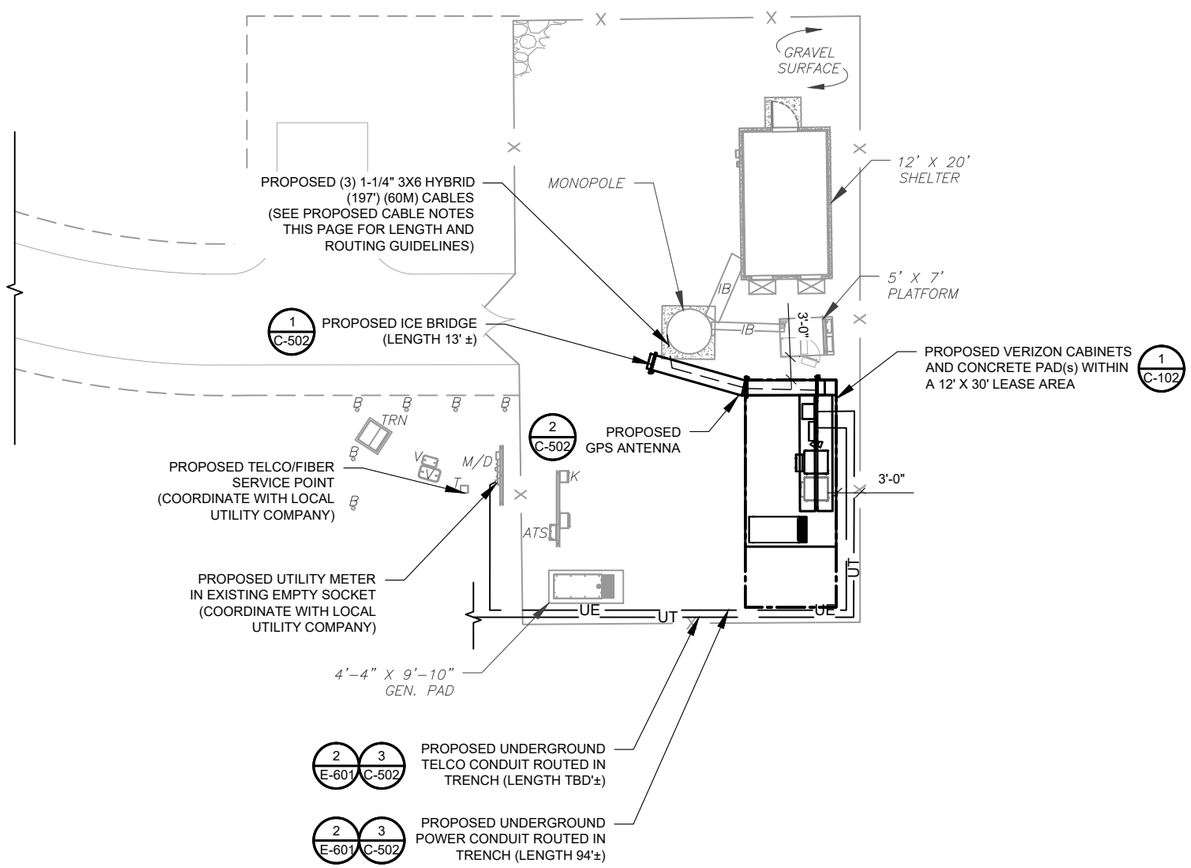

1 DETAILED SITE PLAN

GRAPHIC SCALE

20 0 10 20

(IN FEET)
1 UNIT = 20 FEET

N

AMERICAN TOWER®

A.T. ENGINEERING SERVICES LLC
1 FENTON MAIN
SUITE 300
CARY, NC 27511
PHONE: (919) 468-0112
PEC.0001553

THE USE AND PUBLICATION OF THESE DRAWINGS SHALL BE RESTRICTED TO THE ORIGINAL SITE FOR WHICH THEY ARE PREPARED. ANY USE OR DISCLOSURE OTHER THAN THAT WHICH RELATES TO AMERICAN TOWER OR THE SPECIFIED CARRIER IS STRICTLY PROHIBITED. NEITHER THE ARCHITECT NOR THE ENGINEER WILL BE PROVIDING ON-SITE CONSTRUCTION REVIEW OF THIS PROJECT. CONTRACTOR(S) MUST VERIFY ALL DIMENSIONS AND ADVISE AMERICAN TOWER OR THE SPECIFIED CARRIER OF ANY DISCREPANCIES. ANY PRIOR ISSUANCE OF THIS DRAWING IS SUPERSEDED BY THE LATEST VERSION.

REV.	DESCRIPTION	BY	DATE
0	FOR CONSTRUCTION	JM	05/08/26

ATC SITE NUMBER:
281416

ATC SITE NAME:
WILLINGTON CT

VERIZON SITE NAME:
WILLINGTON HILL CT

SITE ADDRESS:
196 TOLLAND TURNPIKE
WILLINGTON, CT 06279

SEAL:

STATE OF CONNECTICUT · SCOTT A. WIRGAU · 30575 · LICENSED · PROFESSIONAL ENGINEER

Digitally Signed: 2026-05-11

verizon

ATC JOB NO:	15445313_D2
CUSTOMER ID:	WILLINGTON HILL CT
CUSTOMER #:	5000992841

DETAILED SITE PLAN

SHEET NUMBER:	REVISION:
C-101	0

Copyright © 2026 ATC IP LLC, All Rights Reserved.

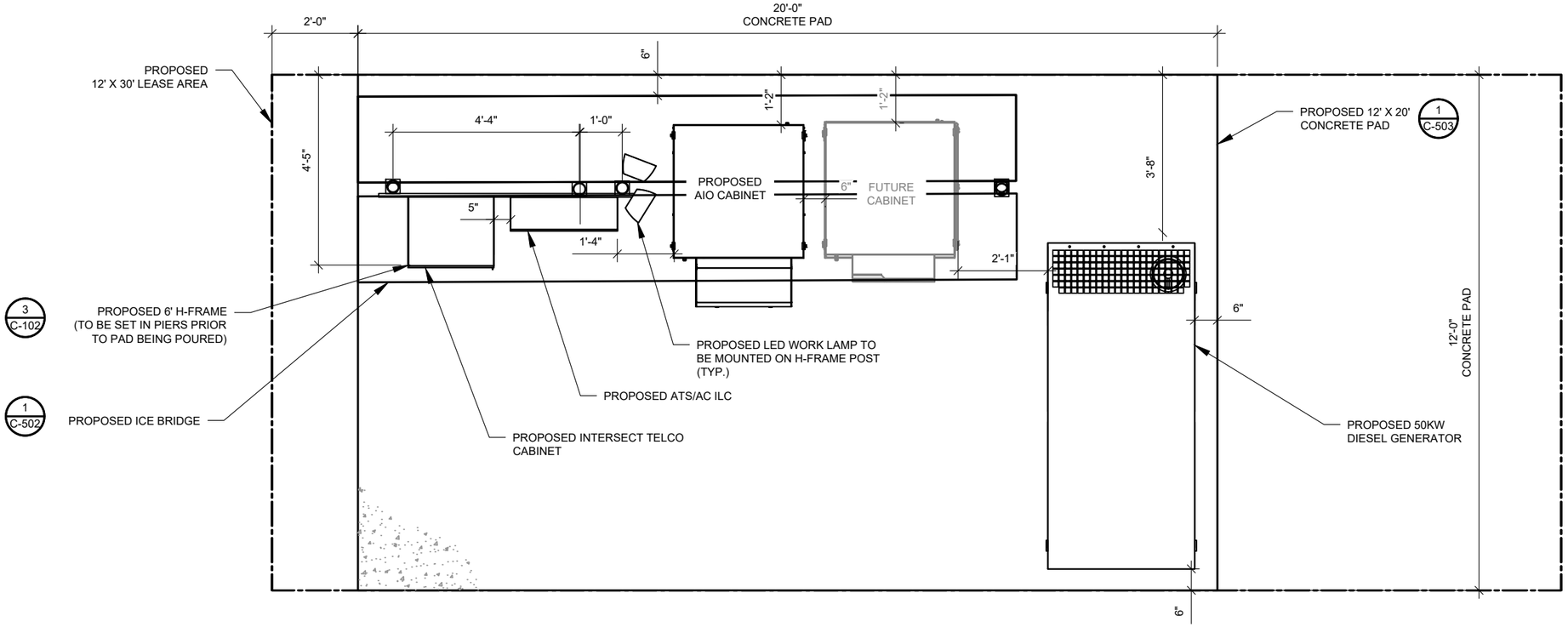

1 PROPOSED GROUND EQUIPMENT LAYOUT

GRAPHIC SCALE

3 0 1.5 3

(IN FEET)
1 UNIT = 3 FEET

VERIZON WIRELESS PROVIDED EQUIPMENT

- CHARLES INDUSTRIES CUBE-SS4B231PX2 EQUIPMENT WITH BATTERY CHARGER
- RAYCAP OVP-12 (1) RXXDC-3315-PF-48

CONTRACTOR PROVIDED EQUIPMENT

* THIS IS NOT A COMPREHENSIVE LIST.
IT SHOULD BE ASSUMED BY THE CONTRACTOR THAT ALL OTHER ITEMS DETAILED IN THIS SET OF DRAWINGS SHALL BE PROVIDED BY THE CONTRACTOR.

- 18"X18" FIBER JUNCTION BOX, NEMA 3R CABINET ENCLOSURE WITH WOODEN BACKBOARD, PADLOCK LATCH, AND COMBINATION LOCK (USE FOR DARK FIBER)

- 26.2" WIDE X 78" TALL X 12.3" DEEP ASCO D300L SERIES POWER TRANSFER LOAD CENTER MODEL AA300G-1PH-N-3R INTEGRATED LOAD CENTER "ILC" WITH COMBINATION PAD LOCK.

- 22" WIDE X 26" TALL X 20" DEEP CHARLES INDUSTRIES CUBE-RL1003C-1 WITH HEAT EXCHANGER (120V) WITH TRIPP-LITE UPS PART #SM1200RMXL2UTAA INSIDE (ONLY REQUIRED WHEN VZT PROVIDES LIT FIBER. UTILITY COORDINATOR MUST VERIFY IF NEEDED)

- COORDINATE ADDITIONAL ENTRY GATE LOCK(S) WITH CONSTRUCTION MANAGER

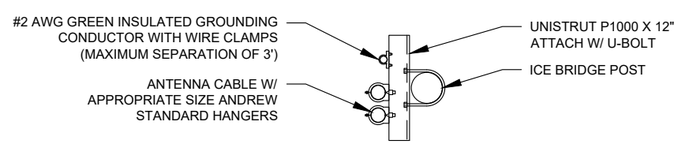

2 WAVEGUIDE UNISTRUT

SCALE: N.T.S.

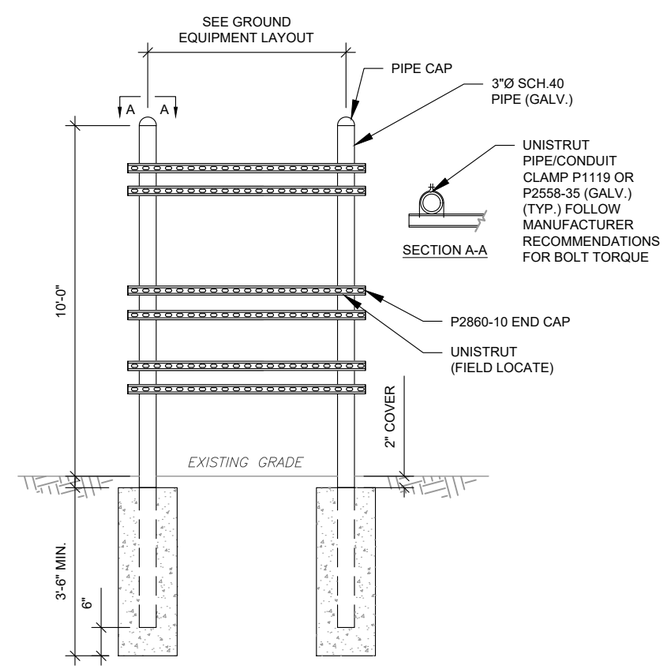

3 TYPICAL H-FRAME DETAIL

SCALE: N.T.S.

AMERICAN TOWER®
A.T. ENGINEERING SERVICES LLC
1 FENTON MAIN
SUITE 300
CARY, NC 27511
PHONE: (919) 468-0112
PEC.0001553

THE USE AND PUBLICATION OF THESE DRAWINGS SHALL BE RESTRICTED TO THE ORIGINAL SITE FOR WHICH THEY ARE PREPARED. ANY USE OR DISCLOSURE OTHER THAN THAT WHICH RELATES TO AMERICAN TOWER OR THE SPECIFIED CARRIER IS STRICTLY PROHIBITED. NEITHER THE ARCHITECT NOR THE ENGINEER WILL BE PROVIDING ON-SITE CONSTRUCTION REVIEW OF THIS PROJECT. CONTRACTOR(S) MUST VERIFY ALL DIMENSIONS AND ADVISE AMERICAN TOWER OR THE SPECIFIED CARRIER OF ANY DISCREPANCIES. ANY PRIOR ISSUANCE OF THIS DRAWING IS SUPERSEDED BY THE LATEST VERSION.

REV.	DESCRIPTION	BY	DATE
0	FOR CONSTRUCTION	JM	05/08/26

ATC SITE NUMBER:
281416

ATC SITE NAME:
WILLINGTON CT

VERIZON SITE NAME:
WILLINGTON HILL CT

SITE ADDRESS:
196 TOLLAND TURNPIKE
WILLINGTON, CT 06279

SEAL:

Digitally Signed: 2026-05-11

verizon

ATC JOB NO:	15445313_D2
CUSTOMER ID:	WILLINGTON HILL CT
CUSTOMER #:	5000992841

DETAILED EQUIPMENT PLAN

SHEET NUMBER:	REVISION:
C-102	0

Copyright © 2026 ATC IP LLC. All Rights Reserved.

FAA REGISTRATION NOT REQUIRED

PER MOUNT ANALYSIS COMPLETED BY COLLIERS, STAMPED 04/13/26, THE PROPOSED MOUNT CAN ADEQUATELY SUPPORT THE PROPOSED LOADING.

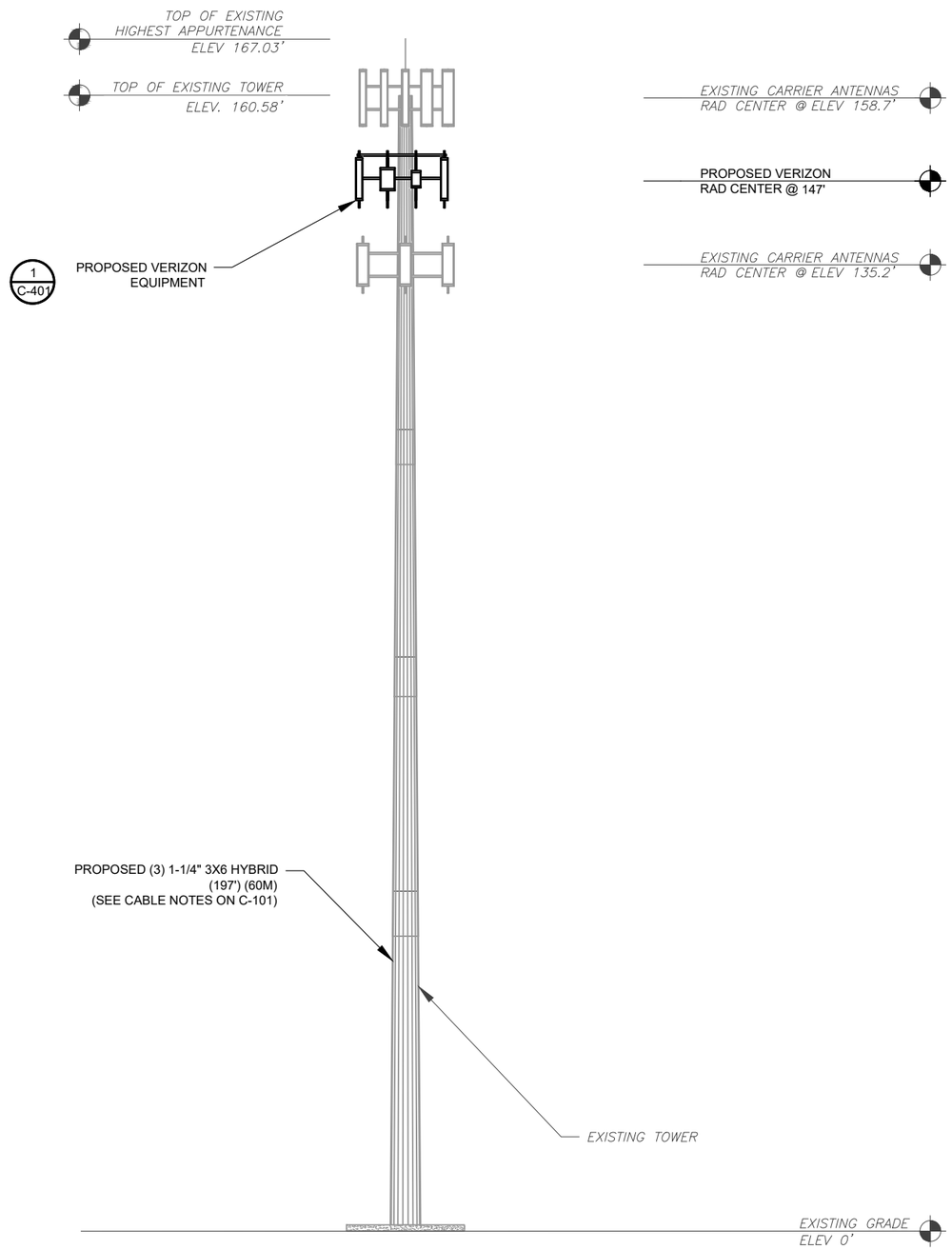

1 TOWER ELEVATION

SCALE: N.T.S.

ALL ELEVATIONS REFLECT ABOVE GROUND LEVEL (A.G.L.)

TOWER NOTE:

1. IT IS THE CONTRACTOR'S RESPONSIBILITY TO CONFIRM WITH THE PROJECT MANAGER THAT THEY HAVE THE MOST RECENT VERSION OF THE STRUCTURAL ANALYSIS BEFORE COMMENCING WORK. EXISTING AND PROPOSED TOWER APPURTENANCES, MOUNTS, AND ANTENNAS ARE SHOWN BASED ON THE STRUCTURAL ANALYSIS, ALTHOUGH DEPICTION MAY NOT REFLECT ALL EQUIPMENT INCLUDED IN STRUCTURAL ANALYSIS. REFER TO STRUCTURAL ANALYSIS FOR FULL TOWER LOADING.
2. WHERE APPLICABLE, ALL NEW ANTENNAS, EQUIPMENT, MOUNTS, CABLING, ETC. SHALL BE PAINTED/SOCKED TO MATCH EXISTING EQUIPMENT IN ACCORDANCE WITH FAA, JURISDICTION, AND/OR OTHER LOCAL REQUIREMENTS.
3. ROUTE PROPOSED CABLES ALONG SAME PATH AS EXISTING CABLES AND IN ACCORDANCE WITH STRUCTURAL ANALYSIS. IF ADEQUATE SPACE EXISTS, ROUTE CABLES THROUGH ENTRY PORT HOLE, UP INSIDE OF MONOPOLE, AND THROUGH EXIT PORT HOLE. IF ROUTING OUTSIDE THE MONOPOLE, ATTACH CABLES USING STAND-OFF ADAPTERS MOUNTED TO TOWER USING STAINLESS STEEL BANDING. ADEQUATELY SECURE CABLES USING EITHER APPROPRIATELY SIZED STAINLESS STEEL SNAP-INS OR MOUNTING HARDWARE AND BRACKETS AS SPECIFIED BY CABLE MANUFACTURER.

AMERICAN TOWER®

A.T. ENGINEERING SERVICES LLC

1 FENTON MAIN
SUITE 300
CARY, NC 27511
PHONE: (919) 468-0112
PEC.0001553

THE USE AND PUBLICATION OF THESE DRAWINGS SHALL BE RESTRICTED TO THE ORIGINAL SITE FOR WHICH THEY ARE PREPARED. ANY USE OR DISCLOSURE OTHER THAN THAT WHICH RELATES TO AMERICAN TOWER OR THE SPECIFIED CARRIER IS STRICTLY PROHIBITED. NEITHER THE ARCHITECT NOR THE ENGINEER WILL BE PROVIDING ON-SITE CONSTRUCTION REVIEW OF THIS PROJECT. CONTRACTOR(S) MUST VERIFY ALL DIMENSIONS AND ADVISE AMERICAN TOWER OR THE SPECIFIED CARRIER OF ANY DISCREPANCIES. ANY PRIOR ISSUANCE OF THIS DRAWING IS SUPERSEDED BY THE LATEST VERSION.

REV.	DESCRIPTION	BY	DATE
0	FOR CONSTRUCTION	JM	05/08/26

ATC SITE NUMBER:
281416

ATC SITE NAME:
WILLINGTON CT

VERIZON SITE NAME:
WILLINGTON HILL CT

SITE ADDRESS:
196 TOLLAND TURNPIKE
WILLINGTON, CT 06279

SEAL:

Digitally Signed: 2026-05-11

verizon

ATC JOB NO:	15445313_D2
CUSTOMER ID:	WILLINGTON HILL CT
CUSTOMER #:	5000992841

TOWER ELEVATION

SHEET NUMBER:	REVISION:
C-201	0

Copyright © 2026 ATC IP LLC, All Rights Reserved.

PER MOUNT ANALYSIS COMPLETED BY COLLIERS, STAMPED 04/13/26, THE PROPOSED MOUNT CAN ADEQUATELY SUPPORT THE PROPOSED LOADING.

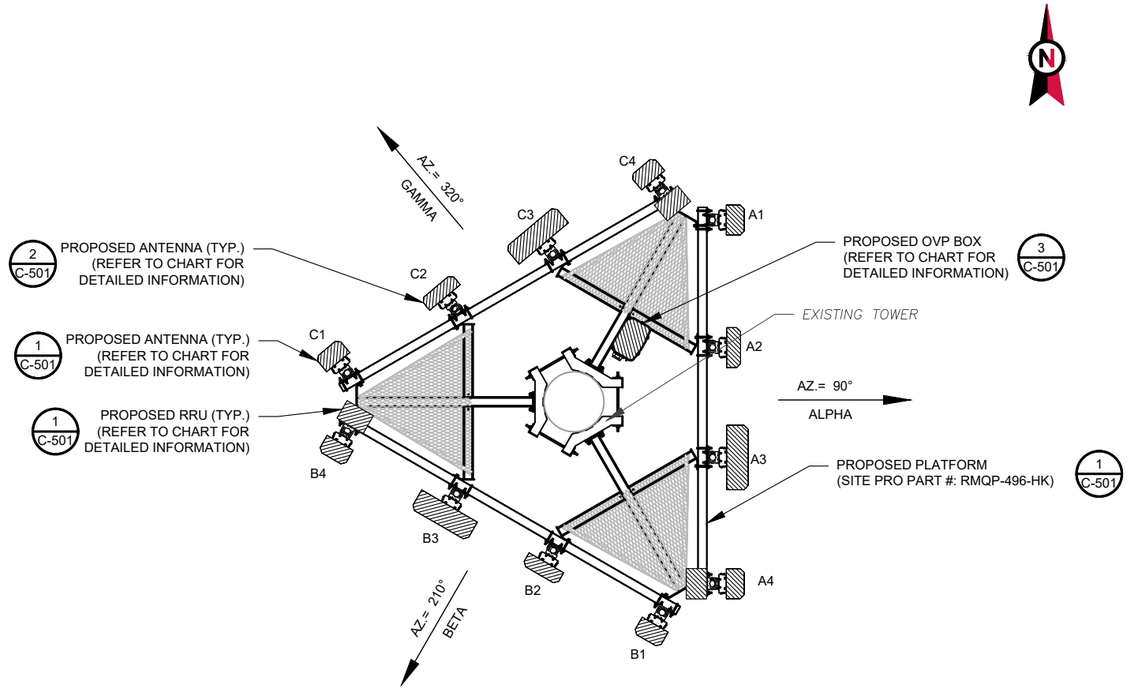

1 FINAL ANTENNA PLAN

SCALE: N.T.S.

FINAL EQUIPMENT SCHEDULE							
LOCATION			ANTENNA SUMMARY			NON ANTENNA SUMMARY	
SECTOR	RAD	AZ	POS	ANTENNA	BAND	ADDITIONAL TOWER MOUNTED EQUIPMENT	CABLE DESCRIPTION
ALPHA	147'	90°	A1	NHH-65B-HG-R2B	700/ 850/ 1900/ AWS LTE/ 850 5G	-	(3) 1-1/4" 3X6 HYBRID (197') (60M)
			A2	MT6413-77A	C-BAND 5G	-	
			A3	MF3208D-25A	1900 LTE/ AWS LTE	-	
			A4	NHH-65B-HG-R2B	700/ 850/ 1900/ AWS LTE/ 850 5G	RF4461D-13A	
BETA	147'	210°	B1	NHH-65B-HG-R2B	700/ 850/ 1900/ AWS LTE/ 850 5G	-	
			B2	MT6413-77A	C-BAND 5G	-	
			B3	MF3208D-25A	1900 LTE/ AWS LTE	-	
			B4	NHH-65B-HG-R2B	700/ 850/ 1900/ AWS LTE/ 850 5G	RF4461D-13A	
GAMMA	147'	320°	C1	NHH-65B-HG-R2B	700/ 850/ 1900/ AWS LTE/ 850 5G	-	
			C2	MT6413-77A	C-BAND 5G	-	
			C3	MF3208D-25A	1900 LTE/ AWS LTE	-	
			C4	NHH-65B-HG-R2B	700/ 850/ 1900/ AWS LTE/ 850 5G	RF4461D-13A	

1. GC TO VERIFY THE FINAL RFDS MATCHES THE FINAL CONSTRUCTION DRAWINGS. GC TO NOTIFY ATC PM OF ANY DISCREPANCY PRIOR TO INSTALLING THE EQUIPMENT.
2. GC TO CAP ALL UNUSED PORTS.
3. GC TO CONFIRM SPACING OF PROPOSED EQUIP DOES NOT CAUSE TOWER CONFLICTS NOR IMPEDE TOWER CLIMBING PEGS.
4. *REFER TO FINAL RFDS FOR MECH/ELEC D-TILT.
5. INSTALL (1) RRVZDC-6600-PF-48 .

2 ANTENNA SCHEDULE

RF JUMPER LENGTH
MONOPOLE = 15'± GUYED / SELF SUPPORT = FACE WIDTH + 15'
REFER TO FINAL RFDS FOR TYPE AND QUANTITY

AMERICAN TOWER®
A.T. ENGINEERING SERVICES LLC
1 FENTON MAIN
SUITE 300
CARY, NC 27511
PHONE: (919) 468-0112
PEC.0001553

THE USE AND PUBLICATION OF THESE DRAWINGS SHALL BE RESTRICTED TO THE ORIGINAL SITE FOR WHICH THEY ARE PREPARED. ANY USE OR DISCLOSURE OTHER THAN THAT WHICH RELATES TO AMERICAN TOWER OR THE SPECIFIED CARRIER IS STRICTLY PROHIBITED. NEITHER THE ARCHITECT NOR THE ENGINEER WILL BE PROVIDING ON-SITE CONSTRUCTION REVIEW OF THIS PROJECT. CONTRACTOR(S) MUST VERIFY ALL DIMENSIONS AND ADVISE AMERICAN TOWER OR THE SPECIFIED CARRIER OF ANY DISCREPANCIES. ANY PRIOR ISSUANCE OF THIS DRAWING IS SUPERSEDED BY THE LATEST VERSION.

REV.	DESCRIPTION	BY	DATE
0	FOR CONSTRUCTION	JM	05/08/26

ATC SITE NUMBER:
281416

ATC SITE NAME:
WILLINGTON CT

VERIZON SITE NAME:
WILLINGTON HILL CT

SITE ADDRESS:
196 TOLLAND TURNPIKE
WILLINGTON, CT 06279

SEAL:

Digitally Signed: 2026-05-11

verizon

ATC JOB NO:	15445313_D2
CUSTOMER ID:	WILLINGTON HILL CT
CUSTOMER #:	5000992841

ANTENNA INFORMATION & SCHEDULE

SHEET NUMBER:	REVISION:
C-401	0

Copyright © 2026 ATC IP LLC, All Rights Reserved.

EXISTING/PROPOSED MOUNTS AND/OR MOUNT MODIFICATIONS NOT SHOWN FOR CLARITY. REFER TO ANTENNA PLANS, MOUNT ANALYSES AND/OR MOUNT MODIFICATION DOCUMENTS FOR ADDITIONAL DETAIL.

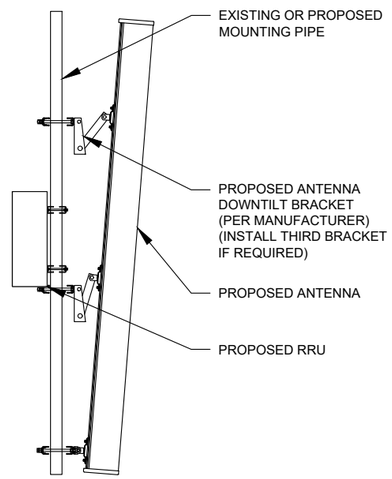

1 PROPOSED ANTENNA MOUNTING DETAIL - TYPICAL

SCALE: N.T.S.

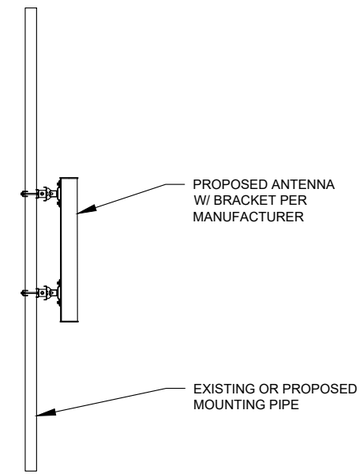

2 PROPOSED ANTENNA MOUNTING DETAIL - TYPICAL

SCALE: N.T.S.

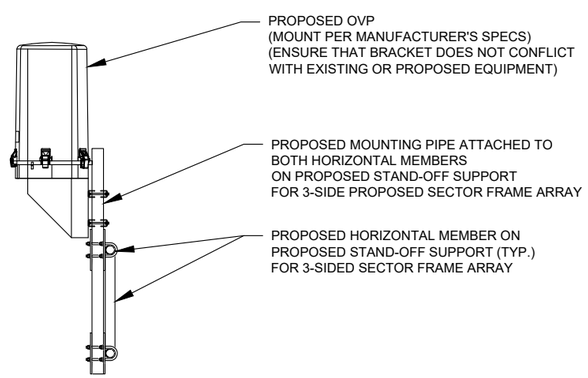

3 PROPOSED OVP MOUNTING DETAIL - TYPICAL

SCALE: N.T.S.

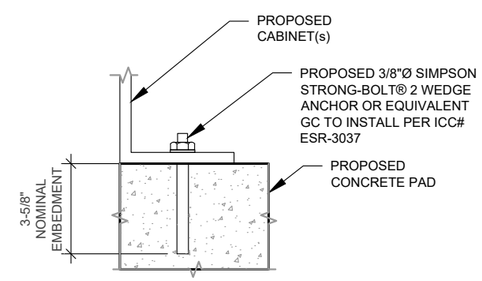

NOTE:

INSTALL SIMPSON STRONG-TIE® STRONG-BOLT® 2 WEDGE ANCHOR(s) STRICTLY PER INSTALLATION INSTRUCTIONS INCLUDED WITH PRODUCT OR FOUND ONLINE AT WWW.STRONGTIE.COM. PROPER INSTALLATION IS CRITICAL FOR FULL PERFORMANCE.

4 CABINET ATTACHMENT DETAIL

SCALE: N.T.S.

AMERICAN TOWER®

A.T. ENGINEERING SERVICES LLC

1 FENTON MAIN
SUITE 300
CARY, NC 27511
PHONE: (919) 468-0112
PEC.0001553

THE USE AND PUBLICATION OF THESE DRAWINGS SHALL BE RESTRICTED TO THE ORIGINAL SITE FOR WHICH THEY ARE PREPARED. ANY USE OR DISCLOSURE OTHER THAN THAT WHICH RELATES TO AMERICAN TOWER OR THE SPECIFIED CARRIER IS STRICTLY PROHIBITED. NEITHER THE ARCHITECT NOR THE ENGINEER WILL BE PROVIDING ON-SITE CONSTRUCTION REVIEW OF THIS PROJECT. CONTRACTOR(S) MUST VERIFY ALL DIMENSIONS AND ADVISE AMERICAN TOWER OR THE SPECIFIED CARRIER OF ANY DISCREPANCIES. ANY PRIOR ISSUANCE OF THIS DRAWING IS SUPERSEDED BY THE LATEST VERSION.

REV.	DESCRIPTION	BY	DATE
0	FOR CONSTRUCTION	JM	05/08/26

ATC SITE NUMBER:
281416

ATC SITE NAME:
WILLINGTON CT

VERIZON SITE NAME:
WILLINGTON HILL CT

SITE ADDRESS:
196 TOLLAND TURNPIKE
WILLINGTON, CT 06279

SEAL:

Digitally Signed: 2026-05-11

verizon

ATC JOB NO:	15445313_D2
CUSTOMER ID:	WILLINGTON HILL CT
CUSTOMER #:	5000992841

MOUNT DETAILS

SHEET NUMBER:	REVISION:
C-501	0

Copyright © 2026 ATC IP LLC, All Rights Reserved.

CONSTRUCTION NOTE:

1. INSTALL ICE BRIDGE TO ALLOW 7 FEET CLEARANCE ABOVE GRADE TO LOWEST APPURTENANCE.

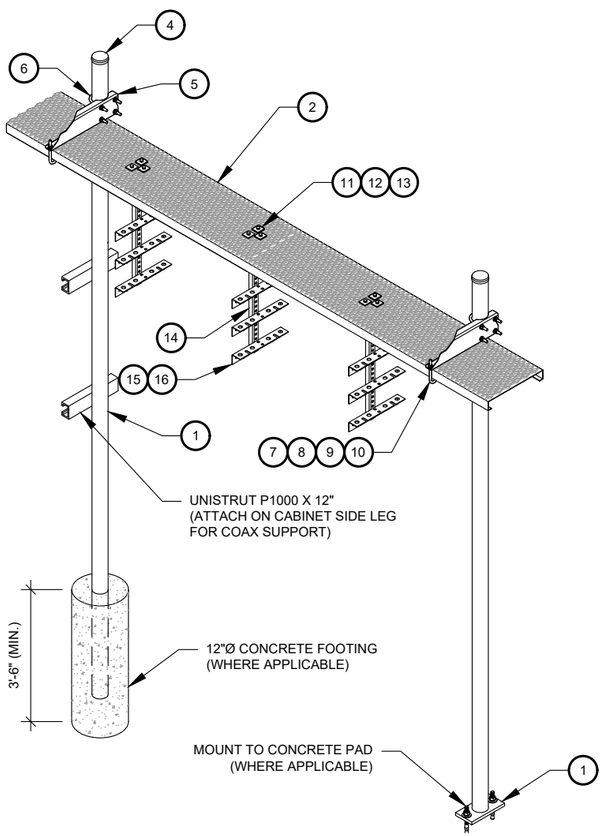

WB-K210-B WAVEGUIDE BRIDGE KIT - BILL OF MATERIALS (INCLUDED WITH KIT UNLESS NOTED OTHERWISE)					
ITEM	PART NUMBER	DESCRIPTION	ITEM	PART NUMBER	DESCRIPTION
1	MF126.01 MF-130	10'-4" COLUMN & BASE SHOE* 13'-4" PIPE COLUMN	9	GWL-04	1/2" GALV LOCK WASHER
2	WB-CY210	SAFETY GRATING 24" X 10'	10	GN-04	1/2" GALV HEX NUT
3	WBK110BHK	HARDWARE KIT (ITEMS 4-16)	11	GB-03205	3/8" X 2" GALV BOLT KIT
4	PC-034	PIPE CAP 3-1/2"	12	MT-387	SQUARE WASHER, 1-1/2" X 1-1/2" W/ 7/16" HOLE
5	WBLB243.08	24" WAVEGUIDE BRIDGE SUPPORT BRACKET	13	GWF-03	3/8" GALV FLAT WASHER
6	GUB-4356	1/2" X 3-5/8" X 6" GALV U-BOLT	14	WBT243.01	VERTICAL TRAPEZE SECTION
7	WB-JB-6	1/2" J-BOLT	15	GB-03105	3/8" X 1" GALV BOLT KIT
8	GWF-04	1/2" GALV FLAT WASHER	16	WBT243.02	HORIZONTAL TRAPEZE SECTION

CONTRACTOR SHALL USE PARTS MANUFACTURED BY COMMSCOPE OR APPROVED EQUIVALENT.
*BASE SHOE NOT INCLUDED IN WB-K210-B KIT, ORDER COLUMN SEPARATELY OR KIT WB-K210-S.

1 WAVEGUIDE BRIDGE KIT

SCALE: N.T.S.

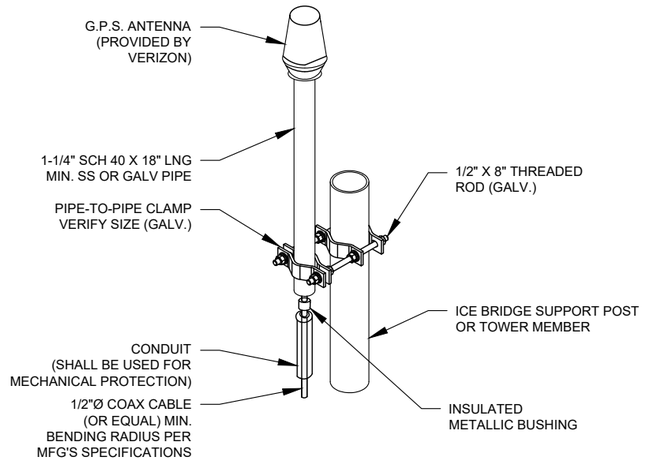

NOTE:
1. GPS SHALL BE PLACED WITH CLEAR SIGHT LINE TO THE SOUTHERN SKY.
2. CONTRACTOR TO SUPPLY COAX FOR GPS UNIT.

2 GPS ANTENNA ATTACHMENT DETAIL

SCALE: N.T.S.

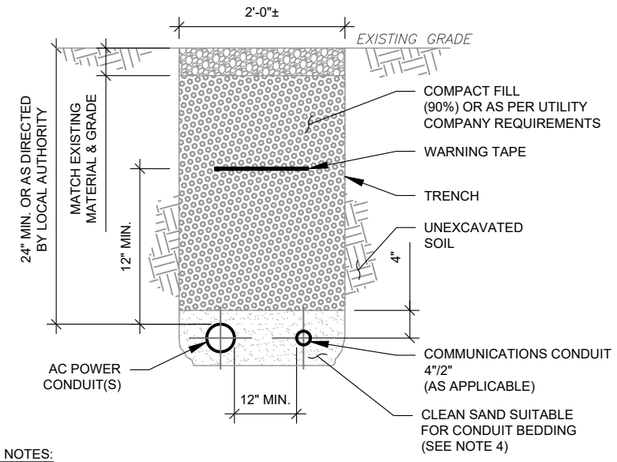

TRENCH NOTES:

1. IF FREE OF ORGANIC OR OTHER DELETERIOUS MATERIAL, EXCAVATED MATERIAL MAY BE USED FOR BACKFILL. IF NOT, PROVIDE CLEAN, COMPACTIBLE MATERIAL.
2. COMPACT IN 8" LIFTS. REMOVE ANY LARGE ROCKS PRIOR TO BACKFILLING. CONTRACTOR TO VERIFY LOCATION OF EXISTING U/G UTILITIES PRIOR TO DIGGING.
3. IF CURRENT AS-BUILT DRAWINGS ARE NOT AVAILABLE CONTRACTOR SHALL HAND DIG U/G TRENCHING.
4. USE COMMUNICATIONS ONLY TRENCH FOR COMMUNICATIONS CONDUIT UNLESS TRAVELING UNDER PATH OF VEHICLE TRAVEL, THEN CONDUIT MUST BE 24" MIN. BELOW GRADE.
5. CONFIRM SPACING AND DEPTH WITH NEC OR LOCAL CODE REQUIREMENTS

3 POWER/ TELCO CONDUIT TRENCH DETAILS

SCALE: N.T.S.

AMERICAN TOWER®
A.T. ENGINEERING SERVICES LLC
1 FENTON MAIN
SUITE 300
CARY, NC 27511
PHONE: (919) 468-0112
PEC.0001553

THE USE AND PUBLICATION OF THESE DRAWINGS SHALL BE RESTRICTED TO THE ORIGINAL SITE FOR WHICH THEY ARE PREPARED. ANY USE OR DISCLOSURE OTHER THAN THAT WHICH RELATES TO AMERICAN TOWER OR THE SPECIFIED CARRIER IS STRICTLY PROHIBITED. NEITHER THE ARCHITECT NOR THE ENGINEER WILL BE PROVIDING ON-SITE CONSTRUCTION REVIEW OF THIS PROJECT. CONTRACTOR(S) MUST VERIFY ALL DIMENSIONS AND ADVISE AMERICAN TOWER OR THE SPECIFIED CARRIER OF ANY DISCREPANCIES. ANY PRIOR ISSUANCE OF THIS DRAWING IS SUPERSEDED BY THE LATEST VERSION.

REV.	DESCRIPTION	BY	DATE
0	FOR CONSTRUCTION	JM	05/08/26

ATC SITE NUMBER:
281416
ATC SITE NAME:
WILLINGTON CT
VERIZON SITE NAME:
WILLINGTON HILL CT

SITE ADDRESS:
196 TOLLAND TURNPIKE
WILLINGTON, CT 06279

SEAL:

Digitally Signed: 2026-05-11

verizon

ATC JOB NO:	15445313_D2
CUSTOMER ID:	WILLINGTON HILL CT
CUSTOMER #:	5000992841

CONSTRUCTION DETAILS

SHEET NUMBER:	REVISION:
C-502	0

Copyright © 2026 ATC IP LLC, All Rights Reserved.

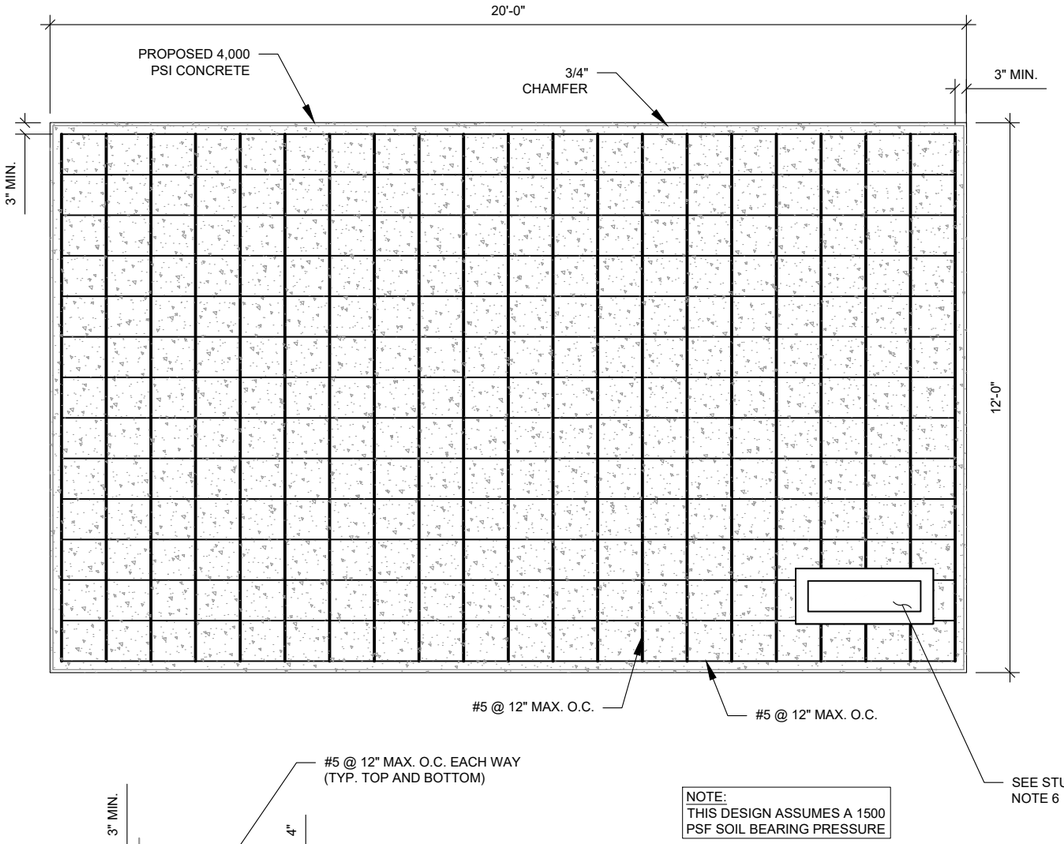

NOTE:
THIS DESIGN ASSUMES A 1500 PSF SOIL BEARING PRESSURE

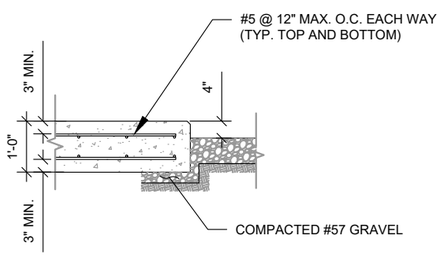

PAD NOTES:
1. REFER TO CONCRETE & REINFORCED STEEL NOTES ON SHEET G-002 & ATC SPEC 033000 FOR CAST-IN-PLACE PADS.
4. USE GALVANIZED HILTI EXPANSION ANCHORS OR, APPROVED EQUAL, FOR EQUIPMENT ANCHORAGE.
5. FOR SIZE AND LOCATION OF ANCHORS AND OTHER REQUIREMENTS, SEE EQUIPMENT VENDOR DRAWINGS.

1 CONCRETE EQUIPMENT PAD DESIGN

SCALE: N.T.S.

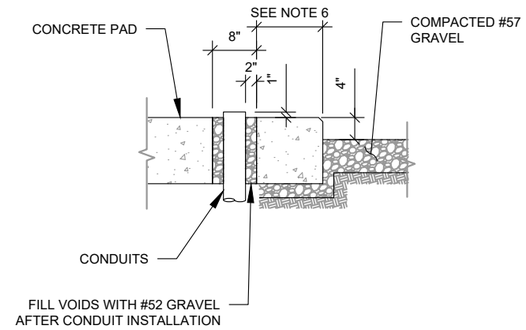

PAD NOTES:
1. SUBGRADE AND FILL SHALL CONSIST OF CLEAN SOIL. DELETRIOUS MATERIAL AND ORGANICS SHALL BE REMOVED.
2. COMPACT SUBGRADE TO 95%.
3. MECHANICALLY COMPACT FOOTPRINT OF PAD PLUS 2' PERIMETER.
4. USE GALVANIZED HILTI EXPANSION ANCHORS OR, APPROVED EQUAL, FOR EQUIPMENT ANCHORAGE.
5. FOR SIZE AND LOCATION OF ANCHORS AND OTHER REQUIREMENTS, SEE EQUIPMENT VENDOR DRAWINGS.
6. MODIFY PER GENERATOR MANUFACTURER SPECIFICATIONS TO ACCOMMODATE STUB UP.

2 GENERATOR CONDUIT STUB UP DETAIL

SCALE: N.T.S.

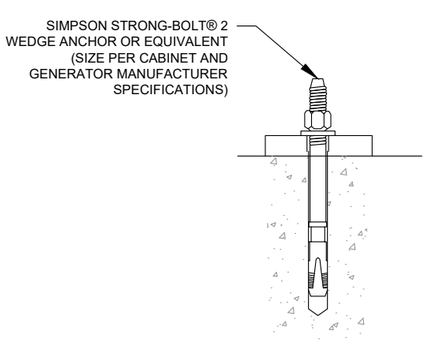

3 EXPANSION ANCHOR DETAIL

SCALE: N.T.S.

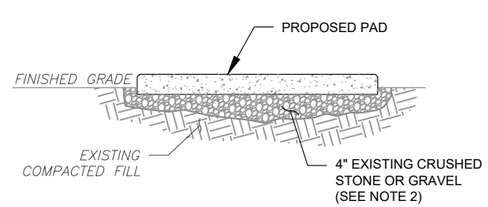

PAD NOTES:
1. SUBGRADE AND FILL SHALL CONSIST OF CLEAN SOIL. DELETERIOUS MATERIAL AND ORGANICS SHALL BE REMOVED.
2. COMPACT SUBGRADE TO 95%.
3. MECHANICALLY COMPACT FOOTPRINT OF PAD PLUS 2' PERIMETER.

4 GRAVEL PREPARATION

SCALE: NOT TO SCALE

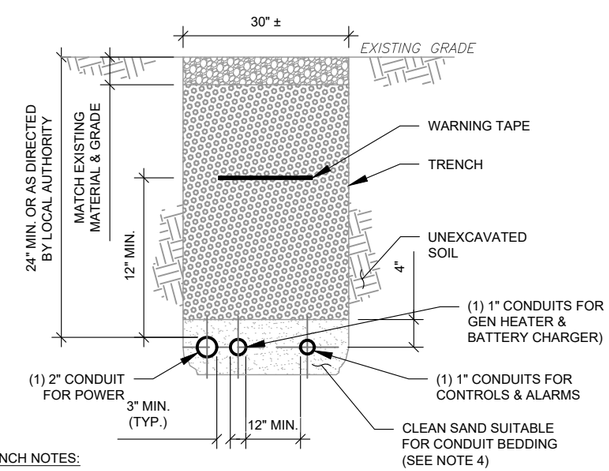

TRENCH NOTES:
1. IF FREE OF ORGANIC OR OTHER DELETERIOUS MATERIAL, EXCAVATED MATERIAL MAY BE USED FOR BACKFILL. IF NOT, PROVIDE CLEAN, COMPACTIBLE MATERIAL.
2. COMPACT IN 8" LIFTS. REMOVE ANY LARGE ROCKS PRIOR TO BACKFILLING. CONTRACTOR TO VERIFY LOCATION OF EXISTING U/G UTILITIES PRIOR TO DIGGING.
3. IF CURRENT AS-BUILT DRAWINGS ARE NOT AVAILABLE CONTRACTOR SHALL HAND DIG U/G TRENCHING.
4. USE COMMUNICATIONS ONLY TRENCH FOR COMMUNICATIONS CONDUIT UNLESS TRAVELING UNDER PATH OF VEHICLE TRAVEL, THEN CONDUIT MUST BE 24" MIN. BELOW GRADE.
5. CONFIRM SPACING AND DEPTH WITH NEC OR LOCAL CODE REQUIREMENTS

5 GENERATOR CONDUIT TRENCH DETAILS

SCALE: N.T.S.

AMERICAN TOWER®
A.T. ENGINEERING SERVICES LLC
1 FENTON MAIN
SUITE 300
CARY, NC 27511
PHONE: (919) 468-0112
PEC.0001553

THE USE AND PUBLICATION OF THESE DRAWINGS SHALL BE RESTRICTED TO THE ORIGINAL SITE FOR WHICH THEY ARE PREPARED. ANY USE OR DISCLOSURE OTHER THAN THAT WHICH RELATES TO AMERICAN TOWER OR THE SPECIFIED CARRIER IS STRICTLY PROHIBITED. NEITHER THE ARCHITECT NOR THE ENGINEER WILL BE PROVIDING ON-SITE CONSTRUCTION REVIEW OF THIS PROJECT. CONTRACTOR(S) MUST VERIFY ALL DIMENSIONS AND ADVISE AMERICAN TOWER OR THE SPECIFIED CARRIER OF ANY DISCREPANCIES. ANY PRIOR ISSUANCE OF THIS DRAWING IS SUPERSEDED BY THE LATEST VERSION.

REV.	DESCRIPTION	BY	DATE
0	FOR CONSTRUCTION	JM	05/08/26

ATC SITE NUMBER:
281416
ATC SITE NAME:
WILLINGTON CT
VERIZON SITE NAME:
WILLINGTON HILL CT
SITE ADDRESS:
196 TOLLAND TURNPIKE
WILLINGTON, CT 06279

SEAL:

Digitally Signed: 2026-05-11

verizon

ATC JOB NO:	15445313_D2
CUSTOMER ID:	WILLINGTON HILL CT
CUSTOMER #:	5000992841

CONSTRUCTION DETAILS

SHEET NUMBER: C-503
REVISION: 0

Copyright © 2026 ATC IP LLC. All Rights Reserved.

CONDUIT KEYED NOTES:

FIBER CABINET CONDUITS

1. (2) 2" PVC CONDUIT WITH MULE TAPE FROM TELCO BOX TO THE EQUIPMENT CABINET

AC POWER CONDUITS

2. (1) 1" CONDUIT WITH (2) #12 & (1) #12 G FROM ILC TO THE TELCO BOX FOR OUTLET/HEATER AND FAN
3. (1) 2" CONDUIT WITH (16) #10 & (4) #10 G FROM THE ILC TO THE EQUIPMENT CABINET FOR (8) 30 AMP 2-POLE CIRCUITS
4. (1) 1" CONDUIT WITH (2) #12 & (1) #12 G FROM ILC TO GFI RECEPTACLE/LIGHT
5. (1) 1-1/2" CONDUIT WITH PULLSTRING FOR FUTURE RECTIFIER CIRCUITS FROM EQUIPMENT CABINET TO ILC
6. (1) 2" CONDUIT WITH (3) #3/0 & (1) #6 G FROM THE ILC TO THE GENERATOR
7. (1) 1" CONDUIT WITH (4) #12 & (1) #12 G FROM ILC TO GENERATOR (GEN HEATER & BATTERY CHARGER)

ALARM/MISCELLANEOUS CONDUITS

8. (1) 1" CONDUIT FROM ILC TO EQUIPMENT CABINET FOR ILC ALARMS
9. (1) 1" CONDUIT FROM ILC TO GENERATOR FOR GEN CONTROLS & ALARMS

NOTE:
ALL BENDS SHALL HAVE MINIMUM 24" RADIUS. ALL FITTINGS SHALL BE COMPATIBLE WITH THE CONDUIT TYPES BEING UTILIZED FOR THIS INSTALLATION. VERIFY CONDUIT TYPE WITH LOCAL CONSTRUCTION MANAGER AND ADJUST AS NECESSARY. ALL CONDUIT SHALL MEET NEC, STATE, AND LOCAL CODE REQUIREMENTS AS REQUIRED.

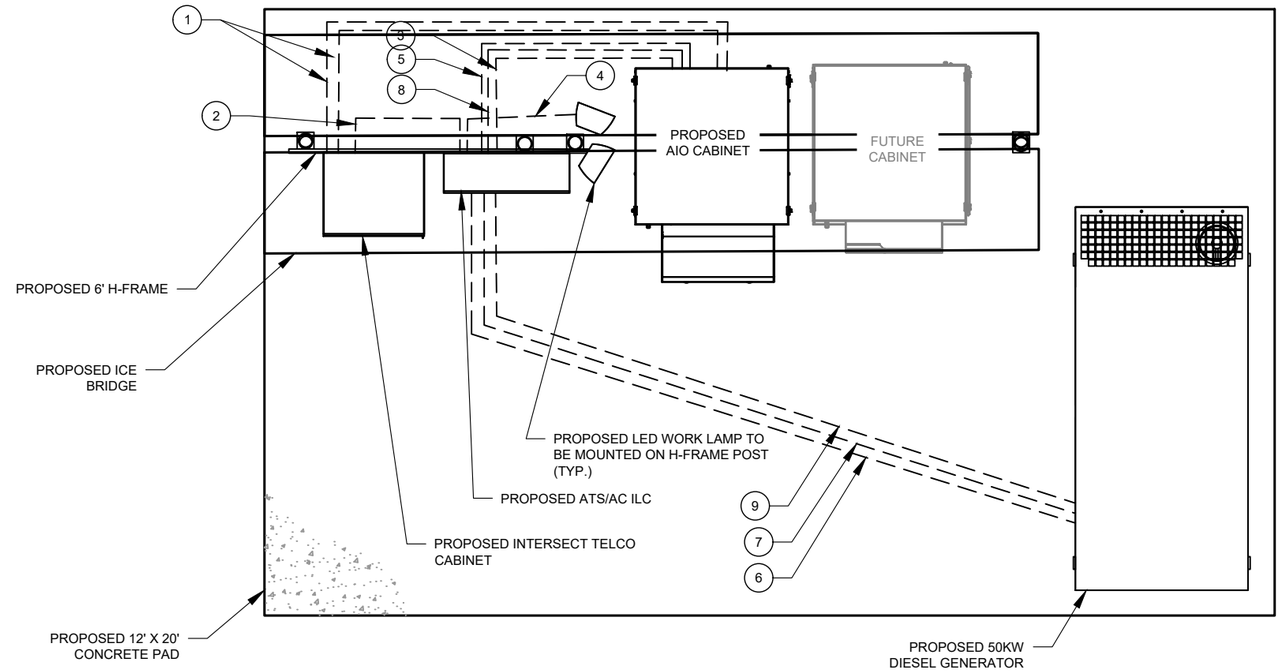

1 DETAILED CONDUIT LAYOUT
SCALE: N.T.S.

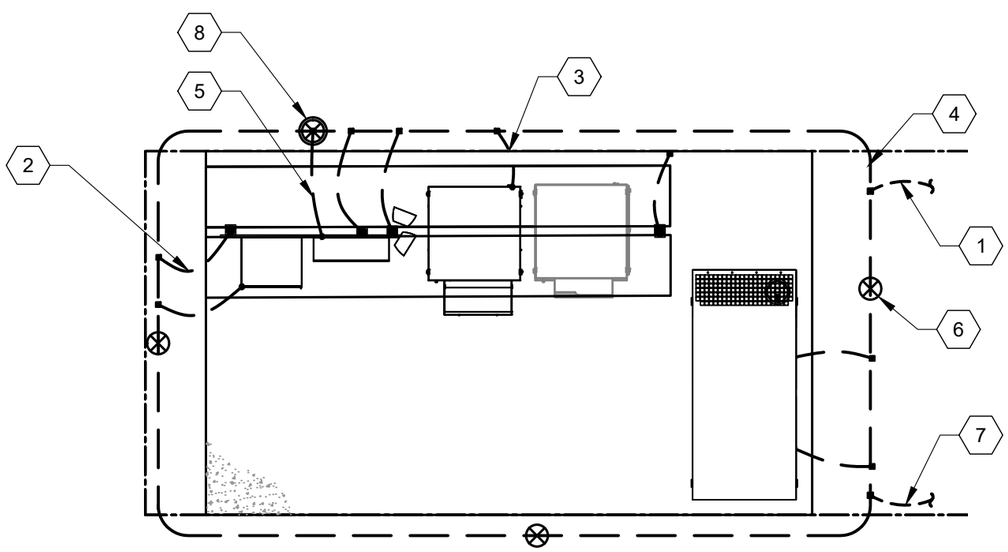

GROUNDING KEYED NOTES:

1. BOND TO TOWER GROUND RING
2. #2 AWG BOND FROM VERTICAL H-FRAME AND ICE BRIDGE POST TO EXTERNAL GROUND RING (TYP. EVERY POST)
3. EQUIPMENT BOND TO GROUND RING (TYP.)
4. #2 GROUND RING
5. GROUNDING ELECTRODE CONDUCTOR PER NEC
6. GROUNDING ELECTRODE (TYP.)
7. BOND TO COMPOUND GROUND RING
8. GROUNDING ELECTRODE WITH TEST WELL

2 DETAILED GROUNDING LAYOUT
SCALE: N.T.S.

AMERICAN TOWER®
A.T. ENGINEERING SERVICES LLC
1 FENTON MAIN
SUITE 300
CARY, NC 27511
PHONE: (919) 468-0112
PEC.0001553

THE USE AND PUBLICATION OF THESE DRAWINGS SHALL BE RESTRICTED TO THE ORIGINAL SITE FOR WHICH THEY ARE PREPARED. ANY USE OR DISCLOSURE OTHER THAN THAT WHICH RELATES TO AMERICAN TOWER OR THE SPECIFIED CARRIER IS STRICTLY PROHIBITED. NEITHER THE ARCHITECT NOR THE ENGINEER WILL BE PROVIDING ON-SITE CONSTRUCTION REVIEW OF THIS PROJECT. CONTRACTOR(S) MUST VERIFY ALL DIMENSIONS AND ADVISE AMERICAN TOWER OR THE SPECIFIED CARRIER OF ANY DISCREPANCIES. ANY PRIOR ISSUANCE OF THIS DRAWING IS SUPERSEDED BY THE LATEST VERSION.

REV.	DESCRIPTION	BY	DATE
0	FOR CONSTRUCTION	JM	05/08/26

ATC SITE NUMBER:
281416

ATC SITE NAME:
WILLINGTON CT

VERIZON SITE NAME:
WILLINGTON HILL CT

SITE ADDRESS:
196 TOLLAND TURNPIKE
WILLINGTON, CT 06279

SEAL:

Digitally Signed: 2026-05-11

verizon

ATC JOB NO:	15445313_D2
CUSTOMER ID:	WILLINGTON HILL CT
CUSTOMER #:	5000992841

GROUNDING PLAN AND NOTES

SHEET NUMBER:	REVISION:
E-101	0

Copyright © 2026 ATC IP LLC, All Rights Reserved.

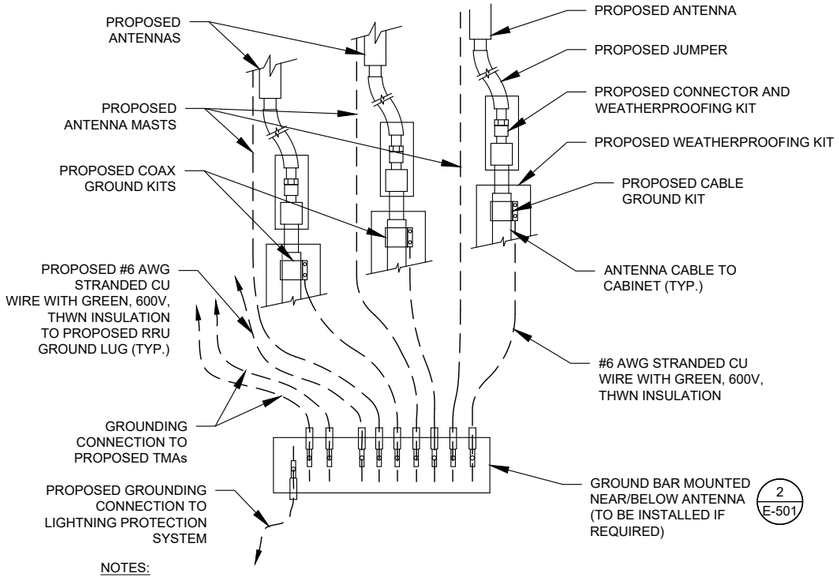

NOTES:

1. THIS DETAIL IS INTENDED TO SHOW THE GENERAL GROUNDING REQUIREMENTS. SLIGHT ADJUSTMENTS MAY BE REQUIRED BASED ON EXISTING SITE CONDITIONS. THE CONTRACTOR SHALL MAKE FIELD ADJUSTMENTS AS NEEDED AND INFORM THE CONSTRUCTION MANAGER OF ANY CONFLICTS.
2. SITE GROUNDING SHALL COMPLY WITH VERIZON GROUNDING STANDARDS, LATEST EDITION, AND COMPLY WITH VERIZON GROUNDING CHECKLIST, LATEST VERSION. WHEN NATIONAL AND LOCAL GROUNDING CODES ARE MORE STRINGENT THEY SHALL GOVERN.

1 TYPICAL ANTENNA GROUNDING DIAGRAM

SCALE: N.T.S.

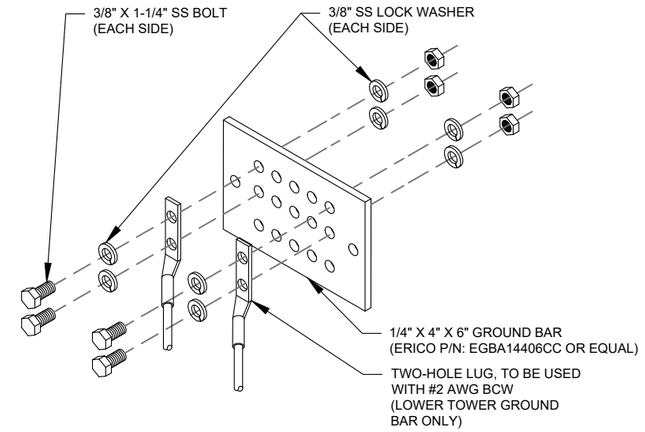

GROUND BAR NOTES:

1. GROUND BAR KITS COME WITH ALL HARDWARE, NUTS, BOLTS, WASHERS, ETC. EXCEPT THE STRUCTURAL MOUNTING MEMBER(S).
2. GROUND BAR TO BE BONDED DIRECTLY TO TOWER.

2 TOWER GROUND BAR DETAIL

SCALE: N.T.S.

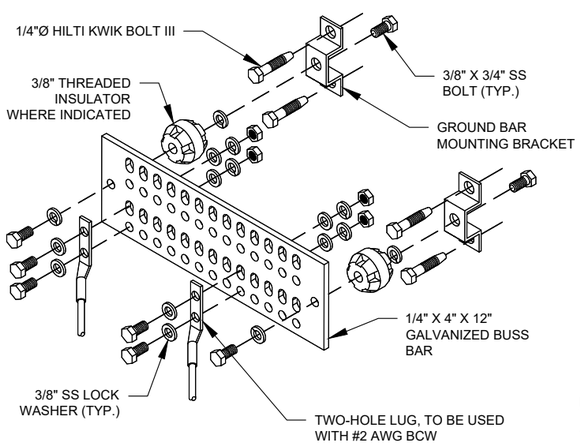

GROUND BAR NOTES

1. GROUND KITS COME WITH ALL HARDWARE, NUTS, BOLTS, WASHERS, ETC. EXCEPT THE STRUCTURAL MOUNTING MEMBER(S).
2. GROUND BAR SHALL BE BOLTED TO STRUCTURAL MEMBER OR ANCHORED TO CONCRETE SLAB W/ HILTI KWIK BOLT III.

3 MAIN GROUND BAR DETAIL

SCALE: N.T.S.

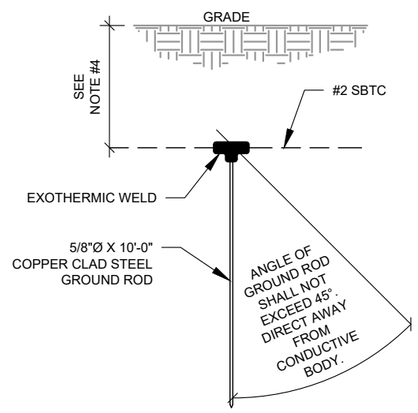

NOTES:

1. SEPARATION DIMENSION TO BE VERIFIED WITH LOCAL UTILITY COMPANY REQUIREMENTS.
2. COORDINATE UTILITY, LOCATE BEFORE DIGGING.
3. CONDUIT TRENCHING DEPTHS AT 36" OR 6" BELOW FROST LINE, WHICHEVER IS GREATER.
4. ALL RING AND RADIAL DEPTHS AT 30" OR 6" BELOW FROST LINE, WHICHEVER IS GREATER.

4 GROUND ROD DETAIL

SCALE: N.T.S.

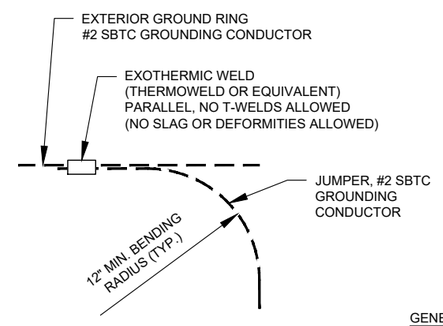

5 TIE CONNECTION DETAIL

SCALE: N.T.S.

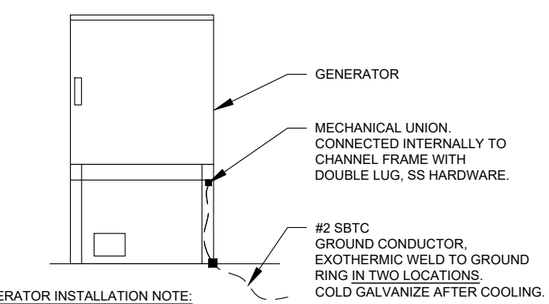

GENERATOR INSTALLATION NOTE:

INSTALL GENERATOR AND TRANSFER SWITCH WITH ALL SUPPLIED ACCESSORIES PER MANUFACTURER'S INSTALLATION INSTRUCTIONS AND SPECIFICATIONS. THIS INCLUDES, BUT IS NOT LIMITED TO, ACCESSORIES FOR THE EXHAUST SYSTEM, FUEL SYSTEM, ENCLOSURE INTEGRITY (CAPS, PLUGS, COVERS, ETC.), ELECTRICAL CONNECTIONS, AND GROUNDING CONNECTIONS.

6 GENERATOR GROUNDING

SCALE: N.T.S.

AMERICAN TOWER®
A.T. ENGINEERING SERVICES LLC
1 FENTON MAIN
SUITE 300
CARY, NC 27511
PHONE: (919) 468-0112
PEC.0001553

THE USE AND PUBLICATION OF THESE DRAWINGS SHALL BE RESTRICTED TO THE ORIGINAL SITE FOR WHICH THEY ARE PREPARED. ANY USE OR DISCLOSURE OTHER THAN THAT WHICH RELATES TO AMERICAN TOWER OR THE SPECIFIED CARRIER IS STRICTLY PROHIBITED. NEITHER THE ARCHITECT NOR THE ENGINEER WILL BE PROVIDING ON-SITE CONSTRUCTION REVIEW OF THIS PROJECT. CONTRACTOR(S) MUST VERIFY ALL DIMENSIONS AND ADVISE AMERICAN TOWER OR THE SPECIFIED CARRIER OF ANY DISCREPANCIES. ANY PRIOR ISSUANCE OF THIS DRAWING IS SUPERSEDED BY THE LATEST VERSION.

REV.	DESCRIPTION	BY	DATE
0	FOR CONSTRUCTION	JM	05/08/26

ATC SITE NUMBER:
281416
ATC SITE NAME:
WILLINGTON CT
VERIZON SITE NAME:
WILLINGTON HILL CT
SITE ADDRESS:
196 TOLLAND TURNPIKE
WILLINGTON, CT 06279

SEAL:

Digitally Signed: 2026-05-11

verizon

ATC JOB NO:	15445313_D2
CUSTOMER ID:	WILLINGTON HILL CT
CUSTOMER #:	5000992841

GROUNDING DETAILS

SHEET NUMBER:	REVISION:
E-501	0

Copyright © 2026 ATC IP LLC, All Rights Reserved.

PANEL DESIGNATION:	VZW	TYPE:	LIGHTING & APPLIANCE	SYSTEM:	120/240V, 3W, 30 CKT
		MOUNTING:	SURFACE	MAIN BREAKER (MB):	MLO
		ENCLOSURE	NEMA 3R	MAIN BUS RATING:	200A
				MIN. A.I.C. RATING:	65K
LOCATION:	VZW LEASE AREA				
PANEL NOTES:	ASCO D300L SERIES				

CONNECTED LOAD (kVA) A	CONNECTED LOAD (kVA) B	BRIEF DESCRIPTION	FEEDER OR BRANCH CIRCUIT BREAKER AMPS	FEEDER OR BRANCH CIRCUIT BREAKER POLES	POLE NO.	CIRC. NOTES		CIRC. NOTES	POLE NO.	FEEDER OR BRANCH CIRCUIT BREAKER POLES	FEEDER OR BRANCH CIRCUIT BREAKER AMPS	BRIEF DESCRIPTION	CONNECTED LOAD (kVA) A	CONNECTED LOAD (kVA) B
1.78		RECTIFIER	30	2	1				2	2	30	RECTIFIER	1.78	
	1.78				3				4					1.78
1.78		RECTIFIER	30	2	5				6	2	30	RECTIFIER	1.78	
	1.78				7				8					1.78
1.78		RECTIFIER	30	2	9				10	2	30	RECTIFIER	1.78	
	1.78				11				12					1.78
1.78		RECTIFIER	30	2	13				14	2	30	RECTIFIER (N+1)	0.00	
	1.78				15				16					0.00
0.68		GFI RECEPT / LIGHT	20	1	17				18			SPACE	0.00	
	1.50	GEN BLOCK HEATER	20	1	19				20			SPACE		0.00
0.50		BATTERY CHARGER	20	1	21				22			SPACE	0.00	
	1.50	TELCO CAB GFI	20	1	23				24			SPACE		0.00
0.00		SPACE			25				26			SPACE	0.00	
	0.00	SPACE			27				28			SPACE		0.00
0.00		SPACE			29				30			SPACE	0.00	
8.3	10.1					A	B	TOTAL					5.3	5.3
						13.6	15.5	29.1	CONNECTED LOAD (kVA)					
						13.6	15.5	29.1	DEMAND LOAD (kVA)					

DERATING FACTOR (80%)
DEMANDLOAD SIZING: 161 AMPS

1 PANEL SCHEDULE

NOTES:
1. ALL CONDUCTORS ARE TYPE THWN (75°C) COPPER.
2. MAXIMUM LENGTH OF RUN FOR RECTIFIER CIRCUITS IS 50 FT.

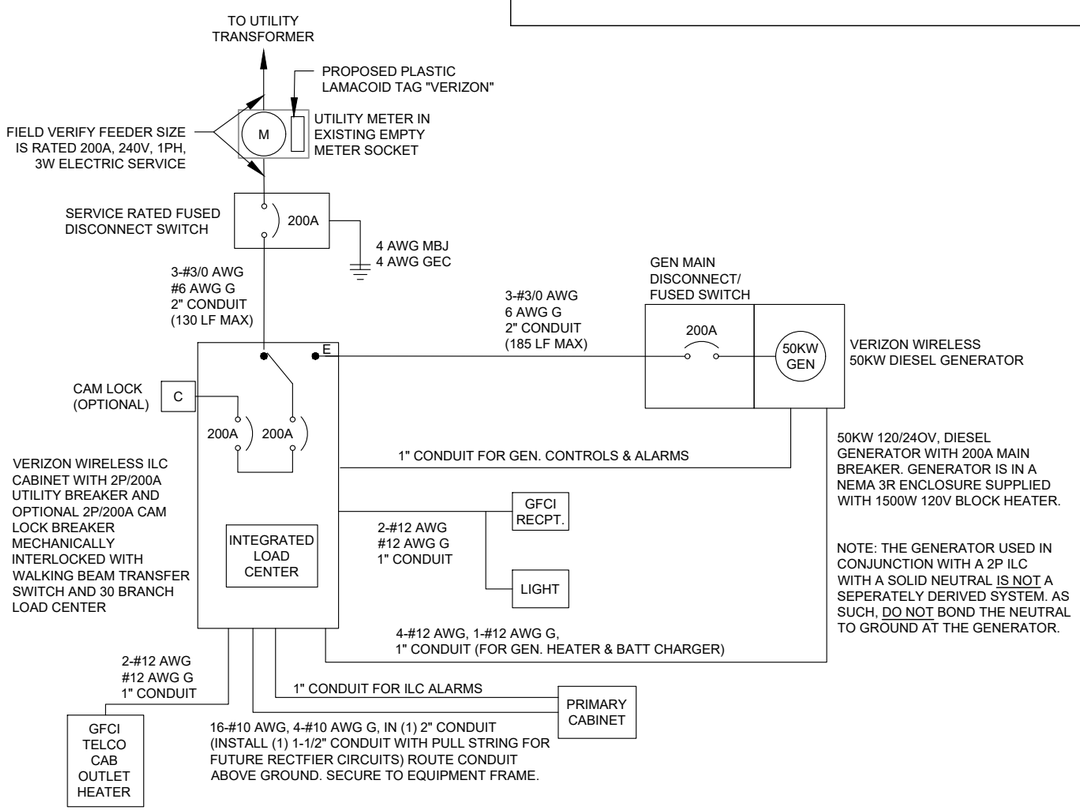

2 ONE-LINE DIAGRAM

ELECTRICAL ONE-LINE DIAGRAM NOTES:

1. ALL EQUIPMENT SHALL BE NEMA 3R RATED.
2. ALL EQUIPMENT SHALL BE GROUNDED IN ACCORDANCE WITH TIA-222-G AND VERIZON WIRELESS STANDARDS.
3. CONDUCTOR SIZES AND DISTANCES HAVE BEEN SIZED FOR 3% MAX VOLTAGE DROP. (TOTAL SYSTEM VOLTAGE DROP ON BOTH FEEDERS AND BRANCH CIRCUITS TO THE FARTHEST DEMAND SHALL NOT EXCEED 5%)
4. WIRE SIZING AND MAXIMUM DISTANCE FROM GENERATOR TO ILC ASSUMES POWER FACTOR OF 0.9.
5. BELOW GRADE PVC CONDUIT SHALL TRANSITION TO RMC PRIOR TO RISING ABOVE GRADE, ALL BENDS SHALL HAVE A MINIMUM 24" RADIUS. ALL FITTINGS SHALL BE SUITABLE FOR USE WITH THREADED RIGID CONDUIT. VERIFY CONDUIT TYPE WITH LOCAL CONSTRUCTION MANAGER AND ADJUST IF NECESSARY. ALL CONDUIT SHALL MEET NEC, STATE, AND LOCAL CODE REQUIREMENTS AS REQUIRED.

AMERICAN TOWER®
A.T. ENGINEERING SERVICES LLC
1 FENTON MAIN
SUITE 300
CARY, NC 27511
PHONE: (919) 468-0112
PEC.0001553

THE USE AND PUBLICATION OF THESE DRAWINGS SHALL BE RESTRICTED TO THE ORIGINAL SITE FOR WHICH THEY ARE PREPARED. ANY USE OR DISCLOSURE OTHER THAN THAT WHICH RELATES TO AMERICAN TOWER OR THE SPECIFIED CARRIER IS STRICTLY PROHIBITED. NEITHER THE ARCHITECT NOR THE ENGINEER WILL BE PROVIDING ON-SITE CONSTRUCTION REVIEW OF THIS PROJECT. CONTRACTOR(S) MUST VERIFY ALL DIMENSIONS AND ADVISE AMERICAN TOWER OR THE SPECIFIED CARRIER OF ANY DISCREPANCIES. ANY PRIOR ISSUANCE OF THIS DRAWING IS SUPERSEDED BY THE LATEST VERSION.

REV.	DESCRIPTION	BY	DATE
0	FOR CONSTRUCTION	JM	05/08/26

ATC SITE NUMBER:
281416
ATC SITE NAME:
WILLINGTON CT
VERIZON SITE NAME:
WILLINGTON HILL CT
SITE ADDRESS:
196 TOLLAND TURNPIKE
WILLINGTON, CT 06279

SEAL:

Digitally Signed: 2026-05-11

verizon

ATC JOB NO:	15445313_D2
CUSTOMER ID:	WILLINGTON HILL CT
CUSTOMER #:	5000992841

ONE-LINE AND PANEL SCHEDULE

SHEET NUMBER:	REVISION:
E-601	0

Copyright © 2026 ATC IP LLC. All Rights Reserved.