AIROSMITH DEVELOPMENT
We do it right the first time.

August 14th, 2018

Melanie Bachman, Executive Director
Connecticut Siting Council
10 Franklin Square
New Britain, CT 06051

RE: Notice of Exempt Modification – Antenna Swap for wireless facility located at 20 POST OFFICE LANE, WESTPORT, CONNECTICUT – CT03XC336 (lat. 41° 07' 24.27" N, long. -73° 18' 46.93" W)

Dear Ms. Bachman:

Sprint Spectrum, LP ("Sprint") currently maintains wireless telecommunications antennas at the (120-foot level) on an existing (142-foot Monopole Tower) at the above-referenced address. The property is owned by The Town of Southbury, and the tower is owned by AMERICAN TOWER CORPORATION.

Sprint's proposed work involves antenna replacement and tower work. Sprint intends to replace six (6) antennas, and add nine (9) new RRHs onto the tower. All the proposed work is contained within the existing fenced area. Please refer to the attached drawings for site plans prepared by Infinigy Engineering.

Please accept this letter as notification pursuant to R.C.S.A. § 16-50j-73, for construction that constitutes an exempt modification pursuant to R.C.S.A. § 16-50j-72(b). In accordance with R.C.S.A. § 16-50j-73, a copy of this letter is being sent to JAMES MARPE, FIRST SELECTMAN and MARY YOUNG, DIRECTOR OF PLANNING AND ZONING of the Town of Southbury. A copy of this letter is also being sent to JUSTINE PAUL the manager for AMERICAN TOWER CORPORATION who manages the tower and a letter is also being sent Jay Sherwood who owns the land.

The planned modifications to the facility fall squarely within those activities explicitly provided for in R.C.S.A. § 16-50j-72(b).

1. The proposed modifications will not result in an increase in the height of the existing tower.
2. The antennas work is a one-for-one replacement of facility components.

32 Clinton Street, Saratoga Springs, NY 12866
Office 518-306-1733 – Fax 518-306-1711
www.airosmithdevelopment.com

Certified WBENC Women's Business Enterprise
Certified SBA WOSB Woman Owned Small Business

3. The proposed modifications will include the addition of ground base equipment as depicted on the attached drawings; however, the proposed equipment will not require an extension of the site boundaries.

4. The proposed modifications will not increase noise levels at the facility by six decibels or more.

5. The additional ground based equipment will not increase radio frequency (RF) emissions at the facility to a level at or above the Federal Communications Commission (FCC) adopted safety standard.

For the foregoing reasons, Sprint respectfully submits that the proposed modifications to the above referenced telecommunications facility constitutes an exempt modification under R.C.S.A. § 16-50j-72(b).

If you have any questions or require any additional information regarding this request, please do not hesitate to give me a call at (518) 350-4222 or email me to aperkowski@airosmithdevelopment.com

Kind Regards,

Arthur Perkowski
Airosmith Development Inc.
32 Clinton Street
Saratoga Springs, NY 12866
518-306-1711 desk & fax
518-871-3707 cell
aperkowski@airosmithdevelopment.com

Attachment

CC: James Marpe (FIRST SELECTMAN, Westport, CT)
Justine Paul (American Tower Corporation)
Mary Young (Planning and Zoning Director, Westport, CT)
Jay Sherwood (Land Owner)

7018 0680 0002 1201 5135

U.S. Postal Service™
CERTIFIED MAIL® RECEIPT
Domestic Mail Only

For delivery information, visit our website at www.usps.com®.

WESTPORT, CT 06880

OFFICIAL USE

Certified Mail Fee $3.45
$ $2.75
Extra Services & Fees (check box, add fee as appropriate)
- Return Receipt (hardcopy) $ $0.00
- Return Receipt (electronic) $ $0.00
- Certified Mail Restricted Delivery $ $0.00
- Adult Signature Required $ $0.00
- Adult Signature Restricted Delivery $

Postage $0.50
$
Total Postage and Fees $6.70
$

0867
17

SARATOGA FINANCE
Postmark Here
AUG 14 2018
08/14/2018
SARATOGA SPRINGS, NY 12866

Sent To Mary Yung CT03xc336
Street and Apt. No., or PO Box No. 110 Myrtle Ave
City, State, ZIP+4® Westport CT 06880

PS Form 3800, April 2015 PSN 7530-02-000-9047 See Reverse for Instructions

7018 0680 0002 1201 5128

U.S. Postal Service™
CERTIFIED MAIL® RECEIPT
Domestic Mail Only

For delivery information, visit our website at www.usps.com®.

WOBURN, MA 01801

OFFICIAL USE

Certified Mail Fee $3.45
$ $2.75
Extra Services & Fees (check box, add fee as appropriate)
- Return Receipt (hardcopy) $ $0.00
- Return Receipt (electronic) $ $0.00
- Certified Mail Restricted Delivery $ $0.00
- Adult Signature Required $ $0.00
- Adult Signature Restricted Delivery $

Postage $0.50
$
Total Postage and Fees $6.70
$

0867
17

SARATOGA FINANCE
Postmark Here
AUG 14 2018
SARATOGA SPRINGS, NY 12866
08/14/2018

Sent To Justin Peul CT03xc336
Street and Apt. No., or PO Box No. 10 Presidential Way
City, State, ZIP+4® Woburn MA 01801

PS Form 3800, April 2015 PSN 7530-02-000-9047 See Reverse for Instructions

7018 0680 0002 1201 5159

U.S. Postal Service™
CERTIFIED MAIL® RECEIPT
Domestic Mail Only

For delivery information, visit our website at www.usps.com®.

WESTPORT, CT 06881

OFFICIAL USE

Certified Mail Fee $3.45
$ $2.75
Extra Services & Fees (check box, add fee as appropriate)
- Return Receipt (hardcopy) $ $0.00
- Return Receipt (electronic) $ $0.00
- Certified Mail Restricted Delivery $ $0.00
- Adult Signature Required $ $0.00
- Adult Signature Restricted Delivery $

Postage $0.50
$
Total Postage and Fees $6.70
$

0867
17

SARATOGA FINANCE
Postmark Here
AUG 14 2018
SARATOGA SPRINGS, NY 12866
08/14/2018

Sent To Jay Sherwood CT03xc336
Street and Apt. No., or PO Box No. PO Box 48
City, State, ZIP+4® Westport CT 06881

PS Form 3800, April 2015 PSN 7530-02-000-9047 See Reverse for Instructions

7018 0680 0002 1201 5142

U.S. Postal Service™
CERTIFIED MAIL® RECEIPT
Domestic Mail Only

For delivery information, visit our website at www.usps.com®.

WESTPORT, CT 06880

OFFICIAL USE

Certified Mail Fee $3.45
$ $2.75
Extra Services & Fees (check box, add fee as appropriate)
- Return Receipt (hardcopy) $ $0.00
- Return Receipt (electronic) $ $0.00
- Certified Mail Restricted Delivery $ $0.00
- Adult Signature Required $ $0.00
- Adult Signature Restricted Delivery $

Postage $0.50
$
Total Postage and Fees $6.70
$

0867
17

SARATOGA FINANCE
Postmark Here
AUG 14 2018
SARATOGA SPRINGS, NY 12866
08/14/2018

Sent To James Nope CT03xc336
Street and Apt. No., or PO Box No. 110 Myrtle Ave
City, State, ZIP+4® Westport CT 06880

PS Form 3800, April 2015 PSN 7530-02-000-9047 See Reverse for Instructions

MAPLE LN

Location	MAPLE LN	**Mblu**	H06/ / 017/000 /
Acct#	5452217-C	**Owner**	SHERWOOD JAY
Assessment	$919,330	**Appraisal**	$1,313,300
PID	7785	**Building Count**	1

Current Value

Appraisal			
Valuation Year	**Improvements**	**Land**	**Total**
2015	$1,253,900	$59,400	$1,313,300

Assessment			
Valuation Year	**Improvements**	**Land**	**Total**
2015	$877,730	$41,600	$919,330

Owner of Record

Owner	SHERWOOD JAY	**Sale Price**	$0
Co-Owner		**Certificate**	1
Address	P O BOX 48 WESTPORT, CT 06881	**Book & Page**	469/ 137
		Sale Date	12/08/1977
		Instrument	29

Ownership History

Ownership History					
Owner	**Sale Price**	**Certificate**	**Book & Page**	**Instrument**	**Sale Date**
SHERWOOD JAY	$0	1	469/ 137	29	12/08/1977

Building Information

Building 1 : Section 1

Year Built:
Living Area: 0
Replacement Cost: $0
Building Percent Good:
Replacement Cost Less Depreciation: $0

Building Attributes	
Field	**Description**
Style	Outbuildings
Model	
Grade:	
Stories:	
Occupancy	
Exterior Wall 1	
Exterior Wall 2	
Roof Structure:	
Roof Cover	

Building Layout

Building Layout (http://images.vgsi.com/photos2/WestportCTPhotos//Sketches/7

Building Sub-Areas (sq ft)	Legend
No Data for Building Sub-Areas	

Interior Wall 1	
Interior Wall 2	
Interior Flr 1	
Interior Flr 2	
Heat Fuel	
Heat Type:	
AC Type:	
Total Bedrooms:	
Total Bthrms:	
Total Half Baths:	
Total Xtra Fixtrs:	
Total Rooms:	
Bath Style:	
Kitchen Style:	
Kitchens	
Whirlpool Tubs	
Hot Tubs	
Sauna (SF Area)	
Fin Basement	
Fin Bsmt Qual	
Bsmt. Garages	
Interior Cond	
Fireplaces	
Ceiling Height	
Sprinklers	

Acc Apts	

Extra Features

Extra Features	Legend
No Data for Extra Features	

Land

Land Use

Use Code	100
Description	Res Vacant Lnd
Zone	AAA
Neighborhood	140
Alt Land Appr	No
Category	

Land Line Valuation

Size (Acres)	2.07
Frontage	0
Depth	0
Assessed Value	$41,600
Appraised Value	$59,400

Outbuildings

Outbuildings						Legend
Code	**Description**	**Sub Code**	**Sub Description**	**Size**	**Value**	**Bldg #**
CELL	Cell on TWR	TW		5 Sites	$1,253,900	1

Valuation History

Appraisal			
Valuation Year	**Improvements**	**Land**	**Total**

2017	$1,253,900	$59,400	$1,313,300
2016	$1,253,900	$59,400	$1,313,300
2014	$818,000	$54,625	$872,625

Assessment			
Valuation Year	**Improvements**	**Land**	**Total**
2017	$877,730	$41,600	$919,330
2016	$877,730	$41,600	$919,330
2014	$572,600	$38,200	$610,800

(c) 2016 Vision Government Solutions, Inc. All rights reserved.

CT03XC336

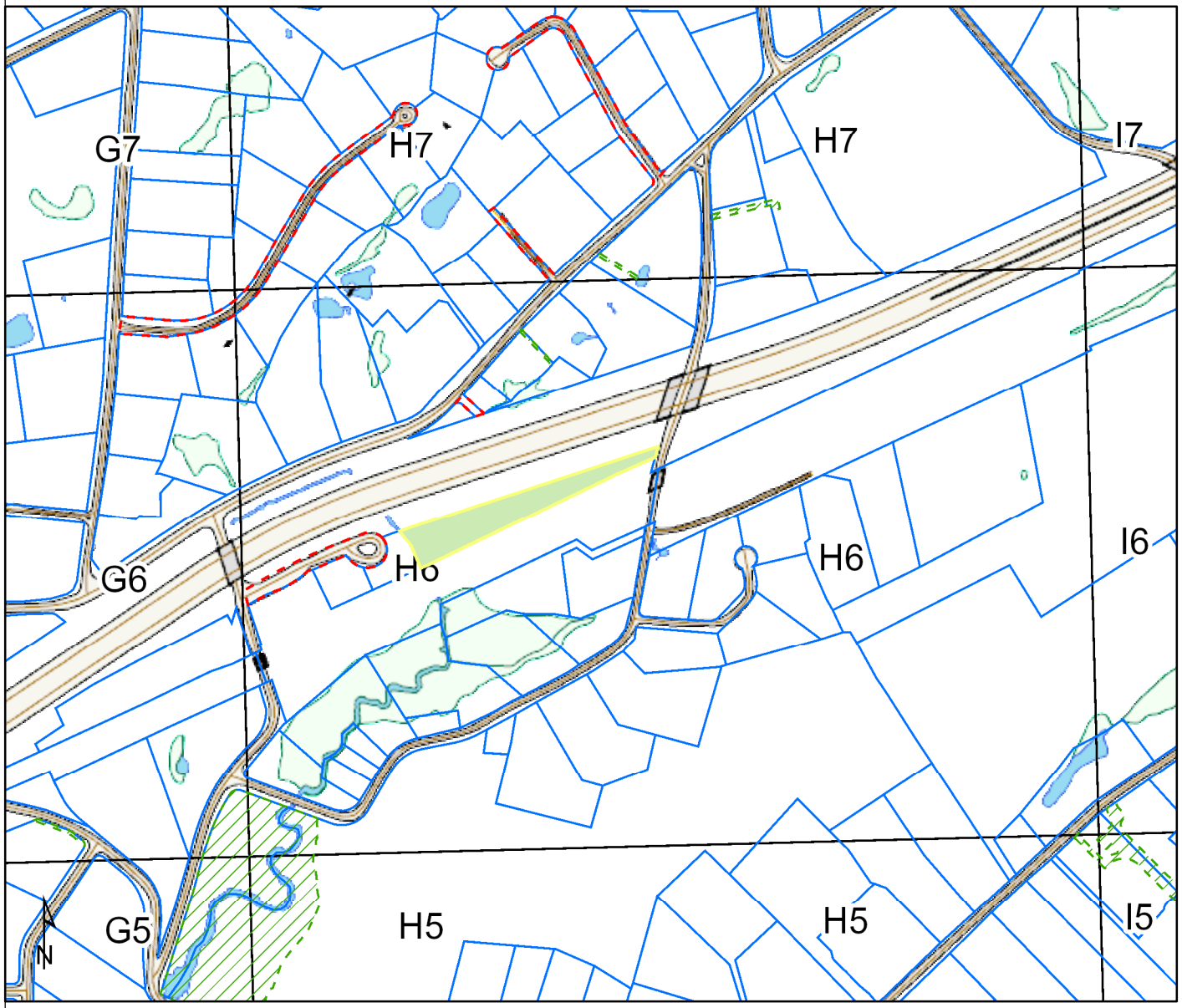

Westport CT Web GIS Map Legend

CAM_line
Deleted_Wetland
Amended_Wetland
dot_line
Tidal_Wetland
Waterbody_Watercourse
wet_text_line
Wetland
100 Year Flood Zone
500 Year Flood Zone
Floodway in Zone AE
Basins
Spot Elevation
Water Spot Elevation
bulkhead_polylines
landhook_polylines
original_parcel_polylines
Index
Index Depression
Index Obscured
Index Depression Obscured
Intermediate
Intermediate Depression
Intermediate Obscured
Intermediate Depression (Obs)
Tree
Pipe
Outfall
Catchbasin
Manhole
Electrical Box
Hydrant
Light Pole
Utility Pole
Sign
Unknown
Billboard
Pipeline Above Ground
Tower
townline_polyline
Unknown Lines
Culvert
Dam
Ditch
Rip Rap
Elevation Well
Fence
Guardrail
Hedge
Retaining Wall
Stone Wall
Trails
Abandoned Railroad Tracks
Railroad Tracks
Paved Road Centerline
Unpaved Road Centerline
Stream
Coast Line
Easement
Utility Right of Way
Private Right of Way
Proposed Right of Way
Public Right of Way
Parcel
Fuel Tank
Water Tank
Quarry or Pit
Building
Building Construction
Cement Pad
Deck
Foundation
Greenhouse
Mobile Home
Ruins
Silo
Somkestack
Substation
Bridge
Paved Road
Runway
Unpaved Road
Golf Path
Paved Parking
Unpaved Parking
Paved Driveway
Unpaved Driveway
Public Sidewalk
Treeline
Wet Area
Sound, Lake, Pond, or River
Pool
Golf Green
Golf Bunker
Tennis Court
Golf Tee
Wharf, Dock, or Pier
Park
Athletic Field
Golf Course
index_polygon
HYDRIC SOILS
NON-HYDRIC SOILS
WATER
A
AA
AAA
B
BCD
BPD
CPD
DDD4
GBD
GBD/S
HDD
HSD
MHP
OSRD
PRD
RBD
RORD
RPOD

1 inch = 567 feet

Westport and its mapping contractors assume no legal responsibility for the information contained herein.

EBI Consulting
environmental | engineering | due diligence

RADIO FREQUENCY EMISSIONS ANALYSIS REPORT
EVALUATION OF HUMAN EXPOSURE POTENTIAL TO NON-IONIZING EMISSIONS

SPRINT Existing Facility

Site ID: CT03XC336

Turkey Hill
20 Post Office Lane
Westport, CT 06880

August 2, 2018

EBI Project Number: 6218005248

Site Compliance Summary	
Compliance Status:	**COMPLIANT**
Site total MPE% of FCC general population allowable limit:	**19.86 %**

21 B Street · Burlington, MA 01803 · Tel: (781) 273.2500 · Fax: (781) 273.3311

August 2, 2018

SPRINT
Attn: RF Engineering Manager
1 International Boulevard, Suite 800
Mahwah, NJ 07495

Emissions Analysis for Site: **CT03XC336 – Turkey Hill**

EBI Consulting was directed to analyze the proposed SPRINT facility located at **20 Post Office Lane, Westport, CT**, for the purpose of determining whether the emissions from the Proposed SPRINT Antenna Installation located on this property are within specified federal limits.

All information used in this report was analyzed as a percentage of current Maximum Permissible Exposure (% MPE) as listed in the FCC OET Bulletin 65 Edition 97-01and ANSI/IEEE Std C95.1. The FCC regulates Maximum Permissible Exposure in units of microwatts per square centimeter (μW/cm2). The number of $\mu W/cm^2$ calculated at each sample point is called the power density. The exposure limit for power density varies depending upon the frequencies being utilized. Wireless Carriers and Paging Services use different frequency bands each with different exposure limits, therefore it is necessary to report results and limits in terms of percent MPE rather than power density.

All results were compared to the FCC (Federal Communications Commission) radio frequency exposure rules, 47 CFR 1.1307(b)(1) – (b)(3), to determine compliance with the Maximum Permissible Exposure (MPE) limits for General Population/Uncontrolled environments as defined below.

General population/uncontrolled exposure limits apply to situations in which the general population may be exposed or in which persons who are exposed as a consequence of their employment may not be made fully aware of the potential for exposure or cannot exercise control over their exposure. Therefore, members of the general population would always be considered under this category when exposure is not employment related, for example, in the case of a telecommunications tower that exposes persons in a nearby residential area.

General population exposure to radio frequencies is regulated and enforced in units of microwatts per square centimeter ($\mu W/cm^2$). The general population exposure limits for the 850 MHz Band is approximately 567 $\mu W/cm^2$. The general population exposure limit for the 1900 MHz (PCS), 2500 MHz (BRS) and 18 GHz microwave bands is 1000 $\mu W/cm^2$. Because each carrier will be using different frequency bands, and each frequency band has different exposure limits, it is necessary to report percent of MPE rather than power density.

Occupational/controlled exposure limits apply to situations in which persons are exposed as a consequence of their employment and in which those persons who are exposed have been made fully aware of the potential for exposure and can exercise control over their exposure. Occupational/controlled exposure limits also apply where exposure is of a transient nature as a result of incidental passage through a location where exposure levels may be above general population/uncontrolled limits (see below), as long as the exposed person has been made fully aware of the potential for exposure and can exercise control over his or her exposure by leaving the area or by some other appropriate means.

Additional details can be found in FCC OET 65.

CALCULATIONS

Calculations were done for the proposed SPRINT Wireless antenna facility located at **20 Post Office Lane, Westport, CT**, using the equipment information listed below. All calculations were performed per the specifications under FCC OET 65. Since SPRINT is proposing highly focused directional panel antennas, which project most of the emitted energy out toward the horizon, all calculations were performed assuming a lobe representing the maximum gain of the antenna per the antenna manufactures supplied specifications, minus 10 dB for directional panel antennas and 20 dB for highly focused parabolic microwave dishes, was focused at the base of the tower. For this report the sample point is the top of a 6-foot person standing at the base of the tower.

For all calculations, all equipment was calculated using the following assumptions:

1) 1 CDMA channels (850 MHz) were considered for each sector of the proposed installation. These Channels have a transmit power of 20 Watts per Channel.

2) 2 LTE channels (850 MHz) were considered for each sector of the proposed installation. These Channels have a transmit power of 50 Watts per Channel.

3) 5 CDMA channels (1900 MHz (PCS)) were considered for each sector of the proposed installation. These Channels have a transmit power of 16 Watts per Channel.

4) 2 LTE channels (1900 MHz (PCS)) were considered for each sector of the proposed installation. These Channels have a transmit power of 40 Watts per Channel.

5) 8 LTE channels (2500 MHz (BRS)) were considered for each sector of the proposed installation. These Channels have a transmit power of 20 Watts per Channel.

6) 1 microwave channel (18 GHz) was considered per sector for sectors A & B of the proposed installation. These channels have a transmit power of 1 Watt.

7) All radios at the proposed installation were considered to be running at full power and were uncombined in their RF transmissions paths per carrier prescribed configuration. Per FCC OET Bulletin No. 65 - Edition 97-01 recommendations to achieve the maximum anticipated value at each sample point, all power levels emitting from the proposed antenna installation are increased by a factor of 2.56 to account for possible in-phase reflections from the surrounding environment. This is rarely the case, and if so, is never continuous.

8) For the following calculations, the sample point was the top of a 6-foot person standing at the base of the tower. The maximum gain of the antenna per the antenna manufactures supplied specifications, minus 10 dB for directional panel antennas and 20 dB for highly focused parabolic microwave dishes, was used in this direction. This value is a very conservative estimate as gain reductions for these particular antennas are typically much higher in this direction.

9) The antennas used in this modeling are the **Commscope NNVV-65B-R4 and the Nokia AAHC** for transmission in the 850 MHz, 1900 MHz (PCS) and 2500 MHz (BRS) frequency bands as well as the **Dragonwave A-ANT-18G-2-C** for microwave backhaul transmissions in the 18 GHz frequency band. This is based on feedback from the carrier with regards to anticipated antenna selection. Maximum gain values for all antennas are listed in the Inventory and Power Data table below. The maximum gain of the antenna per the antenna manufactures supplied specifications, minus 10 dB for directional panel antennas and 20 dB for highly focused parabolic microwave dishes, was used for all calculations. This value is a very conservative estimate as gain reductions for these particular antennas are typically much higher in this direction.

10) The antenna mounting height centerlines of the proposed panel antennas and microwave dishes are **120 feet** above ground level (AGL) for **Sector A**, **120 feet** above ground level (AGL) for **Sector B** and **120 feet** above ground level (AGL) for Sector C.

11) Emissions values for additional carriers were taken from the Connecticut Siting Council active database. Values in this database are provided by the individual carriers themselves.

All calculations were done with respect to uncontrolled / general population threshold limits.

SPRINT Site Inventory and Power Data by Antenna

Sector:	A	Sector:	B	Sector:	C
Antenna #:	**1**	Antenna #:	**1**	Antenna #:	**1**
Make / Model:	Commscope NNVV-65B-R4	Make / Model:	Commscope NNVV-65B-R4	Make / Model:	Commscope NNVV-65B-R4
Gain:	12.75 / 15.05 dBd	Gain:	12.75 / 15.05 dBd	Gain:	12.75 / 15.05 dBd
Height (AGL):	**120 feet**	Height (AGL):	**120 feet**	Height (AGL):	**120 feet**
Frequency Bands	850 MHz / 1900 MHz (PCS)	Frequency Bands	850 MHz / 1900 MHz (PCS)	Frequency Bands	850 MHz / 1900 MHz (PCS)
Channel Count	10	Channel Count	10	Channel Count	10
Total TX Power(W):	280 Watts	Total TX Power(W):	280 Watts	Total TX Power(W):	280 Watts
ERP (W):	7,378.61	ERP (W):	7,378.61	ERP (W):	7,378.61
Antenna A1 MPE%	**2.52 %**	Antenna B1 MPE%	**2.52 %**	Antenna C1 MPE%	**2.52 %**
Antenna #:	**2**	Antenna #:	**2**	Antenna #:	**2**
Make / Model:	Nokia AAHC	Make / Model:	Nokia AAHC	Make / Model:	Nokia AAHC
Gain:	15.05 dBd	Gain:	15.05 dBd	Gain:	15.05 dBd
Height (AGL):	**120 feet**	Height (AGL):	**120 feet**	Height (AGL):	**120 feet**
Frequency Bands	2500 MHz (BRS)	Frequency Bands	2500 MHz (BRS)	Frequency Bands	2500 MHz (BRS)
Channel Count	8	Channel Count	8	Channel Count	8
Total TX Power(W):	160 Watts	Total TX Power(W):	160 Watts	Total TX Power(W):	160 Watts
ERP (W):	5,118.23	ERP (W):	5,118.23	ERP (W):	5,118.23
Antenna A2 MPE%	**1.42 %**	Antenna B2 MPE%	**1.42 %**	Antenna C2 MPE%	**1.42 %**

Microwave Backhaul Data

Antenna Type:	Gain (dBd)	Height (feet AGL):	Frequency Bands	Channel Count	Total TX Power(W)	ERP (W)	MPE %	Sector
Dragonwave A-ANT-18G-2-C	18 dBd	120	18 GHz	1	1	4,415.70	**0.12**	A
Dragonwave A-ANT-18G-2-C	18 dBd	120	18 GHz	1	1	4,415.70	**0.12**	B

Site Composite MPE%	
Carrier	**MPE%**
SPRINT – Sectors A & B	**4.06 %**
AT&T	2.90 %
Verizon Wireless	5.88 %
MetroPCS	1.24 %
T-Mobile	5.70 %
Clearwire	0.08 %
Enertrac	0.00 %
Site Total MPE %:	**19.86 %**

SPRINT Sector A Total:	4.06 %
SPRINT Sector B Total:	4.06 %
SPRINT Sector C Total:	3.93 %
Site Total:	19.86 %

Sprint Maximum MPE Values (Sectors A & B)

SPRINT _ Frequency Band / Technology (All Sectors)	# Channels	Watts ERP (Per Channel)	Height (feet)	Total Power Density ($\mu W/cm^2$)	Frequency (MHz)	Allowable MPE ($\mu W/cm^2$)	Calculated % MPE
Sprint 850 MHz CDMA	1	376.73	120	1.04	850 MHz	567	0.18%
Sprint 850 MHz LTE	2	941.82	120	5.21	850 MHz	567	0.92%
Sprint 1900 MHz (PCS) CDMA	5	511.82	120	7.08	1900 MHz (PCS)	1000	0.71%
Sprint 1900 MHz (PCS) LTE	2	1,279.56	120	7.08	1900 MHz (PCS)	1000	0.71%
Sprint 2500 MHz (BRS) LTE	8	639.78	120	14.16	2500 MHz (BRS)	1000	1.42%
Sprint 18 GHz Microwave	1	4,415.70	120	1.22	18 GHz	1000	0.12%
						Total:	**4.06%**

Summary

All calculations performed for this analysis yielded results that were **within** the allowable limits for general population exposure to RF Emissions.

The anticipated maximum composite contributions from the SPRINT facility as well as the site composite emissions value with regards to compliance with FCC's allowable limits for general population exposure to RF Emissions are shown here:

SPRINT Sector	Power Density Value (%)
Sector A:	4.06 %
Sector B:	4.06 %
Sector C:	3.93 %
SPRINT Maximum MPE % (Sectors A & B):	4.06 %
Site Total:	19.86 %
Site Compliance Status:	**COMPLIANT**

The anticipated composite MPE value for this site assuming all carriers present is **19.86 %** of the allowable FCC established general population limit sampled at the ground level. This is based upon values listed in the Connecticut Siting Council database for existing carrier emissions.

FCC guidelines state that if a site is found to be out of compliance (over allowable thresholds), that carriers over a 5% contribution to the composite value will require measures to bring the site into compliance. For this facility, the composite values calculated were well within the allowable 100% threshold standard per the federal government.

Sprint

PROJECT:	DO MACRO UPGRADE
SITE NAME:	TURKEY HILL
SITE CASCADE:	CT03XC336
SITE ADDRESS:	20 POST OFFICE LANE WESTPORT, CT 06880
SITE TYPE:	MONOPOLE TOWER
MARKET:	SOUTHERN CONNECTICUT

SITE INFORMATION

TOWER OWNER:
AMERICAN TOWER CORPORATION
10 PRESIDENTIAL WAY
WOBURN, MA 01801

LATITUDE (NAD83):
41° 7' 24.27" N
41.12340833

LONGITUDE (NAD83):
73° 18' 46.93" W
-73.3131

COUNTY:
FAIRFIELD

ZONING JURISDICTION:
CONNECTICUT SITING COUNCIL

ZONING DISTRICT:
RESIDENTIAL AAA

POWER COMPANY:
CONNECTICUT LIGHT & POWER
PHONE: (800) 322-3223

AAV PROVIDER:
AT&T
PHONE: (210) 821-4105

PROJECT MANAGER:
AIROSMITH DEVELOPMENT
TERRI BURKHOLDER
(315) 719-2928
TBURKHOLDER@AIROSMITHDEVELOPMENT.COM

AREA MAP

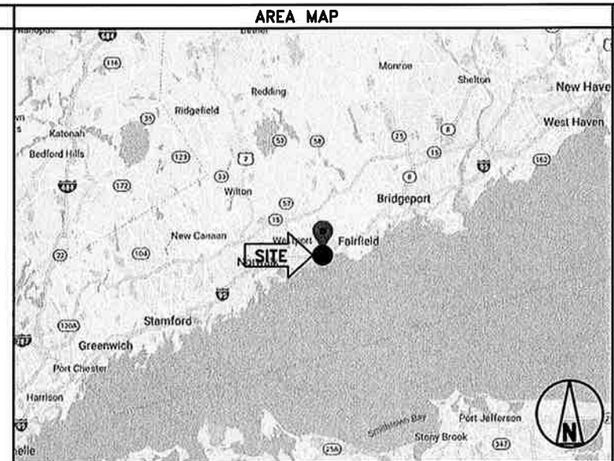

LOCATION MAP

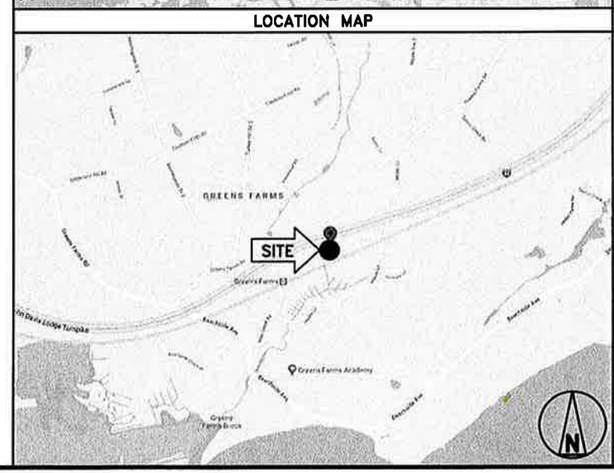

PROJECT DESCRIPTION

SPRINT PROPOSES TO MODIFY AN EXISTING UNMANNED TELECOMMUNICATIONS FACILITY.

- REMOVE (6) EXISTING PANEL ANTENNAS
- INSTALL (3) MIMO PANEL ANTENNAS
- INSTALL (3) DUAL BAND PANEL ANTENNAS
- INSTALL (3) 800 MHz RRH'S BEHIND ANTENNAS
- INSTALL (30) JUMPER CABLES
- INSTALL (2) HYBRID CABLE
- INSTALL 2.5 EQUIPMENT INSIDE EXISTING N.V. MMBS CABINET

THESE PLANS HAVE BEEN DEVELOPED FOR THE MODIFICATION OF AN EXISTING UNMANNED TELECOMMUNICATIONS FACILITY OWNED OR LEASED BY SPRINT IN ACCORDANCE WITH THE SCOPE OF WORK PROVIDED BY SPRINT. INFINIGY HAS INCORPORATED THIS SCOPE OF WORK IN THE PLANS. THESE PLANS ARE NOT FOR CONSTRUCTION UNLESS ACCOMPANIED BY A PASSING STRUCTURAL STABILITY ANALYSIS PREPARED BY A LICENSED STRUCTURAL ENGINEER. STRUCTURAL ANALYSIS MUST INCLUDE BOTH TOWER AND MOUNT.

APPLICABLE CODES

ALL WORK SHALL BE PERFORMED AND MATERIALS INSTALL IN ACCORDANCE WITH THE CURRENT EDITIONS OF THE FOLLOWING CODES AS ADOPTED BY THE LOCAL GOVERNING AUTHORITIES. NOTHING IN THESE PLANS IS TO BE CONSTRUED TO PERMIT WORK NOT CONFORMING TO THESE CODES.

1. INTERNATIONAL BUILDING CODE (2015 IBC)
2. TIA-222-G OR LATEST EDITION
3. NFPA 780 – LIGHTNING PROTECTION CODE
4. 2011 NATIONAL ELECTRIC CODE OR LATEST EDITION
5. ANY OTHER NATIONAL OR LOCAL APPLICABLE CODES, MOST RECENT EDITIONS
6. CT BUILDING CODE
7. LOCAL BUILDING CODE
8. CITY/COUNTY ORDINANCES

811
Know what's **below.**
Call before you dig.
www.call811.com

DRAWING INDEX

SHEET NO.	SHEET TITLE	REV.
T-1	TITLE SHEET & PROJECT DATA	0
SP-1	SPRINT SPECIFICATIONS	0
SP-2	SPRINT SPECIFICATIONS	0
SP-3	SPRINT SPECIFICATIONS	0
A-1	SITE PLAN	0
A-2	TOWER ELEVATION	0
A-3	ANTENNA LAYOUT & MOUNTING DETAILS	0
A-4	EQUIPMENT & MOUNTING DETAILS	0
A-5	CIVIL DETAILS	0
A-6	PLUMBING DIAGRAM	0
E-1	ELECTRICAL & GROUNDING PLAN	0
E-2	ELECTRICAL & GROUNDING DETAILS	0

PLANS PREPARED FOR:
Sprint

PLANS PREPARED BY:
INFINIGY
FROM ZERO TO INFINIGY
the solutions are endless
1033 Watervliet Shaker Rd | Albany, NY 12205
Phone: 518-690-0790 | Fax: 518-690-0793
www.infinigy.com
JOB NUMBER 526-104

PROJECT MANAGER:
AIROSMITH DEVELOPMENT
32 CLINTON ST.
SARATOGA SPRINGS, NY 12866
OFFICE#. (518) 306-3740

ENGINEERING LICENSE:
STATE OF CONNECTICUT
JOHN S. STEVENS
No. 31772
LICENSED PROFESSIONAL ENGINEER
JUL 18 2018

DRAWING NOTICE:
THESE DOCUMENTS ARE CONFIDENTIAL AND ARE THE SOLE PROPERTY OF SPRINT AND MAY NOT BE REPRODUCED, DISSEMINATED OR REDISTRIBUTED WITHOUT THE EXPRESS WRITTEN CONSENT OF SPRINT.

REVISIONS:

DESCRIPTION	DATE	BY	REV.
ISSUED FOR PERMIT	07/02/18	MAP	0

SITE NAME:
TURKEY HILL

SITE NUMBER:
CT03XC336

SITE ADDRESS:
20 POST OFFICE LANE
WESTPORT, CT 06880

SHEET DESCRIPTION:
TITLE SHEET
& PROJECT DATA

SHEET NUMBER:
T-1

THESE OUTLINE SPECIFICATIONS IN CONJUNCTION WITH THE SPRINT STANDARD CONSTRUCTION SPECIFICATIONS, INCLUDING CONTRACT DOCUMENTS AND THE CONSTRUCTION DRAWINGS DESCRIBE THE WORK TO BE PERFORMED BY THE CONTRACTOR.

SECTION 01 100 – SCOPE OF WORK

PART 1 – GENERAL

1.1 THE WORK: THESE STANDARD CONSTRUCTION SPECIFICATIONS IN CONJUNCTION WITH THE SPRINT CONSTRUCTION STANDARDS FOR WIRELESS SITES, CONTRACT DOCUMENTS AND THE CONSTRUCTION DRAWINGS DESCRIBE THE WORK TO BE PERFORMED BY THE CONTRACTOR.

1.2 RELATED DOCUMENTS:

A. THE REQUIREMENTS OF THIS SECTION APPLY TO ALL SECTIONS IN THIS SPECIFICATION.

B. SPRINT "STANDARD CONSTRUCTION DETAILS FOR WIRELESS SITES" ARE INCLUDED IN AND MADE A PART OF THESE SPECIFICATIONS HEREWITH.

1.3 PRECEDENCE: SHOULD CONFLICTS OCCUR BETWEEN THE STANDARD CONSTRUCTION SPECIFICATIONS FOR WIRELESS SITES INCLUDING THE STANDARD CONSTRUCTION DETAILS FOR WIRELESS SITES AND THE CONSTRUCTION DRAWINGS, INFORMATION ON THE CONSTRUCTION DRAWINGS SHALL TAKE PRECEDENCE. NOTIFY SPRINT CONSTRUCTION MANAGER IF THIS OCCURS.

1.4 NATIONALLY RECOGNIZED CODES AND STANDARDS:

A. THE WORK SHALL COMPLY WITH APPLICABLE NATIONAL AND LOCAL CODES AND STANDARDS, LATEST EDITION, AND PORTIONS THEREOF, INCLUDED BUT NOT LIMITED TO THE FOLLOWING:

1. GR-63-CORE NEBS REQUIREMENTS: PHYSICAL PROTECTION
5. GR-78-CORE GENERIC REQUIREMENTS FOR THE PHYSICAL DESIGN AND MANUFACTURE OF TELECOMMUNICATIONS EQUIPMENT.
3. GR-1089 CORE, ELECTROMAGNETIC COMPATIBILITY AND ELECTRICAL SAFETY –GENERIC CRITERIA FOR NETWORK TELECOMMUNICATIONS EQUIPMENT.
4. NATIONAL FIRE PROTECTION ASSOCIATION CODES AND STANDARDS (NFPA) INCLUDING NFPA 70 (NATIONAL ELECTRICAL CODE – "NEC") AND NFPA 101 (LIFE SAFETY CODE).
5. AMERICAN SOCIETY FOR TESTING OF MATERIALS (ASTM)
6. INSTITUTE OF ELECTRONIC AND ELECTRICAL ENGINEERS (IEEE)
7. AMERICAN CONCRETE INSTITUTE (ACI)
8. AMERICAN WIRE PRODUCERS ASSOCIATION (AWPA)
9. CONCRETE REINFORCING STEEL INSTITUTE (CRSI)
10. AMERICAN ASSOCIATION OF STATE HIGHWAY AND TRANSPORTATION OFFICIALS (AASHTO)
11. PORTLAND CEMENT ASSOCIATION (PCA)
12. NATIONAL CONCRETE MASONRY ASSOCIATION (NCMA)
13. BRICK INDUSTRY ASSOCIATION (BIA)
14. AMERICAN WELDING SOCIETY (AWS)
15. NATIONAL ROOFING CONTRACTORS ASSOCIATION (NRCA)
16. SHEET METAL AND AIR CONDITIONING CONTRACTORS' NATIONAL ASSOCIATION (SMACNA)
17. DOOR AND HARDWARE INSTITUTE (DHI)
18. OCCUPATIONAL SAFETY AND HEALTH ACT (OSHA)
19. APPLICABLE BUILDING CODES INCLUDING UNIFORM BUILDING CODE, SOUTHERN BUILDING CODE, BOCA, AND THE INTERNATIONAL BUILDING CODE.

1.5 DEFINITIONS:

A. WORK: THE SUM OF TASKS AND RESPONSIBILITIES IDENTIFIED IN THE CONTRACT DOCUMENTS.

B. COMPANY: SPRINT CORPORATION

C. ENGINEER: SYNONYMOUS WITH ARCHITECT & ENGINEER AND "A&E". THE DESIGN PROFESSIONAL HAVING PROFESSIONAL RESPONSIBILITY FOR DESIGN OF THE PROJECT.

D. CONTRACTOR: CONSTRUCTION CONTRACTOR; CONSTRUCTION VENDOR; INDIVIDUAL OR ENTITY WHO AFTER EXECUTION OF A CONTRACT IS BOUND TO ACCOMPLISH THE WORK.

E. THIRD PARTY VENDOR OR AGENCY: A VENDOR OR AGENCY ENGAGED SEPARATELY BY THE COMPANY, A&E, OR CONTRACTOR TO PROVIDE MATERIALS OR TO ACCOMPLISH SPECIFIC TASKS RELATED TO BUT NOT INCLUDED IN THE WORK.

F. OFCI: OWNER FURNISHED, CONTRACTOR INSTALLED EQUIPMENT.

G. CONSTRUCTION MANAGER – ALL PROJECTS RELATED COMMUNICATION TO FLOW THROUGH SPRINT REPRESENTATIVE IN CHARGE OF PROJECT...

1.6 SITE FAMILIARITY: CONTRACTOR SHALL BE RESPONSIBLE FOR FAMILIARIZING HIMSELF WITH ALL CONTRACT DOCUMENTS, FIELD CONDITIONS AND DIMENSIONS PRIOR TO PROCEEDING WITH CONSTRUCTION. ANY DISCREPANCIES SHALL BE BROUGHT TO THE ATTENTION OF THE SPRINT CONSTRUCTION MANAGER PRIOR TO THE COMMENCEMENT OF WORK. NO COMPENSATION WILL BE AWARDED BASED ON CLAIM OF LACK OF KNOWLEDGE OR FIELD CONDITIONS.

1.7 POINT OF CONTACT: COMMUNICATION BETWEEN SPRINT AND THE CONTRACTOR SHALL FLOW THROUGH THE SINGLE SPRINT CONSTRUCTION MANAGER APPOINTED TO MANAGE THE PROJECT FOR SPRINT.

1.8 ON-SITE SUPERVISION: THE CONTRACTOR SHALL SUPERVISE AND DIRECT THE WORK AND SHALL BE RESPONSIBLE FOR CONSTRUCTION MEANS, METHODS, TECHNIQUES, SEQUENCES, AND PROCEDURES IN ACCORDANCE WITH THE CONTRACT DOCUMENTS. THE CONTRACTOR SHALL EMPLOY A COMPETENT SUPERINTENDENT WHO SHALL BE IN ATTENDANCE AT THE SITE AT ALL TIMES DURING PERFORMANCE OF THE WORK.

1.9 DRAWINGS, SPECIFICATIONS AND DETAILS REQUIRED AT JOBSITE: THE CONSTRUCTION CONTRACTOR SHALL MAINTAIN A FULL SET OF THE CONSTRUCTION DRAWINGS, STANDARD CONSTRUCTION DETAILS FOR WIRELESS SITES AND THE STANDARD CONSTRUCTION SPECIFICATIONS FOR WIRELESS SITES AT THE JOBSITE FROM MOBILIZATION THROUGH CONSTRUCTION COMPLETION.

A. THE JOBSITE DRAWINGS, SPECIFICATIONS AND DETAILS SHALL BE CLEARLY MARKED DAILY IN RED PENCIL WITH ANY CHANGES IN CONSTRUCTION OVER WHAT IS DEPICTED IN THE DOCUMENTS. AT CONSTRUCTION COMPLETION, THIS JOBSITE MARKUP SET SHALL BE DELIVERED TO THE COMPANY OR COMPANY'S DESIGNATED REPRESENTATIVE TO BE FORWARDED TO THE COMPANY'S A&E VENDOR FOR PRODUCTION OF "AS-BUILT" DRAWINGS.

B. DETAILS ARE INTENDED TO SHOW DESIGN INTENT. MODIFICATIONS MAY BE REQUIRED TO SUIT JOB DIMENSIONS OR CONDITIONS, AND SUCH MODIFICATIONS SHALL BE INCLUDED AS PART OF THE WORK. CONTRACTOR SHALL NOTIFY SPRINT CONSTRUCTION MANAGER OF ANY VARIATIONS PRIOR TO PROCEEDING WITH THE WORK.

C. DIMENSIONS SHOWN ARE TO FINISH SURFACES UNLESS NOTED OTHERWISE. SPACING BETWEEN EQUIPMENT IS THE REQUIRED CLEARANCE. SHOULD THERE BE ANY QUESTIONS REGARDING THE CONTRACT DOCUMENTS, EXISTING CONDITIONS AND/OR DESIGN INTENT, THE CONTRACTOR SHALL BE RESPONSIBLE FOR OBTAINING A CLARIFICATION FROM THE SPRINT CONSTRUCTION MANAGER PRIOR TO PROCEEDING WITH THE WORK.

1.10 USE OF JOB SITE: THE CONTRACTOR SHALL CONFINE ALL CONSTRUCTION AND RELATED OPERATIONS INCLUDING STAGING AND STORAGE OF MATERIALS AND EQUIPMENT, PARKING, TEMPORARY FACILITIES, AND WASTE STORAGE TO THE LEASE PARCEL UNLESS OTHERWISE PERMITTED BY THE CONTRACT DOCUMENTS.

1.11 UTILITIES SERVICES: WHERE NECESSARY TO CUT EXISTING PIPES, ELECTRICAL WIRES, CONDUITS, CABLES, ETC., OF UTILITY SERVICES, OR OF FIRE PROTECTION OR COMMUNICATIONS SYSTEMS, THEY SHALL BE CUT AND CAPPED AT SUITABLE PLACES OR WHERE SHOWN. ALL SUCH ACTIONS SHALL BE COORDINATED WITH THE UTILITY COMPANY INVOLVED:

1.12 PERMITS / FEES: WHEN REQUIRED THAT A PERMIT OR CONNECTION FEE BE PAID TO A PUBLIC UTILITY PROVIDER FOR NEW SERVICE TO THE CONSTRUCTION PROJECT, PAYMENT OF SUCH FEE SHALL BE THE RESPONSIBILITY OF THE CONTRACTOR.

1.13 CONTRACTOR SHALL TAKE ALL MEASURES AND PROVIDE ALL MATERIAL NECESSARY FOR PROTECTING EXISTING EQUIPMENT AND PROPERTY.

1.14 METHODS OF PROCEDURE (MOPS) FOR CONSTRUCTION: CONTRACTOR SHALL PERFORM WORK AS DESCRIBED IN THE FOLLOWING INSTALLATION AND COMMISSIONING MOPS.

NOTE: IN SHORT-FORM SPECIFICATIONS ON THE DRAWINGS, A/E TO INSERT LIST OF APPLICABLE MOPS INCLUDING EN-2012-001, EN-2013-002, EL-0568, AND TS-0193

1.15 USE OF ELECTRONIC PROJECT MANAGEMENT SYSTEMS:

PART 2 – PRODUCTS (NOT USED)

PART 3 – EXECUTION

3.1 TEMPORARY UTILITIES AND FACILITIES: THE CONTRACTOR SHALL BE RESPONSIBLE FOR ALL TEMPORARY UTILITIES AND FACILITIES NECESSARY EXCEPT AS OTHERWISE INDICATED IN THE CONSTRUCTION DOCUMENTS. TEMPORARY UTILITIES AND FACILITIES INCLUDE POTABLE WATER, HEAT, HVAC, ELECTRICITY, SANITARY FACILITIES, WASTE DISPOSAL FACILITIES, AND TELEPHONE/COMMUNICATION SERVICES. PROVIDE TEMPORARY UTILITIES AND FACILITIES IN ACCORDANCE WITH OSHA AND THE AUTHORITY HAVING JURISDICTION. CONTRACTOR MAY UTILIZE THE COMPANY ELECTRICAL SERVICE IN THE COMPLETION OF THE WORK WHEN IT BECOMES AVAILABLE. USE OF THE LESSORS OR SITE OWNER'S UTILITIES OR FACILITIES IS EXPRESSLY FORBIDDEN EXCEPT AS OTHERWISE ALLOWED IN THE CONTRACT DOCUMENTS.

3.2 ACCESS TO WORK: THE CONTRACTOR SHALL PROVIDE ACCESS TO THE JOB SITE FOR AUTHORIZED COMPANY PERSONNEL AND AUTHORIZED REPRESENTATIVES OF THE ARCHITECT/ENGINEER DURING ALL PHASES OF THE WORK.

3.3 TESTING: REQUIREMENTS FOR TESTING BY THIS CONTRACTOR SHALL BE AS INDICATED HEREWITH, ON THE CONSTRUCTION DRAWINGS, AND IN THE INDIVIDUAL SECTIONS OF THESE SPECIFICATIONS. SHOULD COMPANY CHOOSE TO ENGAGE ANY THIRD-PARTY TO CONDUCT ADDITIONAL TESTING, THE CONTRACTOR SHALL COOPERATE WITH AND PROVIDE A WORK AREA FOR COMPANY'S TEST AGENCY.

3.4 DIMENSIONS: VERIFY DIMENSIONS INDICATED ON DRAWINGS WITH FIELD DIMENSIONS BEFORE FABRICATION OR ORDERING OF MATERIALS. DO NOT SCALE DRAWINGS.

3.5 EXISTING CONDITIONS: NOTIFY THE SPRINT CONSTRUCTION MANAGER OF EXISTING CONDITIONS DIFFERING FROM THOSE INDICATED ON THE DRAWINGS. DO NOT REMOVE OR ALTER STRUCTURAL COMPONENTS WITHOUT PRIOR WRITTEN APPROVAL FROM THE ARCHITECT AND ENGINEER.

SECTION 01 200 – COMPANY FURNISHED MATERIAL AND EQUIPMENT

PART 1 – GENERAL

1.1 THE WORK: THESE STANDARD CONSTRUCTION SPECIFICATIONS IN CONJUNCTION WITH THE OTHER CONTRACT DOCUMENTS AND THE CONSTRUCTION DRAWINGS DESCRIBE THE WORK TO BE PERFORMED BY THE CONTRACTOR.

1.2 RELATED DOCUMENTS:

A. THE REQUIREMENTS OF THIS SECTION APPLY TO ALL SECTIONS IN THIS SPECIFICATION.

B. SPRINT "STANDARD CONSTRUCTION DETAILS FOR WIRELESS SITES" ARE INCLUDED IN AND MADE A PART OF THESE SPECIFICATIONS HEREWITH.

PART 2 – PRODUCTS (NOT USED)

PART 3 – EXECUTION

3.1 RECEIPT OF MATERIAL AND EQUIPMENT:

A. A COMPANY FURNISHED MATERIAL AND EQUIPMENT IS IDENTIFIED ON THE RF DATA SHEET IN THE CONSTRUCTION DOCUMENTS.

B. THE CONTRACTOR IS RESPONSIBLE FOR SPRINT PROVIDED MATERIAL AND EQUIPMENT AND UPON RECEIPT SHALL:

1 ACCEPT DELIVERIES AS SHIPPED AND TAKE RECEIPT.
2. VERIFY COMPLETENESS AND CONDITION OF ALL DELIVERIES.
3. TAKE RESPONSIBILITY FOR EQUIPMENT AND PROVIDE INSURANCE PROTECTION AS REQUIRED IN AGREEMENT.
4. RECORD ANY DEFECTS OR DAMAGES AND WITHIN TWENTY-FOUR HOURS AFTER RECEIPT, REPORT TO SPRINT OR ITS DESIGNATED PROJECT REPRESENTATIVE OF SUCH.
5. PROVIDE SECURE AND NECESSARY WEATHER PROTECTED WAREHOUSING.
6. COORDINATE SAFE AND SECURE TRANSPORTATION OF MATERIAL AND EQUIPMENT, DELIVERING AND OFF-LOADING FROM CONTRACTOR'S WAREHOUSE TO SITE.

3.2 DELIVERABLES:

A. COMPLETE SHIPPING AND RECEIPT DOCUMENTATION IN ACCORDANCE WITH COMPANY PRACTICE.

B. IF APPLICABLE, COMPLETE LOST/STOLEN/DAMAGED DOCUMENTATION REPORT AS NECESSARY IN ACCORDANCE WITH COMPANY PRACTICE, AND AS DIRECTED BY COMPANY.

C. UPLOAD DOCUMENTATION INTO SPRINT SITE MANAGEMENT SYSTEM (SMS) AND/OR PROVIDE HARD COPY DOCUMENTATION AS REQUESTED.

SECTION 01 300 – CELL SITE CONSTRUCTION CO.

PART 1 – GENERAL

1.1 THE WORK: THESE STANDARD CONSTRUCTION SPECIFICATIONS IN CONJUNCTION WITH THE OTHER CONTRACT DOCUMENTS AND THE CONSTRUCTION DRAWINGS DESCRIBE THE WORK TO BE PERFORMED BY THE CONTRACTOR.

1.2 RELATED DOCUMENTS:

A. THE REQUIREMENTS OF THIS SECTION APPLY TO ALL SECTIONS IN THIS SPECIFICATION.

B. SPRINT "STANDARD CONSTRUCTION DETAILS FOR WIRELESS SITES" ARE INCLUDED IN AND MADE A PART OF THESE SPECIFICATIONS HEREWITH.

1.3 NOTICE TO PROCEED

A. NO WORK SHALL COMMENCE PRIOR TO COMPANY'S WRITTEN NOTICE TO PROCEED AND THE ISSUANCE OF THE WORK ORDER.

B. UPON RECEIVING NOTICE TO PROCEED, CONTRACTOR SHALL FULLY PERFORM ALL WORK NECESSARY TO PROVIDE SPRINT WITH AN OPERATIONAL WIRELESS FACILITY.

PART 2 – PRODUCTS (NOT USED)

PART 3 – EXECUTION

3.1 FUNCTIONAL REQUIREMENTS:

A. THE ACTIVITIES DESCRIBED IN THIS PARAGRAPH REPRESENT MINIMUM ACTIONS AND PROCESSES REQUIRED TO SUCCESSFULLY COMPLETE THE WORK. THE ACTIVITIES DESCRIBED ARE NOT EXHAUSTIVE, AND CONTRACTOR SHALL TAKE ANY AND ALL ACTIONS AS NECESSARY TO SUCCESSFULLY COMPLETE THE CONSTRUCTION OF A FULLY FUNCTIONING WIRELESS FACILITY AT THE SITE IN ACCORDANCE WITH COMPANY PROCESSES.

B. SUBMIT SPECIFIC DOCUMENTATION AS INDICATED HEREIN, AND OBTAIN REQUIRED APPROVALS WHILE THE WORK IS BEING PERFORMED.

C. MANAGE AND CONDUCT ALL FIELD CONSTRUCTION SERVICE RELATED ACTIVITIES

D. PROVIDE CONSTRUCTION ACTIVITIES TO THE EXTENT REQUIRED BY THE CONTRACT DOCUMENTS, INCLUDING BUT NOT LIMITED TO THE FOLLOWING:

PLANS PREPARED FOR:

Sprint

PLANS PREPARED BY:

INFINIGY
FROM ZERO TO INFINIGY
the solutions are endless

1033 Watervliet Shaker Rd | Albany, NY 12205
Phone: 518-690-0790 | Fax: 518-690-0793
www.infinigy.com
JOB NUMBER 526-104

PROJECT MANAGER:

AIROSMITH DEVELOPMENT

32 CLINTON ST.
SARATOGA SPRINGS, NY 12866
OFFICE#. (518) 306-3740

ENGINEERING LICENSE:

STATE OF CONNECTICUT
JOHN S. STEVENS
No. 24705
LICENSED PROFESSIONAL ENGINEER
JUL 18 2018

DRAWING NOTICE:

THESE DOCUMENTS ARE CONFIDENTIAL AND ARE THE SOLE PROPERTY OF SPRINT AND MAY NOT BE REPRODUCED, DISSEMINATED OR REDISTRIBUTED WITHOUT THE EXPRESS WRITTEN CONSENT OF SPRINT.

REVISIONS:

DESCRIPTION	DATE	BY	REV.
ISSUED FOR PERMIT	07/02/18	MAP	0

SITE NAME:

TURKEY HILL

SITE NUMBER:

CT03XC336

SITE ADDRESS:

20 POST OFFICE LANE
WESTPORT, CT 06880

SHEET DESCRIPTION:

SPRINT SPECIFICATIONS

SHEET NUMBER:

SP-1

CONTINUE FROM SP-1

1. PERFORM ANY REQUIRED SITE ENVIRONMENTAL MITIGATION.
2. PREPARE GROUND SITES; PROVIDE DE-GRUBBING; AND ROUGH AND FINAL GRADING, AND COMPOUND SURFACE TREATMENTS.
3. MANAGE AND CONDUCT ALL ACTIVITIES FOR INSTALLATION OF UTILITIES INCLUDING ELECTRICAL AND TELCO BACKHAUL.
4. INSTALL UNDERGROUND FACILITIES INCLUDING UNDERGROUND POWER AND COMMUNICATIONS CONDUITS, AND UNDERGROUND GROUNDING SYSTEM.
5. INSTALL ABOVE GROUND GROUNDING SYSTEMS.
6. PROVIDE NEW HVAC INSTALLATIONS AND MODIFICATIONS.
7. INSTALL "H-FRAMES", CABINETS AND SHELTERS AS INDICATED.
8. INSTALL ROADS, ACCESS WAYS, CURBS AND DRAINS AS INDICATED.
9. ACCOMPLISH REQUIRED MODIFICATION OF EXISTING FACILITIES.
10. PROVIDE ANTENNA SUPPORT STRUCTURE FOUNDATIONS.
11. PROVIDE SLABS AND EQUIPMENT PLATFORMS.
12. INSTALL COMPOUND FENCING, SIGHT SHIELDING, LANDSCAPING AND ACCESS BARRIERS.
13. PERFORM INSPECTION AND MATERIAL TESTING AS REQUIRED HEREINAFTER.
14. CONDUCT SITE RESISTANCE TO EARTH TESTING AS REQUIRED HEREINAFTER
15. INSTALL FIXED GENERATOR SETS AND OTHER STANDBY POWER SOLUTIONS.
16. INSTALL TOWERS, ANTENNA SUPPORT STRUCTURES AND PLATFORMS ON EXISTING TOWERS AS REQUIRED.
17. INSTALL CELL SITE RADIOS, MICROWAVE, GPS, COAXIAL MAINLINE, ANTENNAS, CROSS BAND COUPLERS, TOWER TOP AMPLIFIERS, LOW NOISE AMPLIFIERS AND RELATED EQUIPMENT.
18. PERFORM, DOCUMENT, AND CLOSE OUT ANY CONSTRUCTION CONTROL DOCUMENTS THAT MAY BE REQUIRED BY GOVERNMENT AGENCIES AND LANDLORDS.
19. PERFORM ANTENNAL AND COAX SWEEP TESTING AND MAKE ANY AND ALL NECESSARY CORRECTIONS.
20. REMAIN ON SITE MOBILIZED THROUGHOUT HAND-OFF AND INTEGRATION TO ASSIST AS NEEDED UNTIL SITE IS DEEMED SUBSTANTIALLY COMPLETE AND PLACED "ON AIR."

3.2 GENERAL REQUIREMENTS FOR CIVIL CONSTRUCTION:

A. CONTRACTOR SHALL KEEP THE SITE FREE FROM ACCUMULATING WASTE MATERIAL, DEBRIS, AND TRASH. AT THE COMPLETION OF THE WORK, CONTRACTOR SHALL REMOVE FROM THE SITE ALL REMAINING RUBBISH, IMPLEMENTS, TEMPORARY FACILITIES, AND SURPLUS MATERIALS.

B. EQUIPMENT ROOMS SHALL AT ALL TIMES BE MAINTAINED "BROOM CLEAN" AND CLEAR OF DEBRIS.

C. CONTRACTOR SHALL TAKE ALL REASONABLE PRECAUTIONS TO DISCOVER AND LOCATE ANY HAZARDOUS CONDITION.

1. IN THE EVENT CONTRACTOR ENCOUNTERS ANY HAZARDOUS CONDITION WHICH HAS NOT BEEN ABATED OR OTHERWISE MITIGATED, CONTRACTOR AND ALL OTHER PERSONS SHALL IMMEDIATELY STOP WORK IN THE AFFECTED AREA AND NOTIFY COMPANY IN WRITING. THE WORK IN THE AFFECTED AREA SHALL NOT BE RESUMED EXCEPT BY WRITTEN NOTIFICATION BY COMPANY.
2. CONTRACTOR AGREES TO USE CARE WHILE ON THE SITE AND SHALL NOT TAKE ANY ACTION THAT WILL OR MAY RESULT IN OR CAUSE THE HAZARDOUS CONDITION TO BE FURTHER RELEASED IN THE ENVIRONMENT, OR TO FURTHER EXPOSE INDIVIDUALS TO THE HAZARD.

D. CONTRACTOR'S ACTIVITIES SHALL BE RESTRICTED TO THE PROJECT LIMITS. SHOULD AREAS OUTSIDE THE PROJECT LIMITS BE AFFECTED BY CONTRACTOR'S ACTIVITIES, CONTRACTOR SHALL IMMEDIATELY RETURN THEM TO ORIGINAL CONDITION

E. CONDUCT TESTING AS REQUIRED HEREIN.

3.3 DELIVERABLES:

A. CONTRACTOR SHALL REVIEW, APPROVE, AND SUBMIT TO SPRINT SHOP DRAWINGS, PRODUCT DATA, SAMPLES, AND SIMILAR SUBMITTALS AS REQUIRED HEREINAFTER

B. PROVIDE DOCUMENTATION INCLUDING, BUT NOT LIMITED TO, THE FOLLOWING. DOCUMENTATION SHALL BE FORWARDED IN ORIGINAL FORMAT AND/OR UPLOADED INTO SMS.

1. ALL CORRESPONDENCE AND PRELIMINARY CONSTRUCTION REPORTS.
2. PROJECT PROGRESS REPORTS.
3. CIVIL CONSTRUCTION START DATE (POPULATE FIELD IN SMS AND/OR FORWARD NOTIFICATION).
4. ELECTRICAL SERVICE COMPLETION DATE (POPULATE FIELD IN SMS AND/OR FORWARD NOTIFICATION).
5. LINES AND ANTENNA INSTALL DATE (POPULATE FIELD IN SMS AND/OR FORWARD NOTIFICATION).
6. POWER INSTALL DATE (POPULATE FIELD IN SMS AND/OR FORWARD NOTIFICATION).
7. TELCO READY DATE (POPULATE FIELD IN SMS AND/OR FORWARD NOTIFICATION).
8. PPC (OR SHELTER) INSTALL DATE (POPULATE FIELD IN SMS AND/OR FORWARD NOTIFICATION).
9. TOWER CONSTRUCTION START DATE (POPULATE FIELD IN SMS AND/OR FORWARD NOTIFICATION).
10. TOWER CONSTRUCTION COMPLETE DATE (POPULATE FIELD IN SMS AND/OR FORWARD NOTIFICATION).
11. BTS AND RADIO EQUIPMENT DELIVERED AT SITE DATE (POPULATE FIELD IN SMS AND/OR FORWARD NOTIFICATION).
12. NETWORK OPERATIONS HANDOFF CHECKLIST (HOC WALK) COMPLETE (UPLOAD FORM IN SMS)
13. CIVIL CONSTRUCTION COMPLETE DATE (POPULATE FIELD IN SMS AND/OR FORWARD NOTIFICATION).
14. SITE CONSTRUCTION PROGRESS PHOTOS UNLOADED INTO SMS.

SECTION 01 400 – SUBMITTALS & TESTS

PART 1 – GENERAL

1.1 THE WORK: THESE STANDARD CONSTRUCTION SPECIFICATIONS IN CONJUNCTION WITH THE OTHER CONTRACT DOCUMENTS AND THE CONSTRUCTION DRAWINGS DESCRIBE THE WORK TO BE PERFORMED BY THE CONTRACTOR.

1.2 RELATED DOCUMENTS:

A. THE REQUIREMENTS OF THIS SECTION APPLY TO ALL SECTIONS IN THIS SPECIFICATION.

B. SPRINT "STANDARD CONSTRUCTION DETAILS FOR WIRELESS SITES" ARE INCLUDED IN AND MADE A PART OF THESE SPECIFICATIONS HEREWITH.

1.3 SUBMITTALS:

A. THE WORK IN ALL ASPECTS SHALL COMPLY WITH THE CONSTRUCTION DRAWINGS AND THESE SPECIFICATIONS.

B. SUBMIT THE FOLLOWING TO COMPANY REPRESENTATIVE FOR APPROVAL.

1. CONCRETE MIX-DESIGNS FOR TOWER FOUNDATIONS, ANCHORS PIERS, AND CONCRETE PAVING.
2. CONCRETE BREAK TESTS AS SPECIFIED HEREIN.
3. SPECIAL FINISHES FOR INTERIOR SPACES, IF ANY.
4. ALL EQUIPMENT AND MATERIALS SO IDENTIFIED ON THE CONSTRUCTION DRAWINGS.
5. CHEMICAL GROUNDING DESIGN

D. ALTERNATES: AT THE COMPANY'S REQUEST, ANY ALTERNATIVES TO THE MATERIALS OR METHODS SPECIFIED SHALL BE SUBMITTED TO SPRINT'S CONSTRUCTION MANAGER FOR APPROVAL PRIOR TO BEING SHIPPED TO SITE. SPRINT WILL REVIEW AND APPROVE ONLY THOSE REQUESTS MADE IN WRITING. NO VERBAL APPROVALS WILL BE CONSIDERED. SUBMITTAL FOR APPROVAL SHALL INCLUDE A STATEMENT OF COST REDUCTION PROPOSED FOR USE OF ALTERNATE PRODUCT.

1.4 TESTS AND INSPECTIONS:

A. THE CONTRACTOR SHALL BE RESPONSIBLE FOR ALL CONSTRUCTION TESTS, INSPECTIONS AND PROJECT DOCUMENTATION.

B. CONTRACTOR SHALL ACCOMPLISH TESTING INCLUDING BUT NOT LIMITED TO THE FOLLOWING:

1. COAX SWEEPS AND FIBER TESTS PER TS-0200 REV 4 ANTENNA LINE ACCEPTANCE STANDARDS.
2. AGL, AZIMUTH AND DOWNTILT USING ELECTRONIC COMMERCIAL MADE-FOR-THE-PURPOSE ANTENNA ALIGNMENT TOOL.
3. CONTRACTOR SHALL BE RESPONSIBLE FOR ANY AND ALL CORRECTIONS TO ANY WORK IDENTIFIED AS UNACCEPTABLE IN SITE INSPECTION ACTIVITIES AND/OR AS A RESULT OF TESTING.

C. REQUIRED CLOSEOUT DOCUMENTATION INCLUDES, BUT IS NOT LIMITED TO THE FOLLOWING;

1. AZIMUTH, DOWNTILT, AGL – UPLOAD REPORT FROM ANTENNA ALIGNMENT TOOL TO SITERRA TASK 465. INSTALLED AZIMUTH, DOWNTILT, AND AGL MUST CONFORM TO THE RF DATA SHEETS. SWEEP AND FIBER TESTS
2. SCANABLE BARCODE PHOTOGRAPHS OF TOWER TOP AND INACCESSIBLE SERIALIZED EQUIPMENT
3. ALL AVAILABLE JURISDICTIONAL INFORMATION
4. PDF SCAN OF REDLINES PRODUCED IN FIELD
5. ELECTRONIC AS-BUILT DRAWINGS IN AUTOCAD AND PDF FORMATS. ANY FIELD CHANGE MUST BE REFLECTED BY MODIFYING THE PLANS, ELEVATIONS, AND DETAILS IN THE DRAWING SETS. GENERAL NOTES INDICATING MODIFICATIONS WILL NOT BE ACCEPTED. CHANGES SHALL BE HIGHLIGHTED AS "CLOUDS" IDENTIFIED AS THE "AS-BUILT" CONDITION.
6. LIEN WAIVERS
7. FINAL PAYMENT APPLICATION
8. REQUIRED FINAL CONSTRUCTION PHOTOS
9. CONSTRUCTION AND COMMISSIONING CHECKLIST COMPLETE WITH NO DEFICIENT ITEMS
10. ALL POST NTP TASKS INCLUDING DOCUMENT UPLOADS COMPLETED IN SITERRA (SPRINTS DOCUMENT REPOSITORY OF RECORD).

1.5 COMMISSIONING: PERFORM ALL COMMISSIONING AS REQUIRED BY APPLICABLE MOPs

1.6 INTEGRATION: PERFORM ALL INTEGRATION ACTIVITIES AS REQUIRED BY APPLICABLE MOPs

PART 2 – PRODUCTS (NOT USED)

PART 3 – EXECUTION

3.1 REQUIREMENTS FOR TESTING:

A. THIRD PARTY TESTING AGENCY:

1. WHEN THE USE OF A THIRD PARTY INDEPENDENT TESTING AGENCY IS REQUIRED, THE AGENCY THAT IS SELECTED MUST PERFORM SUCH WORK ON A REGULAR BASIS IN THE STATE WHERE THE PROJECT IS LOCATED AND HAVE A THOROUGH UNDERSTANDING OF LOCAL AVAILABLE MATERIALS, INCLUDING THE SOIL, ROCK, AND GROUNDWATER CONDITIONS.
2. THE THIRD PARTY TESTING AGENCY IS TO BE FAMILIAR WITH THE APPLICABLE REQUIREMENTS FOR THE TESTS TO BE DONE, EQUIPMENT TO BE USED, AND ASSOCIATED HEALTH AND SAFETY ISSUES.
3. EXPERIENCE IN SOILS, CONCRETE, MASONRY, AGGREGATE, AND ASPHALT TESTING USING ASTM, AASJTO, AND OTHER METHODS IS NEEDED.
4. EXPERIENCE IN SOILS, CONCRETE, MASONRY, AGGREGATE, AND ASPHALT TESTING USING ASTM, AASJTO, AND OTHER METHODS IS NEEDED.

3.2 REQUIRED TESTS:

A. CONTRACTOR SHALL ACCOMPLISH TESTING INCLUDING BUT NOT LIMITED TO THE FOLLOWING:

1. CONCRETE CYLINDER BREAK TESTS FOR THE TOWER AND ANCHOR FOUNDATIONS AS SPECIFIED IN SECTION: PORTLAND CEMENT CONCRETE PAVING.
2. ASPHALT ROADWAY COMPACTED THICKNESS, SURFACE SMOOTHNESS, AND COMPACTED DENSITY TESTING AS SPECIFIED IN SECTION: HOT MIX ASPHALT PAVING.
3. FIELD QUALITY CONTROL TESTING AS SPECIFIED IN SECTION: PORTLAND CEMENT CONCRETE PAVING.
4. TESTING REQUIRED UNDER SECTION: AGGREGATE BASE FOR ACCESS ROADS, PADS AND ANCHOR LOCATIONS
5. STRUCTURAL BACKFILL COMPACTION TESTS FOR THE TOWER FOUNDATION.
6. SITE RESISTANCE TO EARTH TESTING PER EXHIBIT: CELL SITE GROUNDING SYSTEM DESIGN.
7. ANTENNA AND COAX SWEEP TESTS PER EXHIBIT: ANTENNA TRANSMISSION LINE ACCEPTANCE STANDARDS.
8. GROUNDING AT ANTENNA MASTS FOR GPS AND ANTENNAS
9. ALL OTHER TESTS REQUIRED BY COMPANY OR JURISDICTION.

3.3 REQUIRED INSPECTIONS

A. SCHEDULE INSPECTIONS WITH COMPANY REPRESENTATIVE.

B. CONDUCT INSPECTIONS INCLUDING BUT NOT LIMITED TO THE FOLLOWING:

1. GROUNDING SYSTEM INSTALLATION PRIOR TO EARTH CONCEALMENT DOCUMENTED WITH DIGITAL PHOTOGRAPHS BY CONTRACTOR, APPROVED BY A&E OR SPRINT REPRESENTATIVE.
2. FORMING FOR CONCRETE AND REBAR PLACEMENT PRIOR TO POUR DOCUMENTED WITH DIGITAL PHOTOGRAPHS BY CONTRACTOR, APPROVED BY A&E OR SPRINT REPRESENTATIVE.
3. COMPACTION OF BACKFILL MATERIALS; AGGREGATE BASE FOR ROADS, PADS, AND ANCHORS; ASPHALT PAVING; AND SHAFT BACKFILL FOR CONCRETE AND WOOD POLES, BY INDEPENDENT THIRD PARTY AGENCY.
4. PRE- AND POST-CONSTRUCTION ROOFTOP AND STRUCTURAL INSPECTIONS ON EXISTING FACILITIES.
5. TOWER ERECTION SECTION STACKING AND PLATFORM ATTACHMENT DOCUMENTED BY DIGITAL PHOTOGRAPHS BY THIRD PARTY AGENCY.
6. ANTENNA AZIMUTH , DOWN TILT AND PER SUNLIGHT TOOL SUNSIGHT INSTRUMENTS – ANTENNALIGN ALIGNMENT TOOL (AAT)

PLANS PREPARED FOR:
Sprint

PLANS PREPARED BY:
INFINIGY
FROM ZERO TO INFINIGY
the solutions are endless
1033 Watervliet Shaker Rd | Albany, NY 12205
Phone: 518-690-0790 | Fax: 518-690-0793
www.infinigy.com
JOB NUMBER 526-104

PROJECT MANAGER:
AIROSMITH DEVELOPMENT
32 CLINTON ST.
SARATOGA SPRINGS, NY 12866
OFFICE#. (518) 306-3740

ENGINEERING LICENSE:
STATE OF CONNECTICUT
JOHN S. STEVENS
No. 2870
LICENSED PROFESSIONAL ENGINEER
JUL 18 2018

DRAWING NOTICE:
THESE DOCUMENTS ARE CONFIDENTIAL AND ARE THE SOLE PROPERTY OF SPRINT AND MAY NOT BE REPRODUCED, DISSEMINATED OR REDISTRIBUTED WITHOUT THE EXPRESS WRITTEN CONSENT OF SPRINT.

REVISIONS:

DESCRIPTION	DATE	BY	REV.
ISSUED FOR PERMIT	07/02/18	MAP	0

SITE NAME: TURKEY HILL

SITE NUMBER: CT03XC336

SITE ADDRESS: 20 POST OFFICE LANE WESTPORT, CT 06880

SHEET DESCRIPTION: SPRINT SPECIFICATIONS

SHEET NUMBER: SP-2

CONTINUE FROM SP-2

7. VERIFICATION DOCUMENTED WITH THE ANTENNA CHECKLIST REPORT, BY A&E, SITE DEVELOPMENT REP, OR RF REP.

8. FINAL INSPECTION CHECKLIST AND HANDOFF WALK (HOC.). SIGNED FORM SHOWING ACCEPTANCE BY FIELD OPS IS TO BE UPLOADED INTO SMS.

9. COAX SWEEP AND FIBER TESTING DOCUMENTS SUBMITTED VIA SMS FOR RF APPROVAL.

10. SCAN-ABLE BARCODE PHOTOGRAPHS OF TOWER TOP AND INACCESSIBLE SERIALIZED EQUIPMENT

11. ALL AVAILABLE JURISDICTIONAL INFORMATION

12. PDF SCAN OF REDLINES PRODUCED IN FIELD

C. THE CONTRACTOR SHALL BE RESPONSIBLE FOR ANY AND ALL CORRECTIONS TO ANY WORK IDENTIFIED AS UNACCEPTABLE IN SITE INSPECTION ACTIVITIES AND/OR AS A RESULT OF TESTING.

D. CONSTRUCTION INSPECTIONS AND CORRECTIVE MEASURES SHALL BE DOCUMENTED BY THE CONTRACTOR WITH WRITTEN REPORTS AND PHOTOGRAPHS. PHOTOGRAPHS MUST BE DIGITAL AND OF SUFFICIENT QUALITY TO CLEARLY SHOW THE SITE CONSTRUCTION. PHOTOGRAPHS MUST CLEARLY IDENTIFY THE PHOTOGRAPHED ITEM AND BE LABELED WITH THE SITE CASCADE NUMBER, SITE NAME, DESCRIPTION, AND DATE.

3.4 DELIVERABLES: TEST AND INSPECTION REPORTS AND CLOSEOUT DOCUMENTATION SHALL BE UPLOADED TO THE SMS AND/OR FORWARDED TO SPRINT FOR INCLUSION INTO THE PERMANENT SITE FILES.

A. THE FOLLOWING TEST AND INSPECTION REPORTS SHALL BE PROVIDED AS APPLICABLE.

1. CONCRETE MIX AND CYLINDER BREAK REPORTS.

2. STRUCTURAL BACKFILL COMPACTION REPORTS.

3. SITE RESISTANCE TO EARTH TEST.

4. ANTENNA AZIMUTH AND DOWN TILT VERIFICATION

5. TOWER ERECTION INSPECTIONS AND MEASUREMENTS DOCUMENTING TOWER INSTALLED PER SUPPLIER'S REQUIREMENTS AND THE APPLICABLE SECTIONS HEREIN.

6. COAX CABLE SWEEP TESTS PER COMPANY'S "ANTENNA LINE ACCEPTANCE STANDARDS".

B. REQUIRED CLOSEOUT DOCUMENTATION INCLUDES THE FOLLOWING;

1. TEST WELLS AND TRENCHES: PHOTOGRAPHS OF ALL TEST WELLS; PHOTOGRAPHS SHOWING ALL OPEN EXCAVATIONS AND TRENCHING PRIOR TO BACKFILLING SHOWING A TAPE MEASURE VISIBLE IN THE EXCAVATIONS INDICATING DEPTH.

2. CONDUITS, CONDUCTORS AND GROUNDING: PHOTOGRAPHS SHOWING TYPICAL INSTALLATION OF CONDUCTORS AND CONNECTORS; PHOTOGRAPHS SHOWING TYPICAL BEND RADIUS OF INSTALLED GROUND WIRES AND GROUND ROD SPACING;

3. CONCRETE FORMS AND REINFORCING: CONCRETE FORMING AT TOWER AND EQUIPMENT/SHELTER PAD/FOUNDATIONS – PHOTOGRAPHS SHOWING ALL REINFORCING STEEL, UTILITY AND CONDUIT STUB OUTS; PHOTOGRAPHS SHOWING CONCRETE POUR OF SHELTER SLAB/FOUNDATION, TOWER FOUNDATION AND GUY ANCHORS WITH VIBRATOR IN USE; PHOTOGRAPHS SHOWING EACH ANCHOR ON GUYED TOWERS, BEFORE CONCRETE POUR.

4. TOWER, ANTENNAS AND MAINLINE: INSPECTION AND PHOTOGRAPHS OF SECTION STACKING; INSPECTION AND PHOTOGRAPHS OF PLATFORM COMPONENT ATTACHMENT POINTS; PHOTOGRAPHS OF TOWER TOP GROUNDING; PHOTOS OF TOWER COAX LINE COLOR CODING AT THE TOP AND AT GROUND LEVEL; INSPECTION AND PHOTOGRAPHS OF OPERATIONAL OF TOWER LIGHTING, AND PLACEMENT OF FAA REGISTRATION SIGN; PHOTOGRAPHS SHOWING ADDITIONAL GROUNDING POINTS FOR TOWERS GREATER THAN 200 FEET.; PHOTOS OF ANTENNA GROUND BAR, EQUIPMENT GROUND BAR, AND MASTER GROUND BAR; PHOTOS OF GPS ANTENNA(S); PHOTOS OF EACH SECTOR OF ANTENNAS; ONE PHOTOGRAPH LOOKING AT THE SECTOR AND ONE FROM BEHIND SHOWING THE PROJECTED COVERAGE AREA; PHOTOS OF COAX WEATHERPROOFING – TOP AND BOTTOM; PHOTOS OF COAX GROUNDING--TOP AND BOTTOM; PHOTOS OF ANTENNA AND MAST GROUNDING; PHOTOS OF COAX CABLE ENTRY INTO SHELTER; PHOTOS OF PLATFORM MECHANICAL CONNECTIONS TO TOWER/MONOPOLE.

5. ROOF TOPS: PRE-CONSTRUCTION AND POST-CONSTRUCTION VISUAL INSPECTION AND PHOTOGRAPHS OF THE ROOF AND INTERIOR TO DETERMINE AND DOCUMENT CONDITIONS; ROOF TOP CONSTRUCTION INSPECTIONS AS REQUIRED BY THE JURISDICTION; PHOTOGRAPHS OF CABLE TRAY AND/OR ICE BRIDGE; PHOTOGRAPHS OF DOGHOUSE/CABLE EXIT FROM ROOF;

6. SITE LAYOUT – PHOTOGRAPHS OF THE OVERALL COMPOUND, INCLUDING EQUIPMENT PLATFORM FROM ALL FOUR CORNERS.

7. FINISHED UTILITIES: CLOSE-UP PHOTOGRAPHS OF THE PPC BREAKER PANEL; CLOSE-UP PHOTOGRAPH OF THE INSIDE OF THE TELCO PANEL AND NIU; CLOSE-UP PHOTOGRAPH OF THE POWER METER AND DISCONNECT; PHOTOS OF POWER AND TELCO ENTRANCE TO COMPANY ENCLOSURE; PHOTOGRAPHS AT METER BOX AND/OR FACILITY DISTRIBUTION PANEL.

8. REQUIRED MATERIALS CERTIFICATIONS: CONCRETE MIX DESIGNS; MILL CERTIFICATION FOR ALL REINFORCING AND STRUCTURAL STEEL; AND ASPHALT PAVING MIX DESIGN.

9. ANY AND ALL SUBMITTALS BY THE JURISDICTION OR COMPANY.

SECTION 01 400 – SUBMITTALS & TESTS

PART 1 – GENERAL

1.1 THE WORK: THESE STANDARD CONSTRUCTION SPECIFICATIONS IN CONJUNCTION WITH THE OTHER CONTRACT DOCUMENTS AND THE CONSTRUCTION DRAWINGS DESCRIBE THE WORK TO BE PERFORMED BY THE CONTRACTOR.

1.2 RELATED DOCUMENTS:

A. THE REQUIREMENTS OF THIS SECTION APPLY TO ALL SECTIONS IN THIS SPECIFICATION.

B. SPRINT "STANDARD CONSTRUCTION DETAILS FOR WIRELESS SITES" ARE INCLUDED IN AND MADE A PART OF THESE SPECIFICATIONS HEREWITH.

PART 2 – PRODUCTS (NOT USED)

PART 3 – EXECUTION

3.1 WEEKLY REPORTS:

A. CONTRACTOR SHALL PROVIDE SPRINT WITH WEEKLY REPORTS SHOWING PROJECT STATUS. THIS STATUS REPORT FORMAT WILL BE PROVIDED TO THE CONTRACTOR BY SPRINT. THE REPORT WILL CONTAIN SITE ID NUMBER, THE MILESTONES FOR EACH SITE, INCLUDING THE BASELINE DATE, ESTIMATED COMPLETION DATE AND ACTUAL COMPLETION DATE.

B. REPORT INFORMATION WILL BE TRANSMITTED TO SPRINT VIA ELECTRONIC MEANS AS REQUIRED. THIS INFORMATION WILL PROVIDE A BASIS FOR PROGRESS MONITORING AND PAYMENT.

3.2 PROJECT CONFERENCE CALLS:

A. SPRINT MAY HOLD WEEKLY PROJECT CONFERENCE CALLS. CONTRACTOR WILL BE REQUIRED TO COMMUNICATE SITE STATUS, MILESTONE COMPLETIONS AND UPCOMING MILESTONE PROJECTIONS, AND ANSWER ANY OTHER SITE STATUS QUESTIONS AS NECESSARY.

3.3 PROJECT TRACKING IN SMS:

A. CONTRACTOR SHALL PROVIDE SCHEDULE UPDATES AND PROJECTIONS IN THE SMS SYSTEM ON A WEEKLY BASIS.

3.4 ADDITIONAL REPORTING:

A. ADDITIONAL OR ALTERNATE REPORTING REQUIREMENTS MAY BE ADDED TO THE REPORT AS DETERMINED TO BE REASONABLY NECESSARY BY COMPANY.

3.5 PROJECT PHOTOGRAPHS:

A. FILE DIGITAL PHOTOGRAPHS OF COMPLETED SITE IN JPEG FORMAT IN THE SMS PHOTO LIBRARY FOR THE RESPECTIVE SITE. PHOTOGRAPHS SHALL BE CLEARLY LABELED WITH SITE NUMBER, NAME AND DESCRIPTION, AND SHALL INCLUDE AT A MINIMUM THE FOLLOWING AS APPLICABLE:

1. 1SHELTER AND TOWER OVERVIEW.

2. TOWER FOUNDATION(S) – FORMS AND STEEL BEFORE POUR (EACH ANCHOR ON GUYED TOWERS).

3. TOWER FOUNDATION(S) POUR WITH VIBRATOR IN USE (EACH ANCHOR ON GUYED TOWERS).

4. TOWER STEEL AS BEING INSTALLED INTO HOLE (SHOW ANCHOR STEEL ON GUYED TOWERS).

5. PHOTOS OF TOWER SECTION STACKING.

6. CONCRETE TESTING / SAMPLES.

7. PLACING OF ANCHOR BOLTS IN TOWER FOUNDATION.

8. BUILDING/WATER TANK FROM ROAD FOR TENANT IMPROVEMENTS OR COMMENTS.

9. SHELTER FOUNDATION--FORMS AND STEEL BEFORE POURING.

10. SHELTER FOUNDATION POUR WITH VIBRATOR IN USE.

11. COAX CABLE ENTRY INTO SHELTER.

12. PLATFORM MECHANICAL CONNECTIONS TO TOWER/MONOPOLE.

13. ROOFTOP PRE AND POST CONSTRUCTION PHOTOS TO INCLUDE PENETRATIONS AND INTERIOR CEILING.

14. PHOTOS OF TOWER TOP COAX LINE COLOR CODING AND COLOR CODING AT GROUND LEVEL.

15. PHOTOS OF ALL APPROPRIATE COMPANY OR REGULATORY SIGNAGE.

16. PHOTOS OF EQUIPMENT BOLT DOWN INSIDE SHELTER.

17. POWER AND TELCO ENTRANCE TO COMPANY ENCLOSURE AND POWER AND TELCO SUPPLY LOCATIONS INCLUDING METER/DISCONNECT.

18. ELECTRICAL TRENCH(S) WITH ELECTRICAL / CONDUIT BEFORE BACKFILL.

19. ELECTRICAL TRENCH(S) WITH FOIL-BACKED TAPE BEFORE FURTHER BACKFILL.

20. TELCO TRENCH WITH TELEPHONE / CONDUIT BEFORE BACKFILL.

21. TELCO TRENCH WITH FOIL-BACKED TAPE BEFORE FURTHER BACKFILL.

22. SHELTER GROUND-RING TRENCH WITH GROUND-WIRE BEFORE BACKFILL (SHOW ALL CAD WELDS AND BEND RADII).

23. TOWER GROUND-RING TRENCH WITH GROUND-WIRE BEFORE BACKFILL (SHOW ALL CAD WELDS AND BEND RADII).

24. FENCE GROUND-RING TRENCH WITH GROUND-WIRE BEFORE BACKFILL (SHOW ALL CAD WELDS AND BEND RADII).

25. ALL BTS GROUND CONNECTIONS.

26. ALL GROUND TEST WELLS.

27. ANTENNA GROUND BAR AND EQUIPMENT GROUND BAR.

28. ADDITIONAL GROUNDING POINTS ON TOWERS ABOVE 200'.

29. HVAC UNITS INCLUDING CONDENSERS ON SPLIT SYSTEMS.

30. GPS ANTENNAS.

31. CABLE TRAY AND/OR WAVEGUIDE BRIDGE.

32. DOGHOUSE/CABLE EXIT FROM ROOF.

33. EACH SECTOR OF ANTENNAS; ONE PHOTOGRAPH LOOKING AT THE SECTOR AND ONE FROM BEHIND SHOWING THE PROJECTED COVERAGE AREA.

34. MASTER BUS BAR.

35. TELCO BOARD AND NIU.

36. ELECTRICAL DISTRIBUTION WALL.

37. CABLE ENTRY WITH SURGE SUPPRESSION.

38. ENTRANCE TO EQUIPMENT ROOM.

39. COAX WEATHERPROOFING-TOP AND BOTTOM OF TOWER.

40. COAX GROUNDING --TOP AND BOTTOM OF TOWER.

41. ANTENNA AND MAST GROUNDING.

42. LANDSCAPING – WHERE APPLICABLE.

3.6 FINAL PROJECT ACCEPTANCE: COMPLETE ALL REQUIRED REPORTING TASKS PER CONTRACT, CONTRACT DOCUMENTS OR THE SPRINT INTEGRATED CONSTRUCTION STANDARDS FOR WIRELESS SITES AND UPLOAD INTO SITERRA.

PLANS PREPARED FOR:

Sprint

PLANS PREPARED BY:

INFINIGY
FROM ZERO TO INFINIGY
the solutions are endless
1033 Watervliet Shaker Rd | Albany, NY 12205
Phone: 518-690-0790 | Fax: 518-690-0793
www.infinigy.com
JOB NUMBER 526-104

PROJECT MANAGER:

AIROSMITH DEVELOPMENT
32 CLINTON ST.
SARATOGA SPRINGS, NY 12866
OFFICE#. (518) 306-3740

ENGINEERING LICENSE:

STATE OF CONNECTICUT
JOHN S. STEVENS
No. 24705
LICENSED PROFESSIONAL ENGINEER
JUL 18 2018

DRAWING NOTICE:

THESE DOCUMENTS ARE CONFIDENTIAL AND ARE THE SOLE PROPERTY OF SPRINT AND MAY NOT BE REPRODUCED, DISSEMINATED OR REDISTRIBUTED WITHOUT THE EXPRESS WRITTEN CONSENT OF SPRINT.

REVISIONS:

DESCRIPTION	DATE	BY	REV.
ISSUED FOR PERMIT	07/02/18	MAP	0

SITE NAME:

TURKEY HILL

SITE NUMBER:

CT03XC336

SITE ADDRESS:

20 POST OFFICE LANE
WESTPORT, CT 06880

SHEET DESCRIPTION:

SPRINT SPECIFICATIONS

SHEET NUMBER:

SP-3

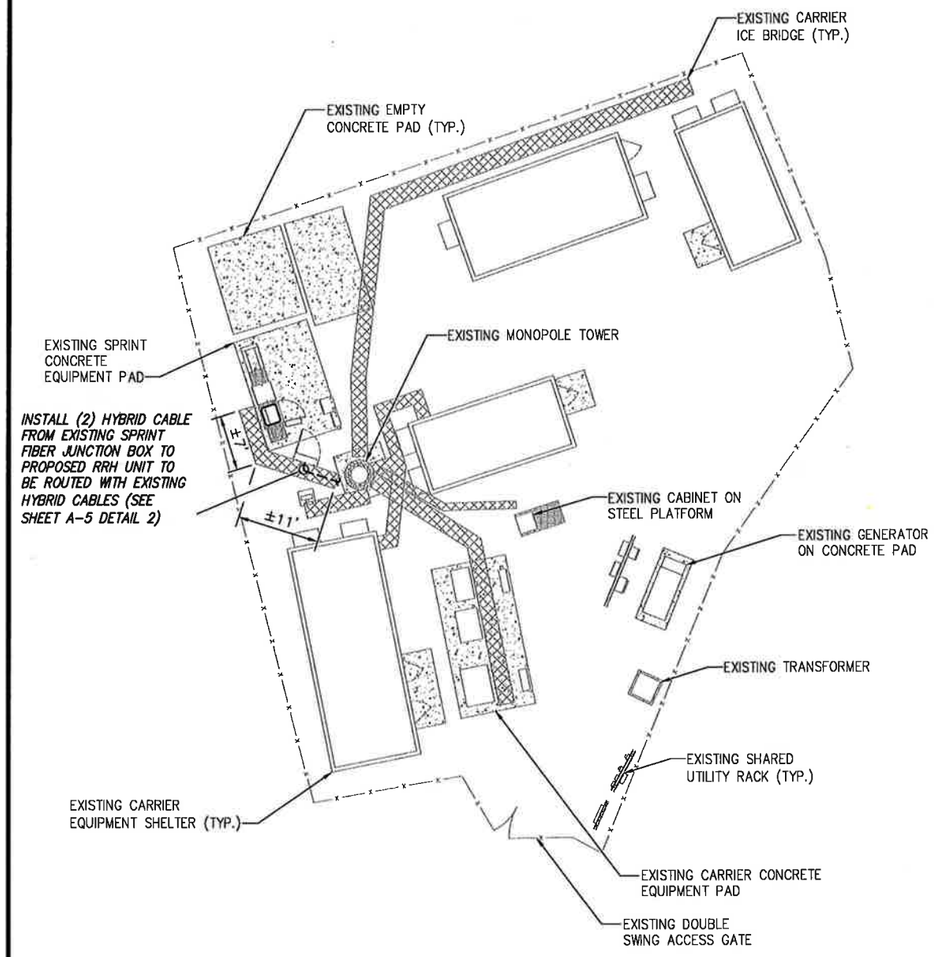

INFORMATION CONTAINED WITHIN DRAWINGS ARE BASED ON PROVIDED INFORMATION AND ARE NOT THE RESULT OF A FIELD SURVEY.

N

GRAPHIC SCALE:
20' 10' 0 10' 20'
SCALE (11x17): 1" = 20'-0"
SCALE (22x34): 1" = 10'-0"

OVERALL SITE PLAN | SCALE: AS NOTED | 1

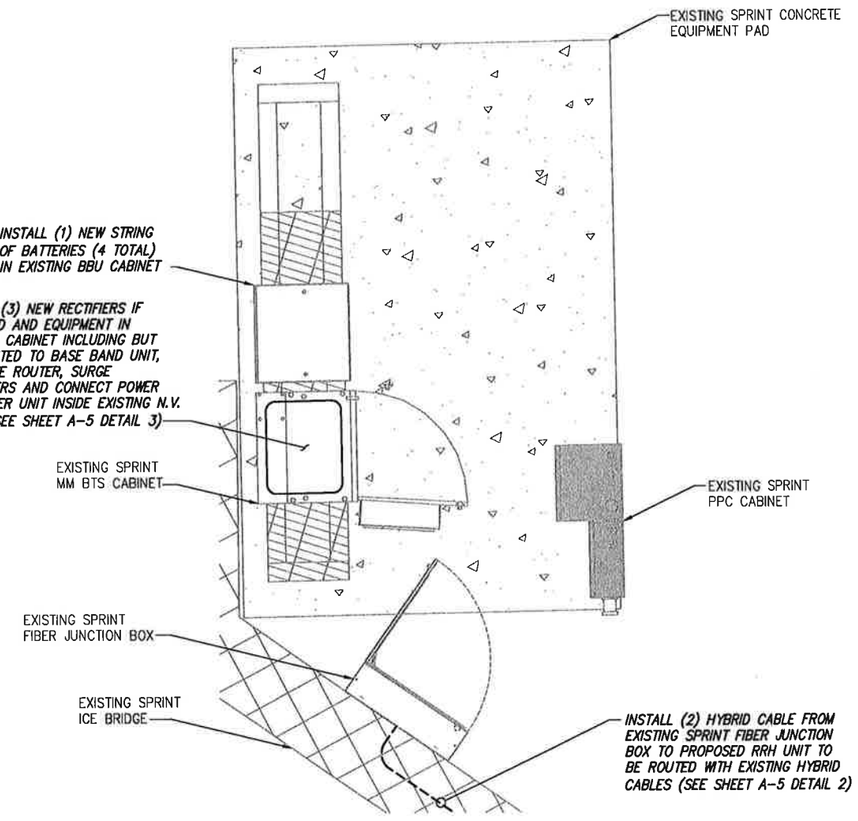

N

GRAPHIC SCALE:
4' 2' 0 2' 4'
SCALE (11x17): 1" = 4'-0"
SCALE (22x34): 1" = 2'-0"

SPRINT EQUIPMENT PLAN | SCALE: AS NOTED | 2

PLANS PREPARED FOR:

Sprint

PLANS PREPARED BY:

INFINIGY
FROM ZERO TO INFINIGY
the solutions are endless

1033 Watervliet Shaker Rd | Albany, NY 12205
Phone: 518-690-0790 | Fax: 518-690-0793
www.infinigy.com
JOB NUMBER 526-104

PROJECT MANAGER:

AIRSMITH DEVELOPMENT

32 CLINTON ST.
SARATOGA SPRINGS, NY 12866
OFFICE#. (518) 308-3740

ENGINEERING LICENSE:

STATE OF CONNECTICUT
JOHN S. STEVENS
No. 24705
LICENSED PROFESSIONAL ENGINEER
JUL 18 2018

DRAWING NOTICE:

THESE DOCUMENTS ARE CONFIDENTIAL AND ARE THE SOLE PROPERTY OF SPRINT AND MAY NOT BE REPRODUCED, DISSEMINATED OR REDISTRIBUTED WITHOUT THE EXPRESS WRITTEN CONSENT OF SPRINT.

REVISIONS:

DESCRIPTION	DATE	BY	REV.
ISSUED FOR PERMIT	07/02/18	MAP	0

SITE NAME:

TURKEY HILL

SITE NUMBER:

CT03XC336

SITE ADDRESS:

20 POST OFFICE LANE
WESTPORT, CT 06880

SHEET DESCRIPTION:

SITE PLAN

SHEET NUMBER:

A-1

NOTE:
INFINIGY ENGINEERING HAS NOT EVALUATED THE EXISTING STRUCTURE FOR THIS SITE, AND ASSUMES NO RESPONSIBILITY FOR ITS STRUCTURAL INTEGRITY. REFER TO STRUCTURAL ANALYSIS BY OTHERS PRIOR TO ANY CONSTRUCTION.

NOTE:
SEE DETAIL 2 ON A-3 FOR ANTENNA LAYOUT

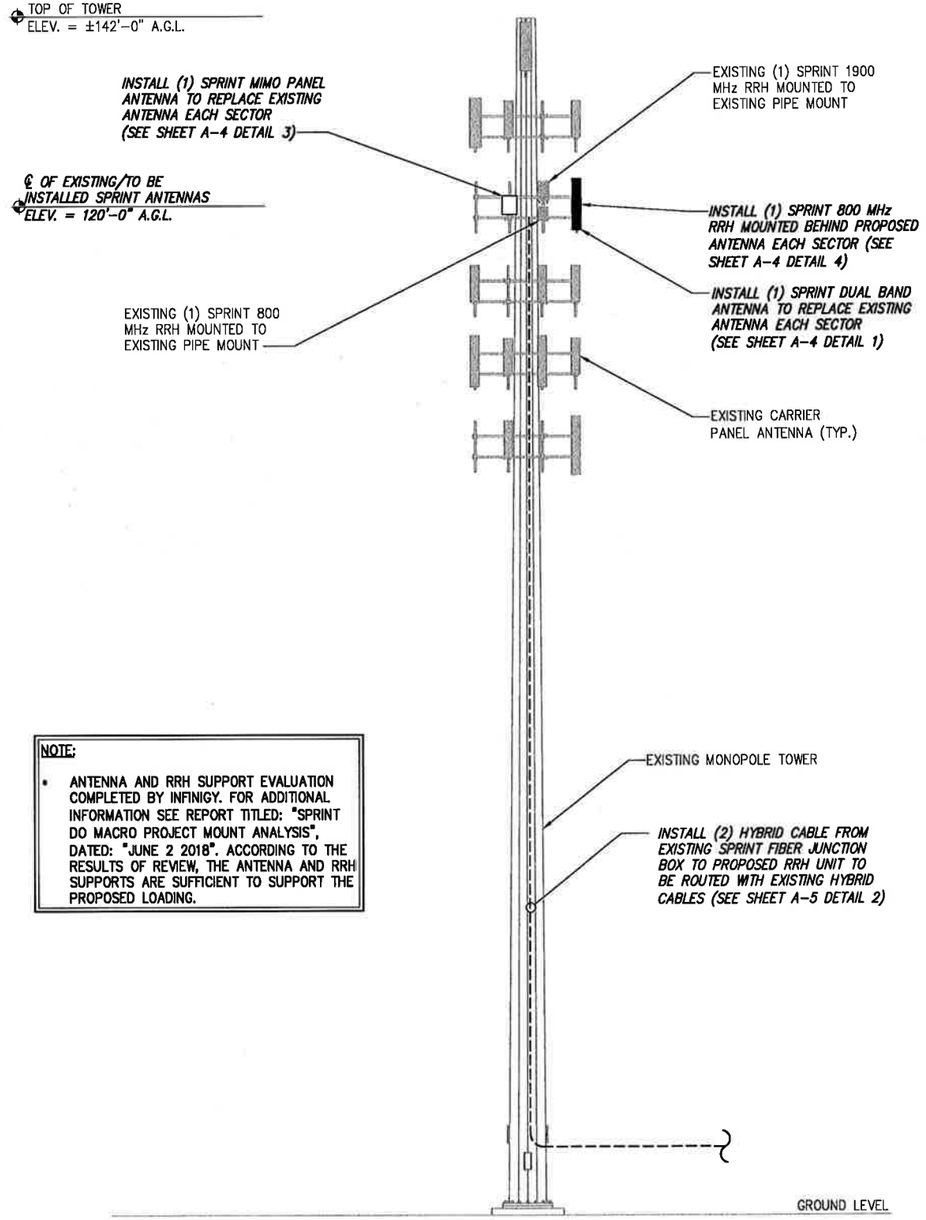

NOTE:

- ANTENNA AND RRH SUPPORT EVALUATION COMPLETED BY INFINIGY. FOR ADDITIONAL INFORMATION SEE REPORT TITLED: "SPRINT DO MACRO PROJECT MOUNT ANALYSIS", DATED: "JUNE 2 2018". ACCORDING TO THE RESULTS OF REVIEW, THE ANTENNA AND RRH SUPPORTS ARE SUFFICIENT TO SUPPORT THE PROPOSED LOADING.

TOWER ELEVATION | NO SCALE | 1

SITE LOADING CHART

SECTOR	EXISTING/ PROPOSED	ANTENNA MODEL #	VENDOR	AZIMUTH	QTY.	REMAIN/ REMOVED	RRH (QTY/MODEL)	CABLE	CABLE LENGTH	RAD CENTER
ALPHA	PROPOSED	AAHC	NOKIA	50°	1	–	(2) 800 MHZ 2X50W RRH	SEE SHEET A-5 DETAIL 1	±146'*	±120' AGL
	PROPOSED	NNVV-65B-R4	COMMSCOPE	50°	1	–	(1) 1900 MHz 4X45 RRH	SEE SHEET A-5 DETAIL 1		
	EXISTING	APXVSSP18-C-A20	RFS	50°	2	REMOVE		EXISTING HYBRID		
BETA	PROPOSED	AAHC	NOKIA	130°	1	–	(2) 800 MHZ 2X50W RRH	SEE SHEET A-5 DETAIL 1		±120' AGL
	PROPOSED	NNVV-65B-R4	COMMSCOPE	130°	1	–	(1) 1900 MHz 4X45 RRH	SEE SHEET A-5 DETAIL 1		
	EXISTING	APXVSPP18-C-A20	RFS	130°	2	REMOVE		EXISTING HYBRID		
GAMMA	PROPOSED	AAHC	NOKIA	270°	1	–	(2) 800 MHZ 2X50W RRH	SEE SHEET A-5 DETAIL 1		±120' AGL
	PROPOSED	NNVV-65B-R4	COMMSCOPE	270°	1	–	(1) 1900 MHz 4X45 RRH	SEE SHEET A-5 DETAIL 1		
	EXISTING	APXVSPP18-C-A20	RFS	270°	2	REMOVE		EXISTING HYBRID		

PROJECT SCOPE:

REMOVE: (6) PANEL ANTENNAS; INSTALL: (6) PANEL ANTENNAS AND (3) RRH'S

* PROPOSED CABLE LENGTH WAS DETERMINED USING THE SUM OF THE RAD CENTER OF ANTENNAS, AND DISTANCE FROM EXISTING EQUIPMENT AREA TO TOWER BASE WITH AN ADDITIONAL 20' BUFFER. LENGTH TO BE VERIFIED IN FIELD PRIOR TO ORDERING MATERIALS.

SITE LOADING CHART | NO SCALE | 2

DETAIL NOT USED | NO SCALE | 3

PLANS PREPARED FOR:

Sprint

PLANS PREPARED BY:

INFINIGY
FROM ZERO TO INFINIGY
the solutions are endless
1033 Watervliet Shaker Rd | Albany, NY 12205
Phone: 518-690-0790 | Fax: 518-690-0793
www.infinigy.com
JOB NUMBER 526-104

PROJECT MANAGER:

AIROSMITH DEVELOPMENT
32 CLINTON ST.
SARATOGA SPRINGS, NY 12866
OFFICE#: (518) 308-3740

ENGINEERING LICENSE:

STATE OF CONNECTICUT
JOHN S. STEVENS
No. 24705
LICENSED PROFESSIONAL ENGINEER
JUL 1 8 2018

DRAWING NOTICE:

THESE DOCUMENTS ARE CONFIDENTIAL AND ARE THE SOLE PROPERTY OF SPRINT AND MAY NOT BE REPRODUCED, DISSEMINATED OR REDISTRIBUTED WITHOUT THE EXPRESS WRITTEN CONSENT OF SPRINT.

REVISIONS:

DESCRIPTION	DATE	BY	REV.
ISSUED FOR PERMIT	07/02/18	MAP	0

SITE NAME:

TURKEY HILL

SITE NUMBER:

CT03XC336

SITE ADDRESS:

20 POST OFFICE LANE
WESTPORT, CT 06880

SHEET DESCRIPTION:

TOWER ELEVATION

SHEET NUMBER:

A-2

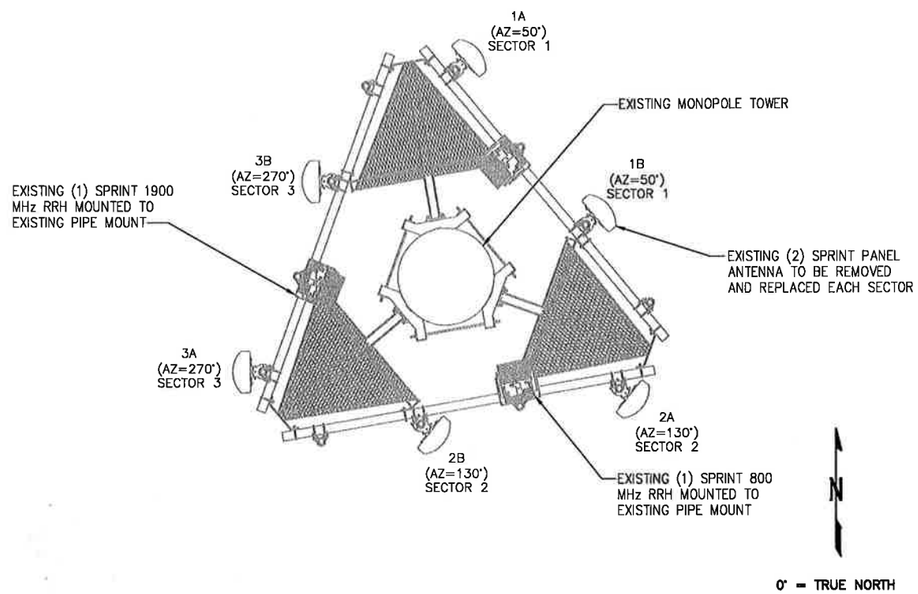

EXISTING ANTENNA & RRH LAYOUT | NO SCALE | 1

THE CONFIGURATION PLANS ARE BASED ON PROVIDED INFORMATION AND ARE FOR CONCEPTUAL PURPOSES ONLY. CONTRACTOR TO VERIFY FIELD CONDITIONS PRIOR TO CONSTRUCTION.

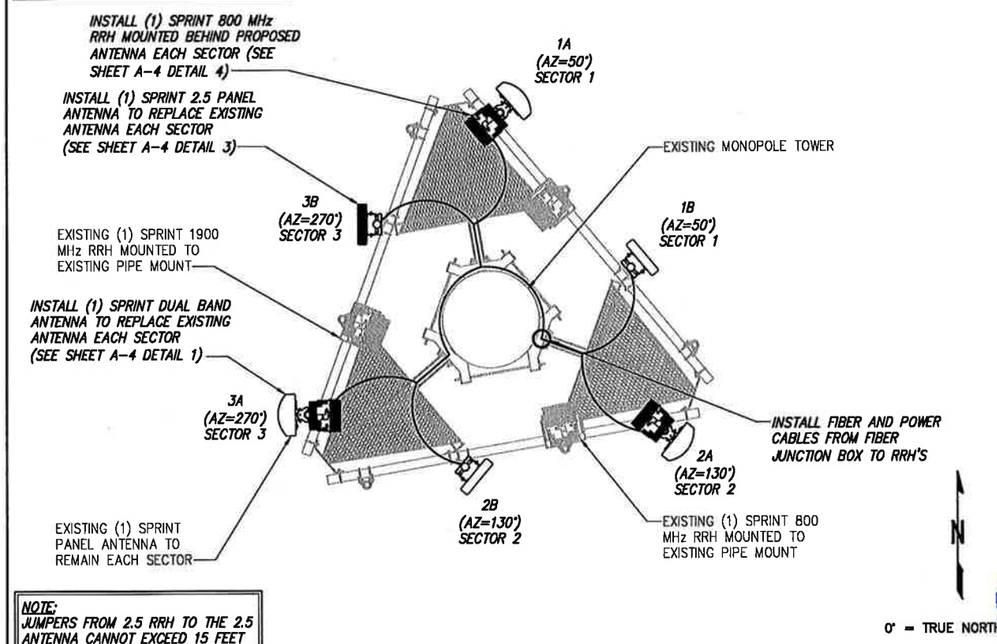

NOTE:
JUMPERS FROM 2.5 RRH TO THE 2.5 ANTENNA CANNOT EXCEED 15 FEET

FINAL ANTENNA & RRH LAYOUT | NO SCALE | 2

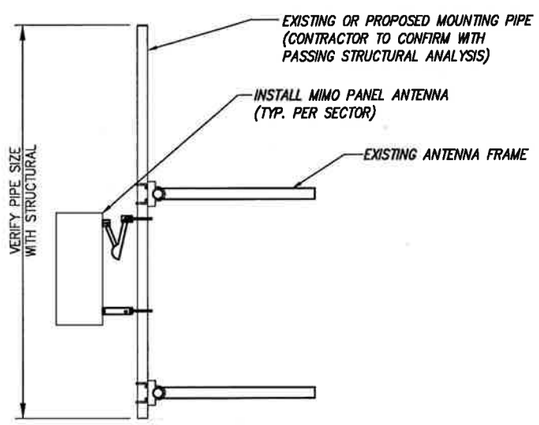

NOTE:
CONTRACTOR TO POSITION RRH ON MOUNT BEHIND ANTENNA SUCH THAT THE RRH DOES NOT INTERFERE WITH THE EXISTING PLATFORM/T-ARM MOUNTING HARDWARE.

NOTE:
THE DIAGRAM IS FOR CONCEPTUAL PURPOSES ONLY. CONTRACTOR IS TO REFER TO PASSING STRUCTURAL ANALYSIS FOR ANTENNA AND RRH MOUNTING DETAILS

NOTES:

1. CUT DC CONDUCTORS TO LENGTH.
2. COIL FIBER CABLE AND SECURE AT SIDE OF RRH.
3. DO NO EXCEED BEND RADIUS.

TYPICAL 2.5 ANTENNA & RRH MOUNTING DETAILS | NO SCALE | 3

NOTE:
CONTRACTOR TO POSITION RRH ON MOUNT BEHIND ANTENNA SUCH THAT THE RRH DOES NOT INTERFERE WITH THE EXISTING PLATFORM/T-ARM MOUNTING HARDWARE.

NOTE:
THE DIAGRAM IS FOR CONCEPTUAL PURPOSES ONLY. CONTRACTOR IS TO REFER TO PASSING STRUCTURAL ANALYSIS FOR ANTENNA AND RRH MOUNTING DETAILS

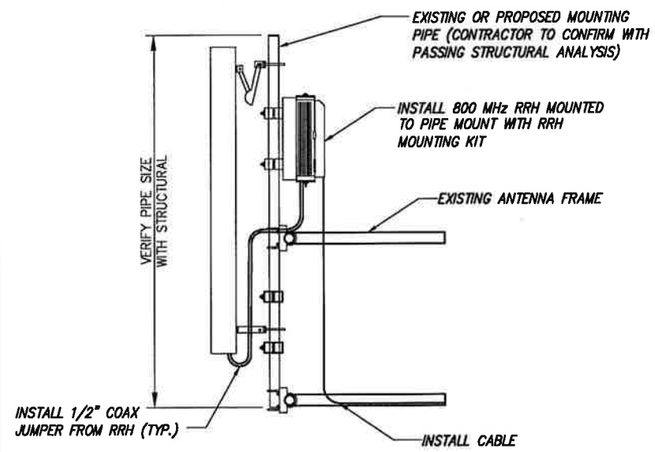

1. CUT DC CONDUCTORS TO LENGTH.
2. COIL FIBER CABLE AND SECURE AT SIDE OF RRH.
3. DO NO EXCEED BEND RADIUS.

TYPICAL DUAL BAND ANTENNA & RRH MOUNTING DETAILS | NO SCALE | 4

PLANS PREPARED FOR:

Sprint

PLANS PREPARED BY:

INFINIGY
FROM ZERO TO INFINIGY
the solutions are endless
1033 Watervliet Shaker Rd | Albany, NY 12205
Phone: 518-690-0790 | Fax: 518-690-0793
www.infinigy.com
JOB NUMBER 526-104

PROJECT MANAGER:

AIROSMITH DEVELOPMENT
32 CLINTON ST.
SARATOGA SPRINGS, NY 12866
OFFICE#. (518) 308-3740

ENGINEERING LICENSE:

STATE OF CONNECTICUT
JOHN S. STEVENS
No. 24705
LICENSED PROFESSIONAL ENGINEER
JUL 18 2018

DRAWING NOTICE:

THESE DOCUMENTS ARE CONFIDENTIAL AND ARE THE SOLE PROPERTY OF SPRINT AND MAY NOT BE REPRODUCED, DISSEMINATED OR REDISTRIBUTED WITHOUT THE EXPRESS WRITTEN CONSENT OF SPRINT.

REVISIONS:

DESCRIPTION	DATE	BY	REV.
ISSUED FOR PERMIT	07/02/18	MAP	0

SITE NAME:

TURKEY HILL

SITE NUMBER:

CT03XC336

SITE ADDRESS:

20 POST OFFICE LANE
WESTPORT, CT 06880

SHEET DESCRIPTION:

ANTENNA LAYOUT
& MOUNTING DETAILS

SHEET NUMBER:

A-3

ANTENNA COMMSCOPE NNVV-65B-R4

RADOME MATERIAL:	FIBERGLASS
RADOME COLOR:	LIGHT GREY
DIMENSIONS, HxWxD.in(mim):	72"x19.6"x7.8" (1828x498x198mm)
WEIGHT:	77.4 lbs
CONNECTORS:	8 PIN DIN FEMALE
	8 PIN DIN MALE

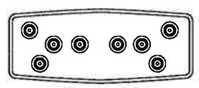

PLAN VIEW

SIDE VIEW

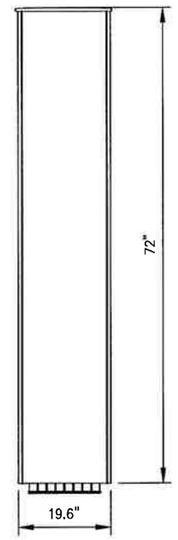

FRONT VIEW

DUAL BAND ANTENNA | NO SCALE | 1

RRH: ALCATEL LUCENT 1900 MHz

COLOR: LIGHT GREY
WEIGHT: 70 LBS.
(INCLUDING OPTIONAL SOLAR SHIELD)

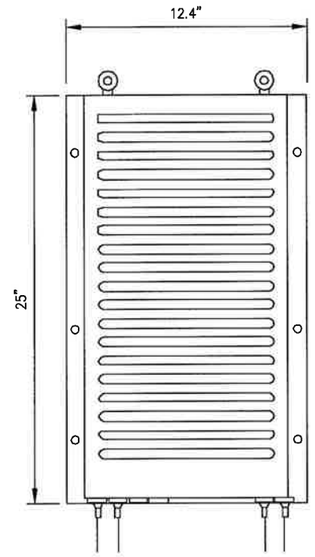

FRONT VIEW

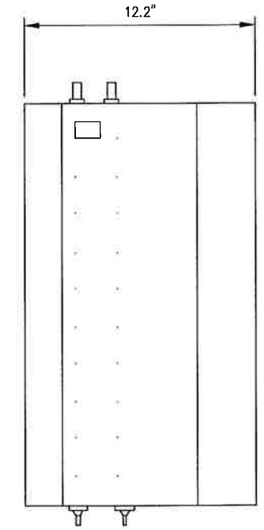

SIDE VIEW

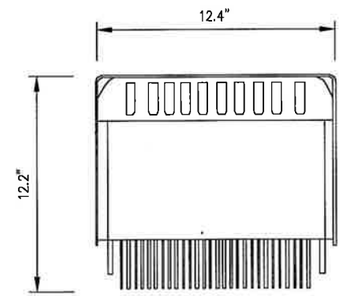

TOP VIEW

EXISTING 1900 MHz RRH | NO SCALE | 2

ANTENNA NOPIKA AAHC

RADOME MATERIAL:	FIBERGLASS
RADOME COLOR:	LIGHT GREY
DIMENSIONS, HxWxD.in(mim):	25.6"x19.7"x9.9" (651x501x245mm)
WEIGHT:	99.2 lbs
CONNECTORS:	(2) 7/16" DIN FEMALE
	(8) 4.1/9.5 DIN FEMALE

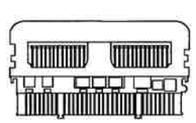

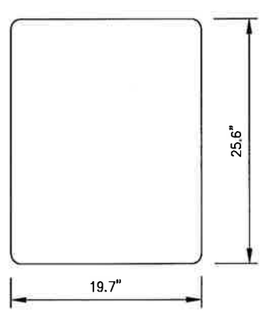

2.5 ANTENNA DETAIL | NO SCALE | 3

RRH: ALCATEL LUCENT RRH 800 MHz 2x50W

COLOR: LIGHT GREY
WEIGHT: 53 LBS.

NOTES

COMPLY WITH MANUFACTURERS INSTRUCTIONS TO ENSURE THAT ALL RRH'S RECEIVE ELECTRICAL POWER WITHIN 24 HOURS OF BEING REMOVED FROM THE MANUFACTURER'S PACKAGING. DO NOT OPEN RRH PACKAGES IN THE RAIN.

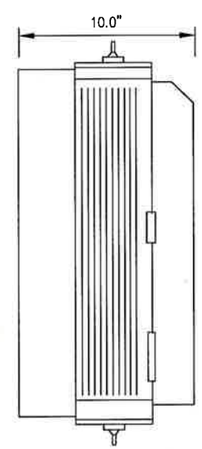

SIDE VIEW

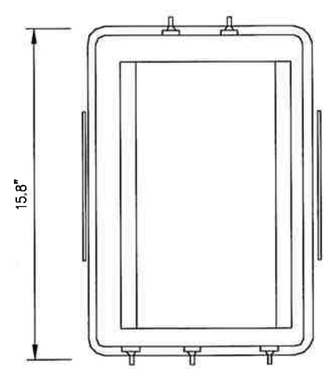

FRONT VIEW

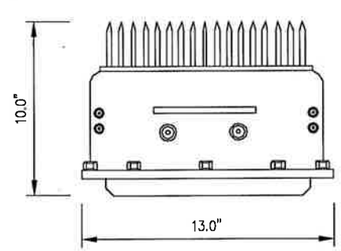

PLAN VIEW

800 MHz RRH | NO SCALE | 4

PLANS PREPARED FOR:

Sprint

PLANS PREPARED BY:

INFINIGY
FROM ZERO TO INFINIGY
the solutions are endless
1033 Watervliet Shaker Rd | Albany, NY 12205
Phone: 518-690-0790 | Fax: 518-690-0793
www.infinigy.com
JOB NUMBER 526-104

PROJECT MANAGER:

AIROSMITH DEVELOPMENT
32 CLINTON ST.
SARATOGA SPRINGS, NY 12866
OFFICE#. (518) 306-3740

ENGINEERING LICENSE:

STATE OF CONNECTICUT · JOHN S. STEVENS · No. 24766 · LICENSED PROFESSIONAL ENGINEER
JUL 18 2018

DRAWING NOTICE:

THESE DOCUMENTS ARE CONFIDENTIAL AND ARE THE SOLE PROPERTY OF SPRINT AND MAY NOT BE REPRODUCED, DISSEMINATED OR REDISTRIBUTED WITHOUT THE EXPRESS WRITTEN CONSENT OF SPRINT.

REVISIONS:

DESCRIPTION	DATE	BY	REV.
ISSUED FOR PERMIT	07/02/18	MAP	0

SITE NAME: TURKEY HILL

SITE NUMBER: CT03XC336

SITE ADDRESS: 20 POST OFFICE LANE WESTPORT, CT 06880

SHEET DESCRIPTION: EQUIPMENT & MOUNTING DETAILS

SHEET NUMBER: A-4

RFS HYBRIFLEX RISER CABLE SCHEDULE

Fiber Only (Existing DC Power)	Hybrid cable MN: HB058-M12-050F 12x multi-mode fiber pairs, Top: Outdoor protected connectors, Bottom: LC Connectors, 5/8 cable, 50 ft	50 ft
	MN: HB058-M12-075F	75 ft
	MN: HB058-M12-100F	100 ft
	MN: HB058-M12-125F	125 ft
	MN: HB058-M12-150F	150 ft
	MN: HB058-M12-175F	175 ft
	MN: HB058-M12-200F	200 ft
8 AWG Power	Hybrid cable MN: HB114-08U3M12-050F 3x 8 AWG power pairs, 12x multi-mode fiber pairs, Outdoor rated connectors & LC Connectors, 1 1/4 cable, 50 ft	50 ft
	MN: HB114-08U3M12-075F	75 ft
	MN: HB114-08U3M12-100F	100 ft
	MN: HB114-08U3M12-125F	125 ft
	MN: HB114-08U3M12-150F	150 ft
	MN: HB114-08U3M12-175F	175 ft
	MN: HB114-08U3M12-200F	200 ft
6 AWG Power	Hybrid cable MN: HB114-13U3M12-225F 3x 6 AWG power pair, 12x multi-mode fiber pairs, Outdoor rated connectors & LC Connectors, 1 1/4 cable, 225 ft	225 ft
	MN: HB114-13U3M12-250F	250 ft
	MN: HB114-13U3M12-275F	275 ft
	MN: HB114-13U3M12-300F	300 ft
4 AWG Power	Hybrid cable MN: HB114-21U3M12-325F 3x 4 AWG power pair, 12x multi-mode fiber pairs, Outdoor rated connectors & LC Connectors, 1 1/4 cable, 325 ft	325 ft
	MN: HB114-21U3M12-350F	350 ft
	MN: HB114-21U3M12-375F	375 ft

RFS HYBRIFLEX JUMPER CABLE SCHEDULE

Fiber Only	Hybrid Jumper cable MN: HBF012-M3-5F1 5 ft, 3x multi-mode fiber pairs, Outdoor & LC connectors, 1/2 cable	5 ft
	MN: HBF012-M3-10F1	10 ft
	MN: HBF012-M3-15F1	15 ft
	MN: HBF012-M3-20F1	20 ft
	MN: HBF012-M3-25F1	25 ft
	MN: HBF012-M3-30F1	30 ft
8 AWG Power	Hybrid Jumper cable MN: HBF058-08U1M3-5F1 5 ft, 1x 8 AWG power pair, 3x multi-mode fiber pairs, Outdoor & LC Connectors, 5/8 cable	5 ft
	MN: HBF058-08U1M3-10F1	10 ft
	MN: HBF058-08U1M3-15F1	15 ft
	MN: HBF058-08U1M3-20F1	20 ft
	MN: HBF058-08U1M3-25F1	25 ft
	MN: HBF058-08U1M3-30F1	30 ft
6 AWG Power	Hybrid Jumper cable MN: HBF058-13U1M3-5F1 5 ft, 1x 6 AWG power pair, 3x multi-mode fiber pairs, Outdoor & LC Connectors, 5/8 cable	5 ft
	MN: HBF058-13U1M3-10F1	10 ft
	MN: HBF058-13U1M3-15F1	15 ft
	MN: HBF058-13U1M3-20F1	20 ft
	MN: HBF058-13U1M3-25F1	25 ft
	MN: HBF058-13U1M3-30F1	30 ft
4 AWG Power	Hybrid Jumper cable MN: HBF078-21U1M3-5F1 5 ft, 1x 4 AWG power pair, 3x multi-mode fiber pairs, Outdoor & LC Connectors, 7/8 cable	5 ft
	MN: HBF078-21U1M3-10F1	10 ft
	MN: HBF078-21U1M3-15F1	15 ft
	MN: HBF078-21U1M3-20F1	20 ft
	MN: HBF078-21U1M3-25F1	25 ft
	MN: HBF078-21U1M3-30F1	30 ft

* PROPOSED CABLE LENGTH WAS DETERMINED USING THE SUM OF THE RAD CENTER OF ANTENNAS, AND DISTANCE FROM EXISTING EQUIPMENT AREA TO TOWER BASE WITH AN ADDITIONAL 20' BUFFER. LENGTH TO BE VERIFIED IN FIELD PRIOR TO ORDERING MATERIALS.

NOTE:
SPRINT CM TO CONFIRM HYBRID OR FIBER RISER CABLE AND HYBRID OR FIBER JUMPER CABLE MODEL NUMBERS IF HYBRID CABLES ARE REQUIRED BEFORE PREPARING BOM.

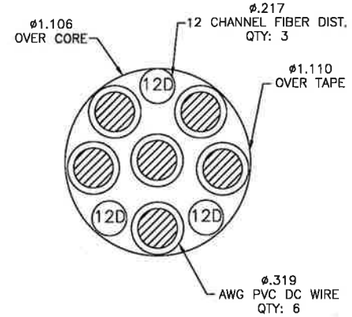

4 AWG

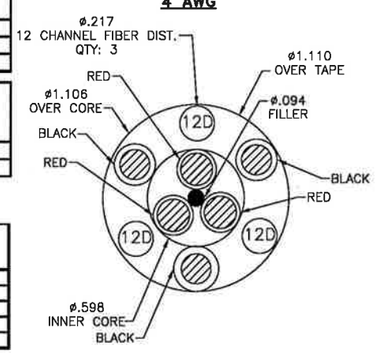

8 & 6 AWG

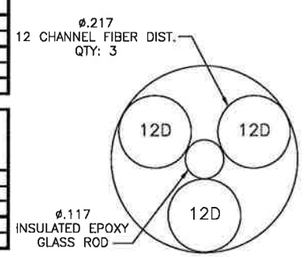

FIBER ONLY

2.5 CABLE CROSS SECTION DATA | NO SCALE | 1

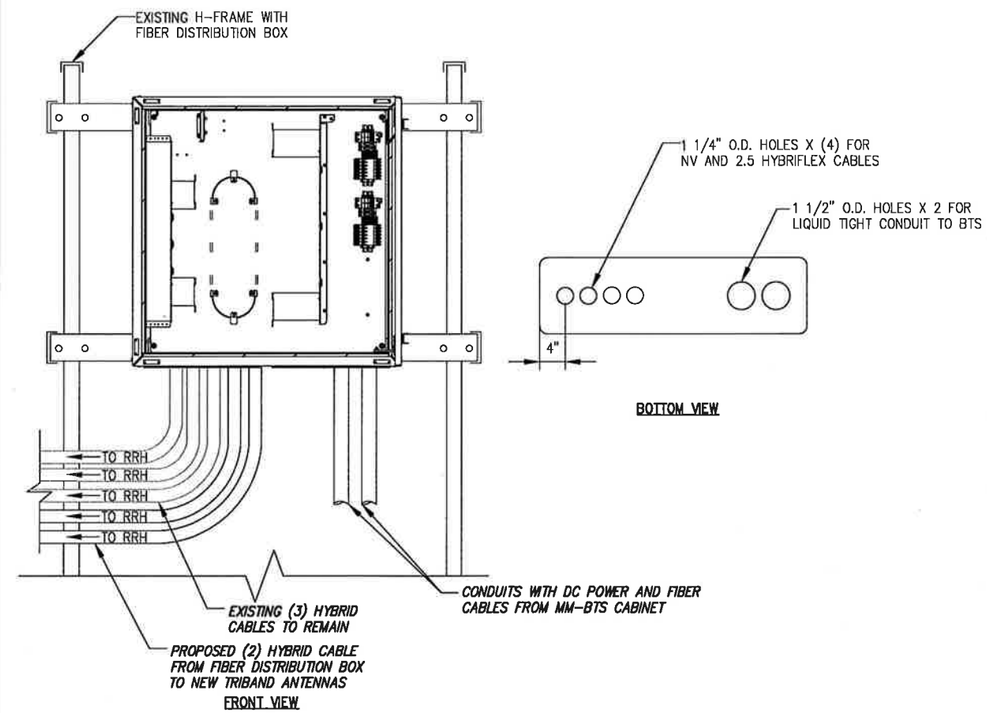

FIBER JUNCTION BOX PENETRATION | NO SCALE | 2

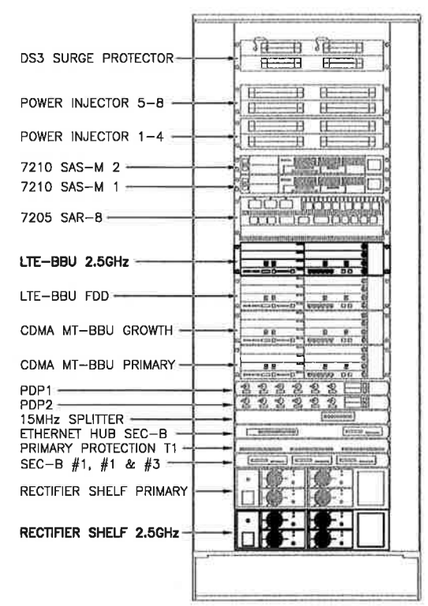

FRONT VIEW

NEW EQUIPMENT IN EXISTING CABINET | NO SCALE | 3

PLANS PREPARED FOR:

Sprint

PLANS PREPARED BY:

INFINIGY
FROM ZERO TO INFINIGY
the solutions are endless
1033 Watervliet Shaker Rd | Albany, NY 12205
Phone: 518-690-0790 | Fax: 518-690-0793
www.infinigy.com
JOB NUMBER 526-104

PROJECT MANAGER:

AIROSMITH DEVELOPMENT
32 CLINTON ST.
SARATOGA SPRINGS, NY 12866
OFFICE#. (518) 306-3740

ENGINEERING LICENSE:

STATE OF CONNECTICUT
JOHN S. STEVENS
No. 24705
LICENSED PROFESSIONAL ENGINEER
JUL 18 2018

DRAWING NOTICE:

THESE DOCUMENTS ARE CONFIDENTIAL AND ARE THE SOLE PROPERTY OF SPRINT AND MAY NOT BE REPRODUCED, DISSEMINATED OR REDISTRIBUTED WITHOUT THE EXPRESS WRITTEN CONSENT OF SPRINT.

REVISIONS:

DESCRIPTION	DATE	BY	REV.
ISSUED FOR PERMIT	07/02/18	MAP	0

SITE NAME:

TURKEY HILL

SITE NUMBER:

CT03XC336

SITE ADDRESS:

20 POST OFFICE LANE
WESTPORT, CT 06880

SHEET DESCRIPTION:

CIVIL DETAILS

SHEET NUMBER:

A-5

ALU 21-MIMO NNVV-65B-R4 wo Filters

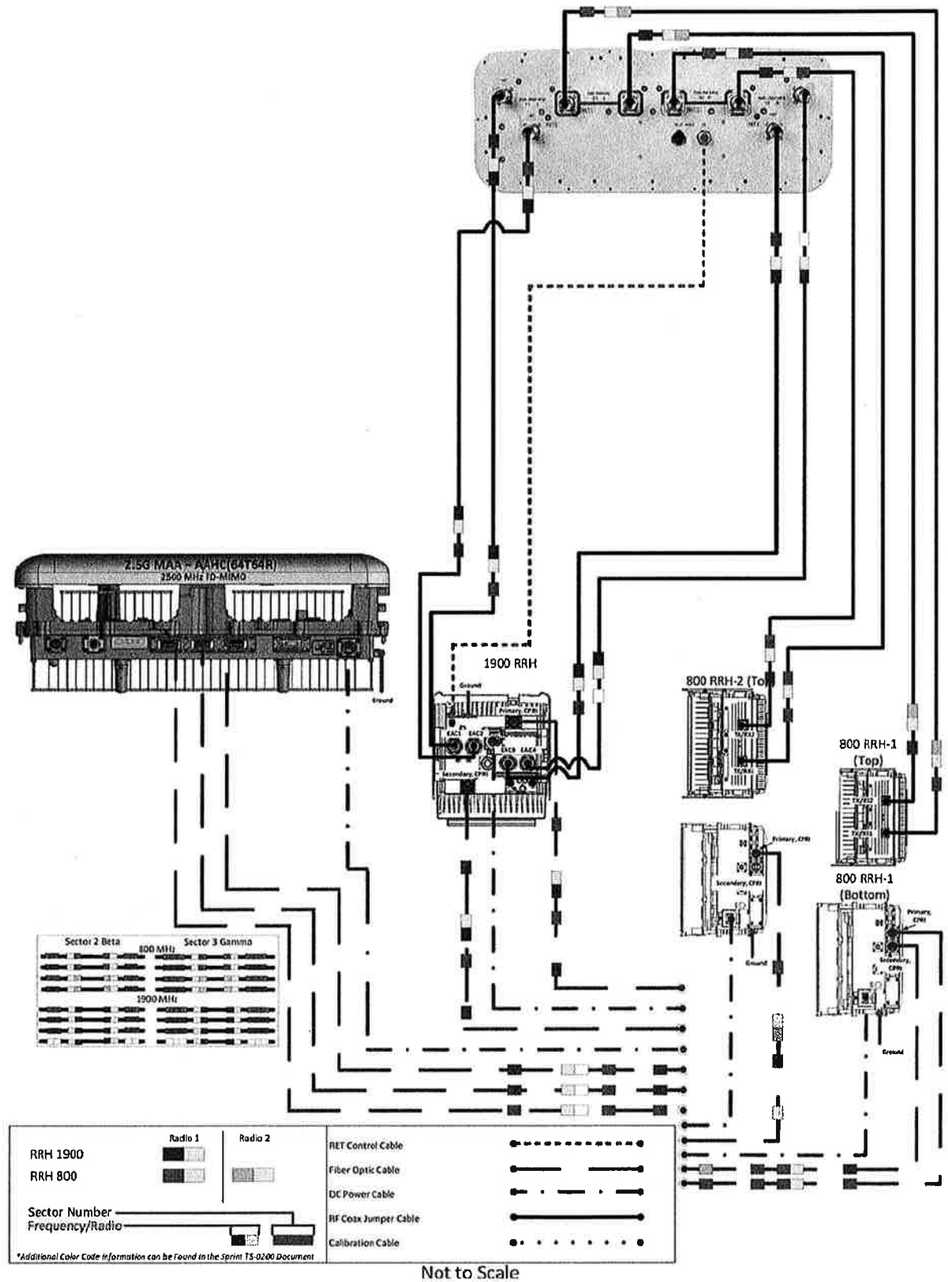

Not to Scale

PLUMBING DIAGRAM | NO SCALE | 1

PLANS PREPARED FOR:

Sprint

PLANS PREPARED BY:

INFINIGY
FROM ZERO TO INFINIGY
the solutions are endless
1033 Watervliet Shaker Rd | Albany, NY 12205
Phone: 518-690-0790 | Fax: 518-690-0793
www.infinigy.com
JOB NUMBER 526-104

PROJECT MANAGER:

AIROSMITH DEVELOPMENT
32 CLINTON ST.
SARATOGA SPRINGS, NY 12866
OFFICE#. (518) 306-3740

ENGINEERING LICENSE:

STATE OF CONNECTICUT
JOHN S. STEVENS
No. 24709
LICENSED PROFESSIONAL ENGINEER
JUL 16 2018

DRAWING NOTICE:

THESE DOCUMENTS ARE CONFIDENTIAL AND ARE THE SOLE PROPERTY OF SPRINT AND MAY NOT BE REPRODUCED, DISSEMINATED OR REDISTRIBUTED WITHOUT THE EXPRESS WRITTEN CONSENT OF SPRINT.

REVISIONS:

DESCRIPTION	DATE	BY	REV.
ISSUED FOR PERMIT	07/02/18	MAP	0

SITE NAME:

TURKEY HILL

SITE NUMBER:

CT03XC336

SITE ADDRESS:

20 POST OFFICE LANE
WESTPORT, CT 06880

SHEET DESCRIPTION:

PLUMBING DIAGRAM

SHEET NUMBER:

A-6

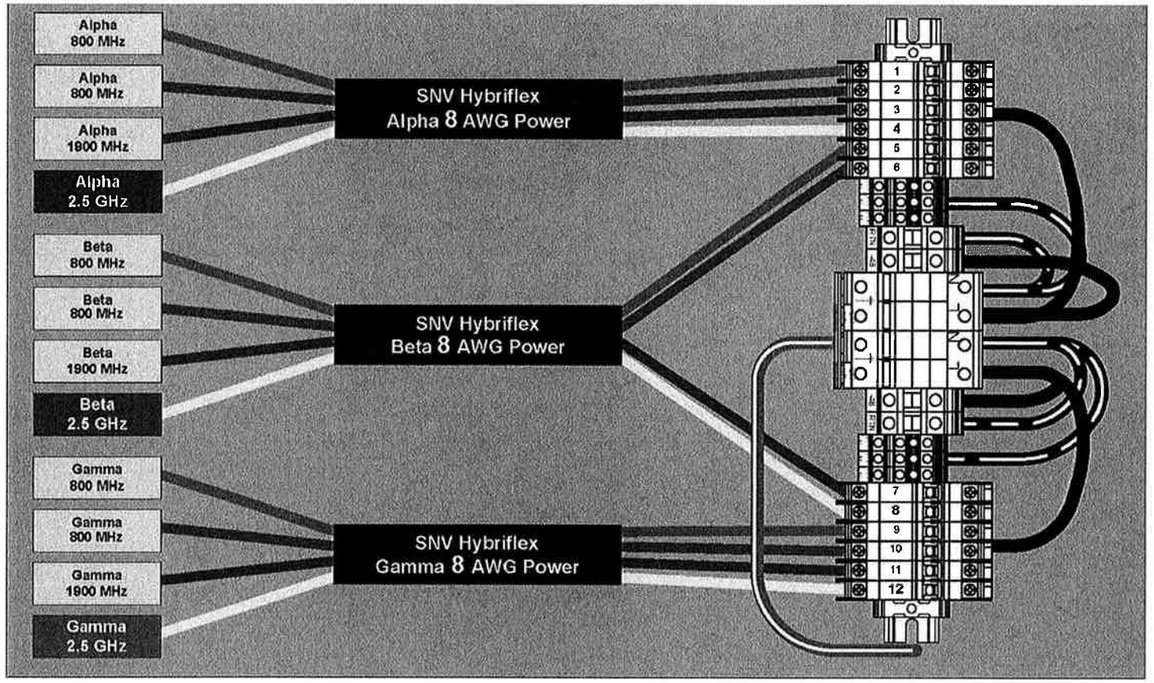

RRH TO DISTRIBUTION BOX POWER CONNECTIVITY | NO SCALE | 1

LEGEND:

- EXISTING GROUND RING
- CADWELD CONNECTION (EXOTHERMIC WELD)
- MECHANICAL CONNECTION
- GROUND ROD
- CABLE GROUND KIT

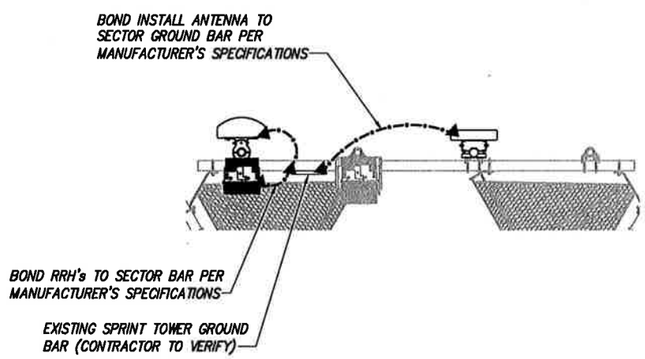

TYPICAL ANTENNA GROUNDING PLAN | NO SCALE | 2

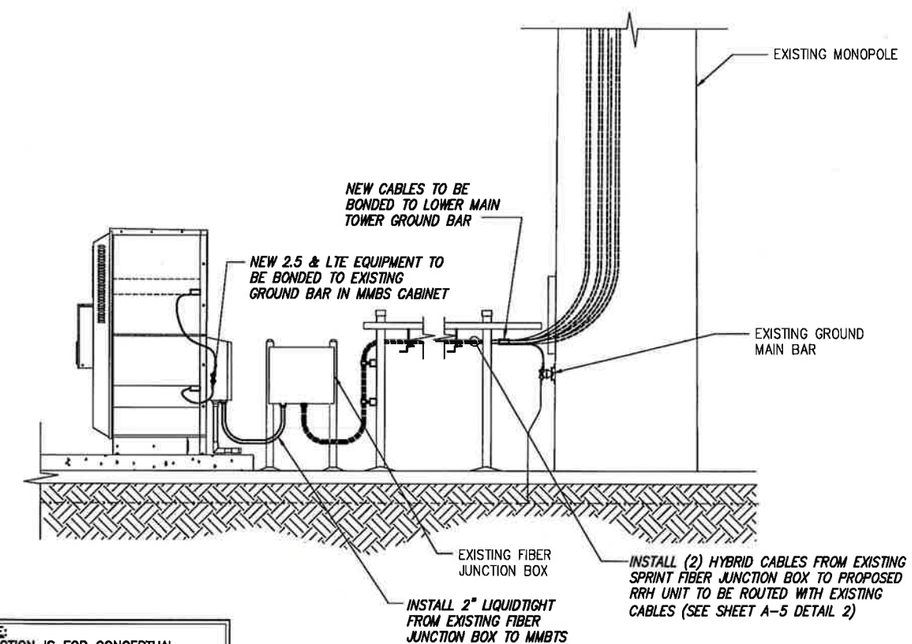

NOTE:
DEPICTION IS FOR CONCEPTUAL PURPOSES ONLY. CONTRACTOR IS TO FIELD VERIFY PRIOR TO CONSTRUCTION

TYPICAL EQUIPMENT GROUNDING PLAN (ELEVATION) | NO SCALE | 3

PLANS PREPARED FOR:

Sprint

PLANS PREPARED BY:

INFINIGY
FROM ZERO TO INFINIGY
the solutions are endless
1033 Watervliet Shaker Rd | Albany, NY 12205
Phone: 518-690-0790 | Fax: 518-690-0793
www.infinigy.com
JOB NUMBER 526-104

PROJECT MANAGER:

AIROSMITH DEVELOPMENT
32 CLINTON ST.
SARATOGA SPRINGS, NY 12866
OFFICE#. (518) 306-3740

ENGINEERING LICENSE:

STATE OF CONNECTICUT
JOHN R. SUCCESS
JUL 18 2018
No. 24705
LICENSED PROFESSIONAL ENGINEER

DRAWING NOTICE:

THESE DOCUMENTS ARE CONFIDENTIAL AND ARE THE SOLE PROPERTY OF SPRINT AND MAY NOT BE REPRODUCED, DISSEMINATED OR REDISTRIBUTED WITHOUT THE EXPRESS WRITTEN CONSENT OF SPRINT.

REVISIONS:

DESCRIPTION	DATE	BY	REV.
ISSUED FOR PERMIT	07/02/18	MAP	0

SITE NAME: TURKEY HILL

SITE NUMBER: CT03XC336

SITE ADDRESS: 20 POST OFFICE LANE WESTPORT, CT 06880

SHEET DESCRIPTION: ELECTRICAL & GROUNDING PLAN

SHEET NUMBER: E-1

NOTES

CG SHALL REFERENCE ALL SPECS FOR "CONNECTING THE POWER SUPPLY" OF THE NEW INSTALLATION DOCUMENTS, FOR ALL CONNECTION SPECIFICATIONS.

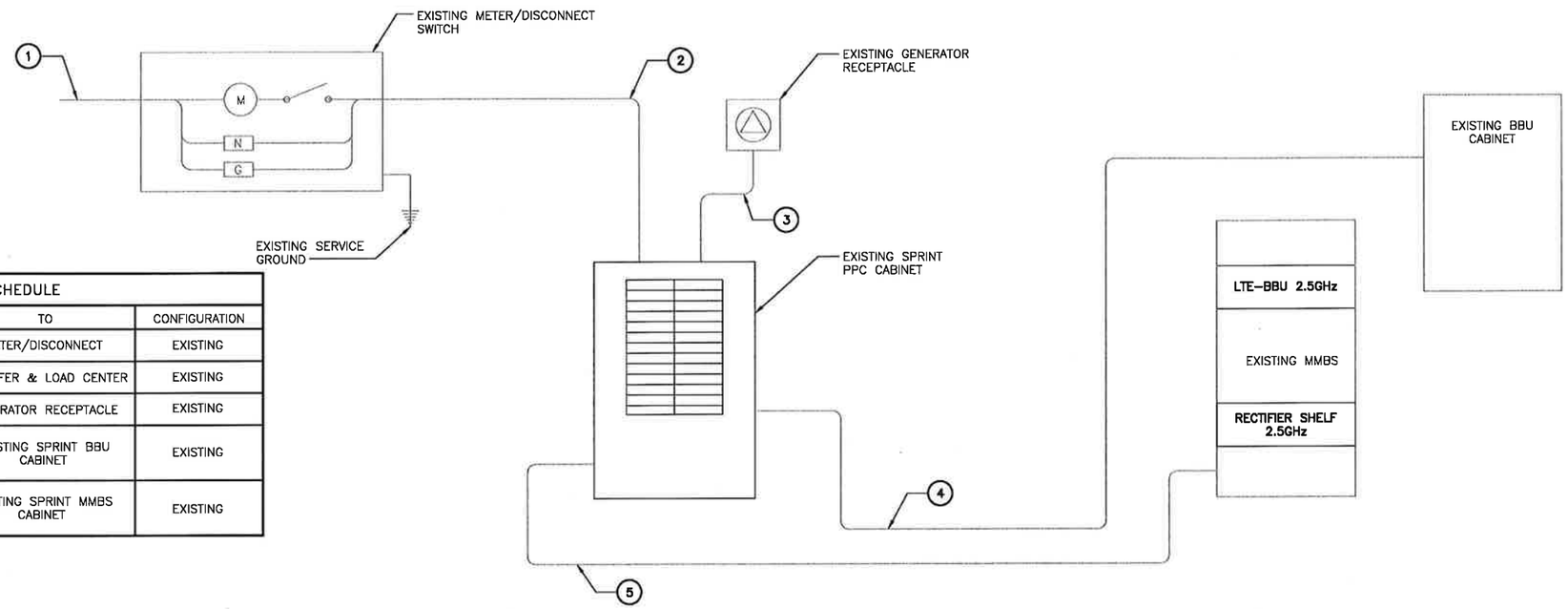

CIRCUIT SCHEDULE

NO	FROM	TO	CONFIGURATION
1	UTILITY SOURCE	METER/DISCONNECT	EXISTING
2	METER/DISCONNECT	TRANSFER & LOAD CENTER	EXISTING
3	TRANSFER & LOAD CENTER	GENERATOR RECEPTACLE	EXISTING
4	TRANSFER & LOAD CENTER	EXISTING SPRINT BBU CABINET	EXISTING
5	TRANSFER & LOAD CENTER	EXISTING SPRINT MMBS CABINET	EXISTING

ELECTRICAL ONE–LINE DIAGRAM — NO SCALE — 1

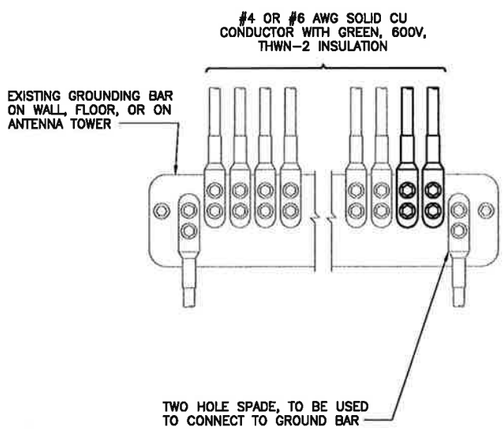

NOTES

1. APPLY NO–OX TO LUG AND BAR CONTACT SURFACE. DO NOT COAT INLINE LUG.
2. IF STOLEN GROUND BARS ARE ENCOUNTERED, CONTACT SPRINT CM FOR REPLACEMENT THREADED ROD KIT.

INSTALLATION OF GROUNDING CONDUCTOR TO GROUNDING BAR — NO SCALE — 2

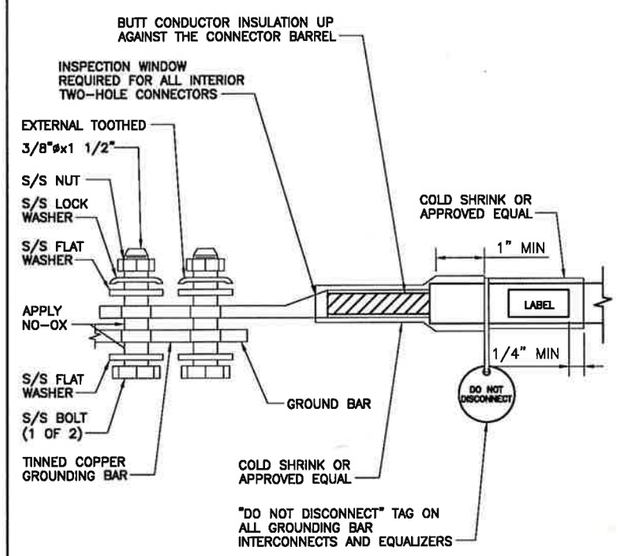

TWO HOLE LUG — NO SCALE — 3

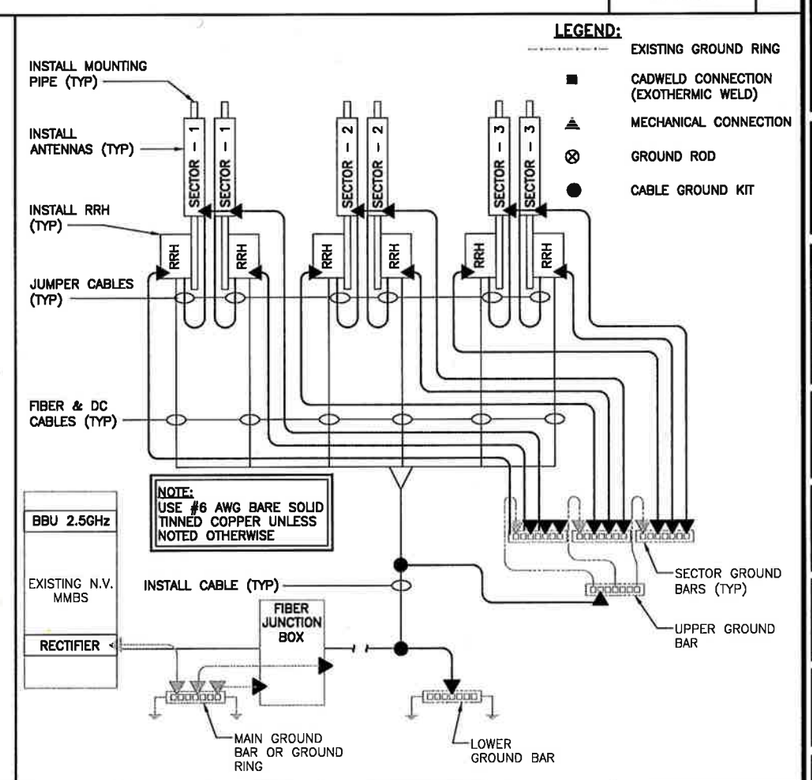

GROUNDING RISER DIAGRAM — NO SCALE — 4

PLANS PREPARED FOR:

Sprint

PLANS PREPARED BY:

INFINIGY
FROM ZERO TO INFINIGY
the solutions are endless
1033 Watervliet Shaker Rd | Albany, NY 12205
Phone: 518-690-0790 | Fax: 518-690-0793
www.infinigy.com
JOB NUMBER 526-104

PROJECT MANAGER:

AIROSMITH DEVELOPMENT
32 CLINTON ST.
SARATOGA SPRINGS, NY 12866
OFFICE#. (518) 306-3740

ENGINEERING LICENSE:

STATE OF CONNECTICUT — JOHN S. STEVENS — LICENSED PROFESSIONAL ENGINEER
JUL 18 2018

DRAWING NOTICE:

THESE DOCUMENTS ARE CONFIDENTIAL AND ARE THE SOLE PROPERTY OF SPRINT AND MAY NOT BE REPRODUCED, DISSEMINATED OR REDISTRIBUTED WITHOUT THE EXPRESS WRITTEN CONSENT OF SPRINT.

REVISIONS:

DESCRIPTION	DATE	BY	REV.
ISSUED FOR PERMIT	07/02/18	MAP	0

SITE NAME: TURKEY HILL

SITE NUMBER: CT03XC336

SITE ADDRESS: 20 POST OFFICE LANE WESTPORT, CT 06880

SHEET DESCRIPTION: ELECTRICAL & GROUNDING DETAILS

SHEET NUMBER: E-2