AMERICAN TOWER®
CORPORATION

Structural Analysis Report

Structure	:	**130 ft Monopole**
ATC Site Name	:	**Cranburysu CT, CT**
ATC Site Number	:	**411189**
Engineering Number	:	**OAA681947_C3_02**
Proposed Carrier	:	**AT&T Mobility**
Carrier Site Name	:	**Canton - Collinsville**
Carrier Site Number	:	**CTL02094 / 10035342**
Site Location	:	**2 Sunny Lane** **Westport, CT 06880-1906** **41.162917,-73.373083**
County	:	**Fairfield**
Date	:	**July 25, 2016**
Max Usage	:	**61%**
Result	:	**Pass**

Reviewed by:
Scott Wirgau, PE
Structural Team Leader

STATE OF CONNECTICUT
SCOTT A. WIRGAU
30575
LICENSED
PROFESSIONAL ENGINEER

Prepared By:
Max McLean
Engineer Intern

Jul 25 2016 4:47 PM

cosign

COA: PEC.0001553

Table of Contents

Introduction 1

Supporting Documents 1

Analysis 1

Conclusion 1

Existing and Reserved Equipment 2

Equipment to be Removed 2

Proposed Equipment 2

Structure Usages 3

Foundations 3

Deflection, Twist, and Sway 3

Standard Conditions 4

Calculations ..... Attached

Introduction

The purpose of this report is to summarize results of a structural analysis performed on the 130 ft monopole to reflect the change in loading by AT&T Mobility.

Supporting Documents

Tower Drawings	EEI Job #10847, dated June 7, 2002
Foundation Drawing	EEI Project #943071, dated March 30, 1999
Geotechnical Report	ERL Project #05443-53, dated November 12, 1996

Analysis

The tower was analyzed using American Tower Corporation's tower analysis software. This program considers an elastic three-dimensional model and second-order effects per ANSI/TIA-222.

Basic Wind Speed:	95 mph (3-Second Gust)
Basic Wind Speed w/ Ice:	No Ice Considered
Code:	ANSI/TIA-222-G / 2003 IBC w/ 2005 CT Supplement & 2009 CT Amendment
Structure Class:	II
Exposure Category:	C
Topographic Category:	1
Crest Height:	0 ft
Spectral Response:	Ss = 0.23, S_1 = 0.07
Site Class:	D - Stiff Soil

Conclusion

Based on the analysis results, the structure meets the requirements per the applicable codes listed above. The tower and foundation can support the equipment as described in this report.

If you have any questions or require additional information, please contact American Tower via email at Engineering@americantower.com. Please include the American Tower site name, site number, and engineering number in the subject line for any questions.

Existing and Reserved Equipment

Elevation[1] (ft) Mount	Elevation[1] (ft) RAD	Qty	Antenna	Mount Type	Lines	Carrier
128.0	130.0	6	Antel BXA-171085-8BF-EDIN-X	Low Profile Platform	(18) 1 5/8" Coax	Verizon
	129.0	4	Decibel DB846F65ZAXY			
		3	Powerwave P65-16-XL-2			
		2	Antel LPA-80080/6CF ___			
		1	VZW Unused Reserve: 5,817 sq in			
121.0	125.0	3	Alcatel-Lucent 800MHz RRH	Low Profile Platform	(6) 1 5/8" Coax (3) 1 1/4" Coax (3) 0.78" 8 AWG 6 (3) 0.39" Fiber Trunk (2) 2" Conduit (1) 1/2" Coax	Sprint Nextel
		3	Alcatel-Lucent 1900MHz RRH			
		3	Kathrein 840 10054			
		1	Andrew VHLP800-11			
		6	RFS APXVSPP18-C-A20			
110.0	113.0	3	Ericsson KRY 112 71	Low Profile Platform	(12) 1 5/8" Coax (6) 7/8" Coax (1) 7/8" Fiber	T-Mobile
		3	Ericsson RRUS 11 B12			
		3	EMS RR90-17-02DP			
		6	Ericsson AIR 21, 1.3 M, B2A B4P			
		3	Commscope LNX-6515DS-VTM			
100.0	104.0	6	Powerwave 7020	Low Profile Platform	(12) 1 5/8" Coax (2) 0.78" 8 AWG 6 (1) 3" conduit (1) 0.39" Fiber Trunk	AT&T Mobility
		12	Powerwave LGP21401			
		1	Raycap DC6-48-60-18-8F			
		6	Powerwave 7770.00			
	100.0	12	Powerwave LGP21901			
91.0	91.0	-	-	Empty Low Profile Platform	-	--
80.0	80.0	1	GPS	Side Arm	(1) 1/2" Coax	T-Mobile
76.0	76.0	1	2" x 8" GPS	Stand-Off	(1) 1/2" Coax	Verizon
75.0	75.0	1	GPS	Flush	(1) 1/2" Coax	Sprint Nextel
		1	2" x 8" GPS		(1) 0.63" LDF4-50A	Verizon
72.0	72.0	1	2" x 8" GPS	Side Arm	(1) 0.63" LDF4-50A	
68.0	68.0	1	2" x 8" GPS	Side Arm	(1) 0.63" LDF4-50A	
60.0	60.0	1	GPS	Side Arm	(1) 1/2" Coax	AT&T Mobility

Equipment to be Removed

Elevation[1] (ft) Mount	Elevation[1] (ft) RAD	Qty	Antenna	Mount Type	Lines	Carrier
100.0	100.0	3	Powerwave P65-16-XLH-RR	-	-	AT&T Mobility
		3	Ericsson RRUS			

Proposed Equipment

Elevation[1] (ft) Mount	Elevation[1] (ft) RAD	Qty	Antenna	Mount Type	Lines	Carrier
100.0	104.0	3	Ericsson RRUS-11 (50 lbs.)	Low Profile Platform	-	AT&T Mobility
		3	Ericsson RRUS 12 w/ RRUS A2			
		3	CCI HPA-65R-BUU-H6			

[1]Mount elevation is defined as height above bottom of steel structure to the bottom of mount, RAD elevation is defined as center of antenna above ground level (AGL).

Structure Usages

Structural Component	Controlling Usage	Pass/Fail
Anchor Bolts	45%	Pass
Shaft	45%	Pass
Base Plate	61%	Pass

Foundations

Reaction Component	Original Design Reactions	Factored Design Reactions*	Analysis Reactions	% of Design
Moment (Kips-Ft)	5,110.7	6,899.4	3,375.5	49%
Shear (Kips)	42.6	57.5	35.0	61%

*** The design reactions are factored by 1.35 per ANSI/TIA-222-G, Sec. 15.5.1**

The structure base reactions resulting from this analysis are acceptable when compared to those shown on the original structure drawings, therefore no modification or reinforcement of the foundation will be required.

Deflection and Sway*

Antenna Elevation (ft)	Antenna	Carrier	Deflection (ft)	Sway (Rotation) (°)
121.0	Andrew Microwaves VHLP800-11	Sprint Nextel	0.700	0.626
100.0	Ericsson RRUS-11 (50 lbs.)	AT&T Mobility	0.480	0.564
	Ericsson RRUS 12 w/ RRUS A2			
	CCI HPA-65R-BUU-H6			

***Deflection and Sway was evaluated considering a design wind speed of 60 mph (3-Second Gust) per ANSI/TIA-222-G**

AMERICAN TOWER®
CORPORATION

Standard Conditions

All engineering services are performed on the basis that the information used is current and correct. This information may consist of, but is not necessary limited, to:

-- Information supplied by the client regarding the structure itself, antenna, mounts and feed line loading on the structure and its components, or other relevant information.

-- Information from drawings in the possession of American Tower Corporation, or generated by field inspections or measurements of the structure.

It is the responsibility of the client to ensure that the information provided to A.T. Engineering Service, PLLC and used in the performance of our engineering services is correct and complete. In the absence of information to the contrary, we assume that all structures were constructed in accordance with the drawings and specifications and that their capacity has not significantly changed from the "as new" condition.

Unless explicitly agreed by both the client and American Tower Corporation, all services will be performed in accordance with the current revision of ANSI/TIA -222. The design basic wind speed will be determined based on the minimum basic wind speed as prescribed in ANSI/TIA-222. Although every effort is taken to ensure that the loading considered is adequate to meet the requirements of all applicable regulatory entities, we can provide no assurance to meet any other local and state codes or requirements. If wind and ice loads or other relevant parameters are to be different from the minimum values recommended by the codes, the client shall specify the exact requirement.

All services are performed, results obtained, and recommendations made in accordance with generally accepted engineering principles and practices. A.T. Engineering Service, PLLC is not responsible for the conclusions, opinions and recommendations made by others based on the information we supply.

© 2007 - 2016 by ATC IP LLC. All rights reserved.

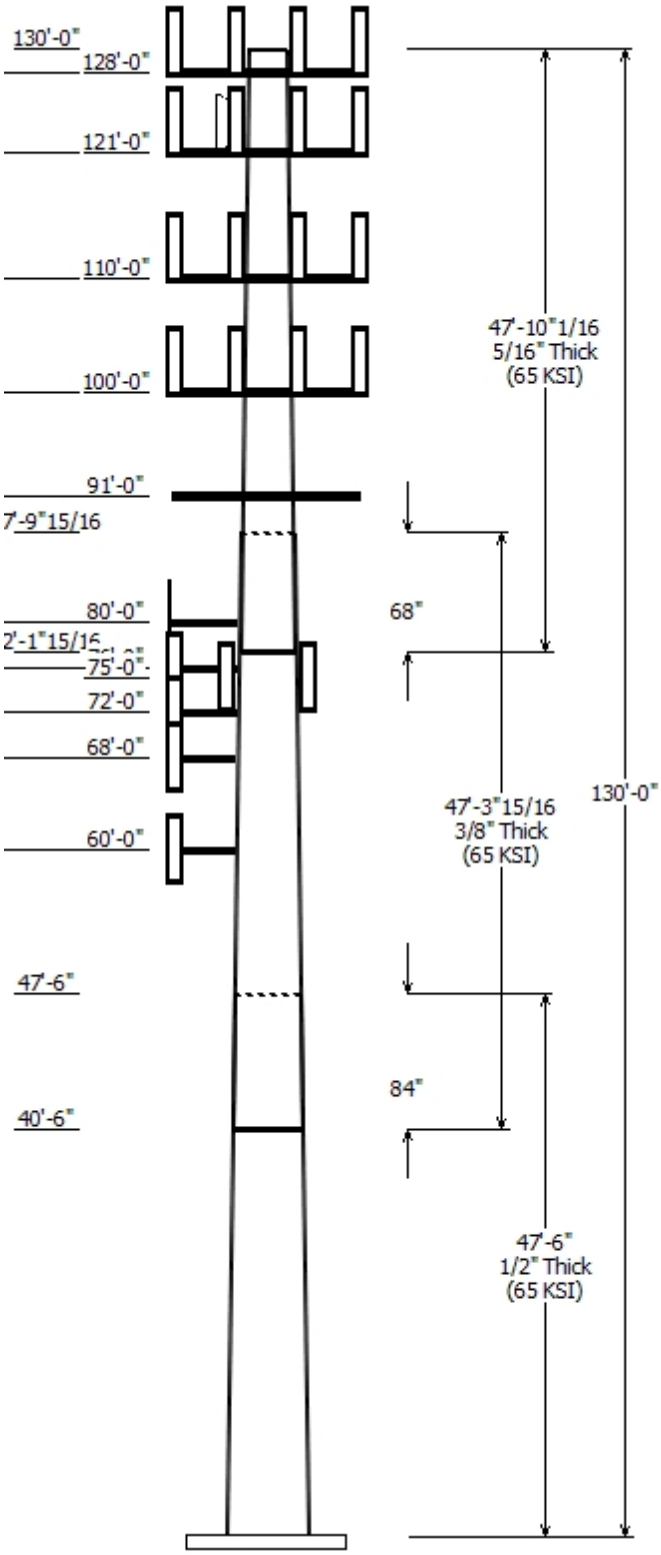

Job Information

Pole :	411189	Code:	ANSI/TIA-222-G
Description :	130 ft EEI Monopole		
Client :	AT&T Mobility	Struct Class :	II
Location :	Cranburysu CT, CT		
Shape :	18 Sides	Exposure :	C
Height :	130.00 (ft)	Topo :	1
Base Elev (ft):	0.00		
Taper:	0.27074 (in/ft)		

Sections Properties

Shaft Section	Length (ft)	Diameter (in) Accross Flats Top	Bottom	Thick (in)	Joint Type	Overlap Length (in)	Taper (in/ft)	Steel Grade (ksi)
1	47.500	49.14	62.00	0.500		0.000	0.270700	65
2	47.330	38.97	51.78	0.375	Slip Joint	84.000	0.270700	65
3	47.837	28.17	41.13	0.313	Slip Joint	68.000	0.270700	65

Discrete Appurtenance

Attach Elev (ft)	Force Elev (ft)	Qty	Description
128.000	129.000	1	VZW Unused Reserve: 5,817
128.000	130.000	6	Amphenol Antel BXA-171085-
128.000	129.000	2	Antel LPA-80080/6CF ___
128.000	129.000	3	Powerwave Allgon P65-16-XL-
128.000	128.000	1	Flat Low Profile Platform
128.000	129.000	4	Decibel DB846F65ZAXY
121.000	125.000	6	RFS APXVSPP18-C-A20
121.000	125.000	3	Kathrein Scala 840 10054
121.000	125.000	3	Alcatel-Lucent 800MHz RRH
121.000	125.000	3	Alcatel-Lucent 1900MHz RRH
121.000	121.000	1	Flat Low Profile Platform
121.000	125.000	1	Andrew Microwaves VHLP800-
110.000	113.000	3	Ericsson KRY 112 71
110.000	113.000	6	Ericsson AIR 21, 1.3 M, B2A B4
110.000	113.000	3	EMS RR90-17-02DP
110.000	113.000	3	Commscope LNX-6515DS-VTM
110.000	110.000	1	Flat Low Profile Platform
110.000	113.000	3	Ericsson RRUS 11 B12
100.000	104.000	3	CCI HPA-65R-BUU-H6
100.000	104.000	3	Ericsson RRUS 12 w/ RRUS A2
100.000	104.000	3	Ericsson RRUS-11 (50 lbs.)
100.000	104.000	1	Raycap DC6-48-60-18-8F
100.000	104.000	12	Powerwave Allgon LGP21401
100.000	104.000	6	Powerwave Allgon 7770.00
100.000	104.000	6	Powerwave Allgon 7020
100.000	100.000	12	Powerwave Allgon LGP21901
100.000	100.000	1	Flat Low Profile Platform
91.000	91.000	1	Empty Flat Low Profile Platfor
80.000	80.000	1	Flat Side Arm
80.000	80.000	1	GPS
76.000	76.000	1	Stand-Off
76.000	76.000	1	2" x 8" GPS
75.000	75.000	1	2" x 8" GPS
75.000	75.000	1	GPS
72.000	72.000	1	Side Arm
72.000	72.000	1	2" x 8" GPS
68.000	68.000	1	Side Arm
68.000	68.000	1	2" x 8" GPS
60.000	60.000	1	Side Arm
60.000	60.000	1	GPS

Linear Appurtenance

Elev (ft) From	To	Description	Exposed To Wind

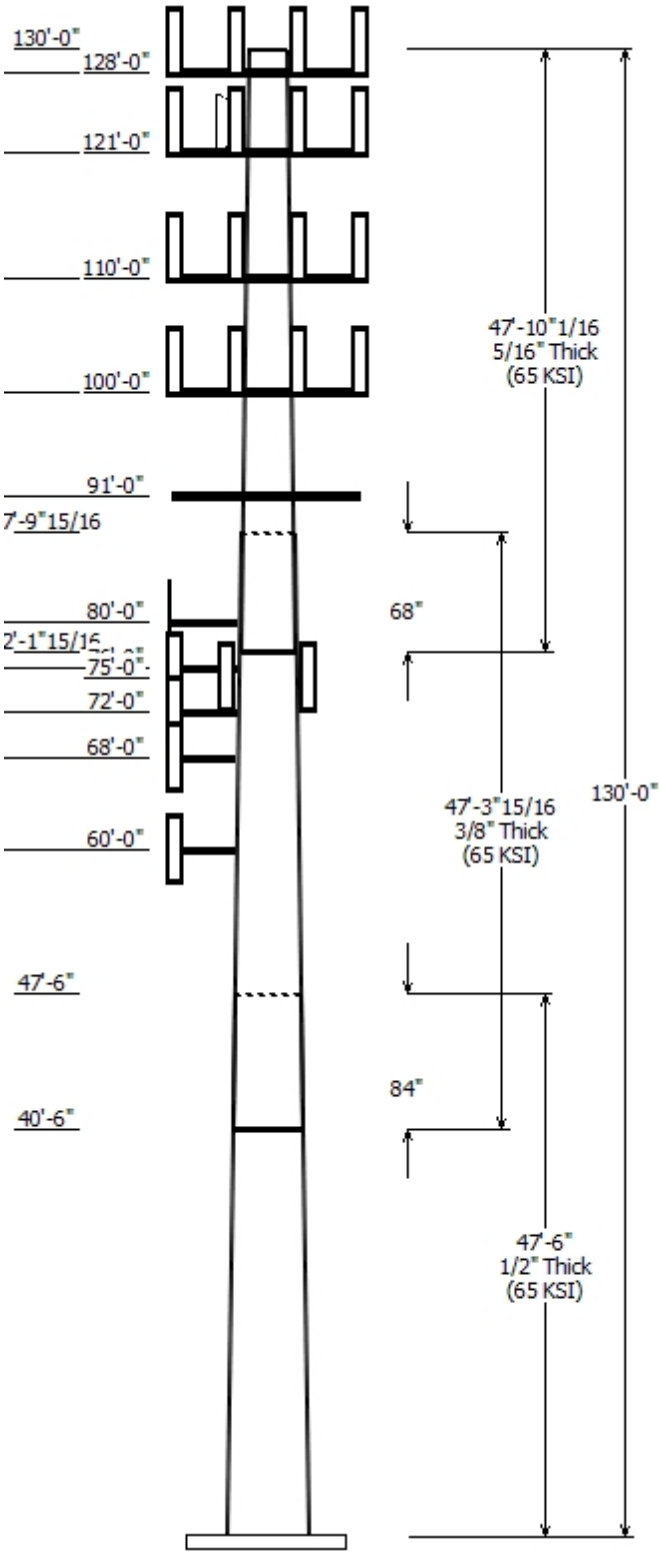

0.000	60.000	1/2" Coax	No
0.000	68.000	0.63" LDF4-50A	No
0.000	72.000	0.63" LDF4-50A	No
0.000	75.000	0.63" LDF4-50A	No
0.000	75.000	1/2" Coax	No
0.000	76.000	1/2" Coax	No
0.000	80.000	1/2" Coax	No
0.000	100.0	0.39" Fiber Trunk	No
0.000	100.0	0.78" 8 AWG 6	No
0.000	100.0	1 5/8" Coax	No
0.000	100.0	3" conduit	No
0.000	110.0	1 5/8" Coax	No
0.000	110.0	7/8" Coax	No
0.000	110.0	7/8" Fiber	No
0.000	121.0	0.39" Fiber Trunk	No
0.000	121.0	0.78" 8 AWG 6	No
0.000	121.0	1 1/4" Coax	No
0.000	121.0	1 5/8" Coax	No
0.000	121.0	1/2" Coax	No
0.000	121.0	2" Conduit	No
0.000	128.0	1 5/8" Coax	No

Load Cases

1.2D + 1.6W	95 mph with No Ice
0.9D + 1.6W	95 mph with No Ice (Reduced DL)
1.2D + 1.0Di + 1.0Wi	0 mph with 0.00 in Radial Ice
(1.2 + 0.2Sds) * DL + E	Seismic Equivalent Lateral Forces Method
(1.2 + 0.2Sds) * DL + E	Seismic Equivalent Modal Analysis Method
(0.9 - 0.2Sds) * DL + E	Seismic (Reduced DL) Equivalent Lateral
(0.9 - 0.2Sds) * DL + E	Seismic (Reduced DL) Equivalent Modal
1.0D + 1.0W	Serviceability 60 mph

Reactions

Load Case	Moment (kip-ft)	Shear (kip)	Axial (kip)
1.2D + 1.6W	3375.45	34.97	57.00
0.9D + 1.6W	3358.32	34.96	42.74
1.2D + 1.0Di + 1.0Wi	0.00	0.00	53.93
(1.2 + 0.2Sds) * DL + E ELFM	299.86	3.09	56.88
(1.2 + 0.2Sds) * DL + E EMAM	333.38	3.35	56.88
(0.9 - 0.2Sds) * DL + E ELFM	298.01	3.09	38.80
(0.9 - 0.2Sds) * DL + E EMAM	331.15	3.35	38.80
1.0D + 1.0W	838.87	8.72	47.52

Dish Deflections

Load Case	Attach Elev (ft)	Deflection (in)	Rotation (deg)
1.0D + 1.0W	121.00	8.398	0.626

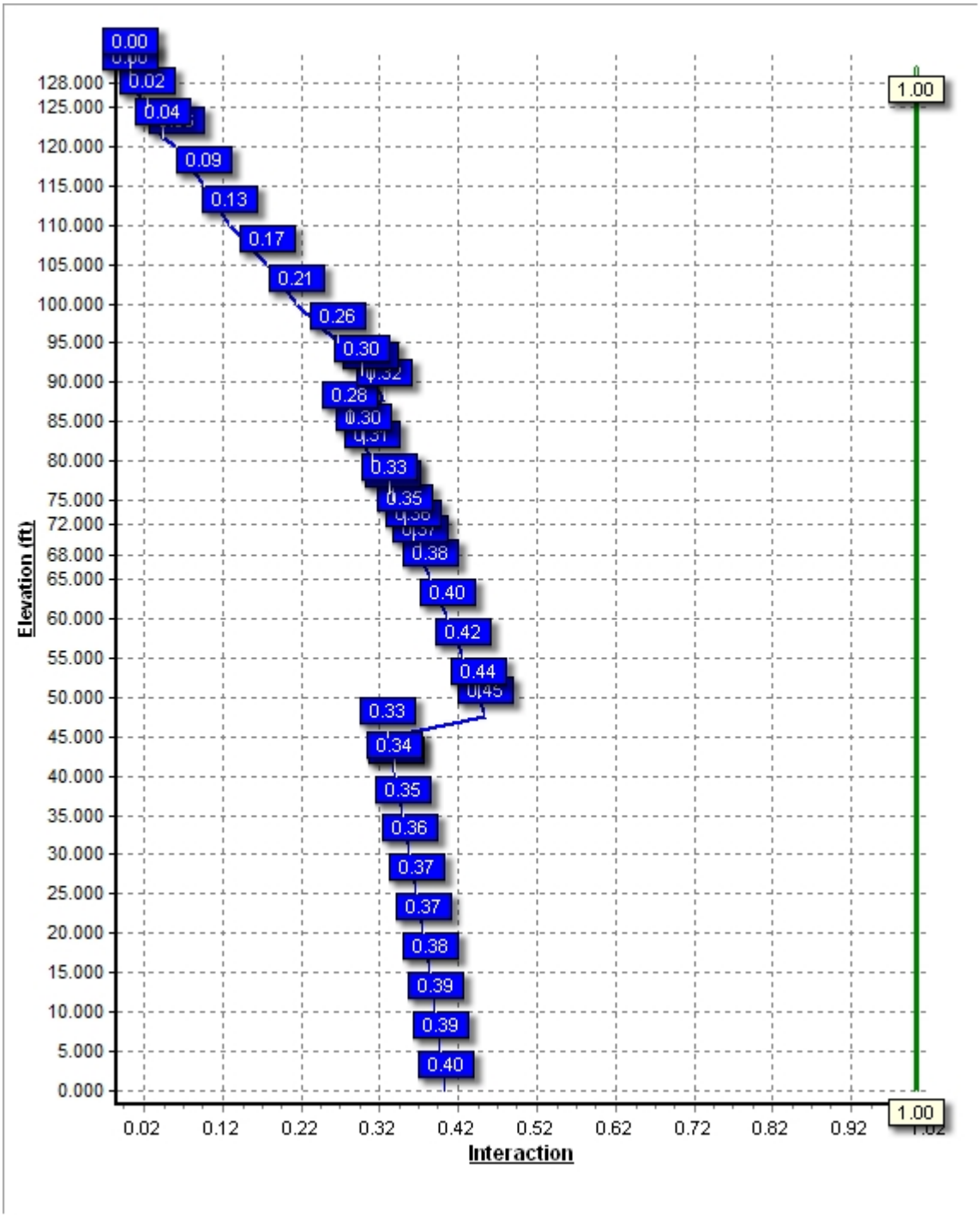
Elevation (ft)
128.000
125.000
120.000
115.000
110.000
105.000
100.000
95.000
90.000
85.000
80.000
75.000
72.000
68.000
65.000
60.000
55.000
50.000
45.000
40.000
35.000
30.000
25.000
20.000
15.000
10.000
5.000
0.000
0.02
0.12
0.22
0.32
0.42
0.52
0.62
0.72
0.82
0.92
Interaction
0.00
0.02
0.04
0.09
0.13
0.17
0.21
0.26
0.30
0.28
0.33
0.35
0.38
0.40
0.42
0.44
0.33
0.34
0.35
0.36
0.37
0.37
0.38
0.39
0.39
0.40
1.00
1.00

Site Number:	**411189**	**Code:**	**ANSI/TIA-222-G**	*© 2007 - 2016 by ATC IP LLC. All rights reserved.*
Site Name:	**Cranburysu CT, CT**	**Engineering Number:**	**OAA681947_C3_02**	**7/25/2016 3:45:59 PM**
Customer:	**AT&T Mobility**			

Analysis Parameters

Location:	**Fairfield County, CT**		
Code:	**ANSI/TIA-222-G**	**Height (ft):**	**130**
Shape:	**18 Sides**	**Base Diameter (in):**	**62.00**
Pole Type:	**Taper**	**Top Diameter (in):**	**28.18**
Pole Manfacturer:	**EEI**	**Taper (in/ft) :**	**0.271**

Ice & Wind Parameters

Structure Class:	**II**	**Design Wind Speed Without Ice:**	**95 mph**
Exposure Category:	**C**	**Design Wind Speed With Ice:**	**0 mph**
Topographic Category:	**1**	**Operational Wind Speed:**	**60 mph**
Crest Height:	**0.0 ft**	**Design Ice Thickness:**	**0.00 in**

Seismic Parameters

Analysis Method:	**Equivalent Modal Analysis & Equivalent Lateral Force Methods**
Site Class:	**D - Stiff Soil**
Period Based on Rayleigh Method (sec):	**1.43**

T_L (sec):	**6**	**p:**	**1.3**	**C_s:**	**0.050**
S_s:	**0.227**	**S_1:**	**0.067**	**C_s Max:**	**0.050**
F_a:	**1.600**	**F_v:**	**2.400**	**C_s Min:**	**0.030**
S_{ds}:	**0.242**	**S_{d1}:**	**0.107**		

Load Cases

1.2D + 1.6W	**95 mph with No Ice**
0.9D + 1.6W	**95 mph with No Ice (Reduced DL)**
1.2D + 1.0Di + 1.0Wi	**0 mph with 0.00 in Radial Ice**
(1.2 + 0.2Sds) * DL + E ELFM	**Seismic Equivalent Lateral Forces Method**
(1.2 + 0.2Sds) * DL + E EMAM	**Seismic Equivalent Modal Analysis Method**
(0.9 - 0.2Sds) * DL + E ELFM	**Seismic (Reduced DL) Equivalent Lateral Forces Method**
(0.9 - 0.2Sds) * DL + E EMAM	**Seismic (Reduced DL) Equivalent Modal Analysis Method**
1.0D + 1.0W	**Serviceability 60 mph**

© 2007 - 2016 by ATC IP LLC. All rights reserved.

Shaft Section Properties

Sect Info	Length (ft)	Thick (in)	Fy (ksi)	Joint Type	Slip Joint Len (in)	Weight (lb)	Bottom Dia (in)	Bottom Elev (ft)	Bottom Area (in²)	Bottom Ix (in⁴)	Bottom W/t Ratio	Bottom D/t Ratio	Top Dia (in)	Top Elev (ft)	Top Area (in²)	Top Ix (in⁴)	Top W/t Ratio	Top D/t Ratio	Taper (in/ft)
1-18	47.500	0.5000	65		0.00	14,125	62.00	0.00	97.60	46638.0	20.45	124.00	49.14	47.50	77.19	23072.0	15.92	98.28	0.270745
2-18	47.330	0.3750	65	Slip	84.00	8,626	51.78	40.50	61.19	20432.2	22.94	138.09	38.97	87.83	45.94	8645.4	16.91	103.92	0.270745
3-18	47.837	0.3125	65	Slip	68.00	5,544	41.13	82.16	40.48	8521.7	21.80	131.62	28.17	130.00	27.64	2711.5	14.49	90.17	0.270745
				Shaft Weight		28,296													

Discrete Appurtenance Properties

Attach Elev (ft)	Description	Qty	No Ice Weight (lb)	No Ice EPAa (sf)	No Ice Orientation Factor	Ice Weight (lb)	Ice EPAa (sf)	Ice Orientation Factor	Distance From Face (ft)	Vert Ecc (ft)
128.00	Amphenol Antel BXA-171085-	6	10.50	2.940	0.87	10.50	2.940	0.87	0.000	2.000
128.00	Antel LPA-80080/6CF	2	21.00	8.630	0.75	21.00	4.323	0.75	0.000	1.000
128.00	Decibel DB846F65ZAXY	4	21.00	7.030	0.94	21.00	7.033	0.94	0.000	1.000
128.00	Flat Low Profile Platform	1	1500.00	26.100	1.00	1,500.00	26.100	1.00	0.000	0.000
128.00	Powerwave Allgon P65-16-	3	33.00	8.400	0.75	33.00	8.400	0.75	0.000	1.000
128.00	VZW Unused Reserve: 5,817	1	922.00	40.430	1.00	922.00	40.430	1.00	0.000	1.000
121.00	Alcatel-Lucent 1900MHz RRH	3	44.00	3.260	0.67	44.00	2.492	0.67	0.000	4.000
121.00	Alcatel-Lucent 800MHz RRH	3	53.00	2.130	0.67	53.00	2.130	0.67	0.000	4.000
121.00	Andrew Microwaves	1	49.00	7.760	1.00	49.00	7.760	1.00	0.000	4.000
121.00	Flat Low Profile Platform	1	1500.00	26.100	1.00	1,500.00	26.100	1.00	0.000	0.000
121.00	Kathrein Scala 840 10054	3	30.00	4.580	0.65	30.00	4.580	0.65	0.000	4.000
121.00	RFS APXVSPP18-C-A20	6	57.00	8.020	0.83	57.00	8.020	0.83	0.000	4.000
110.00	Commscope LNX-6515DS-	3	50.30	11.450	0.84	50.30	11.450	0.84	0.000	3.000
110.00	EMS RR90-17-02DP	3	13.50	4.360	0.73	13.50	4.356	0.73	0.000	3.000
110.00	Ericsson AIR 21, 1.3 M, B2A	6	83.00	6.050	0.86	83.00	6.050	0.86	0.000	3.000
110.00	Ericsson KRY 112 71	3	13.20	0.680	0.50	13.20	0.582	0.50	0.000	3.000
110.00	Ericsson RRUS 11 B12	3	50.70	2.790	0.67	50.70	2.790	0.67	0.000	3.000
110.00	Flat Low Profile Platform	1	1500.00	26.100	1.00	1,500.00	26.100	1.00	0.000	0.000
100.00	CCI HPA-65R-BUU-H6	3	51.00	9.660	0.83	51.00	9.658	0.83	0.000	4.000
100.00	Ericsson RRUS 12 w/ RRUS	3	71.40	3.150	0.67	71.40	3.145	0.67	0.000	4.000
100.00	Ericsson RRUS-11 (50 lbs.)	3	50.00	2.570	0.67	50.00	2.566	0.67	0.000	4.000
100.00	Flat Low Profile Platform	1	1500.00	26.100	1.00	1,500.00	26.100	1.00	0.000	0.000
100.00	Powerwave Allgon 7020	6	2.20	0.400	0.50	2.20	0.400	0.50	0.000	4.000
100.00	Powerwave Allgon 7770.00	6	35.00	5.510	0.77	35.00	5.508	0.77	0.000	4.000
100.00	Powerwave Allgon LGP21401	12	14.10	1.100	0.50	14.10	1.100	0.50	0.000	4.000
100.00	Powerwave Allgon LGP21901	12	5.50	0.230	0.50	5.50	0.230	0.50	0.000	0.000
100.00	Raycap DC6-48-60-18-8F	1	20.00	1.110	1.00	20.00	1.110	1.00	0.000	4.000
91.00	Empty Flat Low Profile Platfor	1	1500.00	26.100	1.00	1,500.00	26.100	1.00	0.000	0.000
80.00	Flat Side Arm	1	150.00	6.300	1.00	150.00	6.300	1.00	0.000	0.000
80.00	GPS	1	10.00	1.000	1.00	10.00	0.525	1.00	0.000	0.000
76.00	2" x 8" GPS	1	10.00	0.160	1.00	10.00	0.160	1.00	0.000	0.000
76.00	Stand-Off	1	100.00	3.000	1.00	100.00	3.000	1.00	0.000	0.000
75.00	2" x 8" GPS	1	10.00	0.160	1.00	10.00	0.160	1.00	0.000	0.000
75.00	GPS	1	10.00	1.000	1.00	10.00	1.000	1.00	0.000	0.000
72.00	2" x 8" GPS	1	10.00	0.160	1.00	10.00	0.160	1.00	0.000	0.000
72.00	Side Arm	1	126.00	5.000	1.00	126.00	5.000	1.00	0.000	0.000
68.00	2" x 8" GPS	1	10.00	0.160	1.00	10.00	0.160	1.00	0.000	0.000
68.00	Side Arm	1	126.00	5.000	1.00	126.00	5.000	1.00	0.000	0.000
60.00	GPS	1	10.00	1.000	1.00	10.00	1.000	1.00	0.000	0.000
60.00	Side Arm	1	126.00	5.000	1.00	126.00	5.000	1.00	0.000	0.000
	Totals	113	12056.70			12,056.70			Number of Loadings :	40

© 2007 - 2016 by ATC IP LLC. All rights reserved.

Linear Appurtenance Properties

Elev From (ft)	Elev To (ft)	Qty	Description	Coax Diameter (in)	Coax Weight (lb/ft)	Flat	Projected Width (in)	Exposed To Wind	Carrier
0.00	128.00	18	1 5/8" Coax	1.98	0.82	N	1.98	N	Verizon
0.00	121.00	3	0.39" Fiber Trunk	0.39	0.06	N	0.39	N	Sprint Nextel
0.00	121.00	3	0.78" 8 AWG 6	0.78	0.59	N	0.78	N	Sprint Nextel
0.00	121.00	3	1 1/4" Coax	1.55	0.63	N	1.55	N	Sprint Nextel
0.00	121.00	6	1 5/8" Coax	1.98	0.82	N	1.98	N	Sprint Nextel
0.00	121.00	1	1/2" Coax	0.63	0.15	N	0.63	N	Sprint Nextel
0.00	121.00	2	2" Conduit	2.38	3.65	N	2.38	N	Sprint Nextel
0.00	110.00	12	1 5/8" Coax	1.98	0.82	N	1.98	N	T-Mobile
0.00	110.00	6	7/8" Coax	1.09	0.33	N	1.09	N	T-Mobile
0.00	110.00	1	7/8" Fiber	0.88	0.70	N	0.88	N	T-Mobile
0.00	100.00	1	0.39" Fiber Trunk	0.39	0.06	N	0.39	N	AT&T Mobility
0.00	100.00	2	0.78" 8 AWG 6	0.78	0.59	N	0.78	N	AT&T Mobility
0.00	100.00	12	1 5/8" Coax	1.98	0.82	N	1.98	N	AT&T Mobility
0.00	100.00	1	3" conduit	3.50	7.58	N	3.50	N	AT&T Mobility
0.00	80.00	1	1/2" Coax	0.63	0.15	N	0.63	N	T-Mobile
0.00	76.00	1	1/2" Coax	0.63	0.15	N	0.63	N	Verizon
0.00	75.00	1	0.63" LDF4-50A	0.63	0.15	N	0.63	N	Verizon
0.00	75.00	1	1/2" Coax	0.63	0.15	N	0.63	N	Verizon
0.00	72.00	1	0.63" LDF4-50A	0.63	0.15	N	0.63	N	Verizon
0.00	68.00	1	0.63" LDF4-50A	0.63	0.15	N	0.63	N	Verizon
0.00	60.00	1	1/2" Coax	0.63	0.15	N	0.63	N	AT&T Mobility

© 2007 - 2016 by ATC IP LLC. All rights reserved.

Segment Properties (Max Len : 5. ft)

Seg Top Elev (ft)	Description	Thick (in)	Flat Dia (in)	Area (in^2)	Ix (in^4)	W/t Ratio	D/t Ratio	F'y (ksi)	S (in^3)	Z (in^3)	Weight (lb)
0.00		0.5000	62.000	97.597	46,638.0	20.45	124.00	77.3	1481.	0.0	0.0
5.00		0.5000	60.646	95.449	43,625.5	19.98	121.29	77.9	1416.	0.0	1,642.2
10.00		0.5000	59.293	93.300	40,745.7	19.50	118.59	78.5	1353.	0.0	1,605.7
15.00		0.5000	57.939	91.152	37,995.4	19.02	115.88	79.0	1291.	0.0	1,569.1
20.00		0.5000	56.585	89.004	35,371.8	18.54	113.17	79.6	1231.	0.0	1,532.6
25.00		0.5000	55.231	86.856	32,871.8	18.07	110.46	80.2	1172.	0.0	1,496.0
30.00		0.5000	53.878	84.707	30,492.5	17.59	107.76	80.7	1114.	0.0	1,459.5
35.00		0.5000	52.524	82.559	28,230.9	17.11	105.05	81.3	1058.	0.0	1,422.9
40.00		0.5000	51.170	80.411	26,083.9	16.63	102.34	81.8	1004.	0.0	1,386.4
40.50	Bot - Section 2	0.5000	51.035	80.196	25,875.4	16.59	102.07	81.9	998.6	0.0	136.6
45.00		0.5000	49.816	78.262	24,048.7	16.16	99.63	82.4	950.8	0.0	2,139.0
47.50	Top - Section 1	0.3750	49.890	58.933	18,254.8	22.05	133.04	75.5	720.7	0.0	1,166.0
50.00		0.3750	49.213	58.127	17,516.3	21.73	131.23	75.8	701.0	0.0	497.9
55.00		0.3750	47.859	56.516	16,099.7	21.09	127.62	76.6	662.6	0.0	975.3
60.00		0.3750	46.505	54.905	14,761.7	20.46	124.01	77.3	625.2	0.0	947.8
65.00		0.3750	45.152	53.293	13,499.9	19.82	120.40	78.1	588.9	0.0	920.4
68.00		0.3750	44.339	52.327	12,778.4	19.44	118.24	78.5	567.6	0.0	539.1
70.00		0.3750	43.798	51.682	12,312.1	19.18	116.79	78.8	553.7	0.0	353.9
72.00		0.3750	43.256	51.038	11,857.2	18.93	115.35	79.1	539.9	0.0	349.5
75.00		0.3750	42.444	50.071	11,196.1	18.55	113.18	79.6	519.6	0.0	516.1
76.00		0.3750	42.173	49.749	10,981.3	18.42	112.46	79.7	512.9	0.0	169.8
80.00		0.3750	41.090	48.460	10,149.7	17.91	109.57	80.3	486.5	0.0	668.4
82.16	Bot - Section 3	0.3750	40.505	47.763	9,717.9	17.63	108.01	80.7	472.6	0.0	354.2
85.00		0.3750	39.737	46.849	9,170.6	17.27	105.96	81.1	454.6	0.0	843.7
87.83	Top - Section 2	0.3125	39.595	38.962	7,596.4	20.93	126.71	76.8	377.9	0.0	825.6
90.00		0.3125	39.008	38.380	7,260.6	20.60	124.83	77.2	366.6	0.0	285.5
91.00		0.3125	38.737	38.111	7,109.3	20.45	123.96	77.4	361.5	0.0	130.1
95.00		0.3125	37.654	37.037	6,525.0	19.84	120.49	78.1	341.3	0.0	511.4
100.0		0.3125	36.301	35.694	5,840.8	19.07	116.16	79.0	316.9	0.0	618.7
105.0		0.3125	34.947	34.352	5,206.1	18.31	111.83	79.9	293.4	0.0	595.9
110.0		0.3125	33.593	33.009	4,619.2	17.54	107.50	80.8	270.8	0.0	573.0
115.0		0.3125	32.239	31.666	4,078.1	16.78	103.17	81.7	249.1	0.0	550.2
120.0		0.3125	30.886	30.324	3,581.1	16.02	98.83	82.6	228.4	0.0	527.3
121.0		0.3125	30.615	30.055	3,486.8	15.86	97.97	82.6	224.3	0.0	102.7
125.0		0.3125	29.532	28.981	3,126.1	15.25	94.50	82.6	208.5	0.0	401.8
128.0		0.3125	28.720	28.175	2,872.6	14.79	91.90	82.6	197.0	0.0	291.7
130.0		0.3125	28.178	27.638	2,711.5	14.49	90.17	82.6	189.5	0.0	189.9
											28,296.3

© 2007 - 2016 by ATC IP LLC. All rights reserved.

Load Case: 1.2D + 1.6W 95 mph with No Ice 19 Iterations

Gust Response Factor : 1.10
Dead Load Factor : 1.20
Wind Load Factor : 1.60

Wind Importance Factor : 1.00

Applied Segment Forces Summary

		Shaft Forces		Discrete Forces				Linear Forces		Sum of Forces			
Seg Elev (ft)	Description	Wind FX (lb)	Dead Load (lb)	Wind FX (lb)	Torsion MY (lb-ft)	Moment MZ (lb-ft)	Dead Load (lb)	Wind FX (lb)	Dead Load (lb)	Wind FX (lb)	Dead Load (lb)	Torsion MY (lb-ft)	Moment MZ (lb)
0.00		276.9	0.0					0.0	0.0	276.9	0.0	0.0	0.0
5.00		547.6	1,970.7					0.0	379.2	547.6	2,349.9	0.0	0.0
10.00		535.4	1,926.8					0.0	379.2	535.4	2,306.0	0.0	0.0
15.00		531.4	1,883.0					0.0	379.2	531.4	2,262.2	0.0	0.0
20.00		541.3	1,839.1					0.0	379.2	541.3	2,218.3	0.0	0.0
25.00		554.0	1,795.2					0.0	379.2	554.0	2,174.4	0.0	0.0
30.00		561.8	1,751.4					0.0	379.2	561.8	2,130.6	0.0	0.0
35.00		565.8	1,707.5					0.0	379.2	565.8	2,086.7	0.0	0.0
40.00		311.9	1,663.6					0.0	379.2	311.9	2,042.8	0.0	0.0
40.50	Bot - Section 2	287.3	164.0					0.0	37.9	287.3	201.9	0.0	0.0
45.00		402.4	2,566.8					0.0	341.3	402.4	2,908.1	0.0	0.0
47.50	Top - Section 1	286.7	1,399.2					0.0	189.6	286.7	1,588.8	0.0	0.0
50.00		428.1	597.5					0.0	189.6	428.1	787.1	0.0	0.0
55.00		567.2	1,170.3					0.0	379.2	567.2	1,549.5	0.0	0.0
60.00	Appertunance(s)	561.4	1,137.4	263.4	0.0	0.0	163.2	0.0	379.2	824.8	1,679.8	0.0	0.0
65.00		444.7	1,104.5					0.0	378.3	444.7	1,482.8	0.0	0.0
68.00	Appertunance(s)	275.2	646.9	232.6	0.0	0.0	163.2	0.0	227.0	507.8	1,037.1	0.0	0.0
70.00		218.5	424.7					0.0	151.0	218.5	575.7	0.0	0.0
72.00	Appertunance(s)	270.9	419.4	235.4	0.0	0.0	163.2	0.0	151.0	506.3	733.6	0.0	0.0
75.00	Appertunance(s)	215.6	619.3	53.4	0.0	0.0	24.0	0.0	225.9	269.0	869.2	0.0	0.0
76.00	Appertunance(s)	266.1	203.8	145.8	0.0	0.0	132.0	0.0	74.9	411.9	410.7	0.0	0.0
80.00	Appertunance(s)	326.0	802.0	340.5	0.0	0.0	192.0	0.0	299.0	666.6	1,293.1	0.0	0.0
82.16	Bot - Section 3	263.2	425.0					0.0	161.3	263.2	586.3	0.0	0.0
85.00		297.2	1,012.5					0.0	211.6	297.2	1,224.0	0.0	0.0
87.83	Top - Section 2	259.4	990.7					0.0	211.1	259.4	1,201.8	0.0	0.0
90.00		163.0	342.7					0.0	161.8	163.0	504.5	0.0	0.0
91.00	Appertunance(s)	253.5	156.2	1,251.0	0.0	0.0	1,800.0	0.0	74.6	1,504.5	2,030.7	0.0	0.0
95.00		449.6	613.7					0.0	298.3	449.6	912.0	0.0	0.0
100.00	Appertunance(s)	488.0	742.5	4,087.3	0.0	11,029.2	2,994.7	0.0	372.9	4,575.3	4,110.1	0.0	0.0
105.00		474.7	715.1					0.0	260.9	474.7	976.0	0.0	0.0
110.00	Appertunance(s)	460.8	687.6	4,361.9	0.0	9,180.0	2,857.3	0.0	260.9	4,822.7	3,805.9	0.0	0.0
115.00		446.4	660.2					0.0	185.8	446.4	846.0	0.0	0.0
120.00		262.5	632.8					0.0	185.8	262.5	818.6	0.0	0.0
121.00	Appertunance(s)	211.9	123.3	4,173.5	0.0	11,380.6	2,726.4	0.0	37.2	4,385.4	2,886.8	0.0	0.0
125.00		292.4	482.1					0.0	70.8	292.4	553.0	0.0	0.0
128.00	Appertunance(s)	204.2	350.1	6,468.9	0.0	5,759.1	3,252.0	0.0	53.1	6,673.1	3,655.2	0.0	0.0
130.00		80.7	227.9					0.0	0.0	80.7	227.9	0.0	0.0
									Totals:	35,197.4	57,027.3	0.00	0.00

© 2007 - 2016 by ATC IP LLC. All rights reserved.

Load Case: 1.2D + 1.6W 95 mph with No Ice 19 Iterations

Gust Response Factor : 1.10
Dead Load Factor : 1.20
Wind Load Factor : 1.60

Wind Importance Factor : 1.00

Calculated Forces

Seg Elev (ft)	Pu FY (-) (kips)	Vu FX (-) (kips)	Tu MY (ft-kips)	Mu MZ (ft-kips)	Mu MX (ft-kips)	Resultant Moment (ft-kips)	phi Pn (kips)	phi Vn (kips)	phi Tn (ft-kips)	phi Mn (ft-kips)	Total Deflect (in)	Rotation (deg)	Ratio
0.00	-57.00	-34.97	0.00	-3,375.45	0.00	3,375.45	6,793.61	3,396.81	17,163.1	8,594.34	0.00	0.00	0.401
5.00	-54.59	-34.52	0.00	-3,200.60	0.00	3,200.60	6,692.31	3,346.15	16,532.0	8,278.33	0.05	-0.10	0.395
10.00	-52.22	-34.07	0.00	-3,028.01	0.00	3,028.01	6,588.83	3,294.42	15,907.1	7,965.37	0.21	-0.20	0.388
15.00	-49.90	-33.62	0.00	-2,857.66	0.00	2,857.66	6,483.18	3,241.59	15,288.6	7,655.67	0.48	-0.30	0.381
20.00	-47.62	-33.15	0.00	-2,689.57	0.00	2,689.57	6,375.36	3,187.68	14,676.9	7,349.39	0.86	-0.41	0.374
25.00	-45.39	-32.66	0.00	-2,523.82	0.00	2,523.82	6,265.37	3,132.69	14,072.5	7,046.72	1.34	-0.51	0.366
30.00	-43.21	-32.16	0.00	-2,360.51	0.00	2,360.51	6,153.21	3,076.61	13,475.6	6,747.85	1.94	-0.62	0.357
35.00	-41.07	-31.65	0.00	-2,199.72	0.00	2,199.72	6,038.88	3,019.44	12,886.7	6,452.96	2.64	-0.73	0.348
40.00	-39.00	-31.35	0.00	-2,041.49	0.00	2,041.49	5,922.38	2,961.19	12,306.1	6,162.22	3.46	-0.83	0.338
40.50	-38.77	-31.09	0.00	-2,025.82	0.00	2,025.82	5,910.61	2,955.30	12,248.5	6,133.39	3.55	-0.84	0.337
45.00	-35.83	-30.69	0.00	-1,885.91	0.00	1,885.91	5,803.70	2,901.85	11,734.2	5,875.83	4.39	-0.94	0.327
47.50	-34.22	-30.41	0.00	-1,809.18	0.00	1,809.18	4,002.81	2,001.40	8,146.29	4,079.20	4.90	-0.99	0.452
50.00	-33.39	-30.02	0.00	-1,733.16	0.00	1,733.16	3,967.67	1,983.84	7,963.57	3,987.71	5.43	-1.05	0.443
55.00	-31.78	-29.50	0.00	-1,583.04	0.00	1,583.04	3,895.77	1,947.89	7,600.87	3,806.08	6.61	-1.18	0.424
60.00	-30.06	-28.71	0.00	-1,435.53	0.00	1,435.53	3,821.70	1,910.85	7,242.12	3,626.44	7.92	-1.32	0.404
65.00	-28.53	-28.28	0.00	-1,291.98	0.00	1,291.98	3,745.46	1,872.73	6,887.67	3,448.96	9.37	-1.45	0.382
68.00	-27.48	-27.78	0.00	-1,207.14	0.00	1,207.14	3,698.67	1,849.34	6,677.23	3,343.58	10.31	-1.53	0.369
70.00	-26.88	-27.57	0.00	-1,151.58	0.00	1,151.58	3,667.05	1,833.52	6,537.91	3,273.81	10.96	-1.58	0.359
72.00	-26.13	-27.07	0.00	-1,096.45	0.00	1,096.45	3,635.07	1,817.54	6,399.40	3,204.45	11.63	-1.63	0.350
75.00	-25.25	-26.80	0.00	-1,015.23	0.00	1,015.23	3,586.46	1,793.23	6,193.19	3,101.20	12.68	-1.71	0.335
76.00	-24.82	-26.40	0.00	-988.43	0.00	988.43	3,570.09	1,785.04	6,124.88	3,066.99	13.04	-1.73	0.329
80.00	-23.52	-25.73	0.00	-882.83	0.00	882.83	3,503.71	1,751.85	5,853.88	2,931.29	14.54	-1.83	0.308
82.16	-22.91	-25.47	0.00	-827.17	0.00	827.17	3,467.23	1,733.61	5,708.83	2,858.66	15.38	-1.88	0.296
85.00	-21.67	-25.15	0.00	-754.93	0.00	754.93	3,418.78	1,709.39	5,520.34	2,764.27	16.52	-1.95	0.280
87.83	-20.46	-24.87	0.00	-683.75	0.00	683.75	2,692.45	1,346.23	4,345.60	2,176.03	17.70	-2.01	0.322
90.00	-19.94	-24.70	0.00	-629.77	0.00	629.77	2,665.65	1,332.83	4,237.49	2,121.89	18.62	-2.06	0.305
91.00	-17.94	-23.15	0.00	-605.07	0.00	605.07	2,653.16	1,326.58	4,187.89	2,097.06	19.06	-2.08	0.296
95.00	-17.01	-22.69	0.00	-512.49	0.00	512.49	2,602.34	1,301.17	3,990.97	1,998.45	20.84	-2.17	0.263
100.00	-13.05	-17.98	0.00	-388.01	0.00	388.01	2,536.86	1,268.43	3,748.34	1,876.95	23.17	-2.27	0.212
105.00	-12.07	-17.48	0.00	-298.11	0.00	298.11	2,469.21	1,234.61	3,509.96	1,757.59	25.60	-2.35	0.175
110.00	-8.46	-12.51	0.00	-201.52	0.00	201.52	2,399.39	1,199.69	3,276.20	1,640.54	28.10	-2.42	0.126
115.00	-7.62	-12.04	0.00	-138.95	0.00	138.95	2,327.39	1,163.70	3,047.43	1,525.98	30.67	-2.48	0.094
120.00	-6.81	-11.74	0.00	-78.76	0.00	78.76	2,252.89	1,126.45	2,823.60	1,413.90	33.29	-2.51	0.059
121.00	-4.12	-7.23	0.00	-55.64	0.00	55.64	2,232.94	1,116.47	2,773.56	1,388.84	33.81	-2.52	0.042
125.00	-3.58	-6.92	0.00	-26.70	0.00	26.70	2,153.14	1,076.57	2,577.88	1,290.85	35.93	-2.53	0.022
128.00	-0.22	-0.09	0.00	-0.18	0.00	0.18	2,093.29	1,046.64	2,435.81	1,219.72	37.53	-2.54	0.000
130.00	0.00	-0.08	0.00	0.00	0.00	0.00	2,053.39	1,026.69	2,343.34	1,173.41	38.59	-2.54	0.000

© 2007 - 2016 by ATC IP LLC. All rights reserved.

Load Case: 0.9D + 1.6W — 95 mph with No Ice (Reduced DL) — 19 Iterations

Gust Response Factor : 1.10
Dead Load Factor : 0.90
Wind Load Factor : 1.60

Wind Importance Factor : 1.00

Applied Segment Forces Summary

		Shaft Forces		Discrete Forces				Linear Forces		Sum of Forces			
Seg Elev (ft)	Description	Wind FX (lb)	Dead Load (lb)	Wind FX (lb)	Torsion MY (lb-ft)	Moment MZ (lb-ft)	Dead Load (lb)	Wind FX (lb)	Dead Load (lb)	Wind FX (lb)	Dead Load (lb)	Torsion MY (lb-ft)	Moment MZ (lb)
0.00		276.9	0.0					0.0	0.0	276.9	0.0	0.0	0.0
5.00		547.6	1,478.0					0.0	284.4	547.6	1,762.4	0.0	0.0
10.00		535.4	1,445.1					0.0	284.4	535.4	1,729.5	0.0	0.0
15.00		531.4	1,412.2					0.0	284.4	531.4	1,696.6	0.0	0.0
20.00		541.3	1,379.3					0.0	284.4	541.3	1,663.7	0.0	0.0
25.00		554.0	1,346.4					0.0	284.4	554.0	1,630.8	0.0	0.0
30.00		561.8	1,313.5					0.0	284.4	561.8	1,597.9	0.0	0.0
35.00		565.8	1,280.6					0.0	284.4	565.8	1,565.0	0.0	0.0
40.00		311.9	1,247.7					0.0	284.4	311.9	1,532.1	0.0	0.0
40.50	Bot - Section 2	287.3	123.0					0.0	28.4	287.3	151.4	0.0	0.0
45.00		402.4	1,925.1					0.0	256.0	402.4	2,181.1	0.0	0.0
47.50	Top - Section 1	286.7	1,049.4					0.0	142.2	286.7	1,191.6	0.0	0.0
50.00		428.1	448.1					0.0	142.2	428.1	590.3	0.0	0.0
55.00		567.2	877.7					0.0	284.4	567.2	1,162.1	0.0	0.0
60.00	Appertunance(s)	561.4	853.1	263.4	0.0	0.0	122.4	0.0	284.4	824.8	1,259.9	0.0	0.0
65.00		444.7	828.4					0.0	283.7	444.7	1,112.1	0.0	0.0
68.00	Appertunance(s)	275.2	485.2	232.6	0.0	0.0	122.4	0.0	170.2	507.8	777.8	0.0	0.0
70.00		218.5	318.5					0.0	113.2	218.5	431.7	0.0	0.0
72.00	Appertunance(s)	270.9	314.6	235.4	0.0	0.0	122.4	0.0	113.2	506.3	550.2	0.0	0.0
75.00	Appertunance(s)	215.6	464.5	53.4	0.0	0.0	18.0	0.0	169.4	269.0	651.9	0.0	0.0
76.00	Appertunance(s)	266.1	152.8	145.8	0.0	0.0	99.0	0.0	56.2	411.9	308.1	0.0	0.0
80.00	Appertunance(s)	326.0	601.5	340.5	0.0	0.0	144.0	0.0	224.3	666.6	969.8	0.0	0.0
82.16	Bot - Section 3	263.2	318.7					0.0	121.0	263.2	439.8	0.0	0.0
85.00		297.2	759.3					0.0	158.7	297.2	918.0	0.0	0.0
87.83	Top - Section 2	259.4	743.1					0.0	158.3	259.4	901.4	0.0	0.0
90.00		163.0	257.0					0.0	121.4	163.0	378.4	0.0	0.0
91.00	Appertunance(s)	253.5	117.1	1,251.0	0.0	0.0	1,350.0	0.0	55.9	1,504.5	1,523.1	0.0	0.0
95.00		449.6	460.3					0.0	223.7	449.6	684.0	0.0	0.0
100.00	Appertunance(s)	488.0	556.8	4,087.3	0.0	11,029.2	2,246.0	0.0	279.7	4,575.3	3,082.6	0.0	0.0
105.00		474.7	536.3					0.0	195.7	474.7	732.0	0.0	0.0
110.00	Appertunance(s)	460.8	515.7	4,361.9	0.0	9,180.0	2,143.0	0.0	195.7	4,822.7	2,854.4	0.0	0.0
115.00		446.4	495.2					0.0	139.4	446.4	634.5	0.0	0.0
120.00		262.5	474.6					0.0	139.4	262.5	614.0	0.0	0.0
121.00	Appertunance(s)	211.9	92.5	4,173.5	0.0	11,380.6	2,044.8	0.0	27.9	4,385.4	2,165.1	0.0	0.0
125.00		292.4	361.6					0.0	53.1	292.4	414.7	0.0	0.0
128.00	Appertunance(s)	204.2	262.6	6,468.9	0.0	5,759.1	2,439.0	0.0	39.9	6,673.1	2,741.4	0.0	0.0
130.00		80.7	170.9					0.0	0.0	80.7	170.9	0.0	0.0
									Totals:	35,197.4	42,770.4	0.00	0.00

© 2007 - 2016 by ATC IP LLC. All rights reserved.

Load Case: 0.9D + 1.6W 95 mph with No Ice (Reduced DL) 19 Iterations

Gust Response Factor : 1.10
Dead Load Factor : 0.90
Wind Load Factor : 1.60

Wind Importance Factor : 1.00

Calculated Forces

Seg Elev (ft)	Pu FY (-) (kips)	Vu FX (-) (kips)	Tu MY (ft-kips)	Mu MZ (ft-kips)	Mu MX (ft-kips)	Resultant Moment (ft-kips)	phi Pn (kips)	phi Vn (kips)	phi Tn (ft-kips)	phi Mn (ft-kips)	Total Deflect (in)	Rotation (deg)	Ratio
0.00	-42.74	-34.96	0.00	-3,358.32	0.00	3,358.32	6,793.61	3,396.81	17,163.1	8,594.34	0.00	0.00	0.397
5.00	-40.92	-34.48	0.00	-3,183.53	0.00	3,183.53	6,692.31	3,346.15	16,532.0	8,278.33	0.05	-0.10	0.391
10.00	-39.13	-34.01	0.00	-3,011.12	0.00	3,011.12	6,588.83	3,294.42	15,907.1	7,965.37	0.21	-0.20	0.384
15.00	-37.37	-33.54	0.00	-2,841.07	0.00	2,841.07	6,483.18	3,241.59	15,288.6	7,655.67	0.48	-0.30	0.377
20.00	-35.65	-33.05	0.00	-2,673.38	0.00	2,673.38	6,375.36	3,187.68	14,676.9	7,349.39	0.85	-0.41	0.369
25.00	-33.97	-32.55	0.00	-2,508.12	0.00	2,508.12	6,265.37	3,132.69	14,072.5	7,046.72	1.33	-0.51	0.361
30.00	-32.32	-32.03	0.00	-2,345.39	0.00	2,345.39	6,153.21	3,076.61	13,475.6	6,747.85	1.93	-0.62	0.353
35.00	-30.70	-31.50	0.00	-2,185.25	0.00	2,185.25	6,038.88	3,019.44	12,886.7	6,452.96	2.63	-0.72	0.344
40.00	-29.14	-31.20	0.00	-2,027.74	0.00	2,027.74	5,922.38	2,961.19	12,306.1	6,162.22	3.44	-0.83	0.334
40.50	-28.96	-30.94	0.00	-2,012.14	0.00	2,012.14	5,910.61	2,955.30	12,248.5	6,133.39	3.53	-0.84	0.333
45.00	-26.75	-30.54	0.00	-1,872.93	0.00	1,872.93	5,803.70	2,901.85	11,734.2	5,875.83	4.37	-0.93	0.323
47.50	-25.54	-30.25	0.00	-1,796.59	0.00	1,796.59	4,002.81	2,001.40	8,146.29	4,079.20	4.87	-0.99	0.447
50.00	-24.90	-29.86	0.00	-1,720.96	0.00	1,720.96	3,967.67	1,983.84	7,963.57	3,987.71	5.40	-1.04	0.438
55.00	-23.68	-29.32	0.00	-1,571.68	0.00	1,571.68	3,895.77	1,947.89	7,600.87	3,806.08	6.57	-1.18	0.419
60.00	-22.38	-28.52	0.00	-1,425.08	0.00	1,425.08	3,821.70	1,910.85	7,242.12	3,626.44	7.87	-1.31	0.399
65.00	-21.22	-28.09	0.00	-1,282.48	0.00	1,282.48	3,745.46	1,872.73	6,887.67	3,448.96	9.31	-1.44	0.378
68.00	-20.43	-27.58	0.00	-1,198.22	0.00	1,198.22	3,698.67	1,849.34	6,677.23	3,343.58	10.24	-1.52	0.364
70.00	-19.98	-27.37	0.00	-1,143.05	0.00	1,143.05	3,667.05	1,833.52	6,537.91	3,273.81	10.89	-1.57	0.355
72.00	-19.41	-26.87	0.00	-1,088.31	0.00	1,088.31	3,635.07	1,817.54	6,399.40	3,204.45	11.56	-1.62	0.345
75.00	-18.75	-26.60	0.00	-1,007.70	0.00	1,007.70	3,586.46	1,793.23	6,193.19	3,101.20	12.61	-1.70	0.330
76.00	-18.42	-26.20	0.00	-981.10	0.00	981.10	3,570.09	1,785.04	6,124.88	3,066.99	12.96	-1.72	0.325
80.00	-17.44	-25.52	0.00	-876.30	0.00	876.30	3,503.71	1,751.85	5,853.88	2,931.29	14.45	-1.82	0.304
82.16	-16.98	-25.27	0.00	-821.08	0.00	821.08	3,467.23	1,733.61	5,708.83	2,858.66	15.29	-1.87	0.292
85.00	-16.05	-24.96	0.00	-749.42	0.00	749.42	3,418.78	1,709.39	5,520.34	2,764.27	16.42	-1.94	0.276
87.83	-15.13	-24.68	0.00	-678.79	0.00	678.79	2,692.45	1,346.23	4,345.60	2,176.03	17.58	-2.00	0.318
90.00	-14.75	-24.51	0.00	-625.24	0.00	625.24	2,665.65	1,332.83	4,237.49	2,121.89	18.50	-2.04	0.301
91.00	-13.25	-22.97	0.00	-600.73	0.00	600.73	2,653.16	1,326.58	4,187.89	2,097.06	18.93	-2.07	0.292
95.00	-12.55	-22.51	0.00	-508.86	0.00	508.86	2,602.34	1,301.17	3,990.97	1,998.45	20.71	-2.16	0.260
100.00	-9.62	-17.84	0.00	-385.26	0.00	385.26	2,536.86	1,268.43	3,748.34	1,876.95	23.02	-2.26	0.209
105.00	-8.88	-17.35	0.00	-296.07	0.00	296.07	2,469.21	1,234.61	3,509.96	1,757.59	25.43	-2.34	0.172
110.00	-6.22	-12.42	0.00	-200.16	0.00	200.16	2,399.39	1,199.69	3,276.20	1,640.54	27.92	-2.41	0.125
115.00	-5.59	-11.95	0.00	-138.08	0.00	138.08	2,327.39	1,163.70	3,047.43	1,525.98	30.47	-2.46	0.093
120.00	-4.99	-11.66	0.00	-78.34	0.00	78.34	2,252.89	1,126.45	2,823.60	1,413.90	33.07	-2.50	0.058
121.00	-3.02	-7.19	0.00	-55.30	0.00	55.30	2,232.94	1,116.47	2,773.56	1,388.84	33.59	-2.50	0.041
125.00	-2.61	-6.88	0.00	-26.56	0.00	26.56	2,153.14	1,076.57	2,577.88	1,290.85	35.70	-2.52	0.022
128.00	-0.17	-0.09	0.00	-0.18	0.00	0.18	2,093.29	1,046.64	2,435.81	1,219.72	37.28	-2.52	0.000
130.00	0.00	-0.08	0.00	0.00	0.00	0.00	2,053.39	1,026.69	2,343.34	1,173.41	38.34	-2.52	0.000

© 2007 - 2016 by ATC IP LLC. All rights reserved.

Load Case: 1.2D + 1.0Di + 1.0Wi 0 mph with 0.00 in Radial Ice 5 Iterations

Gust Response Factor : 1.10
Dead Load Factor : 1.20
Wind Load Factor : 1.00

Ice Dead Load Factor : 1.00

Wind Importance Factor : 1.00
Ice Importance Factor : 1.00

Applied Segment Forces Summary

		Shaft Forces		Discrete Forces				Linear Forces		Sum of Forces			
Seg Elev (ft)	Description	Wind FX (lb)	Dead Load (lb)	Wind FX (lb)	Torsion MY (lb-ft)	Moment MZ (lb-ft)	Dead Load (lb)	Wind FX (lb)	Dead Load (lb)	Wind FX (lb)	Dead Load (lb)	Torsion MY (lb-ft)	Moment MZ (lb)
0.00		0.0	0.0					0.0	0.0	0.0	0.0	0.0	0.0
5.00		0.0	1,970.7					0.0	379.2	0.0	2,349.9	0.0	0.0
10.00		0.0	1,926.8					0.0	379.2	0.0	2,306.0	0.0	0.0
15.00		0.0	1,883.0					0.0	379.2	0.0	2,262.2	0.0	0.0
20.00		0.0	1,839.1					0.0	379.2	0.0	2,218.3	0.0	0.0
25.00		0.0	1,795.2					0.0	379.2	0.0	2,174.4	0.0	0.0
30.00		0.0	1,751.4					0.0	379.2	0.0	2,130.6	0.0	0.0
35.00		0.0	1,707.5					0.0	379.2	0.0	2,086.7	0.0	0.0
40.00		0.0	1,663.6					0.0	379.2	0.0	2,042.8	0.0	0.0
40.50	Bot - Section 2	0.0	164.0					0.0	37.9	0.0	201.9	0.0	0.0
45.00		0.0	2,566.8					0.0	341.3	0.0	2,908.1	0.0	0.0
47.50	Top - Section 1	0.0	1,399.2					0.0	189.6	0.0	1,588.8	0.0	0.0
50.00		0.0	597.5					0.0	189.6	0.0	787.1	0.0	0.0
55.00		0.0	1,170.3					0.0	379.2	0.0	1,549.5	0.0	0.0
60.00	Appertunance(s)	0.0	1,137.4	0.0	0.0	0.0	101.2	0.0	379.2	0.0	1,617.8	0.0	0.0
65.00		0.0	1,104.5					0.0	378.3	0.0	1,482.8	0.0	0.0
68.00	Appertunance(s)	0.0	646.9	0.0	0.0	0.0	299.2	0.0	227.0	0.0	1,173.1	0.0	0.0
70.00		0.0	424.7					0.0	151.0	0.0	575.7	0.0	0.0
72.00	Appertunance(s)	0.0	419.4	0.0	0.0	0.0	107.7	0.0	151.0	0.0	678.1	0.0	0.0
75.00	Appertunance(s)	0.0	619.3	0.0	0.0	0.0	38.3	0.0	225.9	0.0	883.5	0.0	0.0
76.00	Appertunance(s)	0.0	203.8	0.0	0.0	0.0	80.5	0.0	74.9	0.0	359.2	0.0	0.0
80.00	Appertunance(s)	0.0	802.0	0.0	0.0	0.0	112.0	0.0	299.0	0.0	1,213.1	0.0	0.0
82.16	Bot - Section 3	0.0	425.0					0.0	161.3	0.0	586.3	0.0	0.0
85.00		0.0	1,012.5					0.0	211.6	0.0	1,224.0	0.0	0.0
87.83	Top - Section 2	0.0	990.7					0.0	211.1	0.0	1,201.8	0.0	0.0
90.00		0.0	342.7					0.0	161.8	0.0	504.5	0.0	0.0
91.00	Appertunance(s)	0.0	156.2	0.0	0.0	0.0	1,600.0	0.0	74.6	0.0	1,830.7	0.0	0.0
95.00		0.0	613.7					0.0	298.3	0.0	912.0	0.0	0.0
100.00	Appertunance(s)	0.0	742.5	0.0	0.0	0.0	2,650.6	0.0	372.9	0.0	3,766.0	0.0	0.0
105.00		0.0	715.1					0.0	260.9	0.0	976.0	0.0	0.0
110.00	Appertunance(s)	0.0	687.6	0.0	0.0	0.0	2,146.1	0.0	260.9	0.0	3,094.7	0.0	0.0
115.00		0.0	660.2					0.0	185.8	0.0	846.0	0.0	0.0
120.00		0.0	632.8					0.0	185.8	0.0	818.6	0.0	0.0
121.00	Appertunance(s)	0.0	123.3	0.0	0.0	0.0	2,045.1	0.0	37.2	0.0	2,205.5	0.0	0.0
125.00		0.0	482.1					0.0	70.8	0.0	553.0	0.0	0.0
128.00	Appertunance(s)	0.0	350.1	0.0	0.0	0.0	2,190.3	0.0	53.1	0.0	2,593.5	0.0	0.0
130.00		0.0	227.9					0.0	0.0	0.0	227.9	0.0	0.0
									Totals:	0.00	53,930.3	0.00	0.00

 © 2007 - 2016 by ATC IP LLC. All rights reserved.

Load Case: 1.2D + 1.0Di + 1.0Wi 0 mph with 0.00 in Radial Ice 5 Iterations

Gust Response Factor : 1.10 Ice Dead Load Factor : 1.00 Wind Importance Factor : 1.00
Dead Load Factor : 1.20 Ice Importance Factor : 1.00
Wind Load Factor : 1.00

Calculated Forces

Seg Elev (ft)	Pu FY (-) (kips)	Vu FX (-) (kips)	Tu MY (ft-kips)	Mu MZ (ft-kips)	Mu MX (ft-kips)	Resultant Moment (ft-kips)	phi Pn (kips)	phi Vn (kips)	phi Tn (ft-kips)	phi Mn (ft-kips)	Total Deflect (in)	Rotation (deg)	Ratio
0.00	-53.93	0.00	0.00	0.00	0.00	0.00	6,793.61	3,396.81	17,163.1	8,594.34	0.00	0.00	0.008
5.00	-51.58	0.00	0.00	0.00	0.00	0.00	6,692.31	3,346.15	16,532.0	8,278.33	0.00	0.00	0.008
10.00	-49.27	0.00	0.00	0.00	0.00	0.00	6,588.83	3,294.42	15,907.1	7,965.37	0.00	0.00	0.007
15.00	-47.01	0.00	0.00	0.00	0.00	0.00	6,483.18	3,241.59	15,288.6	7,655.67	0.00	0.00	0.007
20.00	-44.79	0.00	0.00	0.00	0.00	0.00	6,375.36	3,187.68	14,676.9	7,349.39	0.00	0.00	0.007
25.00	-42.62	0.00	0.00	0.00	0.00	0.00	6,265.37	3,132.69	14,072.5	7,046.72	0.00	0.00	0.007
30.00	-40.49	0.00	0.00	0.00	0.00	0.00	6,153.21	3,076.61	13,475.6	6,747.85	0.00	0.00	0.007
35.00	-38.40	0.00	0.00	0.00	0.00	0.00	6,038.88	3,019.44	12,886.7	6,452.96	0.00	0.00	0.006
40.00	-36.36	0.00	0.00	0.00	0.00	0.00	5,922.38	2,961.19	12,306.1	6,162.22	0.00	0.00	0.006
40.50	-36.16	0.00	0.00	0.00	0.00	0.00	5,910.61	2,955.30	12,248.5	6,133.39	0.00	0.00	0.006
45.00	-33.25	0.00	0.00	0.00	0.00	0.00	5,803.70	2,901.85	11,734.2	5,875.83	0.00	0.00	0.006
47.50	-31.66	0.00	0.00	0.00	0.00	0.00	4,002.81	2,001.40	8,146.29	4,079.20	0.00	0.00	0.008
50.00	-30.87	0.00	0.00	0.00	0.00	0.00	3,967.67	1,983.84	7,963.57	3,987.71	0.00	0.00	0.008
55.00	-29.32	0.00	0.00	0.00	0.00	0.00	3,895.77	1,947.89	7,600.87	3,806.08	0.00	0.00	0.008
60.00	-27.71	0.00	0.00	0.00	0.00	0.00	3,821.70	1,910.85	7,242.12	3,626.44	0.00	0.00	0.007
65.00	-26.22	0.00	0.00	0.00	0.00	0.00	3,745.46	1,872.73	6,887.67	3,448.96	0.00	0.00	0.007
68.00	-25.05	0.00	0.00	0.00	0.00	0.00	3,698.67	1,849.34	6,677.23	3,343.58	0.00	0.00	0.007
70.00	-24.47	0.00	0.00	0.00	0.00	0.00	3,667.05	1,833.52	6,537.91	3,273.81	0.00	0.00	0.007
72.00	-23.80	0.00	0.00	0.00	0.00	0.00	3,635.07	1,817.54	6,399.40	3,204.45	0.00	0.00	0.007
75.00	-22.91	0.00	0.00	0.00	0.00	0.00	3,586.46	1,793.23	6,193.19	3,101.20	0.00	0.00	0.006
76.00	-22.55	0.00	0.00	0.00	0.00	0.00	3,570.09	1,785.04	6,124.88	3,066.99	0.00	0.00	0.006
80.00	-21.34	0.00	0.00	0.00	0.00	0.00	3,503.71	1,751.85	5,853.88	2,931.29	0.00	0.00	0.006
82.16	-20.75	0.00	0.00	0.00	0.00	0.00	3,467.23	1,733.61	5,708.83	2,858.66	0.00	0.00	0.006
85.00	-19.53	0.00	0.00	0.00	0.00	0.00	3,418.78	1,709.39	5,520.34	2,764.27	0.00	0.00	0.006
87.83	-18.33	0.00	0.00	0.00	0.00	0.00	2,692.45	1,346.23	4,345.60	2,176.03	0.00	0.00	0.007
90.00	-17.82	0.00	0.00	0.00	0.00	0.00	2,665.65	1,332.83	4,237.49	2,121.89	0.00	0.00	0.007
91.00	-15.99	0.00	0.00	0.00	0.00	0.00	2,653.16	1,326.58	4,187.89	2,097.06	0.00	0.00	0.006
95.00	-15.08	0.00	0.00	0.00	0.00	0.00	2,602.34	1,301.17	3,990.97	1,998.45	0.00	0.00	0.006
100.00	-11.31	0.00	0.00	0.00	0.00	0.00	2,536.86	1,268.43	3,748.34	1,876.95	0.00	0.00	0.004
105.00	-10.34	0.00	0.00	0.00	0.00	0.00	2,469.21	1,234.61	3,509.96	1,757.59	0.00	0.00	0.004
110.00	-7.24	0.00	0.00	0.00	0.00	0.00	2,399.39	1,199.69	3,276.20	1,640.54	0.00	0.00	0.003
115.00	-6.40	0.00	0.00	0.00	0.00	0.00	2,327.39	1,163.70	3,047.43	1,525.98	0.00	0.00	0.003
120.00	-5.58	0.00	0.00	0.00	0.00	0.00	2,252.89	1,126.45	2,823.60	1,413.90	0.00	0.00	0.002
121.00	-3.37	0.00	0.00	0.00	0.00	0.00	2,232.94	1,116.47	2,773.56	1,388.84	0.00	0.00	0.002
125.00	-2.82	0.00	0.00	0.00	0.00	0.00	2,153.14	1,076.57	2,577.88	1,290.85	0.00	0.00	0.001
128.00	-0.23	0.00	0.00	0.00	0.00	0.00	2,093.29	1,046.64	2,435.81	1,219.72	0.00	0.00	0.000
130.00	0.00	0.00	0.00	0.00	0.00	0.00	2,053.39	1,026.69	2,343.34	1,173.41	0.00	0.00	0.000

 © 2007 - 2016 by ATC IP LLC. All rights reserved.

Load Case: 1.0D + 1.0W Serviceability 60 mph 18 Iterations

Gust Response Factor : 1.10
Dead Load Factor : 1.00
Wind Load Factor : 1.00

Wind Importance Factor : 1.00

Applied Segment Forces Summary

		Shaft Forces		Discrete Forces				Linear Forces		Sum of Forces			
Seg Elev (ft)	Description	Wind FX (lb)	Dead Load (lb)	Wind FX (lb)	Torsion MY (lb-ft)	Moment MZ (lb-ft)	Dead Load (lb)	Wind FX (lb)	Dead Load (lb)	Wind FX (lb)	Dead Load (lb)	Torsion MY (lb-ft)	Moment MZ (lb)
0.00		69.0	0.0					0.0	0.0	69.0	0.0	0.0	0.0
5.00		136.5	1,642.2					0.0	316.0	136.5	1,958.2	0.0	0.0
10.00		133.5	1,605.7					0.0	316.0	133.5	1,921.7	0.0	0.0
15.00		132.5	1,569.1					0.0	316.0	132.5	1,885.1	0.0	0.0
20.00		134.9	1,532.6					0.0	316.0	134.9	1,848.6	0.0	0.0
25.00		138.1	1,496.0					0.0	316.0	138.1	1,812.0	0.0	0.0
30.00		140.1	1,459.5					0.0	316.0	140.1	1,775.5	0.0	0.0
35.00		141.1	1,422.9					0.0	316.0	141.1	1,738.9	0.0	0.0
40.00		77.8	1,386.4					0.0	316.0	77.8	1,702.4	0.0	0.0
40.50	Bot - Section 2	71.6	136.6					0.0	31.6	71.6	168.2	0.0	0.0
45.00		100.3	2,139.0					0.0	284.4	100.3	2,423.4	0.0	0.0
47.50	Top - Section 1	71.5	1,166.0					0.0	158.0	71.5	1,324.0	0.0	0.0
50.00		106.7	497.9					0.0	158.0	106.7	655.9	0.0	0.0
55.00		141.4	975.3					0.0	316.0	141.4	1,291.3	0.0	0.0
60.00	Appertunance(s)	140.0	947.8	65.7	0.0	0.0	136.0	0.0	316.0	205.6	1,399.8	0.0	0.0
65.00		110.9	920.4					0.0	315.3	110.9	1,235.7	0.0	0.0
68.00	Appertunance(s)	68.6	539.1	58.0	0.0	0.0	136.0	0.0	189.2	126.6	864.3	0.0	0.0
70.00		54.5	353.9					0.0	125.8	54.5	479.7	0.0	0.0
72.00	Appertunance(s)	67.5	349.5	58.7	0.0	0.0	136.0	0.0	125.8	126.2	611.3	0.0	0.0
75.00	Appertunance(s)	53.8	516.1	13.3	0.0	0.0	20.0	0.0	188.3	67.1	724.3	0.0	0.0
76.00	Appertunance(s)	66.3	169.8	36.4	0.0	0.0	110.0	0.0	62.5	102.7	342.3	0.0	0.0
80.00	Appertunance(s)	81.3	668.4	84.9	0.0	0.0	160.0	0.0	249.2	166.2	1,077.6	0.0	0.0
82.16	Bot - Section 3	65.6	354.2					0.0	134.5	65.6	488.6	0.0	0.0
85.00		74.1	843.7					0.0	176.3	74.1	1,020.0	0.0	0.0
87.83	Top - Section 2	64.7	825.6					0.0	175.9	64.7	1,001.5	0.0	0.0
90.00		40.6	285.5					0.0	134.9	40.6	420.4	0.0	0.0
91.00	Appertunance(s)	63.2	130.1	311.9	0.0	0.0	1,500.0	0.0	62.2	375.1	1,692.3	0.0	0.0
95.00		112.1	511.4					0.0	248.6	112.1	760.0	0.0	0.0
100.00	Appertunance(s)	121.7	618.7	1,019.0	0.0	2,749.7	2,495.6	0.0	310.8	1,140.7	3,425.1	0.0	0.0
105.00		118.3	595.9					0.0	217.5	118.3	813.3	0.0	0.0
110.00	Appertunance(s)	114.9	573.0	1,087.5	0.0	2,288.6	2,381.1	0.0	217.5	1,202.3	3,171.6	0.0	0.0
115.00		111.3	550.2					0.0	154.9	111.3	705.0	0.0	0.0
120.00		65.4	527.3					0.0	154.9	65.4	682.2	0.0	0.0
121.00	Appertunance(s)	52.8	102.7	1,040.5	0.0	2,837.3	2,272.0	0.0	31.0	1,093.3	2,405.7	0.0	0.0
125.00		72.9	401.8					0.0	59.0	72.9	460.8	0.0	0.0
128.00	Appertunance(s)	50.9	291.7	1,612.7	0.0	1,435.8	2,710.0	0.0	44.3	1,663.6	3,046.0	0.0	0.0
130.00		20.1	189.9					0.0	0.0	20.1	189.9	0.0	0.0
									Totals:	8,774.98	47,522.7	0.00	0.00

© 2007 - 2016 by ATC IP LLC. All rights reserved.

Load Case: 1.0D + 1.0W Serviceability 60 mph 18 Iterations

Gust Response Factor : 1.10 Wind Importance Factor : 1.00
Dead Load Factor : 1.00
Wind Load Factor : 1.00

Calculated Forces

Seg Elev (ft)	Pu FY (-) (kips)	Vu FX (-) (kips)	Tu MY (ft-kips)	Mu MZ (ft-kips)	Mu MX (ft-kips)	Resultant Moment (ft-kips)	phi Pn (kips)	phi Vn (kips)	phi Tn (ft-kips)	phi Mn (ft-kips)	Total Deflect (in)	Rotation (deg)	Ratio
0.00	-47.52	-8.72	0.00	-838.87	0.00	838.87	6,793.61	3,396.81	17,163.1	8,594.34	0.00	0.00	0.105
5.00	-45.56	-8.60	0.00	-795.29	0.00	795.29	6,692.31	3,346.15	16,532.0	8,278.33	0.01	-0.02	0.103
10.00	-43.63	-8.48	0.00	-752.29	0.00	752.29	6,588.83	3,294.42	15,907.1	7,965.37	0.05	-0.05	0.101
15.00	-41.74	-8.37	0.00	-709.88	0.00	709.88	6,483.18	3,241.59	15,288.6	7,655.67	0.12	-0.08	0.099
20.00	-39.89	-8.25	0.00	-668.04	0.00	668.04	6,375.36	3,187.68	14,676.9	7,349.39	0.21	-0.10	0.097
25.00	-38.08	-8.12	0.00	-626.80	0.00	626.80	6,265.37	3,132.69	14,072.5	7,046.72	0.33	-0.13	0.095
30.00	-36.30	-8.00	0.00	-586.18	0.00	586.18	6,153.21	3,076.61	13,475.6	6,747.85	0.48	-0.15	0.093
35.00	-34.56	-7.87	0.00	-546.20	0.00	546.20	6,038.88	3,019.44	12,886.7	6,452.96	0.66	-0.18	0.090
40.00	-32.85	-7.79	0.00	-506.87	0.00	506.87	5,922.38	2,961.19	12,306.1	6,162.22	0.86	-0.21	0.088
40.50	-32.68	-7.73	0.00	-502.97	0.00	502.97	5,910.61	2,955.30	12,248.5	6,133.39	0.88	-0.21	0.088
45.00	-30.26	-7.63	0.00	-468.21	0.00	468.21	5,803.70	2,901.85	11,734.2	5,875.83	1.09	-0.23	0.085
47.50	-28.93	-7.56	0.00	-449.14	0.00	449.14	4,002.81	2,001.40	8,146.29	4,079.20	1.22	-0.25	0.117
50.00	-28.27	-7.46	0.00	-430.25	0.00	430.25	3,967.67	1,983.84	7,963.57	3,987.71	1.35	-0.26	0.115
55.00	-26.98	-7.33	0.00	-392.96	0.00	392.96	3,895.77	1,947.89	7,600.87	3,806.08	1.64	-0.29	0.110
60.00	-25.58	-7.13	0.00	-356.33	0.00	356.33	3,821.70	1,910.85	7,242.12	3,626.44	1.97	-0.33	0.105
65.00	-24.34	-7.02	0.00	-320.69	0.00	320.69	3,745.46	1,872.73	6,887.67	3,448.96	2.33	-0.36	0.099
68.00	-23.47	-6.89	0.00	-299.63	0.00	299.63	3,698.67	1,849.34	6,677.23	3,343.58	2.56	-0.38	0.096
70.00	-22.99	-6.84	0.00	-285.84	0.00	285.84	3,667.05	1,833.52	6,537.91	3,273.81	2.72	-0.39	0.094
72.00	-22.38	-6.72	0.00	-272.16	0.00	272.16	3,635.07	1,817.54	6,399.40	3,204.45	2.89	-0.41	0.091
75.00	-21.65	-6.65	0.00	-252.00	0.00	252.00	3,586.46	1,793.23	6,193.19	3,101.20	3.15	-0.42	0.087
76.00	-21.31	-6.55	0.00	-245.35	0.00	245.35	3,570.09	1,785.04	6,124.88	3,066.99	3.24	-0.43	0.086
80.00	-20.23	-6.38	0.00	-219.15	0.00	219.15	3,503.71	1,751.85	5,853.88	2,931.29	3.61	-0.45	0.081
82.16	-19.74	-6.32	0.00	-205.34	0.00	205.34	3,467.23	1,733.61	5,708.83	2,858.66	3.82	-0.47	0.078
85.00	-18.72	-6.24	0.00	-187.42	0.00	187.42	3,418.78	1,709.39	5,520.34	2,764.27	4.10	-0.48	0.073
87.83	-17.72	-6.17	0.00	-169.75	0.00	169.75	2,692.45	1,346.23	4,345.60	2,176.03	4.40	-0.50	0.085
90.00	-17.30	-6.13	0.00	-156.36	0.00	156.36	2,665.65	1,332.83	4,237.49	2,121.89	4.62	-0.51	0.080
91.00	-15.61	-5.74	0.00	-150.23	0.00	150.23	2,653.16	1,326.58	4,187.89	2,097.06	4.73	-0.52	0.078
95.00	-14.85	-5.63	0.00	-127.25	0.00	127.25	2,602.34	1,301.17	3,990.97	1,998.45	5.18	-0.54	0.069
100.00	-11.43	-4.46	0.00	-96.35	0.00	96.35	2,536.86	1,268.43	3,748.34	1,876.95	5.75	-0.56	0.056
105.00	-10.62	-4.34	0.00	-74.04	0.00	74.04	2,469.21	1,234.61	3,509.96	1,757.59	6.36	-0.58	0.046
110.00	-7.46	-3.11	0.00	-50.05	0.00	50.05	2,399.39	1,199.69	3,276.20	1,640.54	6.98	-0.60	0.034
115.00	-6.75	-2.99	0.00	-34.52	0.00	34.52	2,327.39	1,163.70	3,047.43	1,525.98	7.62	-0.61	0.026
120.00	-6.07	-2.92	0.00	-19.58	0.00	19.58	2,252.89	1,126.45	2,823.60	1,413.90	8.27	-0.62	0.017
121.00	-3.68	-1.80	0.00	-13.83	0.00	13.83	2,232.94	1,116.47	2,773.56	1,388.84	8.40	-0.63	0.012
125.00	-3.22	-1.72	0.00	-6.64	0.00	6.64	2,153.14	1,076.57	2,577.88	1,290.85	8.92	-0.63	0.007
128.00	-0.19	-0.02	0.00	-0.04	0.00	0.04	2,093.29	1,046.64	2,435.81	1,219.72	9.32	-0.63	0.000
130.00	0.00	-0.02	0.00	0.00	0.00	0.00	2,053.39	1,026.69	2,343.34	1,173.41	9.58	-0.63	0.000

© 2007 - 2016 by ATC IP LLC. All rights reserved.

Equivalent Lateral Forces Method Analysis

(Based on ASCE7-10 Chapters 11, 12, 15)

Spectral Response Acceleration for Short Period (S_s):	0.23	
Spectral Response Acceleration at 1.0 Second Period (S_1):	0.07	
Long-Period Transition Period (T_L):	6	
Importance Factor (I_E):	1.00	
Site Coefficient F_a:	1.60	
Site Coeffiecient F_v:	2.40	
Response Modification Coefficient (R):	1.50	
Design Spectral Response Acceleration at Short Period (S_{ds}):	0.24	
Design Spectral Response Acceleration at 1.0 Second Period (S_{d1}):	0.11	
Seismic Response Coefficient (C_s):	0.05	
Upper Limit C_s	0.05	
Lower Limit C_s	0.03	
Period based on Rayleigh Method (sec):	1.43	
Redundancy Factor (p):	1.30	
Seismic Force Distribution Exponent (k):	1.46	
Total Unfactored Dead Load:	47.52	k
Seismic Base Shear (E):	3.09	k

 © 2007 - 2016 by ATC IP LLC. All rights reserved.

Equivalent Modal Forces Analysis

(Based on ASCE7-10 Chapters 11, 12 & 15 and ANSI/TIA-G, section 2.7)

Spectral Response Acceleration for Short Period (S_s):	0.23
Spectral Response Acceleration at 1.0 Second Period (S_1):	0.07
Importance Factor (I_E):	1.00
Site Coefficient F_a:	1.60
Site Coefficient F_v	2.40
Response Modification Coefficient (R):	1.50
Design Spectral Response Acceleration at Short Period (S_{ds}):	0.24
Desing Spectral Response Acceleration at 1.0 Second Period (S_{d1}):	0.11
Period Based on Rayleigh Method (sec):	1.43
Redundancy Factor (p):	1.30

Load Case (1.2 + 0.2Sds) * DL + E ELFM **Seismic Equivalent Lateral Forces Method**

Segment	Height Above Base (ft)	Weight (lb)	a	b	c	Saz	Horizontal Force (lb)	Vertical Force (lb)
36	129.00	190	1.861	1.831	1.086	0.448	74	162
35	126.50	336	1.790	1.492	0.959	0.392	114	286
34	123.00	461	1.692	1.092	0.802	0.320	128	392
33	120.50	134	1.624	0.854	0.703	0.274	32	114
32	117.50	682	1.544	0.615	0.597	0.222	131	581
31	112.50	705	1.415	0.314	0.448	0.148	90	600
30	107.50	790	1.292	0.110	0.329	0.087	60	673
29	102.50	813	1.175	-0.018	0.237	0.040	28	693
28	97.50	929	1.063	-0.088	0.165	0.006	5	792
27	93.00	760	0.967	-0.117	0.116	-0.012	-8	647
26	90.50	192	0.916	-0.121	0.094	-0.019	-3	164
25	88.92	420	0.884	-0.121	0.081	-0.021	-8	358
24	86.42	1,002	0.835	-0.117	0.064	-0.023	-20	853
23	83.58	1,020	0.781	-0.108	0.049	-0.021	-19	869
22	81.08	489	0.735	-0.097	0.037	-0.018	-7	416
21	78.00	918	0.680	-0.081	0.026	-0.011	-8	781
20	75.50	232	0.637	-0.066	0.019	-0.004	-1	198
19	73.50	704	0.604	-0.054	0.015	0.003	2	600
18	71.00	475	0.564	-0.040	0.011	0.011	4	405
17	69.00	480	0.532	-0.028	0.009	0.017	7	409
16	66.50	728	0.495	-0.014	0.007	0.025	16	620
15	62.50	1,236	0.437	0.006	0.006	0.036	39	1,052
14	57.50	1,264	0.370	0.027	0.008	0.047	52	1,076
13	52.50	1,291	0.308	0.043	0.012	0.054	60	1,100
12	48.75	656	0.266	0.052	0.015	0.057	32	559
11	46.25	1,324	0.239	0.057	0.018	0.057	66	1,127
10	42.75	2,423	0.204	0.062	0.023	0.058	121	2,064
9	40.25	168	0.181	0.065	0.026	0.057	8	143
8	37.50	1,702	0.157	0.067	0.029	0.056	83	1,450
7	32.50	1,739	0.118	0.070	0.035	0.055	82	1,481
6	27.50	1,775	0.085	0.071	0.039	0.052	81	1,512
5	22.50	1,812	0.057	0.071	0.042	0.050	79	1,543
4	17.50	1,849	0.034	0.069	0.041	0.047	76	1,574
3	12.50	1,885	0.017	0.062	0.037	0.043	70	1,605

 © 2007 - 2016 by ATC IP LLC. All rights reserved.

2	7.50	1,922	0.006	0.048	0.027	0.034	56	1,636
1	2.50	1,958	0.001	0.021	0.011	0.015	26	1,668
Amphenol Antel BXA-1	128.00	63	1.832	1.689	1.034	0.425	23	54
Decibel DB846F65ZAXY	128.00	84	1.832	1.689	1.034	0.425	31	72
Powerwave Allgon P65	128.00	99	1.832	1.689	1.034	0.425	36	84
Antel LPA-80080/6CF	128.00	42	1.832	1.689	1.034	0.425	15	36
Flat Low Profile Pla	128.00	1,500	1.832	1.689	1.034	0.425	552	1,277
VZW Unused Reserve:	128.00	922	1.832	1.689	1.034	0.425	340	785
Alcatel-Lucent 800MH	121.00	159	1.637	0.899	0.722	0.283	39	135
Alcatel-Lucent 1900M	121.00	132	1.637	0.899	0.722	0.283	32	112
Kathrein Scala 840 1	121.00	90	1.637	0.899	0.722	0.283	22	77
Andrew Microwaves	121.00	49	1.637	0.899	0.722	0.283	12	42
RFS APXVSPP18-C-A20	121.00	342	1.637	0.899	0.722	0.283	84	291
Flat Low Profile Pla	121.00	1,500	1.637	0.899	0.722	0.283	368	1,277
Ericsson KRY 112 71	110.00	40	1.353	0.201	0.385	0.116	4	34
Ericsson RRUS 11 B12	110.00	152	1.353	0.201	0.385	0.116	15	130
EMS RR90-17-02DP	110.00	41	1.353	0.201	0.385	0.116	4	34
Ericsson AIR 21, 1.3	110.00	498	1.353	0.201	0.385	0.116	50	424
Commscope LNX-	110.00	151	1.353	0.201	0.385	0.116	15	129
Flat Low Profile Pla	110.00	1,500	1.353	0.201	0.385	0.116	150	1,277
Powerwave Allgon LGP	100.00	66	1.118	-0.059	0.198	0.022	1	56
Powerwave Allgon 702	100.00	13	1.118	-0.059	0.198	0.022	0	11
Powerwave Allgon LGP	100.00	169	1.118	-0.059	0.198	0.022	3	144
Raycap DC6-48-60-18-	100.00	20	1.118	-0.059	0.198	0.022	0	17
Ericsson RRUS-11 (50	100.00	150	1.118	-0.059	0.198	0.022	3	128
Ericsson RRUS 12 w/	100.00	214	1.118	-0.059	0.198	0.022	4	182
Powerwave Allgon 777	100.00	210	1.118	-0.059	0.198	0.022	4	179
CCI HPA-65R-BUU-H6	100.00	153	1.118	-0.059	0.198	0.022	3	130
Flat Low Profile Pla	100.00	1,500	1.118	-0.059	0.198	0.022	28	1,277
Empty Flat Low Profi	91.00	1,500	0.926	-0.121	0.098	-0.018	-23	1,277
GPS	80.00	10	0.716	-0.092	0.033	-0.015	0	9
Flat Side Arm	80.00	150	0.716	-0.092	0.033	-0.015	-2	128
2" x 8" GPS	76.00	10	0.646	-0.069	0.021	-0.005	0	9
Stand-Off	76.00	100	0.646	-0.069	0.021	-0.005	0	85
2" x 8" GPS	75.00	10	0.629	-0.063	0.018	-0.002	0	9
GPS	75.00	10	0.629	-0.063	0.018	-0.002	0	9
2" x 8" GPS	72.00	10	0.580	-0.046	0.012	0.007	0	9
Side Arm	72.00	126	0.580	-0.046	0.012	0.007	1	107
2" x 8" GPS	68.00	10	0.517	-0.022	0.008	0.020	0	9
Side Arm	68.00	126	0.517	-0.022	0.008	0.020	2	107
GPS	60.00	10	0.403	0.017	0.006	0.042	0	9
Side Arm	60.00	126	0.403	0.017	0.006	0.042	5	107
		47,523	71.478	21.564	21.148	7.794	3,370	40,469

Load Case (1.2 + 0.2Sds) * DL + E EMAM **Seismic Equivalent Modal Analysis Method**

Segment	Height Above Base (ft)	Weight (lb)	a	b	c	Saz	Horizontal Force (lb)	Vertical Force (lb)
36	129.00	190	1.861	1.831	1.086	0.448	74	162
35	126.50	336	1.790	1.492	0.959	0.392	114	286
34	123.00	461	1.692	1.092	0.802	0.320	128	392
33	120.50	134	1.624	0.854	0.703	0.274	32	114
32	117.50	682	1.544	0.615	0.597	0.222	131	581
31	112.50	705	1.415	0.314	0.448	0.148	90	600
30	107.50	790	1.292	0.110	0.329	0.087	60	673
29	102.50	813	1.175	-0.018	0.237	0.040	28	693
28	97.50	929	1.063	-0.088	0.165	0.006	5	792
27	93.00	760	0.967	-0.117	0.116	-0.012	-8	647
26	90.50	192	0.916	-0.121	0.094	-0.019	-3	164
25	88.92	420	0.884	-0.121	0.081	-0.021	-8	358

 © 2007 - 2016 by ATC IP LLC. All rights reserved.

24	86.42	1,002	0.835	-0.117	0.064	-0.023	-20	853
23	83.58	1,020	0.781	-0.108	0.049	-0.021	-19	869
22	81.08	489	0.735	-0.097	0.037	-0.018	-7	416
21	78.00	918	0.680	-0.081	0.026	-0.011	-8	781
20	75.50	232	0.637	-0.066	0.019	-0.004	-1	198
19	73.50	704	0.604	-0.054	0.015	0.003	2	600
18	71.00	475	0.564	-0.040	0.011	0.011	4	405
17	69.00	480	0.532	-0.028	0.009	0.017	7	409
16	66.50	728	0.495	-0.014	0.007	0.025	16	620
15	62.50	1,236	0.437	0.006	0.006	0.036	39	1,052
14	57.50	1,264	0.370	0.027	0.008	0.047	52	1,076
13	52.50	1,291	0.308	0.043	0.012	0.054	60	1,100
12	48.75	656	0.266	0.052	0.015	0.057	32	559
11	46.25	1,324	0.239	0.057	0.018	0.057	66	1,127
10	42.75	2,423	0.204	0.062	0.023	0.058	121	2,064
9	40.25	168	0.181	0.065	0.026	0.057	8	143
8	37.50	1,702	0.157	0.067	0.029	0.056	83	1,450
7	32.50	1,739	0.118	0.070	0.035	0.055	82	1,481
6	27.50	1,775	0.085	0.071	0.039	0.052	81	1,512
5	22.50	1,812	0.057	0.071	0.042	0.050	79	1,543
4	17.50	1,849	0.034	0.069	0.041	0.047	76	1,574
3	12.50	1,885	0.017	0.062	0.037	0.043	70	1,605
2	7.50	1,922	0.006	0.048	0.027	0.034	56	1,636
1	2.50	1,958	0.001	0.021	0.011	0.015	26	1,668
Amphenol Antel BXA-1	128.00	63	1.832	1.689	1.034	0.425	23	54
Decibel DB846F65ZAXY	128.00	84	1.832	1.689	1.034	0.425	31	72
Powerwave Allgon P65	128.00	99	1.832	1.689	1.034	0.425	36	84
Antel LPA-80080/6CF	128.00	42	1.832	1.689	1.034	0.425	15	36
Flat Low Profile Pla	128.00	1,500	1.832	1.689	1.034	0.425	552	1,277
VZW Unused Reserve:	128.00	922	1.832	1.689	1.034	0.425	340	785
Alcatel-Lucent 800MH	121.00	159	1.637	0.899	0.722	0.283	39	135
Alcatel-Lucent 1900M	121.00	132	1.637	0.899	0.722	0.283	32	112
Kathrein Scala 840 1	121.00	90	1.637	0.899	0.722	0.283	22	77
Andrew Microwaves	121.00	49	1.637	0.899	0.722	0.283	12	42
RFS APXVSPP18-C-A20	121.00	342	1.637	0.899	0.722	0.283	84	291
Flat Low Profile Pla	121.00	1,500	1.637	0.899	0.722	0.283	368	1,277
Ericsson KRY 112 71	110.00	40	1.353	0.201	0.385	0.116	4	34
Ericsson RRUS 11 B12	110.00	152	1.353	0.201	0.385	0.116	15	130
EMS RR90-17-02DP	110.00	41	1.353	0.201	0.385	0.116	4	34
Ericsson AIR 21, 1.3	110.00	498	1.353	0.201	0.385	0.116	50	424
Commscope LNX-	110.00	151	1.353	0.201	0.385	0.116	15	129
Flat Low Profile Pla	110.00	1,500	1.353	0.201	0.385	0.116	150	1,277
Powerwave Allgon LGP	100.00	66	1.118	-0.059	0.198	0.022	1	56
Powerwave Allgon 702	100.00	13	1.118	-0.059	0.198	0.022	0	11
Powerwave Allgon LGP	100.00	169	1.118	-0.059	0.198	0.022	3	144
Raycap DC6-48-60-18-	100.00	20	1.118	-0.059	0.198	0.022	0	17
Ericsson RRUS-11 (50	100.00	150	1.118	-0.059	0.198	0.022	3	128
Ericsson RRUS 12 w/	100.00	214	1.118	-0.059	0.198	0.022	4	182
Powerwave Allgon 777	100.00	210	1.118	-0.059	0.198	0.022	4	179
CCI HPA-65R-BUU-H6	100.00	153	1.118	-0.059	0.198	0.022	3	130
Flat Low Profile Pla	100.00	1,500	1.118	-0.059	0.198	0.022	28	1,277
Empty Flat Low Profi	91.00	1,500	0.926	-0.121	0.098	-0.018	-23	1,277
GPS	80.00	10	0.716	-0.092	0.033	-0.015	0	9
Flat Side Arm	80.00	150	0.716	-0.092	0.033	-0.015	-2	128
2" x 8" GPS	76.00	10	0.646	-0.069	0.021	-0.005	0	9
Stand-Off	76.00	100	0.646	-0.069	0.021	-0.005	0	85
2" x 8" GPS	75.00	10	0.629	-0.063	0.018	-0.002	0	9
GPS	75.00	10	0.629	-0.063	0.018	-0.002	0	9
2" x 8" GPS	72.00	10	0.580	-0.046	0.012	0.007	0	9
Side Arm	72.00	126	0.580	-0.046	0.012	0.007	1	107
2" x 8" GPS	68.00	10	0.517	-0.022	0.008	0.020	0	9
Side Arm	68.00	126	0.517	-0.022	0.008	0.020	2	107
GPS	60.00	10	0.403	0.017	0.006	0.042	0	9
Side Arm	60.00	126	0.403	0.017	0.006	0.042	5	107

© 2007 - 2016 by ATC IP LLC. All rights reserved.

		47,523	71.478	21.564	21.148	7.794	3,370	40,469

Load Case (0.9 - 0.2Sds) * DL + E ELFM — **Seismic (Reduced DL) Equivalent Lateral Forces Method**

Segment	Height Above Base (ft)	Weight (lb)	a	b	c	Saz	Horizontal Force (lb)	Vertical Force (lb)
36	129.00	190	1.861	1.831	1.086	0.448	74	162
35	126.50	336	1.790	1.492	0.959	0.392	114	286
34	123.00	461	1.692	1.092	0.802	0.320	128	392
33	120.50	134	1.624	0.854	0.703	0.274	32	114
32	117.50	682	1.544	0.615	0.597	0.222	131	581
31	112.50	705	1.415	0.314	0.448	0.148	90	600
30	107.50	790	1.292	0.110	0.329	0.087	60	673
29	102.50	813	1.175	-0.018	0.237	0.040	28	693
28	97.50	929	1.063	-0.088	0.165	0.006	5	792
27	93.00	760	0.967	-0.117	0.116	-0.012	-8	647
26	90.50	192	0.916	-0.121	0.094	-0.019	-3	164
25	88.92	420	0.884	-0.121	0.081	-0.021	-8	358
24	86.42	1,002	0.835	-0.117	0.064	-0.023	-20	853
23	83.58	1,020	0.781	-0.108	0.049	-0.021	-19	869
22	81.08	489	0.735	-0.097	0.037	-0.018	-7	416
21	78.00	918	0.680	-0.081	0.026	-0.011	-8	781
20	75.50	232	0.637	-0.066	0.019	-0.004	-1	198
19	73.50	704	0.604	-0.054	0.015	0.003	2	600
18	71.00	475	0.564	-0.040	0.011	0.011	4	405
17	69.00	480	0.532	-0.028	0.009	0.017	7	409
16	66.50	728	0.495	-0.014	0.007	0.025	16	620
15	62.50	1,236	0.437	0.006	0.006	0.036	39	1,052
14	57.50	1,264	0.370	0.027	0.008	0.047	52	1,076
13	52.50	1,291	0.308	0.043	0.012	0.054	60	1,100
12	48.75	656	0.266	0.052	0.015	0.057	32	559
11	46.25	1,324	0.239	0.057	0.018	0.057	66	1,127
10	42.75	2,423	0.204	0.062	0.023	0.058	121	2,064
9	40.25	168	0.181	0.065	0.026	0.057	8	143
8	37.50	1,702	0.157	0.067	0.029	0.056	83	1,450
7	32.50	1,739	0.118	0.070	0.035	0.055	82	1,481
6	27.50	1,775	0.085	0.071	0.039	0.052	81	1,512
5	22.50	1,812	0.057	0.071	0.042	0.050	79	1,543
4	17.50	1,849	0.034	0.069	0.041	0.047	76	1,574
3	12.50	1,885	0.017	0.062	0.037	0.043	70	1,605
2	7.50	1,922	0.006	0.048	0.027	0.034	56	1,636
1	2.50	1,958	0.001	0.021	0.011	0.015	26	1,668
Amphenol Antel BXA-1	128.00	63	1.832	1.689	1.034	0.425	23	54
Decibel DB846F65ZAXY	128.00	84	1.832	1.689	1.034	0.425	31	72
Powerwave Allgon P65	128.00	99	1.832	1.689	1.034	0.425	36	84
Antel LPA-80080/6CF	128.00	42	1.832	1.689	1.034	0.425	15	36
Flat Low Profile Pla	128.00	1,500	1.832	1.689	1.034	0.425	552	1,277
VZW Unused Reserve:	128.00	922	1.832	1.689	1.034	0.425	340	785
Alcatel-Lucent 800MH	121.00	159	1.637	0.899	0.722	0.283	39	135
Alcatel-Lucent 1900M	121.00	132	1.637	0.899	0.722	0.283	32	112
Kathrein Scala 840 1	121.00	90	1.637	0.899	0.722	0.283	22	77
Andrew Microwaves	121.00	49	1.637	0.899	0.722	0.283	12	42
RFS APXVSPP18-C-A20	121.00	342	1.637	0.899	0.722	0.283	84	291
Flat Low Profile Pla	121.00	1,500	1.637	0.899	0.722	0.283	368	1,277
Ericsson KRY 112 71	110.00	40	1.353	0.201	0.385	0.116	4	34
Ericsson RRUS 11 B12	110.00	152	1.353	0.201	0.385	0.116	15	130
EMS RR90-17-02DP	110.00	41	1.353	0.201	0.385	0.116	4	34
Ericsson AIR 21, 1.3	110.00	498	1.353	0.201	0.385	0.116	50	424
Commscope LNX-	110.00	151	1.353	0.201	0.385	0.116	15	129
Flat Low Profile Pla	110.00	1,500	1.353	0.201	0.385	0.116	150	1,277

 © 2007 - 2016 by ATC IP LLC. All rights reserved.

Powerwave Allgon LGP	100.00	66	1.118	-0.059	0.198	0.022	1	56
Powerwave Allgon 702	100.00	13	1.118	-0.059	0.198	0.022	0	11
Powerwave Allgon LGP	100.00	169	1.118	-0.059	0.198	0.022	3	144
Raycap DC6-48-60-18-	100.00	20	1.118	-0.059	0.198	0.022	0	17
Ericsson RRUS-11 (50	100.00	150	1.118	-0.059	0.198	0.022	3	128
Ericsson RRUS 12 w/	100.00	214	1.118	-0.059	0.198	0.022	4	182
Powerwave Allgon 777	100.00	210	1.118	-0.059	0.198	0.022	4	179
CCI HPA-65R-BUU-H6	100.00	153	1.118	-0.059	0.198	0.022	3	130
Flat Low Profile Pla	100.00	1,500	1.118	-0.059	0.198	0.022	28	1,277
Empty Flat Low Profi	91.00	1,500	0.926	-0.121	0.098	-0.018	-23	1,277
GPS	80.00	10	0.716	-0.092	0.033	-0.015	0	9
Flat Side Arm	80.00	150	0.716	-0.092	0.033	-0.015	-2	128
2" x 8" GPS	76.00	10	0.646	-0.069	0.021	-0.005	0	9
Stand-Off	76.00	100	0.646	-0.069	0.021	-0.005	0	85
2" x 8" GPS	75.00	10	0.629	-0.063	0.018	-0.002	0	9
GPS	75.00	10	0.629	-0.063	0.018	-0.002	0	9
2" x 8" GPS	72.00	10	0.580	-0.046	0.012	0.007	0	9
Side Arm	72.00	126	0.580	-0.046	0.012	0.007	1	107
2" x 8" GPS	68.00	10	0.517	-0.022	0.008	0.020	0	9
Side Arm	68.00	126	0.517	-0.022	0.008	0.020	2	107
GPS	60.00	10	0.403	0.017	0.006	0.042	0	9
Side Arm	60.00	126	0.403	0.017	0.006	0.042	5	107
		47,523	71.478	21.564	21.148	7.794	3,370	40,469

Load Case (0.9 - 0.2Sds) * DL + E EMAM **Seismic (Reduced DL) Equivalent Modal Analysis Method**

Segment	Height Above Base (ft)	Weight (lb)	a	b	c	Saz	Horizontal Force (lb)	Vertical Force (lb)
36	129.00	190	1.861	1.831	1.086	0.448	74	162
35	126.50	336	1.790	1.492	0.959	0.392	114	286
34	123.00	461	1.692	1.092	0.802	0.320	128	392
33	120.50	134	1.624	0.854	0.703	0.274	32	114
32	117.50	682	1.544	0.615	0.597	0.222	131	581
31	112.50	705	1.415	0.314	0.448	0.148	90	600
30	107.50	790	1.292	0.110	0.329	0.087	60	673
29	102.50	813	1.175	-0.018	0.237	0.040	28	693
28	97.50	929	1.063	-0.088	0.165	0.006	5	792
27	93.00	760	0.967	-0.117	0.116	-0.012	-8	647
26	90.50	192	0.916	-0.121	0.094	-0.019	-3	164
25	88.92	420	0.884	-0.121	0.081	-0.021	-8	358
24	86.42	1,002	0.835	-0.117	0.064	-0.023	-20	853
23	83.58	1,020	0.781	-0.108	0.049	-0.021	-19	869
22	81.08	489	0.735	-0.097	0.037	-0.018	-7	416
21	78.00	918	0.680	-0.081	0.026	-0.011	-8	781
20	75.50	232	0.637	-0.066	0.019	-0.004	-1	198
19	73.50	704	0.604	-0.054	0.015	0.003	2	600
18	71.00	475	0.564	-0.040	0.011	0.011	4	405
17	69.00	480	0.532	-0.028	0.009	0.017	7	409
16	66.50	728	0.495	-0.014	0.007	0.025	16	620
15	62.50	1,236	0.437	0.006	0.006	0.036	39	1,052
14	57.50	1,264	0.370	0.027	0.008	0.047	52	1,076
13	52.50	1,291	0.308	0.043	0.012	0.054	60	1,100
12	48.75	656	0.266	0.052	0.015	0.057	32	559
11	46.25	1,324	0.239	0.057	0.018	0.057	66	1,127
10	42.75	2,423	0.204	0.062	0.023	0.058	121	2,064
9	40.25	168	0.181	0.065	0.026	0.057	8	143
8	37.50	1,702	0.157	0.067	0.029	0.056	83	1,450
7	32.50	1,739	0.118	0.070	0.035	0.055	82	1,481
6	27.50	1,775	0.085	0.071	0.039	0.052	81	1,512
5	22.50	1,812	0.057	0.071	0.042	0.050	79	1,543

© 2007 - 2016 by ATC IP LLC. All rights reserved.

4	17.50	1,849	0.034	0.069	0.041	0.047	76	1,574
3	12.50	1,885	0.017	0.062	0.037	0.043	70	1,605
2	7.50	1,922	0.006	0.048	0.027	0.034	56	1,636
1	2.50	1,958	0.001	0.021	0.011	0.015	26	1,668
Amphenol Antel BXA-1	128.00	63	1.832	1.689	1.034	0.425	23	54
Decibel DB846F65ZAXY	128.00	84	1.832	1.689	1.034	0.425	31	72
Powerwave Allgon P65	128.00	99	1.832	1.689	1.034	0.425	36	84
Antel LPA-80080/6CF	128.00	42	1.832	1.689	1.034	0.425	15	36
Flat Low Profile Pla	128.00	1,500	1.832	1.689	1.034	0.425	552	1,277
VZW Unused Reserve:	128.00	922	1.832	1.689	1.034	0.425	340	785
Alcatel-Lucent 800MH	121.00	159	1.637	0.899	0.722	0.283	39	135
Alcatel-Lucent 1900M	121.00	132	1.637	0.899	0.722	0.283	32	112
Kathrein Scala 840 1	121.00	90	1.637	0.899	0.722	0.283	22	77
Andrew Microwaves	121.00	49	1.637	0.899	0.722	0.283	12	42
RFS APXVSPP18-C-A20	121.00	342	1.637	0.899	0.722	0.283	84	291
Flat Low Profile Pla	121.00	1,500	1.637	0.899	0.722	0.283	368	1,277
Ericsson KRY 112 71	110.00	40	1.353	0.201	0.385	0.116	4	34
Ericsson RRUS 11 B12	110.00	152	1.353	0.201	0.385	0.116	15	130
EMS RR90-17-02DP	110.00	41	1.353	0.201	0.385	0.116	4	34
Ericsson AIR 21, 1.3	110.00	498	1.353	0.201	0.385	0.116	50	424
Commscope LNX-	110.00	151	1.353	0.201	0.385	0.116	15	129
Flat Low Profile Pla	110.00	1,500	1.353	0.201	0.385	0.116	150	1,277
Powerwave Allgon LGP	100.00	66	1.118	-0.059	0.198	0.022	1	56
Powerwave Allgon 702	100.00	13	1.118	-0.059	0.198	0.022	0	11
Powerwave Allgon LGP	100.00	169	1.118	-0.059	0.198	0.022	3	144
Raycap DC6-48-60-18-	100.00	20	1.118	-0.059	0.198	0.022	0	17
Ericsson RRUS-11 (50	100.00	150	1.118	-0.059	0.198	0.022	3	128
Ericsson RRUS 12 w/	100.00	214	1.118	-0.059	0.198	0.022	4	182
Powerwave Allgon 777	100.00	210	1.118	-0.059	0.198	0.022	4	179
CCI HPA-65R-BUU-H6	100.00	153	1.118	-0.059	0.198	0.022	3	130
Flat Low Profile Pla	100.00	1,500	1.118	-0.059	0.198	0.022	28	1,277
Empty Flat Low Profi	91.00	1,500	0.926	-0.121	0.098	-0.018	-23	1,277
GPS	80.00	10	0.716	-0.092	0.033	-0.015	0	9
Flat Side Arm	80.00	150	0.716	-0.092	0.033	-0.015	-2	128
2" x 8" GPS	76.00	10	0.646	-0.069	0.021	-0.005	0	9
Stand-Off	76.00	100	0.646	-0.069	0.021	-0.005	0	85
2" x 8" GPS	75.00	10	0.629	-0.063	0.018	-0.002	0	9
GPS	75.00	10	0.629	-0.063	0.018	-0.002	0	9
2" x 8" GPS	72.00	10	0.580	-0.046	0.012	0.007	0	9
Side Arm	72.00	126	0.580	-0.046	0.012	0.007	1	107
2" x 8" GPS	68.00	10	0.517	-0.022	0.008	0.020	0	9
Side Arm	68.00	126	0.517	-0.022	0.008	0.020	2	107
GPS	60.00	10	0.403	0.017	0.006	0.042	0	9
Side Arm	60.00	126	0.403	0.017	0.006	0.042	5	107
		47,523	71.478	21.564	21.148	7.794	3,370	40,469

© 2007 - 2016 by ATC IP LLC. All rights reserved.

Analysis Summary

	Reactions						Max Usage	
Load Case	Shear FX (kips)	Shear FZ (kips)	Axial FY (kips)	Moment MX (ft-kips)	Moment MY (ft-kips)	Moment MZ (ft-kips)	Elev (ft)	Interaction Ratio
1.2D + 1.6W	34.97	0.00	57.00	0.00	0.00	3375.45	47.50	0.45
0.9D + 1.6W	34.96	0.00	42.74	0.00	0.00	3358.32	47.50	0.45
1.2D + 1.0Di + 1.0Wi	0.00	0.00	53.93	0.00	0.00	0.00	0.00	0.01
(1.2 + 0.2Sds) * DL + E ELFM	3.09	0.00	56.88	0.00	0.00	299.86	47.50	0.05
(1.2 + 0.2Sds) * DL + E EMAM	3.35	0.00	56.88	0.00	0.00	333.38	47.50	0.05
(0.9 - 0.2Sds) * DL + E ELFM	3.09	0.00	38.80	0.00	0.00	298.01	47.50	0.04
(0.9 - 0.2Sds) * DL + E EMAM	3.35	0.00	38.80	0.00	0.00	331.15	47.50	0.05
1.0D + 1.0W	8.72	0.00	47.52	0.00	0.00	838.87	47.50	0.12

Base/Flange Plate	Plate Type	***Baseplate***	
	Pole Diameter	62	in
	Pole Thickness	0.5	in
	Plate Diameter	77	in
	Plate Thickness	2	in
	Plate Fy	60	ksi
	Weld Length	0.4375	in
	ϕ_s Resistance	525.90	k-in
	Applied	321.48	k-in
Stiffeners	#	***0***	

Bolts	#	***20***	
	Bolt Circle	71	in
	(R)adial / (S)quare	R	
	Diameter	2.25	in
	Hole Diameter	2.625	in
	Type	A615-75	
	Fy	75	ksi
	Fu	100	ksi
	ϕ_s Resistance	259.82	k
	Applied	116.90	k
Reinforcement ●	#	***0***	
Extra Bolts O	#	***0***	

Code Rev.	***G***	**Date**	7/25/2016
		Engineer	GMM
		Site #	411189
Moment	3375.5 k-ft	**Carrier**	Verizon
Axial	57.0 k		

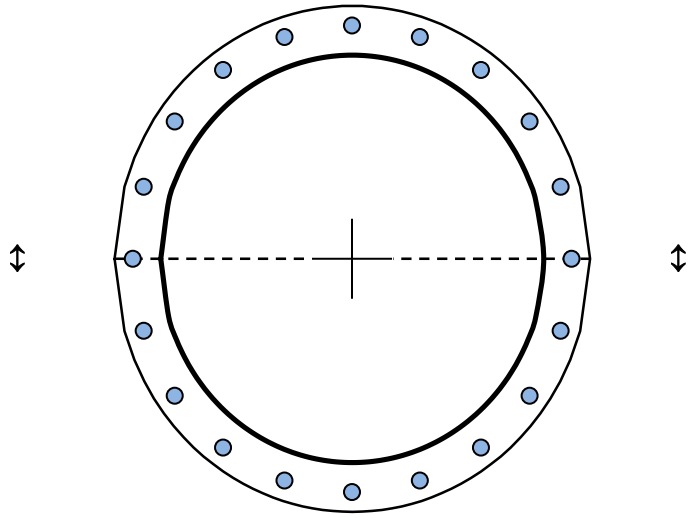

Plate Stress Ratio:
0.61 (Pass)

Bolt Stress Ratio:
0.45 (Pass)