Sprint

CROWN CASTLE

PROJECT:	2.5 EQUIPMENT DEPLOYMENT
SITE NAME:	HRT 099 943226
SITE CASCADE:	CT03XC091
SITE NUMBER:	806370
SITE ADDRESS:	570 NEW PARK AVENUE WEST HARTFORD, CT 06110
SITE TYPE:	MONOPOLE
MARKET:	N. ENGLAND

SITE INFORMATION

TOWER OWNER:
CROWN ATLANTIC COMPANY LLC.
2000 CORPORATE DRIVE
CANONSBURG, PA 15317
(704) 405-6555

LATITUDE (NAD83):
41° 44' 10.50" N
41.736250°

LONGITUDE (NAD83):
72° 43' 14.2" W
-72.720611°

COUNTY:
HARTFORD

ZONING JURISDICTION:
CONNECTICUT SITING COUNCIL

ZONING DISTRICT:
IG

POWER COMPANY:
CONNECTICUT LIGHT AND POWER CO.
(800) 286-2000

SPRINT CONSTRUCTION:
TBD

CROWN PM:
SCOTT WIATROSKI
(201) 236-9228

AREA MAP

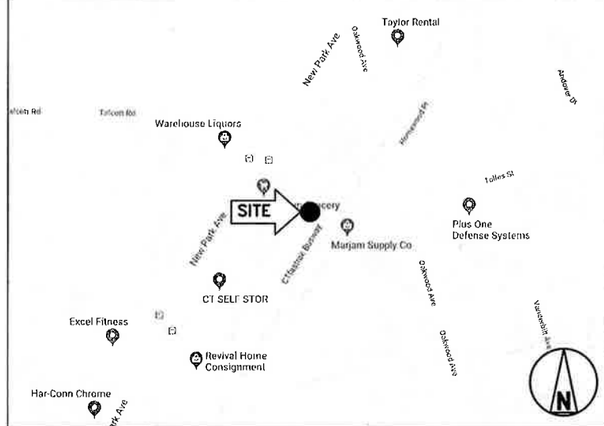

LOCATION MAP

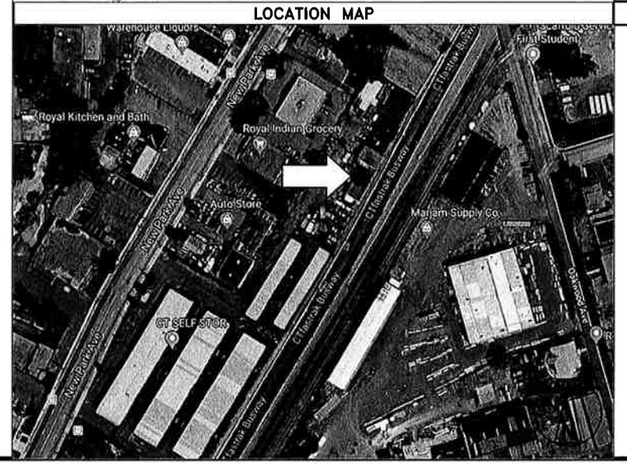

PROJECT DESCRIPTION

SPRINT PROPOSES TO MODIFY AN EXISTING UNMANNED TELECOMMUNICATIONS FACILITY.

- INSTALL 2.5 EQUIPMENT INSIDE EXISTING N.V. MMBS CABINET
- INSTALL (1) SPRINT TOP HAT
- REMOVE (3) PANEL ANTENNAS
- INSTALL (3) PANEL ANTENNAS (3 AAHC)
- REMOVE (1) HYBRID CABLES
- INSTALL (1) HYBRID CABLES
- VERIFY SPRINT ANTENNA CENTERLINE

THESE PLANS HAVE BEEN DEVELOPED FOR THE MODIFICATION OF AN EXISTING UNMANNED TELECOMMUNICATIONS FACILITY OWNED OR LEASED BY SPRINT IN ACCORDANCE WITH THE SCOPE OF WORK PROVIDED BY SPRINT. INFINIGY HAS INCORPORATED THIS SCOPE OF WORK IN THE PLANS. THESE PLANS ARE NOT FOR CONSTRUCTION UNLESS ACCOMPANIED BY A PASSING STRUCTURAL STABILITY ANALYSIS PREPARED BY A LICENSED STRUCTURAL ENGINEER. STRUCTURAL ANALYSIS MUST INCLUDE BOTH STRUCTURE AND MOUNT.

APPLICABLE CODES

ALL WORK SHALL BE PERFORMED AND MATERIALS INSTALL IN ACCORDANCE WITH THE CURRENT EDITIONS OF THE FOLLOWING CODES AS ADOPTED BY THE LOCAL GOVERNING AUTHORITIES. NOTHING IN THESE PLANS IS TO BE CONSTRUED TO PERMIT WORK NOT CONFORMING TO THESE CODES.

1. INTERNATIONAL BUILDING CODE (2015 IBC)
2. TIA-222-G OR LATEST EDITION
3. NFPA 780 – LIGHTNING PROTECTION CODE
4. 2011 NATIONAL ELECTRIC CODE OR LATEST EDITION
5. ANY OTHER NATIONAL OR LOCAL APPLICABLE CODES, MOST RECENT EDITIONS
6. LOCAL BUILDING CODE
7. CITY/COUNTY ORDINANCES

811
Know what's below.
Call before you dig.
www.call811.com

DRAWING INDEX

SHEET NO.	SHEET TITLE	REV.
T-1	TITLE SHEET & PROJECT DATA	0
SP-1	SPRINT SPECIFICATIONS	0
SP-2	SPRINT SPECIFICATIONS	0
SP-3	SPRINT SPECIFICATIONS	0
A-1	SITE PLAN	0
A-2	TOWER ELEVATION & CABLE PLAN	0
A-3	ANTENNA LAYOUT & MOUNTING DETAILS	0
A-4	EQUIPMENT & MOUNTING DETAILS	0
A-5	CIVIL DETAILS	0
A-6	PLUMBING DIAGRAM	0
E-1	ELECTRICAL & GROUNDING DETAILS	0
E-2	ELECTRICAL & GROUNDING DETAILS	0

PLANS PREPARED FOR:
Sprint
6580 Sprint Parkway
Overland Park, Kansas 66251

PLANS PREPARED BY:
INFINIGY
FROM ZERO TO INFINIGY
the solutions are endless
1033 Watervliet Shaker Rd | Albany, NY 12205
Phone: 518-690-0790 | Fax: 518-690-0793
www.infinigy.com
JOB NUMBER 526-103

MLA PARTNER:
CROWN CASTLE

ENGINEERING LICENSE:
STATE OF CONNECTICUT
JOHN S. STEVENS
NO. 24705
LICENSED PROFESSIONAL ENGINEER
NOV 5 2018

DRAWING NOTICE:
THESE DOCUMENTS ARE CONFIDENTIAL AND ARE THE SOLE PROPERTY OF SPRINT AND MAY NOT BE REPRODUCED, DISSEMINATED OR REDISTRIBUTED WITHOUT THE EXPRESS WRITTEN CONSENT OF SPRINT.

REVISIONS:

DESCRIPTION	DATE	BY	REV
ISSUED FOR CONSTRUCTION	10/30/18	RCD	0
ISSUED FOR REVIEW	10/08/18	RCD	A

SITE NAME:
HRT 099 943226

SITE CASCADE:
CT03XC091

SITE ADDRESS:
570 NEW PARK AVENUE
WEST HARTFORD, CT 06110

SHEET DESCRIPTION:
TITLE SHEET
& PROJECT DATA

SHEET NUMBER:
T-1

THESE OUTLINE SPECIFICATIONS IN CONJUNCTION WITH THE SPRINT STANDARD CONSTRUCTION SPECIFICATIONS, INCLUDING CONTRACT DOCUMENTS AND THE CONSTRUCTION DRAWINGS DESCRIBE THE WORK TO BE PERFORMED BY THE CONTRACTOR.

SECTION 01 100 – SCOPE OF WORK

PART 1 – GENERAL

1.1 THE WORK: THESE STANDARD CONSTRUCTION SPECIFICATIONS IN CONJUNCTION WITH THE SPRINT CONSTRUCTION STANDARDS FOR WIRELESS SITES, CONTRACT DOCUMENTS AND THE CONSTRUCTION DRAWINGS DESCRIBE THE WORK TO BE PERFORMED BY THE CONTRACTOR.

1.2 RELATED DOCUMENTS:

A. THE REQUIREMENTS OF THIS SECTION APPLY TO ALL SECTIONS IN THIS SPECIFICATION.

B. SPRINT "STANDARD CONSTRUCTION DETAILS FOR WIRELESS SITES" ARE INCLUDED IN AND MADE A PART OF THESE SPECIFICATIONS HEREWITH.

1.3 PRECEDENCE: SHOULD CONFLICTS OCCUR BETWEEN THE STANDARD CONSTRUCTION SPECIFICATIONS FOR WIRELESS SITES INCLUDING THE STANDARD CONSTRUCTION DETAILS FOR WIRELESS SITES AND THE CONSTRUCTION DRAWINGS, INFORMATION ON THE CONSTRUCTION DRAWINGS SHALL TAKE PRECEDENCE. NOTIFY SPRINT CONSTRUCTION MANAGER IF THIS OCCURS.

1.4 NATIONALLY RECOGNIZED CODES AND STANDARDS:

A. THE WORK SHALL COMPLY WITH APPLICABLE NATIONAL AND LOCAL CODES AND STANDARDS, LATEST EDITION, AND PORTIONS THEREOF, INCLUDED BUT NOT LIMITED TO THE FOLLOWING:

1. GR-63-CORE NEBS REQUIREMENTS: PHYSICAL PROTECTION

5. GR-78-CORE GENERIC REQUIREMENTS FOR THE PHYSICAL DESIGN AND MANUFACTURE OF TELECOMMUNICATIONS EQUIPMENT.

3. GR-1089 CORE, ELECTROMAGNETIC COMPATIBILITY AND ELECTRICAL SAFETY –GENERIC CRITERIA FOR NETWORK TELECOMMUNICATIONS EQUIPMENT.

4. NATIONAL FIRE PROTECTION ASSOCIATION CODES AND STANDARDS (NFPA) INCLUDING NFPA 70 (NATIONAL ELECTRICAL CODE – "NEC") AND NFPA 101 (LIFE SAFETY CODE).

5. AMERICAN SOCIETY FOR TESTING OF MATERIALS (ASTM)

6. INSTITUTE OF ELECTRONIC AND ELECTRICAL ENGINEERS (IEEE)

7. AMERICAN CONCRETE INSTITUTE (ACI)

8. AMERICAN WIRE PRODUCERS ASSOCIATION (AWPA)

9. CONCRETE REINFORCING STEEL INSTITUTE (CRSI)

10. AMERICAN ASSOCIATION OF STATE HIGHWAY AND TRANSPORTATION OFFICIALS (AASHTO)

11. PORTLAND CEMENT ASSOCIATION (PCA)

12. NATIONAL CONCRETE MASONRY ASSOCIATION (NCMA)

13. BRICK INDUSTRY ASSOCIATION (BIA)

14. AMERICAN WELDING SOCIETY (AWS)

15. NATIONAL ROOFING CONTRACTORS ASSOCIATION (NRCA)

16. SHEET METAL AND AIR CONDITIONING CONTRACTORS' NATIONAL ASSOCIATION (SMACNA)

17. DOOR AND HARDWARE INSTITUTE (DHI)

18. OCCUPATIONAL SAFETY AND HEALTH ACT (OSHA)

19. APPLICABLE BUILDING CODES INCLUDING UNIFORM BUILDING CODE, SOUTHERN BUILDING CODE, BOCA, AND THE INTERNATIONAL BUILDING CODE.

1.5 DEFINITIONS:

A. WORK: THE SUM OF TASKS AND RESPONSIBILITIES IDENTIFIED IN THE CONTRACT DOCUMENTS.

B. COMPANY: SPRINT CORPORATION

C. ENGINEER: SYNONYMOUS WITH ARCHITECT & ENGINEER AND "A&E". THE DESIGN PROFESSIONAL HAVING PROFESSIONAL RESPONSIBILITY FOR DESIGN OF THE PROJECT.

D. CONTRACTOR: CONSTRUCTION CONTRACTOR; CONSTRUCTION VENDOR; INDIVIDUAL OR ENTITY WHO AFTER EXECUTION OF A CONTRACT IS BOUND TO ACCOMPLISH THE WORK.

E. THIRD PARTY VENDOR OR AGENCY: A VENDOR OR AGENCY ENGAGED SEPARATELY BY THE COMPANY, A&E, OR CONTRACTOR TO PROVIDE MATERIALS OR TO ACCOMPLISH SPECIFIC TASKS RELATED TO BUT NOT INCLUDED IN THE WORK.

F. OFCI: OWNER FURNISHED, CONTRACTOR INSTALLED EQUIPMENT.

G. CONSTRUCTION MANAGER – ALL PROJECTS RELATED COMMUNICATION TO FLOW THROUGH SPRINT REPRESENTATIVE IN CHARGE OF PROJECT...

1.6 SITE FAMILIARITY: CONTRACTOR SHALL BE RESPONSIBLE FOR FAMILIARIZING HIMSELF WITH ALL CONTRACT DOCUMENTS, FIELD CONDITIONS AND DIMENSIONS PRIOR TO PROCEEDING WITH CONSTRUCTION. ANY DISCREPANCIES SHALL BE BROUGHT TO THE ATTENTION OF THE SPRINT CONSTRUCTION MANAGER PRIOR TO THE COMMENCEMENT OF WORK. NO COMPENSATION WILL BE AWARDED BASED ON CLAIM OF LACK OF KNOWLEDGE OR FIELD CONDITIONS.

1.7 POINT OF CONTACT: COMMUNICATION BETWEEN SPRINT AND THE CONTRACTOR SHALL FLOW THROUGH THE SINGLE SPRINT CONSTRUCTION MANAGER APPOINTED TO MANAGE THE PROJECT FOR SPRINT.

1.8 ON-SITE SUPERVISION: THE CONTRACTOR SHALL SUPERVISE AND DIRECT THE WORK AND SHALL BE RESPONSIBLE FOR CONSTRUCTION MEANS, METHODS, TECHNIQUES, SEQUENCES, AND PROCEDURES IN ACCORDANCE WITH THE CONTRACT DOCUMENTS. THE CONTRACTOR SHALL EMPLOY A COMPETENT SUPERINTENDENT WHO SHALL BE IN ATTENDANCE AT THE SITE AT ALL TIMES DURING PERFORMANCE OF THE WORK.

1.9 DRAWINGS, SPECIFICATIONS AND DETAILS REQUIRED AT JOBSITE: THE CONSTRUCTION CONTRACTOR SHALL MAINTAIN A FULL SET OF THE CONSTRUCTION DRAWINGS, STANDARD CONSTRUCTION DETAILS FOR WIRELESS SITES AND THE STANDARD CONSTRUCTION SPECIFICATIONS FOR WIRELESS SITES AT THE JOBSITE FROM MOBILIZATION THROUGH CONSTRUCTION COMPLETION.

A. THE JOBSITE DRAWINGS, SPECIFICATIONS AND DETAILS SHALL BE CLEARLY MARKED DAILY IN RED PENCIL WITH ANY CHANGES IN CONSTRUCTION OVER WHAT IS DEPICTED IN THE DOCUMENTS. AT CONSTRUCTION COMPLETION, THIS JOBSITE MARKUP SET SHALL BE DELIVERED TO THE COMPANY OR COMPANY'S DESIGNATED REPRESENTATIVE TO BE FORWARDED TO THE COMPANY'S A&E VENDOR FOR PRODUCTION OF "AS-BUILT" DRAWINGS.

B. DETAILS ARE INTENDED TO SHOW DESIGN INTENT. MODIFICATIONS MAY BE REQUIRED TO SUIT JOB DIMENSIONS OR CONDITIONS, AND SUCH MODIFICATIONS SHALL BE INCLUDED AS PART OF THE WORK. CONTRACTOR SHALL NOTIFY SPRINT CONSTRUCTION MANAGER OF ANY VARIATIONS PRIOR TO PROCEEDING WITH THE WORK.

C. DIMENSIONS SHOWN ARE TO FINISH SURFACES UNLESS NOTED OTHERWISE. SPACING BETWEEN EQUIPMENT IS THE REQUIRED CLEARANCE. SHOULD THERE BE ANY QUESTIONS REGARDING THE CONTRACT DOCUMENTS, EXISTING CONDITIONS AND/OR DESIGN INTENT, THE CONTRACTOR SHALL BE RESPONSIBLE FOR OBTAINING A CLARIFICATION FROM THE SPRINT CONSTRUCTION MANAGER PRIOR TO PROCEEDING WITH THE WORK.

1.10 USE OF JOB SITE: THE CONTRACTOR SHALL CONFINE ALL CONSTRUCTION AND RELATED OPERATIONS INCLUDING STAGING AND STORAGE OF MATERIALS AND EQUIPMENT, PARKING, TEMPORARY FACILITIES, AND WASTE STORAGE TO THE LEASE PARCEL UNLESS OTHERWISE PERMITTED BY THE CONTRACT DOCUMENTS.

1.11 UTILITIES SERVICES: WHERE NECESSARY TO CUT EXISTING PIPES, ELECTRICAL WIRES, CONDUITS, CABLES, ETC., OF UTILITY SERVICES, OR OF FIRE PROTECTION OR COMMUNICATIONS SYSTEMS, THEY SHALL BE CUT AND CAPPED AT SUITABLE PLACES OR WHERE SHOWN. ALL SUCH ACTIONS SHALL BE COORDINATED WITH THE UTILITY COMPANY INVOLVED:

1.12 PERMITS / FEES: WHEN REQUIRED THAT A PERMIT OR CONNECTION FEE BE PAID TO A PUBLIC UTILITY PROVIDER FOR NEW SERVICE TO THE CONSTRUCTION PROJECT, PAYMENT OF SUCH FEE SHALL BE THE RESPONSIBILITY OF THE CONTRACTOR.

1.13 CONTRACTOR SHALL TAKE ALL MEASURES AND PROVIDE ALL MATERIAL NECESSARY FOR PROTECTING EXISTING EQUIPMENT AND PROPERTY.

1.14 METHODS OF PROCEDURE (MOPS) FOR CONSTRUCTION: CONTRACTOR SHALL PERFORM WORK AS DESCRIBED IN THE FOLLOWING INSTALLATION AND COMMISSIONING MOPS.

NOTE: IN SHORT-FORM SPECIFICATIONS ON THE DRAWINGS, A/E TO INSERT LIST OF APPLICABLE MOPS INCLUDING EN-2012-001, EN-2013-002, EL-0568, AND TS-0193

1.15 USE OF ELECTRONIC PROJECT MANAGEMENT SYSTEMS:

PART 2 – PRODUCTS (NOT USED)

PART 3 – EXECUTION

3.1 TEMPORARY UTILITIES AND FACILITIES: THE CONTRACTOR SHALL BE RESPONSIBLE FOR ALL TEMPORARY UTILITIES AND FACILITIES NECESSARY EXCEPT AS OTHERWISE INDICATED IN THE CONSTRUCTION DOCUMENTS. TEMPORARY UTILITIES AND FACILITIES INCLUDE POTABLE WATER, HEAT, HVAC, ELECTRICITY, SANITARY FACILITIES, WASTE DISPOSAL FACILITIES, AND TELEPHONE/COMMUNICATION SERVICES. PROVIDE TEMPORARY UTILITIES AND FACILITIES IN ACCORDANCE WITH OSHA AND THE AUTHORITY HAVING JURISDICTION. CONTRACTOR MAY UTILIZE THE COMPANY ELECTRICAL SERVICE IN THE COMPLETION OF THE WORK WHEN IT BECOMES AVAILABLE. USE OF THE LESSORS OR SITE OWNER'S UTILITIES OR FACILITIES IS EXPRESSLY FORBIDDEN EXCEPT AS OTHERWISE ALLOWED IN THE CONTRACT DOCUMENTS.

3.2 ACCESS TO WORK: THE CONTRACTOR SHALL PROVIDE ACCESS TO THE JOB SITE FOR AUTHORIZED COMPANY PERSONNEL AND AUTHORIZED REPRESENTATIVES OF THE ARCHITECT/ENGINEER DURING ALL PHASES OF THE WORK.

3.3 TESTING: REQUIREMENTS FOR TESTING BY THIS CONTRACTOR SHALL BE AS INDICATED HEREWITH, ON THE CONSTRUCTION DRAWINGS, AND IN THE INDIVIDUAL SECTIONS OF THESE SPECIFICATIONS. SHOULD COMPANY CHOOSE TO ENGAGE ANY THIRD-PARTY TO CONDUCT ADDITIONAL TESTING, THE CONTRACTOR SHALL COOPERATE WITH AND PROVIDE A WORK AREA FOR COMPANY'S TEST AGENCY.

3.4 DIMENSIONS: VERIFY DIMENSIONS INDICATED ON DRAWINGS WITH FIELD DIMENSIONS BEFORE FABRICATION OR ORDERING OF MATERIALS. DO NOT SCALE DRAWINGS.

3.5 EXISTING CONDITIONS: NOTIFY THE SPRINT CONSTRUCTION MANAGER OF EXISTING CONDITIONS DIFFERING FROM THOSE INDICATED ON THE DRAWINGS. DO NOT REMOVE OR ALTER STRUCTURAL COMPONENTS WITHOUT PRIOR WRITTEN APPROVAL FROM THE ARCHITECT AND ENGINEER.

SECTION 01 200 – COMPANY FURNISHED MATERIAL AND EQUIPMENT

PART 1 – GENERAL

1.1 THE WORK: THESE STANDARD CONSTRUCTION SPECIFICATIONS IN CONJUNCTION WITH THE OTHER CONTRACT DOCUMENTS AND THE CONSTRUCTION DRAWINGS DESCRIBE THE WORK TO BE PERFORMED BY THE CONTRACTOR.

1.2 RELATED DOCUMENTS:

A. THE REQUIREMENTS OF THIS SECTION APPLY TO ALL SECTIONS IN THIS SPECIFICATION.

B. SPRINT "STANDARD CONSTRUCTION DETAILS FOR WIRELESS SITES" ARE INCLUDED IN AND MADE A PART OF THESE SPECIFICATIONS HEREWITH.

PART 2 – PRODUCTS (NOT USED)

PART 3 – EXECUTION

3.1 RECEIPT OF MATERIAL AND EQUIPMENT:

A. A COMPANY FURNISHED MATERIAL AND EQUIPMENT IS IDENTIFIED ON THE RF DATA SHEET IN THE CONSTRUCTION DOCUMENTS.

B. THE CONTRACTOR IS RESPONSIBLE FOR SPRINT PROVIDED MATERIAL AND EQUIPMENT AND UPON RECEIPT SHALL:

1 ACCEPT DELIVERIES AS SHIPPED AND TAKE RECEIPT.

2. VERIFY COMPLETENESS AND CONDITION OF ALL DELIVERIES.

3. TAKE RESPONSIBILITY FOR EQUIPMENT AND PROVIDE INSURANCE PROTECTION AS REQUIRED IN AGREEMENT.

4. RECORD ANY DEFECTS OR DAMAGES AND WITHIN TWENTY-FOUR HOURS AFTER RECEIPT, REPORT TO SPRINT OR ITS DESIGNATED PROJECT REPRESENTATIVE OF SUCH.

5. PROVIDE SECURE AND NECESSARY WEATHER PROTECTED WAREHOUSING.

6. COORDINATE SAFE AND SECURE TRANSPORTATION OF MATERIAL AND EQUIPMENT, DELIVERING AND OFF-LOADING FROM CONTRACTOR'S WAREHOUSE TO SITE.

3.2 DELIVERABLES:

A. COMPLETE SHIPPING AND RECEIPT DOCUMENTATION IN ACCORDANCE WITH COMPANY PRACTICE.

B. IF APPLICABLE, COMPLETE LOST/STOLEN/DAMAGED DOCUMENTATION REPORT AS NECESSARY IN ACCORDANCE WITH COMPANY PRACTICE, AND AS DIRECTED BY COMPANY.

C. UPLOAD DOCUMENTATION INTO SPRINT SITE MANAGEMENT SYSTEM (SMS) AND/OR PROVIDE HARD COPY DOCUMENTATION AS REQUESTED.

SECTION 01 300 – CELL SITE CONSTRUCTION CO.

PART 1 – GENERAL

1.1 THE WORK: THESE STANDARD CONSTRUCTION SPECIFICATIONS IN CONJUNCTION WITH THE OTHER CONTRACT DOCUMENTS AND THE CONSTRUCTION DRAWINGS DESCRIBE THE WORK TO BE PERFORMED BY THE CONTRACTOR.

1.2 RELATED DOCUMENTS:

A. THE REQUIREMENTS OF THIS SECTION APPLY TO ALL SECTIONS IN THIS SPECIFICATION.

B. SPRINT "STANDARD CONSTRUCTION DETAILS FOR WIRELESS SITES" ARE INCLUDED IN AND MADE A PART OF THESE SPECIFICATIONS HEREWITH.

1.3 NOTICE TO PROCEED

A. NO WORK SHALL COMMENCE PRIOR TO COMPANY'S WRITTEN NOTICE TO PROCEED AND THE ISSUANCE OF THE WORK ORDER.

B. UPON RECEIVING NOTICE TO PROCEED, CONTRACTOR SHALL FULLY PERFORM ALL WORK NECESSARY TO PROVIDE SPRINT WITH AN OPERATIONAL WIRELESS FACILITY.

TOWER OWNER NOTIFICATION
ONCE THE CONTRACTOR HAS RECEIVED AND ACCEPTED THE NOTICE TO PROCEED, CONTRACTOR WILL CONTACT THE CROWN CASTLE CONSTRUCTION MANAGER OF RECORD (NOTED ON THE FIRST PAGE ON THIS CONSTRUCTION DRAWING) A MINIMUM OF 48 HOURS PRIOR TO WORK START. UPON ARRIVAL TO THE JOB SITE, CONTRACTOR CREW IS REQUIRED CALL 1-800-788-7011 TO NOTIFY THE CROWN CASTLE NOC WORK HAS BEGUN.

PART 2 – PRODUCTS (NOT USED)

PART 3 – EXECUTION

3.1 FUNCTIONAL REQUIREMENTS:

A. THE ACTIVITIES DESCRIBED IN THIS PARAGRAPH REPRESENT MINIMUM ACTIONS AND PROCESSES REQUIRED TO SUCCESSFULLY COMPLETE THE WORK. THE ACTIVITIES DESCRIBED ARE NOT EXHAUSTIVE, AND CONTRACTOR SHALL TAKE ANY AND ALL ACTIONS AS NECESSARY TO SUCCESSFULLY COMPLETE THE CONSTRUCTION OF A FULLY FUNCTIONING WIRELESS FACILITY AT THE SITE IN ACCORDANCE WITH COMPANY PROCESSES.

B. SUBMIT SPECIFIC DOCUMENTATION AS INDICATED HEREIN, AND OBTAIN REQUIRED APPROVALS WHILE THE WORK IS BEING PERFORMED.

C. MANAGE AND CONDUCT ALL FIELD CONSTRUCTION SERVICE RELATED ACTIVITIES

D. PROVIDE CONSTRUCTION ACTIVITIES TO THE EXTENT REQUIRED BY THE CONTRACT DOCUMENTS, INCLUDING BUT NOT LIMITED TO THE FOLLOWING:

PLANS PREPARED FOR:

Sprint
6580 Sprint Parkway
Overland Park, Kansas 66251

PLANS PREPARED BY:

INFINIGY
FROM ZERO TO INFINIGY
the solutions are endless
1033 Watervliet Shaker Rd | Albany, NY 12205
Phone: 518-690-0790 | Fax: 518-690-0793
www.infinigy.com
JOB NUMBER 526-103

MLA PARTNER:

CROWN CASTLE

ENGINEERING LICENSE:

STATE OF CONNECTICUT
DAVID STEVENS
No. 24705
LICENSED PROFESSIONAL ENGINEER
NOV 25 2018

DRAWING NOTICE:

THESE DOCUMENTS ARE CONFIDENTIAL AND ARE THE SOLE PROPERTY OF SPRINT AND MAY NOT BE REPRODUCED, DISSEMINATED OR REDISTRIBUTED WITHOUT THE EXPRESS WRITTEN CONSENT OF SPRINT.

REVISIONS:

DESCRIPTION	DATE	BY	REV
ISSUED FOR CONSTRUCTION	10/30/18	RCD	0
ISSUED FOR REVIEW	10/08/18	RCD	A

SITE NAME:

HRT 099 943226

SITE CASCADE:

CT03XC091

SITE ADDRESS:

570 NEW PARK AVENUE
WEST HARTFORD, CT 06110

SHEET DESCRIPTION:

SPRINT SPECIFICATIONS

SHEET NUMBER:

SP-1

CONTINUE FROM SP-1

1. PERFORM ANY REQUIRED SITE ENVIRONMENTAL MITIGATION.
2. PREPARE GROUND SITES; PROVIDE DE-GRUBBING; AND ROUGH AND FINAL GRADING, AND COMPOUND SURFACE TREATMENTS.
3. MANAGE AND CONDUCT ALL ACTIVITIES FOR INSTALLATION OF UTILITIES INCLUDING ELECTRICAL AND TELCO BACKHAUL.
4. INSTALL UNDERGROUND FACILITIES INCLUDING UNDERGROUND POWER AND COMMUNICATIONS CONDUITS, AND UNDERGROUND GROUNDING SYSTEM.
5. INSTALL ABOVE GROUND GROUNDING SYSTEMS.
6. PROVIDE NEW HVAC INSTALLATIONS AND MODIFICATIONS.
7. INSTALL "H-FRAMES", CABINETS AND SHELTERS AS INDICATED.
8. INSTALL ROADS, ACCESS WAYS, CURBS AND DRAINS AS INDICATED.
9. ACCOMPLISH REQUIRED MODIFICATION OF EXISTING FACILITIES.
10. PROVIDE ANTENNA SUPPORT STRUCTURE FOUNDATIONS.
11. PROVIDE SLABS AND EQUIPMENT PLATFORMS.
12. INSTALL COMPOUND FENCING, SIGHT SHIELDING, LANDSCAPING AND ACCESS BARRIERS.
13. PERFORM INSPECTION AND MATERIAL TESTING AS REQUIRED HEREINAFTER.
14. CONDUCT SITE RESISTANCE TO EARTH TESTING AS REQUIRED HEREINAFTER
15. INSTALL FIXED GENERATOR SETS AND OTHER STANDBY POWER SOLUTIONS.
16. INSTALL TOWERS, ANTENNA SUPPORT STRUCTURES AND PLATFORMS ON EXISTING TOWERS AS REQUIRED.
17. INSTALL CELL SITE RADIOS, MICROWAVE, GPS, COAXIAL MAINLINE, ANTENNAS, CROSS BAND COUPLERS, TOWER TOP AMPLIFIERS, LOW NOISE AMPLIFIERS AND RELATED EQUIPMENT.
18. PERFORM, DOCUMENT, AND CLOSE OUT ANY CONSTRUCTION CONTROL DOCUMENTS THAT MAY BE REQUIRED BY GOVERNMENT AGENCIES AND LANDLORDS.
19. PERFORM ANTENNAL AND COAX SWEEP TESTING AND MAKE ANY AND ALL NECESSARY CORRECTIONS.
20. REMAIN ON SITE MOBILIZED THROUGHOUT HAND-OFF AND INTEGRATION TO ASSIST AS NEEDED UNTIL SITE IS DEEMED SUBSTANTIALLY COMPLETE AND PLACED "ON AIR."

3.2 GENERAL REQUIREMENTS FOR CIVIL CONSTRUCTION:

A. CONTRACTOR SHALL KEEP THE SITE FREE FROM ACCUMULATING WASTE MATERIAL, DEBRIS, AND TRASH. AT THE COMPLETION OF THE WORK, CONTRACTOR SHALL REMOVE FROM THE SITE ALL REMAINING RUBBISH, IMPLEMENTS, TEMPORARY FACILITIES, AND SURPLUS MATERIALS.

B. EQUIPMENT ROOMS SHALL AT ALL TIMES BE MAINTAINED "BROOM CLEAN" AND CLEAR OF DEBRIS.

C. CONTRACTOR SHALL TAKE ALL REASONABLE PRECAUTIONS TO DISCOVER AND LOCATE ANY HAZARDOUS CONDITION.

1. IN THE EVENT CONTRACTOR ENCOUNTERS ANY HAZARDOUS CONDITION WHICH HAS NOT BEEN ABATED OR OTHERWISE MITIGATED, CONTRACTOR AND ALL OTHER PERSONS SHALL IMMEDIATELY STOP WORK IN THE AFFECTED AREA AND NOTIFY COMPANY IN WRITING. THE WORK IN THE AFFECTED AREA SHALL NOT BE RESUMED EXCEPT BY WRITTEN NOTIFICATION BY COMPANY.
2. CONTRACTOR AGREES TO USE CARE WHILE ON THE SITE AND SHALL NOT TAKE ANY ACTION THAT WILL OR MAY RESULT IN OR CAUSE THE HAZARDOUS CONDITION TO BE FURTHER RELEASED IN THE ENVIRONMENT, OR TO FURTHER EXPOSE INDIVIDUALS TO THE HAZARD.

D. CONTRACTOR'S ACTIVITIES SHALL BE RESTRICTED TO THE PROJECT LIMITS. SHOULD AREAS OUTSIDE THE PROJECT LIMITS BE AFFECTED BY CONTRACTOR'S ACTIVITIES, CONTRACTOR SHALL IMMEDIATELY RETURN THEM TO ORIGINAL CONDITION

E. CONDUCT TESTING AS REQUIRED HEREIN.

3.3 DELIVERABLES:

A. CONTRACTOR SHALL REVIEW, APPROVE, AND SUBMIT TO SPRINT SHOP DRAWINGS, PRODUCT DATA, SAMPLES, AND SIMILAR SUBMITTALS AS REQUIRED HEREINAFTER

B. PROVIDE DOCUMENTATION INCLUDING, BUT NOT LIMITED TO, THE FOLLOWING. DOCUMENTATION SHALL BE FORWARDED IN ORIGINAL FORMAT AND/OR UPLOADED INTO SMS.

1. ALL CORRESPONDENCE AND PRELIMINARY CONSTRUCTION REPORTS.
2. PROJECT PROGRESS REPORTS.
3. CIVIL CONSTRUCTION START DATE (POPULATE FIELD IN SMS AND/OR FORWARD NOTIFICATION).
4. ELECTRICAL SERVICE COMPLETION DATE (POPULATE FIELD IN SMS AND/OR FORWARD NOTIFICATION).
5. LINES AND ANTENNA INSTALL DATE (POPULATE FIELD IN SMS AND/OR FORWARD NOTIFICATION).
6. POWER INSTALL DATE (POPULATE FIELD IN SMS AND/OR FORWARD NOTIFICATION).
7. TELCO READY DATE (POPULATE FIELD IN SMS AND/OR FORWARD NOTIFICATION).
8. PPC (OR SHELTER) INSTALL DATE (POPULATE FIELD IN SMS AND/OR FORWARD NOTIFICATION).
9. TOWER CONSTRUCTION START DATE (POPULATE FIELD IN SMS AND/OR FORWARD NOTIFICATION).
10. TOWER CONSTRUCTION COMPLETE DATE (POPULATE FIELD IN SMS AND/OR FORWARD NOTIFICATION).
11. BTS AND RADIO EQUIPMENT DELIVERED AT SITE DATE (POPULATE FIELD IN SMS AND/OR FORWARD NOTIFICATION).
12. NETWORK OPERATIONS HANDOFF CHECKLIST (HOC WALK) COMPLETE (UPLOAD FORM IN SMS)
13. CIVIL CONSTRUCTION COMPLETE DATE (POPULATE FIELD IN SMS AND/OR FORWARD NOTIFICATION).
14. SITE CONSTRUCTION PROGRESS PHOTOS UNLOADED INTO SMS.

SECTION 01 400 – SUBMITTALS & TESTS

PART 1 – GENERAL

1.1 THE WORK: THESE STANDARD CONSTRUCTION SPECIFICATIONS IN CONJUNCTION WITH THE OTHER CONTRACT DOCUMENTS AND THE CONSTRUCTION DRAWINGS DESCRIBE THE WORK TO BE PERFORMED BY THE CONTRACTOR.

1.2 RELATED DOCUMENTS:

A. THE REQUIREMENTS OF THIS SECTION APPLY TO ALL SECTIONS IN THIS SPECIFICATION.

B. SPRINT "STANDARD CONSTRUCTION DETAILS FOR WIRELESS SITES" ARE INCLUDED IN AND MADE A PART OF THESE SPECIFICATIONS HEREWITH.

1.3 SUBMITTALS:

A. THE WORK IN ALL ASPECTS SHALL COMPLY WITH THE CONSTRUCTION DRAWINGS AND THESE SPECIFICATIONS.

B. SUBMIT THE FOLLOWING TO COMPANY REPRESENTATIVE FOR APPROVAL.

1. CONCRETE MIX-DESIGNS FOR TOWER FOUNDATIONS, ANCHORS PIERS, AND CONCRETE PAVING.
2. CONCRETE BREAK TESTS AS SPECIFIED HEREIN.
3. SPECIAL FINISHES FOR INTERIOR SPACES, IF ANY.
4. ALL EQUIPMENT AND MATERIALS SO IDENTIFIED ON THE CONSTRUCTION DRAWINGS.
5. CHEMICAL GROUNDING DESIGN

D. ALTERNATES: AT THE COMPANY'S REQUEST, ANY ALTERNATIVES TO THE MATERIALS OR METHODS SPECIFIED SHALL BE SUBMITTED TO SPRINT'S CONSTRUCTION MANAGER FOR APPROVAL PRIOR TO BEING SHIPPED TO SITE. SPRINT WILL REVIEW AND APPROVE ONLY THOSE REQUESTS MADE IN WRITING. NO VERBAL APPROVALS WILL BE CONSIDERED. SUBMITTAL FOR APPROVAL SHALL INCLUDE A STATEMENT OF COST REDUCTION PROPOSED FOR USE OF ALTERNATE PRODUCT.

1.4 TESTS AND INSPECTIONS:

A. THE CONTRACTOR SHALL BE RESPONSIBLE FOR ALL CONSTRUCTION TESTS, INSPECTIONS AND PROJECT DOCUMENTATION.

B. CONTRACTOR SHALL ACCOMPLISH TESTING INCLUDING BUT NOT LIMITED TO THE FOLLOWING:

1. COAX SWEEPS AND FIBER TESTS PER CURRENT VERSION OF SPRINT'S TS-0200 ANTENNA LINE ACCEPTANCE STANDARDS.
2. AGL, AZIMUTH AND DOWNTILT USING ELECTRONIC COMMERCIAL MADE-FOR-THE-PURPOSE ANTENNA ALIGNMENT TOOL.
3. CONTRACTOR SHALL BE RESPONSIBLE FOR ANY AND ALL CORRECTIONS TO ANY WORK IDENTIFIED AS UNACCEPTABLE IN SITE INSPECTION ACTIVITIES AND/OR AS A RESULT OF TESTING.

C. REQUIRED CLOSEOUT DOCUMENTATION INCLUDES, BUT IS NOT LIMITED TO THE FOLLOWING;

1. AZIMUTH, DOWNTILT, AGL – UPLOAD REPORT FROM ANTENNA ALIGNMENT TOOL TO SITERRA TASK 465. INSTALLED AZIMUTH, DOWNTILT, AND AGL MUST CONFORM TO THE RF DATA SHEETS. SWEEP AND FIBER TESTS
2. SCANABLE BARCODE PHOTOGRAPHS OF TOWER TOP AND INACCESSIBLE SERIALIZED EQUIPMENT
3. ALL AVAILABLE JURISDICTIONAL INFORMATION
4. PDF SCAN OF REDLINES PRODUCED IN FIELD
5. ELECTRONIC AS-BUILT DRAWINGS IN AUTOCAD AND PDF FORMATS. ANY FIELD CHANGE MUST BE REFLECTED BY MODIFYING THE PLANS, ELEVATIONS, AND DETAILS IN THE DRAWING SETS. GENERAL NOTES INDICATING MODIFICATIONS WILL NOT BE ACCEPTED. CHANGES SHALL BE HIGHLIGHTED AS "CLOUDS" IDENTIFIED AS THE "AS-BUILT" CONDITION.
6. LIEN WAIVERS
7. FINAL PAYMENT APPLICATION
8. REQUIRED FINAL CONSTRUCTION PHOTOS
9 . CONSTRUCTION AND COMMISSIONING CHECKLIST COMPLETE WITH NO DEFICIENT ITEMS
10. ALL POST NTP TASKS INCLUDING DOCUMENT UPLOADS COMPLETED IN SITERRA (SPRINTS DOCUMENT REPOSITORY OF RECORD).

1.5 COMMISSIONING: PERFORM ALL COMMISSIONING AS REQUIRED BY APPLICABLE MOPs

1.6 INTEGRATION: PERFORM ALL INTEGRATION ACTIVITIES AS REQUIRED BY APPLICABLE MOPs

PART 2 – PRODUCTS (NOT USED)

PART 3 – EXECUTION

3.1 REQUIREMENTS FOR TESTING:

A. THIRD PARTY TESTING AGENCY:

1. WHEN THE USE OF A THIRD PARTY INDEPENDENT TESTING AGENCY IS REQUIRED, THE AGENCY THAT IS SELECTED MUST PERFORM SUCH WORK ON A REGULAR BASIS IN THE STATE WHERE THE PROJECT IS LOCATED AND HAVE A THOROUGH UNDERSTANDING OF LOCAL AVAILABLE MATERIALS, INCLUDING THE SOIL, ROCK, AND GROUNDWATER CONDITIONS.
2. THE THIRD PARTY TESTING AGENCY IS TO BE FAMILIAR WITH THE APPLICABLE REQUIREMENTS FOR THE TESTS TO BE DONE, EQUIPMENT TO BE USED, AND ASSOCIATED HEALTH AND SAFETY ISSUES.
3. EXPERIENCE IN SOILS, CONCRETE, MASONRY, AGGREGATE, AND ASPHALT TESTING USING ASTM, AASJTO, AND OTHER METHODS IS NEEDED.
4. EXPERIENCE IN SOILS, CONCRETE, MASONRY, AGGREGATE, AND ASPHALT TESTING USING ASTM, AASJTO, AND OTHER METHODS IS NEEDED.

3.2 REQUIRED TESTS:

A. CONTRACTOR SHALL ACCOMPLISH TESTING INCLUDING BUT NOT LIMITED TO THE FOLLOWING:

1. CONCRETE CYLINDER BREAK TESTS FOR THE TOWER AND ANCHOR FOUNDATIONS AS SPECIFIED IN SECTION: PORTLAND CEMENT CONCRETE PAVING.
2. ASPHALT ROADWAY COMPACTED THICKNESS, SURFACE SMOOTHNESS, AND COMPACTED DENSITY TESTING AS SPECIFIED IN SECTION: HOT MIX ASPHALT PAVING.
3. FIELD QUALITY CONTROL TESTING AS SPECIFIED IN SECTION: PORTLAND CEMENT CONCRETE PAVING.
4. TESTING REQUIRED UNDER SECTION: AGGREGATE BASE FOR ACCESS ROADS, PADS AND ANCHOR LOCATIONS
5. STRUCTURAL BACKFILL COMPACTION TESTS FOR THE TOWER FOUNDATION.
6. SITE RESISTANCE TO EARTH TESTING PER EXHIBIT: CELL SITE GROUNDING SYSTEM DESIGN.
7. ANTENNA AND COAX SWEEP TESTS PER EXHIBIT: ANTENNA TRANSMISSION LINE ACCEPTANCE STANDARDS.
8. GROUNDING AT ANTENNA MASTS FOR GPS AND ANTENNAS
9. ALL OTHER TESTS REQUIRED BY COMPANY OR JURISDICTION.

3.3 REQUIRED INSPECTIONS

A. SCHEDULE INSPECTIONS WITH COMPANY REPRESENTATIVE.

B. CONDUCT INSPECTIONS INCLUDING BUT NOT LIMITED TO THE FOLLOWING:

1. GROUNDING SYSTEM INSTALLATION PRIOR TO EARTH CONCEALMENT DOCUMENTED WITH DIGITAL PHOTOGRAPHS BY CONTRACTOR, APPROVED BY A&E OR SPRINT REPRESENTATIVE.
2. FORMING FOR CONCRETE AND REBAR PLACEMENT PRIOR TO POUR DOCUMENTED WITH DIGITAL PHOTOGRAPHS BY CONTRACTOR, APPROVED BY A&E OR SPRINT REPRESENTATIVE.
3. COMPACTION OF BACKFILL MATERIALS; AGGREGATE BASE FOR ROADS, PADS, AND ANCHORS; ASPHALT PAVING; AND SHAFT BACKFILL FOR CONCRETE AND WOOD POLES, BY INDEPENDENT THIRD PARTY AGENCY.
4. PRE- AND POST-CONSTRUCTION ROOFTOP AND STRUCTURAL INSPECTIONS ON EXISTING FACILITIES.
5. TOWER ERECTION SECTION STACKING AND PLATFORM ATTACHMENT DOCUMENTED BY DIGITAL PHOTOGRAPHS BY THIRD PARTY AGENCY.
6. ANTENNA AZIMUTH , DOWN TILT AND PER SUNLIGHT TOOL SUNSIGHT INSTRUMENTS – ANTENNALIGN ALIGNMENT TOOL (AAT)

PLANS PREPARED FOR:

Sprint
6580 Sprint Parkway
Overland Park, Kansas 66251

PLANS PREPARED BY:

INFINIGY
FROM ZERO TO INFINIGY
the solutions are endless
1033 Watervliet Shaker Rd | Albany, NY 12205
Phone: 518-690-0790 | Fax: 518-690-0793
www.infinigy.com
JOB NUMBER 526-103

MLA PARTNER:

CROWN CASTLE

ENGINEERING LICENSE:

STATE OF CONNECTICUT
JOHN S. STEVENS
No. 24705
LICENSED PROFESSIONAL ENGINEER
NOV 5 2018

DRAWING NOTICE:

THESE DOCUMENTS ARE CONFIDENTIAL AND ARE THE SOLE PROPERTY OF SPRINT AND MAY NOT BE REPRODUCED, DISSEMINATED OR REDISTRIBUTED WITHOUT THE EXPRESS WRITTEN CONSENT OF SPRINT.

REVISIONS:

DESCRIPTION	DATE	BY	REV
ISSUED FOR CONSTRUCTION	10/30/18	RCD	0
ISSUED FOR REVIEW	10/08/18	RCD	A

SITE NAME:

HRT 099 943226

SITE CASCADE:

CT03XC091

SITE ADDRESS:

570 NEW PARK AVENUE
WEST HARTFORD, CT 06110

SHEET DESCRIPTION:

SPRINT SPECIFICATIONS

SHEET NUMBER:

SP-2

CONTINUE FROM SP-2

7. VERIFICATION DOCUMENTED WITH THE ANTENNA CHECKLIST REPORT, BY A&E, SITE DEVELOPMENT REP, OR RF REP.

8. FINAL INSPECTION CHECKLIST AND HANDOFF WALK (HOC.). SIGNED FORM SHOWING ACCEPTANCE BY FIELD OPS IS TO BE UPLOADED INTO SMS.

9. COAX SWEEP AND FIBER TESTING DOCUMENTS SUBMITTED VIA SMS FOR RF APPROVAL.

10. SCAN–ABLE BARCODE PHOTOGRAPHS OF TOWER TOP AND INACCESSIBLE SERIALIZED EQUIPMENT

11. ALL AVAILABLE JURISDICTIONAL INFORMATION

12. PDF SCAN OF REDLINES PRODUCED IN FIELD

C. THE CONTRACTOR SHALL BE RESPONSIBLE FOR ANY AND ALL CORRECTIONS TO ANY WORK IDENTIFIED AS UNACCEPTABLE IN SITE INSPECTION ACTIVITIES AND/OR AS A RESULT OF TESTING.

D. CONSTRUCTION INSPECTIONS AND CORRECTIVE MEASURES SHALL BE DOCUMENTED BY THE CONTRACTOR WITH WRITTEN REPORTS AND PHOTOGRAPHS. PHOTOGRAPHS MUST BE DIGITAL AND OF SUFFICIENT QUALITY TO CLEARLY SHOW THE SITE CONSTRUCTION. PHOTOGRAPHS MUST CLEARLY IDENTIFY THE PHOTOGRAPHED ITEM AND BE LABELED WITH THE SITE CASCADE NUMBER, SITE NAME, DESCRIPTION, AND DATE.

3.4 DELIVERABLES: TEST AND INSPECTION REPORTS AND CLOSEOUT DOCUMENTATION SHALL BE UPLOADED TO THE SMS AND/OR FORWARDED TO SPRINT FOR INCLUSION INTO THE PERMANENT SITE FILES.

A. THE FOLLOWING TEST AND INSPECTION REPORTS SHALL BE PROVIDED AS APPLICABLE.

1. CONCRETE MIX AND CYLINDER BREAK REPORTS.

2. STRUCTURAL BACKFILL COMPACTION REPORTS.

3. SITE RESISTANCE TO EARTH TEST.

4. ANTENNA AZIMUTH AND DOWN TILT VERIFICATION

5. TOWER ERECTION INSPECTIONS AND MEASUREMENTS DOCUMENTING TOWER INSTALLED PER SUPPLIER'S REQUIREMENTS AND THE APPLICABLE SECTIONS HEREIN.

6. COAX CABLE SWEEP TESTS PER COMPANY'S "ANTENNA LINE ACCEPTANCE STANDARDS".

B. REQUIRED CLOSEOUT DOCUMENTATION INCLUDES THE FOLLOWING;

1. TEST WELLS AND TRENCHES: PHOTOGRAPHS OF ALL TEST WELLS; PHOTOGRAPHS SHOWING ALL OPEN EXCAVATIONS AND TRENCHING PRIOR TO BACKFILLING SHOWING A TAPE MEASURE VISIBLE IN THE EXCAVATIONS INDICATING DEPTH.

2. CONDUITS, CONDUCTORS AND GROUNDING: PHOTOGRAPHS SHOWING TYPICAL INSTALLATION OF CONDUCTORS AND CONNECTORS; PHOTOGRAPHS SHOWING TYPICAL BEND RADIUS OF INSTALLED GROUND WIRES AND GROUND ROD SPACING;

3. CONCRETE FORMS AND REINFORCING: CONCRETE FORMING AT TOWER AND EQUIPMENT/SHELTER PAD/FOUNDATIONS – PHOTOGRAPHS SHOWING ALL REINFORCING STEEL, UTILITY AND CONDUIT STUB OUTS; PHOTOGRAPHS SHOWING CONCRETE POUR OF SHELTER SLAB/FOUNDATION, TOWER FOUNDATION AND GUY ANCHORS WITH VIBRATOR IN USE; PHOTOGRAPHS SHOWING EACH ANCHOR ON GUYED TOWERS, BEFORE CONCRETE POUR.

4. TOWER, ANTENNAS AND MAINLINE: INSPECTION AND PHOTOGRAPHS OF SECTION STACKING; INSPECTION AND PHOTOGRAPHS OF PLATFORM COMPONENT ATTACHMENT POINTS; PHOTOGRAPHS OF TOWER TOP GROUNDING; PHOTOS OF TOWER COAX LINE COLOR CODING AT THE TOP AND AT GROUND LEVEL; INSPECTION AND PHOTOGRAPHS OF OPERATIONAL OF TOWER LIGHTING, AND PLACEMENT OF FAA REGISTRATION SIGN; PHOTOGRAPHS SHOWING ADDITIONAL GROUNDING POINTS FOR TOWERS GREATER THAN 200 FEET.; PHOTOS OF ANTENNA GROUND BAR, EQUIPMENT GROUND BAR, AND MASTER GROUND BAR; PHOTOS OF GPS ANTENNA(S); PHOTOS OF EACH SECTOR OF ANTENNAS; ONE PHOTOGRAPH LOOKING AT THE SECTOR AND ONE FROM BEHIND SHOWING THE PROJECTED COVERAGE AREA; PHOTOS OF COAX WEATHERPROOFING – TOP AND BOTTOM; PHOTOS OF COAX GROUNDING––TOP AND BOTTOM; PHOTOS OF ANTENNA AND MAST GROUNDING; PHOTOS OF COAX CABLE ENTRY INTO SHELTER; PHOTOS OF PLATFORM MECHANICAL CONNECTIONS TO TOWER/MONOPOLE.

5. ROOF TOPS: PRE–CONSTRUCTION AND POST–CONSTRUCTION VISUAL INSPECTION AND PHOTOGRAPHS OF THE ROOF AND INTERIOR TO DETERMINE AND DOCUMENT CONDITIONS; ROOF TOP CONSTRUCTION INSPECTIONS AS REQUIRED BY THE JURISDICTION; PHOTOGRAPHS OF CABLE TRAY AND/OR ICE BRIDGE; PHOTOGRAPHS OF DOGHOUSE/CABLE EXIT FROM ROOF;

6. SITE LAYOUT – PHOTOGRAPHS OF THE OVERALL COMPOUND, INCLUDING EQUIPMENT PLATFORM FROM ALL FOUR CORNERS.

7. FINISHED UTILITIES: CLOSE–UP PHOTOGRAPHS OF THE PPC BREAKER PANEL; CLOSE–UP PHOTOGRAPH OF THE INSIDE OF THE TELCO PANEL AND NIU; CLOSE–UP PHOTOGRAPH OF THE POWER METER AND DISCONNECT; PHOTOS OF POWER AND TELCO ENTRANCE TO COMPANY ENCLOSURE; PHOTOGRAPHS AT METER BOX AND/OR FACILITY DISTRIBUTION PANEL.

8. REQUIRED MATERIALS CERTIFICATIONS: CONCRETE MIX DESIGNS; MILL CERTIFICATION FOR ALL REINFORCING AND STRUCTURAL STEEL; AND ASPHALT PAVING MIX DESIGN.

9. ANY AND ALL SUBMITTALS BY THE JURISDICTION OR COMPANY.

SECTION 01 400 – SUBMITTALS & TESTS

PART 1 – GENERAL

1.1 THE WORK: THESE STANDARD CONSTRUCTION SPECIFICATIONS IN CONJUNCTION WITH THE OTHER CONTRACT DOCUMENTS AND THE CONSTRUCTION DRAWINGS DESCRIBE THE WORK TO BE PERFORMED BY THE CONTRACTOR.

1.2 RELATED DOCUMENTS:

A. THE REQUIREMENTS OF THIS SECTION APPLY TO ALL SECTIONS IN THIS SPECIFICATION.

B. SPRINT "STANDARD CONSTRUCTION DETAILS FOR WIRELESS SITES" ARE INCLUDED IN AND MADE A PART OF THESE SPECIFICATIONS HEREWITH.

PART 2 – PRODUCTS (NOT USED)

PART 3 – EXECUTION

3.1 WEEKLY REPORTS:

A. CONTRACTOR SHALL PROVIDE SPRINT WITH WEEKLY REPORTS SHOWING PROJECT STATUS. THIS STATUS REPORT FORMAT WILL BE PROVIDED TO THE CONTRACTOR BY SPRINT. THE REPORT WILL CONTAIN SITE ID NUMBER, THE MILESTONES FOR EACH SITE, INCLUDING THE BASELINE DATE, ESTIMATED COMPLETION DATE AND ACTUAL COMPLETION DATE.

B. REPORT INFORMATION WILL BE TRANSMITTED TO SPRINT VIA ELECTRONIC MEANS AS REQUIRED. THIS INFORMATION WILL PROVIDE A BASIS FOR PROGRESS MONITORING AND PAYMENT.

3.2 PROJECT CONFERENCE CALLS:

A. SPRINT MAY HOLD WEEKLY PROJECT CONFERENCE CALLS. CONTRACTOR WILL BE REQUIRED TO COMMUNICATE SITE STATUS, MILESTONE COMPLETIONS AND UPCOMING MILESTONE PROJECTIONS, AND ANSWER ANY OTHER SITE STATUS QUESTIONS AS NECESSARY.

3.3 PROJECT TRACKING IN SMS:

A. CONTRACTOR SHALL PROVIDE SCHEDULE UPDATES AND PROJECTIONS IN THE SMS SYSTEM ON A WEEKLY BASIS.

3.4 ADDITIONAL REPORTING:

A. ADDITIONAL OR ALTERNATE REPORTING REQUIREMENTS MAY BE ADDED TO THE REPORT AS DETERMINED TO BE REASONABLY NECESSARY BY COMPANY.

3.5 PROJECT PHOTOGRAPHS:

A. FILE DIGITAL PHOTOGRAPHS OF COMPLETED SITE IN JPEG FORMAT IN THE SMS PHOTO LIBRARY FOR THE RESPECTIVE SITE. PHOTOGRAPHS SHALL BE CLEARLY LABELED WITH SITE NUMBER, NAME AND DESCRIPTION, AND SHALL INCLUDE AT A MINIMUM THE FOLLOWING AS APPLICABLE:

1. 1SHELTER AND TOWER OVERVIEW.

2. TOWER FOUNDATION(S) – FORMS AND STEEL BEFORE POUR (EACH ANCHOR ON GUYED TOWERS).

3. TOWER FOUNDATION(S) POUR WITH VIBRATOR IN USE (EACH ANCHOR ON GUYED TOWERS).

4. TOWER STEEL AS BEING INSTALLED INTO HOLE (SHOW ANCHOR STEEL ON GUYED TOWERS).

5. PHOTOS OF TOWER SECTION STACKING.

6. CONCRETE TESTING / SAMPLES.

7. PLACING OF ANCHOR BOLTS IN TOWER FOUNDATION.

8. BUILDING/WATER TANK FROM ROAD FOR TENANT IMPROVEMENTS OR COMMENTS.

9. SHELTER FOUNDATION––FORMS AND STEEL BEFORE POURING.

10. SHELTER FOUNDATION POUR WITH VIBRATOR IN USE.

11. COAX CABLE ENTRY INTO SHELTER.

12. PLATFORM MECHANICAL CONNECTIONS TO TOWER/MONOPOLE.

13. ROOFTOP PRE AND POST CONSTRUCTION PHOTOS TO INCLUDE PENETRATIONS AND INTERIOR CEILING.

14. PHOTOS OF TOWER TOP COAX LINE COLOR CODING AND COLOR CODING AT GROUND LEVEL.

15. PHOTOS OF ALL APPROPRIATE COMPANY OR REGULATORY SIGNAGE.

16. PHOTOS OF EQUIPMENT BOLT DOWN INSIDE SHELTER.

17. POWER AND TELCO ENTRANCE TO COMPANY ENCLOSURE AND POWER AND TELCO SUPPLY LOCATIONS INCLUDING METER/DISCONNECT.

18. ELECTRICAL TRENCH(S) WITH ELECTRICAL / CONDUIT BEFORE BACKFILL.

19. ELECTRICAL TRENCH(S) WITH FOIL–BACKED TAPE BEFORE FURTHER BACKFILL.

20. TELCO TRENCH WITH TELEPHONE / CONDUIT BEFORE BACKFILL.

21. TELCO TRENCH WITH FOIL–BACKED TAPE BEFORE FURTHER BACKFILL.

22. SHELTER GROUND–RING TRENCH WITH GROUND–WIRE BEFORE BACKFILL (SHOW ALL CAD WELDS AND BEND RADII).

23. TOWER GROUND–RING TRENCH WITH GROUND–WIRE BEFORE BACKFILL (SHOW ALL CAD WELDS AND BEND RADII).

24. FENCE GROUND–RING TRENCH WITH GROUND–WIRE BEFORE BACKFILL (SHOW ALL CAD WELDS AND BEND RADII).

25. ALL BTS GROUND CONNECTIONS.

26. ALL GROUND TEST WELLS.

27. ANTENNA GROUND BAR AND EQUIPMENT GROUND BAR.

28. ADDITIONAL GROUNDING POINTS ON TOWERS ABOVE 200'.

29. HVAC UNITS INCLUDING CONDENSERS ON SPLIT SYSTEMS.

30. GPS ANTENNAS.

31. CABLE TRAY AND/OR WAVEGUIDE BRIDGE.

32. DOGHOUSE/CABLE EXIT FROM ROOF.

33. EACH SECTOR OF ANTENNAS; ONE PHOTOGRAPH LOOKING AT THE SECTOR AND ONE FROM BEHIND SHOWING THE PROJECTED COVERAGE AREA.

34. MASTER BUS BAR.

35. TELCO BOARD AND NIU.

36. ELECTRICAL DISTRIBUTION WALL.

37. CABLE ENTRY WITH SURGE SUPPRESSION.

38. ENTRANCE TO EQUIPMENT ROOM.

39. COAX WEATHERPROOFING–TOP AND BOTTOM OF TOWER.

40. COAX GROUNDING –TOP AND BOTTOM OF TOWER.

41. ANTENNA AND MAST GROUNDING.

42. LANDSCAPING – WHERE APPLICABLE.

3.6 FINAL PROJECT ACCEPTANCE: COMPLETE ALL REQUIRED REPORTING TASKS PER CONTRACT, CONTRACT DOCUMENTS OR THE SPRINT INTEGRATED CONSTRUCTION STANDARDS FOR WIRELESS SITES AND UPLOAD INTO SITERRA.

PLANS PREPARED FOR:

Sprint
6580 Sprint Parkway
Overland Park, Kansas 66251

PLANS PREPARED BY:

INFINIGY
FROM ZERO TO INFINIGY
the solutions are endless
1033 Watervliet Shaker Rd | Albany, NY 12205
Phone: 518-690-0790 | Fax: 518-690-0793
www.infinigy.com
JOB NUMBER 526–103

MLA PARTNER:

CROWN CASTLE

ENGINEERING LICENSE:

STATE OF CONNECTICUT
JOHN S. STEVENS
NOV 5 2018
No. 24705
LICENSED PROFESSIONAL ENGINEER

DRAWING NOTICE:

THESE DOCUMENTS ARE CONFIDENTIAL AND ARE THE SOLE PROPERTY OF SPRINT AND MAY NOT BE REPRODUCED, DISSEMINATED OR REDISTRIBUTED WITHOUT THE EXPRESS WRITTEN CONSENT OF SPRINT.

REVISIONS:

DESCRIPTION	DATE	BY	REV
ISSUED FOR CONSTRUCTION	10/30/18	RCD	0
ISSUED FOR REVIEW	10/08/18	RCD	A

SITE NAME:

HRT 099 943226

SITE CASCADE:

CT03XC091

SITE ADDRESS:

570 NEW PARK AVENUE
WEST HARTFORD, CT 06110

SHEET DESCRIPTION:

SPRINT SPECIFICATIONS

SHEET NUMBER:

SP-3

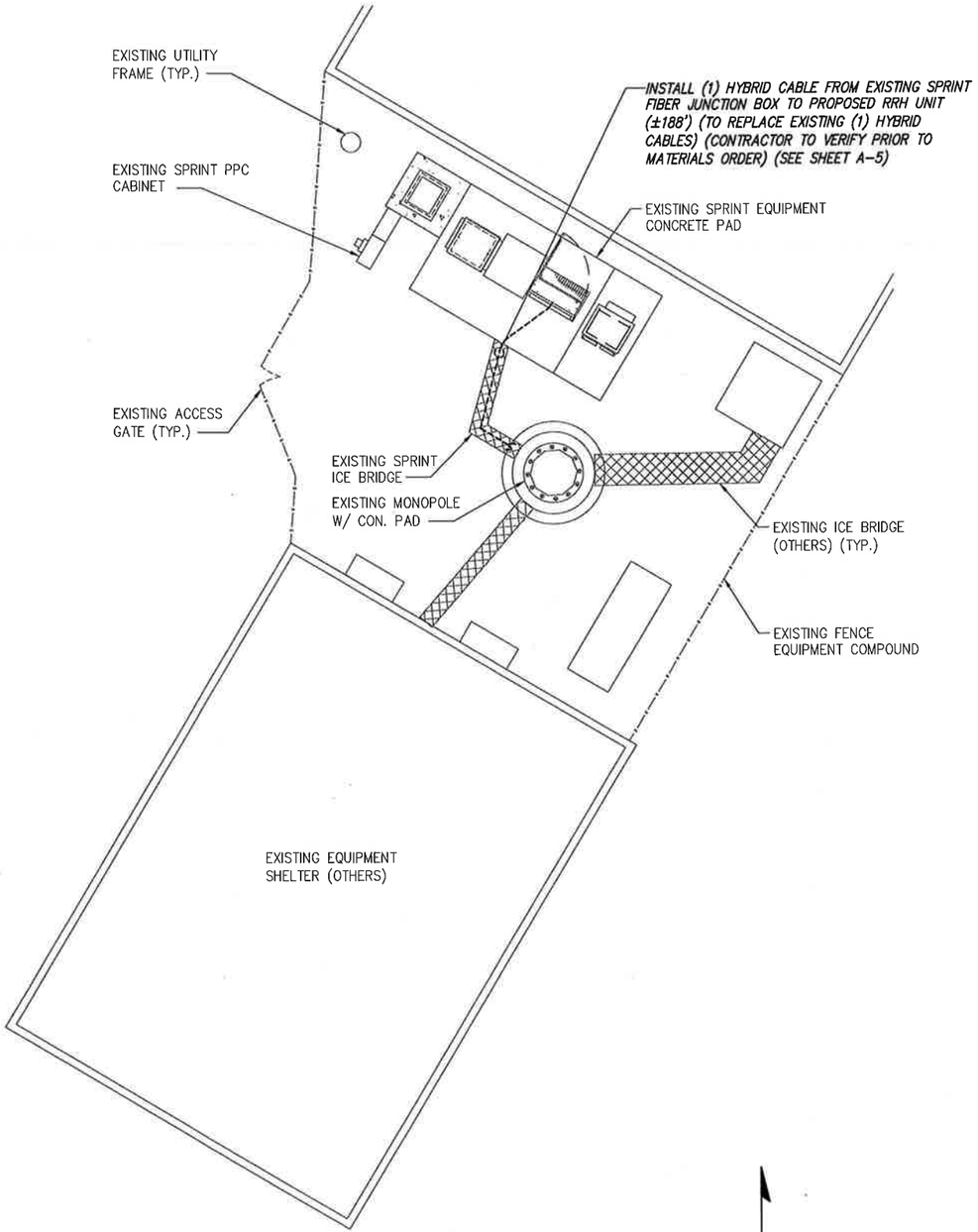

INFORMATION CONTAINED WITHIN DRAWINGS ARE BASED ON PROVIDED INFORMATION AND ARE NOT THE RESULT OF A FIELD SURVEY.

N

2.5' 0 2.5' 5' 10'
(IN FEET)
SCALE: 22"x34" SHEET 1" = 20'-0"
SCALE: 11"x17" SHEET 1" = 10'-0"

OVERALL SITE PLAN | SCALE: AS NOTED | 1

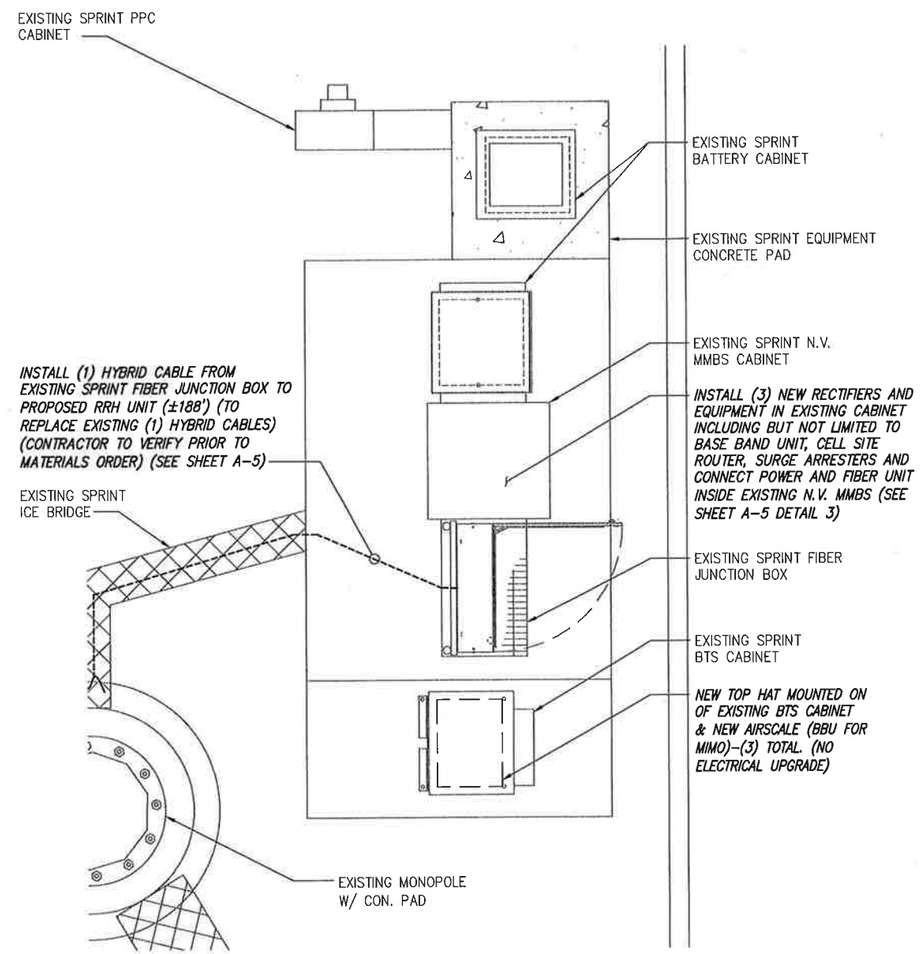

NOTE:
NO LIQUID TIGHT FLEXIBLE METALLIC CONDUIT IS TO EXCEED 6 FEET PER SP-2 SECTION 26 200 ITEM E.

N

1' 0 1' 2' 4'
(IN FEET)
SCALE: 22"x34" SHEET 1" = 8'-0"
SCALE: 11"x17" SHEET 1" = 4'-0"

SPRINT EQUIPMENT PLAN | SCALE: AS NOTED | 2

PLANS PREPARED FOR:

Sprint
6580 Sprint Parkway
Overland Park, Kansas 66251

PLANS PREPARED BY:

INFINIGY
FROM ZERO TO INFINIGY
the solutions are endless
1033 Watervliet Shaker Rd | Albany, NY 12205
Phone: 518-690-0790 | Fax: 518-690-0793
www.infinigy.com
JOB NUMBER 526-103

MLA PARTNER:

CROWN CASTLE

ENGINEERING LICENSE:

STATE OF CONNECTICUT
JOHN S. STEVENS
NOV 8 2018
No. 24705
LICENSED PROFESSIONAL ENGINEER

DRAWING NOTICE:

THESE DOCUMENTS ARE CONFIDENTIAL AND ARE THE SOLE PROPERTY OF SPRINT AND MAY NOT BE REPRODUCED, DISSEMINATED OR REDISTRIBUTED WITHOUT THE EXPRESS WRITTEN CONSENT OF SPRINT.

REVISIONS:

DESCRIPTION	DATE	BY	REV
ISSUED FOR CONSTRUCTION	10/30/18	RCD	0
ISSUED FOR REVIEW	10/08/18	RCD	A

SITE NAME:

HRT 099 943226

SITE CASCADE:

CT03XC091

SITE ADDRESS:

570 NEW PARK AVENUE
WEST HARTFORD, CT 06110

SHEET DESCRIPTION:

SITE PLAN

SHEET NUMBER:

A-1

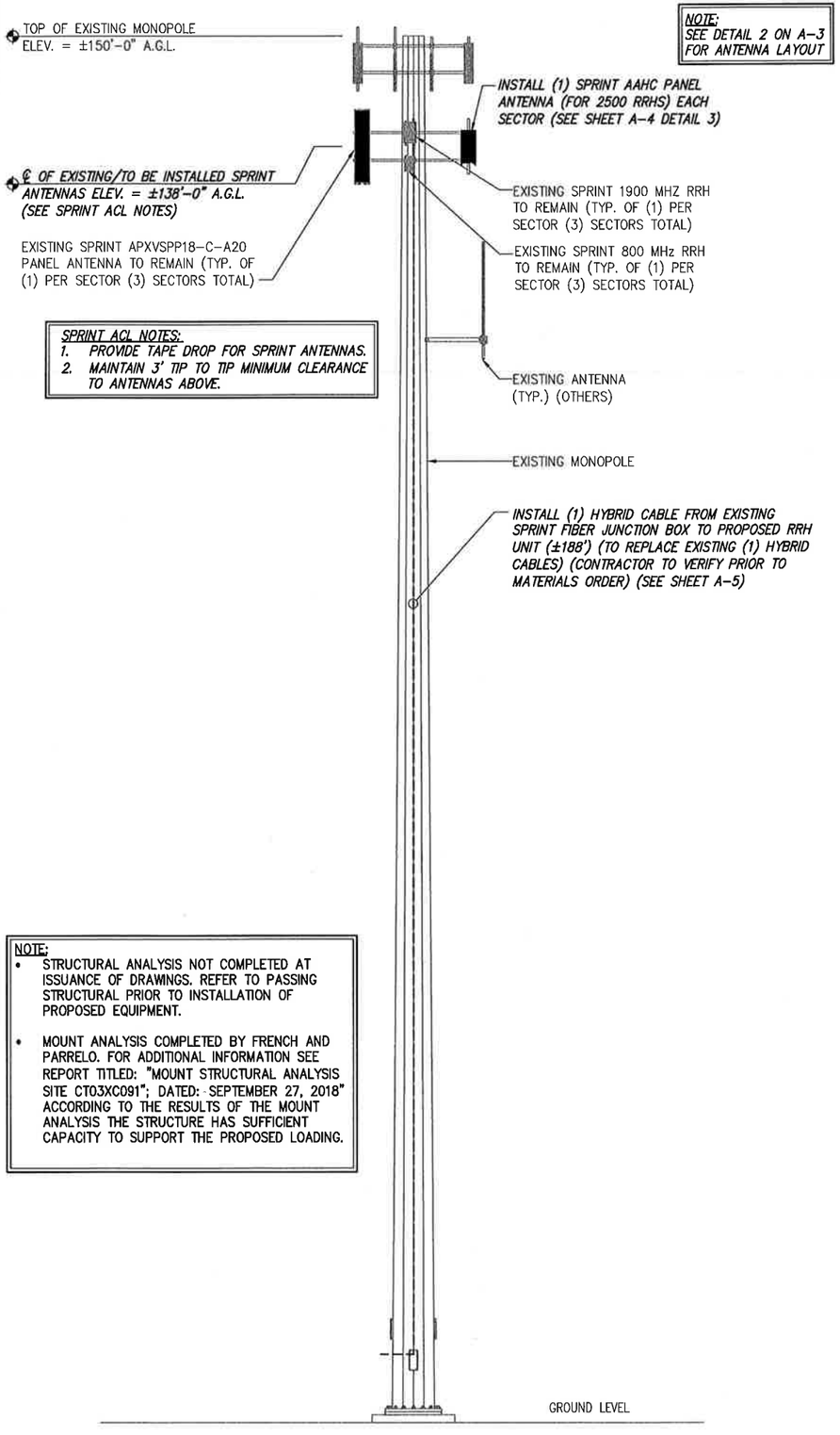

NOTE:
SEE DETAIL 2 ON A-3 FOR ANTENNA LAYOUT

SPRINT ACL NOTES:
1. PROVIDE TAPE DROP FOR SPRINT ANTENNAS.
2. MAINTAIN 3' TIP TO TIP MINIMUM CLEARANCE TO ANTENNAS ABOVE.

NOTE:
- STRUCTURAL ANALYSIS NOT COMPLETED AT ISSUANCE OF DRAWINGS. REFER TO PASSING STRUCTURAL PRIOR TO INSTALLATION OF PROPOSED EQUIPMENT.
- MOUNT ANALYSIS COMPLETED BY FRENCH AND PARRELO. FOR ADDITIONAL INFORMATION SEE REPORT TITLED: "MOUNT STRUCTURAL ANALYSIS SITE CT03XC091"; DATED: SEPTEMBER 27, 2018" ACCORDING TO THE RESULTS OF THE MOUNT ANALYSIS THE STRUCTURE HAS SUFFICIENT CAPACITY TO SUPPORT THE PROPOSED LOADING.

TOWER ELEVATION | NO SCALE | 1

NOTE:
CONTRACTOR TO LINE UP WHITE MARKINGS ON JUMPER AND RISER IP-MPO CONNECTORS AND SLIDE THE RISER CONNECTOR TO THE JUMPER CONNECTOR. PUSH THE WHITE MARK ON THE JUMPER CONNECTOR FLUSH AGAIN THE RED SEAL ON THE RISER CONNECTOR.

CONTRACTOR TO ROTATE THE BAYONET HOUSING CLOCKWISE UNTIL YOU HEAR A CLICK SOUND TO ENSURE A PROPER CONNECTION IS IN PLACE.

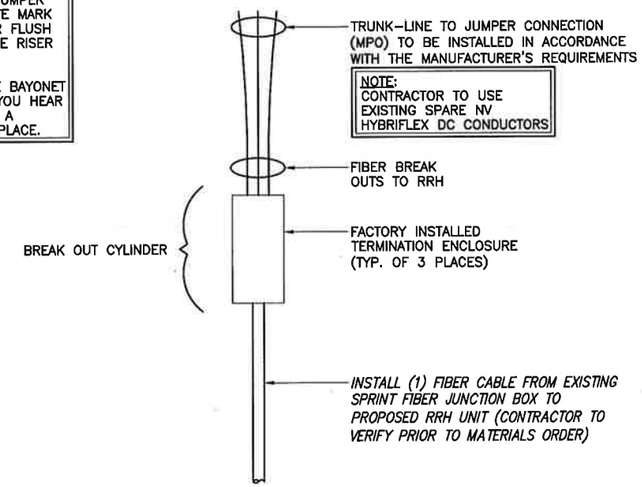

HYBRID BREAKOUT DETAIL | NO SCALE | 2

NOT USED | NO SCALE | 3

PLANS PREPARED FOR:

Sprint
6580 Sprint Parkway
Overland Park, Kansas 66251

PLANS PREPARED BY:

INFINIGY
FROM ZERO TO INFINIGY
the solutions are endless
1033 Watervliet Shaker Rd | Albany, NY 12205
Phone: 518-690-0790 | Fax: 518-690-0793
www.infinigy.com
JOB NUMBER 526-103

MLA PARTNER:

CROWN CASTLE

ENGINEERING LICENSE:

STATE OF CONNECTICUT
JOHN B. STEVENS
No. 24705
LICENSED PROFESSIONAL ENGINEER
NOV 5 2018

DRAWING NOTICE:

THESE DOCUMENTS ARE CONFIDENTIAL AND ARE THE SOLE PROPERTY OF SPRINT AND MAY NOT BE REPRODUCED, DISSEMINATED OR REDISTRIBUTED WITHOUT THE EXPRESS WRITTEN CONSENT OF SPRINT.

REVISIONS:

DESCRIPTION	DATE	BY	REV
ISSUED FOR CONSTRUCTION	10/30/18	RCD	0
ISSUED FOR REVIEW	10/08/18	RCD	A

SITE NAME:

HRT 099 943226

SITE CASCADE:

CT03XC091

SITE ADDRESS:

570 NEW PARK AVENUE
WEST HARTFORD, CT 06110

SHEET DESCRIPTION:

TOWER ELEVATION
& CABLE PLAN

SHEET NUMBER:

A-2

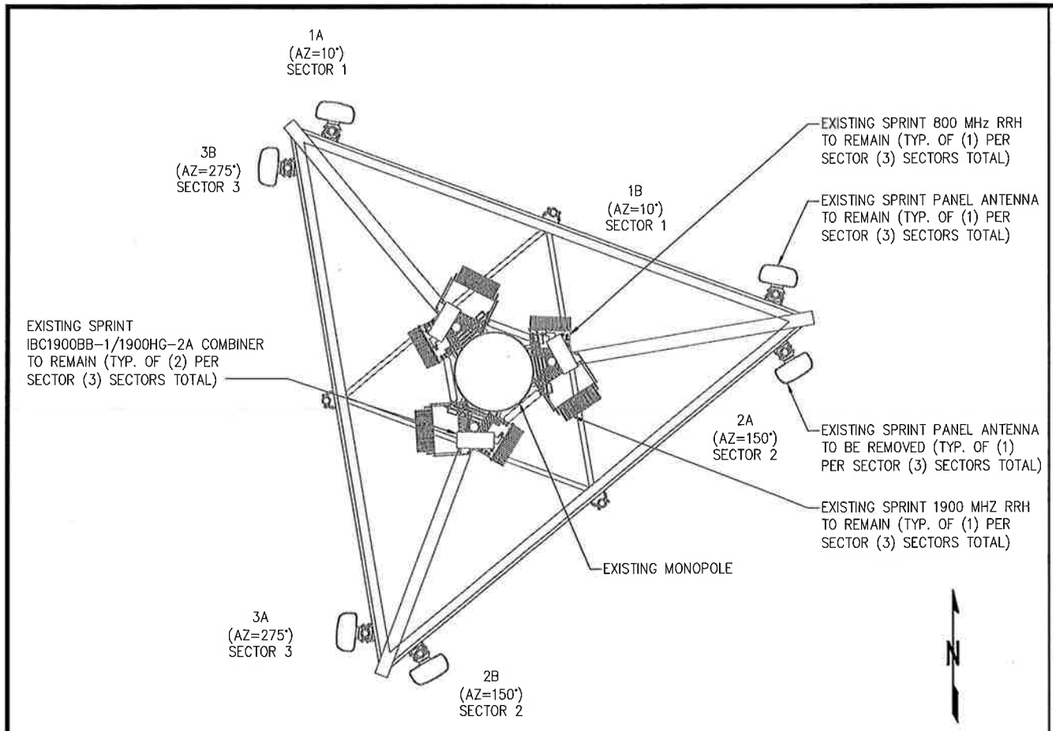

EXISTING ANTENNA LAYOUT | NO SCALE | 1

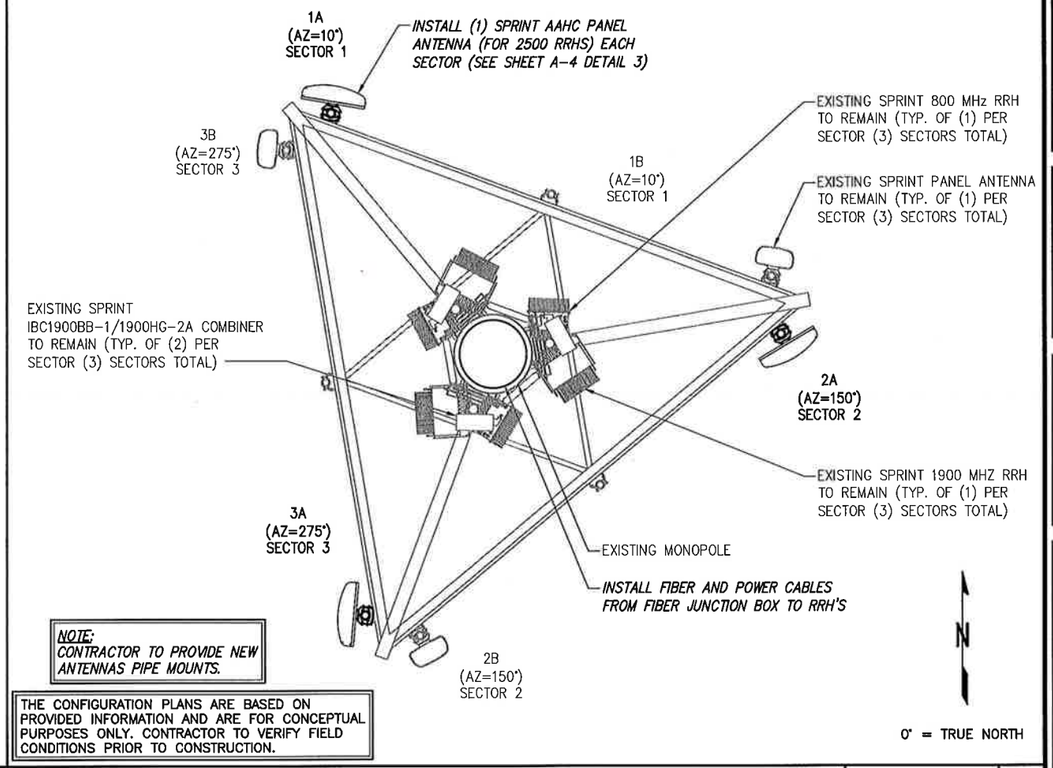

NOTE:
CONTRACTOR TO PROVIDE NEW ANTENNAS PIPE MOUNTS.

THE CONFIGURATION PLANS ARE BASED ON PROVIDED INFORMATION AND ARE FOR CONCEPTUAL PURPOSES ONLY. CONTRACTOR TO VERIFY FIELD CONDITIONS PRIOR TO CONSTRUCTION.

FINAL ANTENNA & RRH LAYOUT | NO SCALE | 2

NOTES:

1. ALL ANTENNA HEIGHTS ARE TO CENTER OF HORIZONTAL ANTENNA.

2. VERIFY AZIMUTH AND CL HEIGHT WITH AS-BUILT DRAWINGS IF AVAILABLE.

3. NO OBJECT IS TO BE WITHIN 45 DEGREES OF BORE-SIGHT OF 2.5G OR ANY OTHER TOWER ANTENNA. IF NECESSARY, 2.5G ANTENNA CAN BE PLACED AT FAR EDGE OF HORIZONTAL ANTENNA MOUNT MEMBER FOR CLEAR LINE OF SITE OR EVEN ON ANOTHER SECTOR FOR CLEAR LINE OF SITE.

4. 2.5G ANTENNA MUST BE AT LEAST 6" FROM 1900MHZ ANTENNA, 30" FROM 800MHZ ANTENNA AND 30MHZ FROM DUAL BAND 1900MHZ AND 800MHZ ANTENNA.

5. IF ANTENNAS ARE MOUNTED ON A FACE SURFACE SUCH AS A BUILDING WALL, PARAPET WALL, OR WATER TOWER WALL, THIS RFDS MUST BE ACCOMPANIED BY A SKETCH PROVIDED BY ITS ORIGINATING RF ENGINEER CALLING OUT THE EXACT LOCATION OF WHERE ANTENNA IS TO BE LOCATED. CONTACT SPRINT RF ENGINEER IF THE SKETCH IS MISSING.

6. GENERAL CONTRACTOR TO FIELD VERIFY AZIMUTH AND CL HEIGHT AND MECHANICAL DOWNTILT. IF DIFFERENT THAN CALLED OUT BELOW, HALT ANTENNA WORK FOR ONE HOUR, CALL SPRINT RF ENGINEER (OR MANAGER IF RF ENGINEER DOES NOT ANSWER, BUT STILL LEAVE A MESSAGE TO RF ENGINEER) USING CONTACT INFORMATION ABOVE FOR FURTHER INSTRUCTIONS. IF SPRINT DOES NOT RESPOND WITHIN ONE HOUR, PLACE 2.5G ANTENNA AT SAME CL HEIGHT AS 1.9G ANTENNA AND EMAIL CORRECT CL HEIGHT AND AZIMUTH TO SPRINT RF ENGINEER. UPDATE AS-BUILD DRAWING WITH CORRECT CL HEIGHT. ALSO EMAIL CORRECT 1900 MHZ AND 800 MHZ ANTENNA CL HEIGHT, AZIMUTH AND MECHANICAL DOWNTILT TO RF ENGINEER.

7. AISG TESTS TO VERIFY OPERATION IS TO BE PERFORMED AFTER FINAL INSTALLATION OF ANTENNAS AND AISG CABLES HAVE BEEN CONNECTED. VERIFY OPERATION OF ALL EXISTING SPRINT AISG EQUIPMENT INCLUDING 800MHZ, 1.9GHZ AND 2.5G. TEST INCLUDE COMPLETE DOWNTILT, AZIMUTH (IF APPLICABLE) AND BEAMWIDTH SWINGS (IF APPLICABLE). DOCUMENT AISG TEST RESULTS IN COAX SWEEP TEST SPREADSHEET.

8. GENERAL CONTRACTOR MUST INSURE THAT NO OBJECT IS LOCATED IN FRONT OF ANTENNA. THIS MEANS NO OBJECT IS TO BE LOCATED 45 DEGREES LEFT AND RIGHT OF FRONT OF ANTENNA OR 7 DEGREES UP AND DOWN FROM CENTER OF ANTENNA. IF THIS IS NOT POSSIBLE, CONTACT RF ENGINEER FOR FURTHER INSTRUCTION. IN ADDITION, 2.5G ANTENNA IS NOT TO BE PLACED IN FRONT OF ANY OTHER ANTENNA USING THE SAME 45 DEGREE RULE. THIS INCLUDES SPRINT AND NON-SPRINT ANTENNAS.

9. GENERAL CONTRACT IS REQUIRED TO USE A DIGITAL ALIGNMENT TOOL TO SET AZIMUTH, ROLL AND DOWNTILT. AZIMUTH ACCURACY IS TO BE WITHIN 1 DEGREES. DOWNTILT AND ROLL (LEFT TO RIGHT TILT) IS TO BE WITHIN 0.1 DEGREES. IF FOR SOME REASON THIS ACCURACY CANNOT BE ACHIEVED, UPDATE AS-BUILT DRAWINGS AND EMAIL SPRINT RF ENGINEER WITH AS-BUILT SETTINGS. USE 3Z RF ALIGNMENT TOOL OR EQUIVALENT TOOL. HTTP://WWW.3ZTELECOM.COM/ANTENNA-ALIGNMENT-TOOL/

NOTES | NO SCALE | 3

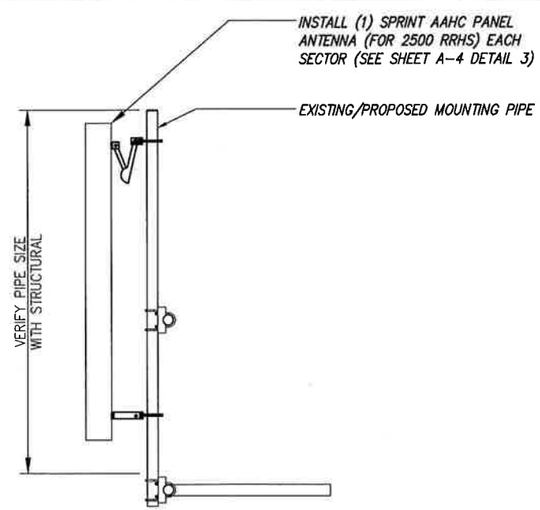

NOTES:

1. CUT DC CONDUCTORS TO LENGTH.

2. COIL FIBER CABLE AND SECURE AT SIDE OF RRH.

3. DO NO EXCEED BEND RADIUS.

NOTE:
CONTRACTOR TO POSITION RRH ON MOUNT BEHIND ANTENNA SUCH THAT THE RRH DOES NOT INTERFERE WITH THE EXISTING PLATFORM/T-ARM MOUNTING HARDWARE.

NOTE:
SPARE DC CABLES ARE COILED UP ON NV RRHS AT SPRINT ARRAY. THESE ARE TO BE USED TO POWER UP THE 2.5 RRHS AND TIED INTO EXISTING DC BREAKERS INSIDE THE FIBER JUNCTION BOX LOCATED AT EQUIPMENT.

NOTE:
THE DIAGRAM IS FOR CONCEPTUAL PURPOSES ONLY. CONTRACTOR IS TO REFER TO PASSING STRUCTURAL ANALYSIS FOR ANTENNA AND RRH MOUNTING DETAILS

TYPICAL ANTENNA & RRH MOUNTING DETAILS | NO SCALE | 4

PLANS PREPARED FOR:

Sprint
6580 Sprint Parkway
Overland Park, Kansas 66251

PLANS PREPARED BY:

INFINIGY
FROM ZERO TO INFINIGY
the solutions are endless
1033 Watervliet Shaker Rd | Albany, NY 12205
Phone: 518-690-0790 | Fax: 518-690-0793
www.infinigy.com
JOB NUMBER 526-103

MLA PARTNER:

CROWN CASTLE

ENGINEERING LICENSE:

STATE OF CONNECTICUT
JOHN S. STEVENS
No. 24705
LICENSED PROFESSIONAL ENGINEER

DRAWING NOTICE:

THESE DOCUMENTS ARE CONFIDENTIAL AND ARE THE SOLE PROPERTY OF SPRINT AND MAY NOT BE REPRODUCED, DISSEMINATED OR REDISTRIBUTED WITHOUT THE EXPRESS WRITTEN CONSENT OF SPRINT.

REVISIONS:

DESCRIPTION	DATE	BY	REV
ISSUED FOR CONSTRUCTION	10/30/18	RCD	0
ISSUED FOR REVIEW	10/08/18	RCD	A

SITE NAME:

HRT 099 943226

SITE CASCADE:

CT03XC091

SITE ADDRESS:

570 NEW PARK AVENUE
WEST HARTFORD, CT 06110

SHEET DESCRIPTION:

ANTENNA LAYOUT
& MOUNTING DETAILS

SHEET NUMBER:

A-3

TOP HAT (AUXILIARY CAB EXTENSION)

MANUFACTURER:	ALU
MODEL:	AUXILIARY CABINET EXTENSION OR "TOP HAT"
WEIGHT:	38 LBS (UNLOADED) 110 LBS (FULLY LOADED)
POWER SUPPLY:	−48 VDC
SUPPORTED TELECOM EQUIPMENT:	LTE 9926 BBU, CDMA 9926 BBU, SAR AGGREGATION ROUTER

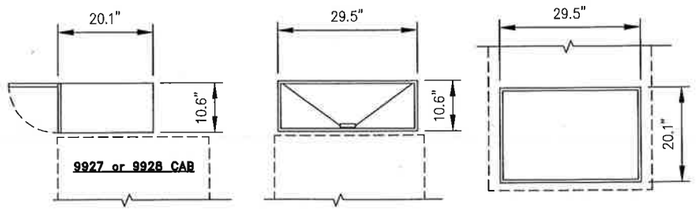

SIDE VIEW FRONT VIEW TOP VIEW

NOTE:
TOP HAT ATTACHED TO EXISTING BTS CABINET USING MANUFACTURES MOUNTING KIT ('L' BRACKET EACH SIDE WITH (2) M12 BOLTS, LOCK WASHERS, AND FLAT WASHER PER BRACKET)

TOP HAT SPECS. | NO SCALE | 1

NOT USED | NO SCALE | 2

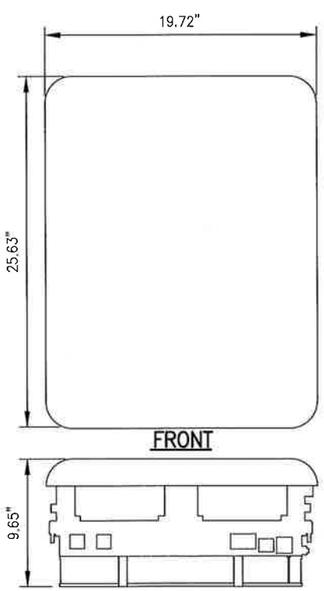

ANTENNA NOKIA AAHC

RADOME MATERIAL:	FIBERGLASS
RADOME COLOR:	LIGHT GREY
DIMENSIONS, HxWxD.in(mim):	25.63"x19.72"x9.65"
WEIGHT:	103.6LBS

2.5 ANTENNA | NO SCALE | 3

NOT USED | NO SCALE | 4

PLANS PREPARED FOR:

Sprint
6580 Sprint Parkway
Overland Park, Kansas 66251

PLANS PREPARED BY:

INFINIGY
FROM ZERO TO INFINIGY
the solutions are endless
1033 Watervliet Shaker Rd | Albany, NY 12205
Phone: 518-690-0790 | Fax: 518-690-0793
www.infinigy.com
JOB NUMBER 526-103

MLA PARTNER:

CROWN CASTLE

ENGINEERING LICENSE:

STATE OF CONNECTICUT
JOHN S. STEVENS
NOV 5 2018
No. 24905
LICENSED PROFESSIONAL ENGINEER

DRAWING NOTICE:

THESE DOCUMENTS ARE CONFIDENTIAL AND ARE THE SOLE PROPERTY OF SPRINT AND MAY NOT BE REPRODUCED, DISSEMINATED OR REDISTRIBUTED WITHOUT THE EXPRESS WRITTEN CONSENT OF SPRINT.

REVISIONS:

DESCRIPTION	DATE	BY	REV
ISSUED FOR CONSTRUCTION	10/30/18	RCD	0
ISSUED FOR REVIEW	10/08/18	RCD	A

SITE NAME:
HRT 099 943226

SITE CASCADE:
CT03XC091

SITE ADDRESS:
570 NEW PARK AVENUE
WEST HARTFORD, CT 06110

SHEET DESCRIPTION:
EQUIPMENT & MOUNTING DETAILS

SHEET NUMBER:
A-4

RFS HYBRIFLEX RISER CABLE SCHEDULE

Fiber Only (Existing DC Power)	**Hybrid cable** MN: HB058-M12-050F 12x multi-mode fiber pairs, Top: Outdoor protected connectors, Bottom: LC Connectors, 5/8 cable, 50 ft	50 ft
	MN: HB058-M12-075F	75 ft
	MN: HB058-M12-100F	100 ft
	MN: HB058-M12-125F	125 ft
	MN: HB058-M12-150F	150 ft
	MN: HB058-M12-175F	175 ft
	MN: HB058-M12-200F	200 ft
8 AWG Power	**Hybrid cable** MN: HB114-08U3M12-050F 3x 8 AWG power pairs, 12x multi-mode fiber pairs, Outdoor rated connectors & LC Connectors, 1 1/4 cable, 50 ft	50 ft
	MN: HB114-08U3M12-075F	75 ft
	MN: HB114-08U3M12-100F	100 ft
	MN: HB114-08U3M12-125F	125 ft
	MN: HB114-08U3M12-150F	150 ft
	MN: HB114-08U3M12-175F	175 ft
	MN: HB114-08U3M12-200F	200 ft
6 AWG Power	**Hybrid cable** MN: HB114-13U3M12-225F 3x 6 AWG power pair, 12x multi-mode fiber pairs, Outdoor rated connectors & LC Connectors, 1 1/4 cable, 225 ft	225 ft
	MN: HB114-13U3M12-250F	250 ft
	MN: HB114-13U3M12-275F	275 ft
	MN: HB114-13U3M12-300F	300 ft
4 AWG Power	**Hybrid cable** MN: HB114-21U3M12-325F 3x 4 AWG power pair, 12x multi-mode fiber pairs, Outdoor rated connectors & LC Connectors, 1 1/4 cable, 325 ft	325 ft
	MN: HB114-21U3M12-350F	350 ft
	MN: HB114-21U3M12-375F	375 ft

RFS HYBRIFLEX JUMPER CABLE SCHEDULE

Fiber Only	**Hybrid Jumper cable** MN: HBF012-M3-5F1 5 ft, 3x multi-mode fiber pairs, Outdoor & LC connectors, 1/2 cable	5 ft
	MN: HBF012-M3-10F1	10 ft
	MN: HBF012-M3-15F1	15 ft
	MN: HBF012-M3-20F1	20 ft
	MN: HBF012-M3-25F1	25 ft
	MN: HBF012-M3-30F1	30 ft
8 AWG Power	**Hybrid Jumper cable** MN: HBF058-08U1M3-5F1 5 ft, 1x 8 AWG power pair, 3x multi-mode fiber pairs, Outdoor & LC Connectors, 5/8 cable	5 ft
	MN: HBF058-08U1M3-10F1	10 ft
	MN: HBF058-08U1M3-15F1	15 ft
	MN: HBF058-08U1M3-20F1	20 ft
	MN: HBF058-08U1M3-25F1	25 ft
	MN: HBF058-08U1M3-30F1	30 ft
6 AWG Power	**Hybrid Jumper cable** MN: HBF058-13U1M3-5F1 5 ft, 1x 6 AWG power pair, 3x multi-mode fiber pairs, Outdoor & LC Connectors, 5/8 cable	5 ft
	MN: HBF058-13U1M3-10F1	10 ft
	MN: HBF058-13U1M3-15F1	15 ft
	MN: HBF058-13U1M3-20F1	20 ft
	MN: HBF058-13U1M3-25F1	25 ft
	MN: HBF058-13U1M3-30F1	30 ft
4 AWG Power	**Hybrid Jumper cable** MN: HBF078-21U1M3-5F1 5 ft, 1x 4 AWG power pair, 3x multi-mode fiber pairs, Outdoor & LC Connectors, 7/8 cable	5 ft
	MN: HBF078-21U1M3-10F1	10 ft
	MN: HBF078-21U1M3-15F1	15 ft
	MN: HBF078-21U1M3-20F1	20 ft
	MN: HBF078-21U1M3-25F1	25 ft
	MN: HBF078-21U1M3-30F1	30 ft

NOTE:
SPRINT CM TO CONFIRM HYBRID OR FIBER RISER CABLE AND HYBRID OR FIBER JUMPER CABLE MODEL NUMBERS IF HYBRID CABLES ARE REQUIRED BEFORE PREPARING BOM.

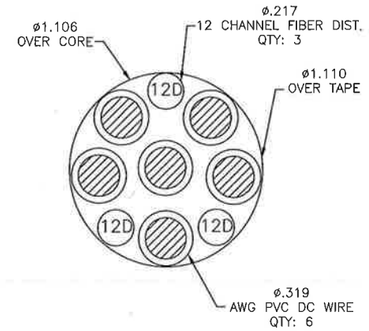

4 AWG

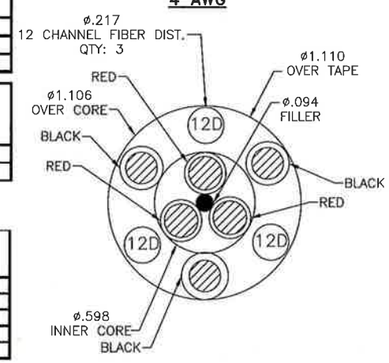

8 & 6 AWG

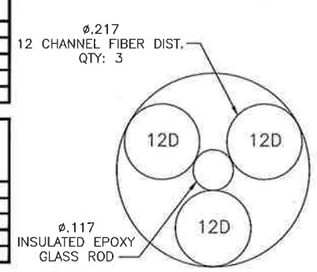

FIBER ONLY

2.5 CABLE CROSS SECTION DATA | NO SCALE | 1

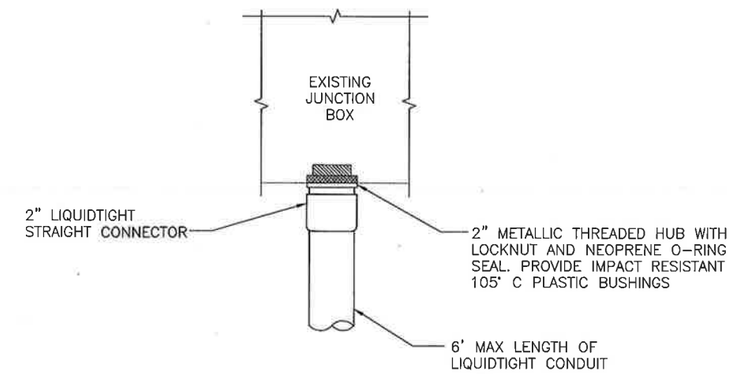

FIBER JUNCTION BOX PENETRATION | NO SCALE | 2

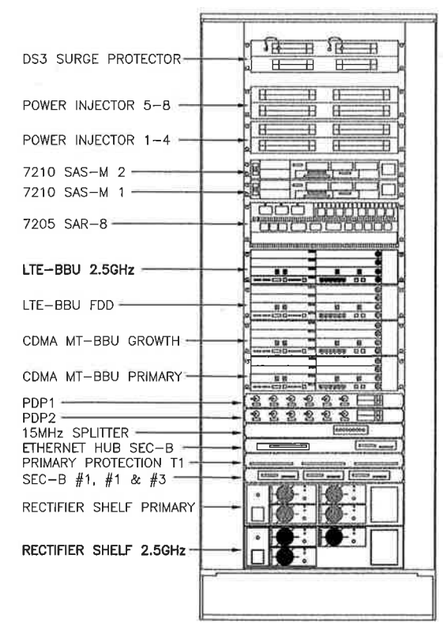

CABINET LAYOUT | NO SCALE | 3

PLANS PREPARED FOR:

Sprint
6580 Sprint Parkway
Overland Park, Kansas 66251

PLANS PREPARED BY:

INFINIGY
FROM ZERO TO INFINIGY
the solutions are endless
1033 Watervliet Shaker Rd | Albany, NY 12205
Phone: 518-690-0790 | Fax: 518-690-0793
www.infinigy.com
JOB NUMBER 526-103

MLA PARTNER:

CROWN CASTLE

ENGINEERING LICENSE:

STATE OF CONNECTICUT
JOHN S. STEVENS
NO. 24755
LICENSED
PROFESSIONAL ENGINEER
2018

DRAWING NOTICE:

THESE DOCUMENTS ARE CONFIDENTIAL AND ARE THE SOLE PROPERTY OF SPRINT AND MAY NOT BE REPRODUCED, DISSEMINATED OR REDISTRIBUTED WITHOUT THE EXPRESS WRITTEN CONSENT OF SPRINT.

REVISIONS:

DESCRIPTION	DATE	BY	REV
ISSUED FOR CONSTRUCTION	10/30/18	RCD	0
ISSUED FOR REVIEW	10/08/18	RCD	A

SITE NAME:

HRT 099 943226

SITE CASCADE:

CT03XC091

SITE ADDRESS:

570 NEW PARK AVENUE
WEST HARTFORD, CT 06110

SHEET DESCRIPTION:

CIVIL DETAILS

SHEET NUMBER:

A-5

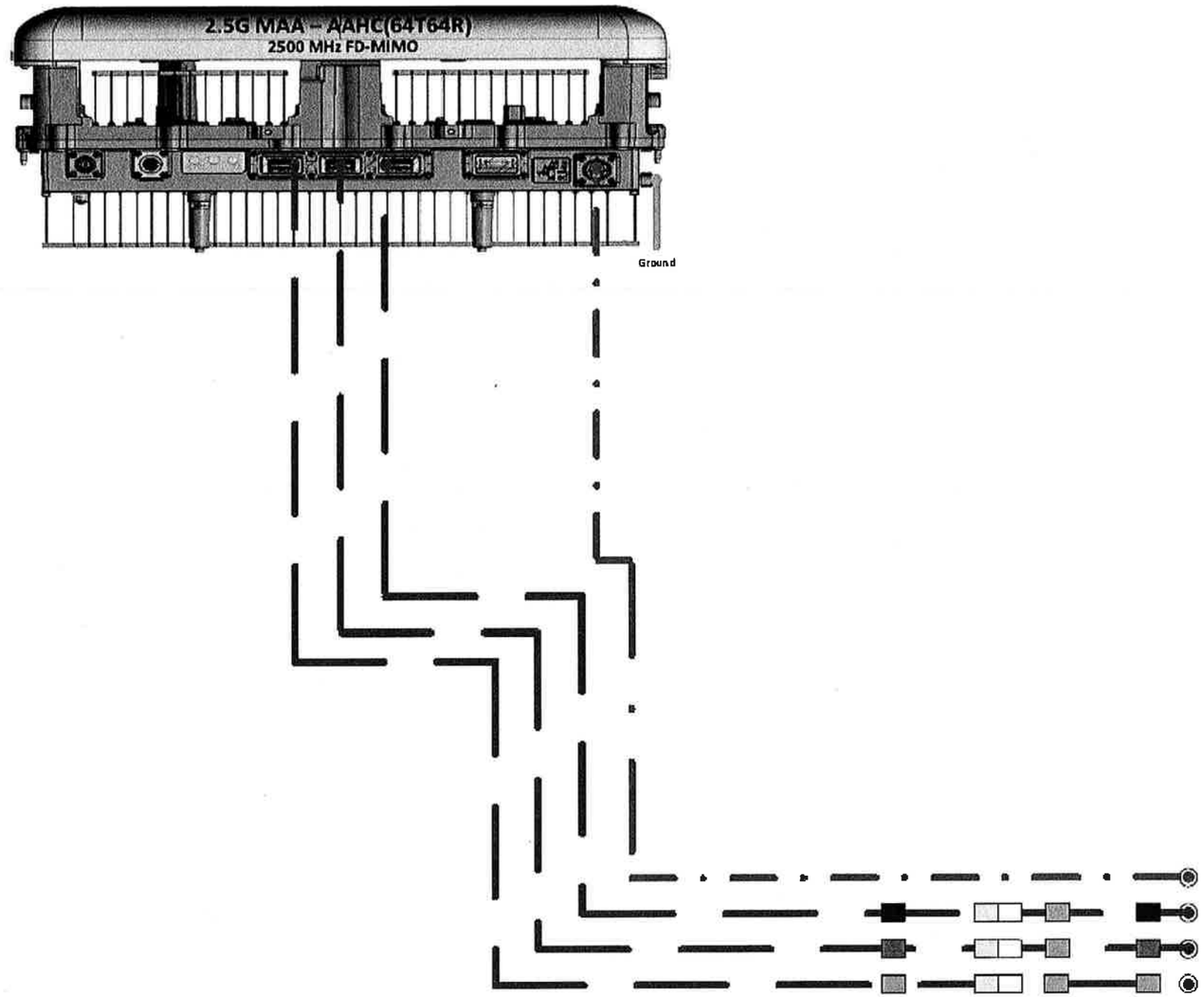

RRH 1900

RRH 800

Sector Number

Frequency/Radio

Additional Color Code Information can be Found in the Sprint TS-0200 Document

RET Control Cable

Fiber Optic Cable

DC Power Cable

RF Coax Jumper Cable

Calibration Cable

Not to Scale

PLUMBING DIAGRAM | NO SCALE | 1

PLANS PREPARED FOR:

Sprint
6580 Sprint Parkway
Overland Park, Kansas 66251

PLANS PREPARED BY:

INFINIGY
FROM ZERO TO INFINIGY
the solutions are endless
1033 Watervliet Shaker Rd | Albany, NY 12205
Phone: 518-690-0790 | Fax: 518-690-0793
www.infinigy.com
JOB NUMBER 526-103

MLA PARTNER:

CROWN CASTLE

ENGINEERING LICENSE:

STATE OF CONNECTICUT
JOHN S. STEVENS
NO. 28705
LICENSED PROFESSIONAL ENGINEER
NOV 2 2018

DRAWING NOTICE:

THESE DOCUMENTS ARE CONFIDENTIAL AND ARE THE SOLE PROPERTY OF SPRINT AND MAY NOT BE REPRODUCED, DISSEMINATED OR REDISTRIBUTED WITHOUT THE EXPRESS WRITTEN CONSENT OF SPRINT.

REVISIONS:

DESCRIPTION	DATE	BY	REV
ISSUED FOR CONSTRUCTION	10/30/18	RCD	0
ISSUED FOR REVIEW	10/08/18	RCD	A

SITE NAME:

HRT 099 943226

SITE CASCADE:

CT03XC091

SITE ADDRESS:

570 NEW PARK AVENUE
WEST HARTFORD, CT 06110

SHEET DESCRIPTION:

PLUMBING DIAGRAM

SHEET NUMBER:

A-6

FINAL EQUIPMENT CONFIGURATION

SECTOR	ANTENNA MANUFACTURER	ANTENNA MODEL	RAD CENTER	AZIMUTH	RRH/ODU MAKE AND MODEL
1	RFS	APXVSPP18-C-A20	138'	10°	(1) ALU 1900MHZ 4x45W (1) ALU 800MHZ 2x50-800
	NOKIA	AAHC	138'	10°	INTEGRATED 2.5 RRH
2	RFS	APXVSPP18-C-A20	138'	150°	(1) ALU 1900MHZ 4x45W (1) ALU 800MHZ 2x50-800
	NOKIA	AAHC	138'	150°	INTEGRATED 2.5 RRH
3	RFS	APXVSPP18-C-A20	138'	275°	(1) ALU 1900MHZ 4x45W (1) ALU 800MHZ 2x50-800
	NOKIA	AAHC	138'	275°	INTEGRATED 2.5 RRH

FEEDER CABLES

MANUFACTURER	MODEL	LENGTH	QTY
HUBER AND SHUNER	MLC6C-06C-008R-008R	188'±	(1)

LEGEND
EXISTING
PROPOSED

NOTES:
1. CONTRACTOR TO VERIFY PROPOSED ANTENNA INFORMATION IS THE MOST CURRENT DATA AT TIME OF CONSTRUCTION.
2. CONTRACTOR TO CONFIRM CABLE LENGTHS PRIOR TO CONSTRUCTION.

ANTENNA/CABLE SCHEDULE — NO SCALE — 1

LEGEND:

- G — EXISTING GROUND RING
- ■ CADWELD CONNECTION (EXOTHERMIC WELD)
- ▲ MECHANICAL CONNECTION
- ⊗ GROUND ROD
- ● CABLE GROUND KIT

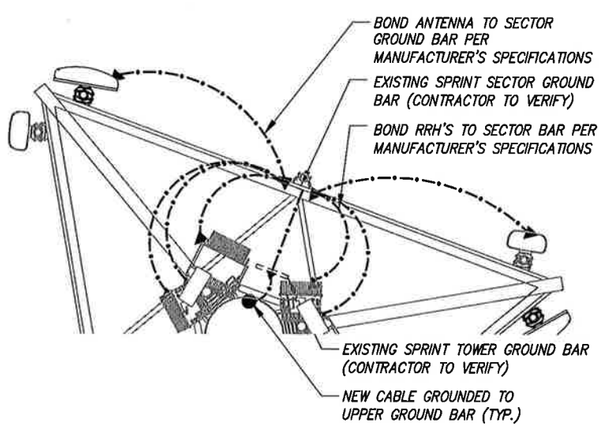

TYPICAL ANTENNA GROUNDING PLAN — NO SCALE — 2

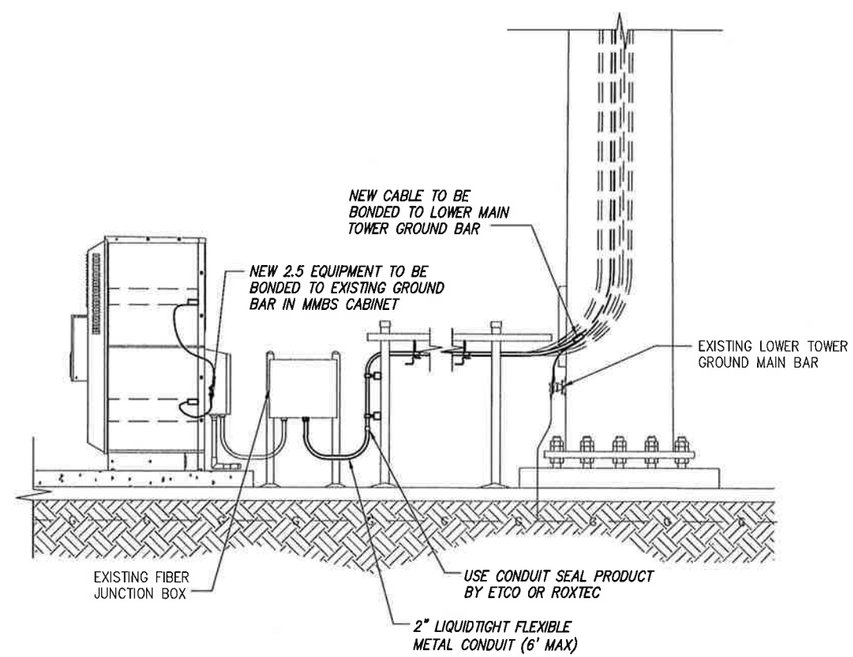

TYPICAL EQUIPMENT GROUNDING PLAN (ELEVATION) — NO SCALE — 3

PLANS PREPARED FOR:

Sprint
6580 Sprint Parkway
Overland Park, Kansas 66251

PLANS PREPARED BY:

INFINIGY
FROM ZERO TO INFINIGY
the solutions are endless
1033 Watervliet Shaker Rd | Albany, NY 12205
Phone: 518-690-0790 | Fax: 518-690-0793
www.infinigy.com
JOB NUMBER 526-103

MLA PARTNER:

CROWN CASTLE

ENGINEERING LICENSE:

STATE OF CONNECTICUT — JOHN S. STEVENS — No. 24705 — LICENSED PROFESSIONAL ENGINEER
NOV 5 2018

DRAWING NOTICE:

THESE DOCUMENTS ARE CONFIDENTIAL AND ARE THE SOLE PROPERTY OF SPRINT AND MAY NOT BE REPRODUCED, DISSEMINATED OR REDISTRIBUTED WITHOUT THE EXPRESS WRITTEN CONSENT OF SPRINT.

REVISIONS:

DESCRIPTION	DATE	BY	REV
ISSUED FOR CONSTRUCTION	10/30/18	RCD	0
ISSUED FOR REVIEW	10/08/18	RCD	A

SITE NAME:

HRT 099 943226

SITE CASCADE:

CT03XC091

SITE ADDRESS:

570 NEW PARK AVENUE
WEST HARTFORD, CT 06110

SHEET DESCRIPTION:

ELECTRICAL & GROUNDING DETAILS

SHEET NUMBER:

E-1

NOTES

CG SHALL REFERENCE ALL SPECS FOR "CONNECTING THE POWER SUPPLY" OF THE NEW INSTALLATION DOCUMENTS, FOR ALL CONNECTION SPECIFICATIONS.

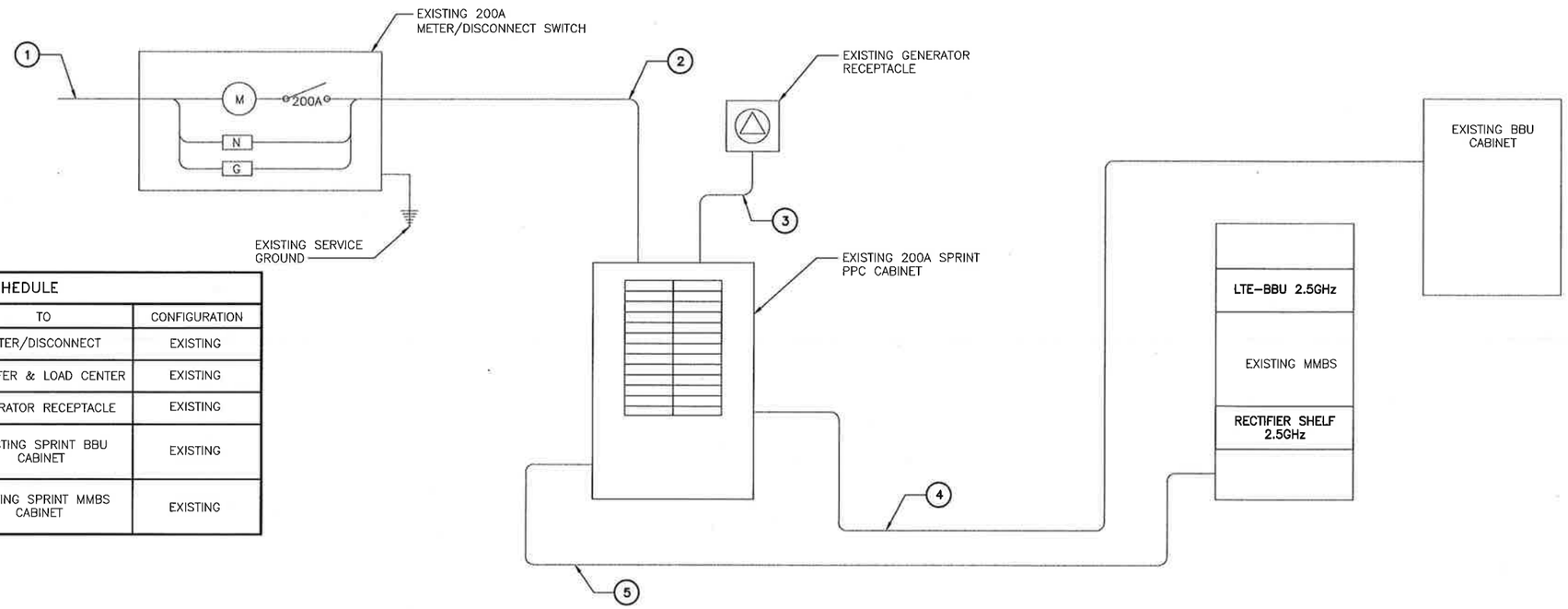

CIRCUIT SCHEDULE			
NO	FROM	TO	CONFIGURATION
1	UTILITY SOURCE	METER/DISCONNECT	EXISTING
2	METER/DISCONNECT	TRANSFER & LOAD CENTER	EXISTING
3	TRANSFER & LOAD CENTER	GENERATOR RECEPTACLE	EXISTING
4	TRANSFER & LOAD CENTER	EXISTING SPRINT BBU CABINET	EXISTING
5	TRANSFER & LOAD CENTER	EXISTING SPRINT MMBS CABINET	EXISTING

ELECTRICAL ONE–LINE DIAGRAM — NO SCALE — 1

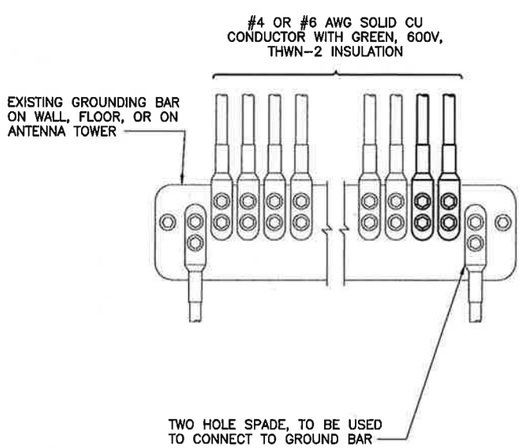

NOTES

1. APPLY NO–OX TO LUG AND BAR CONTACT SURFACE. DO NOT COAT INLINE LUG.
2. IF STOLEN GROUND BARS ARE ENCOUNTERED, CONTACT SPRINT CM FOR REPLACEMENT THREADED ROD KIT.

INSTALLATION OF GROUNDING CONDUCTOR TO GROUNDING BAR — NO SCALE — 2

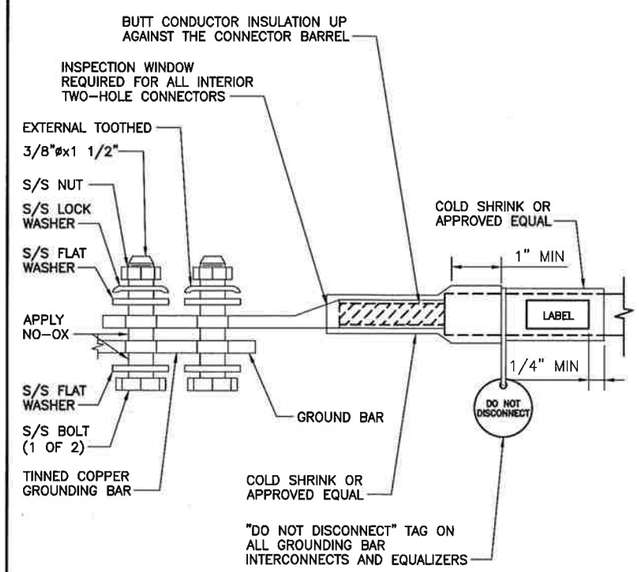

TWO HOLE LUG — NO SCALE — 3

LEGEND:

- — G — EXISTING GROUND RING
- ■ CADWELD CONNECTION (EXOTHERMIC WELD)
- ▲ MECHANICAL CONNECTION
- ⊗ GROUND ROD
- ● CABLE GROUND KIT

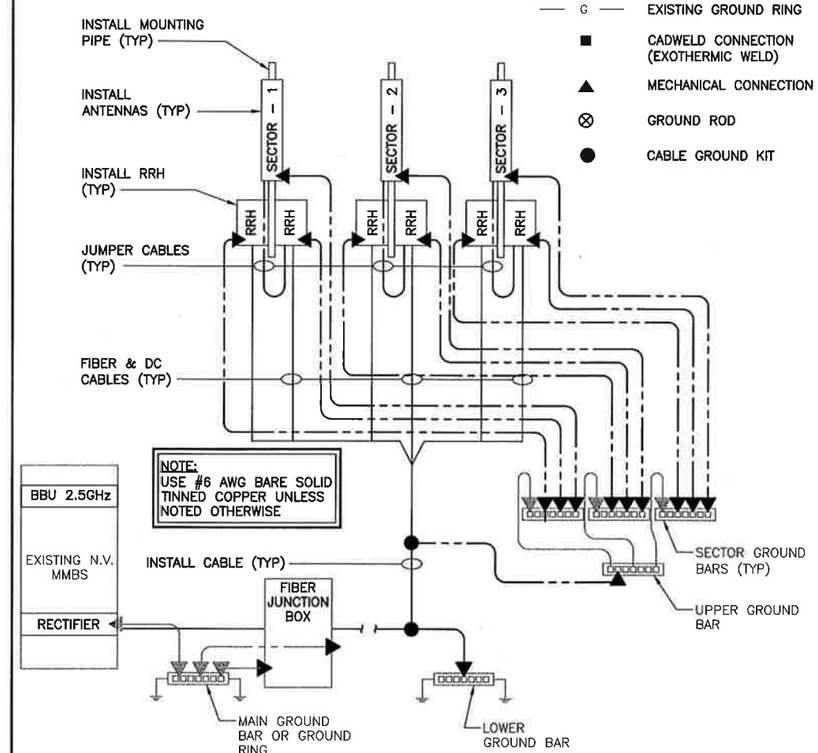

GROUNDING RISER DIAGRAM — NO SCALE — 4

PLANS PREPARED FOR:

Sprint
6580 Sprint Parkway
Overland Park, Kansas 66251

PLANS PREPARED BY:

INFINIGY
FROM ZERO TO INFINIGY
the solutions are endless
1033 Watervliet Shaker Rd | Albany, NY 12205
Phone: 518-690-0790 | Fax: 518-690-0793
www.infinigy.com
JOB NUMBER 526-103

MLA PARTNER:

CROWN CASTLE

ENGINEERING LICENSE:

STATE OF CONNECTICUT — THOMAS S. SCHEMBRI — NOV 5 2018 — No. 24705 — LICENSED PROFESSIONAL ENGINEER

DRAWING NOTICE:

THESE DOCUMENTS ARE CONFIDENTIAL AND ARE THE SOLE PROPERTY OF SPRINT AND MAY NOT BE REPRODUCED, DISSEMINATED OR REDISTRIBUTED WITHOUT THE EXPRESS WRITTEN CONSENT OF SPRINT.

REVISIONS:

DESCRIPTION	DATE	BY	REV
ISSUED FOR CONSTRUCTION	10/30/18	RCD	0
ISSUED FOR REVIEW	10/08/18	RCD	A

SITE NAME: HRT 099 943226

SITE CASCADE: CT03XC091

SITE ADDRESS: 570 NEW PARK AVENUE WEST HARTFORD, CT 06110

SHEET DESCRIPTION: ELECTRICAL & GROUNDING DETAILS

SHEET NUMBER: E-2